ECE 341

Lecture # 3

Instructor: Zeshan Chishti
zeshan@ece.pdx.edu

October 6, 2014

Portland State University

Lecture Topics

- Registers
- Counters
- Finite State Machines

- <u>Reference:</u> Appendix A of the textbook, sections A.7, A.8, A.13.

Registers

- A flip-flop stores one bit of information
- When a set of *n* flip-flops is used together to store *n* bits of data, it is referred to as a ***n-bit register***
- All flip-flops in a register are synchronized by a common clock
  - Data loaded and stored into all flip-flops at the same time
- Common register usage:
  - Temporary storage of data output from an arithmetic circuit

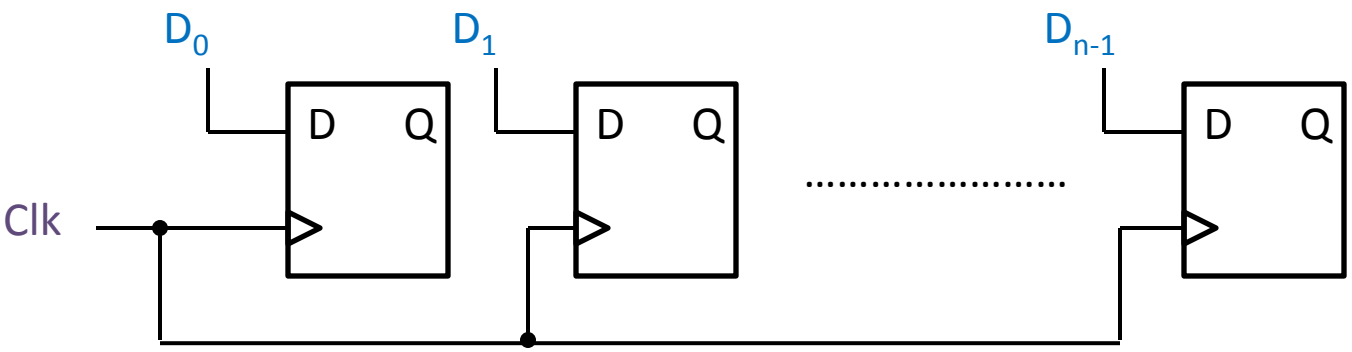

Write operation in a n-bit register

Shift Register

- A register whose contents may be shifted one bit position at a time
  - To the right or left or possibly both
- <u>Example:</u> Shift Right Register
  - At each positive clock edge, contents of F_i are shifted to F_{i+1} (right shift)
  - Gated latch unsuitable for a shift register, no control over # bit shifts per clock

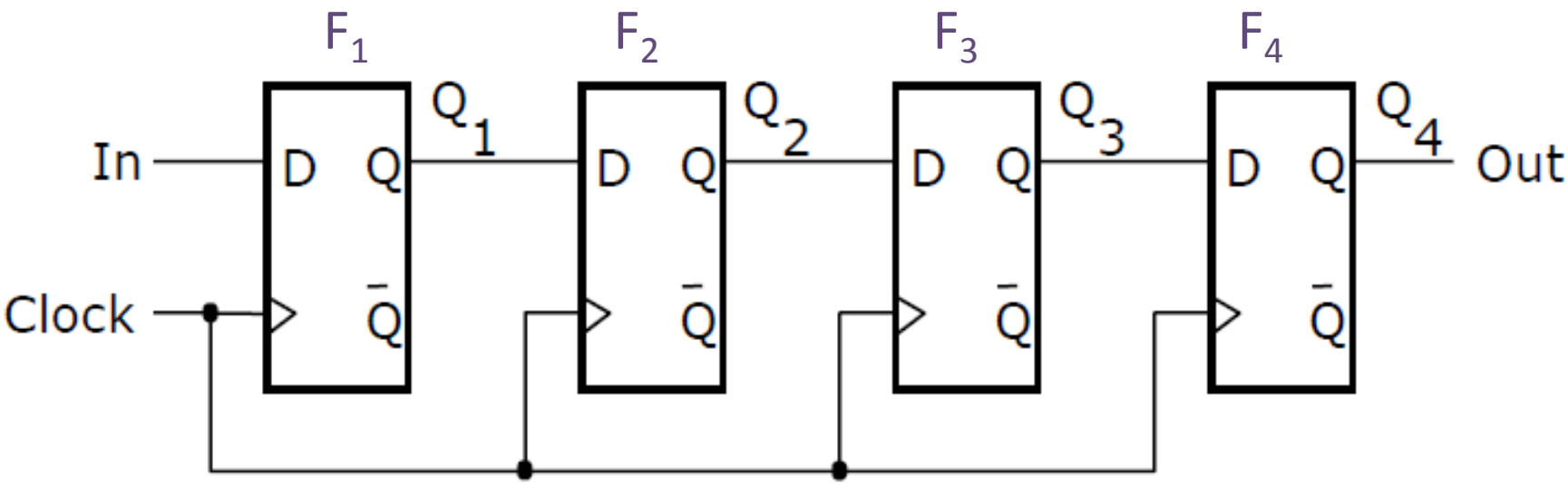

Shift Right Register

Example: Shift Right Register

- <u>Example:</u> Data 1001 needs to be written to a 4-bit shift right register

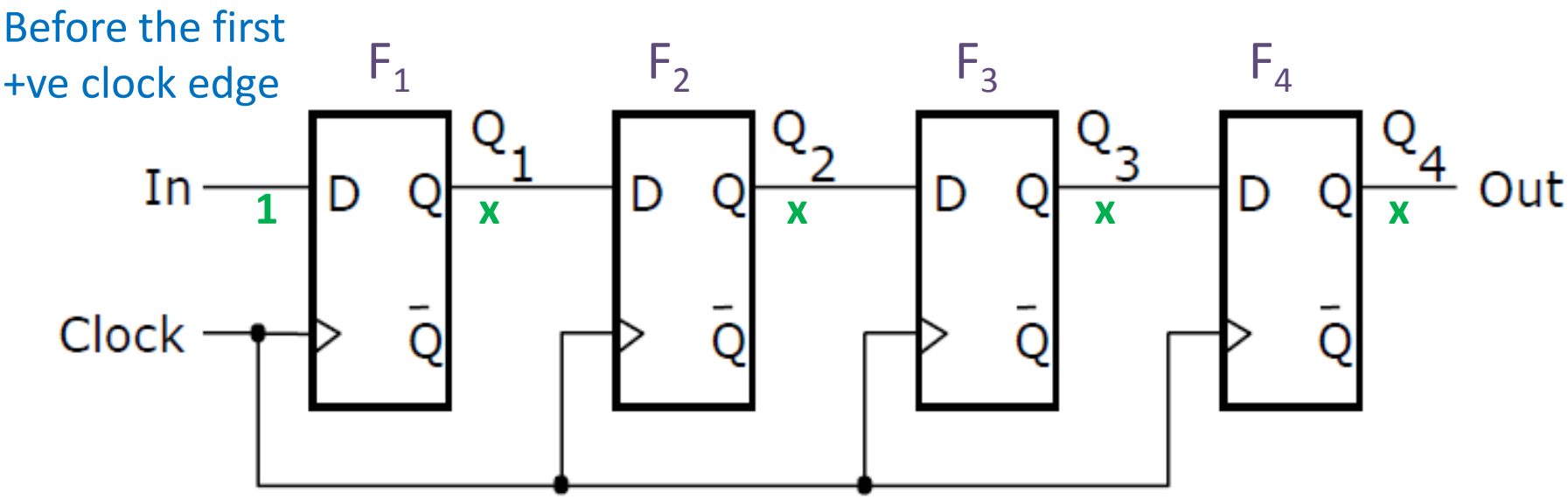

Shift Right Register

Example: Shift Right Register

- <u>Example:</u> Data 1001 needs to be written to a 4-bit shift right register

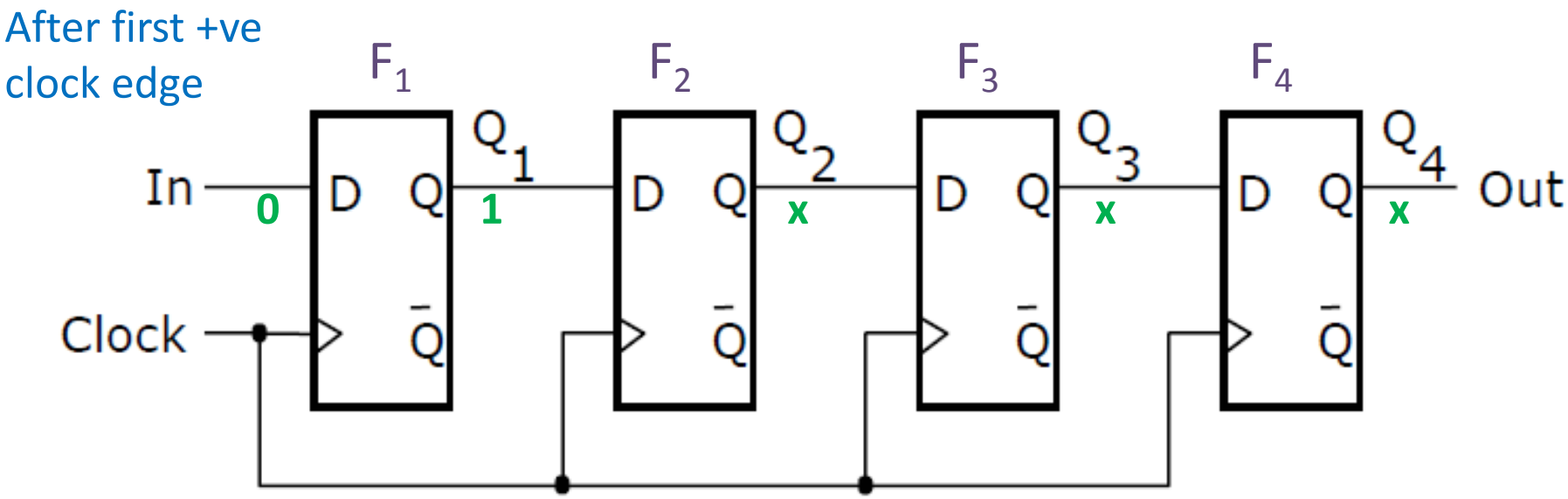

Shift Right Register

Example: Shift Right Register

- <u>Example:</u> Data 1001 needs to be written to a 4-bit shift right register

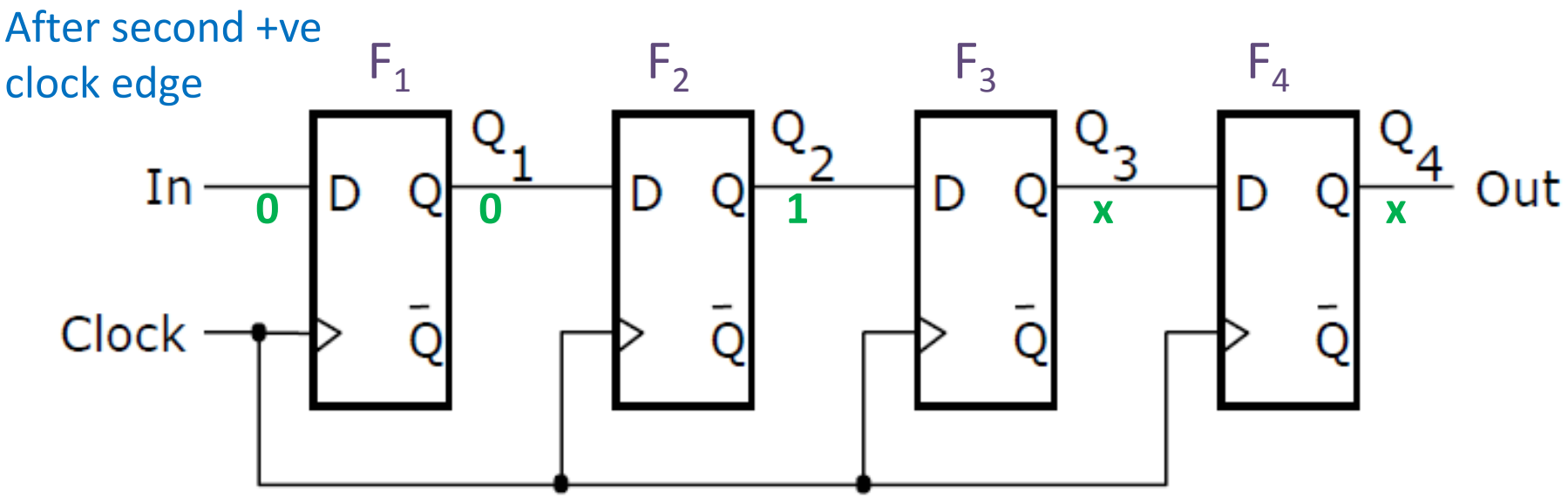

Shift Right Register

Example: Shift Right Register

- <u>Example:</u> Data 1001 needs to be written to a 4-bit shift right register

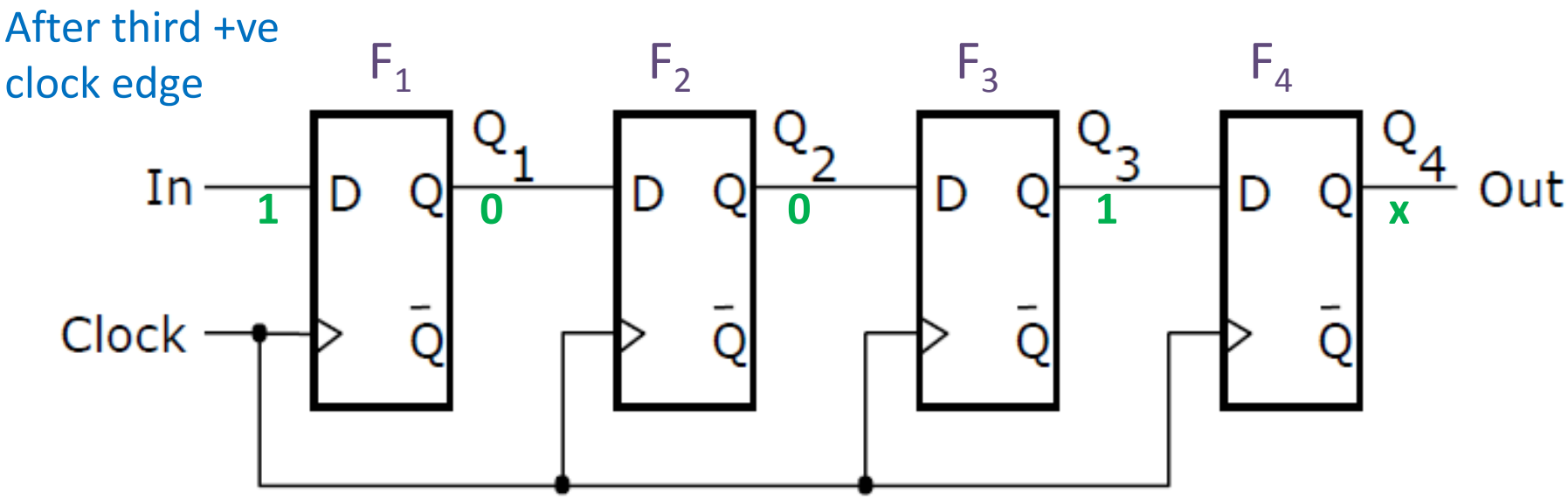

Shift Right Register

Example: Shift Right Register

- <u>Example:</u> Data 1001 needs to be written to a 4-bit shift right register

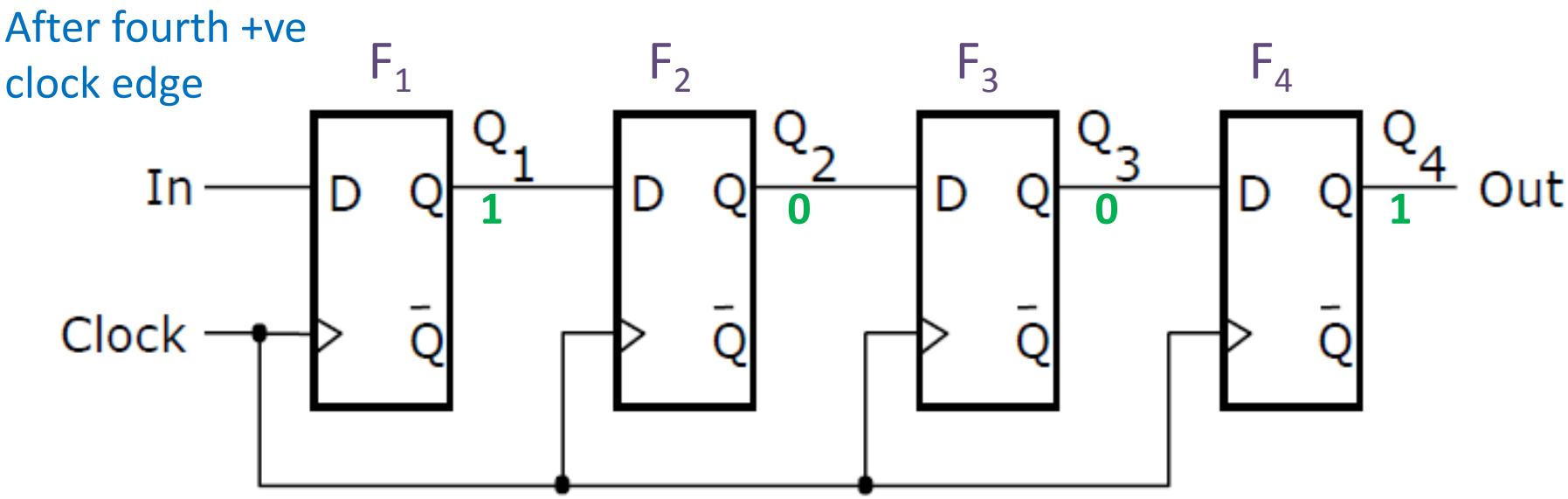

Shift Right Register

Parallel Access Shift Register

- Data transfer in computer systems is of two types:
  - If the transfer is *1*-bit at a time, it is said to be ***serial***
  - If the transfer is *n*-bits (n > 1) at a time, it is said to be ***parallel***
- To read/write a register in *serial* fashion, data is read/written bit-by-bit and is shifted by one bit position each cycle
- To read/write a register in *parallel* fashion, all the n-bits are read/written during the same clock cycle

Parallel Access Shift Register

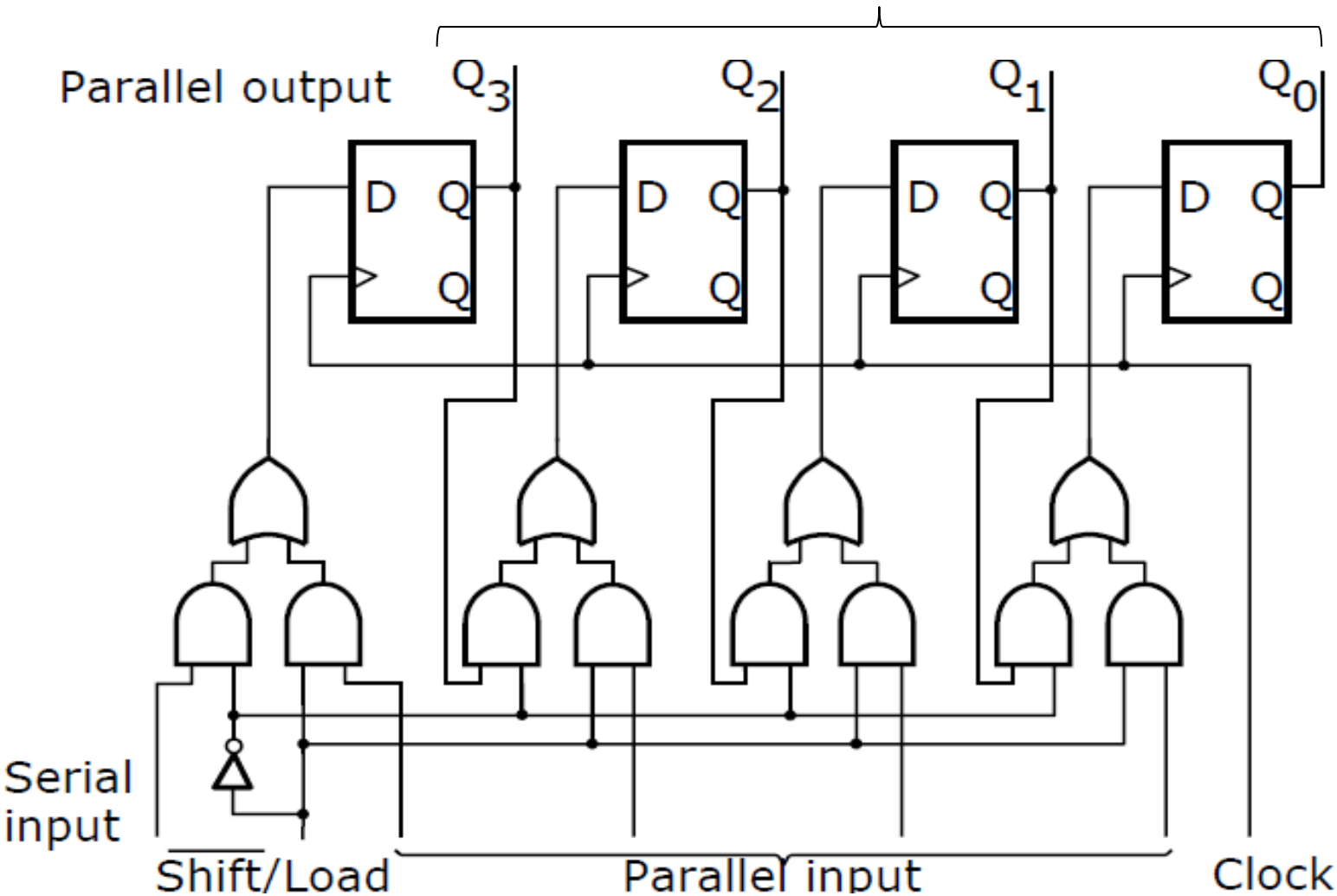

Parallel Access Shift Register

Assume

$\overline{Shift} / Load = 1$

Behavior:

Parallel Access

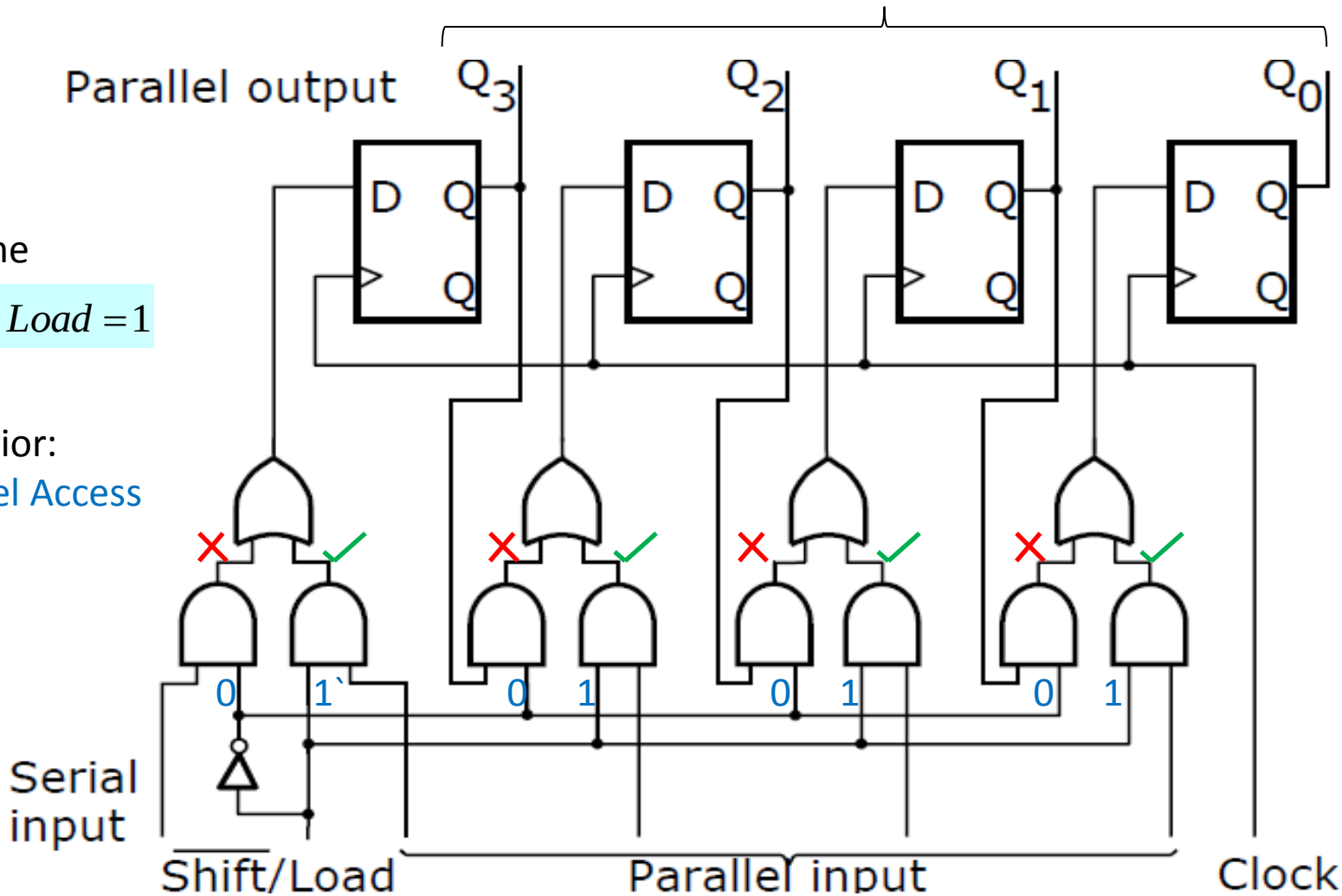

Parallel Access Shift Register

Assume

$\overline{Shift} / Load = 0$

Behavior:

Serial Access

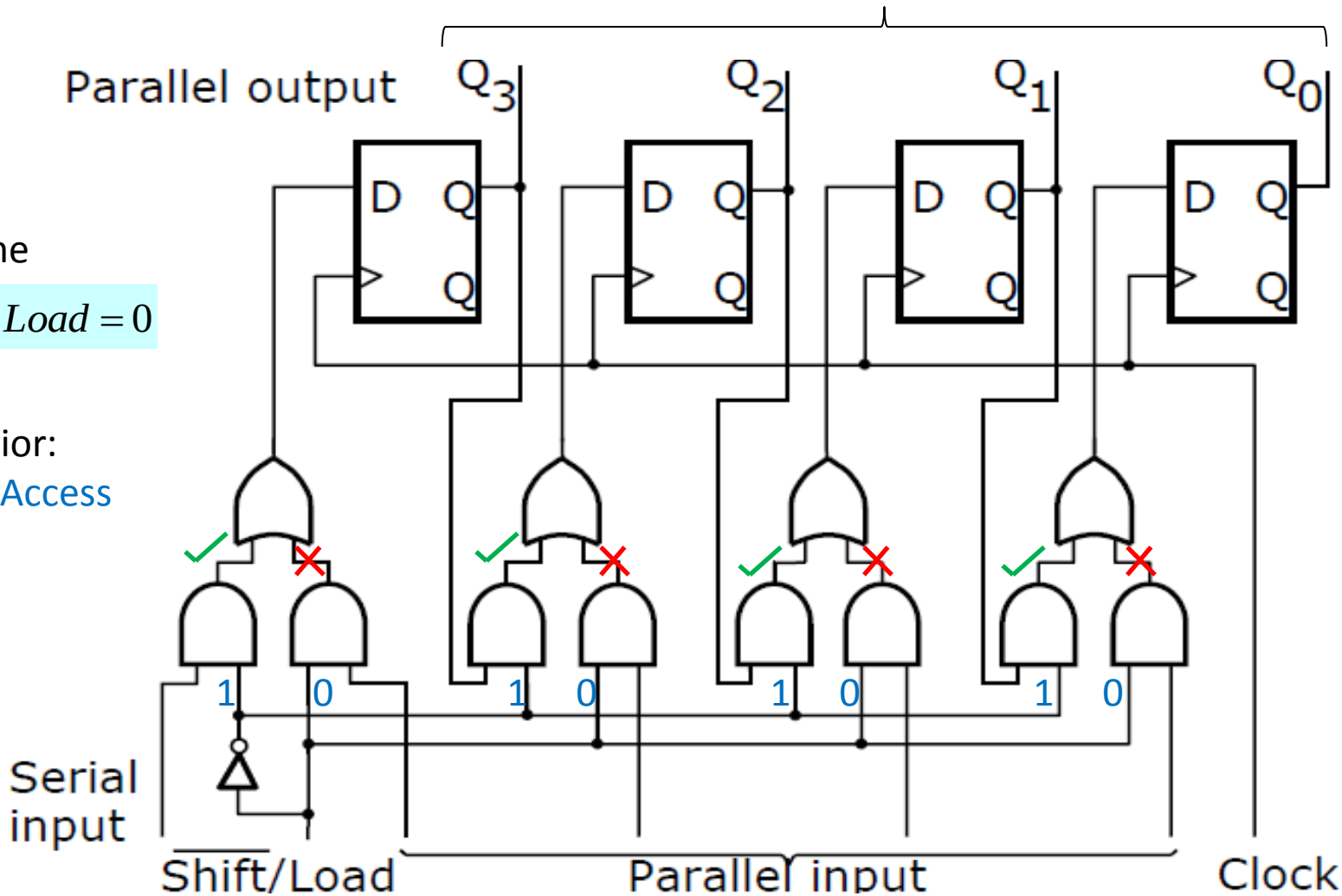

Counters

- Counters are arithmetic circuits used for the purpose of *counting*
  - Can increment or decrement by 1 each cycle
- Counters often implemented with T flip-flops
  - Toggle feature naturally suited for counting operation
- Applications of counters
  - Count occurrences of certain events, for example, no. of add instructions
  - Track elapsed time between events
  - Generate control and timing signals, for example, to produce signals whose frequencies are multiples of original clock frequency

A 3-bit Up-counter

Consider a 3-bit counter $x_2x_1x_0$ shown in table.

- The least significant bit x_0 toggles at every increment of counter
- x_1 toggles on 1->0 transitions of x_0 (half the rate of toggling of x_0)
- x_2 toggles on 1->0 transitions of x_1 (half the rate of toggling of x_1)

Counter Value	x_2	x_1	x_0
0	0	0	0
1	0	0	1
2	0	1	0
3	0	1	1
4	1	0	0
5	1	0	1
6	1	1	0
7	1	1	1

A 3-bit Up-counter

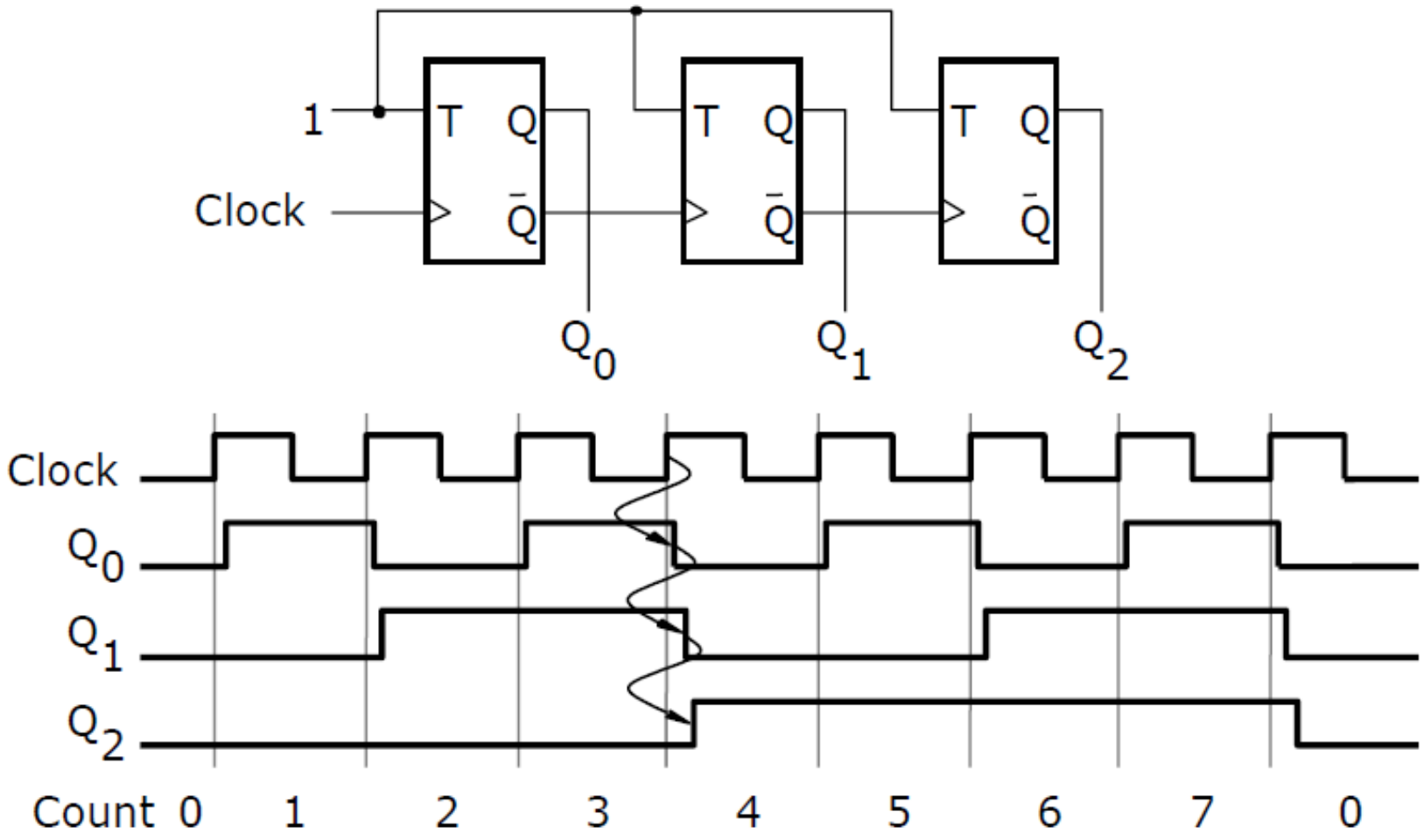

Practice Exercise

- Design a 3-bit down counter with T flip-flops. How does the down counter circuit differ from the up-counter circuit?

A 3-bit Down-counter

- The least significant bit x_0 toggles at every decrement of counter
- x_1 toggles on 0->1 transitions of x_0
- x_2 toggles on 0->1 transitions of x_1

Counter Value	x_2	x_1	x_0
7	1	1	1
6	1	1	0
5	1	0	1
4	1	0	0
3	0	1	1
2	0	1	0
1	0	0	1
0	0	0	0

Practice Exercise Solution

- Design a 3-bit down counter with T flip-flops. How does the down counter circuit differ from the up-counter circuit?
- <u>Solution:</u>
  - Two ways to convert the up-counter to a down-counter:
  1. Either, replace the +ve edge-triggered T flip-flops with –ve edge-triggered T flip-flops
  2. Or, connect the Q outputs (instead of NOT(Q) outputs) from previous flip-flops to clock inputs of next flip-flops

Asynchronous Counters

- The previous counter is an example of ***asynchronous*** counters. Also called ***ripple*** counters
  - Input clock only connected to one flip flop
  - Clocks for other flip-flops are derived from outputs of previous flip-flops
- Asynchronous counters are slow because of cascaded clocking
  - The input clock pulse ripples from stage to stage
  - Propagation delay of individual flip-flops limit speed of operation
- <u>Solution:</u> Synchronous sequential circuits (finite state machines)

Finite State Machines

- Recall that in a sequential circuit:
  - Outputs depend both on present inputs and the sequence of previous inputs
- The ***state*** of a sequential circuit determines its behavior when various input patterns are applied
- A ***finite state machine*** model formally describes a sequential circuit

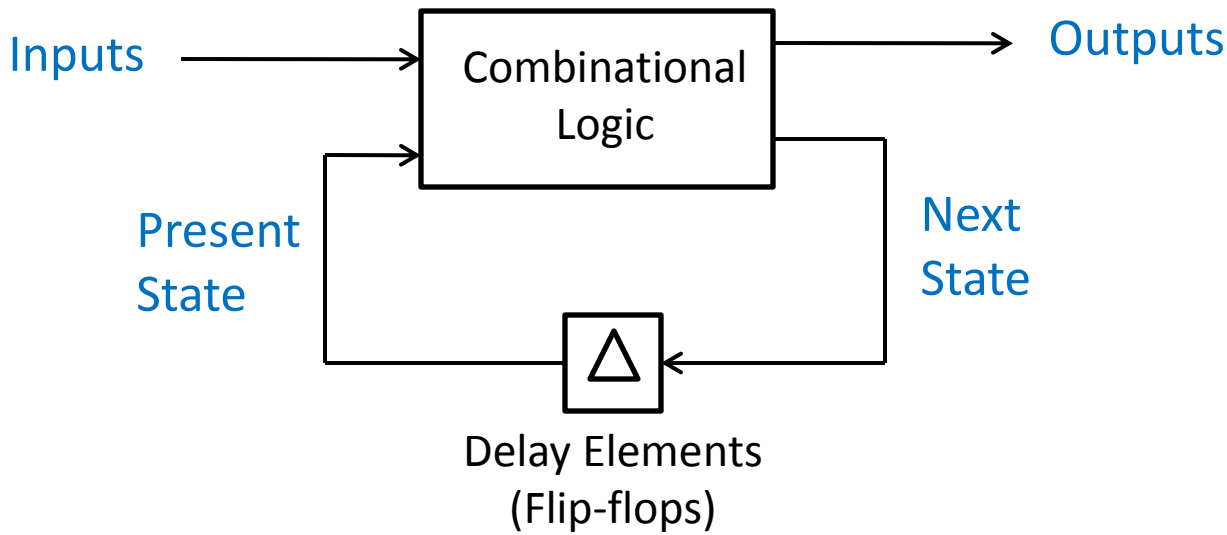

Synthesis of Finite State Machines

Synthesis of FSM involves the following steps:

- Step 1: Develop a *state diagram* or *state table*
  - Depict how state transitions occur in response to input patterns
- Step 2: Determine # and types of needed flip flops
- Step 3: Determine *state assignment* (flip-flop values for each state)
- Step 4: Determine the state-assigned state table
- Step 5: Derive the logic expressions for next-state logic and outputs
- Step 6: Use the derived expressions to implement the circuit

Example: Up/Down Counter with D flip-flops

<u>Problem Statement:</u> Design a mod-4 counter which counts up or down depending on an input and has an output of 1 if the count is equal to 2

- <u>States:</u> 4 states (S0, S1, S2 and S3) corresponding to 4 count values
- <u>Input:</u> Variable *x*. Count up if *x*=0, down if *x*=1
- <u>Output:</u> Variable *z.* If present state is S2, then *z*=1, otherwise *z*=0;

State Diagram

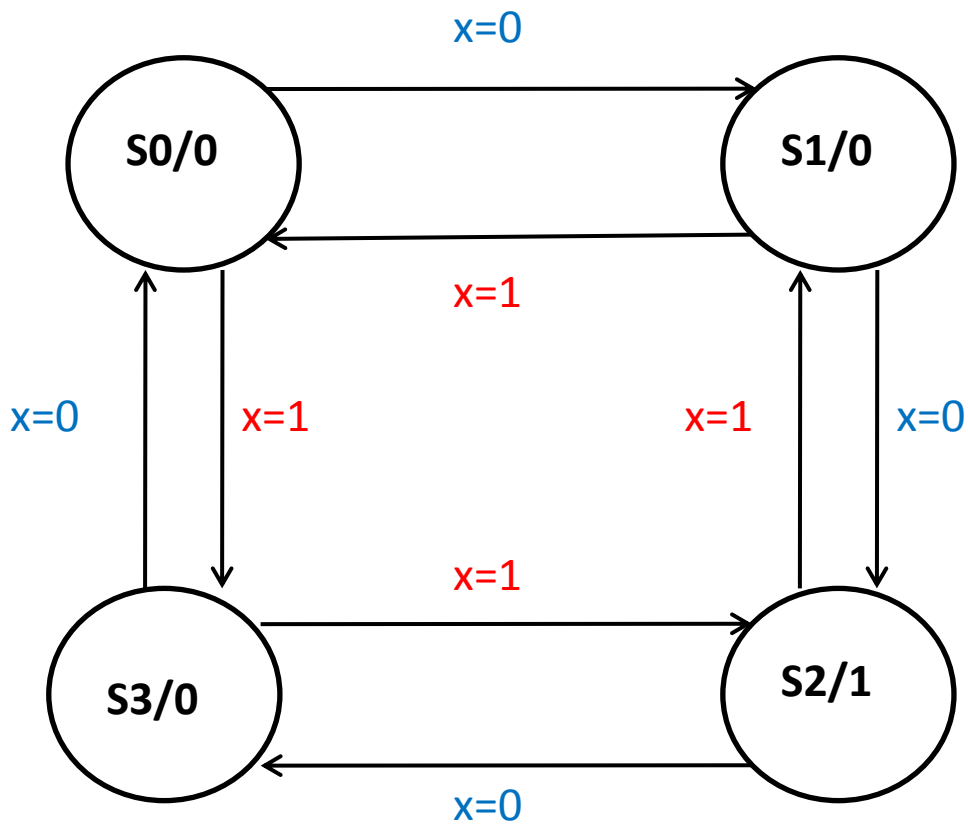

State Table

Present State	Next State		Output *z*
	x = 0	x = 1	
S0	S1	S3	0
S1	S2	S0	0
S2	S3	S1	1
S3	S0	S2	0

Need 2 state variables to represent 4 states => use 2 D flip-flops

State-Assigned State Table

- State variables y_1 and y_2 used to express each state as a 2-bit number y_2y_1
- We choose the following state assignment S0=00, S1=01, S2=10, S3=11

Present State	Next State		Output *z*
	x = 0	x = 1	
y_2y_1	Y_2Y_1	Y_2Y_1	
00	01	11	0
01	10	00	0
10	11	01	1
11	00	10	0

Logic Expressions

Next state $Y2 = y2 \oplus y1 \oplus x$ $\quad Y1 = \overline{y1}$

Output $z = y2\overline{y1}$

Logic Circuit

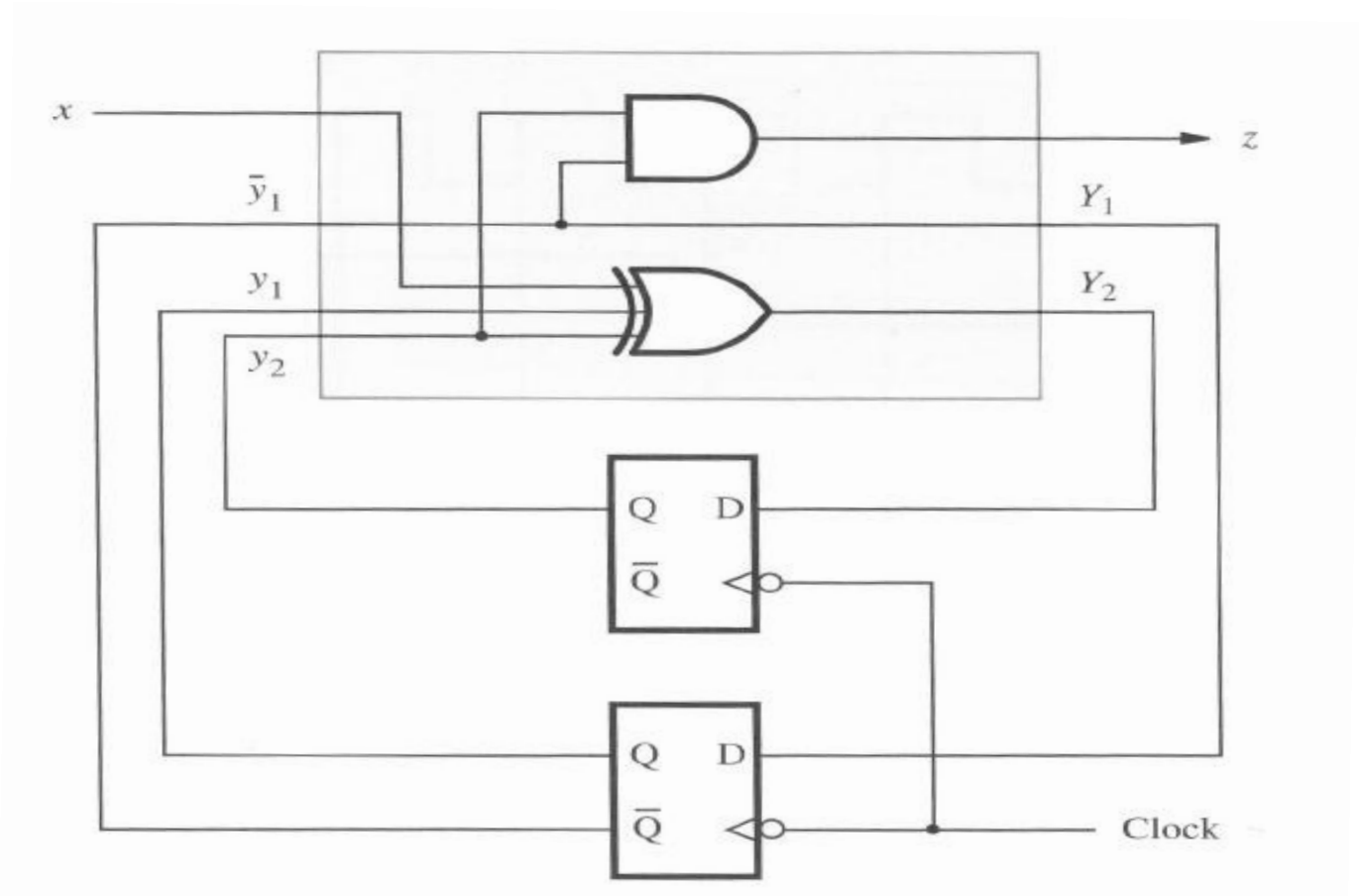

Logic Expressions

Next state $Y2 = y2 \oplus y1 \oplus x$ $\quad Y1 = \overline{y1}$

Output $z = y2\overline{y1}$