= (A' + A)(B'C' + BC) + AB'C = B'C' + BC + AB'C = B'C' + C(B + AB') = B'C' + C(B + A) = B EXNOR C + AC

= BC + B'C' + AB'C = BC + B'(C' + AC) = BC + B'C' + AB' = B EXNOR C + AB'

# DIGITAL SYSTEMS

= C'D' + A'C(D' + B'D) + AB'C' = C'D' + A'CD' + A'B'C + AB'C' = D'(C' + A'C) + B'(A'C + AC')

## EXERCISES 1

= D'C' + A'D' + B'(A EXOR C) = (D + AC)' + B'(A EXOR C)

**Problem 1.** Simplify the following expressions using Boolean Algebra

a. $f = ABC + \bar{A}C$ = (AB + A')C = (A' + B)C
b. $h = (Q + R)(\bar{Q} + \bar{R}$ = Q EXOR R
c. $p = ABC + A\bar{B}C + \bar{A}$ = A(BC + B'C + 1) = A
d. $q = \overline{RST}(\overline{R + S + T})$ = (RST + R + S + T)' = (R + S + T)'
e. $w = \bar{A}\bar{B}\bar{C} + \bar{A}BC + ABC + A\bar{B}\bar{C} + A\bar{B}C$
f. $x = (B + \bar{C})(\bar{B} + C) + \overline{\bar{A} + B + \bar{C}}$
g. $y = (\overline{C + D}) + \bar{A}C\bar{D} + A\bar{B}\bar{C} + \bar{A}\bar{B}CD$
h. $z = AB(\overline{\bar{C}\bar{D}}) + \bar{A}BD + \bar{B}\bar{C}\bar{D}$
= AB(C + D') + A'BD + B'C'D' = B(AD' + A'D + AC) + (B + C + D)' = B(A EXOR D + AC) + (B + C + D)'

**Problem 2.** Simplify the circuits shown in the figures below using Boolean Algebra

a.

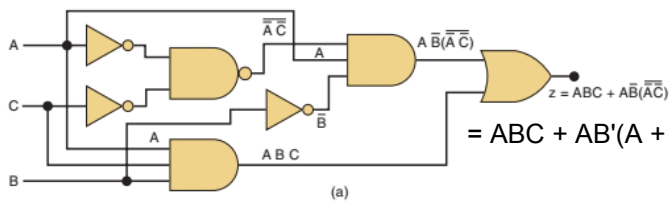


= ABC + AB'(A + C) = ABC + AB' + AB'C = AC + AB' = A(B' + C)

b.

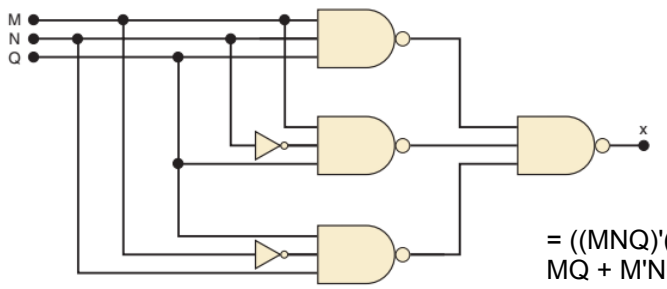


= ((MNQ)'(MN'Q)'(M'NQ)')' = MNQ + MN'Q + M'NQ = MQ + M'NQ = Q(M + N)

**Problem 3.** Use a K-map to simplify (all possible cases)

a. $F(A,B,C) = \sum(1,2,3,4,6,7)$ = B + A'C + AC' = B + A EXOR C
b. $F(A,B,C,D) = \sum(1,3,4,5,6,7,12,13)$ = A'B + BC' + A'D
c. $F(A,B,C,D) = \sum(2,5,7,8,10,12,13,15)$ = BD + ABC' + AB'D' + B'CD' = B(D + AC') + B'D'(A + C)
d. $F(A,B,C,D) = \sum(0,6,8,9,19,11,13,14,15)$ = ABD + AB'C' + AB'D' + B'C'D' + BCD'
e. $F(A,B,C,D) = \sum(0,4,5,6,7,8,9,10,11,13,14,15)$ = A'B + BD + BC + AB' + B'C'D'
f. $F(D,C,B,A) = \sum(0,2,3,5,7,8,10,11,12,13,14,15)$ = DC + BA + CA + C'A'
g. $F(D,C,B,A) = \sum(0,1,4,5,7,8,10,13,14,15)$ = CA + D'B' + DCB + DC'A'
h. $F(D,C,B,A) = \sum(1,2,5,10,12) + \sum d(0,3,4,8,13,14,15)$ = DC + D'B' + C'A'

**Problem 4.** Use a K-map to simplify (all possible cases)

a. $F(A,B,C,D) = \sum m(0,1,2,5,7,8,10,14,15) + d(3,13)$ = A'D + B'D' + ABC

b. $F(A,B,C,D) = \prod M(1,3,4,5,11,12,14,15).D(0,6,7,8)$
c. $F(A,B,C,D) = \sum m(1,3,6,8,11,14) + d(2,4,5,13,15)$
d. $F(A,B,C,D) = \prod(1,5,6,7,9,11,15).D(5,7,10,12)$
e. $F(D,C,B,A) = \sum(0,1,4,6,10,14) + d(5,7,8,9,11,12,15)$
f. $F(E,D,C,B,A) = \sum m(1,3,10,14,21,26,28,30) + d(5,12,17,29)$
g. $F(A,B,C,D) = \prod M(0,2,3,4,7,8)$

**Problem 5.** Design a circuit that produces a HIGH out only when all three inputs are the same level.

a. Use a truth table and K map to produce the SOP solution
b. Use two-input XOR and other gates to find a solution.

**Problem 6.** The following function is in minimum sum of products form. Implement it using only two-input NAND gates. No gate may be used as a NOT gate.

$$\boldsymbol{K = \bar{A}\,\bar{B}\,X + A\bar{B}\,\bar{X} + \bar{A}B\bar{X} + ABX}$$

**Problem 7.** Construct the following circuit using two-input NAND gates only:

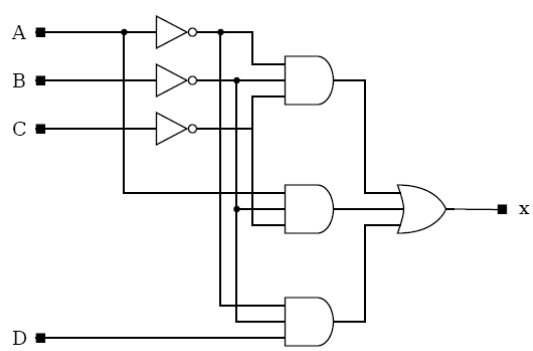


**Problem 8.** A manufacturing plant needs to have a horn sound to signal quitting time. The horn should be activated when either of the following conditions is met:

a. It's after 5 o'clock and all machines are shutdown
b. It's Friday, the production run for the day is complete, and all machines are shutdown.

Design a logic circuit that will control the horn.

**Problem 9.** Figure below shows a diagram for an automobile alarm circuit used to detect certain undesirable conditions. The three switches are used to indicate the status of the door by the driver's seat, the ignition, and the headlights, respectively. Design the logic circuit with these three switches as inputs so that the alarm will be activated whenever either of the following condition exists:

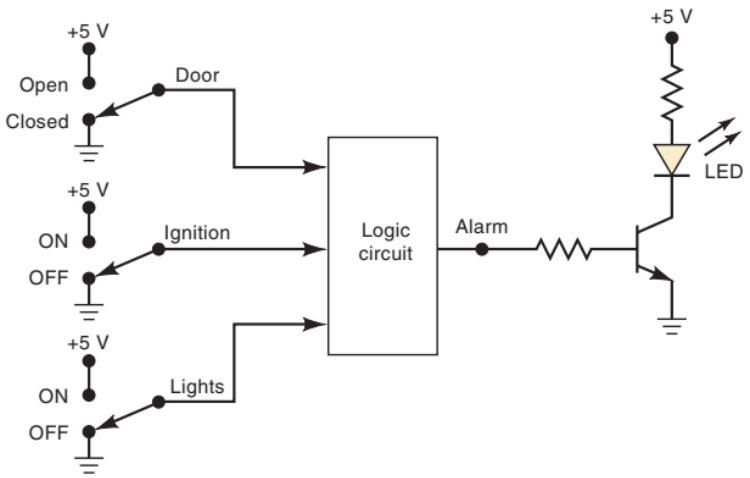


a. The headlights are on while the ignition is off
b. The door is open while the ignition if on

**Problem 10.** A BCD code is being transmitted to a remote receiver. The bits are $A_3$, $A_2$, $A_1$, and $A_0$, with $A_3$ as the MSB. The receiver circuitry includes a BCD error detector circuit that examines the received code to see if it is a legal BCD code (i.e., <= 1001). Design this circuit to produce a HIGH for any error condition.