Ho Chi Minh City University of Technology

FACULTY OF COMPUTER SCIENCE & ENGINEERING

Laboratory Manual

Digital Systems

Experiment 1

Ho Chi Minh City, 10/2020

1. INTRODUCTION

1.1 Goals:

- Introduce the modeling, simulation and implementation of digital circuits using Logisim software.
- Become familiar with Lab KIT and Lab tools.
- Know how to use Digital Integrated Circuits (IC) to implement circuits.
- Consolidate knowledge about Boolean Algebra and Logic Gates.
- Design, simulate and implement simple circuits using primitive logic gates

1.2 Equipment and apparatus:

- Digital System KIT
- Lab tools: VOM
- 74-Series Integrated Circuits (IC)

1.3 References:

- Digital Systems: Principles and Applications (11th Edition) – Ronald J. Tocci, Neal S. Widmer, Gregory L. Moss, 2010.
- Lecture Slides/Videos – Assoc. Prof. Dr. Tran Ngoc Thinh.
- Tutorial videos on Digital Systems Experiments.

1.4 Pre-laboratory:

- Read this experiment carefully to become familiar with the procedural steps in this experiment.

1.5 Safety First

- You are dealing with live power. Be mindful of the current and voltage you are supplying to the circuit. No drinks on the working surface!

1.6 Submit your reports:

- Complete all exercises in Section 2.4. Show all of your work step-by-step.
- Capture and include images about your implemented circuits in Logisim, KIT, and Tools
- Submit report to BKeL by deadline.

2. EXPERIMENTAL PROCEDURE:

2.1 Working with Logisim

Logisim is an educational tool for designing and simulating digital logic circuits, which helps you learn how circuits work. You can download Logisim in BKeL, Google Drive shared folder or in its website http://www.cburch.com/logisim/

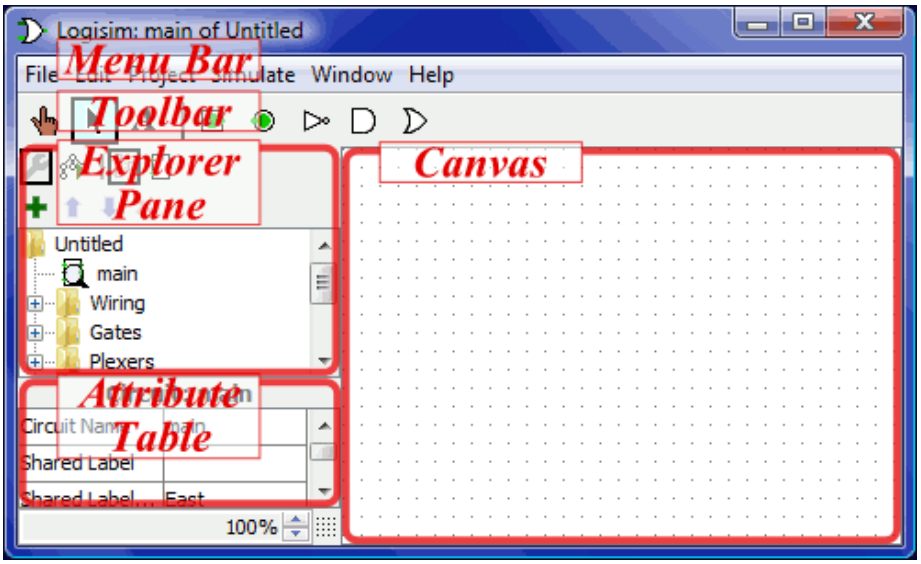

Figure 1: Logisim working environment

Figure 1 shows the environment layout of Logisim. The **main components of layout includes:**

- **Toolbar:** The toolbar contains short cuts to several commonly used items
    - The *poke tool* (shaped like a hand) is used to alter input pins.
    - The *input pin* (green circle surrounded by a box) is used to send a signal through a wire. When placing the input on the canvas it initializes to 1-bit. This number of bits can be increased in the Attribute Table.
    - The *output pin* (green circle in a circle) is used to observe output from a gate. The output pin toggles in real time as long as the simulation is enabled from the menu bar ***Simulate* > *Simulate Enabled***
- **Explorer Pane:** The list of wiring, gates, etc... that are available for digital design in Logisim. Please note not all items are allowed to be used in every project.
- **Attribute Table:** Gives detailed attributes of digital design components (e.g., AND, OR, XOR gates). The attribute table allows you to alter the number of inputs/outputs that a digital design component.
- **Canvas:** The canvas is the area for you to create your digital circuits. In the canvas area you may simulate your circuits while designing in real time.

Begin with Logisim: Please read and practice with the example in the Logisim tutorial document!

2.2 Working with Digital System KIT and Tools

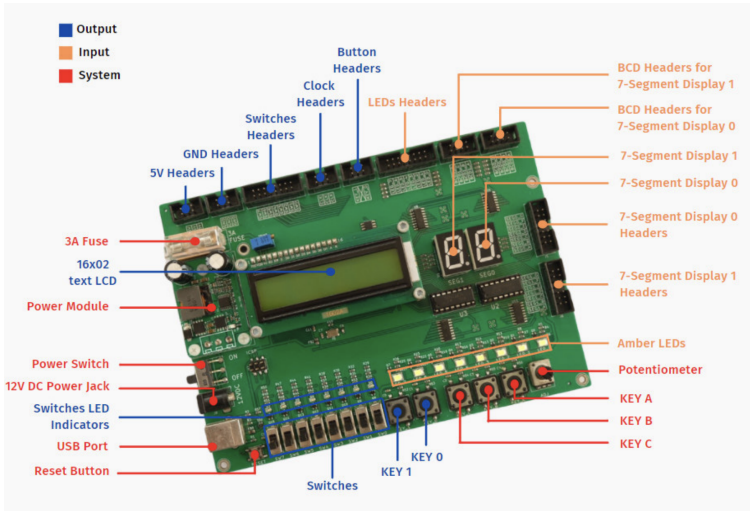

Figure 2: Digital System KIT

Figure 3: Some equipment and tools

Digital System KIT is the main equipment of this course. Each KIT contains one mainboard, one power supply adapter, two breadboards and a bunch of wires.

Some other Lab Tools can be used for assembling and testing circuits such as V.O.M, Oscilloscope, Breadboard, etc.

Use DS-KIT and Lab tools: Please read Digital System KIT manual document and follow the guidance of teachers.

2.3 Working with 7400-Series Integrated Circuits

Integrated Circuits are usually called ICs or chips. They are complex circuits which have been etched onto tiny chips of semiconductor (silicon). In this course, we will use the 7400-Series of ICs, which provides the basis for most of the logic circuits. Our ICs are packed in through-hole dual in-line packages (DIP/DIL, i.e. the ICs have two rows of pin) as described in Figure 3 or Figure 4.

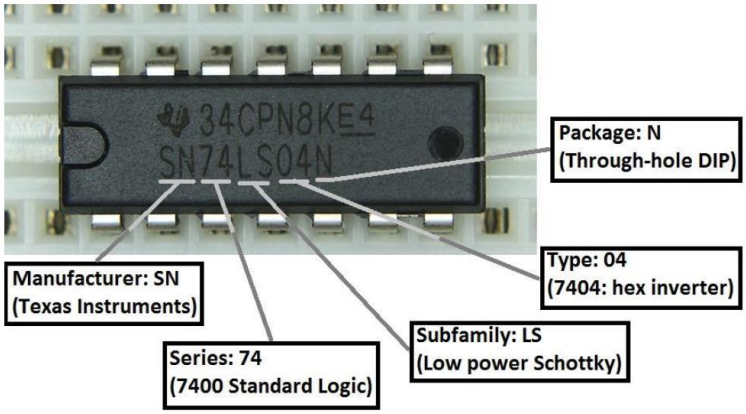

Figure 4: IC Specifications

IC Specifications: All IC chips have a two-part serial number. The first part of the serial number delineates the manufacturer's information (e.g. SN – Texas Instruments). The second part of the serial number indicates the IC's technical specifications as shown in Figure 4.

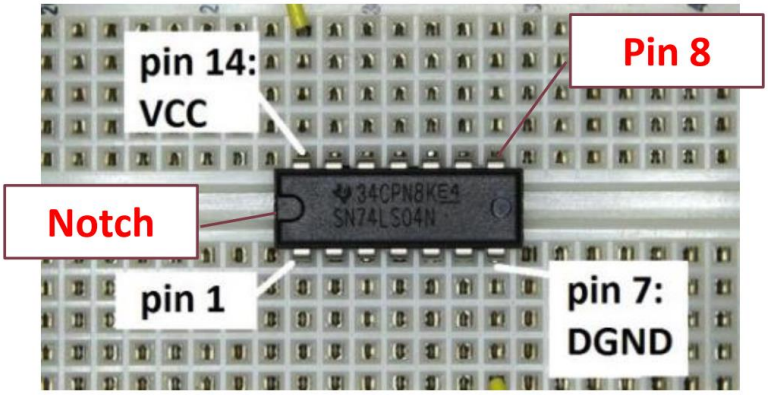

Figure 5: IC Pin Numbers

Pin Numbers: The pins are numbered anti-clockwise around the IC (chip) starting near the notch or dot. Figure 5 shows the numbering for a 14-pin IC. The principle is the same for other IC sizes. Usually, each IC has 2-pins being positive power (+5V DC) and ground (0V DC) which is used to supply power for the ICs (e.g. Pin 14 and Pin 7 in the IC in Figure 5).

Be careful!! Please remember that if you reverse the polarity of power supply, the IC will not work and you can cause damage to the IC and Lab KIT.

Data Sheets: are available for most ICs giving detailed technical information about their ratings and functions. You can search and download PDF data sheets in the manufacturer's websites.

Diagram: describes logic circuits inside the IC and the detail functions of each pin. Figure 6 depicts an example pinout diagram of IC 7404.

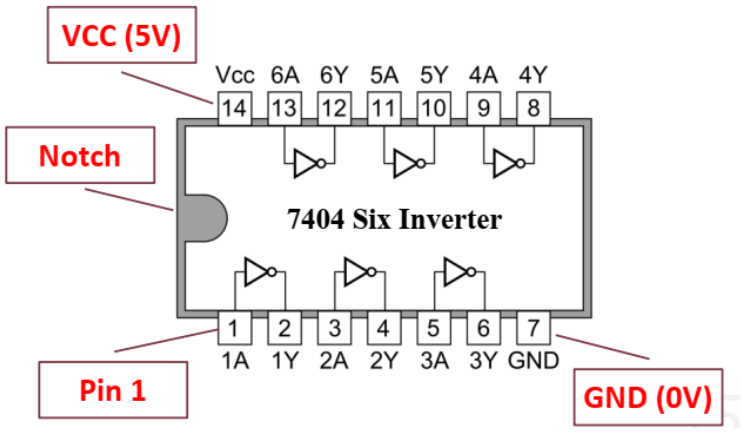

Figure 6: IC Pinout Diagram

74-Series ICs in Logisim: The libraries of 74-Series ICs are provided. Please read the tutorial document to know how to import libraries into Logisim.

The below table and figure list some popular types of 74-Series IC and their pinout diagrams.

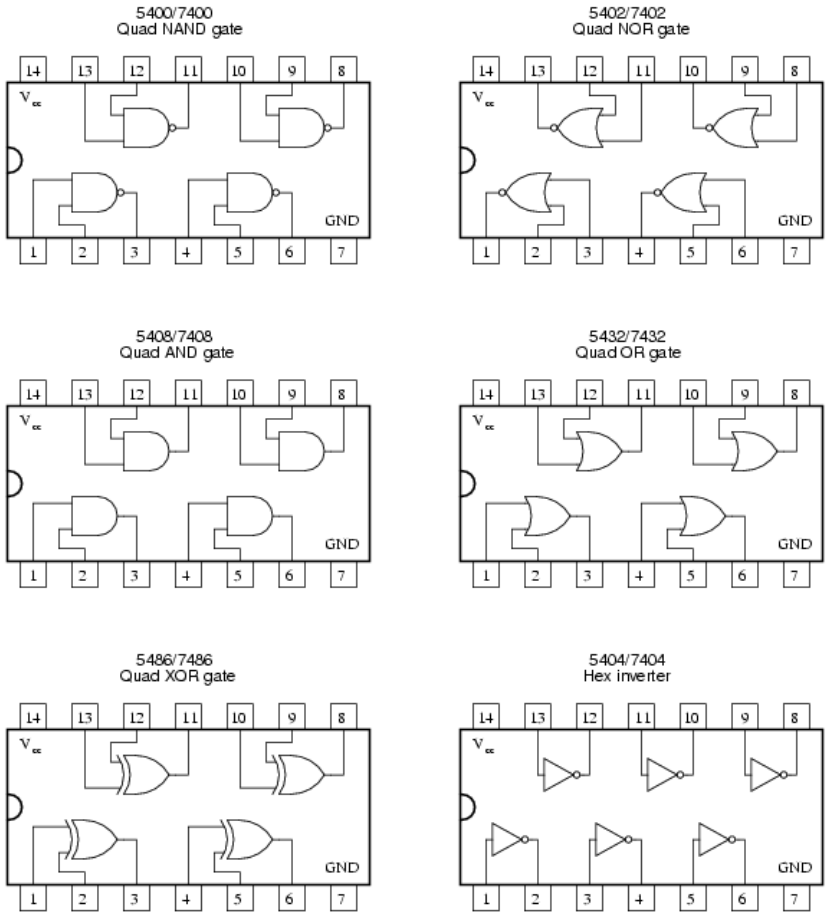

Figure 7: Some type of 74-Series ICs

IC Type	Description	No. Pin
7400	Four 2-input NAND	**14**
7402	Four 2-input NOR	**14**
7404	Six Inverters	**14**
7408	Four 2-input AND	**14**
7432	Four 2-input OR	**14**
7486	Four 2-input XOR	**16**

2.4 Exercises

2.4.1 Randomly select **TWO** 74-Series ICs out of the list in Figure 7 and exam their functions using Logisim, Digital System KIT and V.O.M.

Requirement: Design, simulate and implement a testing circuit with each IC, in which input and output pins are connected to SWITCH and LED respectively. Use VOM to measure voltage values of output signals. Figure 8 shows how to assemble circuit in DS KIT and measure Voltage with V.O.M.

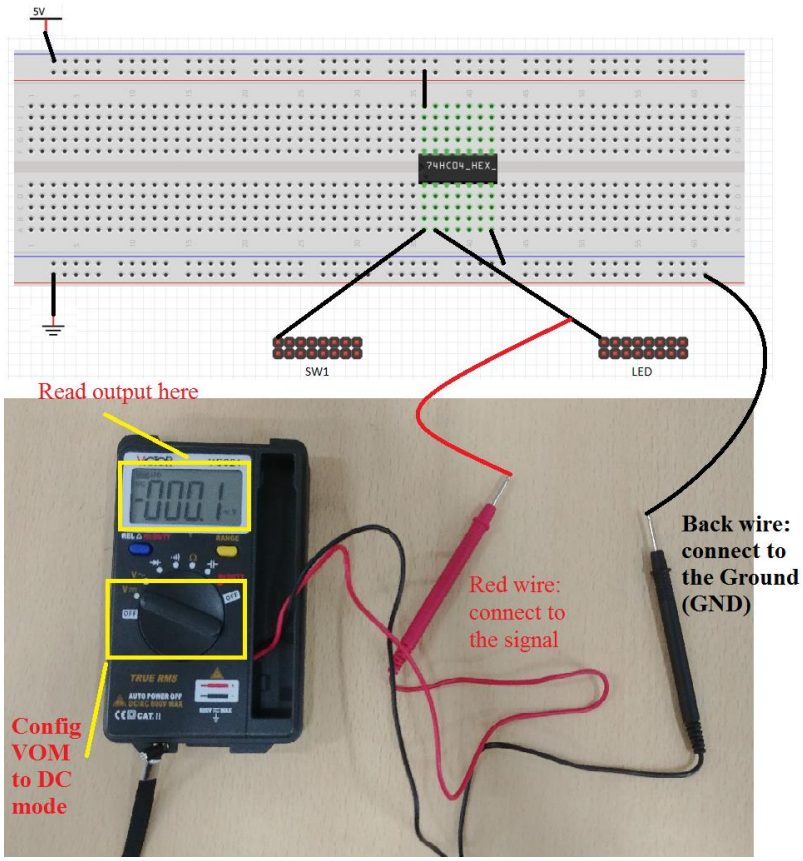

Figure 8: Some type of 74-Series ICs

Hint:

Step 1: Choose ICs: ……

Step 2: Design logic circuits (Use Truth tables, K-Map method, etc.)

Step 3: Simulate circuits in Logisim

Step 4: Implement circuits in Digital System KIT

Step 5: Measure DC Voltage of output pins using V.O.M

2.4.2 Design, simulate and implement the following Boolean expressions using 7404s, 7408s, 7432s.

a. $X = AB + \bar{C}$

b. $Y = (A + B)\bar{C}$

2.4.3 Simplify the following Boolean expressions. Then, design, simulate and implement the minimized circuits using 7404s, 7408s, 7432s.

a. $Z = (M + N)(\bar{M} + P)(\bar{N} + \bar{P})$

b. $W = \bar{A}(A + B) + (B + AA)(A + \bar{B})$