Digital Systems
Experiments

Course Info

- Instructor:
  - **Assoc. Prof. Dr. Tran Ngoc Thinh**
    tnthinh@hcmut.edu.vn
- Teaching Assistants:
  - **Mr. Kieu Do Nguyen Binh**
    binhkieudo@gmail.com
  - **Mr. Le Tan Long**
    tanlong.ce@gmail.com

Course Info

- **Video recordings** of class lectures are available at **E-learning System** or **Google Drive** folder:

  https://drive.google.com/drive/folders/1oMWORL7M4wiZ4jjyBdEnM1d5Sfdg8zqs?usp=sharing

or https://bit.ly/2Gnnqib(*Use @hcmut.edu.vn email*)

- **References:**

- [1] ***Digital Systems: Principles and Applications*** *(11th Edition)* – Ronald J. Tocci, Neal S. Widmer, Gregory L. Moss, 2010.
- [2] ***Lecture Slides/Videos*** – Assoc. Prof. Dr. Tran Ngoc Thinh.

Introduction

Experiments (7 weeks)

- Consolidate knowledge and experience in Digital Systems.
- Design, simulate and assemble basic digital circuits.
- Get familiar with Lab-KITs, Lab-Tools, simulation tools and various commonly used digital ICs

Exercises (2 weeks)

- Midterm and Final Exam Review

Exam (Week 10)

- Summarization and Evaluation

Rules and Regulations

1. Working in **group 3-4 students**
2. Before class, **download Lab's documents** in BKeL website, **self-study** with video/slide lectures
3. In class, **complete Lab's questions and exercises**
4. After class, **make report** and **submit to BKeL** on deadline (**often a week after**)
5. Please follow the guide of teacher, compliance laboratory rules. Feel free to give questions

LAB CONTENT

1. Introduction to Logisim
2. Introduction to Lab-KITs, Lab-Tools
3. Introduction to The 7400-series ICs
4. Questions & Answers
5. Exercises

Introduction to **LOGISIM**

- We use **Logisim** as the main simulation tool.
  - You can download **Logisim** in **BKeL, Google Drive** folder or in **website** http://www.cburch.com/logisim/
- About **Logisim:**
  - ✓ An educational tool for designing and simulating digital logic circuits (Open-source GPL)
  - ✓ Cross-platform, can runs on any machine and OS
  - ✓ Simple enough to facilitate learning the most basic concepts related to logic circuits
  - ✓ Intuitive, Simple and Easy to use
- How to use **Logisim:**
  - Please read **Logisim Tutorial** document for detail information.
  - **http://www.cburch.com/logisim/docs/2.7/en/html/guide/index.html**

Introduction to **Lab-KIT, Lab Tools**

- We use **Digital System KIT** as the main equipment for this course.
  - KITs are available at Computer Engineering Laboratory (Room 202 – Building C5)
  - **In class**, each group will be **assigned a KIT** to do exercises.
  - You can also borrow the KIT for self-study, but only allowed to work in the Laboratory.
- Please read **Digital System KIT manual document** to get familiar with the KIT.
- Some other **Lab Tools** can be used for assembling and testing circuits: **V.O.Ms**, **Oscilloscopes**, **Breadboards,**…

DS KIT - Components

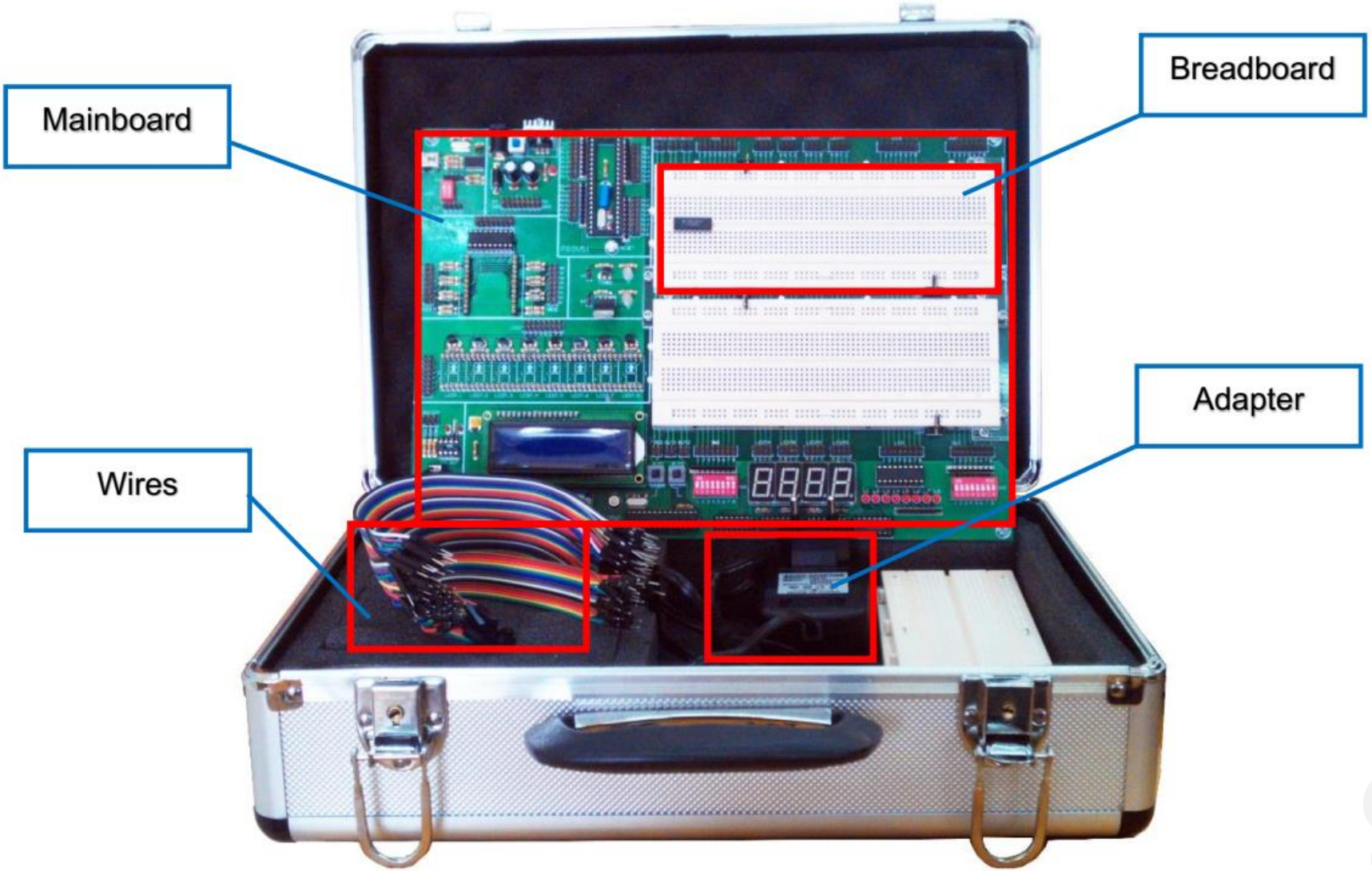

DS KIT – Working Place

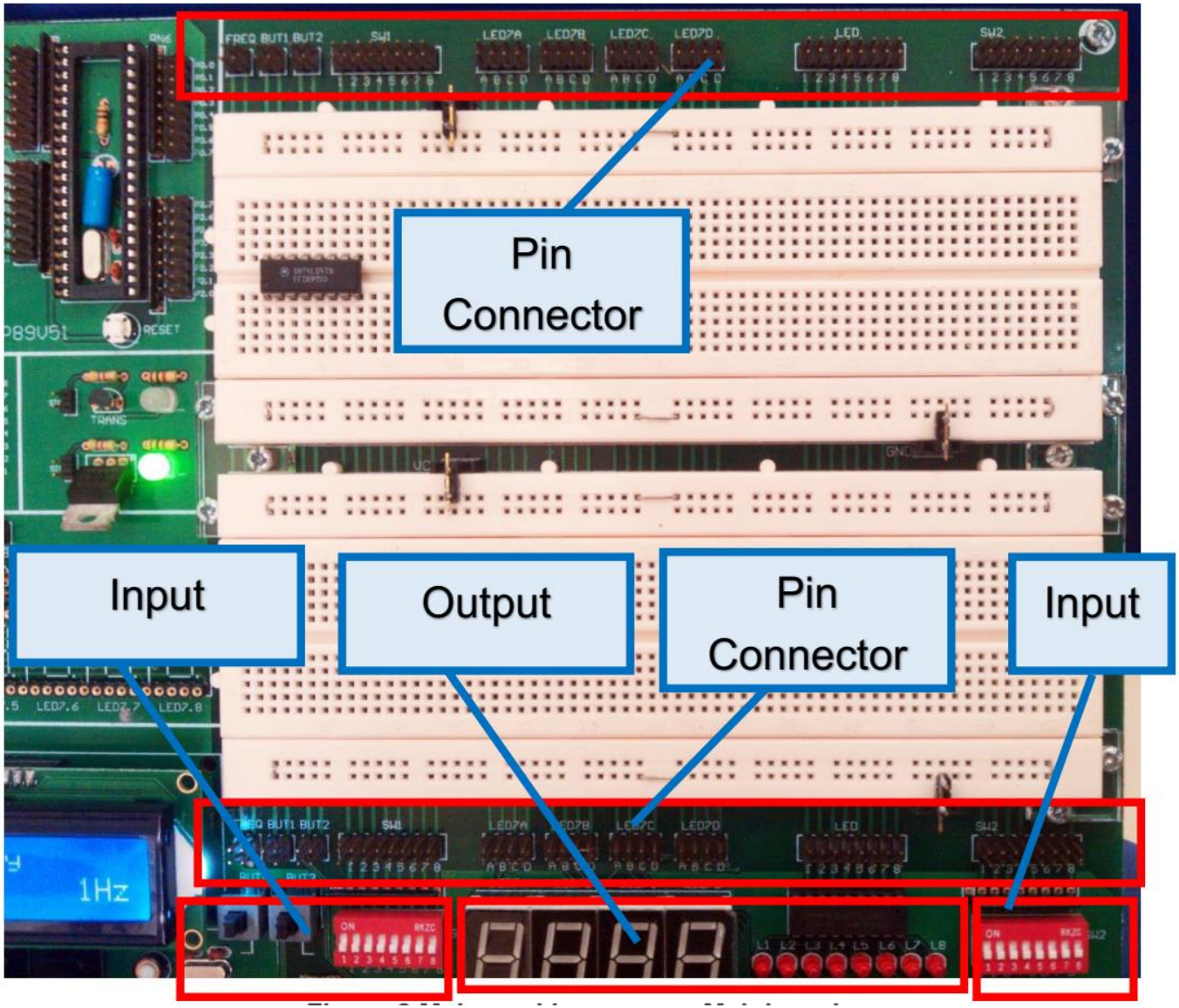

DS KIT – Switches (Input)

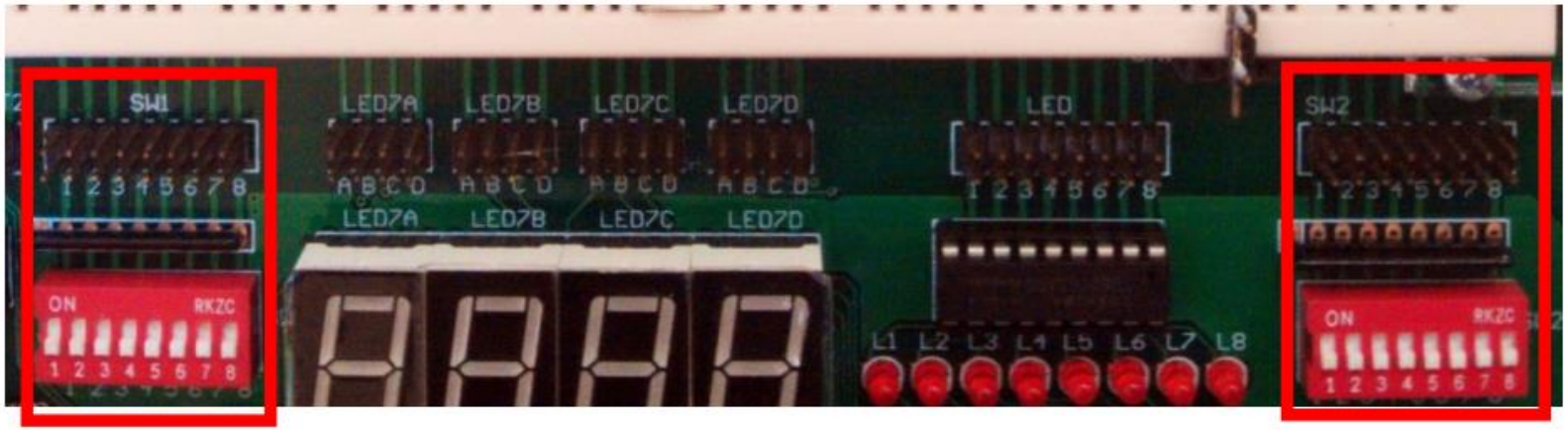

Figure 22 Switch and Switch Pin at Bottom

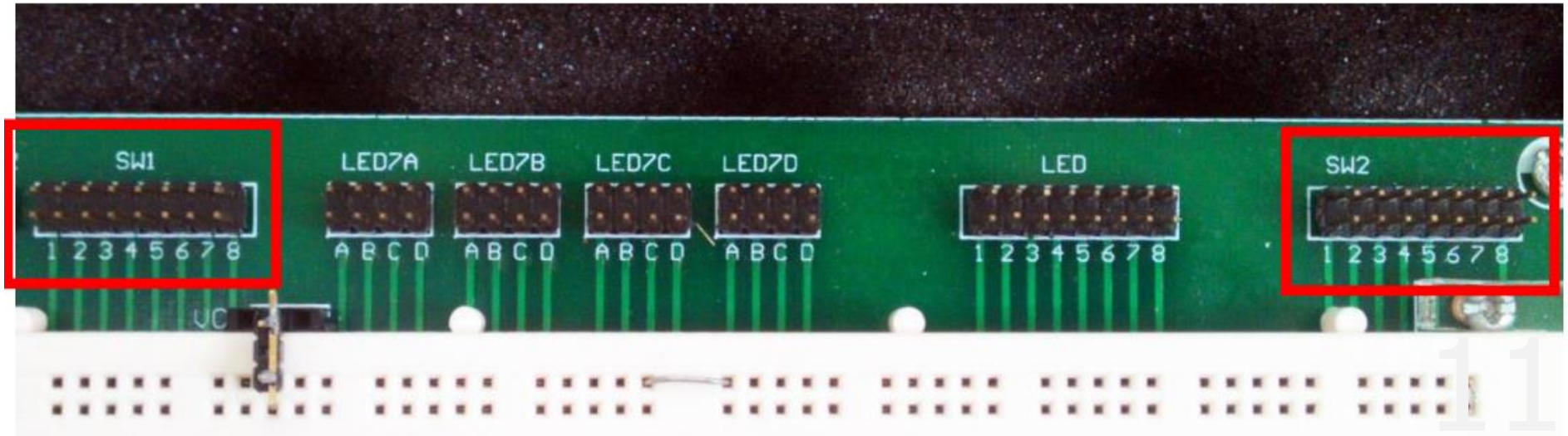

DS KIT – Buttons (Input)

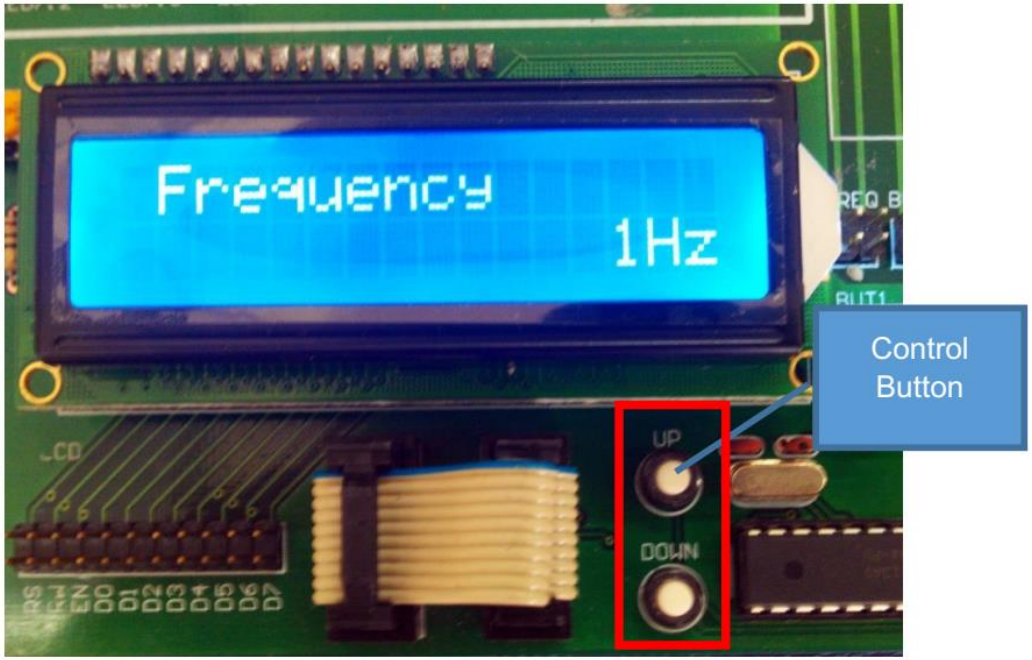

Figure 26 Frequency display and control button

DS KIT – LEDs (Output)

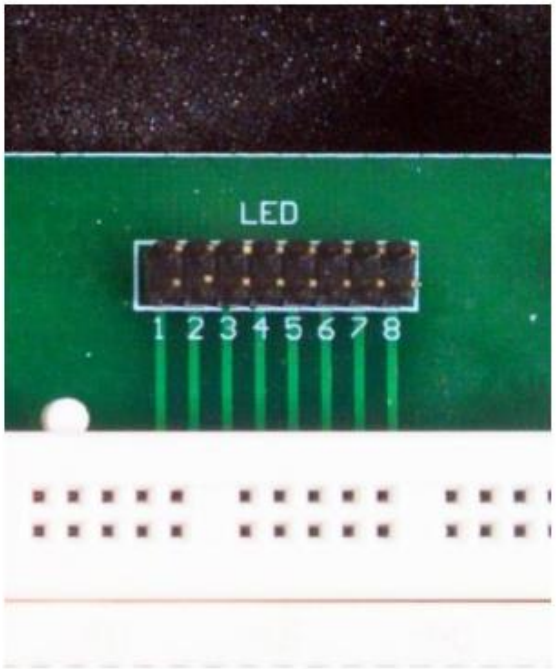

Figure 19 Top Leds Pin Connector

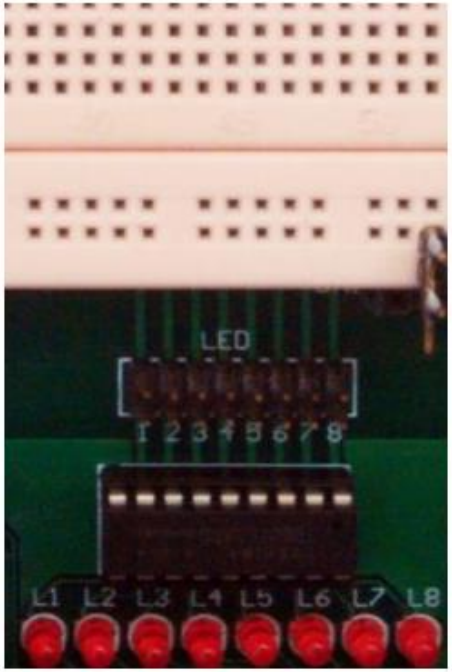

Figure 18 Bottom Leds Pin Connector

DS KIT – LED 7-Segment (Output)

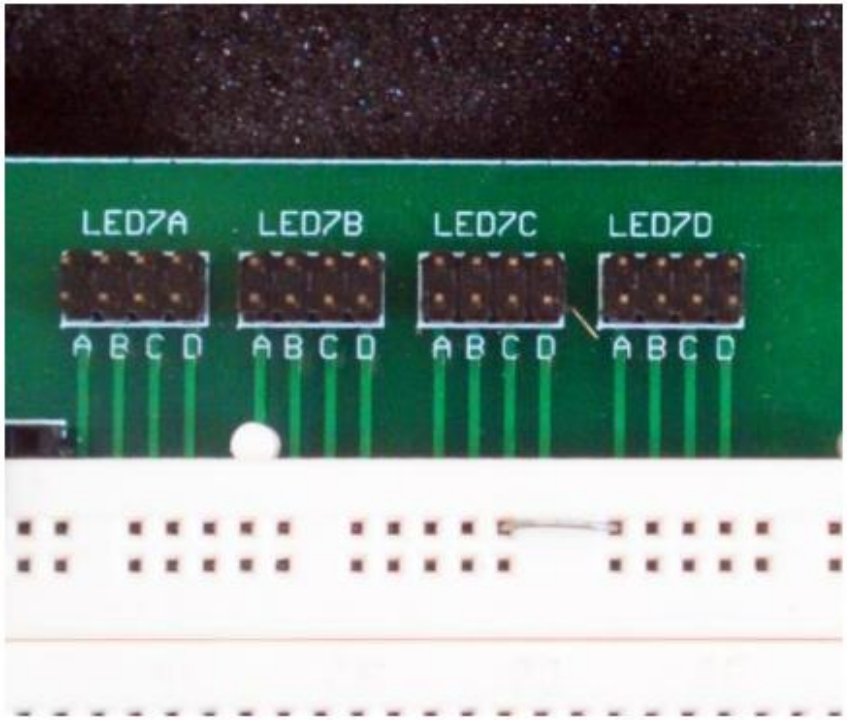

Figure 21 Top 7-seg Led Connector

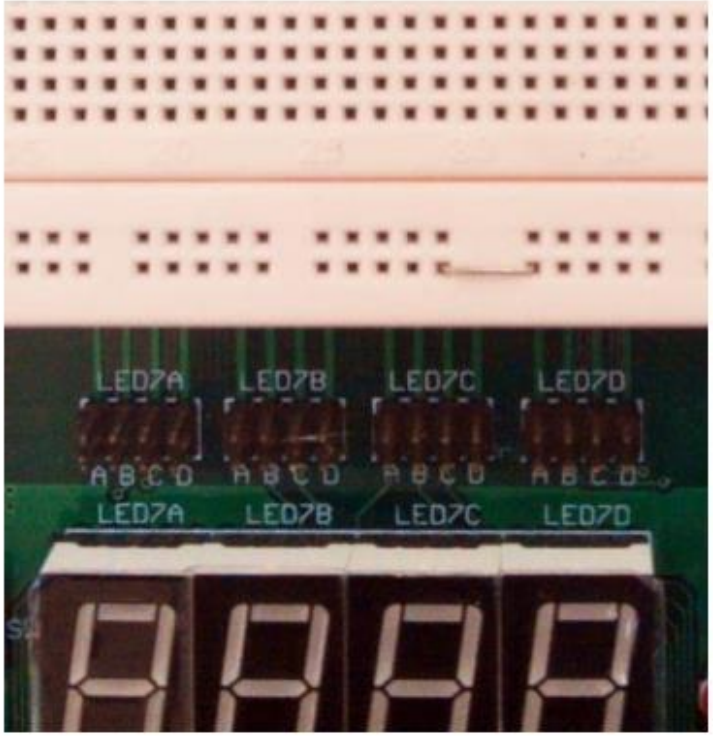

Figure 20 Bottom 7-seg Led Connector

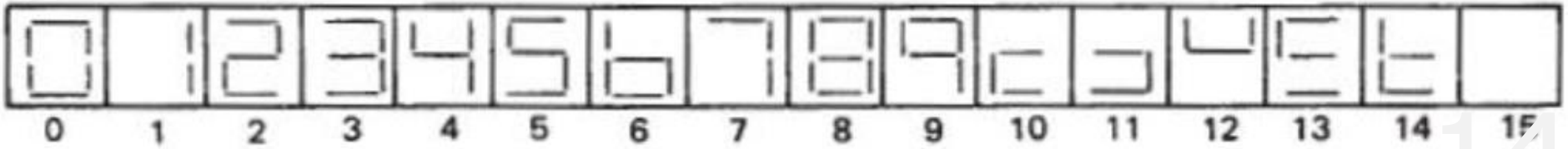

NUMERICAL DESIGNATIONS AND RESULTANT DISPLAYS

DS KIT – Breadboard Replacement

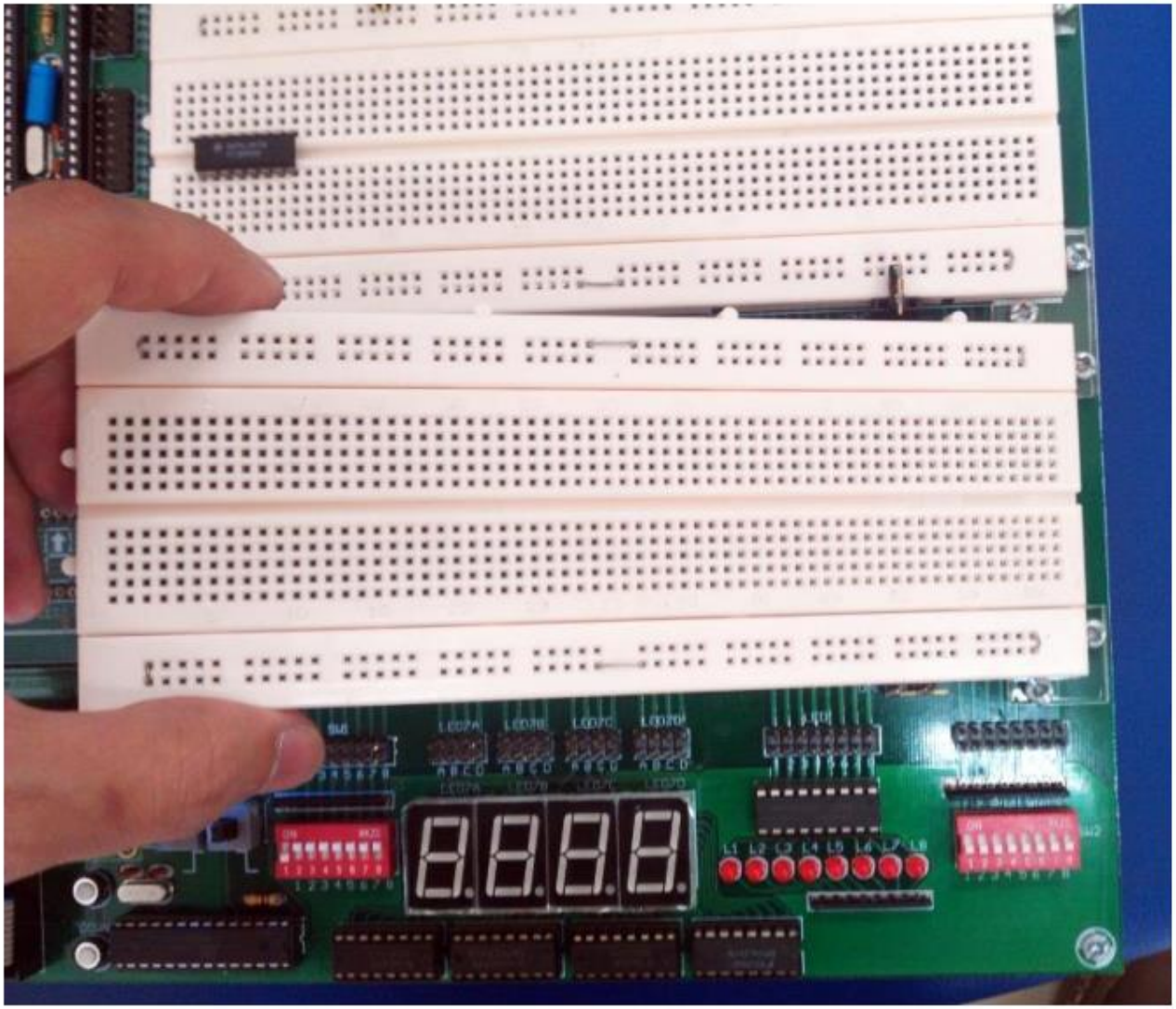

DS KIT – Wires & Pin Connectors

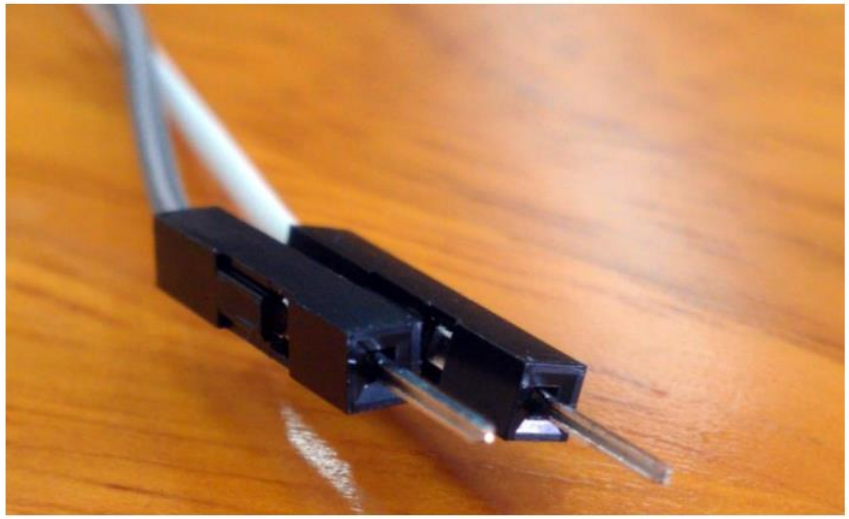

Figure 16 Male connector

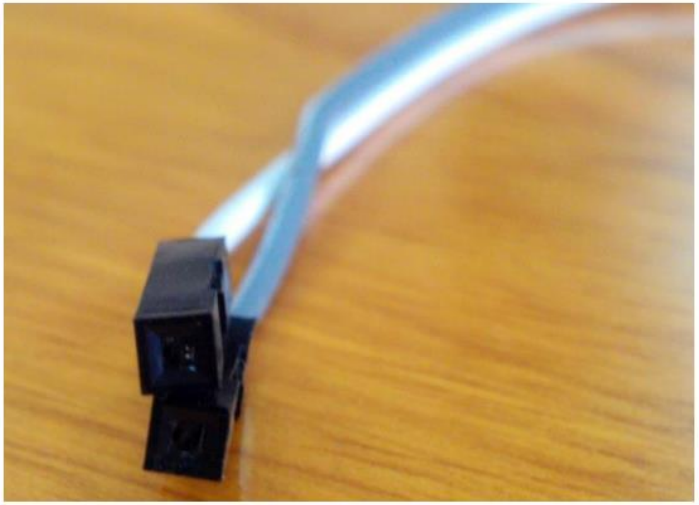

Figure 14 Female connector

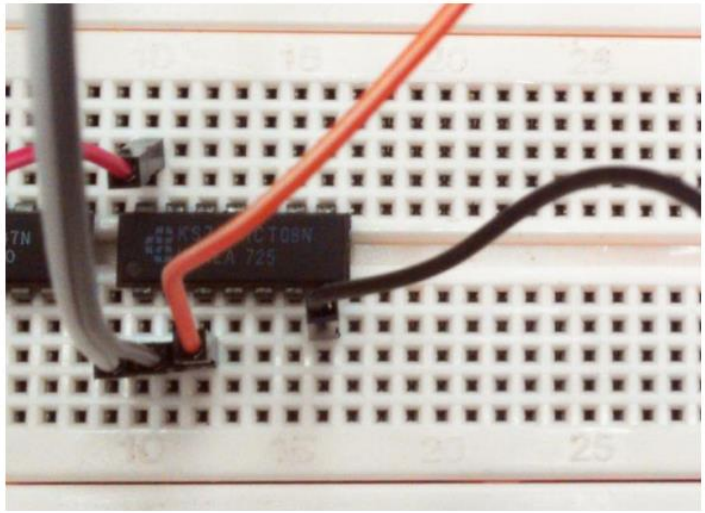

Figure 15 Making connection on Breadboard

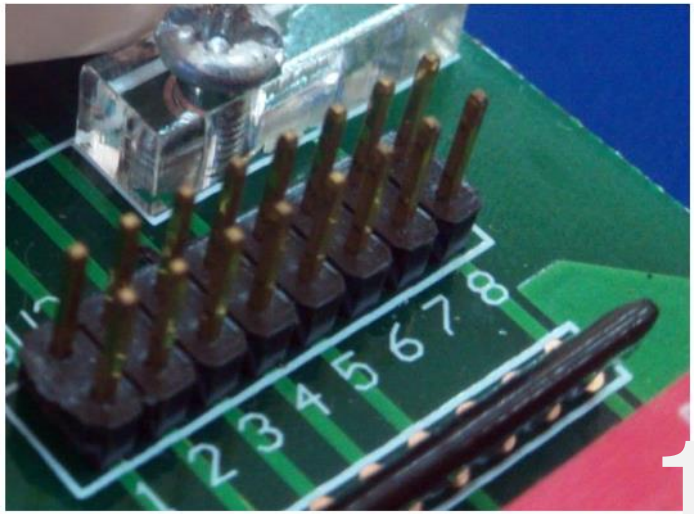

Figure 13 Pin connector on Mainboard

DS KIT – Power Supply

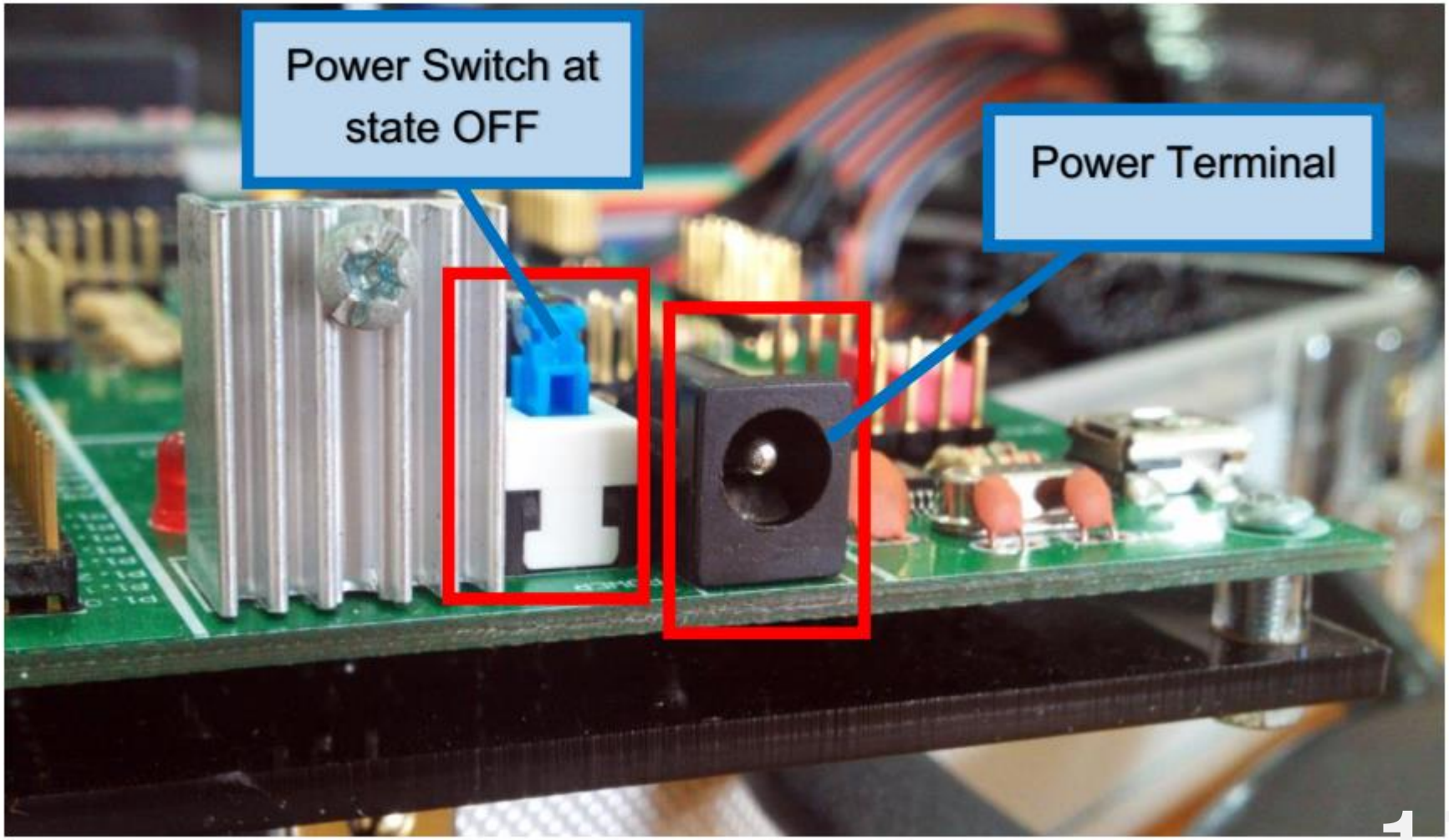

DS KIT – Power Supply

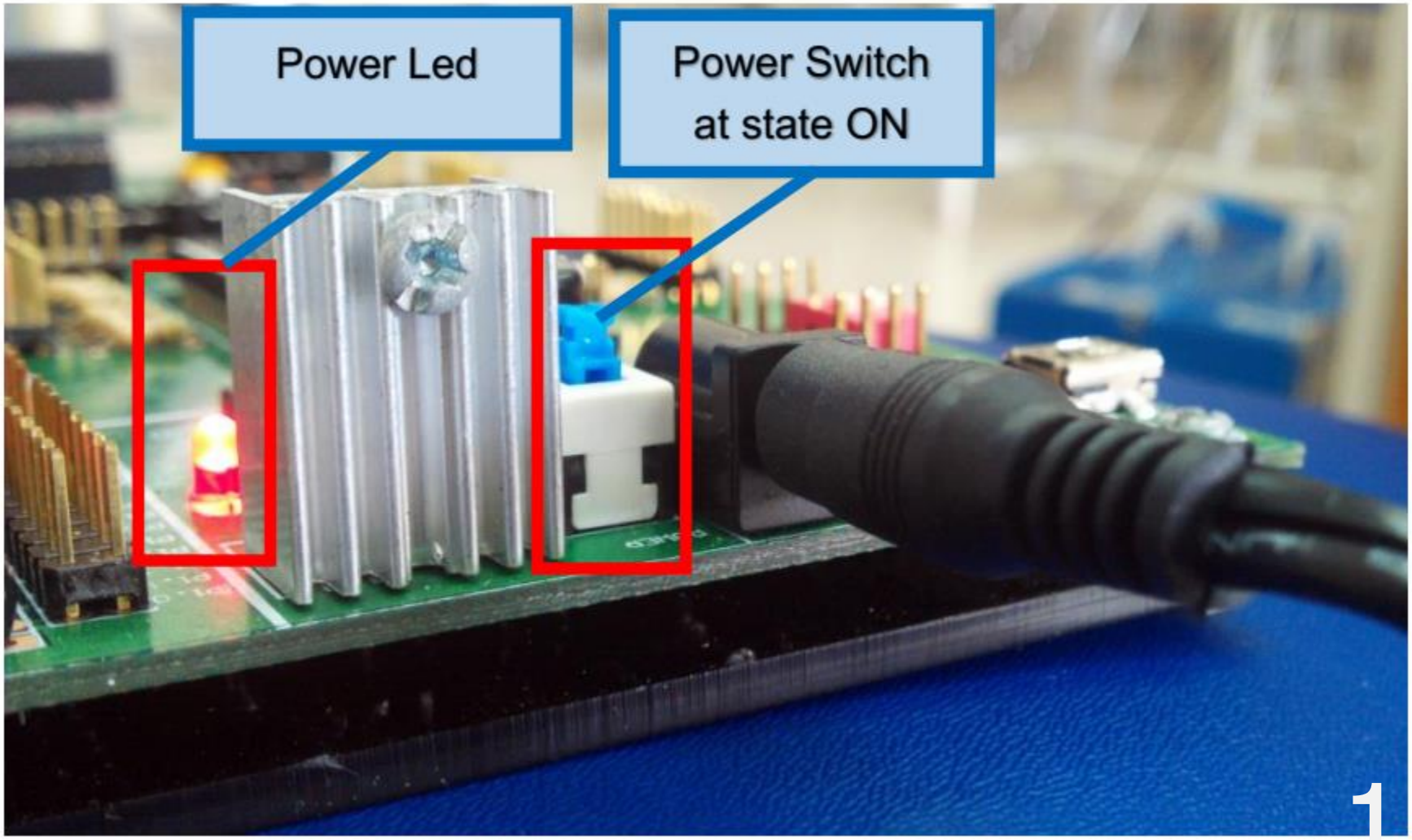

DS KIT – Circuit principle diagram

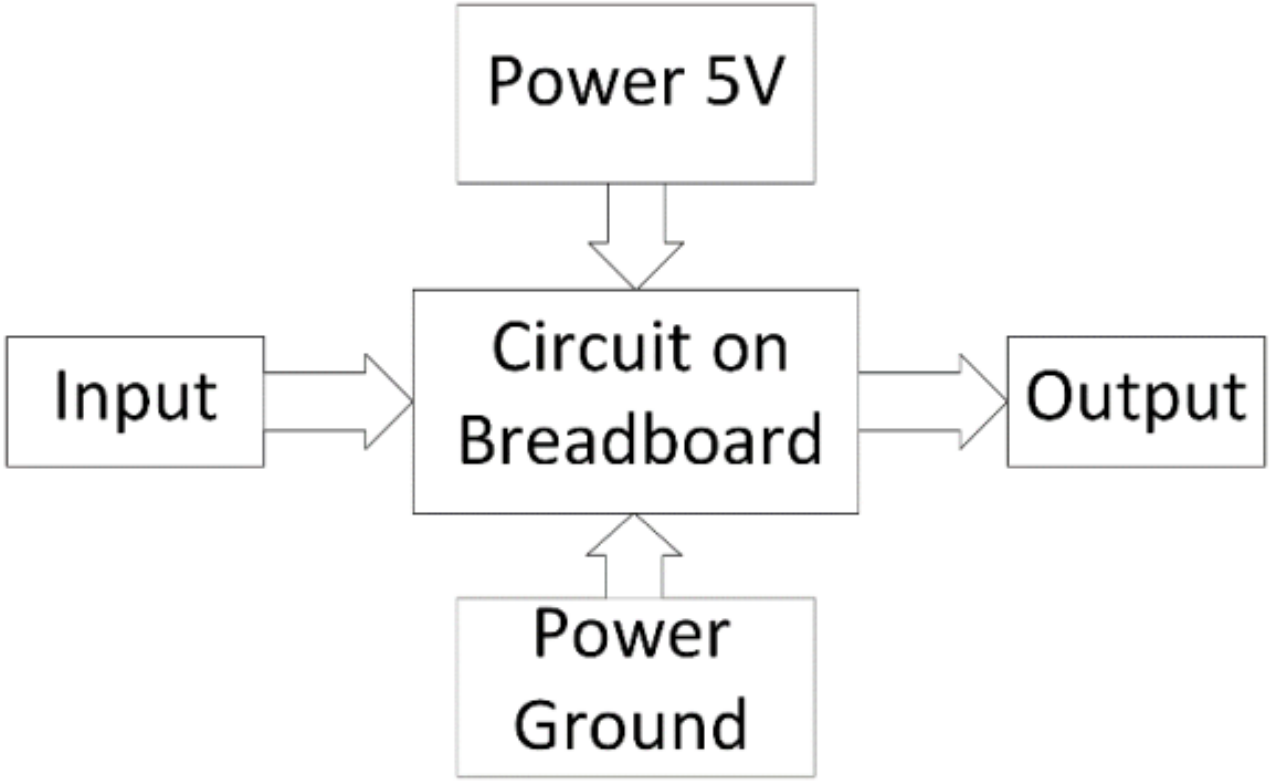

DS KIT – How to use Breadboard

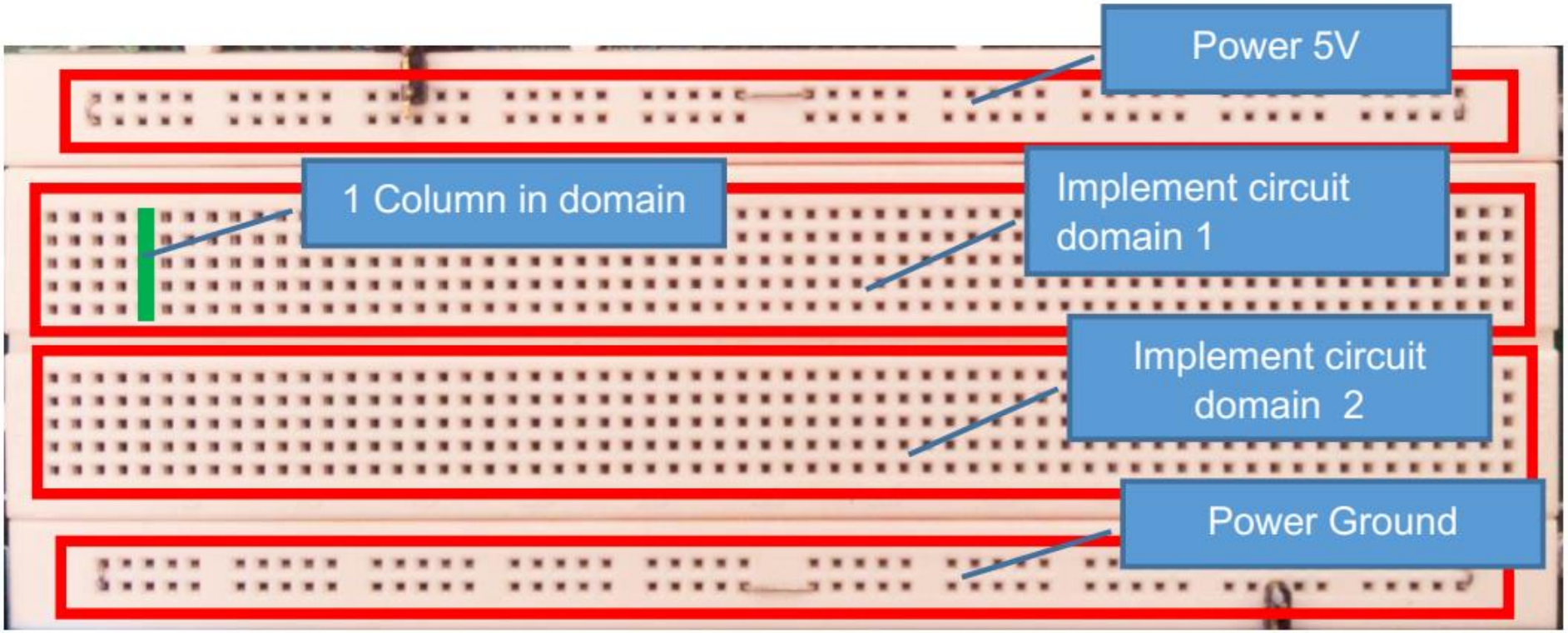

DS KIT – How to use Breadboard

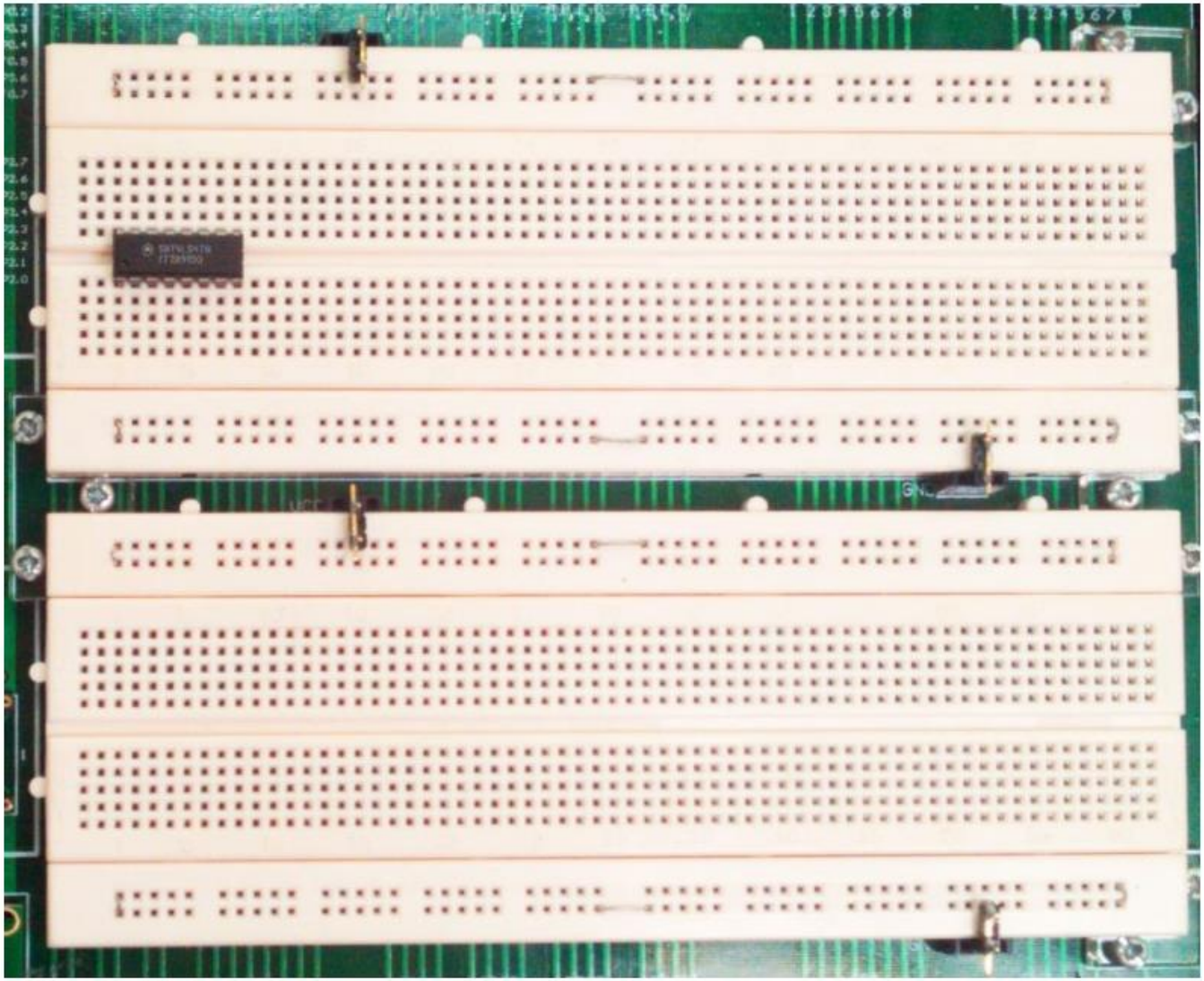

DS KIT – Assemble circuit

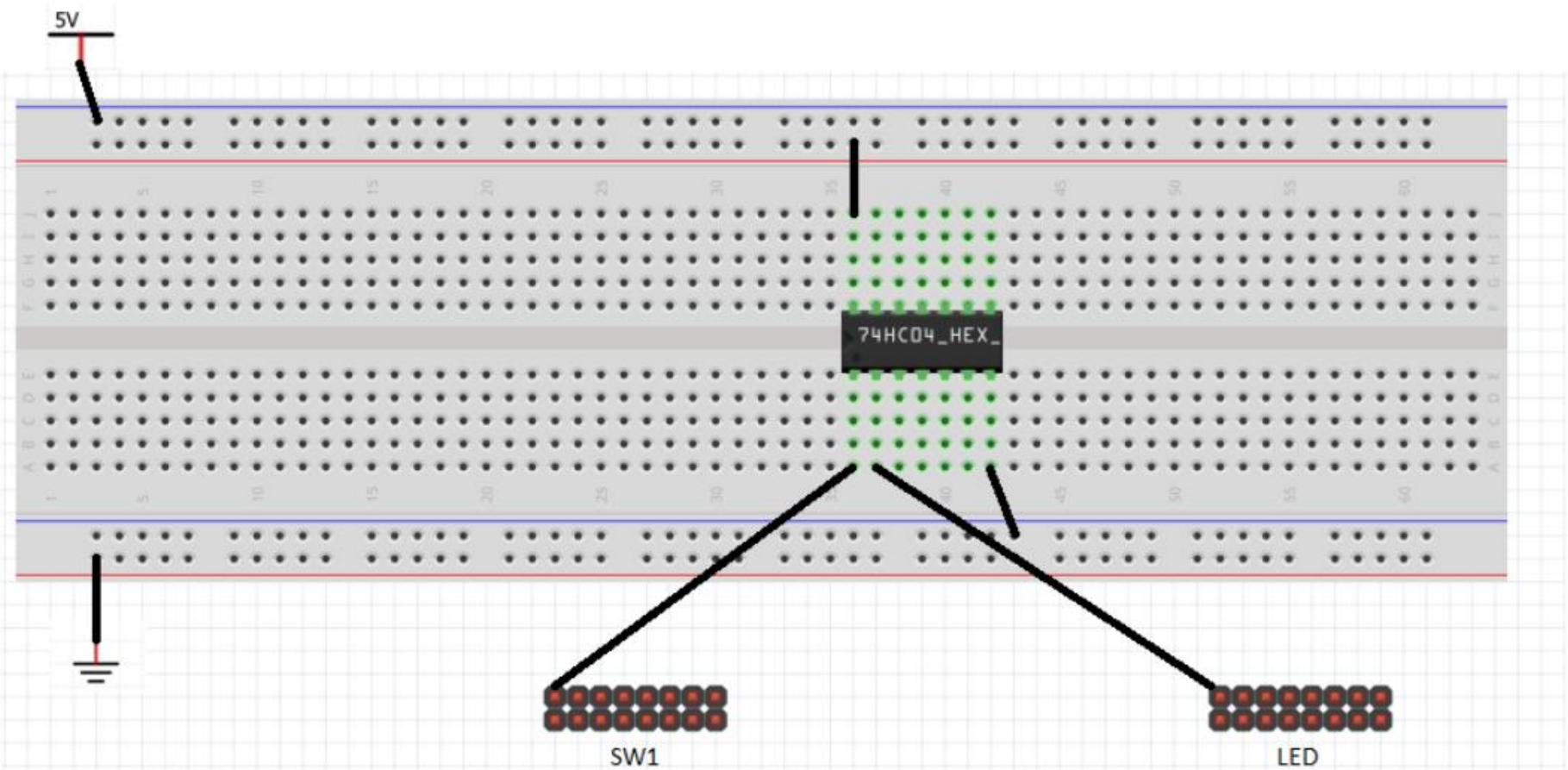

Lab - Tools

VOM = Volt-Ohm-Milliammeter
A Digital Multimeter

Oscilloscope
A Graph-displaying Device

Introduction to **the 7400 – Series ICs**

- The **7400 series** are the most popular logic families
  - contains hundreds of devices that provide everything from basic **logic gates**, **flip-flops**, and **counters**, to special purpose bus transceivers and arithmetic logic units (ALU)
- In this course, we will use through-hole devices in **dual in-line packages (DIP/DIL) ICs**

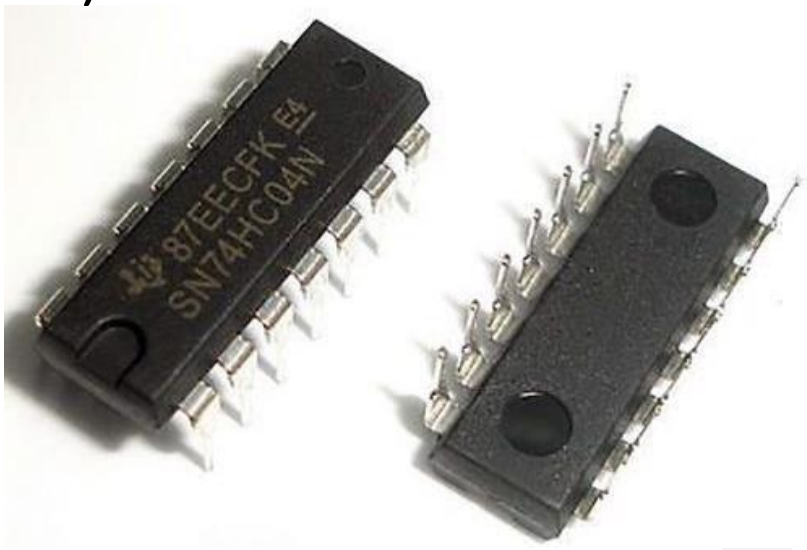

How to use **7400 – Series ICs**

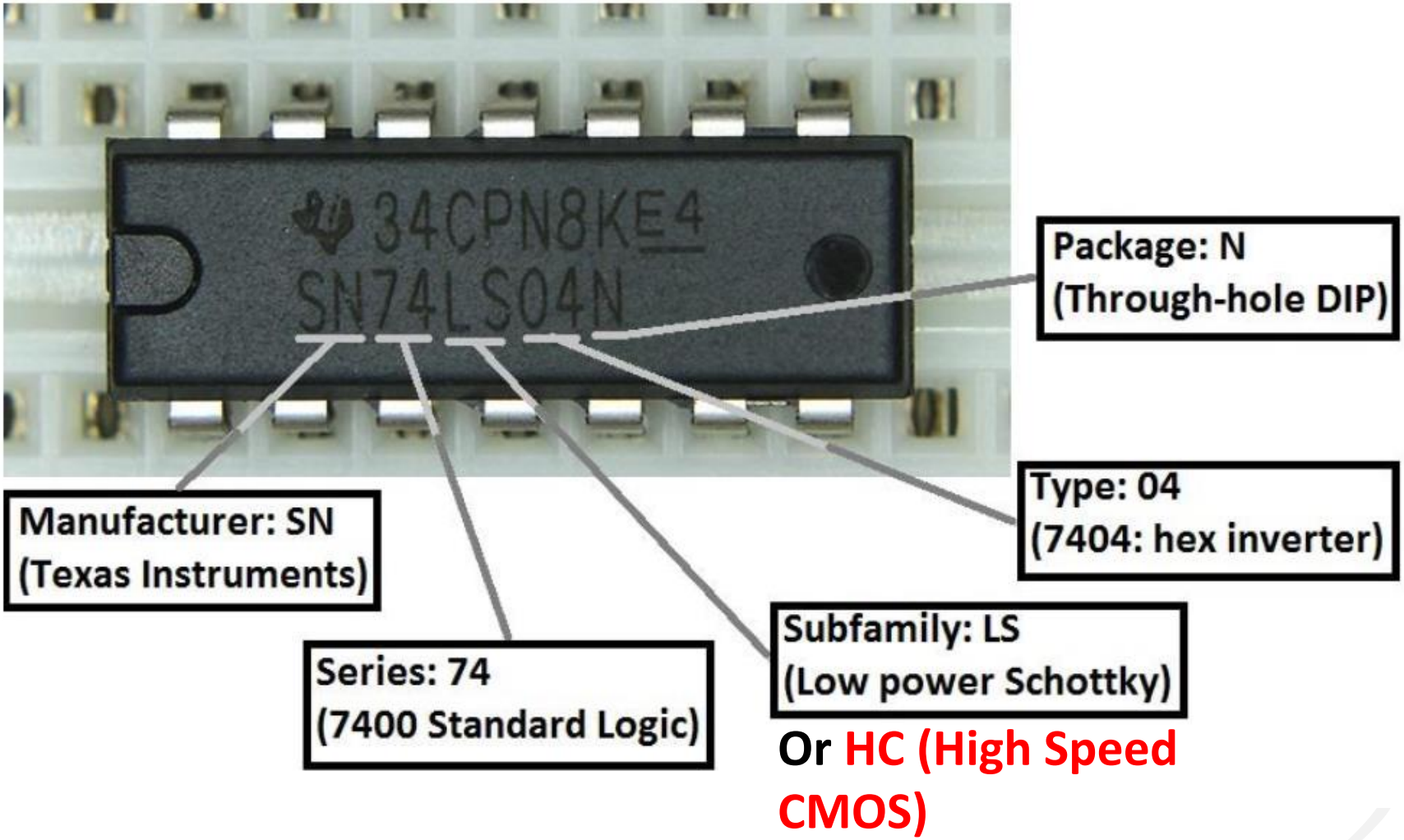

How to use **7400 – Series ICs**

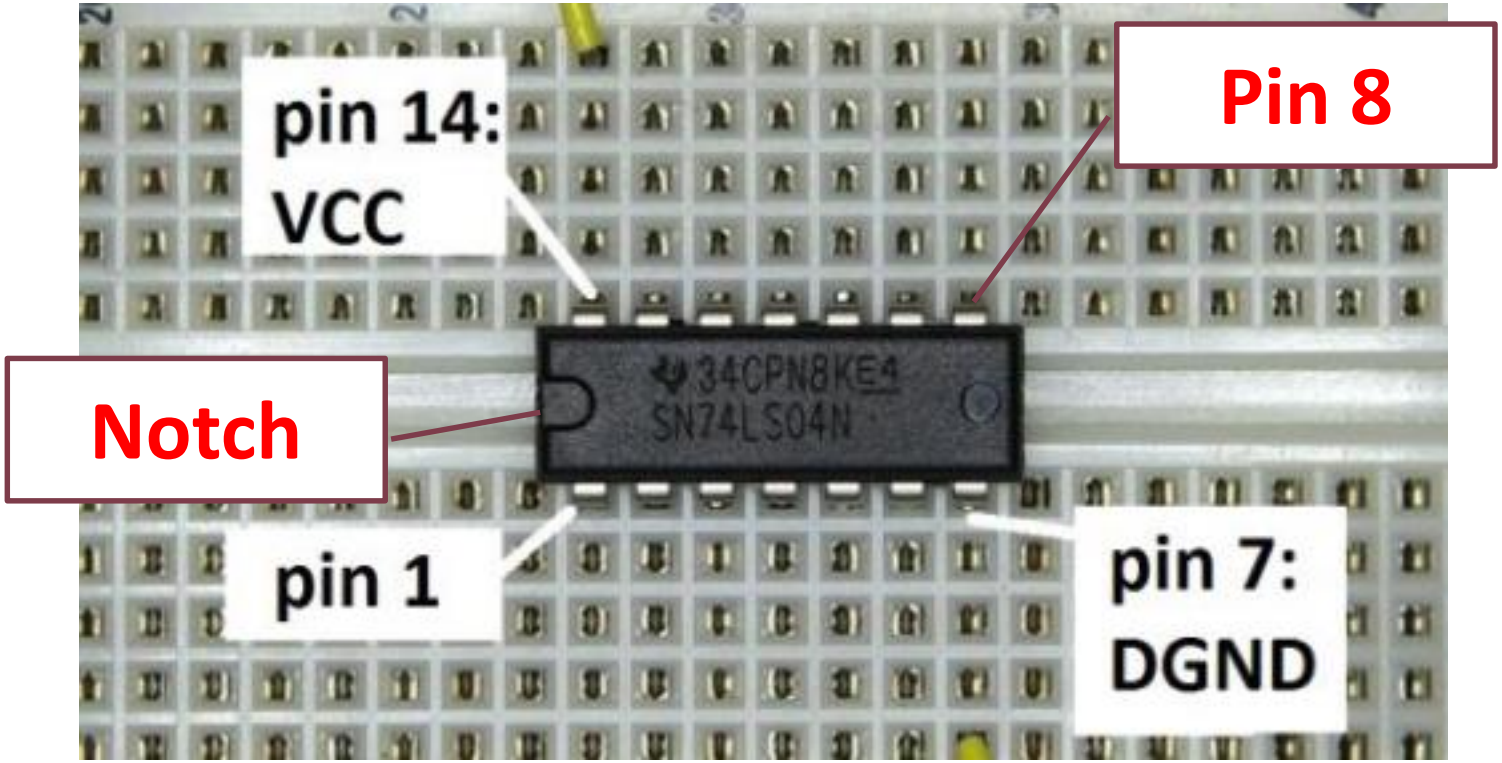

Note that:

- Pin 14 connect to VCC (+5 Voltage)
- Pin 7 connect to Ground (GND - 0 Voltage)

Reverse the polarity of power supply can damage the device

How to use **7400 – Series ICs**

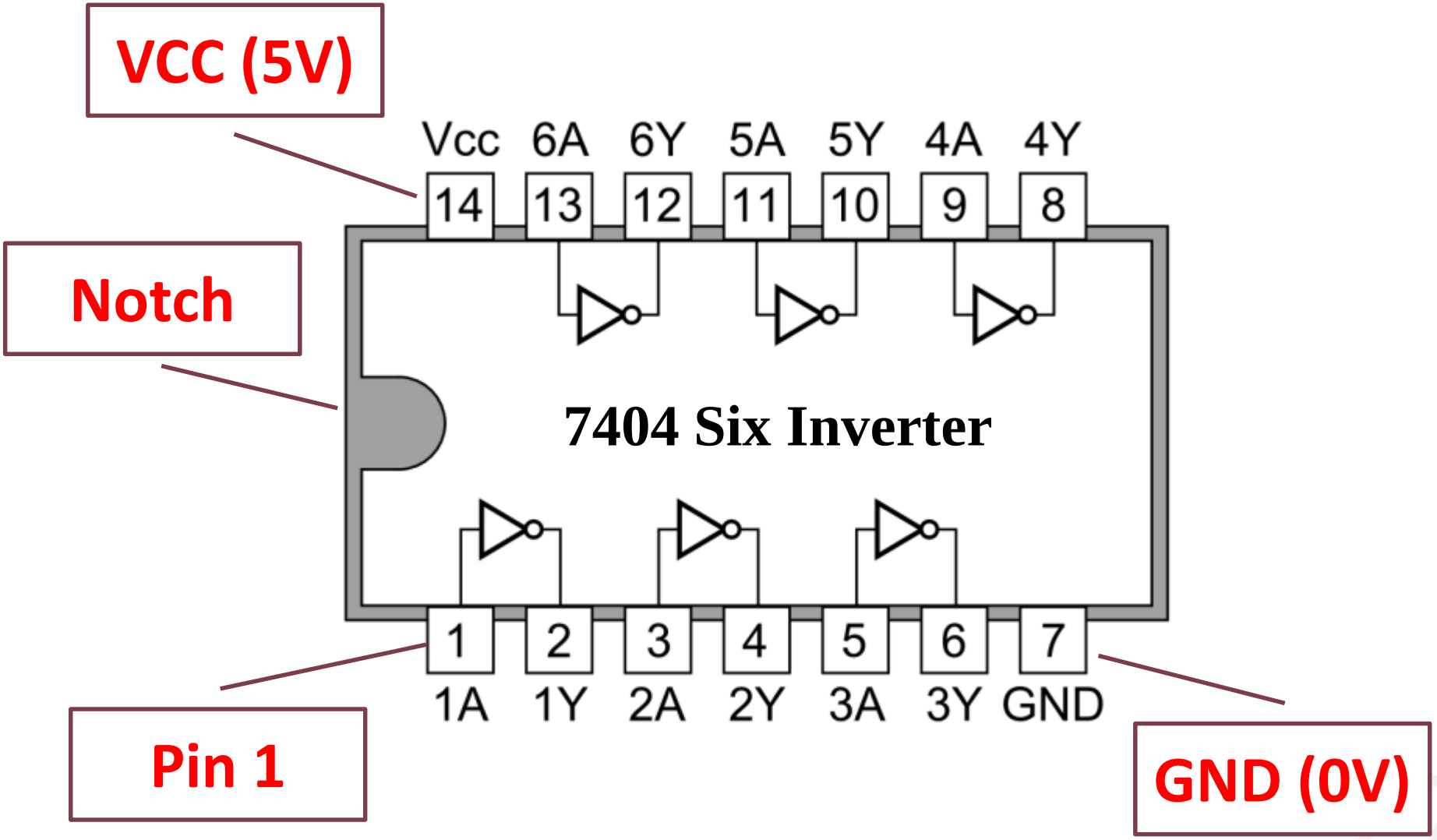

How to use **7400 – Series ICs**

Part	Description	Pins
7400	Four 2-input NAND	**14**
7402	Four 2-input NOR	**14**
7404	Six Inverters	**14**
7408	Four 2-input AND	**14**
7432	Four 2-input OR	**14**
7474	Two D Flip-Flops, positive edge triggered, with preset and reset	**14**
7483	4-it binary full-adder	**16**
7486	4-bit magnitude comparator	**16**

How to use **7400 – Series ICs**

TEXAS INSTRUMENTS
www.ti.com

SN54HC08, SN74HC08
QUADRUPLE 2-INPUT POSITIVE-AND GATES
SCLS081F–DECEMBER 1982–REVISED JANUARY 2007

FEATURES

- Wide Operating Voltage Range of 2 V to 6 V
- Outputs Can Drive Up To 10 LSTTL Loads
- Low Power Consumption, 20-μA Max I_{CC}
- Typical t_{pd} = 8 ns
- ±4-mA Output Drive at 5 V
- Low Input Current of 1 μA Max

SN54HC04...J OR W PACKAGE
SN74HC04...D, DB, N, NS, OR PW PACKAGE
(TOP VIEW)

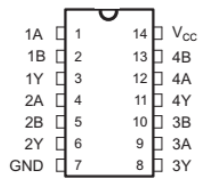

SN54HC04...FK PACKAGE
(TOP VIEW)

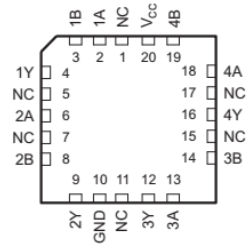

NC – No internal connection

DESCRIPTION/ORDERING INFORMATION

The 'HC08 devices contain four independent 2-input AND gates. They perform the Boolean function $Y = A \bullet B$ or $Y = \overline{A} + \overline{B}$ in positive logic.

ORDERING INFORMATION

T_A	PACKAGE(1)		ODERABLE PART NUMBER	TOP-SIDE MARKING
–40°C to 85°C	PDIP – N	Reel of 1000	SN74HC08N	SN74HC08N
	SOIC – D	Reel of 1000	SN74HC08DE4	HC08
		Reel of 2500	SN74HC08DR	
		Tube of 250	SN74HC08DT	
	SOP – NS	Reel of 2000	SN74HC08NSR	HC08
			SN74HC08NSRG4	
	SSOP – DB	Reel of 2000	SN74HC08DBR	HC08
			SN74HC08DBRE4	
	TSSOP – PW	Tube of 90	SN74HC08PW	HC08
		Reel of 2000	SN74HC08PWR	
		Tube of 250	SN74HC08PWT	
–55°C to 125°C	CDIP – J	Reel of 1000	SNJ54HC08J	SNJ54HC08J
	CFP – W	Reel of 900	SNJ54HC08W	SNJ54HC08W
	LCCC –FK	Reel of 2200	SNJ54HC08FK	SNJ54HC08JFK

(1) Package drawings, standard packing quantities, thermal data, symbolization, and PCB design guidelines are available at www.ti.com/sc/package.

SN54HC08, SN74HC08
QUADRUPLE 2-INPUT POSITIVE-AND GATES
SCLS081F–DECEMBER 1982–REVISED JANUARY 2007

TEXAS INSTRUMENTS
www.ti.com

FUNCTION TABLE
(EACH INVERTER)

INPUTS		OUTPUT
A	B	Y
H	H	H
L	X	L
X	L	L

LOGIC DIAGRAM (POSITIVE LOGIC)

Absolute Maximum Ratings(1)

over operating free-air temperature range (unless otherwise noted)

			MIN	MAX	UNIT
V_{CC}	Supply voltage range		–0.5	7	V
I_{IK}	Input clamp current(2)	$V_I < 0$ or $V_I > V_{CC}$		±20	mA
I_{OK}	Output clamp current(2)	$V_O < 0$		±20	mA
I_O	Continuous output current	$V_O = 0$ to V_{CC}		±25	mA
	Continuous current through V_{CC} or GND			±50	mA
θ_{JA}	Package thermal impedance(3)	D package		86	°C/W
		DB package		96	
		N package		80	
		NS package		76	
		PW package		113	
T_{stg}	Storage temperature range		–60	150	°C

(1) Stresses beyond those listed under "absolute maximum ratings" may cause permanent damage to the device. These are stress ratings only, and functional operation of the device at these or any other conditions beyond those indicated under "recommended operating conditions" is not implied. Exposure to absolute-maximum-rated conditions for extended periods may affect device reliability.
(2) The input and output voltage ratings may be exceeded if the input and output current ratings are observed.
(3) The package thermal impedance is calculated in accordance with JESD 51-7.

IC Design Specifications

- Find in **IC Datasheet**

(Internet Search Engines)

7400 – Series ICs in Logisim

- **Import the 7400-Lib Library in to Logisim first.**
  - Don’t know ? Let revise the previous lesson

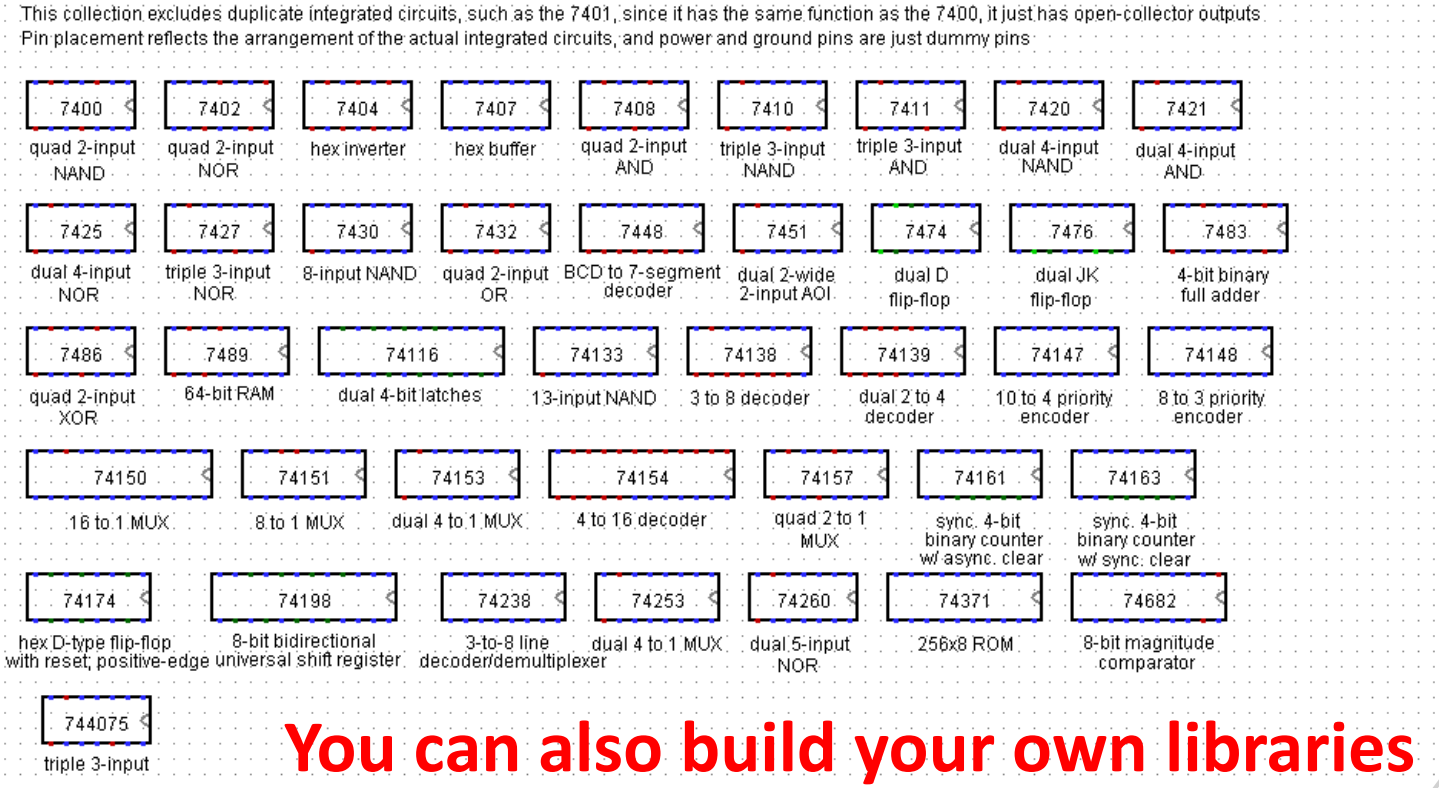

You can also build your own libraries !

Recall: Homework Submission

Requirements on Homework Reports:

- **Filename**: <Class>_<Day>_<Period>_<LabX>_<StudentID>

E.g.: CC01A_Wed_79_Lab1_187000

- **File type**: In **.pdf** format
- **Cover page**: Title, Team member + Student ID
- **Content:** each exercise often have 3 steps:
  - **Design:** Truth table, K-map, Expressions, Logic Ciruits,…
  - **Simulate:** Circuit implemented in Logisim (Take pictures)
  - **Assemble**: Circuit implemented in Digital System KIT (Take pictures)

Q&A