DWG NO. C904687 SH 1

REVISIONS			
REV	DESCRIPTION	DATE	APPROVED
A	SEE ECO CJC	2014/07/08	ON FILE

2 REL

NOTES: UNLESS OTHERWISE SPECIFIED

1. DIMENSIONS AND TOLERANCES IAW ASME Y14.5M - 1994.
2. PART TO BE MANUFACTURED USING THIS DRAWING AND SPECIFIED CAD/CAM DATA FILE. PART IS MODELED AT NOMINAL SIZE.
3. ALL FEATURE SIZES, TOLERANCES AND LOCATIONS SHALL BE IAW THIS DRAWING AND THE CAD/CAM DATA FILE. DIMENSIONAL VALUES OF GEOMETRY DERIVED FROM THE CAD/CAM DATA FILE REPRESENT A BASIC DIMENSION UPON WHICH A TOLERANCE IS APPLIED. UNLESS OTHERWISE SPECIFIED ON THE DRAWING, THE FOLLOWING TOLERANCES SHALL APPLY:
   A) PROFILE TOLERANCE FOR ALL UNSPECIFIED SURFACES TO BE:
   ⌓ .010 A B C
4. ALL DISPLAYED DIMENSIONS ARE CRITICAL TO FUNCTION.
5. DIMENSIONS AND TOLERANCES SHOWN ON THIS DRAWING TAKE PRECEDENCE OVER SUPPLIED CAD/CAM DATA FILE.
6. INSPECTION REQUIREMENTS
   A) USE THIS DRAWING AND APPLICABLE CAD/CAM DATA FILE TO INSPECT PART.
   B) MINIMUM INSPECTION REQUIREMENTS
      1) ALL DIMENSIONS AND TOLERANCES SHOWN ON THIS DRAWING
      2) QUALITY OF FINISH IAW APPLICABLE FINISH SPECIFICATION
   C) INSPECTION CONDITION: PART MAY BE CONSTRAINED ALONG DATUM A

7. IDENTIFICATION OF THE APPROVED SOURCE(S) OF SUPPLY IS NOT TO BE CONSTRUED AS A GUARANTEE OF PRESENT OR CONTINUED AVAILABILITY AS A SOURCE OF SUPPLY FOR THE ITEM DESCRIBED ON THIS DRAWING.

8. MATERIAL: SEE SEPARATE PARTS LIST.

9. FINISH: CHEMICAL CONVERSION COAT IAW MIL-DTL-5541, CLASS 3, YELLOW.

10. MARK PART NUMBER IAW MIL-STD-130, USING INK AA56032-I BLK WITH .12 HIGH CHARACTERS. LOCATE APPROXIMATELY WHERE SHOWN.

11. ABBREVIATIONS NOT IAW ASME Y14.38:
    CNIP - COMMUNICATION, NAVIGATION, IDENTIFICATION PROCESSOR.

APPROVED SOURCE(S) OF SUPPLY 7

CAD/CAM DATA FILE	PART NUMBER	NATIVE CAD FILE	VENDOR
C904687-1_-.igs C904687-1_-.stp	C904687-1	C904687_A.BDL	PROCURE ONLY FROM SUPPLIER WITH SAP QMSV, G OR BETTER.

UNSPECIFIED FEATURE CONTROL

FILLET RADII	R .005 MAX	MODELED AS SHARP
CHAMFERS AND COUNTERSINK INCLUDED ANGLES	± 1°	MODELED AT NOMINAL
HOLE TOLERANCES	PER DRAWING	MODELED AT NOMINAL
BREAK SHARP EDGES	TITLE BLOCK .005 MAX	MODELED AS SHARP

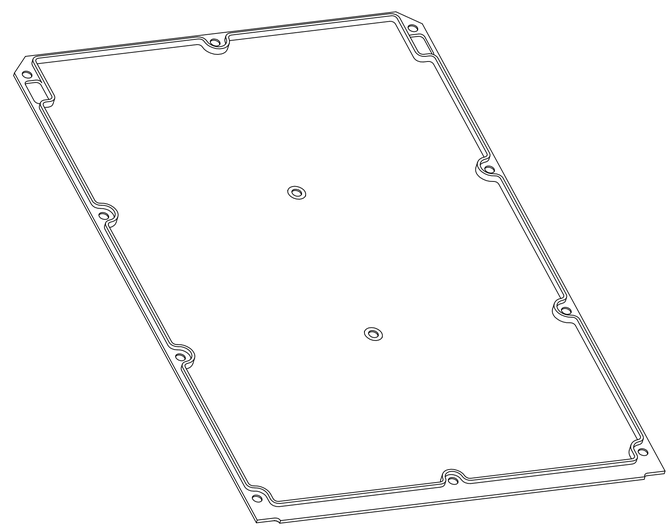

CRITICAL TO FUNCTION DRAWING

ONLY CRITICAL FEATURES ARE DEFINED ON THIS DRAWING. THIS SIMPLIFIED DRAWING AND APPLICABLE CAD/CAM DATA FILE MUST BE USED FOR COMPLETE PART DEFINITION AND FINAL ACCEPTANCE.

UNCONTROLLED COPY

USER MUST VERIFY CURRENT REVISION PRIOR TO USE

SEE SEPARATE PARTS LIST

CAGE CODE	PART OR IDENTIFYING NO.	NOMENCLATURE OR DESCRIPTION	MATERIAL	SPEC	REF DES	FIND NO.

QTY REQD PER ASSY — PARTS LIST

UNLESS OTHERWISE SPECIFIED
1. DIMENSIONS ARE IN INCHES.
2. SURFACE TEXTURE SHALL BE 63
3. DIMENSIONS APPLY AFTER PLATING OR CONVERSION COATING
4. REMOVE BURRS AND SHARP EDGES.
5. PARANTHETICAL DATA IS FOR REFERENCE ONLY.
6. ALL SHEETS ARE THE SAME REVISION STATUS.

TOLERANCES — ON ALL HOLE DIAMETERS

UNDER .0140	+.0020 -.0005	.501 THRU .750	+.008 -.001
.014 THRU .125	+.004 -.001	.751 THRU 1.000	+.010 -.001
.126 THRU .250	+.005 -.001	1.001 THRU 2.000	+.012 -.001
.251 THRU .500	+.006 -.001		

ON DECIMAL DIMENSIONS: .XXX ± .010, .XX ± .03, .X ± .1

ON ANGULAR DIMENSIONS: MACHINED ± 0° 30', LOCATING ± 0° 30', FORMED ± 2°, CHAMFERS ± 5°

FINISH 9 — HEAT TREAT

JSF		900800
USED ON	CI NO.	NEXT ASSY
APPLICATION		

DO NOT SCALE DRAWING

CONTRACT NO.	N00019-02-C-3004	
ORIG	J.J ONEIL	20050421
CHECKER	J. LAUCUS	20050422
RDE	M. LOPEZ	20050425
MFG	P. CREPEAU	20050425
QA	R. STONE	20050425
PCMO	M. UYEDA	20050425
EDMC	R. WELLS	20050425

THIRD ANGLE PROJECTION

NORTHROP GRUMMAN
15120 INNOVATION DRIVE, SAN DIEGO, CA. 92128

COVER - CNIP

SIZE	CAGE CODE	DWG NO.	REV
D	65409	C904687	A

SCALE 1/1 SHEET 1 OF 2

CM/R

WARNING - ITAR/EAR CONTROLLED INFORMATION. DO NOT EXPORT OR REPRODUCE TO THE PUBLIC WITHOUT UNITED STATES GOVERNMENT APPROVAL.

©2014 NORTHROP GRUMMAN SYSTEM CORPORATION. ALL RIGHTS RESERVED.

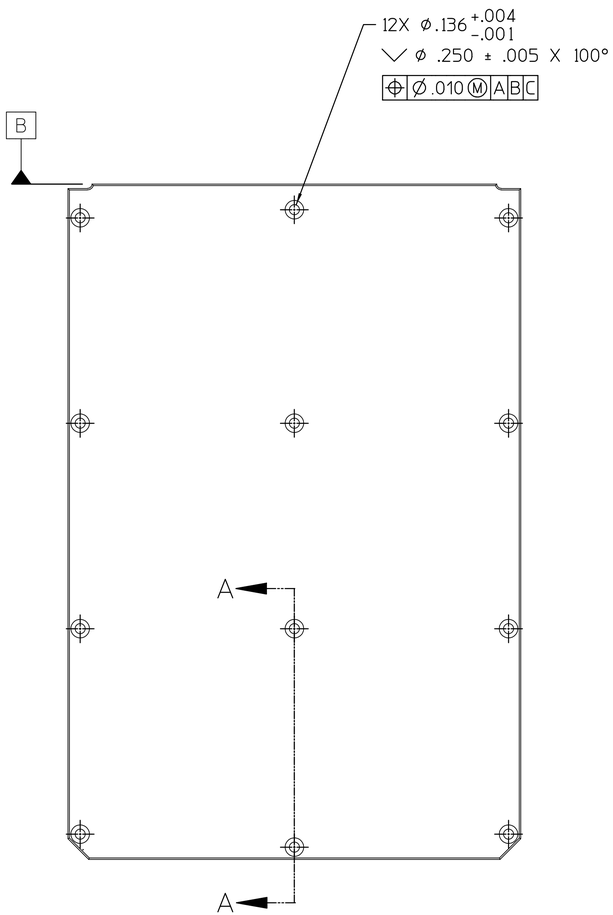

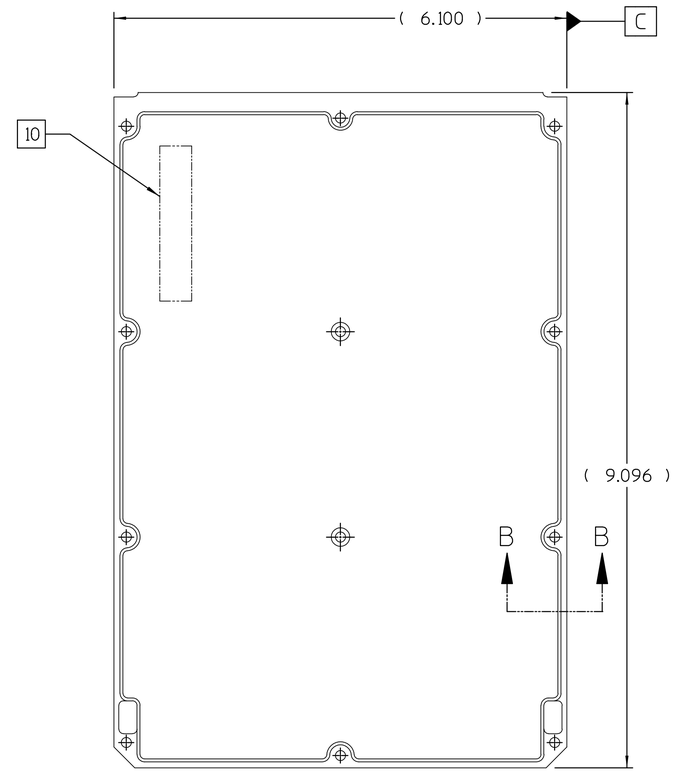

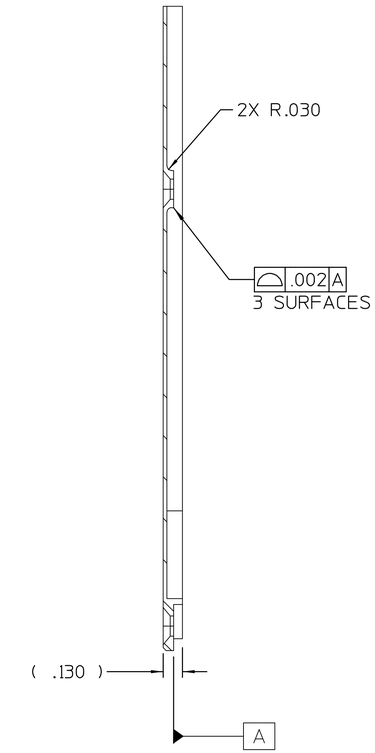

SECTION A-A
SCALE 2:1

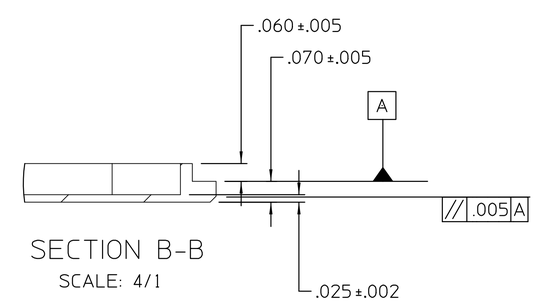

SECTION B-B
SCALE: 4/1

ITAR/EAR CONTROLLED INFORMATION. USE OR DISCLOSURE OF THE INFORMATION CONTAINED HEREIN IS SUBJECT TO THE RESTRICTIONS ON THE COVER PAGE

SIZE	CAGE CODE	DWG NO.	REV
D	65409	C904687	A
SCALE 1/1		SHEET 2	