CAD MAINTAINED. CHANGES SHALL BE INCORPORATED BY THE DESIGN ACTIVITY

REVISION HISTORY

REV.	DESCRIPTION	DATE	APPROVED
E1	ENGINEERING RELEASE	2020/11/10	L. ALDANA
E2	INC DOC DEFECT BCNDR00006656	2020/12/02	L. MCCORMICK

NOTES: UNLESS OTHERWISE SPECIFIED

1. INTERPRET DRAWING IAW ASME Y14.100-2004.
2. DIMENSIONS AND TOLERANCING IAW ASME Y14.5M-1994.
3. MATERIAL: AL ALY 5052-H32 (AMS 4016) .100 STOCK THICKNESS.
4. BREAK ALL SHARP EDGES .01/.02 MAX.
5. FINISH: CHEM FILM IAW MIL-DTL-5541, TYPE I, CLASS 3, COLOR: YELLOW.
6. IDENTIFY IAW MIL-STD-130. RUBBER STAMP PART NO. AND REV WITH .08 MIN HIGH CHARACTERS USING INK, A-A-56032, TYPE I BLACK. LOCATE APPROX. WHERE SHOWN.

   099Q2-(PART NUMBER)-(DASH NO.)-(REVISION)
   MFR-(MANUFACTURER'S CAGE CODE)

7. PART TO BE MANUFACTURED USING THIS DRAWING AND SPECIFIED CAD/CAM DATA FILE. PART IS MODELED AT NOMINAL SIZE.
8. DIMENSIONS AND TOLERANCES SHOWN ON THIS DRAWING TAKE PRECEDENCE OVER SUPPLIED CAD/CAM DATA FILE.
9. ALL FEATURE SIZES, TOLERANCES AND LOCATIONS SHALL BE IAW THIS DRAWING AND THE CAD/CAM DATA FILE. DIMENSIONAL VALUES OF GEOMETRY DERIVED FROM THE CAD/CAM DATA FILE REPRESENT A BASIC DIMENSION UPON WHICH A TOLERANCE IS APPLIED. UNLESS OTHERWISE SPECIFIED ON THE DRAWING, THE FOLLOWING TOLERANCES SHALL APPLY:

   A) PROFILE TOLERANCE SHALL BE:

⌓	.015	A	B	C

   B) TRUE POSITION TOLERANCE FOR HOLES AND COUNTERSINKS SHALL BE:

⌖	∅ .015 Ⓜ	A	B	C

10. USE THIS DRAWING AND APPLICABLE CAD/CAM DATA FILE TO INSPECT PART.
11. ABBREVIATIONS AND ACRONYMS NOT IAW ASME Y14.38:
    BACN = BATTLEFIELD AIRBORNE COMMUNICATIONS NODE

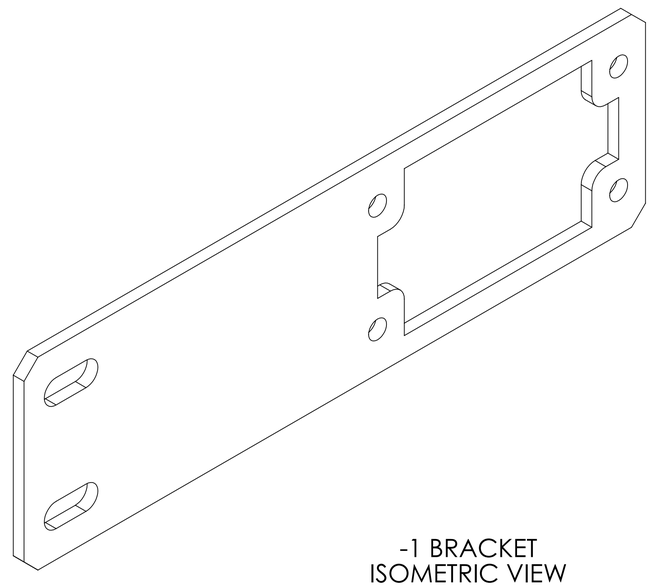

-1 BRACKET
ISOMETRIC VIEW
FOR REFERENCE ONLY

DESTRUCTION NOTICE: DESTROY BY ANY METHOD THAT WILL PREVENT DISCLOSURE OF CONTENTS OR RECONSTRUCTION OF DOCUMENT.

WARNING: THIS DOCUMENT CONTAINS DATA WHOSE EXPORT IS RESTRICTED BY THE ARMS EXPORT CONTROL ACT (TITLE 22, U.S.C., SEC 2751, ET SEQ.) AS AMENDED, OR THE EXPORT ADMINISTRATION ACT (TITLE 50, U.S.C., APP 2401 ET SEQ.) AS AMENDED. VIOLATIONS OF THESE EXPORT LAWS ARE SUBJECT TO SEVERE CRIMINAL AND CIVIL PENALTIES. DISSEMINATE IN ACCORDANCE WITH PROVISIONS OF DOD DIRECTIVE 5230.25.

COPYRIGHT © 2020 NORTHROP GRUMMAN CORP. THIS DATA WAS DEVELOPED PURSUANT TO CONTRACT NUMBER FA8726-18-C-0005 WITH THE US GOVERNMENT. THE US GOVERNMENT'S RIGHTS IN AND TO THIS COPYRIGHTED DATA ARE AS SPECIFIED IN DFAR 252.227-7013 WHICH WAS MADE PART OF THE ABOVE CONTRACT.

CRITICAL TO FUNCTION DRAWING

ONLY CRITICAL FEATURES ARE DEFINED ON THIS DRAWING. THIS IS A SIMPLIFIED DRAWING AND APPLICABLE CAD/CAM DATA FILE MUST BE USED FOR COMPLETE PART IDENTIFICATION AND FINAL ACCEPTANCE.

CAD/CAM DATA FILE:
311-D62585-1_REVE2

ALL SHEETS ARE REV E2

PART DASH NO.	NEXT	FINAL	NEXT ASSY	USED ON
-1			309-A11668	BACN

QTY REQD PER ASSY | APPLICATION

UNLESS OTHERWISE SPECIFIED ALL DIMENSIONS ARE INCHES

DECIMALS X.XX ±0.03 X.XXX ±0.010 | ANGULAR ±1°

THIRD ANGLE PROJECTION

DO NOT SCALE DRAWING

CONTRACT FA8726-18-C-0005		
APPROVALS		DATE
DRAWN	C. ARATEA	2020/11/2
CHECKED		
DESIGN	C. ARATEA	2020/11/2
DESIGN ACTIVITY		
CUSTOMER		

NORTHROP GRUMMAN

TITLE
BRACKET, MOUNTING CISCO 4431

SIZE	CAGE CODE	DWG NO.	REV
D	099Q2	311-D62585	E2

SCALE 2:1 | WEIGHT () | SHEET 1 OF 2

FILE NAME: 311-D62585

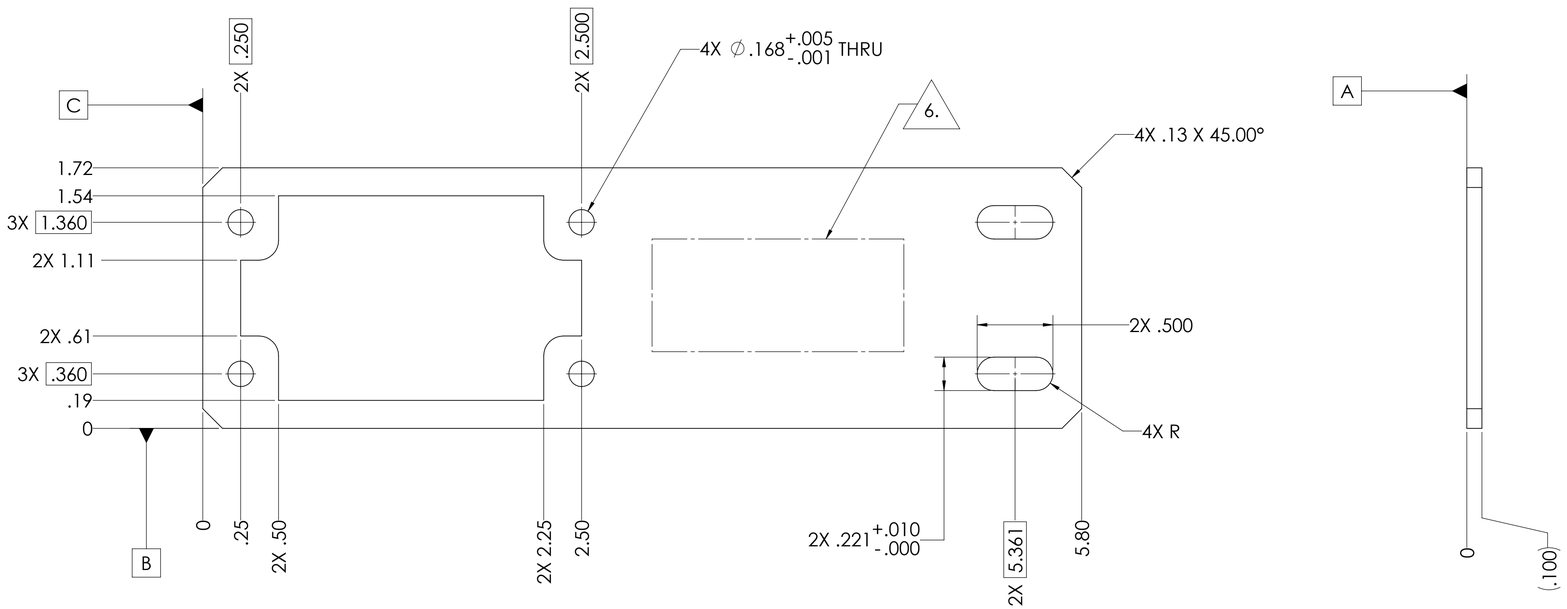

DESTRUCTION NOTICE: DESTROY BY ANY METHOD THAT WILL PREVENT DISCLOSURE OF CONTENTS OR RECONSTRUCTION OF DOCUMENT.

WARNING: THIS DOCUMENT CONTAINS DATA WHOSE EXPORT IS RESTRICTED BY THE ARMS EXPORT CONTROL ACT (TITLE 22, U.S.C., SEC 2751, ET SEQ.) AS AMENDED, OR THE EXPORT ADMINISTRATION ACT (TITLE 50, U.S.C., APP 2401 ET SEQ.) AS AMENDED. VIOLATIONS OF THESE EXPORT LAWS ARE SUBJECT TO SEVERE CRIMINAL AND CIVIL PENALTIES. DISSEMINATE IN ACCORDANCE WITH PROVISIONS OF DOD DIRECTIVE 5230.25.

COPYRIGHT © 2020 NORTHROP GRUMMAN CORP. THIS DATA WAS DEVELOPED PURSUANT TO CONTRACT NUMBER FA8726-18-C-0005 WITH THE US GOVERNMENT. THE US GOVERNMENT'S RIGHTS IN AND TO THIS COPYRIGHTED DATA ARE AS SPECIFIED IN DFAR 252.227-7013 WHICH WAS MADE PART OF THE ABOVE CONTRACT.

-1 BRACKET

SIZE	CAGE CODE	DWG NO.	REV
D	099Q2	311-D62585	E2
SCALE 2:1	WEIGHT ()	SHEET 2	

FILE NAME: 311-D62585