DWG NO DTE2237593 SH 1

REVISION HISTORY			
REV	DESCRIPTION	DATE	APPROVED
1	ENGINEERING DEVELOPMENT		ON FILE

PROTOTYPE RELEASE ONLY
UNCONTROLLED COPY

USER MUST VERIFY CURRENT REVISION PRIOR TO USE

NOTES: UNLESS OTHERWISE SPECIFIED

1. THIS DRAWING SHALL BE INTERPRETED IAW ASME Y14.100-2017.

2. MATERIAL: SEE SEPARATE PARTS LIST.

3 FINISH: BEFORE INSTALLATION OF FN 500- 502, CHEMICAL CONVERSION COAT ALL SURFACES IAW MIL-DTL-5541, CLASS 3, YELLOW.

4 INSERTS, FN 500 - 502, SHALL BE INSTALLED IAW NASM33537.

5 MARK PART AND DASH NUMBER IAW MIL-STD-130 IN .12 HIGH CHARACTERS USING FN 601. LOCATE APPROXIMATELY WHERE SHOWN.

6. ABBREVIATIONS NOT IAW ASME Y14.38:
ITA: INTERFACE TEST ADAPTER
INPA: INTERROGATOR POWER AMPLFIER

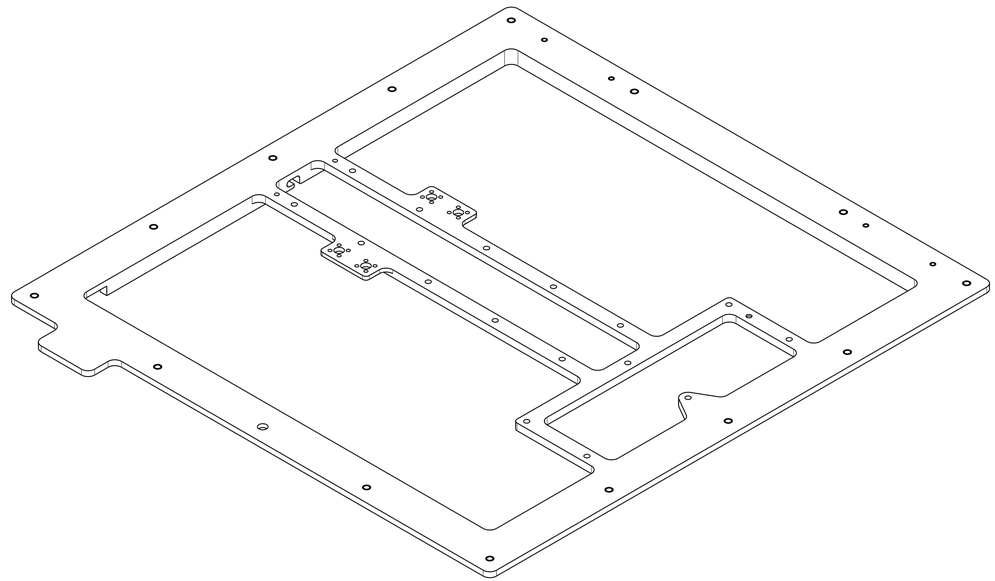

VIEW SHOWN FOR REFERENCE ONLY

NON-DELIVERABLE HARDWARE

THE COMPONENTS DEPICTED ON THIS DRAWING ARE TO BE USED ONLY WITHIN A NORTHROP GRUMMAN APPROVED TEST FACILITY AND ARE DESIGNATED NON-DELIVERABLE

SEE SEPARATE PARTS LIST

QTY REQD PER ASSY	-1	DAI	PART OR IDENTIFYING NO	NOMENCLATURE OR DESCRIPTION	MATERIAL	SPEC	REF DES	FIND NO

PARTS LIST

UNLESS OTHERWISE SPECIFIED
1. DIMENSIONS ARE IN INCHES.
2. SURFACE TEXTURE SHALL BE
3. DIMENSIONS APPLY AFTER PLATING OR FINISH.
4. REMOVE BURRS AND SHARP EDGES.
5. PARENTHETICAL DATA IS FOR REFERENCE ONLY.
6. ALL SHEETS ARE THE SAME REVISION STATUS.

TOLERANCES
ON ALL HOLE DIAMETERS

UNDER .0140	+.0020 -.0005	.501 THRU .750	+.008 -.001
.014 THRU .125	+.004 -.001	.751 THRU 1.000	+.010 -.001
.126 THRU .250	+.005 -.001	1.001 THRU 2.000	+.012 -.001
.251 THRU .500	+.006 -.001	OVER 2.000	+.014 -.001

ON DECIMAL DIMENSIONS:
.XXX ± .010
.XX ± .03
.X ± .1

ON ANGULAR DIMENSIONS:
MACHINED ±0°30'
LOCATING ±0°30'
FORMED ±2°
CHAMFERS ±5°

FINISH 3

HEAT TREAT

JSF PNR | DTE2237590
USED ON | CI NO. | NEXT ASSY
APPLICATION

DO NOT SCALE DRAWING
CONTRACT NO. N00019-14-C-0002
ORIG J.WEBB 20181221
CHECKER
RDE
MFG
QA
PCMO
EDMC
SIGNATURES ON FILE
THIRD ANGLE PROJECTION

NORTHROP GRUMMAN
15120 INNOVATION DRIVE, SAN DIEGO, CA 92128

TITLE
SUPPORT PLATE, BACKPLANE, INPA SUBASSEMBLY ITA

SIZE	DAI	DWG NO	REV
D	65409	DTE2237593	1

SCALE NONE SHEET 1 OF 2

ITAR/EAR-CONTROLLED INFORMATION. DO NOT EXPORT OR RELEASE TO THE PUBLIC WITHOUT UNITED STATES GOVERNMENT APPROVAL.

© 2019 NORTHROP GRUMMAN SYSTEMS CORPORATION. ALL RIGHTS RESERVED.

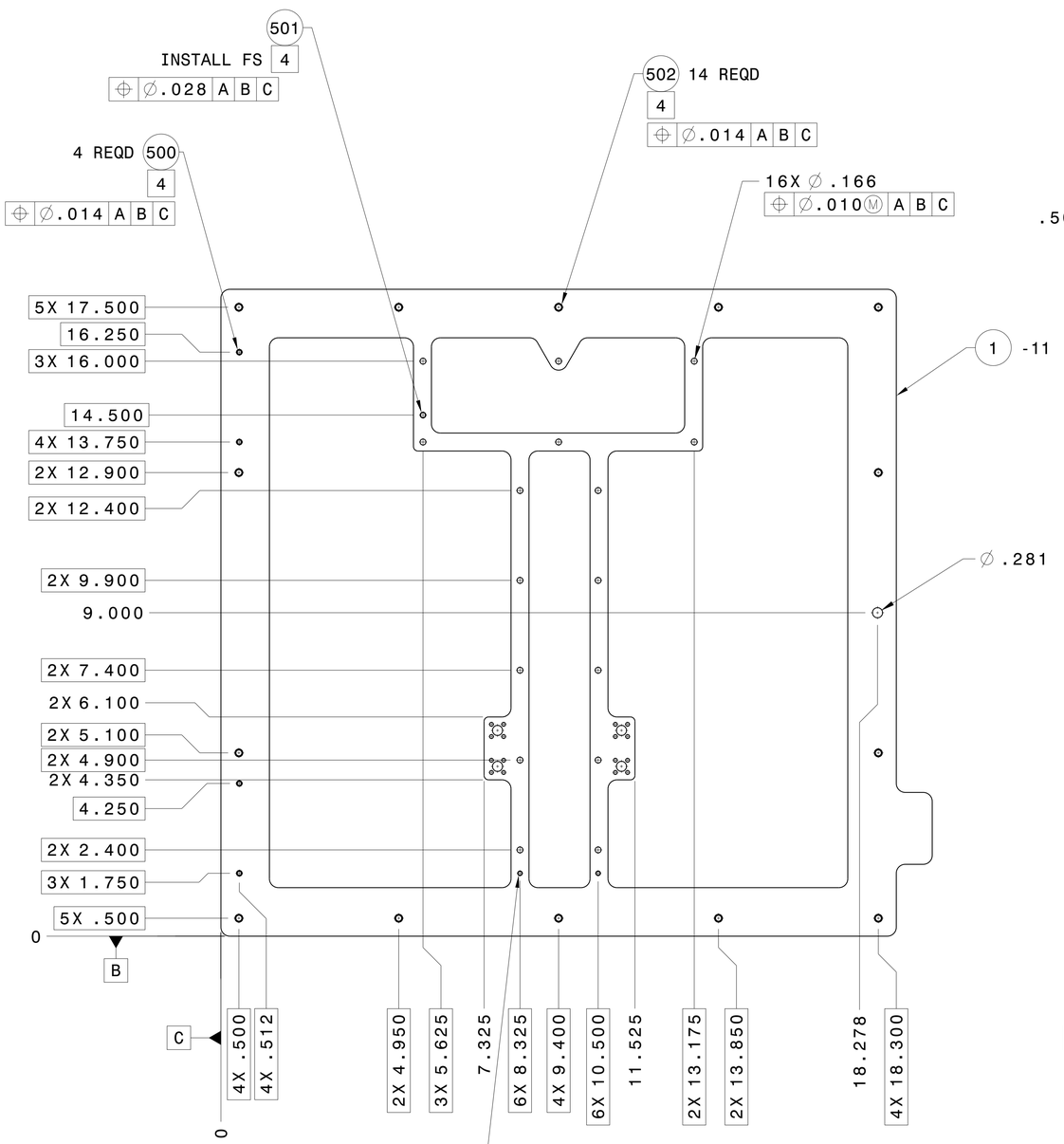

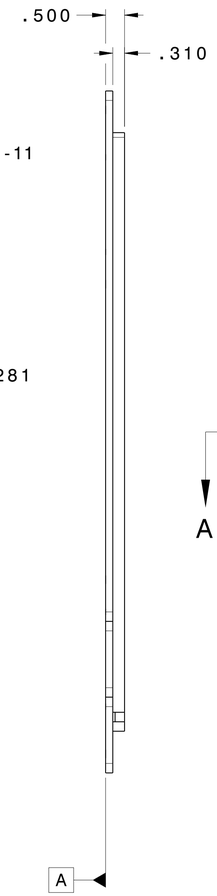

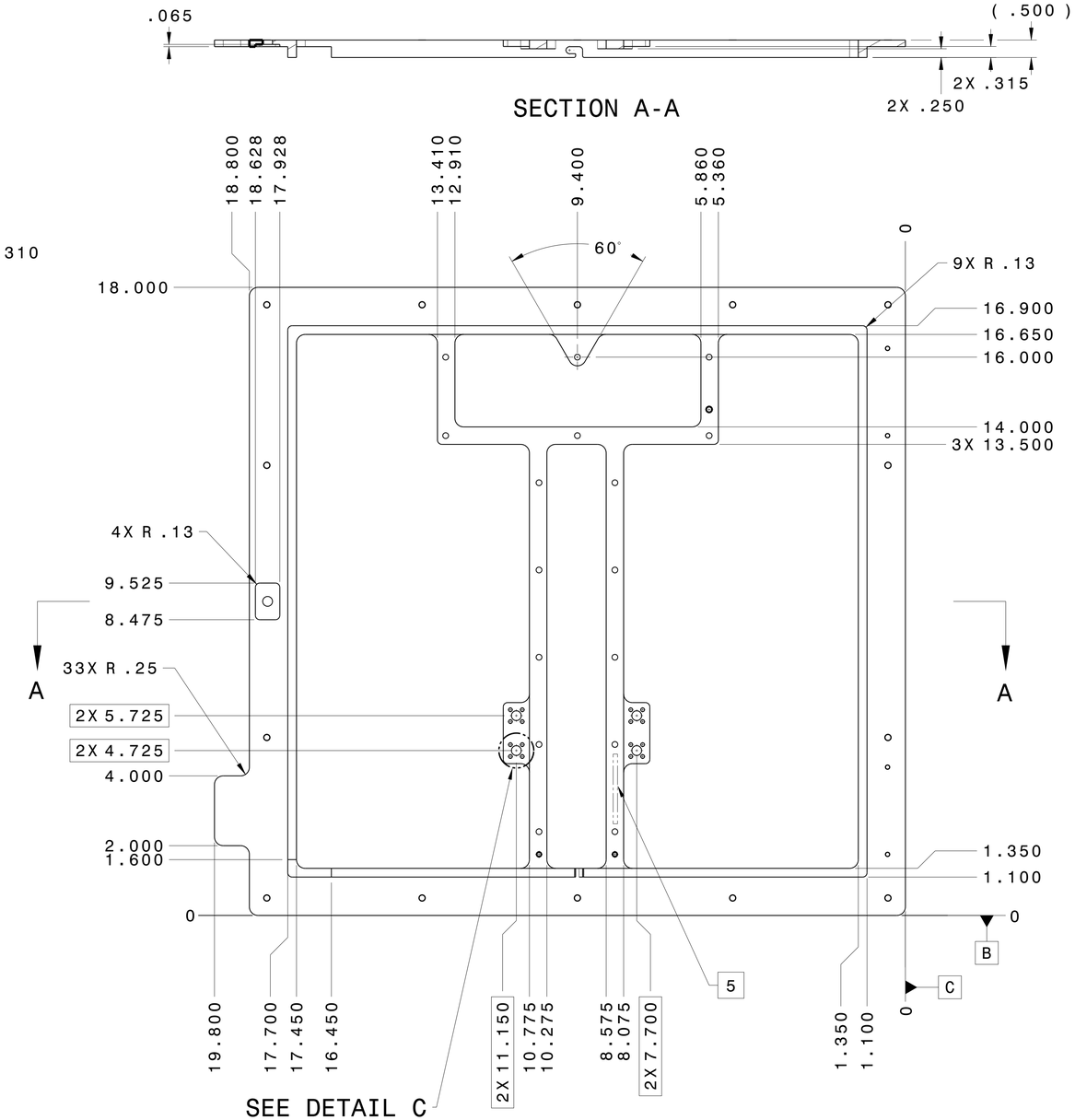

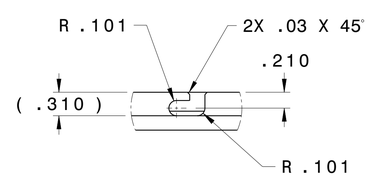

DETAIL B
SCALE: 1/1

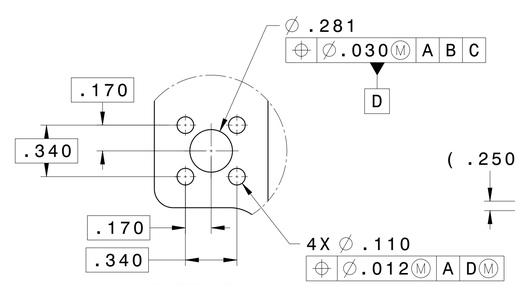

DETAIL C
SCALE: 2/1
4 PL

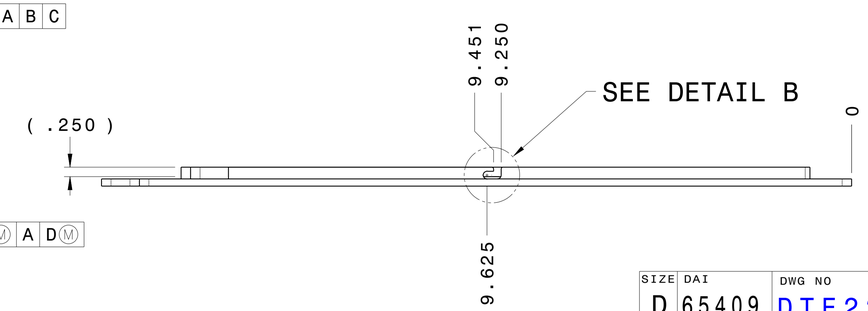

ITAR/EAR-CONTROLLED INFORMATION. USE OR DISCLOSURE OF THE INFORMATION CONTAINED HEREIN IS SUBJECT TO THE RESTRICTIONS ON SHEET 1.

SIZE	DAI	DWG NO	REV
D	65409	DTE2237593	1
SCALE 1 / 2		SHEET 2	