Nathan Hanuscin

CPE301 – SPRING 2018

Design Assignment Midterm

DO NOT REMOVE THIS PAGE DURING SUBMISSION:

The student understands that all required components should be submitted in complete for grading of this assignment.

NO	SUBMISSION ITEM	COMPLETED (Y/N)	MARKS (/MAX)
1	COMPONENTS LIST AND CONNECTION BLOCK DIAGRAM w/ PINS		
2.	INITIAL CODE OF TASK 1/A		
3.	INCREMENTAL / DIFFERENTIAL CODE OF TASK 2/B		
3.	INCREMENTAL / DIFFERENTIAL CODE OF TASK 3/C		
3.	INCREMENTAL / DIFFERENTIAL CODE OF TASK 4/D		
3.	INCREMENTAL / DIFFERENTIAL CODE OF TASK 5/E		
4.	SCHEMATICS		
5.	SCREENSHOTS OF EACH TASK OUTPUT		
5.	SCREENSHOT OF EACH DEMO		
6.	VIDEO LINKS OF EACH DEMO		
7.	GOOGLECODE LINK OF THE DA		

1. COMPONENTS LIST AND CONNECTION BLOCK DIAGRAM w/ PINS

LM34 Temp Sensor
ESP8266

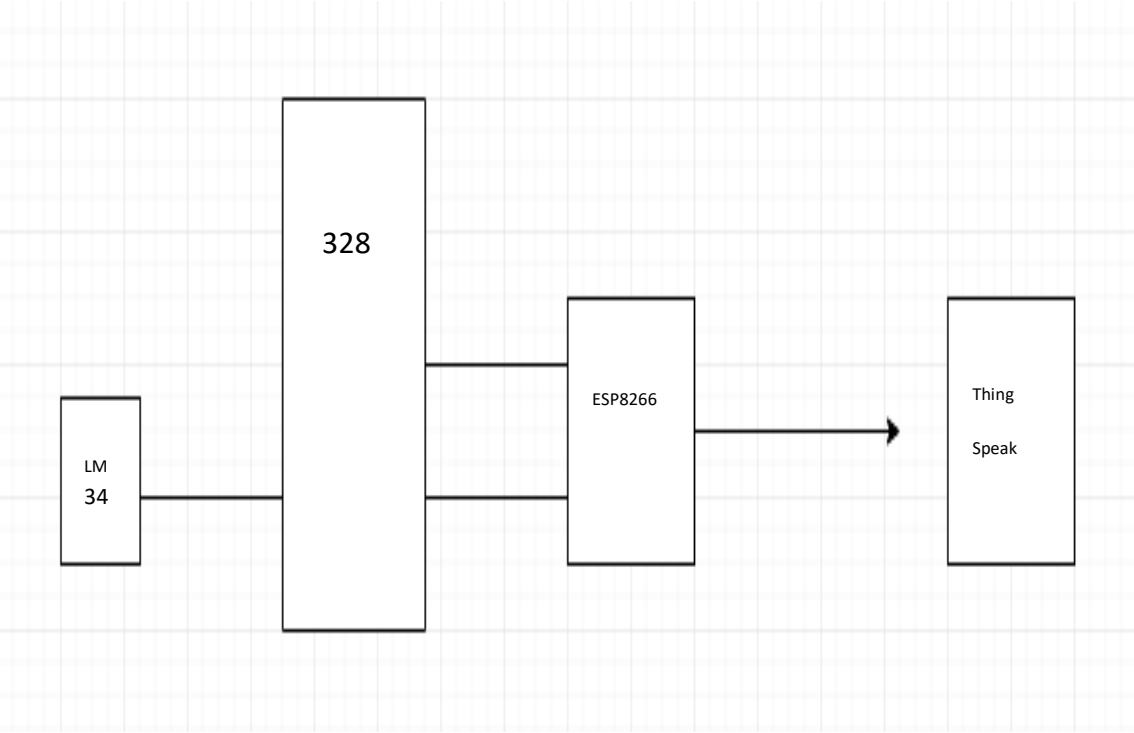

2. INITIAL/DEVELOPED CODE OF TASK 1/A

Modified code from DA3

3. MODIFIED CODE OF TASK 2/A from TASK 1/A

```c
#define F_CPU 8000000UL
#define UBRR_115200 3 // for 8Mhz with 8.5% error

#define Channel_ID "461798"


#include <avr/io.h>
#include <util/delay.h>
#include <stdio.h>
#include <avr/interrupt.h>
#include <stdint.h>

volatile unsigned int adc_temp;
char outs[20];


void adc_init(void)
{
    /** Setup and enable ADC **/
    ADMUX = 0;                  //select ADC0 Pin as input
    ADMUX = (0<<REFS1)|         //Reference Selection Bits
    (1<<REFS0)|                 //AVcc - external cap at AREF
    (1<<ADLAR);                 //ADC left Adjust Result

    ADCSRA = (1<<ADEN)|         //ADC ENable
    (1<<ADSC)|                  //ADC Start Conversion
    (1<<ADATE)|                 //ADC Auto Trigger Enable
    (0<<ADIF)|                  //ADC Interrupt Flag
    (0<<ADIE)|                  //ADC Interrupt Enable
    (1<<ADPS2)|                 //ADC Pre-scaler of 64
    (1<<ADPS1)|
    (0<<ADPS0);

}
```

```c
/* READ ADC PINS*/
void read_adc(void)
{
    unsigned char i = 4;                    //set for 4 ADC reads
    adc_temp = 0;                           //initialize temp to 0
    while (i--)
    {
        ADCSRA |= (1<<ADSC);                //start the conversion
        while((ADCSRA & (1<<ADIF)) == 0);   //wait for conversion to finish
        adc_temp += ADCH*2;                 //get temp value
        _delay_ms(50);                      //wait a bit
    }
    adc_temp = adc_temp / 4;                // Average a few samples

}

/* INIT USART (RS-232) */
void USART_init( unsigned int ubrr )
{
    UBRR0H = (unsigned char)(ubrr>>8);          //set baud rate
    UBRR0L = (unsigned char)ubrr;
    UCSR0B = (1 << TXEN0) | (1 <<RXEN0);        // Enable receiver, transmitter
    UCSR0C = (1 << UCSZ00) | (1 << UCSZ01);     //asynchronous 8-bit data 1 stop bit
}

/* SEND A STRING TO THE RS-232*/
void USART_tx_string( char *data )
{
    while ((*data != '\0'))
    {
        while (!(UCSR0A & (1 <<UDRE0)));    //wait for the transmit buffer to empty
        UDR0 = *data;                       //put the data into the empty buffer, which sends the data
        _delay_ms(125);                     // wait a bit
        data++;
    }
}
```

```c
void usart_send( unsigned char ascii)
{
    while(!(UCSR0A & (1<<UDRE0)));
    UDR0 = ascii;
}
unsigned char usart_receive(void)
{
    while (!(UCSR0A & (1<<RXC0)));
    return UDR0;
}
void send_AT( unsigned char message[])
{
    unsigned char i=0;
    while(message[i] != '\0')
    {
        usart_send(message[i]); // This sends data to esp
        i++;
    }
}


int main(void)
{
    unsigned char AT[] = "AT\r\n";
    unsigned char CWMODE[] = "AT+CWMODE=3\r\n";
    unsigned char CWJAP[] = "AT+CWJAP= \"SSID\",\"PASSWORD\"\r\n";

    unsigned char CIPMUX[] = "AT+CIPMUX=0\r\n";
    //unsigned char CIPMUX[] = "AT+CIPMUX=1\r\n";

    unsigned char CIPSTART[] = "AT+CIPSTART=0,\"TCP\",\"api.thingspeak.com\",80\r\n";

    unsigned char CIPSEND[] = "AT+CIPSEND=45\r\n";
    //unsigned char CIPSEND[] = "AT+CIPSEND=0,110\r\n";

    //unsigned char GET_DATA[] = "GET https://api.thingspeak.com/apps/thinghttp/send_request?api_key=D6UQ4AHE1FSE4808\r\n";
```

```c
    unsigned char SEND_DATA[] = "GET /update?key=PG5YKHOM60E8XQRI&field1=";
    //unsigned char SEND_DATA[] = "GET https://api.thingspeak.com/update?api_key=PG5YKHOM60E8XQRI=50\r\n";


    adc_init();                         //Initialize the ADC (Analog / Digital Converter)
    USART_init(UBRR_115200);            //Initialize the USART (RS232 interface)
    _delay_ms(125);                     //wait a bit

    _delay_ms(200);
    send_AT(AT);                    //send AT commands
    _delay_ms(2000);
    send_AT(CWMODE);                //initialize wifi mode
    _delay_ms(2000);
    send_AT(CIPMUX);                //single connection
    _delay_ms(2000);
    send_AT(CWJAP);                 //connect to wifi network
    _delay_ms(2000);
    send_AT(CIPSTART);              //connect to thingspeak server
    _delay_ms(2000);

    while(1)
    {
        read_adc();
        snprintf(outs,sizeof(outs),"%3d\r\n", adc_temp);        // convert to string
        send_AT(CIPSEND);                                       // send number of bytes
        _delay_ms(2000);
        send_AT(SEND_DATA);                                     // send data command
        _delay_ms(2000);
        USART_tx_string(outs);                                  // send converted value
        _delay_ms(15000);

    }
}
```

4. SCHEMATICS

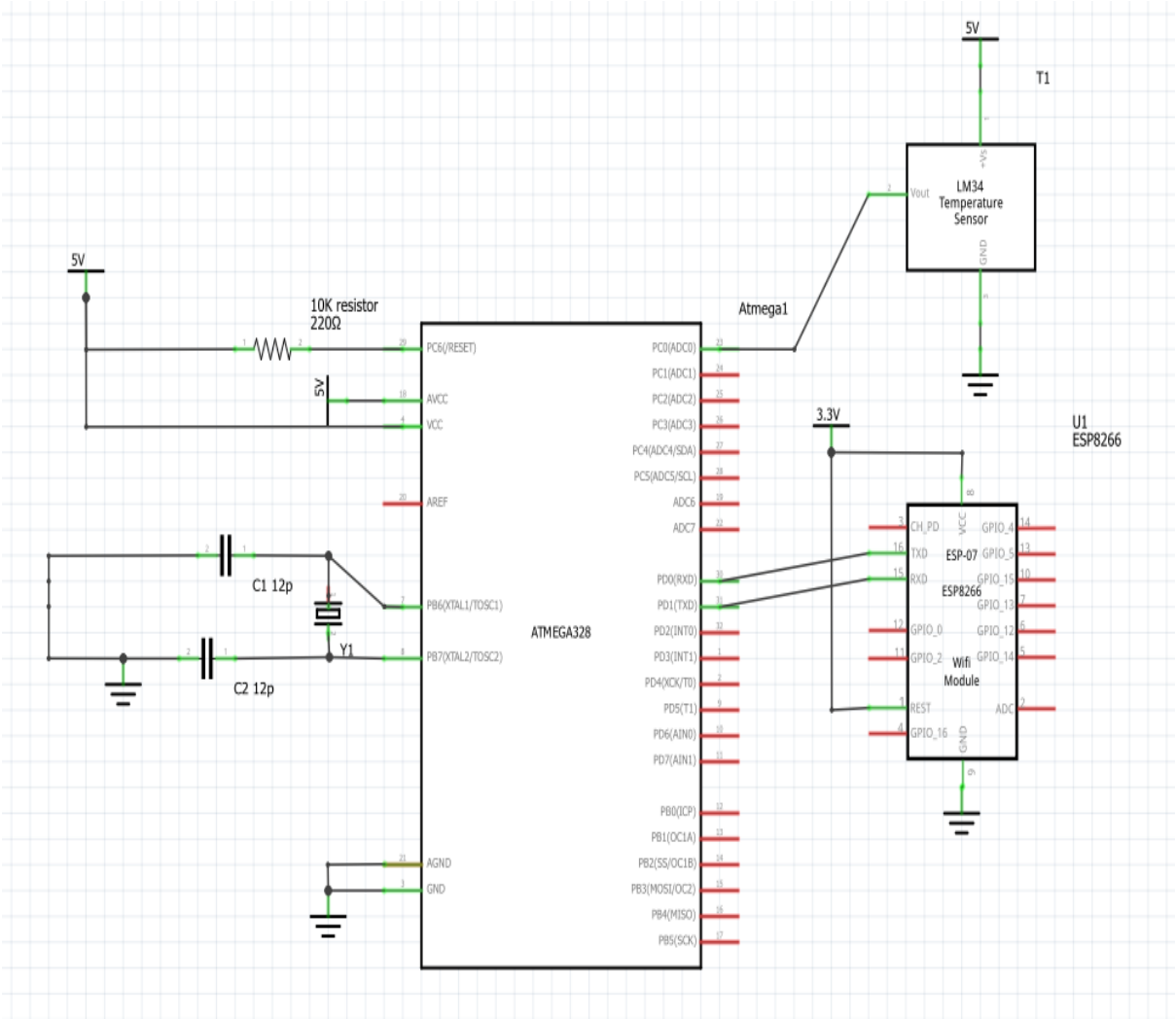

5. SCREENSHOTS OF EACH TASK OUTPUT (ATMEL STUDIO OUTPUT)

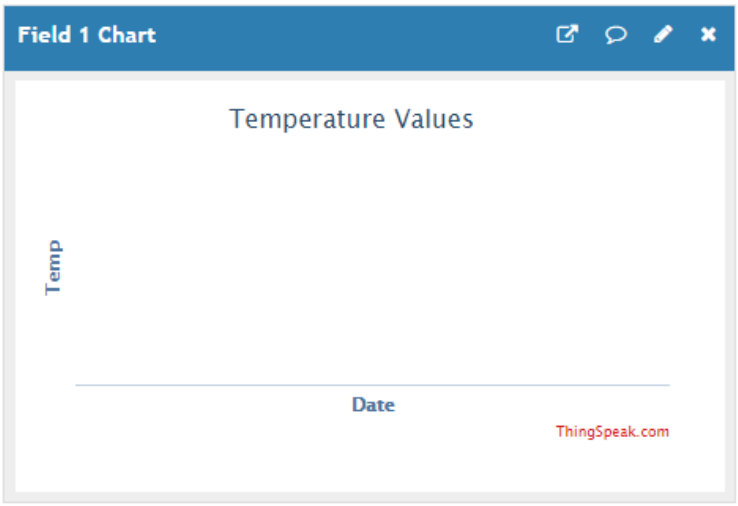

At this point I still am having trouble sending data to the server. Below I tried sending data with the ESP8266 connected to an FDTI chip, however when I input AT+CIPSEND=47, the terminal goes down to the > symbol, but then I cannot input anything. After about a minute it will say closed and I will have to restart the terminal. I am going in to the tutoring center tomorrow to try and fix this.

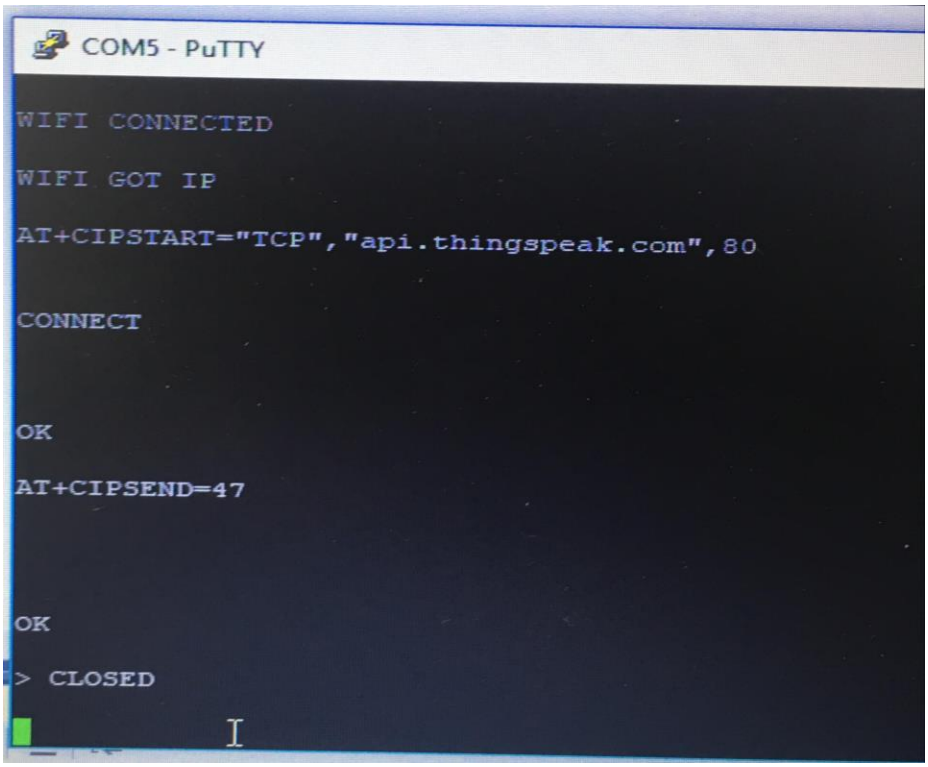

6. SCREENSHOT OF EACH DEMO (BOARD SETUP)

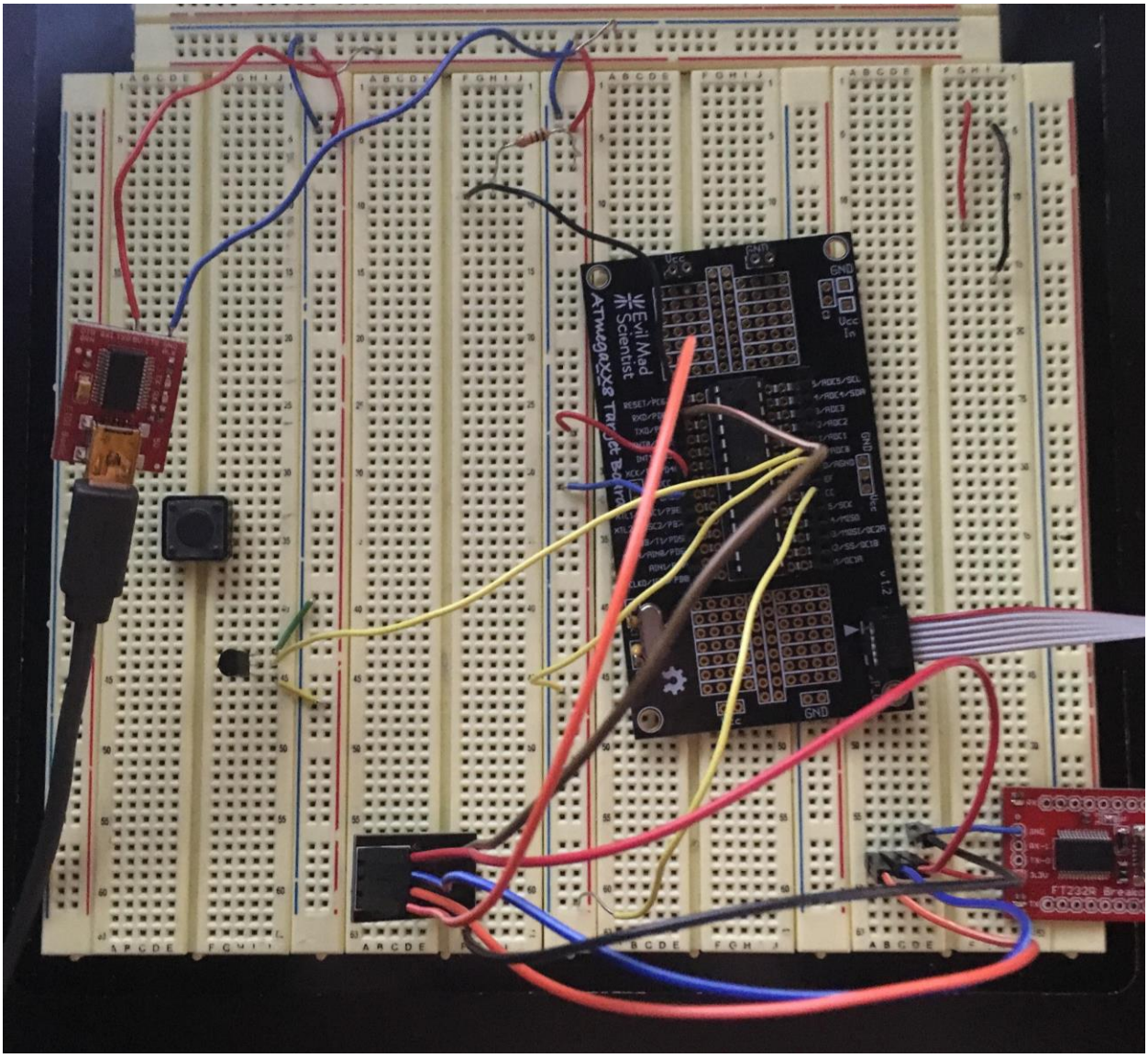

7. VIDEO LINKS OF EACH DEMO

None yet.

8. GITHUB LINK OF THIS DA

https://github.com/nhanuscin/submit/tree/master/DA_Midterm

Student Academic Misconduct Policy

http://studentconduct.unlv.edu/misconduct/policy.html

"*This assignment submission is my own, original work*".

Nathan Hanuscin