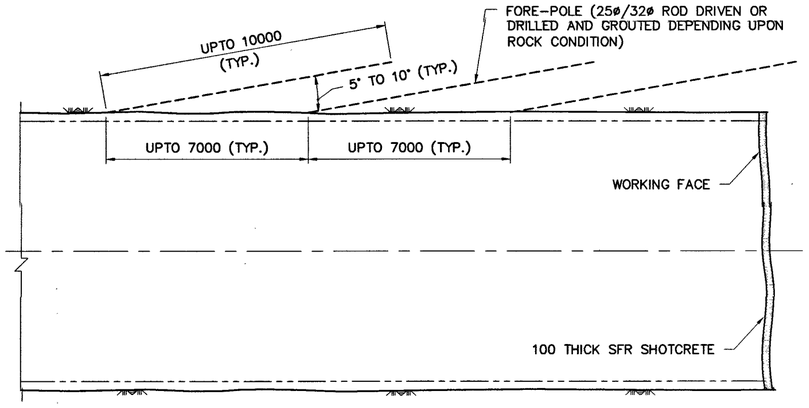

LONGITUDINAL SECTION

FORE POLING - TYPICAL DETAILS

(STEEL RIBS & OTHER SUPPORTS NOT SHOWN)

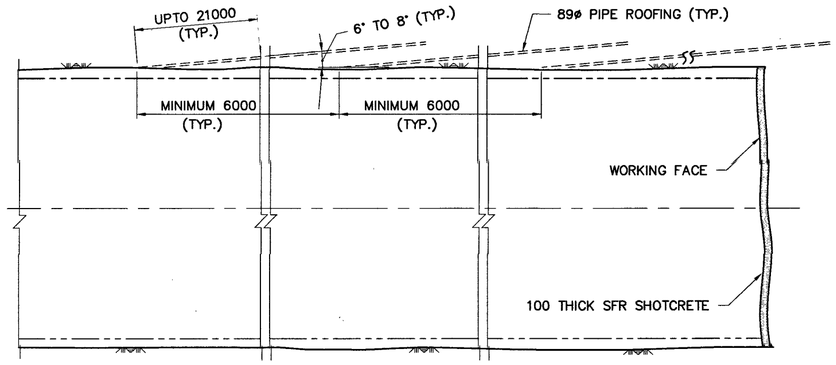

LONGITUDINAL SECTION

PIPE ROOFING - TYPICAL DETAILS

(STEEL RIBS & OTHER SUPPORTS NOT SHOWN)

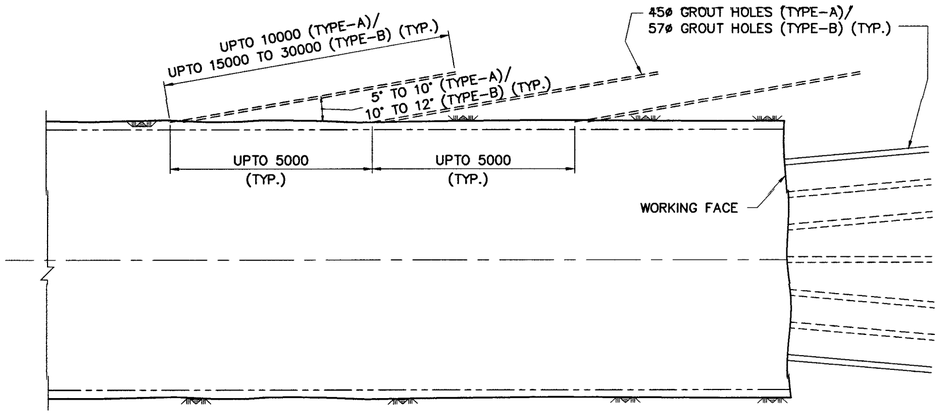

LONGITUDINAL SECTION

PRE-GROUTING (TYPE-A)/

PRE- GROUTING WITH COLLOIDAL SILICA (TYPE-B)

TYPICAL DETAILS

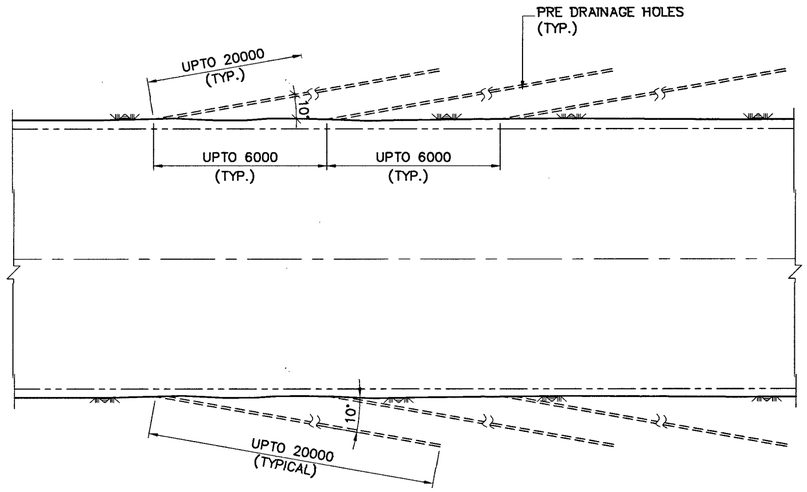

PLAN

PRE-DRAINAGE HOLES - TYPICAL DETAILS

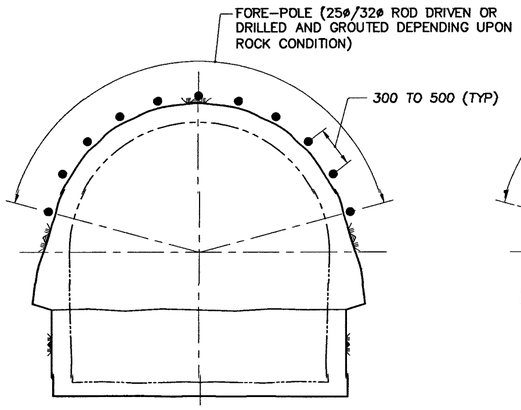

TYPICAL CROSS SECTION

FORE POLING - TYPICAL DETAILS

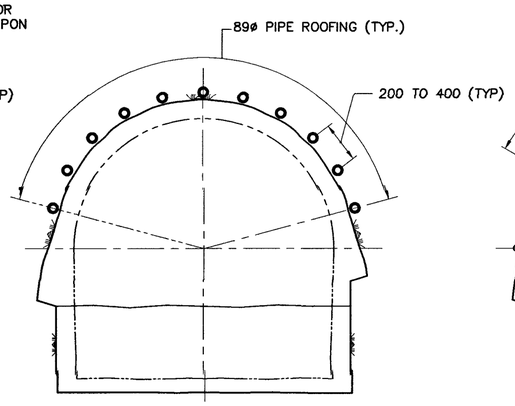

TYPICAL CROSS SECTION

PIPE ROOFING - TYPICAL DETAILS

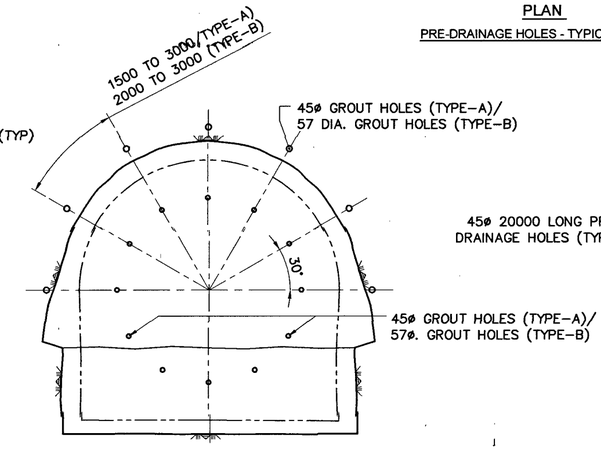

TYPICAL CROSS SECTION

PRE-GROUTING (TYPE-A) /

PRE-GROUTING WITH COLLOIDAL SILICA (TYPE-B)

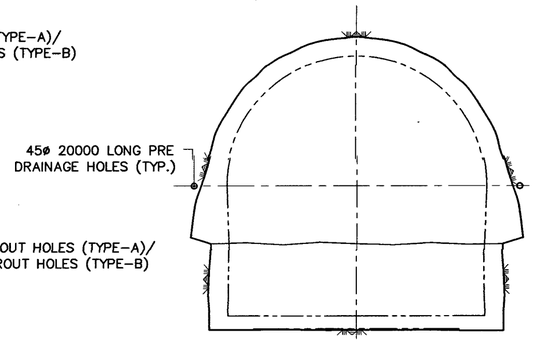

TYPICAL SECTION

PRE-DRAINAGE HOLES - TYPICAL DETAILS

NOTES:-

1. सभी माप मिलीमीटर में दिए गए है।
   ALL DIMENSIONS ARE IN MILLIMETERS.
2. THIS DRAWING SHALL BE READ IN CONJUNCTION WITH RELEVANT DRAWINGS OF ROCK SUPPORT (TYPICAL CROSS-SECTIONS) OF ADITS/TUNNELS. TUNNEL EXCAVATION SHALL BE AS PER SECTION B.3 OF TECHNICAL SPECIFICATIONS.
3. PROBE HOLES (UPTO 20M LONG) SHALL BE DRILLED TO EXPLORE THE STRATA AHEAD OF EXCAVATION PRIOR TO EMPLOYING FORE-POLING OR PIPE ROOFING TECHNIQUE IN GEOLOGICAL POOR REACHES.
4. FOREPOL-ING,PIPE ROOFING, PRE-GROUTING AND PRE-DRAINAGE HOLES SHALL BE AS PER SECTION B.4 OF TECHNICAL SPECIFICATION.
5. PRE-GROUTING SHALL BE DONE IN SUCH A WAY THAT BETWEEN CONSECUTIVE PRE-GROUTING AT LEAST 5M LENGTH OF PRE-GROUTING IS OVERLAPPED. IN CASE OF VERY POOR GEOLOGICAL CONDITIONS AND HEAVY INGRESS OF WATER, PRE GROUTING WITH COLLOIDAL SILICA AS PER SECTION B.4 OF TECHNICAL SPECIFICATIONS SHALL BE USED.
6. FORE POLING SHALL BE CARRIED OUT IN SUCH A WAY THAT ATLEAST 3M LENGTH OF FORE POLE IS OVERLAPPED
7. WHEN GROUND CONDITION ARE SUCH THAT FACE CAN NOT BE STABILIZED BY FORE POLING, SPECIAL TECHNIQUE OF PIPE ROOFING SHALL BE ADOPTED. THE PIPE ROOFING SHALL BE CARRIED OUT BY SPECIAL AGENCY ONLY CONFORMING TO SECTION B.4 OF TECHNICAL SPECIFICATION. PIPE ROOFING SHALL BE DONE IN SUCH A WAY THAT THE LENGTH OF OVERLAP BETWEEN CONSECUTIVE PIPE ROOFING EQUAL TO EXCAVATED DIAMETER OF TUNNEL IS ENSURED.
8. FORE POLING ALONG WITH PRE-GROUTING SHALL BE ADOPTED TO SUPPORT THE ROCK WHERE RMR VALUE IS LESS THAN 35 AS DIRECTED BY ENGINEER-IN-CHARGE. THE LENGTH OF FORE POLES AND PRE GROUT HOLES AS WELL AS SPACING OF THESE HOLES SHALL CONFORM TO SECTION B.4 OF TECHNICAL SPECIFICATIONS AND WILL DEPEND UPON GEOLOGICAL CONDITIONS AT SITE AND MAY BE MODIFIED WITH THE APPROVAL OF ENGINER-IN-CHARGE.
9. IF THE INGRESS OF WATER IS SIGNIFICANT DRILLING OF EXPLORATORY/CHECK HOLES (LENGTH UPTO 15M) SHALL BE CARRIED OUT AS PER DIRECTION OF ENGINEER-IN-CHARGE.
10. WATER PRESSURE TESTING SHALL BE DONE PRIOR TO GROUTING FOR DETERMINATION OF PERMEABILITY OF ROCK MASS AND SELECTION OF GROUT MIX.
11. THE LOCATION, ORIENTATION AND SPACING OF PRE-DRAINAGE HOLES ARE INDICATIVE AND MAY BE MODIFIED BY ENGINEER-IN-CHARGE AS PER SITE CONDITIONS.

0 1.50 375 7.50 METRE

एन एच पी सी लिमिटेड
(भारत सरकार का उद्यम)
NHPC Limited
(A GOVT. OF INDIA ENTERPRISE)

दिबांग बहुउद्देशीय परियोजना
DIBANG MULTIPURPOSE PROJECT

POWER HOUSE COMPLEX
ADITS / TUNNELS
ADDITIONAL MEASURES FOR
TUNNELING IN POOR REACHES

DATE	NO.	REVISION OR ISSUES	BY	CH	APP
17.01.2024	00	ISSUED FOR CONSTRUCTION			

DESIGN MEMO NO. डिजाइन मेमो संख्या

DRAWN अंकित PRABHAT ASWAL	SUBMITTED प्रस्तुत PRABHAT ASWAL	RECOMMENDED अनुशंसित RAJEEV KUMAR		APPROVED अनुमोदन S.K. CHOUDHURY

DATE दिनांक	DRG. NO. ड्रॉइंग संख्या						
JAN 2024	NHDB	4BC4	41	DD	1007	00

DRG. NO. NHDB-4BC4-41-DD-1007-00