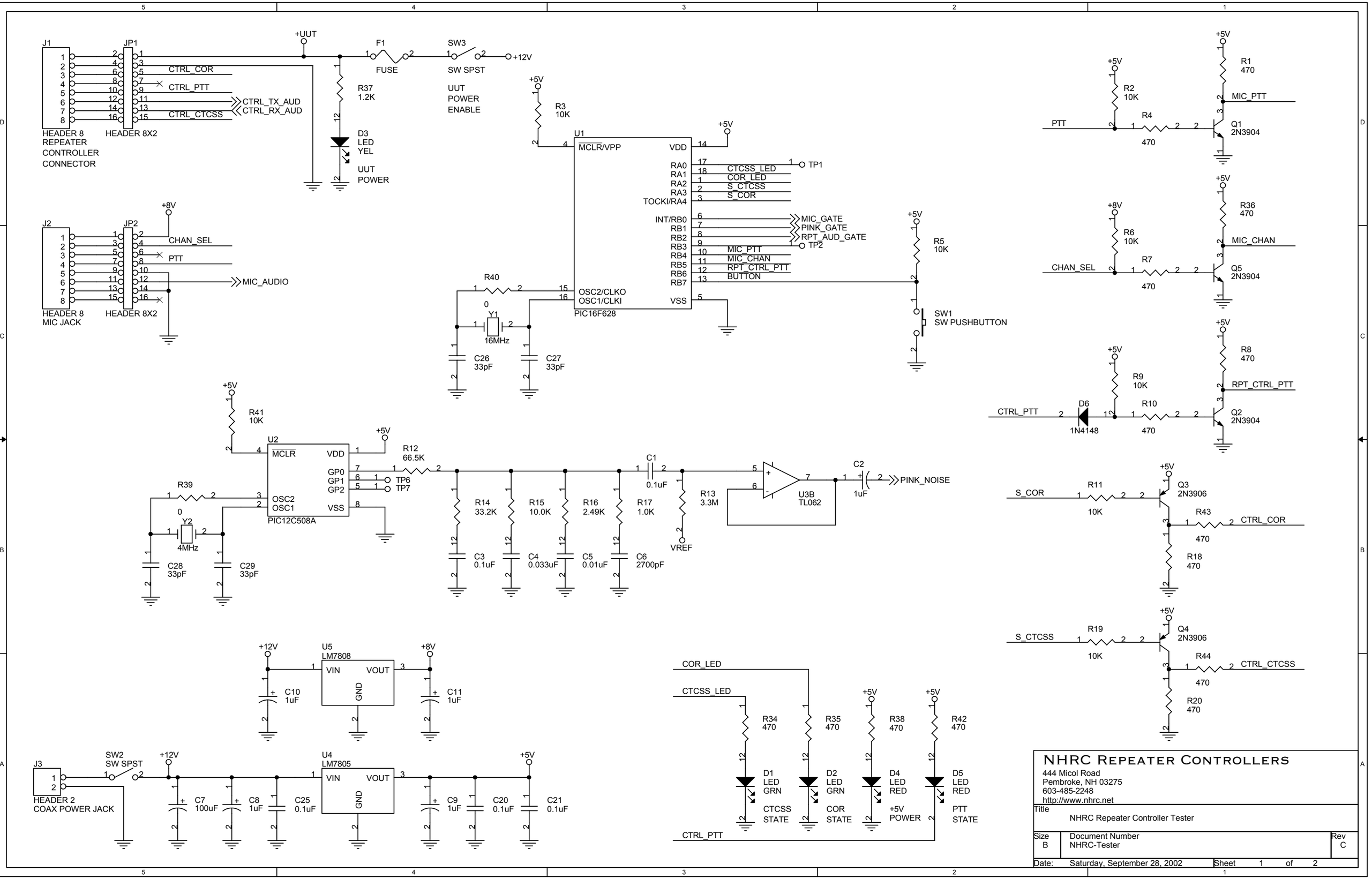
J1
HEADER 8
REPEATER
CONTROLLER
CONNECTOR
JP1
HEADER 8X2
+UUT
CTRL_COR
CTRL_PTT
CTRL_TX_AUD
CTRL_RX_AUD
CTRL_CTCSS
F1
FUSE
SW3
SW SPST
+12V
UUT
POWER
ENABLE
R37
1.2K
D3
LED
YEL
UUT
POWER
J2
HEADER 8
MIC JACK
JP2
HEADER 8X2
+8V
CHAN_SEL
PTT
MIC_AUDIO
R3
10K
U1
PIC16F628
MCLR/VPP
VDD
RA0
RA1
RA2
RA3
TOCKI/RA4
INT/RB0
RB1
RB2
RB3
RB4
RB5
RB6
RB7
OSC2/CLKO
OSC1/CLKI
VSS
CTCSS_LED
COR_LED
S_CTCSS
S_COR
TP1
MIC_GATE
PINK_GATE
RPT_AUD_GATE
TP2
MIC_PTT
MIC_CHAN
RPT_CTRL_PTT
BUTTON
R40
0
Y1
16MHz
C26
33pF
C27
33pF
R5
10K
SW1
SW PUSHBUTTON
R1
470
R2
10K
R4
470
PTT
Q1
2N3904
MIC_PTT
R36
470
R6
10K
R7
470
CHAN_SEL
Q5
2N3904
MIC_CHAN
R8
470
R9
10K
D6
1N4148
R10
470
CTRL_PTT
Q2
2N3904
RPT_CTRL_PTT
R41
10K
U2
PIC12C508A
MCLR
VDD
GP0
GP1
GP2
OSC2
OSC1
VSS
R12
66.5K
TP6
TP7
R39
0
Y2
4MHz
C28
33pF
C29
33pF
R14
33.2K
R15
10.0K
R16
2.49K
R17
1.0K
C1
0.1uF
R13
3.3M
VREF
U3B
TL062
C2
1uF
PINK_NOISE
C3
0.1uF
C4
0.033uF
C5
0.01uF
C6
2700pF
S_COR
R11
10K
Q3
2N3906
R43
470
CTRL_COR
R18
470
S_CTCSS
R19
10K
Q4
2N3906
R44
470
CTRL_CTCSS
R20
470
+12V
U5
LM7808
VIN
VOUT
GND
C10
1uF
C11
1uF
+8V
COR_LED
CTCSS_LED
R34
470
R35
470
R38
470
R42
470
D1
LED
GRN
CTCSS
STATE
D2
LED
GRN
COR
STATE
D4
LED
RED
+5V
POWER
D5
LED
RED
PTT
STATE
CTRL_PTT
J3
HEADER 2
COAX POWER JACK
SW2
SW SPST
U4
LM7805
C7
100uF
C8
1uF
C25
0.1uF
C9
1uF
C20
0.1uF
C21
0.1uF
NHRC Repeater Controllers
444 Micol Road
Pembroke, NH 03275
603-485-2248
http://www.nhrc.net
Title
NHRC Repeater Controller Tester
Size
B
Document Number
NHRC-Tester
Rev
C
Date:
Saturday, September 28, 2002
Sheet
1
of
2

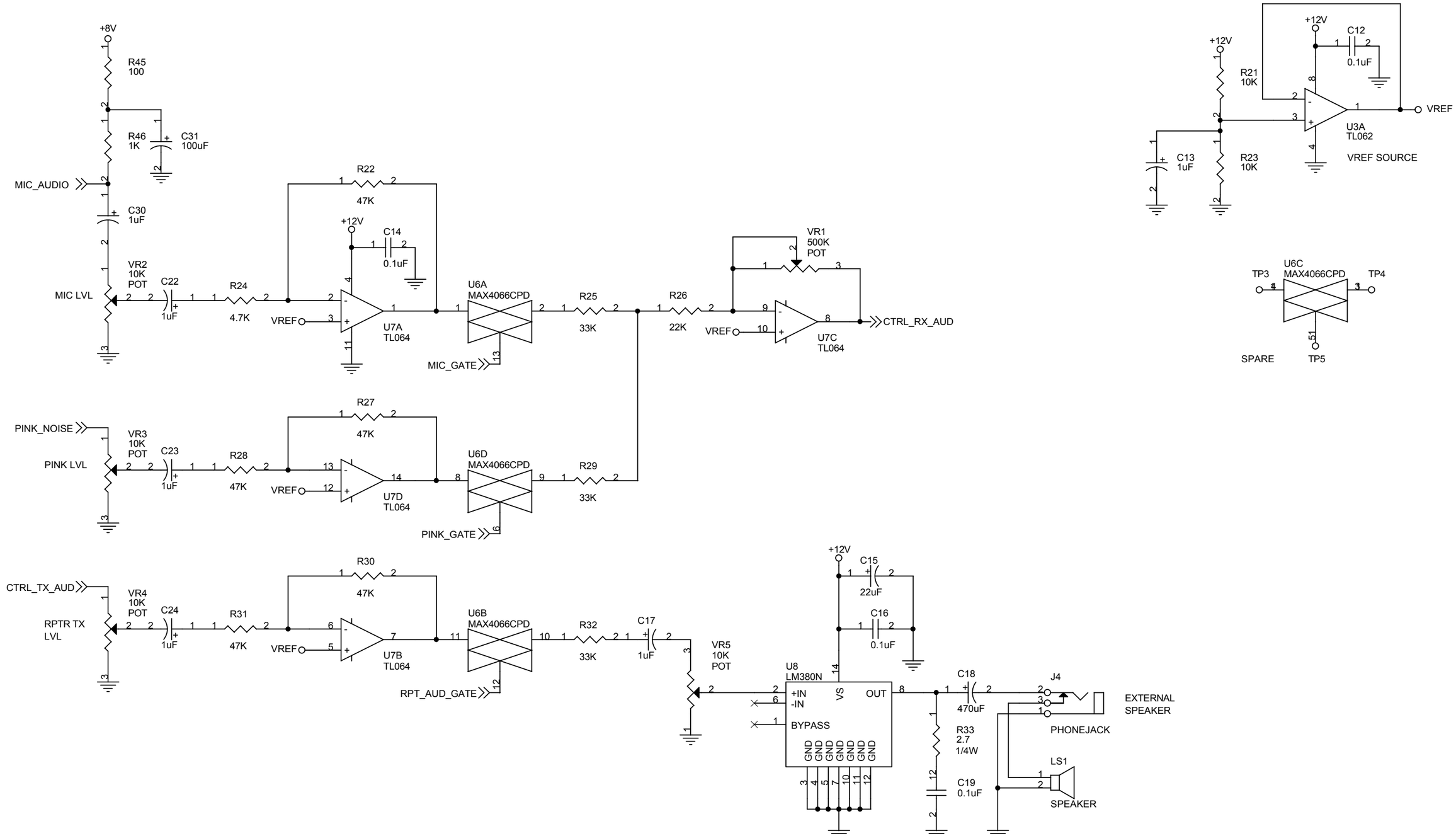

NHRC Repeater Controllers

444 Micol Road
Pembroke, NH 03275
603-485-2248
http://www.nhrc.net

Title	NHRC Repeater Controller Tester	
Size B	Document Number NHRC-Tester	Rev C
Date: Saturday, September 28, 2002	Sheet 2 of 2	