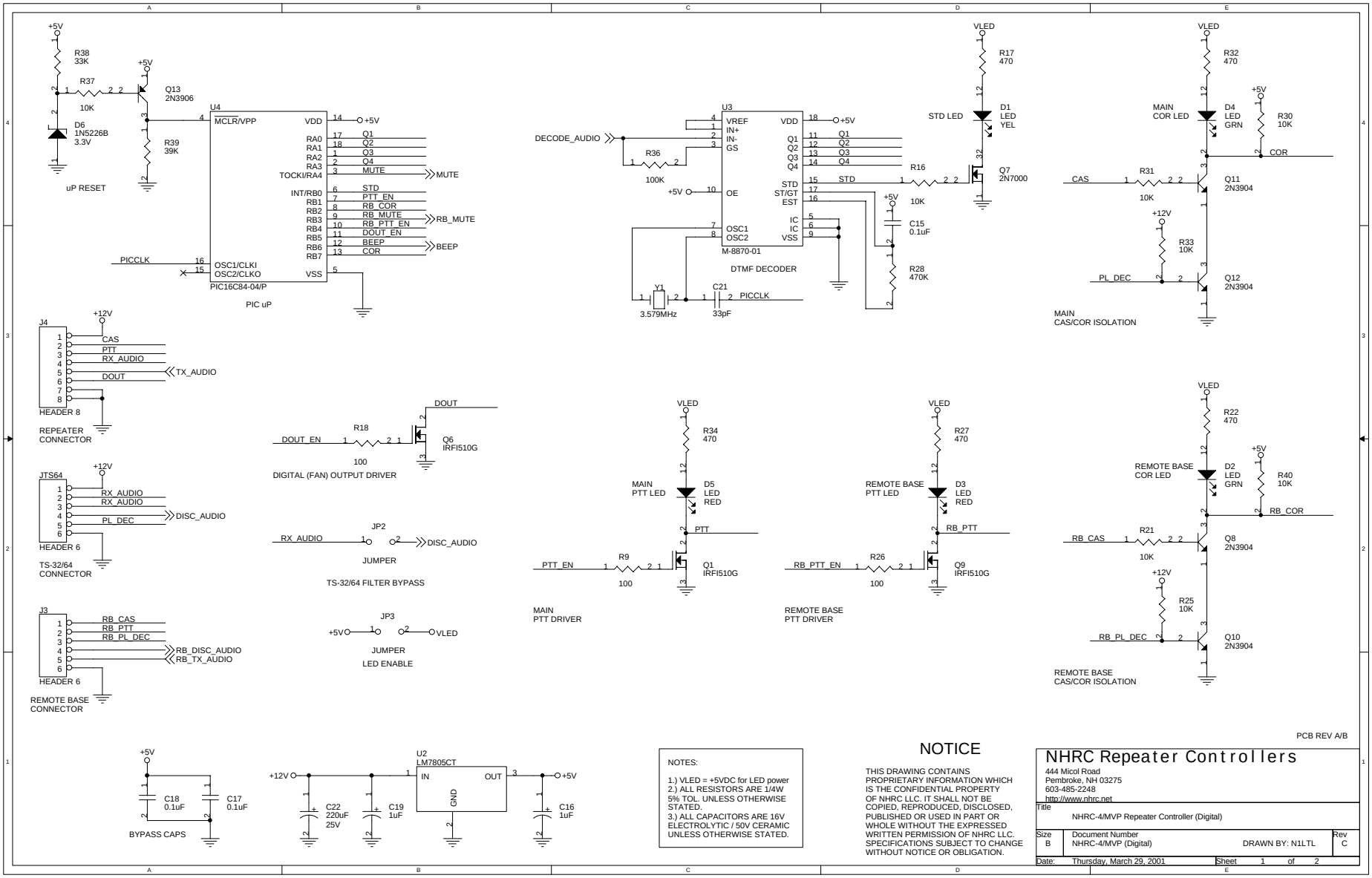
uP RESET
R38 33K
R37 10K
Q13 2N3906
D6 1N5226B 3.3V
R39 39K
U4
MCLR/VPP
VDD
RA0
RA1
RA2
RA3
TOCKI/RA4
INT/RB0
RB1
RB2
RB3
RB4
RB5
RB6
RB7
OSC1/CLKI
OSC2/CLKO
VSS
PICCLK
MUTE
RB_MUTE
BEEP
PIC16C84-04/P
PIC uP
U3
VREF
IN+
IN-
GS
OE
OSC1
OSC2
M-8870-01
DTMF DECODER
DECODE_AUDIO
R36 100K
Y1 3.579MHz
C21 33pF
STD
ST/GT
EST
IC
VSS
R16 10K
C15 0.1uF
R28 470K
R17 470
D1 LED YEL
STD LED
Q7 2N7000
R32 470
D4 LED GRN
MAIN COR LED
R30 10K
COR
R31 10K
Q11 2N3904
Q12 2N3904
R33 10K
MAIN CAS/COR ISOLATION
J4
HEADER 8
REPEATER CONNECTOR
CAS
PTT
RX_AUDIO
DOUT
TX_AUDIO
R18 100
Q6 IRFI510G
DIGITAL (FAN) OUTPUT DRIVER
JTS64
HEADER 6
TS-32/64 CONNECTOR
DISC_AUDIO
JP2
JUMPER
TS-32/64 FILTER BYPASS
J3
HEADER 6
REMOTE BASE CONNECTOR
RB_CAS
RB_PTT
RB_PL_DEC
RB_DISC_AUDIO
RB_TX_AUDIO
JP3
JUMPER
LED ENABLE
R34 470
D5 LED RED
MAIN PTT LED
R9 100
Q1 IRFI510G
MAIN PTT DRIVER
R27 470
D3 LED RED
REMOTE BASE PTT LED
R26 100
Q9 IRFI510G
REMOTE BASE PTT DRIVER
R22 470
D2 LED GRN
REMOTE BASE COR LED
R40 10K
R21 10K
Q8 2N3904
Q10 2N3904
R25 10K
REMOTE BASE CAS/COR ISOLATION
C18 0.1uF
C17 0.1uF
BYPASS CAPS
U2 LM7805CT
IN
OUT
GND
C22 220uF 25V
C19 1uF
C16 1uF
NOTES:
1.) VLED = +5VDC for LED power
2.) ALL RESISTORS ARE 1/4W 5% TOL. UNLESS OTHERWISE STATED.
3.) ALL CAPACITORS ARE 16V ELECTROLYTIC / 50V CERAMIC UNLESS OTHERWISE STATED.
NOTICE
THIS DRAWING CONTAINS PROPRIETARY INFORMATION WHICH IS THE CONFIDENTIAL PROPERTY OF NHRC LLC. IT SHALL NOT BE COPIED, REPRODUCED, DISCLOSED, PUBLISHED OR USED IN PART OR WHOLE WITHOUT THE EXPRESSED WRITTEN PERMISSION OF NHRC LLC. SPECIFICATIONS SUBJECT TO CHANGE WITHOUT NOTICE OR OBLIGATION.
PCB REV A/B
NHRC Repeater Controllers
444 Micol Road
Pembroke, NH 03275
603-485-2248
http://www.nhrc.net
Title
NHRC-4/MVP Repeater Controller (Digital)
Size B
Document Number NHRC-4/MVP (Digital)
DRAWN BY: N1LTL
Rev C
Date: Thursday, March 29, 2001
Sheet 1 of 2

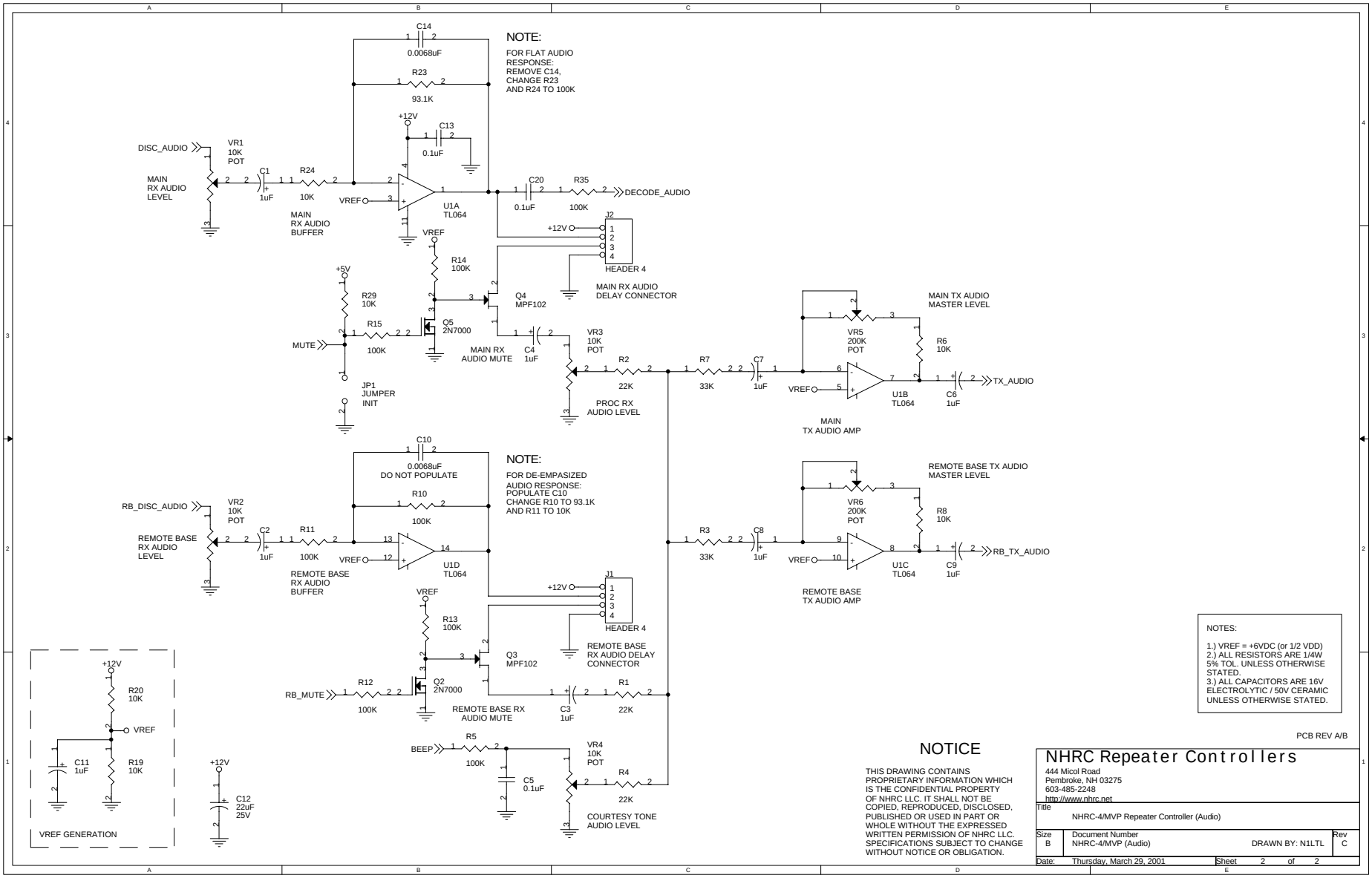

NOTES:

1.) VREF = +6VDC (or 1/2 VDD)
2.) ALL RESISTORS ARE 1/4W 5% TOL. UNLESS OTHERWISE STATED.
3.) ALL CAPACITORS ARE 16V ELECTROLYTIC / 50V CERAMIC UNLESS OTHERWISE STATED.

PCB REV A/B

NOTICE

THIS DRAWING CONTAINS PROPRIETARY INFORMATION WHICH IS THE CONFIDENTIAL PROPERTY OF NHRC LLC. IT SHALL NOT BE COPIED, REPRODUCED, DISCLOSED, PUBLISHED OR USED IN PART OR WHOLE WITHOUT THE EXPRESSED WRITTEN PERMISSION OF NHRC LLC. SPECIFICATIONS SUBJECT TO CHANGE WITHOUT NOTICE OR OBLIGATION.

NHRC Repeater Controllers
444 Micol Road
Pembroke, NH 03275
603-485-2248
http://www.nhrc.net

Title	NHRC-4/MVP Repeater Controller (Audio)		
Size B	Document Number NHRC-4/MVP (Audio)	DRAWN BY: N1LTL	Rev C
Date: Thursday, March 29, 2001	Sheet 2 of 2		