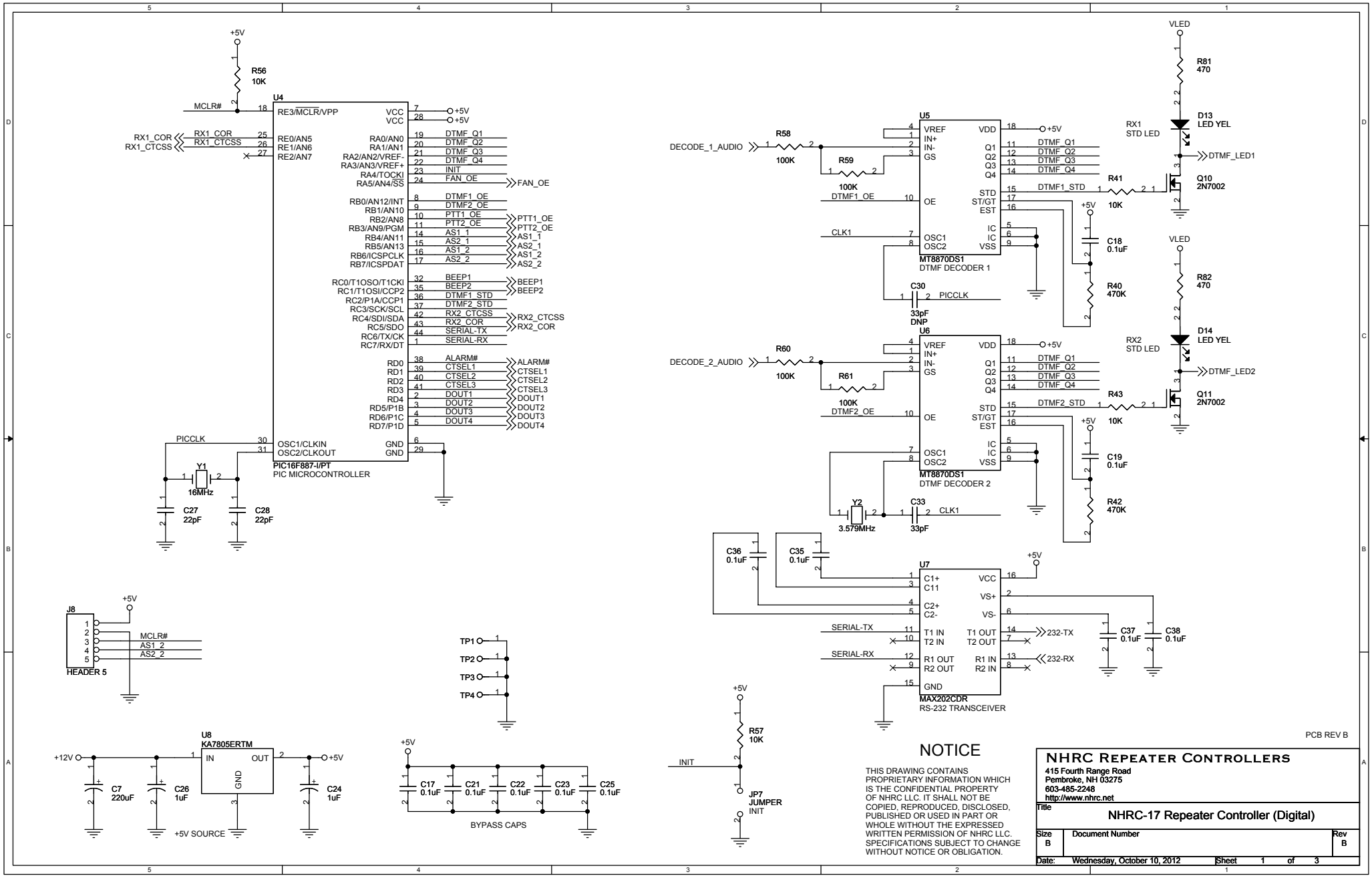

NOTICE

THIS DRAWING CONTAINS PROPRIETARY INFORMATION WHICH IS THE CONFIDENTIAL PROPERTY OF NHRC LLC. IT SHALL NOT BE COPIED, REPRODUCED, DISCLOSED, PUBLISHED OR USED IN PART OR WHOLE WITHOUT THE EXPRESSED WRITTEN PERMISSION OF NHRC LLC. SPECIFICATIONS SUBJECT TO CHANGE WITHOUT NOTICE OR OBLIGATION.

NHRC REPEATER CONTROLLERS
415 Fourth Range Road
Pembroke, NH 03275
603-485-2248
http://www.nhrc.net

Title: NHRC-17 Repeater Controller (Digital)

Size	Document Number	Rev
B		B

Date: Wednesday, October 10, 2012 Sheet 1 of 3

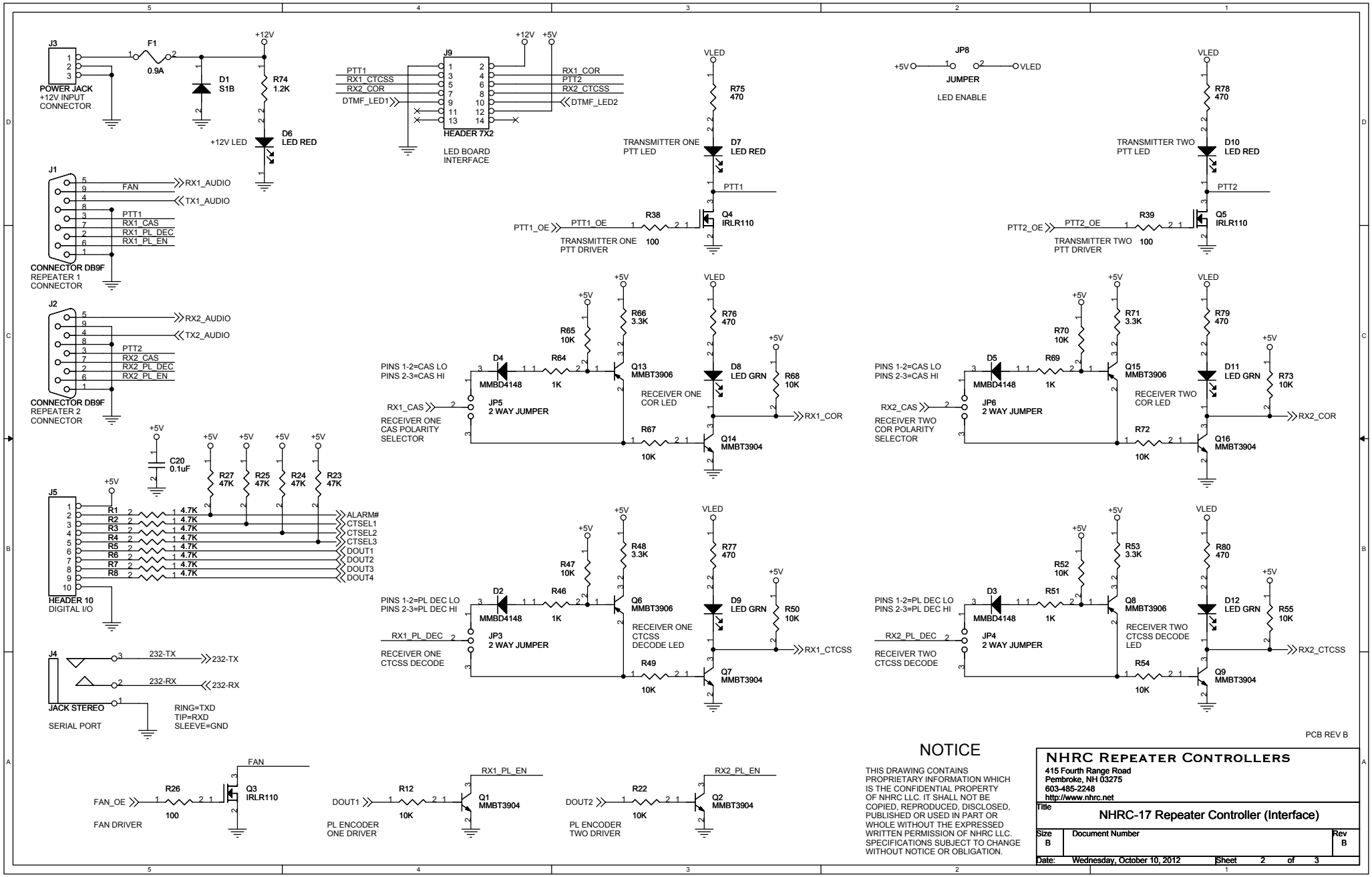

NOTICE

THIS DRAWING CONTAINS PROPRIETARY INFORMATION WHICH IS THE CONFIDENTIAL PROPERTY OF NHRC LLC. IT SHALL NOT BE COPIED, REPRODUCED, DISCLOSED, PUBLISHED OR USED IN PART OR WHOLE WITHOUT THE EXPRESSED WRITTEN PERMISSION OF NHRC LLC. SPECIFICATIONS SUBJECT TO CHANGE WITHOUT NOTICE OR OBLIGATION.

NHRC REPEATER CONTROLLERS
415 Fourth Range Road
Pembroke, NH 03275
603-485-2248
http://www.nhrc.net

Title: NHRC-17 Repeater Controller (Interface)

Size	Document Number	Rev
B		B

Date: Wednesday, October 10, 2012 Sheet 2 of 3

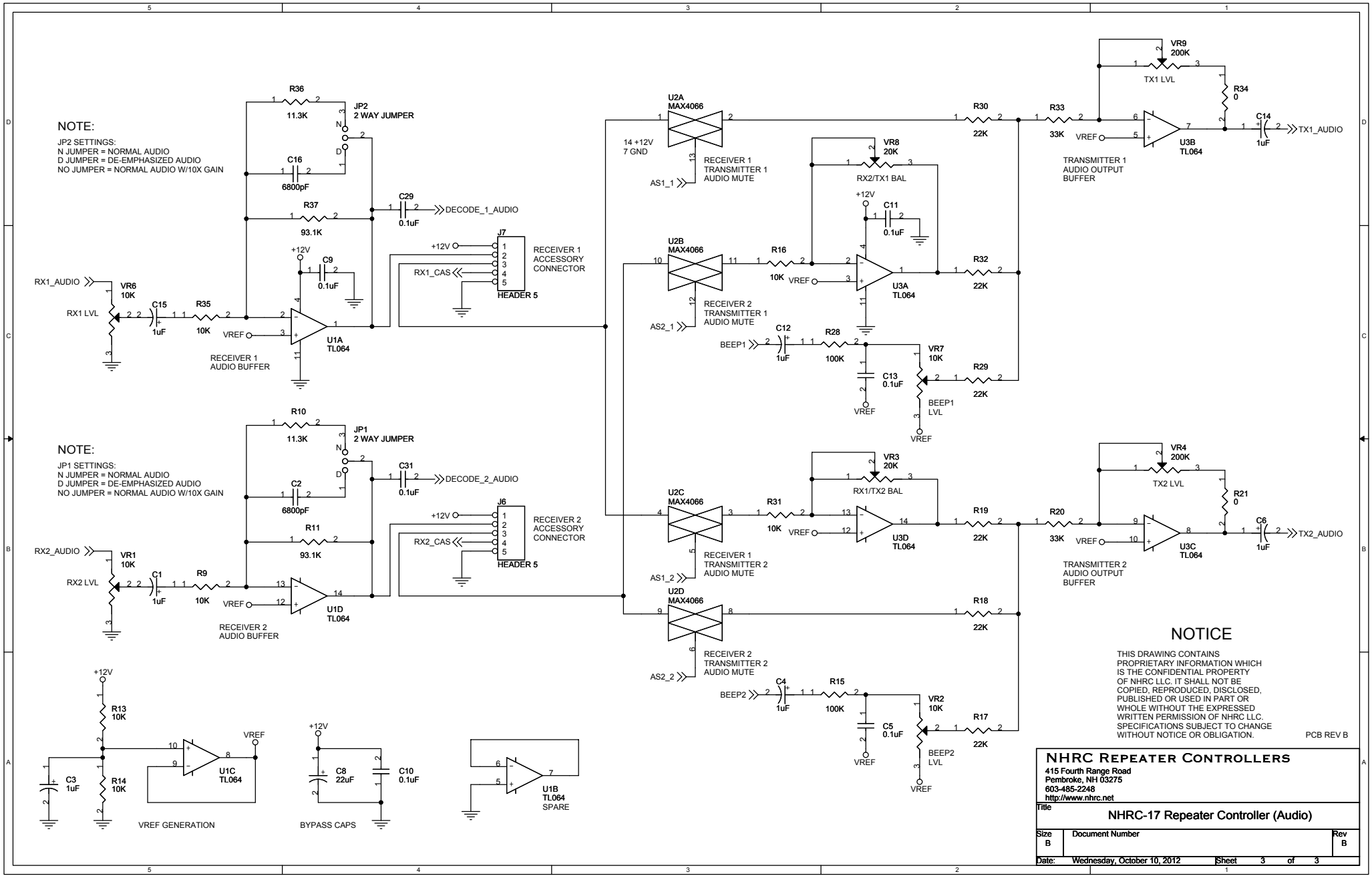
NOTE:
JP2 SETTINGS:
N JUMPER = NORMAL AUDIO
D JUMPER = DE-EMPHASIZED AUDIO
NO JUMPER = NORMAL AUDIO W/10X GAIN
NOTE:
JP1 SETTINGS:
N JUMPER = NORMAL AUDIO
D JUMPER = DE-EMPHASIZED AUDIO
NO JUMPER = NORMAL AUDIO W/10X GAIN
R36 11.3K
JP2 2 WAY JUMPER
C16 6800pF
R37 93.1K
C29 0.1uF
DECODE_1_AUDIO
+12V
C9 0.1uF
RX1_AUDIO
VR6 10K
RX1 LVL
C15 1uF
R35 10K
VREF
U1A TL064
RECEIVER 1 AUDIO BUFFER
J7
RX1_CAS
HEADER 5
RECEIVER 1 ACCESSORY CONNECTOR
R10 11.3K
JP1 2 WAY JUMPER
C2 6800pF
R11 93.1K
C31 0.1uF
DECODE_2_AUDIO
RX2_AUDIO
VR1 10K
RX2 LVL
C1 1uF
R9 10K
U1D TL064
RECEIVER 2 AUDIO BUFFER
J6
RX2_CAS
HEADER 5
RECEIVER 2 ACCESSORY CONNECTOR
R13 10K
R14 10K
C3 1uF
U1C TL064
VREF GENERATION
C8 22uF
C10 0.1uF
BYPASS CAPS
U1B TL064 SPARE
U2A MAX4066
14 +12V
7 GND
RECEIVER 1 TRANSMITTER 1 AUDIO MUTE
AS1_1
U2B MAX4066
RECEIVER 2 TRANSMITTER 1 AUDIO MUTE
AS2_1
U2C MAX4066
RECEIVER 1 TRANSMITTER 2 AUDIO MUTE
AS1_2
U2D MAX4066
RECEIVER 2 TRANSMITTER 2 AUDIO MUTE
AS2_2
R30 22K
R33 33K
VR9 200K
TX1 LVL
R34 0
C14 1uF
TX1_AUDIO
U3B TL064
TRANSMITTER 1 AUDIO OUTPUT BUFFER
VR8 20K
RX2/TX1 BAL
C11 0.1uF
R16 10K
U3A TL064
R32 22K
C12 1uF
BEEP1
R28 100K
C13 0.1uF
VR7 10K
R29 22K
BEEP1 LVL
VR3 20K
RX1/TX2 BAL
R31 10K
U3D TL064
R19 22K
R20 33K
VR4 200K
TX2 LVL
R21 0
C6 1uF
TX2_AUDIO
U3C TL064
TRANSMITTER 2 AUDIO OUTPUT BUFFER
R18 22K
C4 1uF
BEEP2
R15 100K
C5 0.1uF
VR2 10K
R17 22K
BEEP2 LVL
NOTICE
THIS DRAWING CONTAINS PROPRIETARY INFORMATION WHICH IS THE CONFIDENTIAL PROPERTY OF NHRC LLC. IT SHALL NOT BE COPIED, REPRODUCED, DISCLOSED, PUBLISHED OR USED IN PART OR WHOLE WITHOUT THE EXPRESSED WRITTEN PERMISSION OF NHRC LLC. SPECIFICATIONS SUBJECT TO CHANGE WITHOUT NOTICE OR OBLIGATION.
PCB REV B
NHRC REPEATER CONTROLLERS
415 Fourth Range Road
Pembroke, NH 03275
603-485-2248
http://www.nhrc.net
Title
NHRC-17 Repeater Controller (Audio)
Size B
Document Number
Rev B
Date: Wednesday, October 10, 2012
Sheet 3 of 3