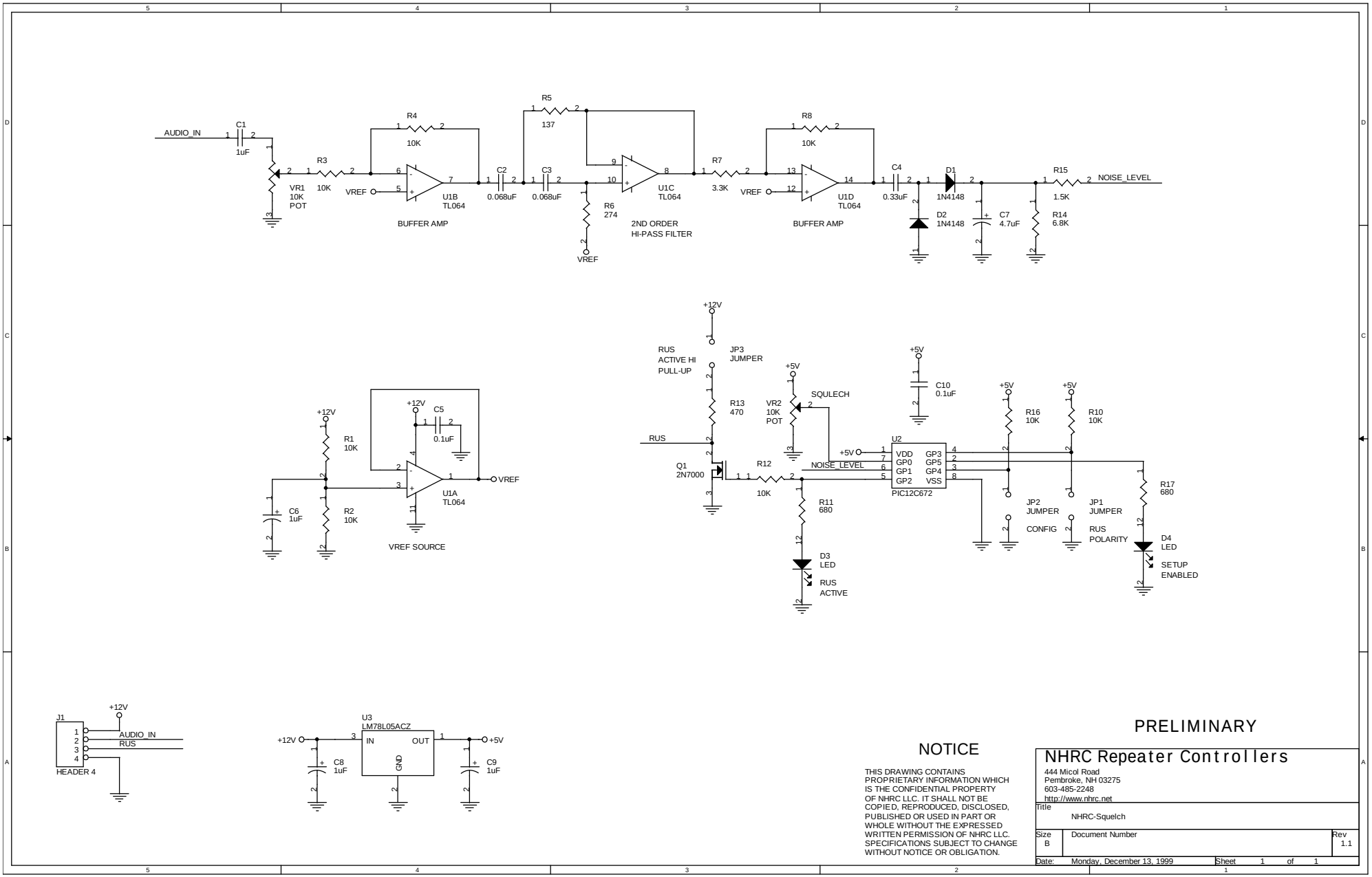

NOTICE

THIS DRAWING CONTAINS PROPRIETARY INFORMATION WHICH IS THE CONFIDENTIAL PROPERTY OF NHRC LLC. IT SHALL NOT BE COPIED, REPRODUCED, DISCLOSED, PUBLISHED OR USED IN PART OR WHOLE WITHOUT THE EXPRESSED WRITTEN PERMISSION OF NHRC LLC. SPECIFICATIONS SUBJECT TO CHANGE WITHOUT NOTICE OR OBLIGATION.

PRELIMINARY

NHRC Repeater Controllers
444 Micol Road
Pembroke, NH 03275
603-485-2248
http://www.nhrc.net

Title	NHRC-Squelch	
Size B	Document Number	Rev 1.1
Date: Monday, December 13, 1999	Sheet 1 of 1	