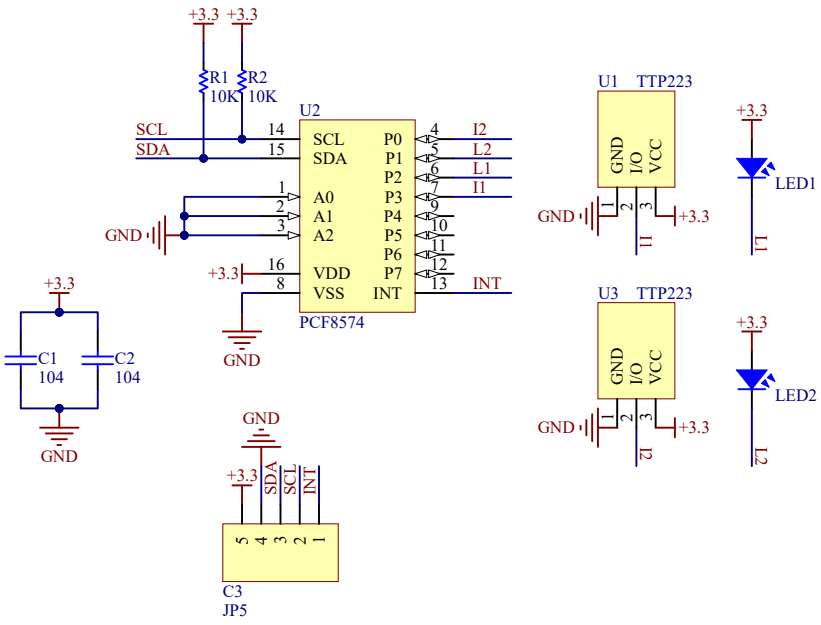

Title	Touch Panel I2C 2CH		
Size A4	Number v1.0		Revision v1.0
Date: 2/08/2025		Sheet of 1	
File: C:\Users\..\Sch.SchDoc		Drawn By: nht	