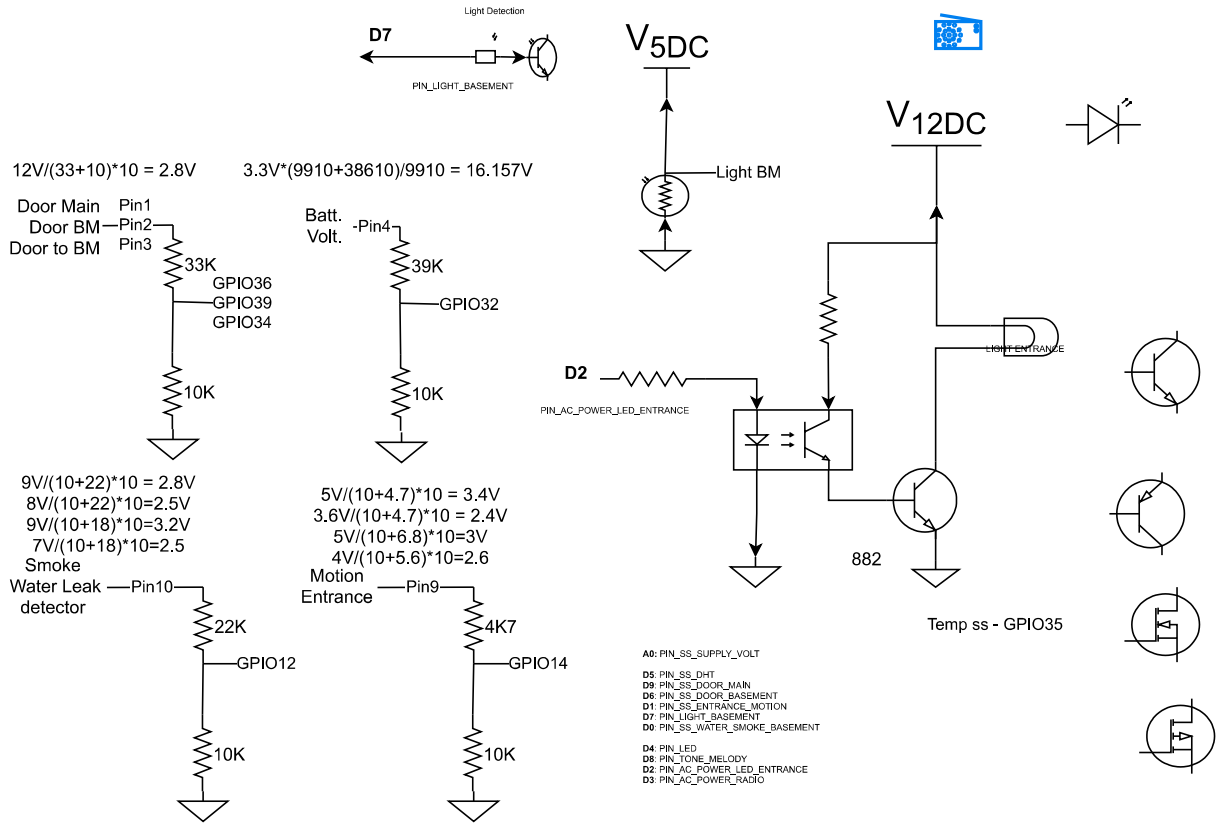
Light Detection
D7
PIN_LIGHT_BASEMENT
V5DC
Light BM
V12DC
12V/(33+10)*10 = 2.8V
3.3V*(9910+38610)/9910 = 16.157V
Door Main
Door BM
Door to BM
Pin1
Pin2
Pin3
33K
GPIO36
GPIO39
GPIO34
10K
Batt.
Volt.
-Pin4
39K
GPIO32
10K
D2
PIN_AC_POWER_LED_ENTRANCE
LIGHT ENTRANCE
882
9V/(10+22)*10 = 2.8V
8V/(10+22)*10=2.5V
9V/(10+18)*10=3.2V
7V/(10+18)*10=2.5
Smoke
Water Leak
detector
Pin10
22K
GPIO12
10K
5V/(10+4.7)*10 = 3.4V
3.6V/(10+4.7)*10 = 2.4V
5V/(10+6.8)*10=3V
4V/(10+5.6)*10=2.6
Motion
Entrance
Pin9
4K7
GPIO14
10K
Temp ss - GPIO35
A0: PIN_SS_SUPPLY_VOLT
D5: PIN_SS_DHT
D9: PIN_SS_DOOR_MAIN
D6: PIN_SS_DOOR_BASEMENT
D1: PIN_SS_ENTRANCE_MOTION
D7: PIN_LIGHT_BASEMENT
D0: PIN_SS_WATER_SMOKE_BASEMENT
D4: PIN_LED
D8: PIN_TONE_MIELODY
D2: PIN_AC_POWER_LED_ENTRANCE
D3: PIN_AC_POWER_RADIO