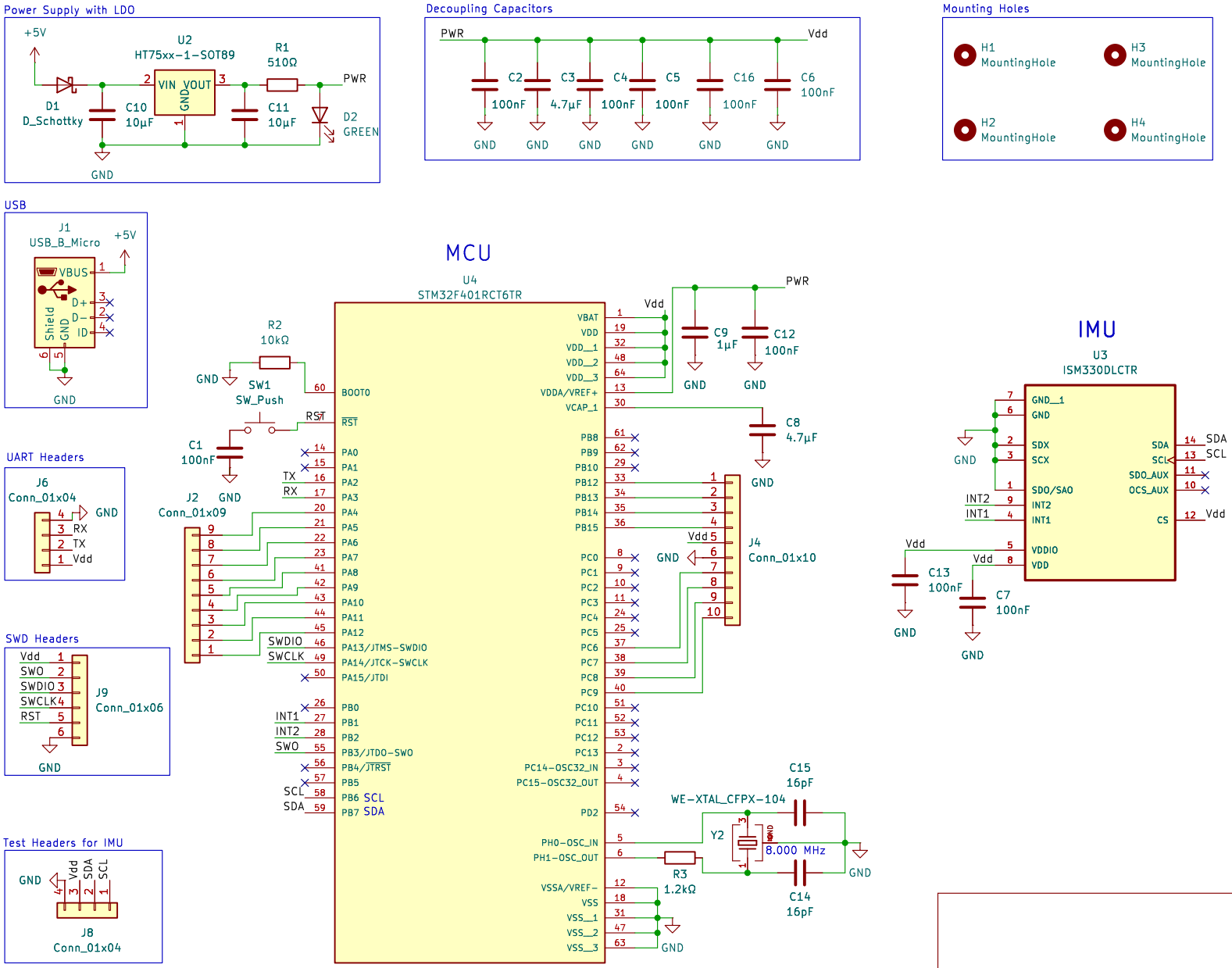

Sheet: / Nithya Sudharshan
File: IMU.kicad_sch

Title: IMU Sensor with STM32

Size: A4	Date:	Rev:
KiCad E.D.A. 9.0.7		Id: 1/1