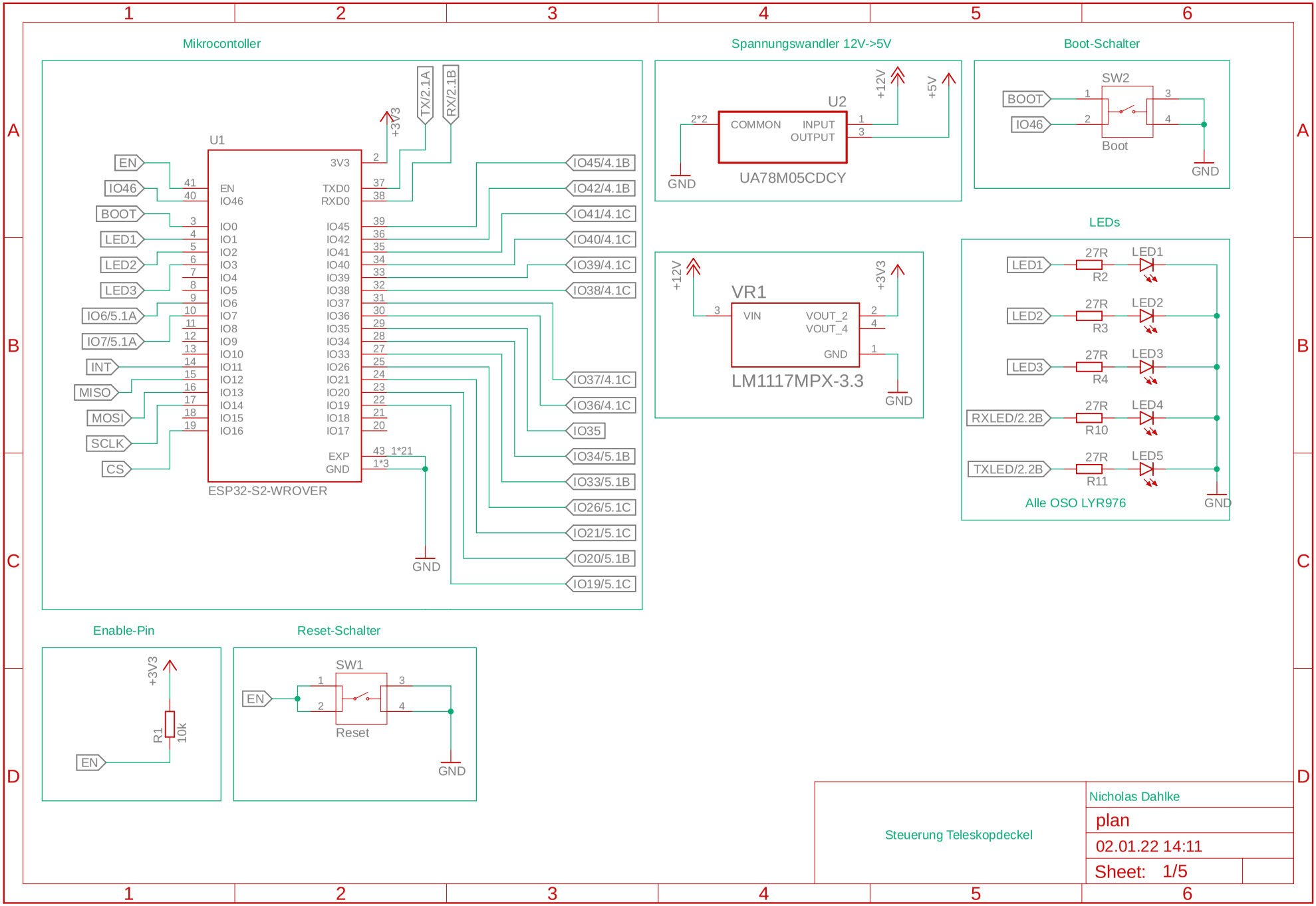
Mikrocontoller
U1
ESP32-S2-WROVER
EN
IO46
BOOT
LED1
LED2
LED3
IO6/5.1A
IO7/5.1A
INT
MISO
MOSI
SCLK
CS
TX/2.1A
RX/2.1B
+3V3
GND
IO45/4.1B
IO42/4.1B
IO41/4.1C
IO40/4.1C
IO39/4.1C
IO38/4.1C
IO37/4.1C
IO36/4.1C
IO35
IO34/5.1B
IO33/5.1B
IO26/5.1C
IO21/5.1C
IO20/5.1B
IO19/5.1C
Spannungswandler 12V->5V
U2
UA78M05CDCY
COMMON
INPUT
OUTPUT
+12V
+5V
VR1
LM1117MPX-3.3
VIN
VOUT_2
VOUT_4
Boot-Schalter
SW2
Boot
LEDs
27R
R2
R3
R4
R10
R11
LED1
LED2
LED3
LED4
LED5
RXLED/2.2B
TXLED/2.2B
Alle OSO LYR976
Enable-Pin
R1
10k
Reset-Schalter
SW1
Reset
Steuerung Teleskopdeckel
Nicholas Dahlke
plan
02.01.22 14:11
Sheet: 1/5

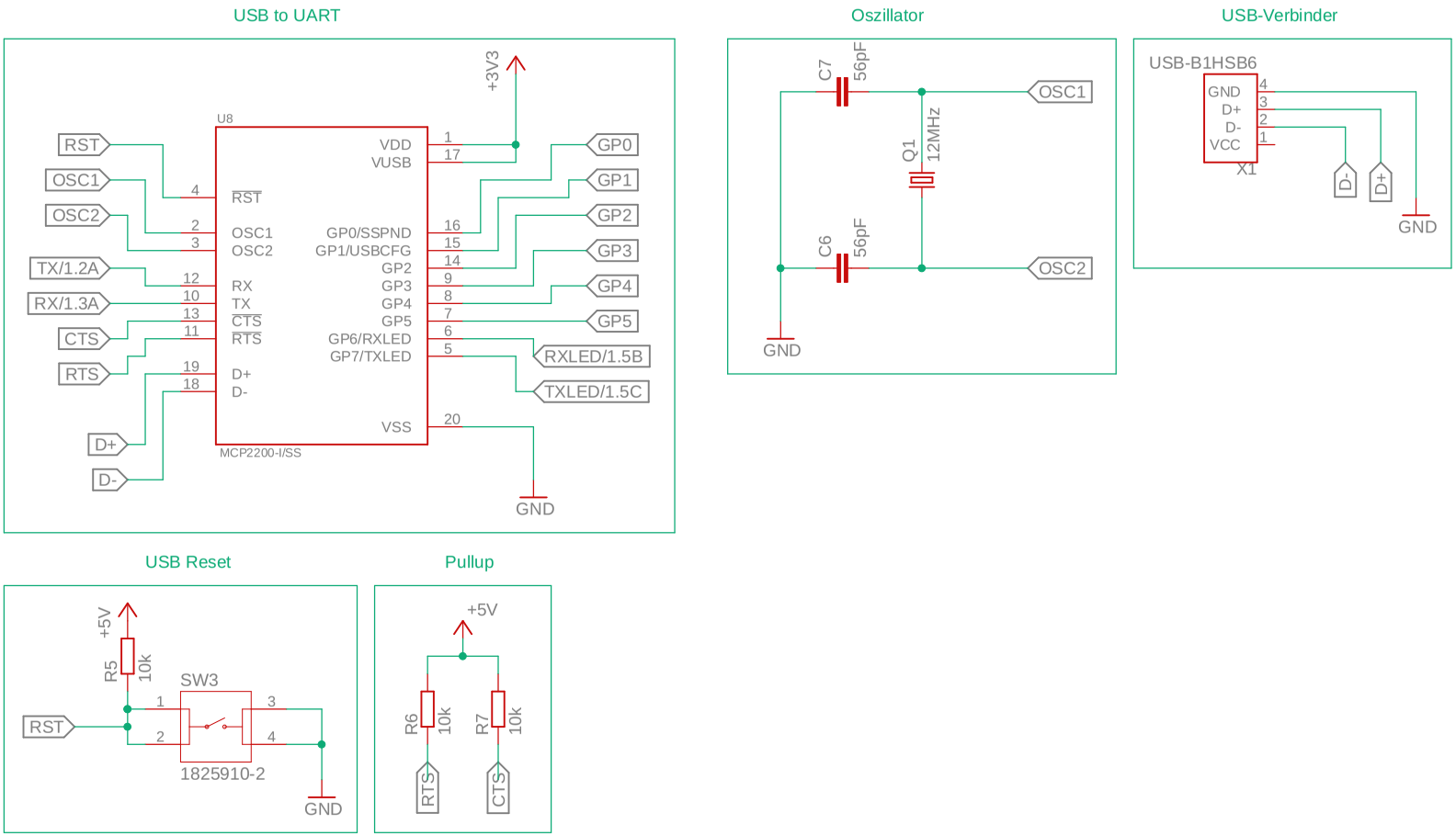


plan

02.01.22 14:11

Sheet: 2/5

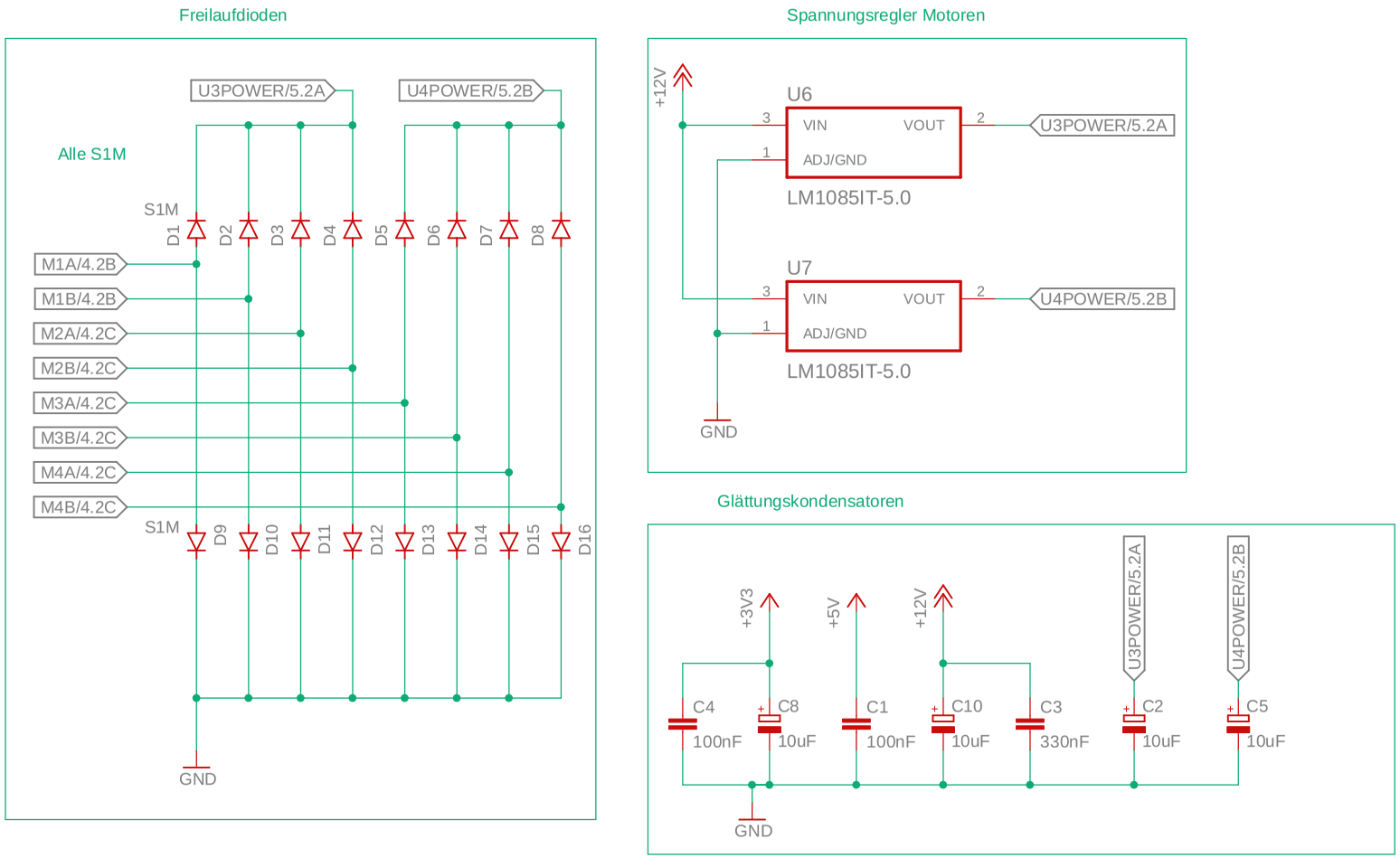


plan

02.01.22 14:11

Sheet: 3/5

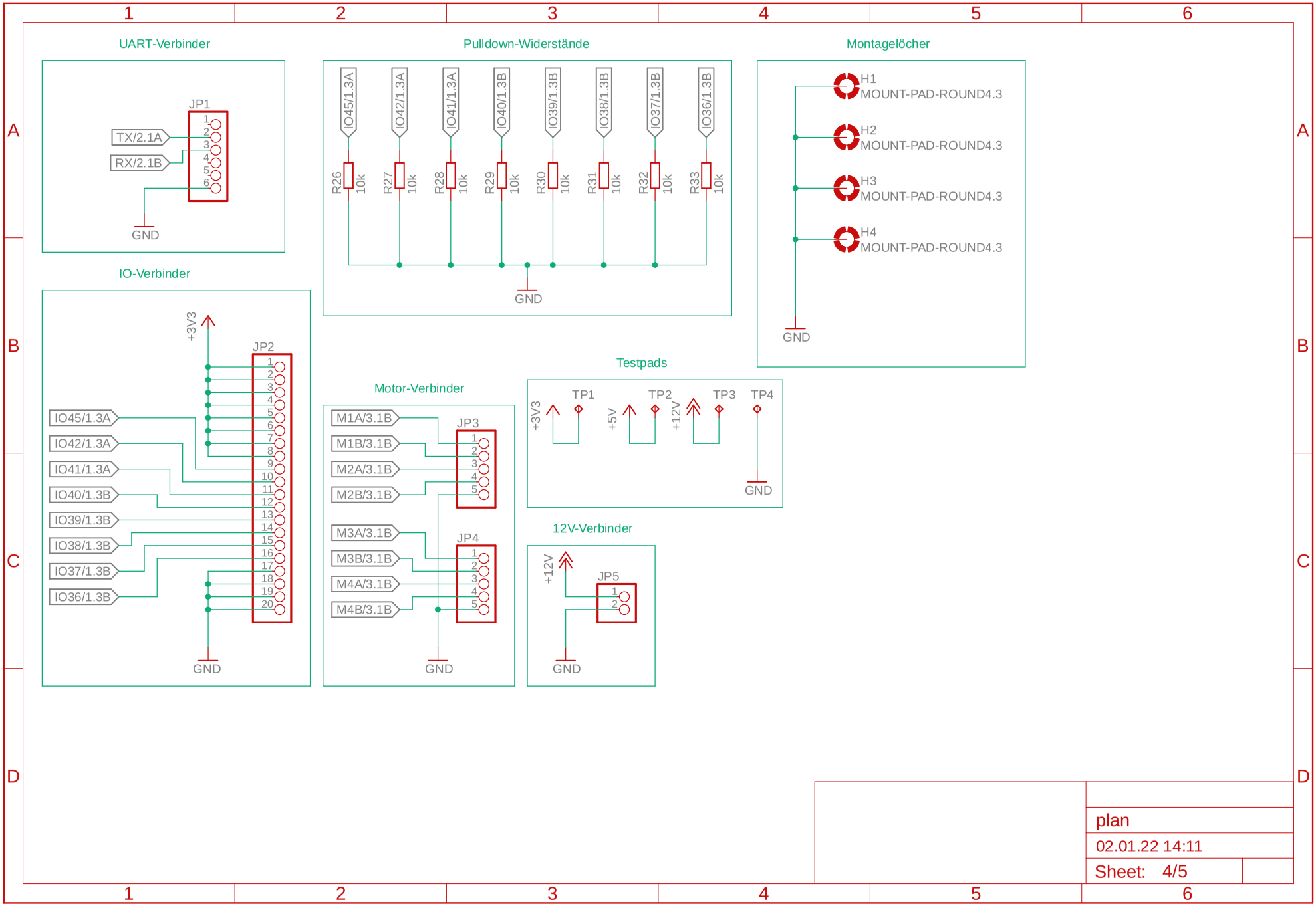
UART-Verbinder
JP1
TX/2.1A
RX/2.1B
GND
Pulldown-Widerstände
IO45/1.3A
IO42/1.3A
IO41/1.3A
IO40/1.3B
IO39/1.3B
IO38/1.3B
IO37/1.3B
IO36/1.3B
R26 10k
R27 10k
R28 10k
R29 10k
R30 10k
R31 10k
R32 10k
R33 10k
GND
Montagelöcher
H1 MOUNT-PAD-ROUND4.3
H2 MOUNT-PAD-ROUND4.3
H3 MOUNT-PAD-ROUND4.3
H4 MOUNT-PAD-ROUND4.3
GND
IO-Verbinder
+3V3
JP2
IO45/1.3A
IO42/1.3A
IO41/1.3A
IO40/1.3B
IO39/1.3B
IO38/1.3B
IO37/1.3B
IO36/1.3B
GND
Motor-Verbinder
M1A/3.1B
M1B/3.1B
M2A/3.1B
M2B/3.1B
JP3
M3A/3.1B
M3B/3.1B
M4A/3.1B
M4B/3.1B
JP4
GND
Testpads
TP1
TP2
TP3
TP4
+3V3
+5V
+12V
GND
12V-Verbinder
+12V
JP5
GND
plan
02.01.22 14:11
Sheet: 4/5

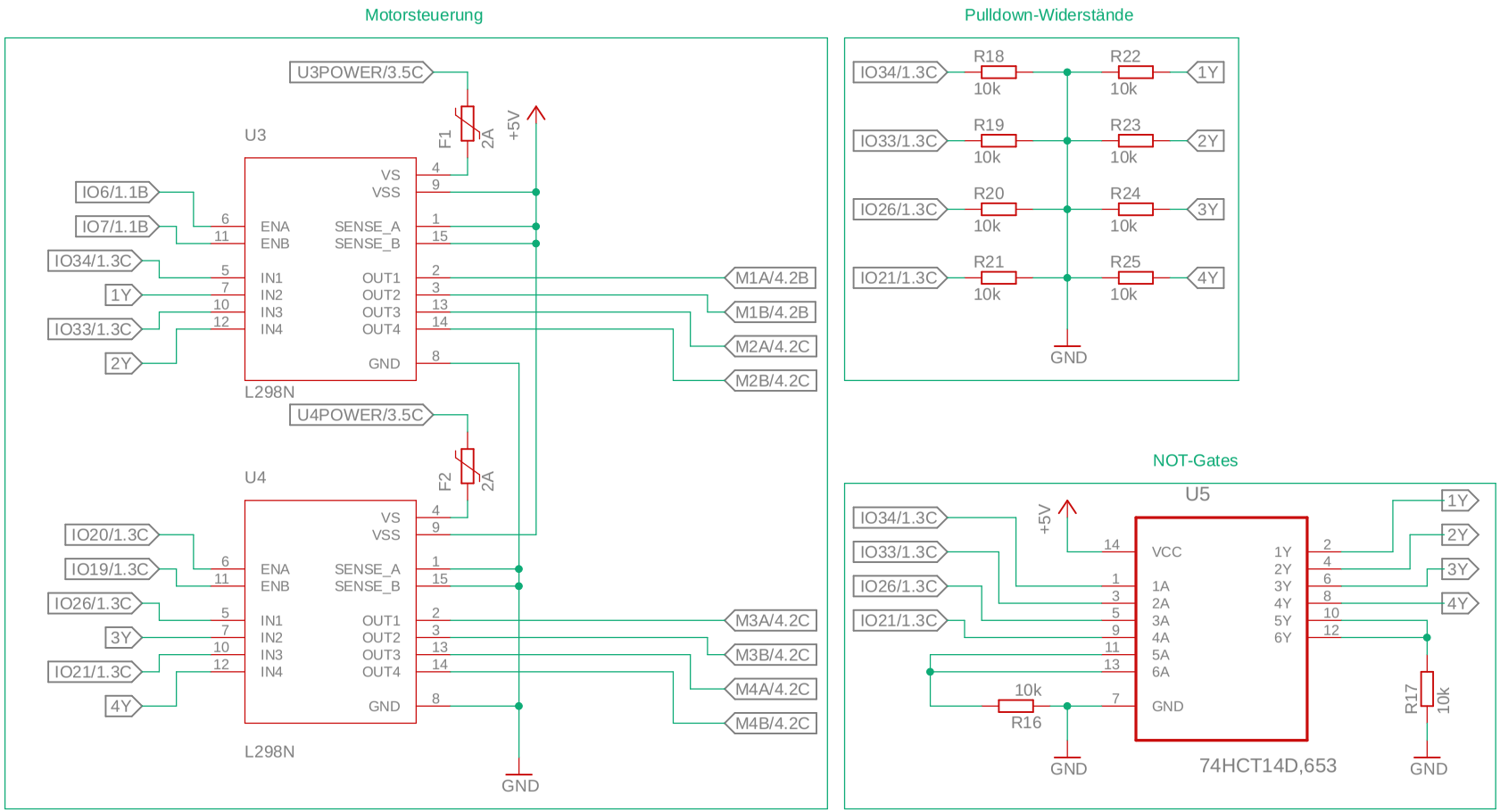


plan

02.01.22 14:11

Sheet: 5/5