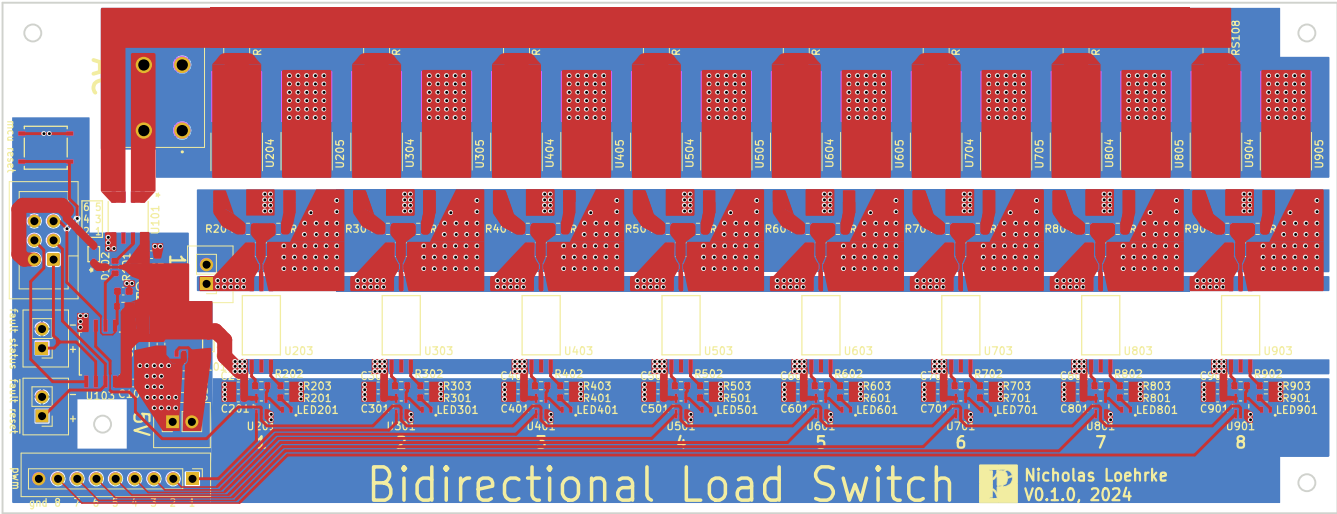
Bidirectional Load Switch
Nicholas Loehrke
V0.1.0, 2024

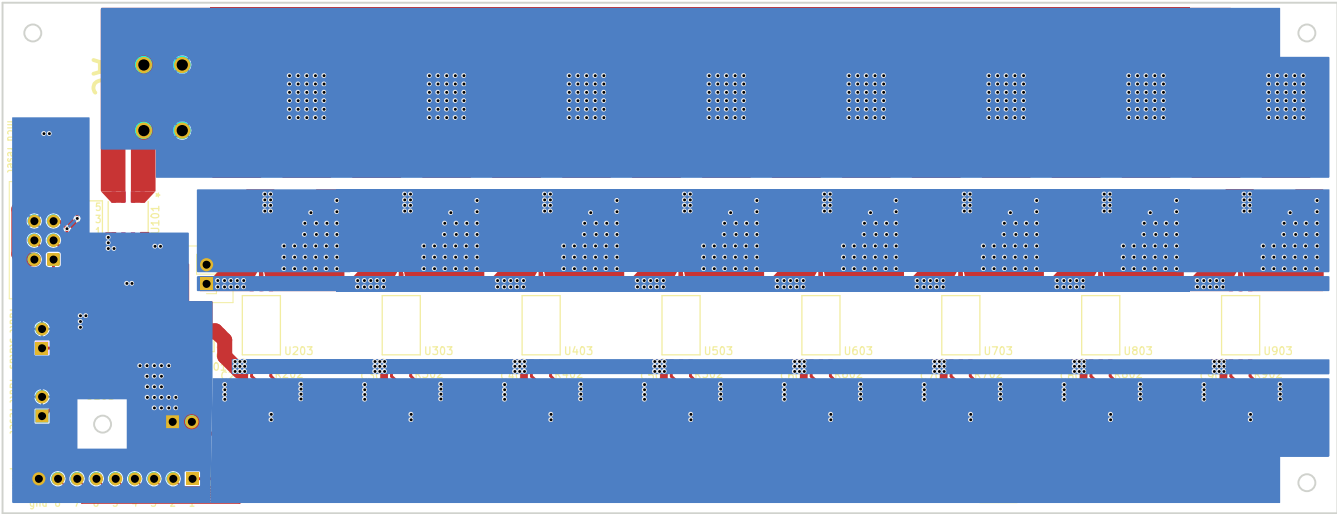
U101
U203
U303
U403
U503
U603
U703
U803
U903

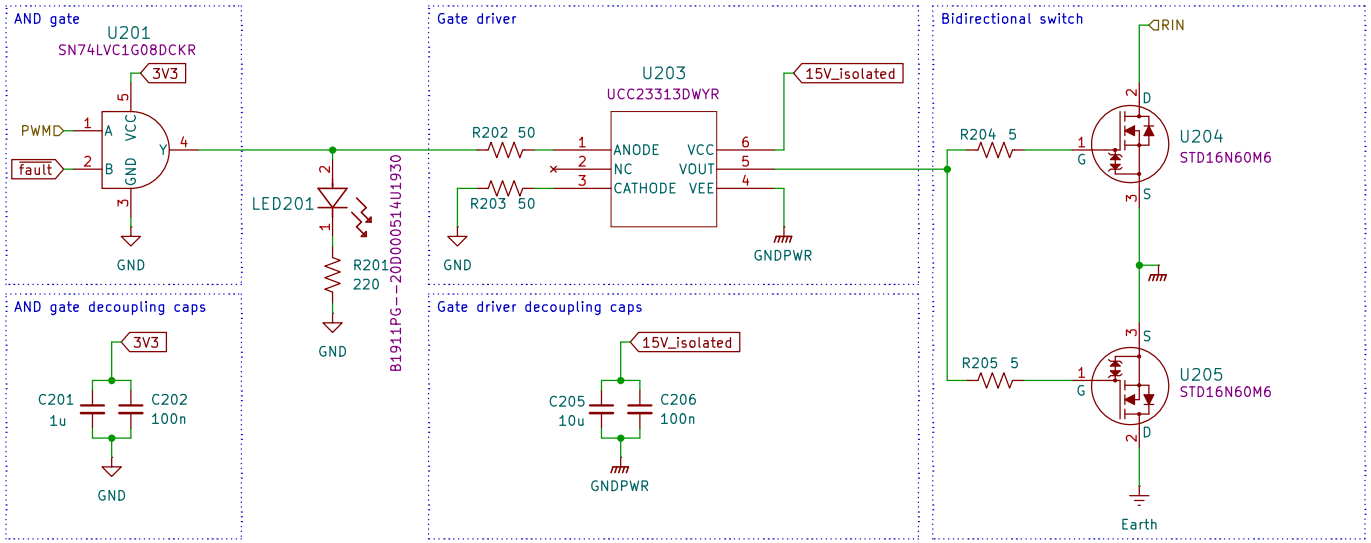
AND gate
U201
SN74LVC1G08DCKR
3V3
PWM
fault
A
B
VCC
GND
Y
GND
AND gate decoupling caps
3V3
C201
1u
C202
100n
GND
LED201
R201
220
GND
B1911PG--20D000514U1930
Gate driver
U203
UCC23313DWYR
15V_isolated
R202 50
R203 50
ANODE
NC
CATHODE
VCC
VOUT
VEE
GND
GNDPWR
Gate driver decoupling caps
15V_isolated
C205
10u
C206
100n
GNDPWR
Bidirectional switch
RIN
R204 5
R205 5
U204
STD16N60M6
U205
STD16N60M6
D
G
S
Earth

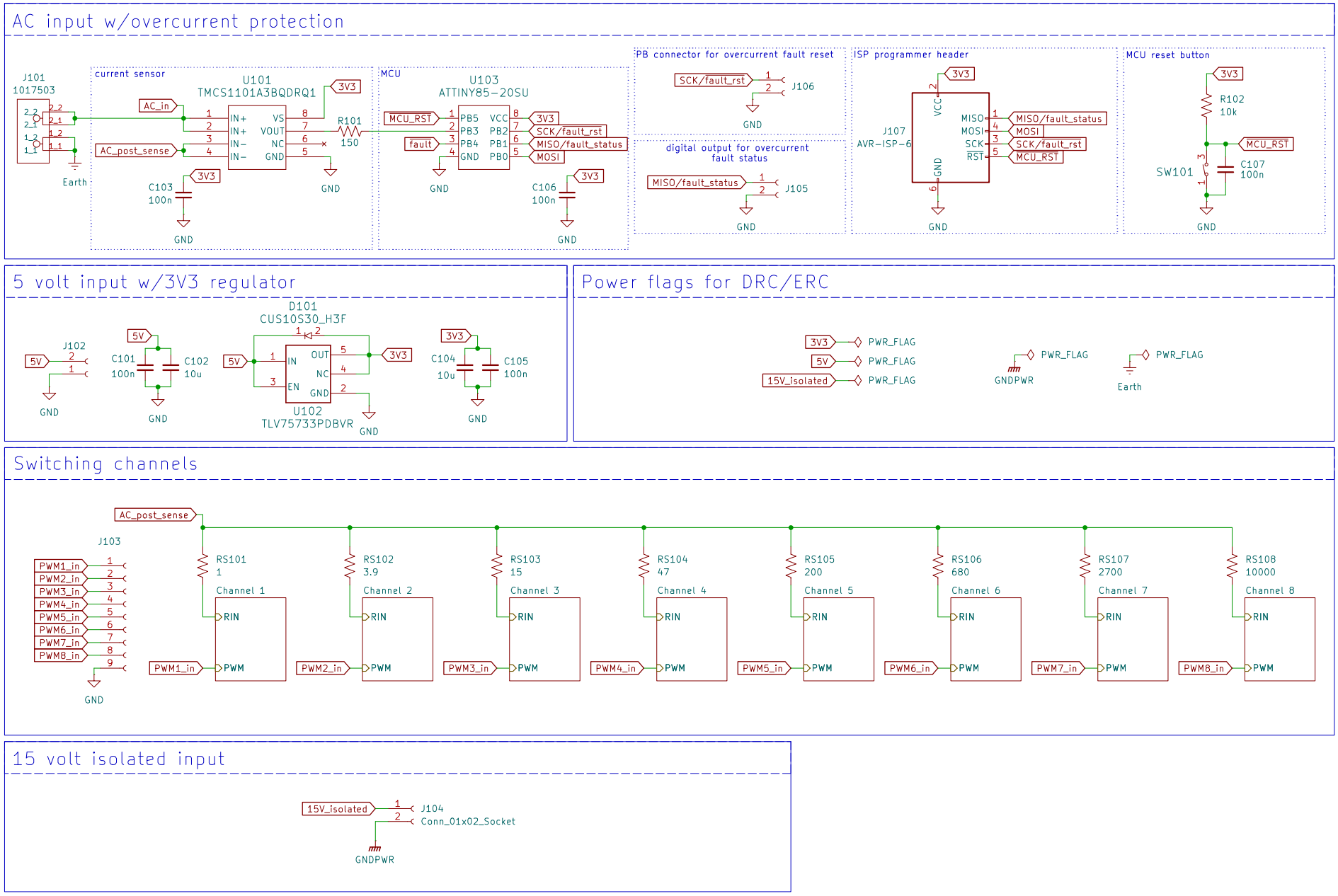
AC input w/overcurrent protection
J101
1017503
Earth
current sensor
U101
TMCS1101A3BQDRQ1
AC_in
AC_post_sense
3V3
IN+
IN+
IN−
IN−
VS
VOUT
NC
GND
R101
150
C103
100n
GND
MCU
U103
ATTINY85−20SU
MCU_RST
fault
PB5
PB3
PB4
GND
VCC
PB2
PB1
PB0
SCK/fault_rst
MISO/fault_status
MOSI
C106
100n
PB connector for overcurrent fault reset
SCK/fault_rst
J106
digital output for overcurrent fault status
MISO/fault_status
J105
ISP programmer header
J107
AVR−ISP−6
VCC
GND
MISO
MOSI
SCK
RST
MISO/fault_status
MOSI
SCK/fault_rst
MCU_RST
MCU reset button
R102
10k
SW101
C107
100n
5 volt input w/3V3 regulator
J102
5V
C101
100n
C102
10u
D101
CUS10S30_H3F
IN
EN
OUT
NC
GND
U102
TLV75733PDBVR
C104
10u
C105
100n
Power flags for DRC/ERC
3V3
5V
15V_isolated
PWR_FLAG
GNDPWR
Earth
Switching channels
AC_post_sense
J103
PWM1_in
PWM2_in
PWM3_in
PWM4_in
PWM5_in
PWM6_in
PWM7_in
PWM8_in
RS101
1
RS102
3.9
RS103
15
RS104
47
RS105
200
RS106
680
RS107
2700
RS108
10000
Channel 1
Channel 2
Channel 3
Channel 4
Channel 5
Channel 6
Channel 7
Channel 8
RIN
PWM
15 volt isolated input
15V_isolated
J104
Conn_01x02_Socket
GNDPWR