Bernoulli Backpack

ME 1670 Section C
Instructor: Dorozhkin

Project Group #10

1. Nicholas Ueki
2. Sophia Aponte
3. Nafez Ahmmed
4. Pranav Devalapalli

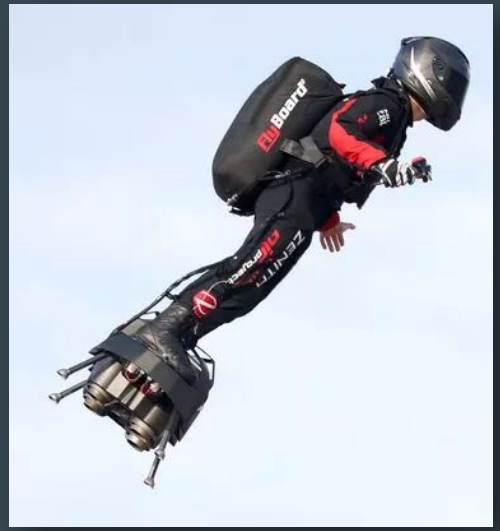

Presentation Outline

Concept : Lightweight luggage + portable air travel

Motivation : Merge everyday life with urban transport

- Parts, subassemblies, challenges

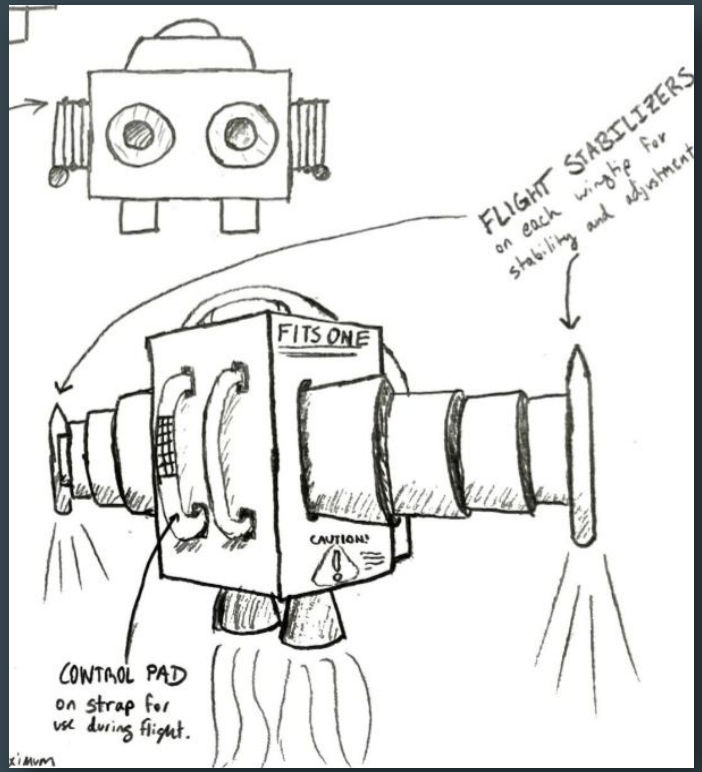

Nicholas Ueki - Part Models

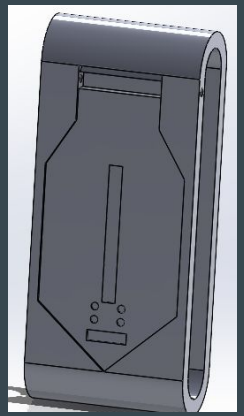

Large Wing Segment

Medium Wing Segment

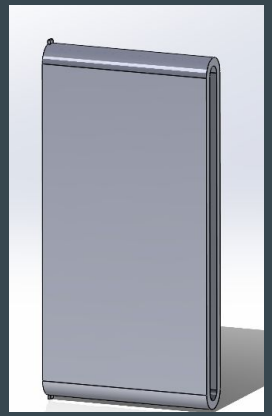

Small Wing Segment

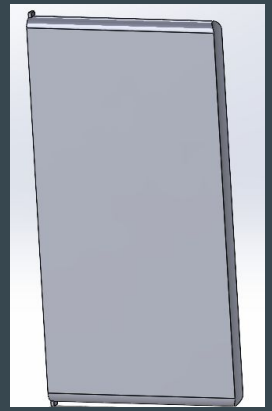

Wing End Segment

Wing Tip

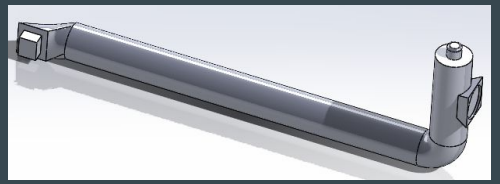

Joystick

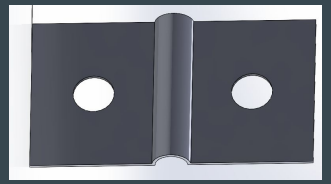

Airbrake Hinge

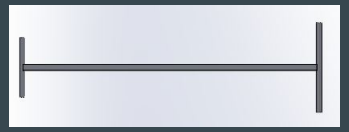

Airbrake Arm Connector

Airbrake

Sub-assembly - Airbreak

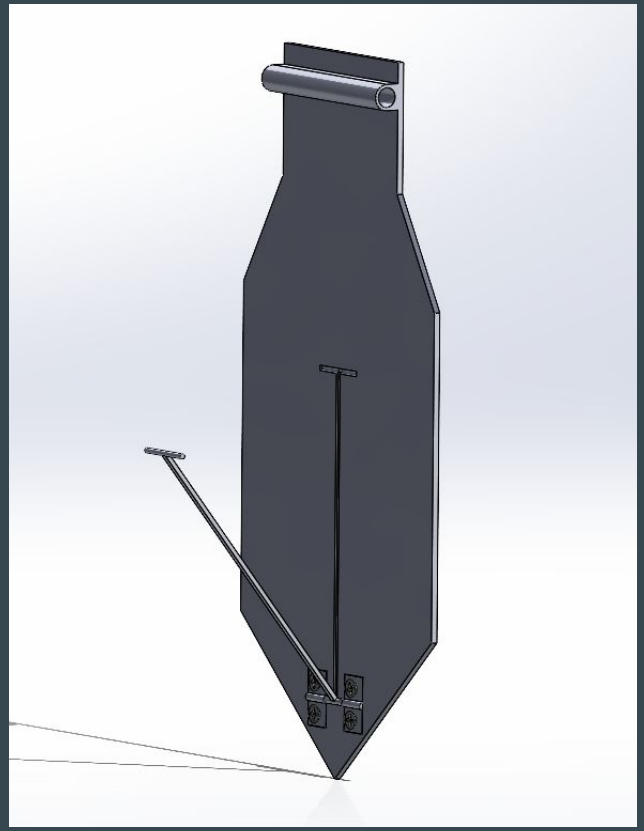

Airbreak Sub-assembly exploded view

ITEM NO.	PART NUMBER	DESCRIPTION	QTY.
1	Airbreaks		1
2	airbreak_arm		1
3	AirBrak_Hinge		2
4	96877A301	Mil. Spec. Stainless Steel Phillips Flat Head Screws	4

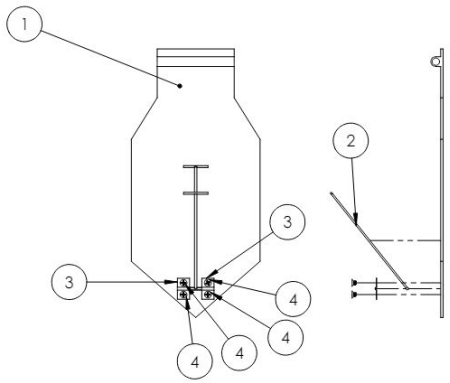

Georgia Institute of Technology

TITLE	DATE	NAME
Airbreaks Exploded View	4/28/2024	Nicholas Ueki

COURSE	SEMESTER	SECTION	LAB	ACTIVITY	DIMENSIONS ARE IN INCHES ANGLES ARE IN DEGREES	SIZE
ME 1670	Spring 2024	C			SCALE 1:4 SHEET 1 OF 1	A

SOLIDWORKS Educational Product. For Instructional Use Only.

Sub-assembly - Wing

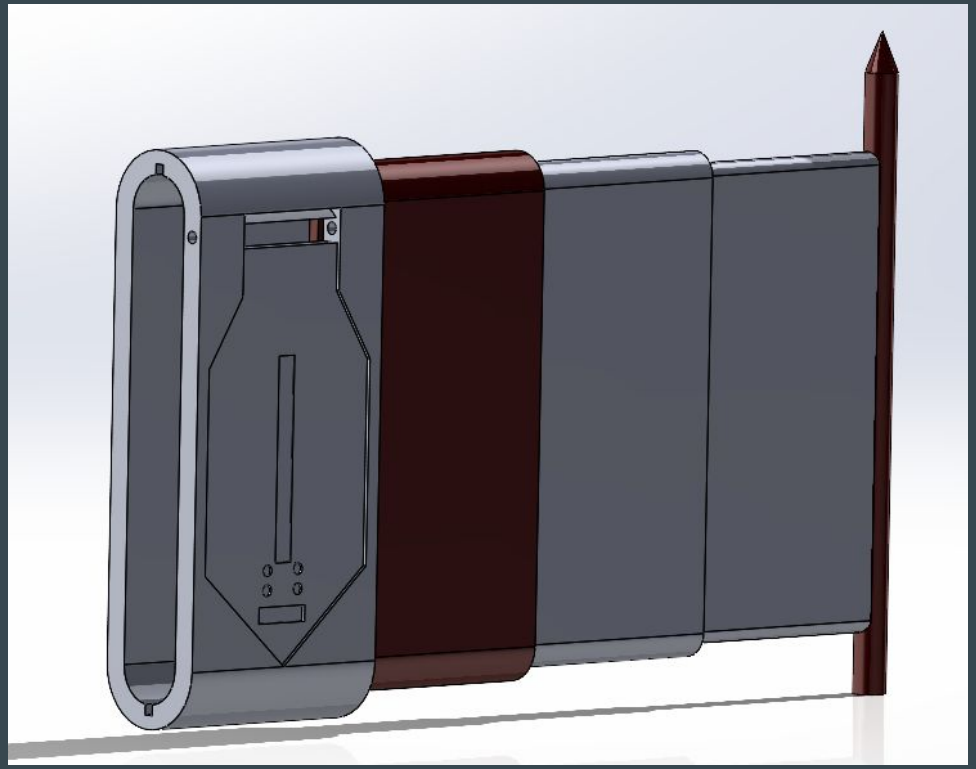

Wing Sub-assembly exploded view

ITEM NO.	PART NUMBER	DESCRIPTION	QTY.
1	large_wing		1
2	medium_wing		1
3	small_wing		1
4	wing_end		1
5	wing_tip		1

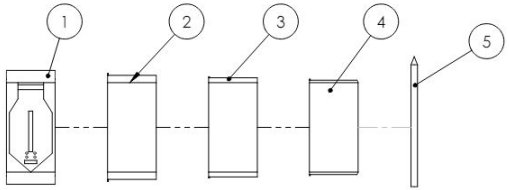

Georgia Institute of Technology

TITLE	DATE	NAME
Wing Exploded View	4/28/2024	Nicholas Ueki

COURSE	SEMESTER	SECTION	LAB	ACTIVITY	DIMENSIONS ARE IN INCHES ANGLES ARE IN DEGREES	SIZE
ME 1670	Spring 2024	C			SCALE 1:12 SHEET 1 OF 1	A

SOLIDWORKS Educational Product. For Instructional Use Only.

Sophia Aponte - Part Models

Handle

Cushion

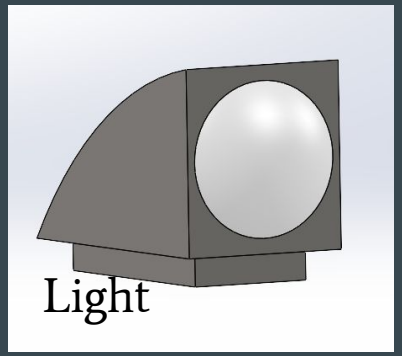
Light

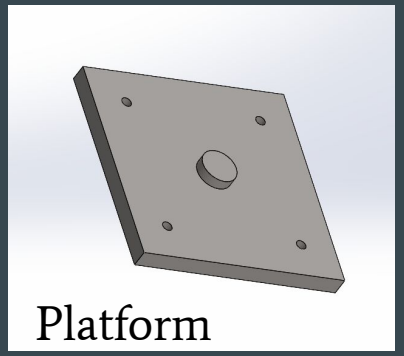
Platform

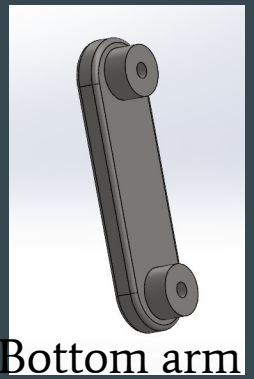
Bottom arm

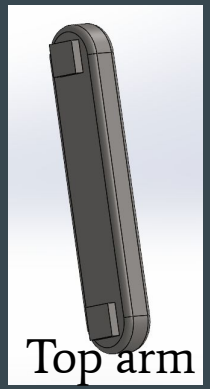
Top arm

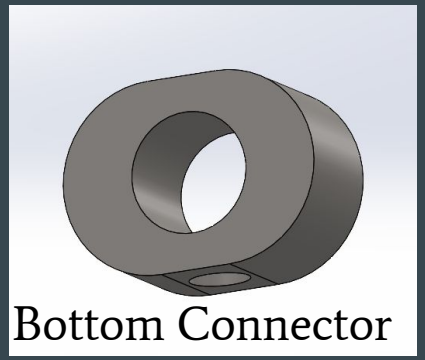
Bottom Connector

Top Connector

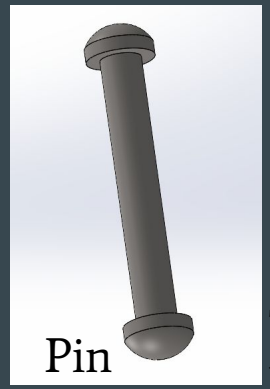
Pin

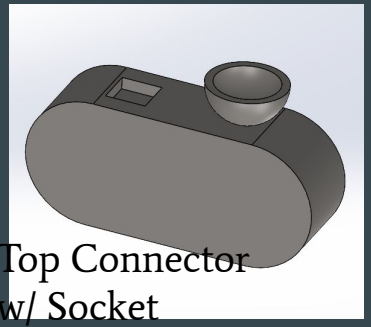
Top Connector w/ Socket

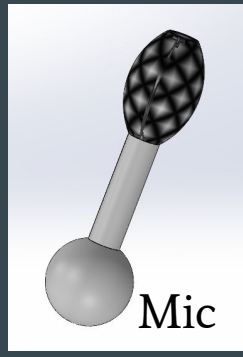
Mic

Subassembly - Microphone stand

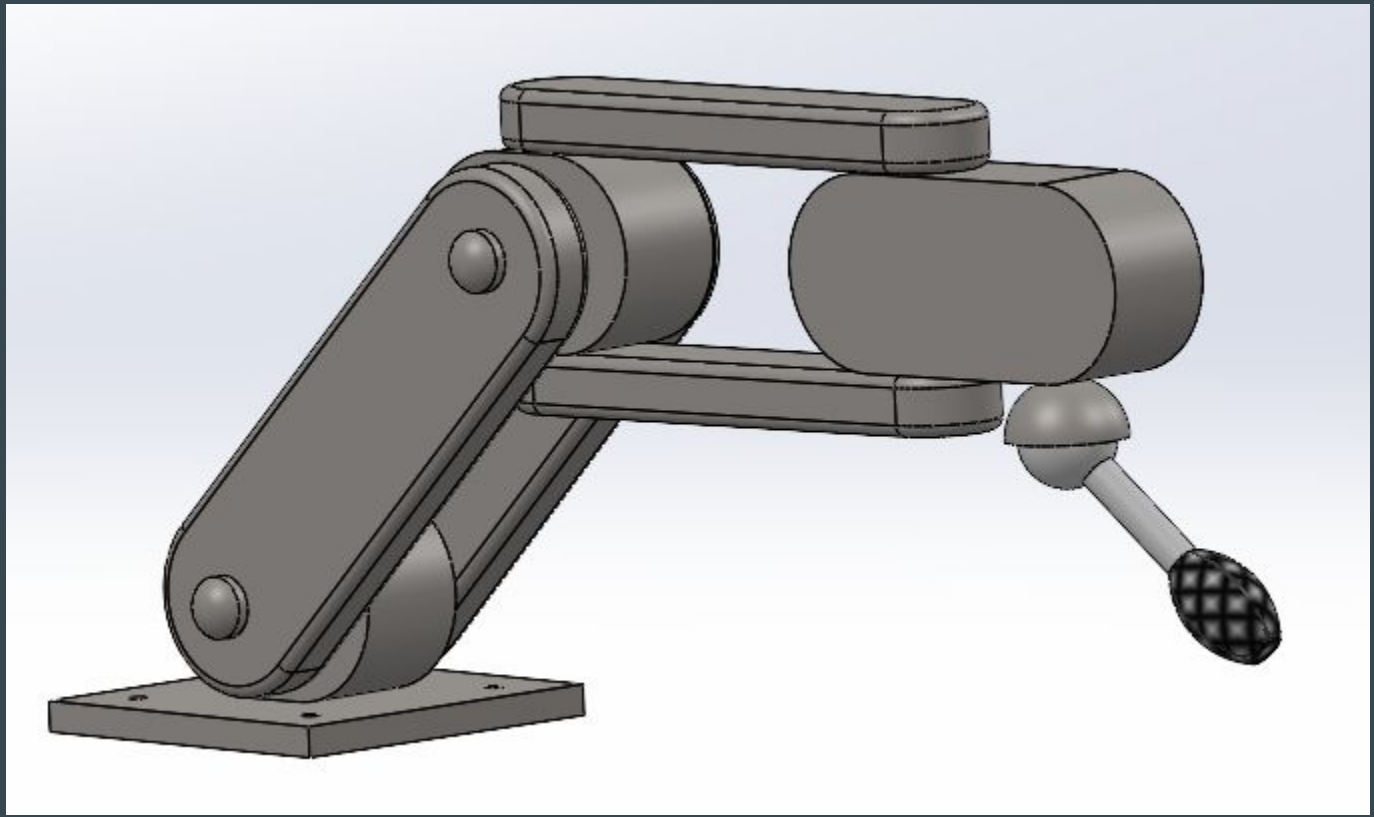

Microphone Stand - Exploded View

ITEM NO.	PART NUMBER	DESCRIPTION	QTY.
1	Microphone_Stand_Bottom	Bottom Arm	2
2	MicStand_Pin	Pin	2
3	MicStand_Connector_Top	Top Connector	1
4	MicStand_Platform	Platform	1
5	MicStand_Connector_Bottom	Bottom Connector	1
6	MicStand_Top	Top Arm	2
7	MicStand_Connector_socket	Connector with Socket	1
8	MicStand_Mic	Microphone	1

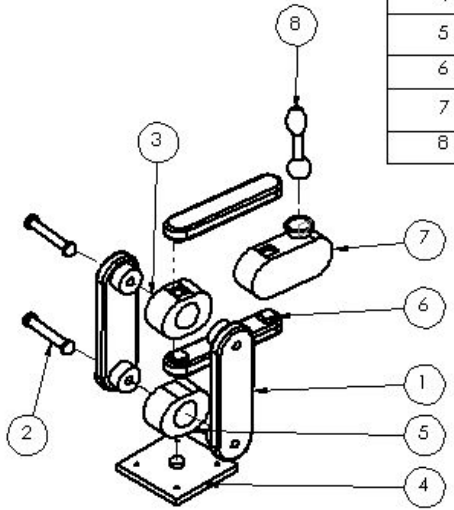

Georgia Institute of Technology

TITLE	DATE	NAME
Bernoulli Backpack - Mic Stand - Exploded	4/22/2024	Sophia Aponte

COURSE	SEMESTER	SECTION	LAB	ACTIVITY	DIMENSIONS ARE IN INCHES ANGLES ARE IN DEGREES	SIZE
ME 1670	Spring 2024	C			SCALE 1:4 SHEET 1 OF 1	A

5 4 3 2 1

Nafez Ahmmed - Part Models

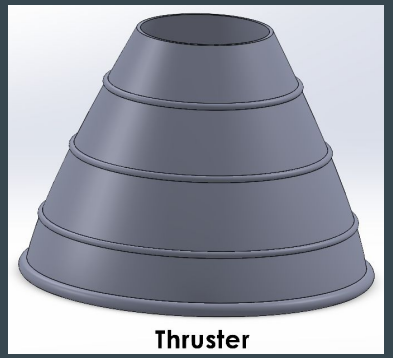

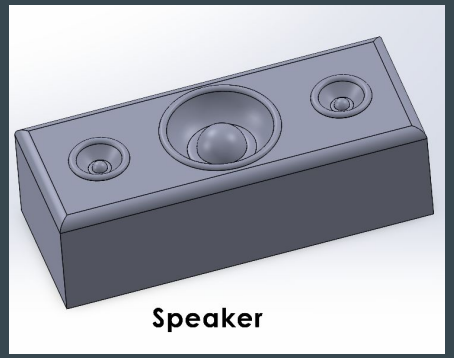

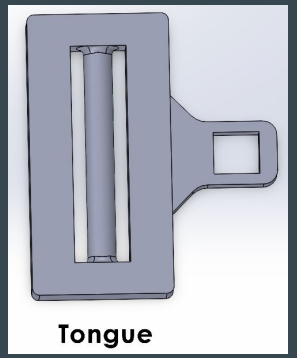

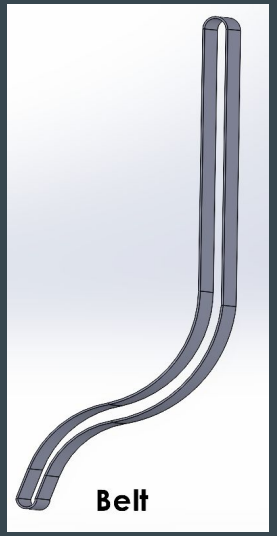

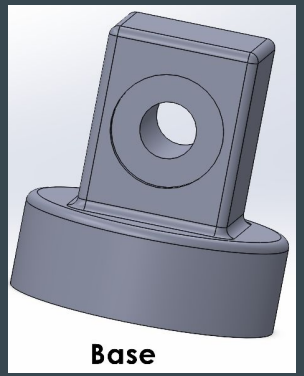

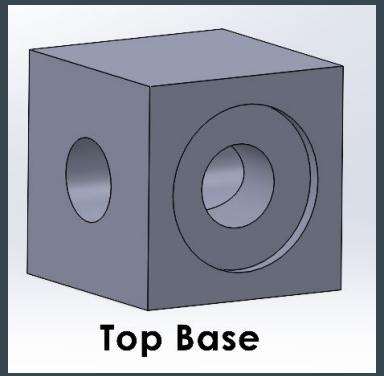

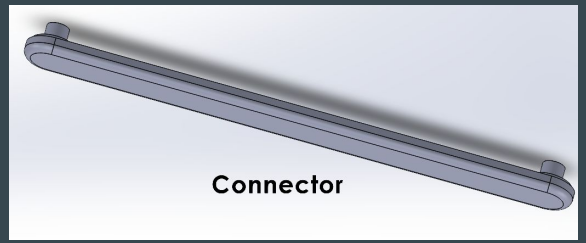

Subassembly - Phone Holder

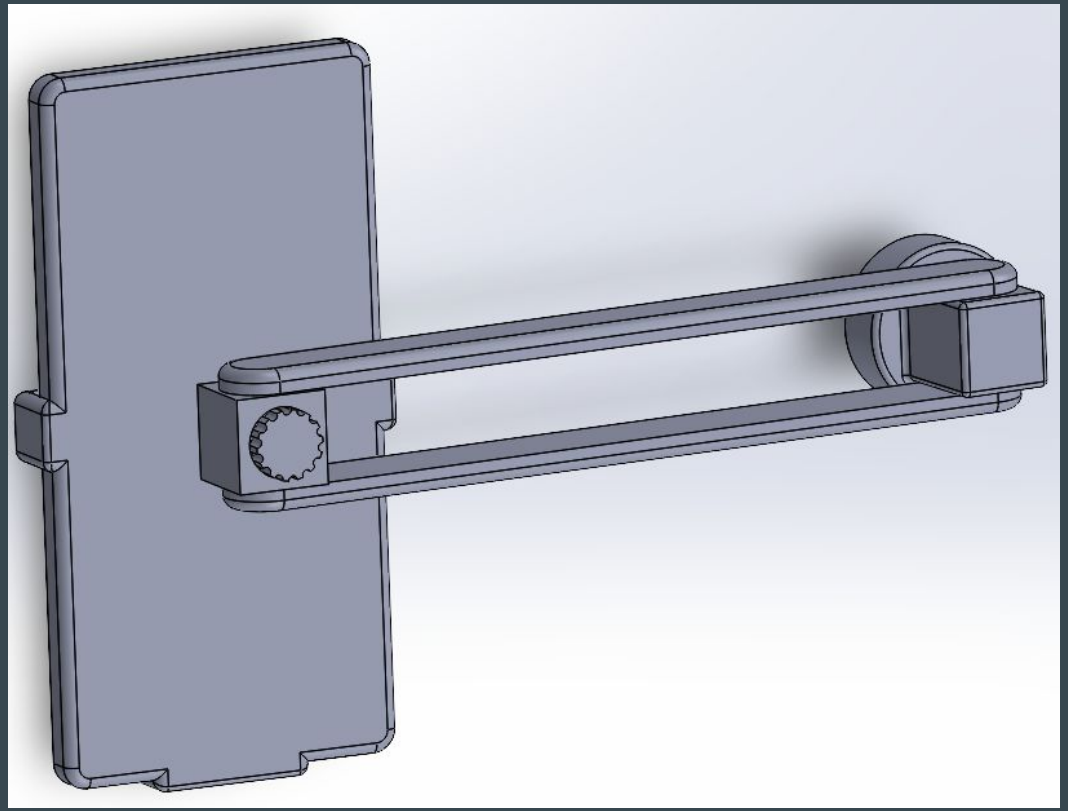

Phone Holder - Exploded View

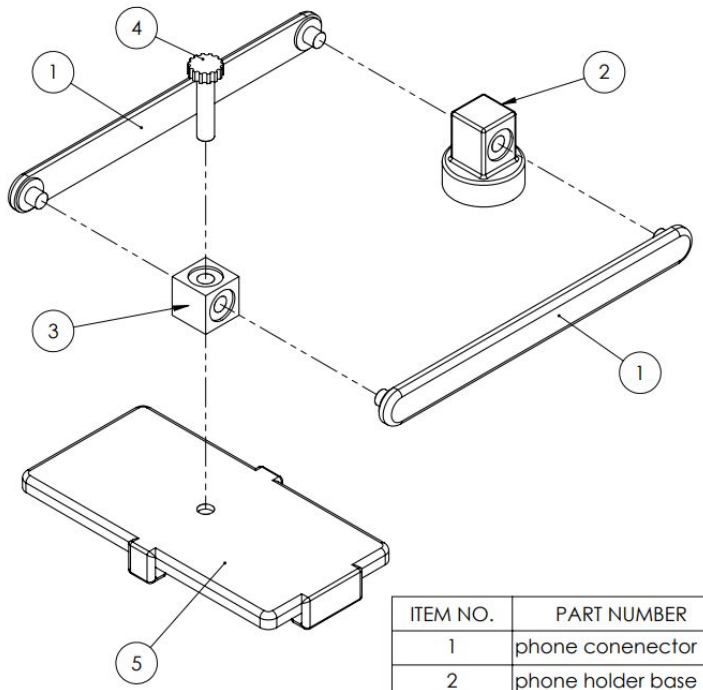

ITEM NO.	PART NUMBER	DESCRIPTION	QTY.
1	phone conenector	Connector Arm	2
2	phone holder base	Bottom Base	1
3	top base	Top Joint	1
4	top cap	Top Knob	1
5	phone	Phone Stand	1

Georgia Institute of Technology

TITLE	DATE	NAME
Exploded Phone Holder	4/28/2024	Nafez Ahmmed

COURSE	SEMESTER	SECTION	LAB	ACTIVITY	DIMENSIONS ARE IN INCHES ANGLES ARE IN DEGREES		SIZE
ME 1670	Spring 2024	C		Team	SCALE 1:2	SHEET 1 OF 1	A

Subassembly - Seatbelt

Seat Belt - Exploded View

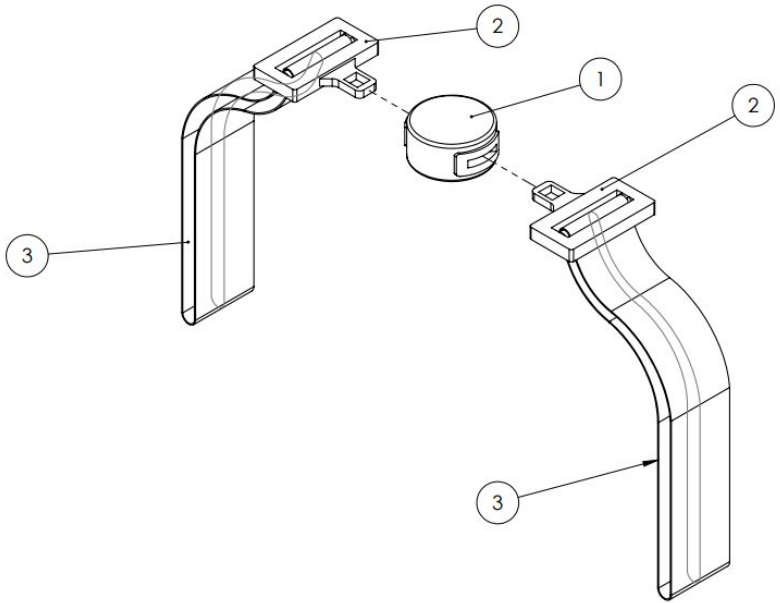

ITEM NO.	PART NUMBER	DESCRIPTION	QTY.
1	buckle	buckle	1
2	tonguebelt	tongue	2
3	belt path	belt	2

Georgia Institute of Technology	TITLE Exploded Seatbelt		DATE 4/28/2024	NAME Nafez Ahmmed			
	COURSE ME 1670	SEMESTER Spring 2024	SECTION C	LAB	ACTIVITY Team	DIMENSIONS ARE IN INCHES ANGLES ARE IN DEGREES SCALE 1:4 SHEET 1 OF 1	SIZE A

Pranav Devalapalli - Part Models

1: Main Body

2: Straps

3: Zipper

4: Power Button

1.

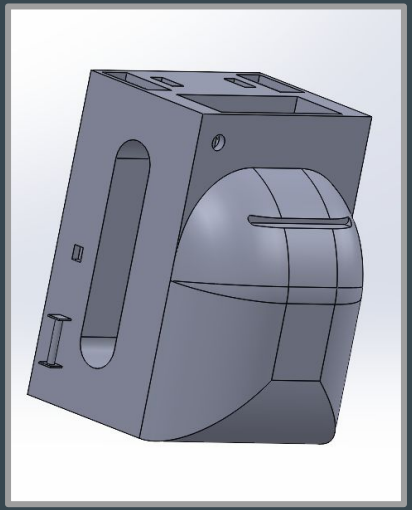

2.

3.

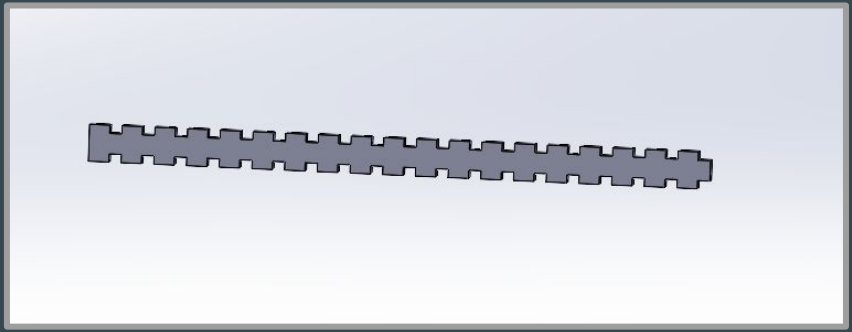

4.

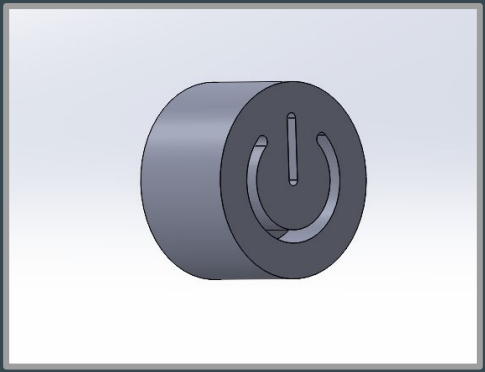

Main Assembly

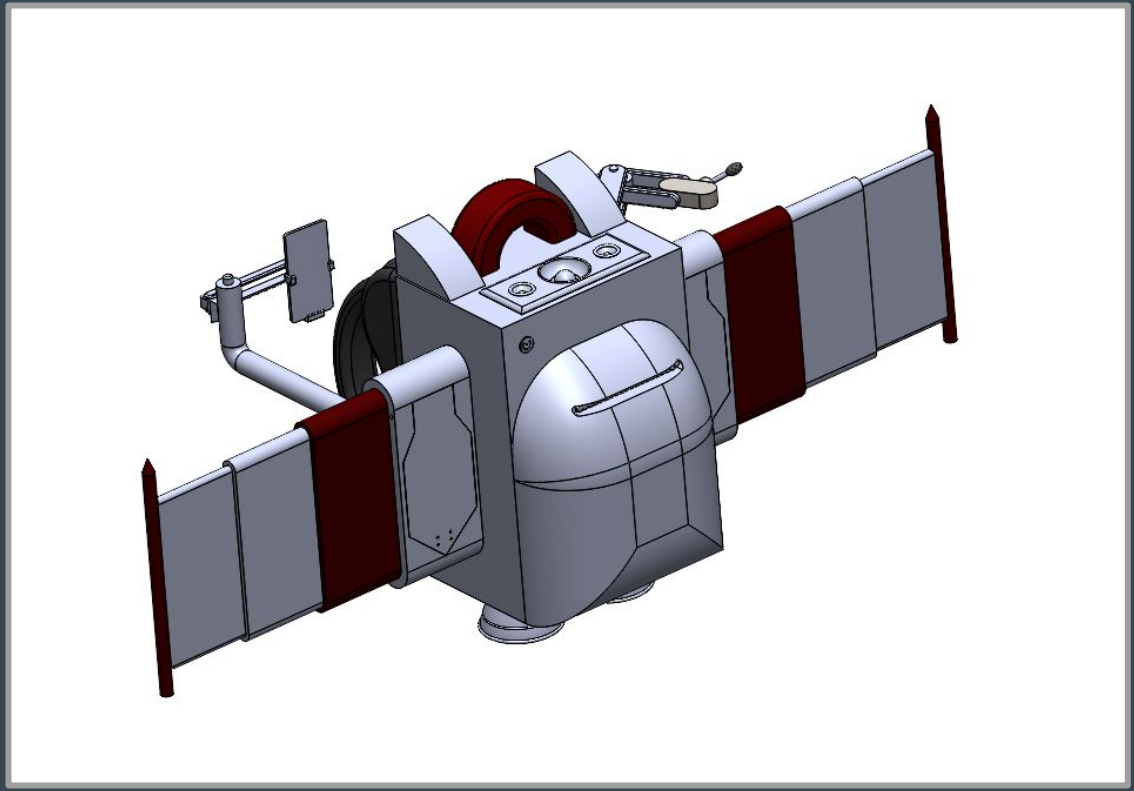

Main Assembly Exploded View

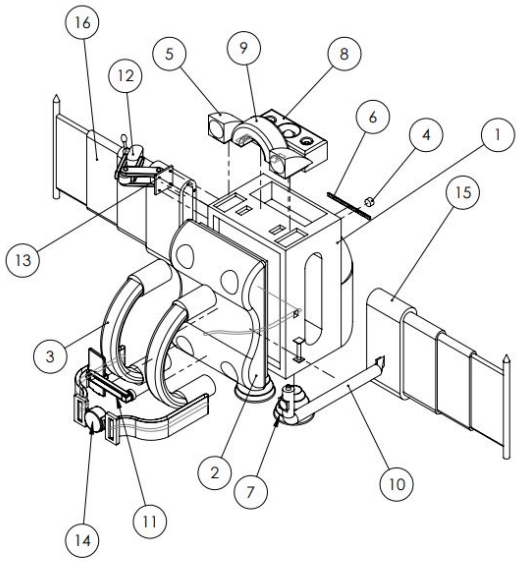

ITEM NO.	PART NUMBER	DESCRIPTION	QTY.
1	MainBodyJetPack		1
2	1670_Group_Cushion		1
3	straps_jetpack		1
4	button 1670 group proj		1
5	1670_Group_Light(x2)		2
6	zipper		1
7	thrusters		2
8	speaker		1
9	1670_Group_Handle - Sophia Aponte		1
10	Joystick		1
11	phone holder assembly		1
12	Mic_Assembly		1
13	91735A146	316 Stainless Steel Pan Head Phillips Screw	4
14	fullSeatbelt		1
15	MirrorWing_Assembly		1
16	Wing_Assembly		1

Georgia Institute of Technology

TITLE	DATE	NAME
EXPLODED VIEW ASSEMBLY	4/29/2024	PRANAV DEVALAPALLI

COURSE	SEMESTER	SECTION	LAB	ACTIVITY	DIMENSIONS ARE IN INCHES ANGLES ARE IN DEGREES		SIZE
ME 1670	SPRING 2024	C	-	-	SCALE 1:12	SHEET 1 OF 3	A

5 4 3 2 1

SOLIDWORKS Educational Product. For Instructional Use Only.

Overall Challenges

- Software Issues
- Engineering drawings
- Communication

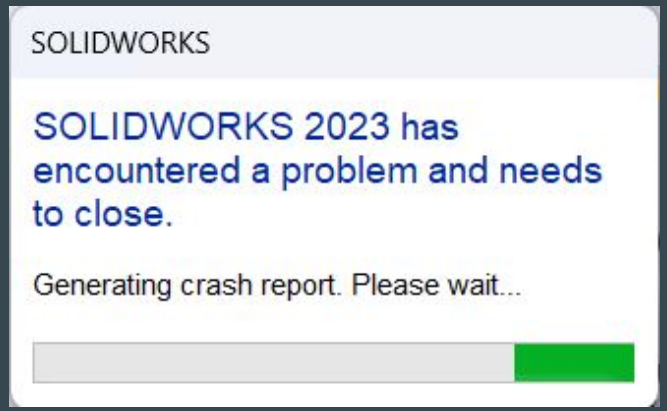

Solutions

- Organization
- Real-life counterparts
- Google Drive

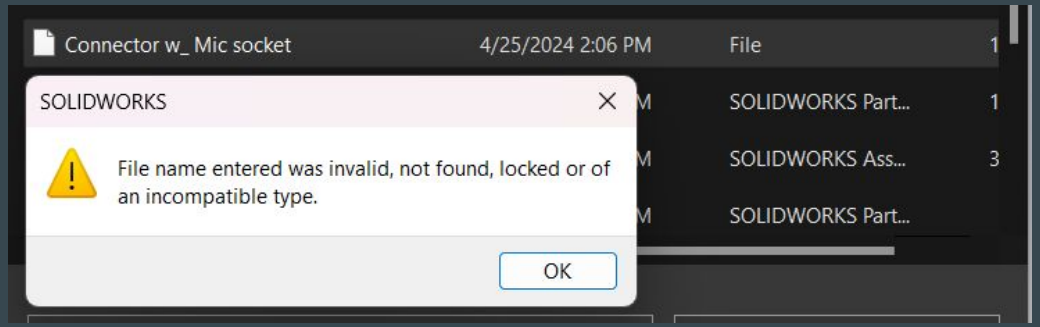

Renderings

Renderings

Renderings

Animation

Conclusion

- Individual Experiences
  - Crashing, parts not fitting, final success
- Important lessons learned
  - Team collaboration experience
  - Stay Organized!
  - Friendship