I can’t get no…
Constraint Satisfaction

Xuanji Yu,

Courtesy of Professor Marie Roch

Chapter 6, Russell & Norvig (skip 6.3.4, 6.5)

Mick Jagger, wordpress.com

Constraint satisfaction problems (CSP)

Special Search Problem:

Don’t care about actions

Care about assignments

Solutions with caveats

Example: Find a way to take classes such that I graduate in four years

- prerequisites
- course availability
- funding

Adobe Stock

Constraint satisfaction problems (CSP)

- To date, states were
  - atomic – didn't care about internal representation except with respect to analyzing for goal/heuristic
  - mutated by actions that produced a new atomic state

- Factored representations
  - states have internal structure
  - structure can be manipulated
  - constraints relate different parts of the structure to one another and provide legal/illegal configurations

CSP Definition

Problem = {X, D, C}

- X – Set of variables $X = \{X_1, X_2, \dots, X_n\}$

- D – Set of domains such that $D = \{D_1, D_2, \dots, D_n\}$

  $\mathrm{X}_i = x_i$ where allowable values $x_i \in D_i$

- C – Set of constraints such that $C = \{C_1, C_2, \dots, C_m\}$

  $C_i =< (Variables), \mathrm{relationship}(variables) >$

  Example: $< (X_2, X_5)\ ,\ X_2 \neq X_5 >$

CSP example: map coloring

- Color territories on a map using 3 colors such that no two colors are adjacent

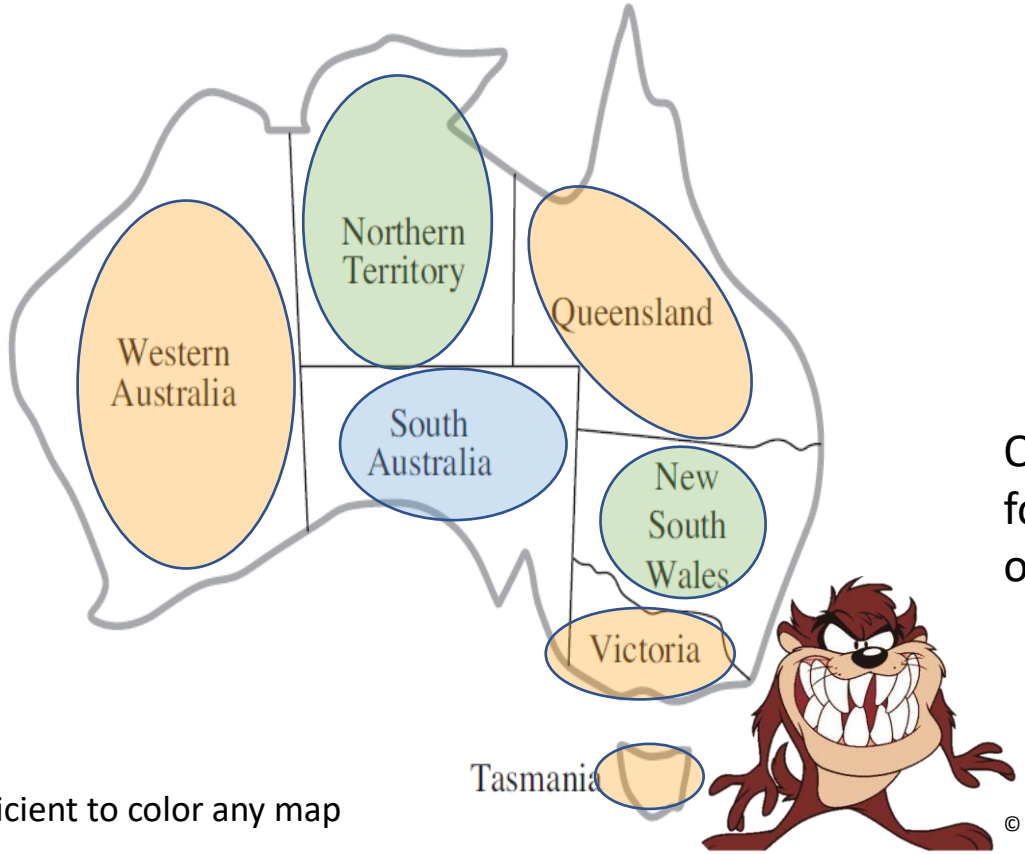

One possible solution for colors:
orange, blue, and green

Note: 4 colors are sufficient to color any map

© Warner Bros

Map coloring

- Graph representation
- Variables
  X={WA, NT, SA, Q, NSW, V, T}
- All variables have the same domain
  D_i={red, green, blue}
- Constraint set
  C={SA ≠ WA, SA ≠ NT, SA ≠ Q, SA ≠ NSW, SA ≠ V,
  WA ≠ NT, NT ≠ Q, Q ≠ NSW, NSW ≠ V}
  or {adjacent(t_a,t_b)→t_a ≠ t_b}

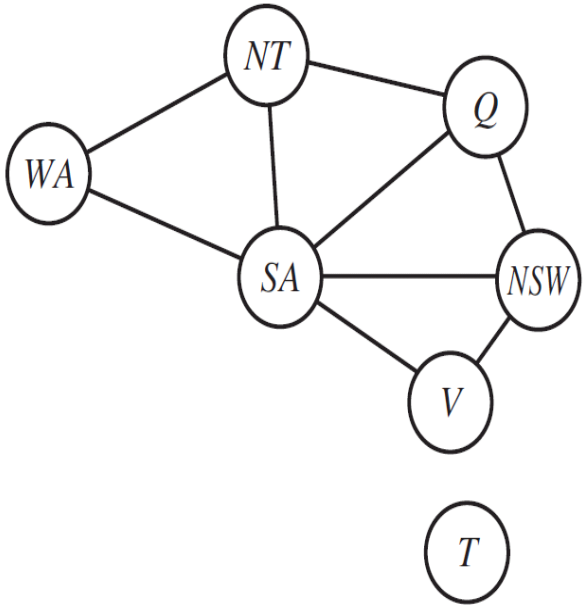

Scheduling example

Partial auto assembly

- Install front and rear axels (10 min each)
- Install four wheels (1 min each)
- Install nuts on wheels (2 min each wheel)
- Attach hubcap (1 min each)
- Inspect

Variable set X

$$X = \left\{ \begin{array}{cccc} Axle_F, & Axle_B, & Wheel_{RF}, & Wheel_{LF}, \\ Wheel_{RB}, & Wheel_{LB}, & Nuts_{RF}, & Nuts_{LF}, \\ Nuts_{RB}, & Nuts_{LB}, & Cap_{RF}, & Cap_{LF}, \\ Cap_{RB}, & Cap_{LB}, & Inspect & \end{array} \right\}$$

Constraint types

- Domain values
  - Time at which task begins {0, 1, 2, …}
- Precedence constraints
  - Suppose it takes 10 minutes to install axles.
  - We can ensure that front wheels are not started before axle assembly is completed:

$$Axle_F + 10 \leq Wheel_{RF}$$

$$Axle_F + 10 \leq Wheel_{LF}$$

- Disjunctive constraints – e.g. doohickey needed to assemble axle, but only have one

$$Axle_F + 10 \leq Axle_B \text{ or } Axle_B + 10 \leq Axle_F$$

Constraint types

- Unary – single variable $Z \leq 10$
- Binary – between two variables $Z^2 > Y$
- Global – constraints with 3+ variables
  can be reduced to multiple binary/unary constraints

$$X \leq Y \leq Z \rightarrow X \leq Y \text{ and } Y \leq Z$$

$$alldiff(W, X, Y, Z) \rightarrow W \neq X, W \neq Y, W \neq Z, X \neq Y, \ldots$$

Note: Global constraints do not have to involve *all* variables

Constraint graphs

Cryptoarithmetic puzzle
Find a different digit for each letter such that substitution results in a valid equation.

$$\begin{array}{r} T\ W\ O \\ +\ T\ W\ O \\ \hline F\ O\ U\ R \end{array}$$

CSP specification

- X = {F,T,U,W,R,O,C_1,C_2,C_3}
- D = {0, 1, 2, 3, 4, 5, 6, 7, 8, 9}
- C = {

  O + O = R + 10 C_1
  C_1 + W + W = U + 10 C_2
  C_2 + T + T = O + 10C_3
  C_3 = F
  Alldiff(F,T,U,W,R,O)
  }

C_i's are auxiliary variables for carry digits

Alldiff(X_1, X_2,…, X_i) → $\forall j,k: j \neq k \text{ and } 1 \leq j,k \leq i, x_j \neq x_k$

Constraint hypergraphs

$$\begin{array}{r} T\ W\ O \\ +\ T\ W\ O \\ \hline F\ O\ U\ R \end{array}$$

$O + O = R + 10\ C_1$

$C_1 + W + W = U + 10\ C_2$

$C_2 + T + T = O + C_3$

$C_3 = F$

Alldiff(F,T,U,W,R,O)

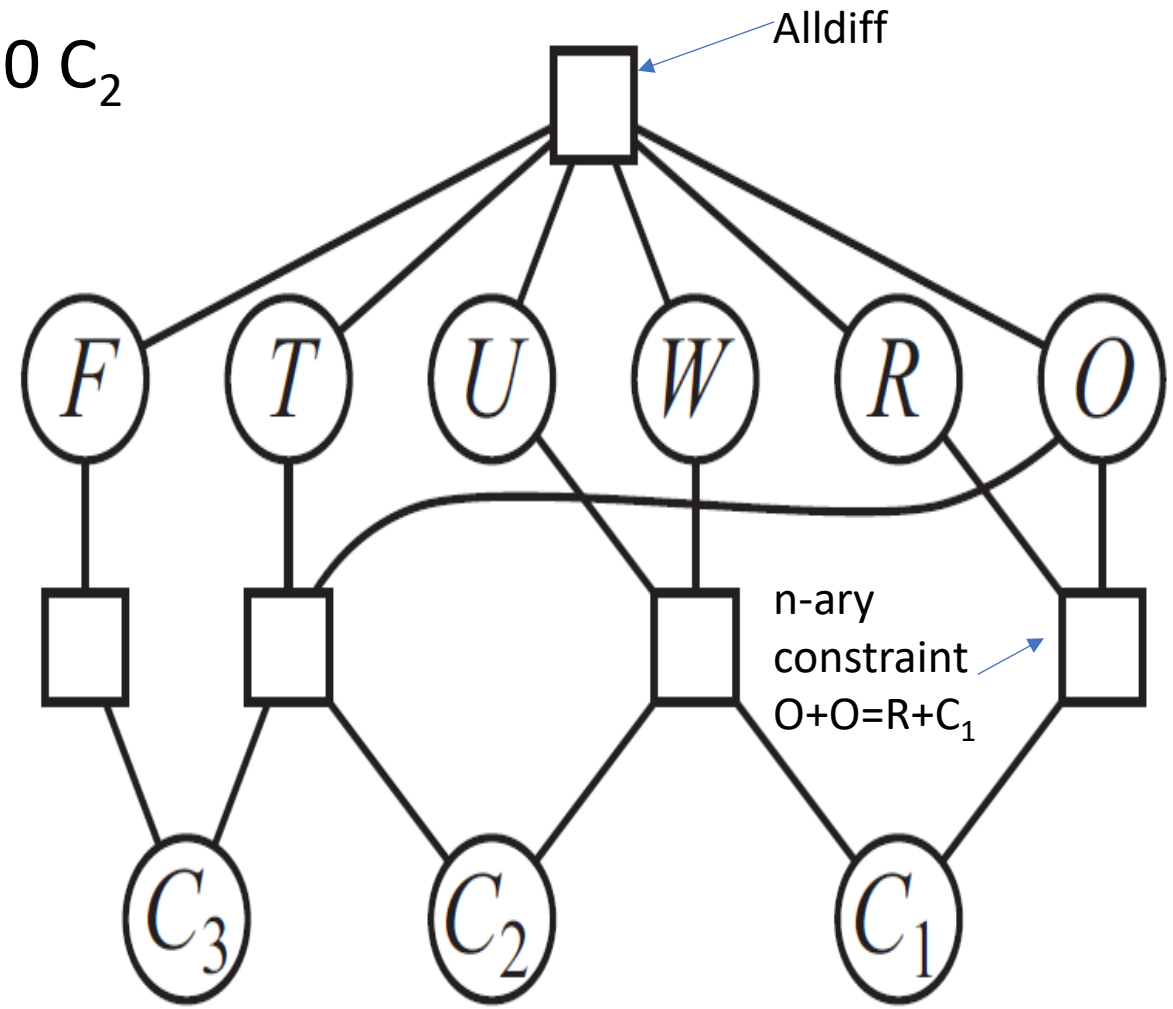

Binarization of constraints

- Convert n-ary constraints into unary/binary ones.
- Example: constraint on X, Y, Z with domains:

$$X \in \{1,2\}\, Y \in \{3,4\}, Z \in \{5,6\}$$

- Create *encapsulated variable U*
  Cartesian product $U = X \times Y \times Z$

$$U \in \left\{ \begin{matrix} (1,3,5),(1,3,6),(1,4,5),(1,4,6), \\ (2,3,5),(2,3,6),(2,4,5),(2,4,6) \end{matrix} \right\}$$

Equivalent binary CSP

- Constraints: $X + Y = Z$

  $X < Y$

- Encapsulations, Cartesian product

$$U \triangleq X \times Y \times Z$$

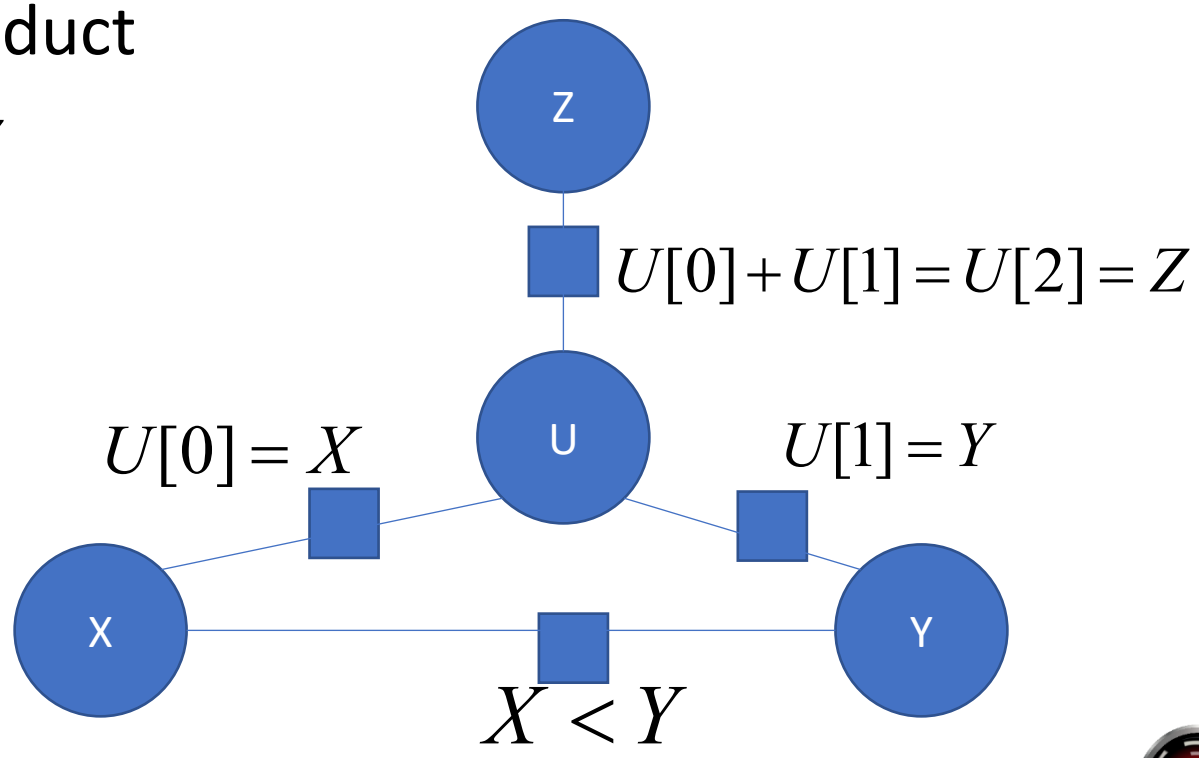

Another example: House puzzle

- A row of 5 houses, each one
  - has a color
  - contains a person with a nationality
  - has a household favorite candy
  - has a household favorite drink
  - contains a pet

  - all attributes are distinct

- How should we represent this?

House Puzzle Constraints

- The Englishman lives in the red house.
- The Spaniard owns the dog.
- The Norwegian lives in the first house on the left.
- The green house is immediately to the right of the ivory house.
- The man who eats Hershey bars lives in the house next to the man with the fox.
- Kit Kats are eaten in the yellow house.
- The Norwegian lives next to the blue house.
- The Smarties eater owns snails.

House Puzzle Constraints

- The Snickers eater drinks orange juice.
- The Ukranian drinks tea.
- The Japanese eats Milky Ways
- Kit Kats are eaten in a house next to where the horse is kept.
- Coffee is drunk in the green house.
- Milk is drunk in the middle house.

Answer the questions:

Where does the zebra live?

Which house drinks water?

House Puzzle Representation

- Variables – What’s common to each thing?

- Domains – What are the domains?

House Puzzle representation

- Constraints are location based, e.g. milk is drunk in the middle house.
- Could we associate variables with a location?
- If so, what are
  - our variables?
  - their domains?
  - and how do we write our constraints?

House puzzle representation

- Colors: red, green, ivory, yellow, & blue
- Nationalities: English, Spaniard, Norwegian, Ukranian, and Japanese
- Pets: dog, fox, snails, horse, and *zebra*
- Candies: Hershey bars, Kit Kats, Smarties, Snickers, and Milky Way
- Drinks: orange juice, tea, coffee, milk, and *water*

Note: water and zebra were inferred from the questions

House puzzle representation

Some examples

- Milk is drunk in the middle house.

  milk = 3

- Coffee is drunk in the green house

  coffee = green

- Kit Kats are eaten in a house next to where the horse is kept.

  abs(kit kats – horse) = 1

- The green house is immediately to the right of the ivory home.

  green = ivory + 1

- The Norwegian lives next to the blue house

  Norwegian = blue + 1 or Norwegian = blue – 1

- The Norwegian lives in the first house on the left

  Norwegian = 1

Implementing a CSP problem: Representation

- variables – simple list
- values – Mapping from variables to value lists
  e.g. Python dictionary
- neighbors – Mapping from variables to list of other variables that participate in constraints
- binary constraints
  - explicit value pairs
  - functions that return a boolean value

Representation of house problem

- variables:
  list of colors, nationalities, pets, candies, & drinks
  {red, green, ivory, yellow, blue, English, Spaniard, …}

- values: $X_i \in \{1,2,3,4,5\}$
  except milk = {3}, Norwegian = {1}

- neighbors:
  - all variable pairs from constraints, e.g. Englishman & red
  - alldiff(red, green, ivory, blue), alldiff(English, Spaniard, …), other category alldiffs

Representation of house problem

- constraints – Function f(A, a, B, b)

  where A and B are variables with values a and b respectively.

  Returns true if constraint is satisfied, otherwise false

  Example: f(“Englishman”, 4, “red”, 5) returns false as the Englishman lives in the red house.

Let’s think about inference

- We know: Norwegian = {1}, milk = {3}
- Consider:
  Norwegian = blue + 1 or Norwegian = blue – 1

  with a sprinkle of algebra we have:
  blue = Norwegian – 1 or blue = Norwegian+1
  or as Norwegian can only be 1:
  blue = 1-1 or blue = 1+1

- We know blue ∈{1,2,3,4,5} , therefore blue=2
- Due to the alldiff constraint, we also know:

$$\forall color_{color \neq blue} color \in \{1,3,4,5\}$$

$$\forall natl_{natl \neq Norwegian} natl \in \{2,3,4,5\}$$

Another inference example

- We have the constraint: green = ivory + 1
  and we know that green & ivory in {1,3,4,5}

- Suppose green=3, can the constraint hold?
- What about green=1?
- We can deduce: $green \in \{4,5\}$
- What about ivory?

How do we formally tame this beastie?

Image: Rankin/Bass 1964

General strategies

- *Local consistency*: Reduce set of possible values through constraint enforcement and propagation
  - node consistency
  - arc consistency
  - path consistency
- Perform search on remaining possible states

Node consistency

- A variable is *node-consistent* if all values satisfy all unary constraints

$$fruits = \left\{ \begin{matrix} apples, oranges, strawberries, \\ peaches, pineapple, bananas \end{matrix} \right\}$$

$$\text{Condition: } allergic(TreeBornFruit)$$

$$\text{Reduced domain: } \{strawberries, pineapple\}$$

- Other unary conditions could further restrict the domain

Arc consistency

- *arc-consistent*
  - variable - all binary constraints are satisfied for the variable
    - it would make sense to call it ‘edge’ consistent, but the name ‘arc-consistent’ is historical
  - network – all variables in CSP are arc-consistent
- Arc consistency only helps when some combinations of values preclude others…

Arc Consistency

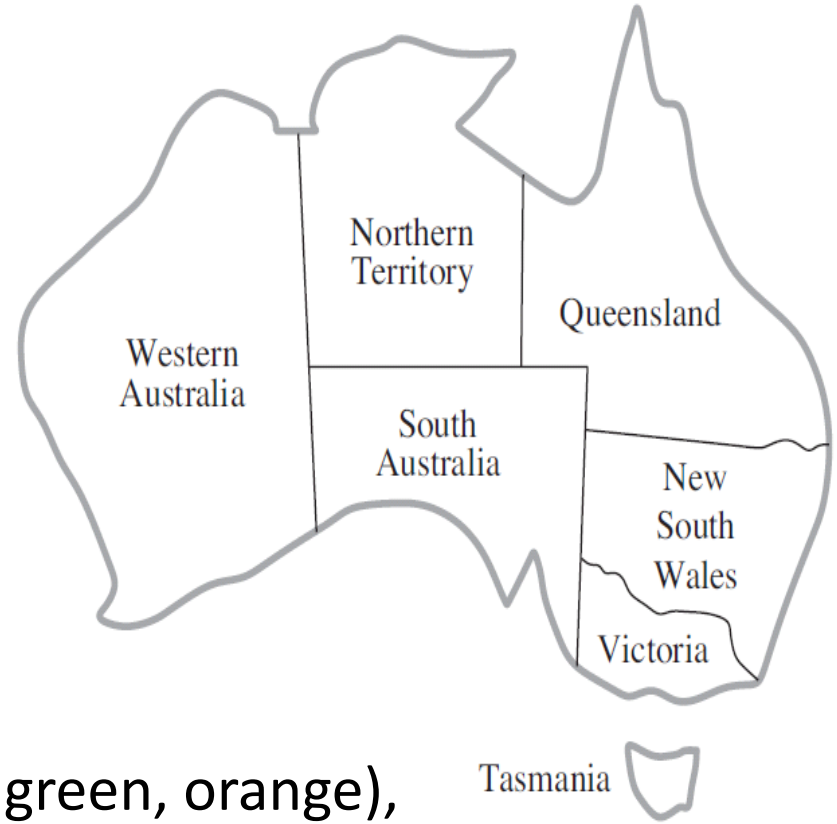

Each territory has domain {orange, green, blue}

WA ≠ SA:
{(orange, green), (orange, blue), (green, orange), (green, blue), (blue, orange), (blue, green)}

Does this reduce the domain of WA or SA?

Arc Consistency

- Constraints that eliminate part of the domain can improve arc consistency
- Variables that represent task starting times

T1 = {0, 1, 2, 3, 4, 5, 6, 7 , 8, 9}

T2 = {2, 3, 4, 5, 6, 7, 8, 9}

- Constraint: T1 + 5 =< T2 yield consistent domains

T1 = {0, 1, 2, 3, 4}

T2 = {5, 6, 7, 8, 9}

Arc Consistency

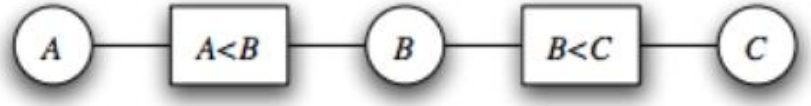

- $dom(A) = \{1, 2, 3, 4\}; dom(B) = \{1, 2, 3, 4\}; dom(C) = \{1, 2, 3, 4\}$
- Suppose you first select the arc $\langle A, A < B \rangle$.
  - Remove $A = 4$ from the domain of A.
  - Add nothing to TDA. (To-Do-Arcs)
- Suppose that $\langle B, B < C \rangle$ is selected next.
  - Prune the value 4 from the domain of B.
  - Add $\langle A, A < B \rangle$ back into the TDA set (why?)
- Suppose that $\langle B, A < B \rangle$ is selected next.
  - Prune 1 from the domain of B.
  - Add no element to TDA (why?)
- Suppose the arc $\langle A, A < B \rangle$ is selected next
  - The value $A = 3$ can be pruned from the domain of A.
  - Add no element to TDA (why?)
- Select $\langle C, B < C \rangle$ next.
  - Remove 1 and 2 from the domain of C.
  - Add $\langle B, B < C \rangle$ back into the TDA set

The other two edges are arc consistent, so the algorithm terminates with $dom(A) = \{1, 2\}$, $dom(B) = \{2, 3\}$, $dom(C) = \{3, 4\}$.

AC-3 arc consistency algorithm

```
def AC3(CSP):
  "CSP: variables X, domains(X), constraints between Xs"
  q = Queue(binary arcs in CSP)  # Need both directions:  Xi,Xj and Xj,Xi
  while not q.empty():
    (Xi, Xj) = q.dequeue()  # get binary constraint
    if revise(CSP, Xi, Xj):
       # We were able to restrict Xi's domain
       if domain(Xi) = ∅ return False
       else:
        for each Xk in {neighbors(Xi)- Xj}: # neighbors of Xi except Xj
           q.enqueue(Xk, Xi)  # New Xi domain may help restrict Xk
  return True
```

$O(cd^3)$ worst case complexity (c # constraints, d max domain size)

AC-3 arc consistency

```
revise(CSP, Xi, Xj):
  "Restrict domain Xi such that it is consistent with Xj"
  revised = False
  for each x in domain(Xi):
    if not ∃y∈domain(Xj) such that
           constraint holds between x & y:
     delete x from domain(Xi)  # note function side effect
     revised = True

  return revised
```

Note: In your text, D_i is used instead of domain(X_i). They are the same thing and both represent the domain values that have not yet been eliminated. This is the *current* domain of the variable, not the original one.

Arc consistency without AC-3

Suppose we have the following CSP,

Variables: X, Y, Z

Domains: Dx = (4 5 6 7), Dy = (4 5 6 8 9), Dz = (3 5 6 7 9)

Constraints: X = Y, Y = Z.

* Let check the **consistency without using AC-3.**

** We check the first constraint: X = Y

We get: Dx = (4 5 6),

Dy = (4 5 6),

Dz no change

Arc consistency without AC-3

*** Then, we check the second constraint: Y = Z

We get: Dy = (5 6)

Dz = (5 6)

Dx = (4 5 6) (no change)

Now we have a problem because

X = Y, is no longer satisfied

This means we have to re-check X = Y, to get Dx = (5 6) as well.

Arc consistency with AC-3

Constraints: X = Y, Y = Z

- Initially, Q = {(1, 2), (2, 1), (2, 3), (3, 2)} alternatively
- Q = {(X, Y), (Y, X), (Y, Z), (Z, Y)}
- *** After removing (X, Y) for check, we have
- Dx = (4 5 6), Dy = (4 5 6 8 9), Dz no change
- Nothing will be brought into Q.
- *** After removing (Y, X) for check, we get
- Dy = (4 5 6), Dx = (4 5 6), Dz no change
- Arc (Z, Y) should be inserted into Q,
- but it is already there, so do nothing
- *** After removing (Y, Z) for check, we have
- Dy = (5 6), Dz no change, Dx = (4 5 6)
- Arc (X, Y) needs to be inserted into Q for recheck.
- And so on ....

AC-3 arc consistency

Example

- Variables: A,B,C,D
- Domain: {1,2,3}
- Constraints: $A \neq B$, $C < B$, $C < D$

Example from “Constraint Satisfaction Problems (CSPs), Gianni A. Di Caro, CMU”

AC-3 arc consistency

- Variables: A,B,C,D
- Domain: {1,2,3}
- Constraints: $A \neq B$, $C < B$, $C < D$ (subset of constraints from before)
- Constraints both ways: $A \neq B$, $B \neq A$, $C < B$, $B > C$, $C < D$, $D > C$
- Queue: AB, BA, BC, CB, CD, DC

AC-3 arc consistency

- Variables: A,B,C,D
- Domain: {1,2,3}
- Constraints: A ≠ B, C < B, C < D (subset of constraints from before)
- Constraints both ways: A≠ B, B≠ A, C < B, B > C, C < D, D > C
- Queue: AB, BA, BC, CB, CD, DC
- Pop AB:
- *for each x in Domain(A)*

  if no value y in Domain(B) that allows (x,y) to satisfy constraint between (A,B)

  delete x from Domain(A)
- No change to domain of A

AC-3 arc consistency

- Variables: A,B,C,D
- Domain: {1,2,3}
- Constraints: $A \neq B$, $C < B$, $C < D$ (subset of constraints from before)
- Constraints both ways: $A \neq B$, $B \neq A$, $C < B$, $B > C$, $C < D$, $D > C$
- Queue: AB, BA, BC, CB, CD, DC
- Pop AB
- Queue: BA, BC, CB, CD, DC

AC-3 arc consistency

- Variables: A,B,C,D
- Domain: {1,2,3}
- Constraints: A ≠ B, C < B, C < D (subset of constraints from before)
- Constraints both ways: A≠ B, B≠ A, C < B, B > C, C < D, D > C
- Queue: AB, BA, BC, CB, CD, DC
- Pop AB
- Queue: BA, BC, CB, CD, DC
- Pop BA
- *for each x in Domain(B)*
  if no value y in Domain(A) that allows (x,y) to satisfy constraint between (B,A)
  delete x from Domain(B)
- No change to domain of B

AC-3 arc consistency

- Variables: A,B,C,D
- Domain: {1,2,3}
- Constraints: A ≠ B, C < B, C < D (subset of constraints from before)
- Constraints both ways: A≠ B, B≠ A, C < B, B > C, C < D, D > C
- Queue: AB, BA, BC, CB, CD, DC
- Queue: BA, BC, CB, CD, DC
- Queue: BC, CB, CD, DC
- Pop BC
- *for each x in Domain(B)*
  - *if no value y in Domain(C) that allows (x,y) to satisfy constraint between (B,C)*
  - *delete x from Domain(B)*
- If B is 1, constraint B >C cannot be satisfied. So delete 1 from B's domain, B={2,3}
- **Also have to add neighbors of B (except C) back to queue: AB**
- Queue: AB, CB, CD, DC

AC-3 arc consistency

Example
- Variables: A,B,C,D
- Domain: {1,2,3}
- Constraints: A ≠ B, C < B, C < D

- Queue: AB, BA, BC, CB, CD, DC A-D = {1,2,3}
- Queue: BA, BC, CB, CD, DC A-D = {1,2,3}
- Queue: BC, CB, CD, DC A-D = {1,2,3}
- Queue: AB, CB, CD, DC B={2,3}, A/C/D = {1,2,3}
- Pop AB
  - For every value of A is there a value of B such that A ≠ B?
  - Yes, so no change

AC-3 arc consistency

Example
- Variables: A,B,C,D
- Domain: {1,2,3}
- Constraints: A ≠ B, C < B, C < D

- Queue: AB, BA, BC, CB, CD, DC, A-D = {1,2,3}
- Queue: BA, BC, CB, CD, DC A-D = {1,2,3}
- Queue: BC, CB, CD, DC A-D = {1,2,3}
- Queue: AB, CB, CD, DC B={2,3}, A/C/D = {1,2,3}
- Queue: CB, CD, DC B={2,3}, A/C/D = {1,2,3}
- Pop CB
  - For every value of C is there a value of B such that C < B
  - If C = 3, no value of B that fits
  - So delete 3 from C's domain, C = {1,2}
  - **Also have to add neighbors of C (except B) back to queue: no change because already in**

AC-3 arc consistency

Example
- Variables: A,B,C,D
- Domain: {1,2,3}
- Constraints: A ≠ B, C < B, C < D

- Queue: AB, BA, BC, CB, CD, DC, A-D = {1,2,3}
- Queue: BA, BC, CB, CD, DC A-D = {1,2,3}
- Queue: BC, CB, CD, DC A-D = {1,2,3}
- Queue: AB, CB, CD, DC B={2,3}, A/C/D = {1,2,3}
- Queue: CB, CD, DC B={2,3}, A/C/D = {1,2,3}
- Queue: CD, DC B={2,3}, C = {1,2} A,D = {1,2,3}
- Pop CD
  - For every value of C, is there a value of D such that C < D?
  - Yes, so no change

AC-3 arc consistency

Example
- Variables: A,B,C,D
- Domain: {1,2,3}
- Constraints: A ≠ B, C < B, C < D

- Queue: AB, BA, BC, CB, CD, DC A-D = {1,2,3}
- Queue: BA, BC, CB, CD, DC A-D = {1,2,3}
- Queue: BC, CB, CD, DC A-D = {1,2,3}
- Queue: AB, CB, CD, DC B={2,3}, A/C/D = {1,2,3}
- Queue: CB, CD, DC B={2,3}, A/C/D = {1,2,3}
- Queue: CD, DC B={2,3}, C = {1,2} A,D = {1,2,3}
- Queue: DC B={2,3}, C = {1,2} A,D = {1,2,3}
- For every value of D is there a value of C such that D > C?
  - Not if D = 1
  - So D = {2,3}

AC-3 arc consistency

Example
- Variables: A,B,C,D
- Domain: {1,2,3}
- Constraints: A ≠ B, C < B, C < D

- Queue: AB, BA, BC, CB, CD, DC A-D = {1,2,3}
- Queue: BA, BC, CB, CD, DC A-D = {1,2,3}
- Queue: BC, CB, CD, DC A-D = {1,2,3}
- Queue: AB, CB, CD, DC B={2,3}, A/C/D = {1,2,3}
- Queue: CB, CD, DC B={2,3}, A/C/D = {1,2,3}
- Queue: CD, DC B={2,3}, C = {1,2} A,D = {1,2,3}
- Queue: DC B={2,3}, C = {1,2} A,D = {1,2,3}
- A = {1,2,3} B={2,3}, C = {1,2} D = {2,3}

Path and k- consistency

- Higher levels of consistency, beyond our scope

- General ideas:
  - Path consistency
    See if a pair of variables $\{X_i, X_j\}$ consistent with a 3rd variable X_k. Solved similarly to arc consistency

  - K-consistency
    Given k-1 consistent variables, can we make a kth variable consistent (generalization of consistency)

Global constraints

Consider the “all different” constraint.

- Each variable has to have a distinct value.
- Assume m variables, and n distinct values.
- What happens when m > n?

Global constraints

Extending this idea:

- Find variables constrained to a single value
- Remove these variables and their values from all variables.
- Repeat until no variable is constrained to a single value
- Constraints cannot be satisfied if
    1. A variable remains with an empty domain
    2. There are more variables than remaining values

Resource constraints ("atmost")

$$atmost(20, X, Y, Z) \rightarrow X + Y + Z \leq 20$$

$$atmost(10, P_1, P_2, P_3, P_4) \rightarrow \sum_{i=1}^{4} P_i \leq 10$$

- Consistency checks
  - Minimum values of domains satisfy constraints?
  - $P_i = \{3, 4, 5, 6\}$ as $3 + \cancel{3} + 3 + 3 = 12 \nleq 10$

- Domain restriction
  - Are the largest values consistent with the minimum ones?
  - $P_i = \{2, 3, 4, \cancel{5}, \cancel{6}\}$ as $2 + 2 + 2 + (5\ or\ 6) = (11\ or\ 12) \nleq 10$

Range bounds

- Impractical to store large integer sets
- Ranges can be used [min, max] instead
- Bounds propagation can be used to restrict domains according to constraints

X domain [25, 100]	[75, 100]	$X+Y \geq 200$
Y domain [50, 125]	[100, 125]	

How did we get [75, 100]? $Y = 125 \rightarrow X \geq 75$

Sudoku

Maki Kaji 1951-2021 (photo: AP)

- Puzzle game played with digit symbols
- All-different constraints exist on *units*
- Some cells initially filled in

- Hard for humans, pretty simple for CSP solvers

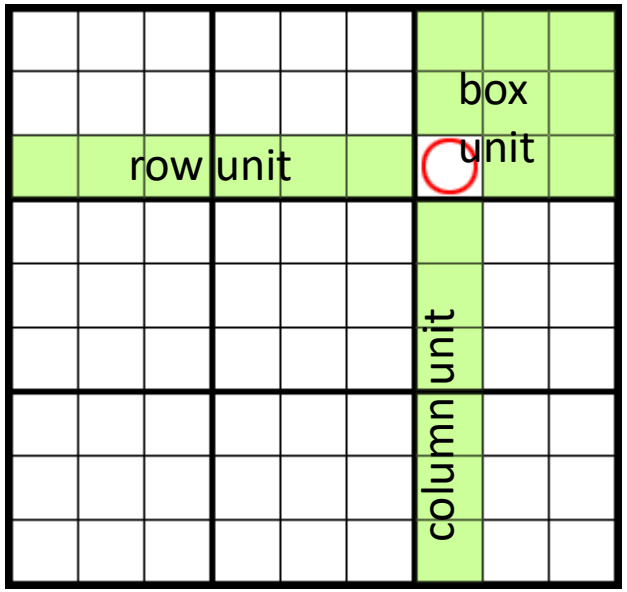

Jef Vandenberghe Sodoku tutorial

Sudoku

	1	2	3	4	5	6	7	8	9
A			3		2		6		
B	9			3		5			1
C			1	8		6	4		
D			8	1		2	9		
E	7								8
F			6	7		8	2		
G			2	6		9	5		
H	8			2		3			9
I			5		1		3		

Sudoku

	1	2	3	4	5	6	7	8	9
A			3		2		6		
B	9			3		5			1
C			1	8		6	4		
D			8	1		2	9		
E	7								8
F			6	7		8	2		
G			2	6		9	5		
H	8			2		3			9
I			5		1		3		

Sample constraints

- Alldiff(A1,A2,A3,A4,A5,A6,A7,A8,A9)
- Alldiff(A1,B1,C1,D1,E1,F1,G1,H1,I1)
- Alldiff(A1,A2,A3,B1,B2,B3,C1,C2,C3)

These can be expanded to binary constraints, e.g. A1≠A2

Sudoku

AC-3 constraint propagation

- E6: d={1, 2, 3, 4, 5, 6, 7, 8, 9}
- Box constraints:
  $d_1 = d - \{1, 2, 7, 8\} = \{3, 4, 5, 6, 9\}$
- Column constraints:
  $d_2 = d_1 - \{2, 3, 5, 6, 8, 9\} = \{4\}$

Therefore E6=4

	1	2	3	4	5	6	7	8	9
A			3		2		6		
B	9			3		5			1
C			1	8		6	4		
D			8	1		2	9		
E	7								8
F			6	7		8	2		
G			2	6		9	5		
H	8			2		3			9
I			5		1		3		

Sudoku

	1	2	3	4	5	6	7	8	9
A			3		2		6		
B	9			3		5			1
C			1	8		6	4		
D			8	1		2	9		
E	7					4			8
F			6	7		8	2		
G			2	6		9	5		
H	8			2		3			9
I			5		1		3		

AC-3 constraint propagation

- I6: d={1, 2, 3, 4, 5, 6, 7, 8, 9}
- Column constraints:
  d_1 = d - {2, 3, 4, 5, 6, 8, 9} = {1, 7}
- Row constraints:
  $d_2 = d_1$ – {1, 3, 5} = {7}

Therefore I6=7

For this puzzle, continued application of AC-3 would solve the puzzle (not always true)

Naked sets

- Yellow squares form a *naked pair* {1, 5}
  - one must contain 1
  - other 5
- Can subtract 1 and 5 from domains of all other cells in row unit.
- These types of “tricks” are not limited to Sudoku puzzles.

4	1 5	3 5	2	7	3 9	6	1 8 9	5 8
7	9	8	1	5	6	2	3	4
1 6	2	3 5 6	8	4	3 9	1 5	1 9	7
2	3	7	4	6	8	9	5	1
8	4	9	5	3	1	7	2	6
5	6	1	7	9	2	8	4	3
3 6	8	2	3 6	1	5	4	7	9
1 6 9	7	5 6	6 9	2	4	3	1 6 8	5 8
1 3 6 9	1 5	4	3 6 9	8	7	1 5	1 6	2

Back to searching…

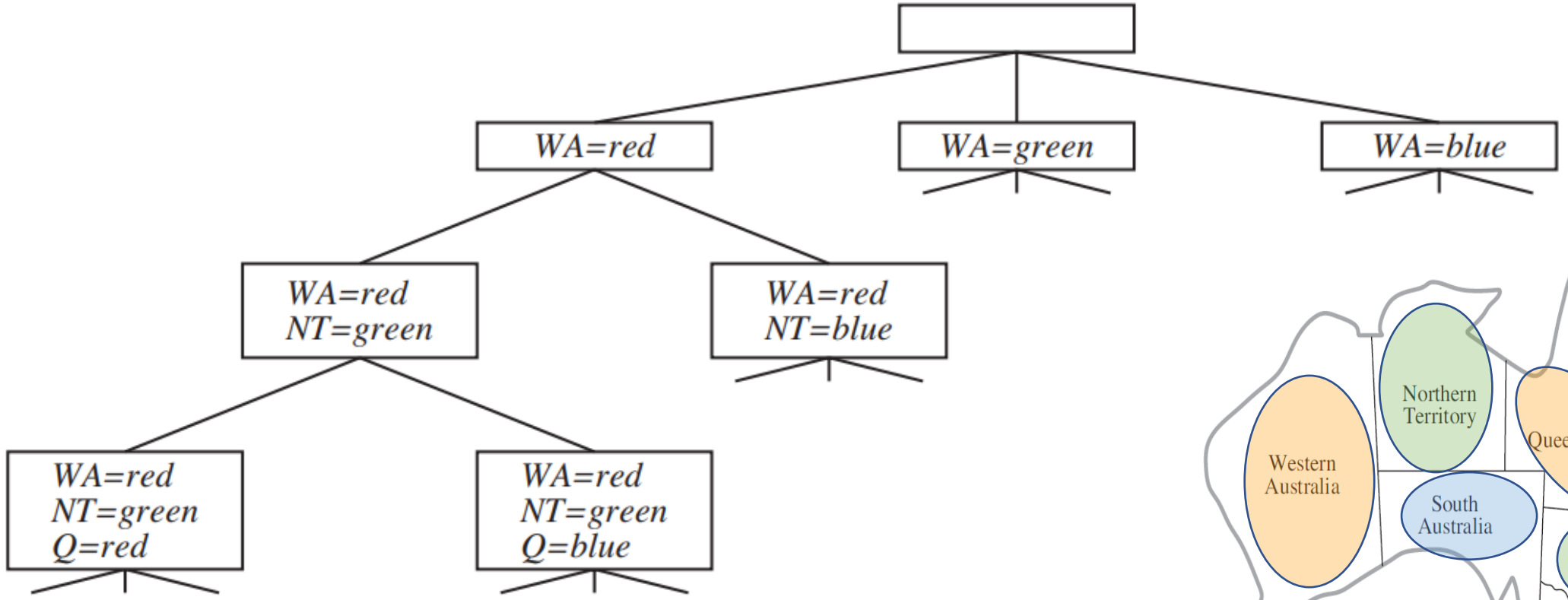

Figure 6.6 Part of the search tree for the map-coloring problem

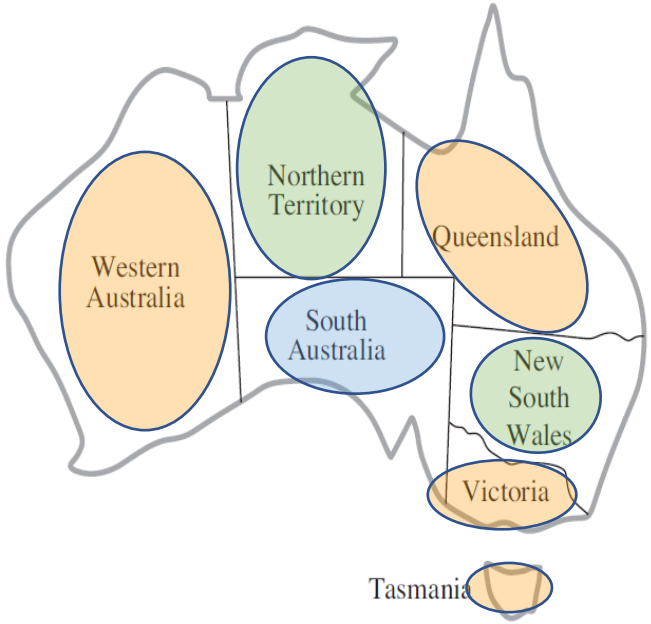

Search problem components

- Initial state
- Actions
- Cost
- Transition model
- Goal predicate

Any path that reaches a goal is a *solution*, the lowest cost path is an *optimal solution*.

CSP Search problem components

- Initial state: Empty assignment
- Actions: add a {variable = value}
- Cost: all path same cost
- Transition model: show how adding an assignment change the assignment
- Goal predicate: check if all variables assigned and constraints all satisfied

Back to searching…

- Once all constraints have been propagated, search for a solution.
- Naïve search
  - Action picks a variable and a value. *n* variables domain size *d* → $n \cdot d$ possible search nodes
  - Search on next variable.
  - Backtrack when search fails.
- Problems with naïve search
  - n variables with domains of size d
  - nd choices for first variable, $(n-1)d$ for second….

$$nd \cdot (n-1)d \cdot \ldots \cdot 2d \cdot 1d = n!\, d^n$$

leaves but there are only d^n possible assignments!

Back to searching

- CSPs are commutative
- Order of variable selection does not affect correctness (may have other impacts)
- Modified search
  - Each level of search handles a specific variable.
  - Levels have d choices, leaving us with d^n leaves

Backtracking Search

```
def backtracking-search(CSP):
  return backtrack({}, CSP);  # call w/ no assignments

def backtrack(assignment, CSP):
  if all variables assigned, return assignment
  var = select-unassigned-variable(CSP, assignment)
  for each value in order-domain-values(var, assignment, csp):
    if value consistent with assignment:
      assignment.add({var = value})
      # propagate new constraints (will work without, but probably slowly)
      inferences = inference(CSP, var, assignment)
      if inferences ≠ failure:
        assignment.add(inferences)
        result = backtrack(assignment, CSP)
        if result ≠ failure, return result
    # either value inconsistent or further exploration failed
    # restore assignment to its state at top of loop and try next value
    assignment.remove({var = value}, inferences)
  # No value was consistent with the constraints
  return failure
```

Backtracking search

- Several strategies can be employed to make searches more efficient, e.g.
  - heuristics (best-first and A* search)
  - pruning (alpha-beta search, we have not covered this)

- Can we come up with strategies to improve CSP search?

select-unassigned-variable

- Could try in order: $\{X_1, X_2, \ldots, X_n\}$
  Rarely efficient…

- Fail-first strategies
  - Minimum remaining value heuristic:
    Select the most constrained variable; the one with the smallest domain.
    Rationale – probably the most likely variable to fail

  - Degree heuristic:
    Use the variable with the highest number of constraints on other unassigned variables.

select-unassigned-variable

- Minimum remaining value usually is a better performer than degree heuristic, but not always:

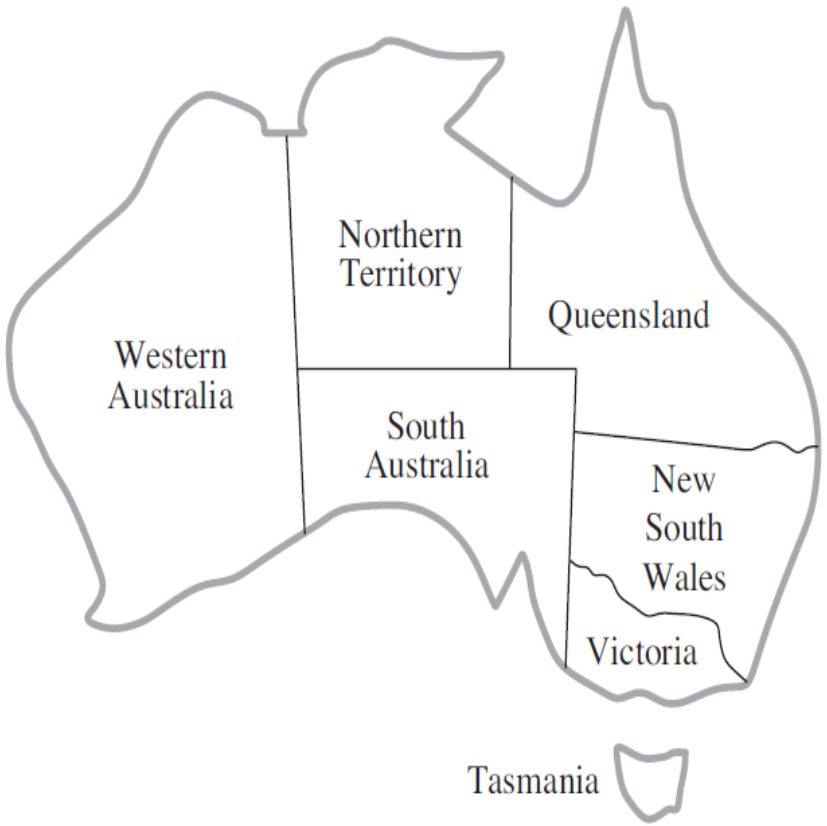

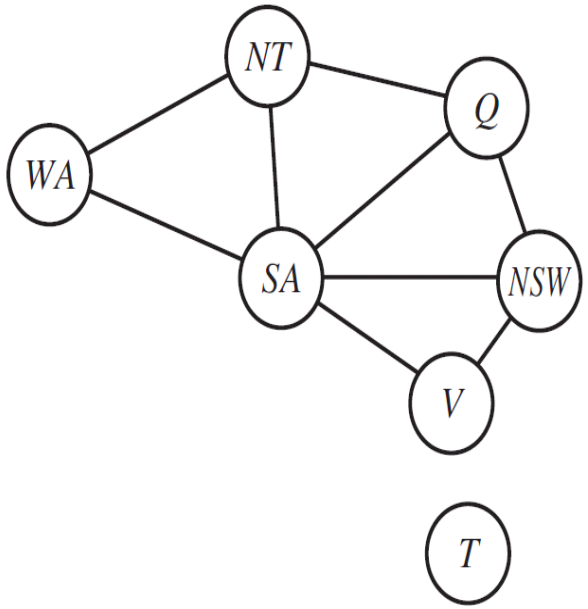

All variables have domains of size three at start, but degree of constraints differs.

order-domain-values

- The order of the values within a domain may or may not make a difference
- Order has no consequence
  - if goal is to produce all solutions or
  - if there are no solutions
- In other cases, we use a fail-last strategy
  - Pick the value that reduces neighbors' domains as little as possible.

order-domain-values

Why fail-first for variable selection and fail-last for value selection?

- It turns out that, a variable ordering that chooses a variable with the minimum number of remaining values helps minimize the number of nodes in the search tree by pruning larger parts of the tree earlier.
- For value ordering, the trick is that we only need one solution; therefore it makes sense to look for the most likely values first.
- If we wanted to enumerate all solutions rather than just find one, then value ordering would be irrelevant.

inference in search

Inference: Makes inferences about other variables based on the current assignment, in short to detect the possible failure before it occurs and to look ahead to not make mistakes

- forward-checking
  - Check arc consistency with immediate neighbors of the assigned variable
  - Removes values from neighbors' domains that conflict with the assignment
  - Return false if domain empty
- Maintaining arc consistency (MAC)
  - maintaining arc-consistency is a variant of AC3
  - more powerful but expensive as it propagates all the way through the graph as opposed to forward checking that just looks at neighbors.

forward-checking example

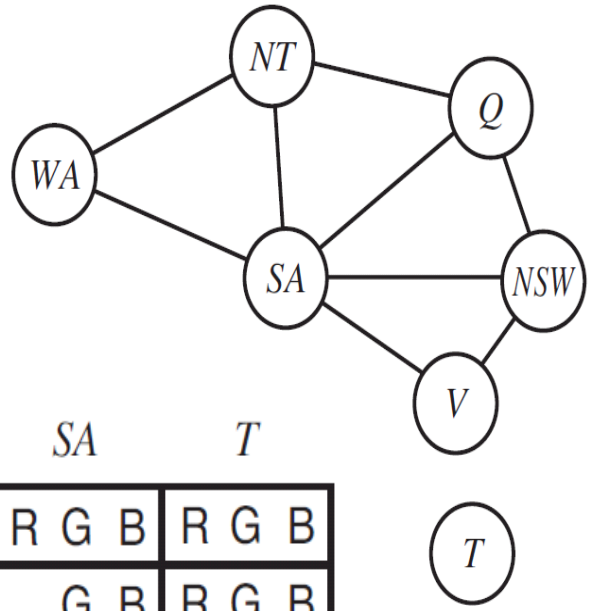

	WA	NT	Q	NSW	V	SA	T
Initial domains	R G B	R G B	R G B	R G B	R G B	R G B	R G B
After *WA=red*	R	G B	R G B	R G B	R G B	G B	R G B
After *Q=green*	R	B	G	R B	R G B	B	R G B
After *V=blue*	R	B	G	R	B	X	R G B

Note: Variable selection is not by degree ordering or min. remaining value

forward-checking example

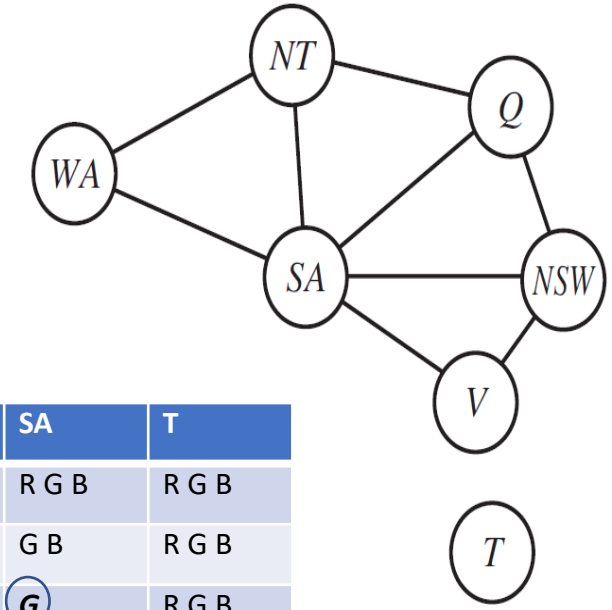

with minimum remaining value heuristic

	WA	NT	Q	NSW	V	SA	T
Initial domains	R G B	R G B	R G B	R G B	R G B	R G B	R G B
After WA=R	***R***	G B	R G B	R G B	R G B	G B	R G B
After SA=G	R	B	R B	R B	R B	***G***	R G B
After Q=R	R	B	***R***	B	R B	G	R G B
After V=R	R	B	R	B	***R***	G	R G B

forward-checking example

When we assigned SA=G, we restricted NT to B
However, Q was only restricted to R B

Forward checking does not check anything other than constraints with the neighbor being assigned.

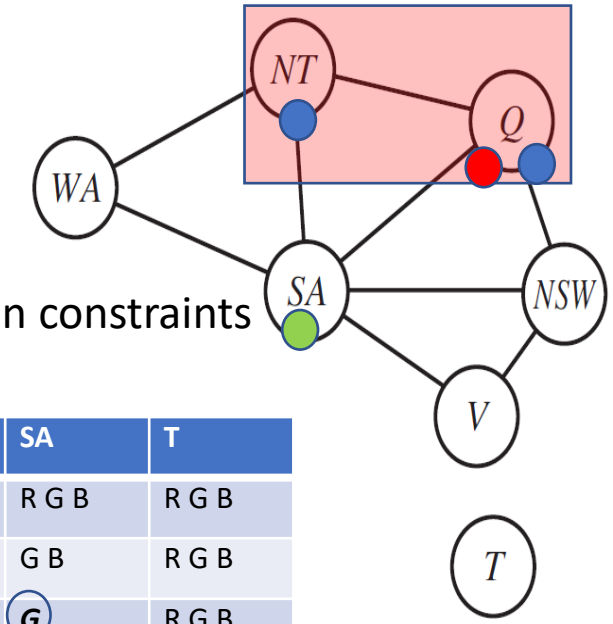

	WA	NT	Q	NSW	V	SA	T
Initial domains	R G B	R G B	R G B	R G B	R G B	R G B	R G B
After WA=R	***R***	G B	R G B	R G B	R G B	G B	R G B
After SA=G	R	B	R B	R B	R B	***G***	R G B
After Q=R	R	B	***R***	B	R B	G	R G B
After V=R	R	B	R	B	***R***	G	R G B

Maintaining arc consistency (MAC)

- Algorithm that propagates constraints beyond the node.
- AC3 algorithm with modified initial queue
  - typical AC3 – *all constraints*
  - MAC – constraints between selected variable X_i and its neighbors X_j $\{(X_j, X_i): X_j \text{ neighbor}(X_i)\}$

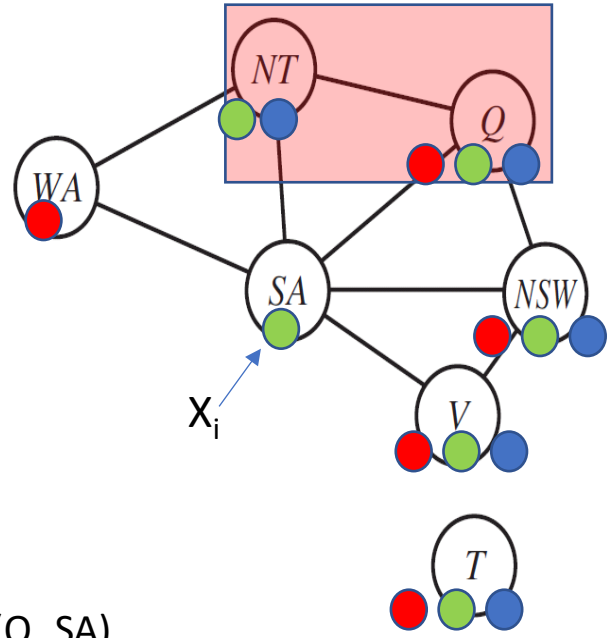

SA=green
queue: (NT, SA), (Q, SA),
(NSW, SA), (V, SA)
Process (NT, SA):
G removed from NT. Neighbors(NT)={WA,SA,Q}
enqueue (WA,NT) (Q,NT)
Process (Q, SA):
G removed from Q
enqueue (NT, Q), (NSW, Q)
and so on…

Intelligent backtracking

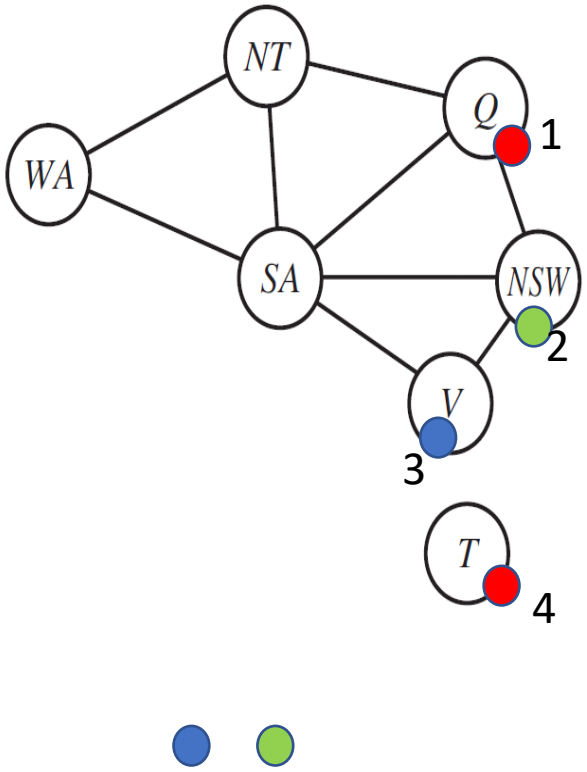

Backtracking when a partial assignment violates constraints

- Suppose variable ordering:
  Q, NSW, V, T, SA, WA, NT
- and assignments:
  {Q=red, NSW=green, V=blue, T=red}
- SA has restricted domain {} and is problematic…
  - backtracking will try new values for Tasmania

- What if we could *backjump* to the variable that caused the problem?

Conflict-directed backjumping

- Maintain an ordered *conflict set* for each variable X:
  A set of assignments that restricted values in X's domain.
- When a conflict occurs, we backtrack to the last conflict that was added.
- In the case of SA,
  - assignments to Q, NSW, and V restricted SA's domain
  - variable ordering: Q, NSW, V, T, SA, WA, NT
  - SA conflict set {Q=red,NSW=green,V=blue}
  - so we backjump to SA's last conflict V. with {Q=red,NSW=green}

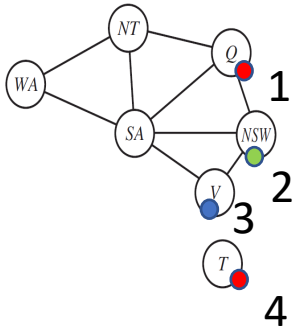

Backjumping implementation

- On forward checks of X assigned to x,
  - when X deletes a value from Y's domain, add X=x to Y's conflict set
  - If Y is emptied, add Y's conflict set to X's and backjump to the last added conflict.
    Adding these lets us be smarter about where to backjump.

- Easy to implement, build conflict set during forward check.

Backjumping

- What we prune in conflict-directed backjumping is redundant to what we'd prune from forward checking or MAC searches.
- Interesting, but better to just use forward checking/MAC…

- Still a good idea, what if we could extend it?

More sophisticated backjumps…

- Assignments to the right are inconsistent
  - Suppose we try and assign T, NT, Q, V, SA
  - SA, NT, Q have reduced domains {green, blue} and cannot be assigned
  - Backjumping fails when a domain is reduced to ∅ as SA, NT, and Q are consistent with WA, NSW.

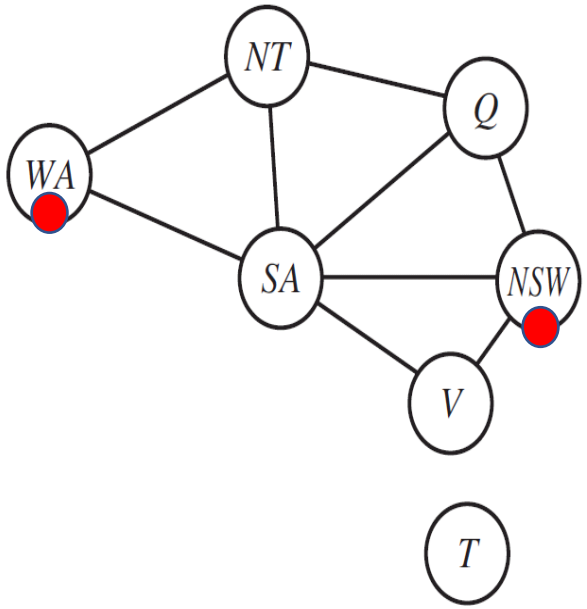

- Can we determine that there is a *conflict set* {WA, SA, NT, Q} that is causing the issue?

Conflict-directed backjumps

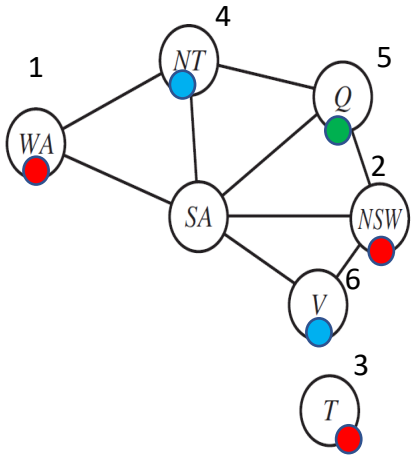

- Variable order: WA, NSW, T, NT, Q, V, SA
- SA fails. **conf(SA) = {WA=red, NT=blue, Q=green}**
- Last variable in conf(SA) is Queensland
  - Absorb SA's conflict set into Q

$$conf(Q) = conf(Q) \cup conf(SA) - \{Q\}$$

  - conf(Q)
    = {NT=blue, NSW=red} U {WA=red, NT=blue,Q=green}-{Q=green}
    = {WA=red, NSW=red, NT=blue}
    Unable to assign a different color to Q, backjump
  - conf(NT) = conf(NT) U conf(Q)-{NT}
    = {WA=red} U {WA=red, NSW=red, NT=blue}-{NT=blue}
    = {WA=red, NSW=red}
    When we run out of colors for NT, we will backump to NSW

Note: conf(SA) would have had NSW=red if NSW was processed before WA

Constraint-learning and no-goods

- On the Australia CSP, we identified a minimal set of assignments that caused the problem.

- We call these assignment *no-goods.*

- We can avoid running into this problem again by adding a new constraint (or checking a no-good cache).

Local Search CSPs

- Alternative to what we have seen so far
- Assign everything at once
- Search changes one variable at a time
  - Which variable?

Min-Conflicts Local Search

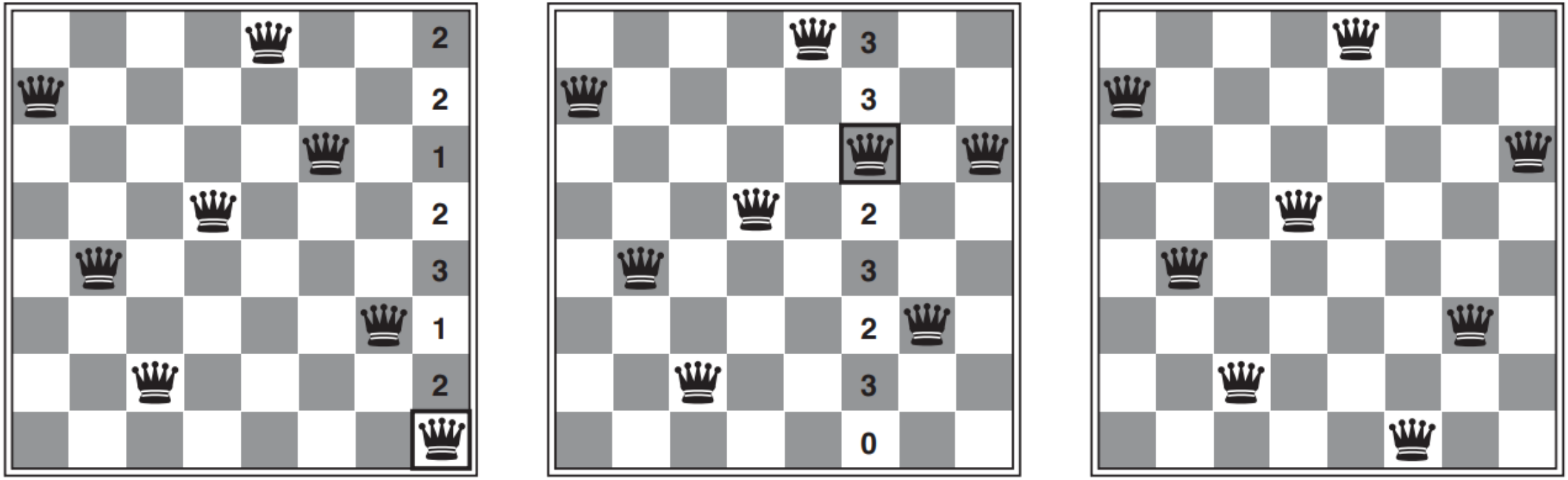

Figure 6.9 A two-step solution using min-conflicts for an 8-queens problem. At each stage, a queen is chosen for reassignment in its column. The number of conflicts (in this case, the number of attacking queens) is shown in each square. The algorithm moves the queen to the min-conflicts square, breaking ties randomly.

Min-Conflicts Local Search

```
def minconflicts(csp, maxsteps):
  current = assign all variables
  for i = 1 to maxsteps:
    if solution(current), return current
    var = select conflicted variable at random from current
    val = find value that minimizes the number of conflicts
    update current such that var=val
  return failure
```

Min-Conflicts local search

- Pretty effective for many problems, e.g.
  million queens problem can be solved in about 50 steps
- This is essentially a greedy search, consequently:
  - local extrema
  - can plateau
  - many techniques used for hill climbing can be applied (e.g. simulated annealing, plateau search)