SENIOR CAPSTONE FINAL REPORT – ET NAVSWARM ESC

Nicholas Snyder, Qiaoyan Yu, Ph.D., Md Shaad Mahmud Ph.D.

ECE 792
Submitted on 8 May 2024

Executive Summary

The ET NavSwarm project, an interdisciplinary initiative, aims to design and deploy a swarm of autonomous rovers for material prospecting on another planet to aid in constructing habitats for future colonists. The project's main technical challenge was to develop a swarm of rovers that integrate both a particle swarm optimization algorithm and an avoidance system to navigate and operate in extraterrestrial environments.

Faced with initial hardware instabilities and the need to ensure long-term battery health, I chose to design a reliable PCB using KiCad, a popular open-source EDA suite. The new PCB design aimed to replace a previously faulty electronic speed controller and incorporate battery monitoring to prevent hardware failures and increase the rover's operational lifespan.

Despite encountering challenges with component availability that led to a slight budget overrun and delays in the prototype phase, the project successfully fabricated five prototype boards. These prototypes integrate dual data planes, ground, and split voltage power planes, designed for cost-effectiveness within a $100 budget. However, limited testing capabilities and time constraints prevented a comprehensive evaluation of the designs. Key project results include a successful adaptation of the STM32F405 microcontroller and MOSFETs for the primary control and power handling components, rather than the initially considered IGBTs, due to cost and applicability.

Table of Contents

Executive Summary 1
Design Problem and Objectives 2
Documentation 3

Testing and Results 4
Bill of Materials 5
Gantt Chart 6
Ethical Consideration 6
Safety 6
Standards Utilized 7
Contribution 7
Conclusions 7
Future Efforts 8
Acknowledgements 8
Appendix 8

Design Problem and Objectives

ET NavSwarm is an interdisciplinary group with the end goal of sending a swarm of small autonomous rovers to another planet to prospect for materials. The end goal is to use these materials to construct habitats for the eventual human colonists. The Computer Science group is tasked with implementing the particle swarm optimization (PSO) algorithm to the rovers. The PSO algorithm includes two parts. One is a waypoint queue for each rover and the other is object avoidance with the help of a Lidar sensor array. Areas for improvements the group have identified include addressing hardware instabilities and promoting battery health. I took it upon myself to solve both objectives in a sleek and effective manner by designing a printed circuit board (PCB) designed for both functions. I also used this opportunity to teach myself how to design PCBs as that is not a topic or course offered at the University of New Hampshire. To design the PCB, I first chose to use KiCad a free and open-source EDA suite application. Due to its popularity, I was able to find tutorials and guides on how to operate inside of it. To fabricate my design, I sent my Gerber, drill, and footprint files to JLCPCB.

Documentation

One of my original objectives was to create an electronic speed controller (ESC) with Insulated-Gate Bipolar Transistors (IGBTs) due to their inherent high-power specifications. I quickly learned why this was not feasible due to the great cost of IGBTs and the lack of consumer uses of IGBTs on similar devices. The previous hardware failures were due to a badly designed off-the-shelf ESC HW-039. The HW-039 would not sense its current correctly at times and burn itself out internally. A well-designed ESC with regular Metal Oxide Semiconductor Field Effect Transistors (MOSFETs) could complete the same objectives at a more competitive cost than IGBTs.

Assumptions made during the design phase were choosing integrated circuits (ICs) to build around. I chose the STM32F405 as the microcontroller for its popularity in the guides I found online. For my specific needs, this chip was more than capable. This helped me find clear descriptions for the need for decoupling capacitors, external oscillators, and boot switches along with recommended circuits for each.

The motivation for monitoring battery health also included a general desire to reduce environmental waste. A dead lithium battery is difficult to recycle and energy intense. I decided to monitor the battery health with two methods. The simpler of the two was simply measuring the pack voltage of the battery and cutting power if it fell below unhealthy limits. The other method was measuring the individual cell voltages of the battery by connecting to the balance leads of a typical lithium-Ion Polymer battery. This was not one of the original specifications but can better determine the condition of a battery. This is due to the internal resistances of each cell increasing at different rates over the life of the battery pack. All the voltages and system messages would be shown on an LCD for the user to view the status of the rover. The LCD is intended to be programmed over I^2C protocol to the microcontroller.

A minor addition to the original specification was to allow the rover's Raspberry Pi to be powered off the board. The circuitry for a 5V supply was already designed but had to be slightly altered for the increased power needs of a Raspberry Pi.

Five prototype boards were fabricated and partially assembled with components. This was due to chips in the design being out of stock by JLCPCB. The plan is to find these chips elsewhere and hand solder them to the boards. The prototypes were delivered on the first of May. The original goal was to have the first prototype delivered in March. This could not be met due to unaccounted for lengths time transferring the electrical schematic to a PCB layout.

The prototype boards were designed with two data planes, an internal ground plane, and an internal split voltage power plane. The processes used for fabrication were chosen to be as cost effective as possible to not exceed the allotted $100 from the Electrical and Computer Engineering Department. The first batch was slightly overbudget with a total cost of fabrication and assembly of $101.75.

Testing and Results

Due to the team's inaction last year, much of the information was disseminated not from official documentation but from the project advisor herself. That being Professor May-Win

Thein. At the beginning of the year, there were not any rovers in working condition. Due to this, I was not able to test on my own to verify the claims of hardware instability or battery health. Informal testing I did was separating the bad batteries from the good batteries. I did this with the help of a cell checker that plugs into the balance leads and displays the voltage of all the cells. Batteries that were below two and a half volts per cell were separated and placed in an empty cabinet labelled as such. I found a YouTube video to corroborate the claims of hardware instability where it was evaluated that the HW-039 was not sensing current correctly. This video included a test where it was observed that the HW-039 would pass too much current for the chips and burn itself out on a random occurrence. Towards the end of the spring semester, a total of five rovers were assembled and made operational. The team bought and installed off-the-shelf ESCs due to delays from designing the ESCs in house.

Due to the delays in the design of the PCB, insufficient time was allocated to programming the microcontroller. This combined with the out-of-stock parts prevented me from evaluating the effectiveness of my design at all. This being my first time designing a PCB, I had no idea how to estimate the time I should have given myself for much of the development phases.

Bill of Materials

Item	Price	Quantity	Total
PCB Fabrication	$1.486	5	$7.43
PCB Assembly	$15.608	5	$78.04
Shipping	$26.28	1	$26.28

Discount	-$10.00	1	-$10.00
Total			**$101.75**

Gantt Chart

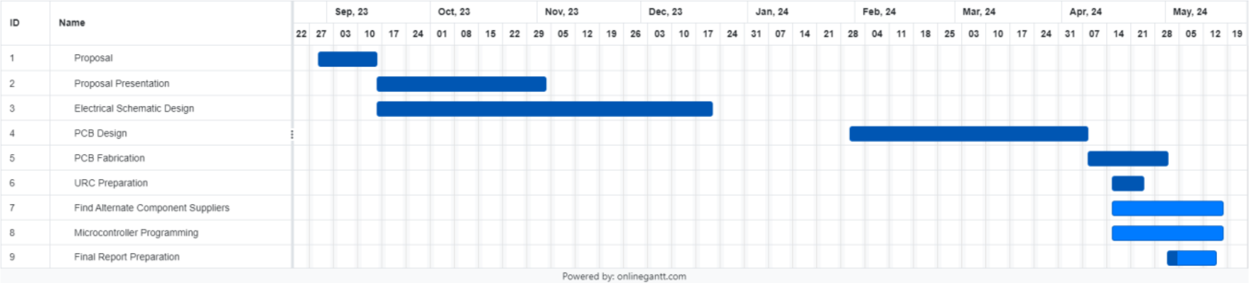

Ethical Consideration

Fabrication of the PCB prototype included lead solder. The presence of lead prevents the PCB from being used in medical settings or in RoHS compliance. Neither use in medical settings nor RoHS compliance were specifications at any time during development.

Safety

Safety was not a key consideration in the development of the prototype PCB. The design was completed solely on a computer. I did not consider the safety conditions of the fabrication facility. Hand soldering the out-of-stock components has the risk of burning the user.

Standards Utilized

No specific standards were adhered to in the development of the prototype PCB. This was because I chose not to for a prototype. Future iteration could include standards such as RoHS.

Contribution

Due to the nature of working on the PCB alone, all accomplishments and shortfalls are attributed to myself. Over the last two semesters completing this capstone I have taught myself a critical skill for all engineers by designing a PCB. I have also increased my knowledge of reading manufacturer documentation such as datasheets and application notes.

Conclusions

In conclusion, the project undertaken by me to design a PCB for autonomous rovers has demonstrated notable learning experiences. Despite facing delays due to unforeseen shortages and design complexities, the project has successfully resulted in the fabrication of five prototype boards. These boards integrate crucial functionalities for managing battery health and enhancing rover operation through improved electronic speed control. My personal journey in this capstone involved self-directed learning in PCB design and adapting to the intricacies of electronic component selection and application. This experience not only enhanced my engineering skills but also prepared me to tackle similar challenges in the future, with an emphasis on sustainability and cost-effectiveness. Moving forward, the lessons learned here will serve as a foundation for refining the designs and ensuring their application in real-world scenarios, potentially leading to their use in extraterrestrial exploration.

Future Efforts

There are improvements that can be made for future iterations. These include a design that has all its components in stock at the same time, is RoHS compliant, has ESD protection, and can output increased power to both the motors and the 5V output. These were not considered for the prototype because of the designer's lack of experience with PCBs.

Acknowledgements

I would like to acknowledge ST Microelectrics and Texas Instruments for providing helpful documentation for their products. I would also like to acknowledge the YouTube channel Phil's Lab for his informative videos on PCB design and tips for fabrication orders.

Appendix

..\ece791\Nick Snyder Project Selection.pdf

..\ece791\Team16 Progress Report Final QYApproved.pdf

..\..\..\..\Downloads\invoice.pdf

BoardDesign

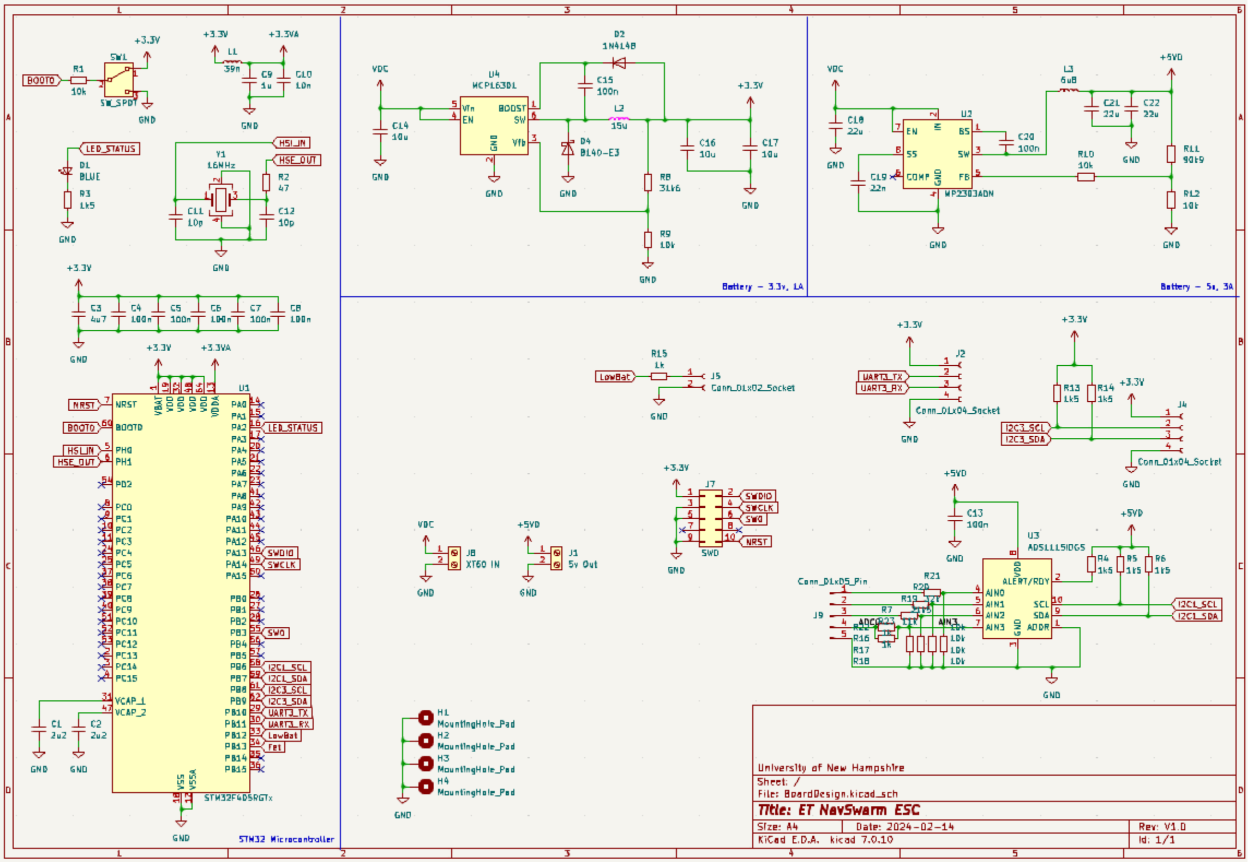

BOOT0
R1
10k
SW1
SW_SPDT
+3.3V
GND
L1
39n
+3.3VA
C9
1u
C10
10n
LED_STATUS
D1
BLUE
R3
1k5
HSI_IN
HSE_OUT
Y1
16MHz
R2
47
C11
10p
C12
10p
C3
4u7
C4
100n
C5
100n
C6
100n
C7
100n
C8
100n
U1
STM32F405RGTx
NRST
BOOT0
PH0
PH1
PD2
PC0
PC1
PC2
PC3
PC4
PC5
PC6
PC7
PC8
PC9
PC10
PC11
PC12
PC13
PC14
PC15
VCAP_1
VCAP_2
VBAT
VDD
VDDA
VSS
VSSA
PA0
PA1
PA2
PA3
PA4
PA5
PA6
PA7
PA8
PA9
PA10
PA11
PA12
PA13
PA14
PA15
PB0
PB1
PB2
PB3
PB4
PB5
PB6
PB7
PB8
PB9
PB10
PB11
PB12
PB13
PB14
PB15
SWDIO
SWCLK
SWO
I2C1_SCL
I2C1_SDA
I2C3_SCL
I2C3_SDA
UART3_TX
UART3_RX
LowBat
Fet
C1
2u2
C2
2u2
STM32 Microcontroller
VDC
U4
MCP16301
VIn
EN
BOOST
SW
Vfb
C14
10u
D2
1N4148
C15
100n
L2
15u
D4
B140-E3
R8
31k6
R9
10k
C16
10u
C17
10u
Battery – 3.3v, 1A
C18
22u
U2
MP2303ADN
BS
SS
COMP
FB
IN
C19
22n
C20
100n
L3
6u8
C21
22u
C22
22u
+5VD
R10
10k
R11
90k9
R12
10k
Battery – 5v, 3A
R15
1k
J5
Conn_01x02_Socket
J2
Conn_01x04_Socket
R13
1k5
R14
1k5
J4
Conn_01x04_Socket
J7
SWD
J8
XT60 IN
J1
5v Out
C13
100n
U3
ADS1115IDGS
ALERT/RDY
AIN0
AIN1
AIN2
AIN3
SCL
SDA
ADDR
R4
1k5
R5
1k5
R6
1k5
Conn_01x05_Pin
J9
R21
R20
R19
32k
R7
11k
21k5
ADC0
R23
1k
R22
R16
1k
R17
R18
10k
AIN3
H1
MountingHole_Pad
H2
MountingHole_Pad
H3
MountingHole_Pad
H4
MountingHole_Pad

University of New Hampshire
Sheet: /
File: BoardDesign.kicad_sch

Title: ET NavSwarm ESC

Size: A4 | Date: 2024-02-14 | Rev: V1.0
KiCad E.D.A. kicad 7.0.10 | Id: 1/1

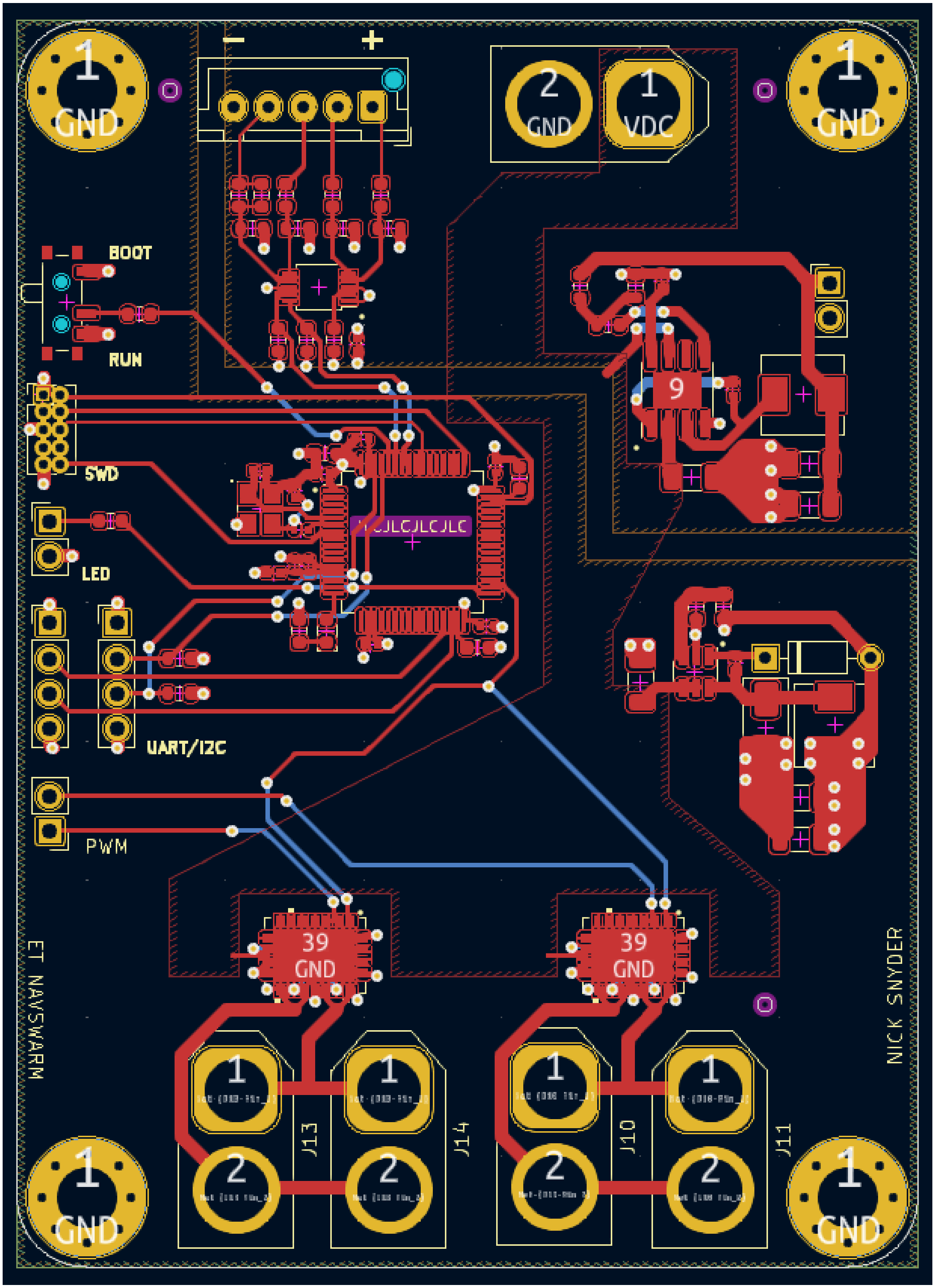
1
GND
−
+
2
GND
1
VDC
1
GND
BOOT
RUN
SWD
LED
JLCJLCJLC
9
UART/I2C
PWM
39
GND
39
GND
ET NAVSWARM
NICK SNYDER
J13
J14
J10
J11
1
2
1
GND
1
GND

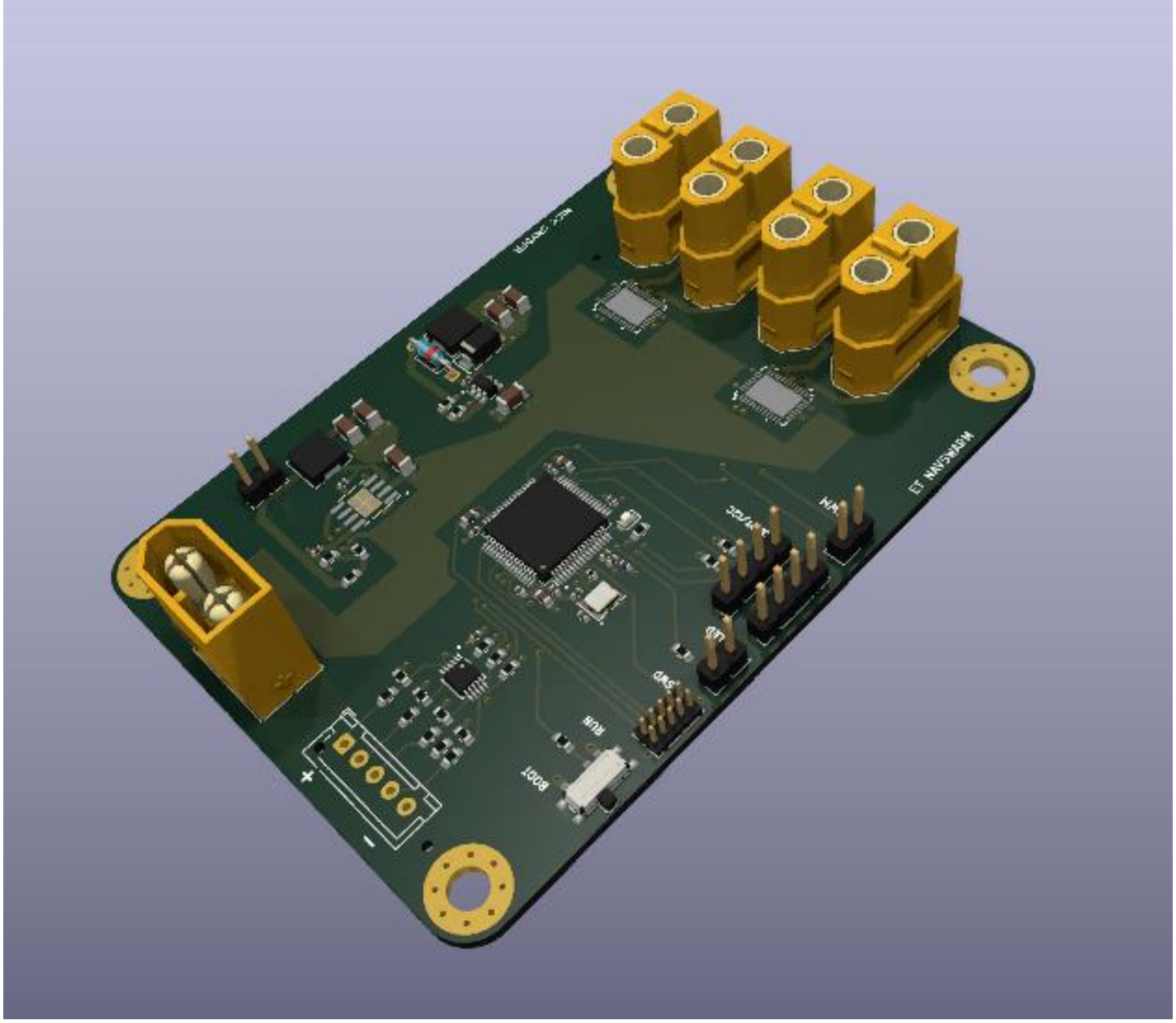
ET NAVSWARM
PWM
LED
SWD
RUN
BOOT
+
-