'Monotype' Electronic Perforator

Instructions for Operators

The Monotype Corporation Limited
Salfords, Redhill, Surrey

Registered Trade Marks: Monotype, Monophoto

'MONOTYPE' ELECTRONIC PERFORATOR

CONTENTS

	PAGE
INTRODUCTION	1
GENERAL DESCRIPTION	2
THE KEYSWITCH DISPLAY UNIT	2
The Keybanks	2
The Function Keys	3
THE DISPLAY PANEL	5
THE ELECTRONIC CONTROL UNIT	6
THE 31-CHENNEL TAPE PUNCH	8
(see also Appendix)	
THE VARIABLE EQUIPMENT	9
THE KEYBANKS	9
THE KEYBANK CIRCUIT BOARDS	9
THE UNIT PLUG	16
THE EXTERNAL INTERCONNECTING 'DUAL' CABLE	16
UNPACKING THE CASES	19
INSTALLATION	19
ASSEMBLING THE BASE UNIT	19
ASSEMBLING THE DISPLAY UNIT	20
ASSEMBLING THE KEYBANKS	20
THE CONSOLE	23
THE 31-CHANNEL TAPE PUNCH	23
CONNECTING THE CABLES	23
SPECIFICATION	26
ROUTINE MAINTENANCE	26
SETTING THE CONSOLE CONTROLS	27
LINE LENGTH	27
SET-SIZE	29
SPACE VALUE	29

PAGE

Combined variable space values 30

Separate variable space values 30

Fixed space values 30

UNIT ADDING 30

LINE COUNTER 30

MAINS CIRCUIT BREAKER 31

SETTING UP SEQUENCE 31

STARTING SPOOL 32

FOR FILMSETTING TAPES 32

FOR HOT METAL TAPES 32

PERFORATING PROCEDURES 33

JUSTIFICATION 33

LINE JUSTIFY 34

COLUMN JUSTIFY 34

LINE FILL 34

CENTRE 34

LINE CANCELLATION 35

QUADDER 35

UNIT SHIFT 35

REVERSE COUNTER 35

CASTING OFF 35

TRIAL LINES 36

OVERSETTING 36

UNDERSETTING 36

LETTERSPACING 37

UNIT REDUCTION 37

FLUSH LEFT 37

FLUSH RIGHT 38

TABULAR SETTING 38

ILLUSTRATIONS

	PAGE
The 'Monotype' Electronic Perforator	(frontispiece)
The Display Panel	7
Standard keybank layout (Hot Metal)	10
Standard keybank layout (Mk. 3 Filmsetter)	11
Standard keybank layout (Mk. 4 Filmsetter)	12
Opening the keybank sandwich	14
Withdrawing the circuit board	14
Inserting the circuit board	15
Pushing the circuit board home	15
The Unit Plug	17
The cables and connectors..	18
Assembling a keybank in the Display Unit	21
The volume control and the ear-piece connection ..	21
Moving a keybank into the operational position ..	22
The complete assembly, showing cable connections ..	24
Locating a connector on the Display Unit	25
The Console control panel	28
Diagrammatic cable plan	40

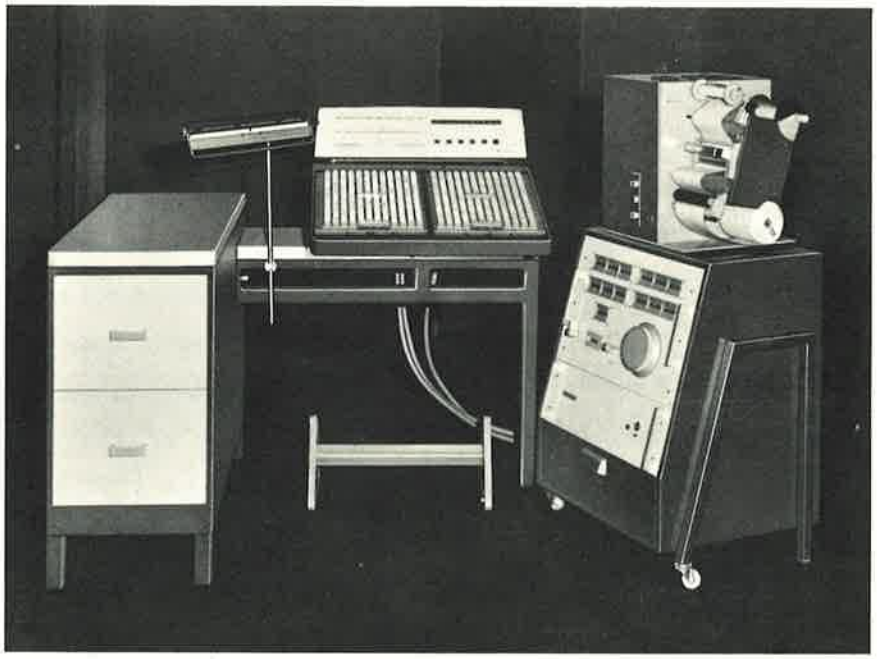

Fig 1
Front view of the complete Electronic Perforator assembly. The 31-Channel Tape Punch illustrated here does not show the wind-up spool release mechanism.

INTRODUCTION

The purpose of this interim instruction is primarily to acquaint 'Monotype' keyboard operators with the method of installing and checking the Electronic Perforator, together with its detailed operational and perforating procedures.

The perforator comprises a 'desk type' base unit which supports an electronic keyswitch display unit which consists of two keybanks, based on standard 'Monotype' layout principles, above which a formica display panel presents an illuminated em scale display and space width indicator, a series of tabulator indicator push-buttons, and other continuous function push-button controls; together with a free standing console, housing the electronic control unit, which also supports the 31-channel tape punch.

The complete assembly is designed to produce 31-channel punched tape for 'Monotype' hot metal casters, and Mk 2, Mk 3 and Mk 4 filmsetters. It is supplied equipped accordingly, to suit your production requirements.

The many outstanding features of the Electronic Perforator tend to simplyfy perforating procedures and improve keyboard performance.. This is largely due to the nature of the command signals embodied in several of the function keys, which result in a reduced number of keystrokes and have a marked effect on, for example, end of line routines; both line and tabular matter being justified automatically by a single keystroke. The required justification calculations are made by the electronic control unit which simultaneously restores the measure on the illuminated em scale display. The illuminated space width indicator likewise advises you (to the nearest unit) of the space width in units, prior to justification. Other function keys and push-button controls provide increased facilities and effect similar economies.

All the function keys and push-buttons relevant to both hot metal and filmsetting tapes are duly illustrated and described.

The information contained herein is therefore intended as a guide, to aid you in rapidly assimilating how the Electronic Perforator performs all the functions of the pneumatic keyboard with which you are already fully conversant, and the detailed procedures in connection with the additional and improved facilities not available hitherto. You will likewise be instructed and advised in the simple,

routine maintenance you will be required to carry out, and of the extent to which you can proceed in such matters prior to seeking qualified technical assistance.

GENERAL DESCRIPTION

The following outline description of the various parts of the Electronic Perforator, together with some indication of its functions and capabilities, will serve to familiarise you with the equipment, before going on to detailed setting-up and operational procedures.

THE KEYSWITCH DISPLAY UNIT

The Keybanks

Keybank layout follows the principles of standard 'Monotype' keyboards, with two 16 x 12 keybanks, each key representing one character only. The layout of each keybank is determined by an easily removable circuit board contained in the keybank sandwich. Each keybutton, on being depressed, makes contact with the circuitry and transmits the required character or function signal to the electronic console, which serves as a control computer. The console control unit in turn actuates the tape punch which perforates the 31-channel tape, and simultaneously progressively indicates the remaining measure on the illuminated em scale display.

The keybuttons are capped by removable lens, beneath which are the character or function key inserts which can be quickly changed if necessary. The printed circuit boards themsleves are likewise easily removable. If a different circuit board is inserted in the keybank sandwich, the keybutton inserts need not be changed however, except in very special circumstances. Circuit boards, being relative to the keybars on a pneumatic keyboard, are changed according to the matrix case or matrix negative arrangement in use.

The Function Keys

All the function keys on the keybanks are coloured red.

a) The following are applicable to hot metal and filmsetter keybanks:

Key Symbol	Designation	
	Line Justify	This perforates the requisite codes to justify the line, and resets the measure - with one keystroke.
	Column Justify	This perforates the requisite codes to justify each column in sequence, and automatically sets the measure and illuminates the push-button for the next column.
	Line Fill	This perforates the requisite space codes to automatically fill a line or column, or the remaining space in a line on completion of text; from one key-stroke.
	Centre	When this key is held down, any character or space tapped will register twice its allocated unit value.
	Line Kill	This perforates the code for 'Line Kill' and restores the measure simultaneously. It can also be used to kill any column.
	Quadder	The improved quadding facility can be used anywhere in a line. The em scale will register 5 times the full unit value of any character or space key depressed whilst the 'Quadder' key is held down.
	Unit Shift	This key enables the code for unit shift to be introduced independently as necessary.
	Letterspace	This key, when held down, will give the additional code for letterspacing. Letterspacing can also be operated as a continuous function by using the push-button provided on the display panel.
	Reverse Counter	This is used to restore the measure after the tapping of trial lines, or when characters have been cancelled using the 'Character Kill' key.

b) The following are applicable to hot metal keybanks only:

Key Symbol	Designation	
⊕	Repeater	Units are not registered when this key is used, thus obviating the need to restore measure.
+2 1/3	Unit Add	This key, if held down, will give the additional codes required for unit adding. The spool must be marked accordingly to indicate your choice. Unit adding can also be operated as a continuous function by using the push-button provided on the display panel.

c) The following are applicable to filmsetter keybanks only:

⊗	Character Kill	This enables any perforation to be cancelled, thus obviating the necessity to patch-up the tape.
⊘	Character Delete	This facility enables the operator to obtain spaces relative to the unit width of any character tapped whilst this key is held down. 'Character Delete' can also be operated as a continuous function by using the push-button provided on the display panel.
⦶	Double Expose	This key initiates the requisite code to cause the unit registration to be ignored by the filmsetter, provided it is held down prior to the character being tapped.
⊕	Low Align	Whilst held down, this key initiates the necessary code with any character tapped. 'Low Align' can also be operated as a continuous function by using the push-button provided on the display panel
⦶	Double Expose/ Low Align	See 'Double Expose' and 'Low Align' above. The key must be held down prior to the character being tapped.

Key Symbol	Designation	
½ 1 to 5½ 6	Variable Line Feed	These six keys will each activate the 'Line Justify' facility, together with the signal for the requisite additional leading.
▽	Machine Stop	This key perforates the codes for stopping the filmsetter and gives the keyboard operator a positive control, thus enabling minor changes to be made to the filmsetter prior to continuing its run; i.e. change of feed, change of focus, etc. See also STARTING SPOOL (film), Page 32.

THE DISPLAY PANEL

The formica display panel mounted above the keybanks presents a variety of information in illuminated display; this includes:

a) The em scale measure in ems and units, against which easily erasable markings can be made with a wax pencil.

b) Space width in units, prior to justification.

c) A set of tabulator push-buttons numbered 1 to 12, which illuminate in sequence when 'Column Justify' is used during tabular setting according to the number of columns in the measure. ('Line Justify' will restore to Column 1). They can also be manually selected as required if the number of columns exceeds twelve.

The display panel also has a series of six push-buttons, four of which control the same functions as the keybank function keys which bear the same markings. These push-buttons, which illuminate when pressed to make them operative, retain continuous control of the following functions etc., as detailed overleaf, and remain in operation until pressed again:

Push-button Symbol	Designation	
	Punch Inhibit	This push-button enables the operator to carry out various operations, such as trial lines, or casting off - without the punches being activated; thus avoiding the need to patch-up the tape.
	Letterspace	For both hot metal and filmsetting tapes.
	Character Delete	For filmsetting tapes only.
	Low Alignment	For filmsetting tapes only.
+ 1 2 3	Unit Add	For hot metal tapes only. The spool must be marked to indicate your choice; (1,2 or 3 units).
	Line	When this push-button is illuminated, the 'Line' measure setting on the console control unit is operative. <u>If no light is displayed, the measures set on the console 'Tabular' switches are operative.</u>

THE ELECTRONIC CONTROL UNIT

The electronic control unit housed in the free-standing console is connected to the mains supply. A short external cable links the control unit with the 31-channel tape punch, whilst an interconnecting power cable likewise carries the mains input.

Three cables link the console with the keyswitch display unit. One of these interconnecting cables is common to hot metal and filmsetting systems. The other two cables are linked together at the display unit end. This 'dual' interconnecting cable is interchangeable, and is fitted as required, according to the system for which the tape is to be punched.

Interchangeable 'dual' cables are provided for three separate systems as follows:

1. Filmsetter Mk 4. 2. Filmsetters Mk 2 & 3. 3. Hot metal.

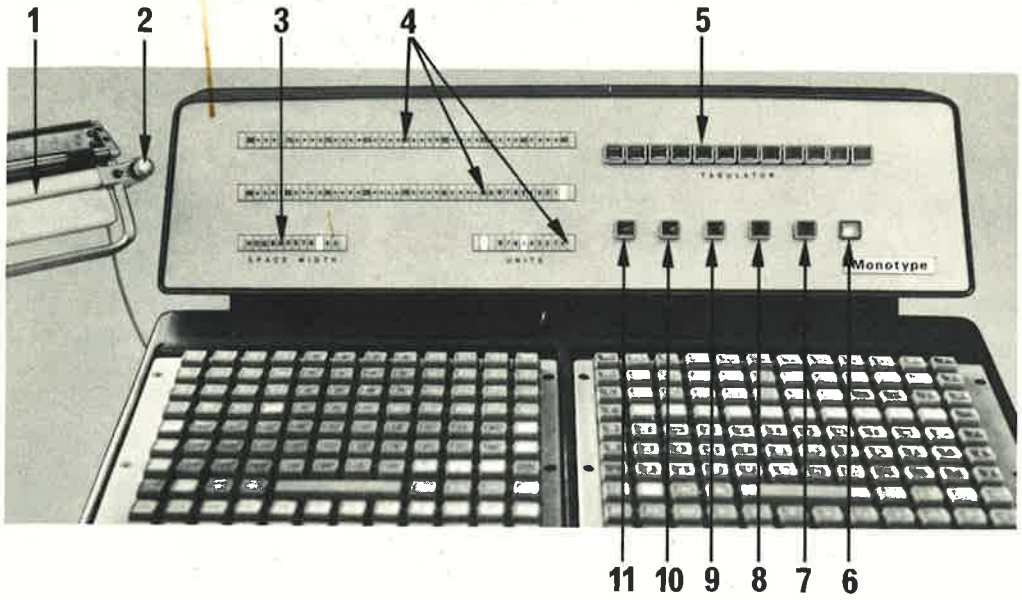

Fig 2
Display Panel, showing:

1 Copyholder
2 Justification lamp
3 Space width indicator
4 Em-scale display

Push-buttons

5 Tabulator (1 to 12)
6 Line
7 Unit add
8 Low alignment
9 Character delete
10 Letterspace
11 Punch inhibit

The front panel of the console carries the following controls, in addition to the circuit breaker ON/OFF buttons and a power lamp which glows when the unit is switched on:

a) A total of twelve column measure thumb switches, each of which can be set to ems and units up to a maximum of 99 ems 17 units of set as required, for tabular setting; within an overall limit of 60 ems of pica.

b) A thumb switch for line length measure, which can be likewise set to ems and units for full measure work up to a maximum of 99 ems 17 units of set, within the same overall limit.

c) Unit adding switch for 1, 2 or 3 units.

d) Space bar switch.

e) Set-size selector dial.

f) A line counter.

THE 31-CHANNEL TAPE PUNCH

The 31-channel tape punch has its own ON/OFF buttons. It also carries on its front panel, two push-buttons for 'tape advance' and 'tape return' in single steps. Three depressions of the 'tape advance' button will bring the last perforation in line with the tape reader if the need to check the perforations should arise. The 'tape return' button must be depressed three times before proceeding, but should any re-perforation (such as 'character kill') be required, the button must be depressed four times in order to align the perforation on the punches.

The front panel also carries a push-button for 'run-out', (continuous forward feed) combining a warning lamp which flashes if the tape is running tight.

The punch ceases to operate under tight tape conditions, and this will generally be brought about by excessive backspacing. If you need to backspace more than about six steps you should first draw tape back by hand from the take-up spool, using the tape release mechanism; then feed tape back through the punch gate as necessary, using the 'tape return' button.

For re-perforation purposes the exsisting perforation must first be aligned with the tape reader, then backspaced four times to bring into line with the punches.

N.B. Complete instructions for the 31-channel tape punch (and details of tight tape conditions) are contained in the Appendix herewith.

FIG 3a

1	2	3	4	↑1	↑2	↑3	↑4	NI	NL	A	B	16
5	6	7	8	↑5	↑6	↑7	↑8	C	EF	E	F	15
9	10	11	12	↑9	↑10	↑11	↑12	G	H	I	J	14
13	14	15		↑13	↑14	↑15	K	L	M	N	O	13
*	Q	W	E	R	T	Y	U	I	O	P		12
·9	A	S	D	F	G	H	J	K	L			11
–9	Z	X	C	V	B	N	M	%	[	]	□10	10
←		⊕	■	Space Key				↑	+2!3	×	▼	9
ffl	Q	W	E	R	T	Y	U	I	O	P	!	8
ffi	A	S	D	F	G	H	J	K	L	&	?	7
fl	Z	X	C	V	B	N	M	–	:	;		6
£	1	2	3	4	5	6	7	8	9	0		5
ff	q	w	e	r	t	y	u	i	o	p	/	4
fi	a	s	d	f	g	h	j	k	l	‘	(	3
□5	z	x	c	v	b	n	m	,	.	’	)	2
□6	□7	□8	□9	Space Key				□18	..	—	↔	1

ffl	Q	W	E	R	T	Y	U	I	O	P	!	16
ffi	A	S	D	F	G	H	J	K	L	&	?	15
fl	Z	X	C	V	B	N	M	–	:	;		14
£	1	2	3	4	5	6	7	8	9	0		13
ff	q	w	e	r	t	y	u	i	o	p	/	12
fi	a	s	d	f	g	h	j	k	l	‘		11
□6	z	x	c	v	b	n	m	,	.	’		10
←		⊕	■	Space Key				↑	+2!3	×	▼	9
ffl	Q	W	E	R	T	Y	U	I	O	P	!	8
ffi	A	S	D	F	G	H	J	K	L	&	?	7
fl	Z	X	C	V	B	N	M	–	:	;		6
£	1	2	3	4	5	6	7	8	9	0		5
ff	q	w	e	r	t	y	u	i	o	p		4
fi	a	s	d	f	g	h	j	k	l	‘	(	3
□6	z	x	c	v	b	n	m	,	.	’	)	2
→	→	⊸	□9	Space Key				□18	...	—	■	1

ELECTRONIC PERFORATOR KEYBANKS

FIG 3b

STANDARD ENGLISH LAYOUT MARK 3

GREY SCALE 2 | GREY SCALE 3

Keys in this area will address matrix case positions of small capitals and other little used characters–all with Double Exposure.

*	Q	W	E	R	T	Y	U	I	O	P	12
·9	A	S	D	F	G	H	J	K	L	&	11
–9	Z	X	C	V	B	N	M	%	[	]	10
←				Space Key							
ffl	Q	W	E	R	T	Y	U	I	O	P	!
ffi	A	S	D	F	G	H	J	K	L	&	?
fl	Z	X	C	V	B	N	M	–	:	;	ALT
£	1	2	3	4	5	6	7	8	9	0	·
ff	q	w	e	r	t	y	u	i	o	p	/
fi	a	s	d	f	g	h	j	k	l	‘	(
5	z	x	c	v	b	n	m	,	.	’	)
6	7	8	9	Space Key				18	..	—	↔

16	ffl	Q	W	E	R	T	Y	U	I	O	P	!
15	ffi	A	S	D	F	G	H	J	K	L	&	?
14	fl	Z	X	C	V	B	N	M	–	:	;	ALT
13	£	1	2	3	4	5	6	7	8	9	0	·
12	ff	q	w	e	r	t	y	u	i	o	p	/
11	fi	a	s	d	f	g	h	j	k	l	‘	(
10	1	z	x	c	v	b	n	m	,	.	’	)
9		½ 1	1½ 2	2½ 3	Space Key				3½ 4	4½ 5	5½ 6	
8	ffl	Q	W	E	R	T	Y	U	I	O	P	!
7	ffi	A	S	D	F	G	H	J	K	L	&	?
6	fl	Z	X	C	V	B	N	M	–	:	;	ALT
5	£	1	2	3	4	5	6	7	8	9	0	
4	ff	q	w	e	r	t	y	u	i	o	p	
3	fi	a	s	d	f	g	h	j	k	l	‘	(
2	1	z	x	c	v	b	n	m	,	.	’	)
1	→	→	⇥	9	Space Key				18	...	—	⊡

ELECTRONIC PERFORATOR KEYBANKS

FIG 3c

STANDARD ENGLISH LAYOUT MARK 4

	´ ▲	⊖	GREY SCALE 2	GREY SCALE 3	▲	▲	▲	▲	▲	▲	▲	´ ▲
	` ▲	à	â	ä	é	è	ê	ë	î	ï	œ	` ▲
	^ ▲	ô	ö	ù	û	ü	ç	ñ	ß	ij	œ	^ ▲
	·· ▲	1	2	3	4	5	6	7	8	9	0	•• ▲
	*	Q	W	E	R	T	Y	U	I	O	P	°
	·9	A	S	D	F	G	H	J	K	L	&	"
	–9	Z	X	C	V	B	N	M	%	[	]	'
	←	⊗	◯	↓	×	+	–	=	↓	∅	╳	▼
16	ffl	Q	W	E	R	T	Y	U	I	O	P	!
15	ffi	A	S	D	F	G	H	J	K	L	&	?
14	fl	Z	X	C	V	B	N	M	–	:	;	ALT
13	£	1	2	3	4	5	6	7	8	9	0	·
12	ff	q	w	e	r	t	y	u	i	o	p	/
11	fi	a	s	d	f	g	h	j	k	l	'	(
10	5	z	x	c	v	b	n	m	,	.	'	)
9	6	7	8	9	Space Key				18	..	—	↔

16	ffl	Q	W	E	R	T	Y	U	I	O	P	!
15	ffi	A	S	D	F	G	H	J	K	L	&	?
14	fl	Z	X	C	V	B	N	M	–	:	;	▲
13	▲	1 1/4	2 1/2	3 1/4	4 1/8	5 1/8	6 1/8	7 1/8	8 1/3	9 1/3	0 1/6	▲
12	ff	q	w	e	r	t	y	u	i	o	p	ı
11	fi	a	s	d	f	g	h	j	k	l	'	(
10	▲	z	x	c	v	b	n	m	,	.	'	)
9		1/2 1	1 1/2 2	2 1/2 3	Space Key				3 1/2 4	4 1/2 5	5 1/2 6	▲
8	ffl	Q	W	E	R	T	Y	U	I	O	P	!
7	ffi	A	S	D	F	G	H	J	K	L	&	?
6	fl	Z	X	C	V	B	N	M	–	:	;	ALT
5	£	1	2	3	4	5	6	7	8	9	0	·
4	ff	q	w	e	r	t	y	u	i	o	p	ı
3	fi	a	s	d	f	g	h	j	k	l	'	(
2	1	z	x	c	v	b	n	m	,	.	'	)
1	→	→	⊸	9	Space Key				18	...	—	⊡

ELECTRONIC PERFORATOR KEYBANKS

The circuit boards are identified by the number displayed in the bottom right-hand corner and are marked 'L' or 'R' accordingly.

Care must be exercised when handling circuit boards. They should always be held at the sides, clear of all the contact pads and circuitry connections, the surface coating of which must be carefully preserved and kept free from grease and finger marks. They must be kept in their polythene containers when not in use and carefully stored away, either lying flat, or stacked upright in a suitable rack after the manner of gramophone records.

Being made of fibre-glass, the boards could suffer damage if carelessly handled or dropped on a hard surface. This applies especially in respect of the edge connector contacts along the top edge.

To change a circuit board it is necessary to remove the keybank from the display unit and place it securely on the level surface of a work-bench. You can then open the keybank sandwich using the keybank circuit board withdrawal tool, the two-pin end of which you engage in the holes in one of the keybank frame cams located on the bottom edge, turning it through 90° to the upright position.

At this stage you must carefully check to ensure that no keybuttons have been inadvertently depressed and subsequently failed to rise, as they would consequently remain in contact with the circuit board and could result in considerable damage as the board is withdrawn. Make certain you keep your hands well clear of the keybuttons, both when removing the keybank from the display unit and when the circuit board is being withdrawn.

All this equally applies when a circuit board is being inserted.

You can now engage the pin located at the other end of the withdrawal tool, in the slot in the circuit board, and withdraw the board about one inch, after which it can be easily removed by hand.

Due care must be exercised, as already emphasised, when inserting a circuit board, which should slide freely into the sandwich except for the final inch, when a little extra pressure is required. Guide the top edge of the board into the sandwich, being careful not to damage the edge connector contacts, and finally push home, using both thumbs against the bottom edge, whilst keeping the hands well clear of the keybuttons.

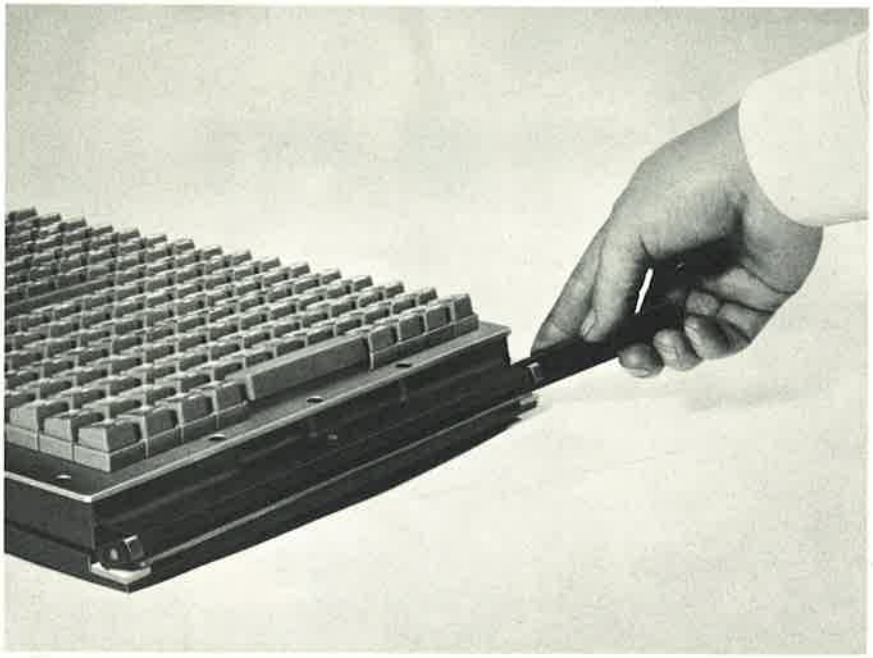

Fig 4
The keybank circuit board withdrawal tool being used to turn the keybank frame cam, in order to open the keybank sandwich to remove the circuit board.

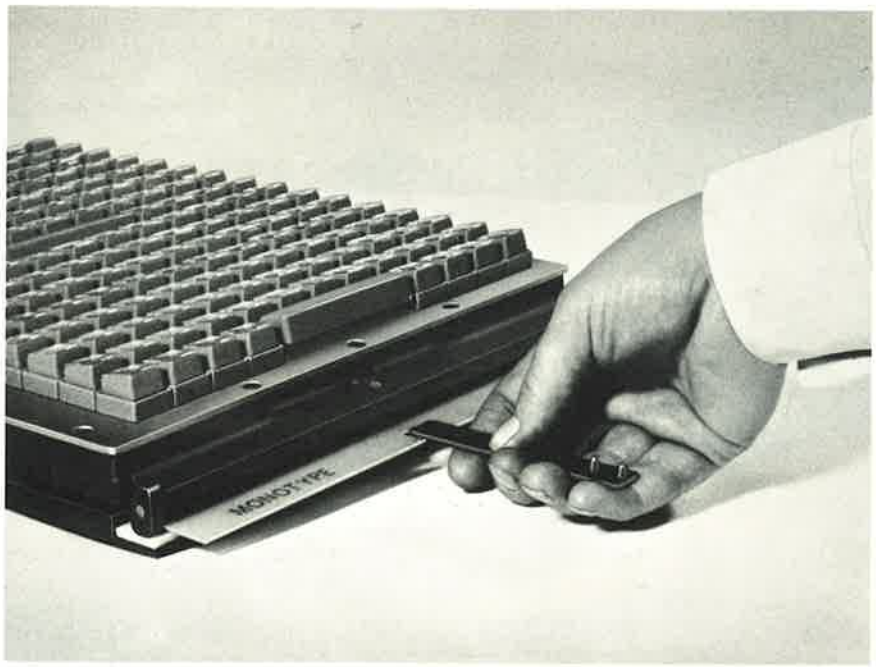

Fig 5
Withdrawing the printed circuit board the first inch, with the aid of the withdrawal tool.

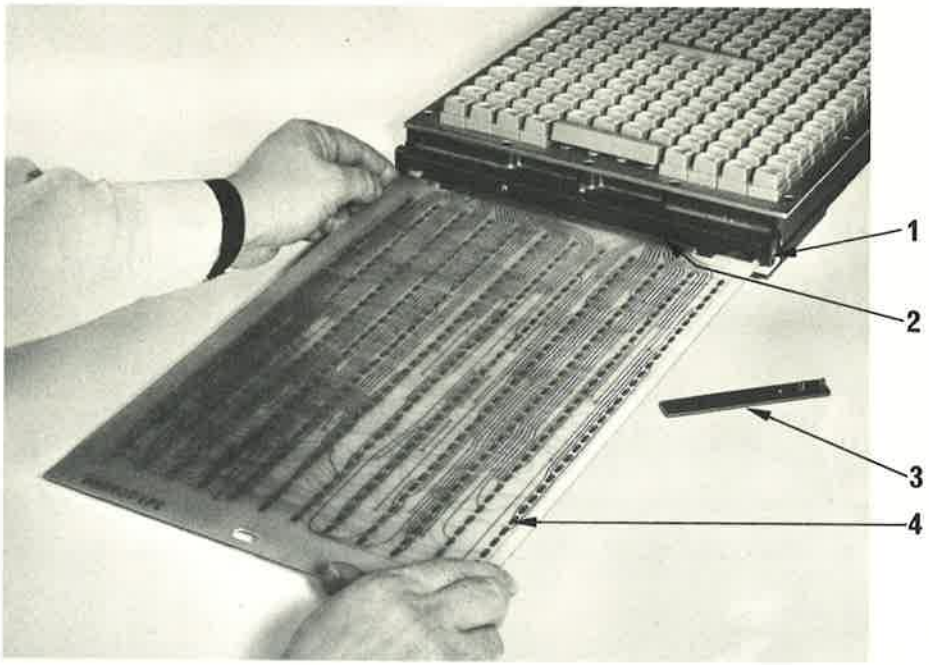

Fig 6
Guiding the top edge of a circuit board into the keybank sandwich.

1 Keybank frame cam
2 Circuit board edge connectors
3 Circuit board withdrawal tool
4 Circuit board contact pads

Fig 7
Pushing the circuit board home. Note how the hands are kept clear of the keybuttons.

Complete by securing the circuit board in the sandwich, using the withdrawal tool again to turn the keybank frame cam back to its original 'locked' position.

THE UNIT PLUG

The unit plug consists of a multi-pin plug located in a socket at the back of the console unit, adjacent to the connecting cables. Its role incidentally, is equivalent to that of the stop bar case on a 'Monotype' pneumatic keyboard.

The unit plug carries the necessary information for unit apportionment, and the correct plug must consequently be used to coincide with the M.C.A. or M.N.A. in use.

The plug also carries information relative to the space codes. For example, a similar apportionment in hot metal and Mk3 film therefore implies the use of a different unit plug, in order to supply the correct space codes.

THE EXTERNAL INTERCONNECTING 'DUAL' CABLE

The external interconnecting 'dual' cable which links the console with the keyswitch display unit as already described, transmits the signals from the keybanks to the equipment which comprises the electronic 'logic' housed in the console unit. The other interconnecting cable which is common to all systems, passes information back to the display panel.

Three of these interconnecting 'dual' cables are necessary, as already explained, in order to cover the full range of codes used for the various 'Monotype' hot metal and filmsetting systems. The correct cable must be fitted (as with the circuit boards and keybanks), to suit the requirements of the particular system being used.

The interconnecting 'dual' cable has two connectors at each end and they are used to connect positions 'B' and 'C' at the rear of the console unit to position 'F' and 'E' at the back of the display unit. (The external cable which is common to all systems, connects position 'A' on the console with position 'G' on the display unit).

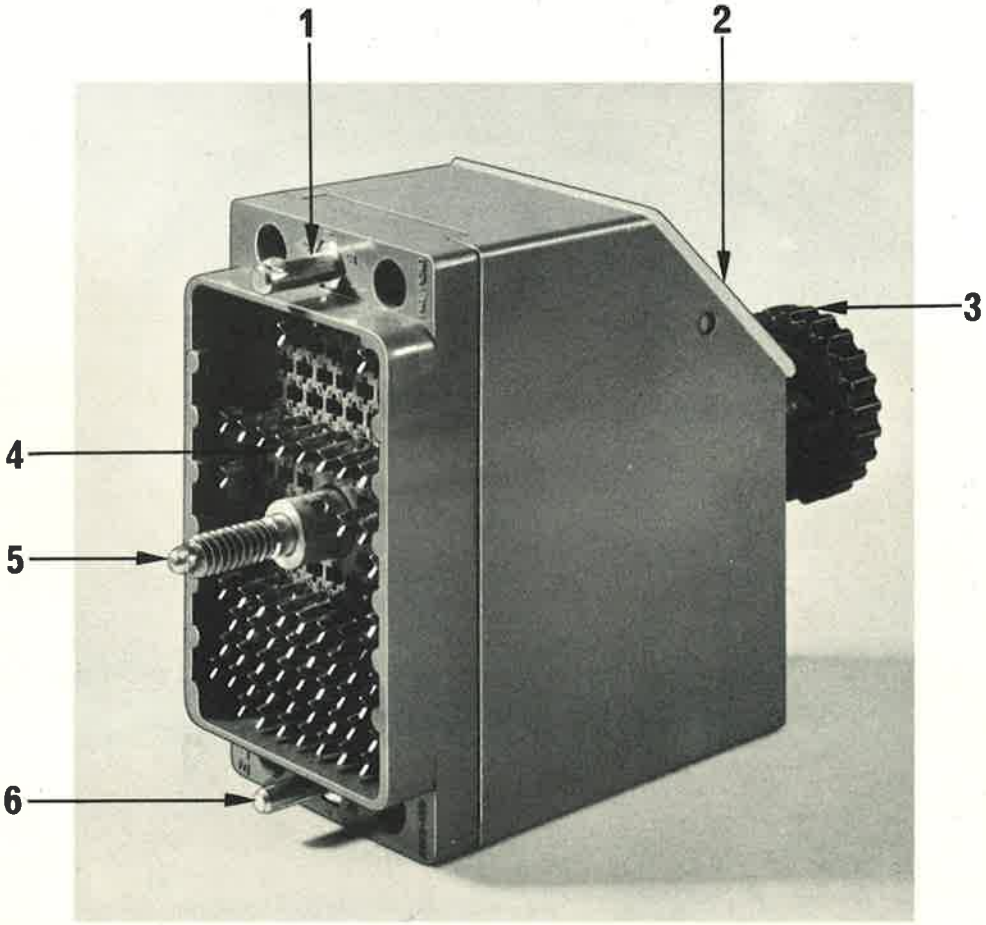

Fig 8
Unit Plug, showing:

1 Locator pin (upper)
2 Plug cap
3 Locking-screw knob
4 Electrical contact inserts
5 Locking-screw
6 Locator pin (lower)

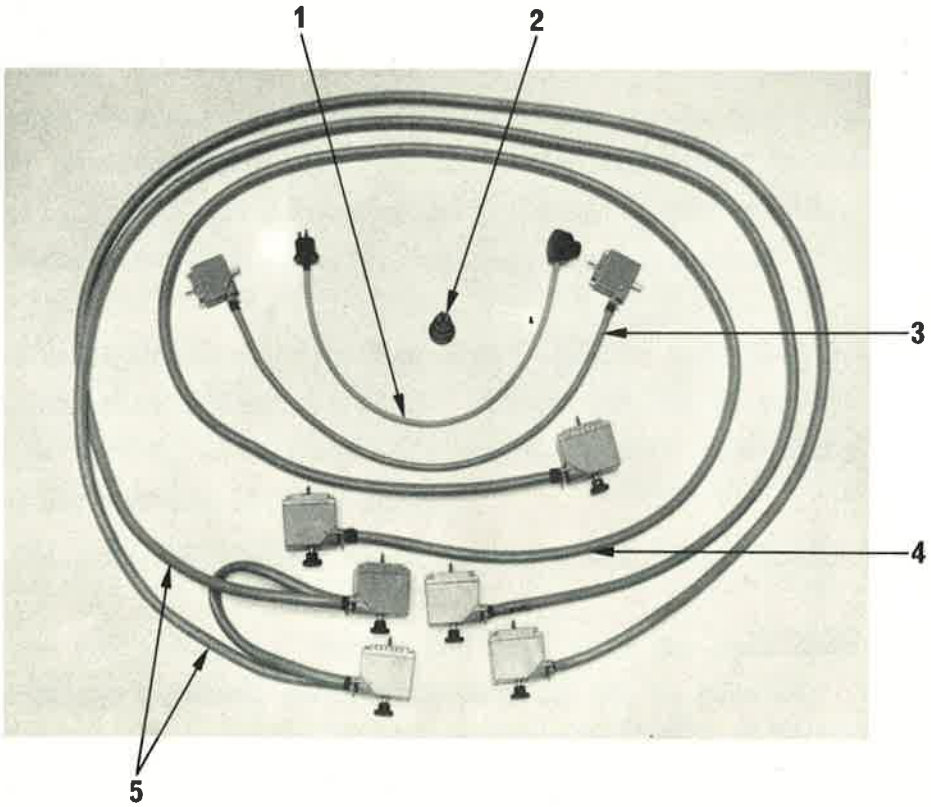

Fig 9
1 Interconnecting power cable (Console to 31-Channel Tape Punch)
2 Mains input connector (Mains to Console)
3 Interconnecting cable (Console to 31-Channel Tape Punch)
4 Interconnecting cable (Console to Display Unit)
5 Interconnecting 'dual' cable (Console to Display Unit)

UNPACKING THE CASES

The electronic perforator, inclusive of the 31-channel tape punch, is delivered securely packed in four separate wooden cases, all of which bear the markings 'KEEP UPRIGHT'. The cases must be opened in the 'upright' position. (Sundry parts, such as cables etc., are sometimes packed separately, dependent on the method of despatch).

On being opened, each package will reveal a cardboard container padded around with rubberised hair. The carton can be cut at the 'top' where marked, and at the side seams, so that access may be gained to the webbing lifting straps.

If you lift the package at this stage, you must use the lifting straps.

Remove the cardboard carton and roll down the polythene sealing bag so that its internal protective packing can be removed. The console unit carton, when opened, will reveal the unit lying on its back. It must be carefully raised to the upright position, standing on its feet, before the polythene bag is rolled down. The back panel is fitted with two transit straps which must be removed.

The console must be moved into position by lifting the rear legs off the ground and rolling it along on its front leg casters. A recess is provided in the back panel for this purpose.

Do not attempt to lift or move the console by means of the drawer handles located on the front panel. They are not provided for this purpose, and are not built to withstand the strain.

Similarly, the punch unit must be lifted by the base plate. No strain whatever must be imposed on the tape feed mechanism.

INSTALLATION

ASSEMBLING THE BASE UNIT

The base unit must be assembled, using the bolts provided, and the formica top must be fitted to the frame with two of the base plate positioning holes in line at the front. The top is thus correctly positioned to receive the base plate of the display unit.

Attach the copyholder to the base unit (after the display unit has been bolted in position). Assemble the copyholder support bolt, together with the collar, inserting the bolt head in the collar. Pass the bolt through the hole provided on the front edge of the base unit frame and lightly secure with the washer and nut. Insert the

Fig 10
A keybank being lowered into position in the keyswitch display unit. Note the position of the right hand with the finger tips safely located clear of the extreme top edge.

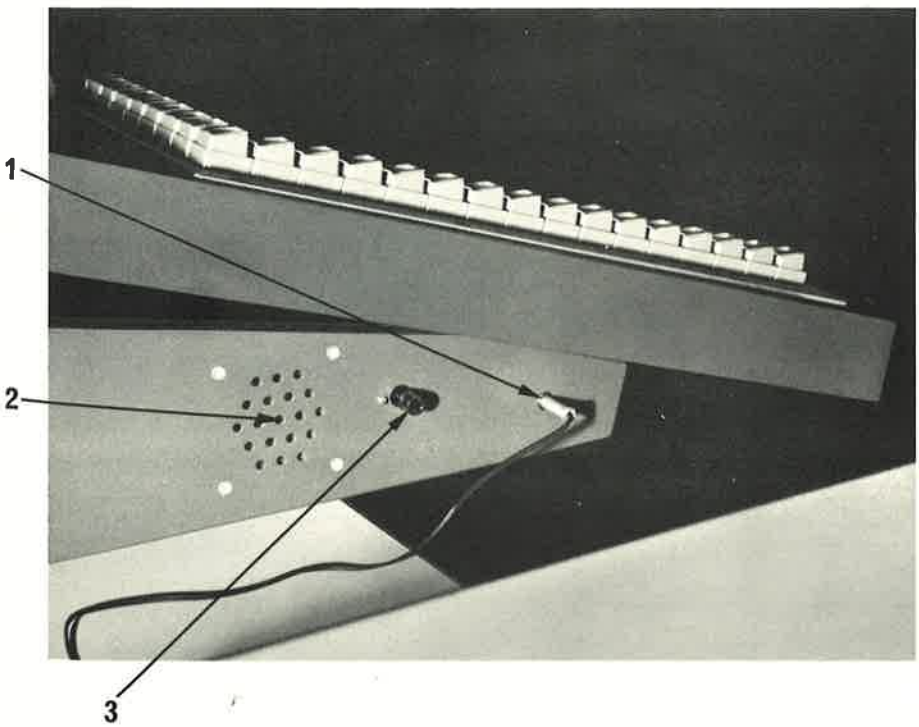

Fig 11
1 Ear-piece jack plug
2 Loudspeaker fret
3 Audible warning volume control

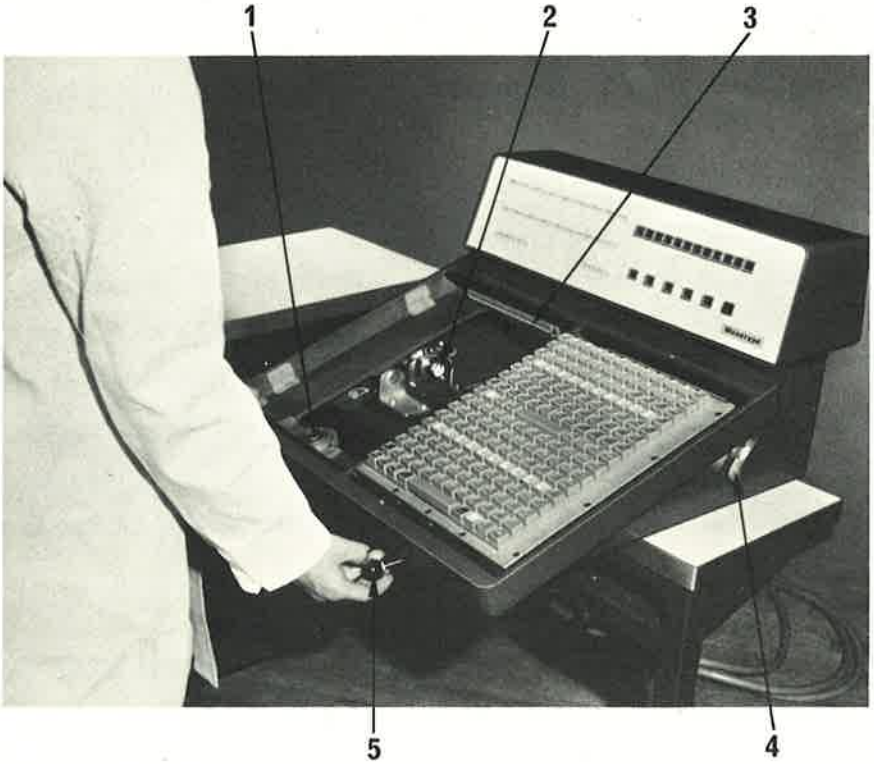

Fig 12
The keybank locking lever being moved over to the right to lift the keybank forward and bring the circuit board into engagement with the fixed edge connector:

1 Left-hand keybank locking cam
2 Loudspeaker
3 Left-hand keybank fixed edge connector
4 Keybank adjusting screw
5 Right-hand keybank locking cam lever

The angle of the keybanks can be varied between 10° and 20° to the horizontal. This you can adjust to suit your requirements by means of the adjusting 'winged' thumb screw located on the right-hand side of the display unit. Release the screw just sufficiently to allow the keybanks free movement, and tighten to retain in the desired position.

THE CONSOLE

The console must be moved into position as already described. The front panel is made up of two drawer units which house the electronic equipment and these should not be opened or interfered with in any way whatsoever except by a duly authorised, qualified technician. The bottom drawer with the centre handle can be used for storage purposes as required.

The rear panel is fitted with two mains fuses, 1 amp. and 2 amp. as marked.

THE 31-CHANNEL TAPE PUNCH

The 31-channel tape punch is positioned for convenience, on top of the console control unit. It has its own separate 'ON' and 'OFF' buttons and obtains its mains input supply via the console with which it is linked by an interconnecting power cable.

The punch is also linked to the console by a short multicored cable which carries the punch data input.

CONNECTING THE CABLES

Connect the console control unit to the keyswitch display unit, using the required external interconnecting 'dual' cable to link console positions 'B' and 'C' with display unit positions 'F' and 'E'. Complete the connection with the external cable common to all systems, which links console position 'A' with display unit position 'G'. Ensure all connector locking screw knobs are tight.

Connect the short external cable to link console position 'K' with the 31-channel tape punch and insert the required unit plug; again ensuring the locking screw knobs are tight.

N.B. A small polarising lug is embodied in the upper and lower locator pins of all connectors. A matching recess is provided in all locator sockets. The lugs (and the socket recesses) of each pair of locators are differently positioned in order to ensure that connectors are not incorrectly engaged, and if due care is exercised

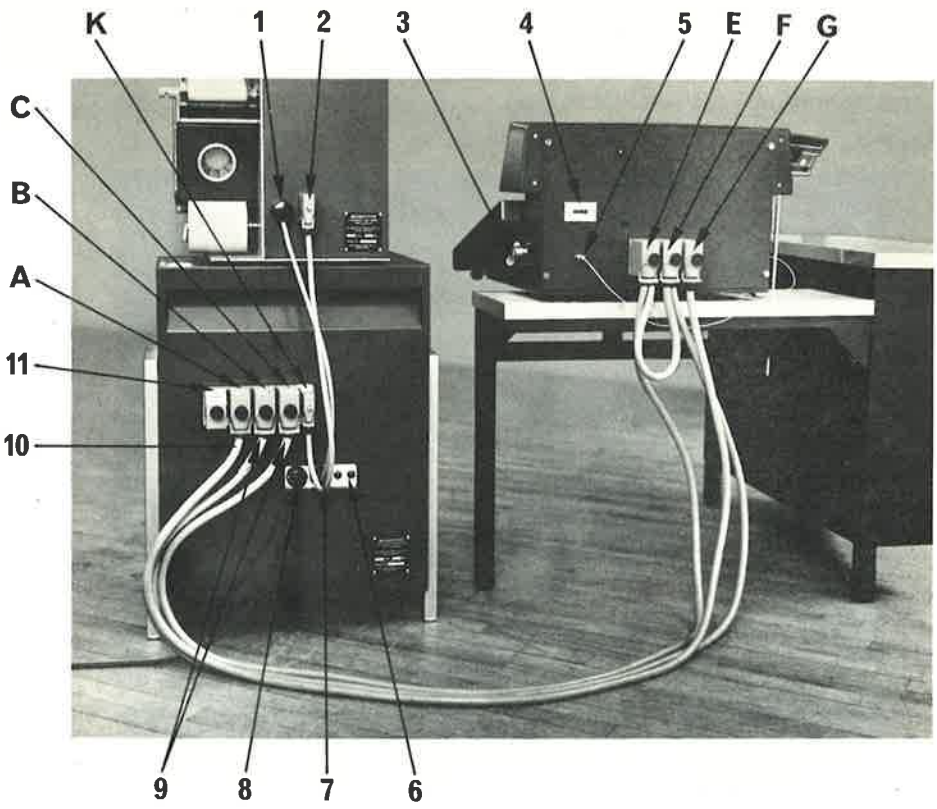

Fig 13
Rear view of the Electronic Perforator, showing the external cables and connectors:

1 31-Channel Tape Punch mains input connecting socket (linked to Console)
2 31-Channel Tape Punch connector socket (linked to position 'K' on Console)
3 Keybank adjusting screw
4 Keystroke counter
5 Justification lamp jack plug
6 Console fuses
7 Interconnecting cable (Console position 'K' to 31-Channel Tape Punch)
8 Mains input connector (Mains to Console)
9 Interconnecting 'dual' cable (Console positions 'C' and 'B' to Display Unit positions 'E' and 'F')
10 Interconnecting cable (Console position 'A' to Display Unit position 'G')
11 Unit plug

(See also diagrammatic cable plan on page 40).

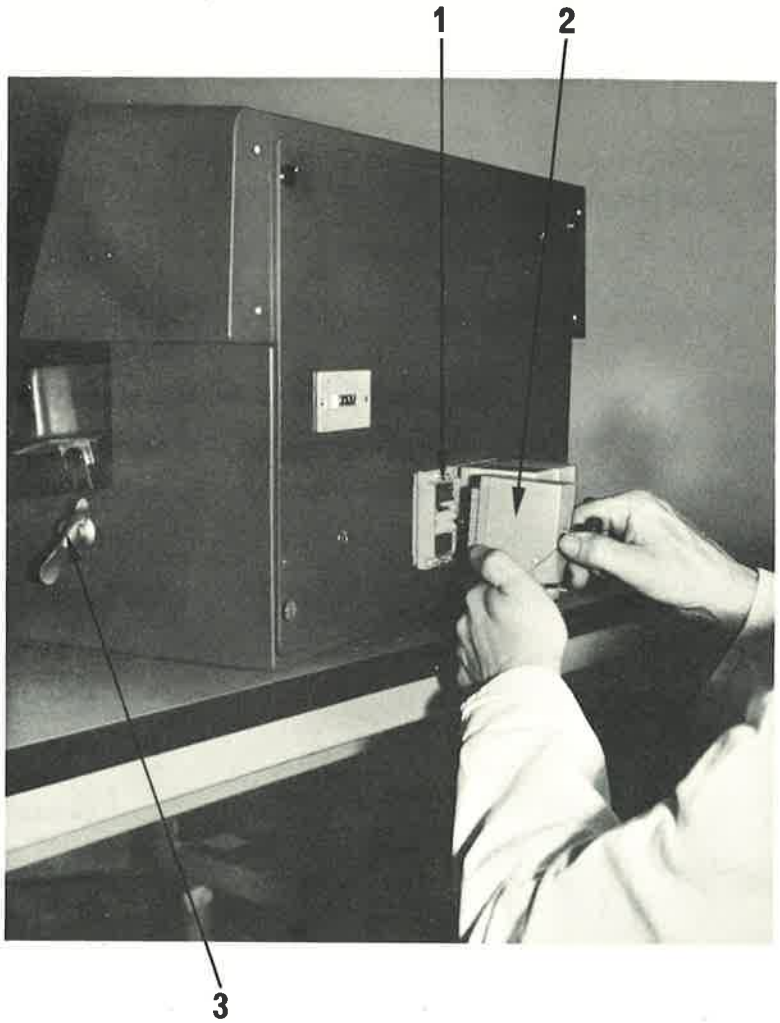

Fig 14
Interconnecting 'dual' cable free connector socket 'E' being located in fixed connector plug 'E' on the keyswitch display unit. Note the correct 'straight on' approach to the fixed connector plug.

1 Fixed connector plug 'E'
2 Free connector socket 'E'
3 Keybank adjusting screw

it is impossible to make a wrong connection.

Engage the free connectors with care and approach the fixed connectors 'straight on', bringing the locator pins and the locking screw sqarely into position. (Remove the free connectors in the same manner in order to avoid damaging the locator pins or the electrical contact inserts).

Attach the justification lamp to the copyholder, and connect the jack plug to the socket at the back of the display unit.

Connect the ear-piece jack plug as required. This will automatically cut out the loudspeaker.

Connect the mains input connecting socket supplied to a three-core cable of the required length, and connect the mains power supply to the mains input plug at the rear of the console unit. The socket is marked 'L' (live), 'N' (neutral), and 'E' (earth). Ensure the earth wire is correctly linked to the mains earth via the plug connection 'E'.

SPECIFICATION

Weights

Base unit	150 lbs (68 Kg.)
Display unit	51 lbs (23 Kg.)
Keybanks	20 lbs (9 Kg.) each
Console control unit	139 lbs (63 Kg.)
31-channel tape punch	84 lbs (38 Kg.)

Input requirements

Mains	240 volts 50 Hz

ROUTINE MAINTENANCE

Routine maintenance of the 31-channel tape punch is dealt with fully in the detailed instructions appended herewith.

The display unit, the keybanks, the keybank circuit boards and the console control unit must be kept clean and free from dust and grease. This applies especially in respect of the keybuttons, which could tend to stick down if neglected over a period of time. The electronic equipment housed in the Electronic Perforator must not be interfered with under any circumstances.

Should anything arise with which you are not competent to deal or on which you need advice, you should contact your nearest 'Monotype' branch office.

SETTING THE CONSOLE CONTROLS

LINE LENGTH

The 'Line' and 'Tabular' setting switches each cater for a maximum of 99 ems 17 units of set, within an overall limit of 60 ems of pica. Each switch consists of a set of four thumb switches which, reading from left to right, are marked as follows:

(a) 0 to 9; each figure representing a measure of ems of set x 10. The figure 1 therefore equals 10 ems of set; 2 equals 20 ems etc.

(b) 0 to 9; each figure representing a measure of ems of set x 1. The figure 1 therefore equals 1 em of set; 2 equals 2 ems etc.

(c) 0 & 1; the figure 1 representing a measure of units of set x 10. The figure 1 therefore equals 10 units of set.

(d) 0 to 9; each figure representing a measure of single units of set. The figure 1 therefore equals 1 unit of set, figure 2 equals 2 units etc. This thumb switch is used in conjunction with thumb switch (c), up to a maximum of 17 units, since 18 units would imply an increase of 1 em on thumb switch (b).

Example settings:

	(a)	(b)	(c)	(d)
Measure; 30 ems of set:	3	0	0	0
Measure; 35 ems of set:	3	5	0	0
Measure; 35 ems 5 units of set:	3	5	0	5
Measure; 35 ems 10 units of set:	3	5	1	0
Measure; 35 ems 17 units of set:	3	5	1	7
Measure; 36 ems of set:	3	6	0	0

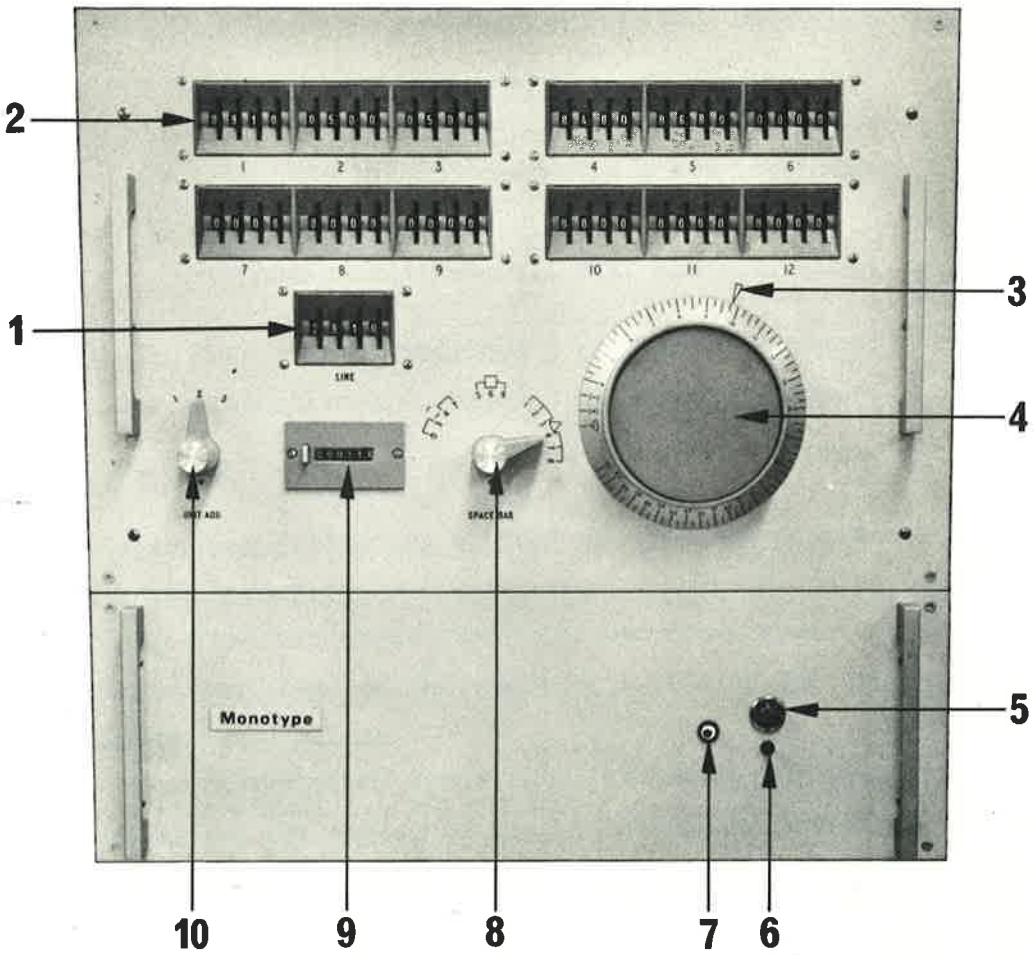

Fig 15
The Console control panel, showing:

1 Line measure thumb switch
2 Tabular thumb switches
3 Set-size selector setting mark
4 Set-size selector dial
5 Mains circuit breaker 'ON' button
6 Mains circuit breaker 'OFF' button
7 Power lamp
8 Space bar switch
9 Line counter
10 Unit Add switch

SET SIZE

The required set-size is obtained from the 'Set-size' selector dial, and can be chosen from the following range:

1) 4 set to 17 set, rising in $\frac{1}{4}$ set increments.
2) 17 set to 30 set, rising in $\frac{1}{2}$ set increments.
3) Film; Mk 3 or 4:
   Proportional separate 1 unit minimum space: 1
   Proportional combined 3 unit minimum space: 3
   Proportional combined 7 unit minimum space: 7

SPACE VALUE

The space bar switch has a total of thirteen positions. Reading in a clockwise direction, the first four positions are combined variable space values. The next three positions are fixed space values, whilst the last six positions on the right hand side of the dial are separate variable space values.

The appropriate space value is set on the space bar switch. dependent on the system in use; selection of the fixed space value being determined by its availability in the unit apportionment in use.

N.B. On both hot metal and Mk 2 filmsetter systems. the space code change above 12 set is catered for automatically through the 'Set-size' selection.

The ranges available for the various system, obtainable from the space bar switch are as follow:

SPACE VALUE	Metal	Mk 2	Mk 3 & 4	Remarks
Combined 0 units	x			If available on caster.
" 3 "			x	Gives 4 - 1 consant.
" 4 "	x			If available on caster.
" 7 "			x	Gives 8 - 1 constant.
Separate 1 units			x	Check apportionment.
" 2 "			x	" "
" 3 "	x	x		12 set and below.
" 4 "	x	x		For all set sizes.
" 7 "	x	x		12 set and below.
" 8 "	x	x		Above 12 set.
Fixed 5 units	x	x	x	Check apportionment.
" 6 "	x	x	x	" "
" 9 "	x	x	x	" "

Combined variable space values

Selection of these positions will automatically stop the tape feed mechanism.

The positions '0' and '4' are for hot metal Composition casters fitted with the combined spacing attachment.

Positions '3' and '7' are for filmsetting tapes Mk 3 and Mk 4; combined spacing being standard on these machines.

Separate variable space values

The positions for 1 and 2 unit variable spaces can be used only for tapes for filmsetters fitted with proportional justification, provided that the relative value is in the unit apportionment, (i.e. Mk 3 and Mk 4). Positions '3' to '8' are used for tapes for hot metal casters and for filmsetters with comparable justification systems.

Fixed space values

The fixed space values of '5', '6' and '9' units can be used for hot metal and all filmsetting tapes, provided such values are available in the unit apportionment.

UNIT ADDING

The 'Unit Add' selection switch is used only for hot metal tapes, provided the caster is fitted with the necessary attachment. Instructions must be given on the spool to enable the caster operator to insert the required unit adding wedge in accordance with the increment chosen.

The electronic control unit automatically adds the selected increment to any characters tapped whilst either the keybank 'Unit Adding' key is held down, or the equivalent display panel continuous control push-button is illuminated.

LINE COUNTER

This records the number of lines completed, and can be reset as necessary. It is activated only by 'Line Justify'

MAINS CIRCUIT BREAKER

The mains circuit breaker power lamp glows when the 'ON' button is pressed. The circuit breaker will cut-out automatically in the event of an excessive power overload.

SETTING-UP SEQUENCE

The following briefly summarises the complete procedure for setting up the electronic perforator.

a) Ensure that both the console and the 31-channel tape punch circuit breaker switches are OFF.

b) Make certain that the required interconnecting 'dual' cable is fitted and that the console is properly linked with the 31-channel tape punch.

c) Check that the unit plug is correct.

d) Confirm that the keybanks are in accordance with the matrix case layout.

e) Check that the keybank circuit boards are likewise correct before inserting them in the keybank sandwich.

f) Ensure that the keybanks are in an operational position.

g) Connect the console to the mains power supply.

h) Press console mains circuit breaker switch ON.

i) Select and set the required measure on the 'Line' thumb switch on the console, or the 'Tabular' thumb switches in the case of column work.

j) For line work, press the 'Line' push-button on the display panel and then 'Line Justify'. This will illuminate the 'Line' push-button and display the measure on the display panel for verification, provided it does not exceed the visible limit of the scale, which is 80 ems 17 units. Measures in excess of this can be checked by tapping and counting sufficient quads to illuminate the scale within the limit for confirmation. When tabular measures are being used, the 'Line' push-button must not be illuminated. 'Column Justify' must be tapped for each column in sequence in order to check each column measure. On completion 'Line Justify' will return you to the measure for the first colum

k) Set the 'Set-size' selector dial for the required set size.

l) Set the 'Space Bar' switch to the required position on the dial.

m) Position the 'Unit Add' switch as necessary. This applies in the case of hot metal tapes only, for composition casters suitably equipped.

n) Press the 31-channel tape punch mains switch ON; then press the 'run-out' button to check the tape feed.

o) Press 'reset' button on 'Line Counter' to reset to zero as necessary.

STARTING SPOOL

FOR FILMSETTING TAPES:

a) Tap Quad.

b) Tap 'Machine Stop', followed by 'Line Kill'.

c) Tap 'Line Justify'.

d) Tap 'Grey Scales'; i.e. tap 'Grey Scale', tap 'Quad' then tap 'Grey Scale' again.

e) Tap 'Line Justify' twice.

f) Tap text.

FOR HOT METAL TAPES

a) Tap Quad.

b) Tap 'Line Kill'.

c) Tap 'Line Justify'.

d) Tap wording for the catch line, then tap 'Line Kill'

e) Tap 'Column Justify'.

f) Tap 'Leader' key twice, then tap 'Line Justify'

g) Tap text.

PERFORATING PROCEDURES

Any measure can be handled, up to 99 ems 17 units. Measures in excess of 80 ems 17 units are not displayed, but the em scale display will illuminate accordingly when the 80 ems 17 units position is reached, For example; with a measure setting of 95 ems 14 units, the em scale will come visibly into operation after 14 ems 15 units have been set. As characters and spaces are tapped, the relevant pilot lights move along the scales, thus progressively indicating the remaining ems and units to be set, until zero is reached. Up to 63 variable spaces or letter-spaced characters can be accommodated in a line.

Character unit width range is from 1 to 22 units, and any set-size can be chosen from 81 values, by means of the set-size selector dial located on the front panel of the console unit. Similarly, any one of thirteen spacing modes may be established by use of the space bar switch. The range covers various values of combined, separate, and fixed spacing, which can be selected as required within the limits imposed by the system being used, as explained under SPACE VALUE on pages 29/30 and summarised in the Space Value chart.

JUSTIFICATION

Justification, for both 'Line' and 'Column' work, is applied by striking the appropriate key. There is only one key for each kind of justification, and the circuitry housed in the console unit makes the required calculation, resets the pilot lights embodies in the em scale, and activates the punches which perforate the codes into the tape; simultaneously - in one tenth of a second.

The justification indicator consists of a green lamp attached to the copyholder, which glows when the justifiaction area is reached, provided variables or letterspaced characters are used. The audible warning which commences to operate at $3\frac{1}{2}$ ems 8 units from zero, gradually alters in tone in a series of descending steps towards zero, and ceases to operate in the event of oversetting.

Whilst the green light indicates that justification is possible, the audible signal indicates when zero on the em scale is approached, and the em scale display indicates the remaining space to aid you if need be in making the end of line decision though, with experience, the audible warning will generally prove sufficient. The 'Space Width' indicator simultaneously indicates (to the nearest unit), the space that will be inserted on justification.

LINE JUSTIFY

The 'end of line' signal is punched into the tape on depression of the 'Line Justify' key. This applies with both hot metal and filmsetting tapes.

This can also be achieved when filmsetting by depressing any of the 'variable line feed' keys when leading is being used, since the necessary end of line signal is automatically included.

COLUMN JUSTIFY

The 'Column Justify' key is used to justify all columns in sequence, except the last one in the measure. 'Line Justify' is used for the last column. This applies with both hot metal and filmsetting tapes.

LINE FILL

This facility can be used to fill out a line where the remaining space is in excess of 4 ems, provided the space bar switch is set on a variable position.

When 'Line Fill' is activated, combinations of quadder, quad and variable space codes are punched, relative to the space to be filled.

CENTRE

Hot metal

a) Press and hold 'Repeater' key; tap quad key and release both.
b) Tap three variable spaces.
c) Set words with fixed spaces, using 'fixed space' keys.
d) Tap three variable spaces.
e) Press and hold 'Centre' key and tap 'Line Fill' key.
f) When punching has stopped, release 'Centre' key.
g) 'Line Justify'; or for Column No.1 only, 'Column Justify'.

LINE CANCELLATION

A line, or part of a line, may be cancelled by depressing the 'Line Kill' key. The necessary coded signal will be punched and the illuminated em scale on the display panel will be automatically restored to measure.

When perforating tabular matter individual columns may be cancelled in the same manner. The column measure will be likewise restored, whilst the relevant column push-button light will remain unchanged until the column is justified.

QUADDER

The 'quadder' key must be held down whilst you tap the 18 unit space key. A reduction of 5 ems will be registered on the em scale each time the 18 unit space key is tapped with the quadder depressed. Any desired multiple of 5 times the unit value of any character or space that is tapped whilst the quadder key is held down, can be included in this manner. The usual exceptions apply according to the system in use. The correct registration of units on the em scale enables this facility to be used anywhere in a line.

UNIT SHIFT

The signal which operates the unit shift will be included automatically when a key for any of the unit shift characters is depressed. It may be introduced independantly by using the 'Unit Shift' key.

REVERSE COUNTER

The 'Reverse Counter' key enables the operator to restore any number of units on the em scale display. 'Punch Inhibit' on the display panel must be depressed before using this facility.

CASTING OFF

a) Press 'Punch Inhibit'.
b) Set 'Line' measure on the console to zero.
c) Tap 'Line Justify'.
d) Depress and hold down the 'Reverse Counter' key.
e) Tap wording, and the display panel will show the measure required in ems and units.

TRIAL LINES

a) Mark the em scale at the start of the trial.
b) Press 'Punch Inhibit' and tap the trial setting.
c) Mark the em scale at the end of the trial.
d) Depress and hold down the 'Reverse Counter' key and restore the measure back to the first mark, using space keys.
e) Release 'Reverse Counter', then release 'Punch Inhibit'.

OVERSETTING

This condition is indicated when setting has continued beyond zero and the audible warning signal has ceased.

This must be remedied; and the fact that the electronic perforator continues to count the units tapped beyond zero, together with the availability of the 'Reverse Counter' facility, enables the operator to come back correctly to within his measure.

For filmsetting tapes, two alternative methods are therefore available:

a) Tap 'Line Kill' and reset the line.
b) Reverse tape feed on the punch for the appropriate number of characters, then tap 'Character Kill' the same number of times. Press 'Punch Inhibit'. Depress and hold down the 'Reverse Counter' key and tap the characters that have been 'Character Killed'.
   Insert hyphen if the back spacing on the tape has involved only part of a word.
   Tap 'Line Justify' or 'Column Justify' accordingly.

For hot metal tapes the operator can similarly tap 'Line Kill' and reset the line. Alternatively, the codes for the characters overset can be patched-up on the tape using the 'tape advance' button. The units overset can then be restored by tapping the appropriate characters with the 'Reverse Counter' and 'Punch Inhibit' facilities in operation.

The tape must subsequently be repositioned for punching by means of the 'tape return' button.

UNDERSETTING

This requirement is catered for automatically because we work on 9 ems as the justification area, as against $3\frac{1}{2}$ ems 8 units on the pneumatic keyboard.

LETTERSPACING

Letterspaced characters in both metal and Mk 2 film, register minus 2 units (12 set and below), and minus 1 unit (above 12 set), on the em scale display. Care should therefore be taken not to overfill the line, and thereby cause unit reduction. The 'Space Width' indicator on the display panel should therefore indicate not less than 6 units prior to justification.

On Mk 3 and Mk 4 filmsetters the above reduction does not operate, but the set-size selector dial on the console unit must be positioned for proportional separate 1 unit minimum spacing.

UNIT REDUCTION

The normal method of unit reduction through the justification wedges is still possible on the electronic perforator for systems other than those using proportional justification, i.e. other than Mk 3 and Mk 4 filmsetters. This is achieved as explained in the preceding section on LETTERSPACING.

On Mk 3 and Mk 4 filmsetters, the method used to obtain unit reduction is to letterspace a fixed space 1 unit less than the character width, using the 'Double Expose' facility when tapping the characters. When doing this, the set-size selector dial must be positioned for 1 unit separate minimum spacing.

FLUSH LEFT

Hot metal

a) Set words, using fixed space keys for interword spaces.
b) Tap 'Line Fill' key. This will automatically set quads and variable spaces, followed by one quad. The variable space width indicated will be approximately 6 units.
c) When punching has stopped, 'Line Justify' or 'Column Justify'.

N.B. If the approximate value of 6 units is acceptable for the interword spaces, then these may be set, using the keybank space bar rather than the fixed space key.
If the indicated space width, after tapping the 'Line Fill' key is larger than 6 units and is not acceptable, then the width may be reduced as required by tapping additional quads.

Film

The 'Flush Left' procedure for filmsetting is exactly the same as for hot metal.

FLUSH RIGHT

Hot metal

a) Press and hold 'Repeater' key; tap quad key and release both.
b) Tap four variable spaces.
c) Set words with fixed spaces, using 'fixed space' keys.
d) Press 'Punch Inhibit' button and tap 'Line Fill' key.
e) When punching has stopped, release 'Punch Inhibit' button.
f) 'Line Justify'; or for Column No. 1 only, 'Column Justify'.

Film

a) Set words with fixed spaces.
b) 'Line Justify'; or for Column No.1 only, 'Column Justify'.

TABULAR SETTING

The electronic perforator is automatically set for tabular work whenever the 'Line' indicator push-button on the display panel is OFF, (not illuminated).

'Line Justify' when depressed, will always restore to column 1. 'Column Justify' will restore the tabulator display in the sequence of column settings, together with the appropriate column light.

Each column is allocated its em and unit value on the series of thumb switches set out in two rows across the from panel of the console unit. The thumb switches, which may be pre-set in this manner to suit up to twelve columns, are related to the tabulator push-buttons on the display panel.

All columns in the line will require to be 'column justified', except the last column which must be 'line justified'. The required number of columns must be set on the appropriate num er of thumb switches.

As a safety precaution, the thumb switch following the last column should be set on zero ems and units. This will automatically produce the audible warning if 'Column Justify' is inadvertently tapped

instead of 'Line Justify'. Should 'Column Justify' be tapped in error, the tapping of 'Line Justify' in addition will remedy the mistake.

Where the number of columns exceeds twelve, they can be set as follows:

a) If the columns outside the first twelve have the same measure as previous columns, the appropriate columns can be manuually selected on the tabulator push-buttons. A suitable indication above the column push-button must be made, and the copyholder marked accordingly to indicate the push-button which has to be depressed.

b) If the columns outside the first twelve have measures different to each of the previous twelve, then the thumb switches on column 1 for column 13 and column 2 for column 14, etc., will need to be reset accordingly. This will necessitate changing back to the original measures for setting columns 1 and 2 etc., as necessary.

N.B. Bearing in mind that 'Column Justify' will illuminate the push-button for the next column on the display panel, you must press the push-button previous to the column required to be displayed. For this purpose, column 12 should be taken as the column preceding column 1.

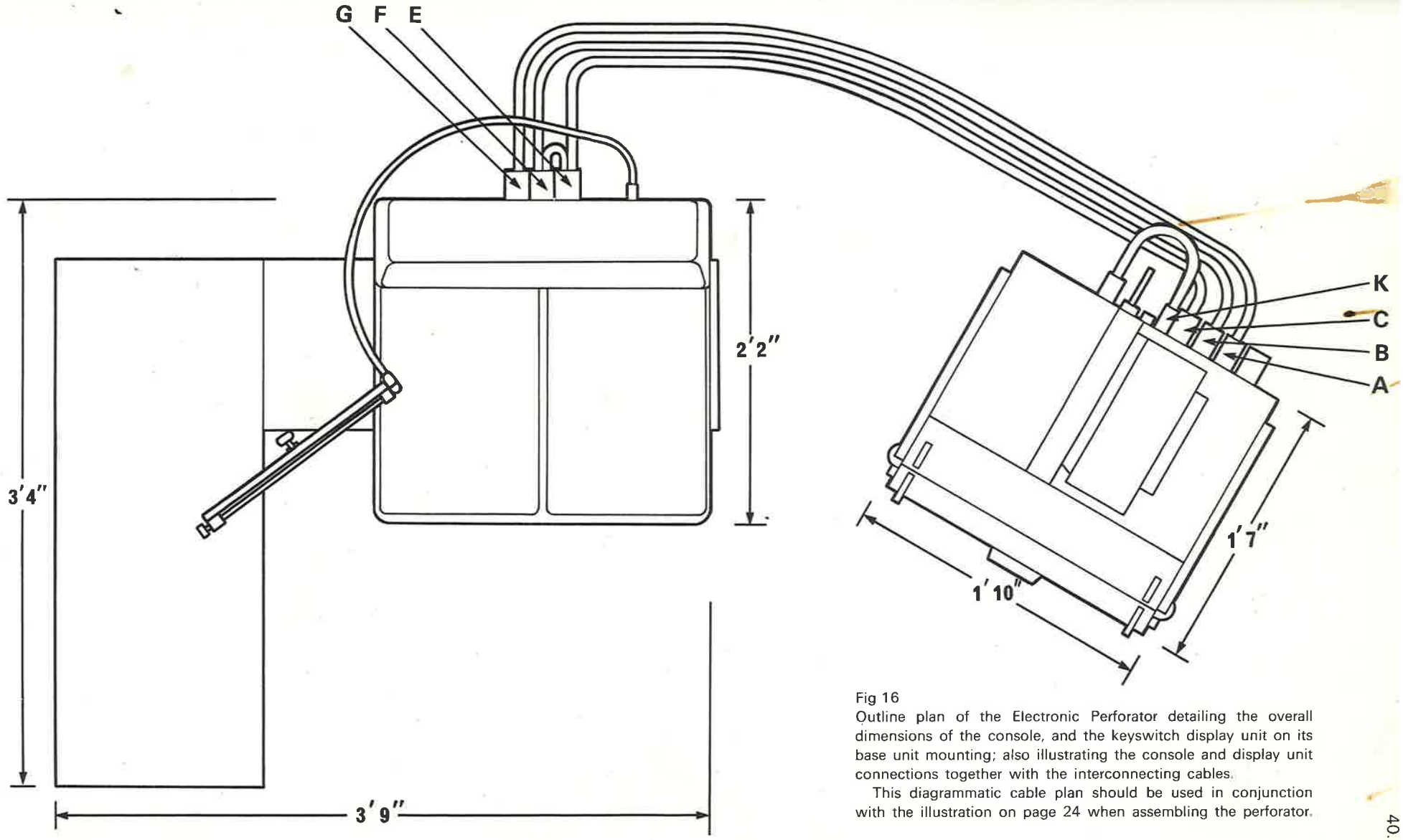

Fig 16
Outline plan of the Electronic Perforator detailing the overall dimensions of the console, and the keyswitch display unit on its base unit mounting; also illustrating the console and display unit connections together with the interconnecting cables.

This diagrammatic cable plan should be used in conjunction with the illustration on page 24 when assembling the perforator.

A P P E N D I X

'MONOTYPE' 31-CHANNEL TAPE PUNCH

Issued by The Monotype Corporation Limited, Salfords, Surrey
Registered Trade Marks: 'Monotype', 'Monophoto'

'MONOTYPE' 31-CHANNEL TAPE PUNCH

CONTENTS

	PAGE
INTRODUCTION	1
SPECIFICATION	
Physical	2
Electrical	2
GENERAL TECHNICAL INFORMATION	4
INSTALLATION	5
OPERATOR'S INSTRUCTIONS	
Loading procedure	7
Checking drill	9
Switch-on routine	10
ROUTINE MAINTENANCE	
Daily	11
Weekly	11
Bi-Weekly	12
Removal of jammed paper from Die Plate	13
ILLUSTRATIONS	
Tape threading diagram	8
FIG. 1	14
FIG. 2	15
FIG. 3	16
WIRING DIAGRAM	17

'MONOTYPE' 3-CHANNEL TAPE PUNCH

Serial Numbers 31P201 to 31P250

INTRODUCTION

A 'Monotype' 31-channel tape punch is a self-contained unit employed to perforate operating codes in 31-channel programme tape. It has been designed primarily as part of either a 'Monotype' Electronic Perforator or a 'Monotype' Tape Conversion System. Information from any suitable data processing system may be accepted however, where a 31-channel programme tape output is required.

The whole unit is mounted on a rigid base with all but the tape feed and punching mechanism enclosed within a metal casing. Function buttons are located on the front of the case together with mains 'on' and 'off' buttons; the mains input socket and data connection are located at the rear of the case. Tape feeds from a roll on the lowest spindle and is carried over guide rollers and a sensing arm to the feed wheel and the die plate; paper punchins are collected in a receptacle clipped over the gate immediately beneath a perforation reader. The perforated tape passes over another sensing arm and a writing platform, round a tensioning guide and to the take-up spool.

Both the tape feed and the code punching systems employed require only minimum maintenance, and the mechanical simplicity of the feed system makes readjustments unnecessary throughout the useful working life of the equipment. Electrical maintenance is minimised by the exclusive use of semiconductors in the olecronic sections, and the extensive use of printed circuit board assemblies facilitates the quick replacement of electronic components if necessary.

Access is gained to the punch pins by removing the receptacle and lifting the gate release catch. Each punch pin may be removed separately for cleaning and inspection purposes without the use of tools. Ventilation louvres are provided at the top and the rear of the unit, and these must be kept free of obstruction at all times.

SPECIFICATION

Physical

Overall dimensions

Height	16" (40.6cm)
Width	16½" (42cm)
Depth	17" (43.2cm) including data connector and function buttons.

Weight (without paper roll) 84 lb (38 Kg)

The ambient working temperature should not exceed 35°C (95°F) and it should be noted that the temperature of any surface on which the punch is placed must not exceed 40°C (104°F). Attention should be given also, to the ventilation louvres in the punch case and to the cooling fan grill in the punch block assembly cover, which must be kept free from obstructions at all times.

Electrical

Input requirements

Mains	220/240 volts single phase 50 Hz or 110/120 volts single phase 50/60 Hz to special order. Power consumption 200 VA peak.
Data	Active level + 2.8 volts minimum, + 5 volts maximum. Inactive level + 0.3 volts/- 0.3 volts maximum. Duration 2.8ms minimum 3.4ms maximum. Rise/fall time 20 microseconds maximum. Current consumption 2mA/channel maximum. Negative input level - 0.3 volts maximum.

Paper feed	Two input lines a) single forward step; duration to be coincident with data input. b) single reverse step; asynchronous. Note: unused inputs must be kept at ground level (inactive). Active level + 2.8 volts minimum, + 5 volts maximum. Inactive level + 0.3 volts/- 0.3 volts maximum. Maximum current out 0.04 mA (active). Maximum current in 1.6 mA (inactive). Feed motor trigger point on trailing edge of input pulse.
Inhibit feed	Inactive level + 2.8 volts minimum, + 5 volts maximum. Active level + 0.3 volts/- 0.3 volts maximum. Maximum current in 1.6 mA (inactive). Maximum current out 0.04 mA (active).
Output signals	Tight tape condition + 5 volts. Normal condition ..... 0 volts. (Monitor point on contact 'SS').
Punching capacity	Maximum number of punches energised simultaneously ..... 8. Maximum mean number of punches to be operated per character over a ten minute period at maximum punching speed ..... 4. One punch may not be operated continuously for more than four seconds.
Punching speed	20 characters per second maximum.

GENERAL TECHNICAL INFORMATION

The schematic circuit diagram of a punch is shown in diagram Fig 4. Basically there are five component systems:

1. Function/Indication System.
2. Motor Drive System.
3. Punching System.
4. Tape Feeding System.
5. Power Supply.

Reference to illustrations will show the location of key components and the methods of gaining access to a punch.

All circuit boards are provided with locating slots in the connector edge to prevent incorrect insertions. Nevertheless, care should always be taken to ensure correct orientation of circuit boards when replacing them.

Punch solenoid protection fuses are provided. Reference to Fig 3. will show the positions of fuses relative to data channels.

INSTALLATION

A punch unit is delivered securely packed in a wooden case bearing instructions to keep the contents in an upright position.

Open the case and remove the packing material from the top and sides to expose a cardboard container. Cut this container at the top and also down the side seams, so that access may be gained to webbing lifting straps already in place; do not lift the unit by any other method at this stage. Open and roll down the sealed polythene bag so that the internal protective packing can be removed. Move the punch to its permanent site by lifting it at the base plate only, since damage will be caused if presssure is applied elsewhere.

Electrical connections

The mains supply should be connected via the three-core mains lead supplied with a punch. The connections are:

RED	Live
BLACK	Neutral
GREEN	Earth

A fuse carrying the mains supply to a punch should be rated at 10 amps. As an additional safeguard, each punch is equipped with a circuit breaker switch which will trip to disconnect the mains supply in the event of a dangerous overload condition occurring.

Data connections are made via the 38-way plug and socket which is adjacent to the mains plug and socket at the rear of the case. The free connector containing fixed contacts, to which data cable wires are soldered, must have these contacts sleeved to prevent the possibility of short circuits occurring. Connections to the data plug and socket are as detailed overleaf.

Remove the cover from the main case, which is secured by six posidrive screws, and check that all printed circuit boards are fully located in their edge connectors. Replace the cover and tighten the screws.

Connect the mains and data inputs as previously described, and check that when the unit is standing switched-on ready for operation all conditions are correct for the precise operation of a punch. When supplied as part of either an Electronic Perforator or a Tape Conversion

Unit, a punch is equipped with ready-made mains and data cables to suit the system.

Load a spool of programme tape according to both the diagram and the instructions written for the operator, and carry out the normal procedure to check operation of the feed system. With the punchings container clipped into position the punch is ready to accept data input.

Arrangements should now be made to energise all punch inputs in accordance with the limits outlined in the electrical specification, coincident forward paper feed signals also being supplied.

DATA PLUG AND SOCKET CONNECTIONS

PIN	FUNCTION	PIN	FUNCTION	PIN	FUNCTION
A	Punch N	S	Punch B	HH	Punch 13
B	Punch M	T	Punch A	JJ	Punch 14
C	Punch L	U	Punch 1	KK	Punch 0005
D	Punch K	V	Punch 2	MM	Forward Paper Feed.
E	Punch J	W	Punch 3	PP	Stop Paper Feed.
F	Punch I	X	Punch 4	LL	Backward Paper Feed.
H	Punch H	Y	Punch 5	RR	+ 5v for test purposes only.
J	Punch G	Z	Punch 6	SS	External indication for tight
K	Punch F	AA	Punch 7		tape condition (giving + 5v
L	Punch S	BB	Punch 8		with respect to NN).
M	Punch E	CC	Punch 9	NN	Common Line.
N	Punch D	DD	Punch 10	TT	External inhibit of punch,
P	Punch 0075	EE	Punch 11		(this is normally connected
R	Punch C	FF	Punch 12		to NN).

Diagram showing method of threading programme tape on 'Monotype' 31-channel punch

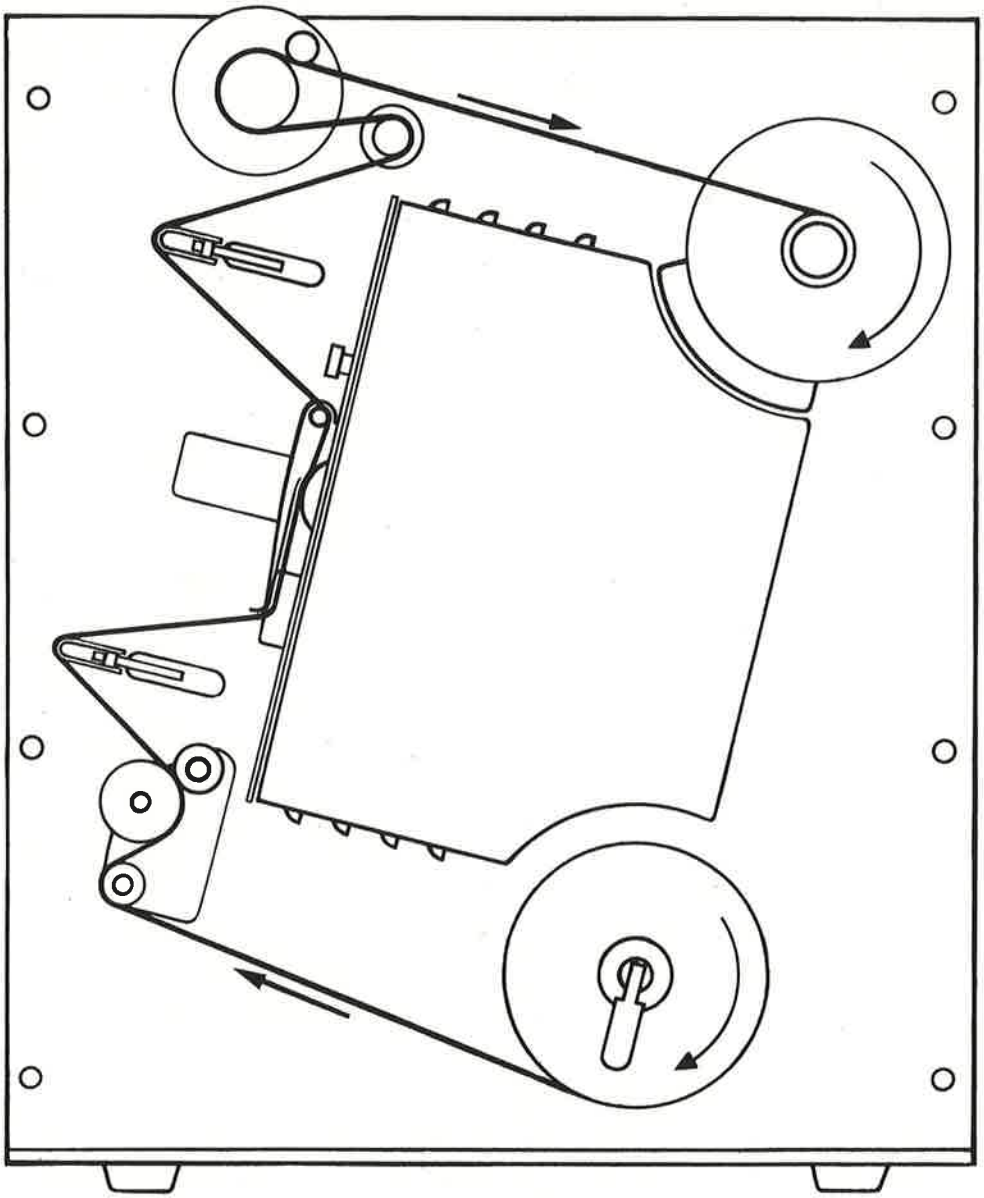

Checking drill

Having loaded a programme tape satisfactorily, switch on the mains supply again and check that the manual tape feed controls function correctly. Operation of the tape run-out button will give a feed of approximately sixteen steps per second. The tight tape indication can be checked by operating the tape arms to their fullest extent - towards the punch housing face plate - and noting that the tight tape indicator lamp flashes. Under tight tape conditions both the forward tape feed and all code punches are made inoperative.

Operate the tape run-out button for a few seconds to ensure that the tape is winding correctly on the take-up spool. Normally the paper guide systems should need no adjustment for first-time operation. However, it should be noted that the tension of the tape being wound onto the spool is governed by the attitude of the friction guide assembly; turning this assembly anti-clockwise will increase the wind-up tension. Excessive tension will create a tendency for the tape to wander or to tear and will also overload the wind-up motor and the gear box system.

Switch-on routine

Due to an inherent characteristic of the tape feed motor system, there is a possibility that a tape feed will take place each time the punch is switched on. This could be either a forward or a backward feed; alternatively, when the first forward tape feed signal is supplied to the system after switch-on, it is possible that an initial reverse feed may result, or vice-versa.

Consequently, when a punch is used in conjunction with a 'Monotype' Electronic Perforator ensure that a 31-channel tape which is incomplete at the end of a period of operation is suitably marked for repositioning before switching off the equipment.

When operation is resumed and the equipment is switched on again, use the manual feed controls to move the tape either forwards or backwards, and then correctly reposition it, even if a tape feed has not occurred when switching on. The manual controls should be operated also immediately after loading programme tape into the wind-up system of a 31-channel punch, irrespective of the system with which it is associated.

Operation of the manual controls primes the tape feed system so that initial feed errors are eliminated before information is fed to the punch.

Tight tape condition

Tight tape is indicated by a flashing red light contained in the continuous tape feed control button. While tight tape conditions prevail, both the data punch and paper feed systems are inoperative.

Lower tape arm

The lower tape arm can take up a tight tape position due to the following conditions:

a) End of the blank 31-channel tape supply (end of tape glued to reel causes tight tape condition).

b) Incorrect operation of paper drive capstan (see routine maintenance notes for cleaning instructions).

c) Failure of reel out motor system.

Upper tape arm

The upper tape arm can take up a tight tape position due to the following conditions:

a) Excessive use of the backspacing facility (when used with the Electronic Perforator) without first ensuring that sufficient loose paper is released from the take-up spool.

b) Wind-up motor system continuously operating.

c) Sticking punches preventing the output of paper from the die plates prior to a wind-up action.

Failure of either of the paper control motor systems to respond correctly to the tape arm actions must be immediately reported to the maintenance engineer responsible for the equipment.

When tight tape occurs as a result of backspacing, the condition can be corrected by winding the spool back by hand, after disengaging it by means of the take-up spool release mechanism. Perforating can then be continued after locking the take-up spool release mechanism again. Slack tape will automatically be taken up.

ROUTINE MAINTENANCE

It is important to empty the punchings container at regular intervals, and at least as frequently as the programme tape spool is renewed. Failure to observe this precaution will result in tearing of the tape when the container becomes full.

Daily

Remove all paper dust from the area of the die plates and the tape feed rollers. Use a .006" berylium copper shim to clear small particles of paper from the die plates, particularly near the tape feed wheels, whilst the punch gate is open. At the same time clear the dust from the punch solenoid arms, and also from the rear end of the punch pins and die plates.

NOTE: The punch gate is opened by raising the die plate latch. Open and close the gate gently to avoid disturbing the seating of the punch pins, which could cause severe damage if closed onto the die plates.

Clean with a good quality brush, being careful to extract loose hairs. Check the operation of the tape feed rollers. Maintain the leading roller bearing slots in a clean condition at all times to ensure that the driven roller will fall freely onto the rubber driving roller.

Make sure that the cooling fan is operating satisfactorily.

Operate a suitable test routine to be sure that all 31 punches perforate tape correctly, and at the same time, check the linearity of punching; this can be performed conveniently by operating 'Line Fill' when a punch is used in conjunction with an Electronic Perforator.

Weekly or after approximately 50 hours of operation

In addition to the routine daily maintenance, open the punch gate but do not remove the punch pins. Apply keyboard oil to the part of the punch pins protruding from the die and remove surplus oil with a lint-free cloth.

Using a paper tissue pad and methylated spirit, wipe clean the rubber driving roller.

Monthly or after approximately 200 hours of operation

Open the punch gate, remove all the punch pins and lay in order of assembly on clean paper or lint-free cloth. Thoroughly clean the pins with a lint-free cloth or paper tissue (taking care to retain their assembly order).

Whilst the punch pins are removed and with the punch gate open, clean the die plates in the following manner: Apply a volatile solvent so that it runs through the die plate holes, yet avoids splashing. Collect the dust-laden solvent in a suitable receptacle. With the aid of an air line, blow out suspended dust from inside the die plate holes and clean the exteriors thoroughly.

Dip the small end of the punch pins in Molyslip G for a depth of 1/16" approximately from the tip and replace the pins into their respective holes, spinning the part to distribute the lubricant in the guide holes before finally positioning.

Lubricate the punch pins with keyboard oil as described under the weekly procedure and apply a film or Molyslip G to the end of the punch pins contacting the solenoid levers.

NOTE: Never use abrasive substances to clean punch pins or die plates. Always use a mask or shield in front of the solenoid arms when removing pins or cleaning die plates.

Use only the approved .006" berylium copper strip supplied for clearing jammed paper from the die plates, and avoid disturbing either the die plate fixing screws or the punch gate hinge blocks. If an improperly seated punch pin has caused damage to a die plate when attempting to close the gate, do not then try to force the pin into its correct position since this action will do further damage.

Removable wind-up spools must be maintained in good condition in order to function properly, Bent or loose side plates will affect the quality of tape wind-up.

Faults occurring which cannot be rectified by routine maintenance specified above, and which are outside the scope of these instructions for operation, should be referred to the appropriate offices as soon as possible.

Removal of Jammed Paper from Die Plates

Paper may become jammed between the die plates as a result of a sticking punch or foreign matter in the paper.

A sticking punch usually causes an elongated tear in the paper with torn paper folding up behind the pin.

With care it is possible to free the paper without jamming the die plates.

First switch the punch off, release the punch gate so that the sprocket holes are free from the feed wheels and release the paper by tearing across the elongated hole, as shown in the illustration.

To clear jammed paper particles from between die plates use the .006" berylium shim to pull paper towards sides of plates where it can be easily removed.

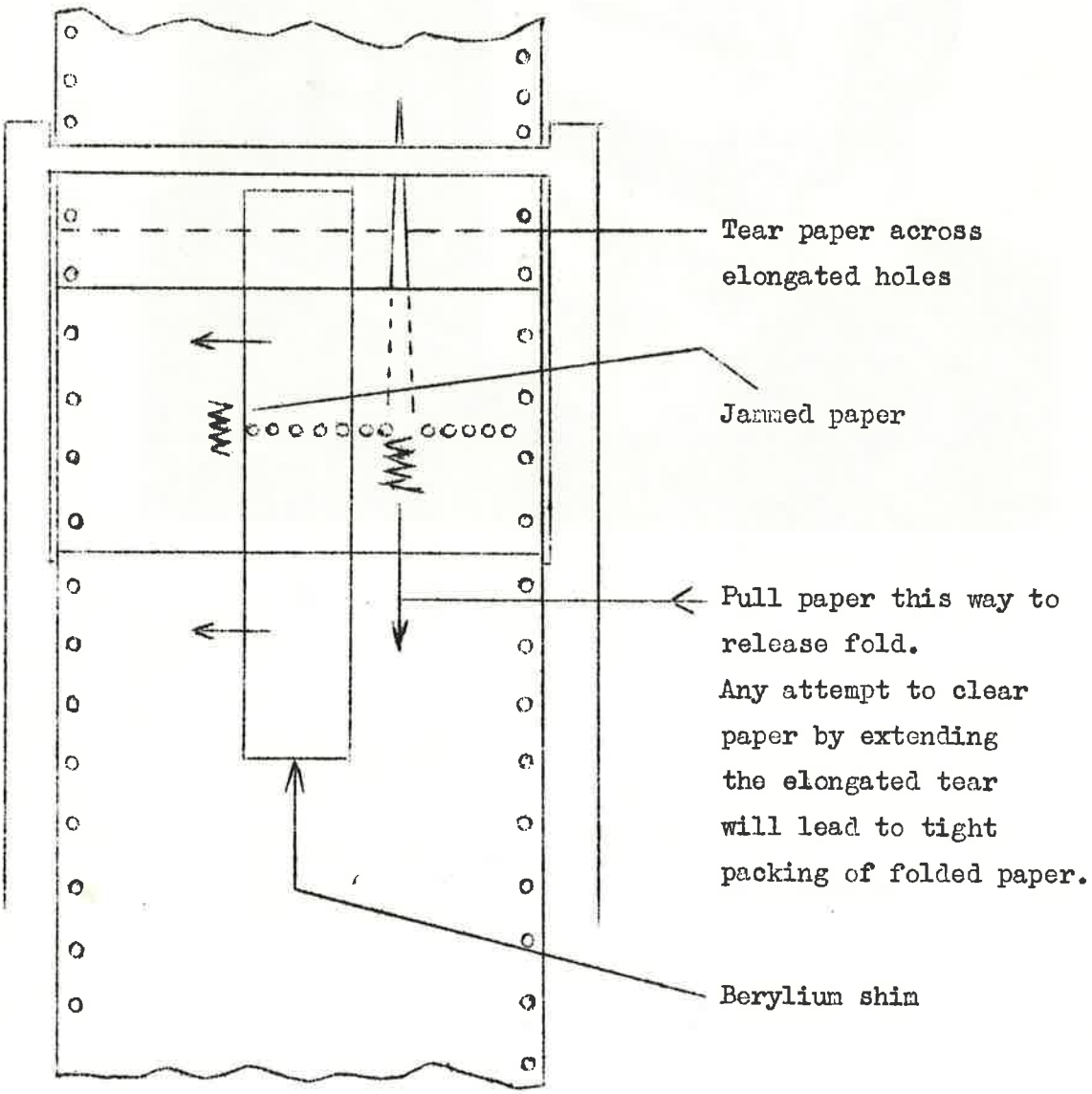

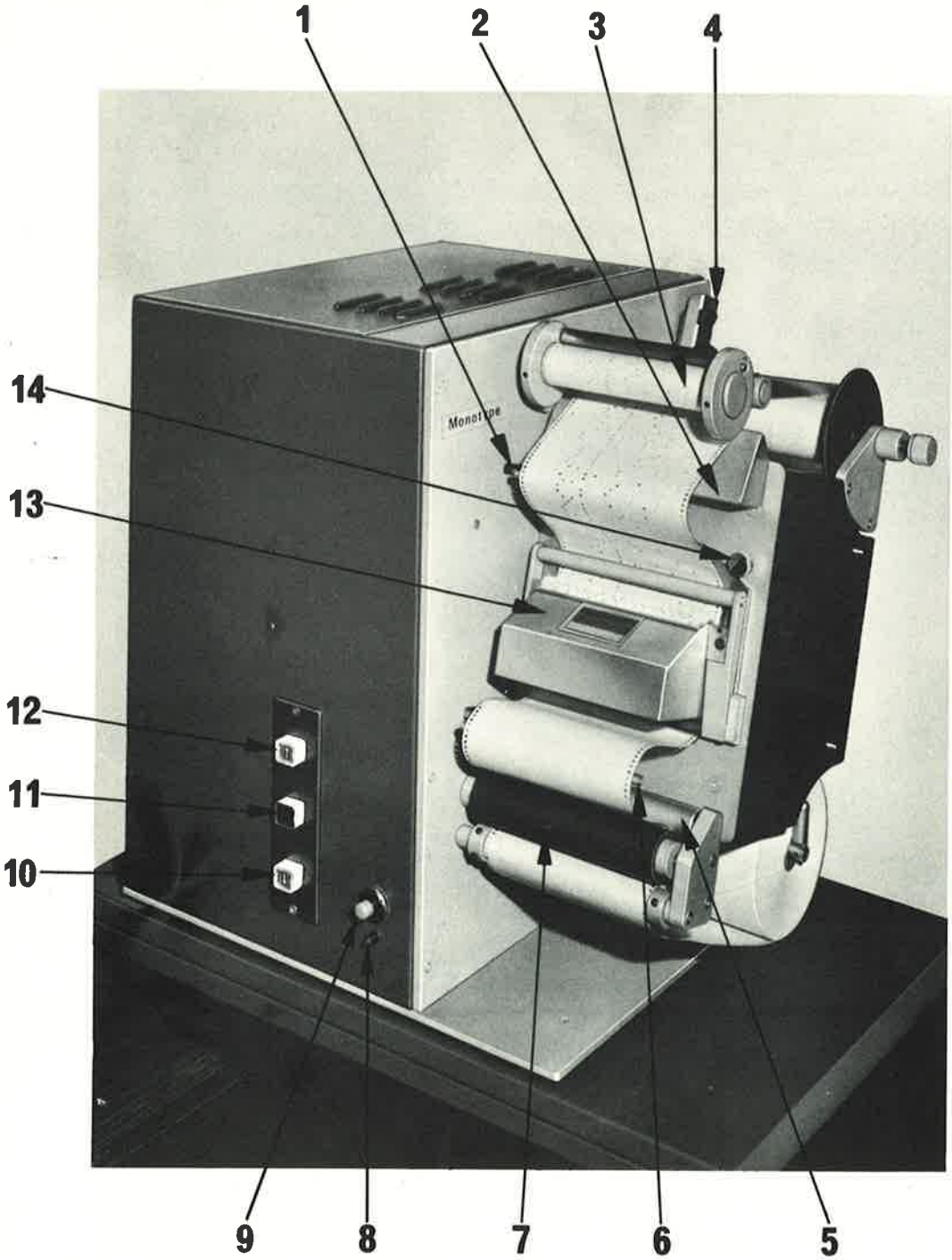

Fig 1

1 Tape take-up sensing arm
2 Tape writing platform
3 Tape take-up tension bail
4 Tape take-up spool release mechanism
5 Driven tape feed roller
6 Tape feed sensing arm
7 Driving tape feed roller
8 Circuit breaker 'OFF' button
9 Circuit breaker 'ON' button
10 Single feed reverse tape button
11 Tape run-out button incorporating tape warning lamp
12 Single feed forward tape button
13 Tape punchings container
14 Die plate latch

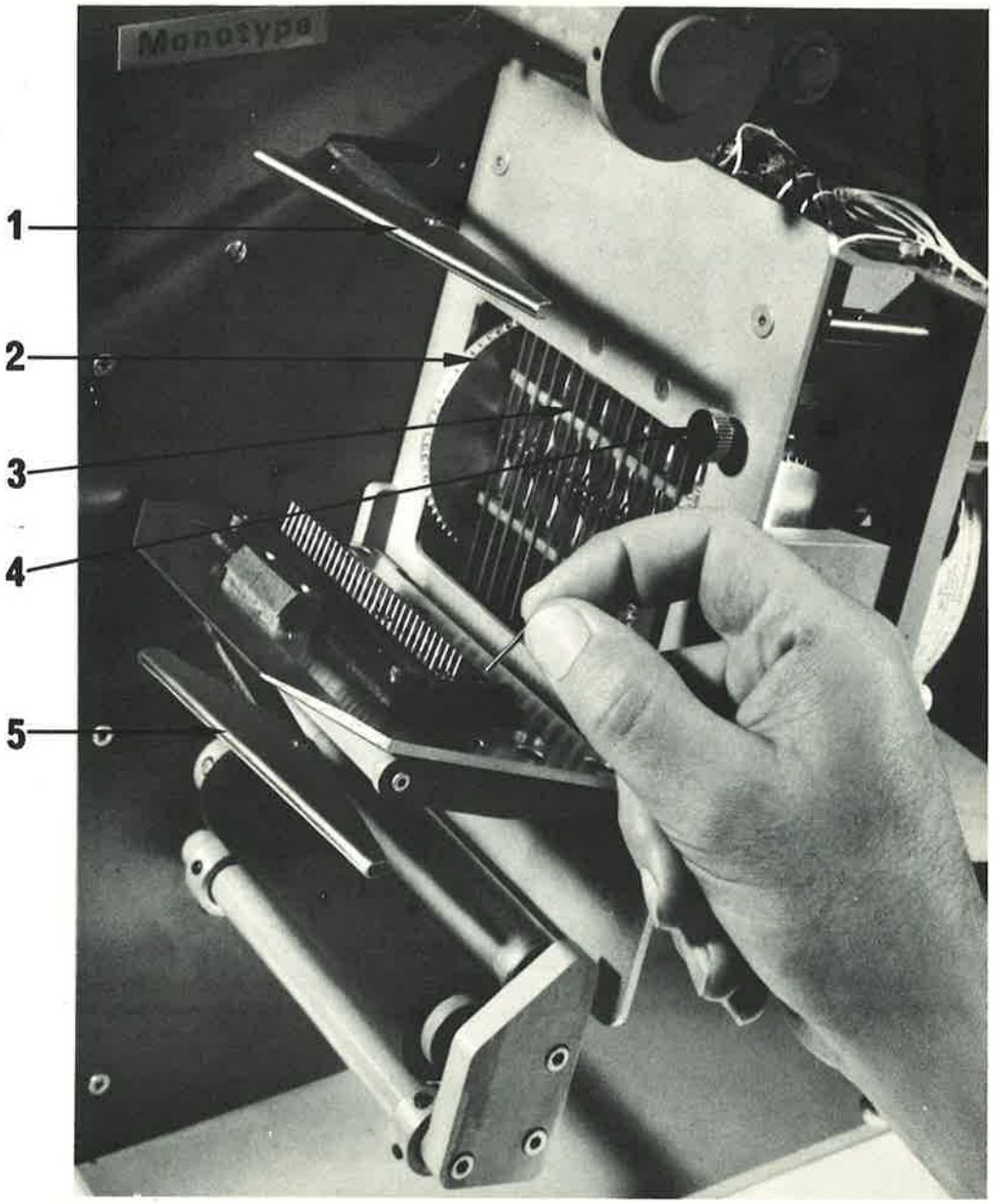

Fig 2
1 Tape take-up sensing arm
2 Tape feed wheel
3 Punch drive solenoid levers
4 Die plate latch
5 Tape feed sensing arm

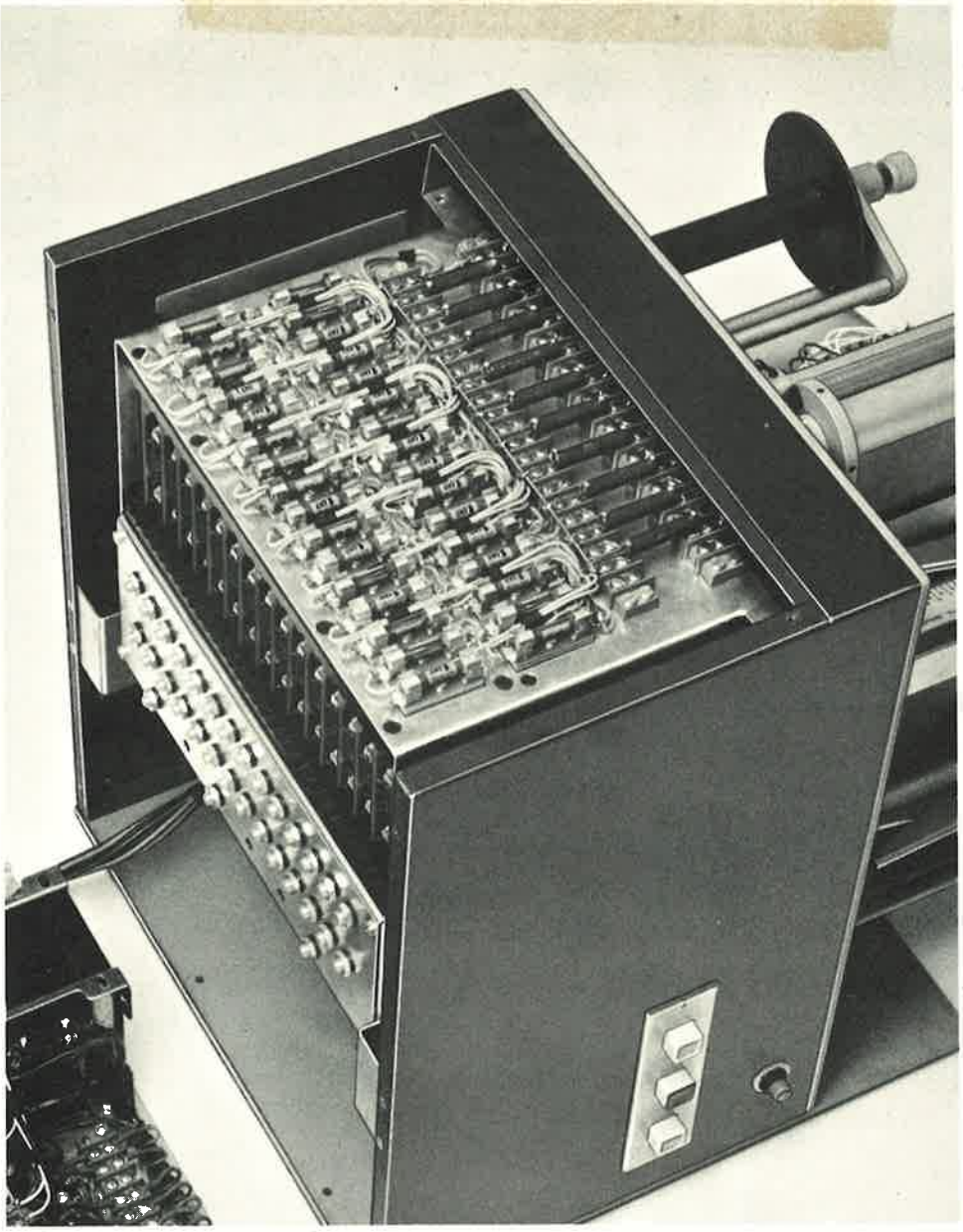

Fig 3
The opened case showing positions of punch solenoid protection fuses.

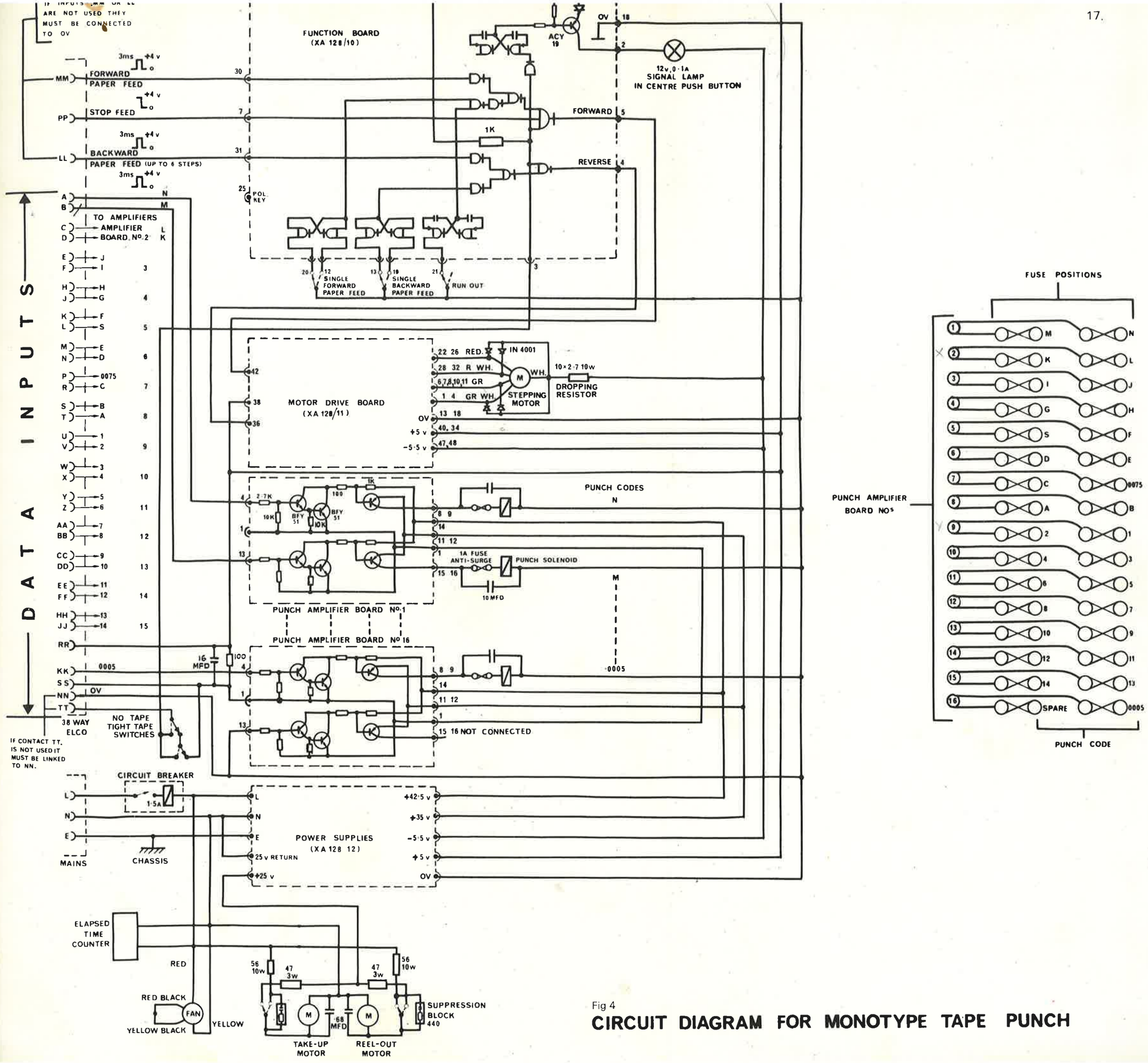

Fig 4

CIRCUIT DIAGRAM FOR MONOTYPE TAPE PUNCH

A	N	E-B	4 OHMS	—	X 1
		E-C	110	—	
		B-C	1K	—	X 10
	P	E-B	∞	✓	X 1
		E-C	∞	—	
		B-C	2.25	—	X 10
B	N	E-B	4	✓	X 1
		E-C	0	✓	
		B-C	100	✓	X 10
	P	E-B	1K	—	X 1
		E-C	0	✓	
		B-C	2.25	—	X 10
C	N	E-B	4	✓	X 1
		E-C	120	✓	
		B-C	1K	✓	X 10
	P	E-B	∞	✓	X 1
		E-C	∞	✓	
		B-C	2.25	✓	X 10
D	N	E-B	4	✓	X 1
		E-C	0	✓	
		B-C	110	✓	X 10
	P	E-B	1K	✓	X 1
		E-C	0	✓	
		B-C	2.25	✓	X 10

OK IN USE

OK IN USE