USBC-3V3

USB-C → 3.3 V LDO power board

3.3V	800mA	48×30
OUTPUT	MAX CURRENT	MM

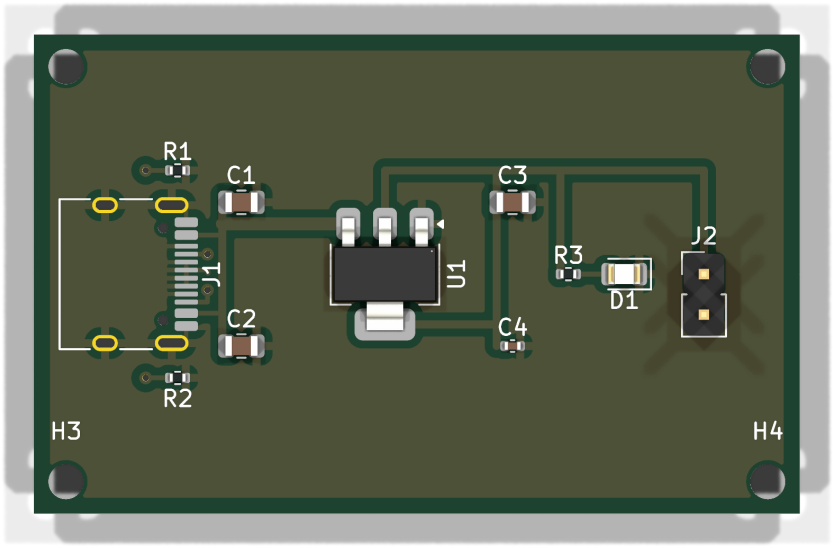

Figure 1. Board top view (3D render).

***This document was generated** by **circuit_toolkit** from a 25-line Python topology description. Any drift between schematic, PCB, and BOM is by construction impossible — they share a single source.*

1.0 SPECIFICATIONS

Electrical and mechanical parameters derived from the circuit topology and PCB layout. Manufacturer-rated values reference the AMS1117 datasheet and USB Type-C specification.

Parameter	Value
Input	USB-C, 5V nominal (4.75–5.25V)
USB advertised role	Sink, 5V/3A (Rd = 5.1kΩ × 2)
Output voltage	3.3V ± 2% (regulated)
Output current (max)	800 mA continuous (datasheet AMS1117)
Dropout voltage	≤ 1.3V at 800mA
Quiescent current	≈ 5 mA (no load)
Power LED	On while regulated output present
Dimensions	48 × 30 mm
Layer count	2 layers, 1.6mm FR-4
Operating temperature	0 to +70 °C (commercial)

Absolute Maximum Ratings

Parameter	Min	Max	Unit
VBUS input	-0.3	6.5	V
+3V3 output (continuous)	—	800	mA
Storage temperature	-65	+150	°C
Operating temperature	0	+70	°C
Junction temperature	—	+125	°C

2.0 SCHEMATIC

Functional schematic in IPC-style hierarchical form. The overview shows every component and net on one sheet; each subsequent page is the detail of one named subcircuit (usbc_power, ldo, led, header, …) — useful for reviewers who want to read the design top-down.

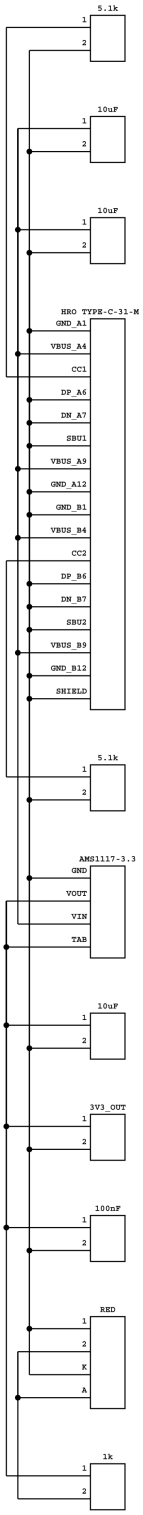

Figure 4. Overview — full flat schematic.

2.1 SCHEMATIC DETAIL — USBC_POWER

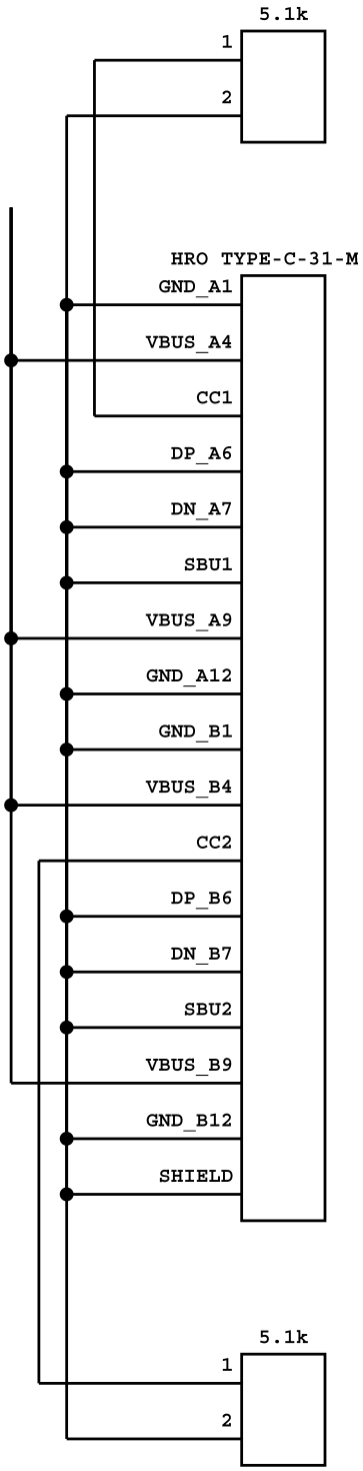

Figure 5. usbc_power subcircuit.

2.2 SCHEMATIC DETAIL — LDO

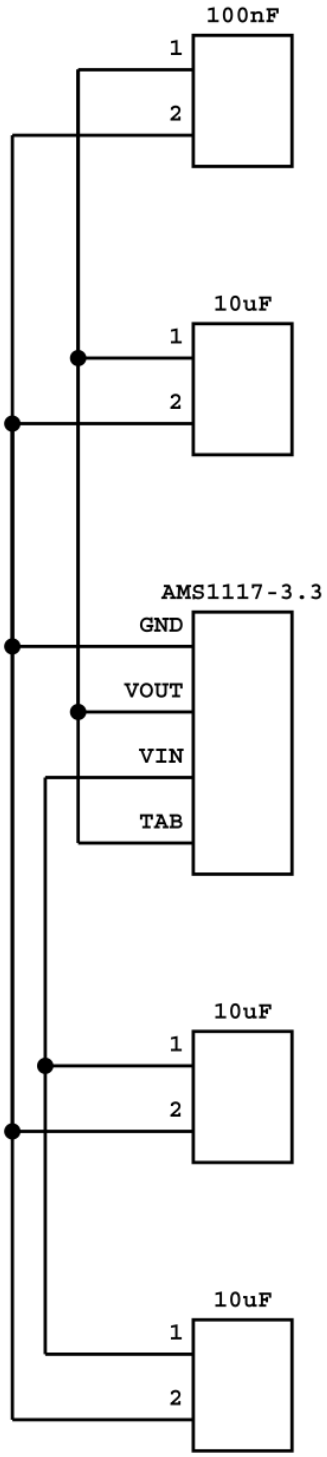

Figure 6. ldo subcircuit.

2.3 SCHEMATIC DETAIL — LED

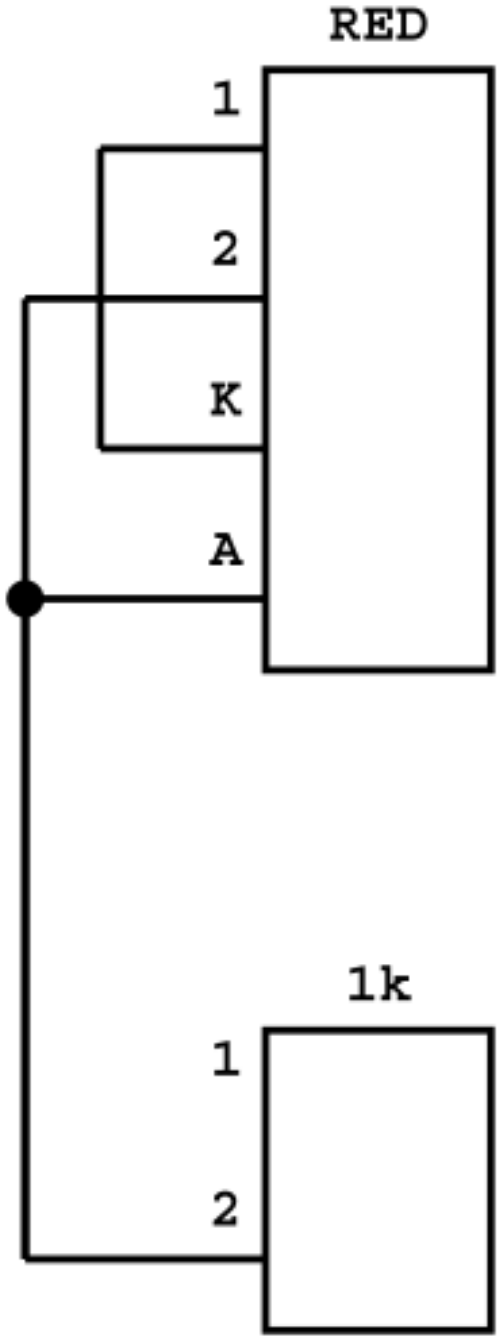

Figure 7. led subcircuit.

2.4 SCHEMATIC DETAIL — HEADER

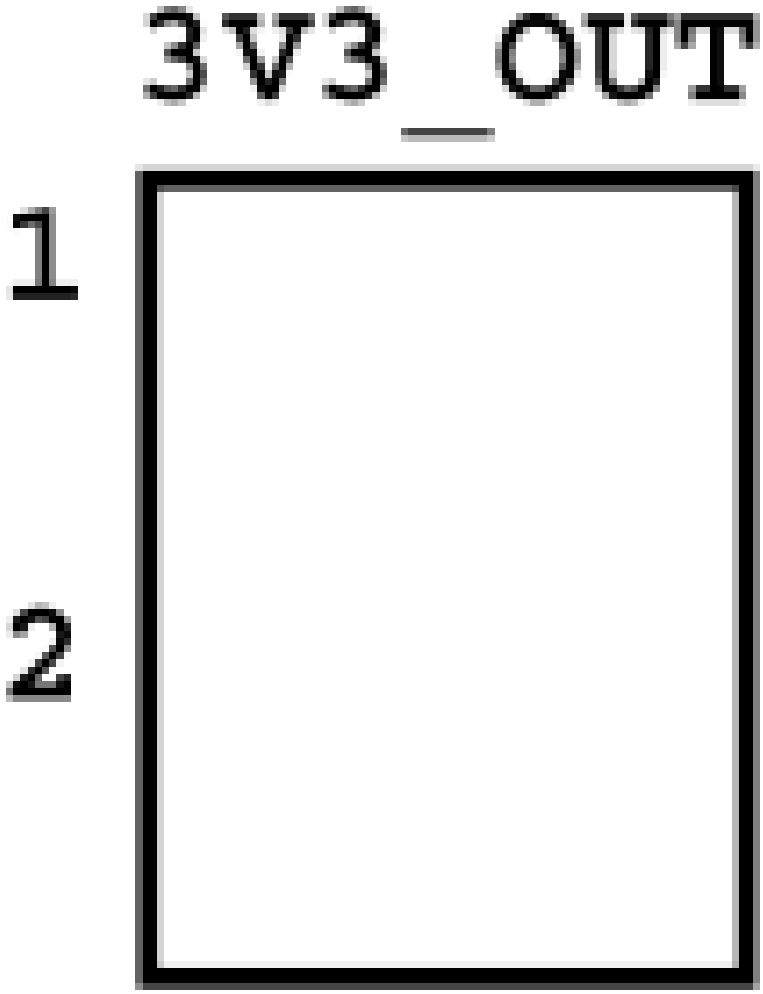

Figure 8. header subcircuit.

2.5 SCHEMATIC DETAIL — MOUNTING

(mounting embed failed: cannot write empty image)

3.0 PCB LAYOUT

Two-layer FR-4, 1.6 mm thickness, 48 × 30 mm. Top copper carries signal and power; bottom copper hosts crossover routes. GND copper pour fills both layers.

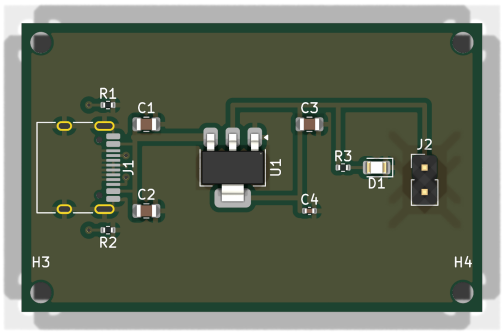

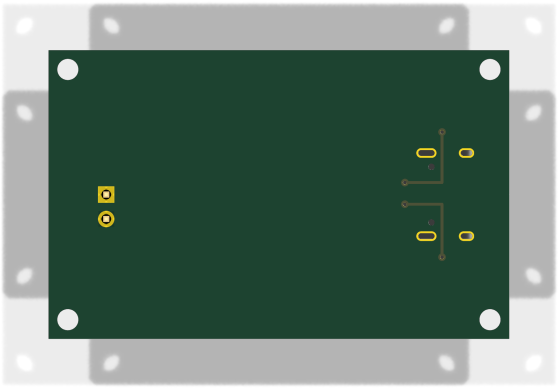

Figure 2. Top view. Figure 3. Bottom view.

3.1 PCB STYLIZED VIEW

Schematic-style 2D rendering generated by pcbdraw — copper tracks, silkscreen, board outline, and pad shapes in vector form. Useful for inspecting routing without the visual noise of the photoreal 3D view.

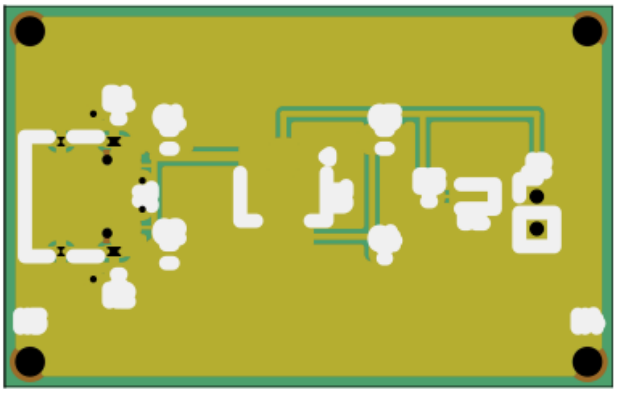

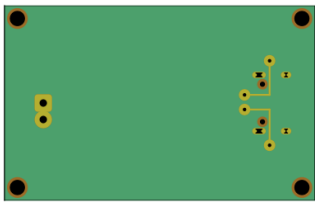

Figure 3a. Front (stylized). Figure 3b. Back (stylized).

4.0 CONNECTOR PIN DESCRIPTIONS

J1 — HRO TYPE-C-31-M-12

Pin	Net	Function
A1	GND	Ground reference
A12	GND	Ground reference
A4	VBUS	USB-C bus power input (5V nominal)
A5	CC1	USB-C Configuration Channel 1 (Rd to GND)
A6	GND	Ground reference
A7	GND	Ground reference
A8	GND	Ground reference
A9	VBUS	USB-C bus power input (5V nominal)
B1	GND	Ground reference
B12	GND	Ground reference
B4	VBUS	USB-C bus power input (5V nominal)
B5	CC2	USB-C Configuration Channel 2 (Rd to GND)
B6	GND	Ground reference
B7	GND	Ground reference
B8	GND	Ground reference
B9	VBUS	USB-C bus power input (5V nominal)
SH	GND	Ground reference

J2 — 3V3_OUT

Pin	Net	Function
1	+3V3	Regulated 3.3V output
2	GND	Ground reference

5.0 BILL OF MATERIALS

All parts are JLCPCB-compatible. Where possible, basic-part LCSC numbers are used to avoid PCBA setup fees.

Designator	Qty	Value	Footprint	LCSC
C1, C2, C3	3	10uF	C_0805_2012Metric	C15850
C4	1	100nF	C_0402_1005Metric	C1525
D1	1	RED	LED_0805_2012Metric	C2286
J1	1	HRO TYPE-C-31-M-12	USB_C_Receptacle_HRO_TYPE-C-31-M-12	C165948
J2	1	3V3_OUT	PinHeader_1x02_P2.54mm_Vertical	C124378
R1, R2	2	5.1k	R_0402_1005Metric	C25905
R3	1	1k	R_0402_1005Metric	C21190
U1	1	AMS1117-3.3	SOT-223-3_TabPin2	C6186

***Total: 11 components** across 8 unique part numbers. Mounting hardware (H1–H4) is excluded from the assembly BOM.*

6.0 BRINGUP PROCEDURE

Board: `usbc-3v3`

Schematic nets: `VBUS` (5V in), `GND`, `+3V3` (LDO out), `CC1`, `CC2`, `N_LED`

Fill in **measured** and **pass/fail** columns during bringup.

1. Visual Inspection (before powering on)

■ **J1 (USB-C)** — seated flush, no solder bridges between SMD signal pads — expected: no bridges — measured: ___ — pass/fail: ___

■ **J1 shield PTH pins (2×)** — fully soldered, not lifted — expected: solid fillet — measured: ___ — pass/fail: ___

■ **U1 (AMS1117-3.3, SOT-223)** — pin 1 (GND) at bottom, large tab (VOUT/pin 2) centred — expected: correct orientation per silkscreen arrow — measured: ___ — pass/fail: ___

■ **U1 tab pad** — soldered to large centre pad, no voids visible — expected: ≥75% coverage — measured: ___ — pass/fail: ___

■ **R1, R2 (5.1kΩ 0402, CC resistors)** — placed left of J1, one above/below centre — expected: no tombstoning — measured: ___ — pass/fail: ___

■ **C1, C2 (10µF 0805, VBUS bypass)** — near J1, correct polarity if electrolytic (these are ceramic — no polarity) — expected: flat, no tilt — measured: ___ — pass/fail: ___

■ **C3 (10µF 0805, 3V3 output bulk)** — right of U1 — expected: no solder bridges — measured: ___ — pass/fail: ___

■ **C4 (100nF 0402, 3V3 output bypass)** — adjacent to C3 — expected: no solder bridges — measured: ___ — pass/fail: ___

■ **R3 (1kΩ 0402, LED current limit)** — between C3 and D1 — expected: no tombstoning — measured: ___ — pass/fail: ___

■ **D1 (LED 0805, red)** — cathode (line on package) toward J2 side — expected: correct orientation per silkscreen — measured: ___ — pass/fail: ___

■ **J2 (2-pin 2.54mm header)** — right edge, pin 1 square pad = +3V3 — expected: pins straight — measured: ___ — pass/fail: ___

■ **H1–H4 (M2 mounting holes)** — four corners, no solder in holes — expected: clear — measured: ___ — pass/fail: ___

■ **GND copper pour** — visible on F.Cu between components — expected: continuous flood — measured: ___ — pass/fail: ___

2. Continuity Checks (DMM in continuity/diode mode, board unpowered)

■ **USB-C shield (J1 NPTH pins) to GND (J2 pin 2)** — expected: 0Ω (continuity beep) — measured: ___ — pass/fail: ___

■ **J1 A1/A12/B1/B12 (GND pins) to J2 pin 2 (GND)** — expected: 0Ω — measured: ___ — pass/fail: ___

■ **J1 A4/B9 (VBUS pins) to C1 pad 1 (VBUS)** — expected: 0Ω — measured: ___ — pass/fail: ___

■ **J1 A5 (CC1) to R1 pin 1** — expected: 0Ω — measured: ___ — pass/fail: ___

■ **J1 B5 (CC2) to R2 pin 1** — expected: 0Ω — measured: ___ — pass/fail: ___

■ **R1 pin 2, R2 pin 2 to GND** — expected: 0Ω — measured: ___ — pass/fail: ___

■ **U1 pin 3 (VIN) to VBUS net** — expected: 0Ω — measured: ___ — pass/fail: ___

■ **U1 pin 1 (GND) to GND** — expected: 0Ω — measured: ___ — pass/fail: ___

■ **U1 pin 2/tab (VOUT) to J2 pin 1 (+3V3)** — expected: 0Ω — measured: ___ — pass/fail: ___

■ **VBUS to GND (short check)** — expected: >10kΩ (no short) — measured: ___ — pass/fail: ___

■ **+3V3 to GND (short check)** — expected: >1kΩ (caps → shows charging, not short) — measured: ___ — pass/fail: ___

3. Smoke Test (current-limited bench supply)

Set supply to **5.0V, current limit 100mA** before connecting.

■ **Connect bench supply + to J1 VBUS / – to GND (or use USB-C cable to a USB power meter)** — expected: no smoke, no burning smell — measured: ___ — pass/fail: ___

■ **Inrush current settles** — expected: current drops to steady-state within 100ms — measured: ___ — pass/fail: ___

■ **Steady-state current at 5V, no load** — expected: 6–10mA (AMS1117 Iq ≈5mA + LED ≈1.3mA) — measured: ___ mA — pass/fail: ___

■ **D1 (red LED) illuminates** — expected: lit, red — measured: ___ — pass/fail: ___

■ **U1 temperature after 60s, no load** — expected: warm but not hot (<50°C) — measured: ___ °C — pass/fail: ___

4. Power Rail Checks (DMM, board powered at 5V)

■ **VBUS rail** — probe C1/C2 pad 1 (+) to GND — expected: 4.75–5.25V — measured: ___ V — pass/fail: ___

■ **+3V3 rail** — probe J2 pin 1 (+) to J2 pin 2 (GND), or C3 pad 1 to GND — expected: 3.235–3.365V (AMS1117 ±2%) — measured: ___ V — pass/fail: ___

■ **CC1** — probe R1 pad 1 to GND — expected: ~0V (pulled to GND via R1=5.1kΩ, USB host sources CC) — measured: ___ V — pass/fail: ___

■ **CC2** — probe R2 pad 1 to GND — expected: ~0V same — measured: ___ V — pass/fail: ___

■ **N_LED (anode of D1 / R3 pad 2)** — expected: +3V3 – Vf_LED ≈ 1.2–1.5V — measured: ___ V — pass/fail: ___

5. Functional Tests

■ ****3V3 line regulation**** — vary input 4.75V→5.25V, measure +3V3 — expected: <±0.1V variation — measured: ___ — pass/fail: ___

■ ****3V3 load test**** — attach 330Ω load across J2 (≈10mA load) — expected: +3V3 stays ≥3.235V — measured: ___ V — pass/fail: ___

■ ****3V3 load test (max)**** — attach 33Ω load across J2 (≈100mA), U1 max 800mA — expected: +3V3 stays ≥3.235V, U1 <70°C — measured: ___ V / ___ °C — pass/fail: ___

■ ****Power dissipation check** at 100mA load** — U1 dissipates (5V–3.3V)×0.1A = 170mW — expected: U1 warm but not burning — measured: ___ — pass/fail: ___

■ ****Ripple**** — scope +3V3 with 100mA load — expected: <50mV pk-pk — measured: ___ mV — pass/fail: ___

■ **J2 output header** — confirm pin 1 = +3V3, pin 2 = GND with DMM — expected: 3.3V between pins — measured: ___ V — pass/fail: ___

Notes

Space for any anomalies found during bringup:

```

Date: _____

Tester: _____

Supply used: _____

Notes:

```