USBC-3V3

USB-C → 3.3V LDO power board

3.3V	800mA	48×30
OUTPUT	MAX CURRENT	MM

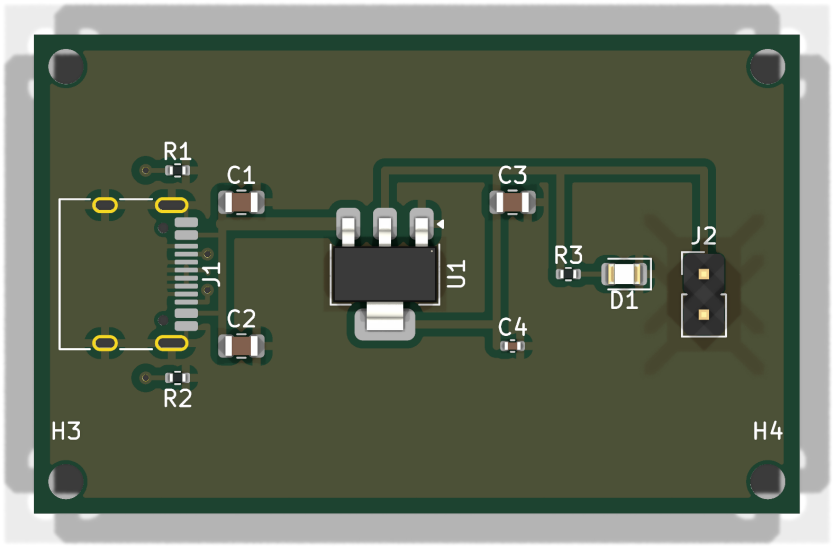

Figure 1. Board top view (3D render).

***This document was generated** by **circuit_toolkit** from a 25-line Python topology description. Any drift between schematic, PCB, and BOM is by construction impossible — they share a single source.*

1.0 SPECIFICATIONS

Electrical and mechanical parameters derived from the circuit topology and PCB layout. Manufacturer-rated values reference the AMS1117 datasheet and USB Type-C specification.

Parameter	Value
Input	USB-C, 5V nominal (4.75–5.25V)
USB advertised role	Sink, 5V/3A (Rd = 5.1kΩ × 2)
Output voltage	3.3V ± 2% (regulated)
Output current (max)	800 mA continuous (datasheet AMS1117)
Dropout voltage	≤ 1.3V at 800mA
Quiescent current	≈ 5 mA (no load)
Power LED	On while regulated output present
Dimensions	48 × 30 mm
Layer count	2 layers, 1.6mm FR-4
Operating temperature	0 to +70 °C (commercial)

Absolute Maximum Ratings

Parameter	Min	Max	Unit
VBUS input	-0.3	6.5	V
+3V3 output (continuous)	—	800	mA
Storage temperature	-65	+150	°C
Operating temperature	0	+70	°C
Junction temperature	—	+125	°C

2.0 SCHEMATIC

Functional schematic auto-generated from the SKiDL netlist. Wires represent named electrical nets; symbol placement is topological rather than physically representative.

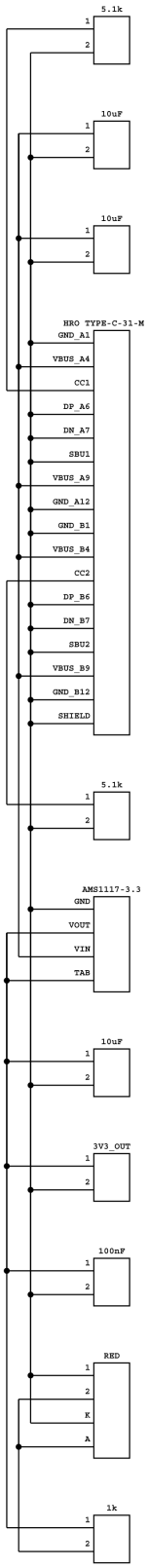

Figure 4. Functional schematic.

3.0 PCB LAYOUT

Two-layer FR-4, 1.6 mm thickness, 48 × 30 mm. Top copper carries signal and power; bottom copper hosts crossover routes. GND copper pour fills both layers.

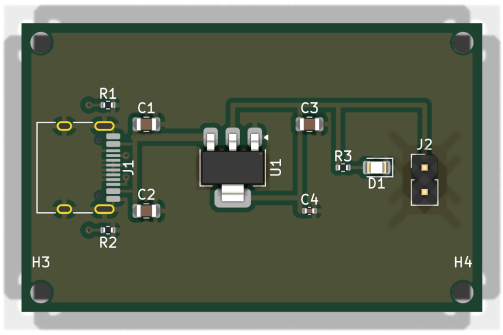

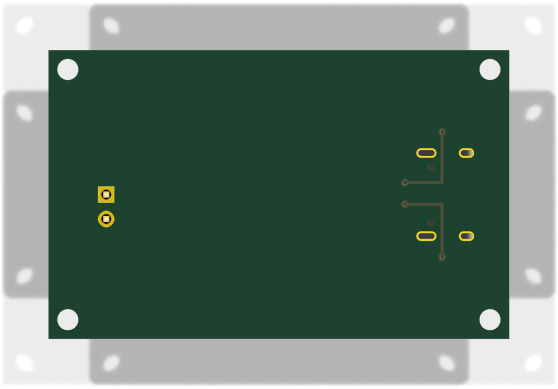

Figure 2. Top view. Figure 3. Bottom view.

4.0 CONNECTOR PIN DESCRIPTIONS

J1 — HRO TYPE-C-31-M-12

Pin	Net	Function
A1	GND	Ground reference
A12	GND	Ground reference
A4	VBUS	USB-C bus power input (5V nominal)
A5	CC1	USB-C Configuration Channel 1 (Rd to GND)
A6	GND	Ground reference
A7	GND	Ground reference
A8	GND	Ground reference
A9	VBUS	USB-C bus power input (5V nominal)
B1	GND	Ground reference
B12	GND	Ground reference
B4	VBUS	USB-C bus power input (5V nominal)
B5	CC2	USB-C Configuration Channel 2 (Rd to GND)
B6	GND	Ground reference
B7	GND	Ground reference
B8	GND	Ground reference
B9	VBUS	USB-C bus power input (5V nominal)
SH	GND	Ground reference

J2 — 3V3_OUT

Pin	Net	Function
1	+3V3	Regulated 3.3V output
2	GND	Ground reference

5.0 BILL OF MATERIALS

All parts are JLCPCB-compatible. Where possible, basic-part LCSC numbers are used to avoid PCBA setup fees.

Designator	Qty	Value	Footprint	LCSC
C1, C2, C3	3	10uF	C_0805_2012Metric	C15850
C4	1	100nF	C_0402_1005Metric	C1525
D1	1	RED	LED_0805_2012Metric	C2286
J1	1	HRO TYPE-C-31-M-12	USB_C_Receptacle_HRO_TYPE-C-31-M-12	C165948
J2	1	3V3_OUT	PinHeader_1x02_P2.54mm_Vertical	C124378
R1, R2	2	5.1k	R_0402_1005Metric	C25905
R3	1	1k	R_0402_1005Metric	C21190
U1	1	AMS1117-3.3	SOT-223-3_TabPin2	C6186

***Total: 11 components** across 8 unique part numbers. Mounting hardware (H1–H4) is excluded from the assembly BOM.*

6.0 BRINGUP PROCEDURE

Board: `usbc-3v3`

Schematic nets: `VBUS` (5V in), `GND`, `+3V3` (LDO out), `CC1`, `CC2`, `N_LED`

Fill in **measured** and **pass/fail** columns during bringup.

1. Visual Inspection (before powering on)

■ **J1 (USB-C)** — seated flush, no solder bridges between SMD signal pads — expected: no bridges — measured: ___ — pass/fail: ___

■ **J1 shield PTH pins (2×)** — fully soldered, not lifted — expected: solid fillet — measured: ___ — pass/fail: ___

■ **U1 (AMS1117-3.3, SOT-223)** — pin 1 (GND) at bottom, large tab (VOUT/pin 2) centred — expected: correct orientation per silkscreen arrow — measured: ___ — pass/fail: ___

■ **U1 tab pad** — soldered to large centre pad, no voids visible — expected: ≥75% coverage — measured: ___ — pass/fail: ___

■ **R1, R2 (5.1kΩ 0402, CC resistors)** — placed left of J1, one above/below centre — expected: no tombstoning — measured: ___ — pass/fail: ___

■ **C1, C2 (10µF 0805, VBUS bypass)** — near J1, correct polarity if electrolytic (these are ceramic — no polarity) — expected: flat, no tilt — measured: ___ — pass/fail: ___

■ **C3 (10µF 0805, 3V3 output bulk)** — right of U1 — expected: no solder bridges — measured: ___ — pass/fail: ___

■ **C4 (100nF 0402, 3V3 output bypass)** — adjacent to C3 — expected: no solder bridges — measured: ___ — pass/fail: ___

■ **R3 (1kΩ 0402, LED current limit)** — between C3 and D1 — expected: no tombstoning — measured: ___ — pass/fail: ___

■ **D1 (LED 0805, red)** — cathode (line on package) toward J2 side — expected: correct orientation per silkscreen — measured: ___ — pass/fail: ___

■ **J2 (2-pin 2.54mm header)** — right edge, pin 1 square pad = +3V3 — expected: pins straight — measured: ___ — pass/fail: ___

■ **H1–H4 (M2 mounting holes)** — four corners, no solder in holes — expected: clear — measured: ___ — pass/fail: ___

■ **GND copper pour** — visible on F.Cu between components — expected: continuous flood — measured: ___ — pass/fail: ___

2. Continuity Checks (DMM in continuity/diode mode, board unpowered)

■ **USB-C shield (J1 NPTH pins) to GND (J2 pin 2)** — expected: 0Ω (continuity beep) — measured: ___ — pass/fail: ___

■ **J1 A1/A12/B1/B12 (GND pins) to J2 pin 2 (GND)** — expected: 0Ω — measured: ___ — pass/fail: ___

■ **J1 A4/B9 (VBUS pins) to C1 pad 1 (VBUS)** — expected: 0Ω — measured: ___ — pass/fail: ___

■ **J1 A5 (CC1) to R1 pin 1** — expected: 0Ω — measured: ___ — pass/fail: ___

■ **J1 B5 (CC2) to R2 pin 1** — expected: 0Ω — measured: ___ — pass/fail: ___

■ **R1 pin 2, R2 pin 2 to GND** — expected: 0Ω — measured: ___ — pass/fail: ___

■ **U1 pin 3 (VIN) to VBUS net** — expected: 0Ω — measured: ___ — pass/fail: ___

■ **U1 pin 1 (GND) to GND** — expected: 0Ω — measured: ___ — pass/fail: ___

■ **U1 pin 2/tab (VOUT) to J2 pin 1 (+3V3)** — expected: 0Ω — measured: ___ — pass/fail: ___

■ **VBUS to GND (short check)** — expected: >10kΩ (no short) — measured: ___ — pass/fail: ___

■ **+3V3 to GND (short check)** — expected: >1kΩ (caps → shows charging, not short) — measured: ___ — pass/fail: ___

3. Smoke Test (current-limited bench supply)

Set supply to **5.0V, current limit 100mA** before connecting.

■ **Connect bench supply + to J1 VBUS / – to GND (or use USB-C cable to a USB power meter)** — expected: no smoke, no burning smell — measured: ___ — pass/fail: ___

■ **Inrush current settles** — expected: current drops to steady-state within 100ms — measured: ___ — pass/fail: ___

■ **Steady-state current at 5V, no load** — expected: 6–10mA (AMS1117 Iq ≈5mA + LED ≈1.3mA) — measured: ___ mA — pass/fail: ___

■ **D1 (red LED) illuminates** — expected: lit, red — measured: ___ — pass/fail: ___

■ **U1 temperature after 60s, no load** — expected: warm but not hot (<50°C) — measured: ___ °C — pass/fail: ___

4. Power Rail Checks (DMM, board powered at 5V)

■ **VBUS rail** — probe C1/C2 pad 1 (+) to GND — expected: 4.75–5.25V — measured: ___ V — pass/fail: ___

■ **+3V3 rail** — probe J2 pin 1 (+) to J2 pin 2 (GND), or C3 pad 1 to GND — expected: 3.235–3.365V (AMS1117 ±2%) — measured: ___ V — pass/fail: ___

■ **CC1** — probe R1 pad 1 to GND — expected: ~0V (pulled to GND via R1=5.1kΩ, USB host sources CC) — measured: ___ V — pass/fail: ___

■ **CC2** — probe R2 pad 1 to GND — expected: ~0V same — measured: ___ V — pass/fail: ___

■ **N_LED (anode of D1 / R3 pad 2)** — expected: +3V3 – Vf_LED ≈ 1.2–1.5V — measured: ___ V — pass/fail: ___

5. Functional Tests

■ ****3V3 line regulation**** — vary input 4.75V→5.25V, measure +3V3 — expected: <±0.1V variation — measured: ___ — pass/fail: ___

■ ****3V3 load test**** — attach 330Ω load across J2 (≈10mA load) — expected: +3V3 stays ≥3.235V — measured: ___ V — pass/fail: ___

■ ****3V3 load test (max)**** — attach 33Ω load across J2 (≈100mA), U1 max 800mA — expected: +3V3 stays ≥3.235V, U1 <70°C — measured: ___ V / ___ °C — pass/fail: ___

■ ****Power dissipation check** at 100mA load** — U1 dissipates (5V–3.3V)×0.1A = 170mW — expected: U1 warm but not burning — measured: ___ — pass/fail: ___

■ ****Ripple**** — scope +3V3 with 100mA load — expected: <50mV pk-pk — measured: ___ mV — pass/fail: ___

■ **J2 output header** — confirm pin 1 = +3V3, pin 2 = GND with DMM — expected: 3.3V between pins — measured: ___ V — pass/fail: ___

Notes

Space for any anomalies found during bringup:

```

Date: _____

Tester: _____

Supply used: _____

Notes:

```