# USBC-DUAL-RAIL

USB-C dual-rail power — 5V passthrough + 3.3V LDO

| 3.3V | 800mA | 50×30 |
|---|---|---|
| OUTPUT | MAX CURRENT | MM |

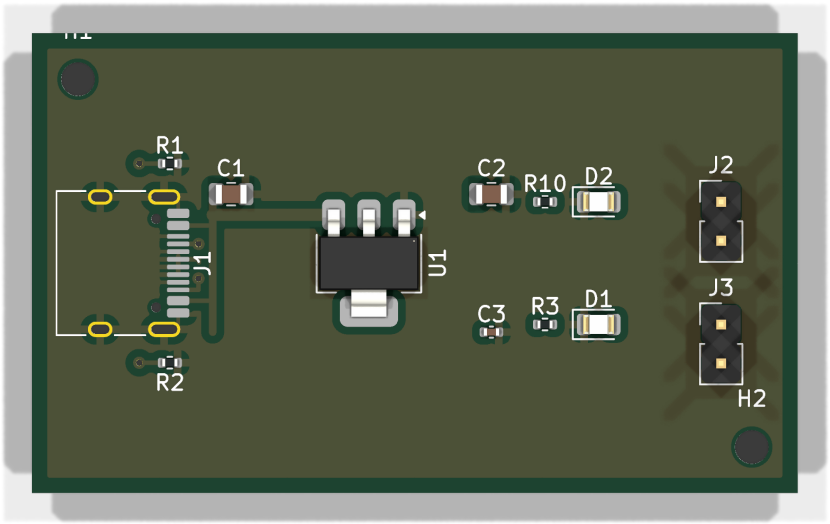


*Figure 1. Board top view (3D render).*

***This document was generated** by **circuit_toolkit** from a 25-line Python topology description. Any drift between schematic, PCB, and BOM is by construction impossible — they share a single source.*

# 1.0 SPECIFICATIONS

Electrical and mechanical parameters derived from the circuit topology and PCB layout. Manufacturer-rated values reference the AMS1117 datasheet and USB Type-C specification.

| Parameter | Value |
|---|---|
| Input | USB-C, 5V nominal (4.75–5.25V) |
| USB advertised role | Sink, 5V/3A (Rd = 5.1kΩ × 2) |
| Output voltage | 3.3V ± 2% (regulated) |
| Output current (max) | 800 mA continuous (datasheet AMS1117) |
| Dropout voltage | ≤ 1.3V at 800mA |
| Quiescent current | ≈ 5 mA (no load) |
| Power LED | On while regulated output present |
| Dimensions | 50 × 30 mm |
| Layer count | 2 layers, 1.6mm FR-4 |
| Operating temperature | 0 to +70 °C (commercial) |

## Absolute Maximum Ratings

| Parameter | Min | Max | Unit |
|---|---|---|---|
| VBUS input | -0.3 | 6.5 | V |
| +3V3 output (continuous) | — | 800 | mA |
| Storage temperature | -65 | +150 | °C |
| Operating temperature | 0 | +70 | °C |
| Junction temperature | — | +125 | °C |

## 2.0 SCHEMATIC

Functional schematic in IPC-style hierarchical form. The overview shows every component and net on one sheet; each subsequent page is the detail of one named subcircuit (usbc_power, ldo, led, header, …) — useful for reviewers who want to read the design top-down.

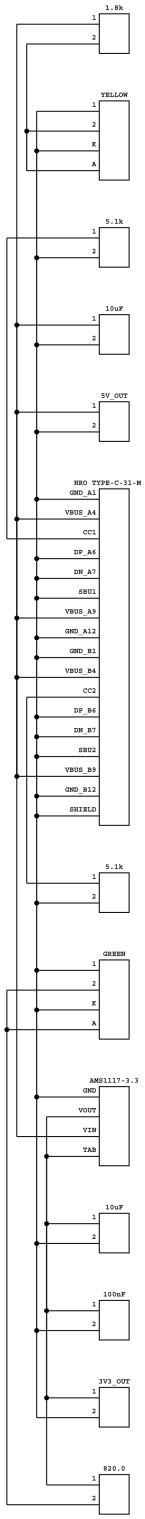


*Figure 4. Overview — full flat schematic.*

## 2.1 SCHEMATIC DETAIL — USBC_POWER

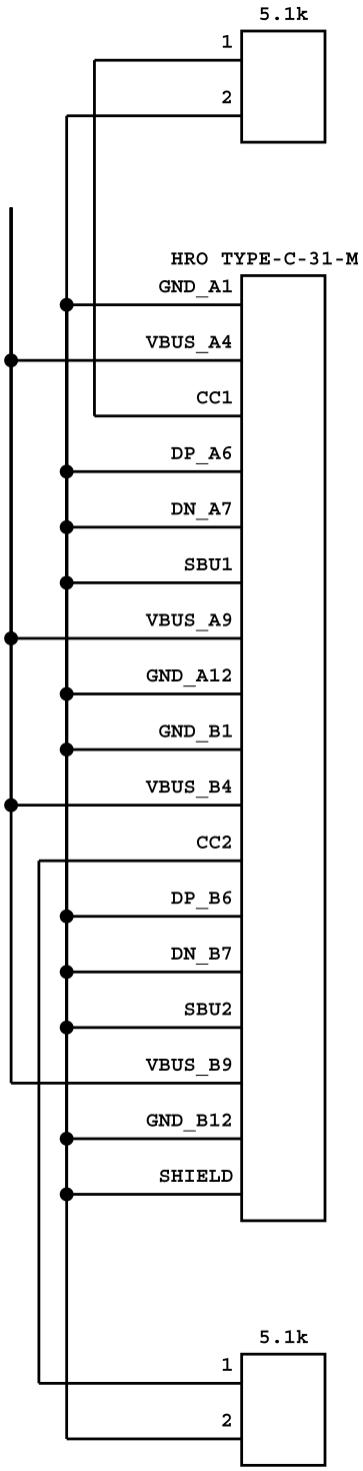


*Figure 5. usbc_power subcircuit.*

## 2.2 SCHEMATIC DETAIL — LDO

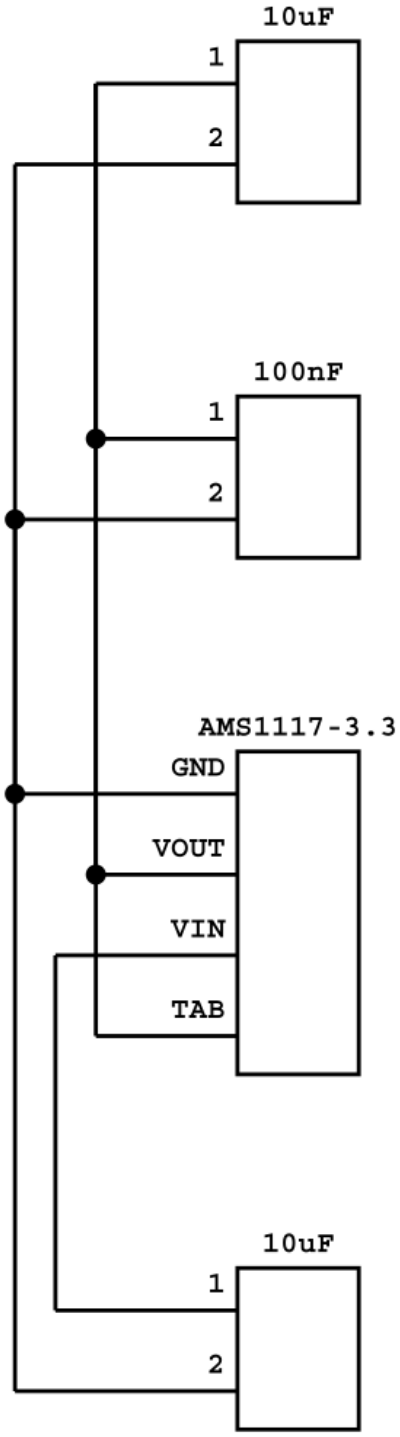


*Figure 6. ldo subcircuit.*

## 2.3 SCHEMATIC DETAIL — LED

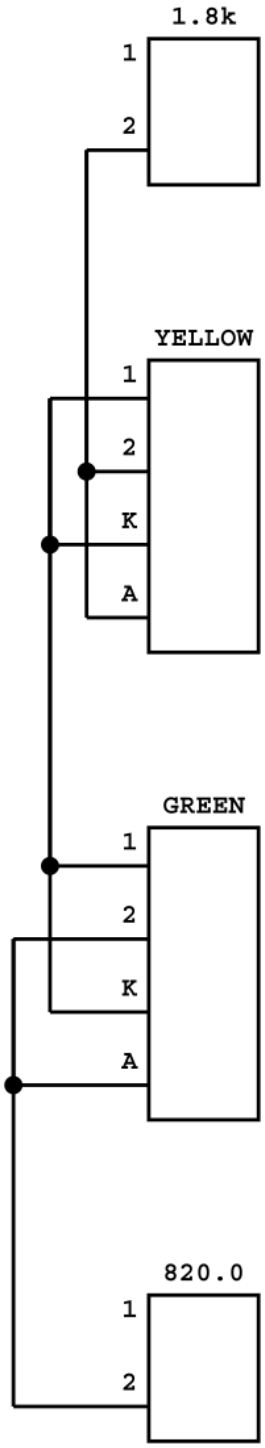


*Figure 7. led subcircuit.*

## 2.4 SCHEMATIC DETAIL — HEADER

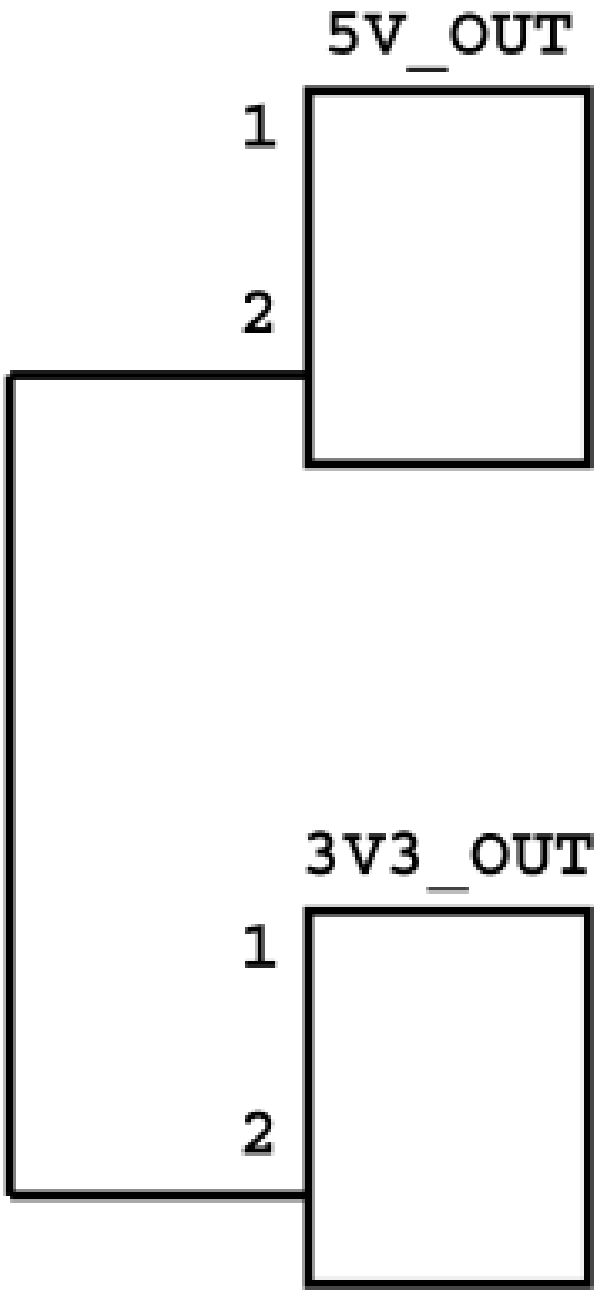


*Figure 8. header subcircuit.*

## 2.5 SCHEMATIC DETAIL — MOUNTING

*(mounting embed failed: cannot write empty image)*

## 3.0 PCB LAYOUT

Two-layer FR-4, 1.6 mm thickness, 50 × 30 mm. Top copper carries signal and power; bottom copper hosts crossover routes. GND copper pour fills both layers.

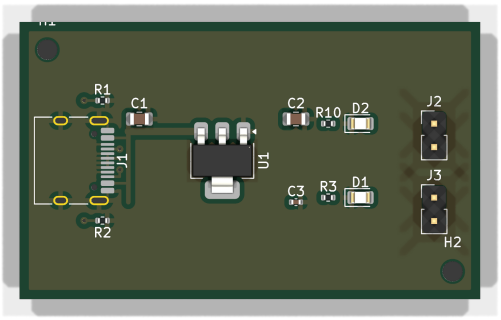


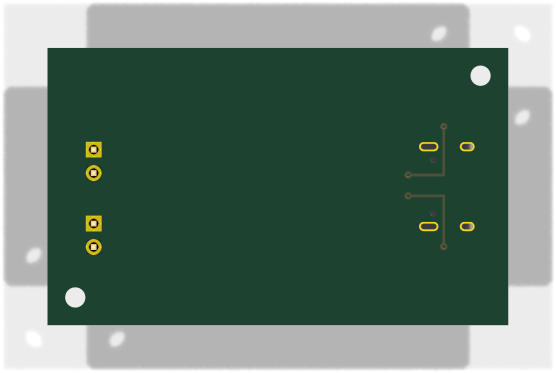

*Figure 2. Top view. Figure 3. Bottom view.*

## 3.1 PCB STYLIZED VIEW

Schematic-style 2D rendering generated by pcbdraw — copper tracks, silkscreen, board outline, and pad shapes in vector form. Useful for inspecting routing without the visual noise of the photoreal 3D view.

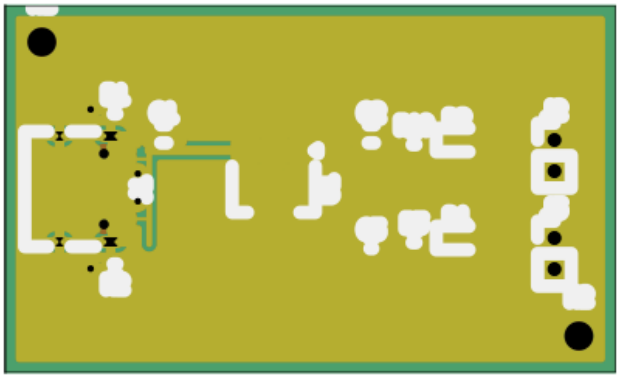

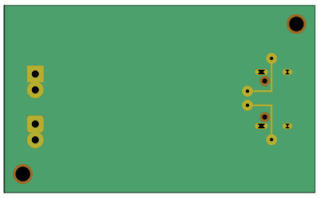

*Figure 3a. Front (stylized). Figure 3b. Back (stylized).*

# 4.0 CONNECTOR PIN DESCRIPTIONS

## J1 — HRO TYPE-C-31-M-12

| Pin | Net | Function |
|---|---|---|
| A1 | GND | Ground reference |
| A12 | GND | Ground reference |
| A4 | VBUS | USB-C bus power input (5V nominal) |
| A5 | CC1 | USB-C Configuration Channel 1 (Rd to GND) |
| A6 | GND | Ground reference |
| A7 | GND | Ground reference |
| A8 | GND | Ground reference |
| A9 | VBUS | USB-C bus power input (5V nominal) |
| B1 | GND | Ground reference |
| B12 | GND | Ground reference |
| B4 | VBUS | USB-C bus power input (5V nominal) |
| B5 | CC2 | USB-C Configuration Channel 2 (Rd to GND) |
| B6 | GND | Ground reference |
| B7 | GND | Ground reference |
| B8 | GND | Ground reference |
| B9 | VBUS | USB-C bus power input (5V nominal) |
| SH | GND | Ground reference |

## J2 — 5V_OUT

| Pin | Net | Function |
|---|---|---|
| 1 | VBUS | USB-C bus power input (5V nominal) |
| 2 | GND | Ground reference |

## J3 — 3V3_OUT

| Pin | Net | Function |
|---|---|---|
| 1 | +3V3 | Regulated 3.3V output |
| 2 | GND | Ground reference |

# 5.0 BILL OF MATERIALS

All parts are JLCPCB-compatible. Where possible, basic-part LCSC numbers are used to avoid PCBA setup fees.

| Designator | Qty | Value | Footprint | LCSC |
|---|---|---|---|---|
| C1, C2 | 2 | 10uF | C_0805_2012Metric | C15850 |
| C3 | 1 | 100nF | C_0402_1005Metric | C1525 |
| D1 | 1 | GREEN | LED_0805_2012Metric | C72043 |
| D2 | 1 | YELLOW | LED_0805_2012Metric | C72038 |
| J1 | 1 | HRO TYPE-C-31-M-12 | USB_C_Receptacle_HRO_TYPE-C-31-M-12 | C165948 |
| J2 | 1 | 5V_OUT | PinHeader_1x02_P2.54mm_Vertical | C124378 |
| J3 | 1 | 3V3_OUT | PinHeader_1x02_P2.54mm_Vertical | C124378 |
| R1, R2 | 2 | 5.1k | R_0402_1005Metric | C25905 |
| R10 | 1 | 1.8k | R_0402_1005Metric | — |
| R3 | 1 | 820.0 | R_0402_1005Metric | — |
| U1 | 1 | AMS1117-3.3 | SOT-223-3_TabPin2 | C6186 |

***Total: 13 components** across 11 unique part numbers. Mounting hardware (H1–H4) is excluded from the assembly BOM.*

# 6.0 BRINGUP PROCEDURE

(Bringup procedure not available — see bringup.md in source repo.)

# 7.0 SIMULATION RESULTS

Pre-fabrication SPICE simulation results. Each plot was generated by ngspice from the same netlist that produced the PCB — circuit and simulation share a single Python source.

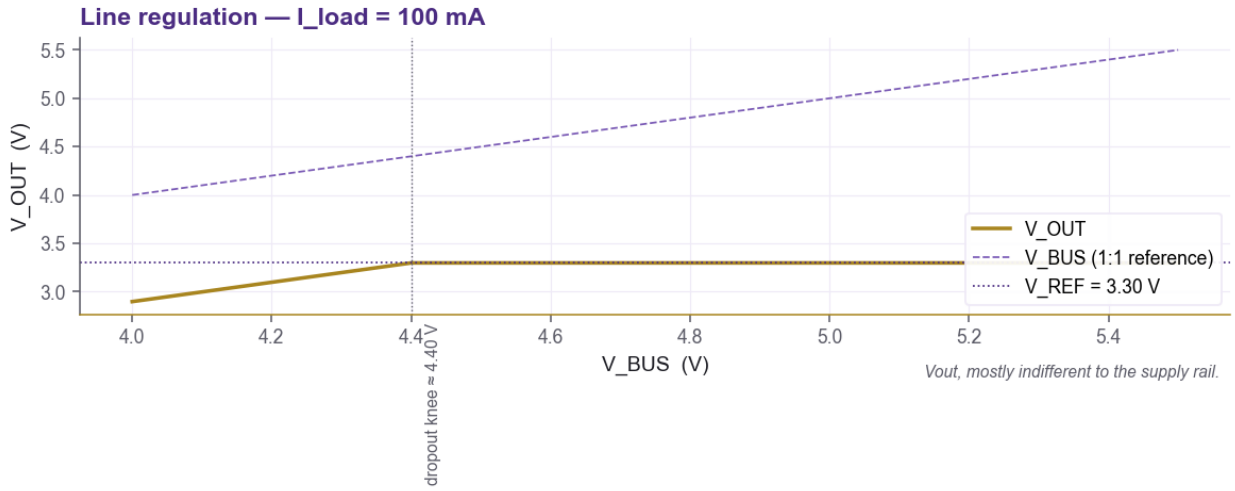


*Figure 1. Line Reg.*

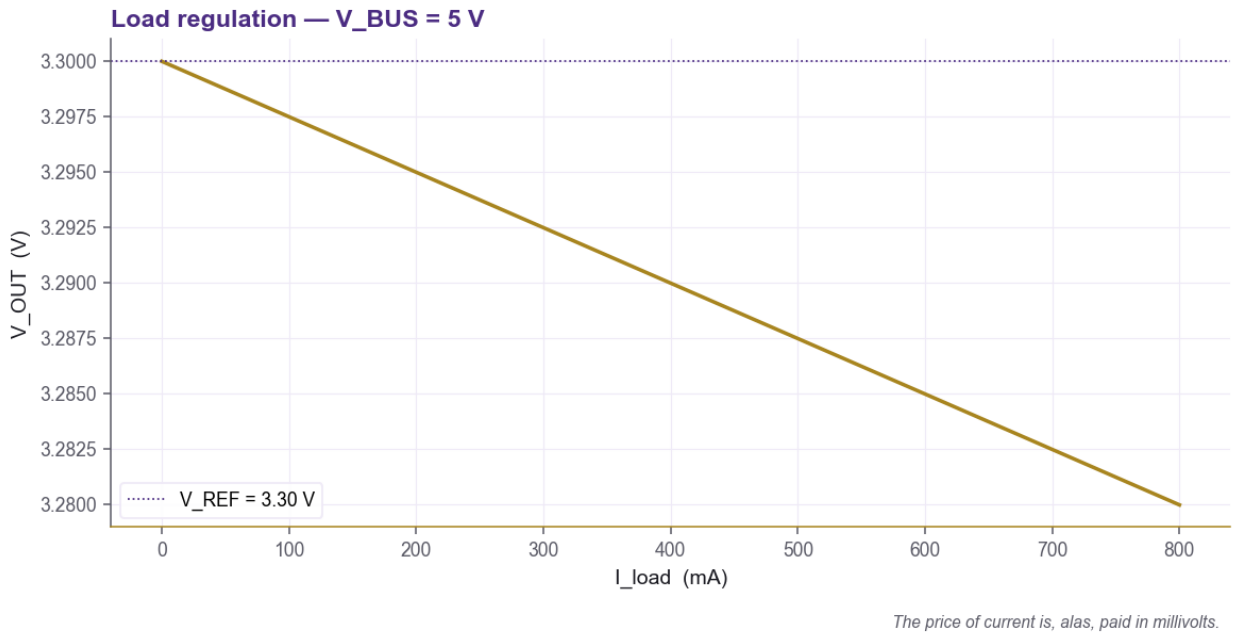


*Figure 2. Load Reg.*

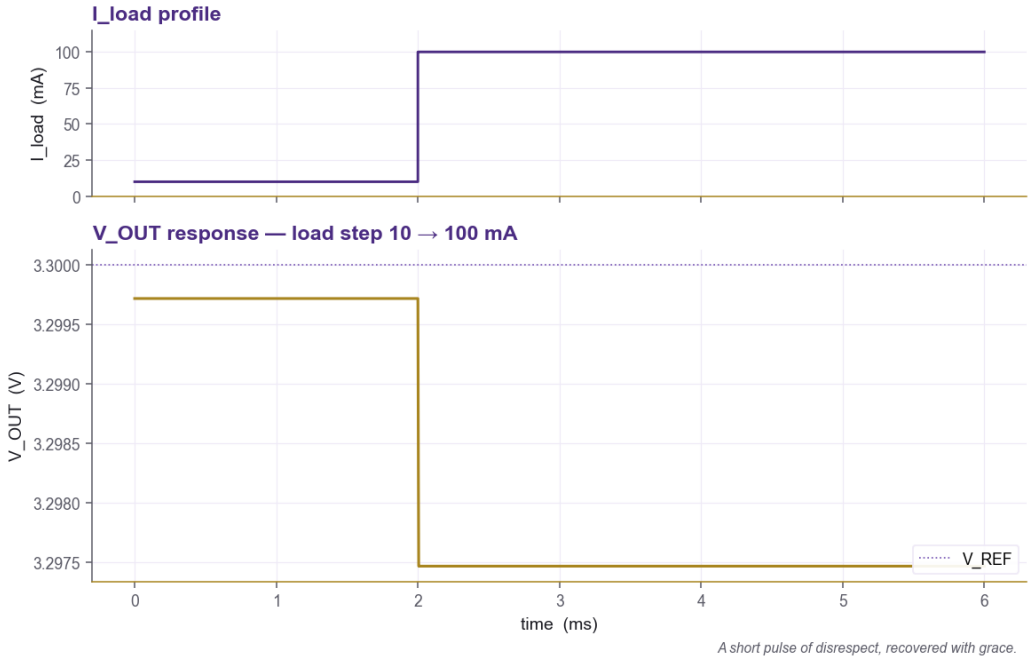


*Figure 3. Load Step.*

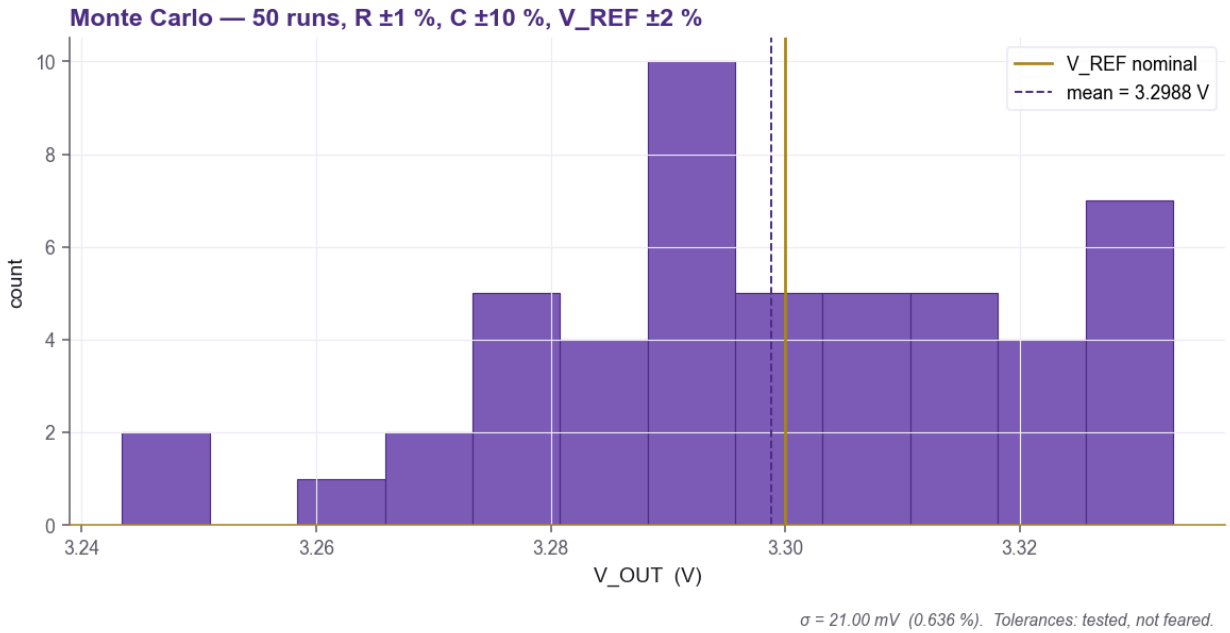


*Figure 4. Monte Carlo.*

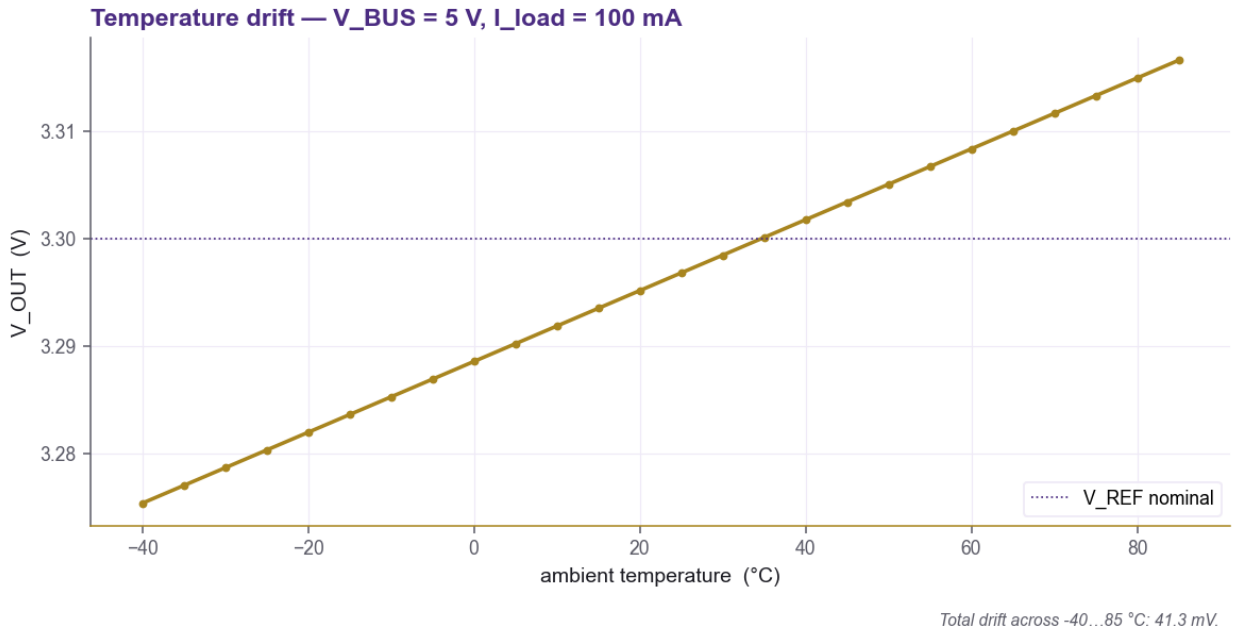


*Figure 5. Temp Sweep.*

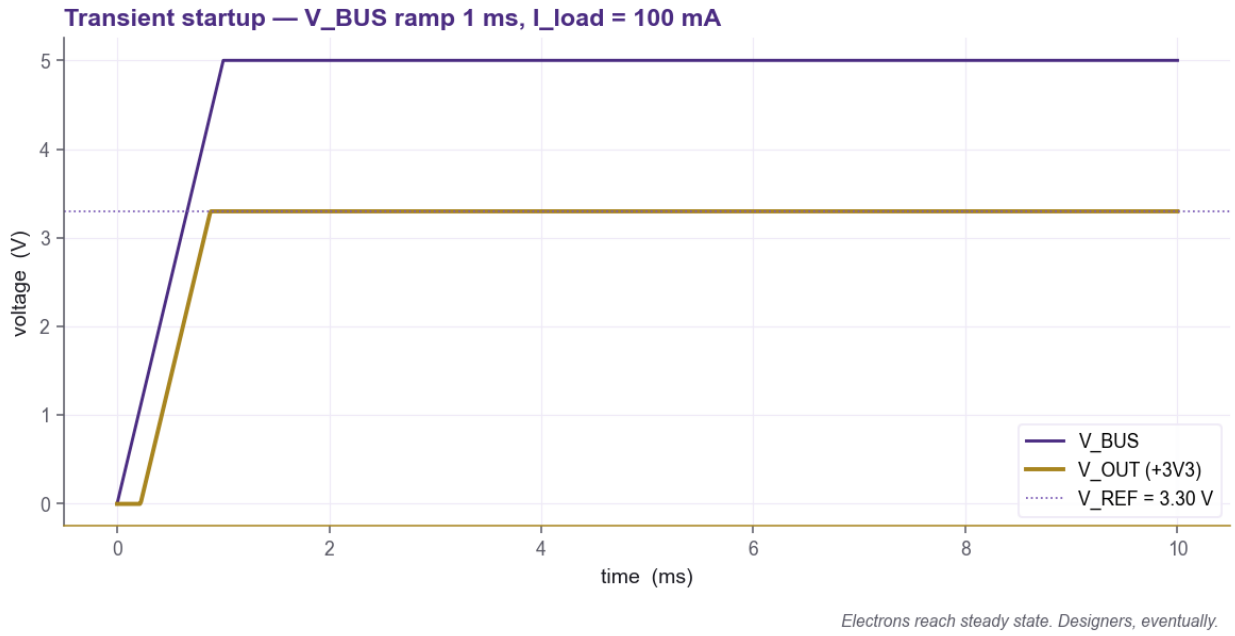


*Figure 6. Transient.*