P.O. BOX 1113 CASPER, WYOMING 82602

L15 C8 3-3/16 C87 .1

D24-31 DATA 24 25 26 27 28 29 30 31

A1-6 ADDRESS 1 2 4 5 6

IPL2 RST

D1 C138 3-3/16

UE9 AM85

RxDA RxDB TRxCA TRxCB INTACK DCDA DCDB EOD TXDA RTSA RTSB TxDB

A-DTR/REQ-B A-W/REQ-B RD

L10 C75 .01 R34 470Ω R55 470Ω

L12 C79 .01 C80 X2

R54 470Ω

UH9 26LS32

UG10 26LS30

UG9 26LS30

L13 C78 C81 .01 X2

R90 100K

R57 470Ω

RC2 RC1

C151 C148 C149 C147 C150 C146 C143 C145 C142 C141 C144 C140

J-12 PRINTER J-7 MODEM

BURN-

PIN VIEW J7 J12

COPYRIGHT © 1992 by BOMARC SERVICES

UNIT DRAWN PROVIDED COURTESY OF "ON-TIME MacSERVICE

APPLE	"MacINTOSH LC II	LOGIC BOARD 820-0327-A	11/13/92-
POWER DISTRIBUTION / PRINTER, MODEM, HARD DRIVE (S.C.S.I.)		sheet 1 of 5	

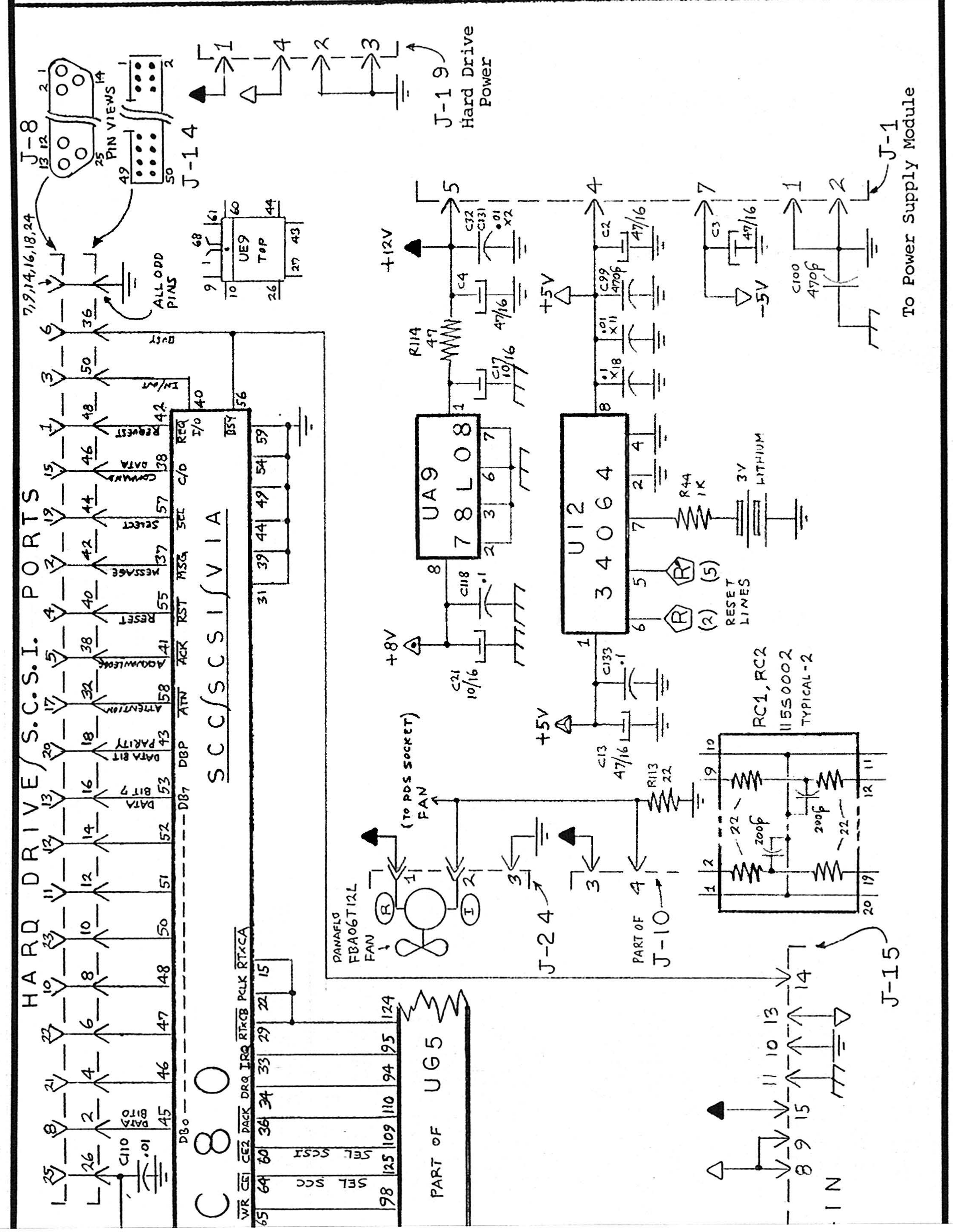

P.O. BOX 1113 CASPER, WYOMING 82602

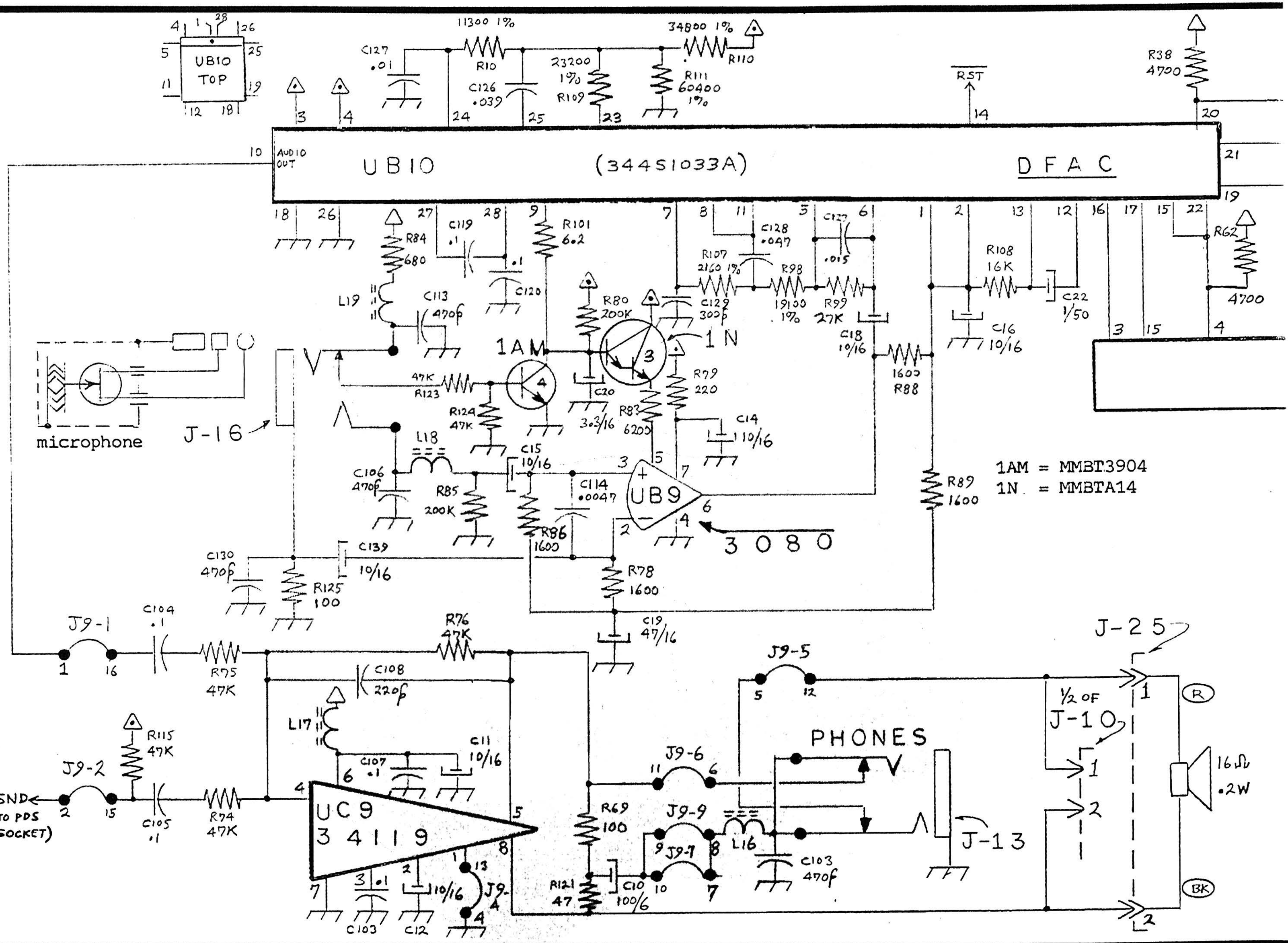

COPYRIGHT © 1992 by BOMARC SERVICES

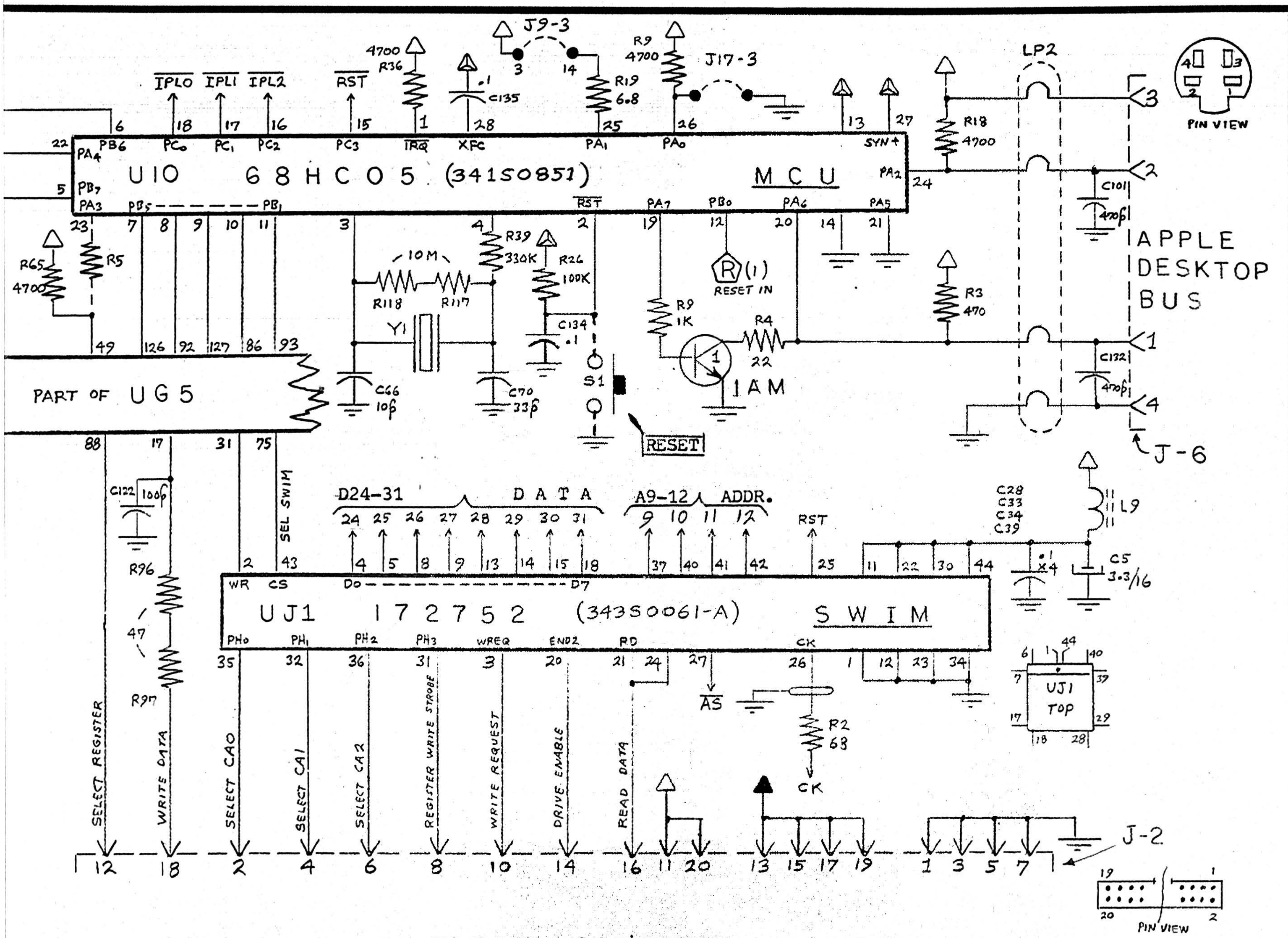

AUDIO / FLOPPY DISC DRIVE SECTIONS / A.D.B. / R.T.C.

APPLE "MacINTOSH LC II LOGIC BOARD 820-0327-A

sheet 2 of 5

11/10/92-

COPYRIGHT © 1992 by BOMARC SERVICES
P.O. BOX 1113 CASPER, WYOMING 82602

PROCESSOR DIRECT SOCKET

L1 .1µH

C9 .1 X2
C93
C16 .01 X2
C111
C94 300pF
C97 10/10

DSACK0 DSACK1 FC0 FC1 FC2 RMC BG BGACK BR RST IPL0 IPL1 IPL2

R103 1K
R105 1K
R64 4700
R91 4700
R63 1K
R60 4700
R102 4700
R94 4700
R82 1K
R58 4700

4 8 18 30 49 63 72 85 105 115 116 128 3 132 12 10 9 13 16 17 20 64 65 70 69 68 71

AMUDS

CDIS

U1 XC6800

AVEC

7 120 119 75 76 78 79 80 81 82 83 86 87 88 89 91 92 93 94 96 97 98 99 101 102 103 104 106 107 108 109 111 112 113 114

SIZ0 SIZ1 DATA D0 1 2 3 4 5 6 7 8 9 10 11 12 13 14 15 16 17 18 19 20 21 22 23 24 25 26 27 28 29 30 D31

10 16 17 18 26 27 43 52 53 61 3 2 1 68 67 66 65 64 62 60 59 58 57 56 55 54 50 49 48 47 46 45 44 42 40 39 38 37 36 35 34 33

SIZE A0

U3 MC68882 FPU

CK 11

SENSE

4 5 6 7 8 9 12 14 19 30 41 51 62 13 20 21 22 23 24 25 28 29 31 32

CS

RST DS AS A4 A3 A2 A1 R/W DSACK0 DSACK1

SEL FPU

1 2 3 4 5 6 7 8 9 10 11 12 13 14 15 16 17 18 19 20 21 22 23 24 25 26 27 28 29 30 31 32

A

SND (SHEET-2) AS DSACK1 HALT FC0 RMC D31 D28 D25 D22 D19 D16 D13 D10 BGACK A1 A26 A23 A20 IPL0 D2 D1 A4 A6 A11 A9 A16 A18 FAN (SHEET1)

SLOTIRQ

A

J-20

B

R/W SIZ1 D30 D27 D24 D21 D18 D15 D12 D9 BR A31 A25 A22 IPL2 D3 D5 D0 A2 A12 A13 A8 A15 A17 Ø

B

CLOCK - 16 MCS

C

SEL FPU

BERR SIZ0 RST D29 D26 D23 D20 D17 D14 D11 D8 A0 A27 A24 A21 IPL1 D4 D6 D7 A3 A5 A7 A10 A14 A19 FC3

C

DS DSACK0 FC1 BG

32 31 21 ROW A ROW B ROW C

PIN VIEW

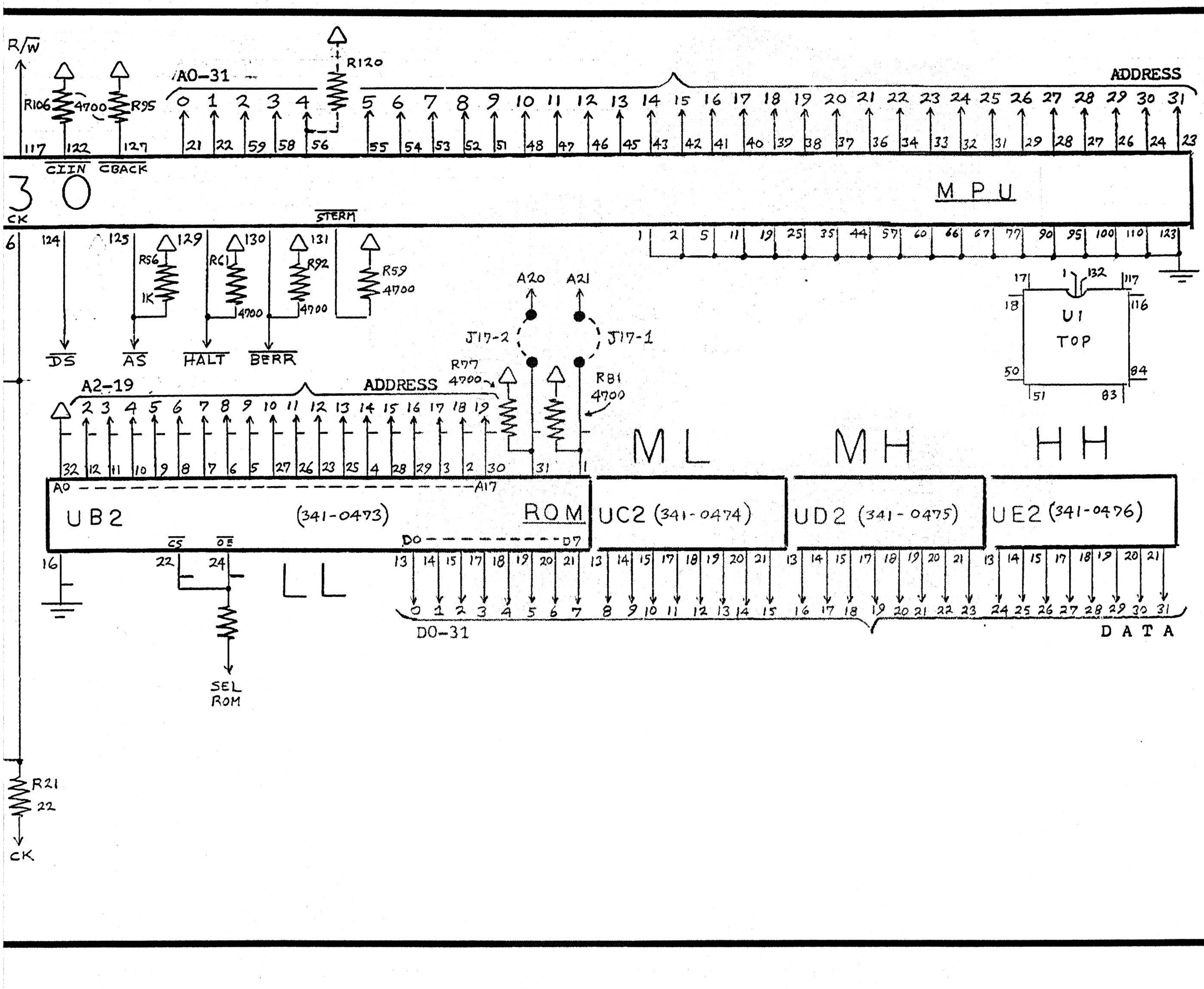

M.P.U. / OPTIONAL F.P.U. / R.O.M. MEMORY

APPLE "MacINTOSH LC II LOGIC BOARD 820-0327-A

sheet 3 of 5

11/10/92-

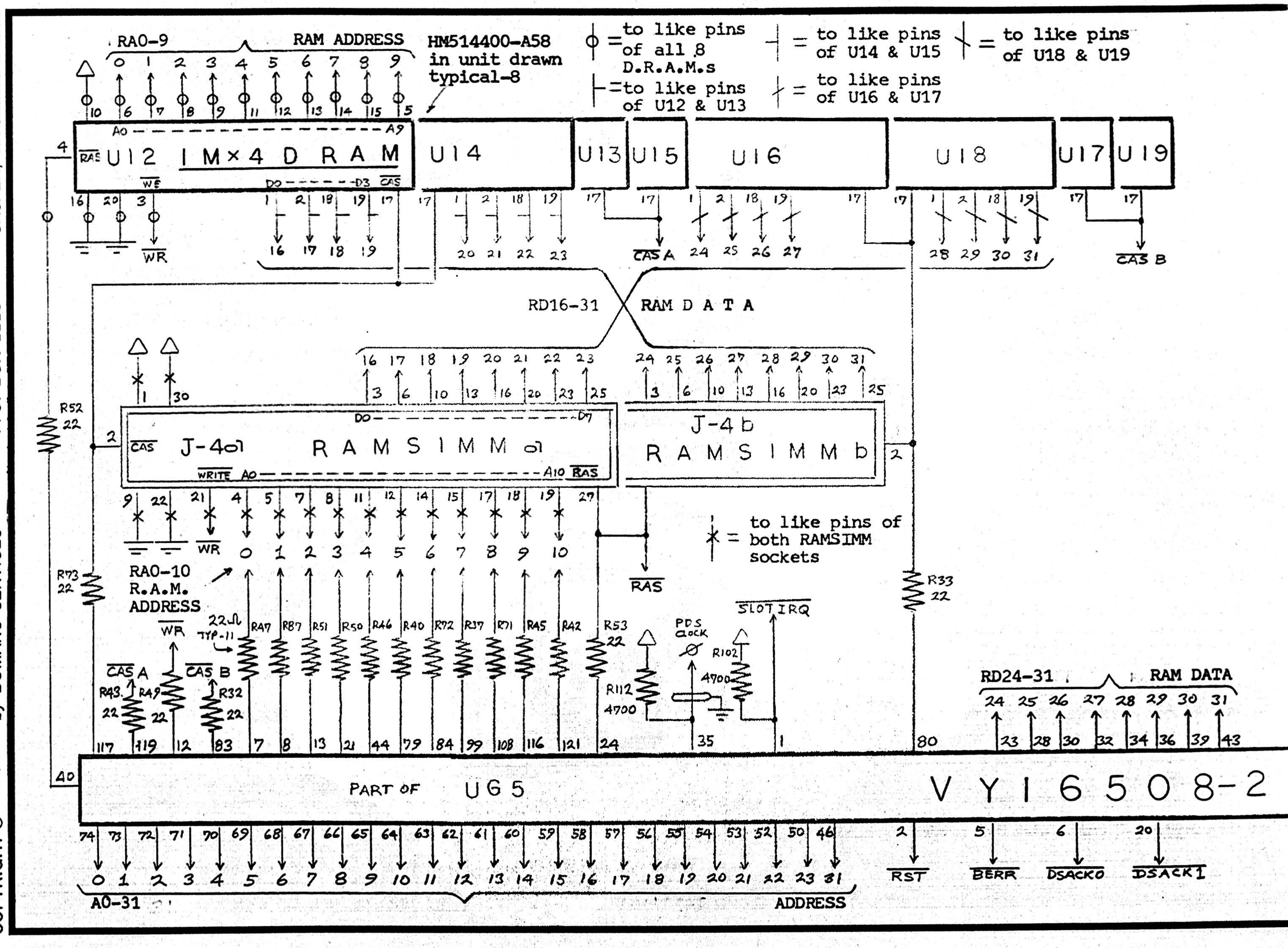

COPYRIGHT © 1992 by BOMARC SERVICES P.O. BOX 1113 CASPER, WYOMING 82602

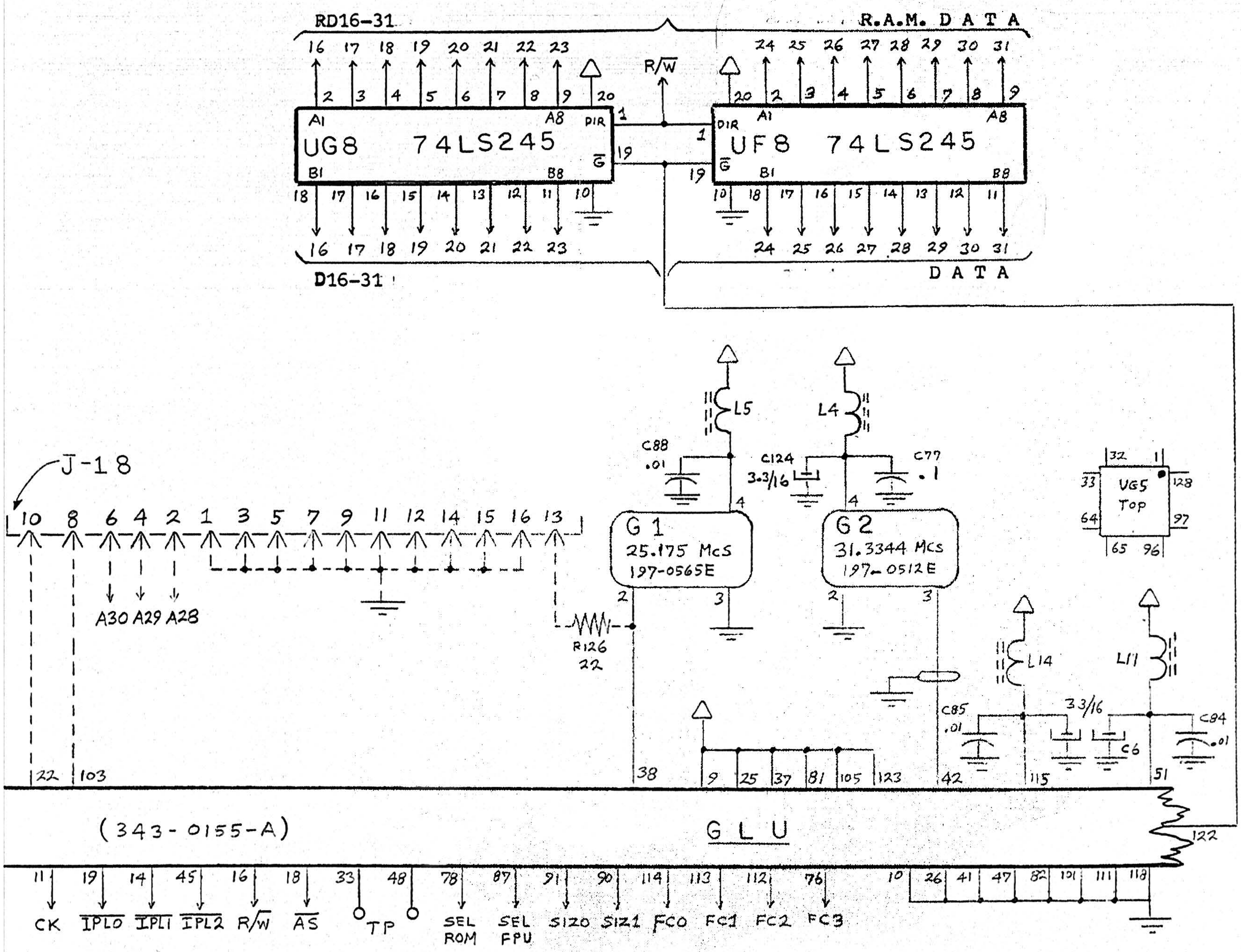

R. A. M. MEMORY SECTION

APPLE "MacINTOSH" LC II LOGIC BOARD 820-0327-A

sheet 4 of 5

11/17/92-

P.O. BOX 1113 CASPER, WYOMING 82602

MONITOR PORT

ID1 ID2 ID3 V. SYNC H. SYNC RED GREEN BLUE

J-3 PIN VIEW

J-5 PIN VIEW

PART OF UG5

UJ10 AH7916-A6 (344S1045-B) CLUTDAC

D24-31 DATA

R/W A0 A1

IOR IOG IOB

CK

J-21 VRAMSIMM VIDEO D.R.A.M.

RD16-31 RAM DATA RA0-8 RAM ADDRESS

WR CASB CASA RAS

RESET PULSE

UJ10 TOP

VIDEO PROCESSING SECTION

APPLE "MacINTOSH" LC II LOGIC BOARD 820-0327-A

sheet 5 of 5

11/11/92-

COPYRIGHT © 1992 by BOMARC SERVICES