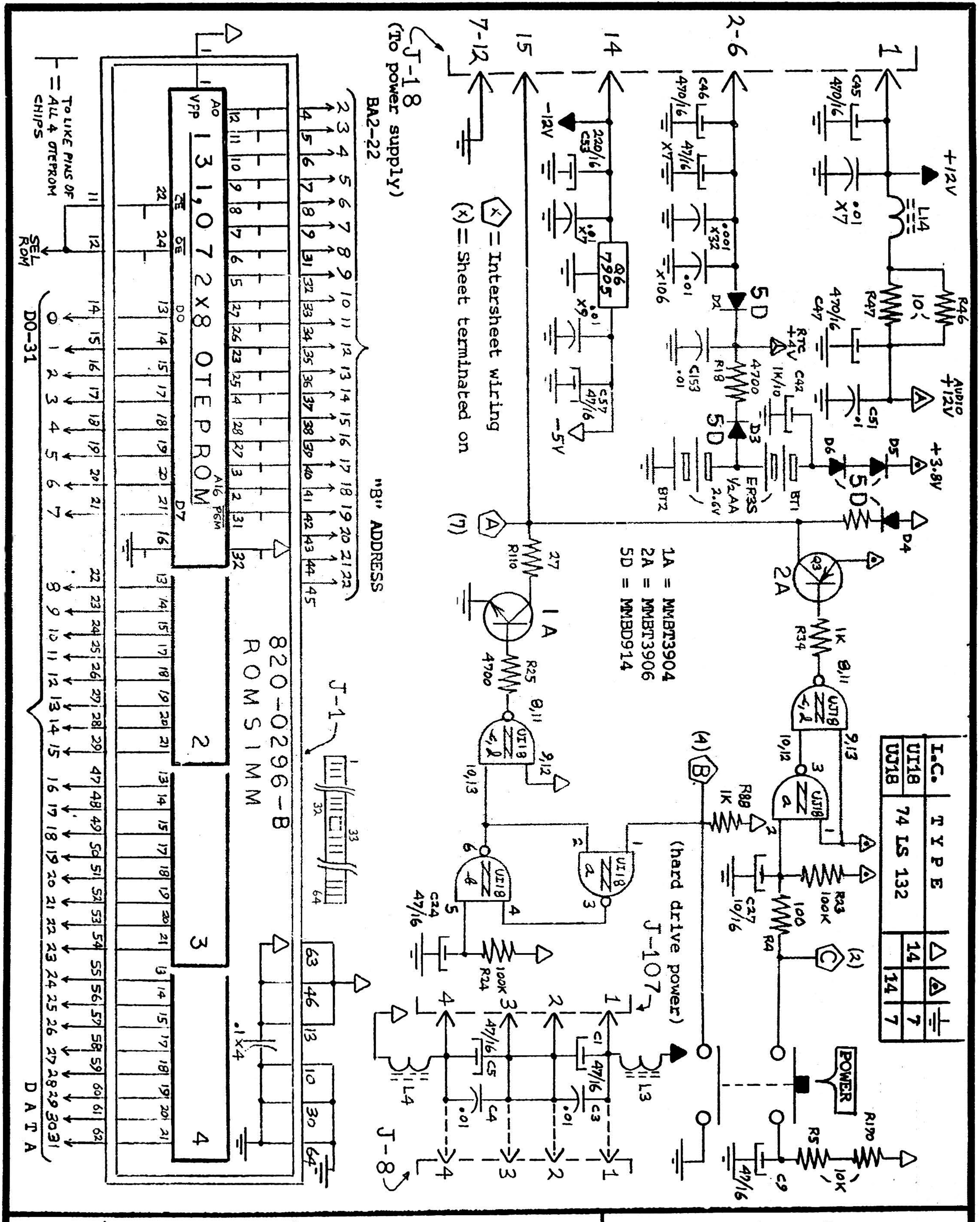
J-18
(To power supply)
7-12
15
14
2-6
1
+12V
AUDIO +12V
+3.8V
RTC +4V
-12V
-5V
C45 470/16
C46 470/16
.01 X7
47/16 X7
.001 X32
.01 X106
L14
R46
R47
10
C47 470/16
C51 .01
D1 5D
D3 5D
D5
D6
D4
R18 4700
C42 1K/10
C153 .01
BT1
BT2
ER3S 1/2AA 2.6V
C53 220/16
Q6 7905
C57 47/16
X9 .01
Q3 2A
1A
R110 27
R34 1K
R25 4700
R88 1K
R33 100K
R4 100
C27 10/16
C24 47/16
R24 100K
R5
R170 10K
C9 47/16
UJ18
POWER
(hard drive power)
J-107
J-8
L3
L4
C1 47/16
C5 47/16
C3 .01
C4 .01
.1 X4
1A = MMBT3904
2A = MMBT3906
5D = MMBD914
= Intersheet wiring
(x) = Sheet terminated on
(A)
(B)
(C)
(7)
(4)
(2)
I.C. | TYPE
UJ18 | 74 LS 132
UJ18 | 14 | 14 | 7
J-1
820-0296-B
ROM SIMM
131,072 2X8 OTEPROM
A0
VPP
CE
OE
D0
D7
A16
PGM
"B" ADDRESS
BA2-22
D0-31
DATA
TO LIKE PINS OF ALL 4 OTEPROM CHIPS
SEL ROM
2
3
4

POWER O/O & DISTRIBUTION / R.O.M.S.I.M.M. sheet 1 of 8

A P P L E "MacINTOSH IIfx" LOGIC BOARD (820-0282-A) 4/15/92-

UNIT DRAWN PROVIDED COURTESY OF "ON-TIME MacSERVICE"

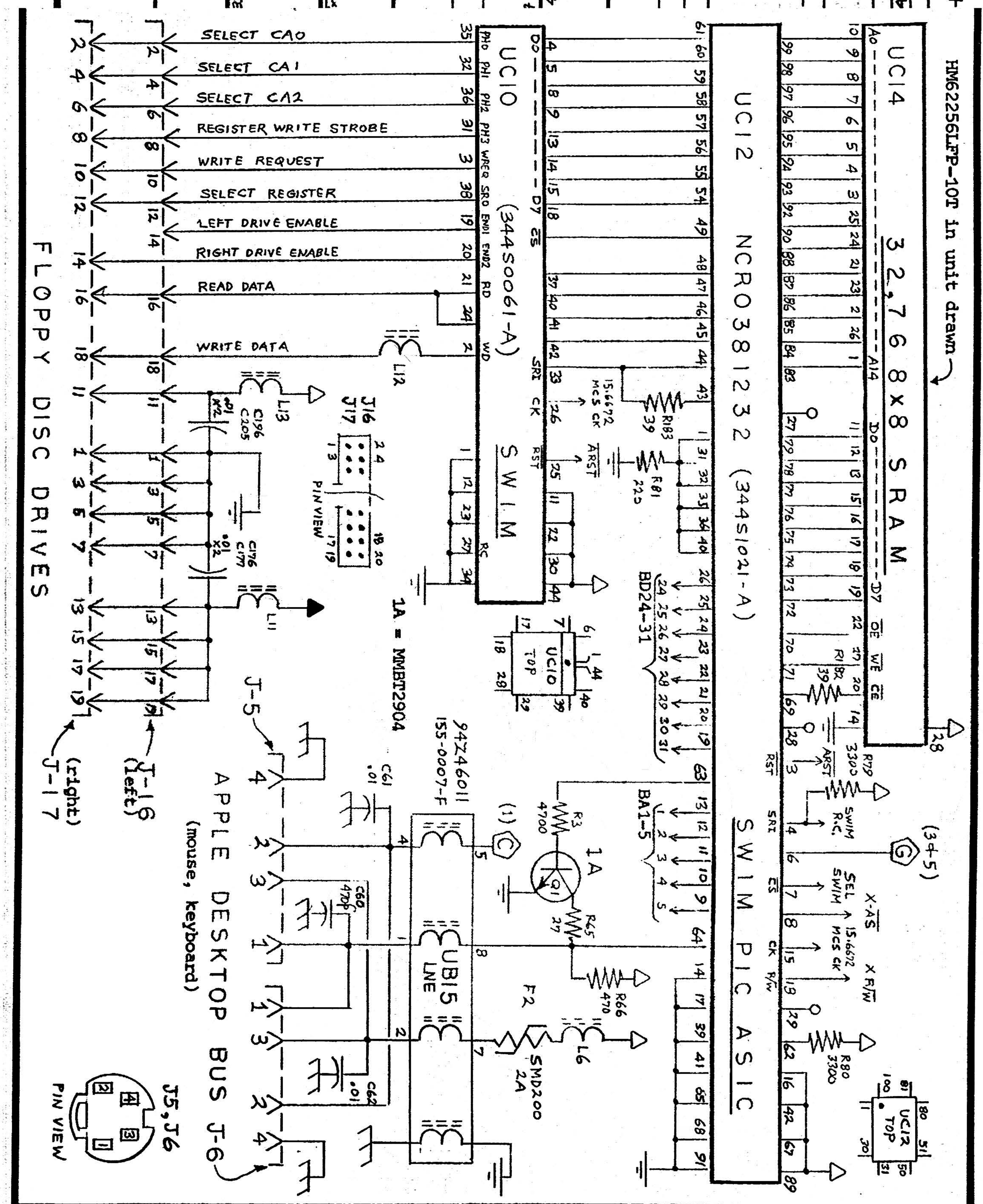
HM62256LFP-10T in unit drawn
UC14
32,768 x 8 SRAM
A0
A14
D0
D7
OE
WE
CE
UC12
NCR0381232 (344S1021-A)
SWIM PIC ASIC
UC10
(344S0061-A)
SWIM
D0
D7
CS
PH0 PH1 PH2 PH3 WREQ SR0 EN01 EN02 RD
WD
SRI
CK
RST
RC
ARST
15.6672 MCS CK
R183 39
R81 220
R182 39
R179 3300
R80 3300
SWIM R.C.
SEL SWIM
X-AS
X R/W
(3+5)
BD24-31
BA1-5
RST
SRI
CS
CK
R/W
UC10 TOP
UC12 TOP
SELECT CA0
SELECT CA1
SELECT CA2
REGISTER WRITE STROBE
WRITE REQUEST
SELECT REGISTER
LEFT DRIVE ENABLE
RIGHT DRIVE ENABLE
READ DATA
WRITE DATA
L12
L13
L11
C196 C205 .01 x2
C176 C177 .01 x2
J16 J17
PIN VIEW
1A = MMBT2904
FLOPPY DISC DRIVES
J-16 (left)
J-17 (right)
APPLE DESKTOP BUS J-6
J-5
(mouse, keyboard)
942Z46011
155-0007-F
UB15 LNE
C61 .01
C60 470p
C62 .01
R3 4700
1A
Q1
R65 27
R66 470
F2
SMD200 2A
L6
J5, J6
PIN VIEW

FLOPPY DISC DRIVE & A.D.B. PROCESSING | **sheet 2 of 8**

A P P L E | **"MacINTOSH IIfx"** | **LOGIC BOARD (820-0282-A)** | **4/7/92-**

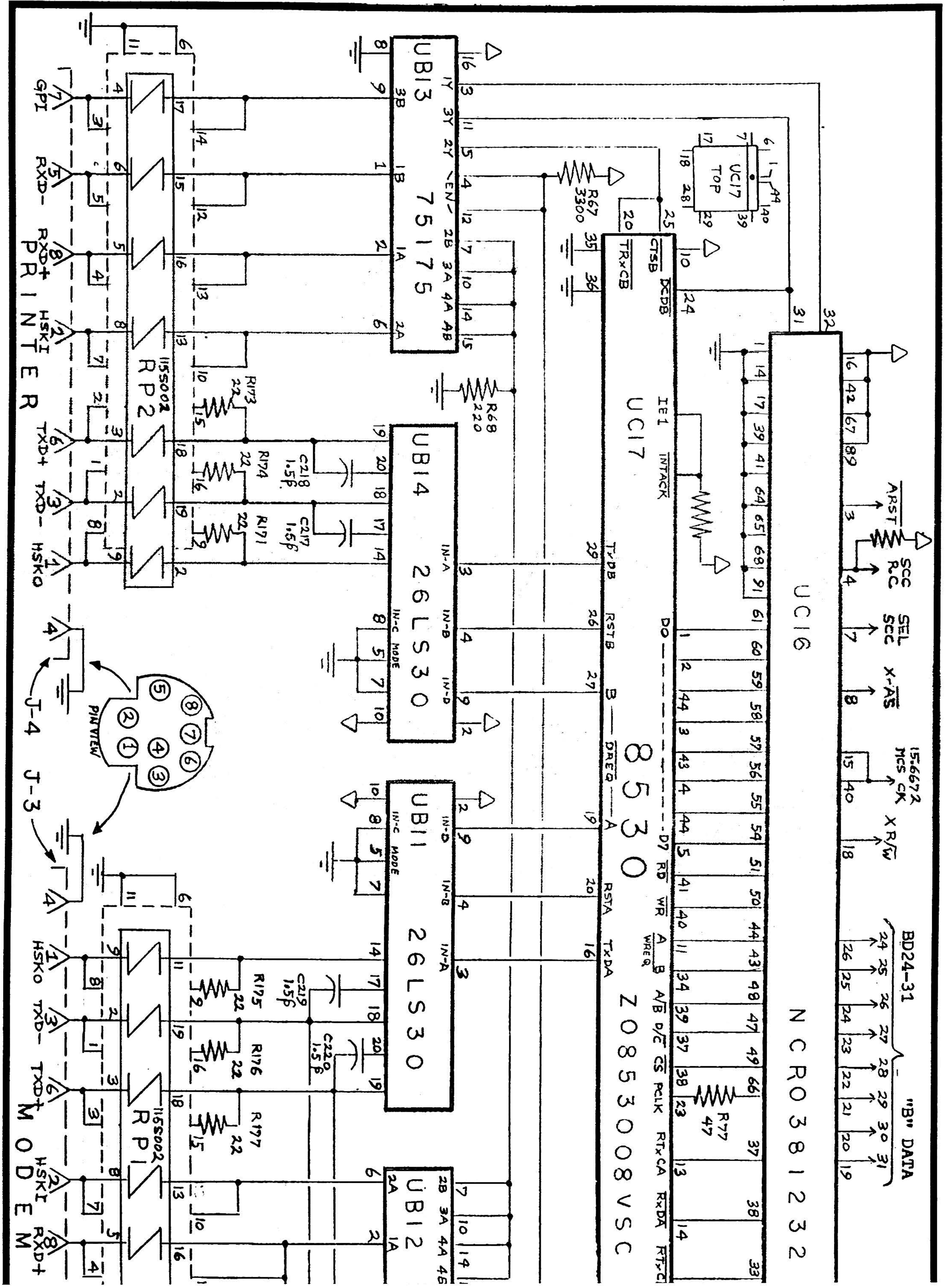
UB13
75175
UB14
26LS30
UB11
26LS30
UB12
UC17
8530
Z0853008VSC
UC16
NCR0381232
UC17 TOP
RP2
115S002
RP1
115S002
PRINTER
MODEM
GPI
RXD-
RXD+
HSKI
TXD+
TXD-
HSKO
J-4
J-3
PIN VIEW
R67 3300
R68 220
R173 22
R174 22
R171 22
C218 1.5p
C217 1.5p
R175 22
R176 22
R177 22
C219 1.5p
C220 1.5p
R77 47
ARST
SCC R.C
SEL SCC
X-AS
15.6672 MCS CK
X R/W
BD24-31
"B" DATA
TRxCB
CTSB
DCDB
IE1
INTACK
TrDB
RSTB
DREQ
RSTA
TxDA
D0
D7
RD
WR
A/B WREQ
A/B
D/C
CS
PCLK
RTxCA
RxDA
RTxC
IN-A
IN-B
IN-C
IN-D
MODE
EN

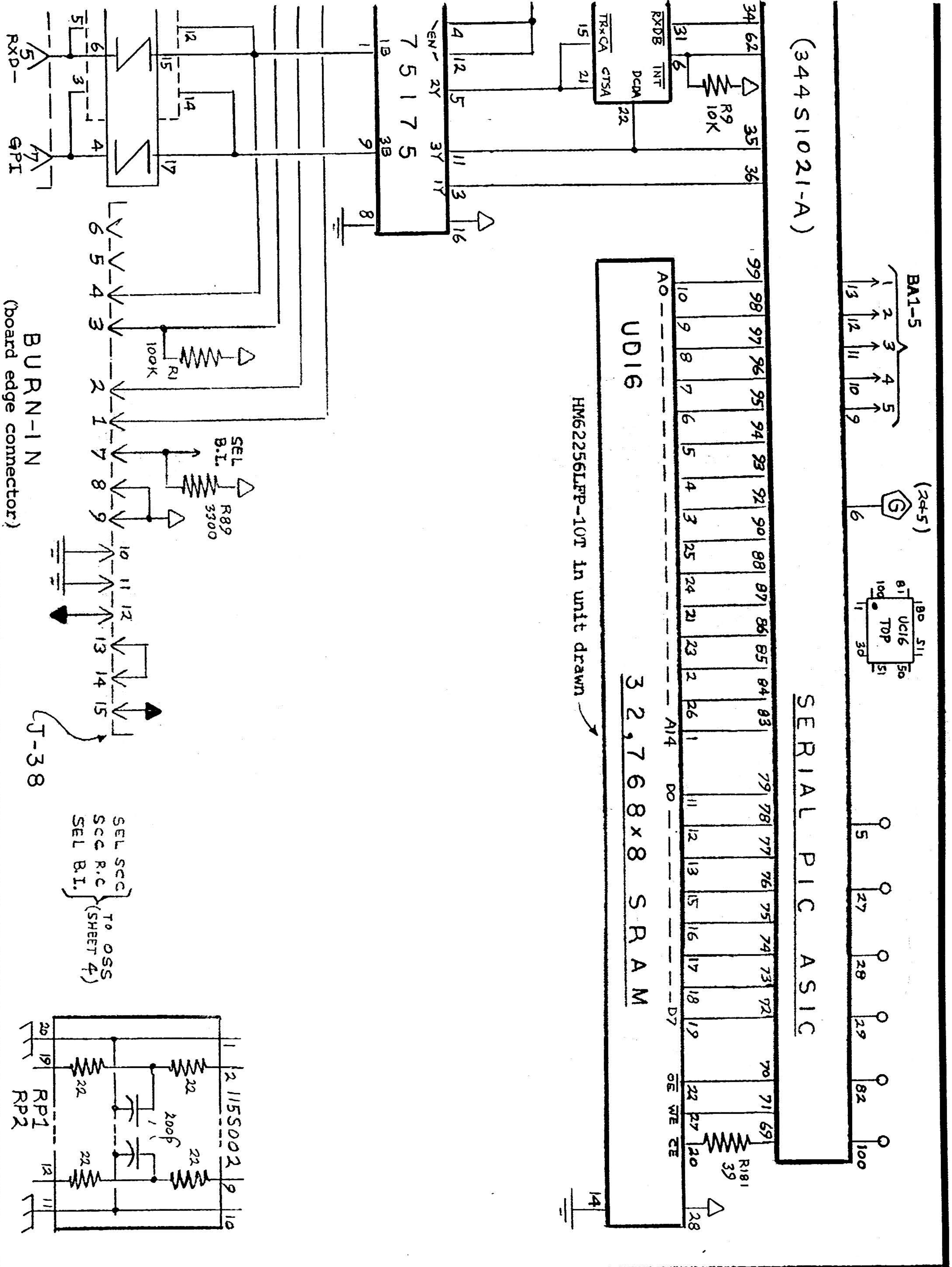
(344S1021-A)
SERIAL PIC ASIC
BA1-5
(2+5)
G
UC16 TOP
RxDB
TRxCA
INT
DCDA
CTSA
R9 10K
75175
-EN-
1B
2Y
3Y
3B
1Y
UD16
32,768x8 SRAM
HM62256LFP-10T in unit drawn
A0
A14
D0
D7
OE
WE
CE
R181 39
BURN-IN
(board edge connector)
J-38
R1 100K
SEL B.I.
R89 3300
RxD-
GPI
SEL SCC
SCC R.C
SEL B.I.
TO OSS (SHEET 4)
115S002
RP1
RP2
22
200f

SERIAL (PRINTER & MODEM) PORT PROCESSING / S.C.C. | sheet 3 of 8

APPLE | "MacINTOSH IIfx" | LOGIC BOARD (820-0282-A) | 4/6/92-

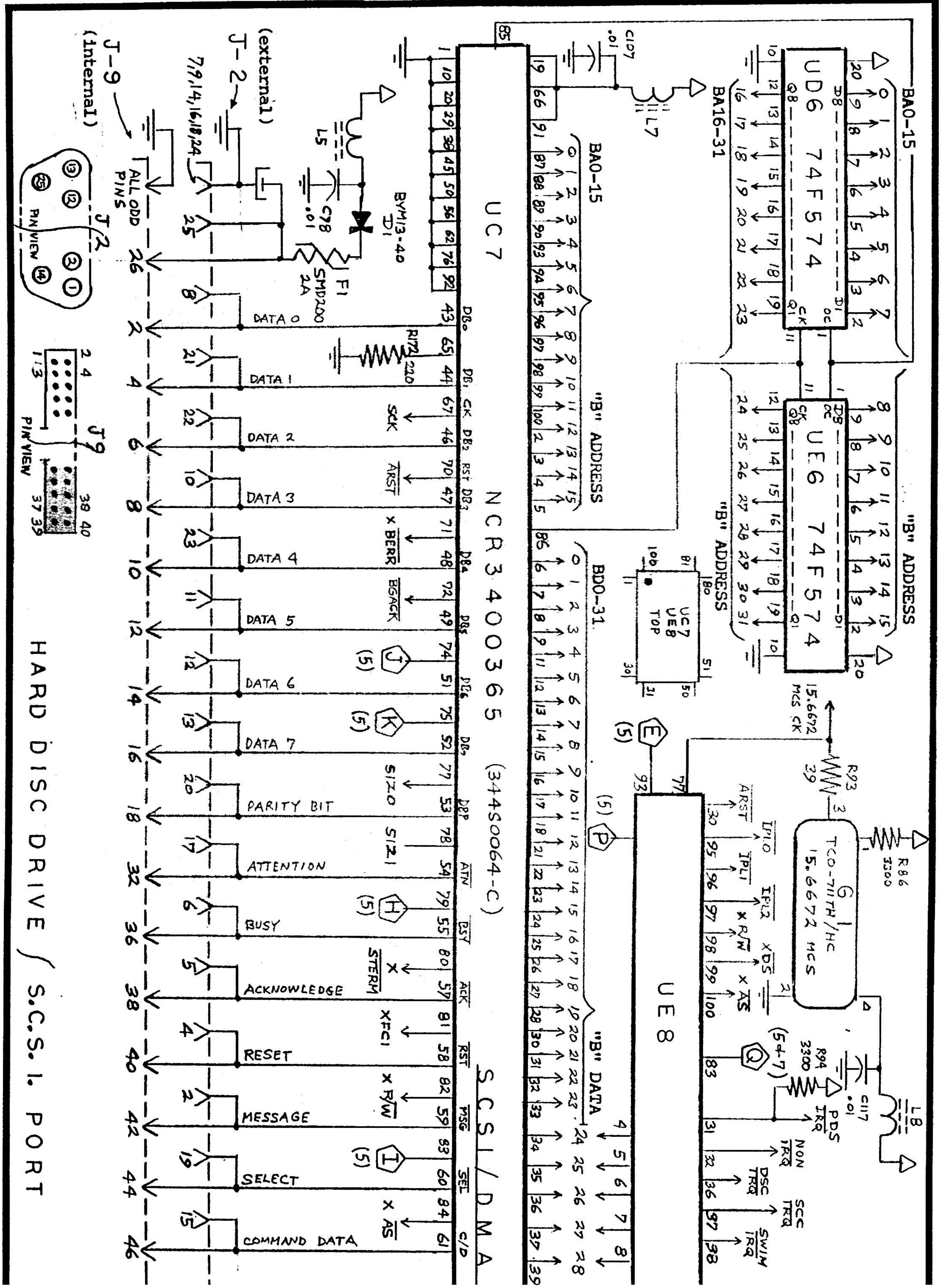
HARD DISC DRIVE / S.C.S.I. PORT
UC7
NCR 3400365
(344S0064-C)
SCSI/DMA
UE8
UD6 74F574
UE6 74F574
BA0-15
BA16-31
"B" ADDRESS
BD0-31
"B" DATA
UC7 UE8 TOP
J-2 (external)
J-9 (internal)
J2 PIN VIEW
J9 PIN VIEW
ALL ODD PINS
7,9,14,16,18,24
DATA 0
DATA 1
DATA 2
DATA 3
DATA 4
DATA 5
DATA 6
DATA 7
PARITY BIT
ATTENTION
BUSY
ACKNOWLEDGE
RESET
MESSAGE
SELECT
COMMAND DATA
SCK
ARST
x BERR
BGACK
SIZ0
SIZ1
x STERM
XFC1
x R/W
x AS
BYM13-40 D1
C78 .01
L5
F1 SMD200 2A
R172 220
C107 .01
L7
G1 TCO-711TH/HC 15.6672 MCS
15.6672 MCS CK
R93 39
R86 3300
R94 3300
C117 .01
L8
IPL0
IPL1
IPL2
x DS
PDS IRQ
NON IRQ
DSC IRQ
SCC IRQ
SWIM IRQ
(5)
(5-7)
J
K
H
I
E
P
Q

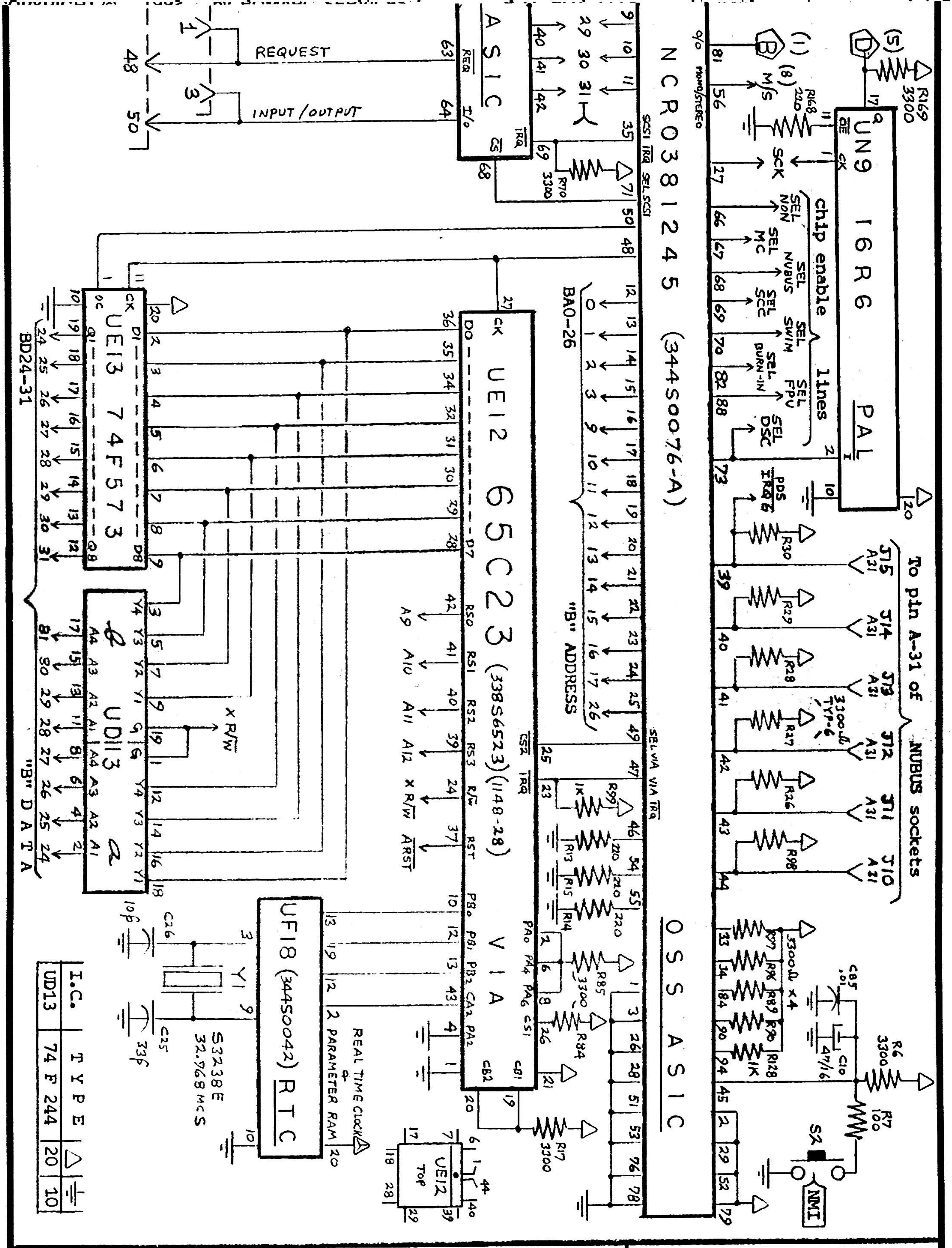
NCR 0381245 (344S0076-A)
ASIC
REQUEST
INPUT/OUTPUT
UN9 16R6 PAL
chip enable lines
SEL NON
SEL MC
SEL NUBUS
SEL SCC
SEL SWIM
SEL BURN-IN
SEL FPU
SEL DSC
PDS IRQ6
To pin A-31 of NUBUS sockets
J15 J14 J13 J12 J11 J10
BA0-26
"B" ADDRESS
UE12 65C23 (338S6523)(148-28)
VIA
SEL VIA
VIA IRQ
UE13 74F573
BD24-31
UD113
"B" DATA
x R/W
ARST
UF18 (344S0042) RTC
REAL TIME CLOCK & PARAMETER RAM
Y1
S3238E 32.768 MCS
OSS ASIC
S2
NMI
UE12 TOP
I.C. | TYPE
UD13 | 74 F 244 | 20 | 10

S.C.S.I. (HARD DISC) PORT PROCESSING / V.I.A. / O.S.S. | sheet 4 of 8

APPLE | "MacINTOSH IIfx" | LOGIC BOARD (820-0282-A) | 4/9/92-

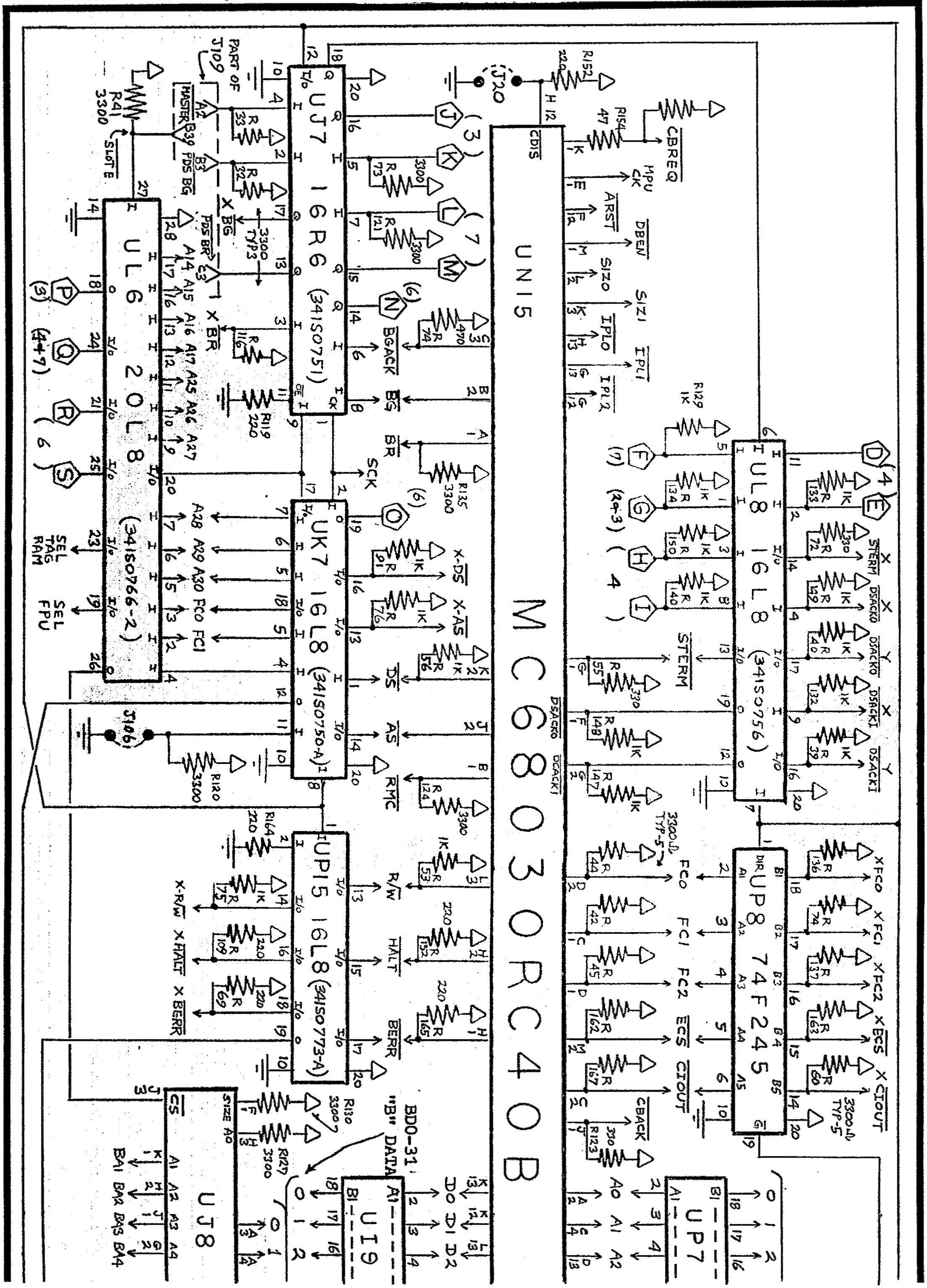
UN15
MC68030RC40B
UJ7 16R6 (341S0751)
UL6 20L8 (341S0766-2)
UK7 16L8 (341S0750-A)
UP15 16L8 (341S0773-A)
UL8 16L8 (341S0756)
UP8 74F245
UJ8
UI9
UP7
J109
J20
J106
PART OF J109
MASTER
SLOTE
CBREQ
MPU CK
ARST
DBEN
SIZ0
SIZ1
IPL0
IPL1
IPL2
BGACK
BG
BR
SCK
DS
AS
RMC
R/W
HALT
BERR
STERM
DSACK0
DSACK1
FC0
FC1
FC2
ECS
CIOUT
CBACK
X-DS
X-AS
X-R/W
X HALT
X BERR
SEL TAG RAM
SEL FPU
A28 A29 A30 FC0 FC1
A14 A15 A16 A17 A25 A26 A27
PDS BR
PDS BG
"B" BD0-31 DATA
D0 D1 D2
A0 A1 A2
BA1 BA2 BA3 BA4
SIZE A0
3300Ω TYP-5

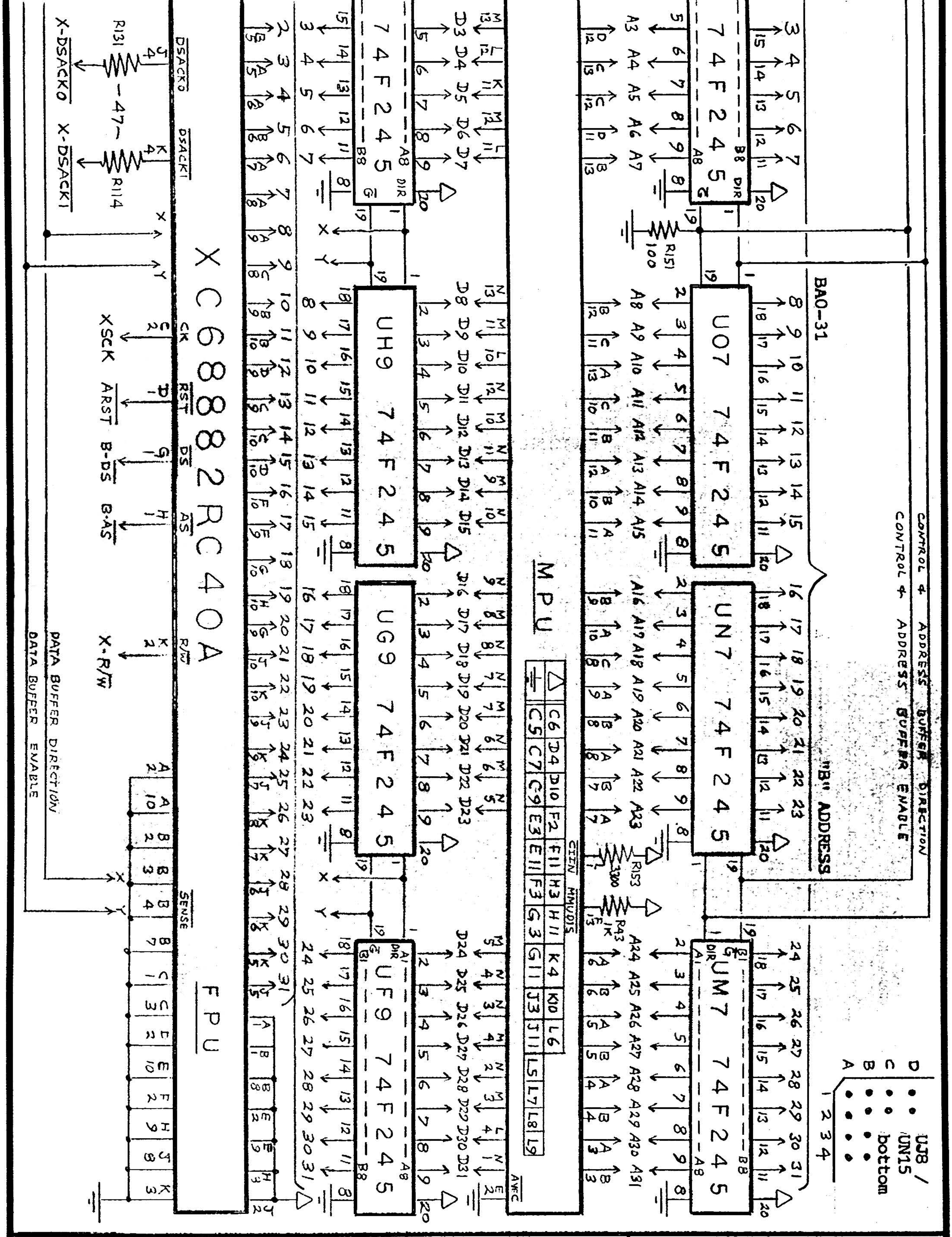
XC68882RC40A
FPU
MPU
UH9 74F245
UG9 74F245
UF9 74F245
UO7 74F245
UN7 74F245
UM7 74F245
74F245
BA0-31
"B" ADDRESS
CONTROL 4 ADDRESS BUFFER DIRECTION
CONTROL 4 ADDRESS BUFFER ENABLE
DATA BUFFER DIRECTION
DATA BUFFER ENABLE
DSACK0
DSACK1
X-DSACK0
X-DSACK1
R131
R114
47
R151
100
R153
330
RA3
1K
CK
XSCK
RST
ARST
DS
B-DS
AS
B-AS
R/W
X-R/W
SENSE
CLIN
MMUDIS
AVEC
DIR
A8
B8
UJ8 /
UN15
bottom
D3 D4 D5 D6 D7
D8 D9 D10 D11 D12 D13 D14 D15
D16 D17 D18 D19 D20 D21 D22 D23
D24 D25 D26 D27 D28 D29 D30 D31
A3 A4 A5 A6 A7
A8 A9 A10 A11 A12 A13 A14 A15
A16 A17 A18 A19 A20 A21 A22 A23
A24 A25 A26 A27 A28 A29 A30 A31
X
Y

M.P.U. / F.P.U. / BUS GENERATION SECTION

sheet 5 of 8

APPLE	"MacINTOSH IIfx"	LOGIC BOARD (820-0282-A)	4/10/92-

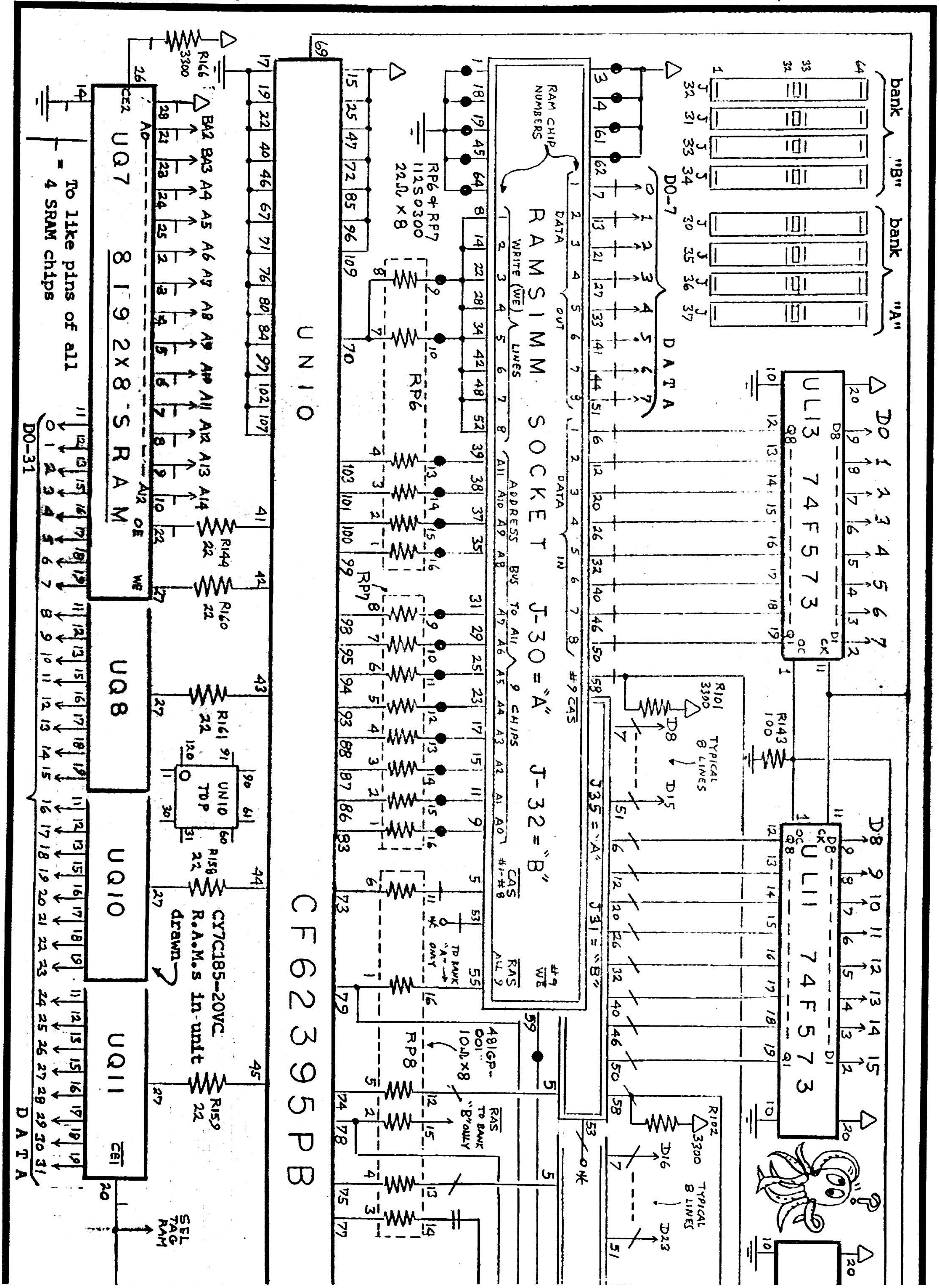
UQ7 8192x8 SRAM
UQ8
UQ10
UQ11
To like pins of all 4 SRAM chips
CY7C185-20VC R.A.M.s in unit drawn
UN10 CF62395PB
UN10 TOP
RAMSIMM SOCKET J-30 = "A" J-32 = "B"
RAM CHIP NUMBERS
DATA OUT
DATA IN
WRITE (WE) LINES
ADDRESS BUS TO ALL 9 CHIPS
#9 CAS
CAS #1-#8
#9 WE
RAS ALL 9
J35 = "A"
J31 = "B"
RP6 & RP7 112S0300 22Ω x8
RP6
RP7
RP8
481GP-001 10Ω x8
TO BANK "A" ONLY
RAS TO BANK "B" ONLY
ULI3 74F573
ULI1 74F573
D0-7 DATA
D0 1 2 3 4 5 6 7
D8 9 10 11 12 13 14 15
D0-31 DATA
R166 3300
R144 22
R160 22
R161 22
R158 22
R159 22
R101 3300
R102 3300
R143 100
D8 D15 TYPICAL 8 LINES
D16 D23 TYPICAL 8 LINES
bank "B"
bank "A"
J32 J31 J33 J34
J30 J35 J36 J37
SEL TAG RAM
BA2 BA3 A4 A5 A6 A7 A8 A9 A10 A11 A12 A13 A14
CE2 A0 A12 OE WE CE1

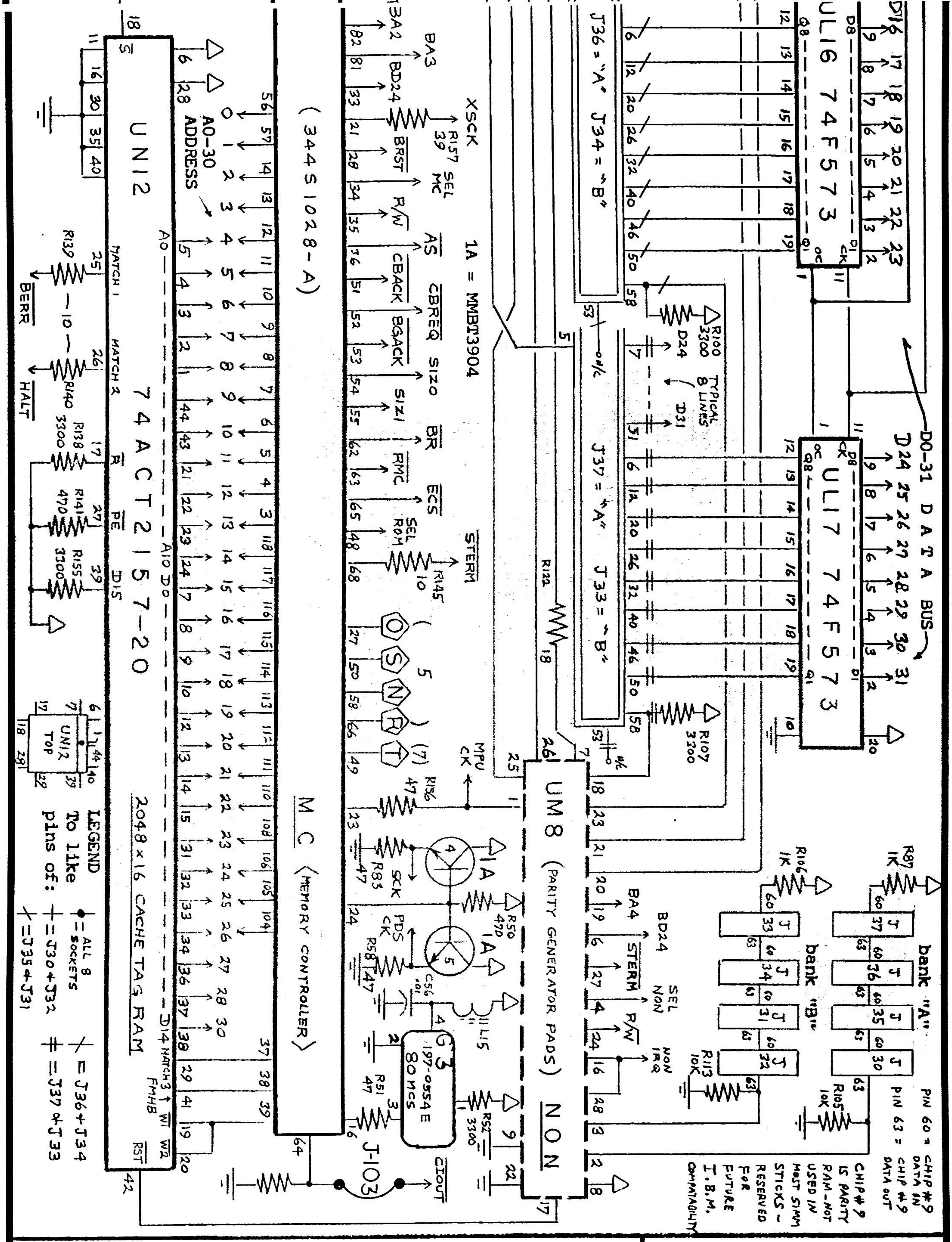
D0-31 DATA BUS
UL16 74F573
UL17 74F573
J36 = "A" J34 = "B"
J37 = "A" J33 = "B"
TYPICAL 8 LINES
D24
D31
R100 3300
R107 3300
R122
UM8 (PARITY GENERATOR PADS) NON
BA4
BD24
STERM
SEL NON
R/W
NON IRQ
MPU CK
bank "A"
bank "B"
PIN 60 = CHIP #9 DATA IN
PIN 63 = CHIP #9 DATA OUT
CHIP #9 IS PARITY RAM - NOT USED IN MOST SIMM STICKS - RESERVED FOR FUTURE I.B.M. COMPATABILITY
R87 1K
R106 1K
R105 10K
R113 10K
XSCK
BA3
BA2
BD24
R157 39
SEL MC
BRST
R/W
AS
CBACK
CBREQ
BGACK
SIZ0
SIZ1
BR
RMC
ECS
SEL ROM
STERM
R145 10
1A = MMBT3904
(344S1028-A)
MC (MEMORY CONTROLLER)
R136 47
R83 47
SCK
PDS CK
R58 47
R50 470
C56 .01
L15
G3 197-0554E 80 MCS
R51 47
R52 3300
J-103
CIOUT
A0-30 ADDRESS
UN12 74ACT2157-20
2048×16 CACHE TAG RAM
MATCH 1
MATCH 2
MATCH 3
FMHB
R139
R140 3300
R138 3300
R141 470
R155 3300
BERR
HALT
PE
DIS
RST
W1
W2
UN12 TOP
LEGEND
= ALL 8 SOCKETS
To like pins of:
= J30+J32
= J35+J31
= J36+J34
= J37+J33

R.A.M. & R.A.M.S.I.M.M. MEMORY SECTION

sheet 6 of 8

A P P L E

"MacINTOSH IIfx"

LOGIC BOARD (820-0282-A)

5/22/92-

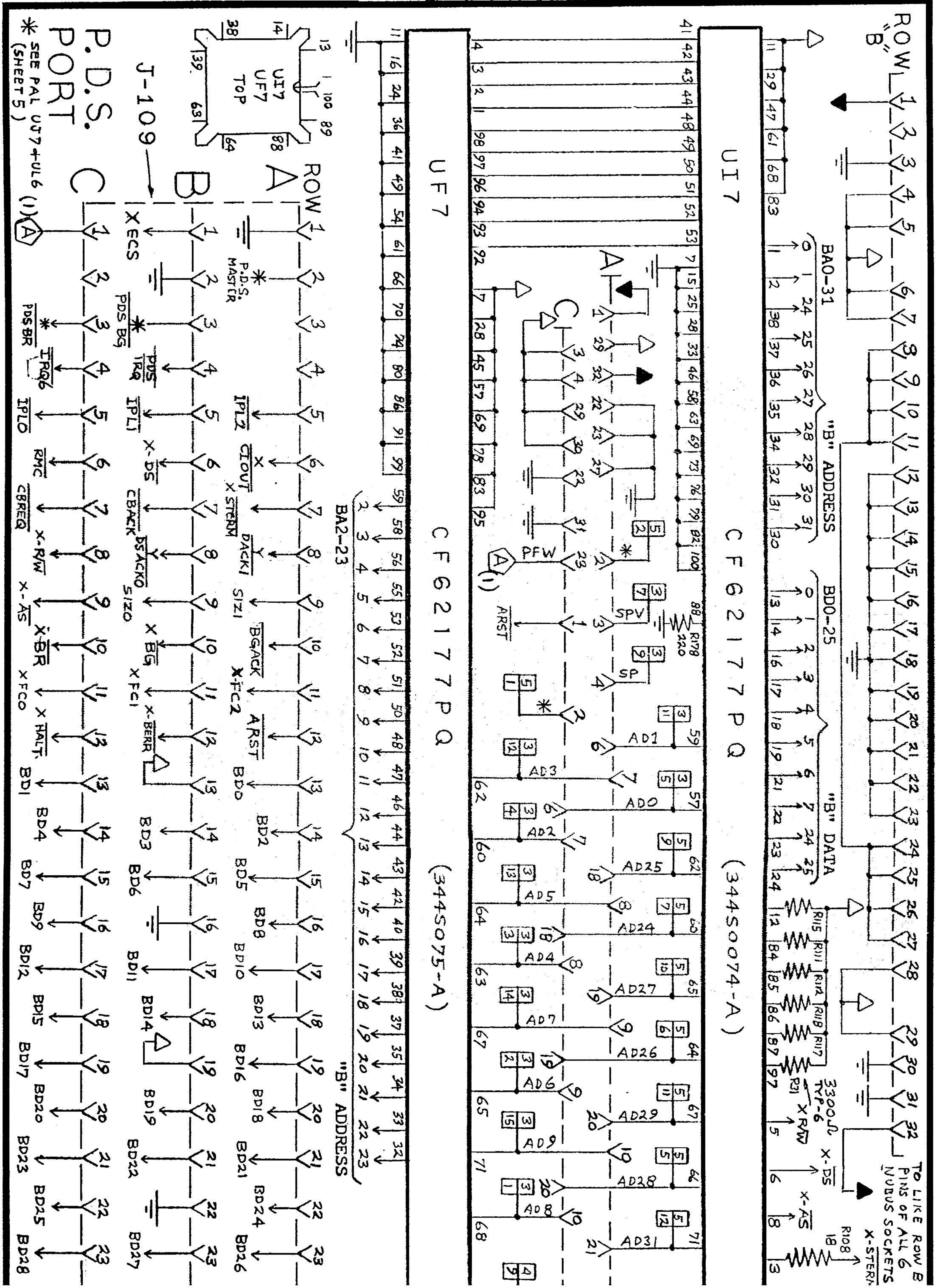
ROW "B"
TO LIKE ROW B PINS OF ALL 6 NUBUS SOCKETS
UI7
CF62177PQ
(344S0074-A)
UF7
CF62177PQ
(344S075-A)
BA0-31
"B" ADDRESS
BD0-25
"B" DATA
BA2-23
"B" ADDRESS
R115
R111
R112
R118
R117
R31
3300Ω TYP-6
R108 18
R178 220
X-R/W
X-DS
X-AS
X-STERM
AD0
AD1
AD2
AD3
AD4
AD5
AD6
AD7
AD8
AD9
AD24
AD25
AD26
AD27
AD28
AD29
AD31
PFW
SPV
SP
ARST
UI7 UF7 TOP
J-109
P.D.S. PORT
ROW A
B
C
* SEE PAL UJ7+UL6 (SHEET 5)
P.D.S. MASTER
PDS BG
PDS BR
PDS IRQ
IRQ6
IPL0
IPL1
IPL2
X CIOUT
X-DS
RMC
X STERM
CBACK
CBREQ
DACK1
DSACK0
X-R/W
SIZ1
SIZ0
X-AS
BG/ACK
X BG
X BR
X FC2
X FC1
X FC0
ARST
X-BERR
X HALT
X ECS
BD0
BD1
BD2
BD3
BD4
BD5
BD6
BD7
BD8
BD9
BD10
BD11
BD12
BD13
BD14
BD15
BD16
BD17
BD18
BD19
BD20
BD21
BD22
BD23
BD24
BD25
BD26
BD27
BD28

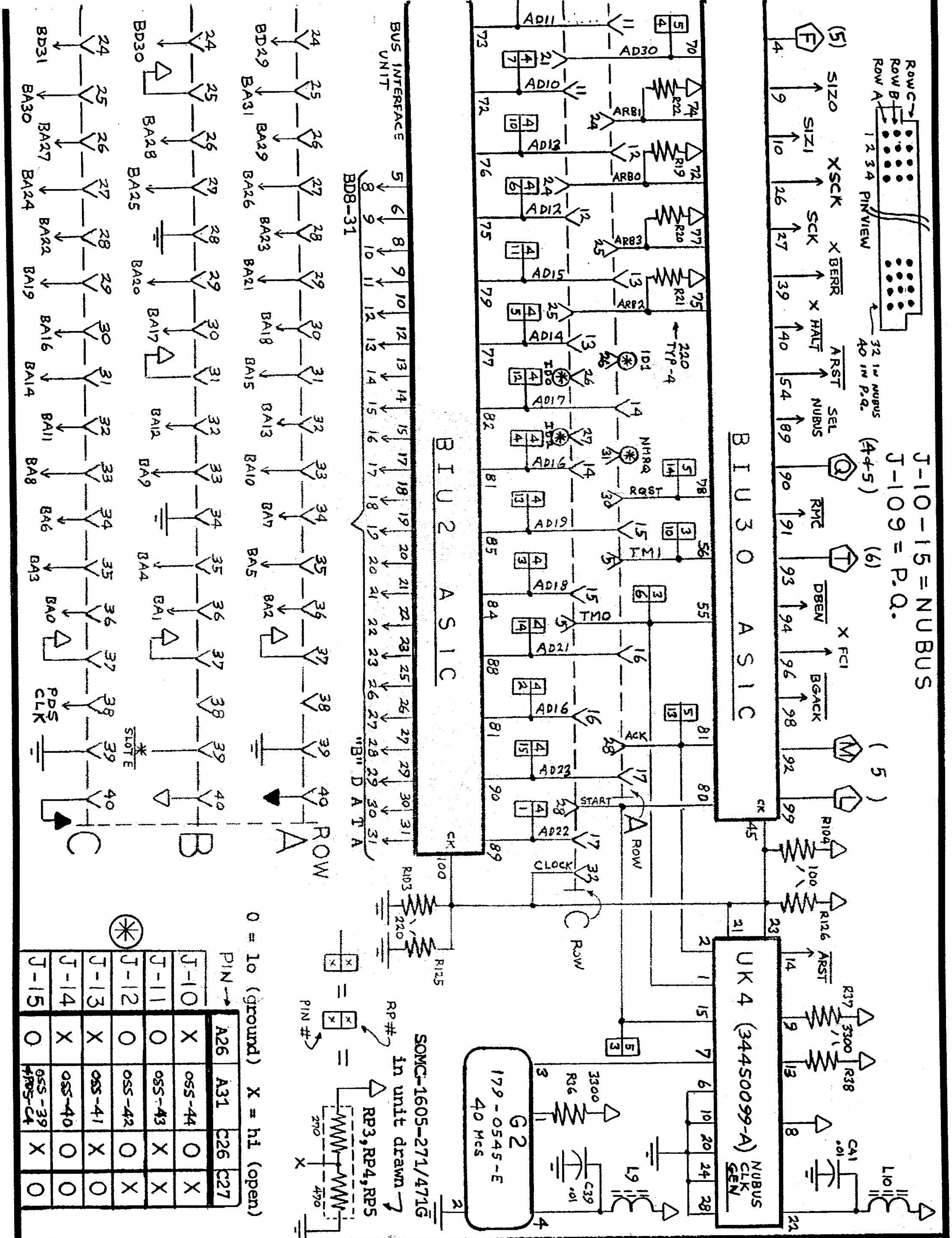
J-10 – 15 = NUBUS
J-109 = P.Q.
ROW C
ROW B
ROW A
1 2 3 4 PIN VIEW
32 in NUBUS
40 in P.Q.
BIU 30 ASIC
BIU 2 ASIC
UK4 (344S0099-A) NUBUS CLK GEN
G2 179-0545-E 40 MCS
BUS INTERFACE UNIT
BD8-31
"B" DATA
ROW A
ROW B
ROW C
SIZ0
SIZ1
XSCK
SCK
X BERR
X HALT
ARST
SEL NUBUS
RMC
DBEN
X FC1
BGACK
ARB0
ARB1
ARB2
ARB3
RQST
TM0
TM1
ACK
START
CLOCK
NMRQ
ID0
ID1
220 TYP-4
PDS CLK
SLOT E
R103
R125
R126
R104
R37
R38
R36
C39
C41
L9
L10
RP#
PIN #
RP3,RP4,RP5
SOMC-1605-271/471G in unit drawn
270
470
3300
100
220
.01

0 = lo (ground) X = hi (open)

PIN →	A26	A31	C26	C27
J-10	X	OSS-44	O	X
J-11	O	OSS-43	X	X
J-12	O	OSS-42	O	X
J-13	X	OSS-41	X	O
J-14	X	OSS-40	O	O
J-15	O	OSS-39 #PDS-C4	X	O

NUBUS SOCKETS PROCESSING / P.D. SOCKET

sheet 7 of 8

APPLE "MacINTOSH IIfx" LOGIC BOARD (820-0282-A)

4/12/92-

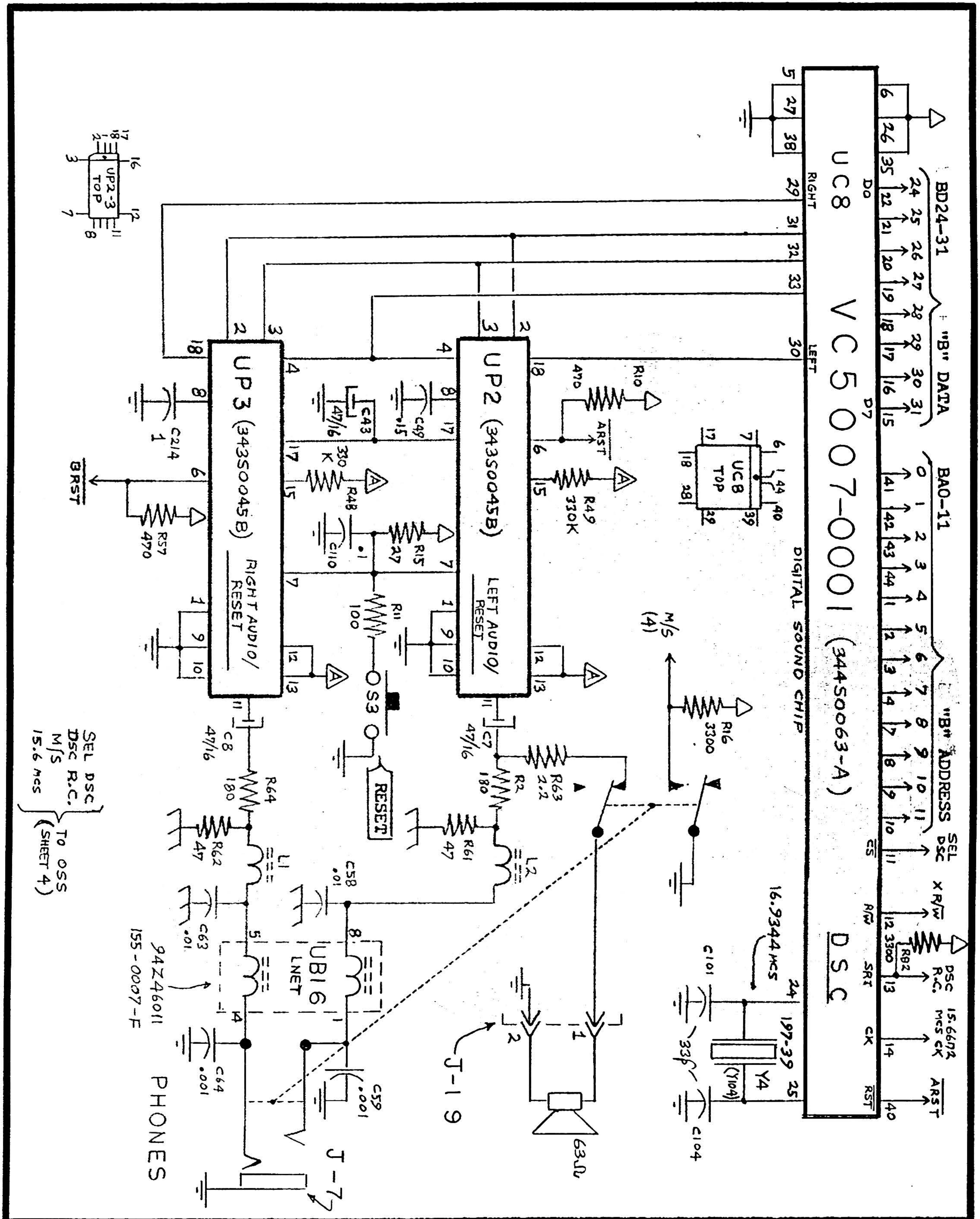
UC8
VC5007-0001 (344S0063-A)
DSC
DIGITAL SOUND CHIP
BD24-31
"B" DATA
BA0-11
"B" ADDRESS
SEL DSC
xR/W
DSC R.C.
15.6672 MCS CK
ARST
RIGHT
LEFT
D0
D7
CS
R/W
SRI
CK
RST
R82
3300
16.9344 MCS
C101
C104
33P
197-39
Y4
(Y104)
UC8 TOP
M/S (4)
R16
3300
UP3 (343S0045B)
RIGHT AUDIO/ RESET
UP2 (343S0045B)
LEFT AUDIO/ RESET
UP2-3 TOP
R10
470
R49
330K
R48
330 K
C43
47/16
C49
.15
C110
.1
R15
27
R11
100
S3
RESET
C214
1
BRST
R57
470
C8
47/16
C7
47/16
R64
180
R2
180
R63
2.2
R62
47
R61
47
L1
L2
C58
.01
C63
.01
UB16
LNET
94Z46011
155-0007-F
C64
.001
C59
.001
PHONES
J-7
J-19
63Ω
SEL DSC
DSC R.C.
M/S
15.6 MCS
TO OSS (SHEET 4)

SOUND GENERATION SECTION

sheet 8 of 8

APPLE "MacINTOSH IIfx" LOGIC BOARD (820-0282-A) 4/6/92-