FANUC Series 0*i*-MODEL F Plus

CONNECTION MANUAL (HARDWARE)

B-64693EN/01

© FANUC CORPORATION, 2019

© MyFANUC B5B0D8428C0144A78A5F4CA87F2C262E

- No part of this manual may be reproduced in any form.
- The appearance and specifications of this product are subject to change without notice.

The products in this manual are controlled based on Japan's “Foreign Exchange and Foreign Trade Law". The export from Japan may be subject to an export license by the government of Japan.
Further, re-export to another country may be subject to the license of the government of the country from where the product is re-exported. Furthermore, the product may also be controlled by re-export regulations of the United States government.
Should you wish to export or re-export these products, please contact FANUC for advice.

The products in this manual are manufactured under strict quality control. However, when using any of the products in a facility in which a serious accident or loss is predicted due to a failure of the product, install a safety device.

In this manual, we endeavor to include all pertinent matters.
There are, however, a very large number of operations that must not or cannot be performed, and if the manual contained them all, it would be enormous in volume.
It is, therefore, requested to assume that any operations that are not explicitly described as being possible are "not possible".

This manual contains the program names or device names of other companies, some of which are registered trademarks of respective owners. However, these names are not followed by ® or ™ in the main body.

© MyFANUC B5B0D8428C0144A78A5F4CA87F2C262E

SAFETY PRECAUTIONS

Described below are the safety precautions regarding the control units and those peripheral units explained herein. The safety precautions must be observed in order to use these units safely.
Because exchanging, as well as performing daily maintenance operations on, the control units and those peripheral units explained herein may incur diverse dangers, you cannot be involved in such work unless you have been sufficiently trained for safety.
Some safety precautions may not apply to your control units or peripheral units explained herein because the units have no corresponding function. If this is the case, skip reading those precautions.
As for safety precautions regarding machine tools, refer to the respective machine manuals provided by the machine tool builders.
Before starting to operate machines for check purposes, be sure to read the manuals provided by the machine tool builders and FANUC and sufficiently understand their descriptions.

DEFINITION OF WARNING, CAUTION, AND NOTE

This manual includes safety precautions for protecting the user and preventing damage to the machine. Precautions are classified into **WARNING** and **CAUTION** according to their bearing on safety. Also, supplementary information is described as a **NOTE**. Read the **WARNING**, **CAUTION**, and **NOTE** thoroughly before attempting to use the machine.

⚠ **WARNING**
Used if a danger resulting in the death or serious injury of the user is expected to occur if he or she fails to observe the approved procedure.

⚠ **CAUTION**
Used if a danger resulting in the minor or moderate injury of the user or equipment damage is expected to occur if he or she fails to observe the approved procedure.

NOTE
Used if a supplementary explanation not related to any of WARNING and CAUTION is to be indicated.

- Read this manual carefully, and store it in a safe place.

© MyFANUC B5B0D8428C0144A78A5F4CA87F2C262E

WARNINGS AND CAUTIONS REGARDING MOUNTING, WIRING, AND EXCHANGING

⚠ **WARNING**

1 Before starting mounting, wiring, and exchanging, be sure to shut off externally supplied power. Otherwise, electrical shocks, breakdown, and blowout may occur.
If a control unit is turned off but other units are not, it is likely that power may be supplied to servo units, resulting in the units being damaged and workers getting an electrical shock when the units are exchanged.

2 Voltage lingers in servo and spindle amplifiers for a while even after power has been turned off, resulting in workers possibly getting an electrical shock when the workers touch them. Before starting to exchange these amplifiers, wait for 20 minutes after power has been turned off.

3 Be sure to ground your control units and peripheral units in accordance with your national grounding standards (protective grounding class C or stricter). Otherwise, electrical shocks, breakdown, and blowout may occur.

4 In order to prevent damage that may be caused by static electricity, wear a grounding wrist strap or take a similar protective measure before starting to touch a printed-circuit board or unit or attach a cable.
Static electricity from human bodies can damage electrical circuits.

5 In unit replacement, specify the same settings and parameters in the newly installed unit as those for the one removed. (For details, refer to the respective manuals for the units.)
Operating the newly installed unit with incorrect settings or parameters will cause the machine to behave unexpectedly, possibly leading to a damaged workpiece or machine or injury.

6 If you notice an apparent hardware fault, such as abnormal noise, abnormal odor, smoke, ignition, or abnormal heat, in the hardware while power is being supplied to it, shut it off at once. These faults can cause fire, breakdown, blowout, and malfunction.

7 The radiating fins of control units, servo amplifiers, spindle amplifiers, and other devices can remain very hot for a while after power has been turned off, making you get burned if you touch them. Before starting to work on them, wait and make sure they are cool.

8 When exchanging heavy stuff, you should do so together with two or more people.
If you try to exchange heavy stuff all by yourself, you may drop it and get hurt.

9 Wiring work in the control units and peripheral units must be done only after they have been installed. Otherwise, electrical shocks can occur.

10 Be careful not to damage cables. Otherwise, electrical shocks can occur.

11 When working, wear suitable clothes with safety taken into account. Otherwise, injury and electrical shocks can occur.

12 Do not work with your hands wet. Otherwise, electrical shocks and damage to electrical circuits can occur.

© MyFANUC B5B0D8428C0144A78A5F4CA87F2C262E

⚠ **CAUTION**

Failing to observe any caution stated below can lead to fire, breakdown, blowout, and malfunction.

1 Do not attach the units directly to any flammable object or install the units near any flammable object.
2 Do not allow any foreign matter (such as a screw, metal chip, or coolant) to get in the units.
3 Handle the units and printed-circuit boards gently because they are precision devices. Be careful not to drop them or give a high impact to them.
4 Lay signal wires away from power wires as stated in this manual.
5 When fastening each unit or wire, be sure to observe the screw tightening torque specified for them. If screws are tightened too weakly or too strongly, it is likely that the unit may drop, break, or malfunction, or the wire may be short-circuited. Do not forget to tighten all necessary screw.
6 Do not block any cooling fan air inlet or outlet. For units having no cooling fan, allow space for natural convection cooling above and below them.
7 Be careful not to make an incorrect wiring or connection. Be sure to attach wires and cables to their respective corresponding terminals and connectors.
8 Confirm equipment's electrical rating stated herein. Do not apply any unspecified voltage to the equipment.
9 Do not confuse voltage polarity. Carefully confirm the arrangement of connector pins.
10 When making a cable assembly, press-mount, crimp, or solder the wires, using the tool specified by the cable manufacturer.
11 Use printed-circuit boards and peripheral units that match your control unit.
12 When mounting the units, pay attention to their mass.
13 When detaching a cable from a unit, hold the connector rather than the cable. When attaching a cable, be sure to fit its connector to the connector pins securely. For connectors having a lock mechanism, be sure to lock them securely.
14 As for the shielding wires of the cables specified herein, securely ground them, using, for example, cable clamps.
15 Always use wires whose length, diameter, heat resistance, and flex resistance match their use.

© MyFANUC B5B0D8428C0144A78A5F4CA87F2C262E

WARNINGS AND CAUTIONS REGARDING DESIGNING

⚠ **WARNING**

1 When designing, be sure to observe all rules stated in this document and any related manuals. Otherwise, it is likely that failure and malfunction may occur.

2 Failures in the control units and I/O units as well as input power abnormality and communication failures can hamper the normal operation of these I/O units. Design each I/O unit in such a way that the machine can operate safely, for example, by providing an external safety circuit to the I/O unit so that no accident will occur even if the I/O unit fails to operate normally.
The DO function of each I/O unit has been designed in such a way that, if a system alarm is issued in the control unit that controls the I/O unit or the power of the control unit or the I/O unit is turned off, the DO function of all the I/O units is turned off. However, it is not guaranteed that the DO function is surely turned off. So, it is requested that, if a signal regarding safety is involved, a safety circuit external to each I/O unit must be configured. Using the dual check safety function makes it possible to detect a single fault in a portion related to safety. For details of the dual check safety function, refer to the Dual Check Safety Connection Manual (B-64483EN-2).

3 Install each control unit, display unit, MDI unit, and machine operator panel in such a place that neither cutting chip nor coolant will spatter to them. Otherwise, damage or malfunction may occur.

4 Coolants containing sulfur or chlorine at a high activation level, oil-free coolants called synthetic, and water-soluble coolants at a high alkali level, in particular, can largely affect the CNC and peripheral units. Please note that, even if consideration is taken to protect them from direct exposure to these coolants, the following trouble is likely to occur.

- Coolants containing sulfur or chlorine at a high activation level
  Some coolants containing sulfur or chlorine are at an extremely high activity level. If such a coolant adheres to the CNC or peripheral units, it reacts chemically with a material, such as resin, of equipment, possibly leading to corrosion or deterioration. If it gets in the CNC or peripheral units, it corrodes metals, such as copper and silver, used as component materials, possibly leading to a defective component.
- Synthetic-type coolants having a high permeability
  Some synthetic-type coolants whose lubricating component is, for example, PAG (polyalkylene glycol) have an extremely high permeability. If such a coolant is used even in equipment having a high closeness, it can readily flow into the CNC or peripheral units through, for example, gaskets. It is likely that, if the coolant gets in the CNC or a peripheral unit, it may deteriorate the insulation and damage the components.
- Water-soluble coolants at a high alkali level
  Some coolants whose pH is increased using alkanolamine are so strong alkali that its standard dilution will lead to pH10 or higher. If such a coolant spatters over the surface of the CNC or peripheral unit, it reacts chemically with a material, such as resin, possibly leading to corrosion or deterioration.

© MyFANUC B5B0D8428C0144A78A5F4CA87F2C262E

WARNINGS, CAUTIONS, AND NOTES REGARDING DAILY MAINTENANCE

⚠ WARNING

Battery replacement

Do not replace batteries unless you have been well informed of maintenance work and safety.

When opening the cabinet and replacing batteries, be careful not to touch any high-voltage circuit (marked with ⚠ and covered with an electric shock prevention cover).

When the electric shock prevention cover has been removed, you will get an electric shock if you touch any high-voltage circuit.

⚠ WARNING

Fuse replacement

Before replacing a blown fuse, it is necessary to remove the cause of the blown fuse.

So, do not replace fuses unless you have been well informed of maintenance work and safety.

When opening the cabinet and replacing fuses, be careful not to touch any high-voltage circuit (marked with ⚠ and covered with an electric shock prevention cover).

When the electric shock prevention cover has been removed, you will get an electric shock if you touch any high-voltage circuit.

⚠ CAUTION

Handle the batteries gently. Do not drop them or give a strong impact to them.

NOTE

Each control unit uses batteries, because it must hold data, such as programs, offset values, and parameters even when AC power for it is off.

Back up the data (programs, offset values, and parameters) regularly.

If the battery voltage becomes low, a low battery voltage alarm is displayed on the machine operator's panel or screen.

Once the battery voltage alarm has been displayed, replace the batteries within one week. Otherwise, the memory contents may be lost.

For the battery replacement procedure, see Section 4.4, "BATTERIES".

Recollect or discard old batteries in the way your local autonomous community specifies.

© MyFANUC B5B0D8428C0144A78A5F4CA87F2C262E

© MyFANUC B5B0D8428C0144A78A5F4CA87F2C262E

PREFACE

This manual describes the information, that is, electrical and structural specifications, needed in connecting machine tools to the control and peripheral units stated below. The manual covers the range shown on the total connection diagrams mentioned in Chapter 2. The manual briefly describes the units that are used in common with the FANUC control units, such as FANUC I/O units, FANUC PANEL *i*H Pro, and servo motors. It also gives supplementary information for use of these units with the control units. For detailed specifications, refer to the manuals of these components.
For options not covered in this manual, also refer to the manuals of these components.

Applicable models

The models covered by this manual, and their abbreviations are :

Model name	Abbreviation		
FANUC Series 0*i*– TF Plus	0*i*–F Plus	0*i*–TF Plus	Series 0*i*
FANUC Series 0*i*– MF Plus		0*i*–MF Plus	

Organization of this manuals

This manual consists of chapters 1 to 12 and appendixes at the end of the book.

Chapter and title	Contents
Chapter 1 CONFIGURATION	Provides general information related to the connection, as well as an introduction to detailed information.
Chapter 2 TOTAL CONNECTION DAIGRAMS	Describes how to connect peripheral units.
Chapter 3 INSTALLATION	Describes the installation requirements for using.
Chapter 4 POWER SUPPLY CONNECTION	Describes how to make connections related to the power supply.
Chapter 5 CONNECTION TO CNC PERIPHERALS	Describes how to connect the peripheral devices.
Chapter 6 SERVO AND SPINDLE INTERFACES	Describes how to connect the servo or spindle amplifiers. Also explains how to connect separate detector interface units.
Chapter 7 CONNECTION TO FANUC I/O Link *i*	Describes how to connect machine interface I/O units using the FANUC I/O Link *i*.
Chapter 8 UNITS CONNECTED TO FANUC I/O Link *i*	Describes major units that correspond to the FANUC I/O Link *i*.
Chapter 9 STOP AND EMERGENCY STOP	Describes how to handle the emergency stop signal. A lot of important information regarding safety is included. Be sure to read It.
Chapter 10 CONNECTION TO OTHER NETWORKS	Describes how to connect to networks.
Chapter 11 CONNECTION WITH FANUC PANEL *i*H Pro AND COMMERCIAL PERSONAL COMPUTERS	Describes how to connect to the FANUC PANEL *i*H Pro or a commercial personal computer, using the high-speed serial bus (HSSB) or Ethernet.
Chapter 12 PANEL *i*H Pro	Describes how to connect a PANEL *i*H Pro.
APPENDIX	A) OUTLINE DRAWINGS OF UNITS AND CONNECTORS B) 20-PIN INTERFACE CONNECTORS AND CABLES C) CONNECTION CABLE (SUPPLIED FROM US) D) OPTICAL FIBER CABLE E) MEMORY CARD INTERFACE F) HOW TO ATTACH THE KEYBOARD COVER

© MyFANUC B5B0D8428C0144A78A5F4CA87F2C262E

Related manuals of 0*i*-F Plus

The following table lists the manuals related to 0*i*-F Plus. This manual is indicated by an asterisk (*).

Manual name	Specification number	
FANUC Series 0*i*-MODEL F Plus DESCRIPTIONS	B-64692EN	
FANUC Series 0*i*-MODEL F Plus CONNECTION MANUAL (HARDWARE)	B-64693EN	*
FANUC Series 0*i*-MODEL F Plus CONNECTION MANUAL (FUNCTION)	B-64693EN-1	
FANUC Series 0*i*-MODEL F Plus OPERATOR'S MANUAL (Common to Lathe System/Machining Center System)	B-64694EN	
FANUC Series 0*i*-MODEL F Plus OPERATOR'S MANUAL (For Lathe System)	B-64694EN-1	
FANUC Series 0*i*-MODEL F Plus OPERATOR'S MANUAL (For Machining Center System)	B-64694EN-2	
FANUC Series 0*i*-MODEL F Plus MAINTENANCE MANUAL	B-64695EN	
FANUC Series 0*i*-MODEL F Plus PARAMETER MANUAL	B-64700EN	
Programming		
Macro Executor PROGRAMMING MANUAL	B-63943EN-2	
Macro Compiler PROGRAMMING MANUAL	B-66263EN	
C Language Executor PROGRAMMING MANUAL	B-63943EN-3	
PMC		
PMC PROGRAMMING MANUAL	B-64513EN	
Network		
PROFIBUS-DP Board CONNECTION MANUAL	B-63993EN	
Fast Ethernet / Fast Data Server OPERATOR'S MANUAL	B-64014EN	
DeviceNet Board CONNECTION MANUAL	B-64043EN	
FL-net Board CONNECTION MANUAL	B-64163EN	
CC-Link Board CONNECTION MANUAL	B-64463EN	
Industrial Ethernet CONNECTION MANUAL	B-64013EN	
Operation guidance function		
MANUAL GUIDE *i* (Common to Lathe System/Machining Center System) OPERATOR'S MANUAL	B-63874EN	
MANUAL GUIDE *i* (For Machining Center System) OPERATOR'S MANUAL	B-63874EN-2	
MANUAL GUIDE *i* (Set-up Guidance Functions) OPERATOR'S MANUAL	B-63874EN-1	
MANUAL GUIDE 0*i* OPERATOR'S MANUAL	B-64434EN	
Dual Check Safety		
Dual Check Safety CONNECTION MANUAL	B-64483EN-2	

© MyFANUC B5B0D8428C0144A78A5F4CA87F2C262E

Related manuals of SERVO MOTOR αis/αil/βis/βi series

The following table lists the manuals related to SERVO MOTOR αis/αi/βis/βi series

Manual name	Specification number
FANUC AC SERVO MOTOR αi-B/αi series DESCRIPTIONS	B-65262EN
FANUC AC SERVO MOTOR βi-B/βi series DESCRIPTIONS	B-65302EN
FANUC AC SPINDLE MOTOR αi-Bseries FANUC AC SPINDLE MOTOR βi-B series DESCRIPTIONS	B-65452EN
FANUC SERVO AMPLIFIER αi-B series DESCRIPTIONS	B-65412EN
FANUC SERVO AMPLIFIER βi-B series DESCRIPTIONS	B-65422EN
FANUC ACSERVO MOTOR αi-B/αi series FANUC AC SPINDLE MOTOR αi-B series FANUC SERVO AMPLIFIER αi-B series FANUC AC SERVO MOTOR βi-B/βi series FANUC AC SPINDLE MOTOR βi-B series FANUC SERVO AMPLIFIER βi-B series MAINTENANCE MANUAL	B-65515EN
FANUC SYNCHRONOUS BUILT-IN SERVO MOTOR DiS series DESCRIPTIONS	B-65332EN
FANUC SYNCHRONOUS BUILT-IN SERVO MOTOR DiS-B series DESCRIPTIONS	B-65492EN
FANUC LINEAR MOTOR LiS series DESCRIPTIONS	B-65382EN
FANUC BUILT-IN SPINDLE MOTOR BiI-B series DESCRIPTIONS	B-65462EN
FANUC SYNCHROUNOUS BUILT-IN SPINDLE MOTOR BiS series DESCRIPTIONS	B-65342EN
FANUC AC SERVO MOTOR αi series FANUC AC SERVO MOTOR βi series FANUC LINEAR MOTOR LiS series FANUC SYNCHRONOUS BUILT-IN SERVO MOTOR DiS series PARAMETER MANUAL	B-65270EN
FANUC AC SPINDLE MOTOR αi series FANUC AC SPINDLE MOTOR βi series BUILT-IN SPINDLE MOTOR Bi series PARAMETER MANUAL	B-65280EN

Related manuals of FANUC PANEL iH Pro

The following table lists the manuals related to FANUC PANEL iH Pro.

Manual name	Specification number
FANUC PANEL i / iH Pro CONNECTION AND MAINTENANCE MANUAL	B-64683EN
FANUC PANEL iH Pro CONNECTION AND MAINTENANCE MANUAL	B-64703EN

Related manuals of FANUC I/O Unit

The following table lists the manuals related to FANUC I/O Unit.

Manual name	Specification number
FANUC I/O Unit-MODEL A CONNECTION AND MAINTENANCE MANUAL	B-61813E
FANUC I/O Unit-MODEL B CONNECTION AND MAINTENANCE MANUAL	B-62163E
Handy Machine Operator's Panel CONNECTION MANUAL	B-63753EN

Training

- FANUC runs FANUC ACADEMY to train those who will be involved in the connection, maintenance, and operation of FANUC products. It is recommended to attend the class so you will be able to use the products effectively.
  Visit the following web site for detailed descriptions of its curriculum.
  https://www.fanuc.co.jp/

© MyFANUC B5B0D8428C0144A78A5F4CA87F2C262E

© MyFANUC B5B0D8428C0144A78A5F4CA87F2C262E

TABLE OF CONTENTS

SAFETY PRECAUTIONS s-1

PREFACE p-1

1 CONFIGURATION 1
1.1 CONTROL UNIT CONFIGURATION AND COMPONENT NAMES 1
1.1.1 Configurations of LCD-mounted Type Control Units 1
1.1.2 Configurations of Optional Boards 5
1.1.3 Configurations of Stand-alone Type Control Units 5
1.2 HARDWARE OVERVIEW 7
1.2.1 LCD-mounted Type Control Unit Overview 7
1.2.2 Stand-alone Type Control Unit Overview 8

2 TOTAL CONNECTION DIAGRAMS 9

3 INSTALLATION 13
3.1 ENVIRONMENTAL REQUIREMENTS OUTSIDE THE CABINET 13
3.1.1 Environmental Conditions outside the Cabinet 13
3.1.2 Installation Conditions of the Control Unit 14
3.2 CAUTIONS REGARDING THE INSTALLATION DESIGN OF MACHINE TOOL POWER MAGNETICS CABINETS 15
3.3 THERMAL DESIGN OF THE MACHINE TOOL MAGNETIC CABINET 17
3.3.1 Temperature Rise within the Machine Tool Magnetic Cabinet 17
3.3.2 Heat Output of Each Unit 17
3.3.3 Thermal Design of Operator's Panel 18
3.4 COUNTERMEASURES AGAINST NOISE AND GROUNDING 19
3.4.1 Grounding as Noise Suppression Measures 19
3.4.1.1 Grounding methods 19
3.4.1.2 Cabinet 22
3.4.2 Protective Ground (Grounding for Protection against Indirect Contact) 24
3.4.3 Connecting the Ground Terminal of the Control Unit 25
3.4.4 Separating Signal Lines 28
3.4.5 Noise Suppressor 29
3.4.6 Cable Clamp and Shield Processing 30
3.4.7 Lightning Surge Absorber Installation 32
3.5 INSTALLING THE CONTROL UNIT 34
3.5.1 Installing the LCD-mounted Type Control Unit 34
3.5.2 Installing the Stand-alone Type Control Unit 35
3.6 TIGHTENING TORQUE FOR FASTENING UNITS AND GROUND TERMINALS 36
3.7 DUSTPROOF MEASURES FOR CABINETS AND PENDANT BOXES 36
3.8 ATTACHING SCREW CAPS 39
3.9 INSTALLATION CONDITION FOR UL RECOGNITION 40

4 POWER SUPPLY CONNECTION 41

© MyFANUC B5B0D8428C0144A78A5F4CA87F2C262E

4.1 24 VDC POWER (INSULATION AC/DC CONVERTOR) 41
4.1.1 Connecting 24 VDC Power 41
4.1.2 24 VDC Power Supply Specification 43
4.1.3 Power Capacity of 24 VDC Power Supplies 45
4.2 TURNING ON AND OFF THE POWER TO THE CONTROL UNIT 46
4.2.1 Power-on Sequence 46
4.2.2 Power-off Sequence 47
4.3 CABLE FOR POWER SUPPLY TO CONTROL UNIT 49
4.4 BATTERIES 50
4.4.1 Battery for Memory Backup in the Control Unit (3 VDC) 50
4.4.1.1 Replacing the lithium battery 51
4.4.1.2 Replacing commercially available alkaline dry cells (size D) 53
4.4.2 Battery for Separate Absolute Pulsecoders (6VDC) 55
4.4.3 Battery for Absolute Pulse Coder Built into the Motor (6VDC) 56

5 CONNECTION TO CNC PERIPHERALS 57
5.1 CONNECTION BETWEEN THE LCD-MOUNTED TYPE CONTROL UNIT AND MDI UNIT 57
5.1.1 Overview 57
5.1.2 Connection with the MDI Unit 58
5.1.3 Key Layout of MDI Unit 60
5.1.4 Keyboard Cover 62
5.2 CONNECTION WITH INPUT/OUTPUT DEVICES 63
5.2.1 Overview 63
5.2.2 Connecting I/O Devices 63
5.2.3 RS-232C Serial Port 64
5.2.4 RS-232C Interface Specification 66
5.3 CONNECTING THE HIGH-SPEED SKIP (HDI) 73
5.3.1 Connecting the High-speed Skip (HDI) 73
5.3.2 Input Signal Rules for the High-speed Skip (HDI) 75
5.4 LINKING THE ETHERNET INTERFACE 76
5.4.1 Connection to the Ethernet Interface 76
5.4.2 Specification of Twisted-Pair Cable 78
5.4.3 Network Installation 80
5.4.4 Ethernet Connector Panel 81
5.5 USB PORT 84
5.6 CONNECTION BETWEEN THE STAND-ALONE TYPE CONTROL UNIT AND DISPLAY UNIT AND BETWEEN THE DISPLAY UNIT AND MDI UNIT 86
5.6.1 Overview 86
5.6.2 With the Display Unit 86
5.7 CONNECTION TO THE TOUCH PANEL 87
5.7.1 Connection of the LCD Unit with a Touch Panel 87
5.7.2 External Touch Panel Interface 88

6 SERVO AND SPINDLE INTERFACES 90
6.1 OVERVIEW 90
6.2 INTERFACE TO THE AMPLIFIERS 92
6.2.1 Number of Units That Can Be Connected 93
6.3 SEPARATE DETECTOR INTERFACE 93
6.3.1 Overview 93
6.3.2 Connection Diagram 95

© MyFANUC B5B0D8428C0144A78A5F4CA87F2C262E

6.3.3 Separate Detector Interface Unit Specification 96
6.3.4 Connection of Power Supply....96
6.3.5 Separate Detector Interface (Digital Input) 98
6.3.5.1 FANUC serial interface 98
6.3.5.2 Parallel interface 99
6.3.5.3 Input signal requirements (parallel interface) 100
6.3.6 Overview of the Analog Basic Unit 102
6.3.7 Connection Diagrams of an Analog Basic Unit 103
6.3.8 Separate Detector Interface (Analog Input)....105
6.3.8.1 Analog 1Vp-p interface 105
6.3.8.2 Input signal requirements (analog 1Vp-p interface) 106
6.3.8.3 Method for checking the encoder signals 107
6.3.9 Connection of Battery for Absolute Position Detector....108
6.3.10 Connection Between the Basic Unit and Additional Unit....109
6.3.11 Connector Locations....110
6.3.12 Installation....111
6.3.13 Notes on Installing a Separate Detector Interface Unit 112
6.4 ANALOG SPINDLE 114
6.5 POSITION CODER....116

7 CONNECTION TO FANUC I/O Link *i* 120
7.1 OVERVIEW 120
7.2 CONNECTION....121
7.2.1 Connection of I/O Link *i* by Electric Cable....122
7.2.2 Connection of FANUC I/O Link *i* by Optical Fiber Cable 123
7.2.3 Connection When Multiple Channels of the I/O Link *i* is Used 125
7.3 ASSIGNMENT FOR I/O UNITS....133
7.3.1 Assignment of Signals....133
7.3.2 Fixed Signals....133
7.3.3 Status Alarm....134
7.4 MANUAL PULSE GENERATOR 135
7.4.1 Manual Pulse Generator Connection....135
7.4.2 Cable Length for Manual Pulse Generator....136
7.4.3 Manual Pulse Generator Signal Specifications 136
7.5 POWER SUPPLY....137

8 UNITS CONNECTED TO FANUC I/O Link *i* 138
8.1 GENERAL UNITS....138
8.2 CONNECTION OF I/O MODULE FOR CONNECTOR PANEL 142
8.2.1 Configuration 142
8.2.2 Connection Diagram....143
8.2.3 Module Specifications....144
8.2.4 Connection of the Basic Module, and Extension Modules A and B 146
8.2.4.1 Connector pin arrangement....146
8.2.4.2 DI (Input Signal) connection 147
8.2.4.3 DO (Output Signal) connection 150
8.2.4.4 DI/DO signal specifications....151
8.2.5 Connection of Extension Module C (2A Output Module) 153
8.2.5.1 Connector pin arrangement....153
8.2.5.2 2A Output signal connection 154
8.2.5.3 2A output signal specifications....155
8.2.6 Connection of Extension Module D (Analog Input Module)....155
8.2.6.1 Analog Input connector pin allocation 155
8.2.6.2 Analog input signal connections....156

© MyFANUC B5B0D8428C0144A78A5F4CA87F2C262E

8.2.6.3 Analog input signal specifications 157
8.2.6.4 Channel selection and A/D conversion data 158
8.2.7 Manual Pulse Generator Connection 160
8.2.8 Connection of Basic and Extension Modules 160
8.2.9 Module Installation 161
8.2.10 Other Notes 166
8.2.11 Rotary Switch Setting 168
8.2.12 Connection of the Grounding Terminal of the Module 170
8.2.13 Terminal Conversion Adapter 171
8.2.13.1 Connection diagram 172
8.2.13.2 Component names 173
8.2.13.3 External view and dimensions 176
8.2.13.4 Installation 177
8.2.13.5 Cable connection to the terminal block 178
8.2.13.6 Connection 180
8.3 CONNECTION OF I/O MODULE FOR OPERATOR'S PANEL (FOR MATRIX INPUT) 185
8.3.1 Overall Connection Diagram 185
8.3.2 Power Connection 186
8.3.3 DI/DO Connector Pin Arrangement 187
8.3.4 DI (General-purpose Input Signal) Connection 188
8.3.5 DI (Matrix Input Signal) Connection 190
8.3.6 DO (Output Signal) Connection 191
8.3.7 Manual Pulse Generator Connection 194
8.3.8 External View 195
8.3.9 Specifications 196
8.3.10 Other Notes 199
8.3.11 Connection of the Grounding Terminal of the Module 201
8.4 CONNECTION OF I/O MODULE FOR OPERATOR'S PANEL AND I/O MODULE FOR POWER MAGNETICS CABINET 202
8.4.1 Overall Connection Diagram 202
8.4.2 Power Connection 203
8.4.3 DI/DO Connector Pin Arrangement 204
8.4.4 DI (General-purpose Input Signal) Connection 205
8.4.5 DO (Output Signal) Connection 209
8.4.6 Manual Pulse Generator Connection 210
8.4.7 External View 211
8.4.8 Specifications 212
8.4.9 Other Notes 214
8.4.10 Connection of the Grounding Terminal of the Module 216
8.5 CONNECTION OF I/O MODULE TYPE-2 FOR CONNECTOR PANEL 217
8.5.1 Configuration 217
8.5.2 Connector Layout Diagram 218
8.5.3 Connection Diagram 219
8.5.4 Module Specifications 220
8.5.5 DI/DO Connector Pin Assignment 221
8.5.6 DI (Input Signal) Connection 222
8.5.7 DO (Output Signal) Connection 229
8.5.8 DI/DO Signal Specifications 233
8.5.9 Power Supply Connection 235
8.5.10 Manual Pulse Generator Connection 235
8.5.11 Connection between Modules 236
8.5.12 Unit Dimensions 237
8.5.13 Mounting the Module 238

© MyFANUC B5B0D8428C0144A78A5F4CA87F2C262E

8.5.14 Connector Panel Printed Circuit Board 239
8.5.15 Other Notes 242
8.5.16 Connection of the Grounding Terminal of the Module 244
8.6 CONNECTION OF TERMINAL TYPE I/O MODULE 245
8.6.1 Overview 245
8.6.2 Module Specifications 246
8.6.2.1 Types of modules 246
8.6.2.2 Installation conditions 247
8.6.2.3 I/O signal specifications 247
8.6.2.4 Power supply rating 252
8.6.2.5 Heat dissipation 252
8.6.2.6 Weight 252
8.6.2.7 Applicable wire 253
8.6.3 External View and Dimensions 254
8.6.3.1 Dimensions (common to the modules) 254
8.6.3.2 Dimensions in a maximum configuration (one basic module + three extension modules) 254
8.6.3.3 Component names 255
8.6.4 Installation 259
8.6.5 Connection 261
8.6.5.1 Overall connection diagram 261
8.6.5.2 Power connection 262
8.6.5.3 Signal assignment on terminal blocks 263
8.6.5.4 DI/DO connection 267
8.6.5.5 Manual pulse generator connection 276
8.6.5.6 Inter-module connection 276
8.6.5.7 Cable connection to a terminal block 277
8.6.5.8 Detaching a terminal block 278
8.6.5.9 Connection of the ground terminal 279
8.6.6 Settings 280
8.6.6.1 Address map 280
8.6.6.2 Channel selection and A/D conversion data for extension module D 281
8.6.6.3 Channel selection and D/A conversion data for extension module E 283
8.6.6.4 Setting the rotary switch 286
8.6.7 Others 287
8.6.7.1 Method of common pin expansion 287
8.6.7.2 Parallel DO (output signal) connection 289
8.7 I/O Link CONNECTION UNIT 290
8.7.1 Overview 290
8.7.2 Specification 291
8.7.3 Installation 293
8.7.4 Connection 295
8.7.4.1 I/O Link connection 295
8.7.4.2 Power connection 296
8.8 CONNECTION TO MACHINE OPERATOR'S PANEL 297
8.8.1 Overview 297
8.8.2 Total Connection Diagram 303
8.8.3 DI/DO Address Map 306
8.8.4 Each Connections 308
8.8.4.1 Pin assignment 308
8.8.4.2 Power supply connection 312
8.8.4.3 I/O Link *i* connection 313
8.8.4.4 Using the channel 2 of I/O Link *i* 313
8.8.4.5 Emergency stop signal connection 316
8.8.4.6 Power ON/OFF control signal connection 318
8.8.4.7 General-purpose DI signal connection 321

© MyFANUC B5B0D8428C0144A78A5F4CA87F2C262E

8.8.4.8 General-purpose DO signal connection 327
8.8.5 Manual Pulse Generator 329
8.8.5.1 Manual pulse generator connection 329
8.8.5.2 Pendant type manual pulse generator connection 329
8.8.6 Connector (on the cable side) Specifications 330
8.8.7 DI/DO Addresses for the Keyboard 331
8.8.8 Code Output for the Rotary Switch 332
8.8.9 Outline 334
8.8.9.1 Outline of main panel 334
8.8.9.2 Outline of Safety machine operator's panel 335
8.8.9.3 Outline of Safety machine operator's panel type B 336
8.8.9.4 Outline of safety machine operator's panel-BK10 337
8.8.9.5 Outline of safety machine operator's panel-BK15 338
8.8.9.6 Outline of sub panel AA 339
8.8.9.7 Outline of sub panel D 340
8.8.9.8 Outline of sub panel-BK10 341
8.8.9.9 Connector locations of main panel 342
8.8.9.10 Connector locations of safety machine operator's panel and safety machine operator's panel-BK10 342
8.8.9.11 Connector locations of safety machine operator's panel type B and safety machine operator's panel-BK15 343
8.8.10 Specifications of the Machine Operator's Panel 343
8.8.10.1 Installation conditions 343
8.8.10.2 Order specification 343
8.8.10.3 Main panel specification 344
8.8.10.4 Each safety machine operator's panel 345
8.8.10.5 Sub panel AA and D,Sub panel-BK10 specification 345
8.8.10.6 Power supply specification 345
8.8.10.7 Heat output 345
8.8.10.8 General-purpose DI signal definition 346
8.8.10.9 General-purpose DO signal definition 346
8.8.11 Keyboard 347
8.8.11.1 Meaning of key symbols 347
8.8.11.2 Detachable key top on the main panel 348
8.8.11.3 Keyboard cover 349
8.8.12 DO (Output Signal) Error Detection 350
8.9 CONNECTION OF OPERATOR'S PANEL CONNECTION UNIT (SOURCE DO) 352
8.9.1 Overall Connection Diagram 352
8.9.2 Power Connection 352
8.9.3 DI/DO Connector Pin Arrangement 353
8.9.4 DI (Input Signal) Connection 354
8.9.5 DO (Output Signal) Connection 361
8.9.6 External View 365
8.9.7 Specifications 366
8.9.8 Other Notes 367
8.10 CONNECTION OF SAFETY IO UNIT 369
8.10.1 Overview 369
8.10.2 Total Connection Diagram 369
8.10.3 Power Supply Connection 369
8.10.4 I/O Link *i* Connection 370
8.10.5 DI/DO Address 370
8.10.6 Pin Assignment of DI/DO 371
8.10.7 DI/DO Connection 372
8.10.8 Outline of Safety IO Unit 380
8.10.9 Connector locations of Safety IO Unit 381

© MyFANUC B5B0D8428C0144A78A5F4CA87F2C262E

8.10.10 Color labels for connectors of Safety IO Unit 382
8.10.11 Connector specification of Safety IO Unit 383
8.10.12 Specifications of Safety IO Unit 384
8.10.13 DO (Output Signal) Error Detection 385
8.11 CONNECTION OF I/O MODULE FOR OPERATOR'S PANEL SUPPORTING SAFETY FUNCTION 386
8.11.1 Overview 386
8.11.2 Connection Diagram 386
8.11.3 Power Connection 387
8.11.4 DI/DO Address Map 388
8.11.5 DI/DO Connector Pin Arrangement 389
8.11.6 DI (General-purpose Input Signal) Connection 391
8.11.7 DO (Output Signal) Connection 394
8.11.8 Manual Pulse Generator Connection 395
8.11.9 External View 396
8.11.10 Specifications 397
8.11.11 DO (output signal) Error Detection 398
8.12 I/O UNIT FOR POWER MAGNETICS CABINET 399
8.12.1 Overall Connection Diagram 399
8.12.2 Power Connection 400
8.12.3 DI/DO Connector Pin Arrangement 401
8.12.4 DI (General-purpose Input Signal)Connection 402
8.12.5 DO (Output Signal) Connection 409
8.12.6 Manual Pulse Generator Connection 413
8.12.7 External View 413
8.12.8 GND Cable Connection 414
8.12.9 Specifications 415
8.12.10 Other Notes 417

9 STOP AND EMERGENCY STOP 419
9.1 STOP MODES 419
9.2 SHUTTING OFF THE MOTOR POWER 419
9.3 STOPPING THE SPINDLE MOTOR 420
9.4 STOPPING THE SERVO MOTOR 420
9.5 EMERGENCY STOP SIGNAL 421
9.6 CAUTIONS ABOUT MULTI-PATH CONTROL 425

10 CONNECTION TO OTHER NETWORKS 426

11 CONNECTION WITH FANUC PANEL *i*H Pro AND COMMERCIAL PERSONAL COMPUTERS 427
11.1 OVERVIEW 427
11.2 CAUTIONS 427
11.3 CONNECTION USING THE HIGH-SPEED SERIAL BUS (HSSB) 427
11.3.1 Overview 427
11.3.2 Connection Diagram 428
11.3.3 Specifications of a Commercial PC 428
11.3.4 Installation Environment 429
11.3.5 Handling Precautions 429
11.3.6 Procedure for Installing Personal Computer Interface Boards 430
11.3.7 Cable Connection 430
11.4 CONNECTION USING Ethernet 431

© MyFANUC B5B0D8428C0144A78A5F4CA87F2C262E

11.4.1 Overview 431
11.4.2 Connection Diagram 431

12 PANEL *i*H Pro 432

APPENDIX

A OUTLINE DRAWINGS OF UNITS AND CONNECTORS 435

B 20-PIN INTERFACE CONNECTORS AND CABLES 470

B.1 BOARD-MOUNTED CONNECTORS 470
B.1.1 Vertical-type Connectors 470
B.1.2 Straight and Right-angled Connectors (for Spring and Screw-fixing Connector Housings) 470
B.2 CABLE CONNECTORS 471
B.2.1 Strand Wire Press-mount Connector 471
B.2.2 Soldering Type Connector 472
B.3 RECOMMENDED CONNECTORS, APPLICABLE HOUSINGS, AND CABLES 473
B.3.1 Recommended Connectors 474
B.3.2 Applicable Cables 474

C CONNECTION CABLE (SUPPLIED FROM US) 481

D OPTICAL FIBER CABLE 484

E MEMORY CARD INTERFACE 493

F HOW TO ATTACH THE KEYBOARD COVER 495

© MyFANUC B5B0D8428C0144A78A5F4CA87F2C262E

1 CONFIGURATION

1.1 CONTROL UNIT CONFIGURATION AND COMPONENT NAMES

Control units can roughly be categorized either as an LCD-mounted type or stand-alone type. The LCD-mounted type is one having both control and indicator sections in it. With the stand-alone type, the control and indicator sections are separated from each other, each being configured as an independent unit. Described below is the configuration of each type. This manual focuses on how to attach the connectors shown in the configuration diagrams to each device.

1.1.1 Configurations of LCD-mounted Type Control Units

LCD-mounted type control units

Type	Screen size	MDI	Touch panel	Number of option slots	Number of horizontal soft keys	Number of vertical soft keys
Type 0	10.4"	Separate	Without / With	Without / 2	10+2	8+1
	15"					
Type 1,3,5	10.4"	Separate	Without / With			
		With (horizontal/ vertical)	Without			

* The control unit with touch panel is not equipped with horizontal and vertical soft keys.

⚠ CAUTION

The touch panel is a device designed to be operated by touching directly its screen. Touch panel is possible to be operated with the gloves or bare hand. It is possible to get a better operating feeling when using a FANUC-supplied exclusive touch panel pen (A02B-0236-K111).
Please be careful not to press too strongly when operating with a finger. There is a risk that internal circuit of the touch panel fails or the glass cracks.
If you press the screen with the pointed pen or sharp tool like a driver, it may cause failure or the surface of the display may be scratched. Be sure to keep away from such improper use.

⚠ CAUTION

Do not poke the surface of the display with a sharp tool like a driver, or hit strongly with a something hard like a grip of driver. It may cause failure or the surface of the display may be scratched.

NOTE

The indicators having a touch panel has a protection sheet attached to its front surface. Explanations about how to replace the protection sheet, refer to the FANUC Series 0*i*-MODEL F Plus MAINTENANCE MANUAL (B-64695EN).

© MyFANUC B5B0D8428C0144A78A5F4CA87F2C262E

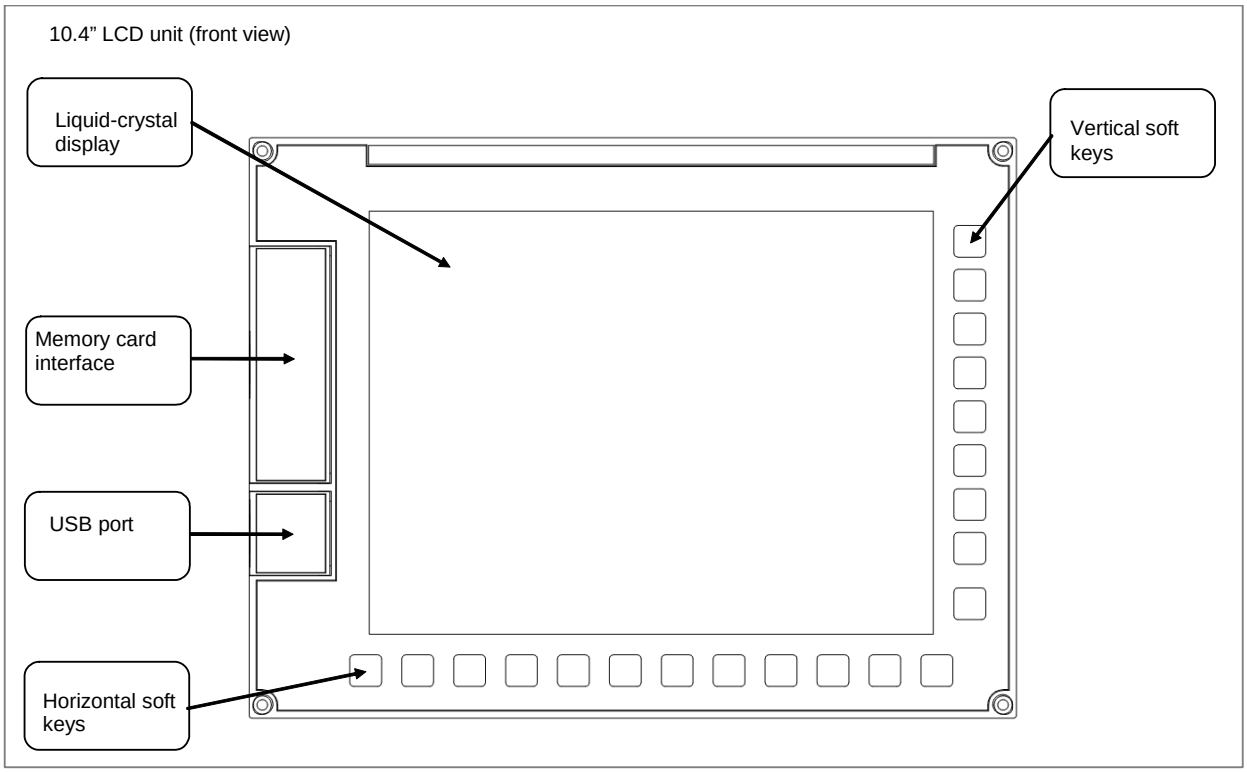

NOTE

1 This figure shows the 10.4” LCD-mounted control unit as viewed from the front. The basic configuration of the other control unit models is the same, as viewed from the front.

2 The LCD (liquid-crystal display) has been fabricated using an extreme precision technology. However, some of their pixels may fail to light or stay constantly lighting because of their characteristics. Please be forewarned that these phenomena are not faults.

© MyFANUC B5B0D8428C0144A78A5F4CA87F2C262E

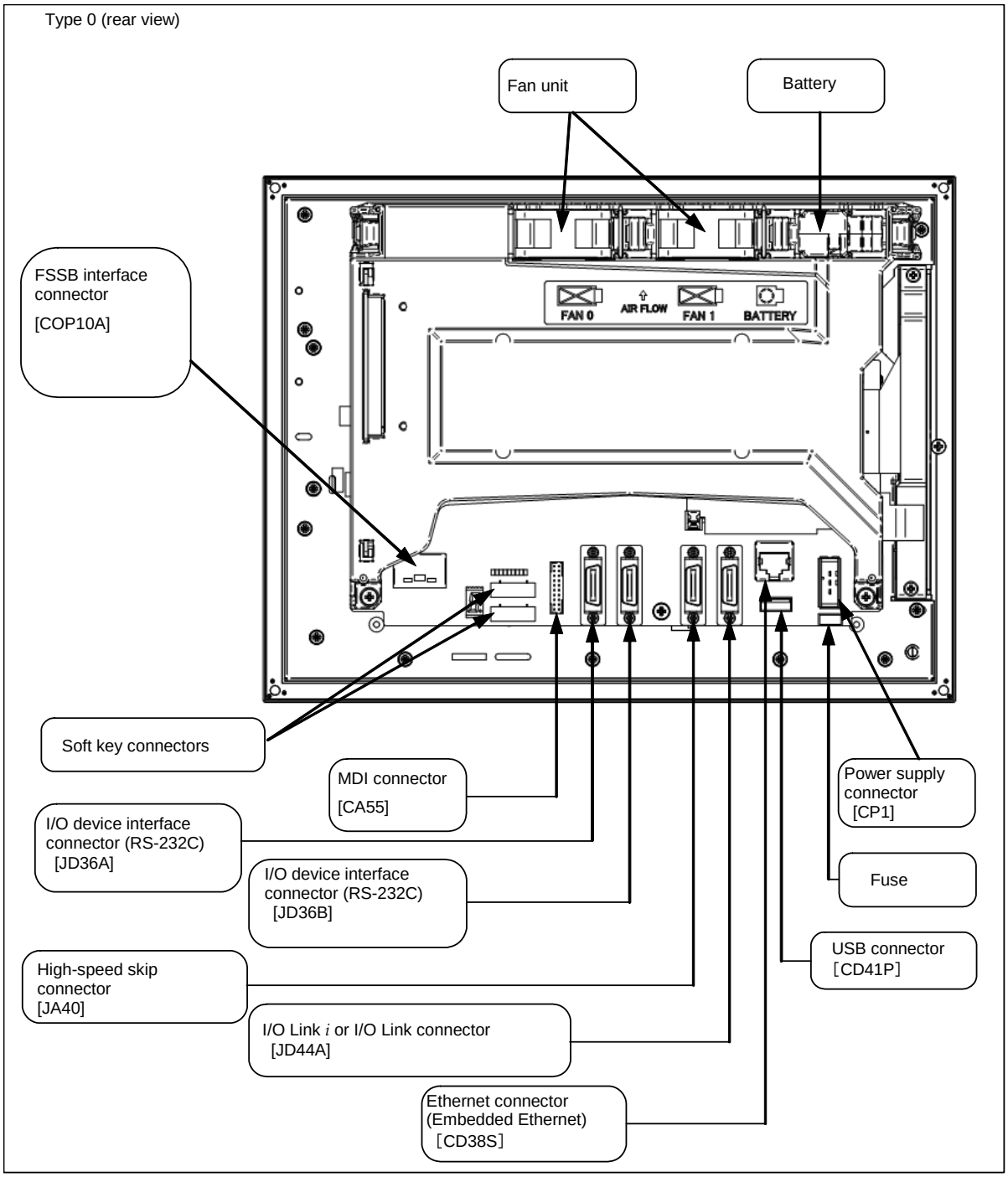

NOTE

1 This figure shows a LCD-mounted control unit (10.4”LCD) as viewed from the rear.
2 The numbers in brackets [ ] in the figures are connector numbers.

© MyFANUC B5B0D8428C0144A78A5F4CA87F2C262E

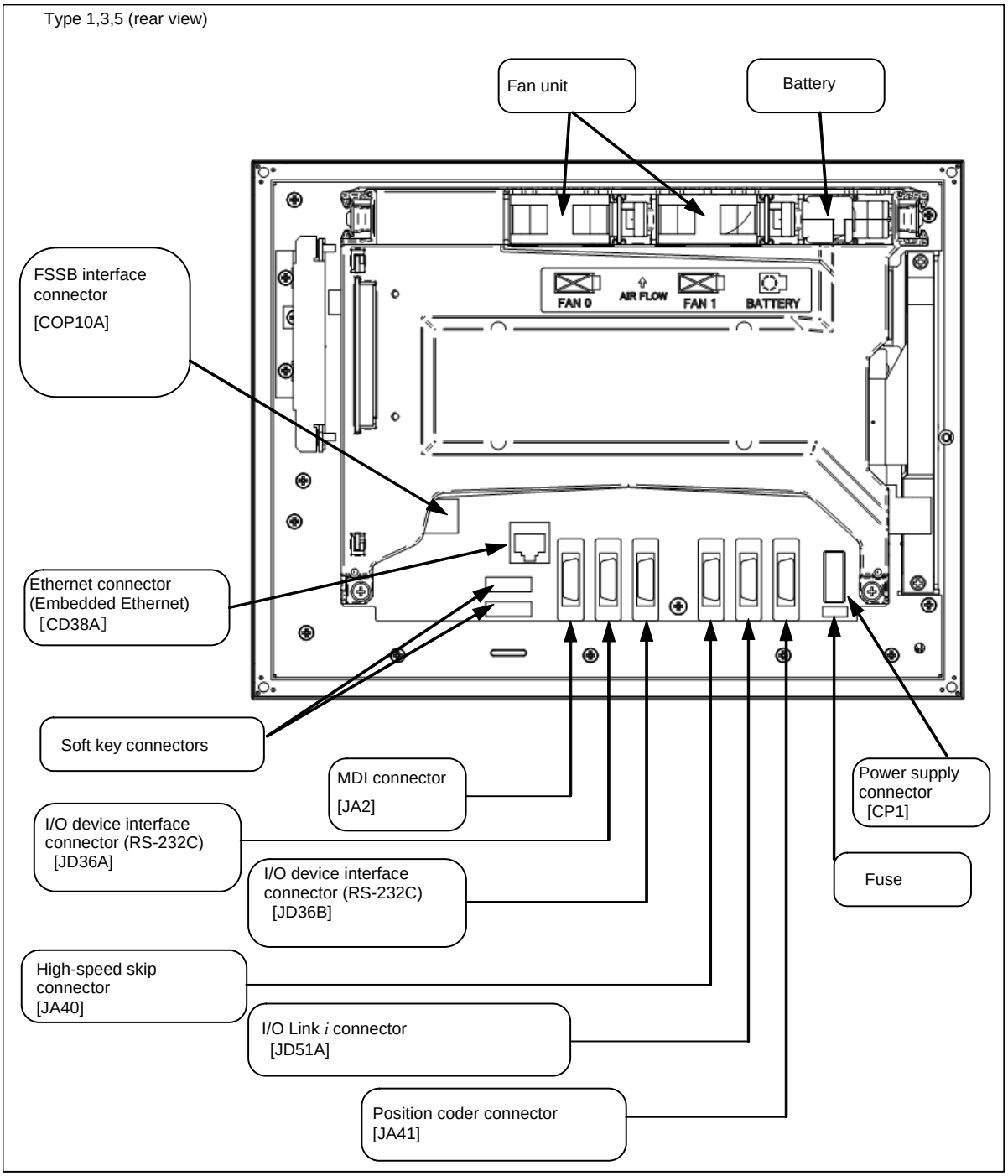

NOTE

1 This figure shows a LCD-mounted control unit (10.4”LCD) as viewed from the rear.
2 The numbers in brackets [ ] in the figures are connector numbers.

© MyFANUC B5B0D8428C0144A78A5F4CA87F2C262E

1.1.2 Configurations of Optional Boards

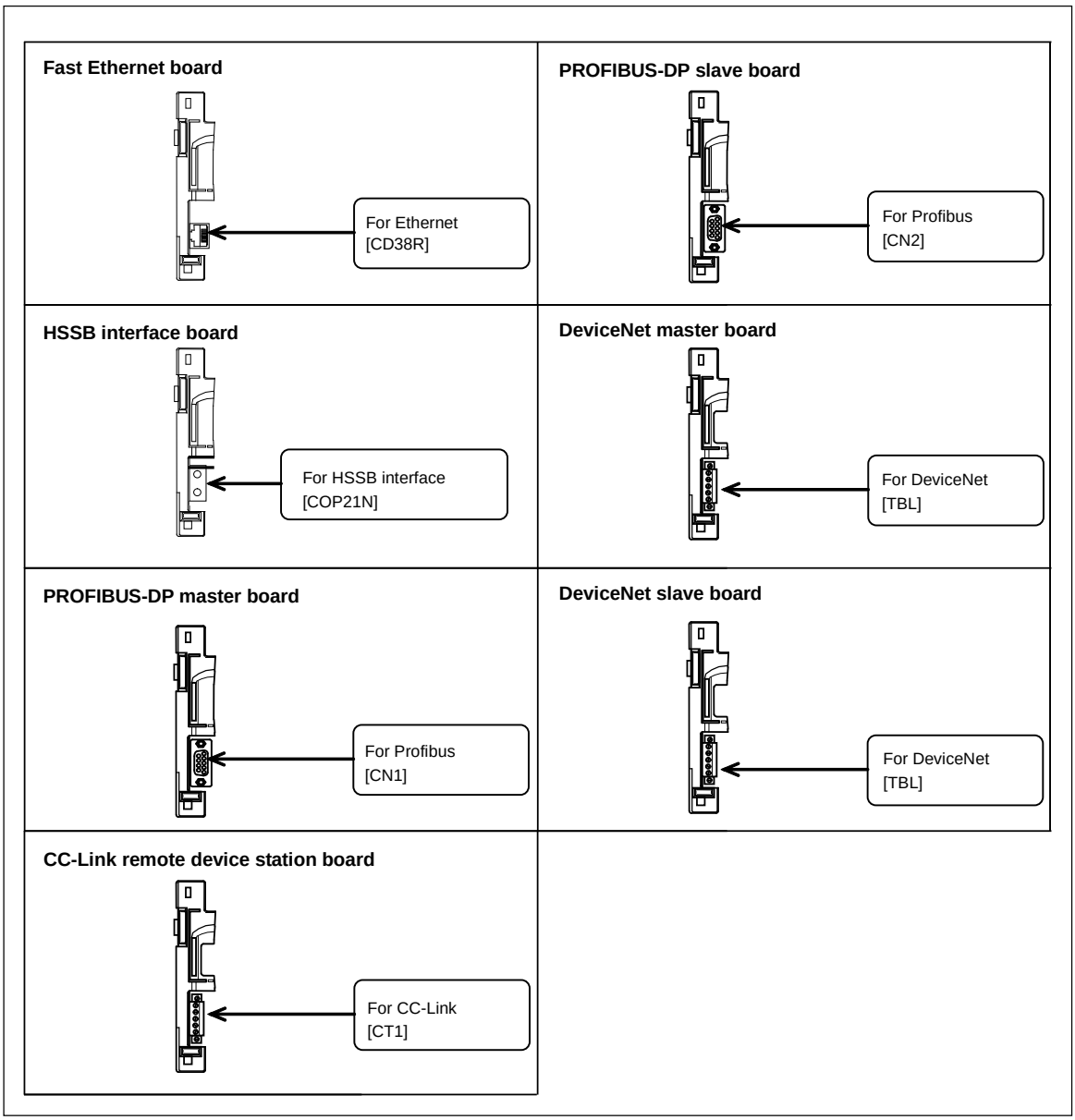

NOTE

The numbers in brackets [ ] in the figures are connector numbers.
The Fast Ethernet board may be used also as data server or FL-net functions, depending on the settings of parameters.

1.1.3 Configurations of Stand-alone Type Control Units

Stand-alone type control units

Slot rack name	Number of option slots
2-slot rack	2

© MyFANUC B5B0D8428C0144A78A5F4CA87F2C262E

Kind of a display unit

It uses as a display unit the FANUC PANEL *i*H Pro or a commercially available personal computer. If connect the FANUC PANEL *i*H Pro, refer to the connection and maintenance manual (B-64683EN, B-64703EN).

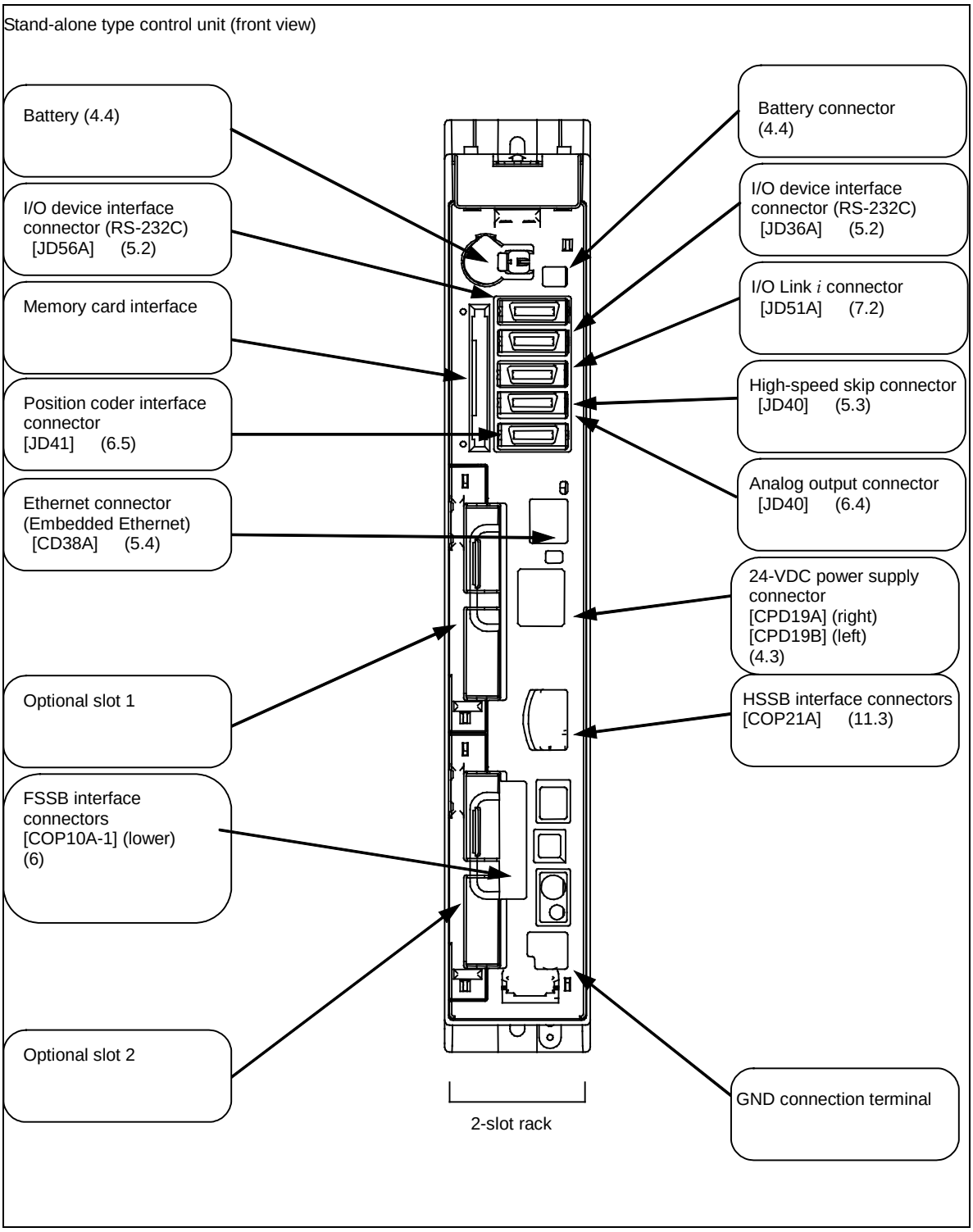

NOTE

The numbers in parentheses ( ) in the figures are keyed to the item numbers of the descriptions in this manual. The numbers in brackets [ ] in the figures are connector numbers.

© MyFANUC B5B0D8428C0144A78A5F4CA87F2C262E

1.2 HARDWARE OVERVIEW

1.2.1 LCD-mounted Type Control Unit Overview

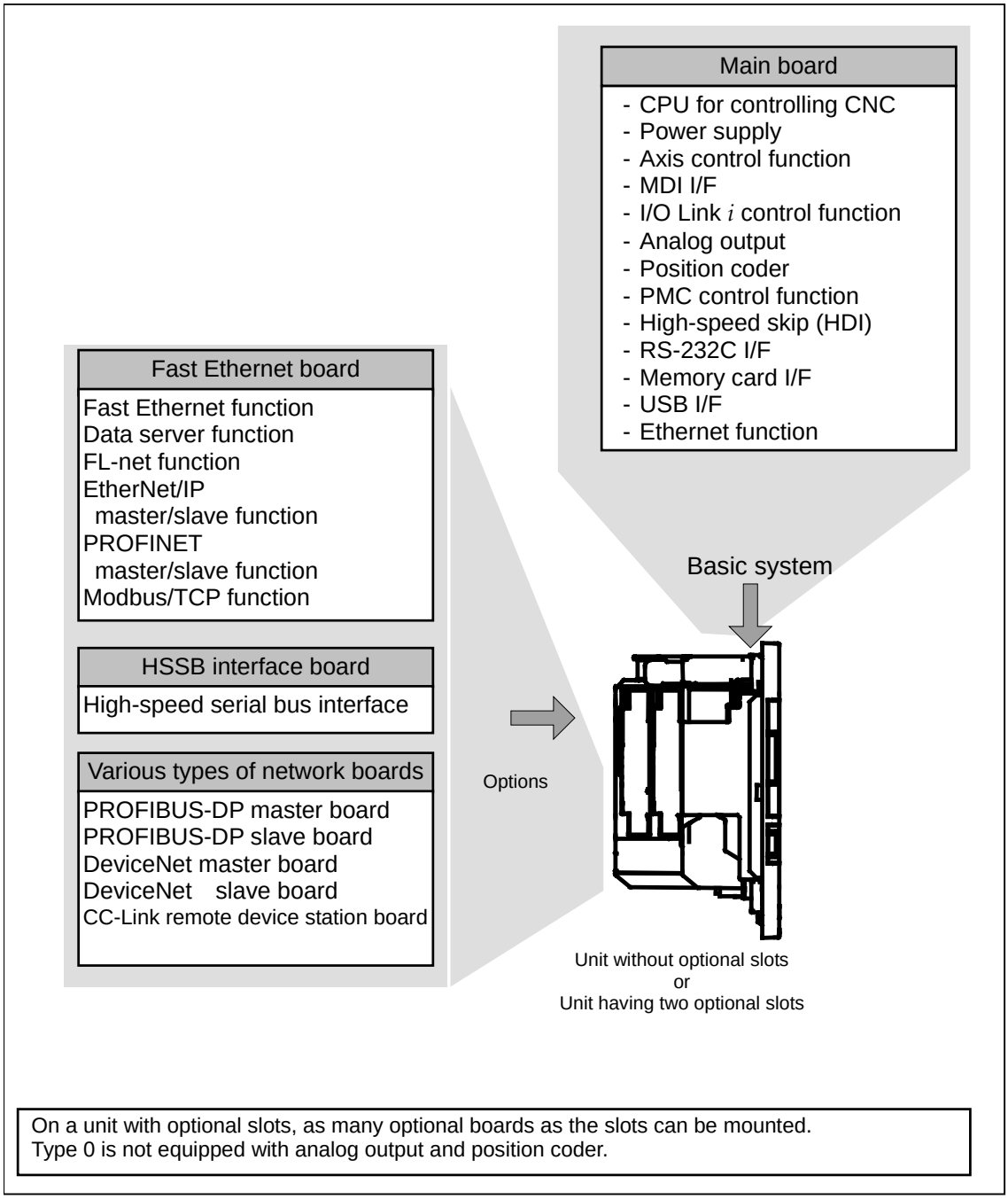

© MyFANUC B5B0D8428C0144A78A5F4CA87F2C262E

1.2.2 Stand-alone Type Control Unit Overview

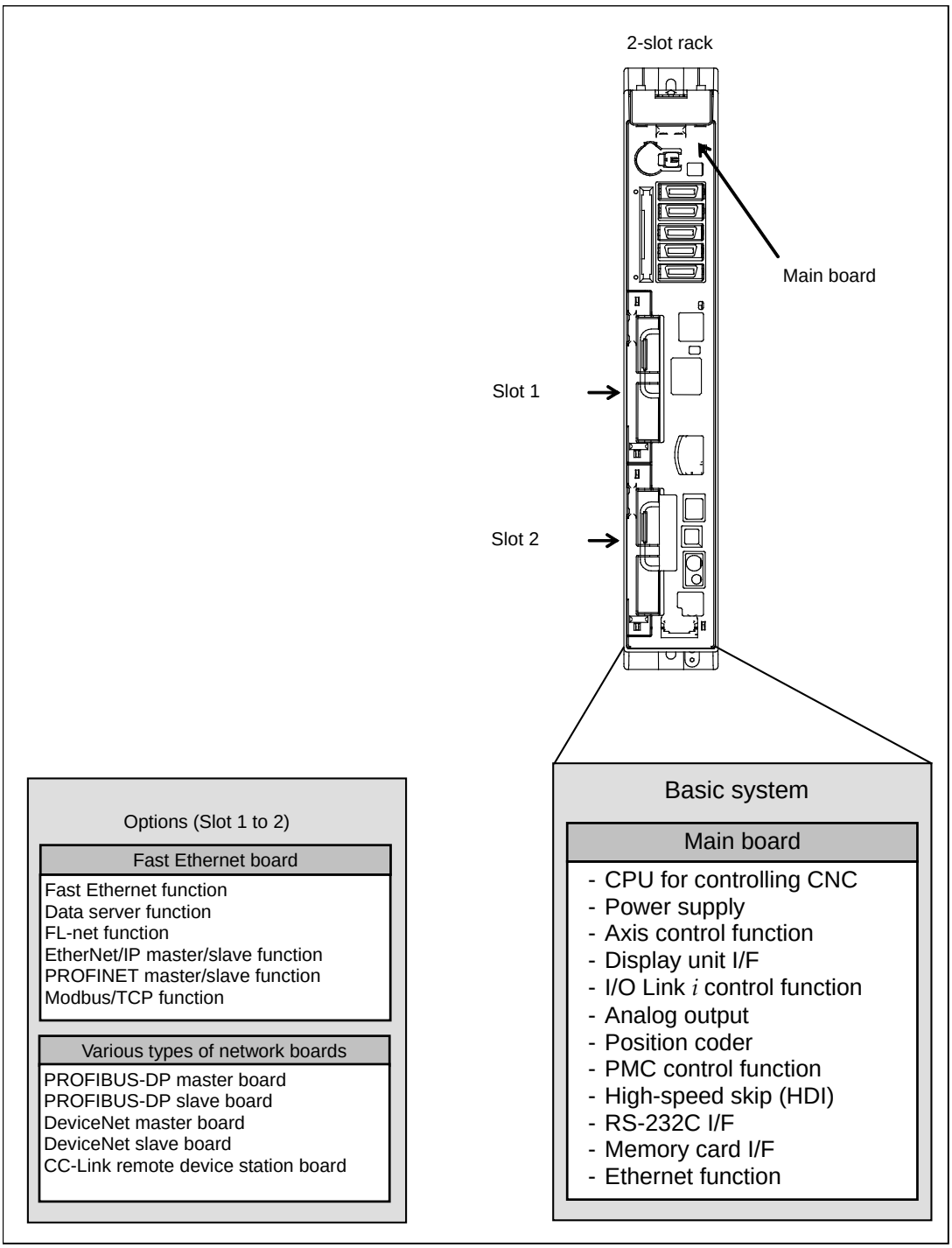

© MyFANUC B5B0D8428C0144A78A5F4CA87F2C262E

2 TOTAL CONNECTION DIAGRAMS

In the case of LCD-mounted type Type 0

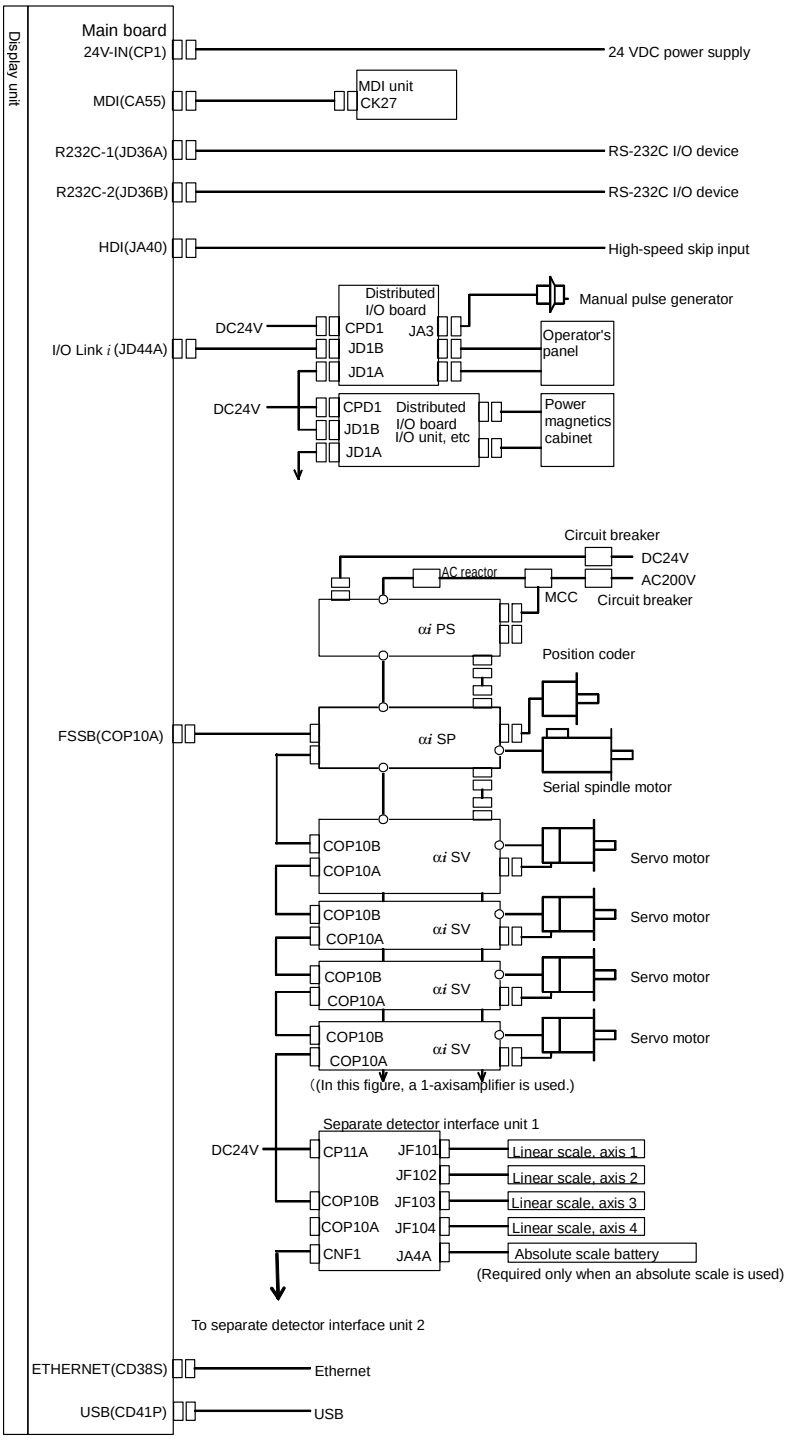

© MyFANUC B5B0D8428C0144A78A5F4CA87F2C262E

In the case of LCD-mounted type Type 1,3,5

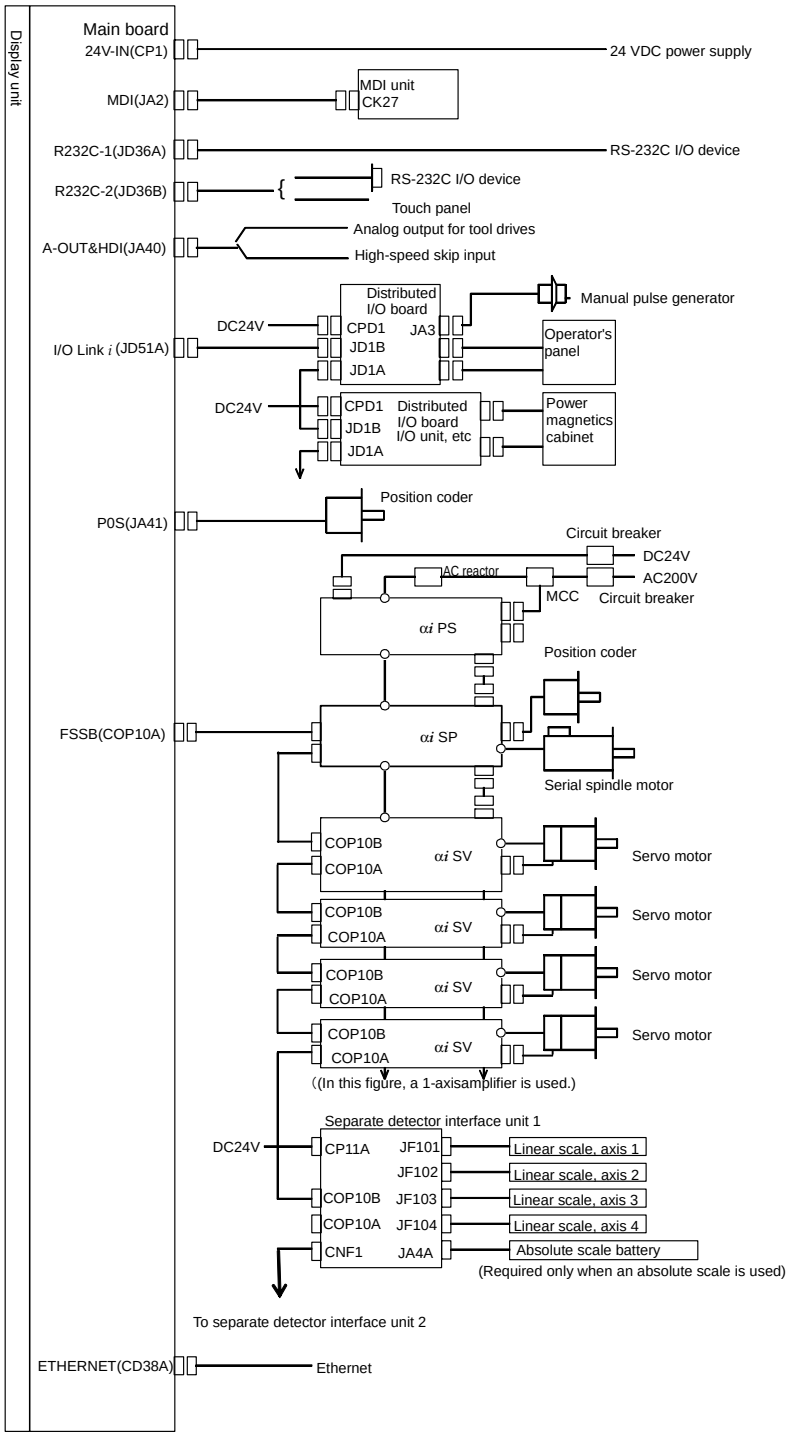

© MyFANUC B5B0D8428C0144A78A5F4CA87F2C262E

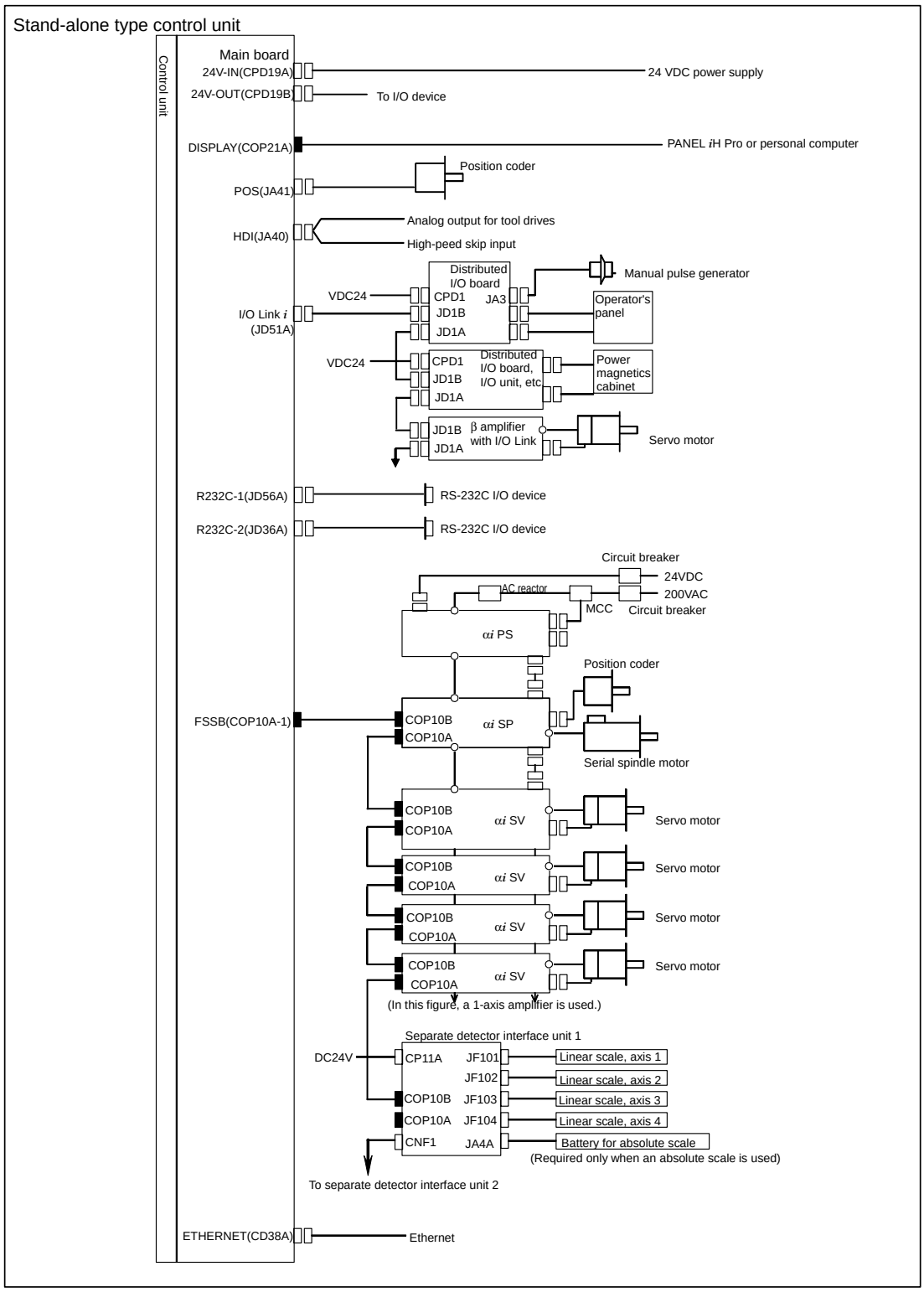

© MyFANUC B5B0D8428C0144A78A5F4CA87F2C262E

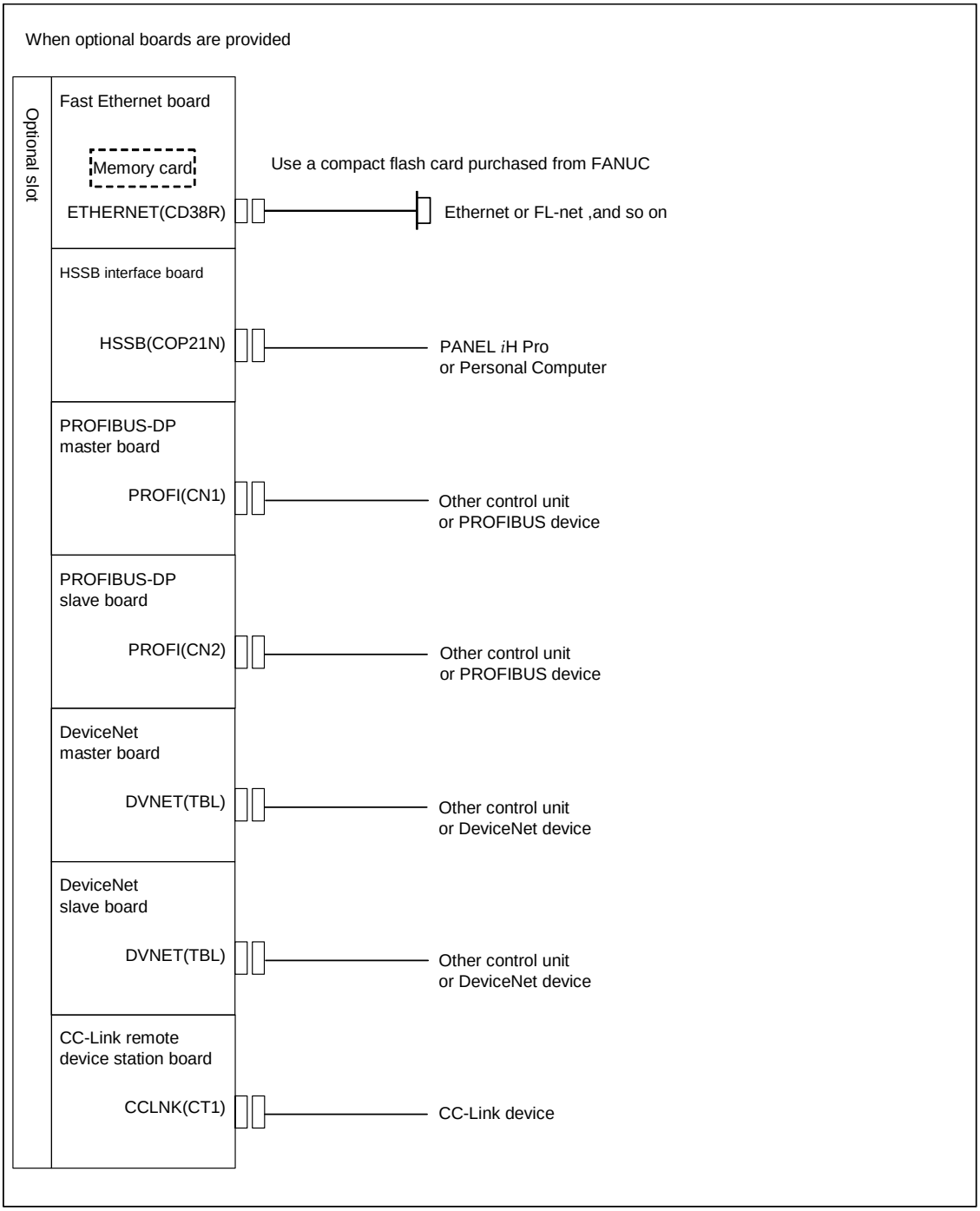

© MyFANUC B5B0D8428C0144A78A5F4CA87F2C262E

3 INSTALLATION

3.1 ENVIRONMENTAL REQUIREMENTS OUTSIDE THE CABINET

3.1.1 Environmental Conditions outside the Cabinet

The control unit and the peripheral units have been designed on the assumption that they are housed in closed cabinets. In this manual "cabinet" refers to the following:

- Cabinet manufactured by the machine tool builder for housing the control unit or peripheral units;
- Operation pendant, manufactured by the machine tool builder, for housing the MDI unit, or operator's panel.
- Equivalent to the above.

The following table lists the environmental conditions required in installing these cabinets. Section 3.3 of this connection manual explains the design conditions regarding installation of cabinets that will meet the environmental conditions.

Ambient temperature of the cabinet	Operating	0°C to 45°C
	Nonoperating (including storage and transportation)	-20°C to 60°C
	Temperature change	0.3°C/minute or less
Humidity	Normal	75%RH or less, no condensation
	Short period (less than 1 month)	95%RH or less, no condensation
Vibration	Operating	4.9m/s^2 (0.5G) or less
	Nonoperating (including storage and transportation)	9.8m/s^2 (1.0G) or less
Meters above sea level	Operating	Up to 1000 m (see NOTE 1 in the Subsec. 3.1.2.)
	Nonoperating (including storage and transportation)	Up to 12000 m
Environment		Normal machine shop environment (The environment must be considered if the cabinets are in a location where the density of dust, coolant, organic solvent, and/or corrosive gas is relatively high.)

© MyFANUC B5B0D8428C0144A78A5F4CA87F2C262E

3.1.2 Installation Conditions of the Control Unit

Condition		LCD-mounted type control unit and display unit	Stand-alone type control unit
Ambient temperature	Operating	0°C to 58°C	0°C to 55°C
	Nonoperating (including storage and transportation)	-20°C to 60°C	
	Temperature change	0.3°C/minute or less	
Humidity	Normal	75%RH or less, no condensation	
	Short period (less than 1 month)	95%RH or less, no condensation	
Vibration	Operating	$4.9m/s^2$ (0.5G) or less FANUC's evaluation test was conducted under the following conditions complying with IEC 60068-2-6. 10 to 58Hz : 0.075mm (amplitude) 58 to 500Hz : $9.8m/s^2$ (1.0G) Direction of vibration : Each of the X, Y, and Z directions Number of sweep cycles : 10	
	Nonoperating (including storage and transportation)	$9.8m/s^2$ (1.0G) or less	
Meters above sea level	Operating	Up to 1000m (NOTE 1)	
	Nonoperating (including storage and transportation)	Up to 12000m	
Environment		Coolant, lubricant, or cutting chips shall not be sprinkled directly over the CNC or servo unit. No corrosive gas shall be allowed.	

NOTE

1 If the control unit is installed 1000 m or higher above sea level, the allowable upper ambient temperature of the control unit in the cabinet is changed as follows. Assume that the allowable upper ambient temperature of the control unit in the cabinet installed 1000 m or higher above sea level decreases by 1.0°C for every 100 m rise in altitude.

Example)

When a control unit whose required operating ambient temperature range is 0°C to 55°C is installed 1750 m above sea level:

55°C-(1750m-1000m)/100m × 1.0°C = 47.5°C

Therefore, the allowable ambient temperature range is from 0°C to 47.5°C.

2 When using a unit having additional installation conditions, be sure to meet also these conditions.

© MyFANUC B5B0D8428C0144A78A5F4CA87F2C262E

3.2 CAUTIONS REGARDING THE INSTALLATION DESIGN OF MACHINE TOOL POWER MAGNETICS CABINETS

When a cabinet is designed, it must satisfy the environmental conditions described in Section 3.1. In addition, the magnetic interference on the screen, noise resistance, and maintenance requirements must be considered. When mounting FANUC-supplied units, such as displays and operator's panels, use packing and fasten the mounting screws with the specified tightening torque. When designing magnetics cabinets, pay due consideration to each item stated in the following "CAUTION".

⚠ CAUTION

1 The cabinet must be fully closed. The cabinet must be designed to prevent the entry of airborne dust, coolant, and organic solvent.

2 The cabinet must be designed so that the permissible temperature of each unit is not exceeded. (See Section 3.3.)

3 A closed cabinet must be equipped with a fan to circulate the air within. (This is not necessary for a unit with fan.) The fan must be adjusted so that the air moves at 0.5 m/sec along the surface of each installed unit.
However, do not blow air from the fan directly to the unit, because doing so can readily make dust attach the portion where the air flow hits, leading to possible trouble. (This is not necessary for a unit with fan.)

4 For the air to move easily, a clearance of 100 mm is required between each unit and the wall of the cabinet.

5 Each FANUC-supplied unit, such as a display or operator's panel, has been designed on the assumption that they will be mounted using packing and with the specified screw tightening torque. Failing to mount them as specified can lead to unit damage and/or malfunction. Be sure to use packing and observe the specified screw tightening torque. (See Sections 3.6 and 3.7.)

6 Failing to use packing or to provide complete sealing, or using any packing not resistant to coolant in use will allow dust, coolant, and organic solvent to get in the cabinet, leading to possible equipment trouble. Be sure to use an appropriate packing and a secure sealing.
In addition, use an appropriate packing and a secure sealing for the cable outlets and doors of the machine builder-provided units, such as displays, operator's panels, and cabinet pendant boxes. (See Section 3.7.)

7 The LCD must not be installed in such a place that coolant would directly fall onto the unit.

8 Noise must be minimized. As the machine and the control unit are reduced in size, the parts that generate noise may be placed near noise-sensitive parts in the magnetics cabinet.
The control unit is built to protect it from external noise. Cabinet design to minimize noise generation and to prevent it from being transmitted to the control unit is necessary. (See Section 3.4.)

9 When placing units in the cabinet, also consider ease of maintenance. The units should be placed so that they can be checked and replaced easily when maintenance is performed.

10 The hard disk drive and floppy disk drive must not be installed near the source of a strong magnetic field.

© MyFANUC B5B0D8428C0144A78A5F4CA87F2C262E

⚠ CAUTION

11 The installation conditions of the I/O unit and connector panel I/O module must be satisfied. In order to secure ventilation in the equipment, mount the I/O unit and connector panel I/O module in the specified orientation. Clearances of 100 mm or more both above and below the I/O unit are required for wiring and ventilation.
Equipment radiating too much heat must not be put below the I/O unit and connector panel I/O module.

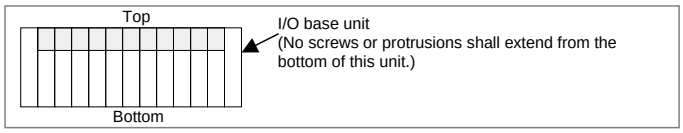

⚠ WARNING

By a machine tool of a machine door adjacent to operator's panel, large shock will be applied to the operator's panel every time of opening or closing the door. CNC control unit and I/O unit on the operator's panel are deteriorated by repeated large shock for a prolonged period every time opening and closing of the door. So, attach a packing rubber or damper on the door to prevent damage by direct large shock. Use the rubber for measures of the door and high tolerance to a cutting fluid. Also, use the rubber even if repetition shock is applied, form does not change and vibration absorption effect does not deteriorate. When the rubber deteriorates, describe exchange method of the rubber, make the structure which can be exchanged by an end user. Describe the exchange method to manual of a machine tool.

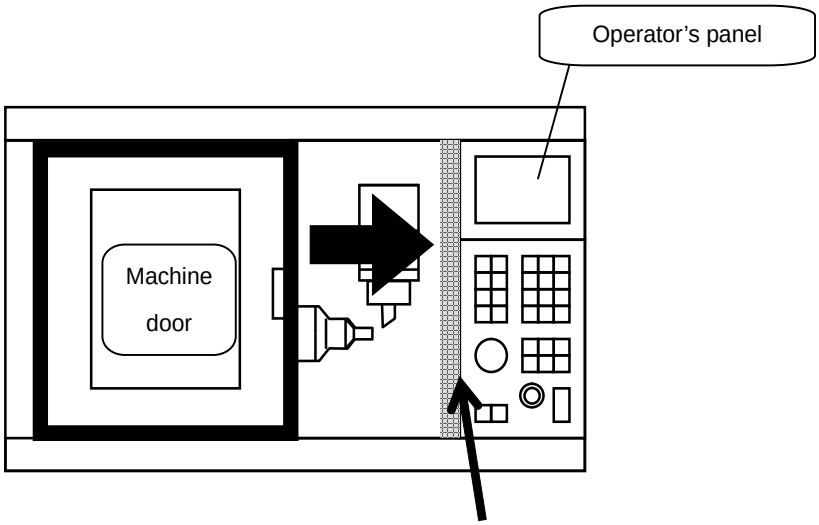

A machine tool of the door and the operator's panel are contiguous, please attach the rubber or a damper for the measures of shock when opening and closing the door.

© MyFANUC B5B0D8428C0144A78A5F4CA87F2C262E

3.3 THERMAL DESIGN OF THE MACHINE TOOL MAGNETIC CABINET

The internal air temperature of the cabinet increases when the units and parts installed in the cabinet generate heat. Since the generated heat is radiated from the surface of the cabinet, the temperature of the air in the cabinet and the outside air balance at certain heat levels. If the amount of heat generated is constant, the larger the surface area of the cabinet, the less the internal temperature rises. The thermal design of the cabinet refers to calculating the heat generated in the cabinet, evaluating the surface area of the cabinet, and enlarging that surface area by installing heat exchangers in the cabinet, if necessary. Such a design method is described in the following subsections.

3.3.1 Temperature Rise within the Machine Tool Magnetic Cabinet

The cooling capacity of a cabinet made of sheet metal is generally 6 W/°C per $1m^2$ surface area, that is, when the 6W heat source is contained in a cabinet having a surface area of 1 m^2, the temperature of the air in the cabinet rises by 1°C. In this case the surface area of the cabinet refers to the area useful in cooling, that is, the area obtained by subtracting the area of the cabinet touching the floor from the total surface area of the cabinet. There are two preconditions : The air in the cabinet must be circuited by the fun, and the temperature of the air in the cabinet must be almost constant. For example, the operator’s panel cabinet may contain an LCD-mounted type control unit or the display of a stand-alone type control unit. To keep the temperature in the cabinet at 58°C or below when the ambient temperature is 45°C, the equation below must be satisfied.

Internal heat loss P [W] $\leq$6[W/m^2·°C] $\times$ surface area S [m^2] $\times$ 13[°C] of rise in temperature

(A cooling capacity of 6 W/°C assumes the cabinet is so large that agitation with the fan motor does not make the temperature distribution uniform. For a small cabinet like the operator's panel, a cooling capacity of 8 W/°C, indicated in Subsection 3.3.3, may be used.)

For example, a cabinet having a surface area of $4m^2$ has a cooling capacity of 24W/°C. To limit the internal temperature increase to 13°C under these conditions, the internal heat must not exceed 312W. If the actual internal heat is 360W, however, the temperature in the cabinet rises by 15°C. When this happens, the cooling capacity of the cabinet must be improved using the heat exchanger.

For the power magnetic cabinet containing a stand-alone type control unit, the internal temperature rise must be suppressed to 55°C or less, instead of 58°C.

3.3.2 Heat Output of Each Unit

Table 3.3.2 Heat output

Unit			Heat output	Remarks
LCD-mounted type control unit	15” LCD unit 10.4” LCD unit 10”4” LCD/MDI unit	Option 0 slot	32W	NOTE 1)
		Option 2 slots		
Stand-alone type control unit		Option 2 slots	25W	NOTE 1)
Optional board	Fast Ethernet board (when used as data server functions)		3W (3.3W)	
	HSSB interface board		4W	
	PROFIBUS-DP master board		5W	
	PROFIBUS-DP slave board		2W	
	DeviceNet master board		3W	
	DeviceNet slave board		3.5W	
	CC-Link remote device station board		3W	
MDI units			0W	

© MyFANUC B5B0D8428C0144A78A5F4CA87F2C262E

NOTE

1 The values listed above do not include any heat output of the option boards. To obtain the total heat output of the control unit, add the heat output from the any option boards.
2 See Chapter 6 for the heat output of the separate detector interface unit.
3 See Chapter 8 for the heat output of each I/O unit.
4 Refer to the PANEL *i* / *i*H Pro CONNECTION AND MAINTENANCE MANUAL (B-64683EN) or PANEL *i*H Pro CONNECTION AND MAINTENANCE MANUAL (B-64703EN) for the heat output of the PANEL *i*H Pro.

3.3.3 Thermal Design of Operator's Panel

With a small cabinet like the operator's panel, the heat dissipating capacity of the cabinet is as shown below, assuming that there is sufficient mixing of the air inside the cabinet.

Coated metal surfaces : 8 W/m^2·°C
Plastic surfaces : 3.7 W/m^2·°C

An example of the thermal design for the cabinet shown in Fig. 3.3.3 is shown below.

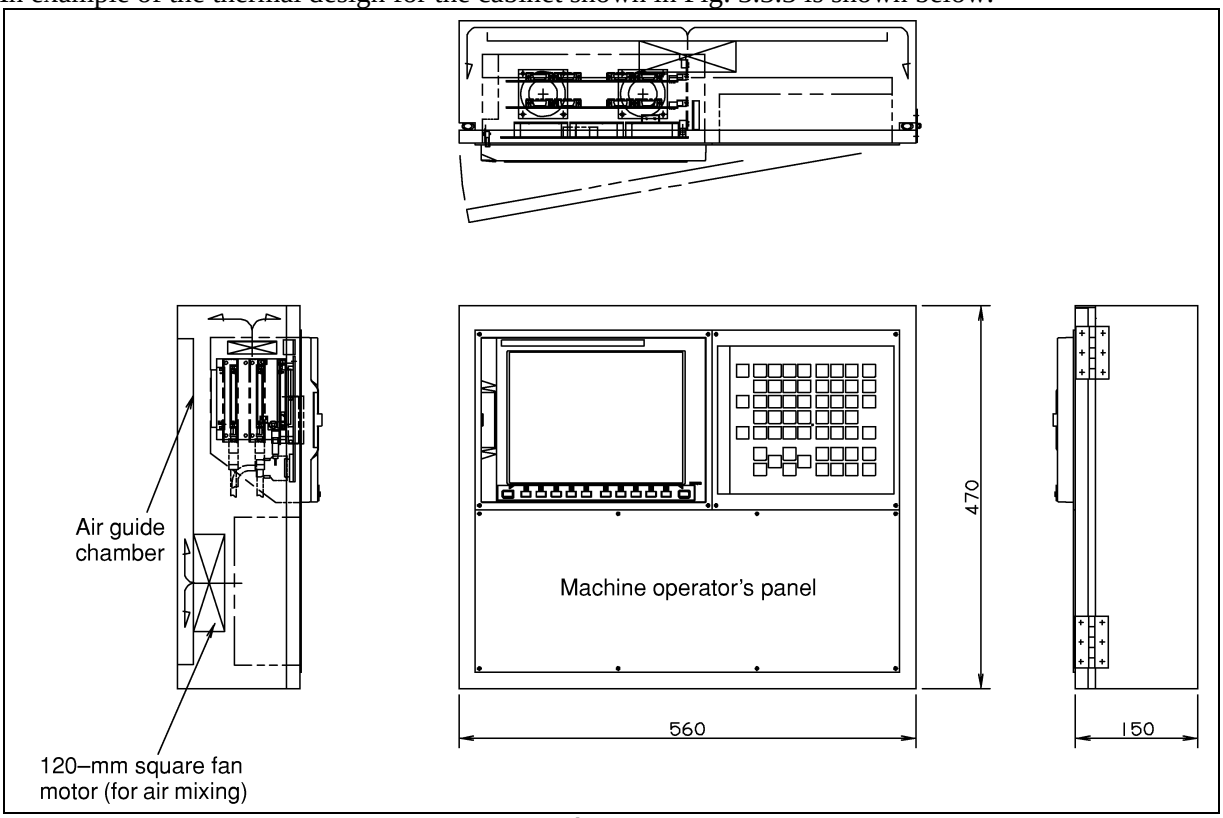

Fig. 3.3.3

Assume the following.
Thermal exchange rates

Coated metal surfaces : 8 W/m^2·°C
Plastic surfaces : 3.7 W/m^2·°C
Allowable temperature rise : 13°C higher than the exterior temperature

Also, assume the following.
Dimensions of pendant type cabinet shown in Fig. 3.3.3 : 560(W) × 470(H) × 150(D) mm
Surface area of metallic sections : 0.5722 m^2
Surface area of plastic sections : 0.2632 m^2
In this case, the allowable total heat dissipation for the cabinet is:

© MyFANUC B5B0D8428C0144A78A5F4CA87F2C262E

$8 \times 0.5722 \times 13 + 3.7 \times 0.2632 \times 13 = 72$ W.

In consequence, it can be concluded that the units shown in Table 3.3.3 on the next page can be installed in this cabinet.

Table 3.3.3

LCD-mounted type control unit (with 10.4”LCD unit)	32W
Standard machine operator's panel	15W(NOTE)
120-mm square fan motor for air mixing	8W
Total heat dissipation of the above	55W

NOTE
The 15 W quoted for the standard machine operator's panel represents an example heat output value when half of all the input signals are turned on. This value varies, depending on the mechanical configuration.

3.4 COUNTERMEASURES AGAINST NOISE AND GROUNDING

In general, noise can occur because of electrostatic coupling, electromagnetic induction, and ground loop and get in a control unit.

On the control unit side, due consideration is paid to a protective measure for external noise. However, it is hard to measure the magnitude and frequency of noise quantitatively and there are lots of uncertainties with noise. So, it is important to take measures for minimizing noise occurrence and keeping any noise from entering the control unit in order to enhance stability in CNC-based machine tool system operation.

Grounding the power magnetics cabinet and devices is very important to prevent an electric shock and suppress a noise influence. The CNC system uses the following three types of grounding:

(1) Signal grounding
This type of grounding is used to supply a reference potential (0V) for the electrical signal system.

(2) Frame grounding
This type of grounding is used for safety reasons as well as to suppress external and internal noise. For example, grounding is provided for the device frames, panels, and shielding on the interface cables connecting the devices.

(3) System grounding (PE)
This type of grounding is used to connect frame grounds, which are provided for the individual devices or between the units, to the ground as a system at a single point.

When designing the power magnetics cabinet, guard against noise in the machine as described in the following section.

3.4.1 Grounding as Noise Suppression Measures

3.4.1.1 Grounding methods

Typically, noise that becomes a problem is high–frequency noise. To suppress high–frequency noise, it is important that the devices are grounded at low impedance (NOTE).

The grounding schemes for this purpose are described below.

NOTE
Impedance includes a resistance component that converts electric current to heat as well as a component called “reactance”, and indicates a characteristic of resistance to the flow of alternating current at a certain frequency.

© MyFANUC B5B0D8428C0144A78A5F4CA87F2C262E

(1) Multipoint grounding scheme

In this grounding scheme, when grounded at sufficiently low impedance, the cabinet metal plates are used as ground plates, to which grounding is provided in the vicinity of each device.
This scheme has a great effect of suppressing high–frequency noise because it enables grounding to the low–impedance metal plates of the cabinet in the shortest distance. However, the noise suppression effect depends on the cabinet structure because the cabinet metal plates are used as ground plates.
See Subsection 3.4.1.2 for the cabinet. Fig. 3.4.1.1 (a) is a schematic wiring diagram.

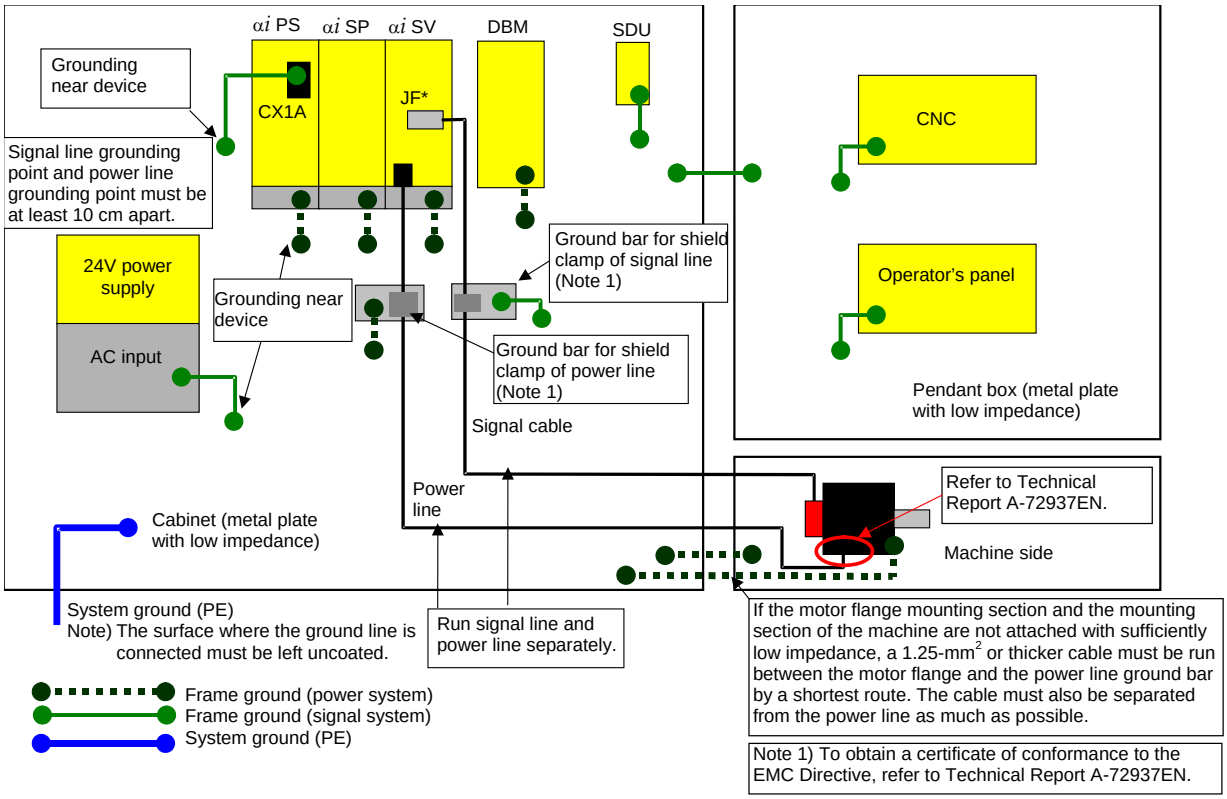

Fig. 3.4.1.1 (a) Schematic diagram for multipoint grounding scheme

When the multipoint grounding scheme is adopted, the units can be grounded at low impedance, and ground wires (wires from the unit's ground terminal to a grounding plate) can be shortened, so that wiring may be simplified. So, FANUC recommends the multipoint grounding scheme.

> ⚠ **CAUTION**
> If it is impossible to configure cabinet metal plates with a low impedance, it is likely that noise may effect grounding circuits shared by power wires and signal wires.

© MyFANUC B5B0D8428C0144A78A5F4CA87F2C262E

(2) Single–point grounding scheme

In this grounding scheme, grounding separation is achieved between the signal system and power system, and grounding is provided at a single point to suppress the noise influence of the power system on the signal system.

This scheme tends to need longer connection wires for grounding the devices. To produce a sufficient effect of suppressing high–frequency noise, it is therefore necessary to use larger–diameter wires or use two or more wires for each connection. Fig. 3.4.1.1 (b) is a schematic wiring diagram.

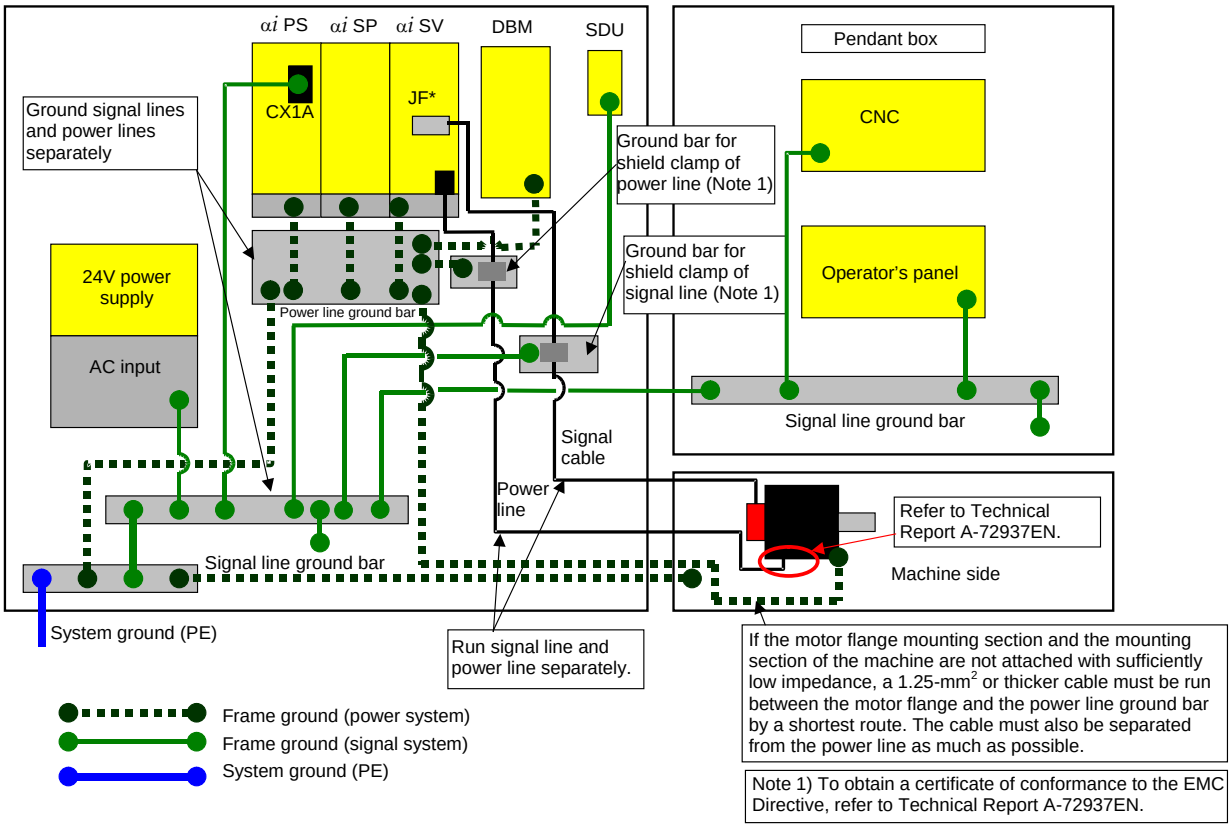

Fig. 3.4.1.1 (b) Schematic diagram for multipoint grounding scheme

© MyFANUC B5B0D8428C0144A78A5F4CA87F2C262E

3.4.1.2 Cabinet

A cabinet is an important element in improving noise immunity and suppressing radiated noise. One of the causes of problems related to noise immunity and radiated noise is faulty electrical continuity between the metal plates that make up the cabinet. Typically, noise that becomes a problem is high–frequency noise, against which measures must be taken in the cabinet design.

(1) Basic cabinet structure

A cabinet should basically be made of metal.
To improve noise immunity, there must be low–impedance electrical continuity between the metal plates that make up the cabinet, which are the side plates, top plate, and bottom plate, and a welding–type cabinet structure is recommended.
As for a cabinet welding method, bead welding is more suitable than spot welding for providing low–impedance electrical continuity between the metal plates.
For an assembly–type cabinet structure, provide electrical continuity by bringing the metal plates into direct contact with each other, without applying a coating to their joint surface areas.
In a structure that has the metal plates connected only with wires because of structural constraints, low–impedance connections are more difficult to make than in a structure in which welding is made or the metal plates are brought into direct contact with each other. It is necessary to maintain sufficient levels of items such as the cross–sectional area of a wire to use, continuity of connections, and contact areas.

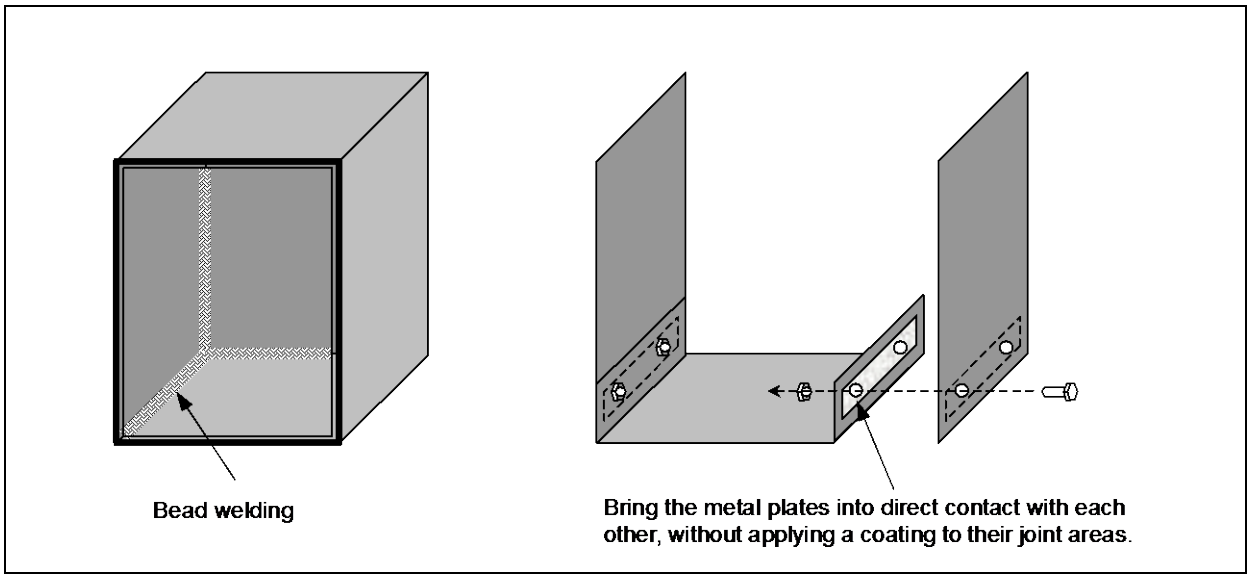

Fig. 3.4.1.2 (a) Cabinet structure

NOTE
Explained above is how to provide cabinets with low-impedance electrical continuity so as to increase noise immunity and to suppress noise radiation. See Subsection 3.4.2 for conditions required to configure protective grounding circuits.

© MyFANUC B5B0D8428C0144A78A5F4CA87F2C262E

(2) Mounting units on the cabinet

The shortest possible lengths of unit ground wires (wires from the unit's ground terminal to a grounding plate) should be used to make connections. A ground wire with a small conductor diameter causes impedance to high-frequency noise to become particularly higher, leading to an insufficient grounding effect. For the location of the ground terminal of each unit, refer to the manual relevant to the unit. The following shows the recommended method by which the metal plate with the unit mounted is installed on the cabinet. Care should be taken so that the cabinet and metal plate are connected to each other on their broad areas with no coating. It is not recommended that electrical continuity be provided only by screws, because impedance to high frequency cannot be sufficiently low.

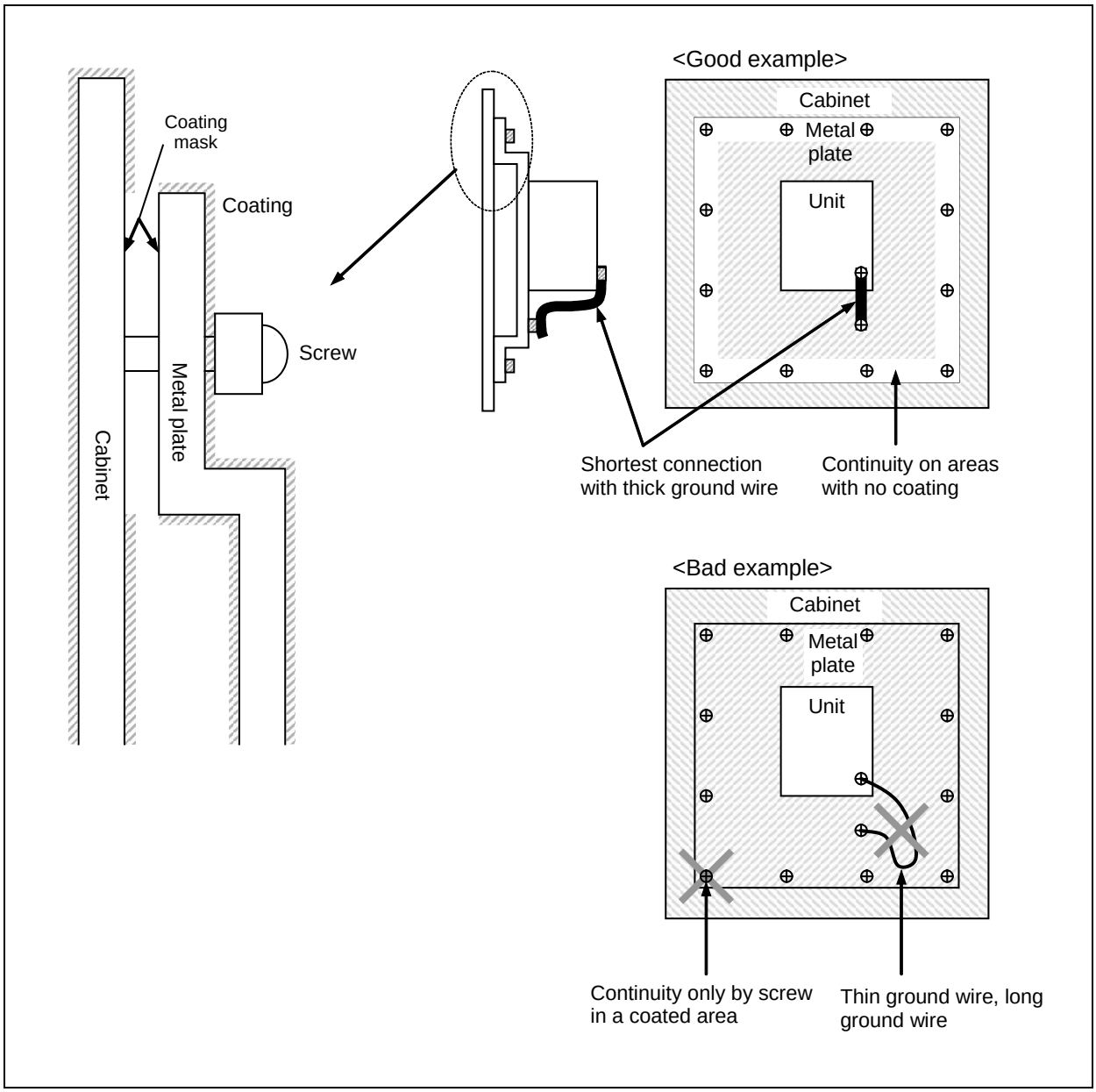

Fig. 3.4.1.2 (b) Installing a unit in a cabinet

© MyFANUC B5B0D8428C0144A78A5F4CA87F2C262E

3.4.2 Protective Ground (Grounding for Protection against Indirect Contact)

Protection against indirect contract is intended to prevent the risk that may occur in a conductive portion which is not charged with electricity (applied with voltage) during normal operation but may be charged with electricity if insulation is accidentally destroyed. It must be implemented by:

- measures to prevent the occurrence of a touch voltage, or
- automatic disconnection of the supply before the time of contact with a touch voltage can become hazardous

As for protective grounding in “automatic disconnection of the supply before the time of contact with a touch voltage can become hazardous”, follow any standards the machine tool is supposed to meet. Some standard examples follow:

Regarding protective grounding

IEC 60364-4-41:2005 and JIS C 60364-4-41:2010 (Low-voltage electrical installations - Part 4-41: Protection for safety - Protection against electric shock) 411

Regarding the minimum cross-sectional area of protective conductors

IEC 60204-1:2005/A1:2008 and JIS B 9960-1:2008/A1:2011 (Safety of Machinery – Electrical Equipment of Machines – Part 1: General Requirements) 8.2.2

NFPA 79:2012 (Electrical Standard for Industrial Machinery) 8.2.2 Equipment Grounding (Protective) Conductors and Bonding Jumpers

NFPA 79:2012 (Electrical Standard for Industrial Machinery) 18.2 Continuity of the Equipment Grounding (Protective Bonding) Circuit

Regarding the cross-sectional area of a protective conductor shared by multiple circuits

IEC 60364-5-54:2011 and JIS C 60364-5-54:2006 (Electrical installations of buildings – Part 5-54: Selection and erection of electrical equipment – Earthing arrangements, protective conductors and protective bonding conductors) 543.1.4

Regarding use of enclosures (cabinets) or frames as protective conductors

IEC 60204-1:2005/A1:2008 and JIS B 9960-1:2008/A1:2011 (Safety of Machinery – Electrical Equipment of Machines – Part 1: General Requirements) 8.2.3

IEC 60364-5-54:2011 and JIS C 60364-5-54:2006 (Electrical installations of buildings – Part 5-54: Selection and erection of electrical equipment – Earthing arrangements, protective conductors and protective bonding conductors) 543.2.2, 543.2.3;

NFPA 79:2012 (Electrical Standard for Industrial Machinery) 12.2.1 Conductor Material

© MyFANUC B5B0D8428C0144A78A5F4CA87F2C262E

3.4.3 Connecting the Ground Terminal of the Control Unit

Continuity between the control unit's and a 0 V terminals

⚠ CAUTION

In each control unit, the 0 V and ground terminals are electrically connected to each other. So, do not connect any external unit's 0 V connected to the control unit's 0 V to any other line's grounding electrode that can have an electrical potential different from that of the grounding electrode connected to the control unit.

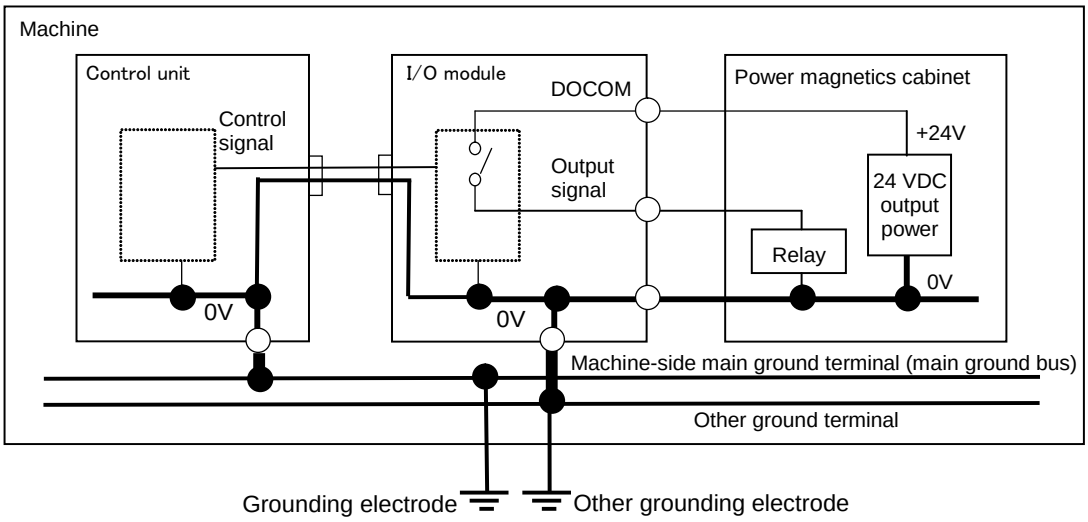

Fig. 3.4.3 (a) Undesired example of using other ground terminal

© MyFANUC B5B0D8428C0144A78A5F4CA87F2C262E

Connecting the ground terminal of an LCD-mounted type control unit

Connect the 0 V line in the control unit to the cabinet's metal plate or signal system ground bar nearby via the protective ground terminal (see below).

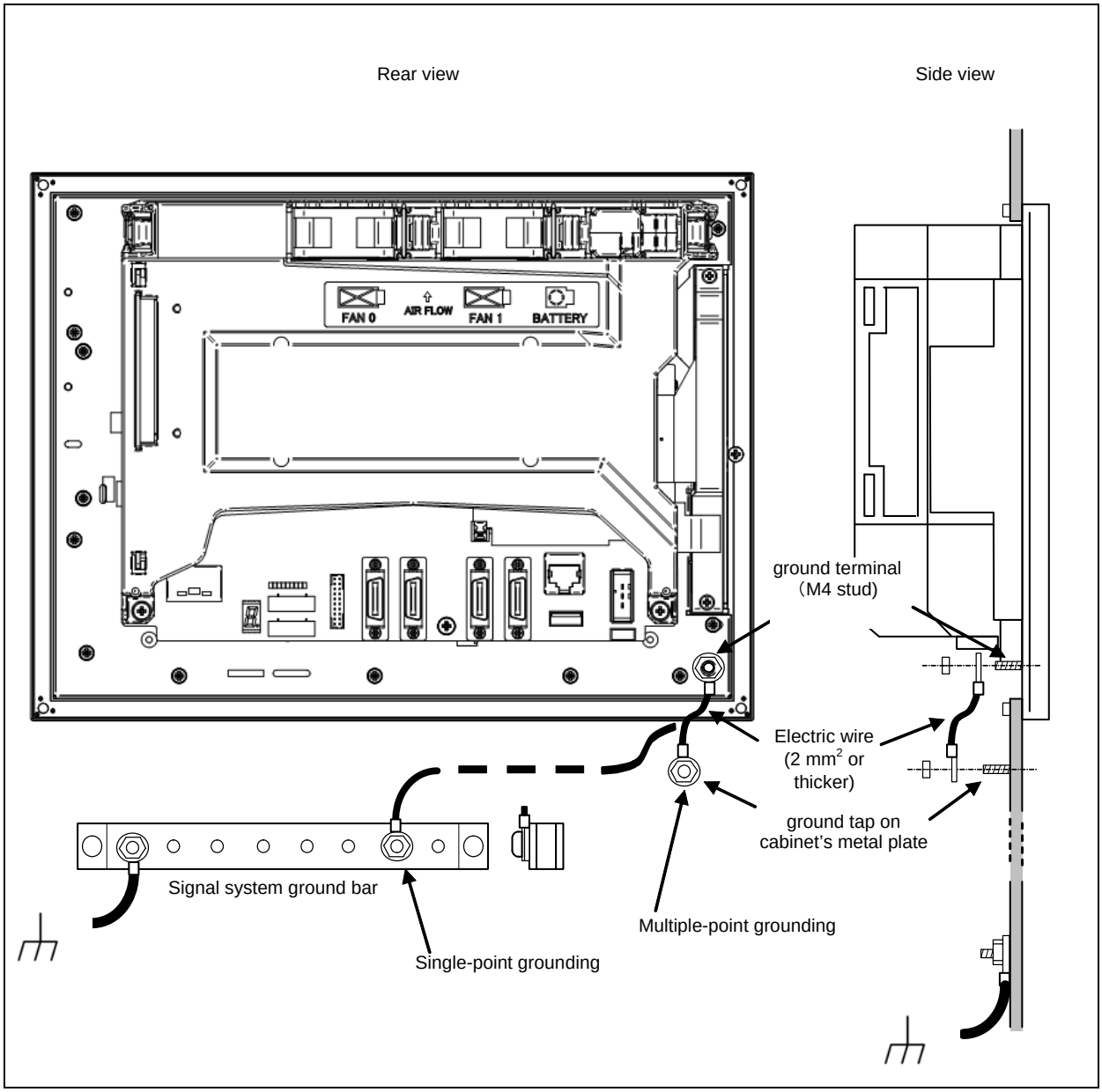

Fig. 3.4.3 (b) Ground terminal connection

© MyFANUC B5B0D8428C0144A78A5F4CA87F2C262E

Connecting the ground terminal of a stand-alone type control unit

Connect an electronics circuit's 0 V line in the control unit to the cabinet's metal plate or signal system ground bar close to it via the signal ground terminal.
Use the Faston terminal (FANUC specification: A02B-0166-K330).

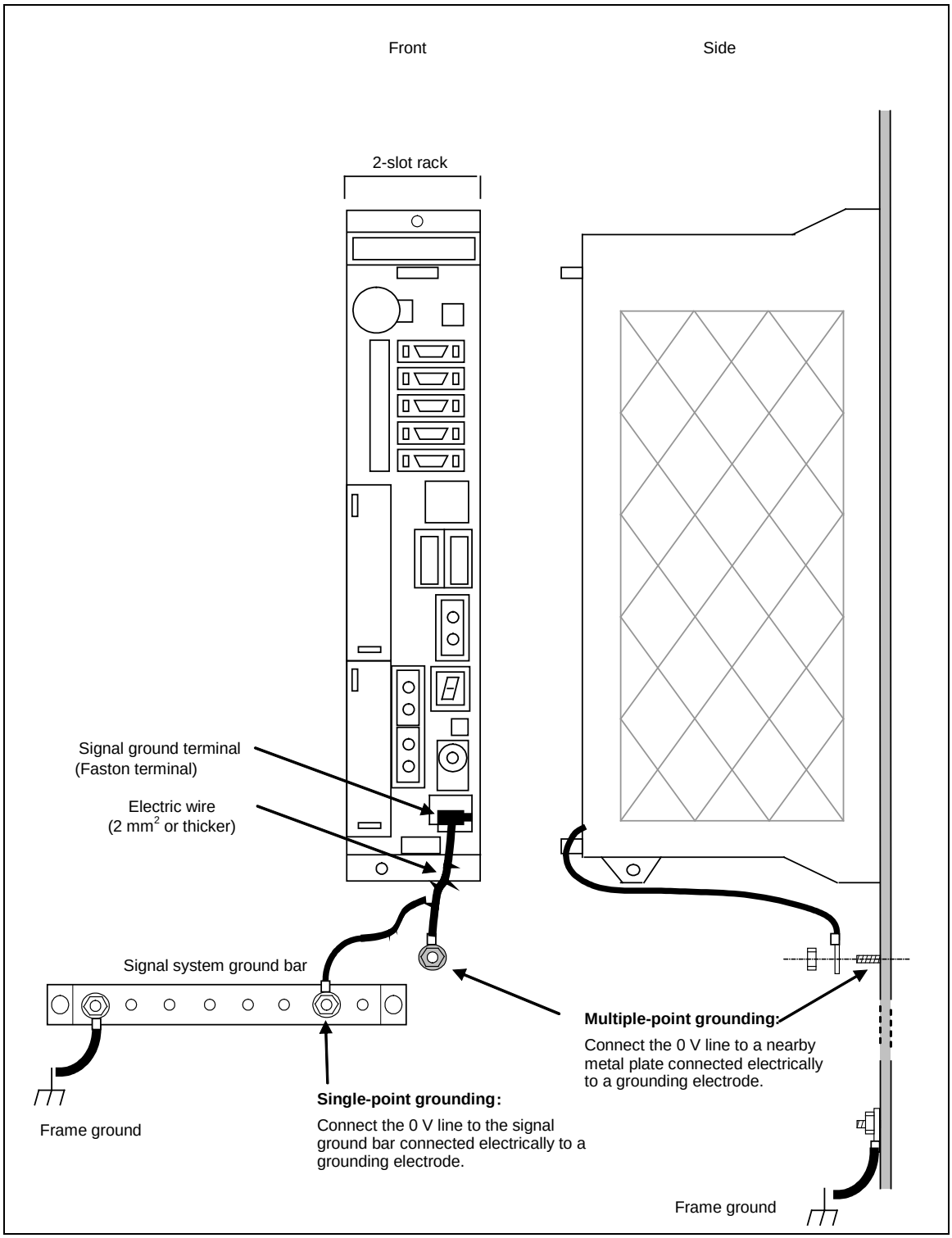

Fig. 3.4.3 (c) Ground terminal connection

© MyFANUC B5B0D8428C0144A78A5F4CA87F2C262E

3.4.4 Separating Signal Lines

The cables used for the CNC machine tool are classified as listed in the following table. Process the cables in each group as described in the action column.

Table 3.4.4 Cable grouping

Group	Signal line	Action
A	Primary AC power line	Bind the cables in group A separately (NOTE 1) from groups B and C, or cover group A with an electromagnetic shield (NOTE 2). See Subsection 3.4.5 and connect spark killers or diodes with the solenoid and relay.
	Secondary AC power line	
	AC/DC power lines (containing the power lines for the servo and spindle motors)	
	AC/DC solenoid	
	AC/DC relay	
B	DC solenoid (24 VDC)	Connect diodes with the DC solenoid and relay. Bind the cables in group B separately from group A, or cover group B with an electromagnetic shield. Separate group B as far from group C as possible. It is desirable to apply shield processing described in Subsection 3.4.6.
	DC relay (24 VDC)	
	DI/DO cable between the I/O unit and power magnetics cabinet	
	DI/DO cable between the I/O unit and machine	
	24 VDC input power cables connected to the control unit and its peripherals	
C	I/O Link *i* cable	Bind the cables in group C separately from group A, or cover group C with an electromagnetic shield. Separate group C as far from group B as possible. Be sure to perform shield processing as described in Subsection 3.4.6.
	Cable for the position coder	
	Cable for the manual pulse generator	
	Cable for the MDI (NOTE 3)	
	RS–232C, RS–422 interface cable	
	Cable for the battery	
	Cable for the Ethernet	
	Other cables for which shield processing is specified	

NOTE

1 Binding the cables in one group separately from another means that the groups are placed 10 cm or more apart from one another.

2 Covering a group with an electromagnetic shield means that shielding is provided between groups with grounded steel plates.

3 The shield is not required when the cable for the MDI is no more than 50 cm in length.

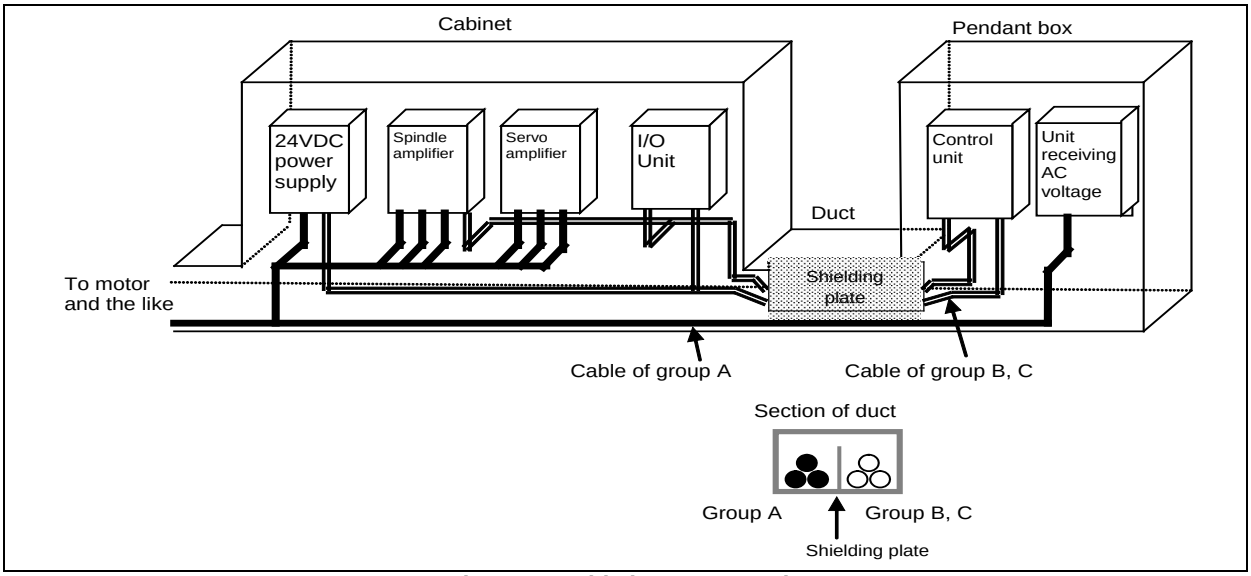

Fig. 3.4.4 Cable layout example

© MyFANUC B5B0D8428C0144A78A5F4CA87F2C262E

3.4.5 Noise Suppressor

Actuators, such as solenoids and relays, used in power magnetics cabinets need a noise suppressor.
Because an actuator, which converts electrical energy to mechanical action, is an inductive load, it resonates with the parasitic capacitance in a circuit containing it, when it works on and off, thus generating intermittent arcs accompanied by abrupt voltage rises and falls at its contacts, hence electromagnetic waves interfering with electronics circuits. As a remediation measure, treat the inductive load as described below.

1) While referencing the processing for cable groups A and B described in Subsection 3.4.4, “Separating Signal Lines”, apply a CR snubber circuit and a diode, respectively, to an inductive load in an AC circuit and that in a DC circuit.
2) When selecting a CR snubber or diode, observe the following cautions.

Cautions for selecting and using a CR snubber

- Use a CR snubber in an AC circuit.
  A varistor, voltage clamping element, can limit the peak of an oscillating voltage waveform but cannot relax an abrupt voltage transition. For this reason, we recommend using a CR snubber rather than the varistor.
- Determine the rating of the resistor and capacitor in the CR snubber according to the steady-state current I (A) and DC resistance RL (Ω) of the inductive load as follows:
  1) CR snubber resistance: $R \cong RL(\Omega)$
  2) CR snubber capacitance: $\frac{I^2}{10} \le C \le \frac{I^2}{20}$ (μF)
- Place the CR snubber close to the inductive load to minimize its wiring.

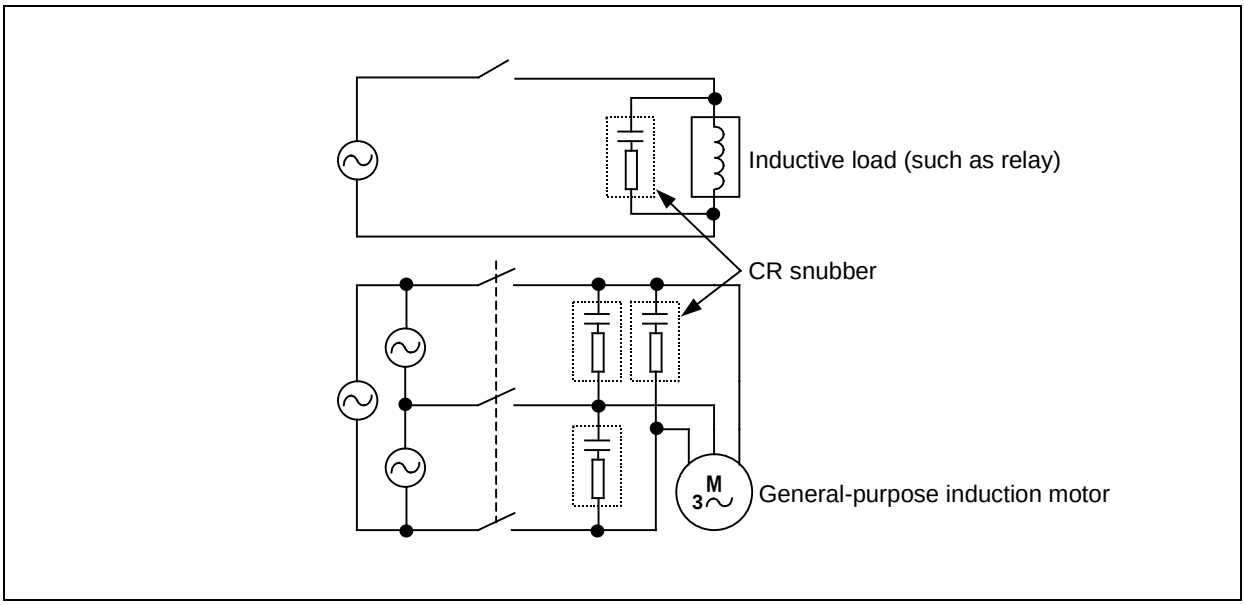

Fig. 3.4.5 (a) Example of applying a CR snubber

Cautions for selecting and using a diode

- A diode (freewheeling diode) can be used as a noise suppressor for a DC driver circuit.
- Determine the ratings of the diode according to the drive voltage and current for the inductive load (such as a solenoid coil, relay, or motor) as follows:
  1) Voltage rating: Approximately twice the voltage applied to the inductive load
  2) Current rating: Approximately twice the steady-state current flowing through the inductive load
- Place the diode close to the inductive load in order to minimize its wiring.

© MyFANUC B5B0D8428C0144A78A5F4CA87F2C262E

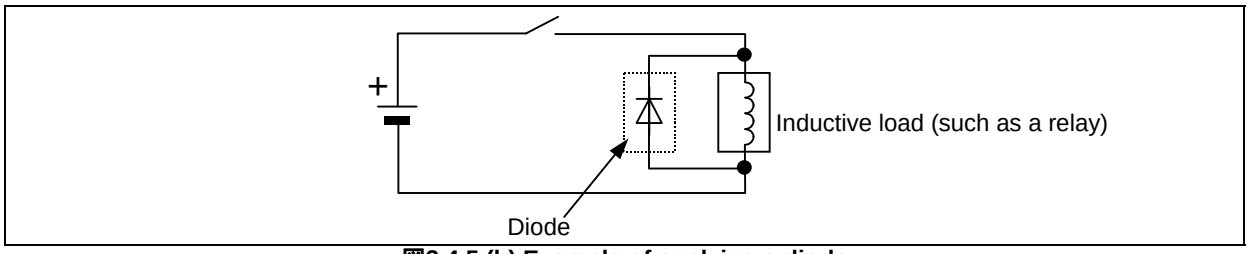

図3.4.5 (b) Example of applying a diode

3.4.6 Cable Clamp and Shield Processing

Some cables that are drawn into the control unit, servo amplifier, or spindle amplifier need shielding (basically, every signal line needs shielding). Clamp all these cables in the way shown below. This type of clamping works for both cable supporting and shielding. Be sure to make clamping because it is quite important to make system operation stable. Clamping shield correctly can suppress effect from external noise.

Partially peel the sheath off a cable and expose the shield, and press the exposed portion against the ground bar with the clamp. Care should be taken so that the ground bar and shield have a surface contact in a larger area. (See the figure below.)

The machine builder is requested to prepare the ground bar for cable clamping and place it as shown below.

When the multipoint grounding scheme is used, care should be taken so that the ground bar for the shield clamp and cabinet are connected at low impedance by, for example, preventing the cabinet side contact surface from being coated.

When using an in-line connector or the like to split a cable, it is necessary to connect the shield of one portion of the cable and that of the other portion and to keep the total impedance of the two cable portions from becoming high. Even if the connector is placed at the inlet of the cabinet, it is also necessary to use the shield for the intra-cabinet portion of the cable all the way to the other end of the cable.

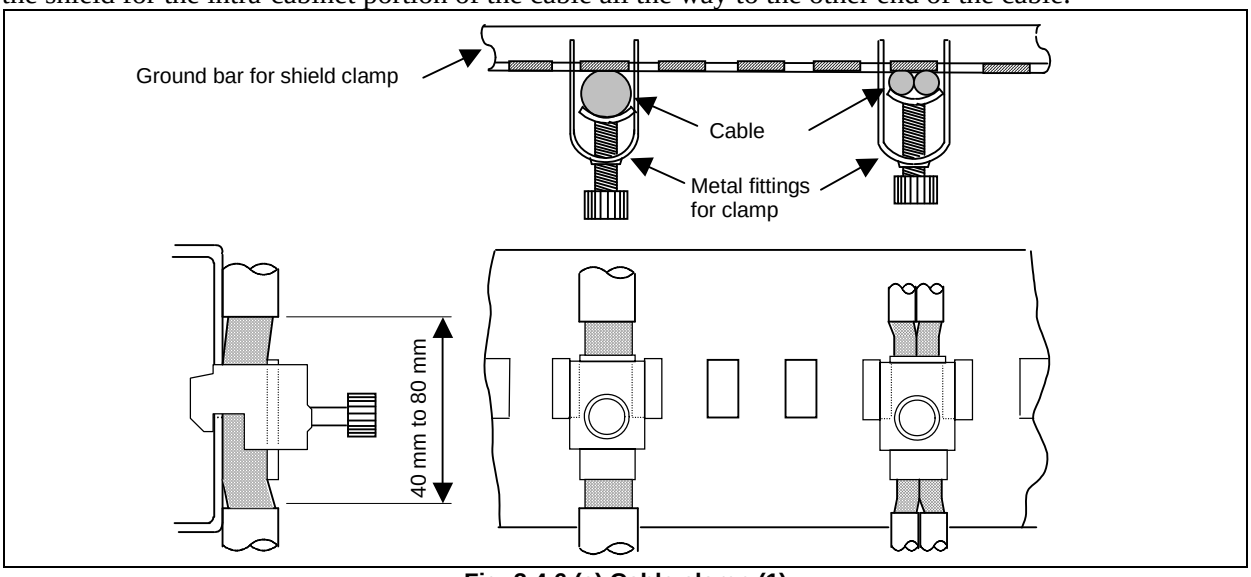

Fig. 3.4.6 (a) Cable clamp (1)

NOTE

1 Select a cable with a proper length.
2 If the cable is too long, the noise immunity may be reduced or noise may be caused on other cables. In addition, when the excess length is coiled, the inductance is increased and a high voltage is induced during turning on or off of signals. This may cause a failure or a malfunction due to noise.
3 Bundle and clamp the shields of cables that lead into the control unit or amplifier at a point, respectively, close to the unit or amplifier.

© MyFANUC B5B0D8428C0144A78A5F4CA87F2C262E

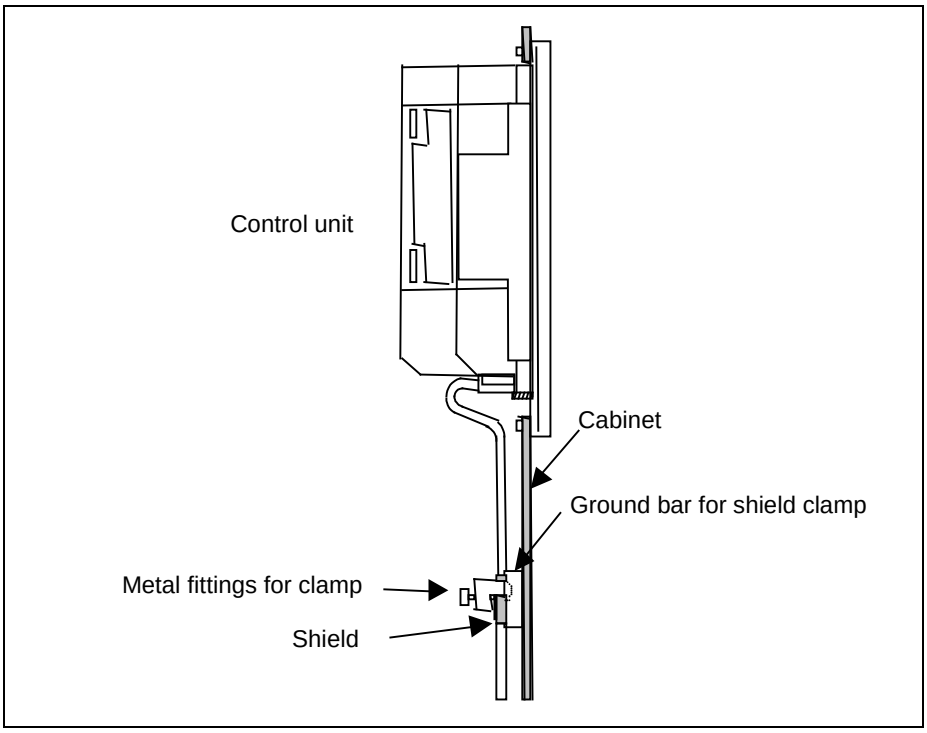

Fig. 3.4.6 (b) Cable clamp (2)

Prepare a ground bar for cable clamping shown below.

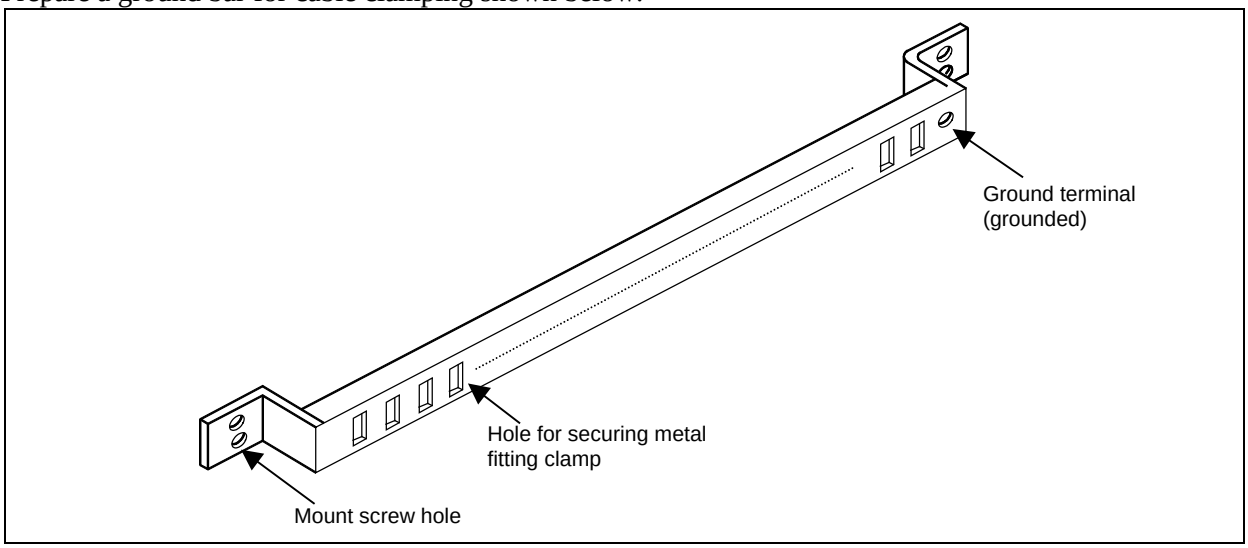

Fig. 3.4.6 (c) Ground bar for shield clamp (outline drawing)

© MyFANUC B5B0D8428C0144A78A5F4CA87F2C262E

The ground bar for cable clamping must be made of a steel plate at least 2 mm thick and plated with nickel.

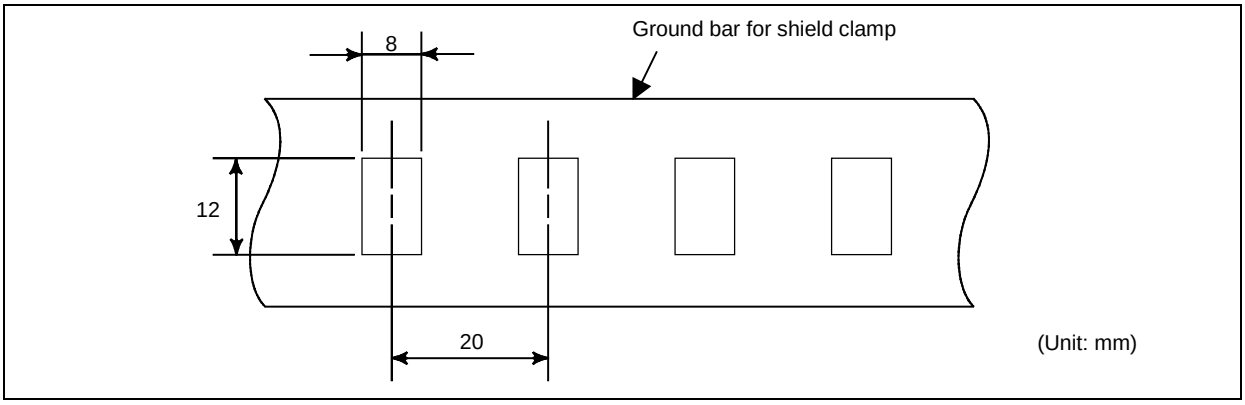

Fig. 3.4.6 (d) Ground bar for shield clamp (hole arrangement and dimension drawing)

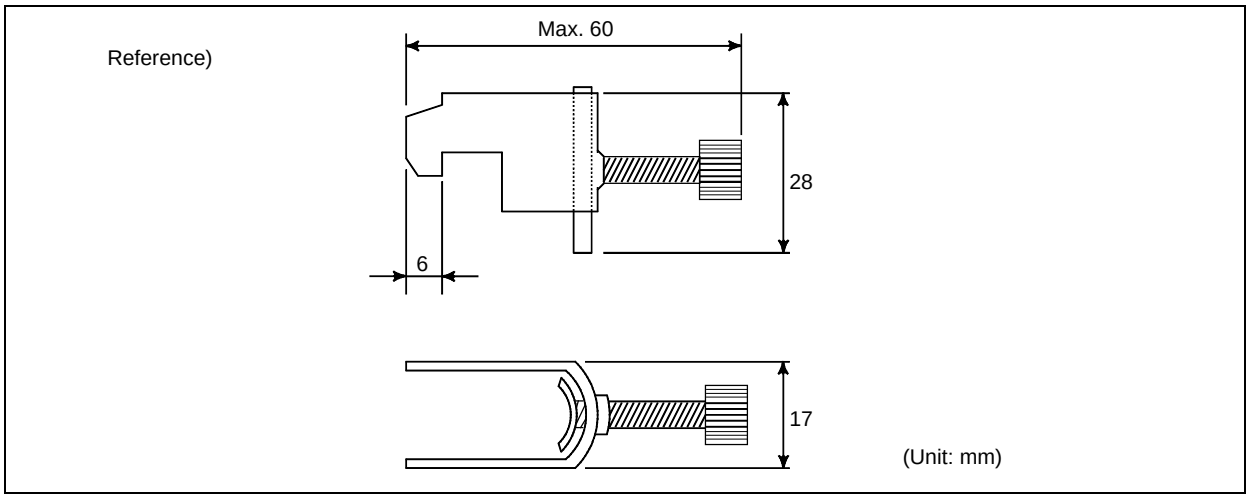

Fig. 3.4.6 (e) Clamping metal fixture (outline drawing)

Ordering specification for metal fittings for clamp
A02B-0303-K001 (8 pieces)

3.4.7 Lightning Surge Absorber Installation

It is recommended to install a surge absorber between input power lines and between input power lines and the ground in order to protect equipment from thunderbolt-caused voltage surges. However, installing a surge absorber does not always ensure protection from lightning surges.
For recommended lightning surge absorbers, refer to your respective servo amplifier descriptions.

Installation procedure

The surge-absorbing elements used for measures against surges due to lightening must be installed in the input power unit as shown in the figure below. The figure below shows an example in which an insulating transformer, shown by dotted lines, is not installed. If an insulating transformer is installed, surge-absorbing element 2 (between line and ground) is not required.

© MyFANUC B5B0D8428C0144A78A5F4CA87F2C262E

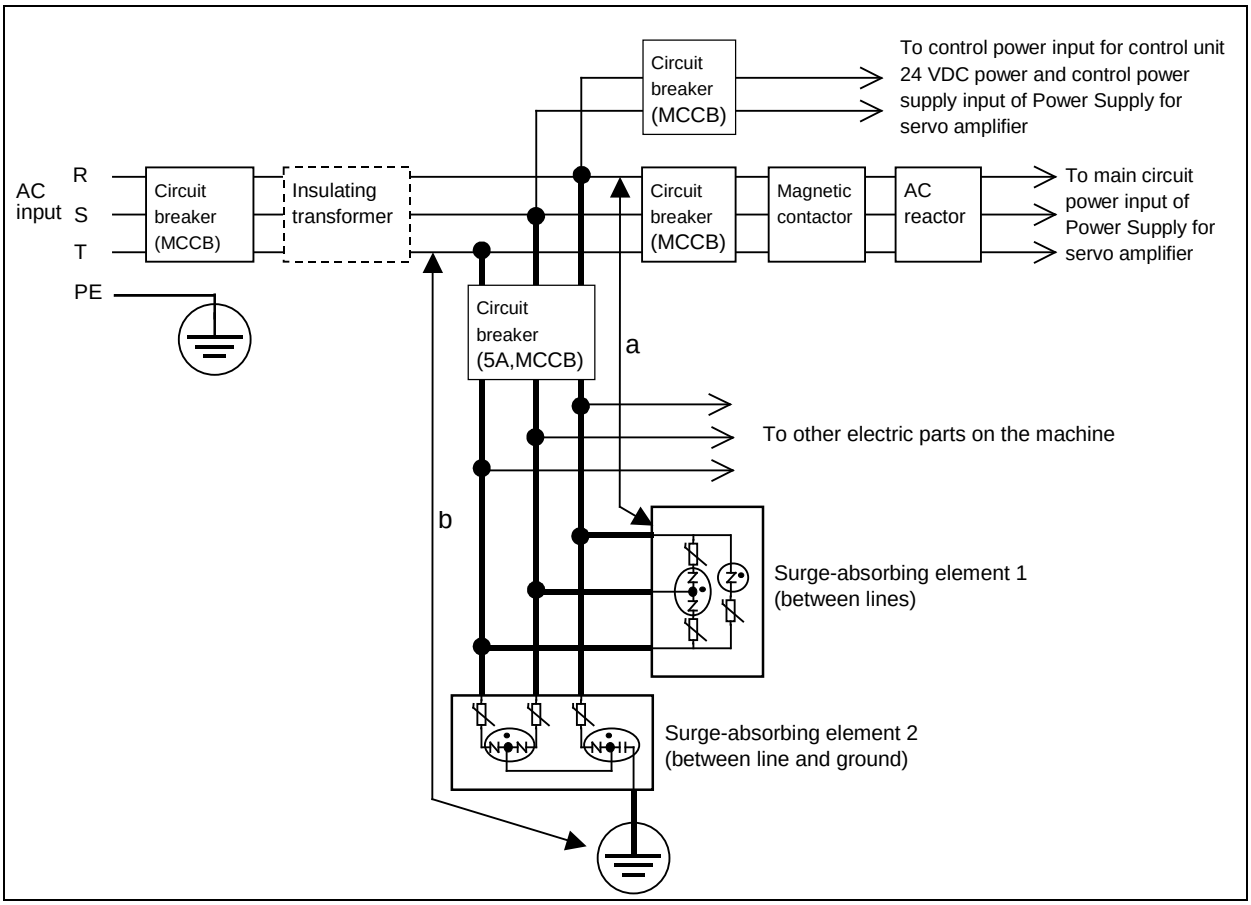

Fig. 3.4.7 Example of installing lightning surge absorbers on 200 VAC lines

⚠ CAUTION

1 For a better surge absorbing effect, the wiring shown by heavy line must be as short as possible.
Wire size : Cross-sectional area at least 2 mm^2 large
Wire length: The sum of the length (a) of the wire for the connection of surge-absorbing element 1 and that (b) of surge-absorbing element 2 must be 2 m or less.

2 If conducting dielectric strength tests by applying overvoltages (1000 VAC and 1500 VAC) to the power line, remove surge-absorbing element 2. Otherwise, the overvoltages would activate the element.

3 The circuit breaker (5A) is a short circuit protection of lines if the surge-absorbing elements result in short circuit breakdown due to the absorption of an excessive amount of energy.

NOTE

The circuit breaker (5A) can be used also for other electric parts on the machine because no current flows through surge-absorbing elements 1 and 2 in the normal state. The “other electric parts on the machine” can be the control power supply of Power Supply for servo unit and the power supply for the fan motor for a spindle motor.

© MyFANUC B5B0D8428C0144A78A5F4CA87F2C262E

3.5 INSTALLING THE CONTROL UNIT

> ⚠ **CAUTION**
> The control unit has a built-in fan motor. Failing to secure a space sufficient to maintain a satisfactory air flow in the control unit can lead to abnormal heat generation and faults.

3.5.1 Installing the LCD-mounted Type Control Unit

Air enters the control unit through the bottom and is drawn through the fan motor which is located on the top of the control unit.
Space (A), shown in Fig. 3.5.1, must be provided to ensure unrestricted air flow. Also, space (B) should be provided whenever possible. When space (B) cannot be provided, ensure that nothing is placed in the immediate vicinity which could obstruct the air flow.

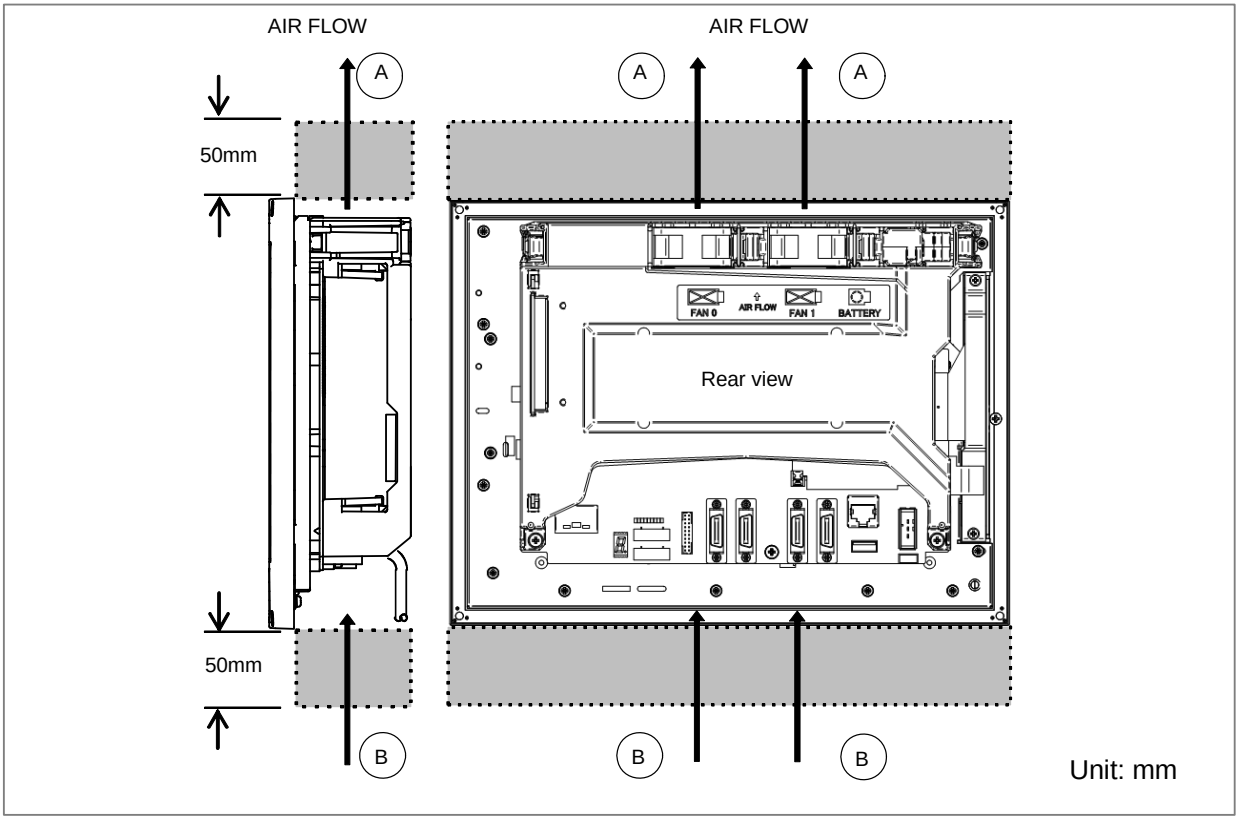

Fig. 3.5.1

© MyFANUC B5B0D8428C0144A78A5F4CA87F2C262E

3.5.2 Installing the Stand-alone Type Control Unit

Air is fed into the bottom of the unit and output from the fan motor mounted on the top of the unit.
The spaces shown in Fig. 3.5.2 (areas Ⓐ and Ⓑ) are always required to ensure smooth air flow.
Also, adequate service access space is required in front of and at the top of the unit so that printed circuit boards and the fan motor can be replaced easily if necessary.
There is a spare connector located at the far end (at middle height) on the right side of the control unit. This connector is used for control unit testing and other purposes. Therefore, space (area Ⓒ) for handling the connector is required.

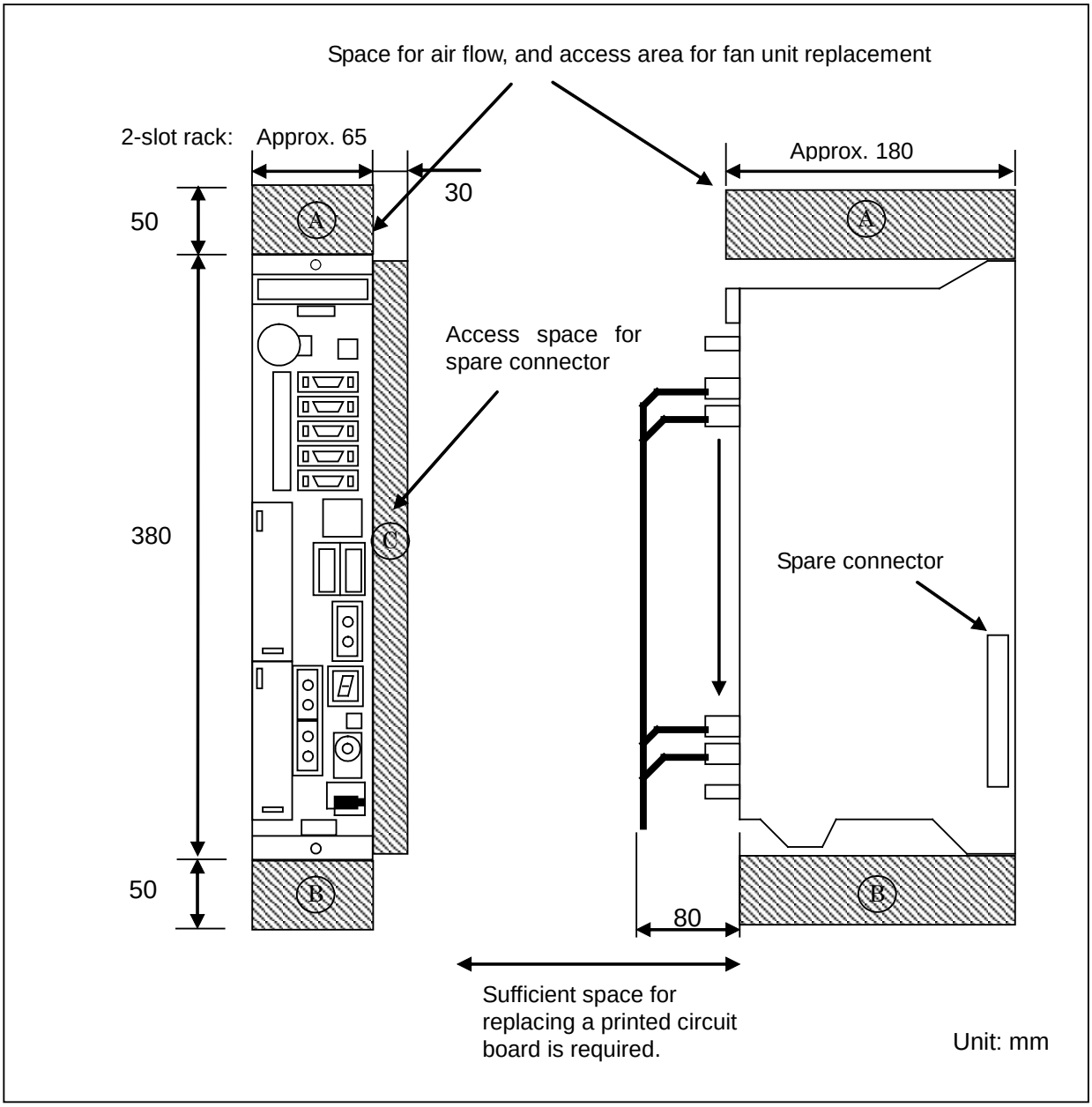

Fig. 3.5.2

© MyFANUC B5B0D8428C0144A78A5F4CA87F2C262E

3.6 TIGHTENING TORQUE FOR FASTENING UNITS AND GROUND TERMINALS

The following table lists the tightening torque for screws and nuts used to fasten the units (except those having molded mounting parts) explained herein and ground terminals in the units.

Screw and nut diameter	Tightening torque
M3	0.8 to 1.0 N·m
M4	1.6 to 2.0 N·m

The following table lists the tightening torque for screws and nuts used to fasten those units having molded mounting parts, such as stand-alone control units and separate detector interface units.

Screw and nut diameter	Tightening torque
M4	1.1 to 1.5 N·m
M5	2.4 to 2.8 N·m

⚠ CAUTION

Be sure to observe the rules listed above when tightening screws. If screws are tightened too weakly or too strongly, it is likely that the unit may drop, break, or malfunction.
For units having a touch panel in particular, be sure to observe the above rules. Failing to observe them can cause the touch panel to malfunction.

NOTE

For units having different installation conditions specified herein, observe them first.

3.7 DUSTPROOF MEASURES FOR CABINETS AND PENDANT BOXES

When designing and manufacturing cabinets or pendant boxes for housing displays and operator’s panels, they are requested to observe the following cautions to make their structures resistant to intrusion of dust, cutting chips, coolant, organic solvent, and oil mist because these cabinets and pendant boxes are susceptible to them.

1) The cabinet and pendant box must be of a hermetically sealed structure.
2) Apply packing to the panel mounting surface to which a display and operator's panel are to be mounted.
3) Make sure that the door packing of the cabinet and pendant box is sealed firmly.
4) For a cabinet or pendant box with a rear cover, apply packing to the mounting surface.
5) Make sure that the cable entrance is sealed with packing, connectors for conduits, etc.
6) Make sure that all other openings are blocked, if any.
7) Pay due consideration to keep the display and operator’s panel from direct exposure to cutting chips and coolant; do not let any coolant come into contact with them.
8) Coolant can readily form puddles on the cabinet and pendant box and may drop on the panel surface of the display and operator’s panel. Use such a structure that can prevent coolant from forming puddles on the display and operator’s panel or dropping on the panel surface.

© MyFANUC B5B0D8428C0144A78A5F4CA87F2C262E

⚠ WARNING

Coolants containing sulfur or chlorine at a high activation level, oil-free coolants called synthetic, and water-soluble coolants at a high alkali level, in particular, can largely affect the CNC and peripheral units. Please note that, even if consideration is taken to protect them from direct exposure to these coolants, the following trouble is likely to occur.

- Coolants containing sulfur or chlorine at a high activation level
  Some coolants containing sulfur or chlorine are at an extremely high activity level. If such a coolant adheres to the CNC or peripheral units, it reacts chemically with a material, such as resin, of equipment, possibly leading to corrosion or deterioration. If it gets in the CNC or a peripheral unit, it corrodes metals, such as copper and silver, used as component materials, possibly leading to a defective component.
- Synthetic-type coolants having a high permeability
  Some synthetic-type coolants whose lubricating component is, for example, PAG (polyalkylene glycol) have an extremely high permeability. If such a coolant is used even in equipment having a high closeness, it can readily flow into the equipment through, for example, gaskets, or packing. It is likely that, if the coolant gets in the CNC or a peripheral unit, it may deteriorate the insulation and damage the components.
- Water-soluble coolants at a high alkali level
  Some coolants whose pH is increased using alkanolamine are so strong alkali that its standard dilution will lead to pH10 or higher. If such a coolant spatters over the surface of the CNC or peripheral unit, it reacts chemically with a material, such as resin, possibly leading to corrosion or deterioration.

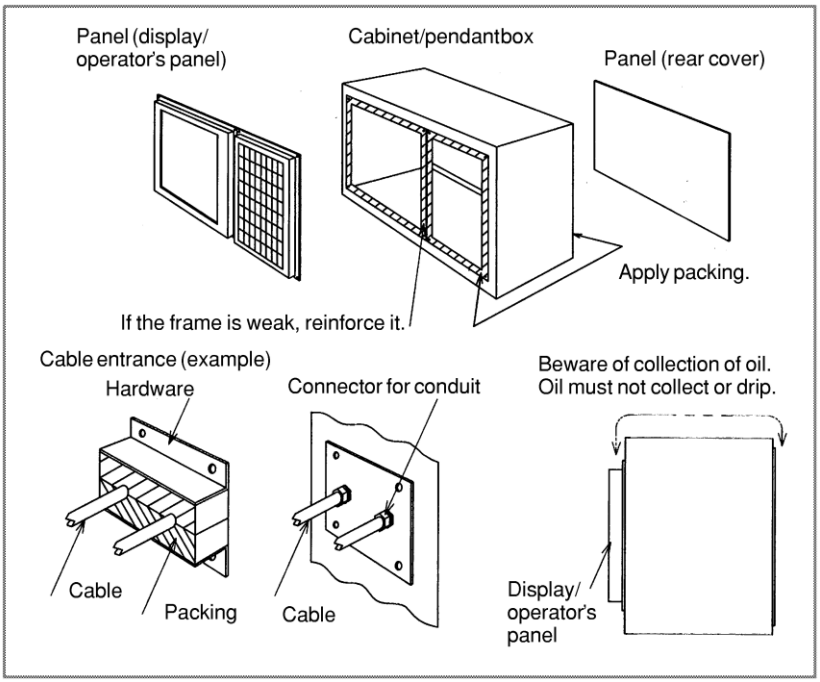

© MyFANUC B5B0D8428C0144A78A5F4CA87F2C262E

When making screw holes in packing, be careful not to cut to the edge of the packing. Any extra cut can let coolant get in the cabinet through the screw hole, causing trouble.

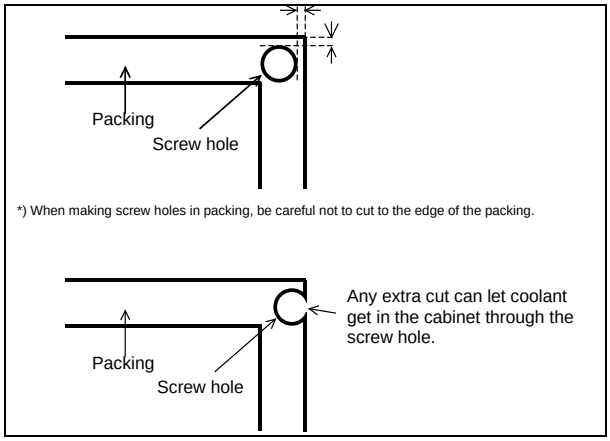

Packing for LCD units, MDI units, and machine operator's panels

Observe the following rough standards for the thickness and hardness of packing used with LCD units (included LCD-mounted control units or display units), MDI units, and machine operator's panels.

Thickness: 1.4mm (including double-stick tape)
Hardness : 8 (Asker C)

The following models of packing can be purchased from FANUC. These models are electrically conductive. When they are used to mount a unit on a cabinet or pendant box, they leave no electrical gap between the unit and cabinet or pendant box, being effective in electromagnetic wave shielding and EMC measures.

Ordering information	Use
A02B-0323-K301	For 10.4" LCD unit, for standard MDI unit (ONG vertical type) (220 x 290mm)
A02B-0323-K304	For 15" LCD unit
A02B-0323-K310	For standard MDI unit (ONG vertical type) (220 x 230mm)
A02B-0323-K314	For standard MDI unit (QWERTY) (160 x 290mm)
A02B-0323-K315	For standard MDI unit (QWERTY type B) (145 x 400mm)
A02B-0323-K320	For main panel of standard machine operator's panel, safety machine operator's panel or safety machine operator's panel-BK10 (140 x 290mm)
A02B-0323-K321	For safety machine operator's panel type B or safety machine operator's panel-BK15
A02B-0323-K323	For each sub panel (450mm:2 piece)
A02B-0338-K150	For 10.4" LCD/MDI (horizontal)
A02B-0338-K151	For 10.4" LCD/MDI (vertical)

⚠ CAUTION

1 We have evaluated the above models of packing for many different coolants. However, we do not necessarily guarantee that they are resistant to all coolants. They are not resistant to, for example, coolants containing sulfur or chlorine at a high activation level and water-soluble coolants at a high alkali level.
2 When attaching these models of packing, observe the cautions provided together with them.

We will attach non-conductive packing to a packing box for CNC (LCD unit) as standard. The non-conductive packing to be attached as standard is as shown in the table below. Please use it as necessary. It is not necessary to use this packing if it is arranged other packing by machine tool bender.

© MyFANUC B5B0D8428C0144A78A5F4CA87F2C262E

Ordering information	Use
A02B-0338-K152 (A250-0945-X016)	For 10.4 inch LCD/MDI unit (Horizontal)
A02B-0338-K153 (A250-0945-X017)	For 10.4 inch LCD/MDI unit (Vertical)
A02B-0338-K156 (A98L-0047-0003)	For 10.4 inch LCD unit

The packing configuration is 4 sheets in total, 2 sheets in each of the horizontal direction and the vertical direction. In the case of non-conductive packing, there is no outside and inside orientation of the packing.

When using packing to install a LCD unit, MDI unit, or machine operator's panel in a cabinet or pendant box, be careful not to pinch the packing between the mounting surface of the cabinet or pendant box and the brim of the unit being installed.

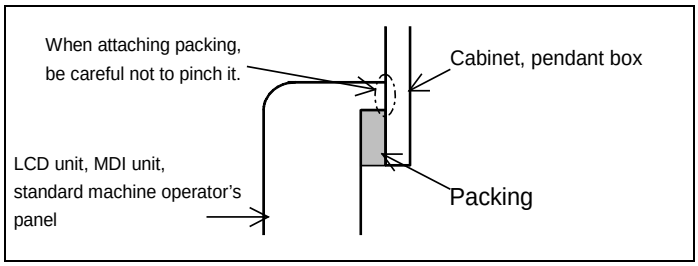

3.8 ATTACHING SCREW CAPS

After mounting any of the LCD-mounted control unit, MDI unit, and machine operator's panel main panel, which are supposed to be mounted on the front of a cabinet or pendant box using M3 screws, attach screw caps to the screw mounting hole at every corner.

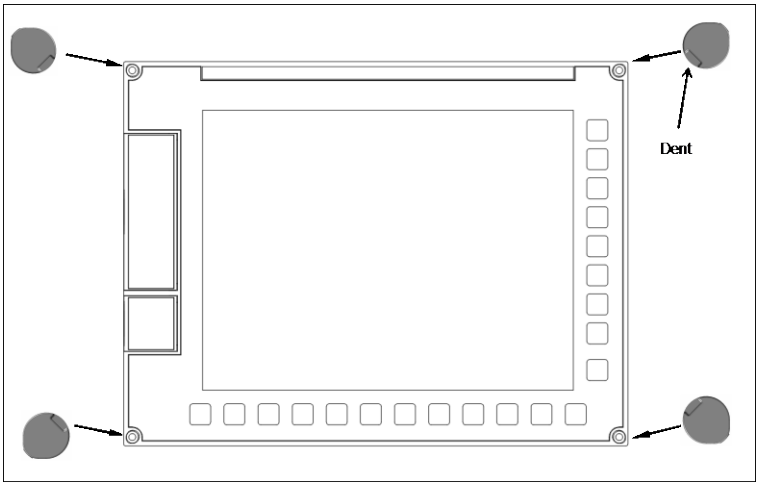

⚠ CAUTION
When attaching screw caps, pay due attention to the dent in them and be careful not leave any gap. Otherwise, coolant may get in the equipment, causing trouble.

© MyFANUC B5B0D8428C0144A78A5F4CA87F2C262E

3.9 INSTALLATION CONDITION FOR UL RECOGNITION

1 Outline

For UL recognition of the product, installed after due considerations on UL requirements.

2 Notes on the installation conditions for UL recognition

- Set up the LCD-mounted type control unit, display unit and MDI unit on a flat surface of a Type 1 Enclosure [*1].

  (*1. Type 1 Enclosure is defined in standard UL 50 as follows.
  TYPE 1 - Enclosures constructed for indoor use to provide a degree of protection to personnel against incidental contact with the enclosed equipment and to provide a degree of protection against falling dirt.)

- Use CNC, Display and MDI unit in Pollution degree 2 [*2] environment or cleaner environment, except for part exposed on the outside of enclosure.

  (*2. Pollution degree is a classification according to the amount of pollution and condensation present in the environment.
  "Pollution Degree 2" is defined in the standard UL 508 as follows.
  Normally, only nonconductive pollution occurs; however, temporary conductivity caused by condensation may be expected.)

- Maximum surrounding air temperature rating: +60°C [*3]

  (*3. This temperature rating is a condition of UL evaluation for recognition. However, for long-term reliability, the cabinet should be actually designed in accordance with the maximum operating surrounding air temperature that described in the subsection 3.1.2.)

- Power supply unit for this unit must have an isolating device and the DC 24 Volt output must be isolated from AC mains supply.

  (This isolation can be achieved with the use of the isolating DC power supply unit that complies with UL standard.)
  DC 24 Volt power cable needs to be used with 14AWG or 16AWG size conductors.

  For details, refer to "INSTALLATION CONDITION FOR UL RECOGNITION" at the following URL:
  https://www.fanuc.co.jp/en/product/stddoc/

© MyFANUC B5B0D8428C0144A78A5F4CA87F2C262E

4 POWER SUPPLY CONNECTION

4.1 24 VDC POWER (INSULATION AC/DC CONVERTOR)

4.1.1 Connecting 24 VDC Power

Prepare a 24 VDC power supply (insulation AC/DC converter) and supply power to the 24 VDC input of the control unit and peripheral units, such as I/O units.
It is recommended to provide an ON/OFF circuit external to the 24 VDC power supply as shown in Fig. 4.1.1(a) so that it can turn on and off the AC input to the 24 VDC power supply.
It is also recommended to use a separate 24 VDC power supply for any unit whose load fluctuates largely or which may generate noise, in order to minimize effect of noise and voltage variation to the control unit or peripheral unit.

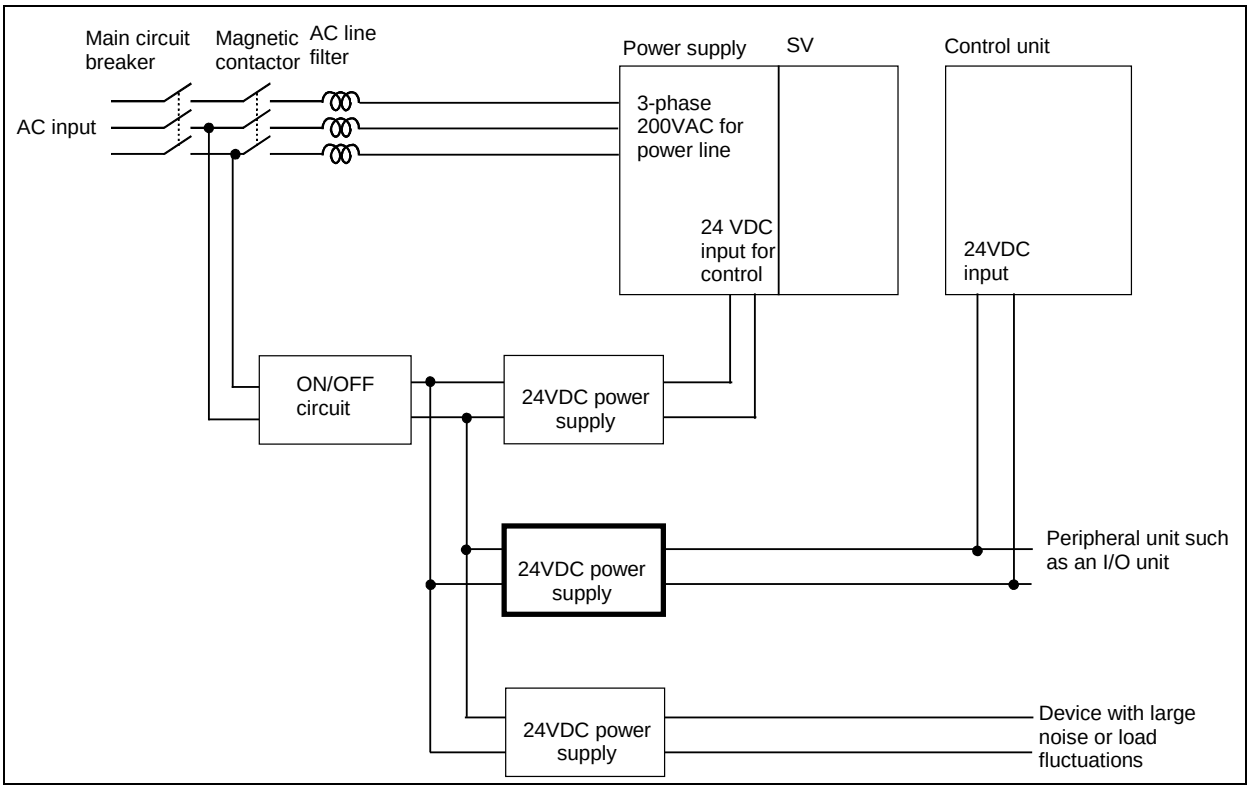

Fig. 4.1.1 (a) Example of recommended 24 VDC power supply connection

> ⚠ **CAUTION**
> When the ON/OFF circuit is provided on the DC side of a 24 VDC power supply, on-time rush current imposes an extremely heavy burden on the relay contact in the ON/OFF circuit compared with the time when the ON/OFF circuit is provided on the AC side. So, it is necessary to select a relay that is highly resistant to rush current. In general, a relay having a high current rating and being large in size should be selected.
> In the connection shown in Fig. 4.1.1(b), for example, use a separate 24 VDC power supply if voltage variation due to abrupt changes in the load or rush current may transiently exceed the rated input voltage range (24 VDC ±10%) for the control unit or peripheral unit.

© MyFANUC B5B0D8428C0144A78A5F4CA87F2C262E

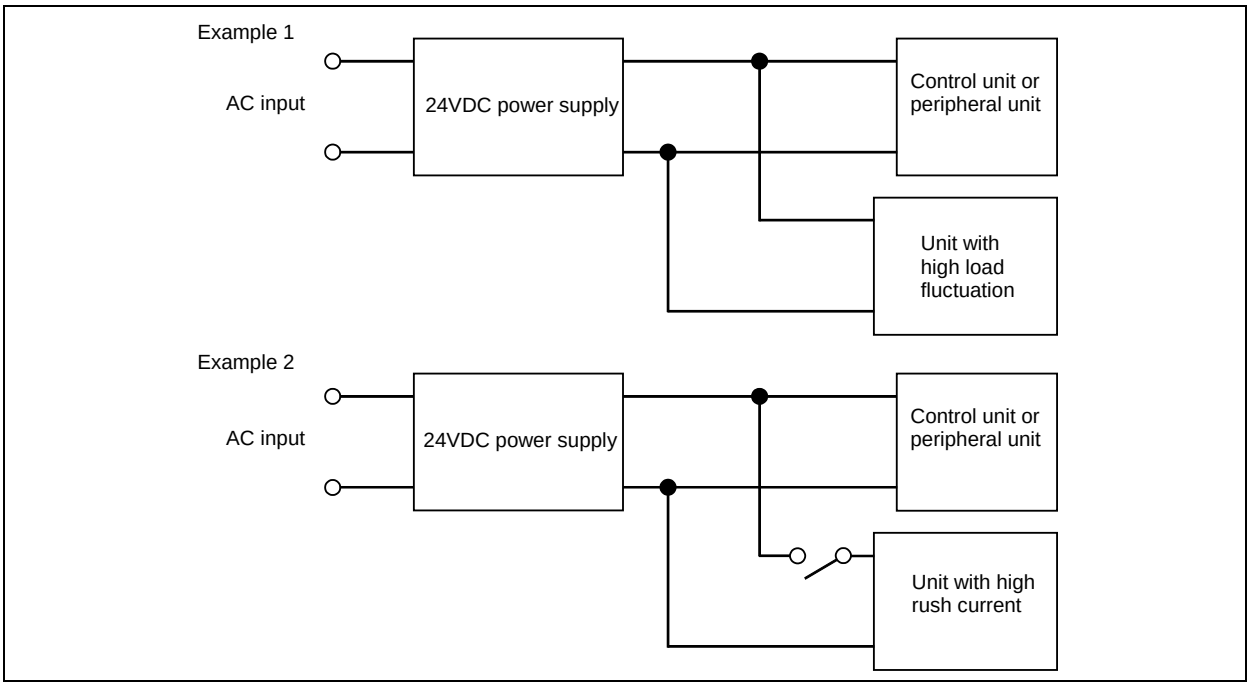

Fig. 4.1.1 (b) Example of connection with high transient voltage variation

NOTE

Try as much as possible to avoid the configuration shown in Fig. 4.1.1(b) even when load fluctuation and rush current are low.
In a configuration where two or more units are connected to the same 24 VDC power supply, the control unit will not be able to start, thus failing to issue an alarm, if the power supply fails to operate because of a fault in a unit other than the control unit. For this reason, it is likely that it may take time to locate the fault.
If the 24 VDC power supply for the control unit and peripheral units must be connected also to another unit because of a limited space in the power magnetics cabinet, insert a noise filter, example: ZGB2203-01U manufactured by TDK, before the 24 VDC input for the control unit and peripheral units in order to prevent noise from the 24 VDC power supply from entering the control unit and peripheral units after paying due consideration to the voltage variation resulting from load fluctuation or rush current. In case of using a noise filter, enough inspect workings of the control unit and peripheral units, because there may be influenced of another noise by the noise filter.

© MyFANUC B5B0D8428C0144A78A5F4CA87F2C262E

4.1.2 24 VDC Power Supply Specification

Specifications of recommended 24 VDC power supply:

Output voltage: +24V±10% (21.6V to 26.4V)
(In the 24 VDC input for the control unit and peripheral units, ripple voltage and noise are contained. See Fig. 4.1.2.)

Output current:
The continuous load current of the 24 VDC power supply is higher than or equal to the current used by the control unit and peripheral units that are connected to the power supply.
(At the maximum temperature inside the power magnetics cabinet in which the power supply is located. See Subsection 4.1.3.)

Load fluctuations (including rush current):
The output voltage must not go out of the above range due to load fluctuations by external DO and other factors.

Instantaneous input interruption retention time: 10 ms or more (for -100%), 20 ms or more (for -50%)

Safety standard
UL 60950-1, CSA-C22.2 No. 60950-1, EN60950-1 approved

Noise voltage at terminal/electrical field intensity of noise
EN55011/EN55022-B, FCC-B, VCCI-B compliant

NOTE
Safety standard and Noise voltage at terminal/electrical field intensity of noise are recommended for selecting the 24 VDC power supply on the market. However, the required standards may be different from above standards by the machine, an importing country, revision of the standard, or etc, prepare the 24 VDC power supply that is conformed to required standards.

© MyFANUC B5B0D8428C0144A78A5F4CA87F2C262E

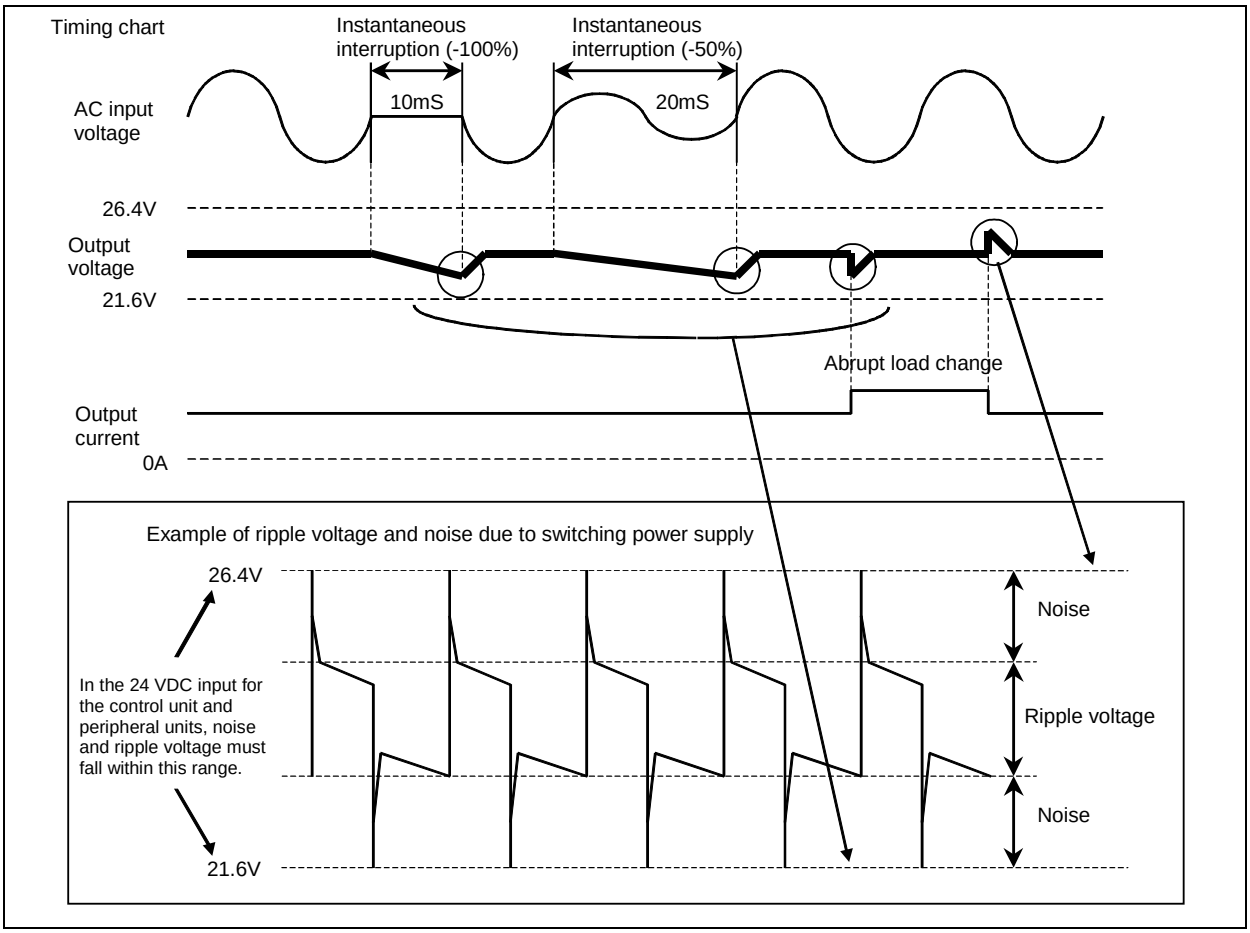

Fig. 4.1.2 (a) Timing chart

> ⚠ **CAUTION**
> Do not use any power supply circuit, consisting of a capacitor and rectifier circuit, like one shown in Fig. 4.1.2 (b), because it cannot maintain a voltage of 24 VDC (the voltage falls to 21.6 V or below in each 24 VDC input for the control unit and peripheral units) due to instantaneous interruption or voltage variation in the AC input. Instead, use a voltage regulator.

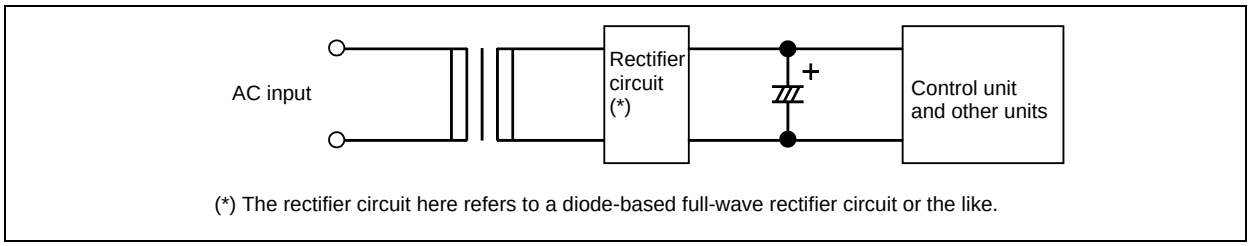

Fig. 4.1.2 (b) Example of a power supply circuit that cannot maintain 24 VDC

© MyFANUC B5B0D8428C0144A78A5F4CA87F2C262E

4.1.3 Power Capacity of 24 VDC Power Supplies

The 24 VDC power supply for the control unit and peripheral units must have the power capacity that can supply current required by them.
Calculate the power capacity required of each 24 VDC power supply according to what control unit and options are connected to the power supply while referencing Table 4.1.3.

Table 4.1.3 Power capacity

Unit			Power capacity	Remarks
LCD-mounted type control unit	15” LCD unit 10.4”LCD unit 10.4” LCD/MDI unit	Option 0 slot Option 2 slots	1.4A	NOTE 1)
Stand-alone type control unit		Option 2 slots	1.6A	NOTE 1)
Option board	Fast Ethernet board		0.1A	
	HSSB interface board		0.2A	
	PROFIBUS-DP master board		0.2A	
	PROFIBUS-DP slave board		0.1A	
	DeviceNet master board		0.1A	
	DeviceNet slave board		0.1A	
	CC-Link remote device station board		0.1A	
MDI units			0A	

NOTE
1 Each power capacity listed above does not include that of option boards.
2 When connecting the RS-232C device which will draw power from the control unit, add the power capacity that the device requires to the listed power capacity.
3 Limit the total power consumption of memory cards and USB memories to within 2 W.
4 See Chapter 6 for the power capacity of the separate detector interface unit.
5 See Chapter 8 for the power capacity of I/O units.
6 Refer to the PANEL *i*/*i*H Pro CONNECTION AND MAINTENANCE MANUAL (B-64683EN) or PANEL *i*H Pro CONNECTION AND MAINTENANCE MANUAL (B-64703EN) for the power capacity of the PANEL *i*H Pro.
7 Selecting 24 VDC power supplies impose restrictions besides their power capacity. Be sure to read also Subsection 4.1.2.

⚠ **WARNING**
If the machine tool of interest has a vertical axis, it is necessary to select a 24 VDC power supply that can hold its output of 24 VDC for a prolonged time even after the AC input has been interrupted (including power failure and instantaneous power interruption) in order to keep a possible fall along the vertical axis within an acceptable range. The control unit deenergizes servo circuits if its 24 VDC input falls to 21.6 V or below. For this reason, failing to maintain the 24 VDC input to the control unit for a satisfactory period after the AC input has been interrupted may lead to a larger amount of fall along the vertical axis, depending on a peripheral circuit in use, because the servo for the vertical axis is deenergized before the peripheral circuit detects an AC input interruption and activates the brake. In general, selecting a 24 VDC power supply having a power capacity with a wide margin would prolong the hold time of the 24 VDC output after an AC input interruption.

© MyFANUC B5B0D8428C0144A78A5F4CA87F2C262E

4.2 TURNING ON AND OFF THE POWER TO THE CONTROL UNIT

4.2.1 Power-on Sequence

Turn on the power to all the units at the same time, or in the following sequence:

1 Power to the overall machine (AC input)
2 Servo amplifier control power supply (24VDC)
3 Power to the slave I/O units connected via the I/O Link *i*, the separate detector interface unit, and power to the control unit (24 VDC), power to the separate detector (scale)

The expression "the same time" here means that the power to the units mentioned in Steps 1 and 2 above has been turned on at least within 500 ms after the 24 VDC power supply for the control unit mentioned in Step 3 above has been turned on. The power to each unit mentioned in Step 3 must have been turned on within a period between 200 ms before the 24 VDC power supply for the control unit is turned on and 500 ms after that time.

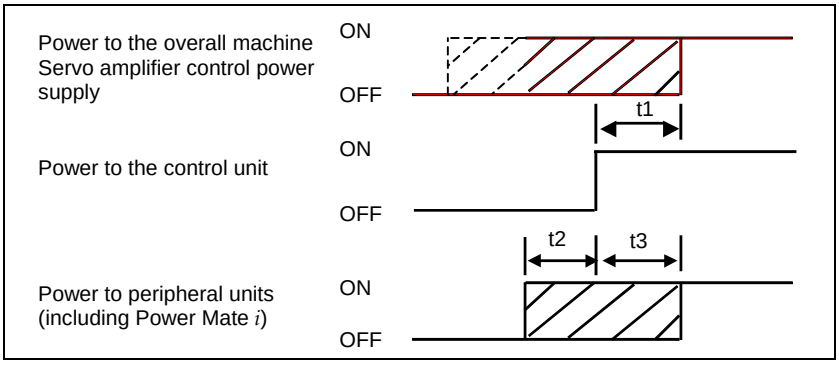

Fig. 4.2.1

t1: -500ms It is meant that the power to the overall machine and the servo amplifier control power are turned on at least within 500 ms after the control unit power has been turned on.

t2: 200ms It is meant that the power to peripheral units (including Power Mate *i*) is turned on not earlier than 200 ms before the control unit power is turned on.

t3: -500ms It is meant that the power to peripheral units (including Power Mate *i*) is turned on not earlier than 500 ms before the control unit power is turned on.

NOTE

Leave each of the memory backup battery (3 VDC) and separate absolute pulse coder battery (6 VDC) connected regardless of whether the control unit power is on or off. Removing these batteries with the control unit power turned off can corrupt parameters and programs in the control unit as well as position data in the pulse coder.
See Subsection 4.4.1 for explanations about how to replace the memory backup battery.
See Subsection 4.4.2 for explanations about how to replace the separate absolute pulse coder battery.

© MyFANUC B5B0D8428C0144A78A5F4CA87F2C262E

4.2.2 Power-off Sequence

Turn off the power to all the units at the same time, or in the following sequence:

1	Power to the slave I/O units connected via the I/O Link *i*, the separate detector interface unit, and power to the control unit (24 VDC)
2	Servo amplifier control power supply (24 VDC), power to the separate detector (scale)
3	Power to the overall machine (AC input)

The expression "the same time" here means that there is no problem even if the power to the units mentioned in Steps 2 and 3 above is turned off not earlier than 500 ms before the power to the control unit mentioned in Step 1 above is turned off. If the power to the units mentioned in Steps 2 and 3 is turned off earlier, alarm information is left in the control unit. In addition, the power to each peripheral unit mentioned in Step 1 above must be turned off not earlier than 500 ms before the power to the control unit is turned off. Otherwise, alarm information is left in the control unit.

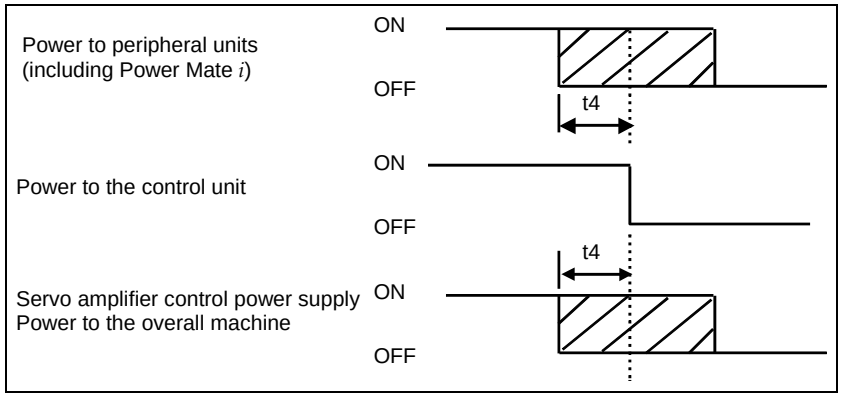

Fig. 4.2.2

t4:500ms It is meant that the power of interest is turned off not earlier than 500 ms before the power to the control unit is turned off.

> ⚠ **CAUTION**
> The power to the control unit cannot be turned on or off with peripheral units supplied with power.
> Before turning off the power to the control unit, be sure to turn off the power to the units (such as slave I/O units connected via the I/O Link *i*, the I/O Link *i*, I/O Link *i* -equipped β*i* series servo amplifier, Power Mate *i*, separate detector I/F units, servo amplifier control power, and separate detectors (scale)) connected to the control unit.

© MyFANUC B5B0D8428C0144A78A5F4CA87F2C262E

⚠ **WARNING**

It is impossible for the control side to control motors if the power supply is off or there is no AC input (including power failure). It is necessary for the machine side to perform any necessary processing.

If the control unit is used to control a vertical axis, for example, provide the motor with a brake mechanism to prevent a fall along the vertical axis. The brake should be controlled in such a way that the motor is clamped when the servo has not be started or when the motor is not supposed to rotate and unclamped only when it is supposed to rotate. It is common practice to clamp servo motors when the servo axes cannot be controlled because of the power supply being off or of a power failure. Even with this common practice, a fall may occur along a controlled axis before the relay works. So, it is necessary to examine whether the fall distance poses any problem.

Power-off: Before turning off the control unit power, be sure to apply the brake to clamp the motor.

Power failure: On detecting a power failure, apply the brake quickly.
Turning off the control unit power results in the servo being deenergized. So, select a 24 VDC power supply that can maintain its 24 VDC output for a prolonged time after an AC input interruption.

© MyFANUC B5B0D8428C0144A78A5F4CA87F2C262E

4.3 CABLE FOR POWER SUPPLY TO CONTROL UNIT

Supply the power to the control unit from a 24 VDC power supply.

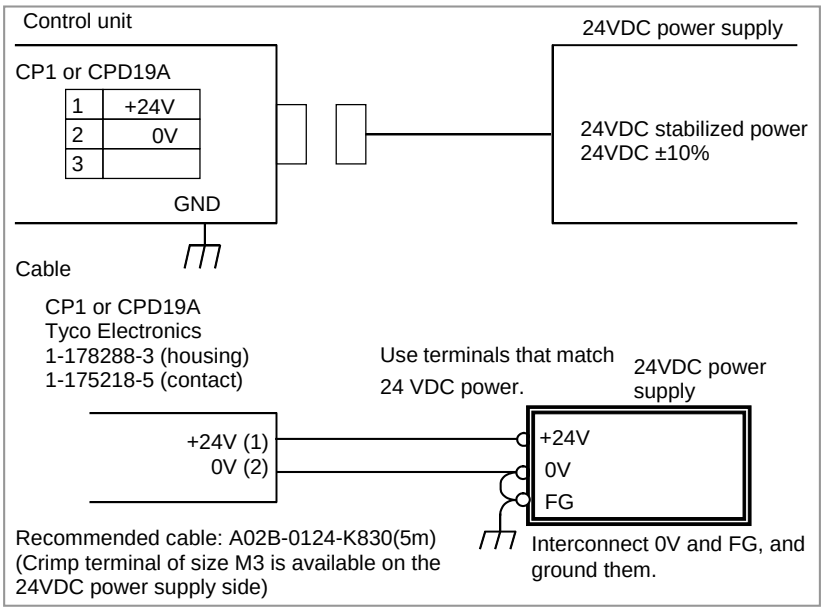

In the stand-alone type control unit, a voltage of 24 VDC once input to CPD19A can be branched out from CPD19B. The terminal arrangement of CPD19B is shown below. With this configuration, it is necessary for the 24 VDC power supply to supply as much current to CPD19A as the total of that required by the control unit and that required by external devices connected to CPD19B. The current-carrying capacity of CPD19B is 1.0 A.

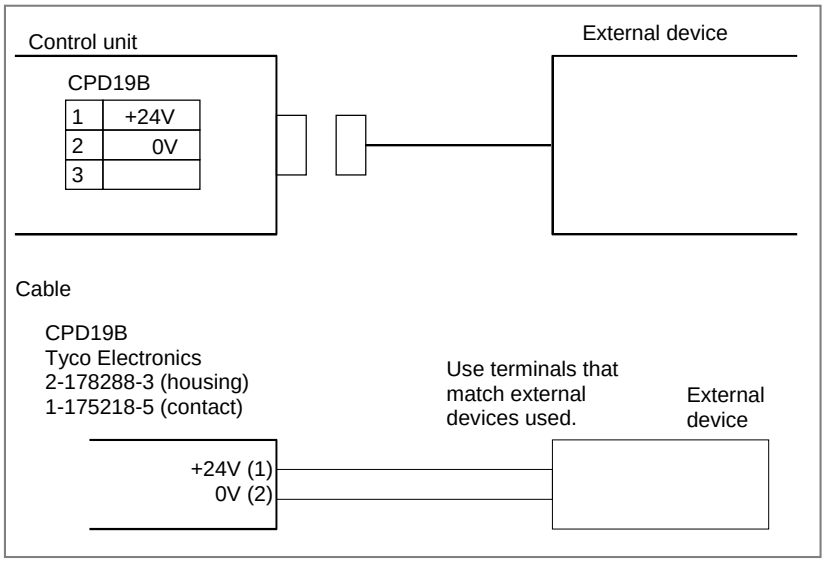

© MyFANUC B5B0D8428C0144A78A5F4CA87F2C262E

4.4 BATTERIES

A system using this control unit uses batteries in the places listed below. Refer to the PANEL *i* / *i*H Pro CONNECTION AND MAINTENANCE MANUAL (B-64683EN) or PANEL *i*H Pro CONNECTION AND MAINTENANCE MANUAL (B-64703EN) for explanations about the batteries used for the PANEL *i*. Used batteries must be discarded according to appropriate local ordinances or rules. When discarding batteries, insulate them by using tape and so forth to prevent the battery terminals from short-circuiting.

Use	Component connected to battery
Memory backup in the control unit	Control unit
Preservation of the current position indicated by the separate absolute pulse coder	Separate detector interface unit
Preservation of the current position indicated by the absolute pulse coder built into the motor	Servo amplifier

4.4.1 Battery for Memory Backup in the Control Unit (3 VDC)

Offset data, and system parameters are stored in SRAM in the control unit. The SRAM power is backed up with the memory backup batteries held in the control unit.
When the voltage of the battery becomes low, alarm message "BAT" blinks on the LCD screen and the battery alarm signal is output to the PMC. Upon the alarm, replace the battery as soon as possible. The rough standard for the replacement limit is one week. However, how long the battery lasts after the alarm varies, depending on the system configuration of interest.
If the voltage of the battery becomes any lower, memory can no longer be backed up. Turning on the power to the control unit in this state causes system alarm to occur because the contents of memory are lost. Clear the entire memory and reenter data after replacing the battery.
FANUC thus recommends that the battery be replaced periodically, once a year, regardless of whether a battery alarm is issued.
The following two kinds of batteries can be used.

- Lithium battery built into the CNC control unit.
- Alkaline dry cell (size D) inserted in an external battery case attached to the control unit.

NOTE
Before shipped from FANUC, the control unit is equipped with a lithium battery set as default. With this lithium battery, memory contents can be preserved for one year.

© MyFANUC B5B0D8428C0144A78A5F4CA87F2C262E

4.4.1.1 Replacing the lithium battery

For LCD-mounted type control unit

Prepare a new lithium battery (ordering code: A02B-0323-K102).

(1) Turn on the power to the machine (control unit). After about 30 seconds, turn off the power.

(2) Take out the lithium battery from the rear of the control unit (by holding the latch of the lithium battery and pulling it up while unlatching the claw held in the case).

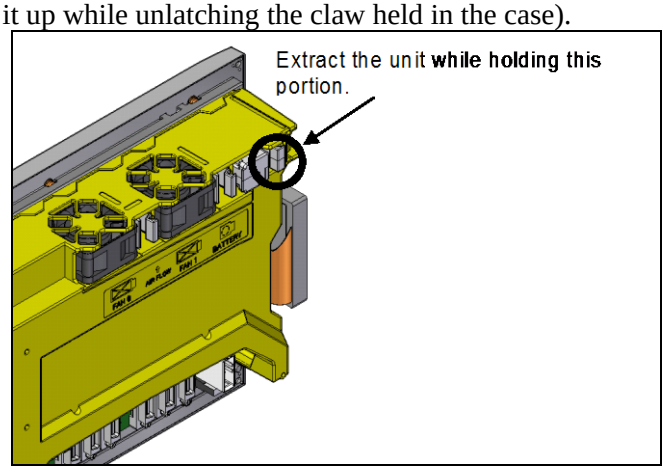

(3) Insert a new lithium battery, prepared in advance, into the battery case (by pushing it in until the claw of the lithium battery fits in the case). Make sure that the claw is latched securely.

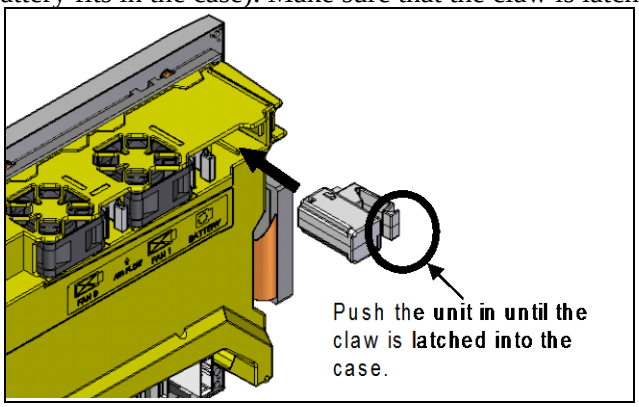

⚠ WARNING

It is likely that the lithium battery may explode unless it is replaced correctly.
Do not use any battery other than the specified one (A02B-0323-K102).

⚠ CAUTION

Steps (1) to (3) should be completed within 30 minutes.
Do not leave the control unit without a battery for any longer than the specified period. Otherwise, the contents of SRAM may be lost.
Before starting battery replacement, save the SRAM contents in a batch. They can be restored easily even if they are lost.
Refer to the MAINTENANCE MANUAL (B-64695EN) for explanations about how to save and restore SRAM contents in a batch.

NOTE

Discard used batteries as “industrial waste” according to the rules and ordinances of the country where the machine is installed and of the local government that has jurisdiction over the location of the machine. When discarding them, insulate the battery terminals with tape or the like to protect them from short-circuiting.

© MyFANUC B5B0D8428C0144A78A5F4CA87F2C262E

For stand-alone type control unit

Prepare a new lithium battery (ordering code: A02B-0200-K102).

(1) Turn on the power to the machine (control unit). After about 30 seconds, turn off the power.

(2) Remove the lithium battery from top of the control unit.
First, pull the lithium battery cable to detach the connector. Then, take out the lithium battery from the battery case.
The battery case is on top of the main board face plate.

(3) After lithium battery replacement, attach the connector.

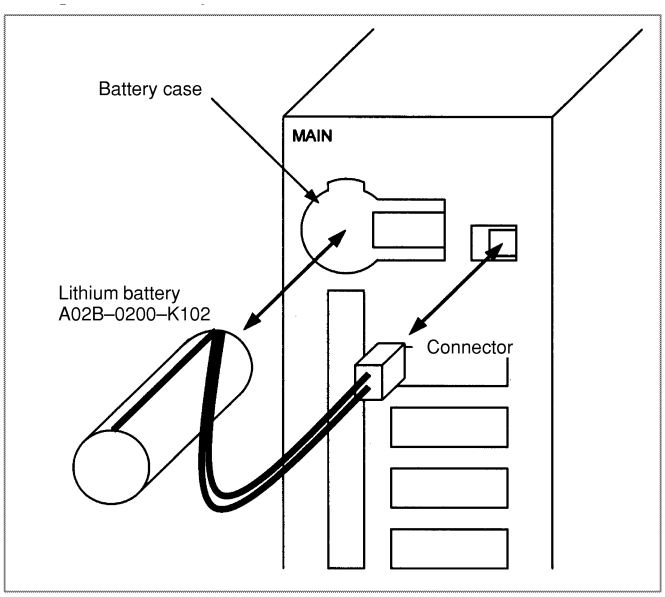

⚠ WARNING

It is likely that the lithium battery may explode unless it is replaced correctly.
Do not use any battery other than the specified one (A02B-0200-K102).

⚠ CAUTION

Steps (1) to (3) should be completed within 30 minutes.
Do not leave the control unit without a battery for any longer than the specified period. Otherwise, the contents of SRAM may be lost.
Before starting battery replacement, save the SRAM contents in a batch. They can be restored easily even if they are lost.
Refer to the MAINTENANCE MANUAL (B-64695EN) for explanations about how to save and restore SRAM contents in a batch.

NOTE

Discard used batteries as “industrial waste” according to the rules and ordinances of the country where the machine is installed and of the local government that has jurisdiction over the location of the machine. When discarding them, insulate the battery terminals with tape or the like to protect them from short-circuiting.

© MyFANUC B5B0D8428C0144A78A5F4CA87F2C262E

4.4.1.2 Replacing commercially available alkaline dry cells (size D)

In place of the built-in lithium battery in the control unit, commercially available alkaline dry cells (size D) can be used by installing a battery case outside the control unit and inserting the dry cells in the case.

How to connect the battery case to the control unit

For the LCD-mounted type control unit, connect the battery cable (A02B-0323-K103) to the battery case (A02B-0236-C282). For the stand-alone type control unit, use the battery case (A02B-0236-C281), which comes with the battery cable attached.

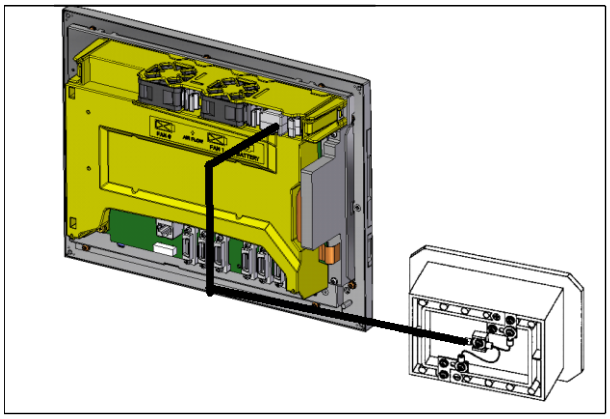

Example of connecting the battery case to the control unit (LCD-mounted type)

NOTE

1 The battery cable is engaged with its connector using a simple lock mechanism. Fasten the cable at a length of 500 mm or smaller measured from the connector with some slack so that the connector will not be disengaged due to the weight or tension of the cable.

2 Keep the battery cable away from any possible noise source, such as power wires.

Battery cable for LCD-mounted type control unit

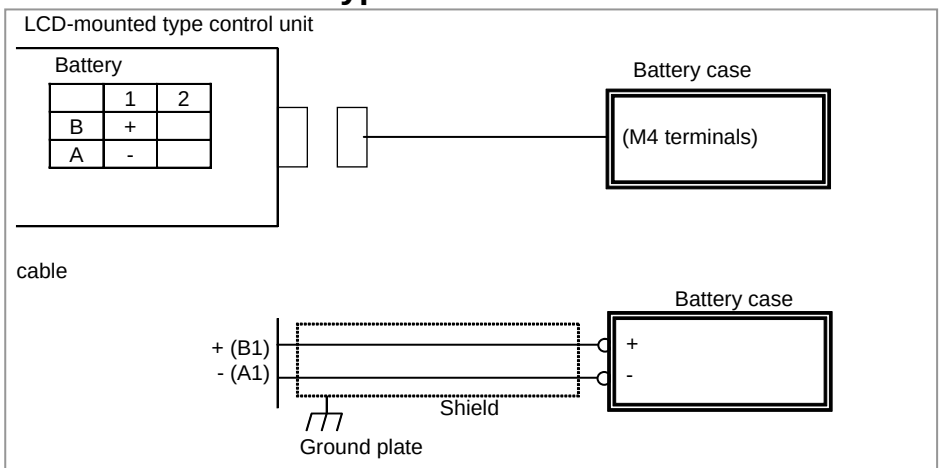

Recommended cable:	A02B-0323-K103(14m)
Connector kit (CNC side):	A02B-0323-K107 (CNC side cases, housings and contacts* for 10 cables) * contact is 1-2069337-1 (TE connectivity)
Terminal(Battery case side):	M4 terminal
Recommended wire:	#22AWG 2wires, with shield, outside diameter:5mm or less

Battery cable for LCD-mounted type control unit

© MyFANUC B5B0D8428C0144A78A5F4CA87F2C262E

NOTE

1 In case of assemble this cable, please keep loosening the cable length in the case and clamp with nylon band etc. as bellow figure in order to prevent tension to the contacts directly.

2 Special tool provided by connector manufacture is required to assemble this cable.

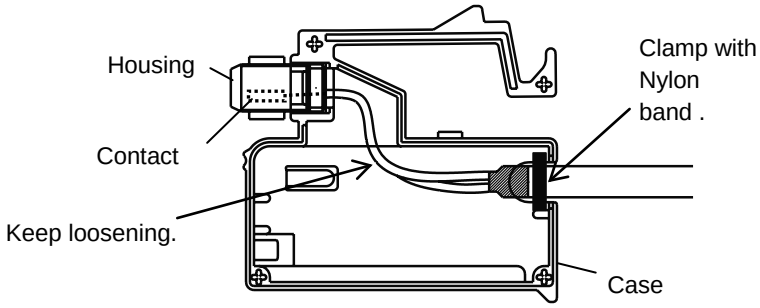

Internal figure of CNC side connector

Replacing the alkaline dry cells (size D)

(1) Prepare two new alkaline dry cells (size D).
(2) Turn on the power to the machine (control unit).
(3) Remove the battery case cover.
(4) Replace the batteries, paying careful attention to their orientation.
(5) Replace the battery case cover.

⚠ **CAUTION**

To replace the battery when the power is off, follow the same procedure as that for the replacement of a lithium battery, described above.
Pay attention to the battery polarity. If a battery is installed with incorrect polarity, the battery may overheat, blow out, or catch fire

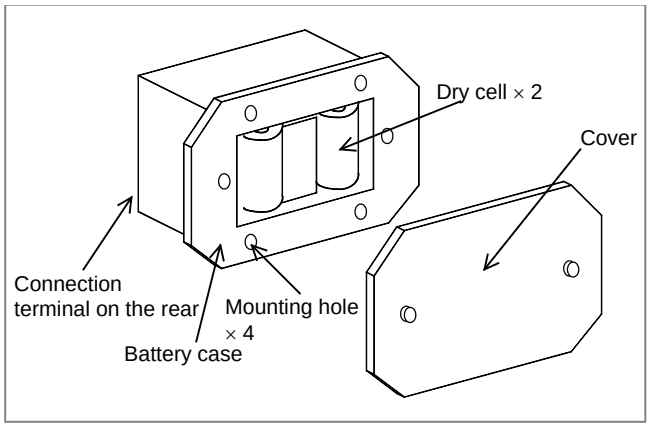

© MyFANUC B5B0D8428C0144A78A5F4CA87F2C262E

4.4.2 Battery for Separate Absolute Pulsecoders (6VDC)

- The absolute Pulsecoder uses a battery because it must hold data on absolute positions. When the voltage of the batteries for absolute Pulsecoders becomes low, alarm 307 or 306 occurs, with the following indication in the CNC state display at the bottom of the CNC screen.
  Alarm 308 (alarm 2 indicating the voltage of the battery becomes low) :
  The indication "APC" blinks in reversed display.
  Alarm 307 (alarm indicating the voltage of the battery becomes low) :
  The indication "APC" blinks in reversed display.
  Alarm 306 (battery zero alarm) :
  The indication "ALM" blinks in reversed display.
- When alarm 307 (alarm indicating the voltage of the battery becomes low) occurs, replace the battery as soon as possible. In general, the battery should be replaced within one or two weeks, however, this depends on the number of Pulsecoders used.
- When alarm 306 (battery zero alarm) occurs, Pulsecoders are reset to the initial state, in which absolute positions are not held. Alarm 300 (reference position return request alarm) also occurs, indicating that reference position return is required.
- In general, replace the batteries periodically within the service life listed below.
  - A06B-6050-K061 or D-size alkaline dry cells (LR20)
    : Two years (for each six-axis configuration)
  - A06B-6073-K001 : Two years (for each three-axis configuration)
  - A06B-6114-K504 : One year (for each three-axis configuration)

NOTE
The above values indicate the estimated service life of batteries used with FANUC absolute Pulsecoders. The actual battery service life depends on the machine configuration based on, for example, detector types. For details, contact the machine tool builder.

Replacing batteries

To prevent absolute position information in absolute Pulsecoders from being lost, turn on the machine power before replacing the battery. The replacement procedure is described below.

<1> Ensure that the power to the servo amplifier is turned on.
<2> Ensure that the machine is in the emergency stop state (the motor is inactive).
<3> Ensure that the DC link charge LED of the servo amplifier is off.
<4> Detach the old batteries and attach new ones.

© MyFANUC B5B0D8428C0144A78A5F4CA87F2C262E

⚠ WARNING

- The absolute Pulsecoder of each of the αi/αiS series servo motors and the βiS series servo motors (βiS0.4 to βiS22) has a built-in backup capacitor. Therefore, even when the power to the servo amplifier is off and the batteries are replaced, reference position return is not required if the replacement completes within less than 10 minutes. Turn the power on and replace the batteries if the replacement will take 10 minutes or more.
- To prevent electric shock, be careful not to touch metal parts in the power magnetics cabinet when replacing the batteries.
- Because the servo amplifier uses a large-capacitance electrolytic capacitor internally, the servo amplifier remains charged for a while even after the power is turned off. Before touching the servo amplifier for maintenance or other purposes, ensure your safety by measuring the residual voltage in the DC link with a tester and confirming that the charge indication LED (red) is off.
- Be sure to replace the batteries with specified ones. Pay attention to the battery polarity. If a wrong type of battery is used or a battery is installed with incorrect polarity, the battery may overheat, blow out, or catch fire, or the absolute position information in the absolute Pulsecoders may be lost.
- Ensure that the battery connector is inserted in the correct position.

How to insert batteries into the battery case

Use the following procedure to replace the batteries in the battery case.

<1> Loosen the screws on the battery case and detach the cover.
<2> Replace the batteries in the case (pay attention to the polarity).
<3> Attach the cover to the battery case.

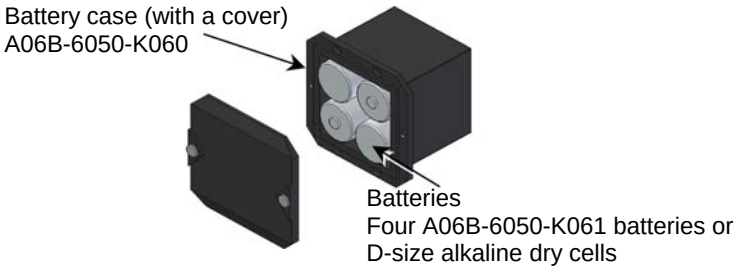

⚠ CAUTION

- Four D-size alkaline dry cells (LR20) that are commercially available can be used as batteries. A set of four A06B-6050-K061 batteries is optionally available from FANUC.
- Replace all the four batteries with new ones. If old and new batteries are mixed, the absolute position information in the absolute Pulsecoders may be lost.
- When connecting batteries, pay due attention to their polarity. If they are connected in reverse polarity, it is likely that they may get hot, explode, or catch fire. In addition, it is also likely that information on absolute positions may be lost from the absolute Pulsecoder.

4.4.3 Battery for Absolute Pulse Coder Built into the Motor (6VDC)

The battery for the absolute pulse coder built into the motor is installed in the servo amplifier. Explanations about how to connect and replace the battery, refer to the maintenance manual for the servo amplifier in use.

© MyFANUC B5B0D8428C0144A78A5F4CA87F2C262E

5 CONNECTION TO CNC PERIPHERALS

5.1 CONNECTION BETWEEN THE LCD-MOUNTED TYPE CONTROL UNIT AND MDI UNIT

5.1.1 Overview

A MDI is embedded in 10.4” LCD/MDI unit, therefore it is not necessary to connect the MDI cable by a machine maker.
Connection of the MDI cable of a control unit without the MDI is described below.

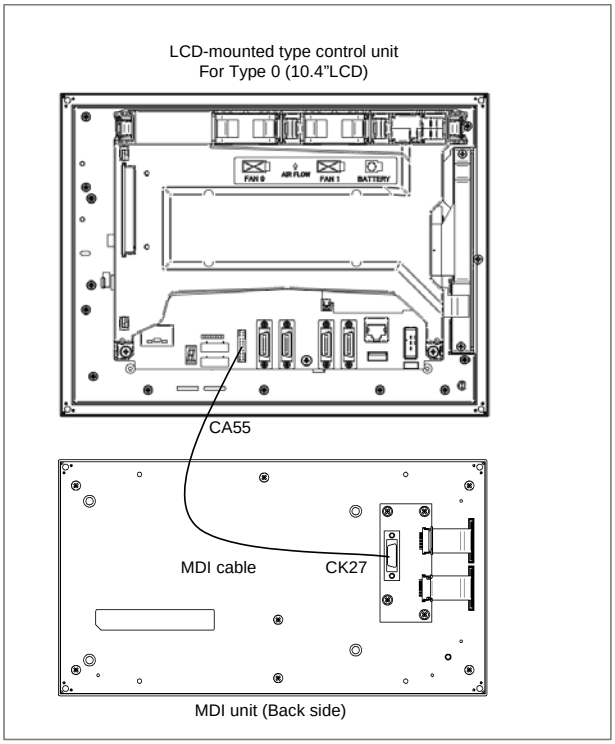

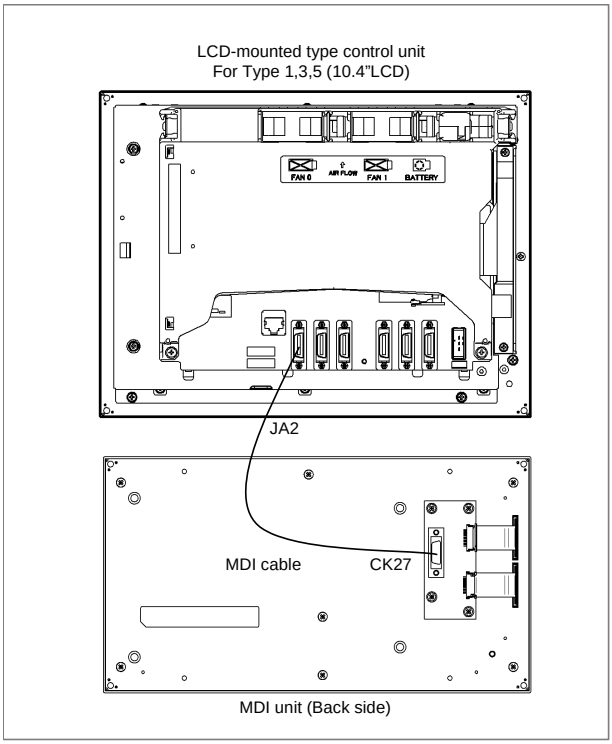

© MyFANUC B5B0D8428C0144A78A5F4CA87F2C262E

5.1.2 Connection with the MDI Unit

・For Type 0

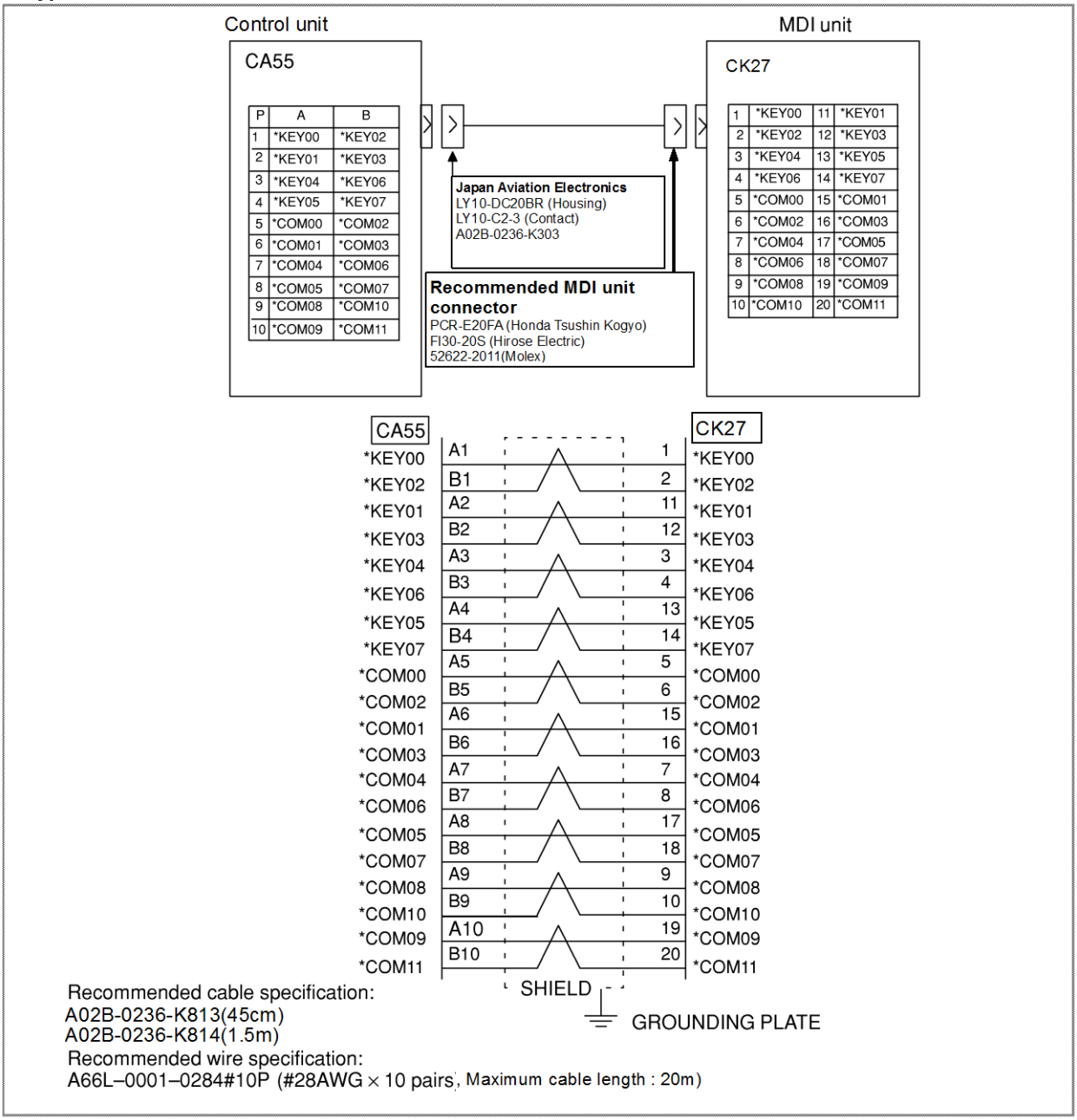

P	A	B
1	*KEY00	*KEY02
2	*KEY01	*KEY03
3	*KEY04	*KEY06
4	*KEY05	*KEY07
5	*COM00	*COM02
6	*COM01	*COM03
7	*COM04	*COM06
8	*COM05	*COM07
9	*COM08	*COM10
10	*COM09	*COM11

1	*KEY00	11	*KEY01
2	*KEY02	12	*KEY03
3	*KEY04	13	*KEY05
4	*KEY06	14	*KEY07
5	*COM00	15	*COM01
6	*COM02	16	*COM03
7	*COM04	17	*COM05
8	*COM06	18	*COM07
9	*COM08	19	*COM09
10	*COM10	20	*COM11

CA55		CK27
*KEY00	A1 — 1	*KEY00
*KEY02	B1 — 2	*KEY02
*KEY01	A2 — 11	*KEY01
*KEY03	B2 — 12	*KEY03
*KEY04	A3 — 3	*KEY04
*KEY06	B3 — 4	*KEY06
*KEY05	A4 — 13	*KEY05
*KEY07	B4 — 14	*KEY07
*COM00	A5 — 5	*COM00
*COM02	B5 — 6	*COM02
*COM01	A6 — 15	*COM01
*COM03	B6 — 16	*COM03
*COM04	A7 — 7	*COM04
*COM06	B7 — 8	*COM06
*COM05	A8 — 17	*COM05
*COM07	B8 — 18	*COM07
*COM08	A9 — 9	*COM08
*COM10	B9 — 10	*COM10
*COM09	A10 — 19	*COM09
*COM11	B10 — 20	*COM11

NOTE

For MDI cable connector mating on the CA55 side, a simple lock mechanism is employed. Ensure that a load greater than 1 kg is not applied to the connectors. Moreover, clamp the cable so that excessive force is not applied due to vibration. However, shielding and clamping are not required for a cable of up to 50 cm.

© MyFANUC B5B0D8428C0144A78A5F4CA87F2C262E

- **For Type1,3,5**

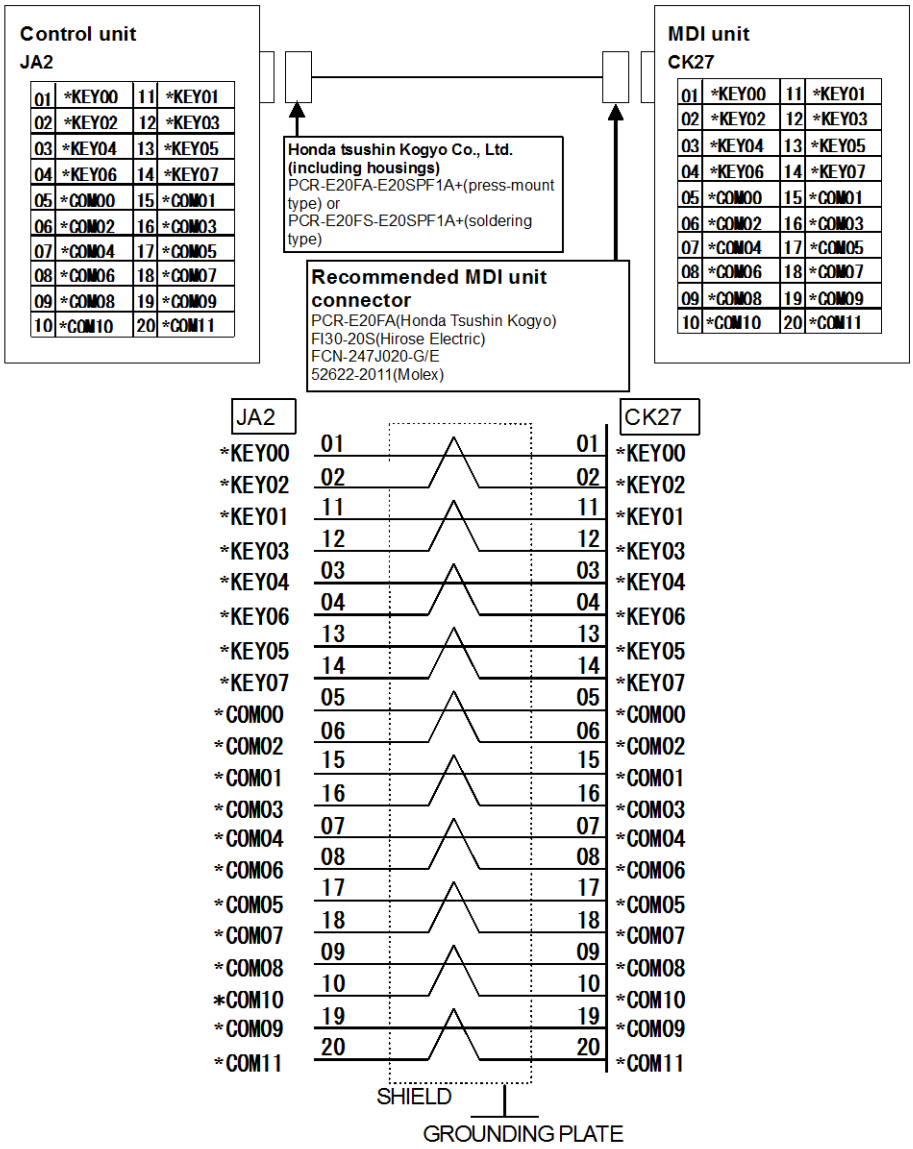

NOTE
Shielding is not required for a cable of up to 50 cm.

© MyFANUC B5B0D8428C0144A78A5F4CA87F2C262E

5.1.3 Key Layout of MDI Unit

For Lathe (T series)

- **Standard MDI unit (ONG keys)**

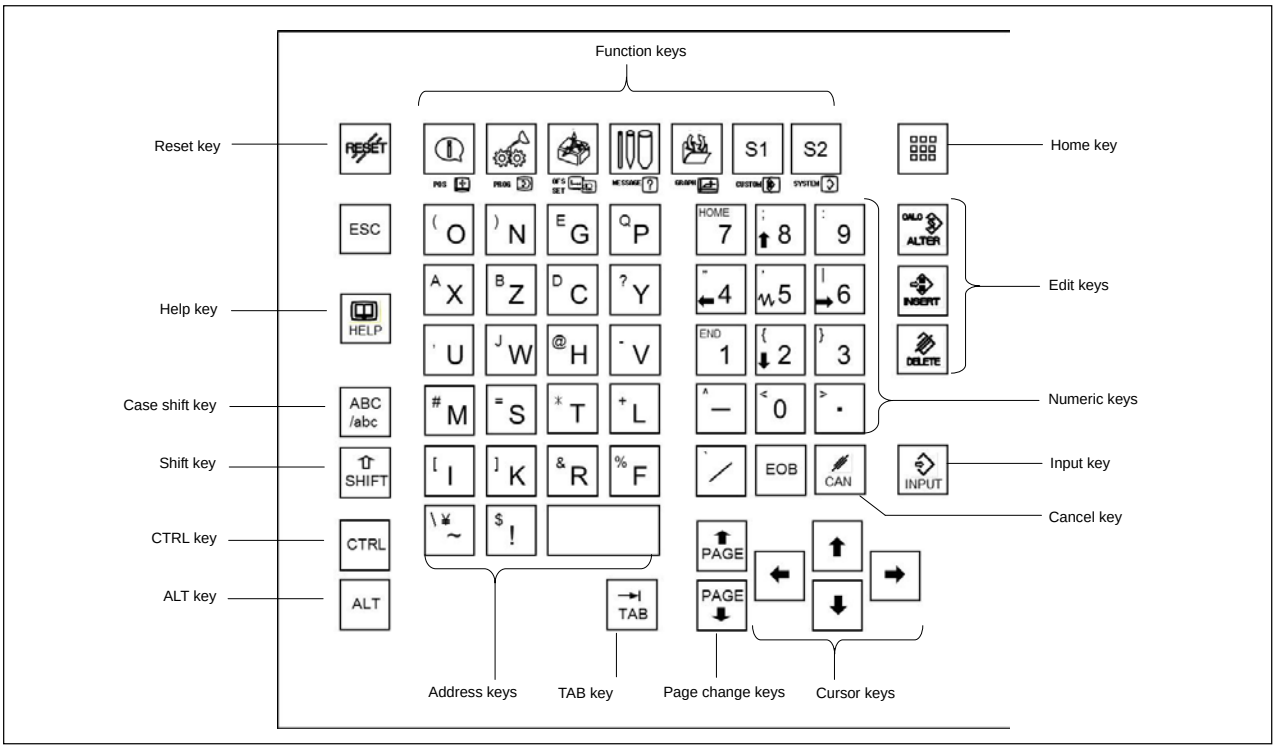

MDI unit (for PANEL *i*H, with lathe system (T series), ONG, horizontal, 220x230mm)

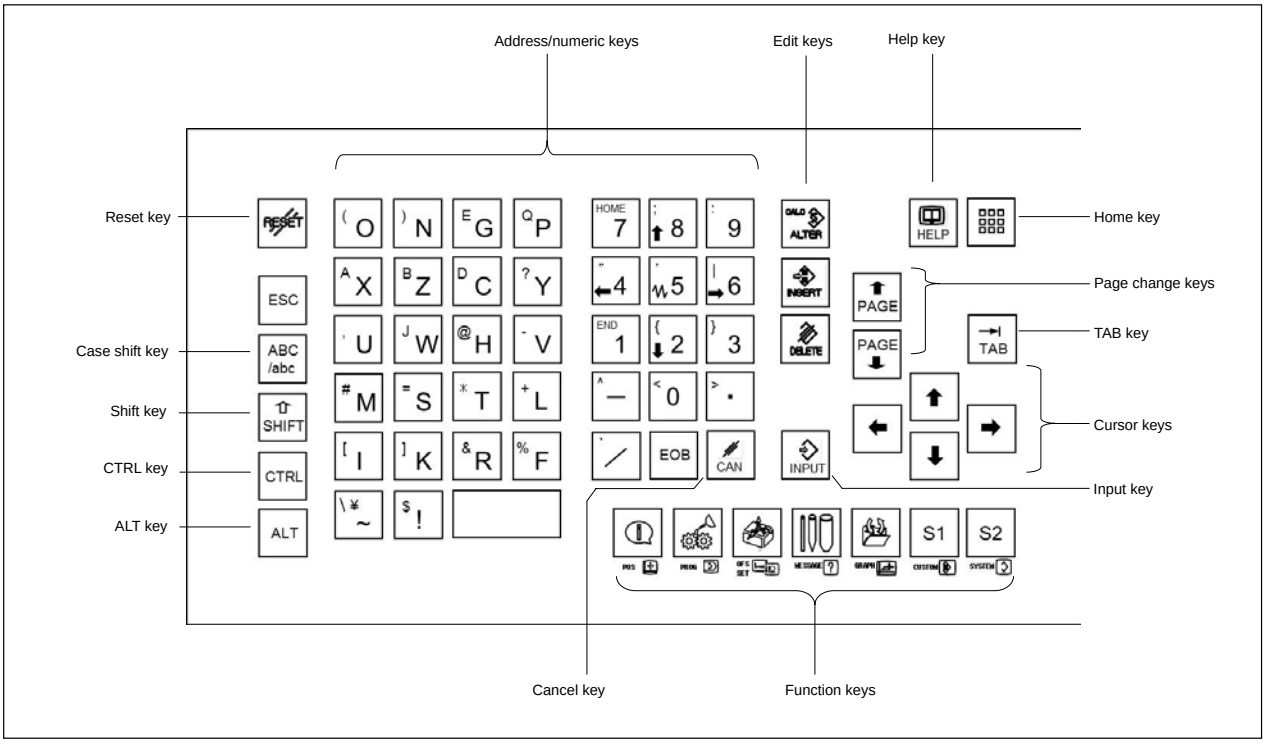

MDI unit (for PANEL *i*H, with lathe system (T series), ONG, vertical, 160x290mm)

© MyFANUC B5B0D8428C0144A78A5F4CA87F2C262E

For Machining center (M series)

- **Standard MDI unit (ONG keys)**

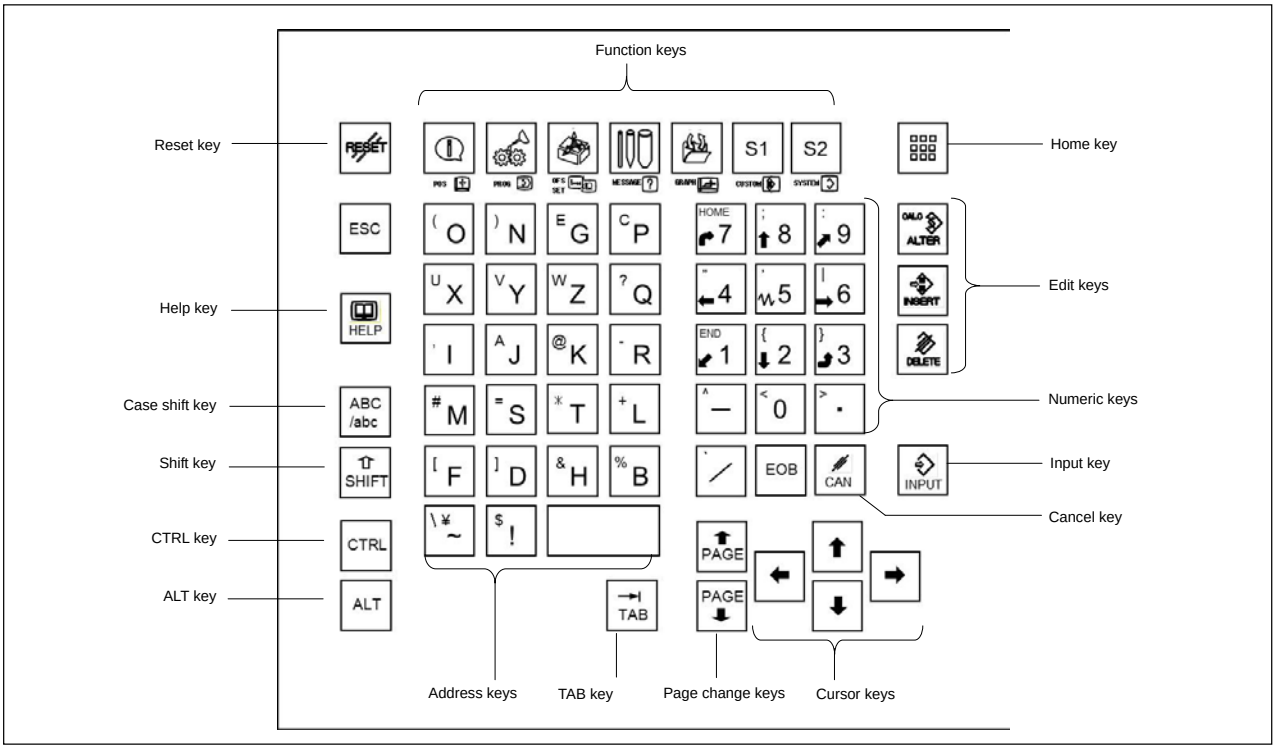

MDI unit (for PANEL *i*H, with machining center system (M series), ONG, horizontal, 220x230mm)

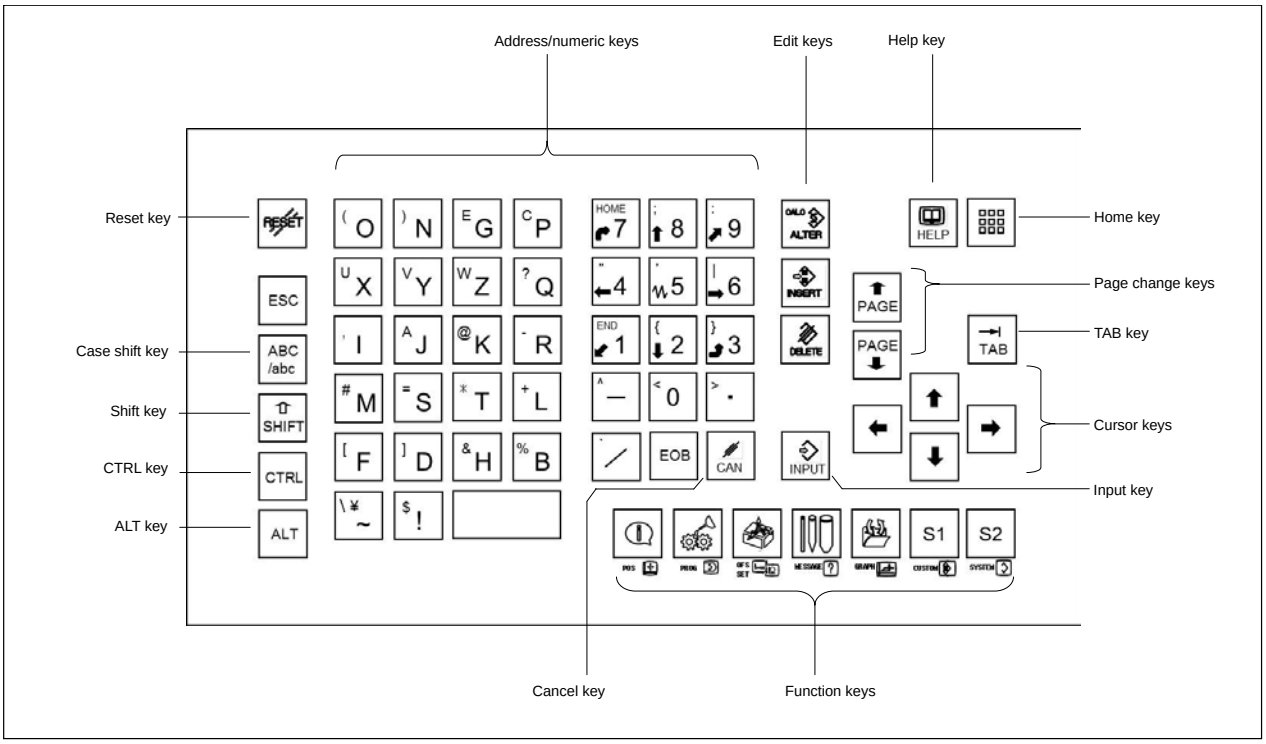

MDI unit (for PANEL *i*H, with machining center system (M series), ONG, vertical, 160x290mm)

© MyFANUC B5B0D8428C0144A78A5F4CA87F2C262E

Common to lathe system / machining center system

- **Standard MDI unit (QWERTY keys)**

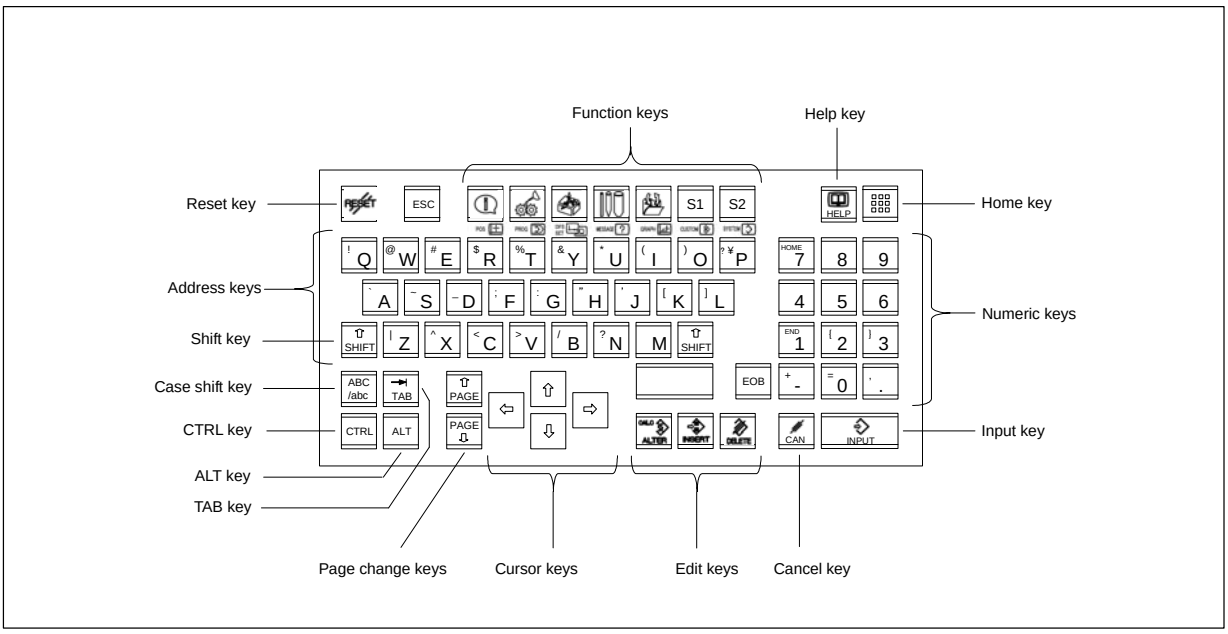

MDI unit (for PANEL *i*H, for common to lathe system (T series)/machining center system (M series), QWERTY type A, vertical, 160x290mm)

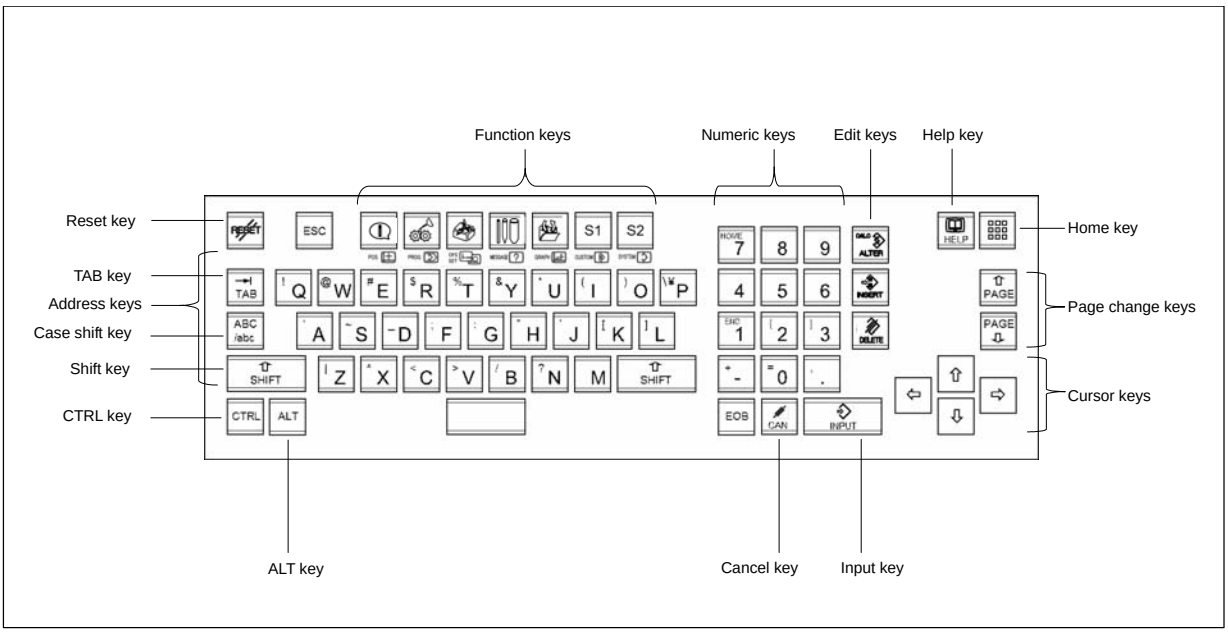

MDI unit (for PANEL *i*H, for common to lathe system (T series)/machining center system (M series), QWERTY type B, vertical, 145x400mm)

5.1.4 Keyboard Cover

Use the keyboard cover when using the system under environments with higher degree of dust or coolant. Refer Appendix F about how to setting.

> ⚠ **WARNING**
> Use the keyboard cover, when it may become impossible to operate key switch because the dust, cutting chips, etc. get in the crevice between keyboards.

© MyFANUC B5B0D8428C0144A78A5F4CA87F2C262E

5.2 CONNECTION WITH INPUT/OUTPUT DEVICES

5.2.1 Overview

An input/output device is used to enter information such as control unit programs and parameters from an external device to the control unit, or to output information from the control unit to an external device.
The input/output devices usable with this control unit include Handy File.
The interface of the input/output devices electrically conforms to RS-232C, so that a connection can be made with a device that has an RS-232C interface.
The tables below indicate the serial ports of this control unit.

Port name	Interface location	
1CH (JD36A)	Main control unit	
2CH (JD36B)	Main control unit	NOTE

NOTE
In case a touch panel is used in Type1,3,5, this serial port is used for touch panel communication on the control unit side, so that this port cannot be used as a general-purpose port.

5.2.2 Connecting I/O Devices

In case of Type 0

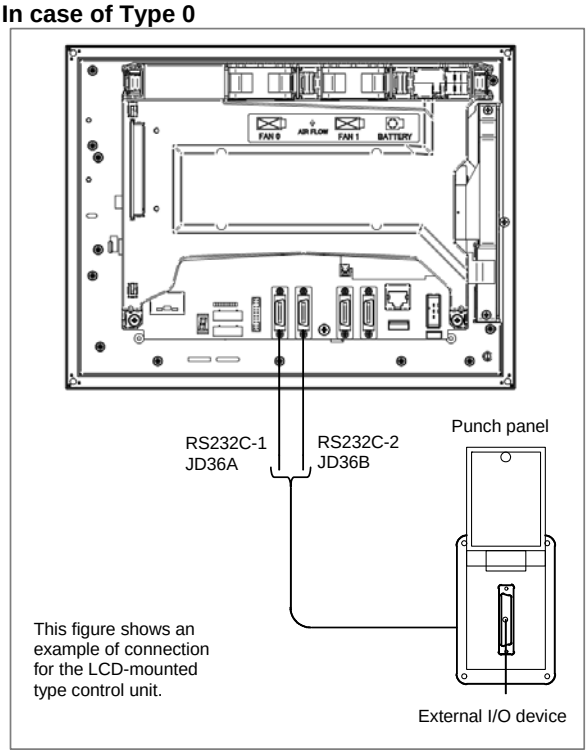

In case of Type1,3,5

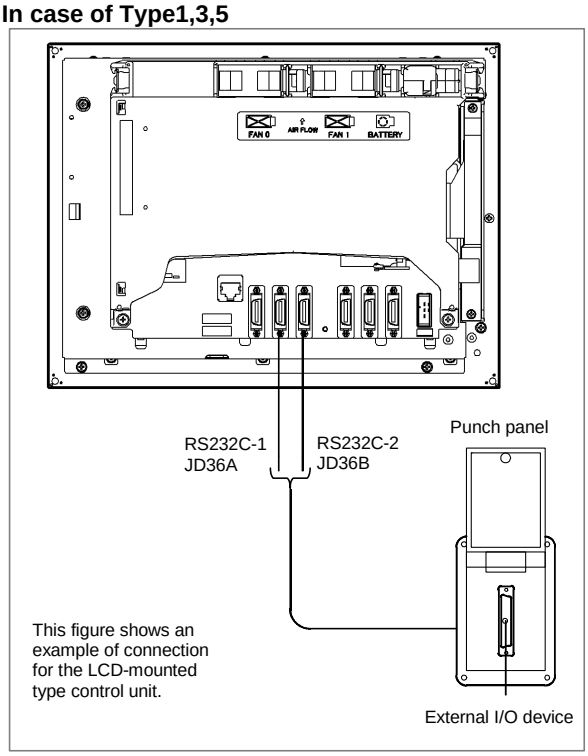

© MyFANUC B5B0D8428C0144A78A5F4CA87F2C262E

NOTE

This interface is the RS-232C interface on the control unit side.
For these devices, the RS-232C interface on the control unit is used for the following cases:

- Ladder monitoring, storing, or loading using FANUC LADDER III
- DNC operation via RS-232C, external I/O device control
- Input/output of parameters and programs by using the control unit screen display function

5.2.3 RS-232C Serial Port

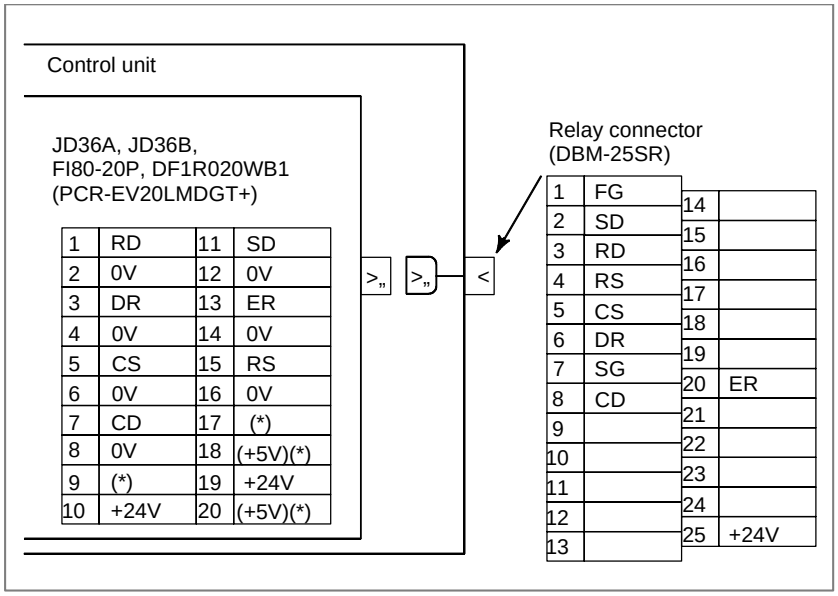

NOTE

1 Do not connect anything to those pins for which signal names are not indicated.
2 Pins 18 and 20 (+5V) are provided for touch channel connection.
3 The upper manufacturer and model on the control unit side are for the LCD-mounted type.
The lower manufacturer and model in parentheses are for the stand-alone type.
4 +24V can be used as the power supply for FANUC RS-232C equipment.
Please do not use it for other purposes.

© MyFANUC B5B0D8428C0144A78A5F4CA87F2C262E

CABLE CONNECTION

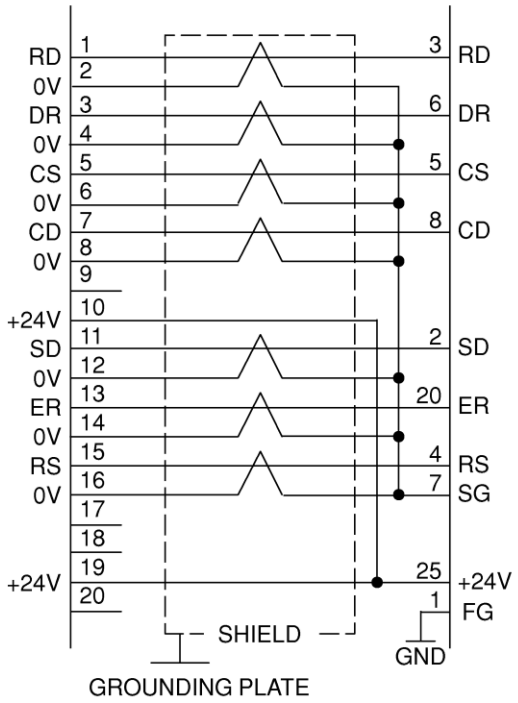

RECOMMENDED CABLE SPECIFICATION
A66L-0001-0284#10P (#28AWG × 10 pairs)

RECOMMENDED CABLE-SIDE CONNECTORS (JD36A, JD36B)
PCR-E20FA (Honda Tsushin Kogyo Co., Ltd.)
FI30-20S (Hirose Electric Co., Ltd.)
FCN-247J020-G/E
52622-2011 (Molex Japan Co., Ltd.)

RECOMMENDED CABLE SPECIFICATION (PUNCH PANEL)
For LCD-mounted type
<Narrow width type>
A02B-0236-C191 (1m)
A02B-0236-C192 (2m)
A02B-0236-C193 (5m)

For stand-alone type
<Narrow width type>
A02B-0120-C191 (1m)
A02B-0120-C192 (2m)
A02B-0120-C193 (5m)

NOTE

1 Do not connect anything to those pins for which signal names are not indicated.
2 Recommended cable-side connector FI30-20S (manufactured by Hirose Electric) cannot be used for the stand-alone type.

© MyFANUC B5B0D8428C0144A78A5F4CA87F2C262E

5.2.4 RS-232C Interface Specification

RS-232C Interface signals

Generally signals as follows are used in RS-232C interface.

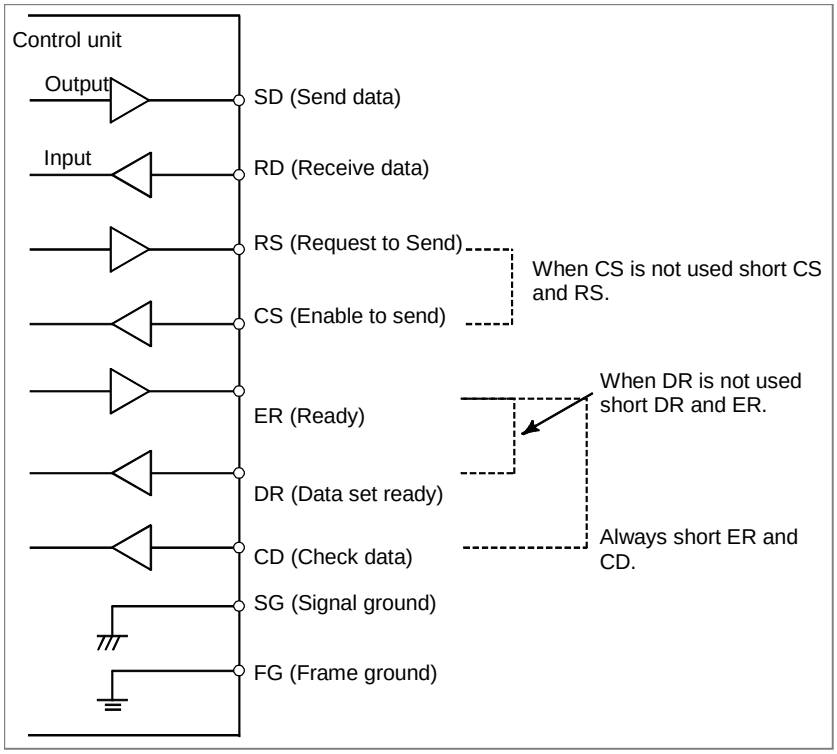

Fig. 5.2.4 (a) RS-232C interface

Signal description of RS-232C interface

Signal	I/O	Description	
SD	Output	Sending data	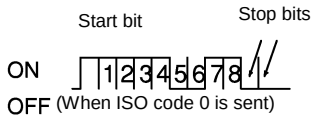
RD	Input	Receiving data	
RS	Output	Sending request	This signal is set to on when control unit starts sending data and is turned off when transmission ends.
CS	Input	Sending permitted	When both this signal and the DR signal are set, the control unit can send data. If I/O device processing is delayed by a punching operation, etc., control unit data sending can be stopped by turning off this signal after sending two characters, including the data being sent currently. If this signal will not be used, make sure to strap this signal circuit to the RS signal circuit.
DR	Input	Data set ready	When I/O device is ready to operate, this signal is set. This signal should usually be connected to the signal indicating I/O device power supply being on. (ER signal (Note) of I/O device). See Note below. The control unit transfers data when this signal is set. If the signals turned off during data transfer, alarm 086 is issued. If the DR signal will not be used, make sure to strap this signal circuit to the ER signal circuit.
ER	Output	Control unit ready to operation	This signal is set when the control unit is ready to operate. External device should regard the SD signal as being significant when the ER signal is set.
CD	Input	Signal Condition	Since this signal is not used in connections with I/O device, the signal circuit must be strapped, inside the connecting cable, to the ER signal circuit.
SG		Signal grounding	
FG		Frame grounding	

© MyFANUC B5B0D8428C0144A78A5F4CA87F2C262E

NOTE

Signal on/off state is defined as follows;

	-3V or lower	+3V or higher
Function	OFF	ON
Signal Condition	Marking	Spacing

Transmission Method of RS-232C interface

- Start-stop

Generally, two transmission methods are available at the serial interface. This control unit uses the start-stop method (NOTE).

NOTE

Start-stop method:

With this method, start and stop signals are output before and after each data bit.

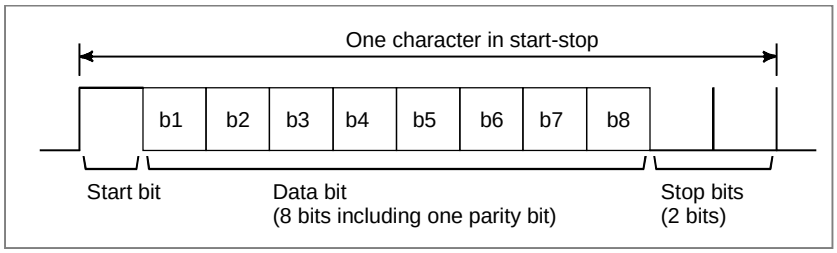

- Codes

Transmission codes are as follows:

(1) EIA code and Control codes DC1 to DC4.

(2) ISO code and Control codes DC1 to DC4.

The connected I/O device must be able to recognize the following control codes, sent from control unit.

Control code		8	7	6	5	4		3	2	1
DC1	Tape reader start				○		○			○
DC2	Tape punch designation				○		○		○	
DC3	Tape reader stop	○			○		○		○	○
DC4	Tape punch release				○		○	○		

NOTE

The listed control codes are used for both EIA and ISO.

In this interface, control codes DC1 to DC4 are used.

(a) Control unit can control I/O device by issuing codes DC1 to DC4.

(b) If processing is delayed at the I/O device (when the control unit outputs data)

(i) External device can temporarily stop control unit data output by using the control unit's CS signal. Data output stops within two characters including a currently transmitting character when CS OFF signal is input to control unit. When CS signal is turned on again, data transmission start.

(ii) If control code DC3 is input to control unit, control unit stops data output within ten characters. When control code DC1 is input to control unit, control unit starts sending data again.

(c) When the external device is equipped with an ISO/EIA converter, the external device must satisfy the specification shown in Table 5.2.4.

© MyFANUC B5B0D8428C0144A78A5F4CA87F2C262E

Table 5.2.4

ISO code										EIA code										Remarks	
Character	8	7	6	5	4		3	2	1	Character	8	7	6	5	4		3	2	1		
0			○	○		●				0			○			●					Number 0
1	○		○	○		●			○	1						●			○		Number 1
2	○		○	○		●		○		2						●		○			Number 2
3			○	○		●		○	○	3				○		●		○	○		Number 3
4	○		○	○		●	○			4						●	○				Number 4
5			○	○		●	○		○	5				○		●	○		○		Number 5
6			○	○		●	○	○		6				○		●	○	○			Number 6
7	○		○	○		●	○	○	○	7						●	○	○	○		Number 7
8	○		○	○	○	●				8					○	●					Number 8
9			○	○	○	●			○	9				○	○	●			○		Number 9
A		○				●			○	a		○	○			●			○		Address A
B		○				●		○		b		○	○			●		○		?	Address B
C	○	○				●		○	○	c		○	○	○		●		○	○		Address C
D		○				●	○			d		○	○			●	○			?	Address D
E	○	○				●	○		○	e		○	○	○		●	○		○	?	Address E
F	○	○				●	○	○		f		○	○	○		●	○	○			Address F
G		○				●	○	○	○	g		○	○	○		●	○	○	○		Address G
H		○			○	●				h		○	○		○	●					Address H
I	○	○			○	●			○	i		○	○	○	○	●			○		Address I
J	○	○			○	●		○		j		○		○		●		○	○	?	Address J
K		○			○	●		○	○	k		○		○		●		○			Address K
L	○	○			○	●	○			l		○				●		○	○	?	Address L
M		○			○	●	○		○	m		○		○		●	○				Address M
N		○			○	●	○	○		n		○				●	○		○		Address N
O	○	○			○	●	○	○	○	o		○				●	○	○			Address O
P		○		○		●				p		○		○		●	○	○	○		Address P
Q	○	○		○		●			○	q		○		○	○	●					Address Q
R	○	○		○		●		○		r		○			○	●			○		Address R
S		○		○		●		○	○	s			○	○		●		○			Address S
T	○	○		○		●	○			t			○			●		○	○		Address T
U		○		○		●	○		○	u			○	○		●	○				Address U
V		○		○		●	○	○		v			○			●	○		○	?	Address V
W	○	○		○		●	○	○	○	w			○			●	○	○			Address W
X	○	○		○	○	●				x			○	○		●	○	○	○		Address X
Y		○		○	○	●			○	y			○	○	○	●				?	Address Y
Z		○		○	○	●		○		z			○		○	●			○		Address Z
DEL	○	○	○	○	○	●	○	○	○	Del		○	○	○	○	●	○	○	○	*	
NUL						●				Blank						●				*	
BS	○				○	●				BS			○		○	●		○		*	
HT					○	●			○	Tab			○	○	○	●	○	○		*	
LF or NL					○	●		○		CR or EOB	○					●					
CR	○				○	●	○		○											*	
SP	○		○			●				SP				○		●				*	
%	○		○			●	○		○	ER					○	●		○	○		
(			○		○	●				(2-4-5)				○	○	●		○			
)	○		○		○	●			○	(2-4-7)		○			○	●		○			
+			○		○	●		○	○	+		○	○	○		●				*	
-			○		○	●	○		○	-		○				●					
:			○	○	○	●		○													
/	○		○		○	●	○	○	○	/			○	○		●			○		
.			○		○	●	○	○		.		○	○		○	●		○	○		
#	○		○			●		○	○												
$			○			●	○														
&	○		○			●	○	○		&					○	●	○	○		*	
∇			○			●	○	○	○											*	
*	○		○		○	●		○												*	
,	○		○		○	●	○			,			○	○	○	●		○	○	*	
;	○		○	○	○	●		○	○											*	
<			○	○	○	●	○													*	
=	○		○	○	○	●	○		○											*	
>	○		○	○	○	●	○	○												*	
?			○	○	○	●	○	○	○											*	
@	○	○				●														*	
”			○					○												*	

© MyFANUC B5B0D8428C0144A78A5F4CA87F2C262E

NOTE

1 When the external device is equipped with an ISO/EIA converter, the following items must be noted in Table 5.2.4.

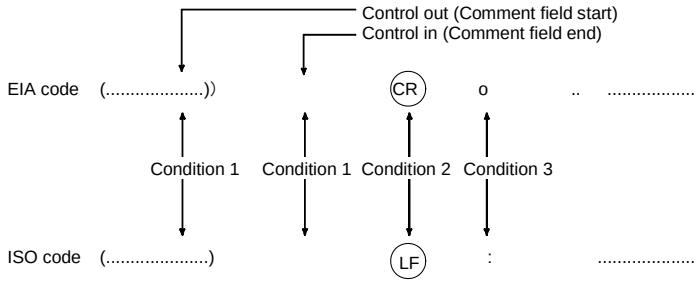

Condition1 Left parenthesis "("of the ISO code punches holes at bits 2, 4 and 5 when used in the EIA code.
Right parenthesis ")"of the ISO code punches holes at bits 2, 4 and 7 when used in the EIA code.

Condition2 EIA code CR is LF in ISO code.

Condition3 EIA code O is : in ISO code.

2 Control codes DC1 to DC4 are transmission codes output from the control unit. So they need not to be punched on the control unit tape.

(3) Transmission rate (Baud rate)

The transmission rate (Baud rate) is the number of bits transferred per second.
The following baud rates are available depending on the system parameter.
50, 100, 110, 150, 200, 300, 600, 1200, 2400, 4800, 9600

[Example] Baud rate : 110
When using one start bit and two stop bits (totaling 11 bits per character):
Transmission characters/second= 110/11 =10 characters/second (Max.)

(4) Cable length

The cable length depends on the external device type. Consult with the device manufacturers for actual connecting cable lengths.
Cable length is as follows by the specification of control unit.
RS-232C Baud rate 4800 or less: Up to 100 m
Baud rate 9600 or less: Up to 50 m

© MyFANUC B5B0D8428C0144A78A5F4CA87F2C262E

Time chart when the control unit receives data (Read into memory)

(1) Control unit outputs DC1.
(2) The I/O device starts sending data upon receiving DC1.
(3) Control unit sends DC3 when control unit processing is delayed.
(4) The I/O device stops sending data to control unit after receiving DC3.
The device may send up to 10 characters after receiving DC3. If it sends more than 10 characters, alarm 087 will occur.
(5) Control unit reissues DC1 upon completing delayed processing.
(6) The I/O device restarts data output upon receiving the DC1 code (the data must be the next data to the preceding.)
(7) Control unit sends DC3 upon completing data read.
(8) The I/O device stops sending data.

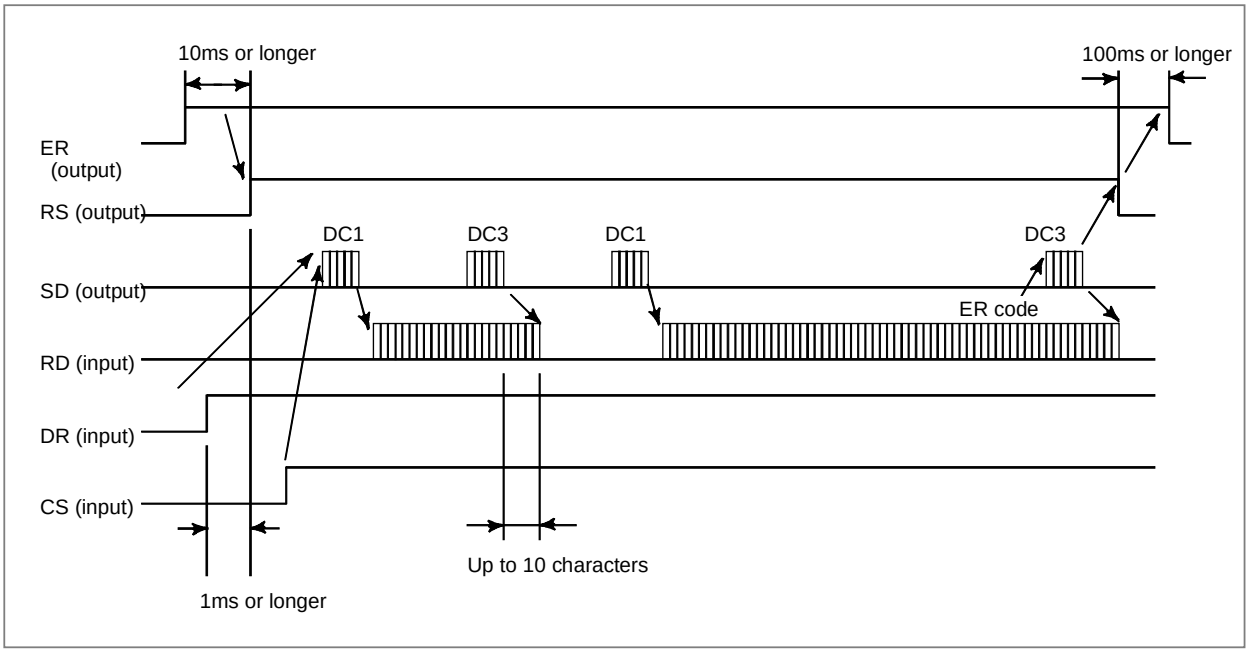

Fig. 5.2.4 (b)

© MyFANUC B5B0D8428C0144A78A5F4CA87F2C262E

Time chart when the control unit send data (Punch out)

(1) Control unit output DC2.
(2) Control unit outputs punch data in succession.
(3) When data processing is delayed at the I/O device.
  (a) Data output stops within two characters including a currently transmitting character when CS signal is turned off.
  When CS signal is turned on again, data transmission starts. (See Fig. 5.2.4 (c))
  (b) If control code DC3 is input to control unit, control unit stops data output within ten characters. When control code DC1 is input to control unit, control unit starts sending data again. (See Fig. 5.2.4 (d))
(4) The control unit starts sending the next data if the CS signal is turned on after the I/O device completes data processing.
(5) The control unit issues DC4 upon completing data output.

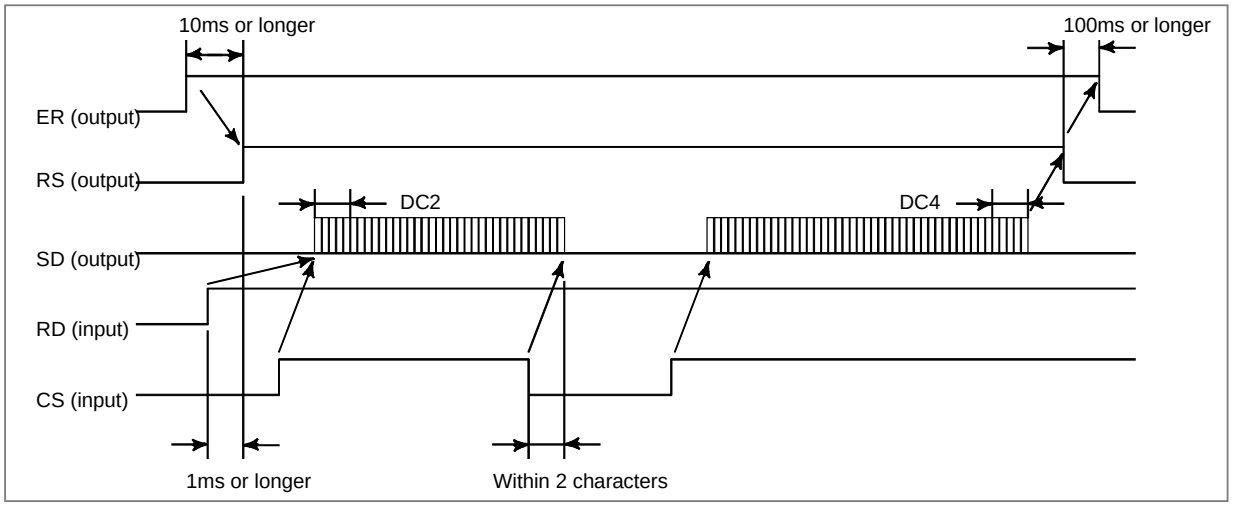

Fig. 5.2.4 (c)

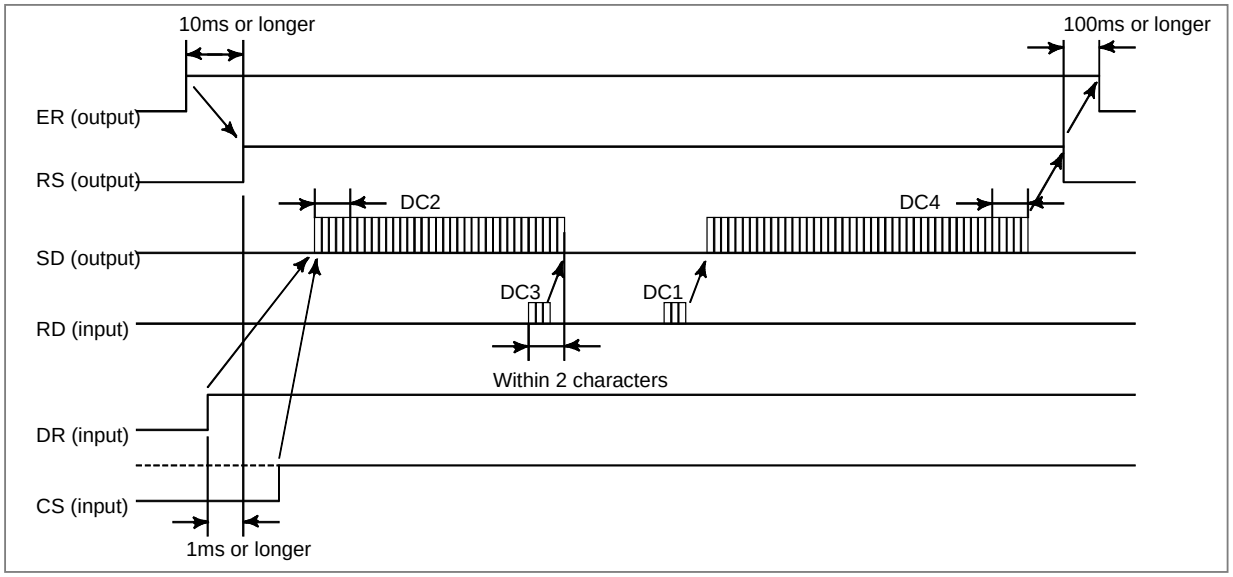

Fig. 5.2.4 (d)

© MyFANUC B5B0D8428C0144A78A5F4CA87F2C262E

Connection between RS-232C interface and external device

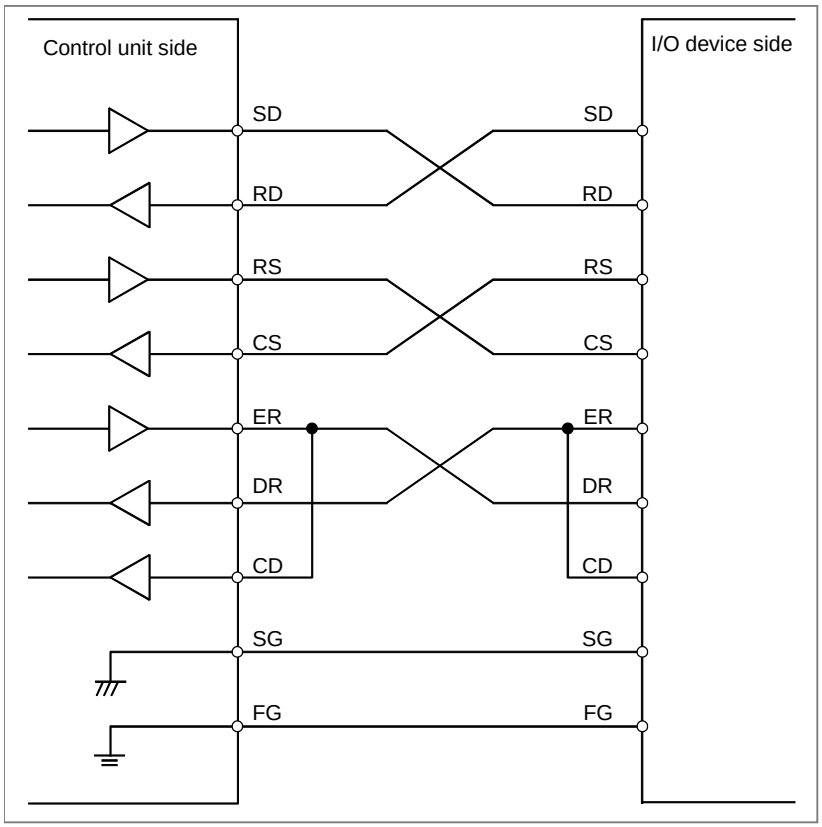

- Use the connection shown in the figure below when the ER and DR signals are not used for handshaking.

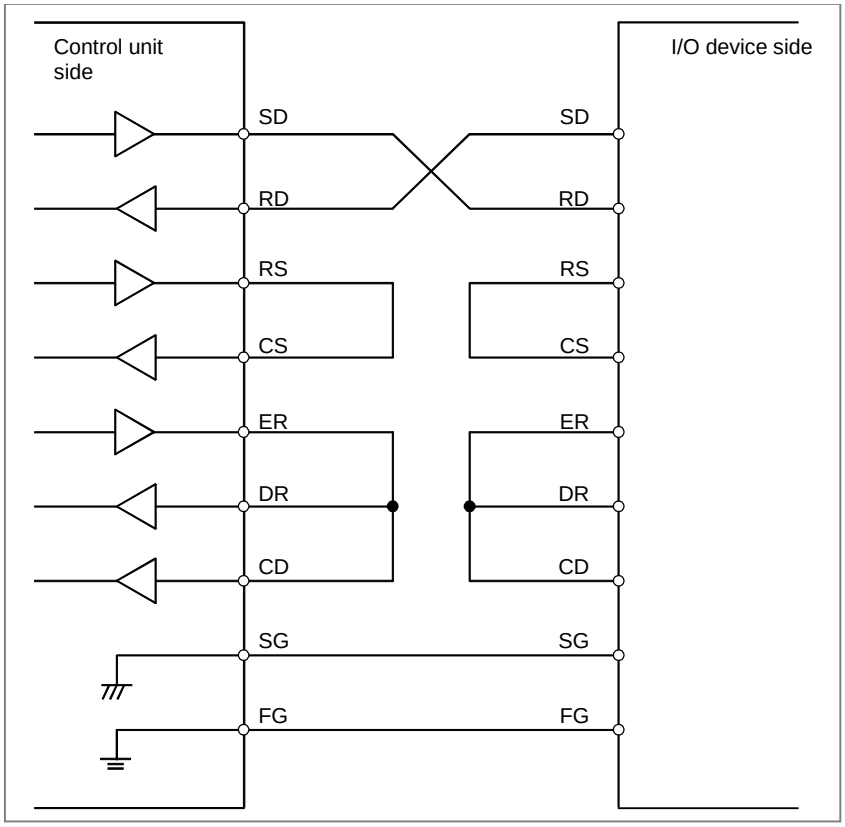

© MyFANUC B5B0D8428C0144A78A5F4CA87F2C262E

The cable for connecting the I/O device to the control unit should be connected as shown in the below diagram.

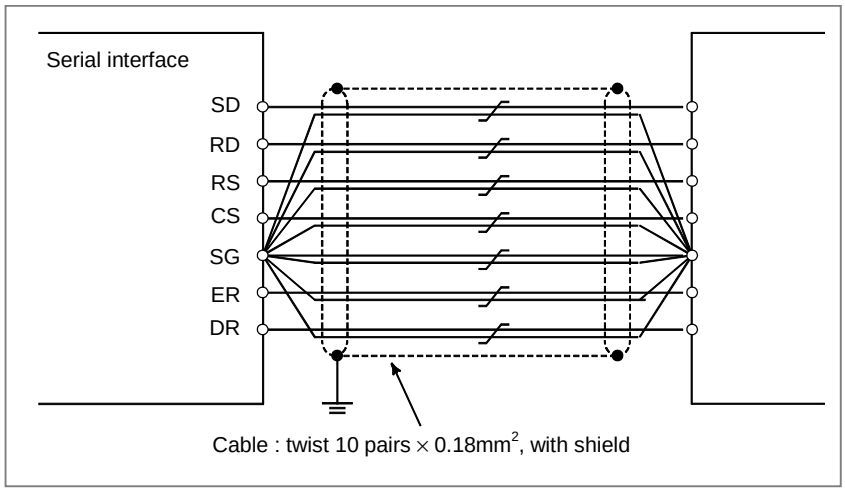

5.3 CONNECTING THE HIGH-SPEED SKIP (HDI)

5.3.1 Connecting the High-speed Skip (HDI)

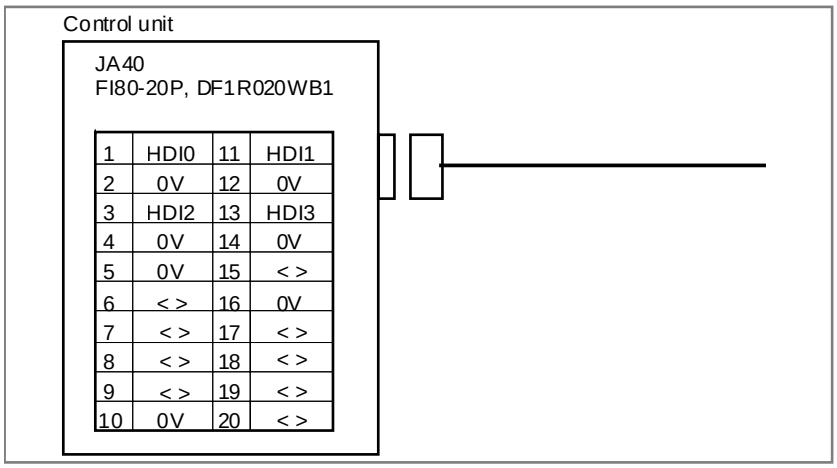

1	HDI0	11	HDI1
2	0V	12	0V
3	HDI2	13	HDI3
4	0V	14	0V
5	0V	15	< >
6	< >	16	0V
7	< >	17	< >
8	< >	18	< >
9	< >	19	< >
10	0V	20	< >

NOTE
No connections must be made to the pins with angle brackets (<>) because they are reserved for expansions.

© MyFANUC B5B0D8428C0144A78A5F4CA87F2C262E

Cable connections

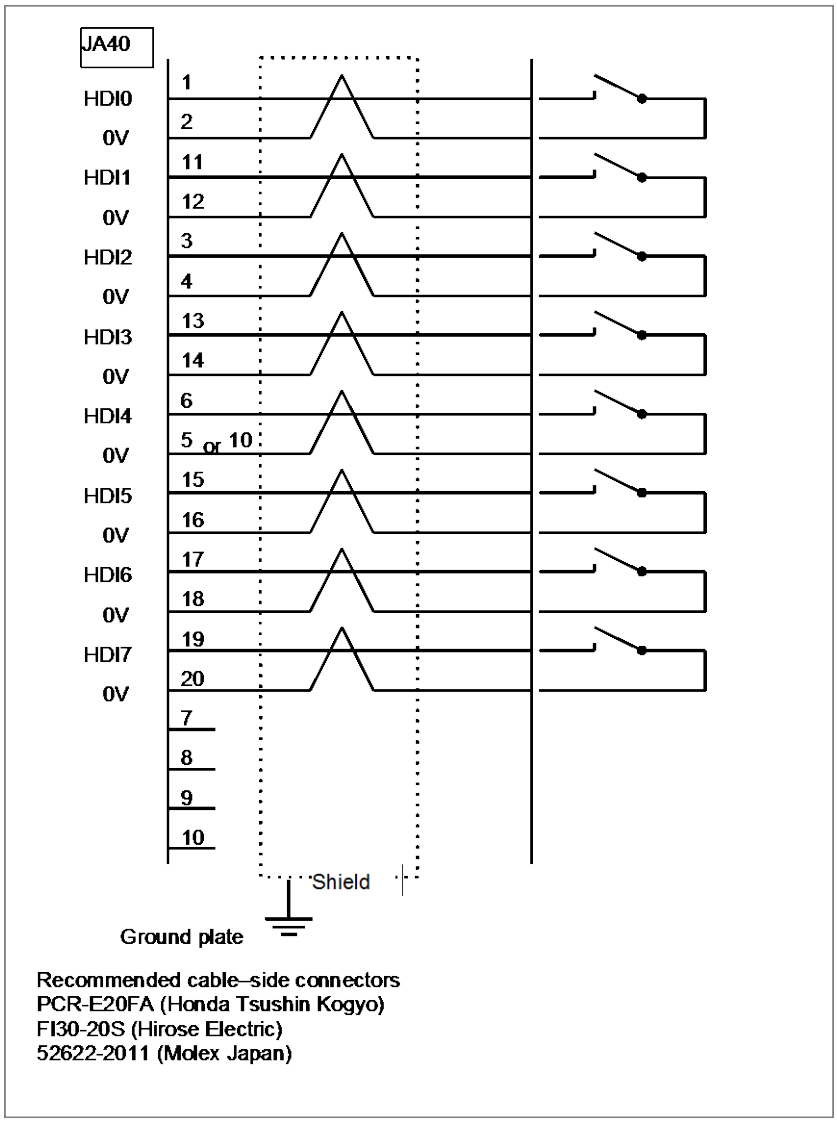

NOTE

The recommended cable connector FI30-20S (manufactured by Hirose Electric) cannot be used for the stand-alone type.

© MyFANUC B5B0D8428C0144A78A5F4CA87F2C262E

5.3.2 Input Signal Rules for the High-speed Skip (HDI)

Circuit configuration

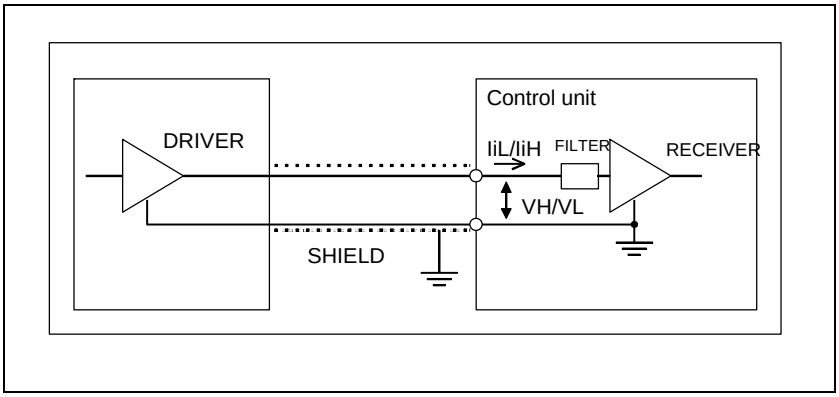

Absolute maximum rating
Input voltage range Vin: -3.6V to +13.6V

Input characteristics

Unit	Symbol	Specification	Unit	Remarks
High level input voltage	VH	3.6 to 11.6	V	
Low level input voltage	VL	0 to 1.0	V	
High level input current	IiH	2 (max)	mA	Vin=5V
		11 (max)	mA	Vin=10V
Low level input current	IiL	-8.0 (max)	mA	Vin=0V
Input signal pulse duration		20 (min)	µs	
Input signal delay or variations		0.02 (max)	ms	

NOTE

1 The plus (+) sign of IiH/IiL represents the direction of flow into the receiver. The minus (-) sign of IiH/IiL represents the direction of flow out of the receiver.
2 The high-speed skip signal is assumed to be 1 when the input voltage is at the low level and 0 when it is at the high level.
3 The input level for the control unit receiver is high when the circuit is open. So, the input level for the external driver must be low.

© MyFANUC B5B0D8428C0144A78A5F4CA87F2C262E

5.4 LINKING THE ETHERNET INTERFACE

⚠ CAUTION

Before attaching or removing cables, power off the control unit main unit, and confirm that the power is off.
Ask the respective manufacturers for explanations about how to build a network and about conditions for using units (such as a media converter, hub, transceiver, and cable) other than the control unit. When installing network cables, exercise sufficient caution so that the network will not be affected by any noise source. Electrically separate the network wiring sufficiently from noise sources like motors and their power lines. Also, ground each unit as required. If the grounding impedance is high, it may cause trouble in communication. Once the equipment is installed, conduct communication tests to verify normal operation before starting actual use of the equipment.
FANUC is not liable to any damage related to trouble arising from any unit other than the control unit.

5.4.1 Connection to the Ethernet Interface

A hub (line concentrator) is used to connect the control unit to a system. A typical example of connection is shown below. For the connection of the control unit with the FANUC PANEL *i*H Pro and a commercially available personal computer using Ethernet, see also Chapter 11.

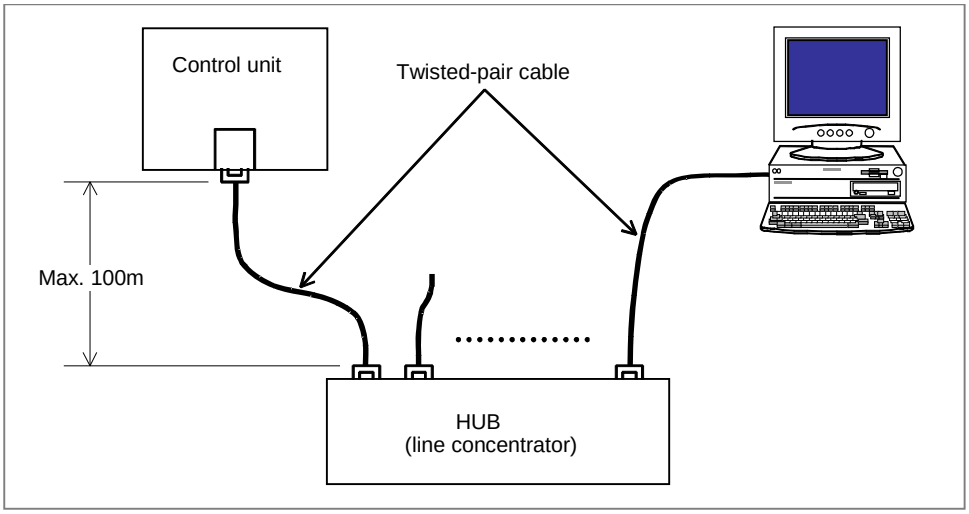

© MyFANUC B5B0D8428C0144A78A5F4CA87F2C262E

NOTE

1 To connect the control unit to the 10BASE-T Ethernet interface, use a hub which satisfies the following conditions:
- Supports 100BASE-TX.
- Has an auto-negotiation function.
- Supports store-and-forward switching.

2 The cable can be up to 100 m long (for the FANUC- recommended cable for movable sections, up to 50 m). Do not make the cable longer than necessary.

3 An Ethernet cable needs clamping to make system operation stable. For details of clamping, see Subsection 3.4.6, “Cable Clamp and Shield Processing”. The clamp for grounding the shield of the cable can also fix the cable.

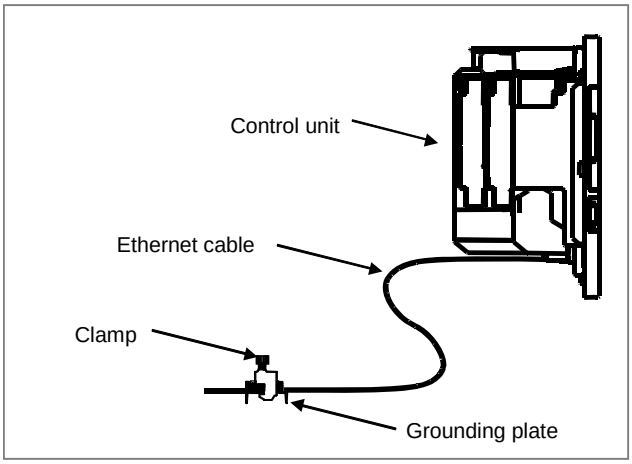

4 Some of the units (hub, transceiver, etc.) required to build a network are not dust-proof. They should be enclosed in a dust-proof cabinet. Using them in an atmosphere with dust or oil mist may lead to a communication error or failure.

Pin arrangement of the Ethernet connector (CD38A, CD38S)

CD38A, CD38S

Pin No.	Signal name	Description
1	TX+	Transmit +
2	TX-	Transmit -
3	RX+	Receive +
4		Not used
5		Not used
6	RX-	Receive -
7		Not used
8		Not used

© MyFANUC B5B0D8428C0144A78A5F4CA87F2C262E

5.4.2 Specification of Twisted-Pair Cable

Cable connection

The connectors of a cable for connecting between the Ethernet interface (CD38A, CD38S) and the hub have the pin arrangement shown below.

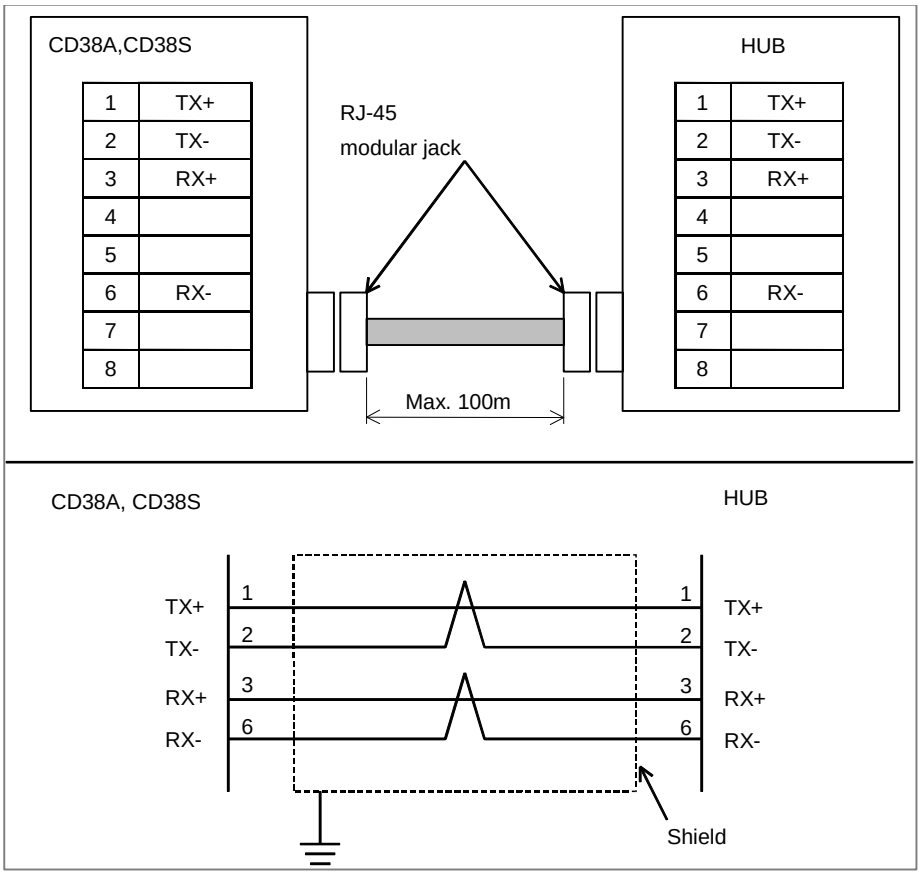

NOTE
The cable can be up to 100 m long (for the FANUC- recommended cable for movable sections, up to 50 m). Do not make the cable longer than necessary.

Cable Wires

Many cables without a shield (UTP cables) are commercially available as twisted pair cables conforming to 10BASE-T or 100BASE-TX. To improve noise immunity in factory automation environments, however, be sure to use twisted pair cables (STP cables) with a common shield in category 5.

Recommended cable wire (for fixed parts)

Manufacturer	Specification	Remark
Nissei Electric Co., Ltd.	F-4PWMWMF	Single-wire cable

NOTE
No cable recommended for use in fixed sections shall be used in movable sections.
For movable sections, be sure to use the recommended cables for movable sections listed below.

© MyFANUC B5B0D8428C0144A78A5F4CA87F2C262E

Recommended cable wire (for movable sections)

Manufacturer	Specification	Remark
Oki Electric Cable Co., Ltd.	AWG26 4P TPMC-C5-F (SB)	Dedicated to FANUC products, with no connector
SHINKO ELECTRIC INDUSTRIES CO., LTD.	FNC-118	

Specification

- Ordering specifications : A66L-0001-0453
- Electrical characteristic : Complying with EIA/TIA 568A categories 3 and 5
- Structure : Common-shield braided cable with drain wire
  The conductors of the cable are AWG26 annealed-copper strand wire, with a sheath 0.8 mm thick and an outer diameter of 6.7 ± 0.3 mm
- Fire resistance : UL1581 VW-1
- Oil resistance : As per FANUC's internal standard (Equivalent to conventional oil-resistant electrical cable)
- Flex resistance : Million or more bending cycles with a bending radius of 50 mm (U-shaped bend test)
- UL style No. : AWM20276 (80℃/30V/VW-1)

NOTE
When using this cable, keep the length between the control unit and hub within 50 m because of its attenuation performance. Be sure to use the TM21CP-88P(03) connector manufactured by Hirose Electric Co., Ltd.

About cable assemblies
Oki Electric Cable Co., Ltd. can offer a cable assembly that uses the TM21CP-88P(03) connector made by Hirose Electric Co., Ltd. To get this cable assembly, negotiate directly with the manufacturer on its specifications (cable length, shipping test, package, etc.).

Connector specification

An 8-pin modular connector called the RJ-45 is used with a twisted-pair cable for Ethernet interfaces. Use the connector listed below or equivalent.

	Manufacturer's model number	Manufacturer	Remark
Connector used with cable AWG26 4P TPMC-C5-F(SB)	TM21CP-88P(03)	Hirose Electric Co., Ltd.	(NOTE)

NOTE
About TM21CP-88P(03)
Ordering specifications: A63L-0001-0823#P
Complying with EIA/TIA 568A categories 3 and 5
Ask Hirose Electric Co., Ltd. for explanations about how to attach the connector to a cable. (Hirose Electric Co., Ltd. offers the TM21CP-88P(03) Wiring Procedure Specification (Engineering Specification No. ATAD-E2367) to explain the related technical information.)

© MyFANUC B5B0D8428C0144A78A5F4CA87F2C262E

5.4.3 Network Installation

Even when the machine satisfies its grounding requirements, noise from the machine may get on communication lines depending on the way the machine is installed and its environment, resulting in a communication error. Separating and isolating the Ethernet backbone cable and PC from the machine can prevent noise from getting on the communication lines.
An example of connection is shown below.

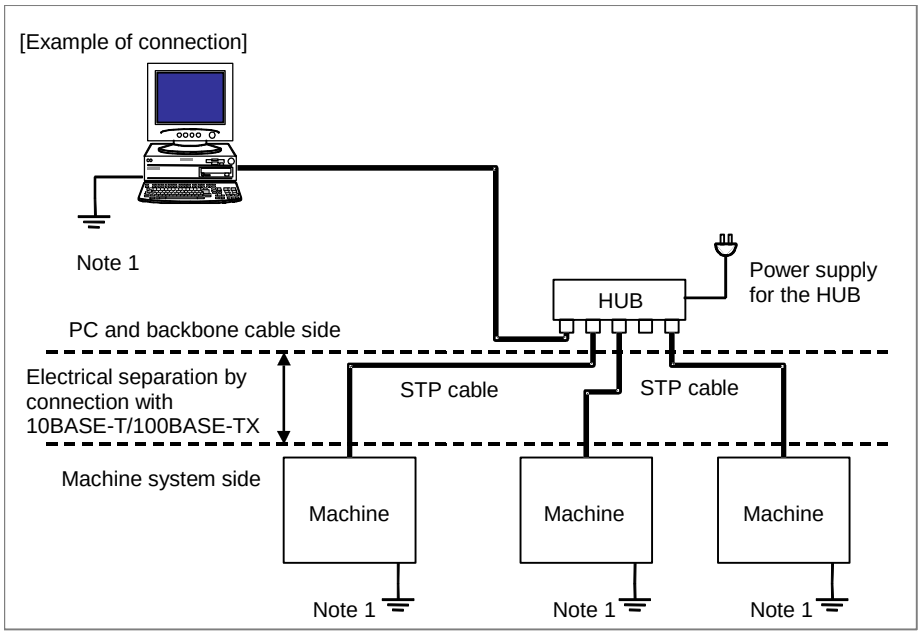

NOTE

1 Ground the PC and backbone cable separately from the machine system.
If this is impossible because there is only one grounding point, use separate grounding wires for the PC/backbone cable and the machine system up to the grounding point.
The grounding resistance must not be higher than 100 Ω (class 3 grounding).
The grounding wire must not be thinner than the AC power line conductor, and its cross-sectional area must not smaller than 5.5 mm^2.

2 In some cases, the aforementioned isolation/separation method based on 10BASE-T/ 100BASE-TX cannot assure normal communication because of influence by noise. In such worst environments, use optical fiber media to completely isolate the machine from the PC.

© MyFANUC B5B0D8428C0144A78A5F4CA87F2C262E

5.4.4 Ethernet Connector Panel

Ethernet Connector Panel enables user to connect/disconnect Ethernet cable at the front panel of the cabinet with ease.

Specification

Name	Specification	
Ethernet Connector Panel	A02B-0303-C194	with 1m cable
	A02B-0303-C195	with 2m cable
	A02B-0303-C196	with 5m cable
Ethernet Cable for Connector Panel	A02B-0303-K820	cross cable 1.5m
	A02B-0303-K821	cross cable 5m
	A02B-0303-K822	straight cable 1.5m
	A02B-0303-K823	straight cable 5m

Component

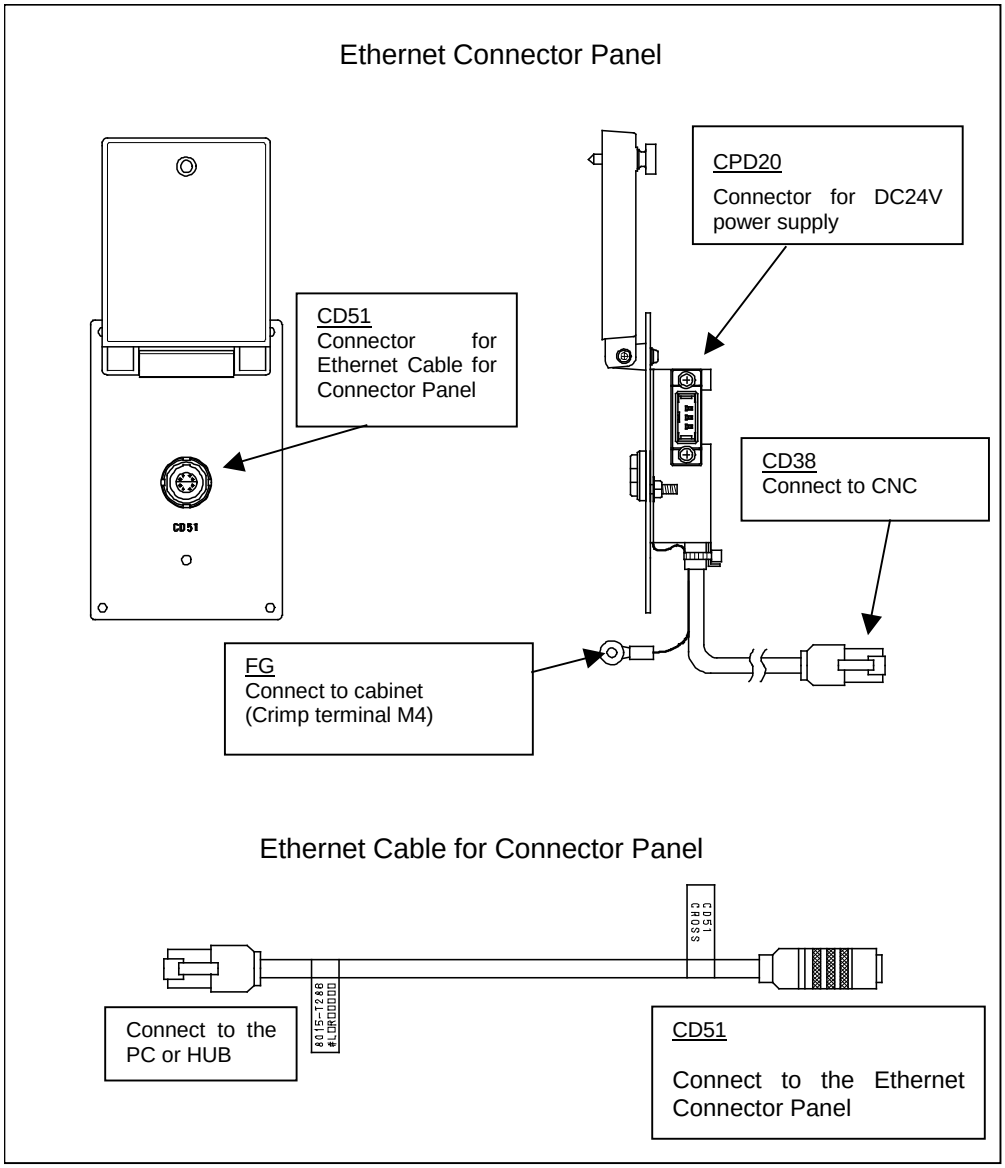

© MyFANUC B5B0D8428C0144A78A5F4CA87F2C262E

Connection of Ethernet Connector Panel

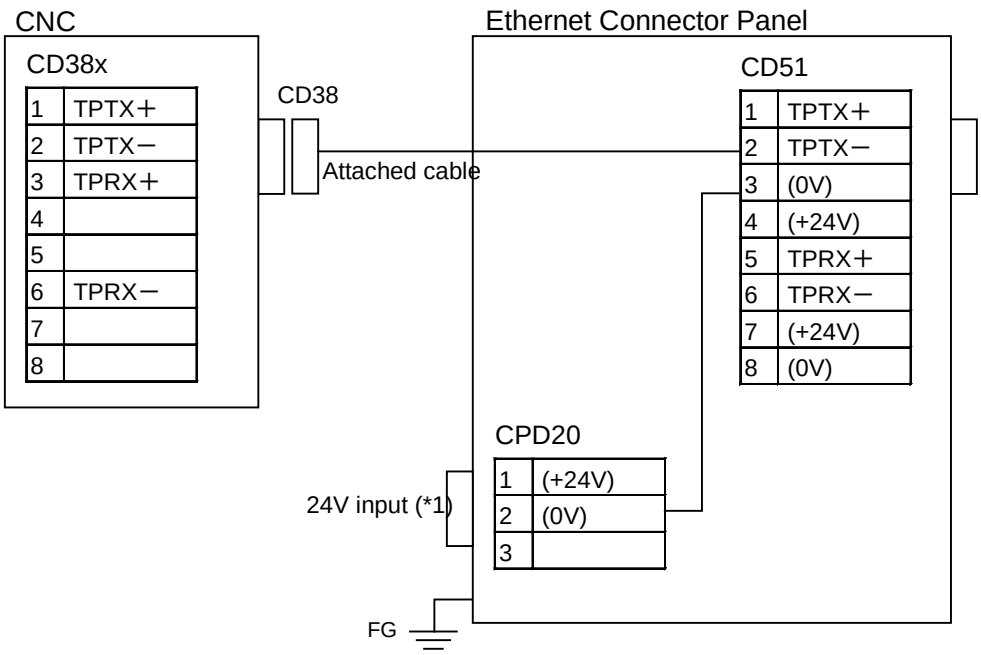

(*1)When DC24V is used at CD51, CPD20 connect to DC24V power supply. Do not connect when it is unnecessary.

Cable connection

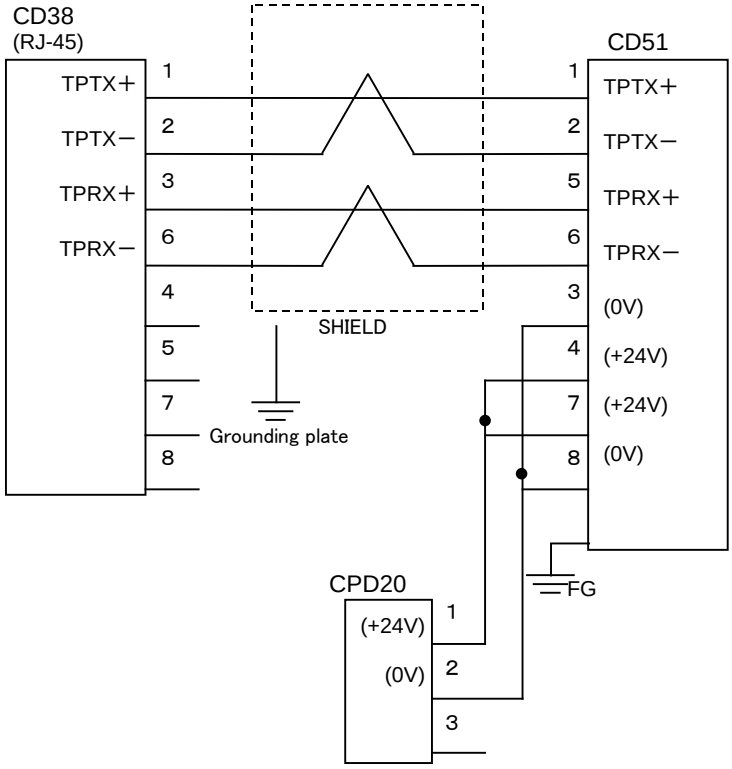

© MyFANUC B5B0D8428C0144A78A5F4CA87F2C262E

Connection of Ethernet Cable for Connector Panel

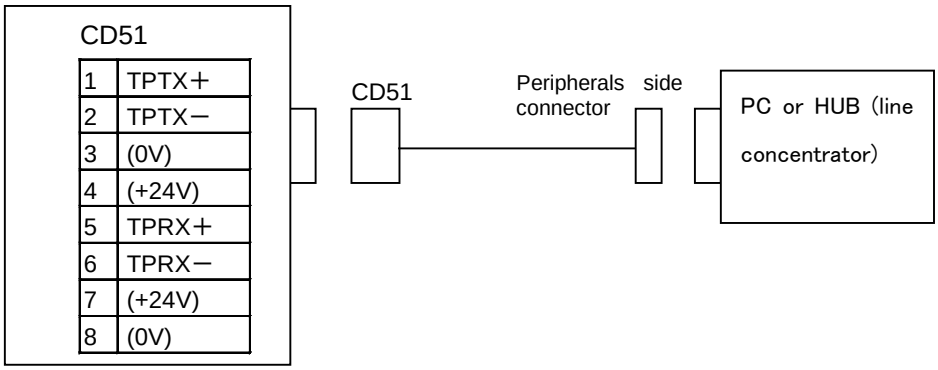

Cable connection

[Cross cable]

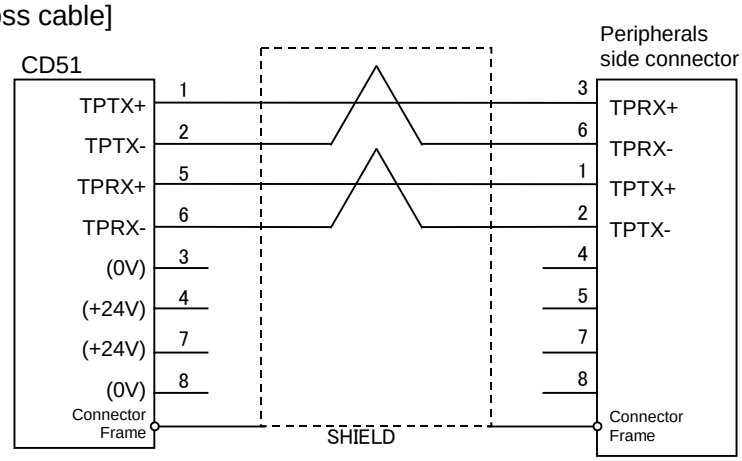

[Straight cable]

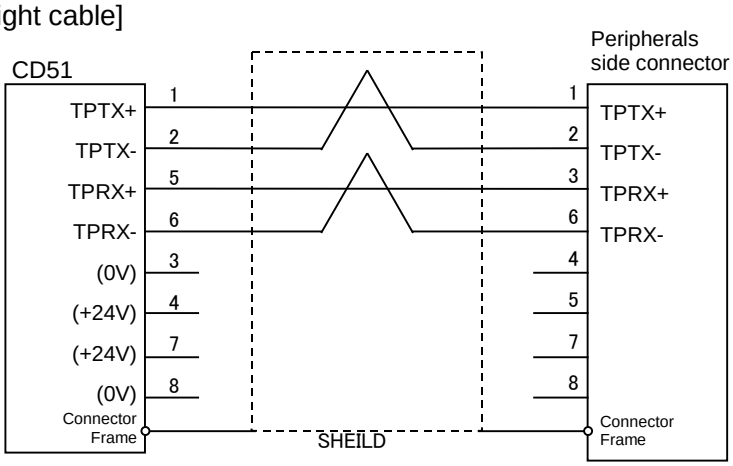

© MyFANUC B5B0D8428C0144A78A5F4CA87F2C262E

- Recommended cable side connector (NOTE)
  CD51 side: JB5DT08YN1211-(Japan Aviation Electronics)
  Peripheral side: TMP21P-88P (Hirose Electric)
- Recommended cable conductor : A66L-0001-0453
- Maximum cable length: 40m (in case of recommended cable)
  Do not make the cable longer than necessary.
- Recommended cable specification
  [Cross cable]
  A02B-0303-K820 (Cable length: 1.5m)
  A02B-0303-K821 (Cable length: 5m)
  [Straight cable]
  A02B-0303-K822 (Cable length: 1.5m)
  A02B-0303-K823 (Cable length: 5m)

NOTE
Technical information about connecting wires and the assembly of the connector is prepared. Refer to this information.
- Japan Aviation Electronics: JB5DT08YN1211 Operator's Manual (No. JAHL-50007)
- Hirose Electric: TM21CP-88P(03) Wiring Procedure Specification (Engineering Specification No.ATAD-E2367)

5.5 USB PORT

The LCD-mounted type control unit has a USB port for a USB memory. Via the USB port, data can be input to the control unit and output from it.
If connect the FANUC PANEL *i*H Pro, refer to the CONNECTION AND MAINTENANCE MANUAL (B-64683EN, B-64703EN).

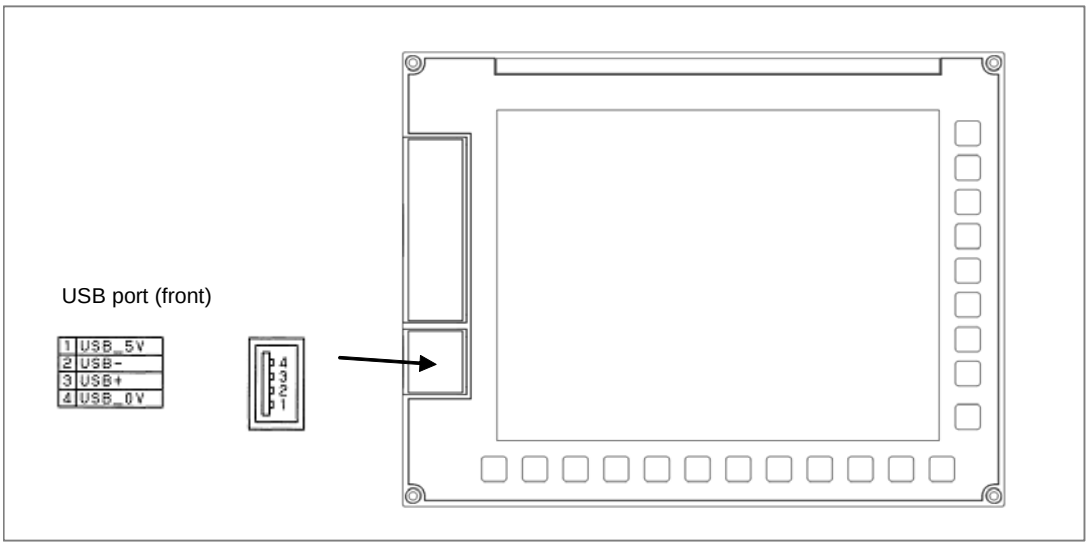

NOTE
1 This USB port is dedicated to a USB memory. Do not connect other USB devices to the port.
2 It is not guaranteed that every commercially available USB memory can operate normally. For example, a USB memory with a security function does not operate. Some commercially available USB memories may not be designed for the use in an FA environment.

© MyFANUC B5B0D8428C0144A78A5F4CA87F2C262E

⚠ CAUTION

1 While the control unit is accessing the USB memory, do not turn the power to the control unit off or remove the USB memory.
2 Close the cover of the USB port when no USB memory is inserted.
3 The maximum USB power supply (USB_5V) current is 500 mA in total.

LCD-mounted type control unit Type 0 also has USB ports for USB memory at the rear.

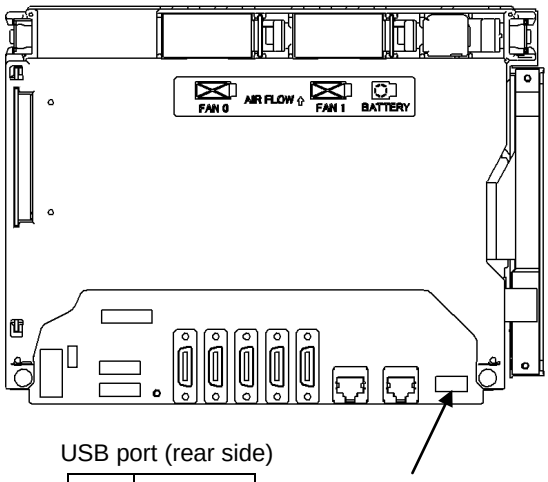

USB port (rear side)

1	USB_5V
2	USB -
3	USB +
4	USB_0V

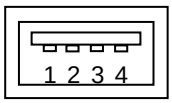

NOTE

1 The connected USB cable must not become longer than 5m surely. When using USB device through the relay cable, confirm the operation enough in the machine maker.
2 These USB ports are dedicated to a USB memory. Do not connect other USB devices to the port.
3 It is not guaranteed that every commercially available USB memory can operate normally. For example, a USB memory with a security function does not operate. Some commercially available USB memories may not be designed for the use in an FA environment.

⚠ CAUTION

1 While the control unit is accessing the USB memory, do not turn the power to the control unit off or remove the USB memory.
2 Close the cover of the USB port when no USB memory is inserted in front USB port.
3 The maximum USB power supply (USB_5V) current on the front and rear sides is 500mA in total.

© MyFANUC B5B0D8428C0144A78A5F4CA87F2C262E

5.6 CONNECTION BETWEEN THE STAND-ALONE TYPE CONTROL UNIT AND DISPLAY UNIT AND BETWEEN THE DISPLAY UNIT AND MDI UNIT

5.6.1 Overview

In the stand-alone type, use the FANUC PANEL *i*H Pro or a commercially available personal computer as a display device. About connection of the PANEL *i*H Pro, refer to the PANEL *i* / *i*H Pro CONNECTION AND MAINTENANCE MANUAL (B-64683EN) or PANEL *i*H Pro CONNECTION AND MAINTENANCE MANUAL (B-64703EN).

5.6.2 With the Display Unit

Connection to the control unit and power supply

An optical fiber cable is used to make the connection between the control unit and display unit.
For details of the optical fiber cable, see Appendix D.
In the power of display unit, If connect the FANUC PANEL *i*H Pro, refer to the PANEL *i* / *i*H Pro CONNECTION AND MAINTENANCE MANUAL (B-64683EN) or PANEL *i*H Pro CONNECTION AND MAINTENANCE MANUAL (B-64703EN).

Connection to the MDI unit

MDI is connected to the display unit. If connect the FANUC PANEL *i*H Pro as a display unit, refer to the PANEL *i* / *i*H Pro CONNECTION AND MAINTENANCE MANUAL (B-64683EN) or PANEL *i*H Pro CONNECTION AND MAINTENANCE MANUAL (B-64703EN).

Installing the display unit

If connect the FANUC PANEL *i*H Pro as a display unit, refer to the PANEL *i* / *i*H Pro CONNECTION AND MAINTENANCE MANUAL (B-64683EN) or PANEL *i*H Pro CONNECTION AND MAINTENANCE MANUAL (B-64703EN).

© MyFANUC B5B0D8428C0144A78A5F4CA87F2C262E

5.7 CONNECTION TO THE TOUCH PANEL

5.7.1 Connection of the LCD Unit with a Touch Panel

When using the LCD unit with touch panel in Type 1, 3, or 5, RS-232C serial port 2CH (JD36B) cannot be used as a general-purpose port because it is used for touch panel communication. Since the touch panel communication cable is routed before shipment from FANUC, the tool builder does not need to route it.

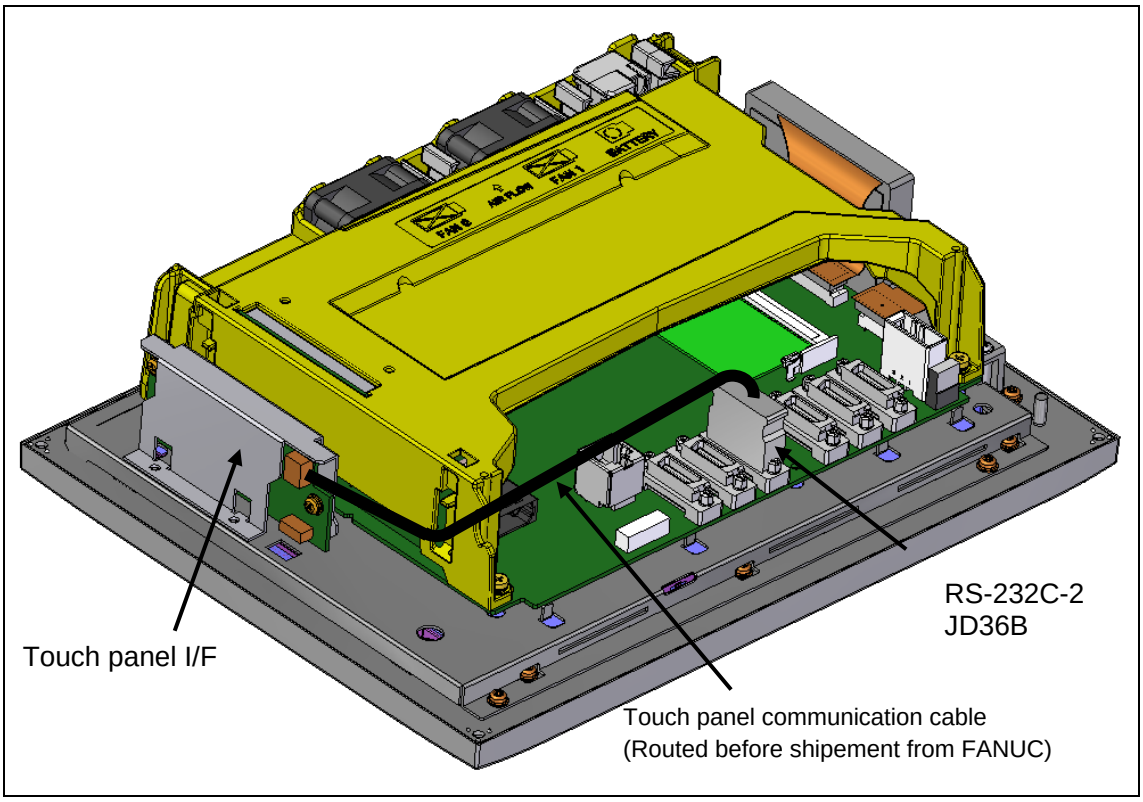

© MyFANUC B5B0D8428C0144A78A5F4CA87F2C262E

5.7.2 External Touch Panel Interface

The external touch panel interface function can be used to connect to the external touch panel that supports the SNP-X protocol. In this case, RS-232C serial port 2CH (JD36B) is used to connect between the CNC and the external touch panel.

Connection cable

The connection diagram is shown below.

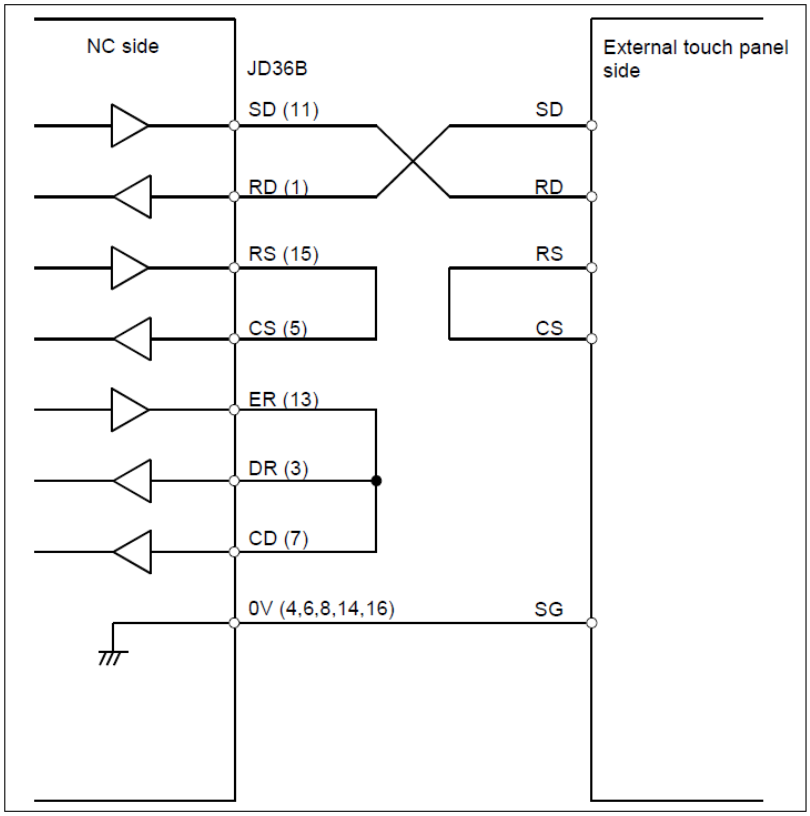

© MyFANUC B5B0D8428C0144A78A5F4CA87F2C262E

The connection cable needs to be created as shown below.

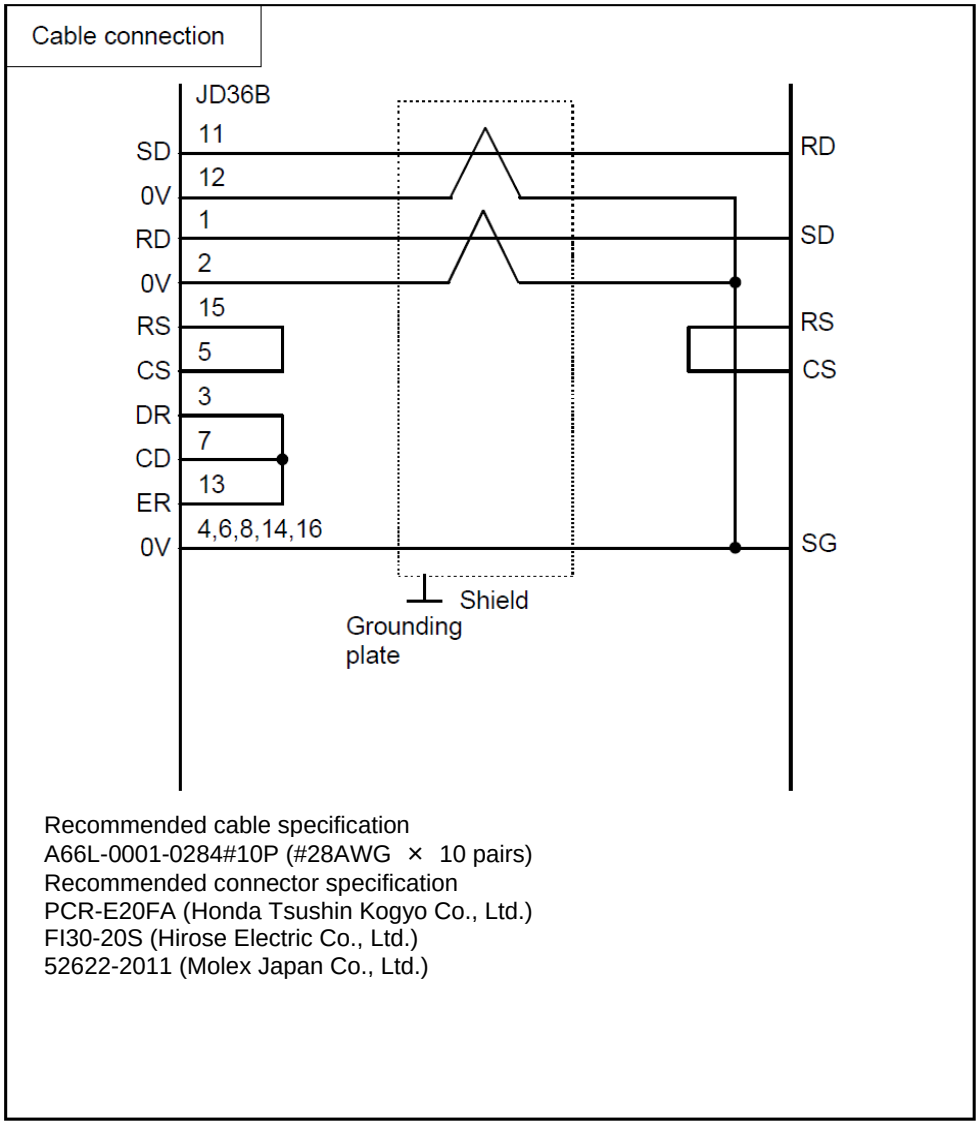

NOTE

Recommended cable connector FI30-20S (Hirose Electric) cannot be used for the stand-alone type.

© MyFANUC B5B0D8428C0144A78A5F4CA87F2C262E

6 SERVO AND SPINDLE INTERFACES

6.1 OVERVIEW

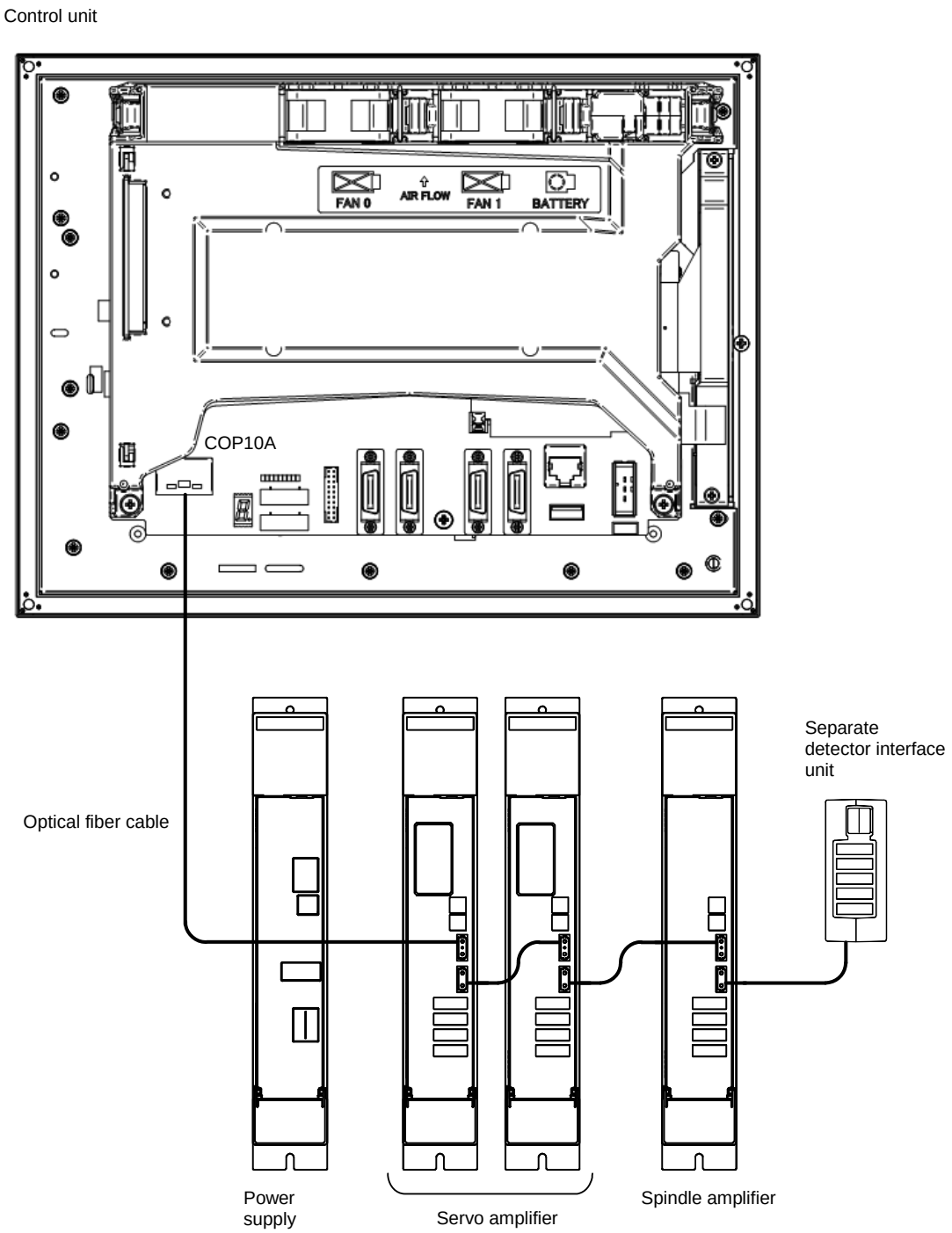

This figure is an example of connecting to control unit a LCD-mounted type.

© MyFANUC B5B0D8428C0144A78A5F4CA87F2C262E

This chapter describes how to connect the control unit to the servo amplifiers, spindle amplifiers, and separate detector interface units.
The control unit is connected to servo amplifiers, spindle amplifiers, and separate detector interface units via serial buses using optical fiber cables (called FSSBs below). A FSSB lines can be connected to the control unit. For the FSSB lines, optical connectors are located on the main board.
Slave units to be connected to the control unit must support the 30*i*-B series. Slave units include servo amplifiers, spindle amplifiers, and separate detector interface units.

© MyFANUC B5B0D8428C0144A78A5F4CA87F2C262E

6.2 INTERFACE TO THE AMPLIFIERS

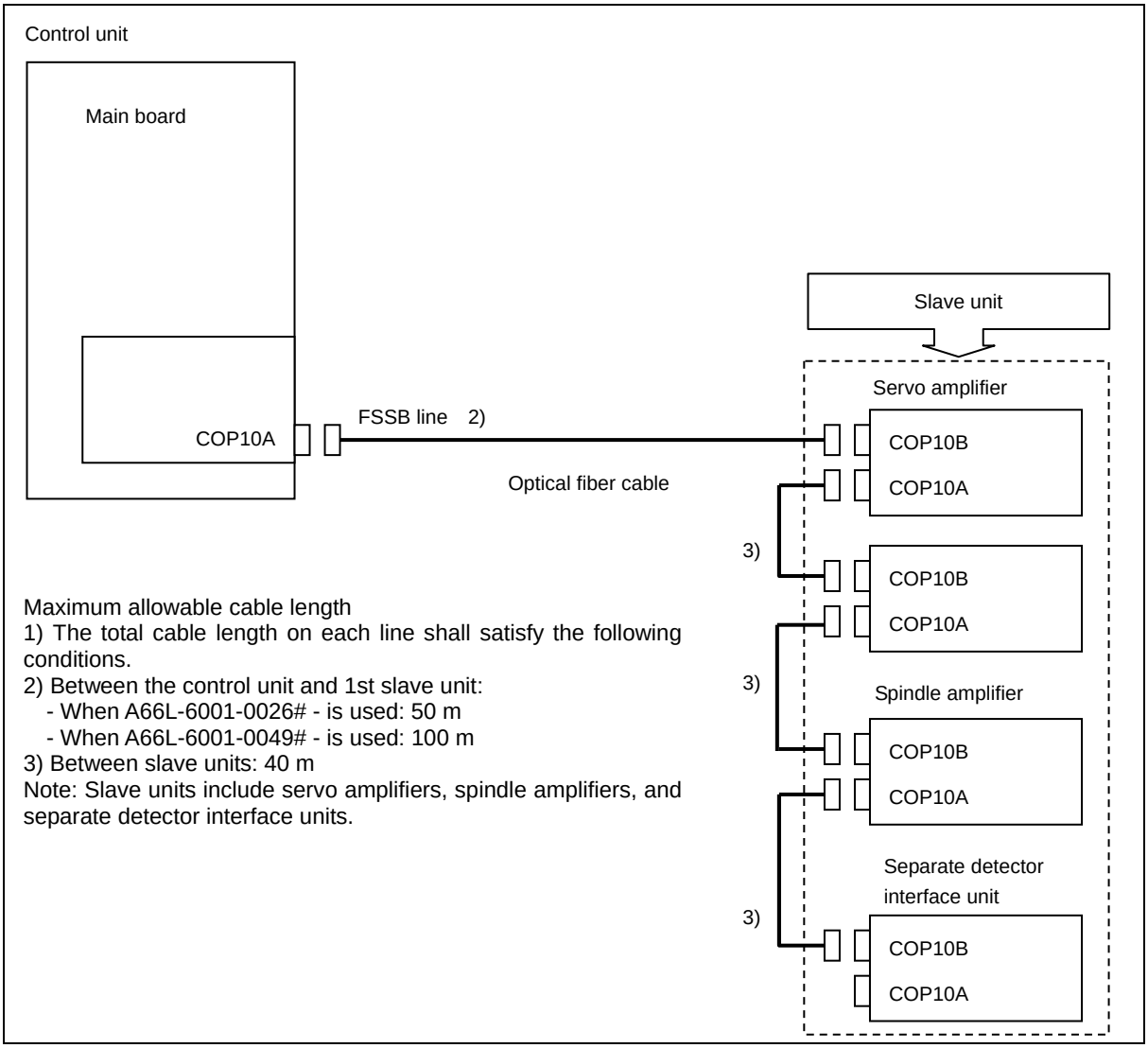

<Total cable length on each line>

Control mode	Maximum total cable length
HRV2	500m
HRV3	200m

<Optical fiber cable types>

Usage	Cable drawing number	Cable length
For internal connection	A02B-0236-K851 to -K856 and -K860 to –K862 (A66L-6001-0023#~)	Length of 10 m or less
For external connection	A66L-6001-0026#~	Length of 50 m or less (40 m or less between slave units)
	A66L-6001-0049#~	Length of 100 m or less (40 m or less between slave units)

© MyFANUC B5B0D8428C0144A78A5F4CA87F2C262E

6.2.1 Number of Units That Can Be Connected

The maximum total number of servo and spindle axes is the table below.

			FS0*i*-TF	FS0*i*-MF
Without loader control	1path system	maximum total control axes (NOTE)	9 (NOTE)	9 (NOTE)
		maximum feed axes	7 (NOTE)	7 (NOTE)
		maximum spindle axes	4	3
	2path system	maximum total control axes (NOTE)	12 (NOTE)	11 (NOTE)
		maximum feed axes	10 (NOTE)	9 (NOTE)
		maximum spindle axes	6	4
With loader control	1path system	maximum total control axes with loader (NOTE)	15 (HRV2) 13 (HRV3)	14 (HRV2) 12 (HRV3)
	2path system	maximum total control axes with loader (NOTE)	16 (HRV2) 14 (HRV3)	16 (HRV2) 14 (HRV3)
		maximum total connection axes of servo motor with loader	12 (HRV2) 10 (HRV3)	12 (HRV2) 10 (HRV3)

NOTE
No count Cs axis and virtual axis for number of feed axes.
Maximum total control axes are number of axes with feed axes and spindle axes.

6.3 SEPARATE DETECTOR INTERFACE

6.3.1 Overview

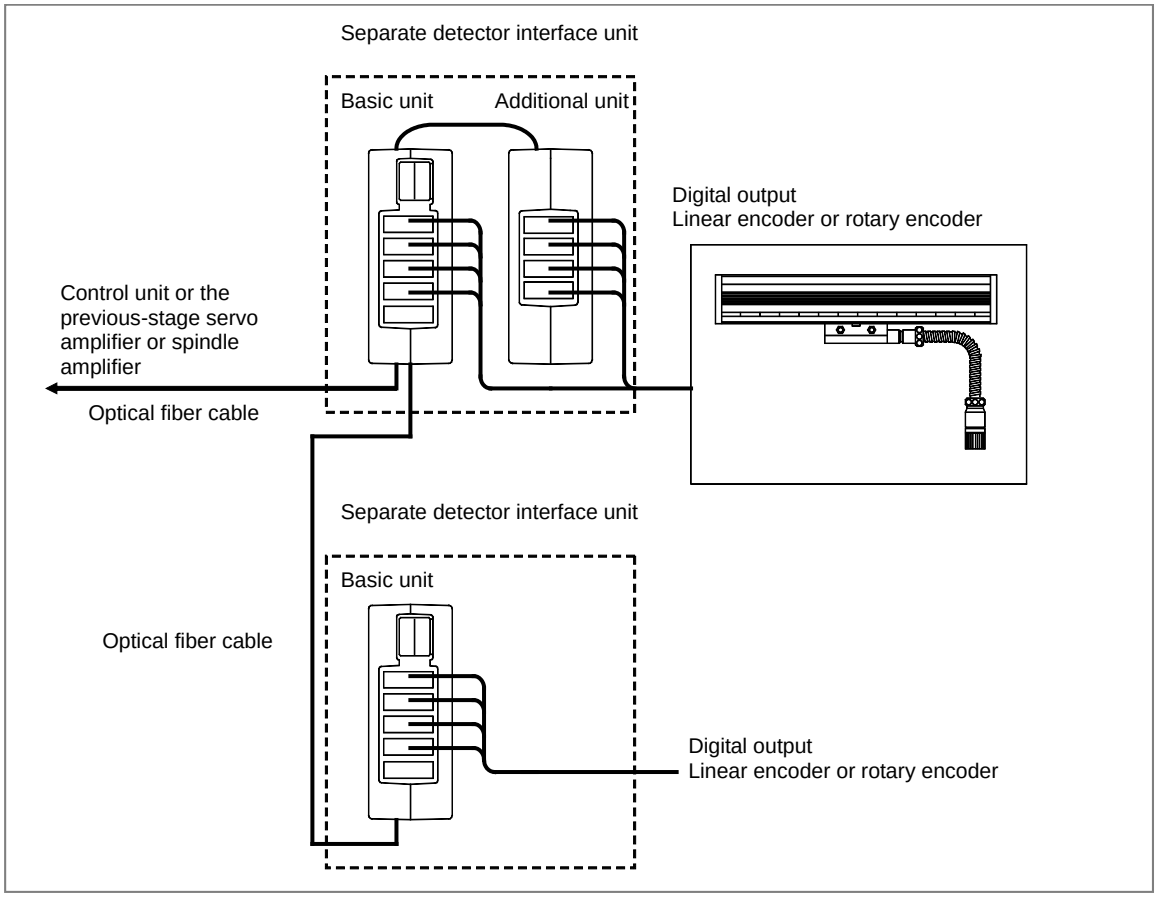

© MyFANUC B5B0D8428C0144A78A5F4CA87F2C262E

When a separate detector such as a separate rotary encoder or linear encoder is used, a separate detector interface unit is required. The separate detector interface unit is connected through an optical fiber cable as a unit on an FSSB line.

A separate detector interface unit consists of a separate detector I/F unit for basic four axes (called a basic unit below) and a separate detector I/F unit for additional four axes (called an additional unit below) (the additional unit may not be provided). The basic and additional units are connected through a flat cable. Up to four separate detectors can be connected to the basic unit and the additional unit, respectively.

Regardless of the kind of the control unit and the type of software, the maximum number of separate detector interface units that can be connected to an FSSB line is description below.
In case of 5 servo motors connected in HRV3, separate detector interface unit can to connect max three units. In case from 6 to 10 servo motors connected in HRV3, separate detector interface unit can to connect max six units. In case of HRV2, separate detector interface unit can to connect max 8 units.

The basic unit is broken down into a basic unit of the digital input type and a basic unit of the analog input type. The basic unit of the digital input type can receive parallel (AB phase rectangular wave) or serial (FANUC serial interface) signals from separate detectors. The basic unit of the analog input type can receive analog 1Vp-p signals.

When a basic unit is solely described in this chapter, it refers to a basic unit of the digital input type.

NOTE
All units of a separate detector interface unit must support the 30*i*-B series (Refer to Item 6.3.3).

© MyFANUC B5B0D8428C0144A78A5F4CA87F2C262E

6.3.2 Connection Diagram

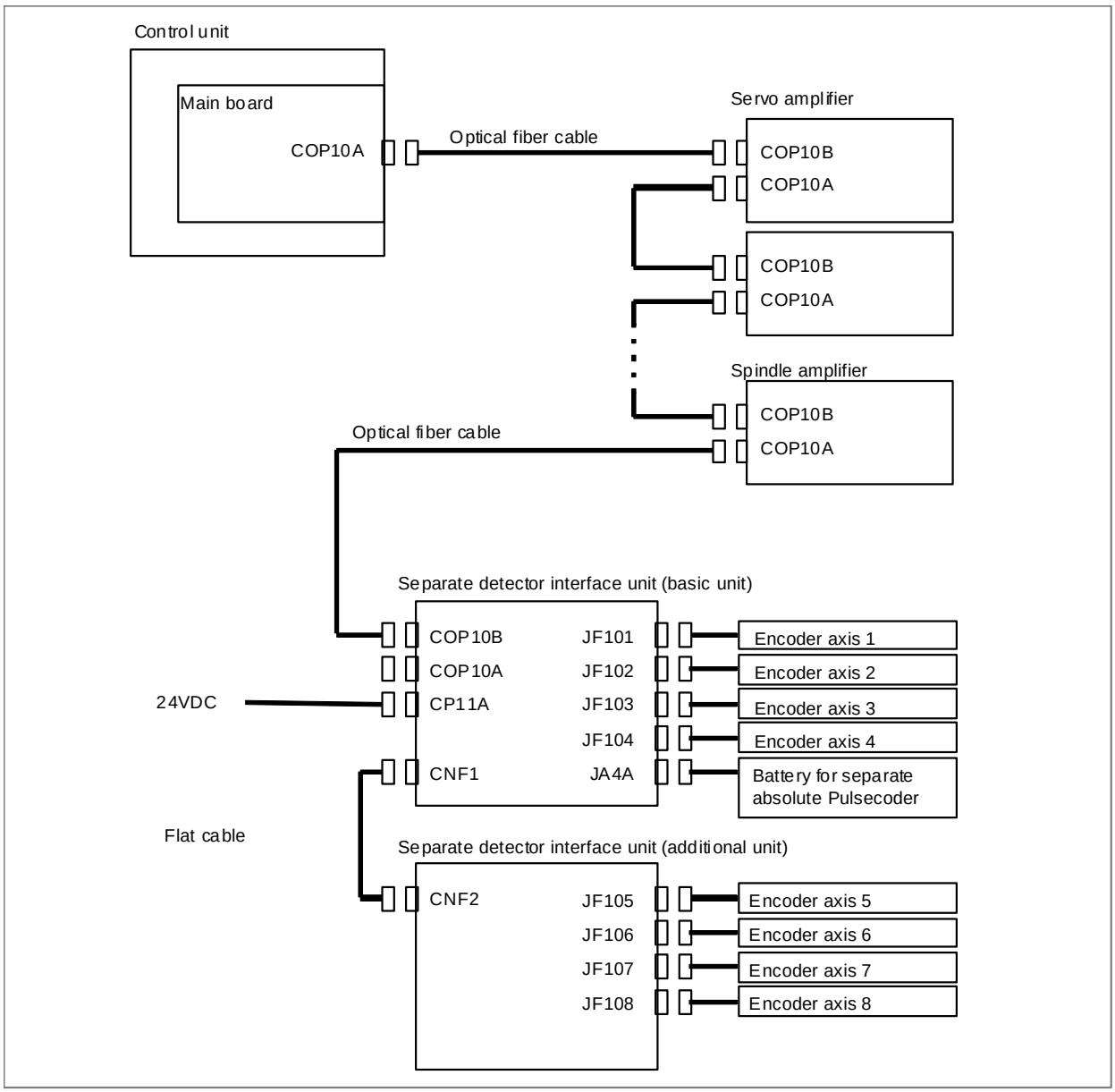

© MyFANUC B5B0D8428C0144A78A5F4CA87F2C262E

6.3.3 Separate Detector Interface Unit Specification

Item	Specification
Power supply capacity	Voltage 24 VDC ±10% Current: 0.9 A (basic unit only), 1.5 A (basic unit + additional unit) Includes the power to be supplied to the detectors.
Consumption power	9W (for basic four axes) 14W (for basic four axes + additional four axes)
Ordering information	Basic unit : A02B-0323-C205 (Separate detector I/F unit for basic four axes) Additional unit : A02B-0323-C204 (Separate detector I/F unit for additional four axes) Analog basic unit : A06B-6061-C202 (Analog input separate detector I/F unit for basic four axes)
Method of installation	An interface unit can be installed by using screws or a DIN rail.

6.3.4 Connection of Power Supply

Power to the separate detector interface unit should be supplied from an external 24 V DC power supply. An additional unit is powered by a basic unit.

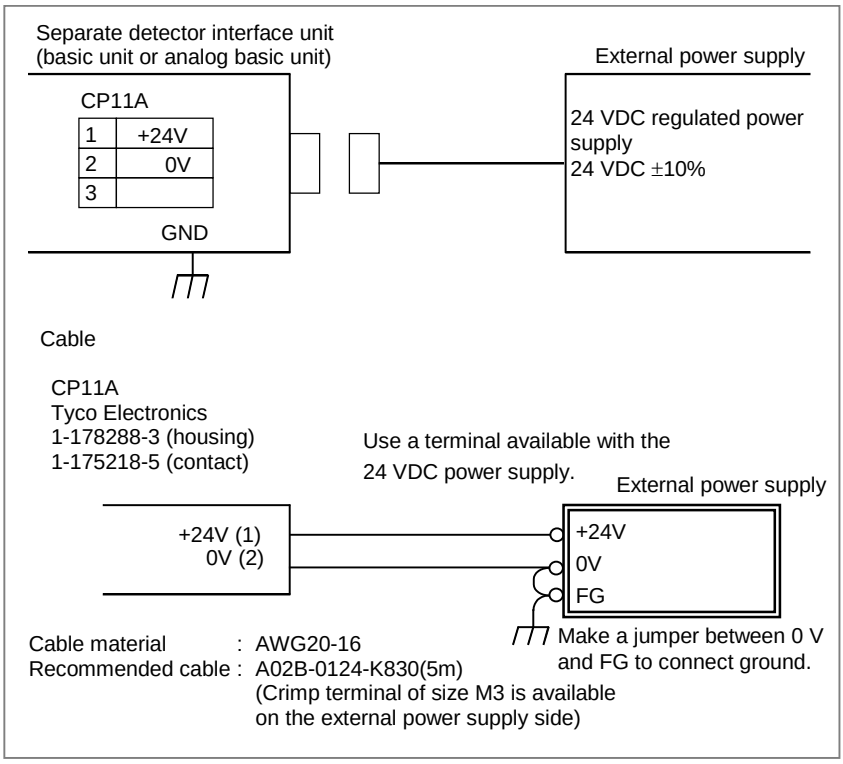

The 24 VDC input to CP11A can be output at CP11B for use in branching. A cable with the same specifications as for CP11A can be connected to connector CP11B. In this case, the power supplied to CP11A should be equal to the sum of the rating of the separate detector interface unit and that of the units after CP11B. A current of up to 1.5 A can be supplied via CP11A.

Be sure to ground the 0-V line of the power supply to the separate detector interface unit. In addition, keep any noise source (such as an AC power cable and contactor) away from the power line of the separate detector interface unit as far as possible to prevent noise from being picked up through the power line.

© MyFANUC B5B0D8428C0144A78A5F4CA87F2C262E

For all units of the separate detector interface unit, secure the ground line to the ground terminal (GND) for signals, which is located at the bottom of each unit, with an M3 screw as shown in the figure below. Connect the ground line to the ground plate of the cabinet.

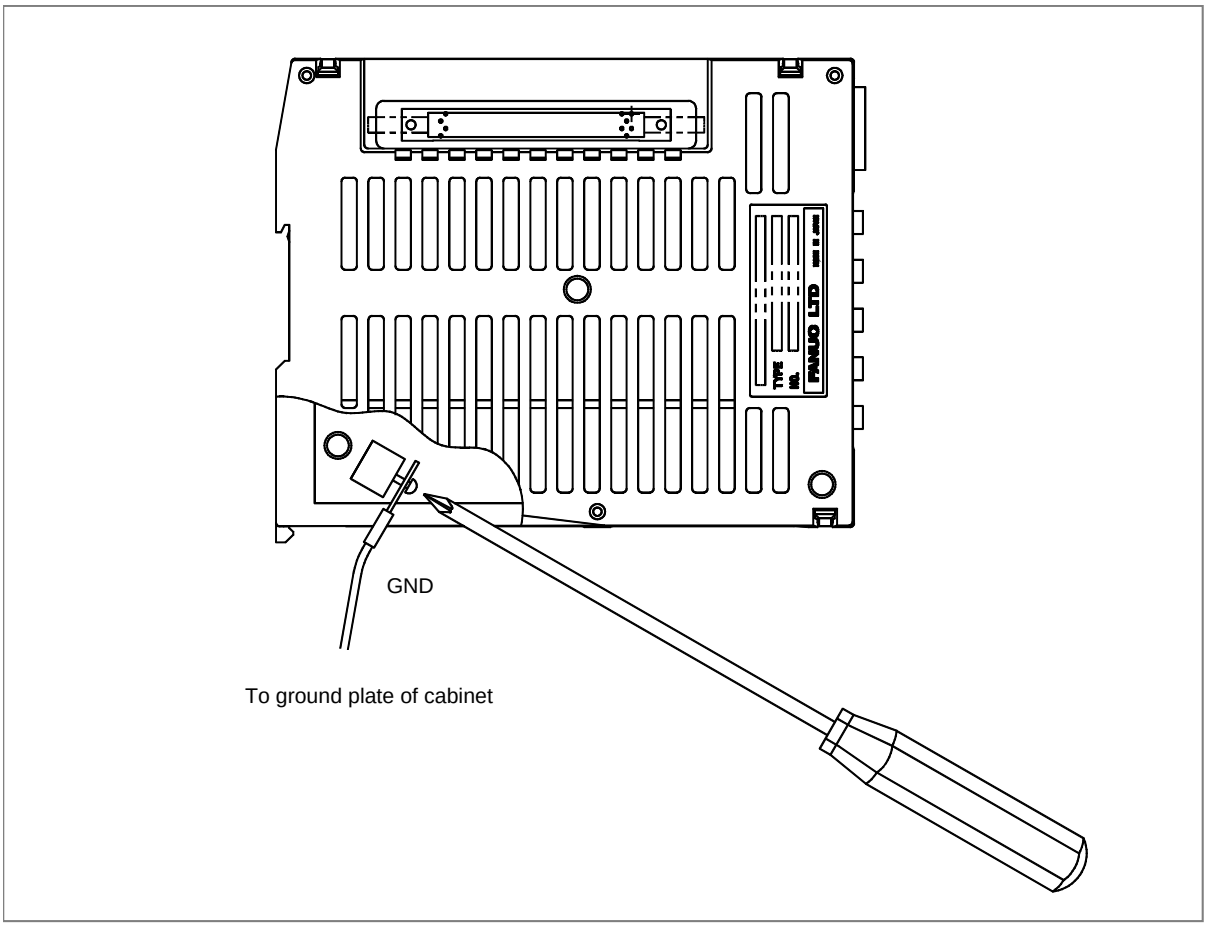

NOTE

The torque with which a screw is tightened is 0.5 N·m or less.

© MyFANUC B5B0D8428C0144A78A5F4CA87F2C262E

6.3.5 Separate Detector Interface (Digital Input)

6.3.5.1 FANUC serial interface

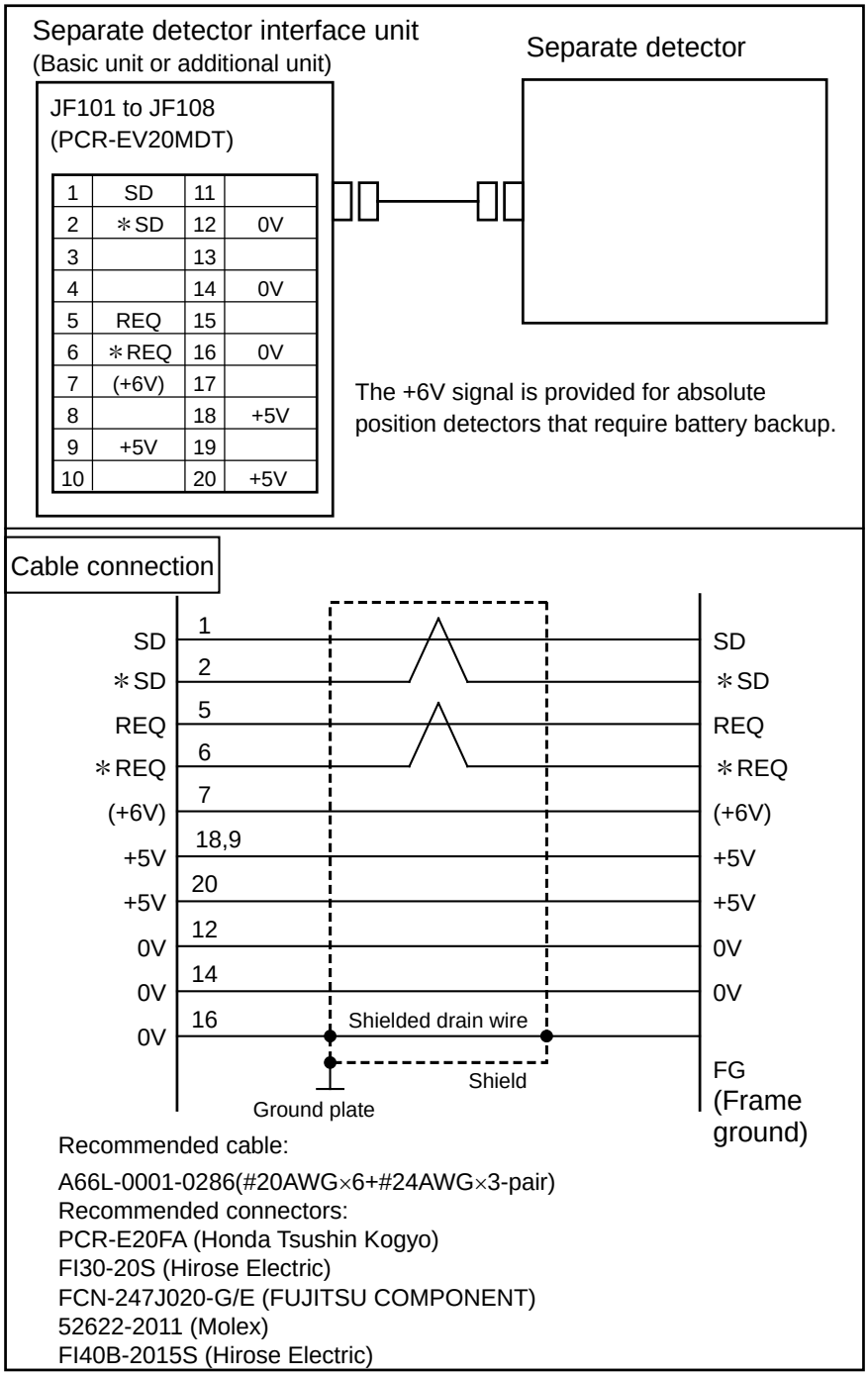

1	SD	11	
2	∗SD	12	0V
3		13	
4		14	0V
5	REQ	15	
6	∗REQ	16	0V
7	(+6V)	17	
8		18	+5V
9	+5V	19	
10		20	+5V

NOTE

1 The +5V signals above can be used to feed power to the detectors. The supply current per detector is 0.35 A maximum.
The lower limit of the 5V signals is 4.95 V for the basic unit or 4.9 V for the additional unit. Determine the specifications and length of the cable to be used so that the specification of the detector is not exceeded.

2 Ask the manufacturer of each detector whether it supports the FANUC serial interface.

© MyFANUC B5B0D8428C0144A78A5F4CA87F2C262E

6.3.5.2 Parallel interface

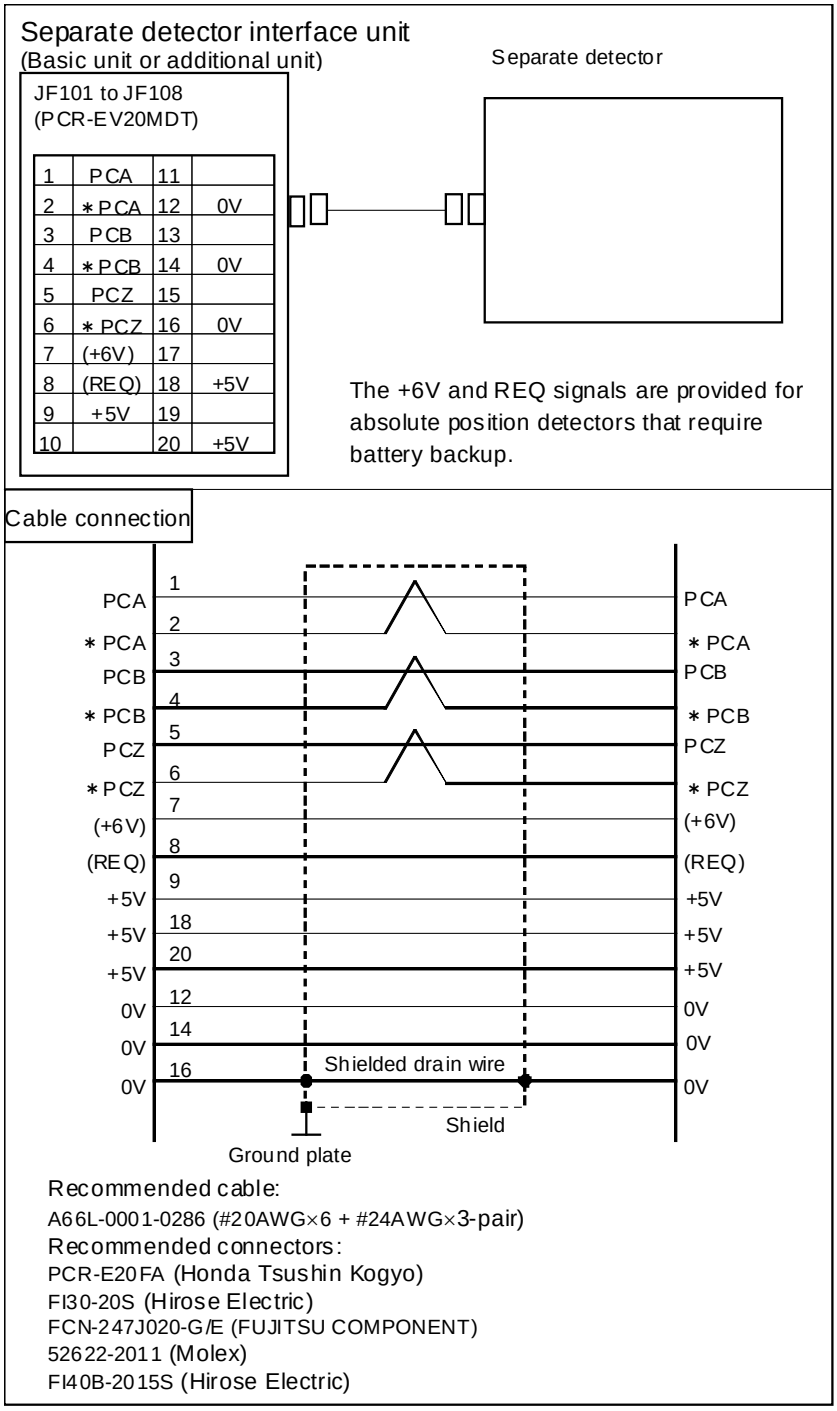

NOTE

The +5V signals above can be used to feed power to the detectors. The supply current per detector is 0.35 A maximum.
The lower limit of the 5V signals is 4.95 V for the basic unit or 4.9 V for the additional unit. Determine the specifications and length of the cable to be used so that the specification of the detector is not exceeded.

© MyFANUC B5B0D8428C0144A78A5F4CA87F2C262E

6.3.5.3 Input signal requirements (parallel interface)

The feedback signals from the separate detectors connected via the parallel interface are defined as follows:

(1) A and B phase signal input
This is a method to input position information by the mutual 90 degree phase slip of A and B phase signals.
Detection of the position is performed with the state in which the B phase is leading taken as a shift in the plus direction, and the state in which the A phase is leading as a shift in the minus direction.

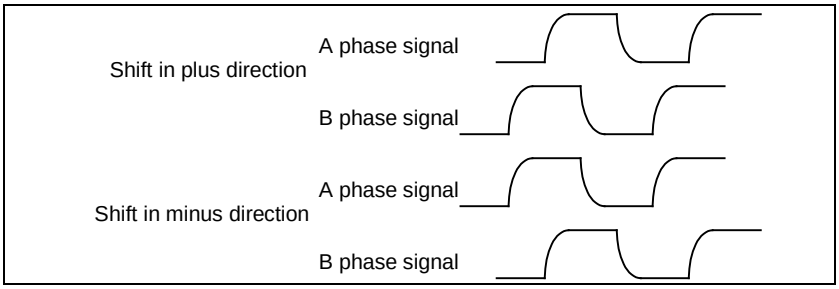

(2) Phase difference and minimum repeat frequency

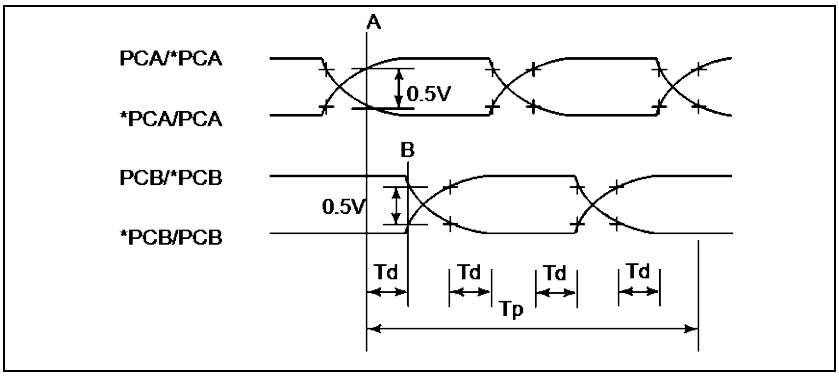

(3) Z phase signal input

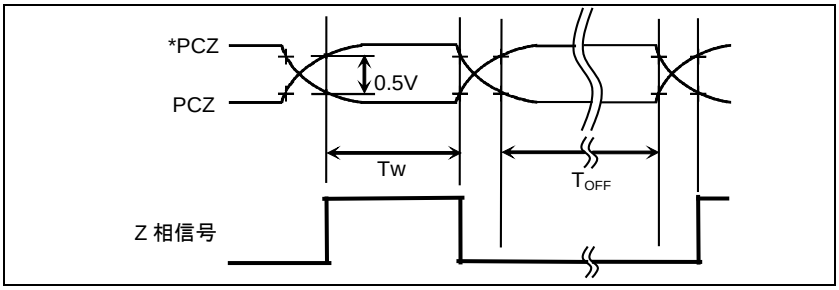

© MyFANUC B5B0D8428C0144A78A5F4CA87F2C262E

Time rules for input signals

Requirements for the signals at the input pins of input connectors JF101 to JF108. The signals for these connectors are differential input signals with A and B phases. The time from Point A at which the relative potential difference between PCA and *PCA reaches 0.5 V or more to Point B at which the relative potential difference between PCB and *PCB drops to 0.5 V or less (Td) must be the following value: The minimum value of Td is 0.15 μs.
The cycle and pulse width of the signal must satisfy the above phase difference.

The Z phase signals are also differential signals. There are the following requirements for the time from when the potential difference between PCZ and *PCZ exceeds 0.5 V to when it becomes lower than 0.5 V:

Tw ≥ 1/4 frequency of the A or B phase signals
TOFF > 1.5 msec

Input voltage requirements

The voltage of the A and B phase signals must meet the following requirements:
High level: 2.4 V or more
Low level: 0.8 V or less

Receiver circuit

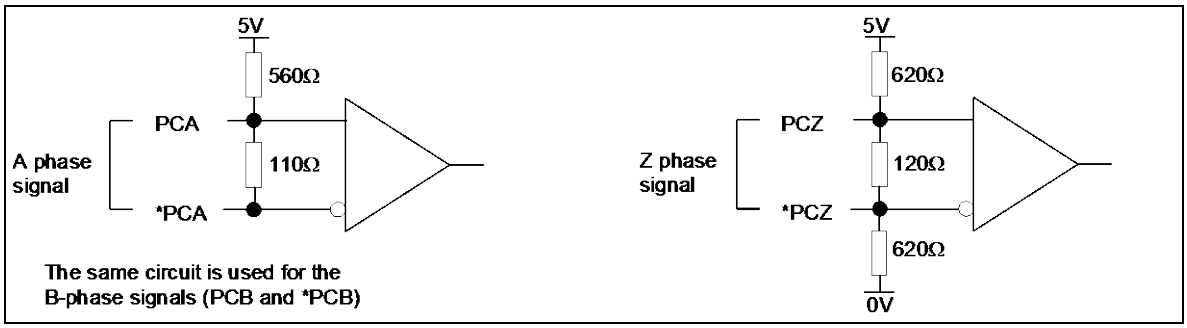

Rotation directions of a servo motor and separate Pulsecoder

If a separate Pulsecoder rotates in a direction opposite to the direction of servo motor rotation when the servo motor is rotating, the connection of the feedback cable from the separate Pulsecoder must be changed as follows:
(1) Exchange signal PCA with signal PCB.
(2) Exchange signal *PCA with signal *PCB.
The rotation direction can also be changed using a parameter.
For details, refer to the servo parameter manual.

© MyFANUC B5B0D8428C0144A78A5F4CA87F2C262E

6.3.6 Overview of the Analog Basic Unit

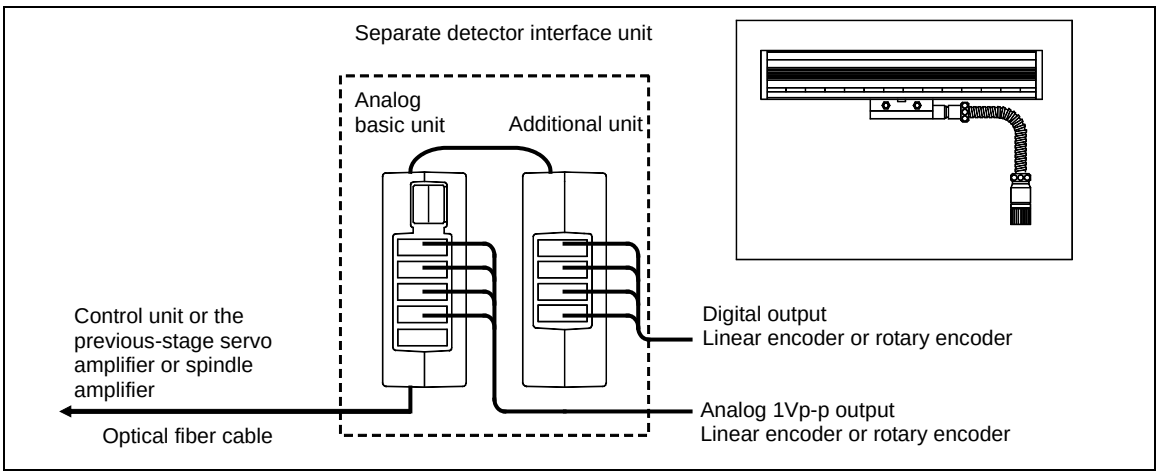

To use a separate detector with an analog output of 1 Vp-p requires an analog basic unit, which is a basic unit of the analog input type. The analog basic unit is connected as a unit on the FSSB line via an optical fiber cable.

Up to four separate detectors with an analog output of 1 Vp-p can be connected to an analog basic unit. Four separate detectors with digital output can be connected to the additional unit regardless of whether an analog or digital basic unit is used.

NOTE

1 All units of a separate detector interface unit must support the 30*i*-B series (Refer to Item 6.3.3).
2 No 1-Vp-p output detector can be connected to additional units.

© MyFANUC B5B0D8428C0144A78A5F4CA87F2C262E

6.3.7 Connection Diagrams of an Analog Basic Unit

(1) When encoders with an analog output of 1 Vp-p are connected to the 1st to 4th axes

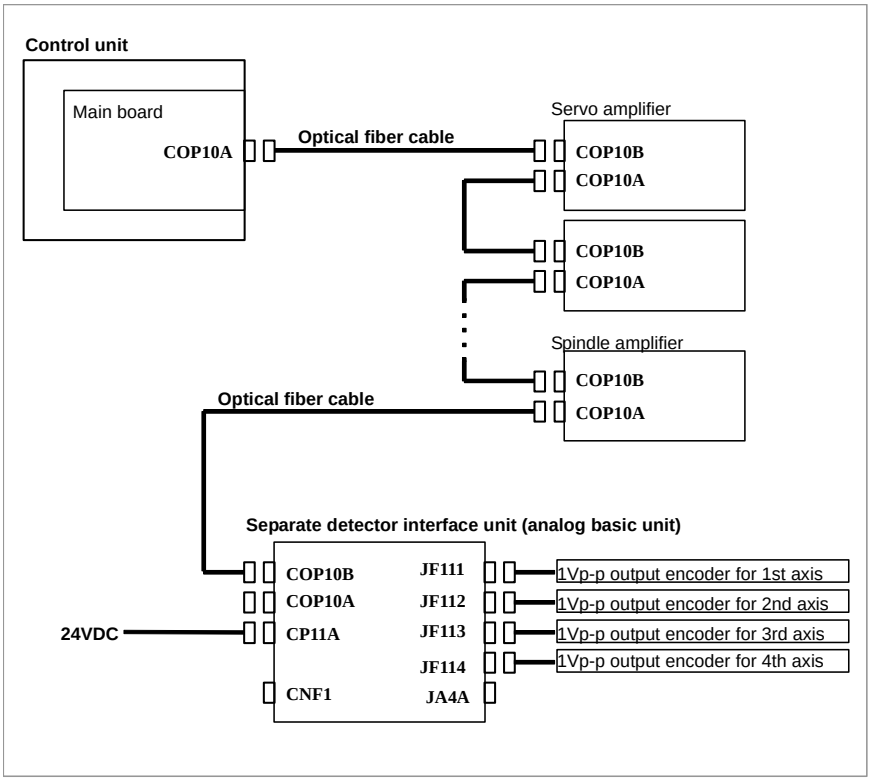

(2) When encoders with an analog output of 1 Vp-p are connected to the 5th to 8th axes

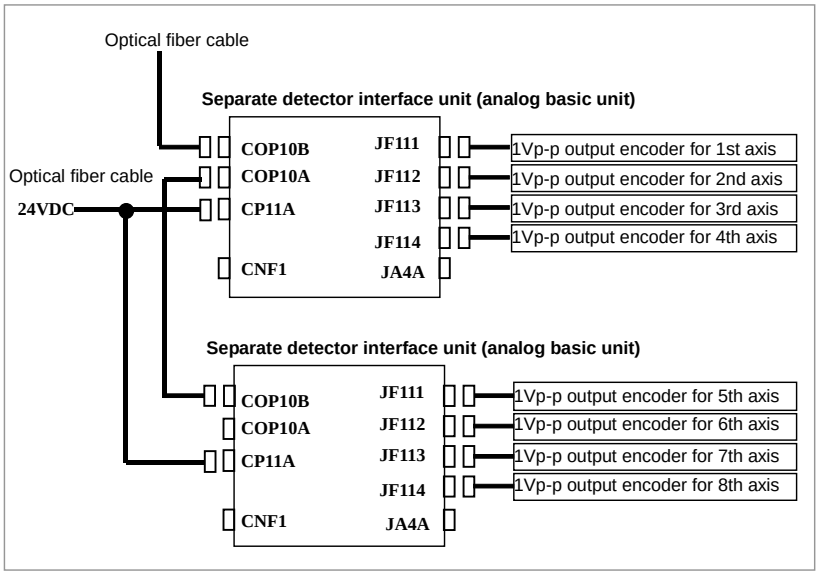

© MyFANUC B5B0D8428C0144A78A5F4CA87F2C262E

(3) When encoders with an analog output of 1 Vp-p are connected to the 1st to 4th axes and digital output encoders are connected to the 1st to 4th axes

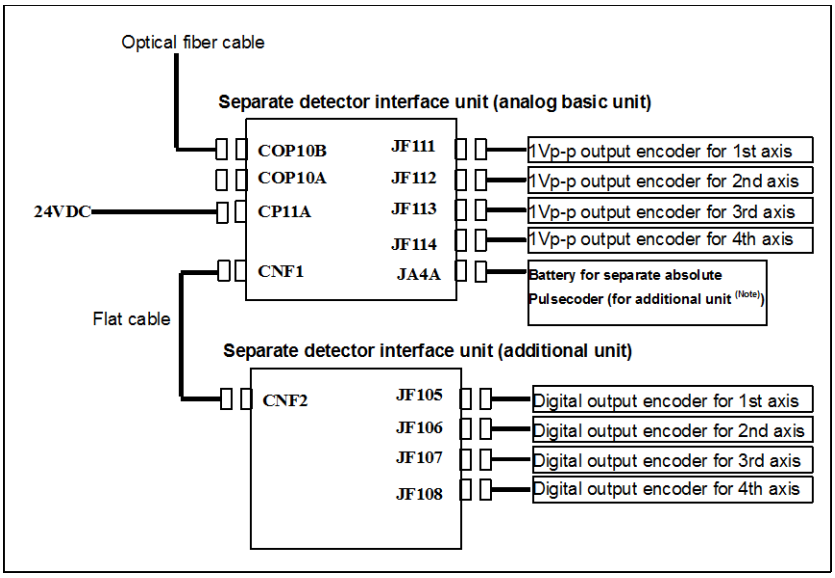

(4) When encoders with an analog output of 1 Vp-p are connected to the 1st to 4th axes and digital output encoders are connected to the 5th to 8th axes

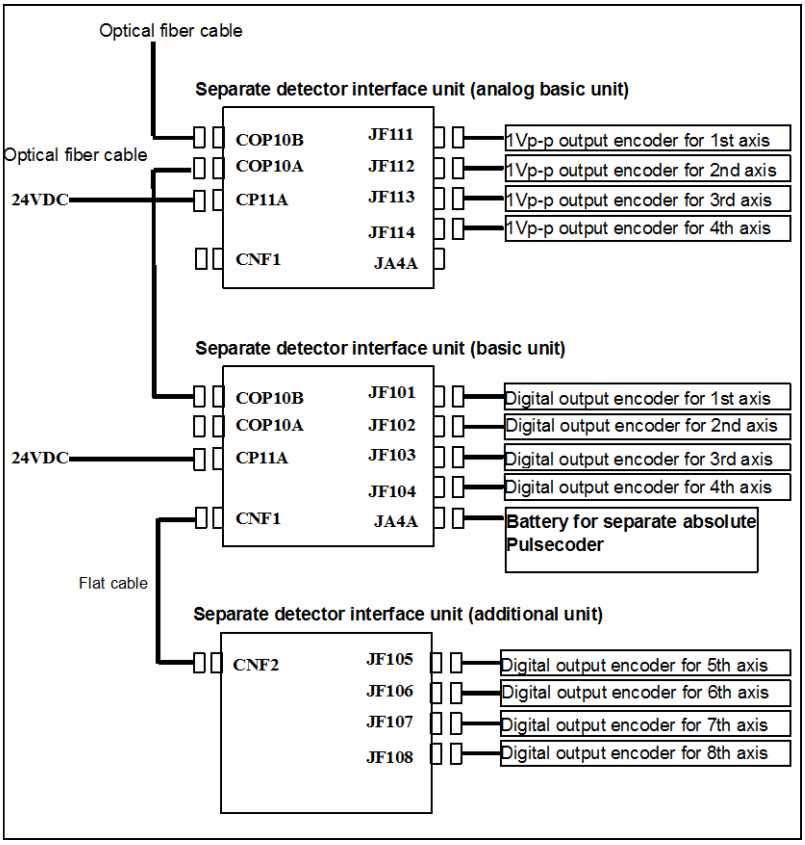

NOTE

When a separate absolute position detector that requires battery backup is connected to an additional unit, a battery case for the separate absolute pulse coder must be connected to JA4A on the analog basic unit. The battery voltage is supplied to the additional unit via the flat cable.

© MyFANUC B5B0D8428C0144A78A5F4CA87F2C262E

6.3.8 Separate Detector Interface (Analog Input)

6.3.8.1 Analog 1Vp-p interface

Separate detector interface unit
(Analog basic unit)

JF111～JF114
(PCR-EV20MDT)

1	A	11	NC(ADIF)
2	XA	12	0V
3	B	13	NC(BDIF)
4	XB	14	0V
5	Z	15	NC(T0)
6	XZ	16	0V
7		17	
8		18	+5V
9	+5V	19	NC(PZ)
10		20	+5V

Analog 1Vp-p output encode

Leave NC (No Connection) open.

Cable connection

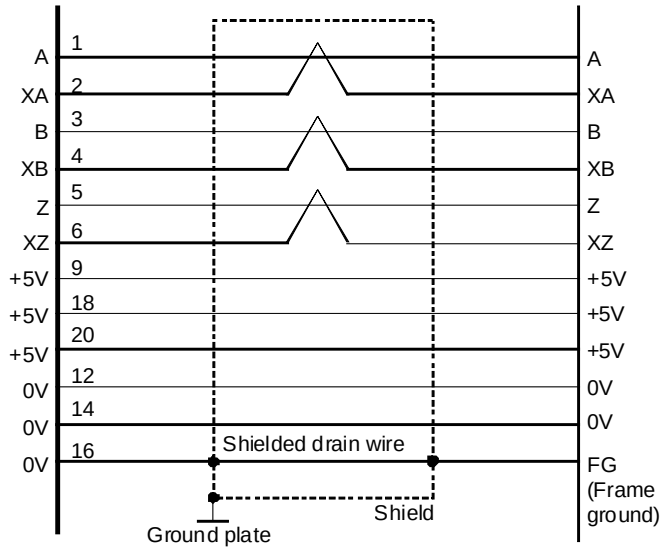

Recommended cable:
A66L-0001-0286 (#20AWG × 6 + #24AWG × 3-pair)
Recommended connectors:
PCR-E20FA (Honda Tsushin Kogyo)
FI30-20S (Hirose Electric)
FCN-247J020-G/E (FUJITSU COMPONENT)
52622-2011 (Molex)
FI40B-2015S (Hirose Electric)

NOTE

The +5V signals above can be used to feed power to the detectors. The supply current per detector is 0.35 A maximum.
The lower limit of the 5V signals is 4.95 V for the basic unit or 4.9 V for the additional unit. Determine the specifications and length of the cable to be used so that the specification of the detector is not exceeded.

© MyFANUC B5B0D8428C0144A78A5F4CA87F2C262E

6.3.8.2 Input signal requirements (analog 1Vp-p interface)

A/B (Type I)

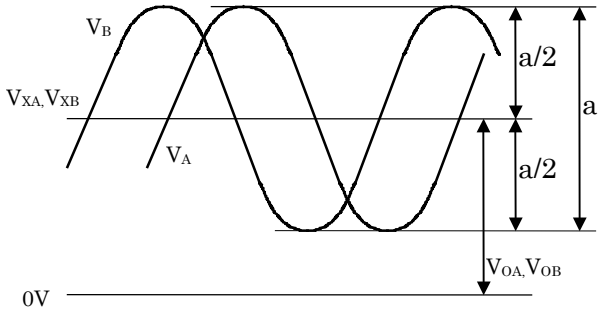

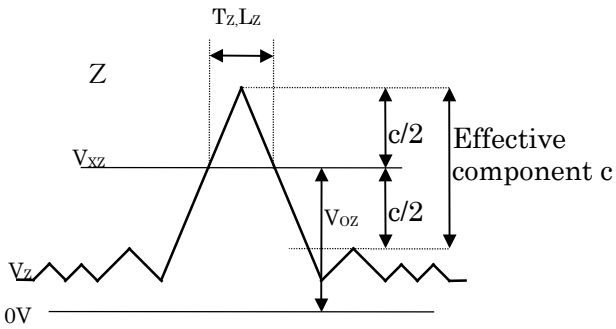

A/B (Type II)

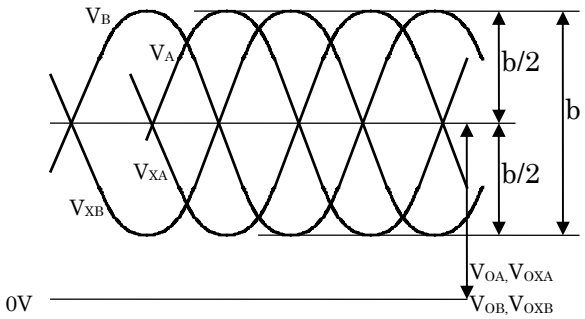

Item	Symbol	Min. spec.	Standard spec.	Max. spec.	Unit
Amplitude (phase A/B)	Type I a of phase A and phase B Type II Sum of b of phase A and b of phase XA Sum of b of phase B and b of phase XB	0.6	1.0	1.5	V_{P-P}
Amplitude (phase Z)	Sum of c of Z and c of XZ (analog signal)	0.2	0.4	-	V
Center value (DC level)	Type I V_{OA},V_{XA} ,V_{OB},V_{XB} Type II V_{OA},V_{OXA} ,V_{OB},V_{OXB} V_{OZ},V_{OXZ}	2.0	2.5	3.0	V
Offset voltage (phase A/B)	Type I V_{OA}-V_{XA} , V_{OB}-V_{XB} Type II V_{OA}-V_{OXA} , V_{OB}-V_{OXB}	-0.1	0	+0.1	V
Offset voltage (phase Z)	V_{OZ}-V_{OXZ}	-0.05	0	+0.05	V
Pulse width of phase Z	T_Z	600	-	-	nSec
Length of phase Z	L_Z	1/4	-	-	Pitch of A (or B)
Input impedance		100	120	140	Ω
Input frequency		-	-	200	kHz

* The detection precision depends on the precision of signals from the encoder.

© MyFANUC B5B0D8428C0144A78A5F4CA87F2C262E

6.3.8.3 Method for checking the encoder signals

The check pin board can be used to observe ADIF (differential amplified signal from A and XA input signals), BDIF (differential amplified signal from B and XB input signals), T0 (reference voltage), and PZ (compared digital signal from Z and XZ input signals).

(1) Ordering specifications A06B-6071-K290
Details

A20B-1005-0340	Printed circuit board with check pins
A660-2042-T031#L200R0	200-mm cable

(2) Connection
Connect the check pin board to the cable of which axis you want to observe the signals.

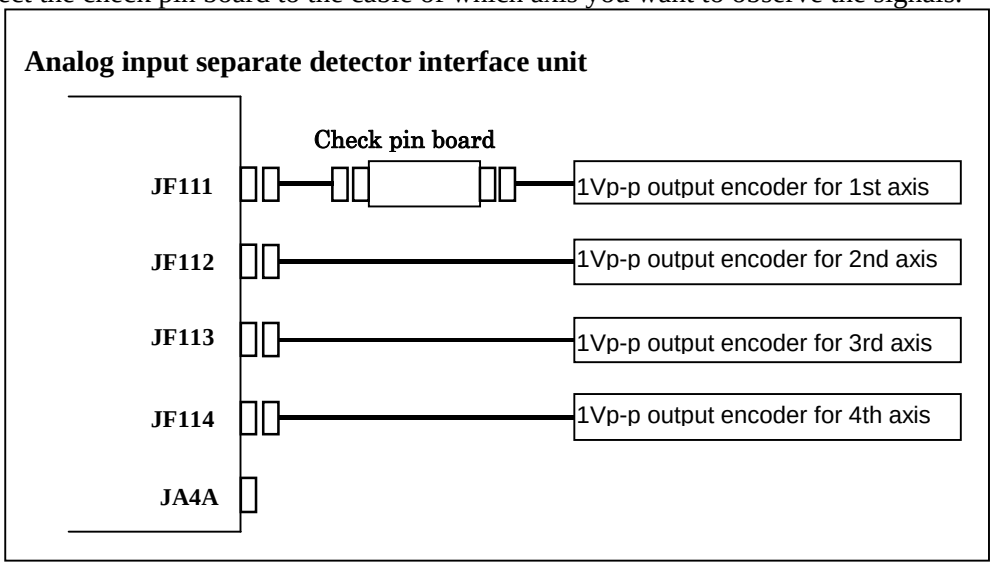

(3) Signal output

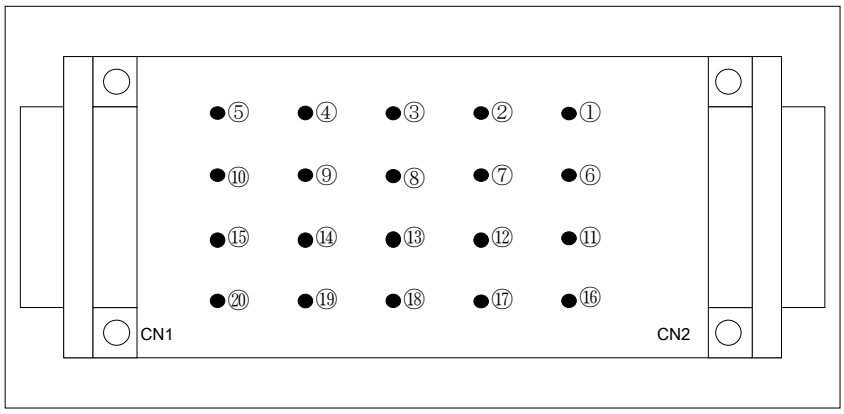

Pin number	Signal name	Remarks
⑪	ADIF	Differential amplified signal from A and XA input signals ADIF = 2 × (XA – A)
⑬	BDIF	Differential amplified signal from B and XB input signals BDIF = 2 × (XB – B)
⑮	T0	Reference voltage 2.5VDC (=1/2Vcc)
⑲	PZ	Compared digital signal from Z and XZ input signals
⑨、⑱、⑳	+5V	Power
⑫、⑭、⑯	0V	Signal ground

© MyFANUC B5B0D8428C0144A78A5F4CA87F2C262E

6.3.9 Connection of Battery for Absolute Position Detector

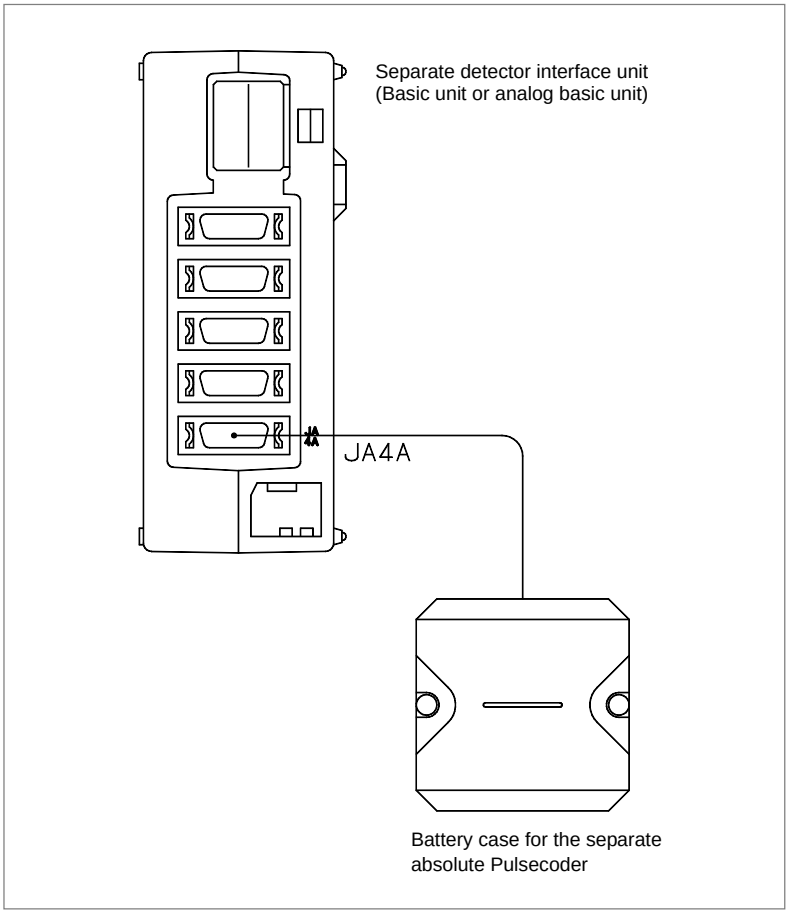

When a separate absolute position detector that requires battery backup is connected, a battery case for the separate absolute pulse coder must be connected to JA4A on the basic unit (or analog basic unit).
The battery voltage is supplied to the additional unit via the flat cable.

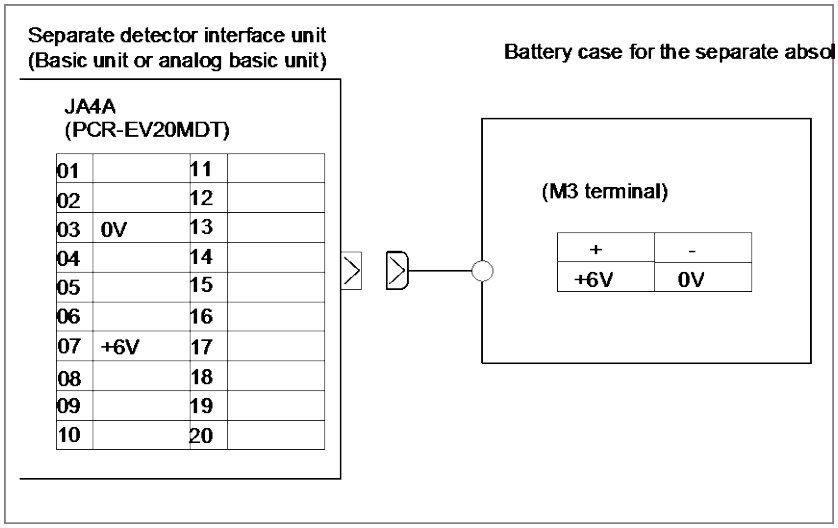

© MyFANUC B5B0D8428C0144A78A5F4CA87F2C262E

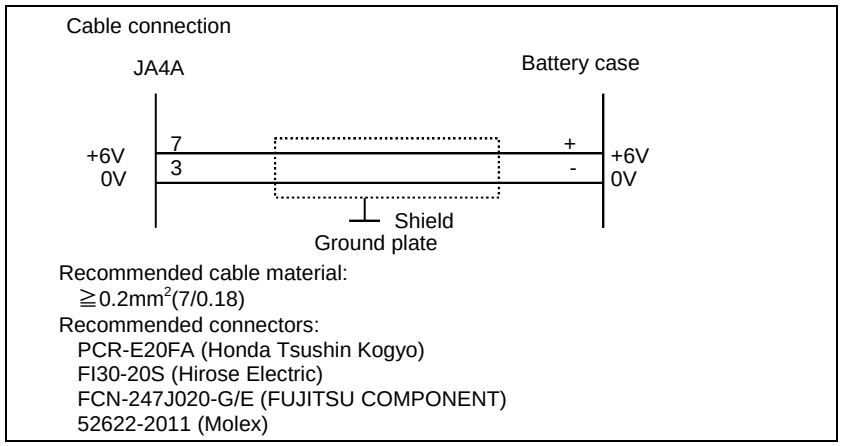

⚠ CAUTION

If the cable is connected to JA4A when the separate absolute pulse coder battery case contains the battery, the battery voltage is applied to the battery power supply pin (+6V) for each of the feedback connectors (JF101 to JF108). In this case, if the battery line and 0 V are short-circuited, the battery may heat up or the protection circuit within the separate detector interface unit may fail. First, make sure the battery case contains no battery or the cable is not connected to JA4A. Then, complete all cabling work and confirm cables are correctly connected. Finally, place the battery or connect the cable to JA4A.

6.3.10 Connection Between the Basic Unit and Additional Unit

A flat cable is used to connect the basic unit (or analog basic unit) and additional unit as shown below. The flat cable is 100 mm long.

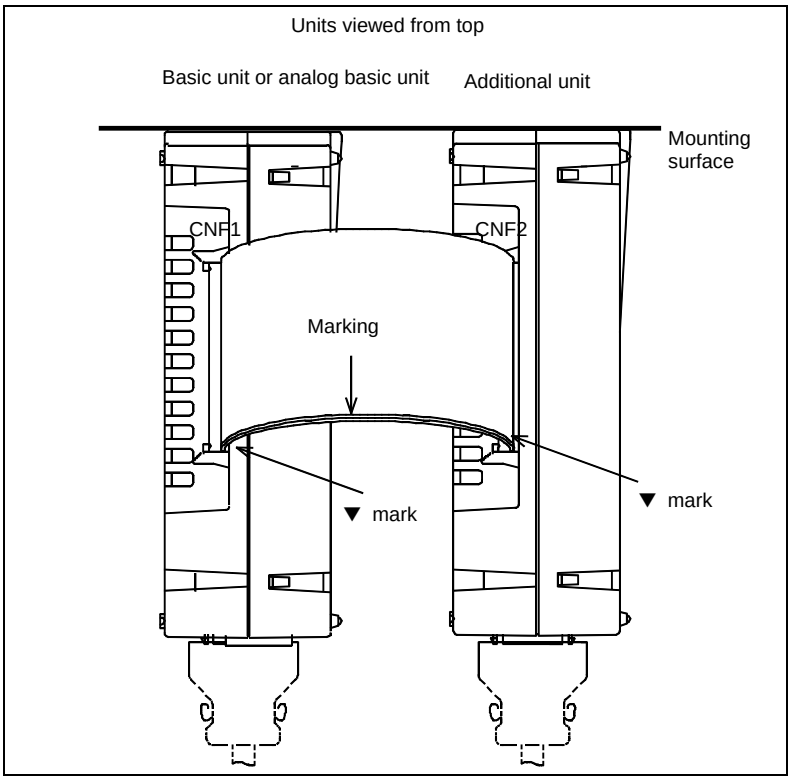

Place an order on a flat cable together with separate detector interface units.

© MyFANUC B5B0D8428C0144A78A5F4CA87F2C262E

6.3.11 Connector Locations

Connector locations on the basic unit

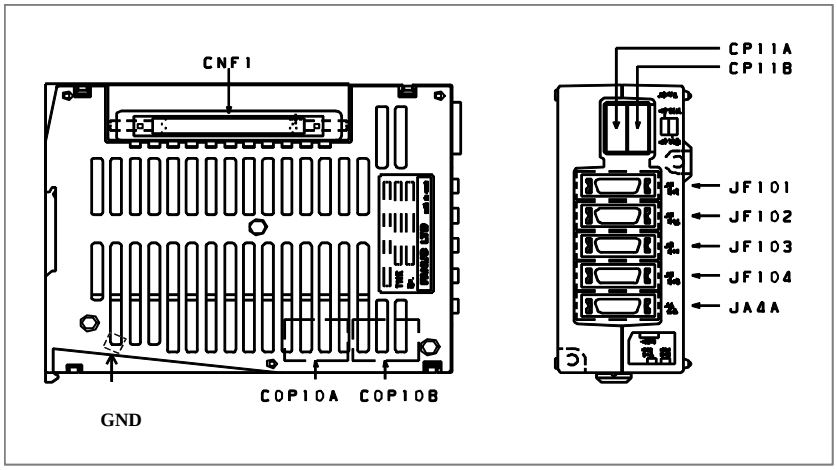

Connector locations on the additional unit

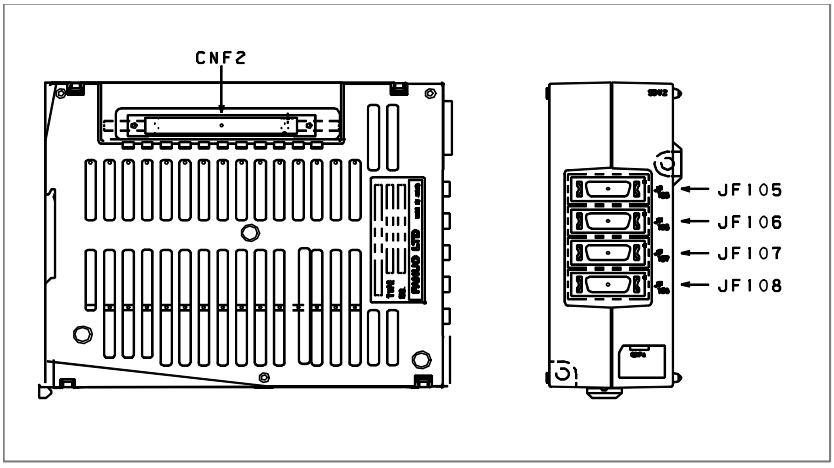

Connector locations on the analog basic unit

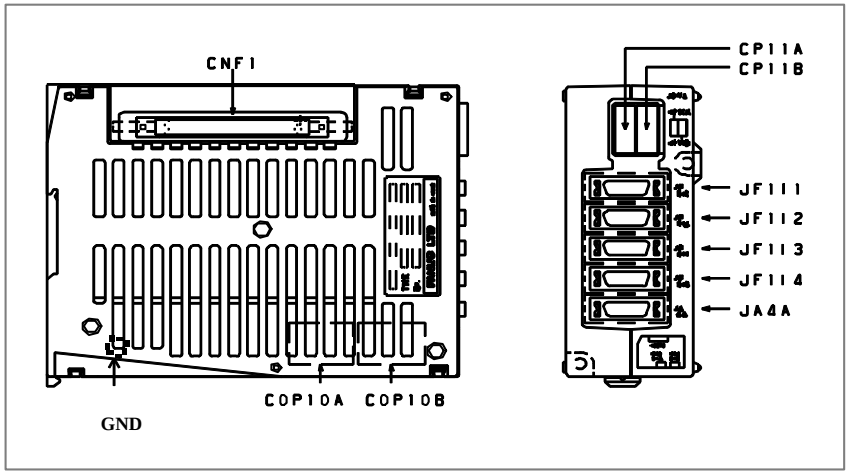

For the outside dimensions, see Appendix A, “OUTLINE DRAWINGS OF UNITS AND CONNECTORS”.

© MyFANUC B5B0D8428C0144A78A5F4CA87F2C262E

6.3.12 Installation

1) Notes on installation
   (1) Use an interface unit in a completely enclosed cabinet.
   (2) Install an interface unit on a vertical surface, and provide a space of 100 mm above and below the unit. Below an interface unit, do not place equipment that generates a large amount of heat.
   (3) When using a basic unit (or analog basic unit) and additional unit, place the units as shown below so that the flat cable connecting the units does not block the vent holes on the basic unit (or analog basic unit). A flat cable not longer than 100 mm must be used.

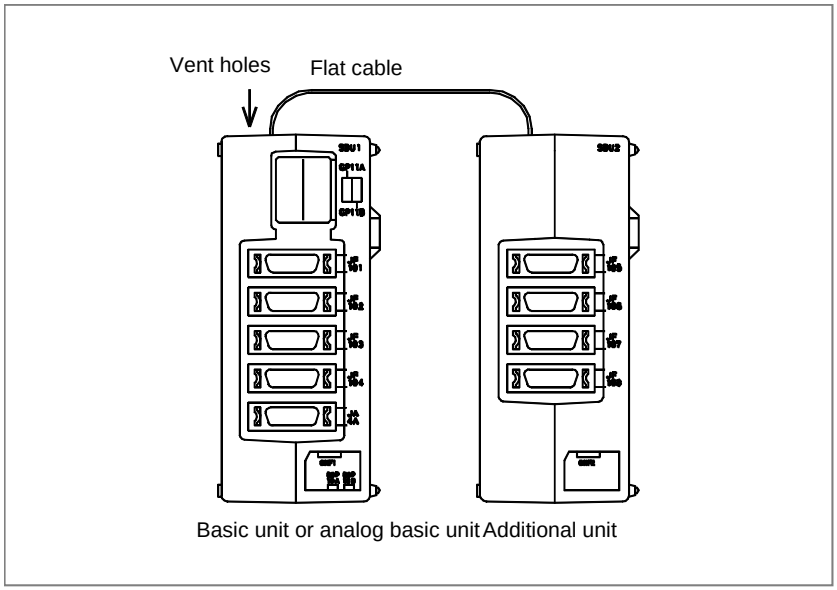

2) Installation using screws

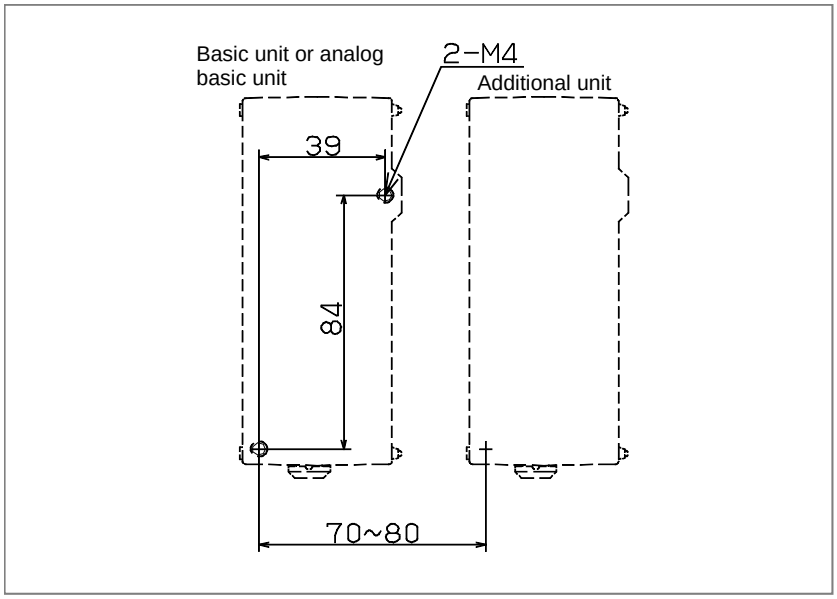

When using both a basic unit (or analog basic unit) and additional unit, install the units as shown above, with the mounting holes horizontally separated by 70 to 80 mm.

© MyFANUC B5B0D8428C0144A78A5F4CA87F2C262E

6.3.13 Notes on Installing a Separate Detector Interface Unit

NOTE

Since a screwdriver must be inserted obliquely to install or remove this unit and heat is radiated from the sides of the unit, sufficient access clearances are required on both sides of the unit.
As a guideline, if the front of an adjacent unit appears flush with the unit or slightly set back, allow a clearance of about 20 mm between the unit and the adjacent unit. If the front of an adjacent unit protrudes beyond the front of the unit, allow a clearance of about 70 mm between the unit and the adjacent unit.
Also, when installing the unit near a side of the cabinet, allow a clearance of about 70 mm between the unit and the side of the cabinet.

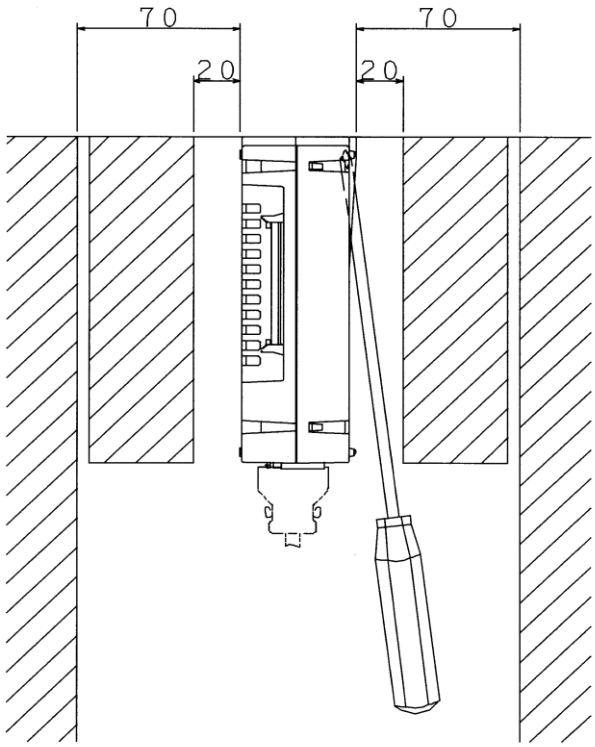

Access clearance near a separate detector interface unit

© MyFANUC B5B0D8428C0144A78A5F4CA87F2C262E

Installing the unit on the DIN rail

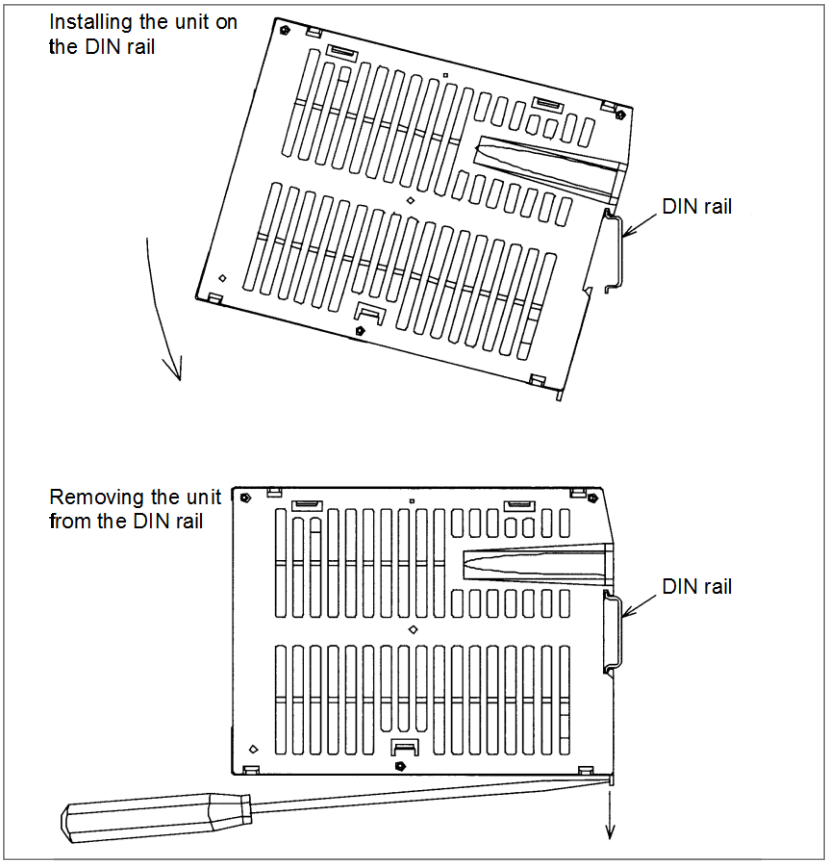

Installing the unit:

1 Hook the unit on the top of the DIN rail.

2 Push the unit in until it clicks.

Removing the unit:

1 Push down the lock by using a screwdriver.

2 Remove the unit by pulling the lower end of the unit towards you.

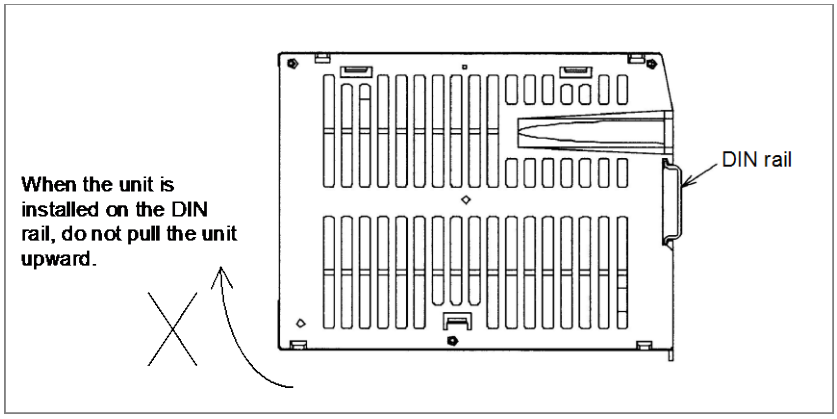

⚠ CAUTION

Be careful not to damage the lock by applying excessive force to the installed unit. When installing and removing the unit, hold the upper and lower ends of the unit so that stress is not applied to the side (surface with the slits) of the unit. When the unit is installed on the DIN rail, do not pull the unit upward, or the case may be damaged.

© MyFANUC B5B0D8428C0144A78A5F4CA87F2C262E

6.4 ANALOG SPINDLE

NOTE
LCD-mounted control unit Type 0 does not have the analog spindle interface.

CNC

JA40 (main board)
FI80-20P, DF1R020WB1
(PCR-EV20MDT)

1	( )	11	( )
2	(0V)	12	
3	( )	13	( )
4		14	
5	ES	15	( )
6	( )	16	
7	SVC	17	( )
8	ENB1	18	
9	ENB2	19	( )
10		20	

Signal name	Description
SVC,ES	Spindle voltage command and common
ENB1,ENB2	Spindle enable

Cable connection

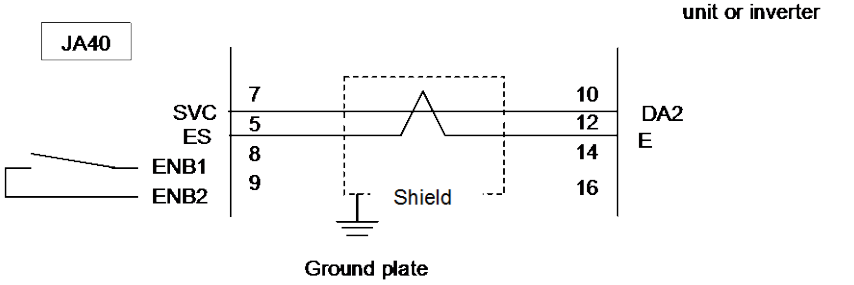

Recommended cable connector:
PCR-E20FA (Honda Tsushin Kogyo)
FI30-20S (Hirose Electric)
FCN-247J020-G/E (FUJITSU COMPONENT)
52622-2011 (Molex Japan)

Recommended wire specification: A66L-0001-0284#10P (28AWG × 10 pairs)

© MyFANUC B5B0D8428C0144A78A5F4CA87F2C262E

⚠ **WARNING**

The output voltage of SVC pin is not valid when ENB is turned off (ENB1 and 2 are unconnected). For example, although the spindle command voltage is 0V when S0 is specified, the output voltage of SVC pin is not precisely 0V because of noise and error contained in the output voltage. So ENB is turned off whenever S0 is specified.

The output voltage of SVC pin is not valid when a system alarm occurs or immediately after turning on/off the power of the control unit. In such cases, ENB is turned off. Therefore the spindle motor should not be activated while the ENB is off.

Failures in the control units and the analog spindle amplifier as well as input power abnormality and communication failures can hamper the normal operation of these units. Design the system in such a way that the machine can operate safely, for example, by providing an external safety circuit so that no accident will occur even if the system fail to operate normally.

As stated previously, ENB is designed in such a way that, if a system alarm occurs or the power of the control unit is turned off, ENB is turned off. However it is not guaranteed that ENB is surely turned off. So it is required that an external safety circuit must be configured to ensure the safety, regardless of the state of ENB.

NOTE

1 The output rating of ENB1 and ENB2 is 200mA /30V.

2 The analog output ratings are as follows;
   Output voltage: ±10V
   Output current: 2mA (MAX)
   Output impedance: 100 ohm

3 The parenthesized pins are used for the high-speed skip function (HDI). Don't connect to non-assigned pins.

4 The connector specification "FI80-20P,DF1R020WB1" is used with the LCD-mounted type control unit. "PCR-EV20MDT" is used with the stand-alone type control unit.

5 The recommended cable connector FI30-20S (manufactured by Hirose Electric) cannot be used for the stand-alone type control unit in following combination.

Connector case	FI-20-CV7 (HIROSE Electric)
Connector case+connector	FI30-20S-CV7 (HIROSE Electric)

© MyFANUC B5B0D8428C0144A78A5F4CA87F2C262E

6.5 POSITION CODER

NOTE
LCD-mounted control unit Type 0 does not have the position coder interface.

Control unit

JA41
FI80-20P,DF1R020WB1
(PCR-EV20MDT)

1		11	
2		12	0V
3		13	
4		14	0V
5	PCA	15	PCZ
6	*PCA	16	0V
7	PCB	17	*PCZ
8	*PCB	18	+5V
9	+5V	19	
10		20	+5V

Signal Name	Description
PCZ, *PCZ	Position coder phase Z signals
PCA, *PCA	Position coder phase A signals
PCB, *PCB	Position coder phase B signals

Cable

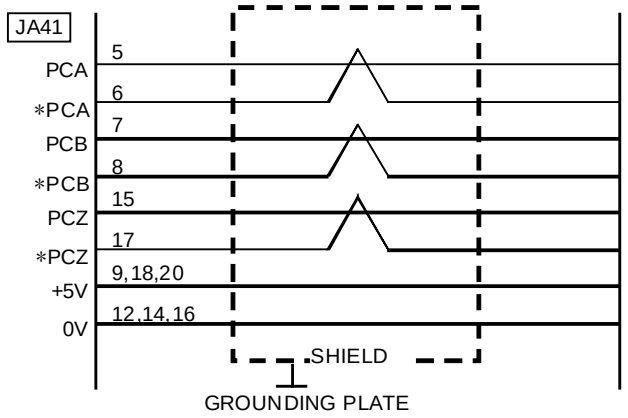

RECCOMENDED CABLE SPECIFICATION:
A66L-0001-0286 (#20AWG × 6 + #24AWG × 3 pairs) MAX. LENGTH 20m
RECCOMENDED CABLE-SIDE CONNECTOR:
PCR-E20FA (Honda Tsushin Kogyo)
FI30-20S (Hirose Electric)
FCN-247J020-G/E (FUHITSU COMPONENT)
52622-2011 (Molex Japan)

© MyFANUC B5B0D8428C0144A78A5F4CA87F2C262E

NOTE

1 Don't connect to the non-assigned pins.
2 As the connector on the cable side, the solder-type 15 pin connector (FI40B-2015S, or conventional FI40-2015S) manufactured by Hirose Electric cannot be used.
3 The connector specification "FI80-20P, DF1R020WB1" is used with the LCD-mounted type control unit. "PCR-EV20MDT" is used with the stand-alone type control unit.
4 The recommended cable connector FI30-20S (manufactured by Hirose Electric) cannot be used for the stand-alone type control unit in following combination.

Connector case	FI-20-CV7 (HIROSE Electric)
Connector case+connector	FI30-20S-CV7 (HIROSE Electric)

5 The +5V signals above can be used to feed power to the detectors. The supply current is 0.35 A maximum.

The position coder generates rectangular wave voltage signals in proportion to the angle of rotation of the spindle, and is used in feed per revolution and thread cutting.
The figure below shows the timing of the signals generated by the pulse coder.

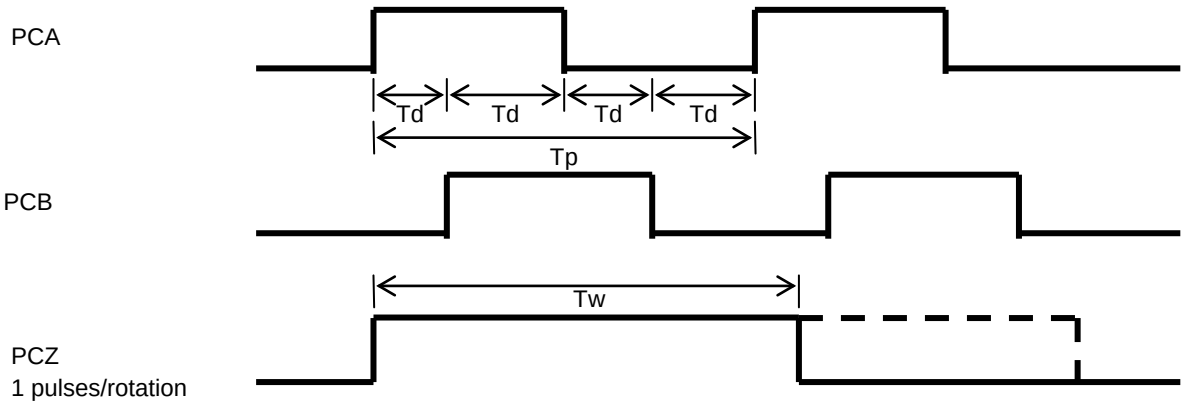

Rectangular wave of position coder

NOTE

The differential signal is used as the feedback signal from the position coder.
*PCA, *PCB and *PCZ refer to each of their inverted signals.

Time rules

These are the signal rules that apply to the input pin of the input connector of the control unit in the figure above.
The signals for this connector are differential input signals with A and B phases. Therefore, the time from Point A at which the relative potential difference between PCA and *PCA reaches 0.5 V or more to Point B at which the relative potential difference between PCB and *PCB drops to 0.5 V or less (Td) is the following value:

$Td \geq 0.65\mu sec$

Tp, which is the minimum of one period in each of phases A and B, is:

$Tp \geq 4\mu sec$

Tw, which is the minimum of the phase Z signal (one-rotation signal) width, is:

$Tw \geq$ One period of the phase A or B signal

© MyFANUC B5B0D8428C0144A78A5F4CA87F2C262E

Time rules for digital encoder

The encoder has two types of analog and digital. Digital type encoder outputs A,B and Z phase signals synchronized to internal clock of the encoder and Td is always longer than regulated value. In contrast, the period of A, B and Z phase signals of analog type encoder may be as short as possible depending on the revolution of the encoder.

In the digital type encoder, because the timing between Z and A or B signal can be defined, the following time rule can be applied. Time rules for A and B phase signals are same as above.

Tw ≥ 1/2 period of the phase A or B signal

(In this regard, Tj, which is phase difference between phase A or B signal and phase Z signal, should be within 100nsec)

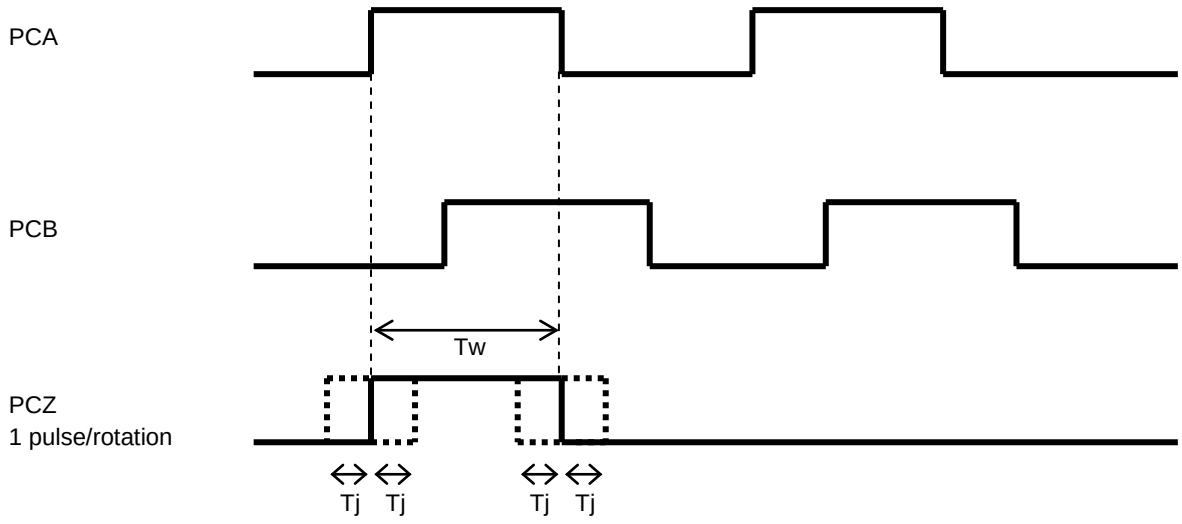

Rectangular wave of position coder

> ⚠ **WARNING**
> The maximum rotation speed of the position coder can be determined in accordance with these timing rules. However, even if the rotational speed of the position coder is lower than the maximum rotational speed, if Td not met the timing rule because of the spindle axis vibration so on CNC can not receive the signals from the position coder and it may cause the missing of the spindle position.

Input voltage requirements

The voltage of the A and B phase signals must meet the following requirements:

High level: 2.4 V or more

Low level: 0.8 V or less

The relative potential difference of A, B and Z phase signal should be 0.5V or more.

© MyFANUC B5B0D8428C0144A78A5F4CA87F2C262E

Receiver circuit

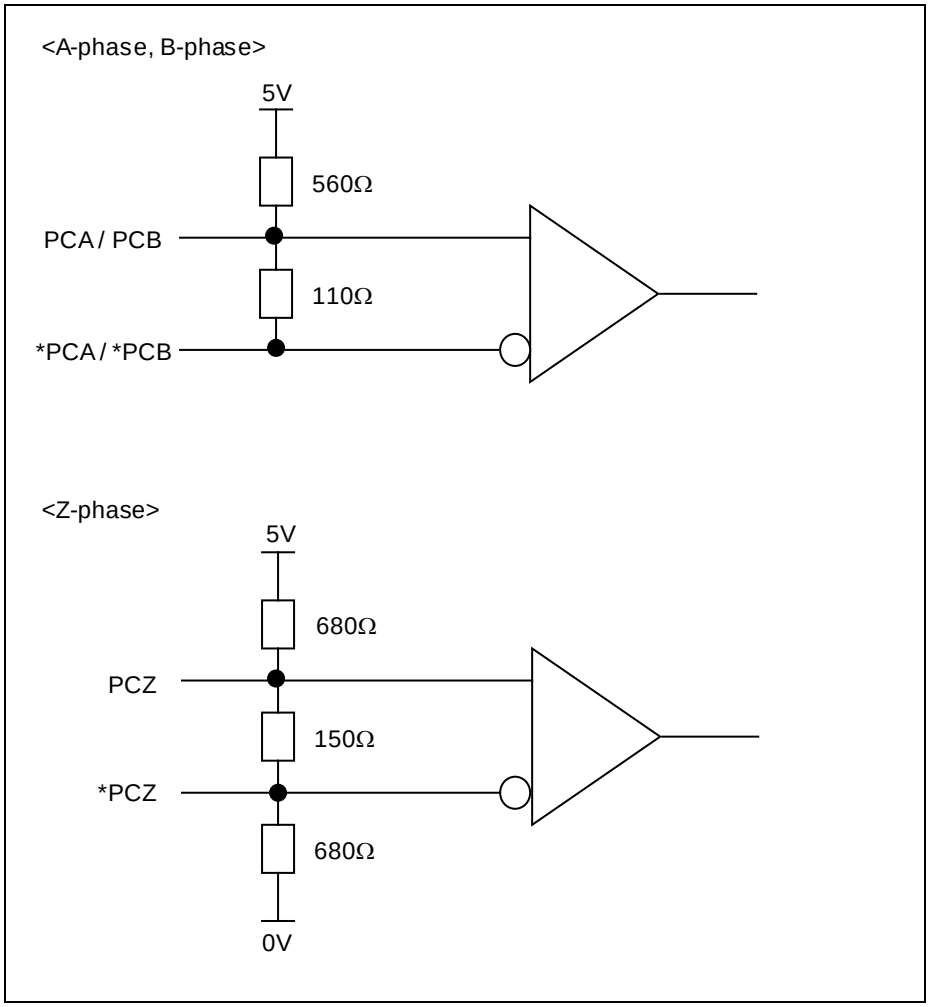

© MyFANUC B5B0D8428C0144A78A5F4CA87F2C262E

7 CONNECTION TO FANUC I/O Link *i*

> ⚠ **WARNING**
> An I/O unit may not operate normally due to a control unit, I/O unit, or input power failure, or communication error. To prevent accidents even in this case, design the machine to operate safely by making a safety circuit outside the I/O unit.
> All DO signals of an I/O unit are designed to be turned off if a system alarm occurs in the control unit which controls the I/O unit, or if the power to the control unit or I/O unit is turned off. However, it cannot be guaranteed that DO signals of the I/O unit will certainly be turned off. Therefore, manage the signals related to safety by making a safety circuit outside of the I/O unit. The dual check safety function can be used to detect a single failure in the safety-related section. For details of the dual check safety function, refer to the Dual Check Safety Connection Manual (B-64483EN-2).

7.1 OVERVIEW

The I/O Link *i* is a serial interface which connects the control unit, I/O Unit-MODEL A, Power Mate, and other units and transfers I/O signals (bit data) at high speed between units. In I/O Link *i* control, this is the master station and its slave stations. The master is the control unit, and the slaves are other I/O units.
The status of input signals from the slaves is sent to the master at specified intervals. Output signals from the master are also sent to the slaves at specified intervals.
With the I/O Link *i*, the communication transfer rate is increased. More signals and slaves (groups) can be connected.

Specification of the I/O Link *i*

Item	I/O Link *i*
Transfer cycle	2 ms (normal mode) 0.5 ms (high-speed mode)
Maximum number of I/O signals (per channel)	2048/2048 (normal mode) 512/512 (high-speed mode)
Maximum number of I/O signals (per group)	512/512
Maximum number of groups (per channel)	24 groups (normal mode) 5 groups (high-speed mode)
Number of channels required for dual check safety	1 channel

* The normal and high-speed modes can be used simultaneously. For the setting of the high-speed mode, refer to the PMC Programming Manual (B-64513EN).
* The transfer cycle means the cycle of DI/DO transfer between the master and slaves. For the actual delay time, the slave driver and receiver delay times and ladder scan period must be considered.
* When dual check safety (safety I/O mode) is used, the maximum number of I/O signals that can be used is limited to 28 bytes per group. For details, refer to the PMC Programming Manual (B-64513EN).
* The high-speed mode is applied to I/O module for connector panel, I/O module for power magnetics cabinet and Terminal type I/O module.

It is a total of two channels of I/O Link *i* interfaces.

Number of channels available for the I/O Link *i*

Item	I/O Link *i*
Number of available channels	Up to 2

© MyFANUC B5B0D8428C0144A78A5F4CA87F2C262E

7.2 CONNECTION

Interface connector for the I/O Link *i* JD51A (for two channels) is located on the main board.
In I/O control, there are the master station and its slave stations. The master is the control unit, and the slaves are other I/O units. The slaves are divided into groups. Up to 24 slave groups can be connected to one channel with the I/O Link *i*.
The I/O Link *i* is connected in different ways depending on the types of units actually used and the number of I/O signals. Therefore, the assignment and addresses of the I/O signals have been made programmable with the PMC program. The maximum number of I/O signals available for each channel is 2048/2048 for the I/O Link *i*.
Up to 2048/2048 signals in total can be used for the entire system.

NOTE
1 Only I/O Link *i* compatible units can be used.

An I/O unit has I/O Link *i* interface connectors JD1A and JD1B. All units with the I/O Link *i* function have these connectors. A cable must always be connected from JD1A to JD1B. Although connector JD1A on the last unit is not used and left open, it is not necessary to connect JD1A with a terminator.
The pin assignments of connectors JD1A and JD1B are common to all units with the I/O Link *i* function. They are described in Subsection 7.2.1. Fig. 7.2 shows a connection diagram of the I/O Link *i*.

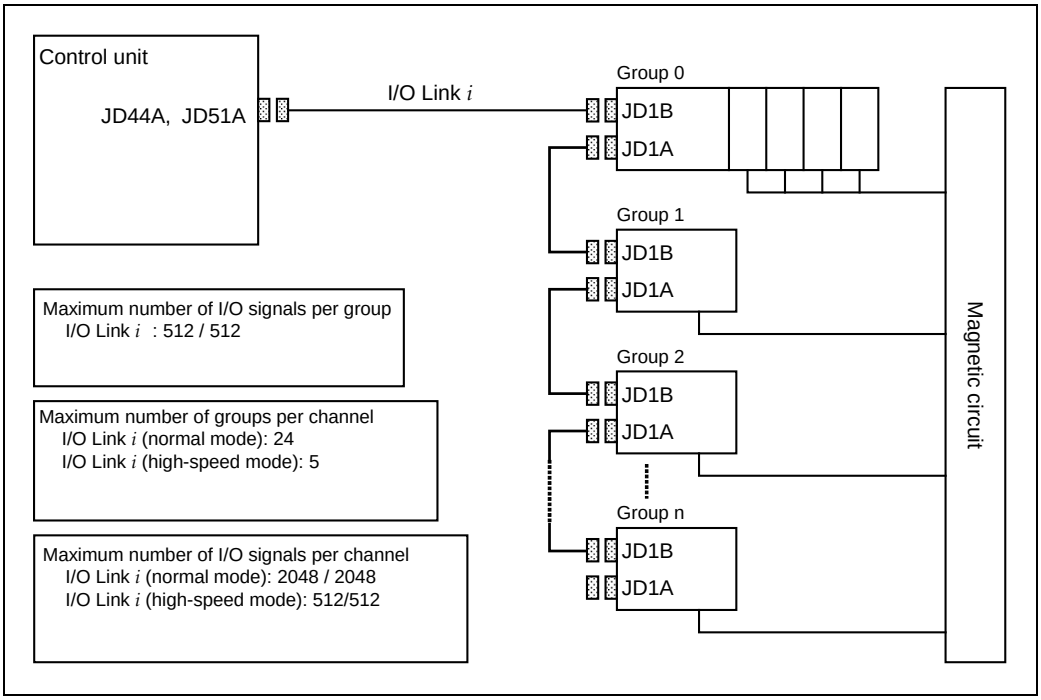

Fig. 7.2 I/O Link *i* connection diagram

© MyFANUC B5B0D8428C0144A78A5F4CA87F2C262E

The I/O Link *i* is connected by an electric cable (Subsection 7.2.1) or by an optical fiber cable (Subsection 7.2.2). When an electric cable is used, the maximum cable length between units is 10 m. When the cable is laid within the same cabinet(NOTE), however, the maximum length is 15 m. The maximum cable length between units can be extended to 200 m with optical fiber cables using an optical adapter.
If any of the following conditions is satisfied, use an optical fiber cable for connecting units:

- The cable laid within the same cabinet is longer than 15 m.
- The cable is run between different cabinets and is longer than 10 m or the cabinets cannot be connected with each other via a ground wire of 5.5 mm^2 or more.
- The cable may be influenced by strong noise.
  For example, there is a strong electromagnetic noise source such as a welding machine beside the cable or a noise generating cable such as a power cable or power magnetic cable runs for a long distance in parallel with the cable.

NOTE
Different cabinets connected at low impedance by a closed metal duct can be assumed to be one cabinet.

7.2.1 Connection of I/O Link *i* by Electric Cable

When an electric cable is used, the maximum cable length between units is 10 m.
When the cable is laid within the same cabinet, however, the maximum length is 15 m.

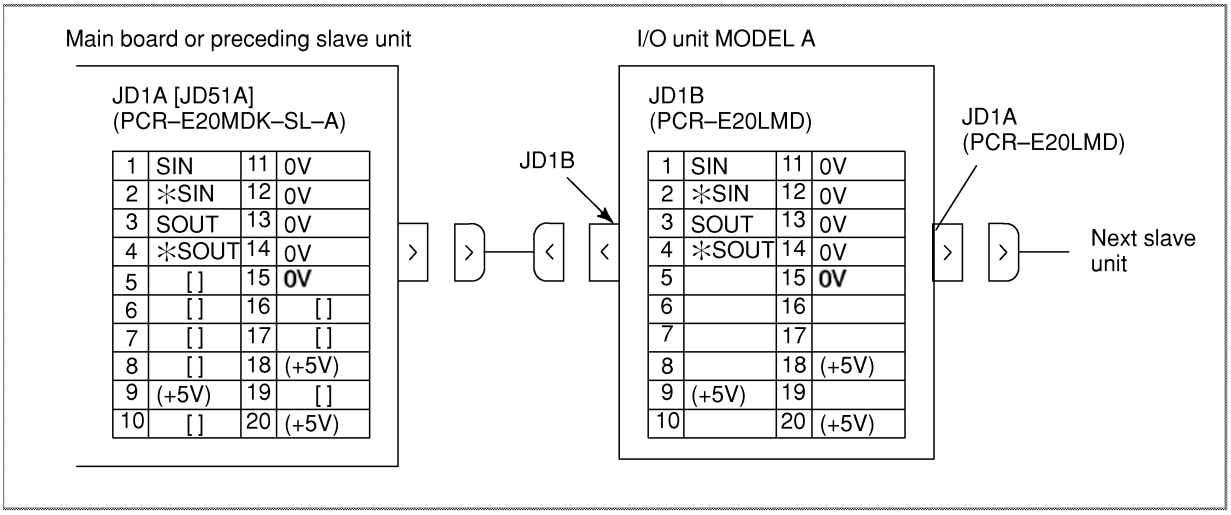

NOTE
1 The +5 V terminals in parentheses are for supplying the power to an optical adapter to be used for connection by an optical fiber cable. Do not connect the +5 V terminals when using no optical adapter.
2 Do not connect the pins in brackets. They are used for connecting channels 2 with JD51A.
3 Do not connect any pin for which no signal is assigned.
4 Take sufficient measures against noise. See Section 3.4, “Countermeasures against Noise and Grounding”.

© MyFANUC B5B0D8428C0144A78A5F4CA87F2C262E

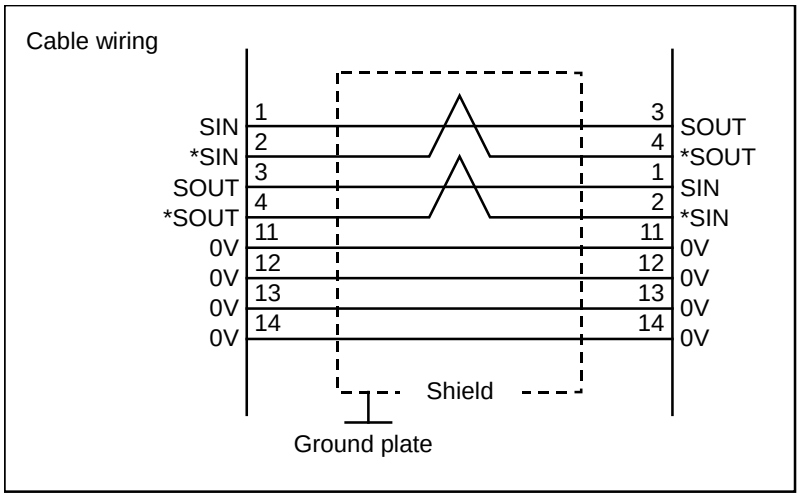

Recommended wire material	A66L-0001-0284#10P (#28AWG × 10 pairs)
Recommended cable connectors	PCR-E20FA (Honda Tsushin Kogyo Co., Ltd.) FCN-247J020-G/E (FUJITSU COMPONENT) 52622-2011 (Molex Japan Co., Ltd.)

7.2.2 Connection of FANUC I/O Link *i* by Optical Fiber Cable

The I/O Link *i* can be extended to a maximum length of 200 m with optical fiber cables using an optical adapter. The length of the electric cable connected to the optical adapter must not exceed 2 m (when the recommended wire material is used).

Connection

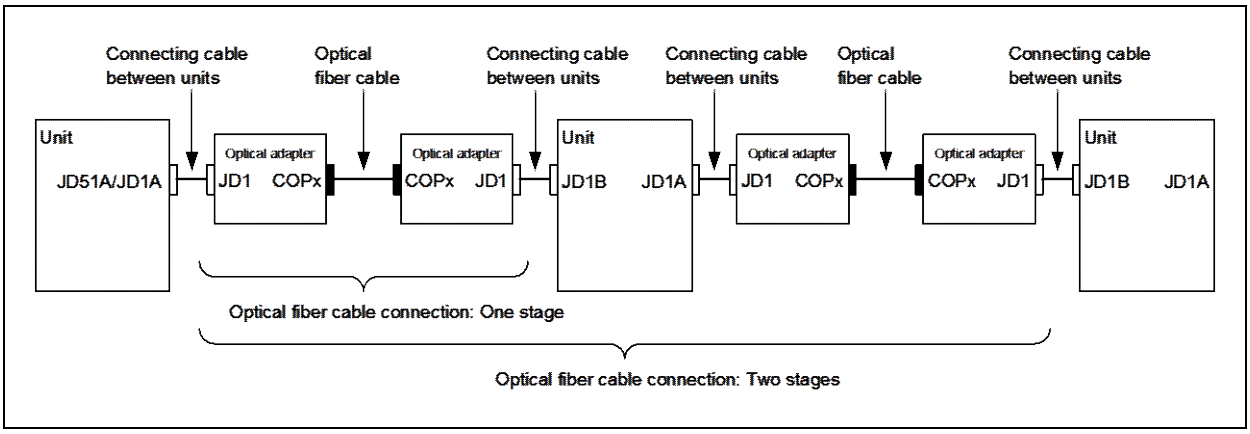

© MyFANUC B5B0D8428C0144A78A5F4CA87F2C262E

Connecting cable between units

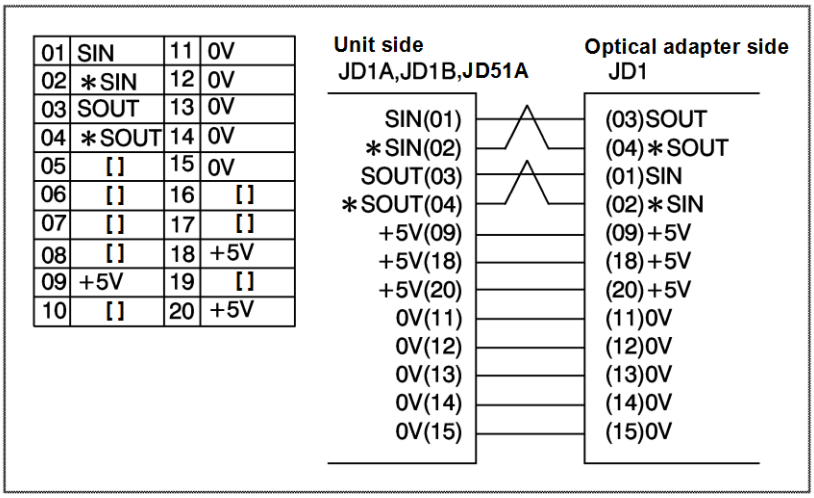

Recommended wire material A66L-0001-0284#10P (#28AWG × 10 pairs)

Recommended cable connectors PCR-E20FA (Honda Tsushin Kogyo Co., Ltd.)
FCN-247J020-G/E (FUJITSU COMPONENT)
52622-2011 (Molex Japan Co., Ltd.)

NOTE

1 The length of the cable for connecting units must not exceed 2 m (when the recommended wire material is used).
2 Do not connect the pins in brackets. They are used for connecting channels 2 with JD51A.
3 Do not connect any pin for which no signal is assigned.

Specifications of optical adapters and optical fiber cables

The following table lists the specifications of the optical adapter for the I/O Link *i*.

Specifications	Transfer mode	Maximum transmission distance	Maximum number of connectable stages	Relay with an optical fiber relay adapter	Weight
A13B-0154-B101	Normal mode	200m	5	None	About 100 g
		100m	16	Up to one point	
	High-speed mode	100m	10	Up to one point	

The specifications of the optical fiber cable are A66L-2001-0026#~. For details, see Appendix D.
The specification of the optical fiber relay adapter is A63L-0020-0002. For its external dimensions, see Appendix D.

© MyFANUC B5B0D8428C0144A78A5F4CA87F2C262E

External dimension of optical adapter

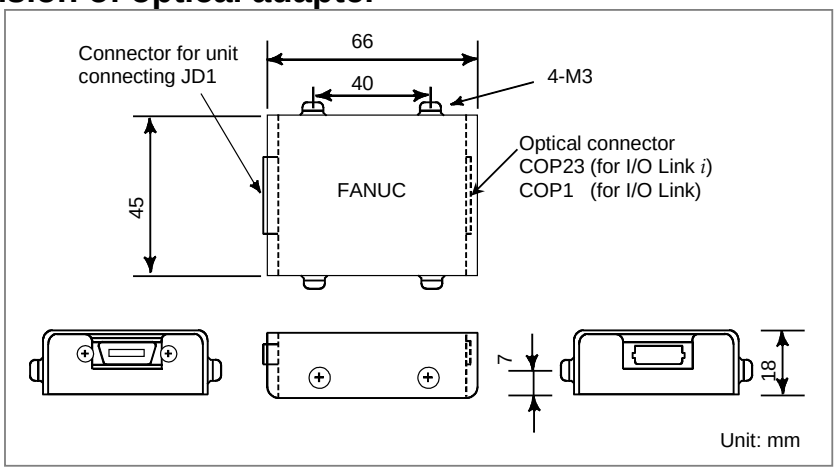

Optical adapter installation conditions

(a) The optical adapter enclosure is not fully sealed; install it with the control unit in the fully enclosed cabinet.
(b) Ground the case using the case fixing screw of the optical adapter.
(c) The optical adapter is light, and it may not be necessary to mount it with screws. However, keep it from coming in contact with other circuits to prevent possible short-circuits. When mounting the optical adapter in a cabinet, attach it with an L-type fitting using the case fixing screws (M3) of the optical link adapter.

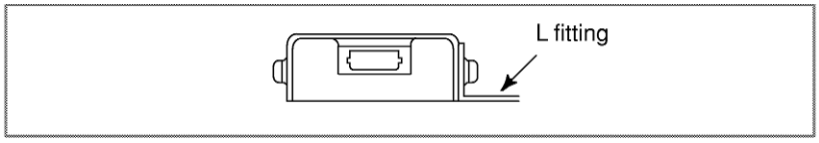

7.2.3 Connection When Multiple Channels of the I/O Link *i* is Used

Up to two channels of the I/O Link *i* interface can be used.
Signals for two channels are assigned to the connector (JD51A) on the main board. When using only channel 1, see Subsection 7.2.1.
When using the channel 2, use the I/O Link branching adapter for two channels to branch the I/O Link *i*.

Using the channel 2

When using channel 2, use the 2ch I/O Link signal divider for two channels to branch the I/O Link *i*.

Connection

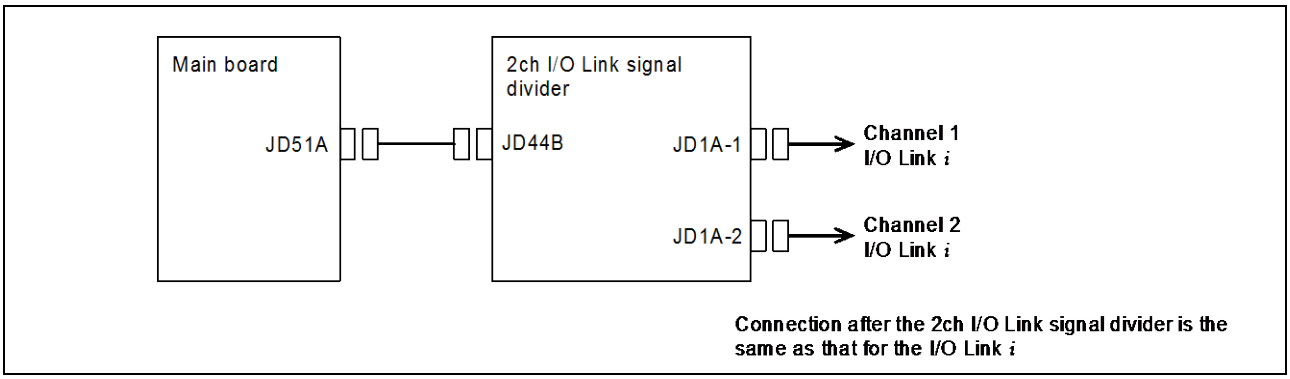

Specification of the 2ch I/O Link signal divider: A20B-1007-0680 (Weight: 60g)

© MyFANUC B5B0D8428C0144A78A5F4CA87F2C262E

Connection between the main board and 2ch I/O Link signal divider

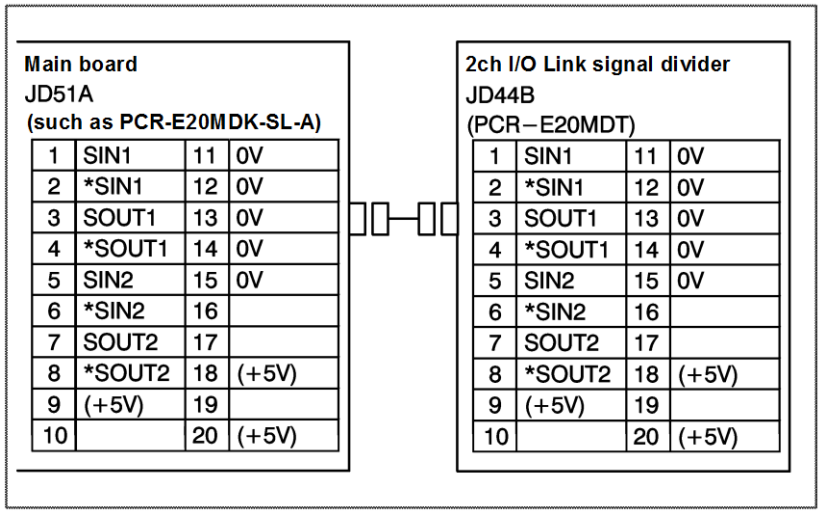

1	SIN1	11	0V
2	*SIN1	12	0V
3	SOUT1	13	0V
4	*SOUT1	14	0V
5	SIN2	15	0V
6	*SIN2	16	
7	SOUT2	17	
8	*SOUT2	18	(+5V)
9	(+5V)	19	
10		20	(+5V)

1	SIN1	11	0V
2	*SIN1	12	0V
3	SOUT1	13	0V
4	*SOUT1	14	0V
5	SIN2	15	0V
6	*SIN2	16	
7	SOUT2	17	
8	*SOUT2	18	(+5V)
9	(+5V)	19	
10		20	(+5V)

NOTE

1 The +5 V terminals in parentheses are for supplying the power to an optical adapter to be used for connection by an optical fiber cable. Do not connect the +5 V terminals when using no optical adapter.

2 Do not connect any pin for which no signal is assigned.

Cable connection

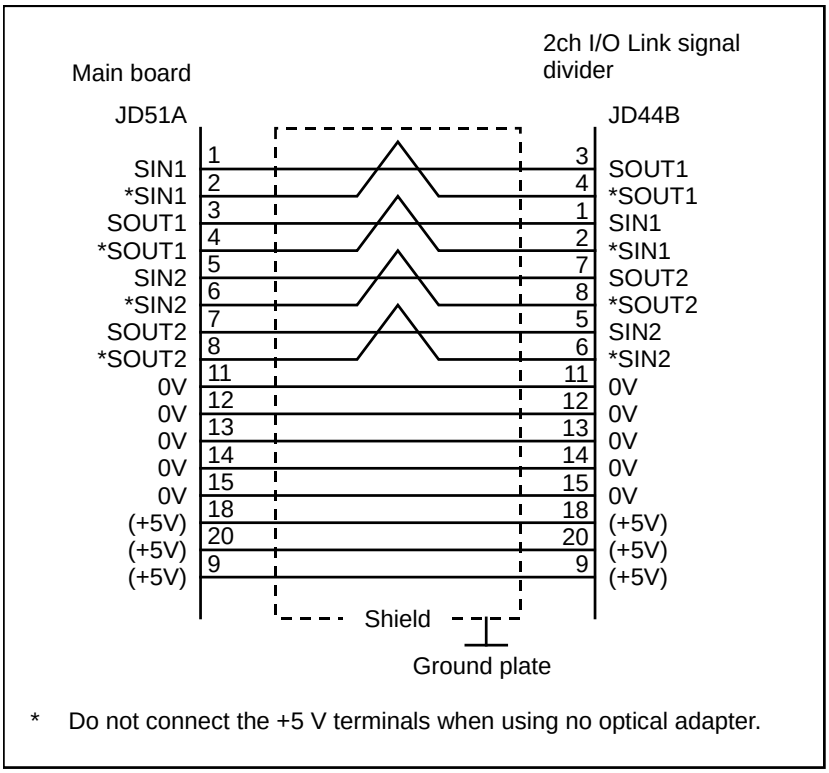

Recommended wire material: A66L-0001-0284#10P (#28AWG × 10 pairs)

Recommended cable connectors: PCR-E20FA (Honda Tsushin Kogyo Co., Ltd.)
FCN-247J020-G/E (FUJITSU COMPONENT)
52622-2011 (Molex Japan Co., Ltd.)

© MyFANUC B5B0D8428C0144A78A5F4CA87F2C262E

Sample of connection when 2ch I/O Link signal divider is used without optical adapter

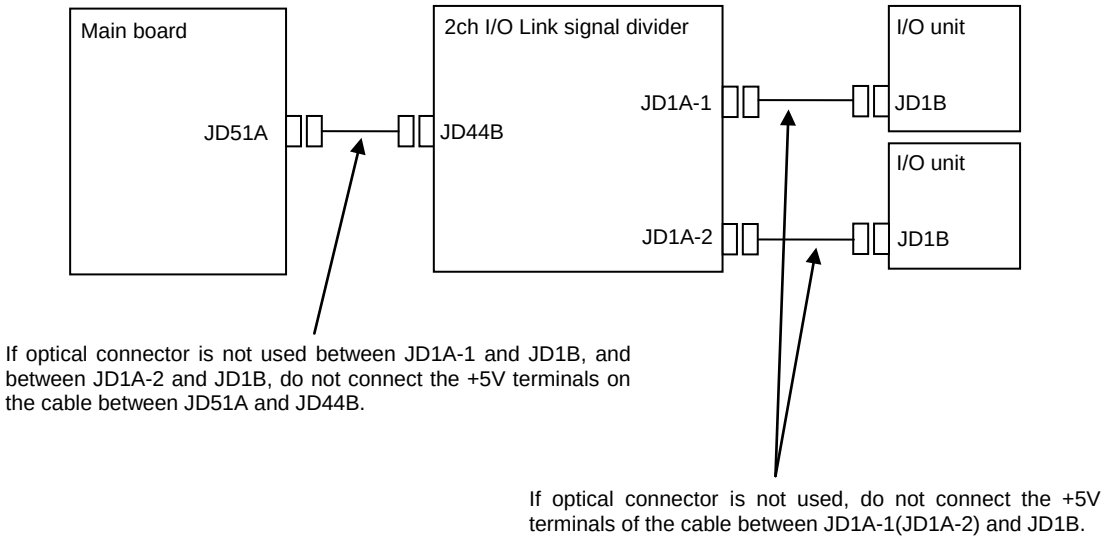

Sample of cable connection when 2ch I/O Link signal divider is used without optical adapter

Between JD51A and JD44B

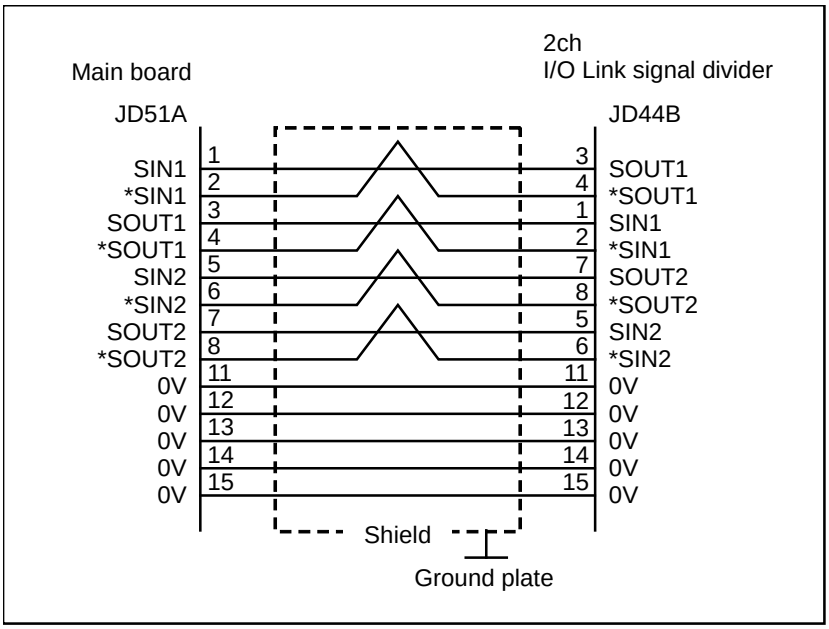

© MyFANUC B5B0D8428C0144A78A5F4CA87F2C262E

Between JD1A-1(JD1A-2) and JD1B

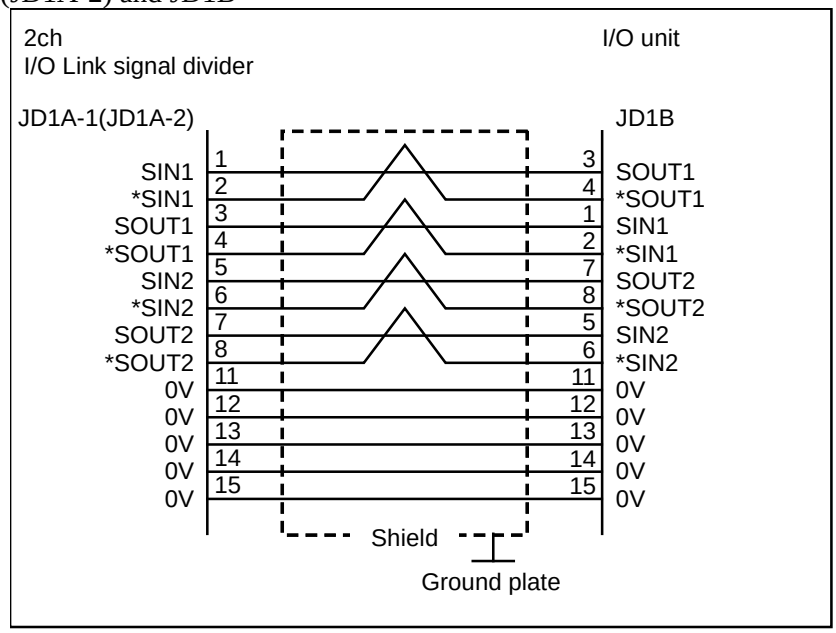

Sample of connection when 2ch I/O Link signal divider is used with optical adapter

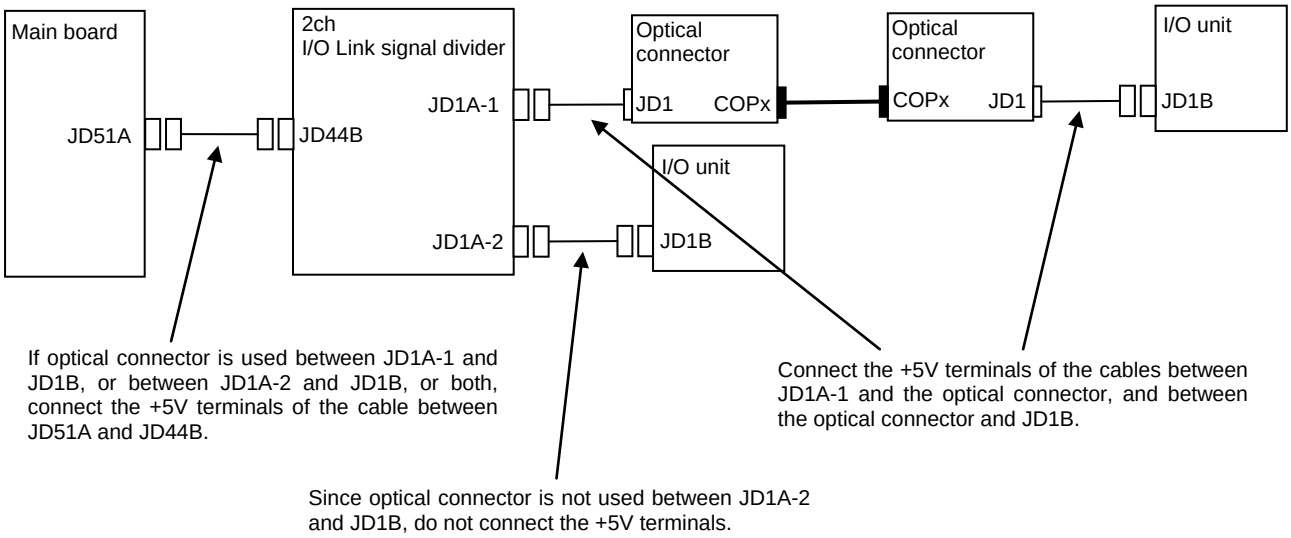

© MyFANUC B5B0D8428C0144A78A5F4CA87F2C262E

Sample of cable connection when 2ch I/O Link signal divider is used with optical adapter

Between JD51A and JD44B

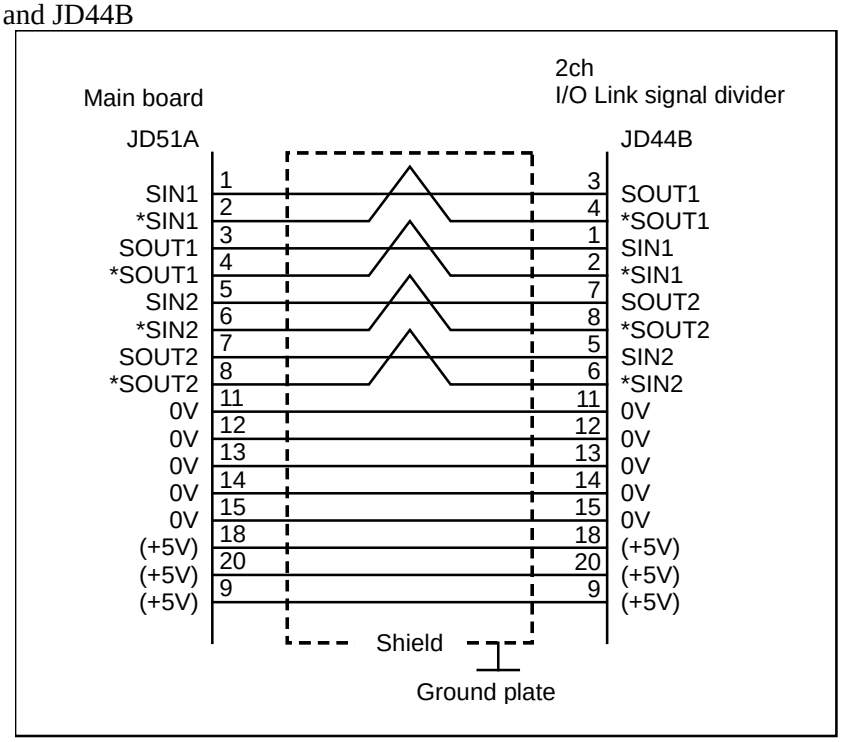

Between JD1A-1 and JD1

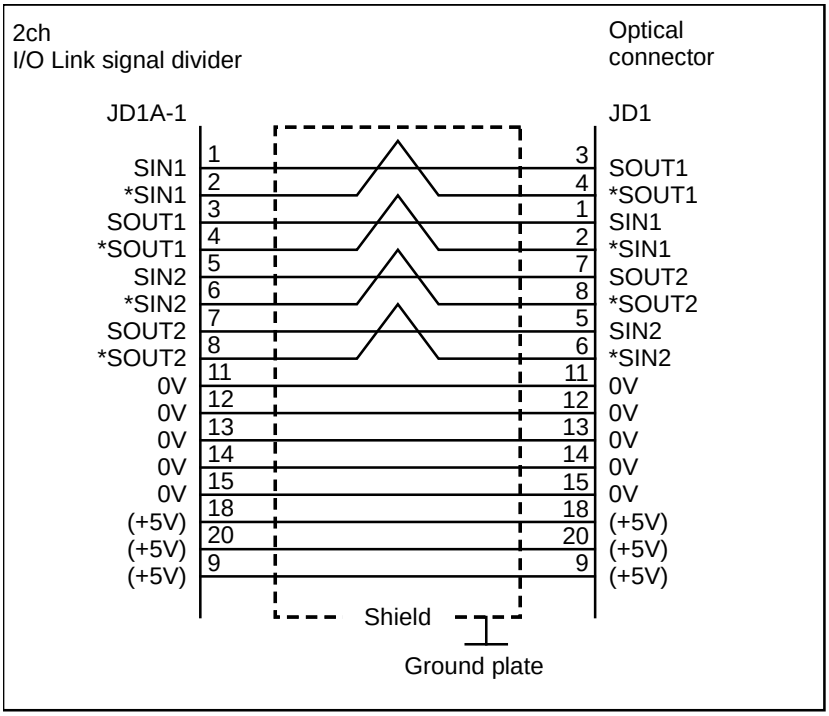

© MyFANUC B5B0D8428C0144A78A5F4CA87F2C262E

Between JD1 and JD1B

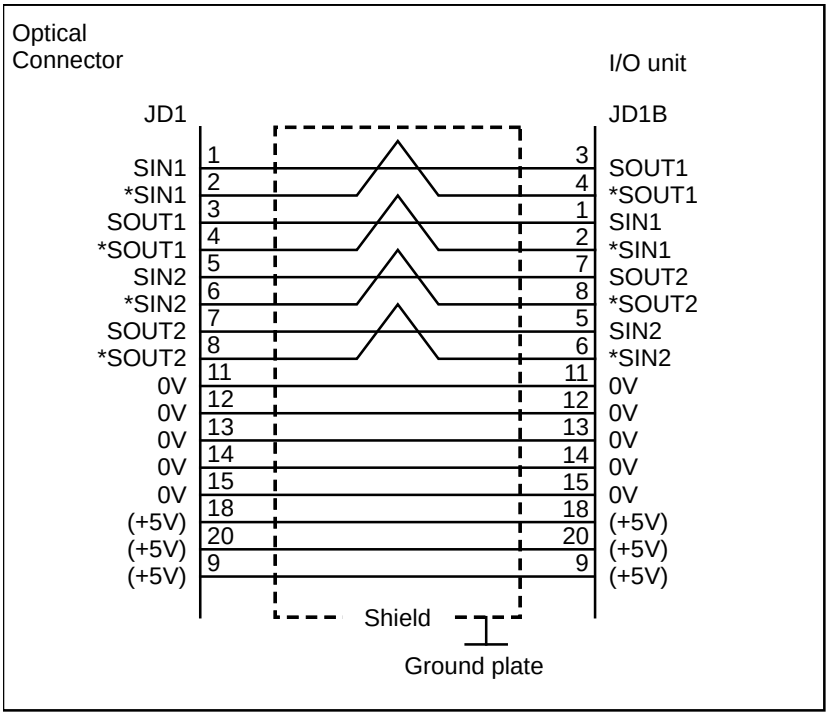

Between JD1A-2 and JD1B

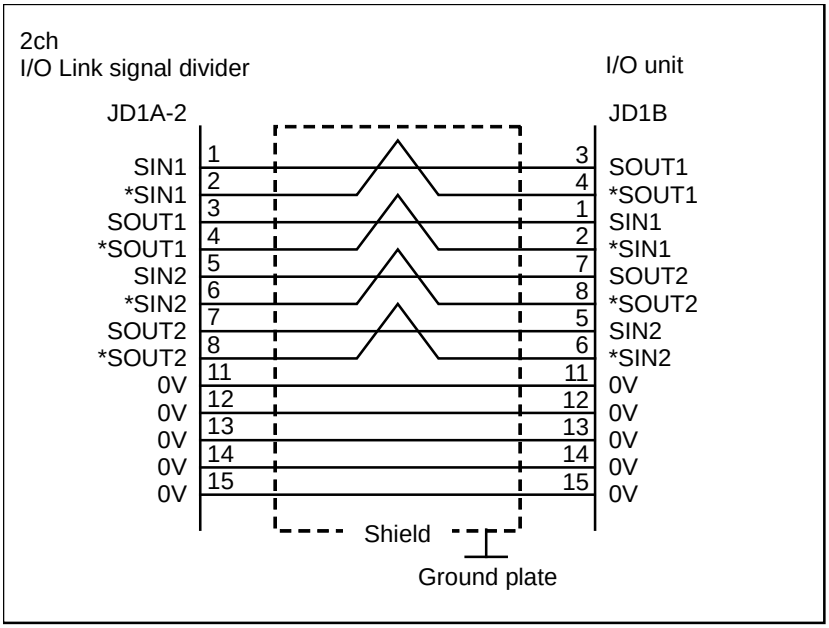

© MyFANUC B5B0D8428C0144A78A5F4CA87F2C262E

Connection between the 2ch I/O Link signal divider and I/O units

The 2ch I/O Link signal divider can be connected to I/O units in the same way as for the I/O Link *i*. See Subsection 7.2.1.

Cable length

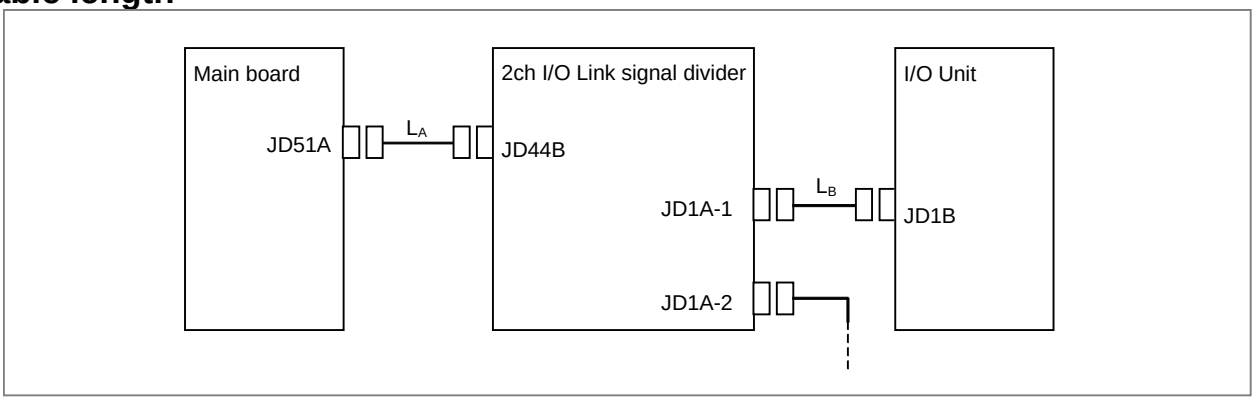

NOTE

The total of L_A and L_B must not exceed 10 m, where L_A is the length of the cable between connector JD51A on the main board and connector JD44B on the 2ch I/O Link signal divider, and L_B is the length of the cable between connector JD1A-1 or JD1A-2 on the 2ch I/O Link signal divider and connector JD1B on the I/O unit. When all cables are laid within the same cabinet, however, a total cable length of up to 15 m is allowed.

Installation of the 2ch I/O Link signal divider

Install the 2ch I/O Link signal divider in a hermetically sealed cabinet like the control unit.

External dimensions of the 2ch I/O Link signal divider

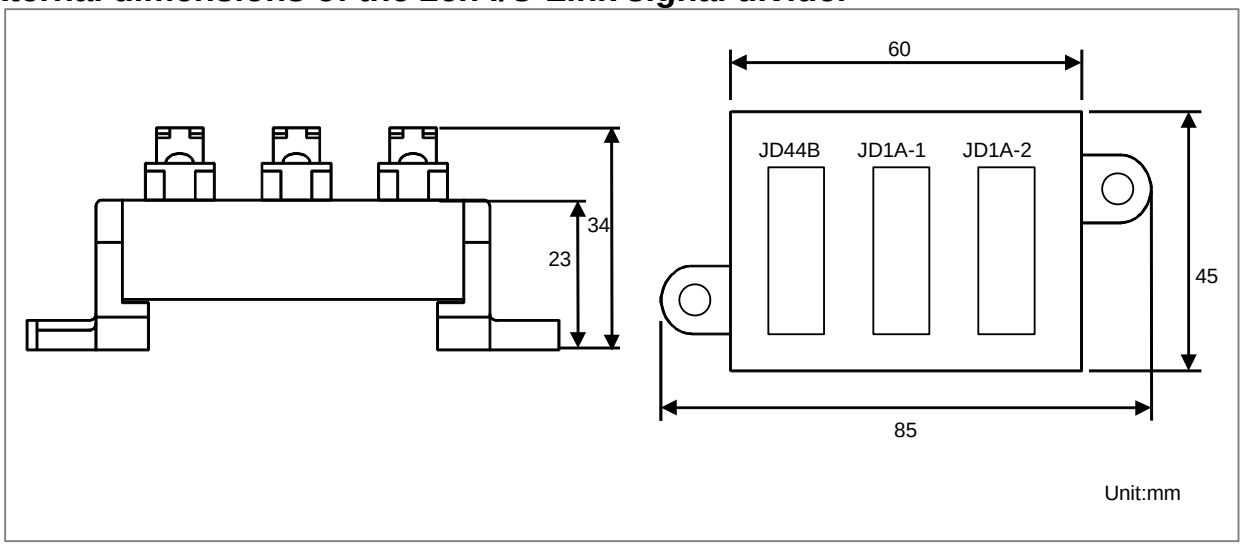

Allow a clearance of about 10 cm above the adapter for connection and routing of cables.

© MyFANUC B5B0D8428C0144A78A5F4CA87F2C262E

Installation of the 2ch I/O Link signal divider

1) Installation on the DIN rail
The following figure shows the external dimensions of a recommended DIN rail.

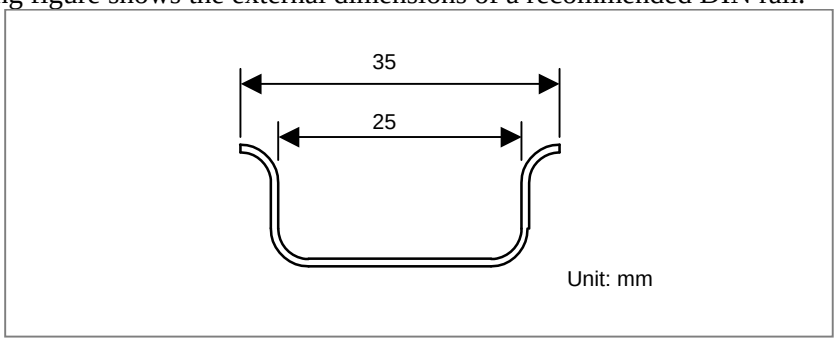

External dimensions of a recommended DIN rail

2) Screwing
The following figure shows drilling on the plate.

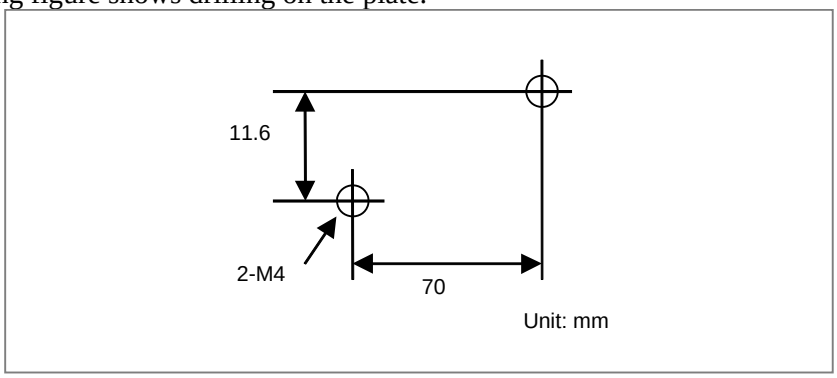

Drilling on the plate

© MyFANUC B5B0D8428C0144A78A5F4CA87F2C262E

7.3 ASSIGNMENT FOR I/O UNITS

7.3.1 Assignment of Signals

The unit of slaves connected to the I/O Link *i* is called a group. One group of connected I/O units may consist of multiple modules. This unit is called a slot.
On the I/O Link *i*, to allow the control unit as the master to control other I/O units as slaves, the I/O signals of each I/O unit must be assigned to X addresses (input) and Y addresses (output) of the control unit. Assign signals in units of slots for the I/O Link *i*.
In assignment for the I/O Link *i*, each of basic and extension modules connected to I/O modules for connector panel is treated as a slot.

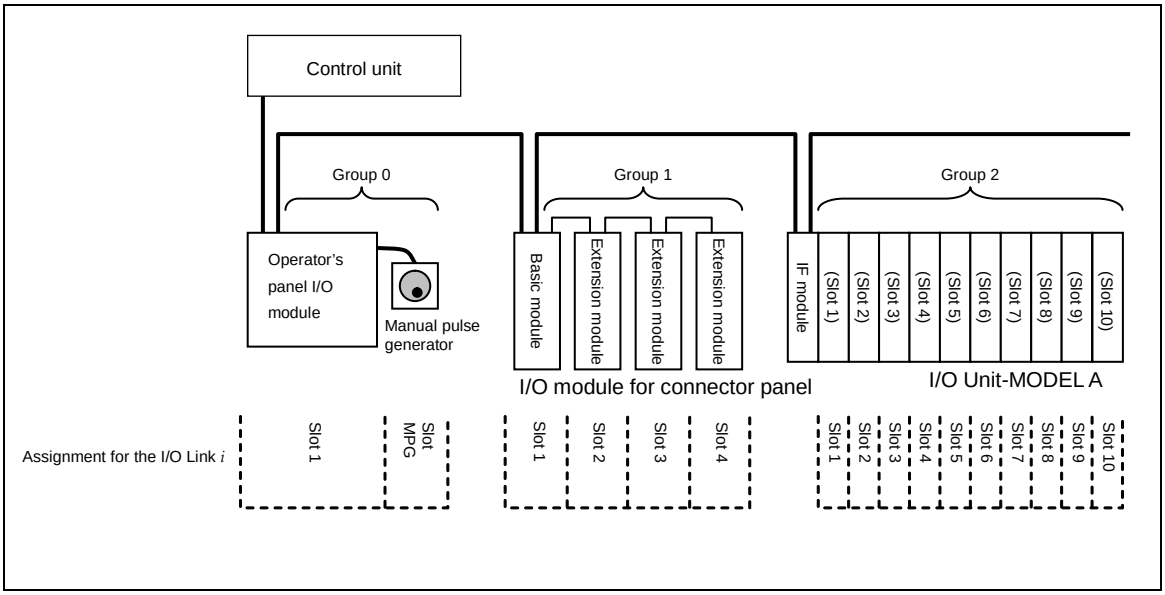

7.3.2 Fixed Signals

Some DI signals are monitored directly by the control unit. Fixed addresses are assigned to these directly monitored signals. Select I/O units and assign addresses with attention to the polarity of each signal.
Whether addresses are assigned to signals are determined according to the machine control type, number of controlled axes, and parameter setting. For details, refer to the FANUC Series 0*i*-MODEL F Plus CONNECTION MANUAL (FUNCTION) (B-64693EN-1).

> ⚠ **CAUTION**
> Safety-critical signals such as the emergency stop signal (*ESP) must be a DI signal at an address for which the common voltage is fixed to 24 V so that it functions to the safety side if a failure such as cable disconnection occurs.

Examples of fixed addresses the control unit directly monitors

	7	6	5	4	3	2	1	0
X004	SKIP	SKIP6	SKIP5	SKIP4	SKIP3	SKIP2	SKIP8	SKIP7
X005								
X006								
X007								
X008				*ESP				
X009	*DEC8	*DEC7	*DEC6	*DEC5	*DEC4	*DEC3	*DEC2	*DEC1

© MyFANUC B5B0D8428C0144A78A5F4CA87F2C262E

7.3.3 Status Alarm

Some I/O units have a function which detects unit errors including DO alarms (DO ground faults) and DO common voltage errors.
With the I/O Link *i*, detected information is called a status alarm, and the CNC is notified of the status alarm separate from DI signals. For this reason, it is not necessary to assign the information to X addresses. If an error occurs, a PMC alarm message is displayed on the PMC alarm screen and the information is also output to the system relay (R or Z) area. The information only for one group per channel is output to the system relay area. Only the information for the first group in which a status alarm is detected is output.
The following figure shows an address map of a system relay area to which to output a status alarm. For details of status alarms actually detected by units, see the section for each unit in Chapter 8.

System relay area related to a status alarm address map

Channel 1	Channel 2	#7	#6	#5	#4	#3	#2	#1	#0
R9268(Z268)	R9276(Z276)	Status	Type						
R9269(Z269)	R9277(Z277)				Group number				
R9270(Z270)	R9278(Z278)				Slot number				
R9271(Z271)	R9279(Z279)	Alarm information number							
R9272(Z272)	R9280(Z280)	Y address							
R9273(Z273)	R9281(Z281)								
R9274(Z274)	R9282(Z282)					PMC path			
R9275(Z275)	R9283(Z283)	Alarm data							

Note : Status alarm information is output to either R address or Z address, which depends on selected PMC memory type. For relation between PMC memory type and R/Z address, refer to the PMC Programming Manual (B-64513EN).

Simple description of signals in previous figure

Name	Description
Status	Indicates that a status alarm occurs when this signal is set to 1.
Type	Indicates the type of status alarm. 0: DO alarm (a ground fault), 1: Other alarm (such as a DO common voltage error)
Group number	Outputs a group number (0 to 23).
Slot number	Outputs a numeric value 1 to 32, which indicates slot number 1 to 32.
Alarm information number	Outputs the byte position in the slot or other alarm information When DO alarm occurs(Type=0), a numeric value 0 to 31 is output. When other alarm occurs(Type=1), the meaning of output number depends on each unit..
Y address	Outputs the Y address binary number of the relevant DO signal (R9273 : upper, R9272 : lower) (Yn : n=0 to 127, 200 to 327, 400 to 527, 600 to 727, 1000 to 1127) Valid when DO alarm occurs(Type=0) ex. Y511 : R9273 = “00000001”, R9272 = “11111111”
PMC path	Outputs the PMC path at the Y address assigned to the relevant DO signal. (PMC1 to PMC5 : 1 to 5, DCSPMC : 9) Valid when DO alarm occurs(Type=0) Outputs 0 when other alarm occurs (Type=1)
Alarm data	Outputs information on the alarm which occurs or other alarm information. Outputs 1 to the bit corresponding to the alarm which occurs when DO alarm occurs(Type=0) When other alarm occurs(Type=1), the meaning of output number depends on each unit..

NOTE

1 If a status alarm occurs once, it will not be cleared until the power is turned off.
2 The information output to the system relay area is only one group per channel, and only the one group where the status alarm was detected for the first time.
3 The output destination address is the same regardless of the PMC path. All PMC path including DCS PMC will output to the same address.
4 For details of the PMC alarm messages displayed on the PMC alarm screen, refer to B-64605EN FANUC Series 0*i*-MODEL F MAINTENANCE MANUAL.

© MyFANUC B5B0D8428C0144A78A5F4CA87F2C262E

7.4 MANUAL PULSE GENERATOR

When multiple I/O units having a manual pulse generator interface are connected, the manual pulse generator interface of the I/O unit nearest the control unit on the I/O Link *i* is enabled in the initial status. The manual pulse generator interface of a desired I/O unit can be enabled by setting the relevant parameter.
For the parameter setting, refer to the FANUC Series 0*i*-MODEL F Parameter Manual (B-64610EN).

7.4.1 Manual Pulse Generator Connection

The following figure shows an example in which three manual pulse generators are connected.

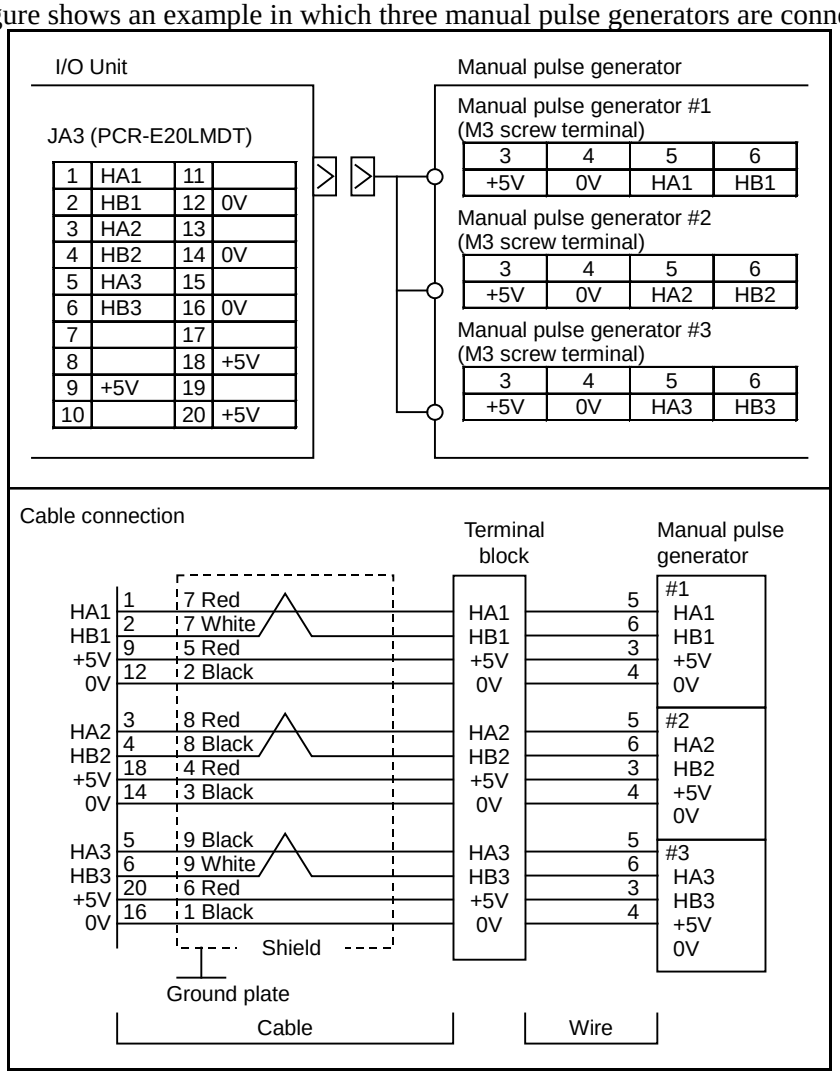

Recommended wire material : A66L-0001-0286 (#20AWG×6+#24AWG×3 pairs)
Recommended connector : A02B-0120-K303 (including the following connector and case)
(Connector: FI40-2015S (Hirose Electric Co., Ltd.))
(Case: FI40-20-CV5 (Hirose Electric Co., Ltd.))
Recommended cables : A02B-0120-K841 (7m) (for connecting three manual pulse generators)
A02B-0120-K848 (7m) (for connecting two manual pulse generators)
A02B-0120-K847 (7m) (for connecting one manual pulse generator)
(These cables do not include the wire shown in the above figure.)

NOTE
The number of connectable manual pulse generators depends on the option configuration.

© MyFANUC B5B0D8428C0144A78A5F4CA87F2C262E

7.4.2 Cable Length for Manual Pulse Generator

The manual pulse generator operates on 5 VDC. The supply voltage drop due to the cable resistance must be held below 0.2 V (when those of the 0-volt and 5-volt wires are combined), as expressed in the following expression:

$$0.2 \geq \frac{0.1 \times R \times 2L}{m}$$

where
0.1 = manual pulse generator supply current (0.1 A)
R = resistance per unit cable length (Ω/m)
m = number of 0-volt and 5-volt wires
L = cable length (m).

Therefore, the cable length can be determined using the following expression.

$$L \leq \frac{m}{R}$$

As an example, obtain the cable length when recommended cable wire A66L-0001-0286 is used.
This cable wire has three paired signal wires and six power connection wires. Since the electric resistance of a power connection wire is 0.0394 Ω/m, if three wires are used for 0 V and 5 V, the cable length is:

$$L \leqq \frac{3}{0.0394} = 76.75[m]$$

According to the FANUC specifications, however, the maximum transmission distance of a pulse signal from a manual pulse generator must not exceed 50 m.
Therefore, when one manual pulse generator is connected, the maximum cable length is 50 m.
The maximum cable length is:

When two manual pulse generators are connected	38.37 m
When three manual pulse generators are connected	25.58 m

7.4.3 Manual Pulse Generator Signal Specifications

If the customer will use a manual pulse generator which is not manufactured by FANUC, the following conditions must be satisfied.
The relationship between signals HAn and HBn, and pulses issued to the control unit is as shown in the figure below. A cycle of a pulse T_1 must be at least 200 μsec and $T_1/4$ must be at least 50 μsec.

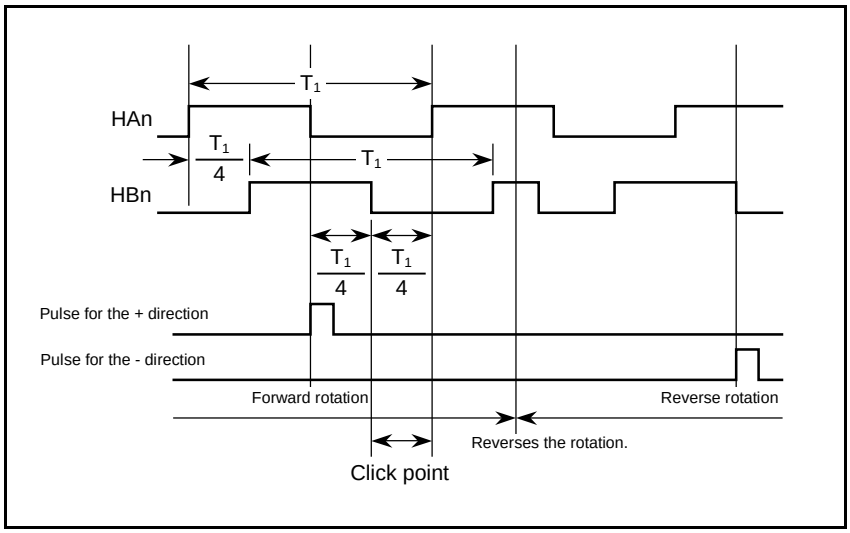

© MyFANUC B5B0D8428C0144A78A5F4CA87F2C262E

The following figure shows the receiver circuit for signals in the manual pulse generator.

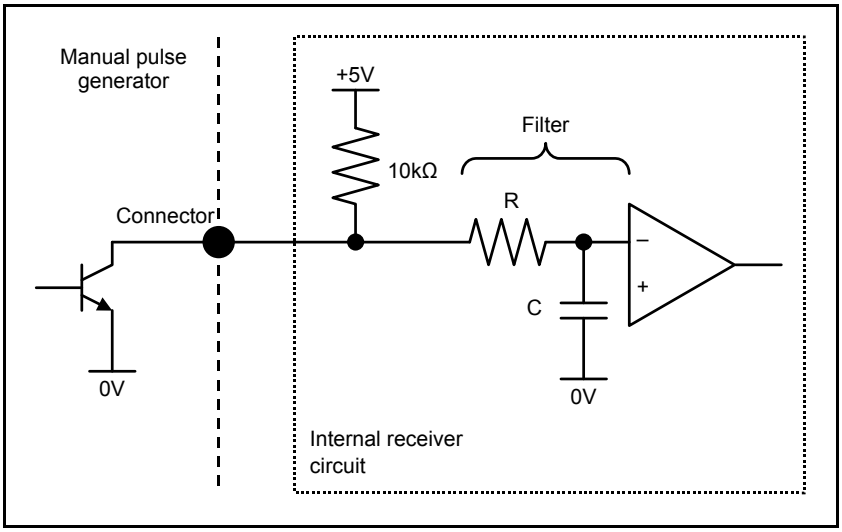

The points (thresholds) at which the input signal to the receiver changes are:
3.7 V or higher when the input signal state changes from the low level to the high level
1.5 V or lower when the input signal state changes from the high level to the low level

7.5 POWER SUPPLY

⚠ WARNING

1 Supply the +24V power to the slave I/O units connected with the I/O Link *i* when or before the power to the control unit is turned on at the power-on of the system. At the power-off of the system, turn the +24 V off when or after the power to the control unit is turned off. For detailed timing specifications at power-on and -off, see Section 4.2, “Turning On and Off the Power to the Control Unit”. Do not turn the +24V power to any slave I/O unit off during operation, otherwise the control unit will be in the status of communication alarm.

2 For the safety of the system, don’t supply the power for the load (DOCOM) when the power for the I/O Unit is off. If the power for the load (DOCOM) is supplied when the power for the I/O Unit is off, invalid output or malfunction may cause an accident.

© MyFANUC B5B0D8428C0144A78A5F4CA87F2C262E

8 UNITS CONNECTED TO FANUC I/O Link *i*

8.1 GENERAL UNITS

Basically, 0*i*-F Plus can be connected to any unit that has a FANUC I/O Link *i* slave interface. The following table lists general units that can be connected. For detailed description of each unit, see the section or manual indicated in Detailed description in the table below.

General units that can be connected to 30*i*-B/31*i*-B/32*i*-B

Unit	Description	Detailed description
I/O module for connector panel	Distribution type I/O module that can flexibly support a combination of input/output signals required by a power magnetics circuit. It has an interface with a manual pulse generator.	Section 8.2
I/O module for operator's panel (for Matrix Input)	Unit having an interface with a machine operator's panel; it has an interface with a manual pulse generator.	Section 8.3
I/O module for operator's panel	Unit having an interface with a machine operator's panel that handles the input/output signals required by the power magnetics circuit; it has an interface with a manual pulse generator.	Section 8.4
I/O module for power magnetics cabinet	Unit that has an interface with the power magnetics cabinet. This unit can also handle input/output signals required for the power magnetics circuit.	Section 8.4
I/O module type-2 for connector panel	Distribution type I/O module that can flexibly support a combination of input/output signals required by a power magnetics circuit. It has an interface with a manual pulse generator.	Section 8.5
Terminal type I/O module	I/O module that is equivalent to a connector panel I/O module. Input/output signals are connected on a spring-type terminal block (ferrule terminal block).	Section 8.6
FANUC I/O Unit-MODEL A	I/O unit with a module configuration that can flexibly handle a combination of input/output signals required for the power magnetics circuit	Connection and Maintenance Manual B-61813E
FANUC I/O Unit-MODEL B	I/O unit of distribution type that can flexibly handle a combination of input/output signals required for the power magnetics circuit	Connection and Maintenance Manual B-62163E
Fanuc I/O Link connection unit	Unit that makes a connection with a FANUC I/O Link *i* master to transfer DI/DO signals	Section 8.7
Servo amplifier β*i* SV series (I/O Link *i* interface)	Unit that makes a connection with a control unit through the FANUC I/O Link *i* for servo motor control	Descriptions B-65322EN
Standard machine operator's panel	The appearance of this machine operator's panel is consistent. The panel can easily be customized.	Section 8.8
Handy machine operator's panel	Compact handy operation panel, used for operation on the machine side, that consists of the manual pulse generator, emergency stop switch, enable switch, display unit, and input key.	Connection Manual B-63753EN
Operator’s panel connection unit (source DO)	Unit having an interface with a machine operator’s panel.	Section 8.10
Safrty IO unit	I/O unit to connect duplicated safety signals.	Section 8.11

© MyFANUC B5B0D8428C0144A78A5F4CA87F2C262E

Unit	Description	Detailed description
I/O module for operator's panel supporting safety function	I/O module for a machine operator's panel that has a terminal to input duplicated safety signals.	Section 8.12
I/O Unit for power magnetics cabinet	Unit that has an interface with the power magnetics cabinet. This unit can also handle input/output signals required for the power magnetics circuit. It has an interface with a manual pulse generator.	Section 8.13
Mult Sensor Unit	I/O unit with the Shock Input, the Temperature Input, and the Analog Input for machine state monitoring.	

⚠ WARNING

1 If the load current of a unit or module with no output protection function exceeds its rating continuously for a long time, it is likely that smoke or ignition may occur. In order to prevent burnout, it is recommended to use a fuse rated twice the output rating at every external terminal.

2 Some modules have a built-in fuse for each common. However, no such output module can be protected from overload. Be sure to use them within their rating. In order to protect modules from overload, it is recommended to attach an external fuse to each of them.

3 It is likely that, if a short circuit occurs, an external fuse (even if provided) for an output module may fail to protect its components. If an external load is short-circuited, ask for repair.

4 As for modules having an output protection element, the protection function is intended to protect the components internal to the modules rather than external units.

5 No protection function of modules can protect their internal components in all cases. Once any protection function has worked, remove the cause promptly. If an absolute maximum rating is exceeded, for example, it is likely that protection functions may not work or an IC may break down before the related protection function works, depending on the way or situation in which the modules are used.

6 If an output protection function is defective, it is likely that, if the load current exceeds its rating continuously for a long time, smoke or ignition may occur.

NOTE

1 To use a unit listed in the table above that supports, be sure to specify a unit of the ordering specifications described in the relevant section.

© MyFANUC B5B0D8428C0144A78A5F4CA87F2C262E

NOTE regarding Input module

1 Pay attention to the contact chattering and noise sufficiently may cause these input modules to read incorrect inputs.

2 If an input contact is connected to an input module and inductive load in parallel, a surge voltage that occurs across the load when the contact becomes off may cause the input module to malfunction. If this is the case, attach a surge arrester to the load in parallel to suppress the surge voltage.

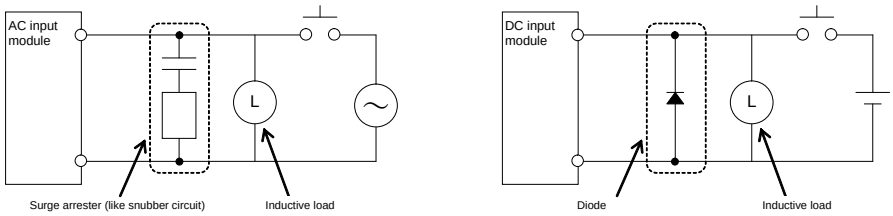

3 The maximum current described in Signal Specifications of each units includes the permissible rush current.

© MyFANUC B5B0D8428C0144A78A5F4CA87F2C262E

NOTE regarding Output module

1 Even if the sequence program has turned off an output module, its internal stray capacity may cause an output current to flow instantaneously through it when a voltage is applied abruptly to the load. In order to evade this symptom, use the configuration that the load power is turned on/off on the primary side, as shown below.

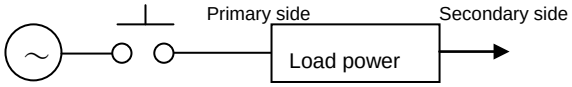

2 Be sure to connect the power supply and common pins. Otherwise, current flow may get in the output circuit, resulting in the output being turned on.

3 Measures for inductive loads
- Do not turn on/off the output module repeatedly within a short period of time. The maximum permissible ON/OFF frequency is: ON for at least 1 second and OFF for at least 1 second.
- If the output load is inductive, connect a protection circuit like a surge killer or diode to the load in parallel. Note, however, that, connection of a protection circuit may cause a delay in recovery time. If this is a problem, use a CR snubber circuit instead of a surge killer or diode.

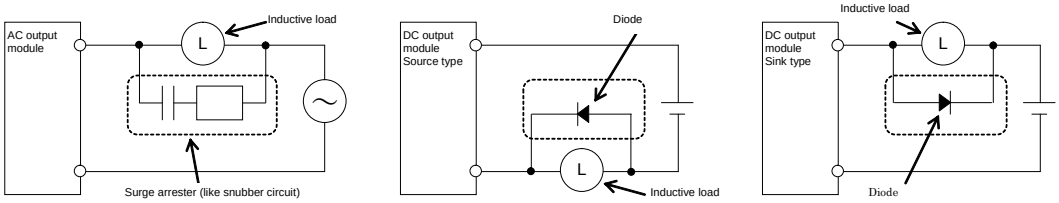

4 If the output module is used to control a lamp load, it is likely that output turn-on rush current may damage the output element. Do not even instantaneously fail to observe the current and voltage ratings. If a dark lighting resistor is used in the source type DC output module, connect a leakage prevention diode as shown below.

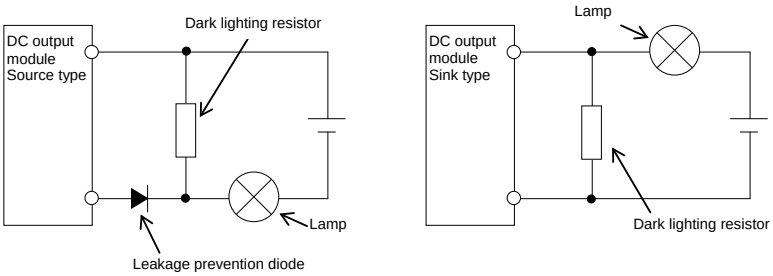

5 The maximum current described in Signal Specifications of each units includes the permissible rush current.

© MyFANUC B5B0D8428C0144A78A5F4CA87F2C262E

8.2 CONNECTION OF I/O MODULE FOR CONNECTOR PANEL

8.2.1 Configuration

As shown in the figure below, an I/O module for connector panel consists of the basic module and extension modules (up to three modules).

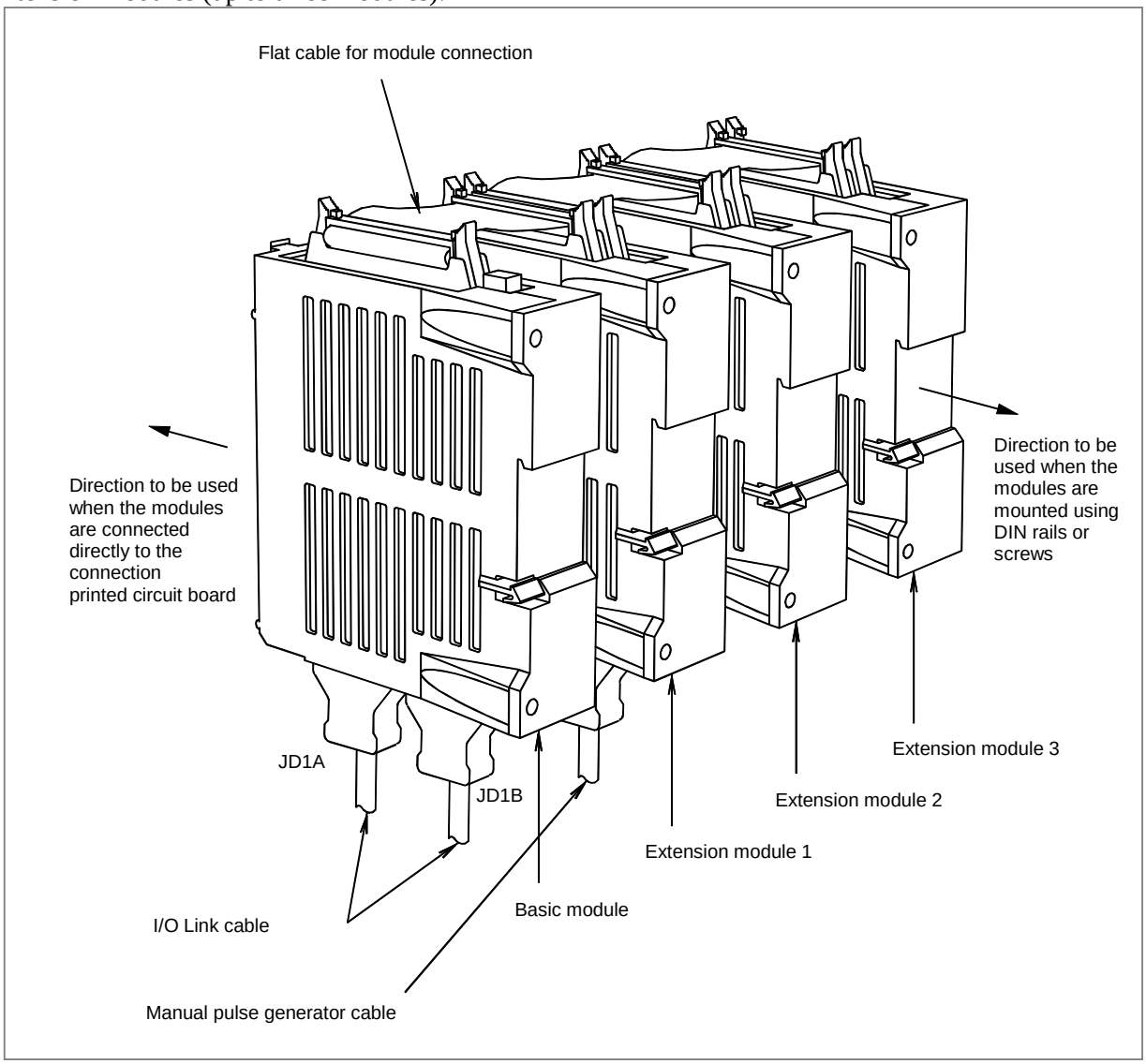

NOTE

Be sure to install I/O modules for connector panel so that the basic module and extension modules are placed as shown in the figure above. Please do not set it landscape

When the modules are directly connected to the connection printed circuit board designed by the machine tool builder:

Install the extension modules to the right of the basic module on the installation plane.

When the modules are installed using DIN rails or screws:

Install the extension modules to the left of the basic module on the installation plane.

© MyFANUC B5B0D8428C0144A78A5F4CA87F2C262E

8.2.2 Connection Diagram

The following figure shows an example of connecting extension module A, extension module C, and extension module D as extension modules.

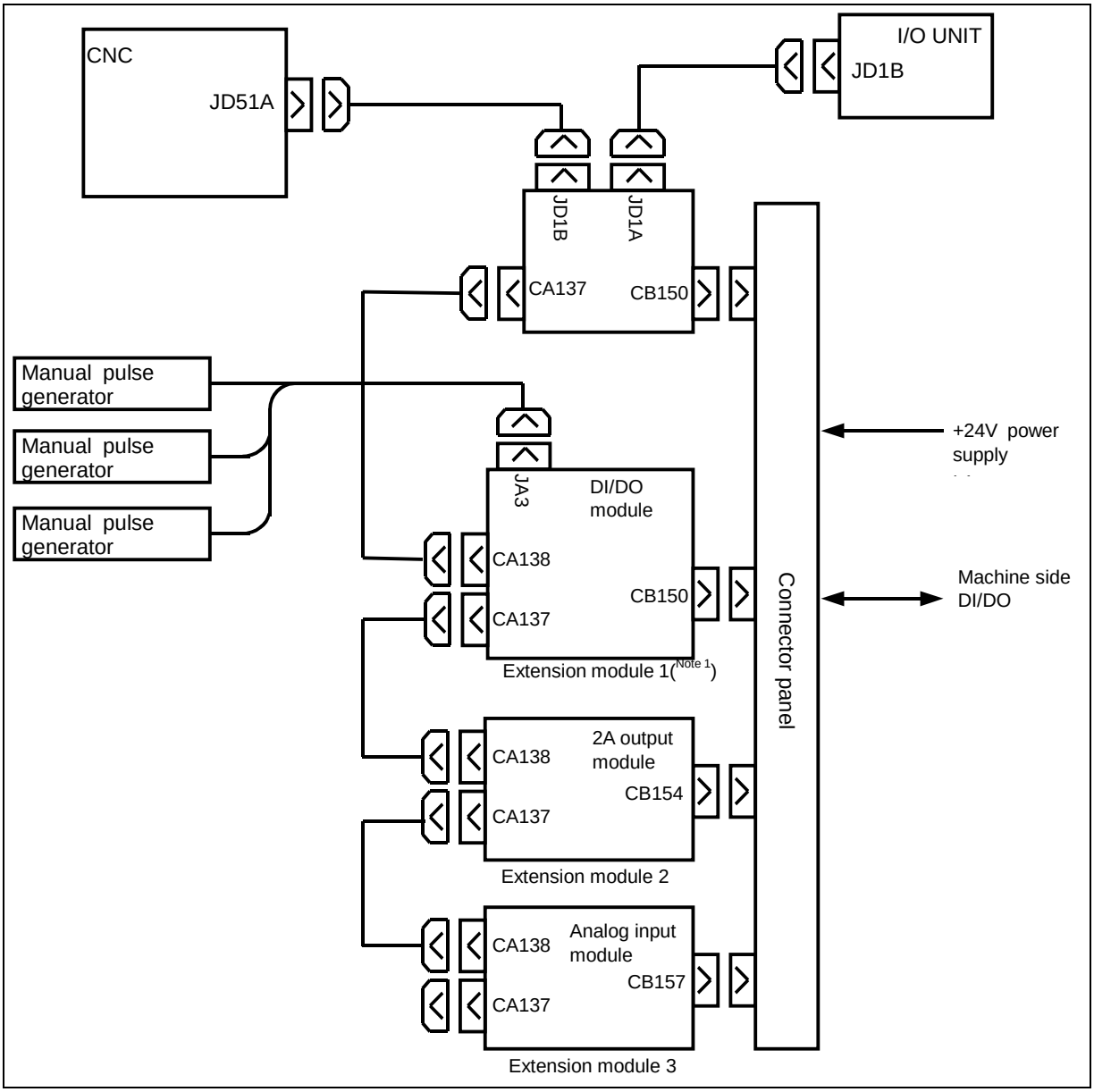

NOTE

Extension modules A, B, C, and D can be installed in any position of extension modules 1, 2, and 3. If a manual pulse generator interface is required, however, be sure to install extension module A in extension module 1. Other modules cannot be installed in extension module 1.

© MyFANUC B5B0D8428C0144A78A5F4CA87F2C262E

8.2.3 Module Specifications

Types of modules

Name	Ordering specifications	Specifications	Weight	Reference item
I/O module for connector panel (basic module)	A03B-0824-C001	DI/DO : 24/16	220g	Subsec. 8.2.4
I/O module for connector panel (extension module A)	A03B-0824-C002	DI/DO : 24/16 With MPG interface	210g	Subsec. 8.2.4
I/O module for connector panel (extension module B)	A03B-0824-C003	DI/DO : 24/16 Without MPG interface	200g	Subsec. 8.2.4
I/O module for connector panel (extension module C)	A03B-0824-C004	DO : 16 2A output module	230g	Subsec. 8.2.5
I/O module for connector panel (extension module D)	A03B-0824-C005	Analog input module	210g	Subsec. 8.2.6
Terminal conversion adapter TA1	A03B-0824-K151 (A20B-2005-0160)	For basic module and extension module A, B	60g	Subsec.8.2.13
Terminal conversion adapter TA2	A03B-0824-K152 (A20B-2005-0190)	For extension module C	45g	Subsec.8.2.13
Terminal conversion adapter TA3	A03B-0824-K153 (A20B-1009-0720)	For extension module D	50g	Subsec.8.2.13
Fuse (spare parts)	A03B-0815-K002	1A (For basic module)		
Flat cable between modules	A03B-0815-K100	25 mm long Suitable for a module interval of 32 mm		

NOTE
Be sure to use modules with the ordering specifications listed above in combination. Do not configurate them with other modules not supported I/O Link *i*.

For the specifications (such as signal input requirements) specific to each module, see the relevant pages of each item.

Installation conditions

(1) Use each I/O module in a completely sealed cabinet.
(2) Use the units under the following ambient temperature conditions:
Operation : 0°C to 55°C
Storage and transportation :-20°C to 80°C
(3) For other installation conditions, conform to the CNC installation conditions.
(4) For ventilation within each I/O module, each module must be installed in shown below. Moreover, for ventilation and wiring, allow a clearance of 100 mm or more above and below each module. Never place a device that generates a large amount of heat below an I/O module.
(5) Install the basic module and extension modules so that the connection flat cables lie on the top of them. Also ensure that the flat cable does not block the vent holes on the basic unit. (See Subsection 8.2.8.)

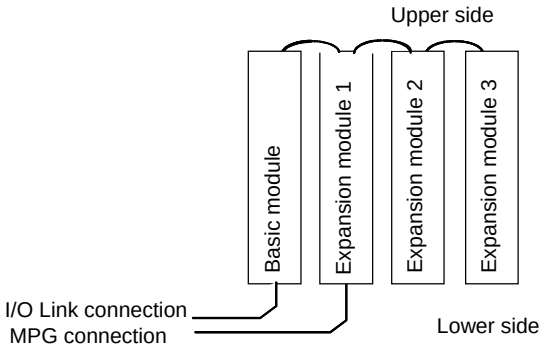

© MyFANUC B5B0D8428C0144A78A5F4CA87F2C262E

(6) Install the basic module and extension modules so that they are placed as shown in the figure in Subsection 8.2.1.
- When the modules are directly connected to the connection printed circuit board designed by the machine tool builder:
  Install the extension modules to the right of the basic module on the installation plane.
- When the modules are installed using DIN rails or screws:
  Install the extension modules to the left of the basic module on the installation plane.

Power supply rating

Module	Power supply voltage	Power supply rating	Remarks
Basic module	24 VDC ±10% is fed through the I/O connector (CB150) of the basic module; ±10% includes momentary variations and ripples.	0.2A+7.3mA×DI	Number of DI points with DI=ON
Expansion modules A and B		0.1A+7.3mA×DI	Number of DI points with DI=ON
Expansion module C (2A output module)		0.1A	
Expansion module D (analog input module)		0.1A	

As a guideline for the heat dissipation, assume [above power supply capacity × 24 (W)].

NOTE
1 The above power supply rating does not include that to be input to DOCOM for DO output.
2 To connect an optical adapter for the I/O Link *i* to both connectors JD1A and JD1B on the basic module, the above power supply rating + 70 mA is required for the power supply of the basic module.
3 If the Terminal conversion adapter is used, in order to light the LED, the power supply rating will increase as follow.
TA1: The power supply rating of 24VDC power supply will increase up to 5.5mA.
The power supply rating of DOCOM will increase up to 95mA.
TA2: The power supply rating of DOCOM will increase up to 95mA.
TA3: There is no LED.

© MyFANUC B5B0D8428C0144A78A5F4CA87F2C262E

8.2.4 Connection of the Basic Module, and Extension Modules A and B

8.2.4.1 Connector pin arrangement

The following figure shows the connector pin arrangement of the basic module and extension modules A and B.

CB150(HONDA MRH-50RMAST)

33	DOCOM			01	DOCOM
34	Yn+0.0	19	0V	02	Yn+1.0
35	Yn+0.1	20	0V	03	Yn+1.1
36	Yn+0.2	21	0V	04	Yn+1.2
37	Yn+0.3	22	0V	05	Yn+1.3
38	Yn+0.4	23	0V	06	Yn+1.4
39	Yn+0.5	24	DICOM0	07	Yn+1.5
40	Yn+0.6	25	Xm+1.0	08	Yn+1.6
41	Yn+0.7	26	Xm+1.1	09	Yn+1.7
42	Xm+0.0	27	Xm+1.2	10	Xm+2.0
43	Xm+0.1	28	Xm+1.3	11	Xm+2.1
44	Xm+0.2	29	Xm+1.4	12	Xm+2.2
45	Xm+0.3	30	Xm+1.5	13	Xm+2.3
46	Xm+0.4	31	Xm+1.6	14	Xm+2.4
47	Xm+0.5	32	Xm+1.7	15	Xm+2.5
48	Xm+0.6			16	Xm+2.6
49	Xm+0.7			17	Xm+2.7
50	+24V			18	+24V

50 male pins with fittings for fixing the connector covers

⚠ CAUTION
Pins 18 and 50 (+24V) of connector CB150 are used to apply +24 V externally to a module. Be sure to connect these pins because the +24 V is used internally. Also be sure to connect pins 19 to 23 (0V).

© MyFANUC B5B0D8428C0144A78A5F4CA87F2C262E

8.2.4.2 DI (Input Signal) connection

This subsection describes the DI (input signal) connections of the basic module and expansion modules A and B.
The following figures show DI connection per module. A maximum of 96 signals are available in a configuration of one basic module (24 signals) and three extension modules (24 signals each).

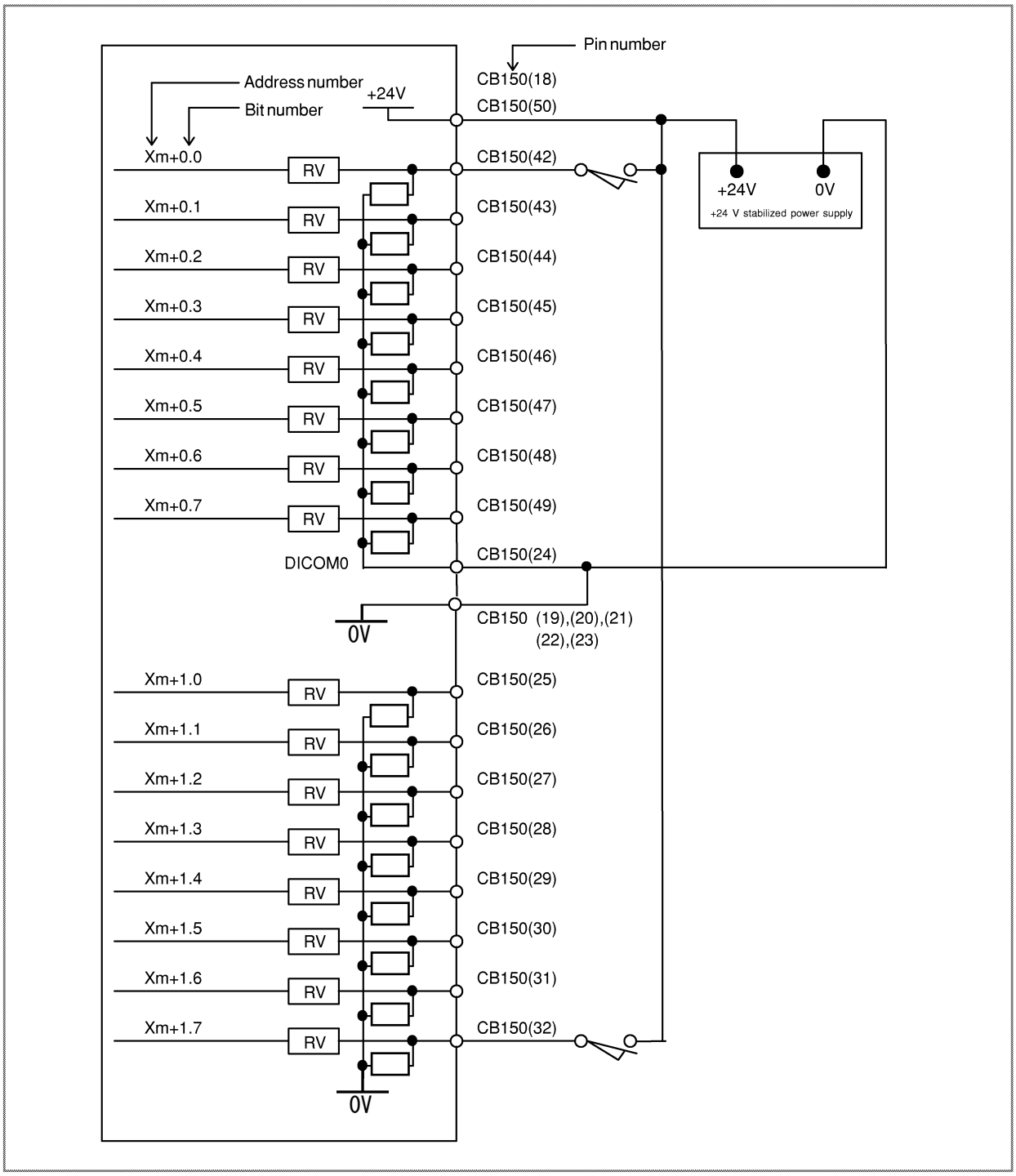

© MyFANUC B5B0D8428C0144A78A5F4CA87F2C262E

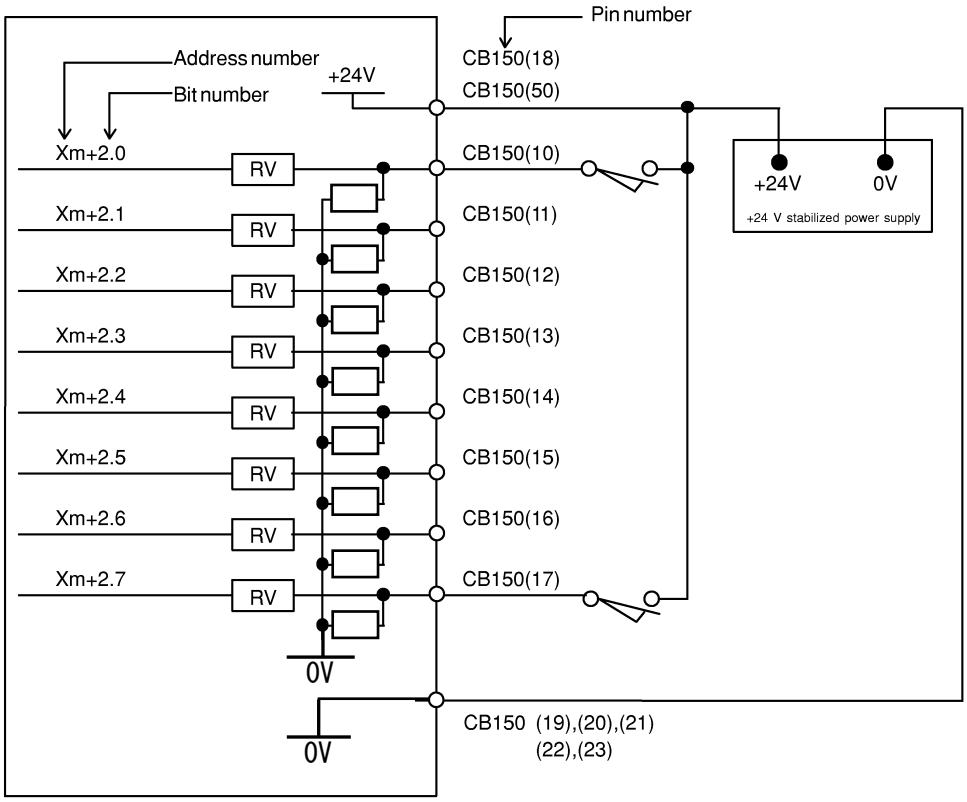

© MyFANUC B5B0D8428C0144A78A5F4CA87F2C262E

NOTE

As listed in the table below, Xm+0.0 through Xm+0.7 are DI pins for which a common voltage can be selected. That is, by connecting the DICOM0 CB150 (24) pin to the +24 V power supply, a DI signal can be input with its logical state reversed. If, however, a cable is connected to ground, it has the same effect as inputting an ON state DI signal. To prevent such accidents, the connection of the DICOM0 CB150 (24) pin to the 0 V power supply is recommended wherever possible. Even in the above case, related input signals may become unstable and an incorrect state could be input if the wiring of DICOM0 (Pin No. CB150 (24)) is disconnected. To avoid this situation, we recommend using the DI of which common voltage is fixed at 24 V, and creating a logic (ladder) that ensures safety if a ground fault or disconnection occurs on a signal line.

For the unconnected pins at the addresses for which the common voltage is fixed (from Xm+1.0 to Xm+1.7 and from Xm+2.0 to Xm+2.7), the input is “0”. For the unconnected pins at the addresses for which a common voltage can be selected (from Xm+0.0 to Xm+0.7), the input is “0” when the DICOM0 CB150(24) pin is connected to the 0 V power supply or “1” when it is connected to the +24 V power supply. Connect DICOM0 when used. When addresses from Xm+0.0 to Xm+0.7 are not used, connect DICOM0 to the 0 V power supply.

Common voltage for the basic module, and extension modules A and B

Address	Common voltage
Xm	Can externally be selected with DICOM0.
Xm+1	Cannot be selected.
Xm+2	Cannot be selected.

© MyFANUC B5B0D8428C0144A78A5F4CA87F2C262E

8.2.4.3 DO (Output Signal) connection

This subsection describes the DO (output signal) connections of the basic module and expansion modules A and B.
The following figures show DI connection per module. A maximum of 64 signals are available in a configuration of one basic module (16 signals) and three extension modules (16 signals each).

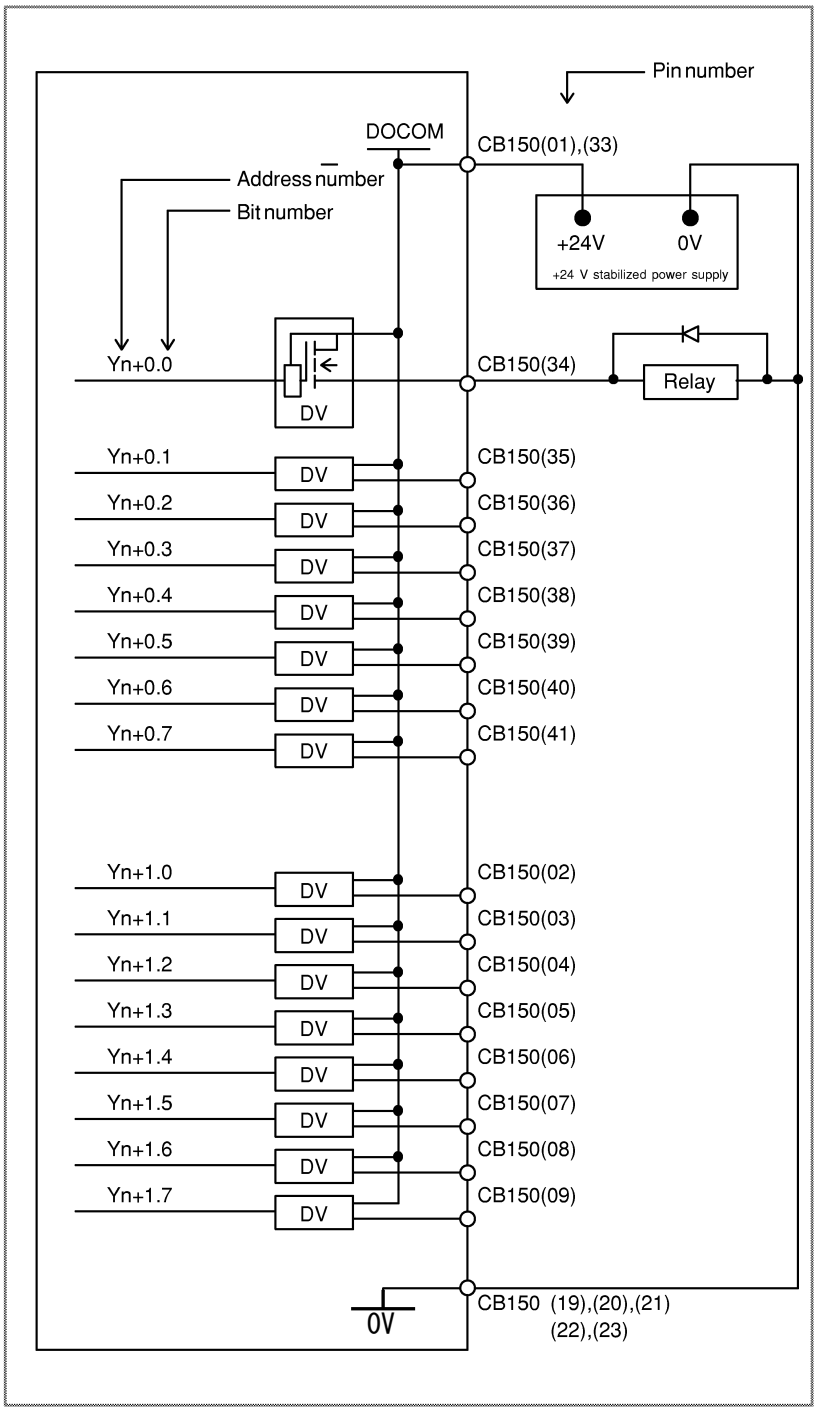

© MyFANUC B5B0D8428C0144A78A5F4CA87F2C262E

8.2.4.4 DI/DO signal specifications

This section describes the specifications of the DI/DO signals used with the basic module and expansion modules A and B.

DI (input signal specifications)

Number of points	24 points (per module)
Rated input	DC24V, 7.3mA
ON voltage/current	18 VDC or more, 6 mA or more *In case of use terminal conversion adapter TA1 or TA2, as follows. 20 VDC or more, 6 mA or more
OFF voltage/current	6 VDC or less, 1.5 mA or less *In case of use terminal conversion adapter TA1 or TA2, as follows. 8 VDC or less, 1.5 mA or less
Delay time	The receiver delay time is 2 ms (maximum). In addition, [I/O Link transfer time between CNC and I/O module] and [ladder scan period (depending on CNC)] must be considered.

DI（contact specification）

Contact rating	30 VDC, 16 mA or more
Leakage current between contacts when opened	1mA or less (26.4V)
Voltage decrease between contacts when closed	2 V or less (including a cable voltage decrease)

DO (output signal specifications)

Number of points	16 points (per module)
Maximum load current when ON	200 mA or less including momentary variations
Saturation voltage when ON	1 V (maximum) when the load current is 200 mA
Withstand voltage	24 V +20% or less including momentary variations
Leakage current when OFF	20 μA or less
Delay time	The driver delay time is 50 μs (maximum). In addition, [I/O Link transfer time between CNC and I/O module] and [ladder scan period (depending on CNC)] needs to be considered.

NOTE

1 When inductive load is connected to DO terminal, connect a diode in parallel in order to reduce the noise.
2 When capacitive load is connected to DO terminal, connect a resistor in series in order to diminish the rush current.

© MyFANUC B5B0D8428C0144A78A5F4CA87F2C262E

Power supply for DO load (DOCOM)

Input voltage range : min 0V, max 26.4V
Be sure to connect all power supply for DO load (DOCOM) pins.
Turn on the power supply for DO load (DOCOM) at the same time as or later than the power for the control unit.
Turn off the power supply for DO load (DOCOM) when or before the power for the control unit is turned off.

> ⚠ **WARNING**
> For the safety of the system, don't supply the power for the load (DOCOM) when the power for the I/O Unit is off. If the power for the load (DOCOM) is supplied when the power for the I/O Unit is off, invalid output or malfunction may cause an accident.

By turning off (opening) the power supply (DOCOM) for the DO signals (output signals), all the DO signals of each module can be turned off at the same time. At this time, the DO state is as shown below.

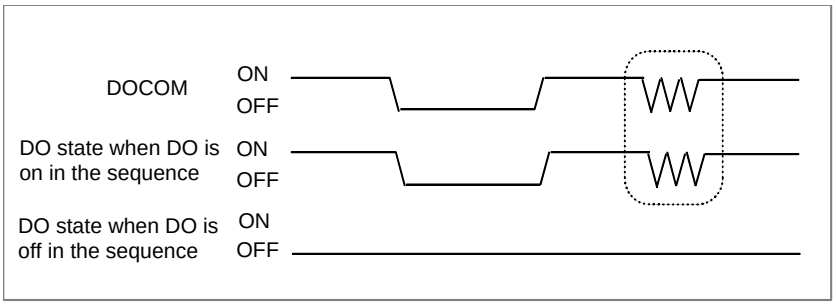

> ⚠ **CAUTION**
> When DO is on in the sequence, the ON/OFF state of DOCOM is directly reflected in the DO state as indicated above by the dashed box.
> Don't connect the inductive load or the capacitive load to the power supply for DO load (DOCOM). If the power supply for DO load (DOCOM) is turned on/off in the condition that it is connect to the inductive load or the capacitive load, it will cause the DO to malfunction.

Parallel DO (output signal) connection

A DO load current of twice the level can be obtained by connecting DO points in parallel and exercising ON/OFF control at the same time in the sequence. Namely, the maximum load current per DO point is 200 mA. By connecting two DO points in parallel and turning on the two DO points at the same time, 400 mA can be obtained. In this case, however, the leakage current is doubled up to 40 μA when the DO points are turned off.

> ⚠ **CAUTION**
> Be sure to connect the bit at the same address for parallel connection.
> Do not connect three or more signals in parallel.

© MyFANUC B5B0D8428C0144A78A5F4CA87F2C262E

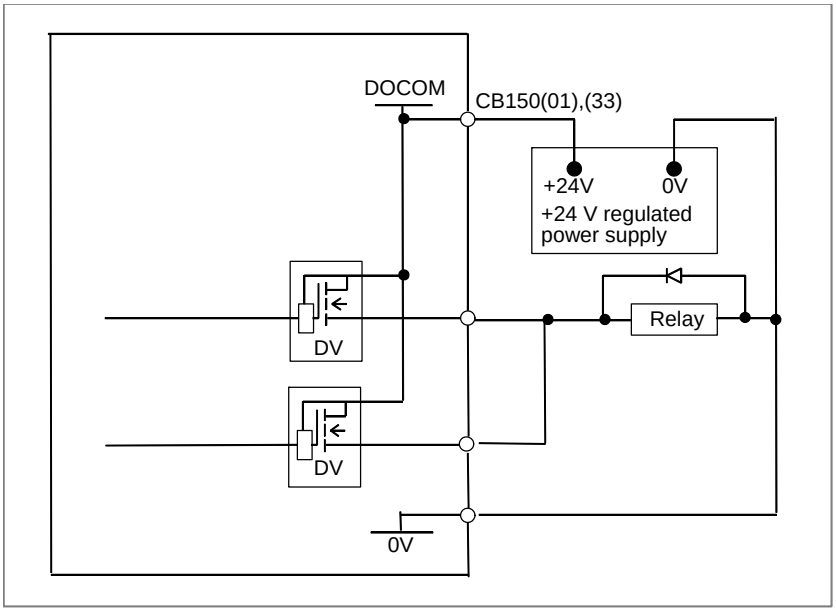

8.2.5 Connection of Extension Module C (2A Output Module)

8.2.5.1 Connector pin arrangement

The following figure shows the connector pin arrangement of the extension module C (2A output module).

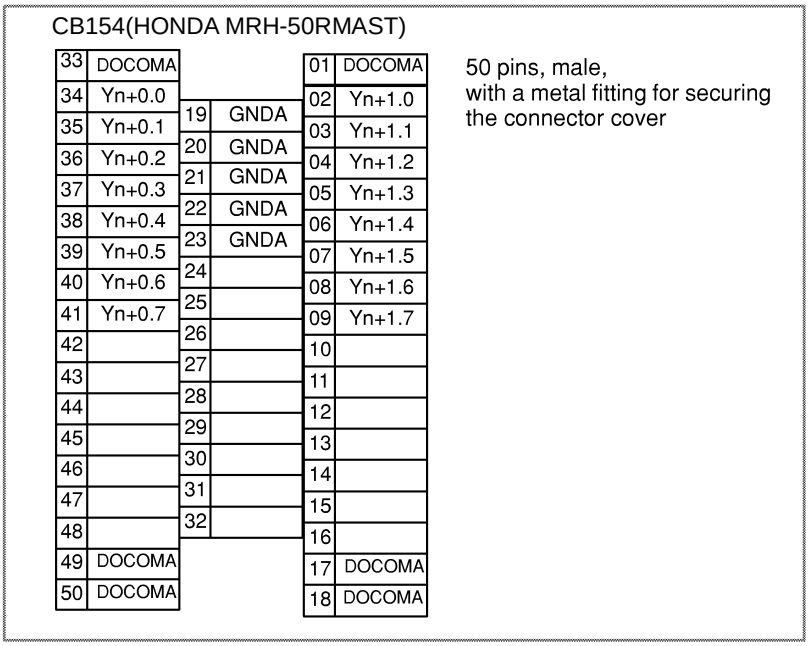

© MyFANUC B5B0D8428C0144A78A5F4CA87F2C262E

8.2.5.2 2A Output signal connection

This subsection describes the connection of extension module C (2A output module).

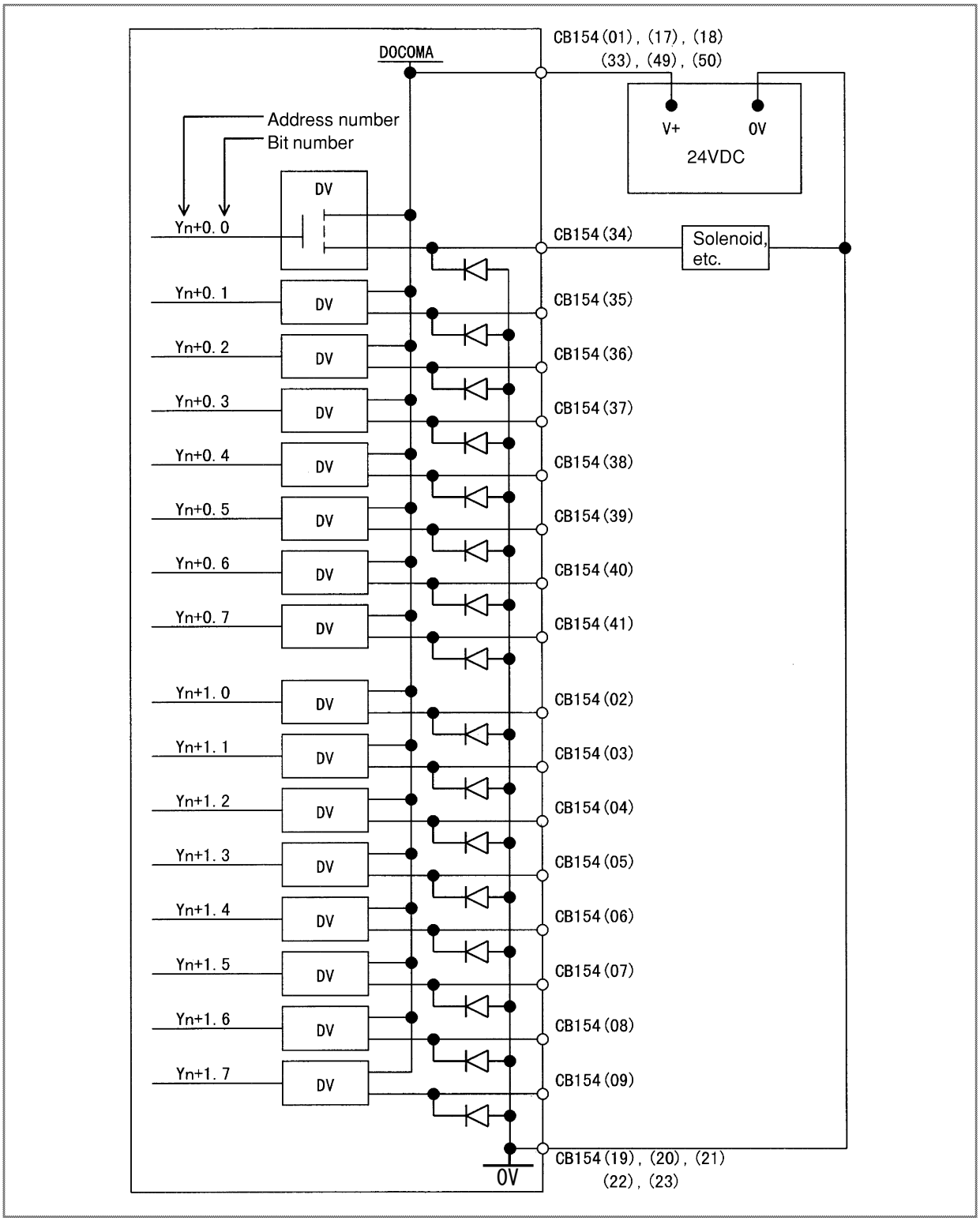

© MyFANUC B5B0D8428C0144A78A5F4CA87F2C262E

8.2.5.3 2A output signal specifications

This subsection describes the specifications of the signals used with extension module C (2A output module).

DO (output signal specifications)

Number of points	16 points (per module)
Maximum load current when ON	2 A or less per point. 12 A maximum for the entire module (DO: 16 points) (including momentary variations).
Withstand voltage	24 V +20% or less (including momentary variations)
Leakage current when OFF	100 μA or less
Delay time	The driver delay time is 120ns (MAX). In addition, [I/O Link transfer time between CNC and I/O module] and [ladder scan period (depending on CNC)] needs to be considered.

⚠ **CAUTION**
If the over current is continued for a long time, 2A module might emit smoke or take fire.
It is recommend to connect a fuse about two times rating of the rated output to each output for burnout prevention.
However, the fuse can't protect the device in any case when short-circuit is occurred. Replace the module if short-circuit is occurred because the device might be broken.

Parallel DO (output signal) connection

The 2A output module does not allow parallel DO connections.

8.2.6 Connection of Extension Module D (Analog Input Module)

8.2.6.1 Analog Input connector pin allocation

This subsection describes the pin allocation of extension module D (analog input module).

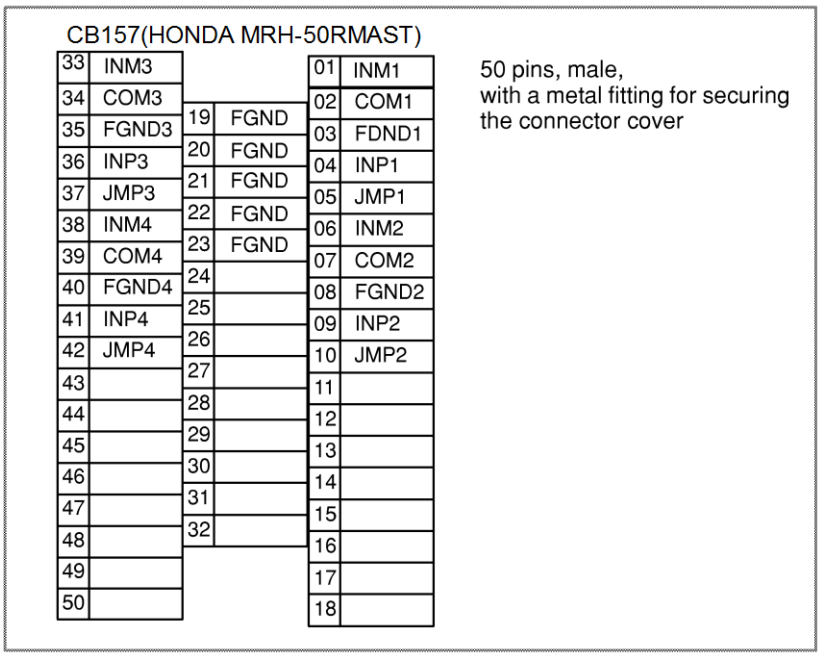

© MyFANUC B5B0D8428C0144A78A5F4CA87F2C262E

8.2.6.2 Analog input signal connections

This subsection provides a connection diagram of extension module D (analog input module).

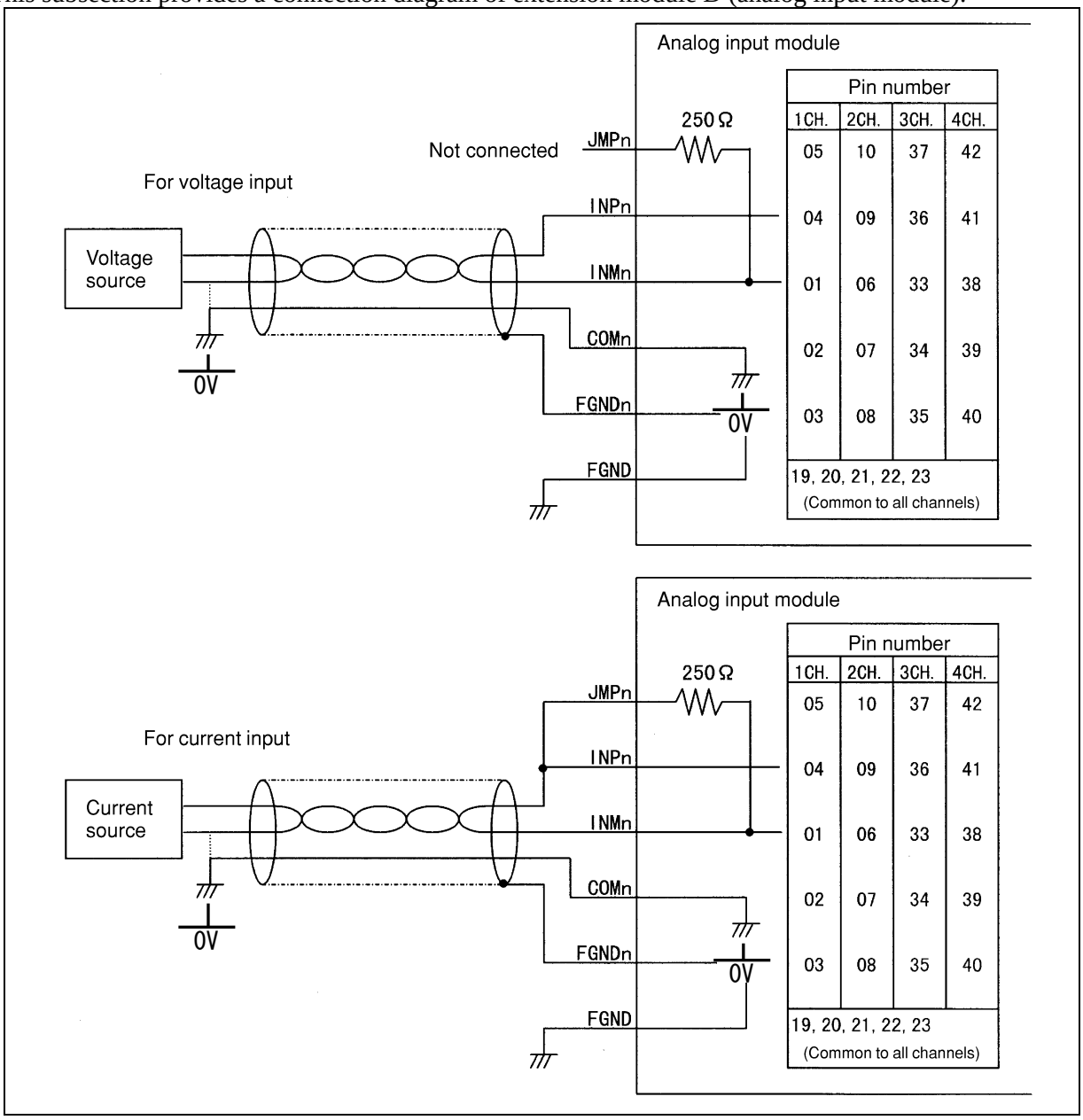

NOTE

1 In the diagram above, n represents each channel (n = 1, 2, 3, 4).
2 Current input or voltage input can be selected on a channel-by-channel basis. For current input, be sure to connect JMPn to INPn.
3 For the connection, use a shielded twisted pair.
4 In the diagram above, the shield of each channel is connected to FGNDn, and FGND is used for shield processing of all channels. However, the shield of a channel may be directly connected to frame ground with a cable clamp, instead of using FGNDn.
5 If the voltage (current) source has a GND pin, as shown in the figure above, connect COMn to this pin. Otherwise, connect INMn and COMn together in the analog input module.

© MyFANUC B5B0D8428C0144A78A5F4CA87F2C262E

8.2.6.3 Analog input signal specifications

This subsection describes the specifications of the input signals used with extension module D (analog input module).

Item	Specifications	Remarks
Number of input channels (Note)	Four channels	
Analog input	DC -10 to +10 V (Input resistance: 4.7 MΩ) DC -20 to +20 mA (Input resistance: 250 Ω)	Voltage input or current input can be selected on channel-by-channel basis.
Digital output (Note)	12 bits (binary)	Represented as two's complement
Input/output correspondence	Analog input / Digital output +10V / +2000 +5V or +20mA / +1000 0V or 0mA / 0 -5V or -20mA / -1000 -10V / -2000	
Resolution	5 mV or 20 μA	
Overall precision	Voltage input: ±0.5% Current input: ±1%	With respect to full scale
Maximum input voltage/current	±15V/±30mA	
Minimum conversion time	[I/O Link transfer time between CNC and I/O module] and [ladder scan period (depending on CNC)] needs to be considered.	
Number of occupied input/output points (Note)	DI = 3 bytes, DO = 2 bytes	

NOTE

Extension module D (analog input module) has four input channels. The digital output section consists of a group of 12 bits within the three-byte occupied input points. This means that the channel to be used can be dynamically selected by the ladder. The channel switching DO point for channel selection is included in the two-byte occupied output points.

© MyFANUC B5B0D8428C0144A78A5F4CA87F2C262E

8.2.6.4 Channel selection and A/D conversion data

NOTE
For allocation, see Subsection 8.2.10.

(Channel selection)

With extension module D (analog input module), which of the four analog input channels is to be the target of A/D conversion must be determined with a PMC program. The DO points used for this selection are CHA and CHB (two-byte occupied output points). These are mapped as indicated below.

Address in the module	7	6	5	4	3	2	1	0
Yn	X	X	X	X	X	X	X	X
Yn+1	X	X	X	X	X	X	CHB	CHA

Yn is the first address to which the analog input module is allocated.

By writing the values indicated below to CHA and CHB, the corresponding channel is selected, and the A/D converted data of the channel and the data of the selected channel can be read as DI data. The character X indicated above represents an unused bit, so that either 1 or 0 may be written in place of X.

CHB	CHA	Channel selected
0	0	Channel 1
0	1	Channel 2
1	0	Channel 3
1	1	Channel 4

(Address)

A/D conversion data of the channel selected by the above setting is output to two bytes of the three bytes of DI (input signals) of the slot to which this module is allocated. The A/D conversion data output addresses are as shown below, depending on where extension module D (analog input module) is installed.

⚠ CAUTION
Be sure to allocate the start address of the slot as shown below, according to where the analog input module is installed:
When connected to extension module 1 (slot 2):
Xm_2 must always be allocated at an odd-numbered address.
When connected to extension module 2 (slot 3):
Xm_3 must always be allocated at an even-numbered address.
When connected to extension module 3 (slot 4):
Xm_4 must always be allocated at an odd-numbered address.

- When extension module D (analog input module) is installed in extension module 1 (slot 2)

Address	7	6	5	4	3	2	1	0
Xm_2(odd-numbered address)	Undefined							
Xm_2+1(even-numbered address)	D07	D06	D05	D04	D03	D02	D01	D00
Xm_2+2(odd-numbered address)	0	0	CHB	CHA	D11	D10	D09	D08

Xm_2 is the start address of slot 2.

- When extension module D (analog input module) is installed in extension module 2 (slot 3)

Address	7	6	5	4	3	2	1	0
Xm_3(even-numbered address)	D07	D06	D05	D04	D03	D02	D01	D00
Xm_3+1(odd-numbered address)	0	0	CHB	CHA	D11	D10	D09	D08
Xm_3+2(even-numbered address)	Undefined							

Xm_3 is the start address of slot 3.

© MyFANUC B5B0D8428C0144A78A5F4CA87F2C262E

- When extension module D (analog input module) is installed in extension module 3 (slot 4)

Address	7	6	5	4	3	2	1	0
Xm_4(odd-numbered address)	Undefined							
Xm_4+1(even-numbered address)	D07	D06	D05	D04	D03	D02	D01	D00
Xm_4+2(odd-numbered address)	0	0	CHB	CHA	D11	D10	D09	D08

Xm_4 is the start address of slot 4.

(A/D conversion data)

A/D conversion data for the selected channel is output to the above address as 12-bit data in the following format.

Address in the module	7	6	5	4	3	2	1	0
Xm	D07	D06	D05	D04	D03	D02	D01	D00
Xm+1	0	0	CHB	CHA	D11	D10	D09	D08

D00 to D11 represent 12-bit digital output data. D00 corresponds to weighting of 2^0 and D10 corresponds to that of 2^{10}. D11 is a sign bit expressed as a two's complement. (Refer to the following table)

Digital data			Analog data	
Decimal	**Hexadecimal**	**Binary (D11~D00)**	**Voltage input**	**Current input**
2047	7 F F h	0 1 1 1 1 1 1 1 1 1 1 1	Outside of the specification range	Outside of the specification range
2001	7 D 1 h	0 1 1 1 1 1 0 1 0 0 0 1		
2000	7 D 0 h	0 1 1 1 1 1 0 1 0 0 0 0	10V	
1999	7 C F h	0 1 1 1 1 1 0 0 1 1 1 1	9.995V	
1001	3 E 9 h	0 0 1 1 1 1 1 0 1 0 0 1	5.005V	
1000	3 E 8 h	0 0 1 1 1 1 1 0 1 0 0 0	5V	20mA
999	3 E 7 h	0 0 1 1 1 1 1 0 0 1 1 1	4.995V	19.98mA
2	0 0 2 h	0 0 0 0 0 0 0 0 0 0 1 0	10mV	40uA
1	0 0 1 h	0 0 0 0 0 0 0 0 0 0 0 1	5mV	20uA
0	0 0 0 h	0 0 0 0 0 0 0 0 0 0 0 0	0V	0mA
-1	F F F h	1 1 1 1 1 1 1 1 1 1 1 1	-5mV	-20uA
-2	F F E h	1 1 1 1 1 1 1 1 1 1 1 0	-10mV	-40uA
-999	C 1 9 h	1 1 0 0 0 0 0 1 1 0 0 1	-4.995V	-19.98mA
-1000	C 1 8 h	1 1 0 0 0 0 0 1 1 0 0 0	-5V	-20mA
-1001	C 1 7 h	1 1 0 0 0 0 0 1 0 1 1 1	-5.005V	Outside of the specification range
-1999	8 3 1 h	1 0 0 0 0 0 1 1 0 0 0 1	-9.995V	
-2000	8 3 0 h	1 0 0 0 0 0 1 1 0 0 0 0	-10V	
-2001	8 2 F h	1 0 0 0 0 0 1 0 1 1 1 1	Outside of the specification range	
-2048	8 0 0 h	1 0 0 0 0 0 0 0 0 0 0 0		

CHA and CHB represent an analog input channel. This means that when the two bytes above are read with a PMC program, the A-D converted data of the input channel represented by CHA and CHB can be read from D11 to D00.

NOTE

When two-byte digital output addresses are to be referenced with a PMC program, a read must always be performed word-by-word (16 bits).

© MyFANUC B5B0D8428C0144A78A5F4CA87F2C262E

8.2.7 Manual Pulse Generator Connection

For an I/O module for connector panel, three manual pulse generators can be connected to extension module A. For the connection, see Subsection 7.4.1.

NOTE
To use extension module A having a manual pulse generator interface, connect the module next to the basic module.

8.2.8 Connection of Basic and Extension Modules

Modules can be connected in the same way, regardless of whether you are connecting the basic module to an extension module or connecting two extension modules. Connect the modules by using 34-pin flat cable connectors as shown in the figure below. Ensure that all 34 pins at one end of the cable are connected to the corresponding pins at the other end; e.g., connect the A1 pin to the pin having the same designation (A1) at the other end.

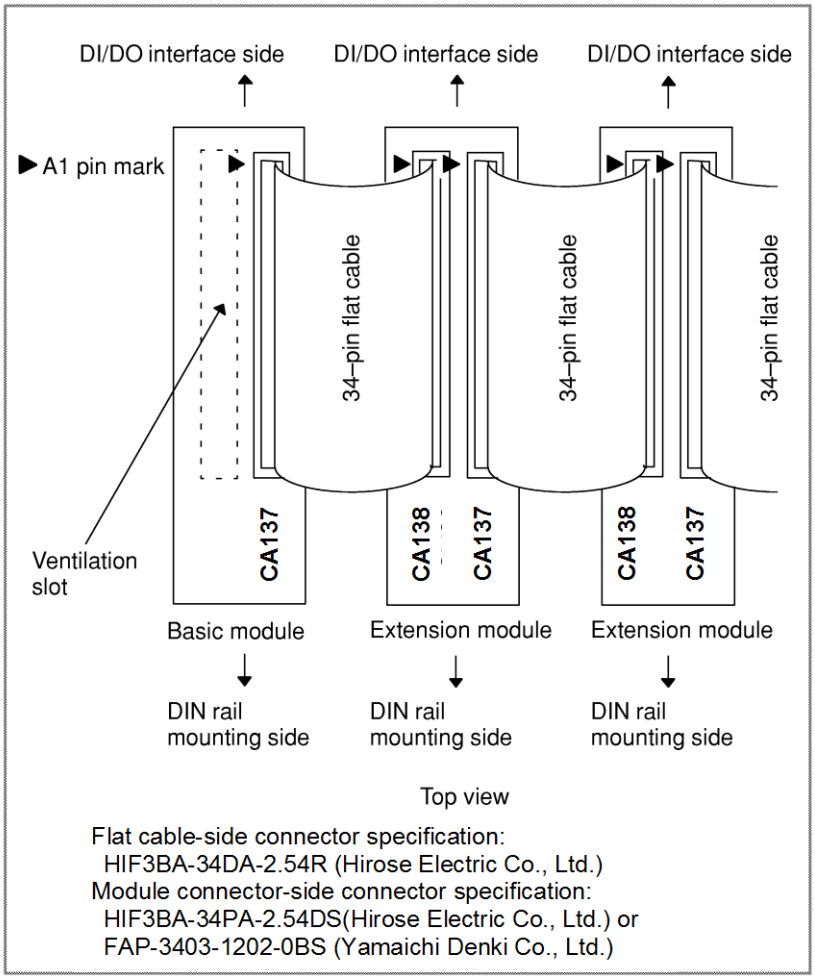

© MyFANUC B5B0D8428C0144A78A5F4CA87F2C262E

NOTE

Install the basic module and extension modules so that they are placed as shown in the figure above.

- When the modules are directly connected to the connection printed circuit board designed by the machine tool builder:
  Install the extension modules to the right of the basic module on the installation plane.
- When the modules are installed using DIN rails or screws:
  Install the extension modules to the left of the basic module on the installation plane.

Modules need to be spaced at least 32 mm apart, in which case a flat cable of about 20 mm in length is required. To install modules further away from each other, the cable length will be 20 mm plus the extra distance. Note that the maximum length of a flat cable is 300 mm.

To ensure adequate ventilation, install the modules in such a way that the flat cables lie on top of them.
The basic module has a vent at the top (as indicated by the dotted lines in the above figure). Install the modules so that the flat cable does not block the vent.

Be sure to connect the flat cable from CA137 on a module to CA138 on the next module.

8.2.9 Module Installation

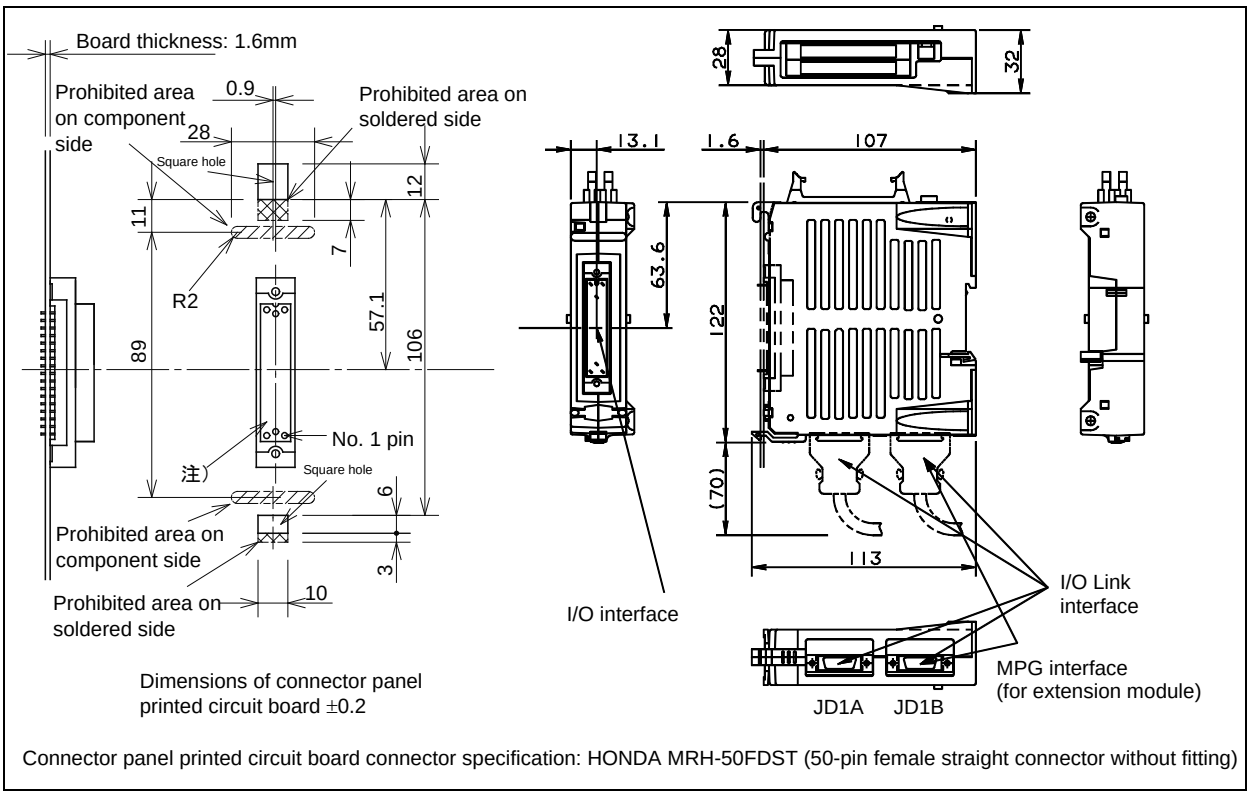

When connecting a connector panel printed circuit board directly (external module view and mounting diagram)

© MyFANUC B5B0D8428C0144A78A5F4CA87F2C262E

NOTE

1 A connector with a fitting (HONDA MRH-50RMAST) is used for the module-side I/O interface. Always use a connector having no fitting for the connector panel printed circuit board.

2 Area where pattern printing is prohibited
: Prohibited area on soldered side
: Prohibited area on component side

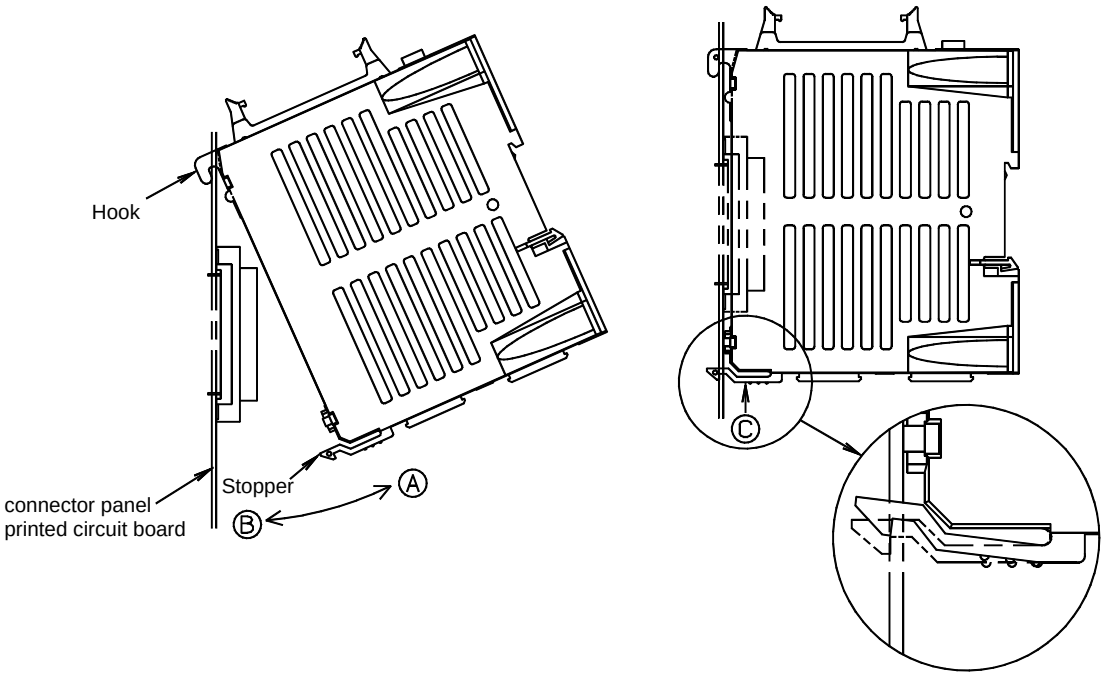

Mounting the module
1. Insert the hook of the module into the square hole located at the upper part of the connector panel printed circuit board.
2. Using the hook as a fulcrum, push the module in the direction of (B), and attach the module's connector to the connector on the printed circuit board.
3. Push the stopper into the lower hole of the printed circuit board until it clicks into place.

Dismounting the module
1. Press the stopper (C) upward.
2. Using the hook as a fulcrum, pull the lower part of the module in the direction of (A)

When connecting a connector panel printed circuit board directly (mounting and dismounting a module)

NOTE

When mounting and dismounting a module, hold the module by its top and bottom surfaces. Avoid applying force to the sides where there are slits.

© MyFANUC B5B0D8428C0144A78A5F4CA87F2C262E

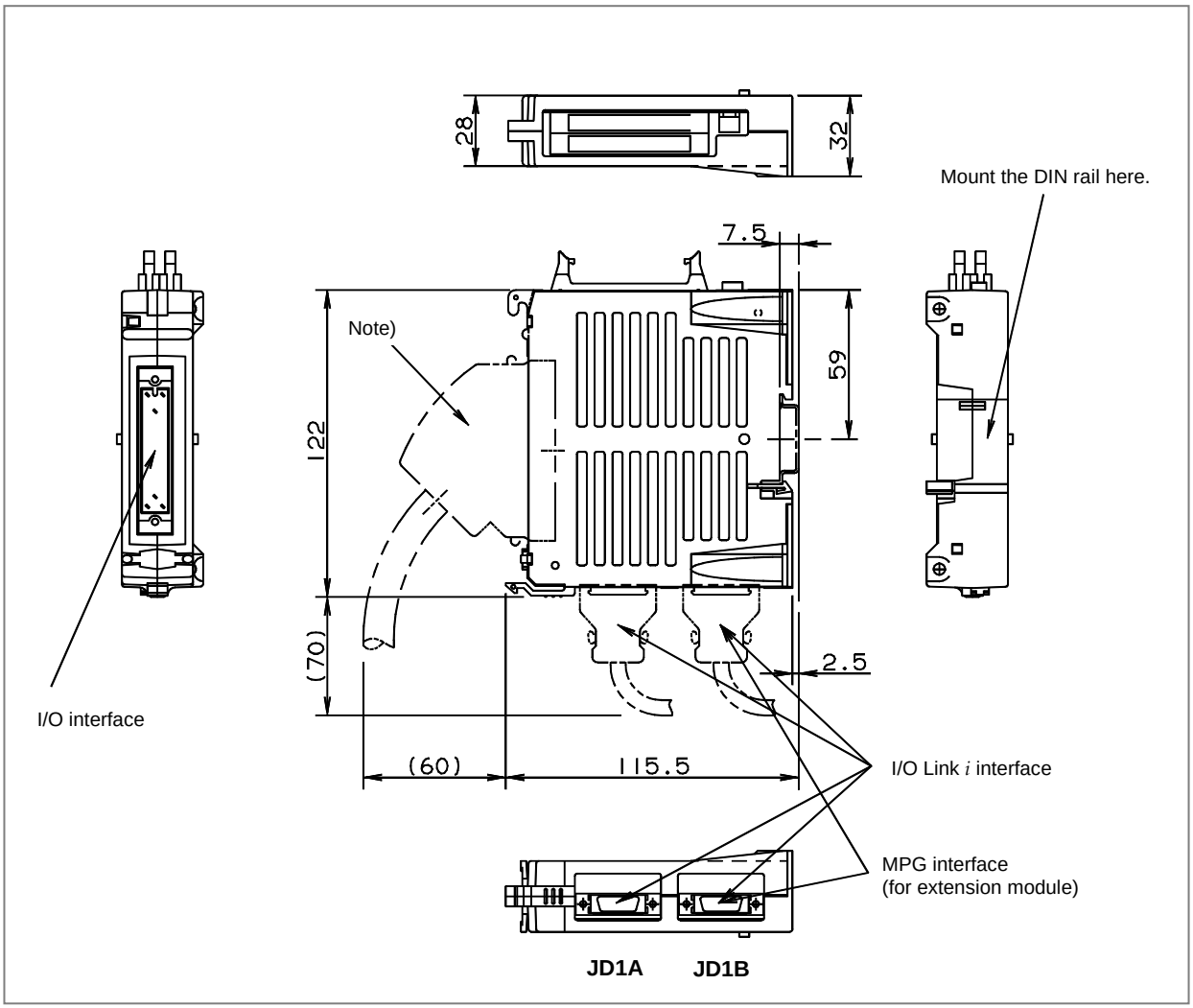

When mounting a DIN rail (external module view and mounting diagram)

NOTE

Recommended connector:

A02B-0098-K891 (including the following connector and case)
(Connector: HONDA MR-50F solder type)
(Case: HONDA MR-50NSB angled type)

Recommended wire material:

A66L-0001-0042 (7/0.18, 50 pins)

© MyFANUC B5B0D8428C0144A78A5F4CA87F2C262E

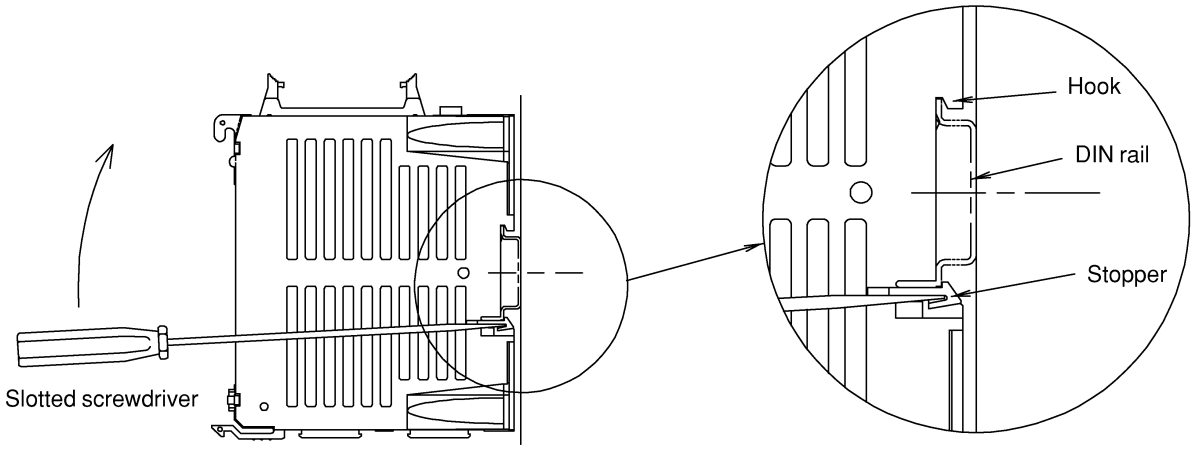

Mounting the module
1. Hook the module at the upper end of the DIN rail.
2. Push the stopper into the slit located at the lower end of the rail until it clicks into place.

Dismounting the module
1. Insert the tip of the slotted screwdriver and push out the stopper in the direction indicated by the arrow.

When mounting a DIN rail (mounting and dismounting a module)

NOTE

When dismounting the module, take care not to damage the stopper by applying excessive force with the screwdriver.
When mounting and dismounting a module, hold the module by its top and bottom surfaces. Avoid applying force to the sides where there are slits.

© MyFANUC B5B0D8428C0144A78A5F4CA87F2C262E

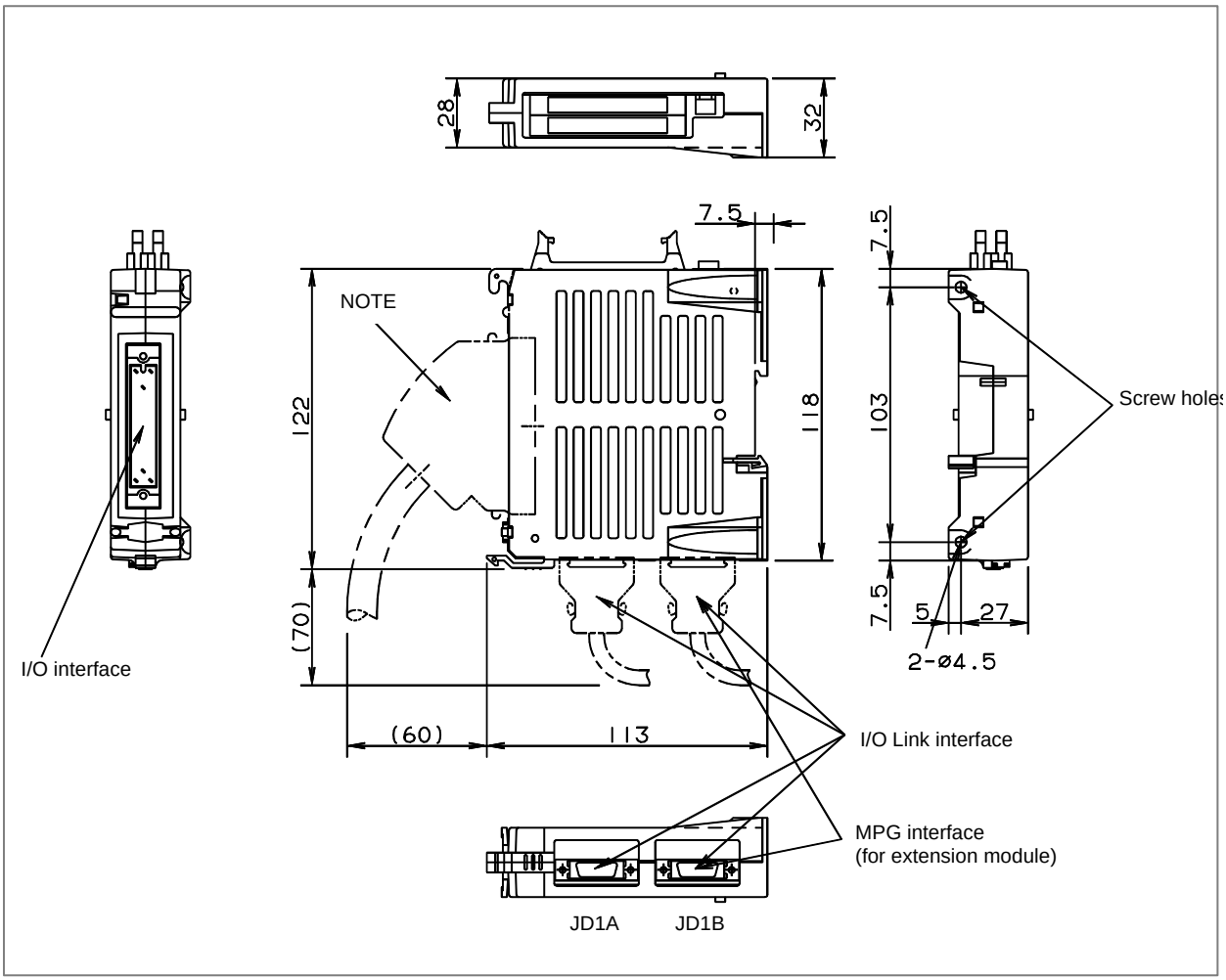

When mounting a module using screws (external module view and mounting diagram)

NOTE

Recommended connector:

A02B-0098-K891 (including the following connector and case)
(Connector: HONDA MR-50F solder type)
(Case: HONDA MR-50NSB angled type)

Recommended wire material:

A66L-0001-0042(7/0.18, 50 pins)

© MyFANUC B5B0D8428C0144A78A5F4CA87F2C262E

8.2.10 Other Notes

Address allocation

For the I/O module for connector panel, I/O addresses are mapped as follows.

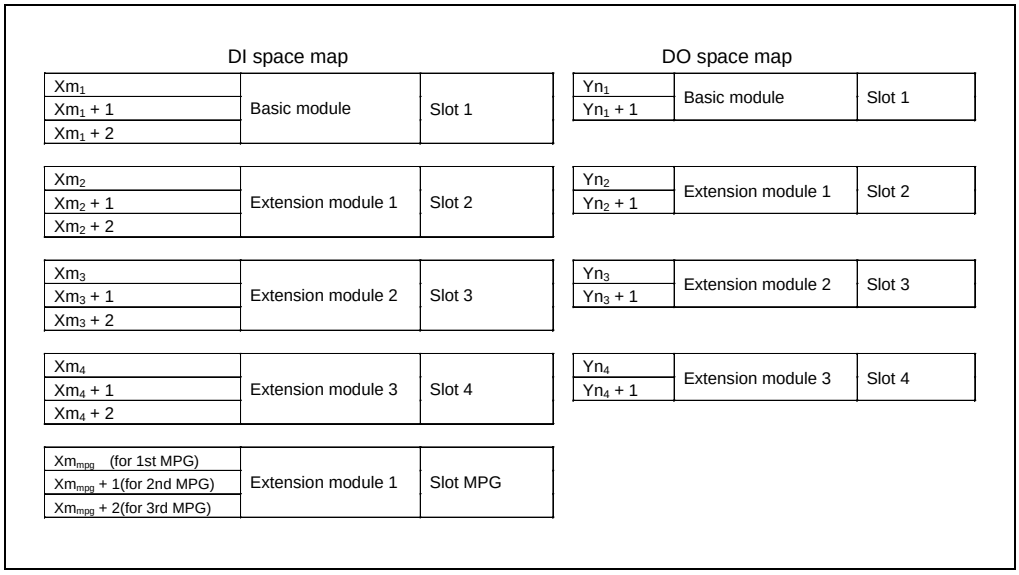

Xm_1, Xm_2, Xm_3, Xm_4, Xm_{mpg}, Yn_1, Yn_2, Yn_3, and Yn_4 indicate the start address at allocation.

Each module is treated as a slot and addresses are allocated for each module. When only the basic module is used, allocate 3-byte DI addresses and 2-byte DO addresses to slot 1. When extension modules are added, allocate 3-byte DI addresses and 2-byte DO addresses to slots 2, 3, and 4.
An I/O module for connector panel has an interface for three manual pulse generators. To use manual pulse generators, allocate addresses to slot MPG. With this setting, addresses can be allocated to the three manual pulse generators at a time (addresses cannot be allocated individually to manual pulse generators). Do not use the DI space with the ladder because the CNC processes the manual pulse generator signals directly.

NOTE
1 Be sure to allocate addresses to the basic module. (DI: 3 bytes, DO: 2 bytes)
2 Extension module C (2A output module) has no DI signals. For connection to the I/O Link *i*, it is not necessary to allocate addresses to the DI section of extension module C.

NOTE
Extension module C (2A output module) involves no DI signals. For connection to the I/O Link, the DI addresses allocated to the 2A output module cannot be used. When a 2A output module is installed in extension module 2, for example, addresses Xm+6 to Xm+8 cannot be used. (The addresses for other modules are not shifted. In this case, the DI addresses for extension module 3 remain Xm+9 to Xm+11.)

© MyFANUC B5B0D8428C0144A78A5F4CA87F2C262E

DO (output signal) error detection

The DO driver of the Basic and Extension module A/B is capable of detecting an overcurrent and measuring its own temperature. If an accident, such as the connecting of the cable to ground, causes an abnormal increase in the load current or in the driver temperature, a protection circuit, which is provided for each DO driver, is activated and keeps the DO signal in the OFF state until the cause of the problem is eliminated. Even if this occurs, the CNC and I/O module continue operating without entering the alarm status, but the PMC is notified of the location of the error detected by the DO driver. This information can be checked on the PMC status screen or alarm processing can be performed in advance using a ladder to help error check and recovery.

A DO error such as a ground fault is detected for each signal. This DO error is transferred to the PMC system relay area as a status alarm. The following table lists system relay area information and corresponding DO data related to a status alarm. When an alarm data bit is set to “1”, the DO driver corresponding to the bit detects an error. Also see Subsection 7.3.3, “Status Alarm”.

Information output to the system relay area and corresponding location where an error occurred

Information output to the system relay area						Faulty location
Type	Group number	PMC path	Slot number	Alarm information number (Intra-slot byte address)	Y address (DO address)	
0	0 to 23	1 to 5, 9	1	0	Yn_1	0th byte DO of Basic module
				1	Yn_1+1	1st byte DO of Basic module
			2	0	Yn_2	0th byte DO of Extension module1
				1	Yn_2+1	1st byte DO of Extension module1
			3	0	Yn_3	0th byte DO of Extension module2
				1	Yn_3+1	1st byte DO of Extension module2
			4	0	Yn_4	0th byte DO of Extension module3
				1	Yn_4+1	1st byte DO of Extension module3

Output values of “Group number”, “PMC path”, and “Y address” depends on unit connection and I/O address assignment.
Yn_1, Yn_2, Yn_3 and Yn_4 indicate the start address at allocation.

Description of “Alarm data” in the system relay area

Alarm data							
#7	#6	#5	#4	#3	#2	#1	#0
DO ground fault at bit 7	DO ground fault at bit 6	DO ground fault at bit 5	DO ground fault at bit 4	DO ground fault at bit 3	DO ground fault at bit 2	DO ground fault at bit 1	DO ground fault at bit 0

⚠ CAUTION

1 The output protection function is not for external equipment but for internal device of the module.
2 The output protection function can’t protect the internal device in any case. If the output protection function is activated, remove the cause immediately. If the output exceed the absolute maximum rating, the output protection function may not operate normally or the internal device may break before the output protection function operates.
3 If the over current is continued with a condition that the output protection function can’t operate normally, the internal device might emit smoke or take fire.

NOTE

This function is not supported by the extension module C (2A output module) or extension module D (analog input module).

© MyFANUC B5B0D8428C0144A78A5F4CA87F2C262E

8.2.11 Rotary Switch Setting

NOTE
In the description in this subsection, slots are applicable only for the I/O Link *i*.

By changing the setting (rotary switch) for the expansion modules, connections can be made by omitting some expansion modules (slots) as shown below.

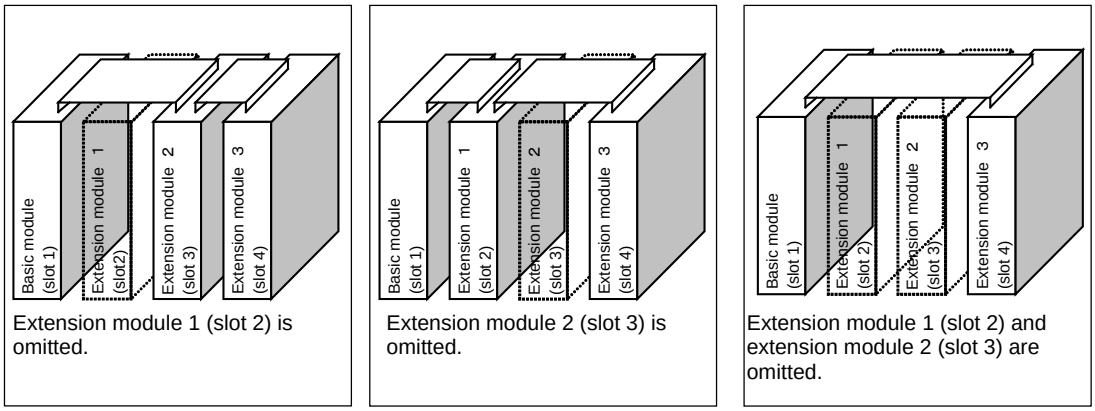

Method of setting (control and method of setting the control)
As shown below, the control (rotary switch) is located on an expansion module. To change the setting, turn the switch with a flat-bladed screwdriver with a tip width of about 2.5 mm.

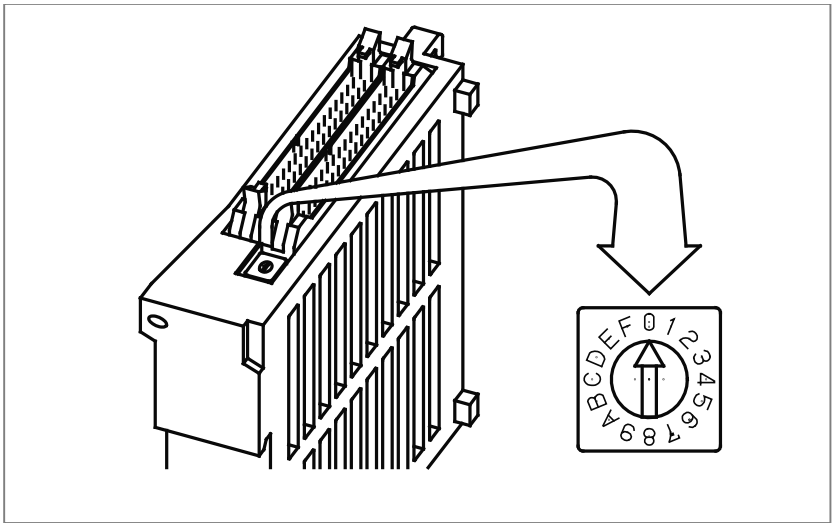

The setting position of the control (rotary switch) has the following meaning.

Setting position	Meaning of setting
0	This is the standard setting. The rotary switch is factory-set to this position. This setting is used when no expansion module is omitted.
1	Set the rotary switch on an expansion module to this position when the preceding expansion module is omitted.
2	Set the rotary switch on an expansion module to this position when the preceding two expansion modules are omitted.
3 to F	This setting is prohibited.

© MyFANUC B5B0D8428C0144A78A5F4CA87F2C262E

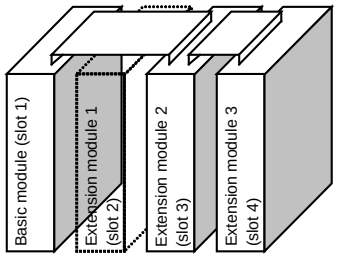

- (When extension module 1 (slot 2) is omitted)
  On extension module 2, set the rotary switch to setting position 1. On extension module 3, keep the rotary switch set to setting position 0.

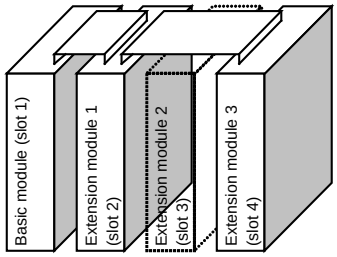

- (When extension module 2 (slot 3) is omitted)
  On extension module 3, set the rotary switch to setting position 1. On extension module 1, keep the rotary switch set to setting position 0.

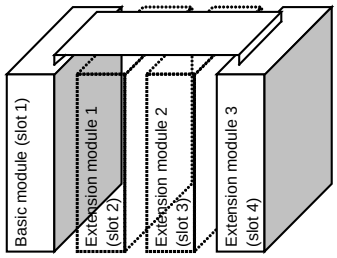

- (When extension module 1 (slot 2) and extension module 2 (slot 3) is omitted)
  On extension module 3, set the rotary switch to setting position 2.

NOTE

Extension module A is fitted with an additional rotary switch as other types of modules are modified. However, extension module A is always mounted at the location of extension module 1, so that its factory setting need not be changed.

© MyFANUC B5B0D8428C0144A78A5F4CA87F2C262E

8.2.12 Connection of the Grounding Terminal of the Module

Connect the 0V line in the basic module to the cabinet's metal plate that is connected to ground or signal ground bar nearby via the protective ground terminal. About Multipoint grounding or Single-point grounding, refer to Item 3.4.1
Use fasten terminal for series 250 as cable terminal.

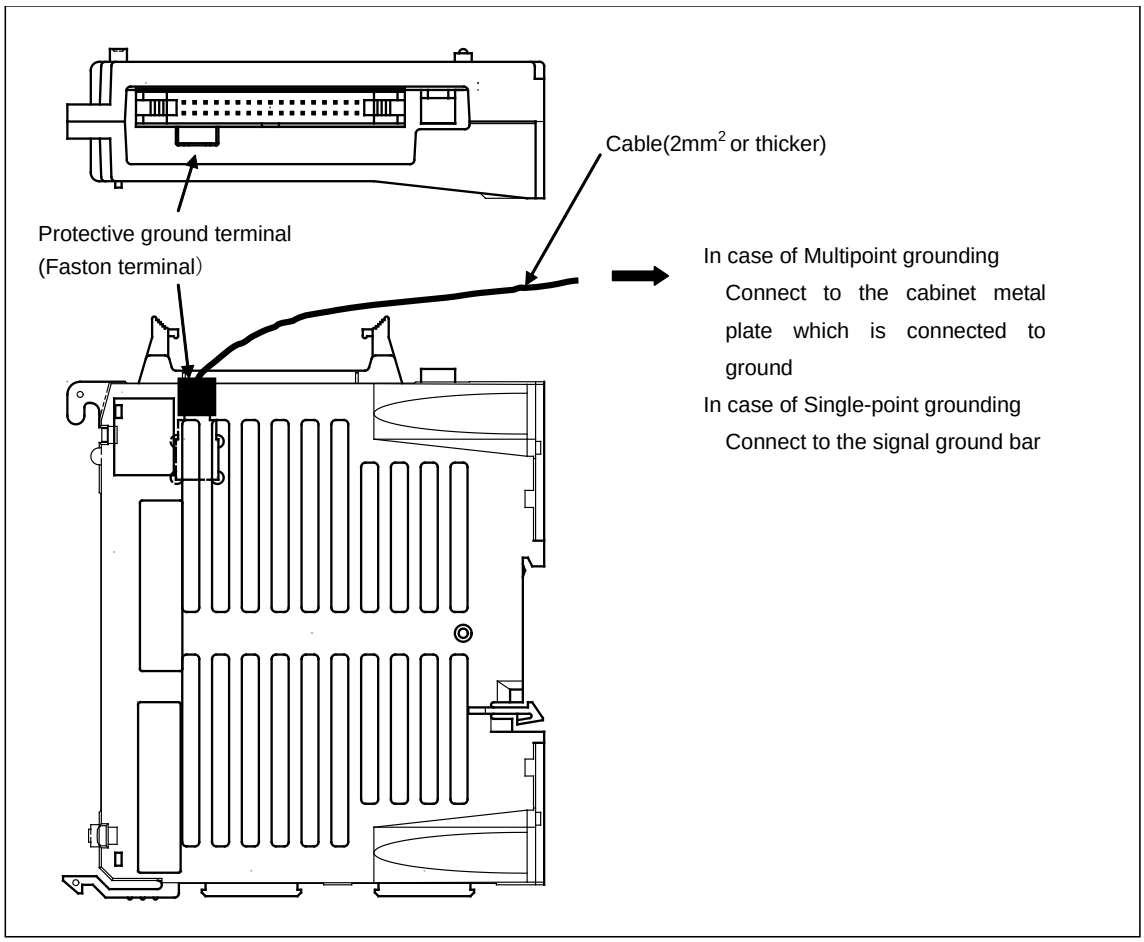

© MyFANUC B5B0D8428C0144A78A5F4CA87F2C262E

8.2.13 Terminal Conversion Adapter

TERMINAL CONVERSION ADAPTER converts method of cable connection of I/O MODULE FOR CONNECTOR PANEL to the terminal block connection from the connector connection.
TERMINAL CONVERSION ADAPTER has TA1 for Basic module and Extension module A, B, and TA2 for Extension module C, and TA3 for Extension module D, and has the following features:

- LED for state indication of +24V power supply is provided. (TA1)
- LED for state indication is provided for each I/O signal. (TA1, TA2)
- Since the terminal block for distribute signals and PCB for connector panel is not required, space saving is possible.
- Wiring time can be reduced compared to the screw type terminal block, because the push-in type terminal block is used.
- Possible to replace the I/O MODULE FOR CONNECTOR PANEL without removing wire.
- Even if user requests the terminal block connection, it is possible to use the I/O MODULE FOR CONNECTOR PANEL which space-saving.

I/O MODULE FOR CONNECTOR PANEL

TERMINAL CONVERSION ADAPTER

© MyFANUC B5B0D8428C0144A78A5F4CA87F2C262E

8.2.13.1 Connection diagram

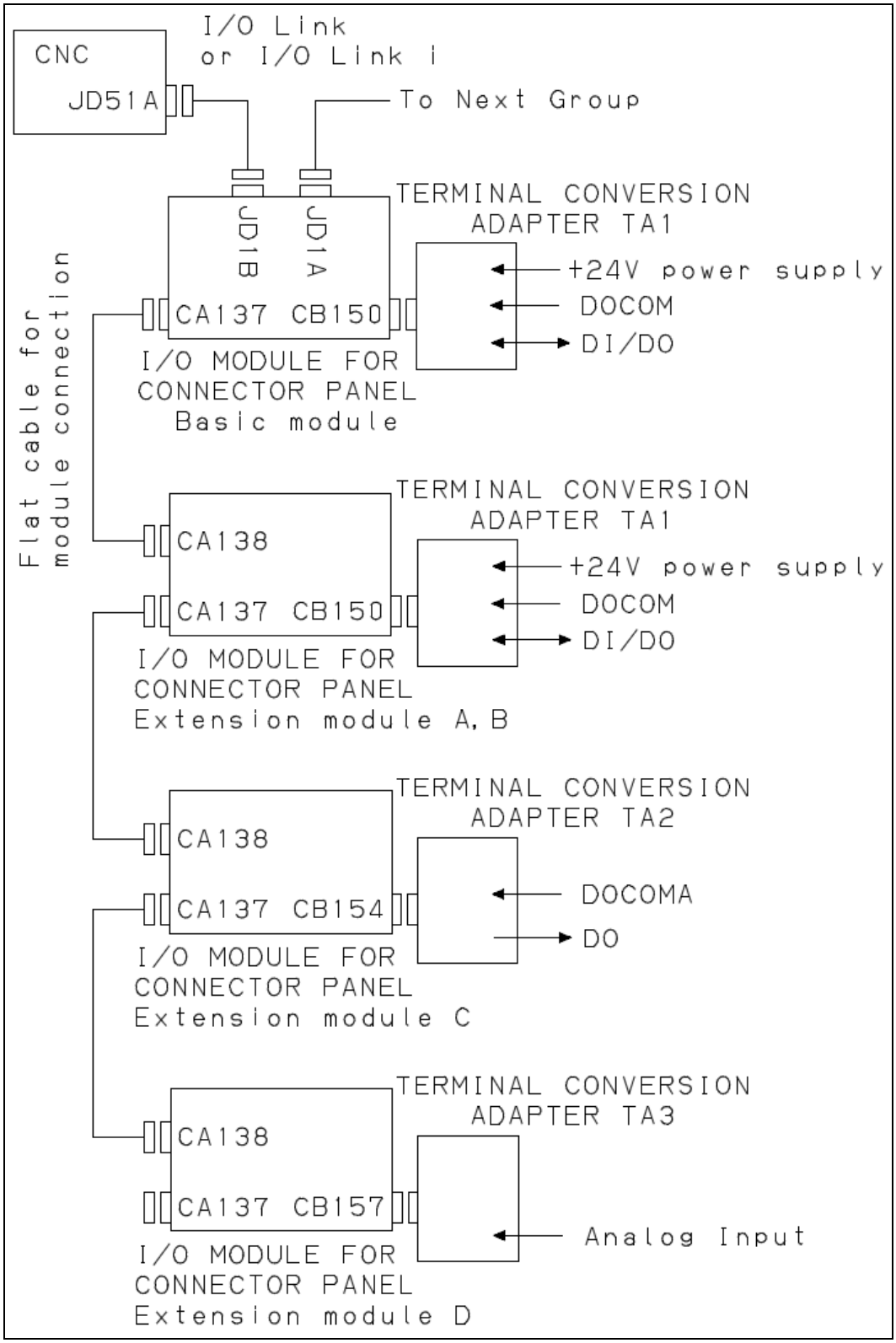

© MyFANUC B5B0D8428C0144A78A5F4CA87F2C262E

8.2.13.2 Component names

TERMINAL CONVERSION ADAPTER TA1

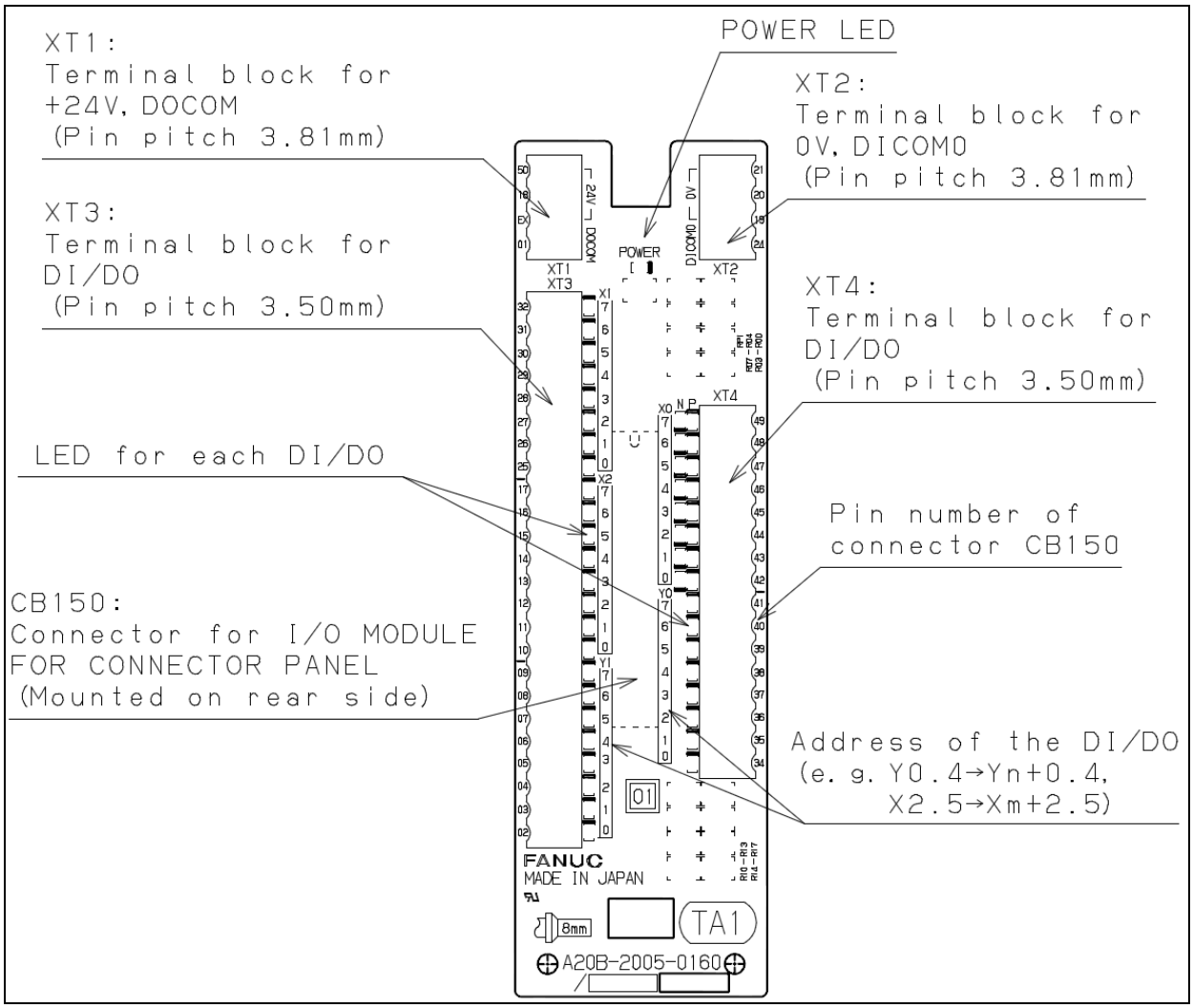

LED indication

Item	Function
Power LED	Lights when the +24V power supply is turned on.
LED for Xm+0.0 to Xm+0.7	Xm+0.0 to Xm+0.7 are DI that common voltage can be selected. If DICOM0 is connected to 0V, LED of P column indicate the state of Xm+0.0 to Xm+0.7. If DICOM0 is connected to 24V, LED of N column indicate the state of Xm+0.0 to Xm+0.7. When DI is ON, corresponding LED will light.
LED for other DI/DO	When DI/DO is ON, corresponding LED will light.

© MyFANUC B5B0D8428C0144A78A5F4CA87F2C262E

TERMINAL CONVERSION ADAPTER TA2

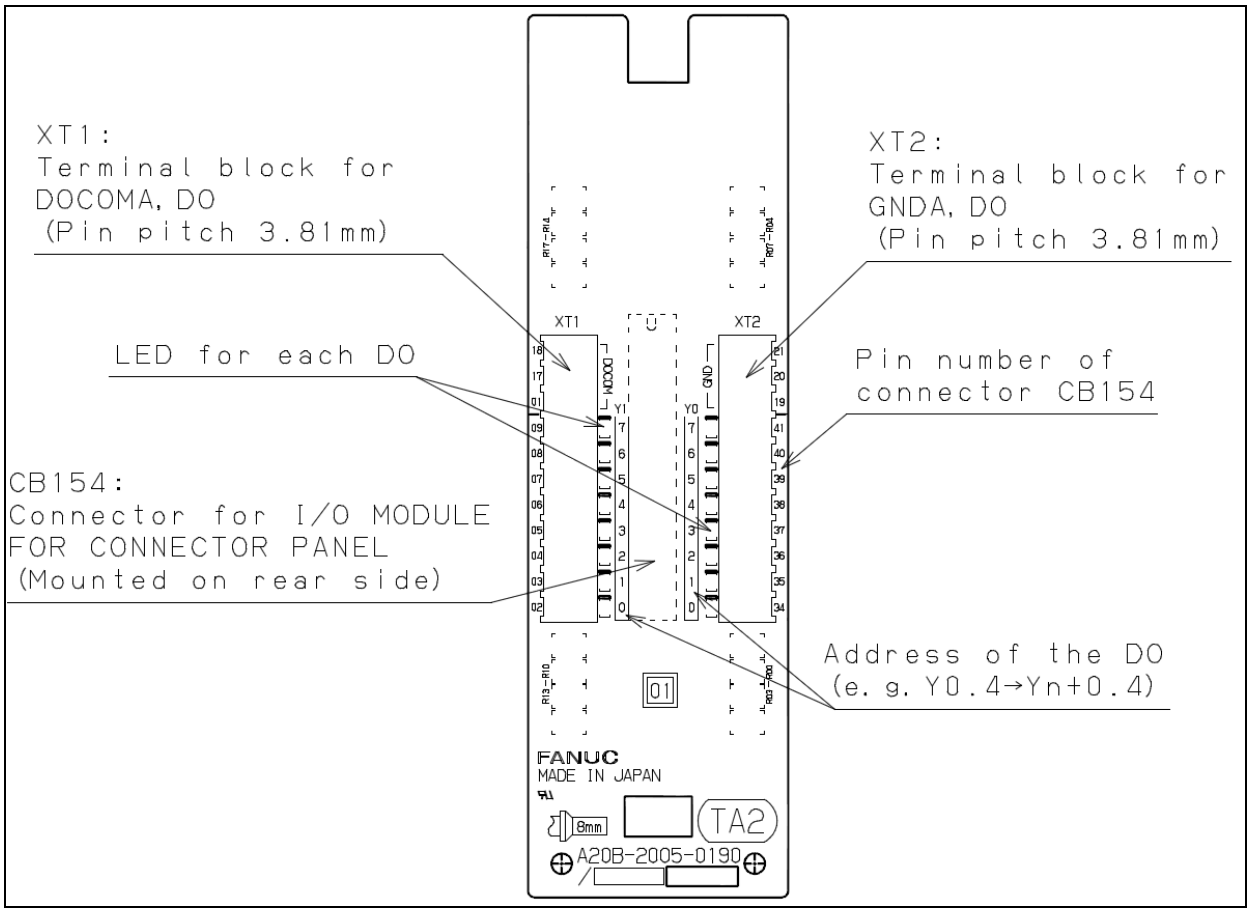

LED indication

Item	Function
LED for each DO	When DO is ON, corresponding LED will light.

© MyFANUC B5B0D8428C0144A78A5F4CA87F2C262E

TERMINAL CONVERSION ADAPTER TA3

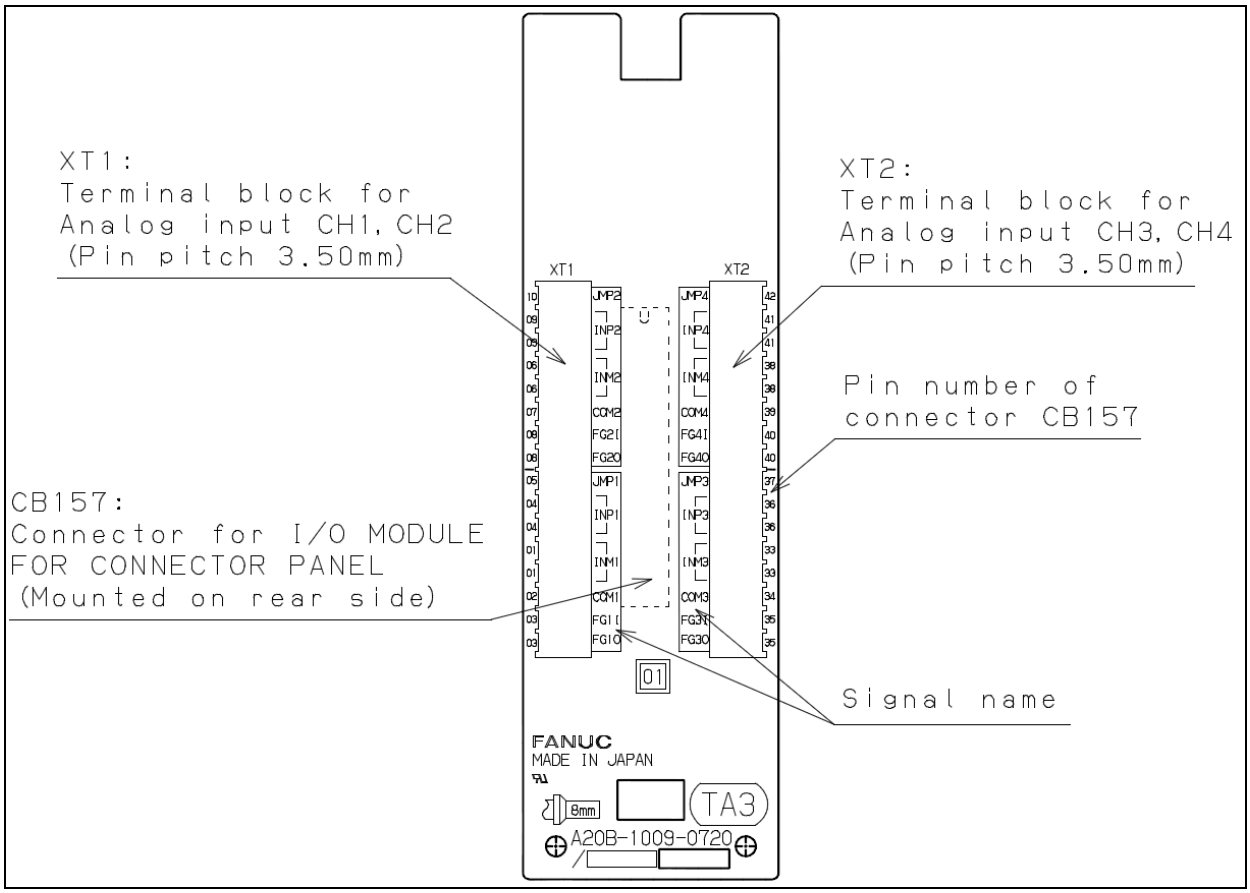

© MyFANUC B5B0D8428C0144A78A5F4CA87F2C262E

8.2.13.3 External view and dimensions

Dimensions when connect to the I/O MODULE FOR CONNECTOR PANEL is as follows.

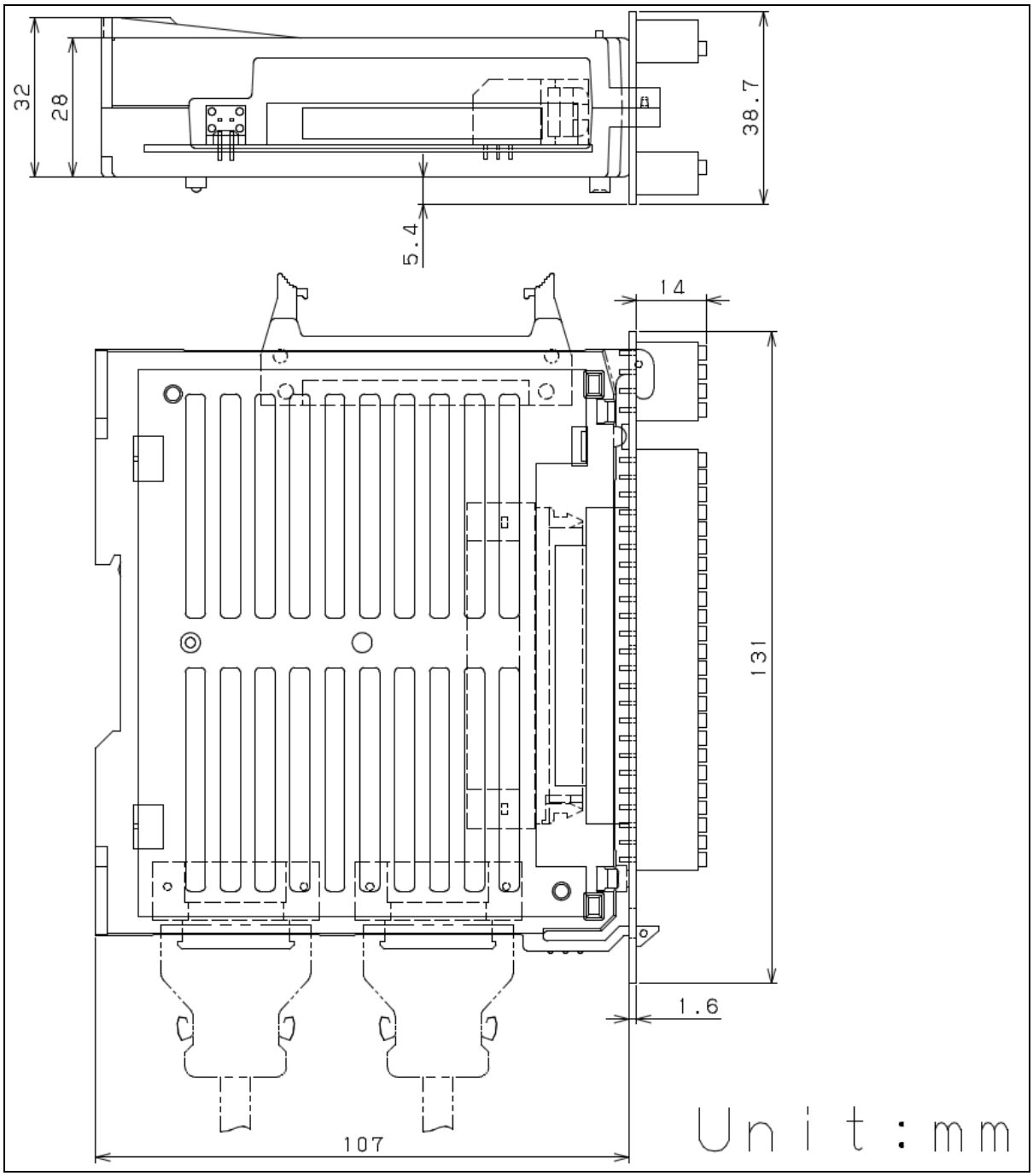

NOTE

The width of the adapter is wider than the width of I/O MODULE FOR CONNECTOR PANEL.
If the adapter is used, cable length of Flat cable for module connection needs 25mm or more.

© MyFANUC B5B0D8428C0144A78A5F4CA87F2C262E

8.2.13.4 Installation

Method of install to I/O MODULE FOR CONNECTOR PANEL is as follows.

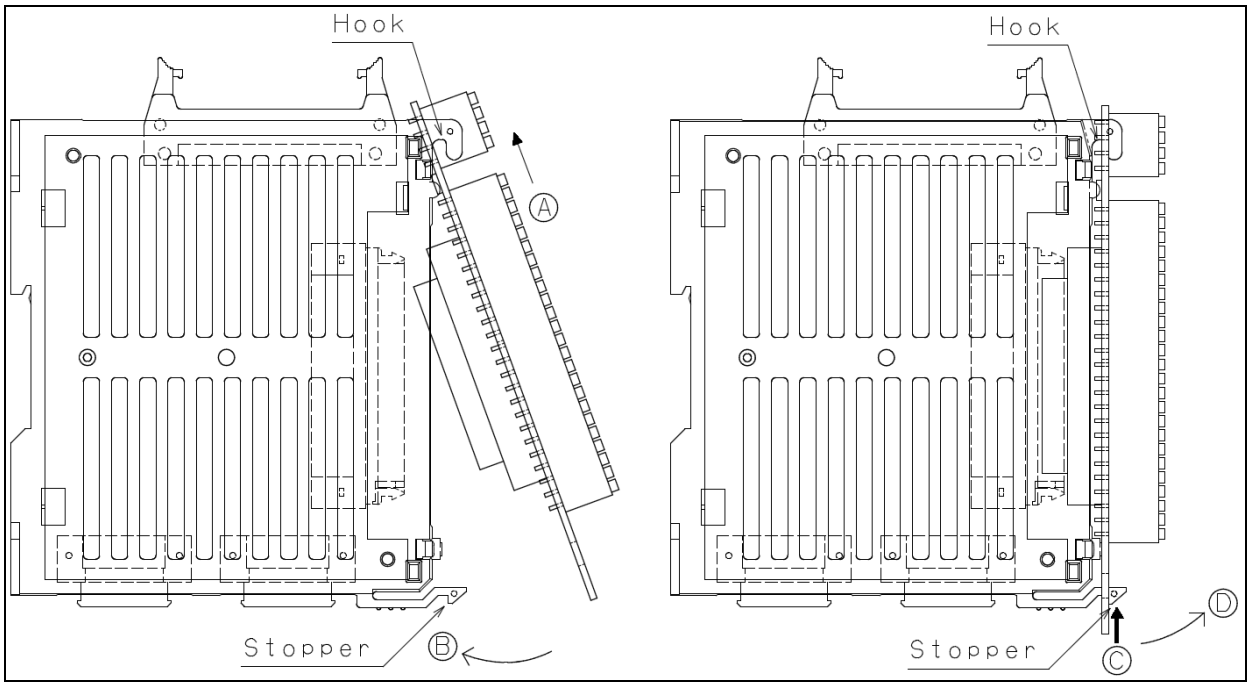

Mounting the ADAPTER

1 As “A”, Hook the hollow of TERMINAL CONVERSION ADAPTER to the hook of I/O MODULE FOR CONNECTOR PANEL.
2 Using the hook as fulcrum, push the ADAPTER in the direction of “B”, and attach the connector on the ADAPTER to the connector on the I/O MODULE.
3 Push the ADAPTER until it clicks into place.

Dismounting the ADAPTER

1 Press the stopper “C” upward.
2 Using the hook as a fulcrum, pull the lower part of the ADAPTER in the direction of “D”.

NOTE

Leads (XT1, XT2, XT3, XT4) of the terminal block are exposed.
Be careful to avoid injury.

© MyFANUC B5B0D8428C0144A78A5F4CA87F2C262E

8.2.13.5 Cable connection to the terminal block

Applicable wire

The wire that cross-sectional area is from 0.3mm^2(AWG22) to 0.75mm^2(AWG18) can be connected to the terminal block of the ADAPTER.
Ferrules that have the size of following are suitable for connect to the terminal block ofthe ADAPTER.

Electric wire size

Ferrule terminal

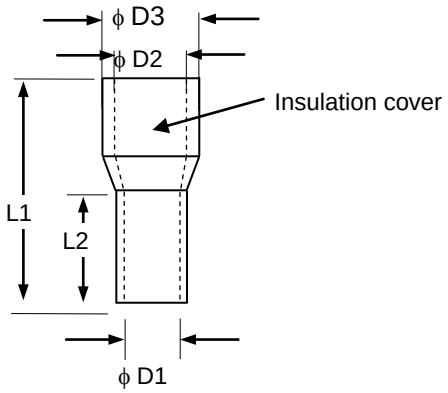

The dimensions indicated below are based on the products of Weidmuller Co.,Ltd.

Cross sectional area of electric wire (mm^2)	AWG	Electric wire sheath stripped length (mm)	Overall length L1(mm)	Length of metallic part L2(mm)	Inner diameter of conductor D1(mm)	Inner diameter of sheath D2(mm)	Outer diameter of sheath D3(mm)
0.3	22	10	14	8	0.8	2	2.5
0.5	20	10	14	8	1	2.6	3.1
0.75	18	10	14	8	1.2	2.8	3.3

Cable connection to the terminal block

Connect cable

Insert the cable with ferrule into the terminal block.

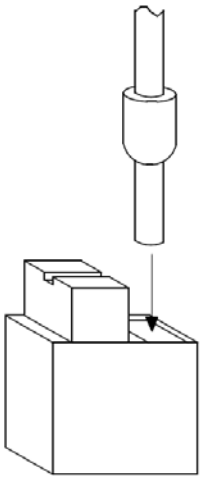

Disconnect cable

While pushing the button at the side of the terminal insertion hole, remove the cable.

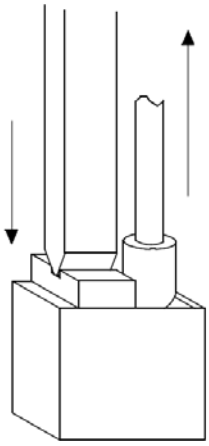

© MyFANUC B5B0D8428C0144A78A5F4CA87F2C262E

Attention of cable connection to the terminal block

Please observe the following precautions when connecting to the terminal block.

1 Use a ferrule terminal from the viewpoint of long-term reliability.

2 In case of the shape of cross section is rectangle, please confirm that the finished ferrule size is less than the opening. Please take care to the orientation of the ferrule when insert to the terminal, so that it does not interfere with the opening.
If the size of ferrule is larger than the opening, the terminal might be damaged.

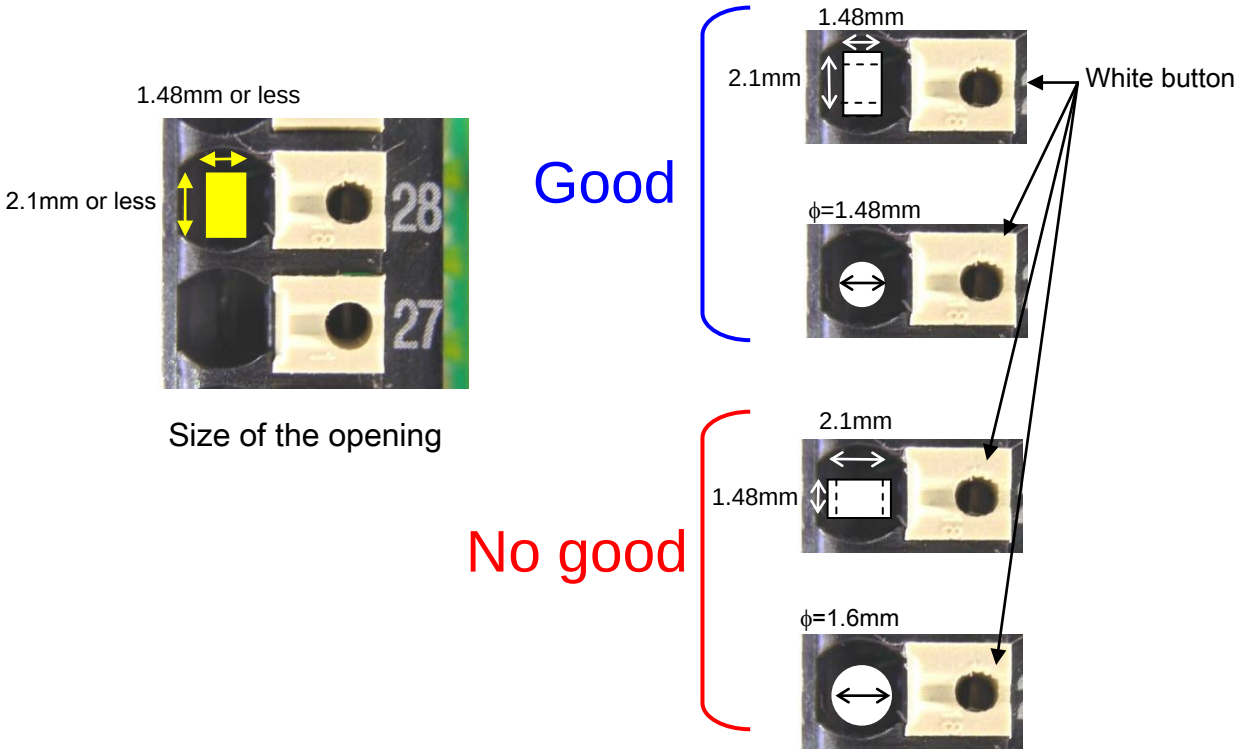

3 Use a ferrule terminal whose length of metallic part L2 (refer to "**Applicable wire**") is 8 to 10 mm. If the metallic part of the used ferrule terminal is more than 10 mm long, the ferrule terminal protrudes much from the terminal block. As a result, the ferrule terminal may tilt, put more load than necessary on the pushbutton, and damage the terminal block.

4 The outer diameter of sleeve (D3, refer to the figure in "**Applicable wire**") of the ferrule should be smaller than pin pitch. If larger ferrule is used, the sleeves interfere with each other. This might cause the damage to the terminal block.

Pin pitch of the terminal block is as follows.

ADAPTER	Terminal block	Pin pitch
TA1	XT1, XT2	3.81mm
	XT3, XT4	3.50mm
TA2	XT1, XT2	3.81mm
TA3	XT1, XT2	3.50mm

5 Recommended crimping tool for the ferrule is follows.
Manufacturer: Weidmüller
Type: PZ 6/5 Order No.901146
Type: PZ 6roto Order No.901435

© MyFANUC B5B0D8428C0144A78A5F4CA87F2C262E

8.2.13.6 Connection

- Connection of TERMINAL CONVERSION ADAPTER TA1

TERMINAL CONVERSION ADAPTER TA1 distributes the signals of the connector CB150 of I/O MODULE FOR CONNECTOR PANEL Basic module and Extension module A, B to the terminal block XT1, XT2, XT3 and XT4

Pin number of the terminal block XT1, XT2, XT3 and XT4 is corresponding to the pin number of the connector CB150. (NOTE)

XT1

50	+24V
18	+24V
EX	+24V
01	DOCOM

XT2

21	0V
20	0V
19	0V
24	DICOM0

XT3

32	Xm+1.7
31	Xm+1.6
30	Xm+1.5
29	Xm+1.4
28	Xm+1.3
27	Xm+1.2
26	Xm+1.1
25	Xm+1.0
17	Xm+2.7
16	Xm+2.6
15	Xm+2.5
14	Xm+2.4
13	Xm+2.3
12	Xm+2.2
11	Xm+2.1
10	Xm+2.0
09	Yn+1.7
08	Yn+1.6
07	Yn+1.5
06	Yn+1.4
05	Yn+1.3
04	Yn+1.2
03	Yn+1.1
02	Yn+1.0

XT4

49	Xm+0.7
48	Xm+0.6
47	Xm+0.5
46	Xm+0.4
45	Xm+0.3
44	Xm+0.2
43	Xm+0.1
42	Xm+0.0
41	Yn+0.7
40	Yn+0.6
39	Yn+0.5
38	Yn+0.4
37	Yn+0.3
36	Yn+0.2
35	Yn+0.1
34	Yn+0.0

© MyFANUC B5B0D8428C0144A78A5F4CA87F2C262E

NOTE

- 24V pin is assigned at two-terminals (18pin and 50pin) in the connector CB150, but assigned at three-terminals (18pin, 50pin and EXpin) in the terminal block XT1.
  18pin, 50pin and EXpin of the terminal block XT1 are connected to 18pin and 50pin of the connector CB150 in TERMINAL CONVERSION ADAPTER TA1.
- DOCOM pin is assigned at two-terminals (01pin and 33pin) in the connector CB150, but assigned at one-terminal (01pin) in the terminal block XT1.
  01pin of the terminal block XT1 is connected to 01pin and 33pin of the connector CB150 in TERMINAL CONVERSION ADAPTER TA1.
- 0V pin is assigned at five-terminals (19-23pin) in the connector CB150, but assigned at three-terminal (19-21pin) in the terminal block XT2.
  19-21pin of the terminal block XT2 are connected to 19-23pin of the connector CB150 in TERMINAL CONVERSION ADAPTER TA1.

NOTE

- As shown in the following figure, it is possible to branch external 24V to I/O MODULE FOR CONNECTOR PANEL Basic module or Extension module A, B.
  (It is not possible to branch to Extension module C, D.
  Possible branch number is up to one, cannot branch two or more.)
  In addition, it is also possible to take out 24V for DOCOM from EX pin.

  Sum of the current consumed in the I/O MODULE FOR CONNECTOR PANEL, and consumed in the branch-destination module, and consumed as DOCOM, must be supplied from external power supply. To connect to external power supply, please use wire that can tolerate the above current.

  0V that is connected to terminal block XT2 is same as 24V.

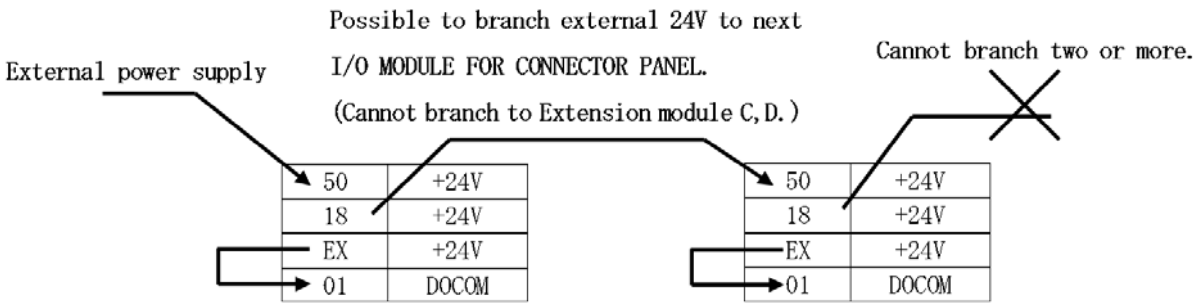

© MyFANUC B5B0D8428C0144A78A5F4CA87F2C262E

- Connection of TERMINAL CONVERSION ADAPTER TA2

  TERMINAL CONVERSION ADAPTER TA2 distributes the signals of the connector CB154 of I/O MODULE FOR CONNECTOR PANEL Extension module C to the terminal block XT1, XT2.

  Pin number of the terminal block XT1, XT2 is corresponding to the pin number of the connector CB154. (NOTE)

XT1

18	DOCOMA
17	DOCOMA
01	DOCOMA
09	Yn+1.7
08	Yn+1.6
07	Yn+1.5
06	Yn+1.4
05	Yn+1.3
04	Yn+1.2
03	Yn+1.1
02	Yn+1.0

XT2

21	GNDA
20	GNDA
19	GNDA
41	Yn+0.7
40	Yn+0.6
39	Yn+0.5
38	Yn+0.4
37	Yn+0.3
36	Yn+0.2
35	Yn+0.1
34	Yn+0.0

NOTE

- DOCOMA pin is assigned at six-terminals (01,17,18,33,49,50pin) in the connector CB154, but assigned at three-terminal (01,17,18pin) in the terminal block XT1.
  01,17,18pin of the terminal block XT1 is connected to 01,17,18,33,49,50pin of the connector CB154 in TERMINAL CONVERSION ADAPTER TA2.
- GNDA pin is assigned at five-terminals (19-23pin) in the connector CB154, but assigned at three-terminal (19-21pin) in the terminal block XT2.
  19-21pin of the terminal block XT2 are connected to 19-23pin of the connector CB154 in TERMINAL CONVERSION ADAPTER TA2.
- Be sure to connect all DOCOMA pins.
  Also be sure to connect all GNDA pins.

© MyFANUC B5B0D8428C0144A78A5F4CA87F2C262E

- Conncetion of TERMINAL CONVERSION ADAPTER TA3

TERMINAL CONVERSION ADAPTER TA3 distributes the signals of the connector CB157 of I/O MODULE FOR CONNECTOR PANEL Extension module D to the terminal block XT1, XT2.

Pin number of the terminal block XT1, XT2 is corresponding to the pin number of the connector CB157. (NOTE)

XT1

10	JMP2
09	INP2
09	INP2
06	INM2
06	INM2
07	COM2
08	FG2I
08	FG2O
05	JMP1
04	INP1
04	INP1
01	INM1
01	INM1
02	COM1
03	FG1I
03	FG1O

XT2

42	JMP4
41	INP4
41	INP4
38	INM4
38	INM4
39	COM4
40	FG4I
40	FG4O
37	JMP3
36	INP3
36	INP3
33	INM3
33	INM3
34	COM3
35	FG3I
35	FG3O

© MyFANUC B5B0D8428C0144A78A5F4CA87F2C262E

Example of wiring (n=1,2,3,4)

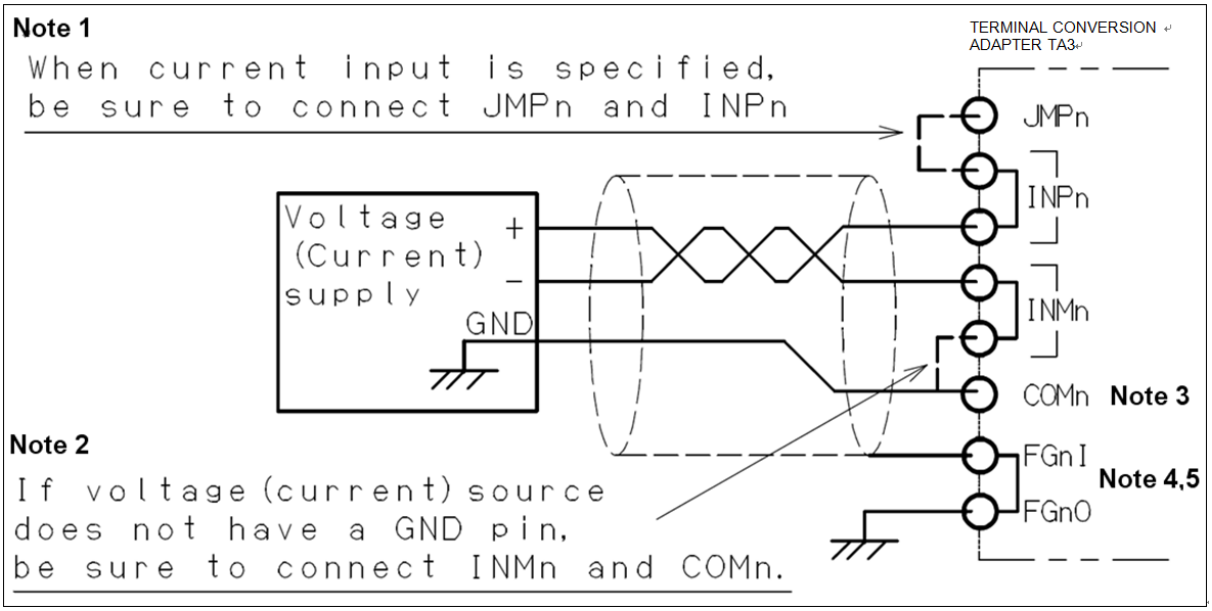

NOTE

1 Because when current input is specified, it is necessary to connect JMPn and INPn, there are two-INPn terminals in the terminal block XT1, XT2.

2 Because if voltage(current)source does not have a GND pin, it is necessary to connect INMn and COMn in order to fix the reference voltage, there are two-INMn terminals in the terminal block XT1, XT2.

3 COMn of each channel are connected to common analog GND in module through the adapter.

4 Connect the shield of the cable to FGnI, and be sure to ground at FGnO. Because FGnI of each channel is not connected each other, and FGnO of each channel is also not connected each other, be sure to ground at each channel. However, the shield may be directly connected to frame ground by using a cable clamp without using FGnI and FGnO.

5 However, both ends grounding or both ends opening may be more effective depending on the environment where the unit is used. Select one of the grounding types, whichever is appropriate, depending on what the ambient noise is like.

© MyFANUC B5B0D8428C0144A78A5F4CA87F2C262E

8.3 CONNECTION OF I/O MODULE FOR OPERATOR'S PANEL (FOR MATRIX INPUT)

8.3.1 Overall Connection Diagram

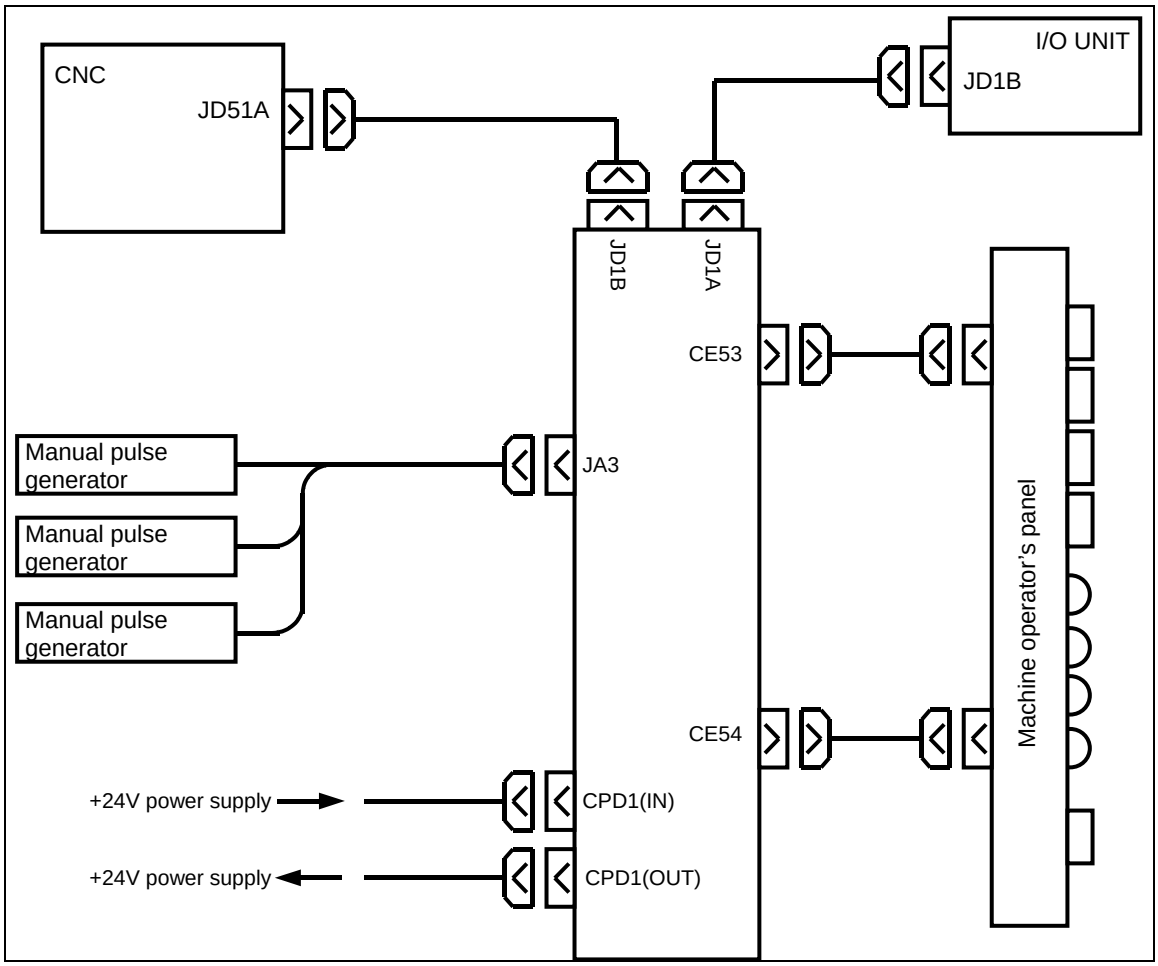

NOTE
The following screw type connectors, newly incorporated into the main board of control unit, cannot be used to connect the I/O Link *i* or manual pulse generator.

Connectors that cannot be used on the cable side

	Specification	Manufacturer
Connector case	FI-20-CV7	Hirose Electric Co., Ltd.
Connector case and connector	FI30-20S-CV7	Hirose Electric Co., Ltd.

© MyFANUC B5B0D8428C0144A78A5F4CA87F2C262E

8.3.2 Power Connection

Provide the CPD1 (IN) connector, shown below, with the power necessary for printed circuit board operation and that for DI operation. To facilitate power division, the power is output to CPD1 (OUT) exactly as it is input from CPD1 (IN). When power division is required, use CPD1 (OUT). Up to 1.0 A can be supplied by branching.

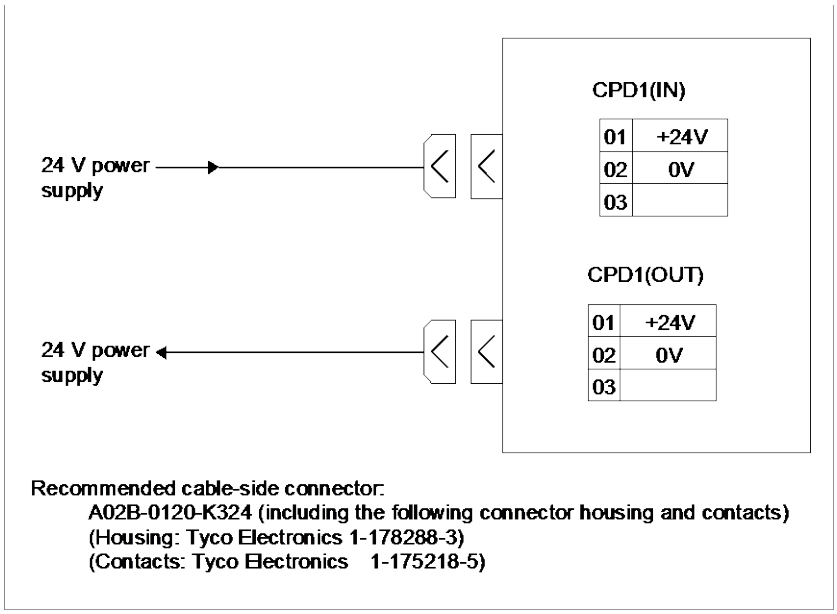

NOTE

The specification of the power supply connector CPD1 (IN) is the same as that for CPD1 (OUT). There are no indications on the printed circuit board to distinguish between the IN and OUT connectors.

© MyFANUC B5B0D8428C0144A78A5F4CA87F2C262E

8.3.3 DI/DO Connector Pin Arrangement

CE53

	A	B
01	0V	0V
02	N.C.	+24V
03	Xm+0.0	Xm+0.1
04	Xm+0.2	Xm+0.3
05	Xm+0.4	Xm+0.5
06	Xm+0.6	Xm+0.7
07	Yn+0.0	Yn+0.1
08	Yn+0.2	Yn+0.3
09	Yn+0.4	Yn+0.5
10	Yn+0.6	Yn+0.7
11	Yn+1.0	Yn+1.1
12	Yn+1.2	Yn+1.3
13	Yn+1.4	Yn+1.5
14	Yn+1.6	Yn+1.7
15	Yn+2.0	Yn+2.1
16	Yn+2.2	Yn+2.3
17	Yn+2.4	Yn+2.5
18	Yn+2.6	Yn+2.7
19	KYD0	KYD1
20	KYD2	KYD3
21	KYD4	KYD5
22	KYD6	KYD7
23	KCM1	KCM2
24	KCM3	KCM4
25	DOCOM	DOCOM

CE54

	A	B
01	0V	0V
02	COM1	+24V
03	Xm+1.0	Xm+1.1
04	Xm+1.2	Xm+1.3
05	Xm+1.4	Xm+1.5
06	Xm+1.6	Xm+1.7
07	Yn+3.0	Yn+3.1
08	Yn+3.2	Yn+3.3
09	Yn+3.4	Yn+3.5
10	Yn+3.6	Yn+3.7
11	Yn+4.0	Yn+4.1
12	Yn+4.2	Yn+4.3
13	Yn+4.4	Yn+4.5
14	Yn+4.6	Yn+4.7
15	Yn+5.0	Yn+5.1
16	Yn+5.2	Yn+5.3
17	Yn+5.4	Yn+5.5
18	Yn+5.6	Yn+5.7
19	Yn+6.0	Yn+6.1
20	Yn+6.2	Yn+6.3
21	Yn+6.4	Yn+6.5
22	Yn+6.6	Yn+6.7
23	KCM5	KCM6
24	KCM7	DOCOM
25	DOCOM	DOCOM

Flat cable–side connector specification:
A02B–0120–K342
(HIF3BB–50D–2.54R (Hirose Electric Co., Ltd.))
50 contacts
Cable material specification:
A02B–0120–K886
(61–meter, 50–pin cable
(Hitachi Cable, Ltd. or Oki Electric Cable Co., Ltd.))

⚠ CAUTION
An output DC voltage of +24 V at CE53 (B02) and CE54 (B02) is for DI signals. Do not supply 24 VDC to these pins from the outside.

© MyFANUC B5B0D8428C0144A78A5F4CA87F2C262E

8.3.4 DI (General-purpose Input Signal) Connection

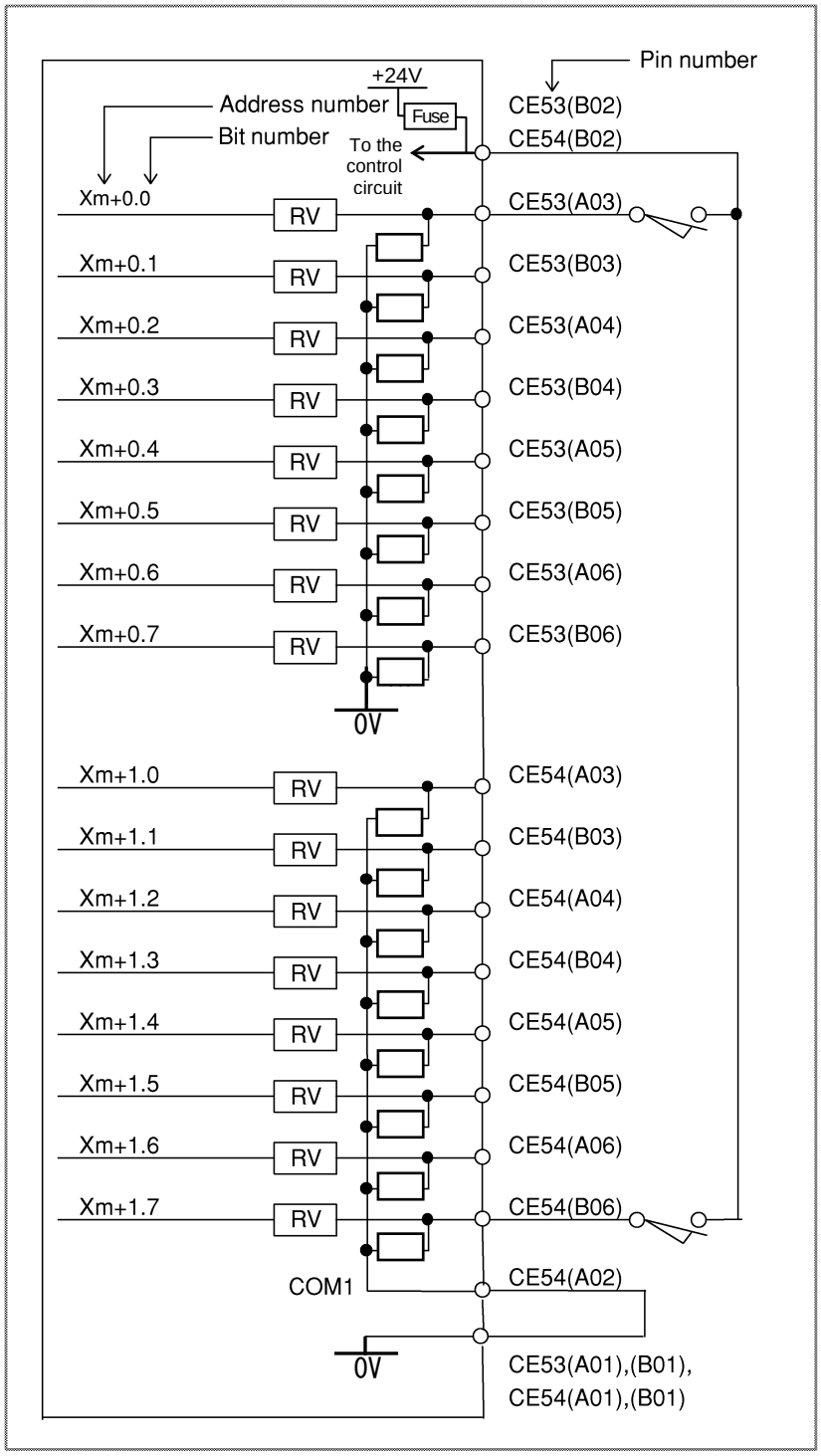

© MyFANUC B5B0D8428C0144A78A5F4CA87F2C262E

NOTE

Xm+1.0 through Xm+1.7 are DI pins for which a common voltage can be selected. That is, by connecting the COM1 CE54 (A02) pin to the +24 V power supply, a DI signal can be input with its logical state reversed. If, however, a cable is connected to ground, it has the same effect as inputting an ON state DI signal. To prevent this from occurring, the connection of the COM1 CE54 (A02) pin to the 0 V power supply is recommended whereever possible. Even in the above case, related input signals may become unstable and an incorrect state could be input if the wiring of COM1 Pin No. CE54 (A02) is disconnected. To avoid this situation, we recommend using the DI of which common voltage is fixed at 24 V, and creating a logic (ladder) that ensures safety if a ground fault or disconnection occurs on a signal line.

For the unconnected pins at the addresses for which the common voltage is fixed (from Xm+0.0 to Xm+0.7), the input is “0”. For the unconnected pins at the addresses for which a common voltage can be selected (from Xm+1.0 to Xm+1.7), the input is “0” when the COM1 CE54 (A02) pin is connected to the 0 V power supply or “1” when it is connected to the +24 V power supply. Connect COM1 when used. When addresses from Xm+1.0 to Xm+1.7 are not used, connect COM1 to the 0 V power supply.

Common voltage for general-purpose DI

Address	Common voltage
Xm	Cannot be selected.
Xm+1	Can externally be selected with COM1.

⚠ **CAUTION**

An output DC voltage of +24 V at CE53 (B02) and CE54 (B02) is for DI signals. Do not supply 24 VDC to these pins from the outside.

© MyFANUC B5B0D8428C0144A78A5F4CA87F2C262E

8.3.5 DI (Matrix Input Signal) Connection

- A maximum of 56 points are provided.

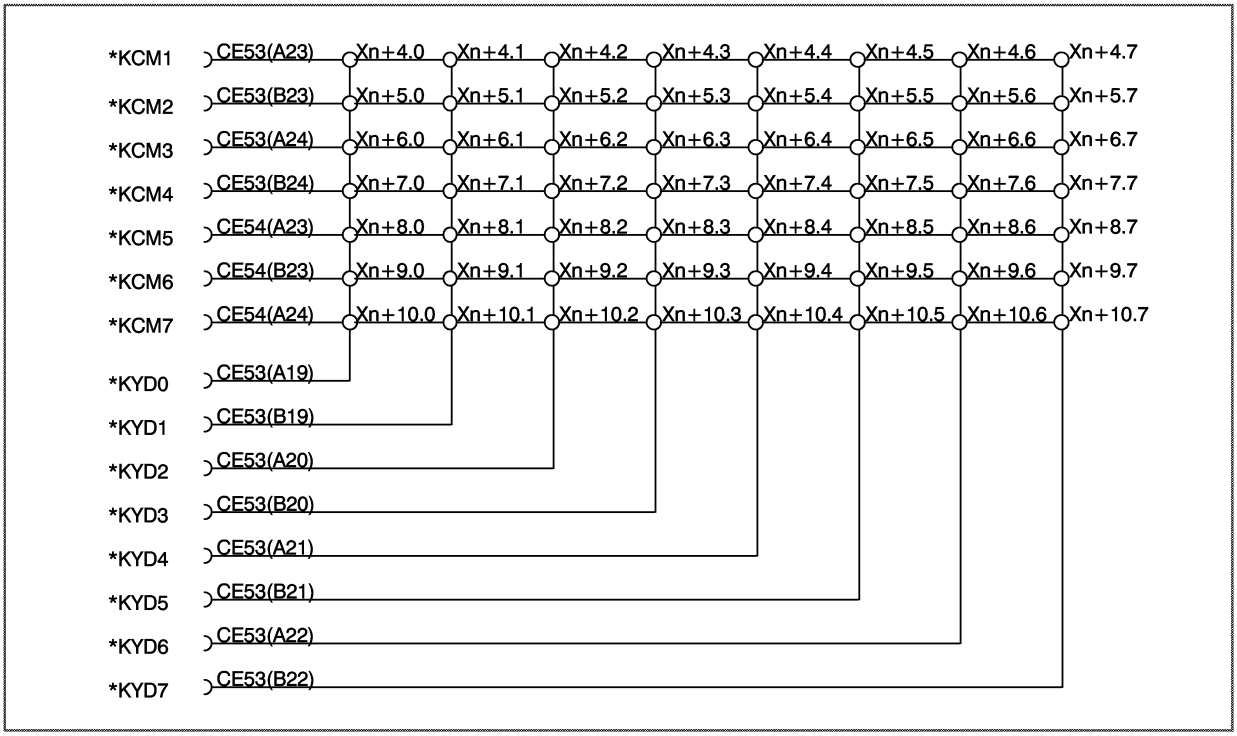

NOTE

Detour prevention diodes must be incorporated for matrix signal input, as shown in the following figure. Otherwise, only two signals can be input at the same time. Inputting three or more signals simultaneously without using detour prevention diodes may result in data input errors.

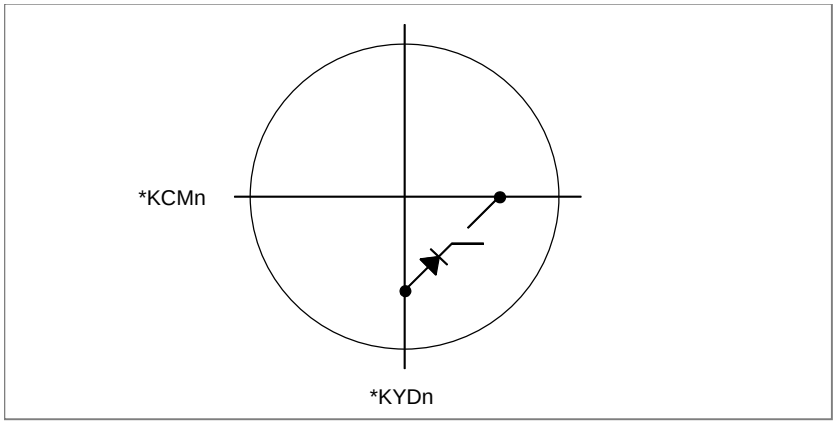

© MyFANUC B5B0D8428C0144A78A5F4CA87F2C262E

8.3.6 DO (Output Signal) Connection

- A maximum of 56 points are provided.

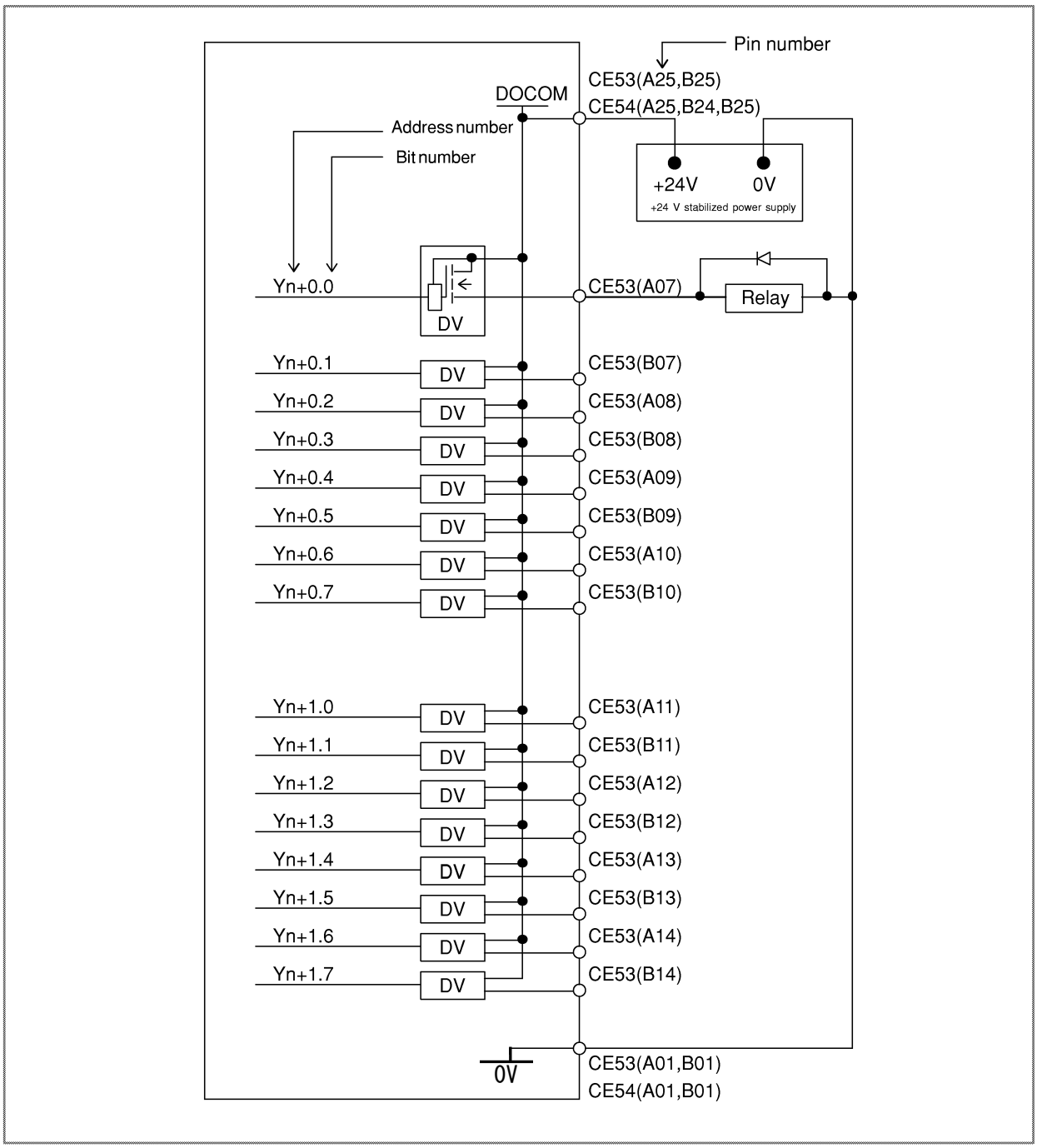

© MyFANUC B5B0D8428C0144A78A5F4CA87F2C262E

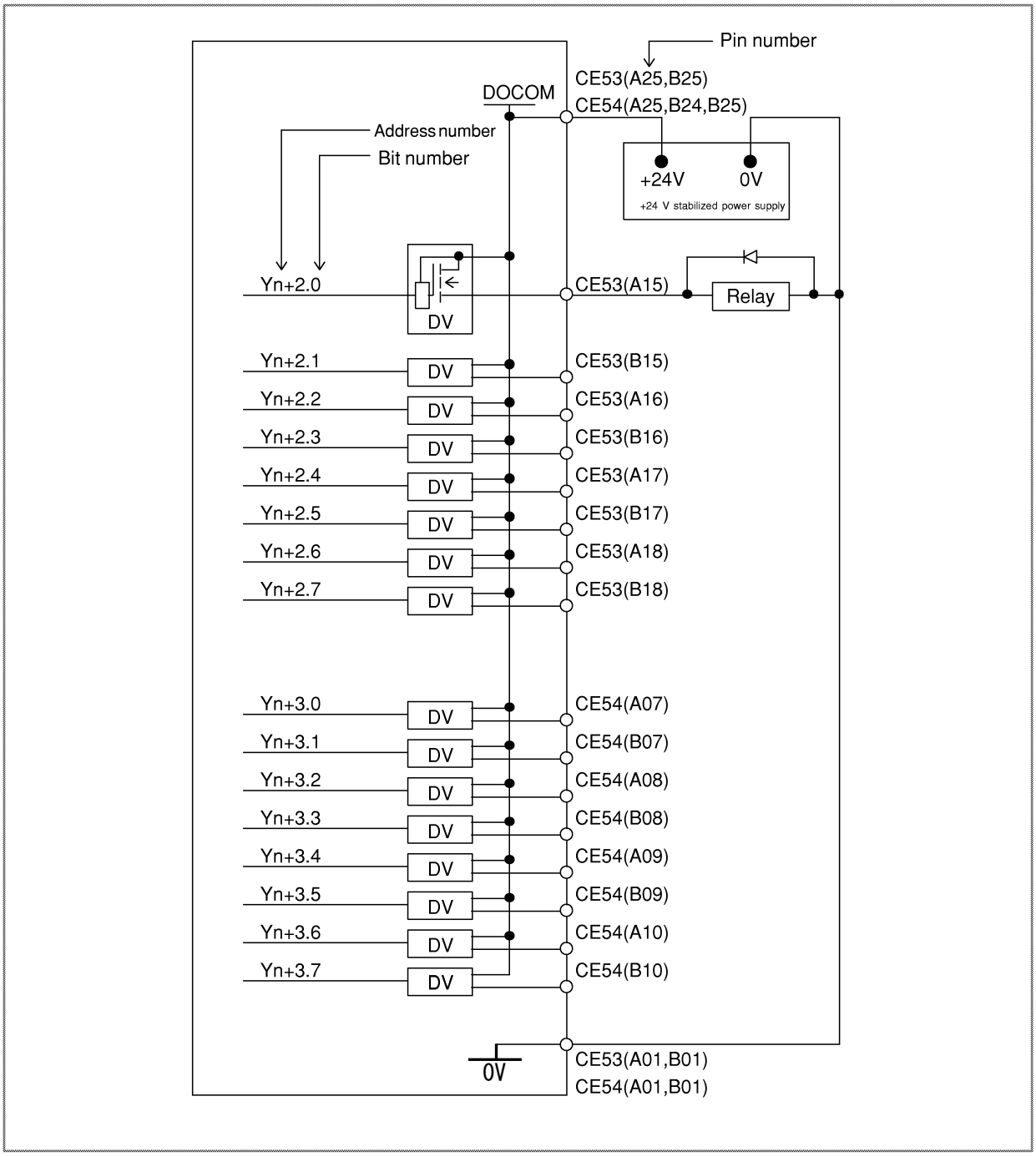

© MyFANUC B5B0D8428C0144A78A5F4CA87F2C262E

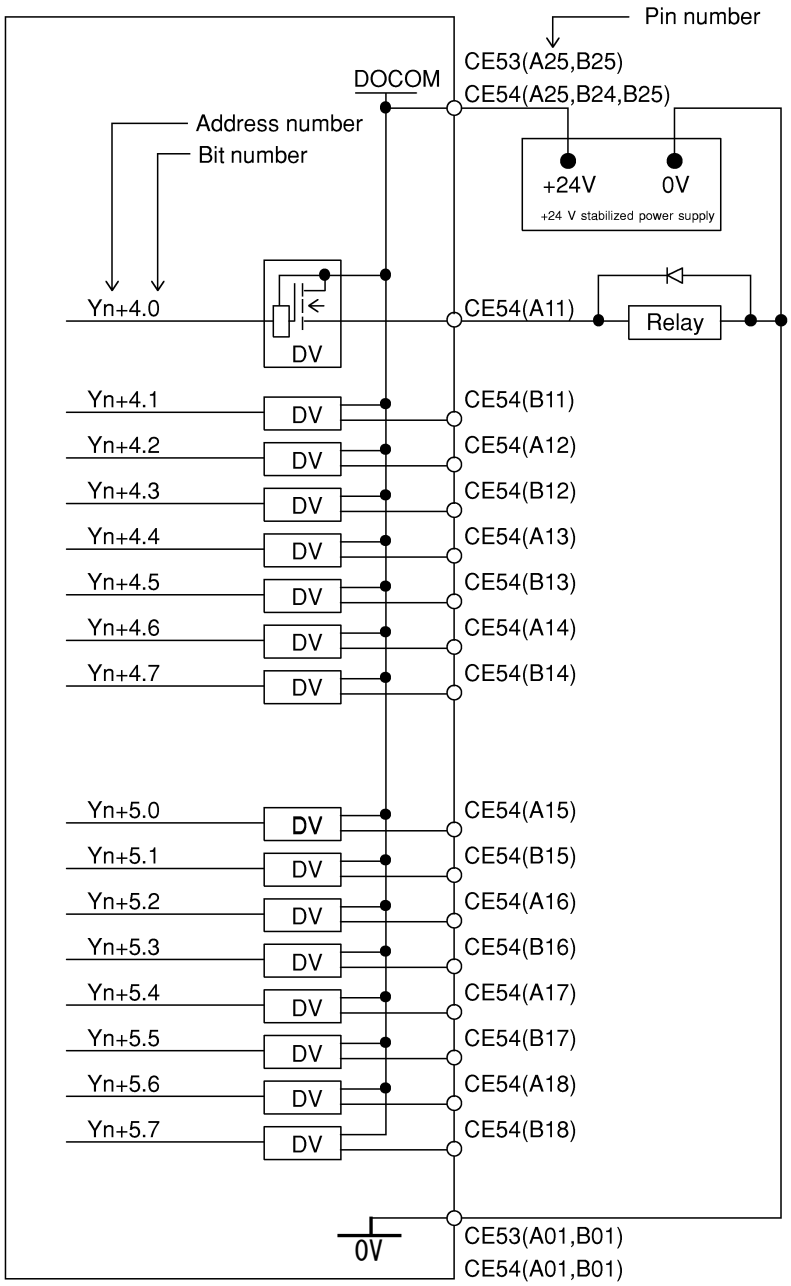

© MyFANUC B5B0D8428C0144A78A5F4CA87F2C262E

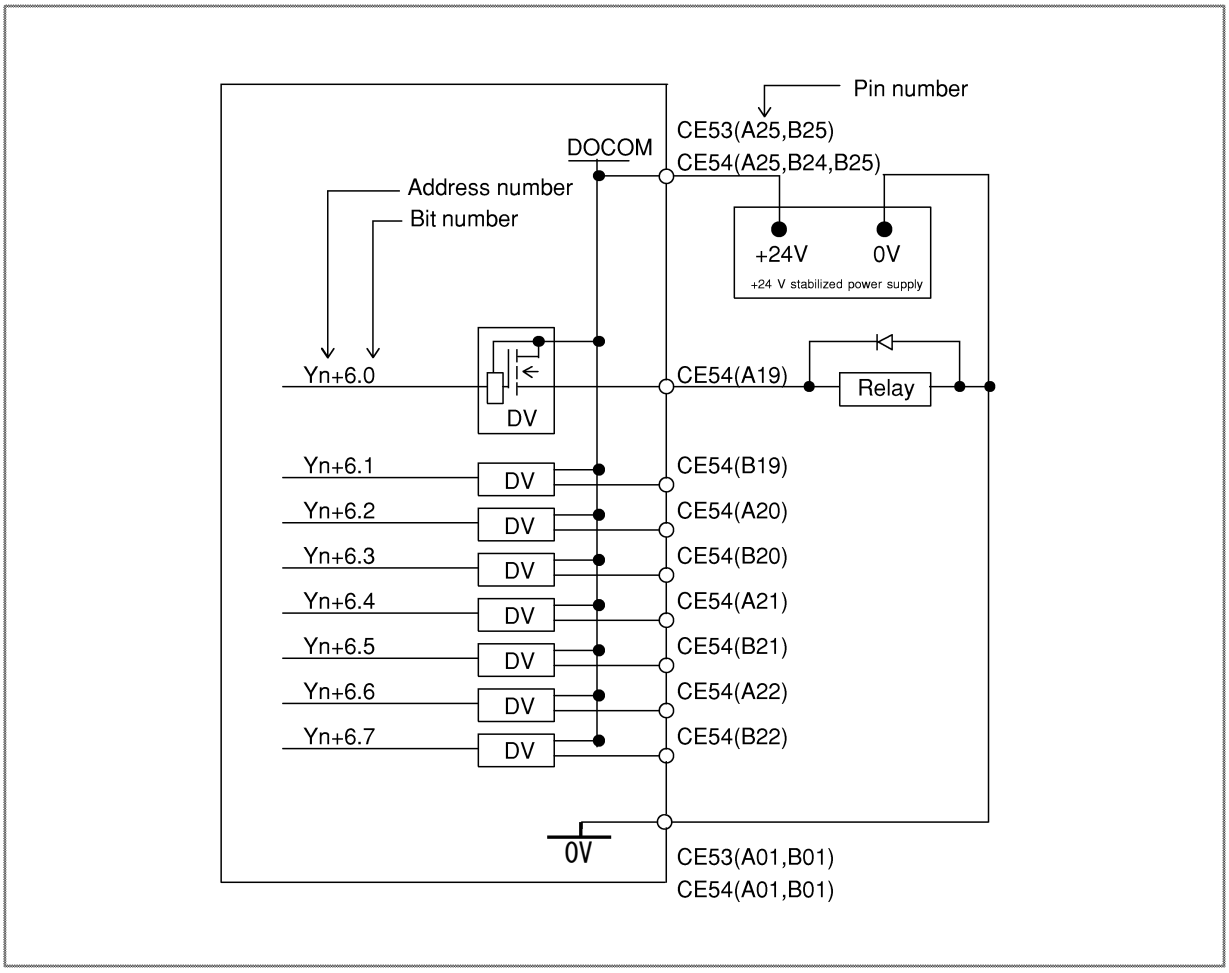

8.3.7 Manual Pulse Generator Connection

For an I/O module for operator's panel, three manual pulse generators can be connected.
For the connection, see Subsection 7.4.1.

© MyFANUC B5B0D8428C0144A78A5F4CA87F2C262E

8.3.8 External View

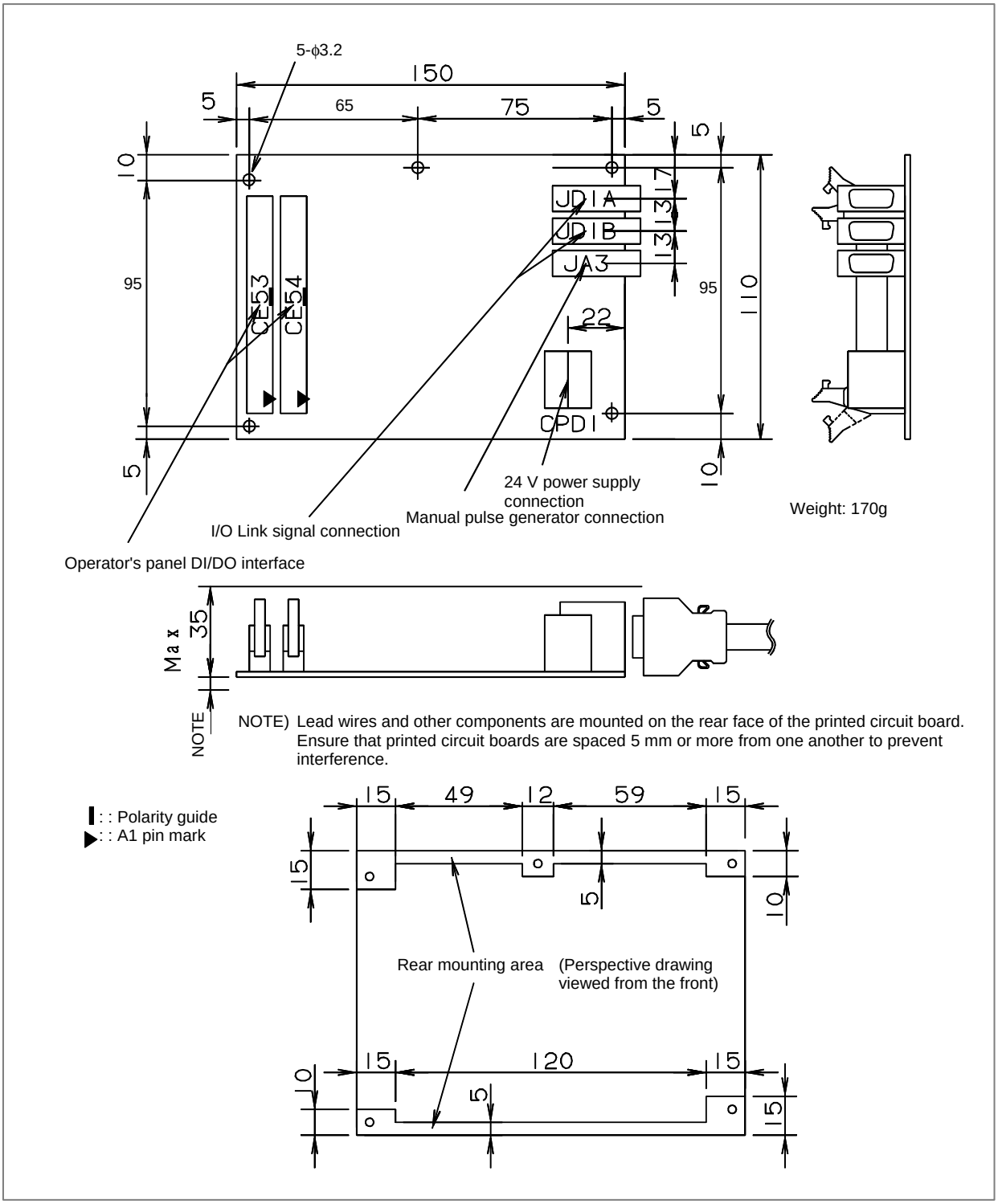

© MyFANUC B5B0D8428C0144A78A5F4CA87F2C262E

8.3.9 Specifications

Installation specifications

Install the I/O module in a fully enclosed cabinet.
For other installation conditions, conform to the CNC installation conditions.

Ordering specifications

Item	Ordering specifications	Remarks
I/O module for operator's panel	A03B-0824-K200	
Fuse (spare parts)	A03B-0815-K001	1A

Module specifications

Item	Specification	Remarks
General-purpose DI	16 points	24-V input
Matrix DI	56 points (8 × 7)	5-V input
DO points	56 points (8 × 7)	24 V source type output
MPG interface	Max. 3 units	

Power supply rating

Module	Supply voltage	Current rating	Remarks
I/O module for operator's panel	24 VDC ±10% supplied from the power supply connector CPD1. The allowance of ±10% should include instantaneous voltage and ripple voltage.	0.35A	The total power consumption of DI points is included. (This is true when all general-purpose DI points are turned on.) The power consumption of DO points is not included.

As a guideline for the heat dissipation, assume [above power supply capacity × 24 (W)].

NOTE
To connect an optical adapter for the I/O Link *i* to both connectors JD1A and JD1B, the above power supply rating + 70 mA is required.

DI (input signal specifications)
(General-purpose input signal)

Signal specifications

Number of points	16 points (per module)
Rated input	DC24V, 7.3mA
ON voltage/current	18 VDC or more, 6 mA or more
OFF voltage/current	6 VDC or less, 1.5 mA or less
Delay time	The receiver delay time is 2 ms (maximum). In addition, [I/O Link transfer time between CNC and I/O module] and [ladder scan period (depending on CNC)] must be considered.

Contact specification

Contact rating	30 VDC, 16 mA or more
Leakage current between contacts when opened	1mA or less (26.4V)
Voltage decrease between contacts when closed	2 V or less (including a cable voltage decrease)

© MyFANUC B5B0D8428C0144A78A5F4CA87F2C262E

(Matrix input signal)

Signal specifications

Number of points	56 points (per module)
Delay time	The maximum matrix period of 16 ms (maximum). In addition, [I/O Link transfer time between CNC and I/O module] and [ladder scan period (depending on CNC)] must be considered.

Contact specification

Contact rating	6VDC, 2mA or more
Leakage current between contacts when opened	0.2mA or less(6V)
Voltage decrease between contacts when closed	0.9V or less(with a current 1mA)

NOTE
When detour prevention diodes are used, the voltage drop across closed contacts indicated above must be maintained, including the diode voltage drop.

DO (output signal specifications)

Maximum load current when ON	200 mA or less including momentary current per signal. 3.5 A or less for DO signals in all
Saturation voltage when ON	1 V (maximum) when the load current is 200 mA
Withstand voltage	24 V +20% or less including momentary variations
Leakage current when OFF	20μA or less
Delay time	The driver delay time is 50 μs (maximum). In addition, [I/O Link transfer time between CNC and I/O module] and [ladder scan period (depending on CNC)] must be considered.

NOTE
1 When inductive load is connected to DO terminal, connect a diode in parallel in order to reduce the noise..
2 When capacitive load is connected to DO terminal, connect a resistor in series in order to diminish the rush current.

Power supply for DO load (DOCOM)

Input voltage range : min 0V, max 26.4V
Be sure to connect all power supply for DO load (DOCOM) pins.
Turn on the power supply for DO load (DOCOM) at the same time as or later than the power for the control unit.
Turn off the power supply for DO load (DOCOM) when or before the power for the control unit is turned off.

⚠ **WARNING**
For the safety of the system, don't supply the power for the load (DOCOM) when the power for the I/O Unit is off. If the power for the load (DOCOM) is supplied when the power for the I/O Unit is off, invalid output or malfunction may cause an accident.

© MyFANUC B5B0D8428C0144A78A5F4CA87F2C262E

By turning off (opening) the power supply (DOCOM) for the DO signals (output signals), all the DO signals of each module can be turned off at the same time. At this time, the DO state is as shown below.

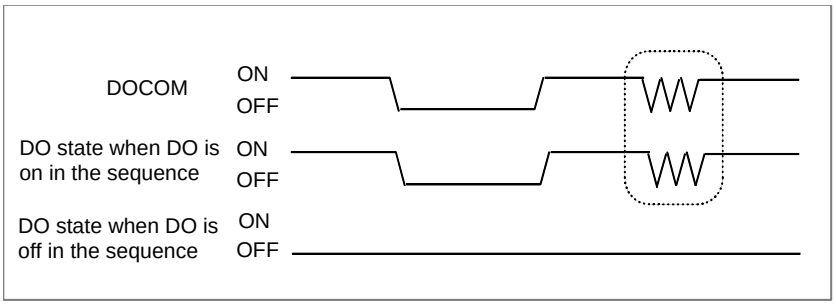

> ⚠ **CAUTION**
> When DO is on in the sequence, the ON/OFF state of DOCOM is directly reflected in the DO state as indicated above by the dashed box.
> Don't connect the inductive load or the capacitive load to the power supply for DO load (DOCOM). If the power supply for DO load (DOCOM) is turned on/off in the condition that it is connect to the inductive load or the capacitive load, it will cause the DO to malfunction.

Parallel DO (output signal) connection

A DO load current of twice the level can be obtained by connecting DO points in parallel and exercising ON/OFF control at the same time in the sequence. Namely, the maximum load current per DO point is 200 mA. By connecting two DO points in parallel and turning on the two DO points at the same time, 400 mA can be obtained. In this case, however, the leakage current is doubled up to 40 μA when the DO points are turned off.

> ⚠ **CAUTION**
> Be sure to connect the bit at the same address for parallel connection.
> Do not connect three or more signals in parallel.

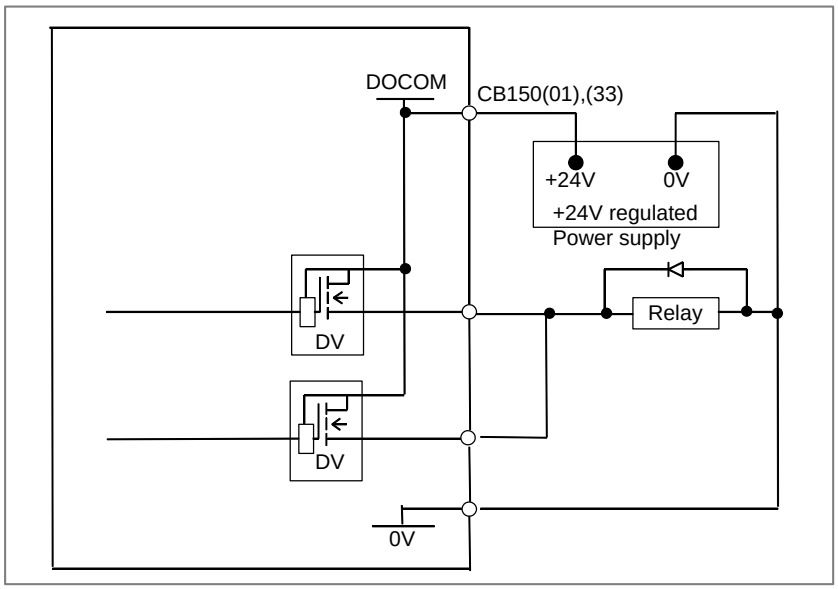

© MyFANUC B5B0D8428C0144A78A5F4CA87F2C262E

8.3.10 Other Notes

Address allocation

For the I/O module for operator's panel, I/O addresses are mapped as follows.

DI space map

Xm_1	General-purpose input signal	Slot 1
$Xm_1 + 1$		
$Xm_1 + 2$	Reserved	
$Xm_1 + 3$		
$Xm_1 + 4$	Matrix input signal	
$Xm_1 + 5$		
$Xm_1 + 6$		
$Xm_1 + 7$		
$Xm_1 + 8$		
$Xm_1 + 9$		
$Xm_1 + 10$		
$Xm_1 + 11$	Reserved	

Xm_{mpg} (for 1st MPG)	Basic module	Slot MPG
$Xm_{mpg} + 1$ (for 2nd MPG)		
$Xm_{mpg} + 2$ (for 3rd MPG)		

DO space map

Yn_1	Output signal	Slot 1
$Yn_1 + 1$		
$Yn_1 + 2$		
$Yn_1 + 3$		
$Yn_1 + 4$		
$Yn_1 + 5$		
$Yn_1 + 6$		
$Yn_1 + 7$	Reserved	

Xm_1, Xm_{mpg}, and Yn_1 indicate the start address at allocation.
Basically, for an I/O module for operator's panel, allocate 12-byte DI addresses to slot 1 and 8-byte DO addresses to slot 1.
An I/O module for operator's panel has an interface for three manual pulse generators. To use manual pulse generators, allocate addresses to slot MPG. With this setting, addresses can be allocated to the three manual pulse generators at a time (addresses cannot be allocated individually to manual pulse generators). Do not use the addresses with the ladder because the CNC processes the manual pulse generator signals directly.

DO (output signal) alarm detection

The DO driver of an I/O module for operator's panel is capable of detecting an overcurrent and measuring its own temperature. If an accident, such as connecting the cable to ground, causes an abnormal increase in the load current or in the driver temperature, a protection circuit, which is provided for each DO driver, is activated which keeps the DO signal for the relevant 1 byte in the OFF state until the cause of the problem is eliminated. Even if this occurs, the CNC and I/O module continue operating without entering the alarm status, but the PMC is notified of the location of the error detected by the DO driver. This information can be checked on the PMC status screen or alarm processing can be performed in advance using a ladder to help error check and recovery.

A DO error such as a ground fault is detected for each bit. This DO error is transferred to the PMC system relay area as a status alarm. The following table lists system relay area information and corresponding DO data related to a status alarm. When alarm data bit 0 is set to "1", the DO driver indicated by the slot number and byte offset detects an error as listed in the table below. Also see Subsection 7.3.3, "Status Alarm".

© MyFANUC B5B0D8428C0144A78A5F4CA87F2C262E

Information output to the system relay area and corresponding location where an error occurred

Information output to the system relay area						Faulty location
Type	Group number	PMC path	Slot number	Alarm information number (Intra-slot byte address)	Y address (DO address)	
0	0 to 23	1 to 5, 9	1	0	Yn	0th byte DO
				1	Yn+1	1st byte DO
				2	Yn+2	2nd byte DO
				3	Yn+3	3rd byte DO
				4	Yn+4	4th byte DO
				5	Yn+5	5th byte DO
				6	Yn+6	6th byte DO
				7	Yn+7	7th byte DO

Output values of “Group number”, “PMC path”, and “Y address” depends on unit connection and I/O address assignment.
Yn indicates the start address at allocation.

Description of “Alarm data” in the system relay area

Alarm data							
#7	#6	#5	#4	#3	#2	#1	#0
DO ground fault at bit 7	DO ground fault at bit 6	DO ground fault at bit 5	DO ground fault at bit 4	DO ground fault at bit 3	DO ground fault at bit 2	DO ground fault at bit 1	DO ground fault at bit 0

⚠ **CAUTION**

1 The output protection function is not for external equipment but for internal device of the module.
2 The output protection function can’t protect the internal device in any case. If the output protection function is activated, remove the cause immediately. If the output exceed the absolute maximum rating, the output protection function may not operate normally or the internal device may break before the output protection function operates.
3 If the over current is continued with a condition that the output protection function can’t operate normally, the internal device might emit smoke or take fire.

© MyFANUC B5B0D8428C0144A78A5F4CA87F2C262E

8.3.11 Connection of the Grounding Terminal of the Module

Connect the 0V line in the basic module to the cabinet's metal plate that is connected to ground or signal ground bar nearby via the protective ground terminal. About Multipoint grounding or Single-point grounding, refer to Item 3.4.1

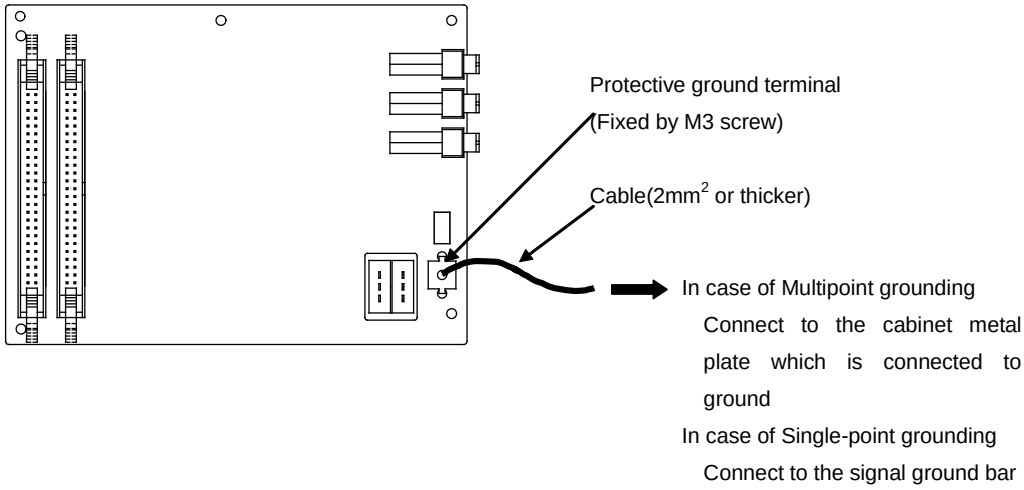

© MyFANUC B5B0D8428C0144A78A5F4CA87F2C262E

8.4 CONNECTION OF I/O MODULE FOR OPERATOR'S PANEL AND I/O MODULE FOR POWER MAGNETICS CABINET

The difference between the I/O module for operator's panel and the I/O module for power magnetics cabinet lies in whether an interface to a manual pulse generator is provided. The power magnetics cabinet does not provide an interface to a manual pulse generator.

8.4.1 Overall Connection Diagram

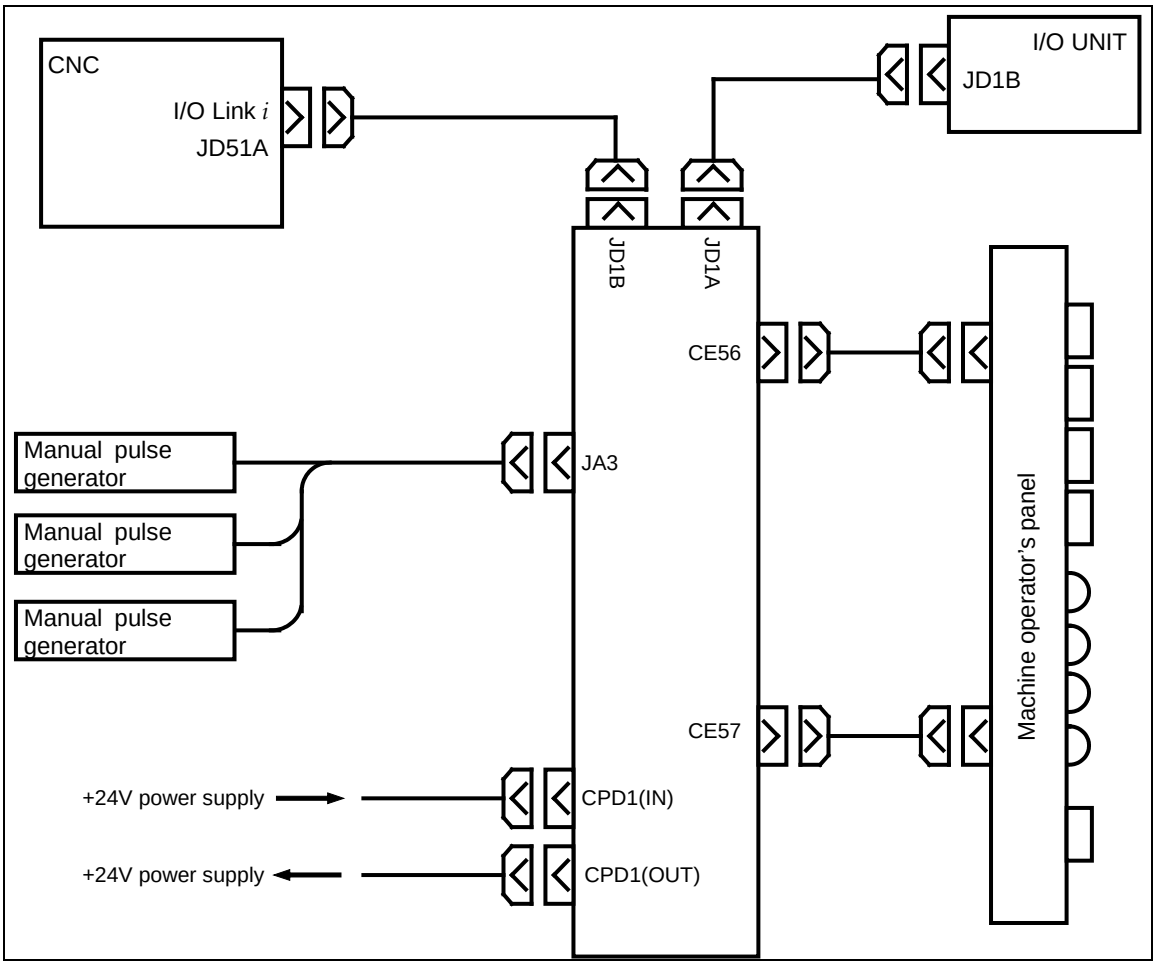

NOTE

The following screw type connectors, newly incorporated into the main board of control unit, cannot be used to connect the I/O Link *i* or manual pulse generator.

Connectors that cannot be used on the cable side

	Specification	Manufacturer
Connector case	FI-20-CV7	Hirose Electric Co., Ltd.
Connector case and connector	FI30-20S-CV7	Hirose Electric Co., Ltd.

© MyFANUC B5B0D8428C0144A78A5F4CA87F2C262E

8.4.2 Power Connection

Provide the CPD1 (IN) connector, shown below, with the power necessary for the printed circuit board operation and that for DI operation. To facilitate power division, the power is output to CPD1 (OUT) exactly as it is input from CPD1 (IN). When power division is required, use CPD1 (OUT).
Up to 1.0 A can be supplied by branching.

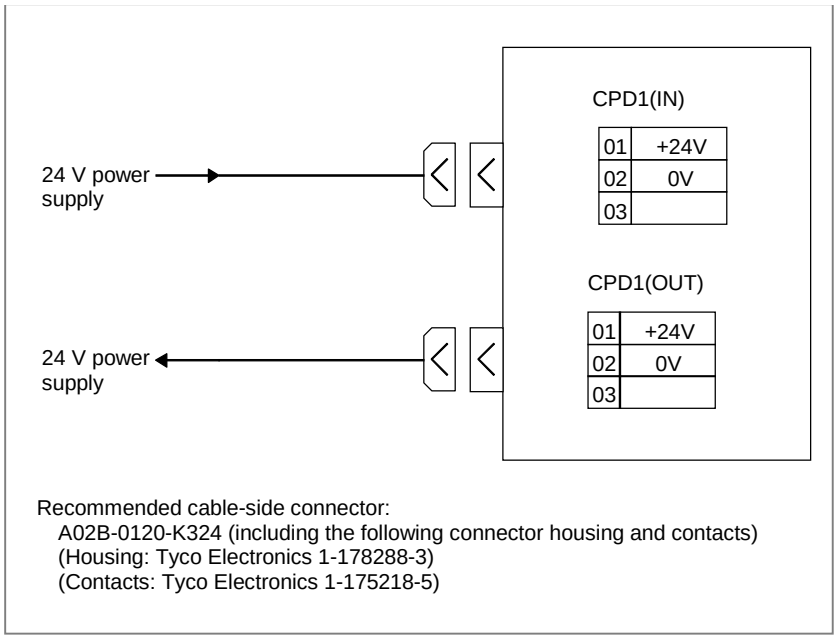

NOTE

The specification of the power supply connector CPD1 (IN) is the same as that for CPD1 (OUT). There are no indications on the printed circuit board to distinguish between the IN and OUT connectors.

© MyFANUC B5B0D8428C0144A78A5F4CA87F2C262E

8.4.3 DI/DO Connector Pin Arrangement

CE56

	A	B
01	0V	+24V
02	Xm+0.0	Xm+0.1
03	Xm+0.2	Xm+0.3
04	Xm+0.4	Xm+0.5
05	Xm+0.6	Xm+0.7
06	Xm+1.0	Xm+1.1
07	Xm+1.2	Xm+1.3
08	Xm+1.4	Xm+1.5
09	Xm+1.6	Xm+1.7
10	Xm+2.0	Xm+2.1
11	Xm+2.2	Xm+2.3
12	Xm+2.4	Xm+2.5
13	Xm+2.6	Xm+2.7
14	DICOM0	
15		
16	Yn+0.0	Yn+0.1
17	Yn+0.2	Yn+0.3
18	Yn+0.4	Yn+0.5
19	Yn+0.6	Yn+0.7
20	Yn+1.0	Yn+1.1
21	Yn+1.2	Yn+1.3
22	Yn+1.4	Yn+1.5
23	Yn+1.6	Yn+1.7
24	DOCOM	DOCOM
25	DOCOM	DOCOM

CE57

	A	B
01	0V	+24V
02	Xm+3.0	Xm+3.1
03	Xm+3.2	Xm+3.3
04	Xm+3.4	Xm+3.5
05	Xm+3.6	Xm+3.7
06	Xm+4.0	Xm+4.1
07	Xm+4.2	Xm+4.3
08	Xm+4.4	Xm+4.5
09	Xm+4.6	Xm+4.7
10	Xm+5.0	Xm+5.1
11	Xm+5.2	Xm+5.3
12	Xm+5.4	Xm+5.5
13	Xm+5.6	Xm+5.7
14		DICOM5
15		
16	Yn+2.0	Yn+2.1
17	Yn+2.2	Yn+2.3
18	Yn+2.4	Yn+2.5
19	Yn+2.6	Yn+2.7
20	Yn+3.0	Yn+3.1
21	Yn+3.2	Yn+3.3
22	Yn+3.4	Yn+3.5
23	Yn+3.6	Yn+3.7
24	DOCOM	DOCOM
25	DOCOM	DOCOM

Flat cable–side connector specification:
A02B–0120–K342
(HIF3BB–50D–2.54R (Hirose Electric Co., Ltd.))
50 contacts
Cable material specification:
A02B–0120–K886
(61–meter, 50–pin cable
(Hitachi Cable, Ltd. or Oki Electric Cable Co., Ltd.))

⚠ CAUTION
An output DC voltage of +24 V at CE56 (B01) and CE57 (B01) is for DI signals. Do not supply 24 VDC to these pins from the outside.

© MyFANUC B5B0D8428C0144A78A5F4CA87F2C262E

8.4.4 DI (General-purpose Input Signal) Connection

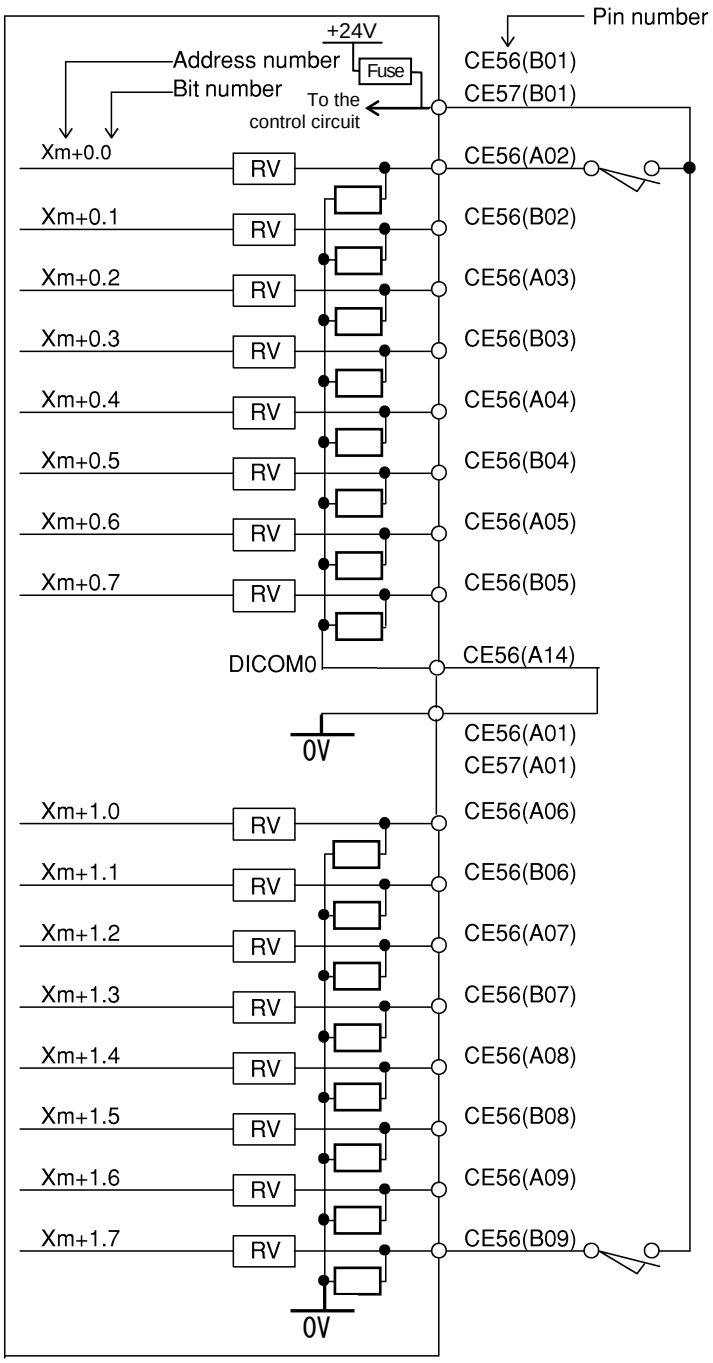

© MyFANUC B5B0D8428C0144A78A5F4CA87F2C262E

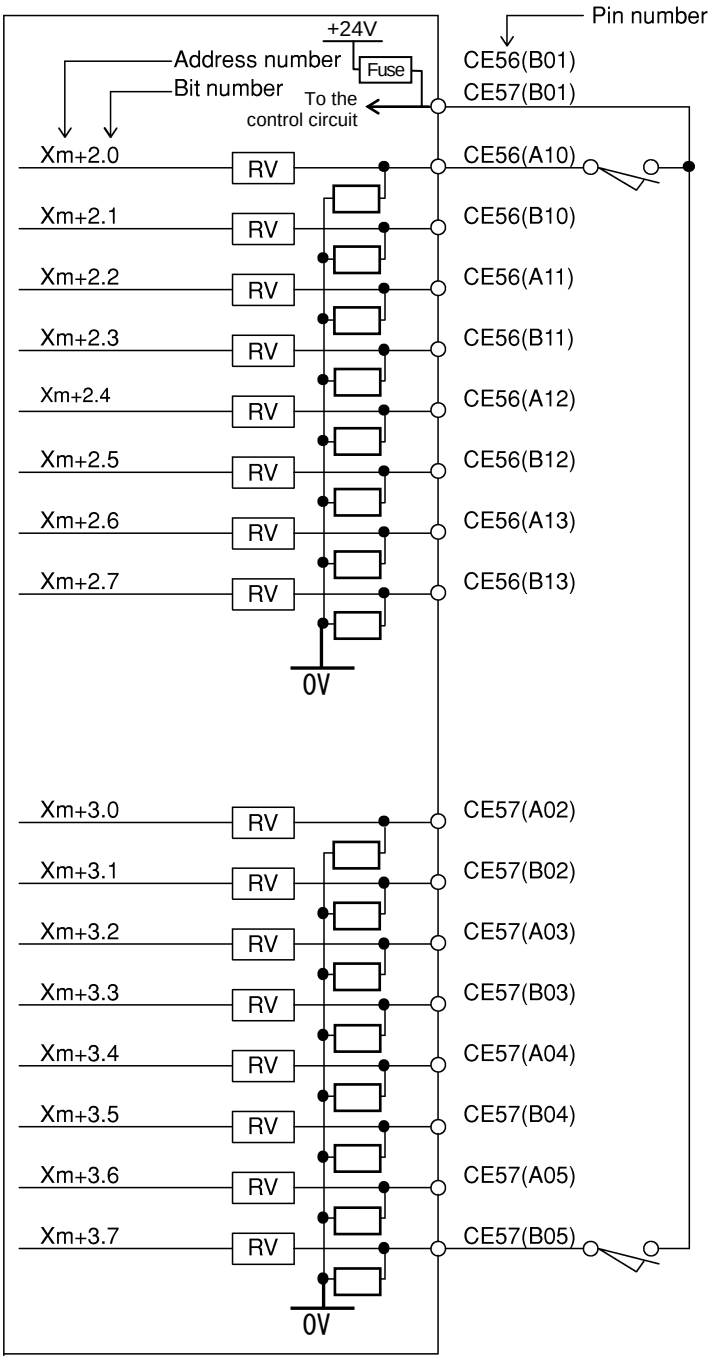

© MyFANUC B5B0D8428C0144A78A5F4CA87F2C262E

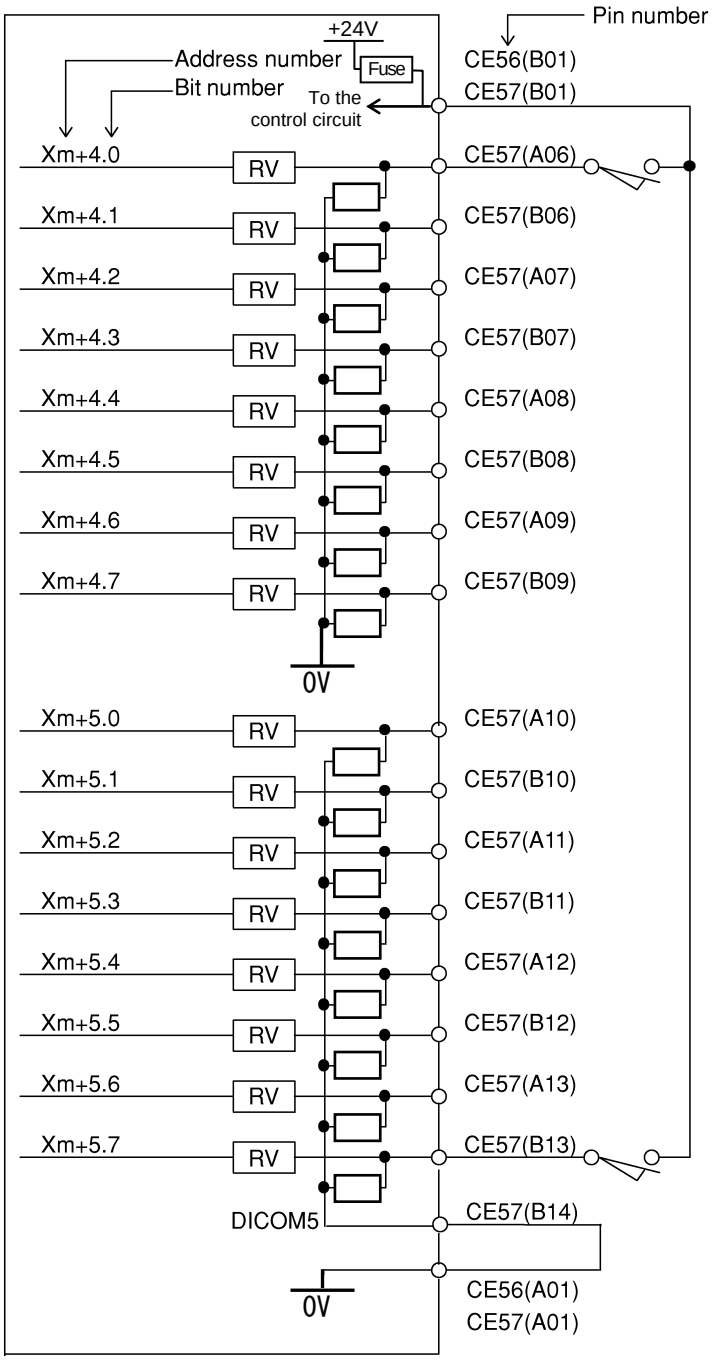

© MyFANUC B5B0D8428C0144A78A5F4CA87F2C262E

NOTE

Xm+0.0 through Xm+0.7 and Xm+5.0 through Xm+5.7 are DI pins for which a common voltage can be selected. That is, by connecting the DICOM0 CE56 (A14) or DICOM5 CE57 (B14) pin to the +24 V power supply, a DI signal can be input with its logical state reversed. If, however, a cable is connected to ground, it has the same effect as inputting an ON state DI signal. To prevent this from occurring, the connection of the DICOM0 CE56 (A14) and DICOM5 CE57 (B14) pins to the 0 V power supply is recommended whereever possible. Even in the above case, related input signals may become unstable and an incorrect state could be input if the wiring of DICOM0 or DICOM5 is disconnected. To avoid this situation, we recommend using the DI of which common voltage is fixed at 24 V, and creating a logic (ladder) that ensures safety if a ground fault or disconnection occurs on a signal line.

For the unconnected pins at the addresses for which the common voltage is fixed, the input is “0”. For the unconnected pins at the addresses for which a common voltage can be selected, the input is “0” when the DICOMx common select pin is connected to the 0 V power supply or “1” when it is connected to the +24 V power supply. Connect DICOM0 and DICOM5 when used. When addresses from Xm+0.0 to Xm+0.7 and Xm+5.0 to Xm+5.7 are not used, connect DICOM0 and DICOM5 to the 0 V power supply.

Common voltage for general-purpose DI

Address	Common voltage
Xm	Can be selected with DICOM0.
Xm+1	Cannot be selected.
Xm+2	Cannot be selected.
Xm+3	Cannot be selected.
Xm+4	Cannot be selected.
Xm+5	Can be selected with DICOM5.

⚠ **CAUTION**

An output DC voltage of +24 V at CE56 (B01) and CE57 (B01) is for DI signals. Do not supply 24 VDC to these pins from the outside.

© MyFANUC B5B0D8428C0144A78A5F4CA87F2C262E

8.4.5 DO (Output Signal) Connection

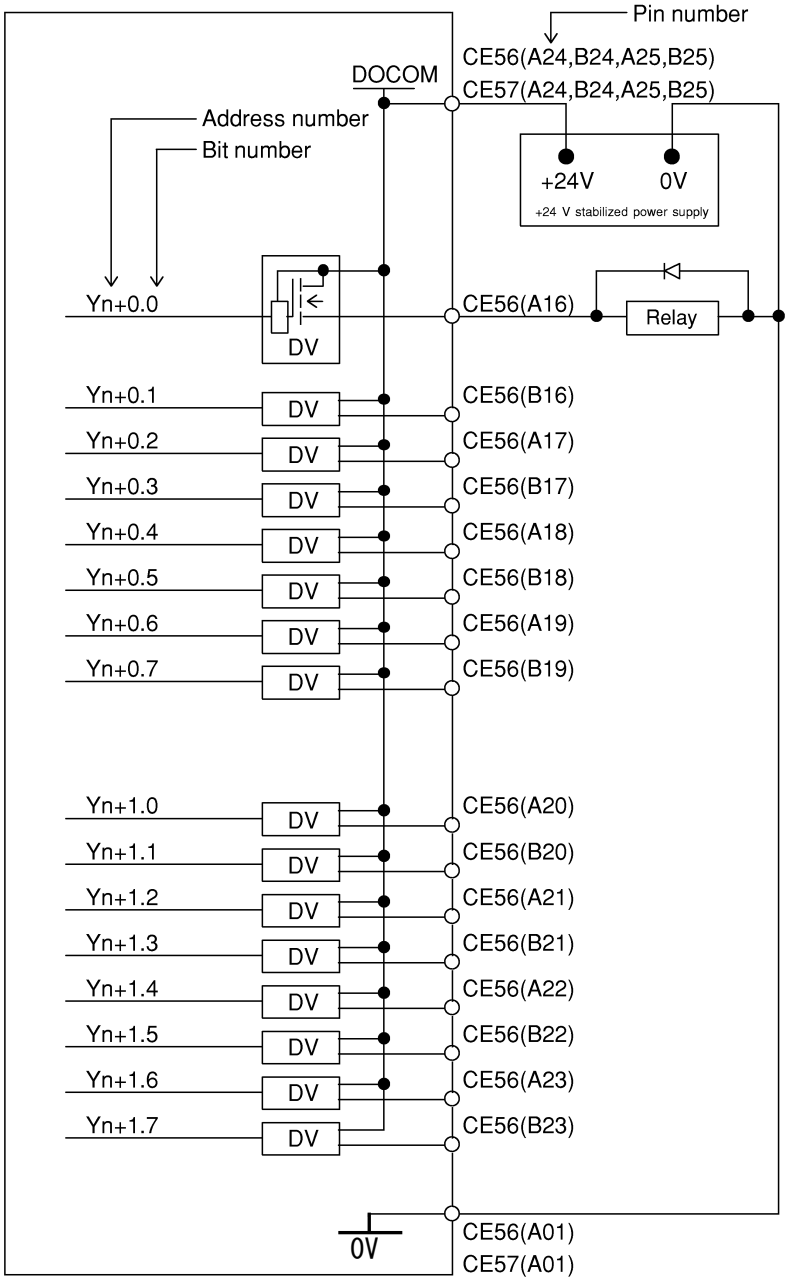

© MyFANUC B5B0D8428C0144A78A5F4CA87F2C262E

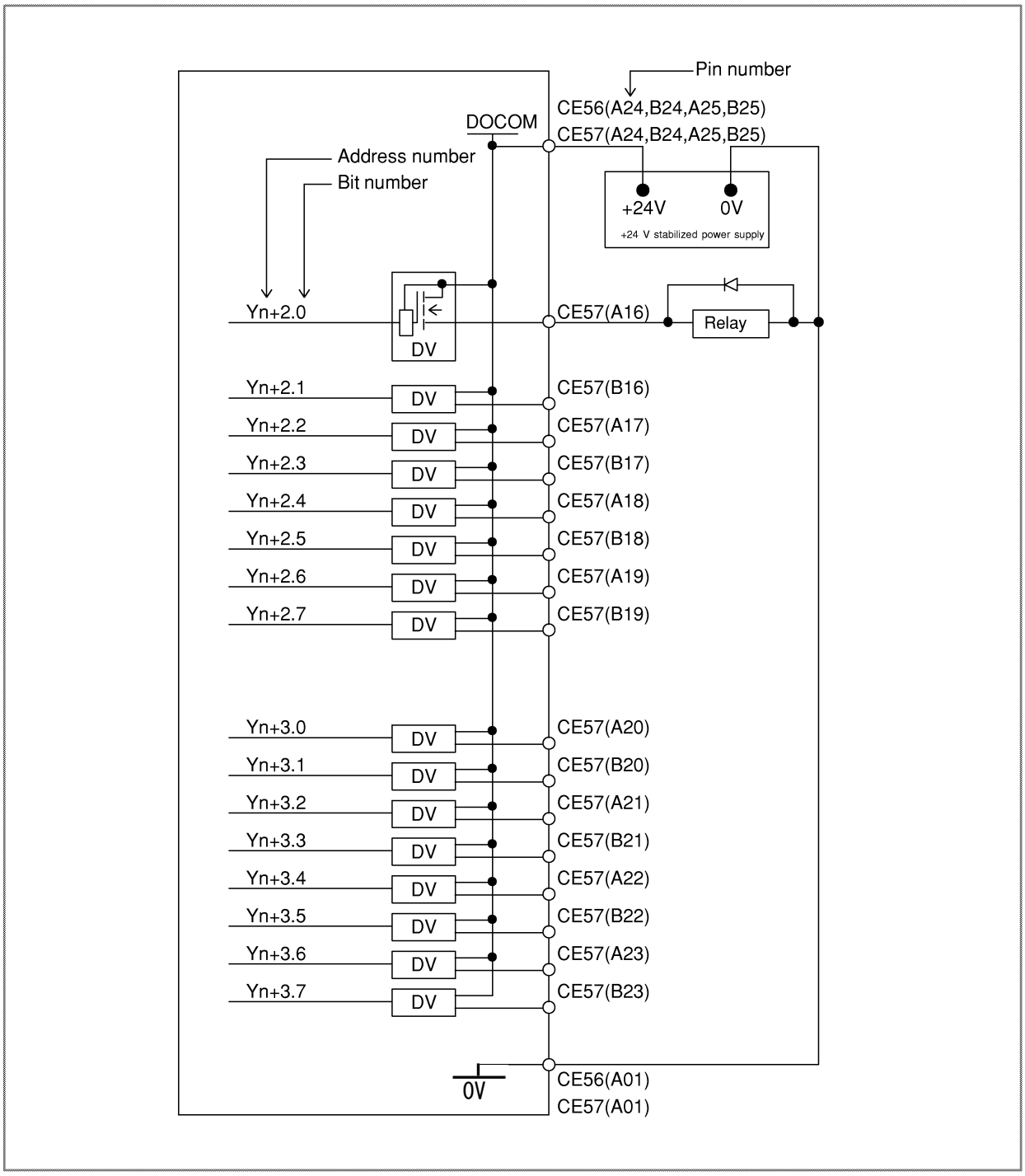

8.4.6 Manual Pulse Generator Connection

For an I/O module for operator's panel, three manual pulse generators can be connected.
For the connection, see Subsection 7.4.1.

© MyFANUC B5B0D8428C0144A78A5F4CA87F2C262E

8.4.7 External View

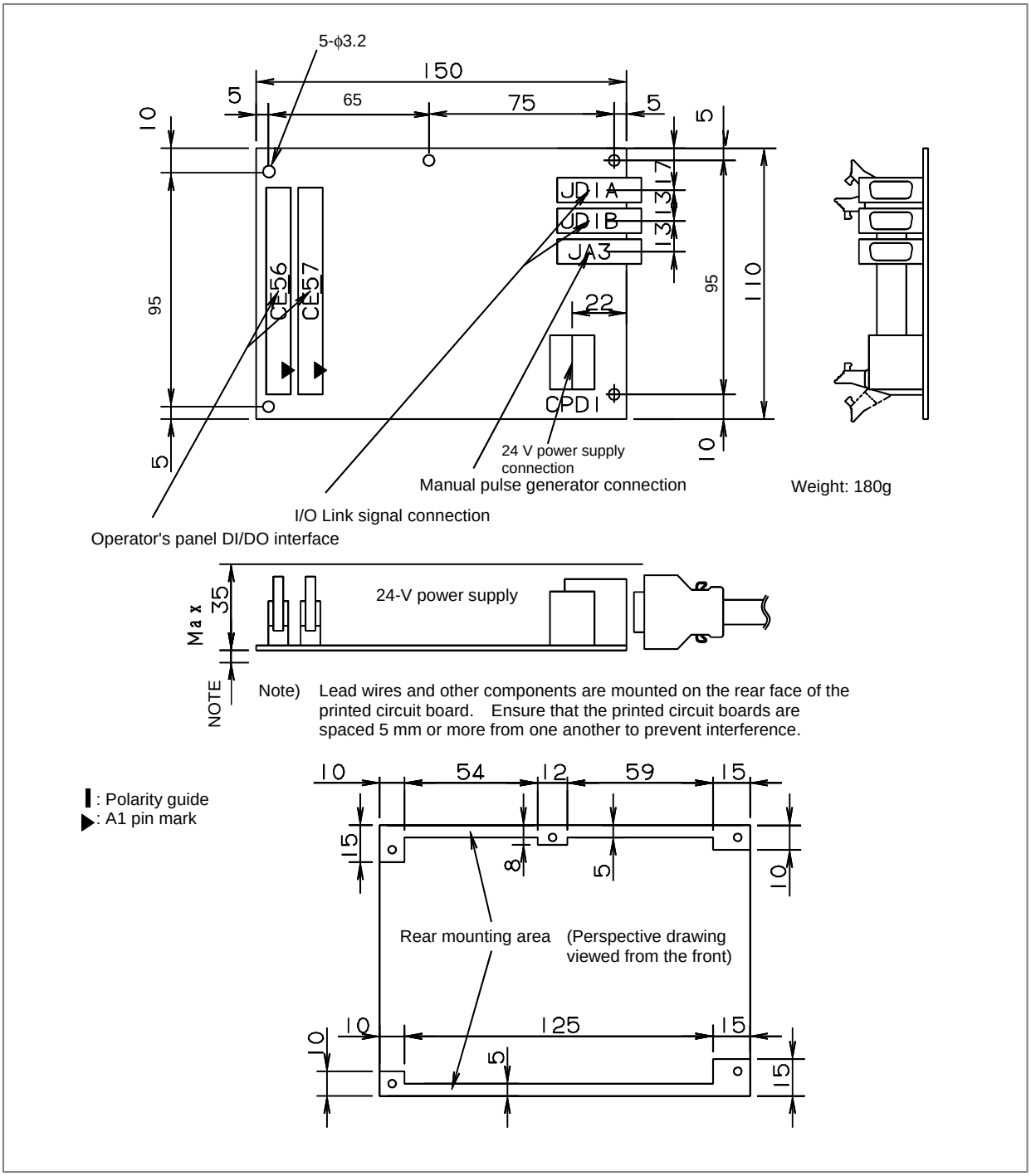

© MyFANUC B5B0D8428C0144A78A5F4CA87F2C262E

8.4.8 Specifications

Installation specifications

Install the I/O module in a fully enclosed cabinet.
For other installation conditions, conform to the CNC installation conditions.

Ordering specifications

Item	Ordering specifications	Remarks
I/O module for operator's panel B1 (with MPG interface)	A03B-0824-K202	DI : 48 points DO : 32 points With MPG interface
I/O module for power magnetics cabinet B2 (without MPG interface)	A03B-0824-K203	DI : 48 points DO : 32 points Without MPG interface
Fuse (spare parts)	A03B-0815-K001	1A

Module specifications

Item	Specification	Remarks
DI points	48 points	24-V input
DO points	32 points	24 V source type output
MPG interface	Max. 3 units	For A03B-0824-K202

Power supply rating

Module	Supply voltage	Power supply rating	Remarks
I/O module for operator's panel and I/O module for power magnetics cabinet	24 VDC ±10% supplied from the power supply connector CPD1. The allowance of ±10% should include instantaneous voltage and ripple voltage.	0.3A+7.3mA×DI	DI = number of DI points in the ON state

As a guideline for the heat dissipation, assume [above power supply capacity × 24 (W)].

NOTE
To connect an optical adapter for the I/O Link *i* to both connectors JD1A and JD1B, the above power supply rating + 70 mA is required.

DI (input signal specifications)

Number of points	24 points (per module)
Rated input	24 VDC, 7.3 mA
ON voltage/current	18 VDC or more, 6 mA or more
OFF voltage/current	6 VDC or less, 1.5 mA or less
Delay time	The receiver delay time is 2 ms (maximum). In addition, [I/O Link transfer time between CNC and I/O module] and [ladder scan period (depending on CNC)] must be considered.

DI (General-purpose input signal)

Contact rating	30 VDC, 16 mA or more
Leakage current between contacts when opened	1 mA or less (26.4 V)
Voltage decrease between contacts when closed	2 V or less (including a cable voltage decrease)

© MyFANUC B5B0D8428C0144A78A5F4CA87F2C262E

DO (output signal specifications)

Maximum load current when ON	200 mA or less including momentary current per signal. 5.6 A or less for DO signals in all
Saturation voltage when ON	1 V (maximum) when the load current is 200 mA
Withstand voltage	24 V +20% or less including momentary variations
Leakage current when OFF	20μA or less
Delay time	The driver delay time is 50 μs (maximum). In addition, [I/O Link transfer time between CNC and I/O module] and [ladder scan period (depending on CNC)] must be considered.

NOTE

1 When inductive load is connected to DO terminal, connect a diode in parallel in order to reduce the noise.
2 When capacitive load is connected to DO terminal, connect a resistor in series in order to diminish the rush current.

Power supply for DO load (DOCOM)

Input voltage range : min 0V, max 26.4V
Be sure to connect all power supply for DO load (DOCOM) pins.
Turn on the power supply for DO load (DOCOM) at the same time as or later than the power for the control unit.
Turn off the power supply for DO load (DOCOM) when or before the power for the control unit is turned off.

⚠ WARNING

For the safety of the system, don't supply the power for the load (DOCOM) when the power for the I/O Unit is off. If the power for the load (DOCOM) is supplied when the power for the I/O Unit is off, invalid output or malfunction may cause an accident.

By turning off (opening) the power supply (DOCOM) for the DO signals (output signals), all the DO signals of each module can be turned off at the same time. At this time, the DO state is as shown below.

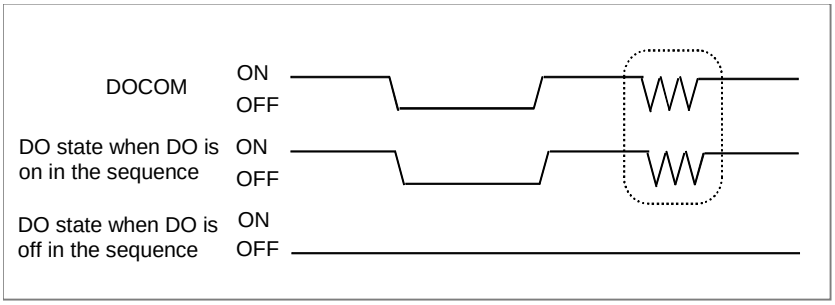

⚠ CAUTION

When DO is on in the sequence, the ON/OFF state of DOCOM is directly reflected in the DO state as indicated above by the dashed box.
Don't connect the inductive load or the capacitive load to the power supply for DO load (DOCOM). If the power supply for DO load (DOCOM) is turned on/off in the condition that it is connect to the inductive load or the capacitive load, it will cause the DO to malfunction.

© MyFANUC B5B0D8428C0144A78A5F4CA87F2C262E

Parallel DO (output signal) connection

A DO load current of twice the level can be obtained by connecting DO points in parallel and exercising ON/OFF control at the same time in the sequence. Namely, the maximum load current per DO point is 200 mA. By connecting two DO points in parallel and turning on the two DO points at the same time, 400 mA can be obtained. In this case, however, the leakage current is doubled up to 40 μA when the DO points are turned off.

> ⚠ **CAUTION**
> Be sure to connect the bit at the same address for parallel connection.
> Do not connect three or more signals in parallel.

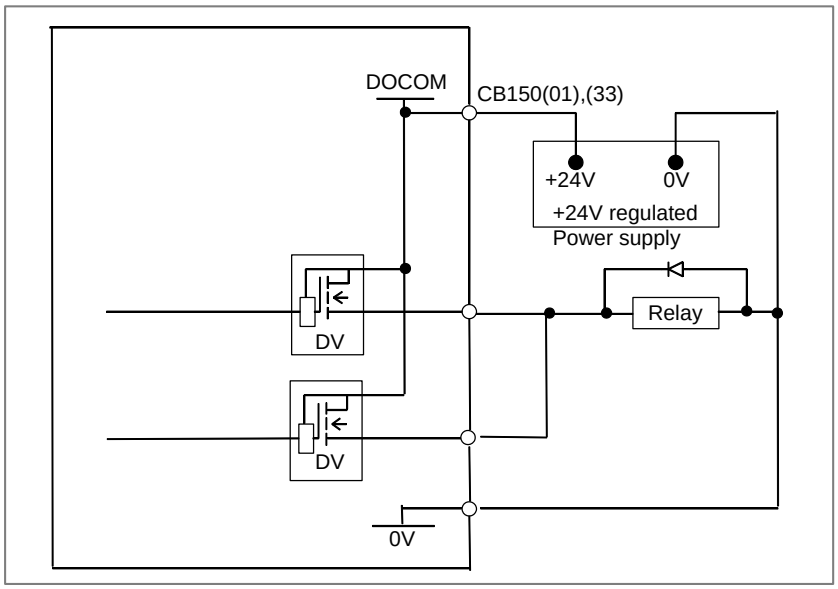

8.4.9 Other Notes

Address allocation

For this I/O module, I/O addresses are mapped as follows.

DI space map

Xm_1	Input signal	Slot 1
$Xm_1 + 1$		
$Xm_1 + 2$		
$Xm_1 + 3$		
$Xm_1 + 4$		
$Xm_1 + 5$		

Xm_{mpg} (for 1st MPG)	Manual pulse generator	Slot MPG
$Xm_{mpg} + 1$ (for 2nd MPG)		
$Xm_{mpg} + 2$ (for 3rd MPG)		

DO space map

Yn_1	Output signal	Slot 1
$Yn_1 + 1$		
$Yn_1 + 2$		
$Yn_1 + 3$		

Xm_1, Xm_{mpg}, and Yn_1 indicate the start address at allocation.

Basically, for this I/O module, allocate 6-byte DI addresses to slot 1 and 4-byte DO addresses to slot 1.
An I/O module for operator's panel has an interface for three manual pulse generators. To use manual pulse generators, allocate addresses to slot MPG. With this setting, addresses can be allocated to the three manual pulse generators at a time (addresses cannot be allocated individually to manual pulse generators). Do not use this area with the ladder because the CNC processes the manual pulse generator signals directly.

© MyFANUC B5B0D8428C0144A78A5F4CA87F2C262E

DO (output signal) alarm detection

The DO driver of the I/O module is capable of detecting an overcurrent and measuring its own temperature. If an accident, such as the connecting of the cable to ground, causes an abnormal increase in the load current or in the driver temperature, a protection circuit, which is provided for each DO driver, is activated and keeps the DO signal for the relevant 1 byte in the OFF state until the cause of the problem is eliminated. Even if this occurs, the CNC and I/O module continues operating without entering the alarm status, but the DO driver which detected the error can be checked. If a DO error occurs, this information can be checked on the CNC DGN screen or alarm processing can be performed in advance using a ladder to help error check and recovery.

For connection to the I/O Link *i*, a DO error such as a ground fault is detected for each point. This DO error is transferred to the PMC system relay area as a status alarm. The following table lists system relay area information and corresponding DO data related to a status alarm. When an alarm data bit is set to “1”, the DO driver corresponding to the bit detects an error. Also see Subsection 7.3.3, “Status Alarm”.

Information output to the system relay area and corresponding location where an error occurred

Information output to the system relay area						Faulty location
Type	Group number	PMC path	Slot number	Alarm information number (Intra-slot byte address)	Y address (DO address)	
0	0 to 23	1 to 5, 9	1	0	Yn	0th byte DO
				1	Yn+1	1st byte DO
				2	Yn+2	2nd byte DO
				3	Yn+3	3rd byte DO

Output values of “Group number”, “PMC path”, and “Y address” depends on unit connection and I/O address assignment.
Yn indicates the start address at allocation.

Description of “Alarm data” in the system relay area

Alarm data							
#7	#6	#5	#4	#3	#2	#1	#0
DO ground fault at bit 7	DO ground fault at bit 6	DO ground fault at bit 5	DO ground fault at bit 4	DO ground fault at bit 3	DO ground fault at bit 2	DO ground fault at bit 1	DO ground fault at bit 0

⚠ CAUTION

1 The output protection function is not for external equipment but for internal device of the module.
2 The output protection function can’t protect the internal device in any case. If the output protection function is activated, remove the cause immediately. If the output exceed the absolute maximum rating, the output protection function may not operate normally or the internal device may break before the output protection function operates.
3 If the over current is continued with a condition that the output protection function can’t operate normally, the internal device might emit smoke or take fire.

© MyFANUC B5B0D8428C0144A78A5F4CA87F2C262E

8.4.10 Connection of the Grounding Terminal of the Module

Connect the 0V line in the basic module to the cabinet's metal plate that is connected to ground or signal ground bar nearby via the protective ground terminal. About Multipoint grounding or Single-point grounding, refer to Item 3.4.1

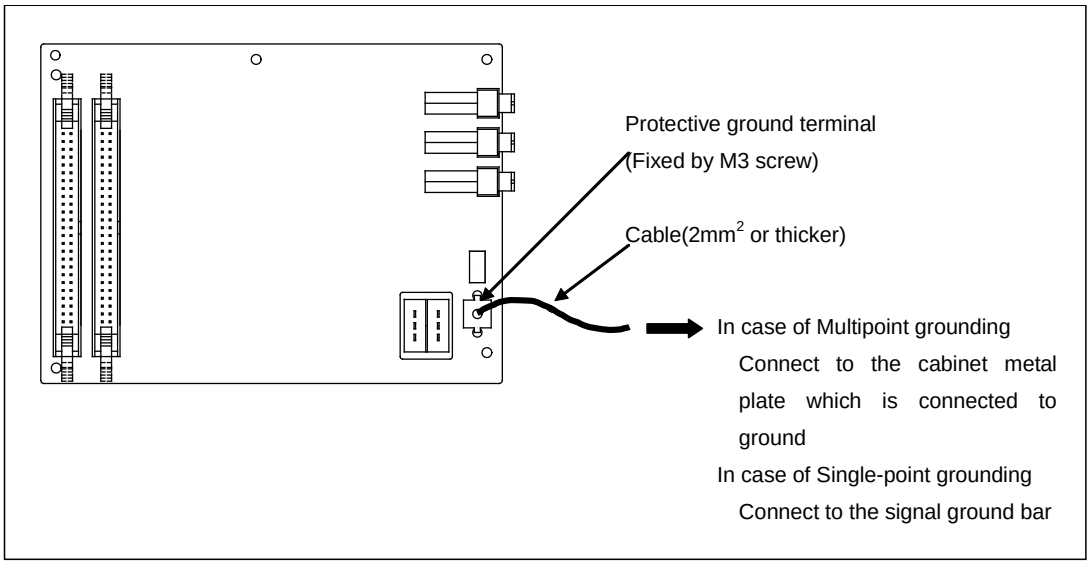

© MyFANUC B5B0D8428C0144A78A5F4CA87F2C262E

8.5 CONNECTION OF I/O MODULE TYPE-2 FOR CONNECTOR PANEL

8.5.1 Configuration

I/O module for connector panel type-2 consists of the basic module and up to one extension module as shown in the figure below.

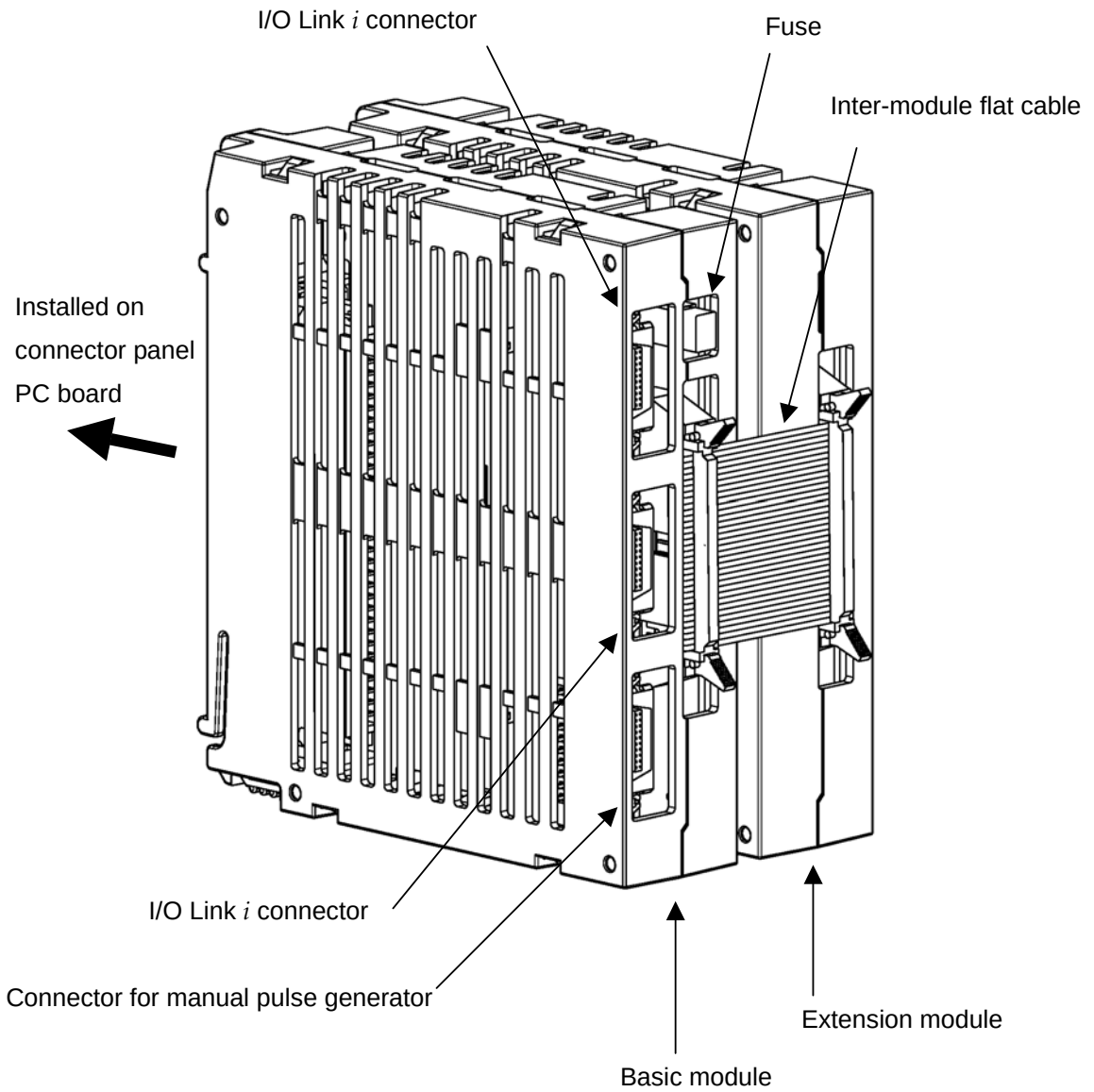

NOTE

As shown in the figure above, be sure to install the basic module to the left of the extension module, viewed from the side of the flat cable for connecting modules. Please do not set it landscape.
This unit cannot be installed on the DIN rail.
In a maximum configuration, one basic module plus one expansion module can be installed per group as shown above (DI/DO=96/64).

© MyFANUC B5B0D8428C0144A78A5F4CA87F2C262E

8.5.2 Connector Layout Diagram

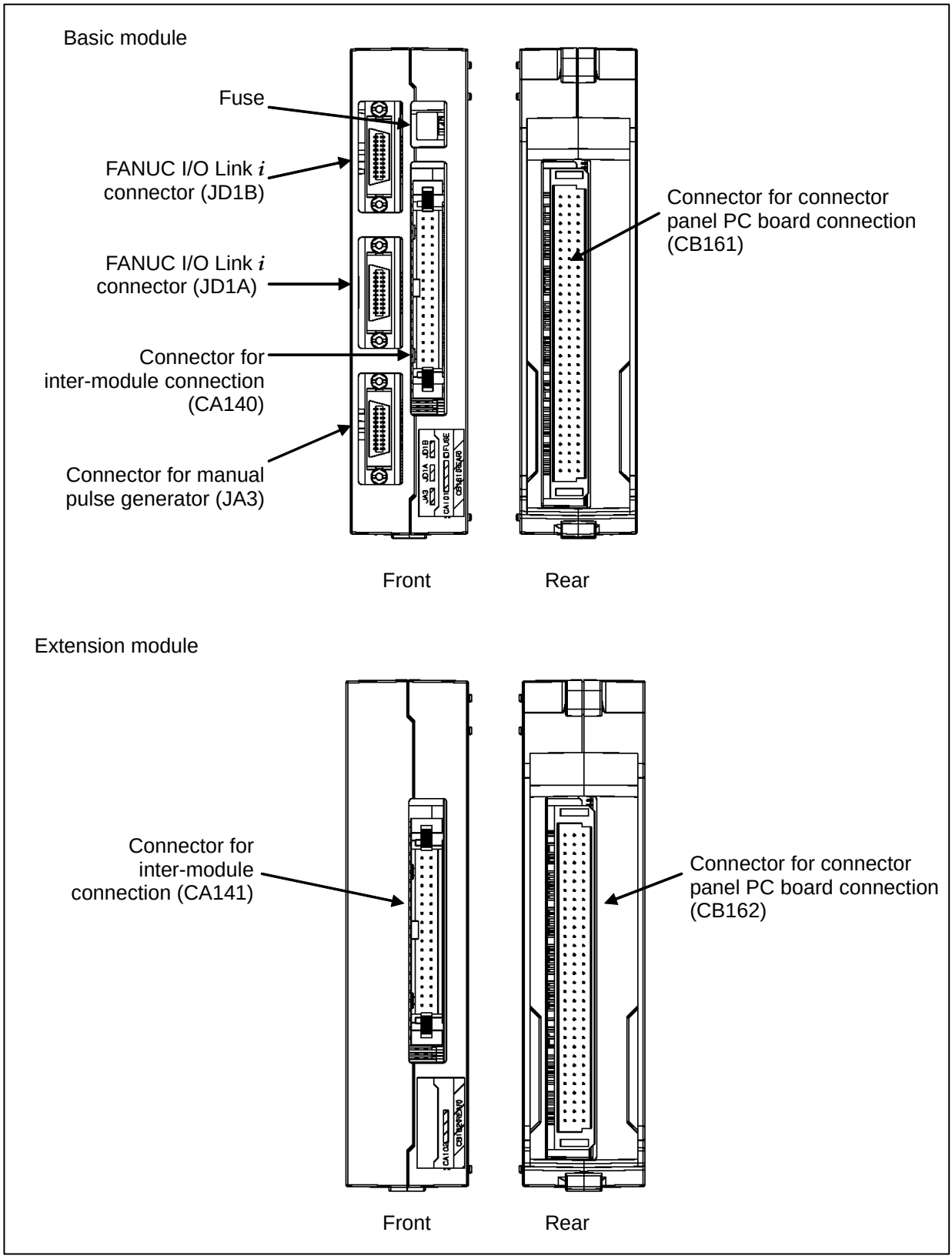

© MyFANUC B5B0D8428C0144A78A5F4CA87F2C262E

8.5.3 Connection Diagram

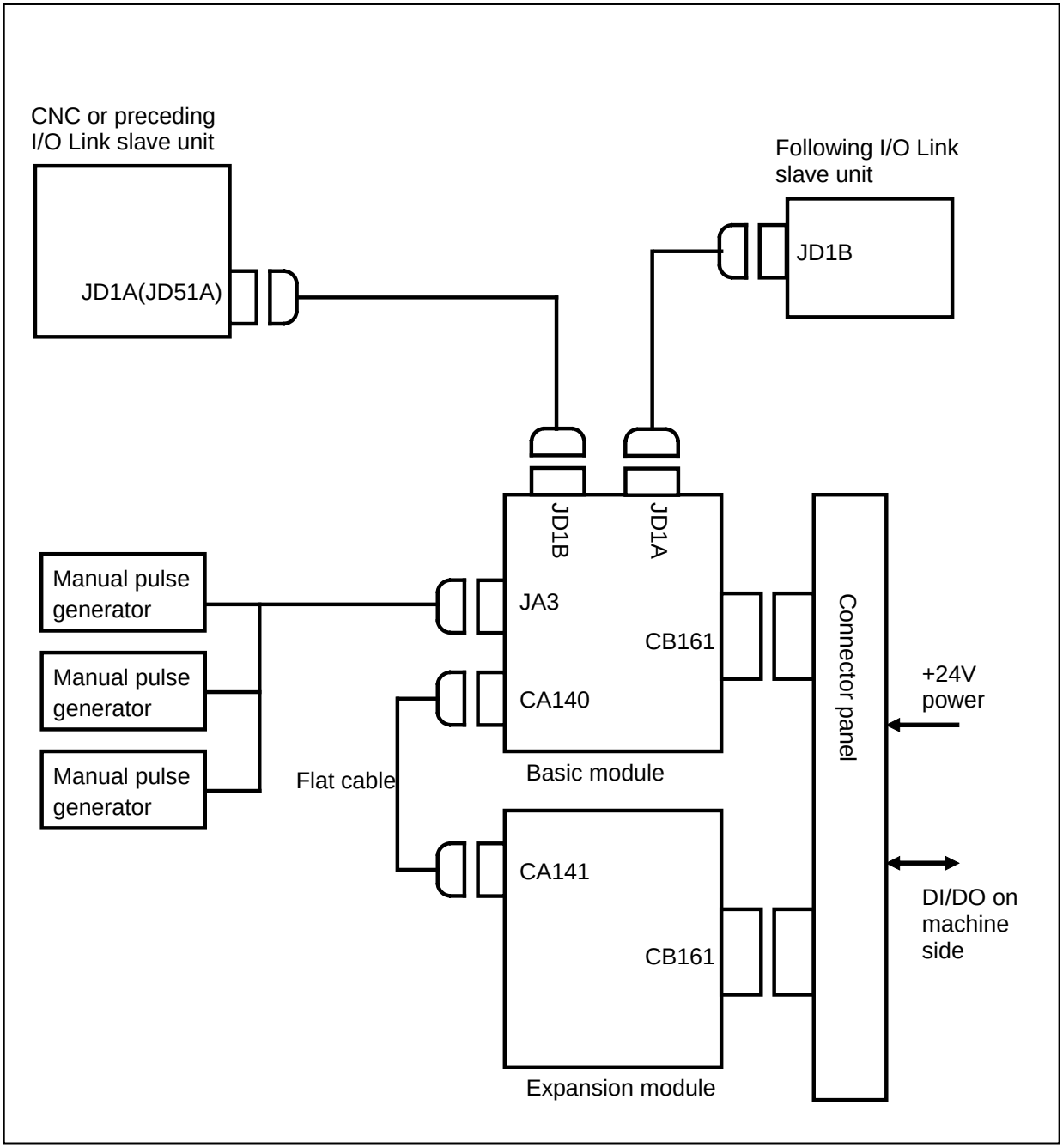

NOTE

The maximum configuration of a group consists of one basic module plus one expansion module as shown above. At this time, the number of input points is 96, and the number of output points is 64. To add points, connect an additional slave onto the I/O Link.

© MyFANUC B5B0D8428C0144A78A5F4CA87F2C262E

8.5.4 Module Specifications

Types of modules

Item	Ordering specifications	Specification
I/O module type-2 for connector panel (basic module B1)	A03B-0824-C040	DI/DO=48/32 With MPG interface
I/O module type-2 for connector panel (basic module B2)	A03B-0824-C041	DI/DO=48/32 Without MPG interface
I/O module type-2 for connector panel (extension module E1)	A03B-0824-C042	DI/DO=48/32
Fuse (spare parts)	A03B-0815-K002	1 A (for basic module)
Inter-module flat cable	A03B-0815-K102	Cable length: 35 mm Module interval: 5 mm

NOTE
Be sure to use modules with the ordering specifications listed above in combination. Do not use other modules.

Installation conditions

(1) Use this I/O module in a completely sealed cabinet.
(2) Use the units under the following ambient temperature conditions:
Operation: 0°C to 55°C
Storage and transportation: -20°C to 80°C
(3) For other installation conditions, conform to the CNC installation conditions.
(4) For ventilation within each I/O module, allow a clearance of 40 mm or more between modules. Moreover, allow a clearance of 50 mm or more above and below each module.
(5) When mounting I/O modules, ensure that the basic module is mounted on the left side when viewed from the flat cable.

Power supply rating

Module	Supply voltage	Power supply rating	Remarks
Basic module	24 VDC ±10% is fed through CB161 and CB162; ±10% includes momentary variations and ripples.	0.3A+7.3mA × DI	DI = number of DI points in the ON state
Extension module		0.2A+7.3mA × DI	DI = number of DI points in the ON state

As a guideline for heat dissipation, assume [power supply rating × 24 (W)].

NOTE
1 The above power supply rating does not include that to be input to DOCOM for DO output.
2 To connect an optical adapter for the I/O Link *i* to both connectors JD1A and JD1B on the basic module, the above power supply rating + 70 mA is required for the power supply of the basic module.

© MyFANUC B5B0D8428C0144A78A5F4CA87F2C262E

8.5.5 DI/DO Connector Pin Assignment

This subsection describes the DI/DO connector pin assignment of the basic module and extension modules.

Basic module
CB161(HONDA MRF-96MLST)

	A	B	C
32	+24V	+24V	+24V
31	0V	0V	0V
30	0V	0V	0V
29		DICOM0	Xm+0.0
28	Xm+0.1	Xm+0.2	Xm+0.3
27	Xm+0.4	Xm+0.5	Xm+0.6
26	Xm+0.7	Xm+1.0	Xm+1.1
25	Xm+1.2	Xm+1.3	Xm+1.4
24	Xm+1.5	Xm+1.6	Xm+1.7
23	Xm+2.0	Xm+2.1	Xm+2.2
22	Xm+2.3	Xm+2.4	Xm+2.5
21	Xm+2.6	Xm+2.7	Xm+3.0
20	Xm+3.1	Xm+3.2	Xm+3.3
19	Xm+3.4	Xm+3.5	Xm+3.6
18	Xm+3.7	Xm+4.0	Xm+4.1
17	Xm+4.2	Xm+4.3	Xm+4.4
16	Xm+4.5	Xm+4.6	Xm+4.7
15	Xm+5.0	Xm+5.1	Xm+5.2
14	Xm+5.3	Xm+5.4	Xm+5.5
13	Xm+5.6	Xm+5.7	DICOM3
12	Yn+3.5	Yn+3.6	Yn+3.7
11	Yn+3.2	Yn+3.3	Yn+3.4
10	Yn+2.7	Yn+3.0	Yn+3.1
9	Yn+2.4	Yn+2.5	Yn+2.6
8	Yn+2.1	Yn+2.2	Yn+2.3
7	DOCOM23	DOCOM23	Yn+2.0
6	Yn+1.5	Yn+1.6	Yn+1.7
5	Yn+1.2	Yn+1.3	Yn+1.4
4	Yn+0.7	Yn+1.0	Yn+1.1
3	Yn+0.4	Yn+0.5	Yn+0.6
2	Yn+0.1	Yn+0.2	Yn+0.3
1	DOCOM01	DOCOM01	Yn+0.0

Extension module
CB162(HONDA MRF-96MLST)

	A	B	C
32	+24V	+24V	+24V
31	0V	0V	0V
30	0V	0V	0V
29		DICOM6	Xm+6.0
28	Xm+6.1	Xm+6.2	Xm+6.3
27	Xm+6.4	Xm+6.5	Xm+6.6
26	Xm+6.7	Xm+7.0	Xm+7.1
25	Xm+7.2	Xm+7.3	Xm+7.4
24	Xm+7.5	Xm+7.6	Xm+7.7
23	Xm+8.0	Xm+8.1	Xm+8.2
22	Xm+8.3	Xm+8.4	Xm+8.5
21	Xm+8.6	Xm+8.7	Xm+9.0
20	Xm+9.1	Xm+9.2	Xm+9.3
19	Xm+9.4	Xm+9.5	Xm+9.6
18	Xm+9.7	Xm+10.0	Xm+10.1
17	Xm+10.2	Xm+10.3	Xm+10.4
16	Xm+10.5	Xm+10.6	Xm+10.7
15	Xm+11.0	Xm+11.1	Xm+11.2
14	Xm+11.3	Xm+11.4	Xm+11.5
13	Xm+11.6	Xm+11.7	DICOM9
12	Yn+7.5	Yn+7.6	Yn+7.7
11	Yn+7.2	Yn+7.3	Yn+7.4
10	Yn+6.7	Yn+7.0	Yn+7.1
9	Yn+6.4	Yn+6.5	Yn+6.6
8	Yn+6.1	Yn+6.2	Yn+6.3
7	DOCOM67	DOCOM67	Yn+6.0
6	Yn+5.5	Yn+5.6	Yn+5.7
5	Yn+5.2	Yn+5.3	Yn+5.4
4	Yn+4.7	Yn+5.0	Yn+5.1
3	Yn+4.4	Yn+4.5	Yn+4.6
2	Yn+4.1	Yn+4.2	Yn+4.3
1	DOCOM45	DOCOM45	Yn+4.0

NOTE

1 Each of Xm and Yn represents the start address of the module on the I/O Link.
2 The A32, B32, and C32 pins of each connector are used to feed 24 V to the module externally. Be sure to connect these pins. Be sure to connect the A30, A31, B30, B31, C30, and C31 pins to the 0 V power supply.

© MyFANUC B5B0D8428C0144A78A5F4CA87F2C262E

8.5.6 DI (Input Signal) Connection

This subsection describes the DI (input signal) connections of the basic module and extension moduless.

○ 96 points maximum (Up to 48 points (basic module) + 48 points (extension modules) can be connected.)

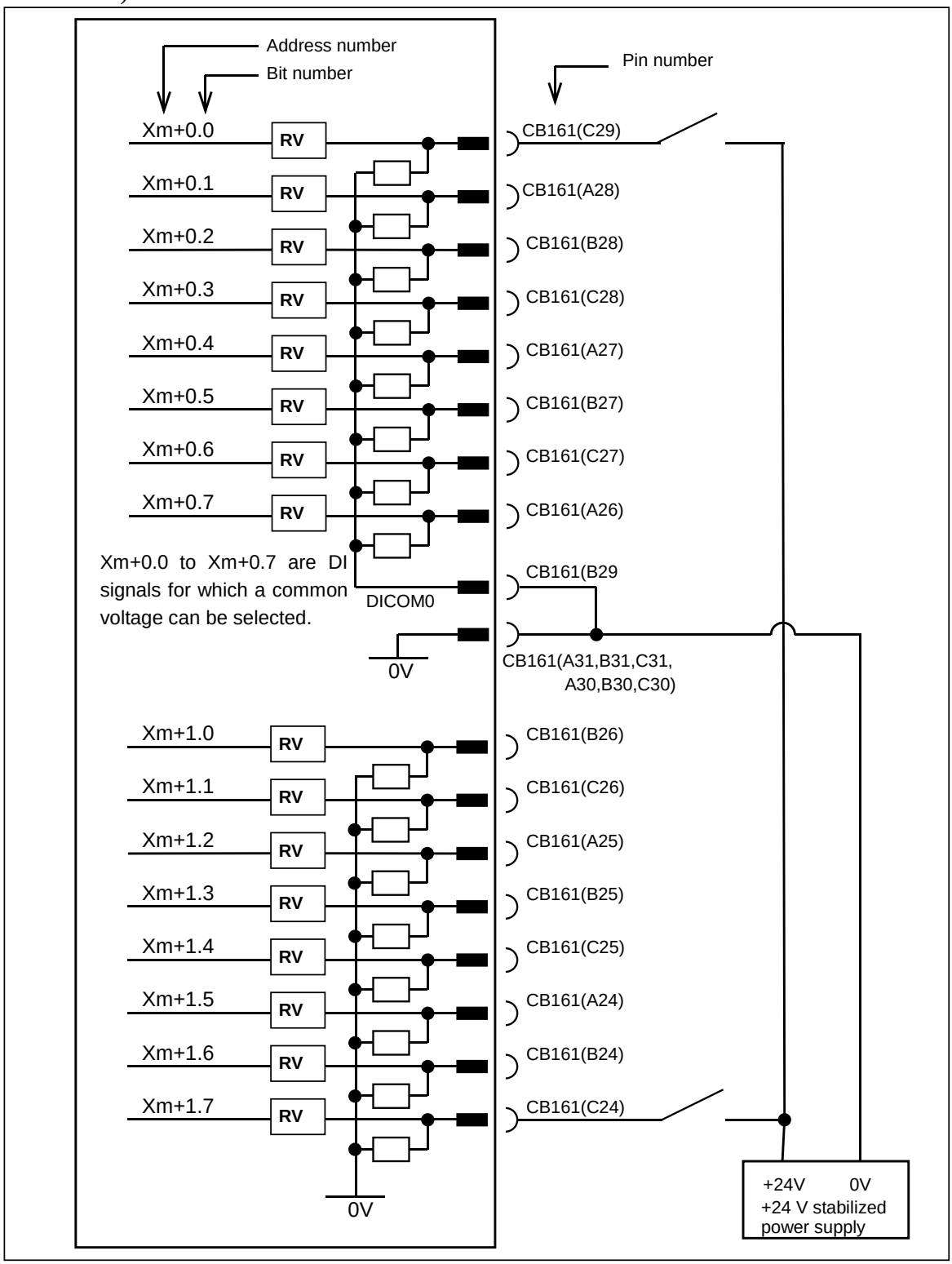

© MyFANUC B5B0D8428C0144A78A5F4CA87F2C262E

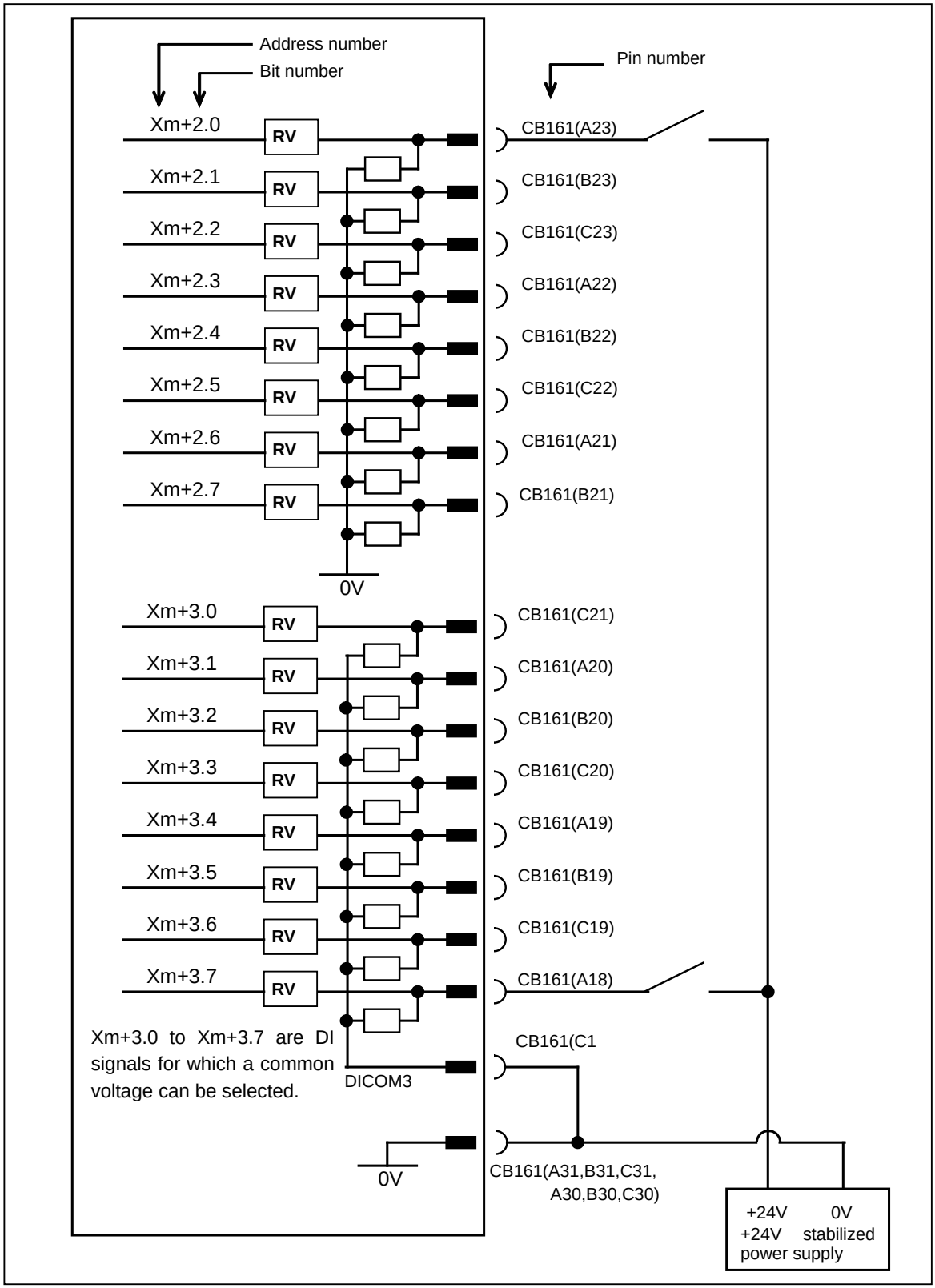

© MyFANUC B5B0D8428C0144A78A5F4CA87F2C262E

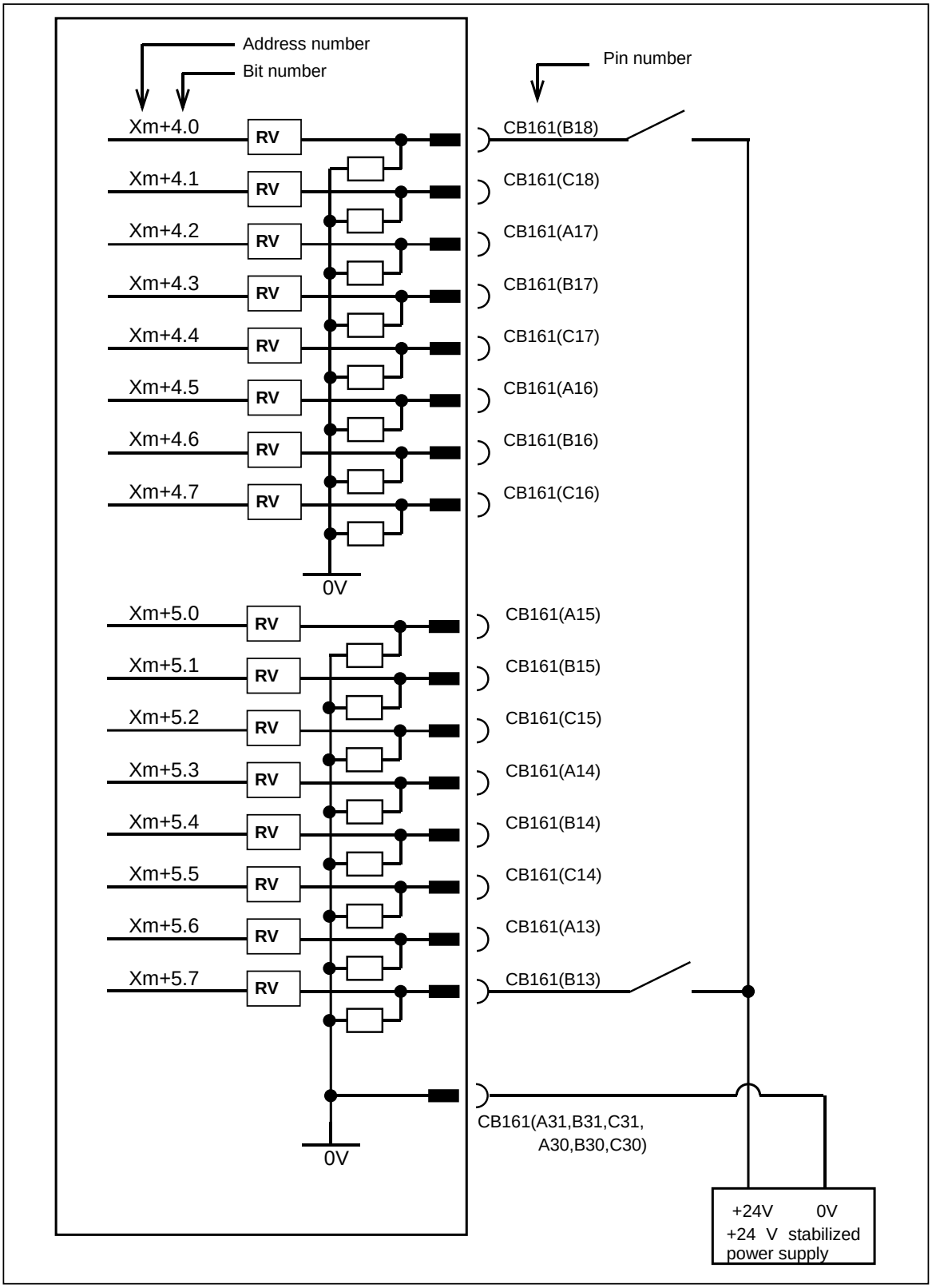

© MyFANUC B5B0D8428C0144A78A5F4CA87F2C262E

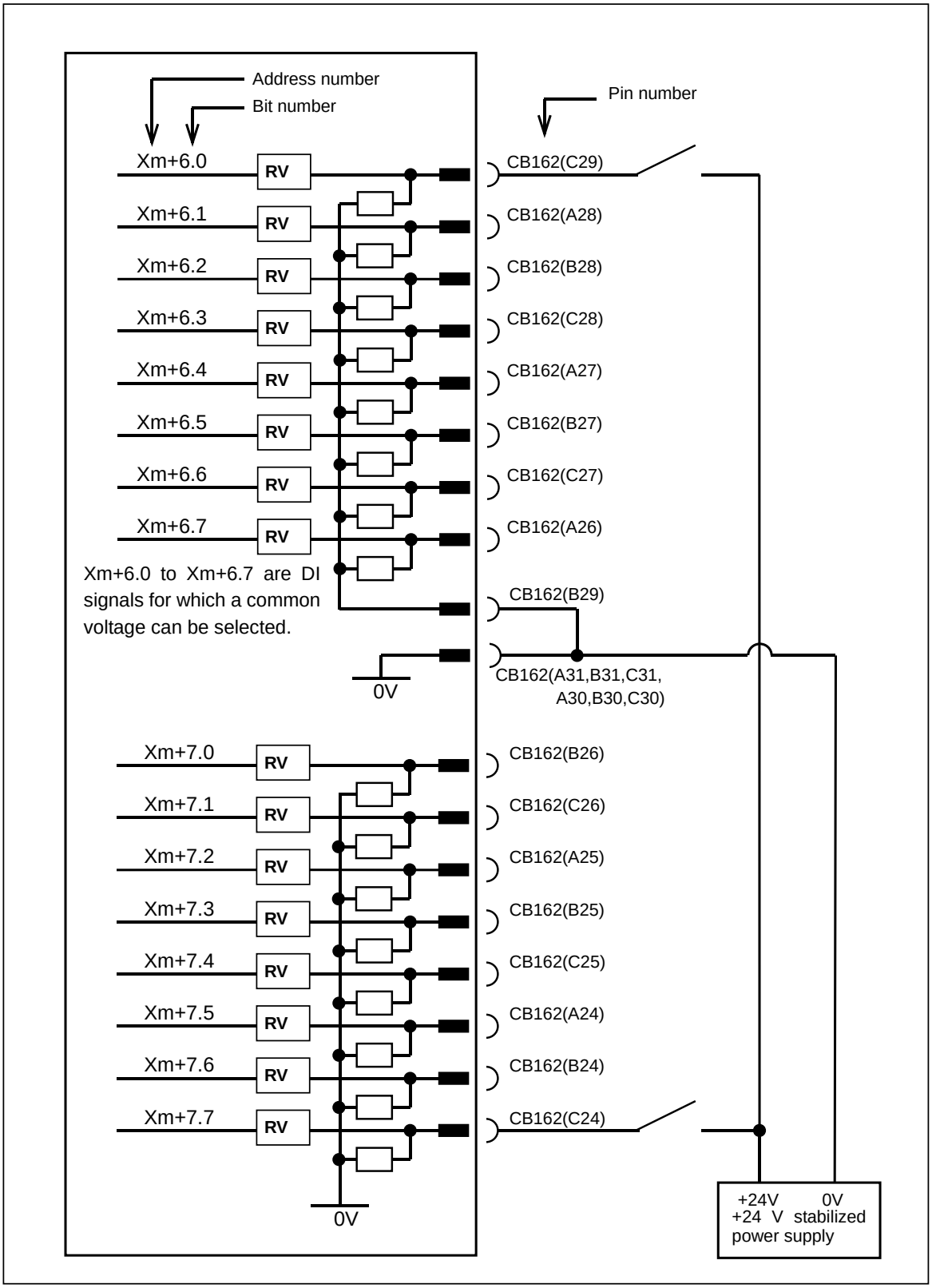

© MyFANUC B5B0D8428C0144A78A5F4CA87F2C262E

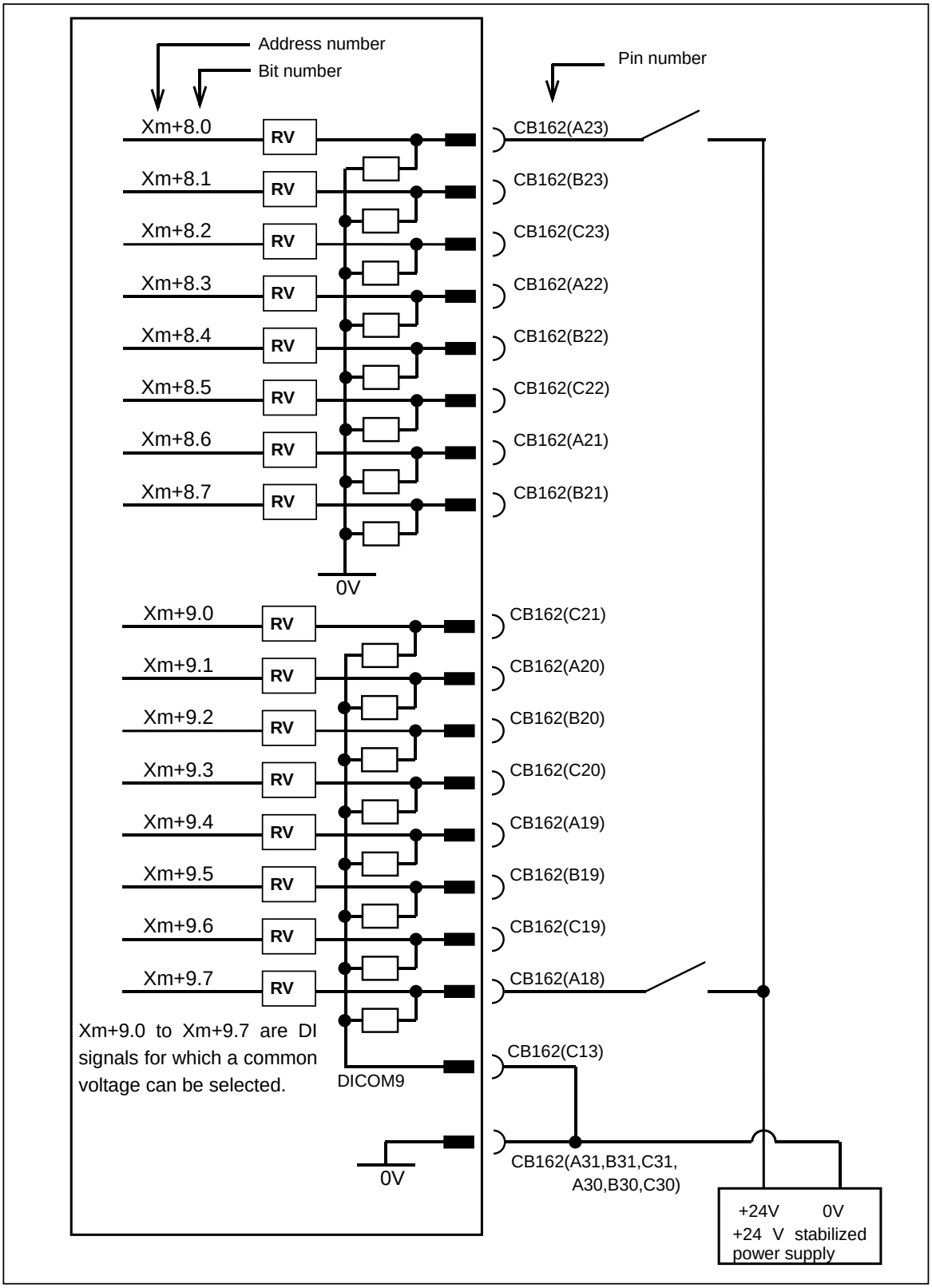

© MyFANUC B5B0D8428C0144A78A5F4CA87F2C262E

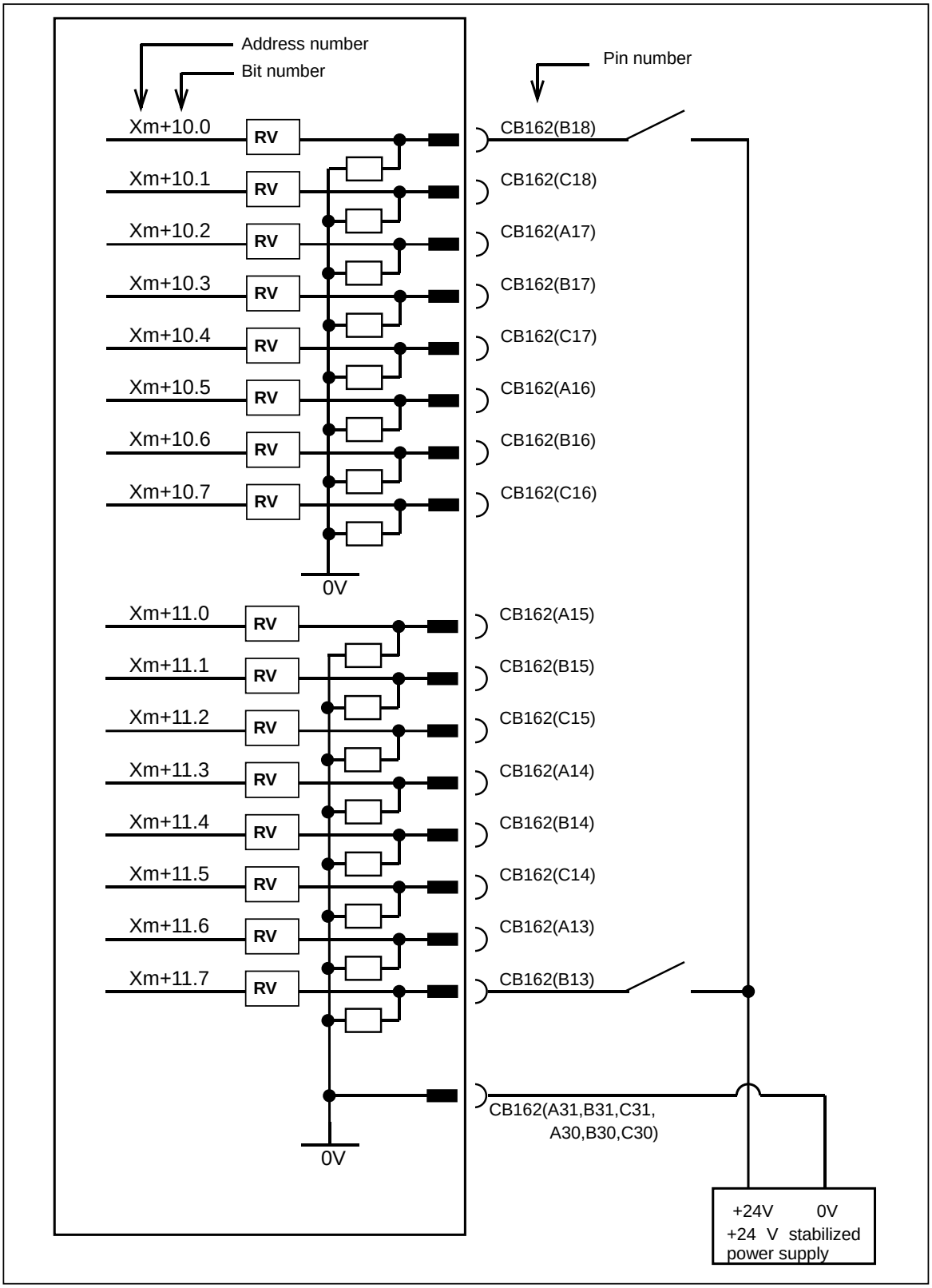

© MyFANUC B5B0D8428C0144A78A5F4CA87F2C262E

NOTE

A common voltage can be selected for DI signals at Xm+0.0 to Xm+0.7, Xm+3.0 to Xm+3.7, Xm+6.0 to Xm+6.7, and Xm+9.0 to Xm+9.7. That is, by connecting the DICOM0, DICOM3, DICOM6, and DICOM9 pins to the +24 V power supply, a DI signal can be input with its logical state reversed. If, however, a cable is connected to ground, it has the same effect as inputting an ON state DI signal. To prevent such accidents, the connection of these pins to the 0 V power supply is recommended wherever possible. Even in the above case, related input signals may become unstable and an incorrect state could be input if the wiring of DICOM0, DICOM3, DICOM6, or DICOM9 is disconnected. To avoid this situation, we recommend using the DI of which common voltage is fixed at 24 V, and creating a logic (ladder) that ensures safety if a ground fault or disconnection occurs on a signal line.

For the unconnected pins at the addresses for which the common voltage is fixed, the input is “0”. For the unconnected pins at the addresses for which a common voltage can be selected, the input is “0” when the DICOMx common select pin is connected to the 0 V power supply or “1” when it is connected to the +24 V power supply. Connect DICOM0, DICOM3, DICOM6, and DICOM9 when used. When the corresponding address input is not used, connect the DICOM pins to the 0 V power supply.

Common voltage for general-purpose DI

Address	Common voltage
Xm	Can be selected with DICOM0.
Xm+1	Cannot be selected.
Xm+2	Cannot be selected.
Xm+3	Can be selected with DICOM3.
Xm+4	Cannot be selected.
Xm+5	Cannot be selected.
Xm+6	Can be selected with DICOM6.
Xm+7	Cannot be selected.
Xm+8	Cannot be selected.
Xm+9	Can be selected with DICOM9.
Xm+10	Cannot be selected.
Xm+11	Cannot be selected.

© MyFANUC B5B0D8428C0144A78A5F4CA87F2C262E

8.5.7 DO (Output Signal) Connection

This subsection describes the DO (output signal) connections of the basic module and extension modules.

○ 64 points maximum (Up to 32 points (basic module) + 32 points (extension modules) can be connected.)

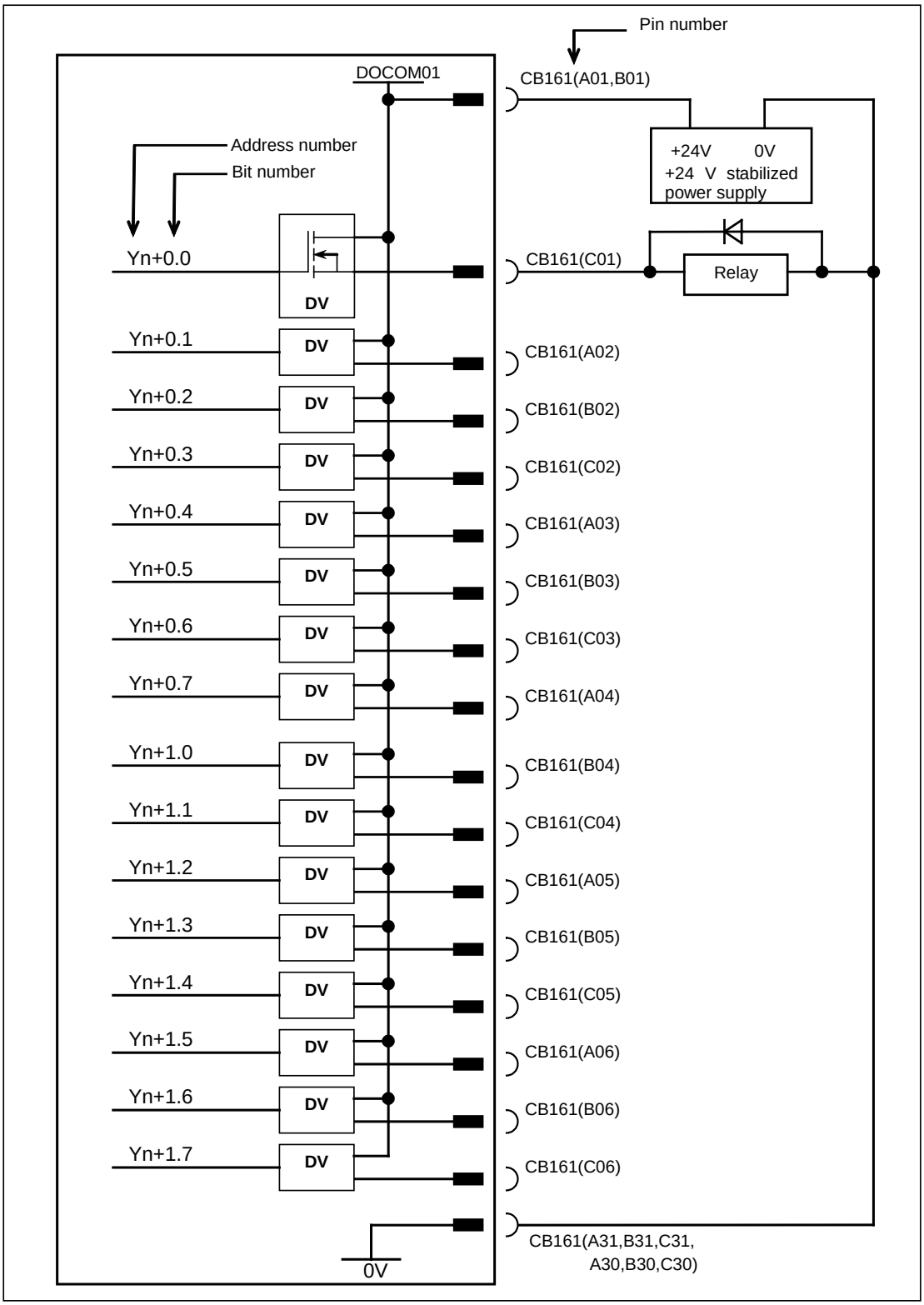

© MyFANUC B5B0D8428C0144A78A5F4CA87F2C262E

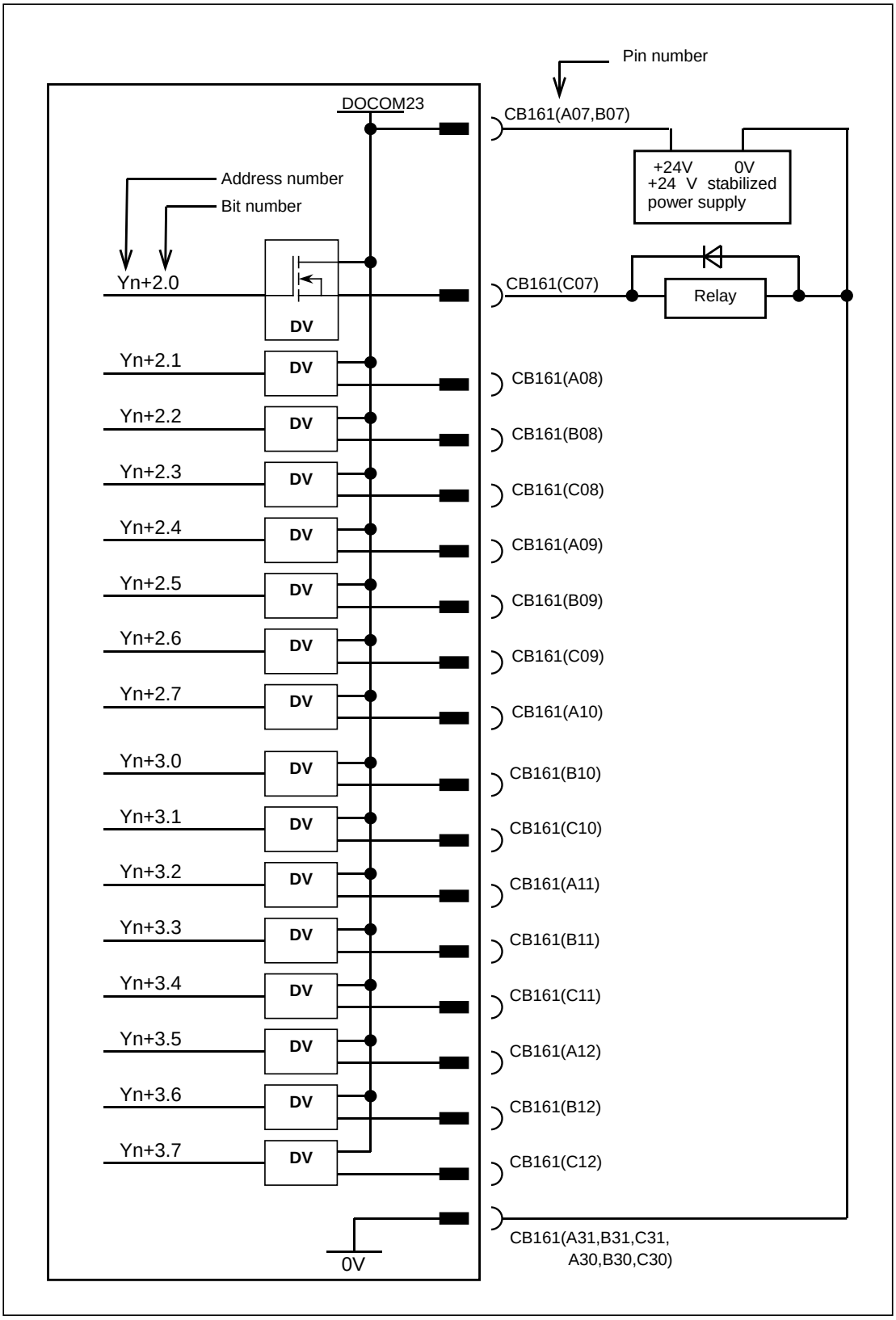

© MyFANUC B5B0D8428C0144A78A5F4CA87F2C262E

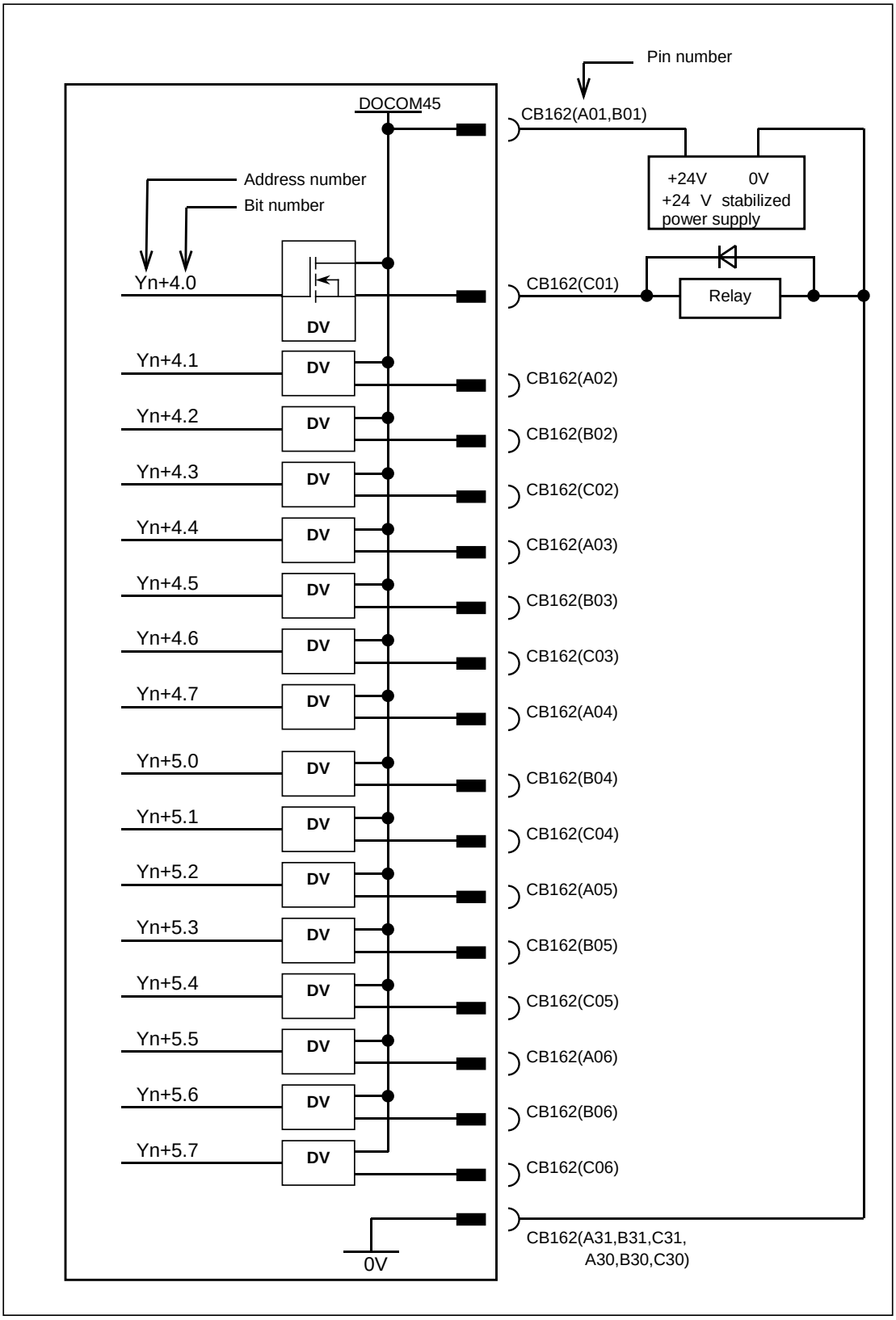

© MyFANUC B5B0D8428C0144A78A5F4CA87F2C262E

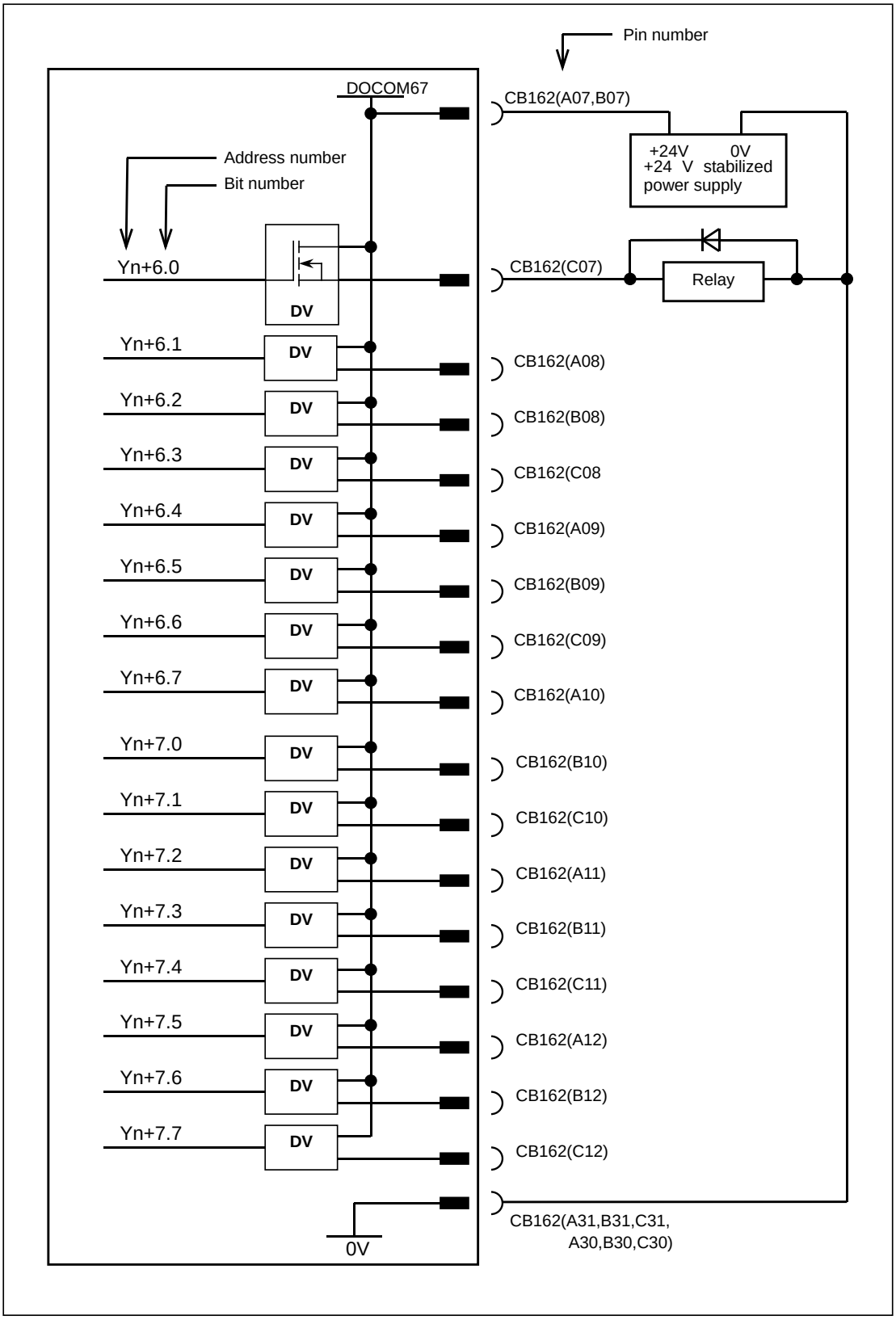

© MyFANUC B5B0D8428C0144A78A5F4CA87F2C262E

8.5.8 DI/DO Signal Specifications

This subsection describes the specifications of the DI/DO signals used with the basic module and extension modules.

DI (input signal specifications)

Number of points	48 points (per module)
Rated input	DC24V, 7.3mA
ON voltage/current	18 VDC or more, 6 mA or more
OFF voltage/current	6 VDC or less, 1.5 mA or less
Delay time	The receiver delay time is 2 ms (maximum). In addition, [I/O Link transfer time between CNC and I/O module] and [ladder scan period (depending on CNC)] must be considered.

DI（contact specification）

Contact rating	30 VDC, 16 mA or more
Leakage current between contacts when opened	1mA or less(26.4V)
Voltage decrease between contacts when closed	2 V or less (including a cable voltage decrease)

DO(output signal specifications)

Number of points	32 points (per module)
Maximum load current when ON	200 mA or less including momentary variations
Saturation voltage when ON	1 V (maximum) when the load current is 200 mA
Withstand voltage	24 V +20% or less including momentary variations
Leakage current when OFF	20μA or less
Delay time	The driver delay time is 50 μs (maximum). In addition, [I/O Link transfer time between CNC and I/O module] and [ladder scan period (depending on CNC)] must be considered.

NOTE

1 When inductive load is connected to DO terminal, connect a diode in parallel in order to reduce the noise.
2 When capacitive load is connected to DO terminal, connect a resistor in series in order to diminish the rush current.

Power supply for DO load (DOCOM)

Input voltage range : min 0V, max 26.4V
Be sure to connect all power supply for DO load (DOCOM) pins.
Turn on the power supply for DO load (DOCOM) at the same time as or later than the power for the control unit.
Turn off the power supply for DO load (DOCOM) when or before the power for the control unit is turned off.

⚠ **WARNING**

For the safety of the system, don’t supply the power for the load (DOCOM) when the power for the I/O Unit is off. If the power for the load (DOCOM) is supplied when the power for the I/O Unit is off, invalid output or malfunction may cause an accident.

© MyFANUC B5B0D8428C0144A78A5F4CA87F2C262E

By turning off (opening) the power supply (DOCOM) for the DO signals (output signals), all the DO signals of each module can be turned off at the same time. At this time, the DO state is as shown below.

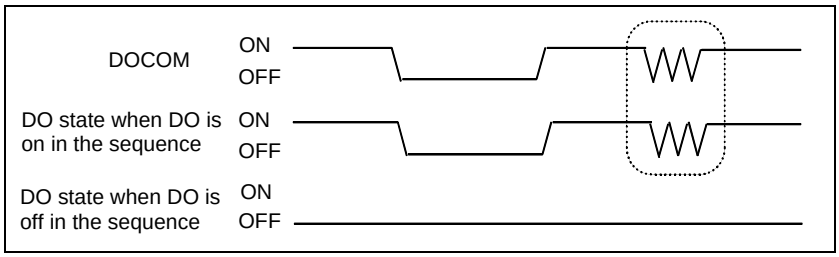

> ⚠ **CAUTION**
> When DO is on in the sequence, the ON/OFF state of DOCOM is directly reflected in the DO state as indicated above by the dashed box.
> Don't connect the inductive load or the capacitive load to the power supply for DO load (DOCOM). If the power supply for DO load (DOCOM) is turned on/off in the condition that it is connect to the inductive load or the capacitive load, it will cause the DO to malfunction.

Parallel DO (output signal) connection

A DO load current of twice the level can be obtained by connecting DO points in parallel and exercising ON/OFF control at the same time in the sequence. Namely, the maximum load current per DO point is 200mA. By connecting two DO points in parallel and turning on the two DO points at the same time, 400 mA can be obtained. In this case, however, the leakage current is doubled up to 40 μA when the DO points are turned off.

> ⚠ **CAUTION**
> Be sure to connect the bit at the same address for parallel connection.
> Do not connect three or more signals in parallel.

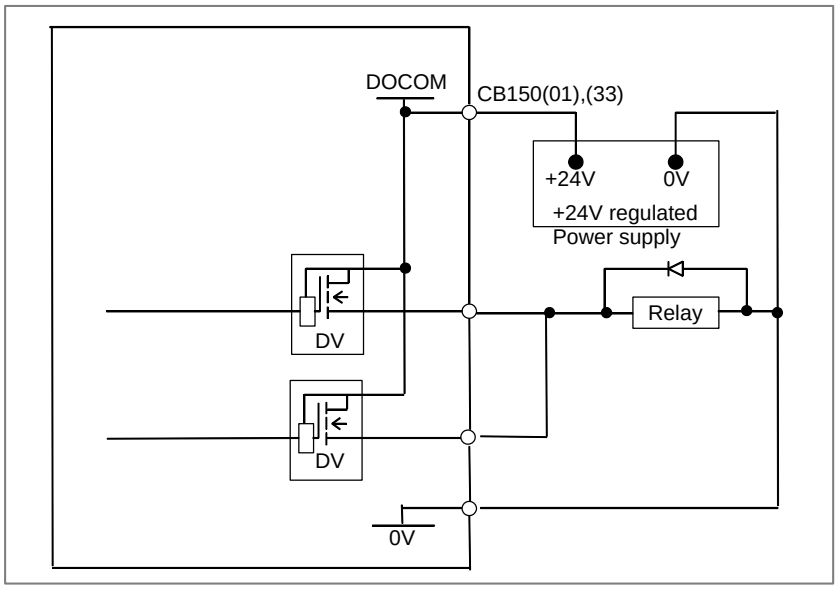

© MyFANUC B5B0D8428C0144A78A5F4CA87F2C262E

8.5.9 Power Supply Connection

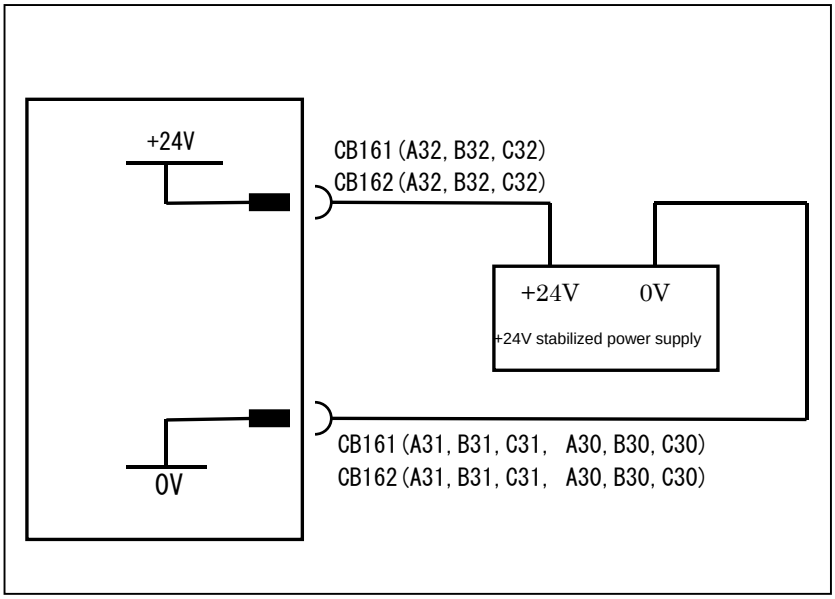

8.5.10 Manual Pulse Generator Connection

For I/O module for connector panel type-2, three manual pulse generators can be connected to the basic module.
For the connection, see Subsection 7.4.1.

© MyFANUC B5B0D8428C0144A78A5F4CA87F2C262E

8.5.11 Connection between Modules

Connect the basic module with an extension modules by using a 34-pin flat cable. At this time, install an extension modules on the right side of the basic module to prevent the I/O Link *i* connector from being covered by the flat cable.

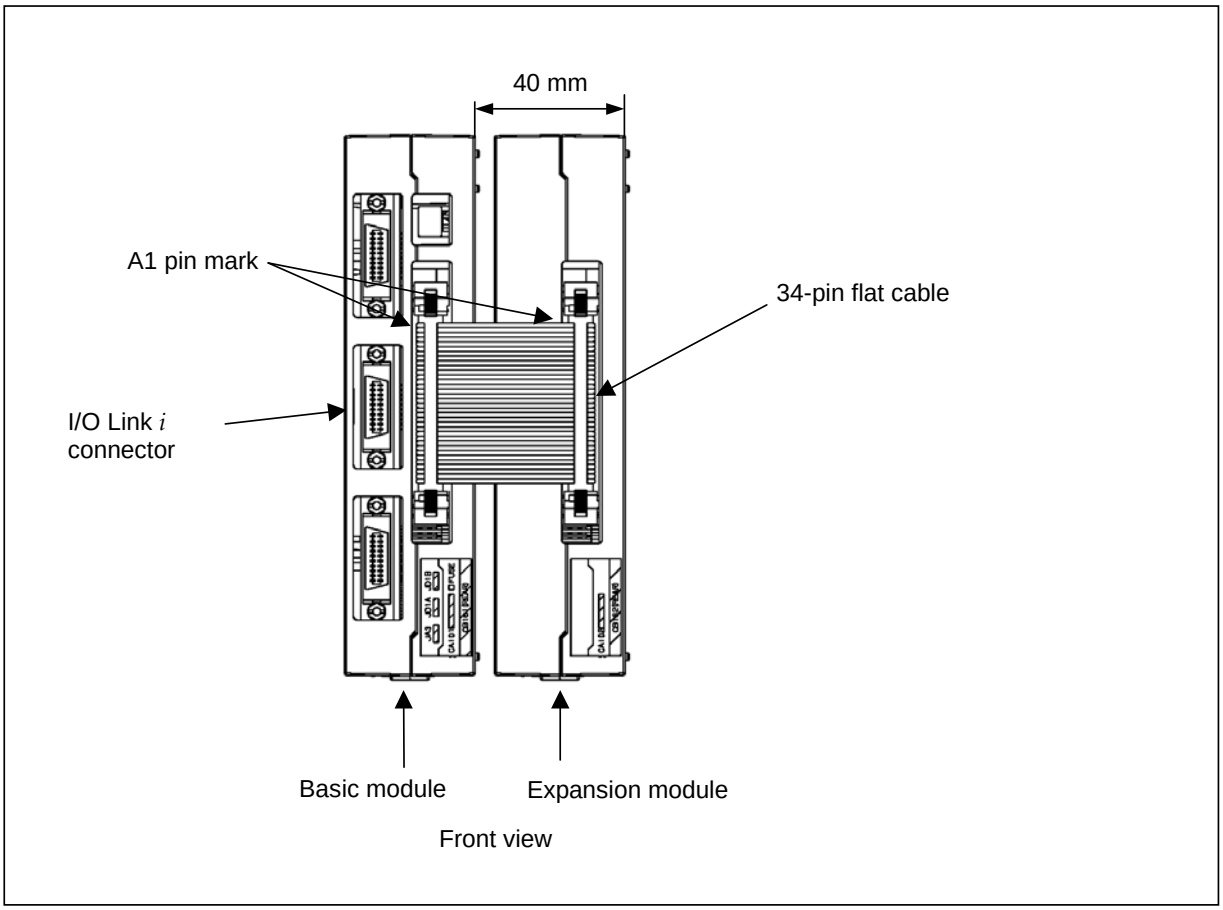

Flat cable-side connector : Hirose Electric : HIF3BA-34DA-2.54R
Module-side connector : Hirose Electric : 3BA-34PA-2.54DS or
Yamaichi Denki : FAP-3403-1202-0BS

NOTE

When installing a flat cable, ensure that all pins are connected on a one-to-one basis.
The modules must be spaced at least 40 mm apart.
In this case, the length of the flat cable is about 35 mm. When the modules are separated furthermore, the length of the flat cable is:
35 mm + (module spacing - 40 mm)
Note, however, that the maximum allowable flat cable length is 300 mm.

© MyFANUC B5B0D8428C0144A78A5F4CA87F2C262E

8.5.12 Unit Dimensions

The basic module and extension modules have the same dimensions.

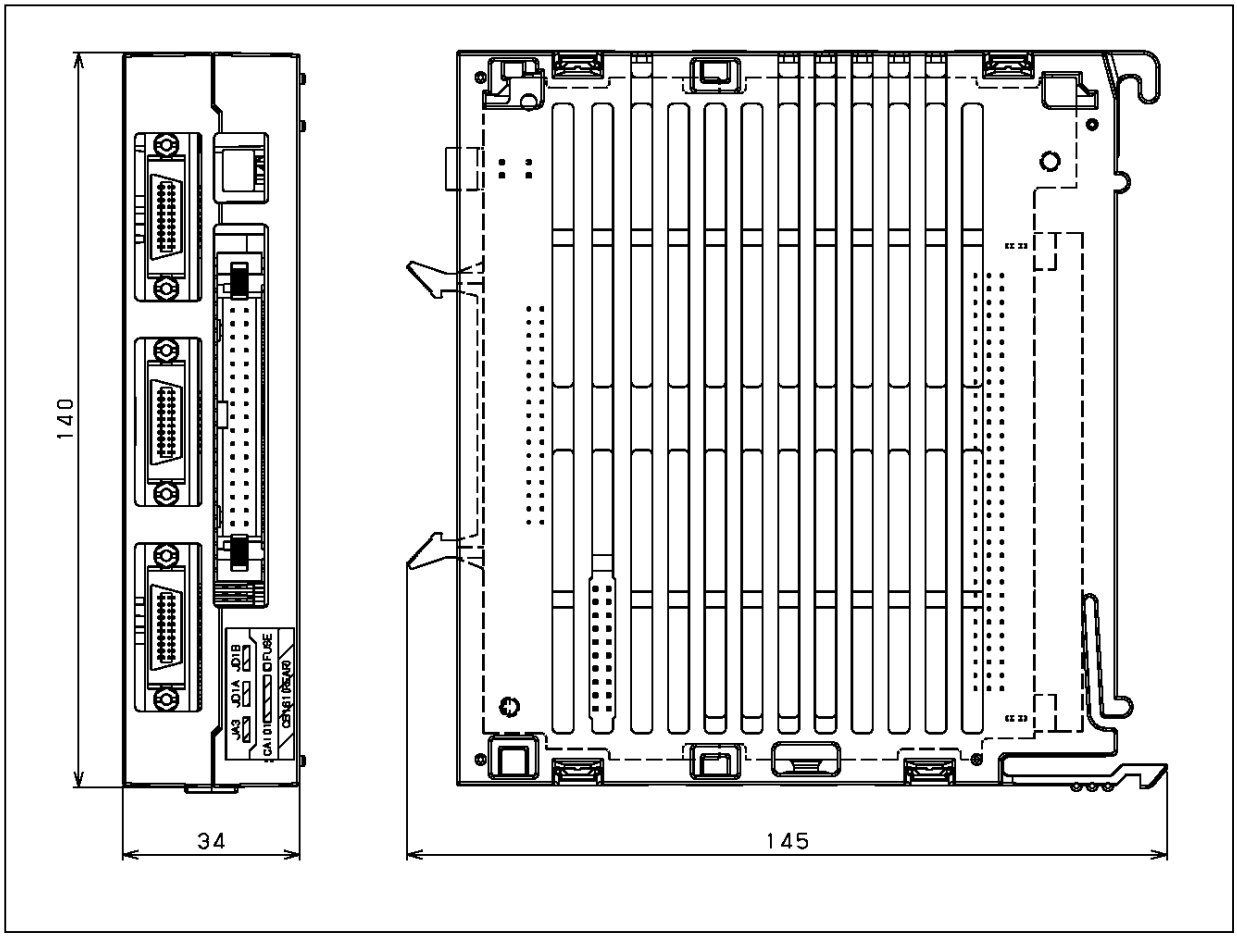

Weight: Basic module 280 g
Extension modules 210 g

© MyFANUC B5B0D8428C0144A78A5F4CA87F2C262E

8.5.13 Mounting the Module

Mounting the module

1 Insert the hook of the module into the square hole located at the upper part of the connector panel printed circuit board.
2 Using the hook as a fulcrum, push the module in the direction of A and mate the module's connector with the connector on the printed circuit board.
3 Push the stopper into the square hole located at the lower part of the connector panel printed circuit board until it clicks into place.

Dismounting the module

1 Press point B of the stopper.
2 Using the hook as a fulcrum, pull the lower part of the module in the direction of C.

NOTE
When mounting and dismounting a module, hold the module by its top and bottom surfaces. Avoid applying force to the sides (where slits are provided).

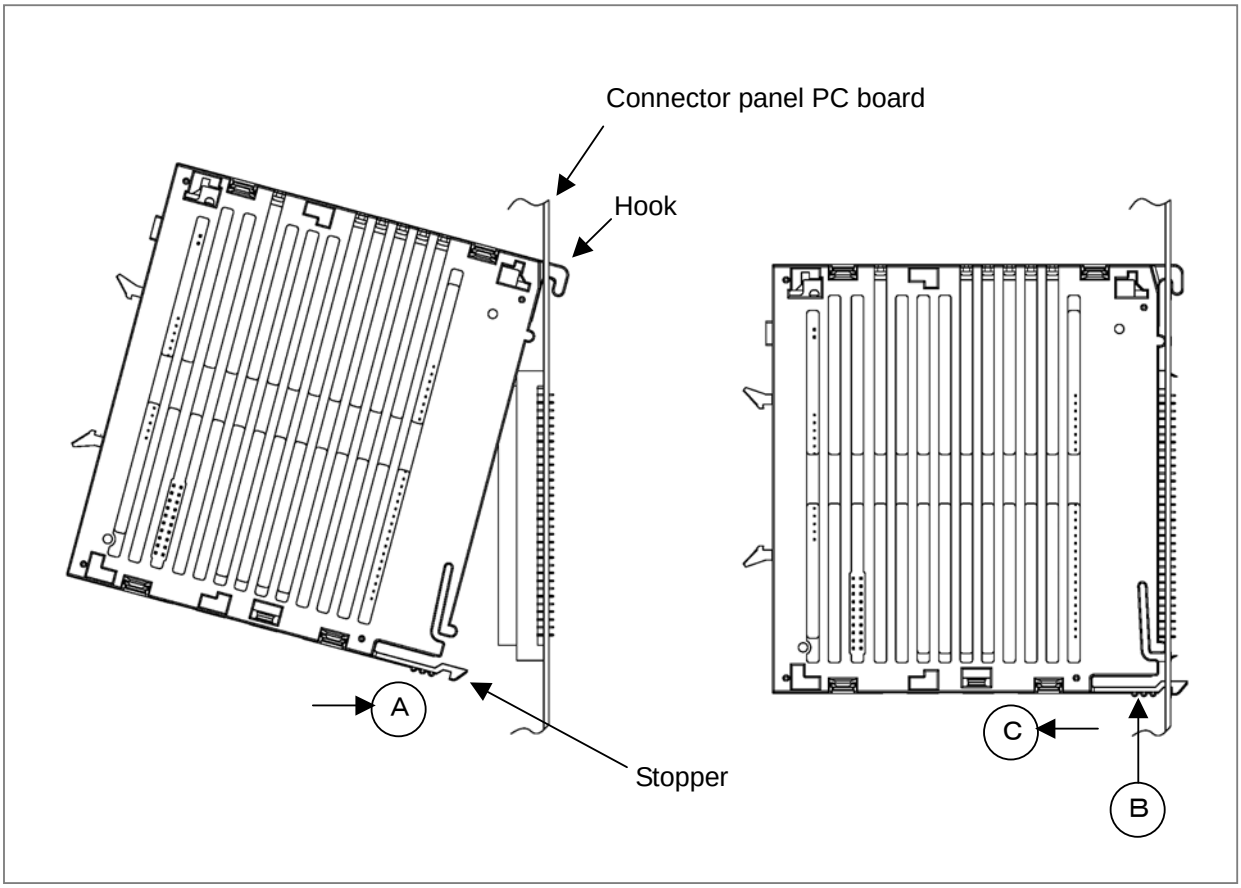

© MyFANUC B5B0D8428C0144A78A5F4CA87F2C262E

8.5.14 Connector Panel Printed Circuit Board

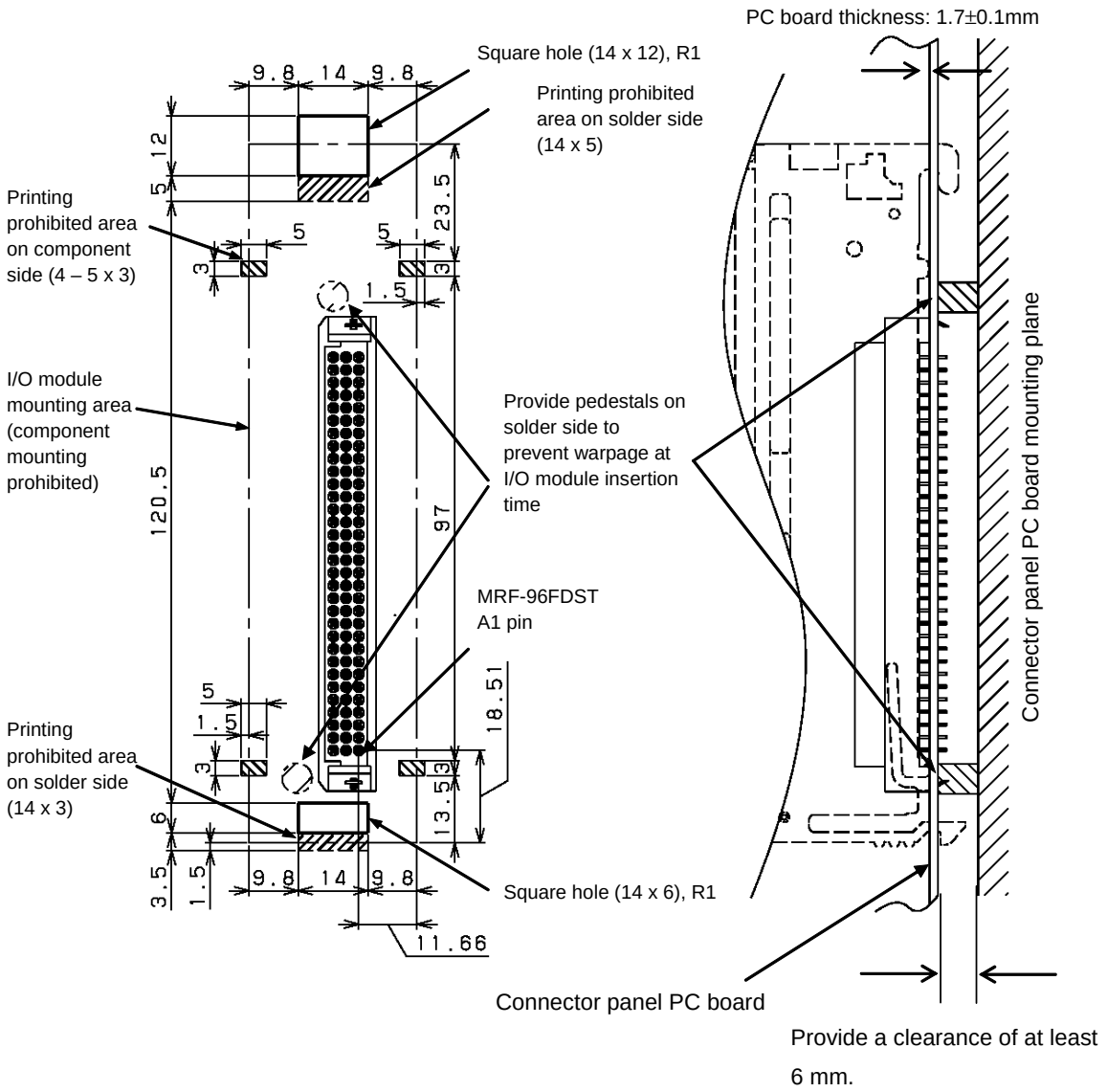

Connector specifications of the connection printed circuit board: HONDA MRF-96FDST(straight, 96 pins, female)

© MyFANUC B5B0D8428C0144A78A5F4CA87F2C262E

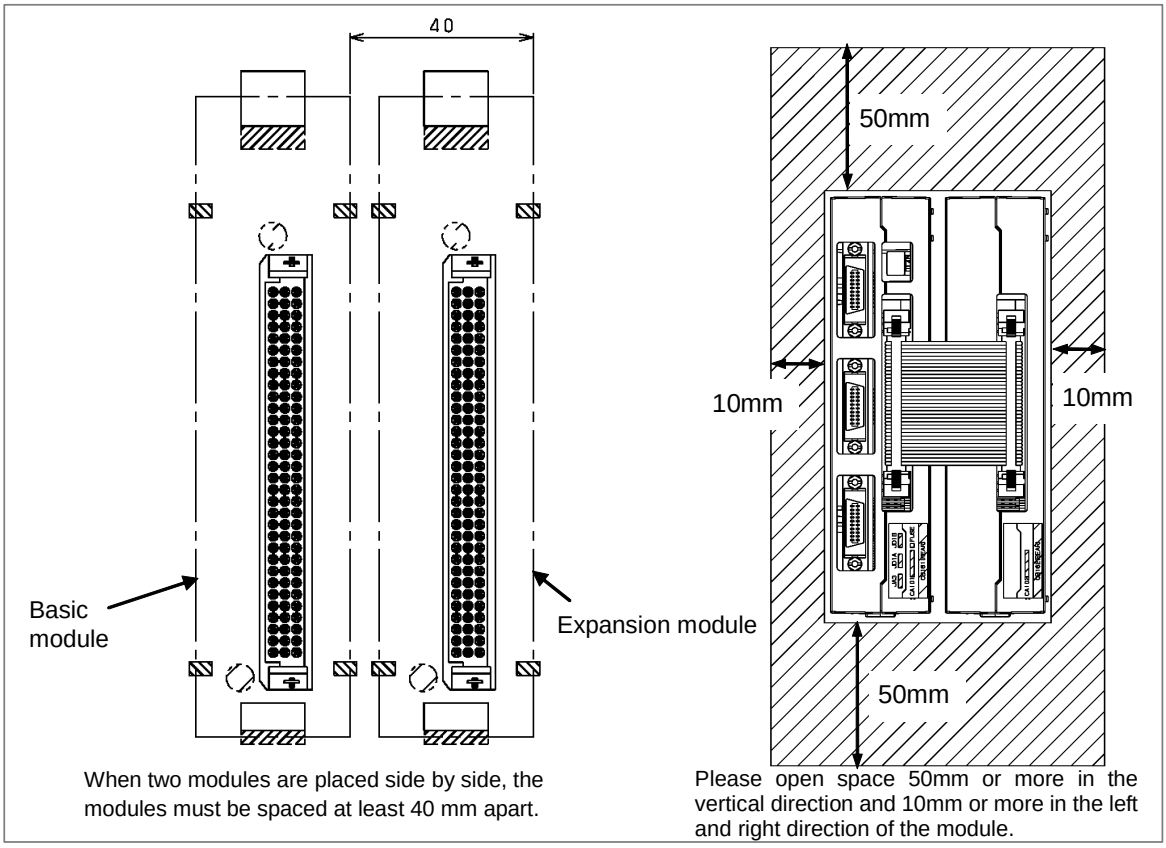

NOTE

1 To ensure adequate ventilation within an I/O module, allow a clearance of 50 mm or more above and below the module and a clearance of 10 mm or more on the left and right sides. Never place a device that generates a large amount of heat below an I/O module.

2 To the front panel of an I/O module, the cables for the I/O Link *i* and manual pulse generator are connected.
For cabling, allow a clearance of about 70 mm at the front of an I/O module.

3 Space the basic module and extension modules at least 40 mm apart from each other.

4 An I/O module is secured to the connector panel by inserting the hook into a hole on the connector panel as with the current distribution I/O module. Allow a clearance for hooking on the rear side of the connector panel.

5 For securing an I/O module, four printing prohibited areas are provided on the surface of the connector panel, and a printing prohibited area is also provided beside the upper and lower square holes on the rear side.

6 When mounting the basic module and extension modules side by side, ensure that the basic module is mounted on the left side when viewed from the I/O Link *i* connector.

7 When inserting an I/O module into the connector panel, provide pedestals at positions nearest to the connector of the connector panel to support the top and bottom areas of the connector from the rear side to protect the connector panel from being warped.

8 Ensure that the thickness of the connector panel printed circuit board is 1.7 mm ±0.1 mm.

© MyFANUC B5B0D8428C0144A78A5F4CA87F2C262E

Dimensions of the connector (HONDA MRF-96FDST) for the connector panel printed circuit board (Part order specification drawing number: A03B-0815-K030)

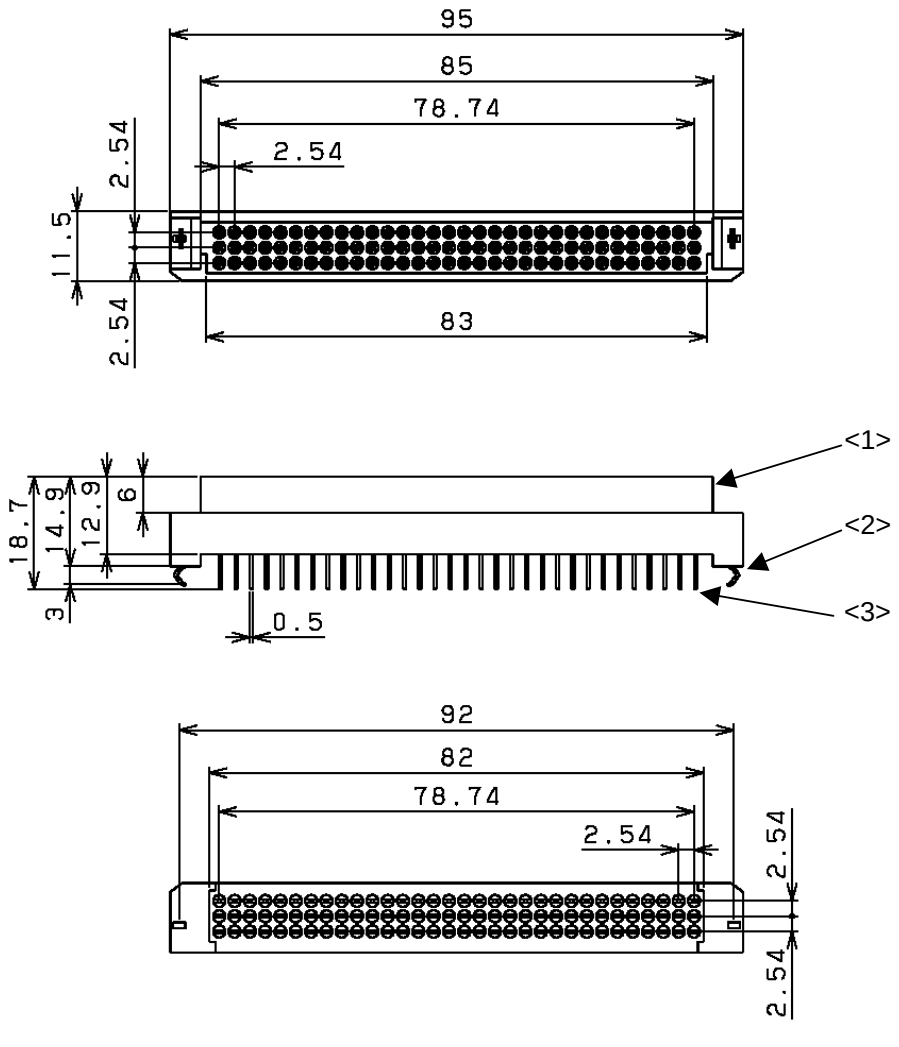

Unit: mm

<1> Insulator
<2> Locking hardware
<3> Contact

© MyFANUC B5B0D8428C0144A78A5F4CA87F2C262E

8.5.15 Other Notes

Address allocation

For this I/O module, I/O addresses are mapped as follow:

DI space map

Xm_1	Basic module	Slot 1
$Xm_1 + 1$		
$Xm_1 + 2$		
$Xm_1 + 3$		
$Xm_1 + 4$		
$Xm_1 + 5$		
Xm_2	Extension module	Slot 2
$Xm_2 + 1$		
$Xm_2 + 2$		
$Xm_2 + 3$		
$Xm_2 + 4$		
$Xm_2 + 5$		
Xm_{mpg} (for 1st MPG)	Basic module	Slot MPG
$Xm_{mpg} + 1$ (for 2nd MPG)		
$Xm_{mpg} + 2$ (for 3rd MPG)		

DO space map

Yn_1	Basic module	Slot 1
$Yn_1 + 1$		
$Yn_1 + 2$		
$Yn_1 + 3$		
Yn_2	Extension module	Slot 2
$Yn_2 + 1$		
$Yn_2 + 2$		
$Yn_2 + 3$		

Xm_1, Xm_2, Xm_{mpg}, Yn_1, and Yn_2 indicate the start address at allocation.

Each module of I/O module for connector panel type-2 is treated as a slot and addresses are allocated for each module. When only the basic module is used, allocate 6-byte DI addresses and 4-byte DO addresses to slot 1. When an extension module is used, allocate 6-byte DI addresses and 4-byte DO addresses to slot 2.
I/O module for connector panel type-2 has an interface for three manual pulse generators. To use manual pulse generators, allocate addresses to slot MPG. With this setting, addresses can be allocated to the three manual pulse generators at a time (addresses cannot be allocated individually to manual pulse generators).
Do not use these addresses with the ladder because the CNC processes the manual pulse generator signals directly.

DO (output signal) alarm detection

The DO driver of this I/O module is capable of detecting an overcurrent and measuring its own temperature. If an accident, such as connecting the cable to ground, causes an abnormal increase in the load current or in the driver temperature, a protection circuit, which is provided for each DO driver, is activated which keeps the DO signal for the relevant 1 byte in the OFF state until the cause of the problem is eliminated. Even if this occurs, the CNC and I/O module continues operating without entering the alarm status, but the DO driver which detected the error can be checked. If a DO error occurs, this information can be checked on the CNC DGN screen or alarm processing can be performed in advance using a ladder to help error check and recovery.

A DO error such as a ground fault is detected for each point. This DO error is transferred to the PMC system relay area as a status alarm. The following table lists system relay area information and corresponding DO data related to a status alarm. When an alarm data bit is set to “1”, the DO driver corresponding to the bit detects an error. Also see Subsection 7.3.3, “Status Alarm”.

© MyFANUC B5B0D8428C0144A78A5F4CA87F2C262E

Information output to the system relay area and corresponding location where an error occurred

Information output to the system relay area						Faulty location
Type	Group number	PMC path	Slot number	Alarm information number (Intra-slot byte address)	Y address (DO address)	
0	0 to 23	1 to 5, 9	1	0	Yn_1	0th byte DO of Basic module
				1	Yn_1+1	1st byte DO of Basic module
				2	Yn_1+2	2nd byte DO of Basic module
				3	Yn_1+3	3rd byte DO of Basic module
			2	0	Yn_2	0th byte DO of Extension module
				1	Yn_2+1	1st byte DO of Extension module
				2	Yn_2+2	2nd byte DO of Extension module
				3	Yn_2+3	3rd byte DO of Extension module

Output values of “Group number”, “PMC path”, and “Y address” depends on unit connection and I/O address assignment.
Yn_1 and Yn_2 indicate the start address at allocation.

Description of “Alarm data” in the system relay area

Alarm data							
#7	#6	#5	#4	#3	#2	#1	#0
DO ground fault at bit 7	DO ground fault at bit 6	DO ground fault at bit 5	DO ground fault at bit 4	DO ground fault at bit 3	DO ground fault at bit 2	DO ground fault at bit 1	DO ground fault at bit 0

⚠ CAUTION

1 The output protection function is not for external equipment but for internal device of the module.
2 The output protection function can’t protect the internal device in any case. If the output protection function is activated, remove the cause immediately. If the output exceed the absolute maximum rating, the output protection function may not operate normally or the internal device may break before the output protection function operates.
3 If the over current is continued with a condition that the output protection function can’t operate normally, the internal device might emit smoke or take fire.

© MyFANUC B5B0D8428C0144A78A5F4CA87F2C262E

8.5.16 Connection of the Grounding Terminal of the Module

Connect the 0V line in the basic module to the cabinet's metal plate that is connected to ground or signal ground bar nearby via the protective ground terminal. About Multipoint grounding or Single-point grounding, refer to Item 3.4.1
Use fasten terminal for series 250 as cable terminal.

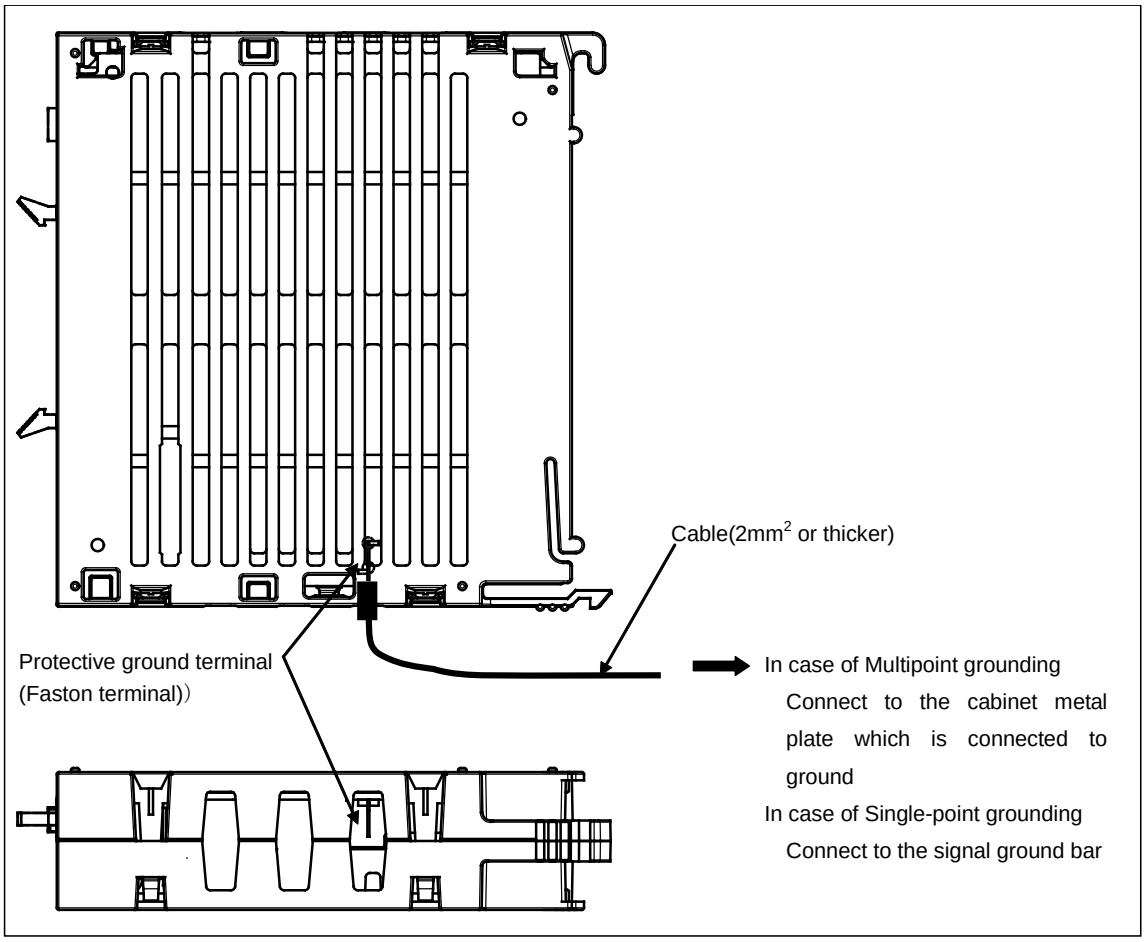

© MyFANUC B5B0D8428C0144A78A5F4CA87F2C262E

8.6 CONNECTION OF TERMINAL TYPE I/O MODULE

8.6.1 Overview

The terminal type I/O module has the following features:

- Input/output signals are connected on a spring-type terminal block (ferrule terminal block).
- A terminal block can be attached to or detached from the main body of the module.
- An LED for state indication is provided for each I/O signal.
- The terminal type I/O module can be installed on the DIN rail.
- By using extension modules, the maximum number of digital input points can be extended to 96 and the maximum number of digital output points can be extended to 64.
- An extension module with a manual pulse generator (MPG) interface is available.

NOTE
Extension modules D and E have no LED for state indication.

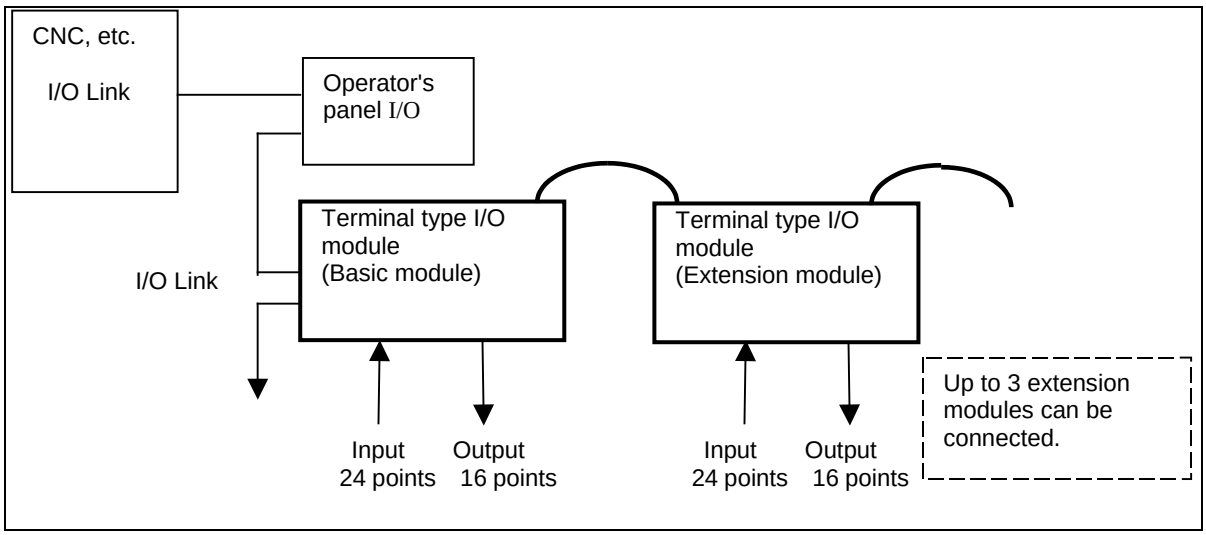

© MyFANUC B5B0D8428C0144A78A5F4CA87F2C262E

8.6.2 Module Specifications

8.6.2.1 Types of modules

Item	Ordering specifications	Specification
Basic module	A03B-0823-C011	DI/DO: 24/16
Extension module A	A03B-0823-C012	DI/DO : 24/16 With MPG interface
Extension module B	A03B-0823-C013	DI/DO : 24/16 Without MPG interface
Extension module C	A03B-0823-C014	DO : 16 2-A output module
Extension module D	A03B-0823-C015	Analog input module
Extension module E	A03B-0823-C016	Analog output module
Basic module (for DCS)	A03B-0823-C021	DI/DO:12/8 (for PMC) DI/DO:12/8 (for DCS PMC)
Fuse (spare parts)	A03B-0823-K001	2A (for basic module)
Spare terminal block set (for basic module and extension module A/B)	A03B-0823-K020	Cable-side terminal block set (including each of T1 through T4)
Spare terminal block set (for extension module C)	A03B-0823-K011	Cable-side terminal block set (including each of T1 and T2)
Spare terminal block set (for extension module D)	A03B-0823-K012	Cable-side terminal block set (including each of T1 and T2)
Spare terminal block set (for extension module E)	A03B-0823-K013	Cable-side terminal block set (including each of T1 and T2)
Spare terminal block set (for DCS)	A03B-0823-K021	Cable-side terminal block set (including each of T1 through T4)
Inter-module cable A	A03B-0823-K100	Cable length: 100 mm Used for extension module connection

NOTE
A cable-side terminal block is shipped with the main unit. Spare terminal blocks are used for replacement.

Module specifications (common items)

Item	Specification	Remarks
Interface between basic module and extension modules	Bus connection using a flat cable	Up to three extension modules connectable per basic module. Up to two extension modules D connectable, however.

For the specifications (such as signal input requirements) specific to each module, see the relevant pages of each item.

NOTE
1 Be sure to use modules with the ordering specifications listed above in combination. Do not use other modules.
2 Always use the basic module (for DCS) with the dual check safety function.

© MyFANUC B5B0D8428C0144A78A5F4CA87F2C262E

8.6.2.2 Installation conditions

(1) Use this I/O module in a completely sealed cabinet.
(2) Use the units under the following ambient temperature conditions:
Operation: 0°C to 55°C
Storage and transportation: -20°C to 80°C
(3) For other installation conditions, conform to the CNC installation conditions.
(4) Be sure to install this module on a vertical surface and provide a clearance of 100 mm or more both above and below the module. Do not place equipment that generates a large amount of heat below the I/O module.

8.6.2.3 I/O signal specifications

Basic module, Extension modules A and B

Digital input	
Number of points	24 points
Common	8 points/common (6 common terminals)
Rated input voltage	24 VDC (+10%, –10%)
Rated input current	7 mA (average)
Polarity	Xm+0.0 to Xm+0.7: Sink or source type selectable Xm+1.0 to Xm+1.7, Xm+2.0 to Xm+2.7: Sink type
ON voltage/current	20 VDC or more, 6 mA or more
OFF voltage/current	8 VDC or less, 1.5 mA or less
Response time	The receiver delay time is 2 ms (maximum). In addition, [I/O Link transfer time between CNC and I/O module] and [ladder scan period (depending on CNC)] needs to be considered.

Digital output	
Number of points	16 points
Common	8 points/common (8 common terminals)
Rated output voltage	12 VDC to 24 VDC (+20%, –15%)
Rated output current	0.2A/pt
Polarity	Source type
Maximum voltage decrease when ON	0.63 V (load current × 1.25Ω)
Maximum leakage current when OFF	40 μA
Output protection function	Protection against overheat and overcurrent
Response time	The driver delay time is 50 μs (maximum). In addition, [I/O Link transfer time between CNC and I/O module] and [ladder scan period (depending on CNC)] needs to be considered.

Output protection and abnormal detection

Connection	Module name	Unit of output protection	Unit of abnormal detection	Area of abnormal detection information
I/O Link *i*	Basic module	1point	1point	System relay area
	Extension module A	1point	1point	System relay area
	Extension module B	1point	1point	System relay area

© MyFANUC B5B0D8428C0144A78A5F4CA87F2C262E

⚠ CAUTION

1 The protection function is intended to protect the components internal to the modules rather than external units.
2 No protection function of modules can protect their internal components in all cases. Once any protection function has worked, remove the cause promptly. If an absolute maximum rating is exceeded, for example, it is likely that protection functions may not work or an IC may break down before the related protection function works, depending on the way or situation in which the modules are used.
3 If an output protection function is defective, it is likely that, if the load current exceeds its rating continuously for a long time, smoke or ignition may occur.

Power supply for DO load (DOCOM)

Input voltage range : min 0V, max 26.4V
Be sure to connect all power supply for DO load (DOCOM) pins.
Turn on the power supply for DO load (DOCOM) at the same time as or later than the power for the control unit.
Turn off the power supply for DO load (DOCOM) when or before the power for the control unit is turned off.

⚠ WARNING

For the safety of the system, don't supply the power for the load (DOCOM) when the power for the I/O Unit is off. If the power for the load (DOCOM) is supplied when the power for the I/O Unit is off, invalid output or malfunction may cause an accident.

By turning off (opening) the power supply (DOCOM) for the DO signals (output signals), all the DO signals of each module can be turned off at the same time. At this time, the DO state is as shown below.

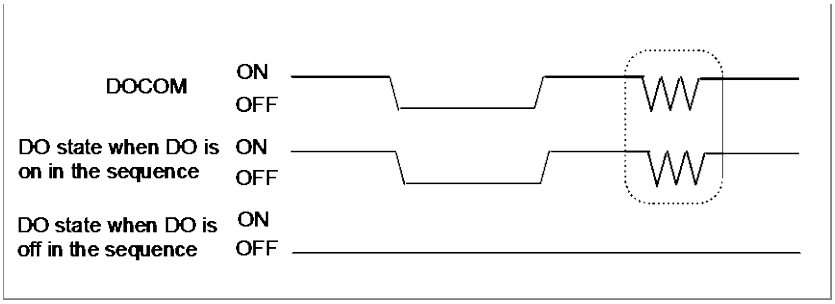

⚠ CAUTION

When DO is on in the sequence, the ON/OFF state of DOCOM is directly reflected in the DO state as indicated above by the dashed box.
Don't connect the inductive load or the capacitive load to the power supply for DO load (DOCOM). If the power supply for DO load (DOCOM) is turned on/off in the condition that it is connect to the inductive load or the capacitive load, it will cause the DO to malfunction.

© MyFANUC B5B0D8428C0144A78A5F4CA87F2C262E

Extension module C

Digital output	
Number of points	16 points
Common	4 points/common
Rated output voltage	12 VDC to 24 VDC (+20%, –15%)
Rated output current	2 A/pt (4 A/common)
Polarity	Source type
Maximum voltage decrease when ON	0.18 V (load current × 0.09Ω)
Maximum leakage current when OFF	0.1mA
Insulation method	Photocoupler insulation
Output protection function	Protection against overheat, overcurrent, short-circuiting, and disconnection detection
Response time	The driver delay time is 50 μs (maximum). In addition, [I/O Link transfer time between CNC and I/O module] and [ladder scan period (depending on CNC)] needs to be considered.

Output protection and abnormal detection

Connection	Unit of output protection	Unit of abnormal detection	Area of abnormal detection information
I/O Link *i*	1point	1point	DI area (See 8.6.6.4)

⚠ CAUTION

1 The protection function is intended to protect the components internal to the modules rather than external units.
2 No protection function of modules can protect their internal components in all cases. Once any protection function has worked, remove the cause promptly. If an absolute maximum rating is exceeded, for example, it is likely that protection functions may not work or an IC may break down before the related protection function works, depending on the way or situation in which the modules are used.
3 If an output protection function is defective, it is likely that, if the load current exceeds its rating continuously for a long time, smoke or ignition may occur.
4 For connection at Extension module C, the area of abnormal detection information is not system relay area, but DI area.

Extension module D

Analog input		
Number of input channels	4 channels	
Analog input range	-10 VDC to +10 VDC (Input resistance: 4.7 MΩ) -20 VDC to +20 mA (Input resistance: 250Ω)	Voltage input or current input can be selected on a channel–by–channel basis by wiring.
Digital conversion range	12 bits (binary), two's complement representation See Subsection 8.6.6.2, “Channel selection and A/D conversion data for extension module D”.	
Input/output correspondence		

Analog input	Digital output
+10V	+2000
+5V or +20mA	+1000
0V or 0mA	0
-5V or -20mA	-1000
-10V	-2000

© MyFANUC B5B0D8428C0144A78A5F4CA87F2C262E

Analog input	
Resolution	5 mV or 20 μA
Overall precision	Voltage input: ±0.5% (with respect to full scale) Current input: ±1.0% (with respect to full scale)
Maximum input voltage/current	±15 V/±30 mA
A-D conversion time	2 ms or less
Minimum update period of digital output	Ladder scan period of CNC connected
Number of occupied input/output points	DI = 3 bytes, DO = 2 bytes(NOTE)

NOTE

This module has four analog input channels but has only one 12-bit digital output channel within the occupied input points (3 bytes). Namely, a channel for conversion is selected dynamically using a ladder program. Channel switching DO points for selecting a channel are present in the occupied output points (2 bytes). (See Subsection 8.6.6.2, “Channel selection and A/D conversion data for extension module D”.)

Extension module E

Analog output	
Number of input channels (NOTE 1)	4 channels
Analog output range (NOTE 2)	-10 VDC to +10 VDC (external load resistance 10kΩ or more) 0 VDC to +20 mA (external load resistance 400Ω or less)
Digital conversion range	12 bits (binary), two's complement representation See Subsection 8.6.6.3, “Channel selection and D/A conversion data for extension module E”.
Input/output correspondence	

Digital input	Analog output	
	Voltage output	Current output
+2000	+10V	-
+1000	+5V	+20mA
0	0V	0mA
-1000	-5V	-
-2000	-10V	-

Resolution	5 mV or 20 μA
Overall precision	Voltage input: ±0.5% (with respect to full scale) Current input: ±1.0% (with respect to full scale)
D-A conversion time (NOTE 3)	1ms or less
Minimum update period of digital input	Ladder scan period of CNC connected
Number of occupied input/output points (NOTE 4)	For connection to the I/O Link *i*: DO = 2 bytes

NOTE

1 One of the four channels must be selected for output using a ladder program. (See Subsection 8.6.6.3, “Channel selection and D/A conversion data for extension module E”.)
2 There is a choice between use for voltage output or use for current output during connection to the terminal section.
3 The conversion time refers to that only within the module. The actual response time includes the scan time determined depending on the system.
4 Assignment of 3 bytes of DI are unnecessary.

© MyFANUC B5B0D8428C0144A78A5F4CA87F2C262E

Basic module (DCS-enabled version)

Digital input	
Number of points	24 points (12 points for PMC and 12 points for DCSPMC)
Rule for the number of points	Sink type
Common	24 points/ common (6 common terminals)
Rated input voltage	24 VDC (+10%, -10%)
Rated input current	7 mA (average)
Polarity	Sink type
ON voltage/current	20 VDC or more, 6 mA or more
OFF voltage/current	8 VDC or less, 1.5 mA or less
Response time	The receiver delay time is 2 ms (maximum). In addition, [I/O Link transfer time between CNC and I/O module] and [ladder scan period (depending on CNC)] needs to be considered.

Digital output	
Number of points	16 points (8 points for PMC and 8 points for DCSPMC)
Rule for the number of points	Source type
Common	8 points/common (2 common terminals for 8 points.)
Rated output voltage	12 VDC to 24 VDC (+20%, –15%)
Rated output current	0.2 A/pt
Polarity	Source type
Maximum voltage decrease when ON	0.63 V (load current × 1.25 Ω)
Maximum leakage current when OFF	20 μA
Output protection function	Protection against overheat and overcurrent
Response time	The driver delay time is 50 μs (maximum). In addition, [I/O Link transfer time between CNC and I/O module] and [ladder scan period (depending on CNC)] needs to be considered.

Output protection and abnormal detection unit

Connection	Unit of output protection	Unit of error detection	Reference area of error detection information
I/O Link *i*	1 point	1 point	System relay area

⚠ CAUTION

1 The output protection function is intended to protect the components in the modules rather than external units.
2 Each protection function may not be able to protect internal components in some cases. Once any protection function has worked, remove the cause promptly. If an absolute maximum rating is exceeded, for example, it is likely that protection functions may not work as normal or an IC may break down before the related protection function works, depending on the way or situation in which the modules are used.
3 If an output protection function is defective, it is likely that, if the load current exceeds its rating continuously for a long time, smoke or ignition may occur.

© MyFANUC B5B0D8428C0144A78A5F4CA87F2C262E

8.6.2.4 Power supply rating

Module name	Supply voltage	Current rating
Basic module	24 VDC ±10%	0.2 A + 7.3 mA × DI (DI: Number of DI points in the ON state)
Extension modules A, B	Supplied from the basic module	0.1 A + 7.3 mA × DI (DI: Number of DI points in the ON state)
Extension module C	Supplied from the basic module	0.1A
Extension module D	Supplied from the basic module	0.1A
Extension module E	Supplied from the basic module	0.16A
Basic module (DCS-enabled version)	DC24V±10%	0.2A+7.3mA×DI (DI: Number of DI points in the ON state)

NOTE

1 The above power supply rating does not include that to be input to DOCOM0 and DOCOM1 for DO output.

2 To connect an optical adapter for the I/O Link *i* to both connectors JD1A and JD1B on the basic module, the above power supply rating + 70 mA is required for the power supply of the basic module.

8.6.2.5 Heat dissipation

The heat dissipation of a module is the sum of "Basic heat dissipation" in the table below plus the total obtained by multiplying each of "Heat dissipation per input point" and "Heat dissipation per output point" in the table below by the number of points that are turned on at the same time.

Module name	Basic heat dissipation (W)	Heat dissipation per input point (W)	Heat dissipation per output point (W) IL: Output load current
Basic module	4.8	0.23	$0.04+0.9\times IL^2$
Extension modules A, B	2.4	0.23	$0.04+0.9\times IL^2$
Extension module C	2.4	-	$0.04+0.1\times IL^2$
Extension module D	2.4	-	-
Extension module E	3.8	-	-
Basic module (DCS-enabled version)	4.8	0.23	$0.04+0.9\times IL^2$

[Calculation example]

When 16 input points, eight 0.1-A output points, and four 0.2-A output points are used for the basic module, and eight 2-A output points are used for extension module C

$P=4.8+0.23\times16+(0.04+0.9\times0.1^2)\times8+(0.04+0.9\times0.2^2)\times4+1.0+(0.04+0.09\times2^2)\times8$

$=13.4W$

8.6.2.6 Weight

Module name	Weight (g)
Basic module	420
Extension module A	400
Extension module B	380
Extension module C	440
Extension module D	400
Extension module E	400
Basic module (DCS-enabled version)	460

© MyFANUC B5B0D8428C0144A78A5F4CA87F2C262E

8.6.2.7 Applicable wire

Electric wires and ferrule terminals used for connection with a terminal block of this module should have the following dimensions:

Electric wire size

Ferrule terminal

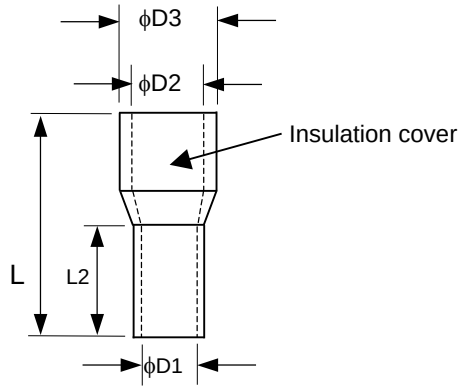

The dimensions indicated below are based on the products of Weidmuller Color., Ltd.

Cross sectional area of electric wire (mm2)	JIS VSF KIV (mm2)	JIS IV (mm2)	UL1007 (AWG)	UL1015 (AWG)	Electric wire sheath stripped length (mm)	Overall length L1 (mm)	Length of metallic part L2 (mm)	Inner diameter of conductor D1 (mm)	Inner diameter of sheath D2 (mm)	Outer diameter of sheath D3 (mm)
0.5	-	-	20	-	10	14	8	1	2.6	3.1
					12	16	10			
0.75	0.5	-	18	20	10	14	8	1.2	2.8	3.3
					12	16	10			
1.0	0.75	0.9	-	18	10	14	8	1.4	3	3.5
					12	16	10			

NOTE

Use a ferrule terminal from the viewpoint of long-term reliability.

© MyFANUC B5B0D8428C0144A78A5F4CA87F2C262E

8.6.3 External View and Dimensions

8.6.3.1 Dimensions (common to the modules)

Unit: mm

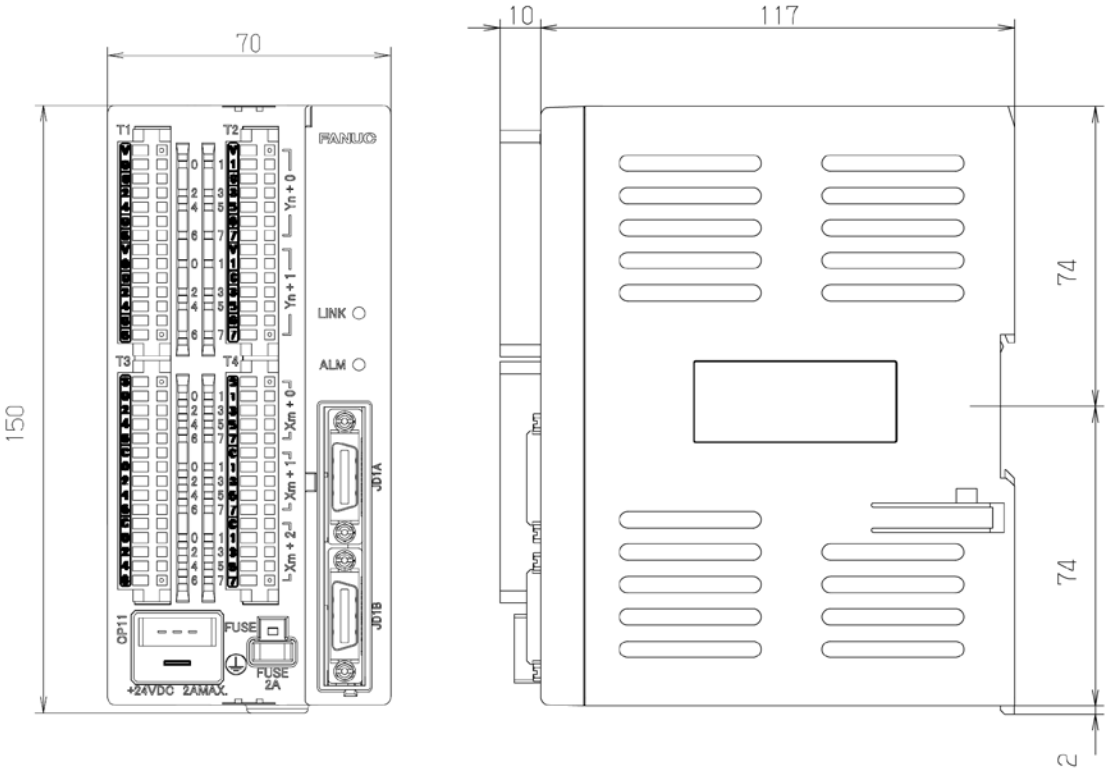

8.6.3.2 Dimensions in a maximum configuration (one basic module + three extension modules)

Unit: mm

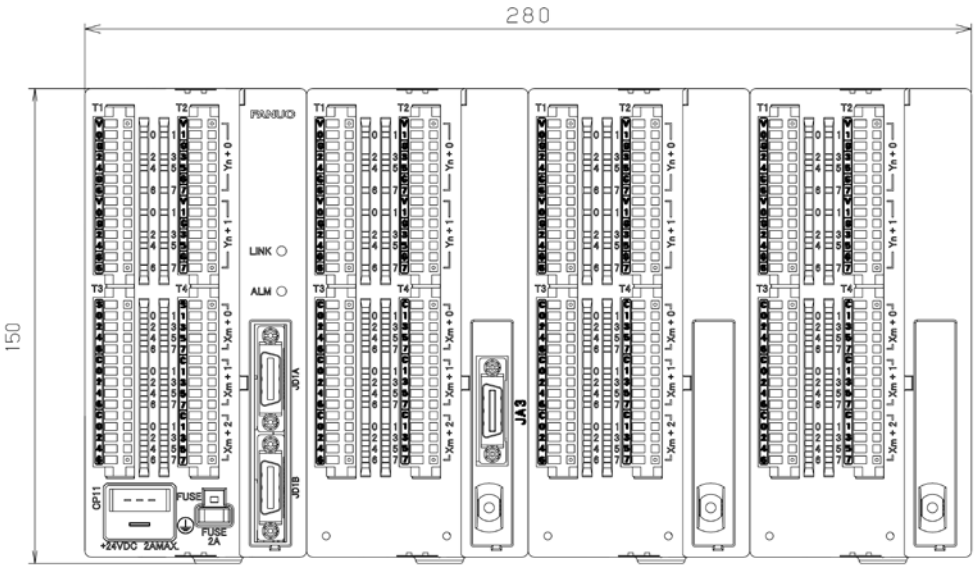

© MyFANUC B5B0D8428C0144A78A5F4CA87F2C262E

8.6.3.3 Component names

Basic module A03B－0823－C011

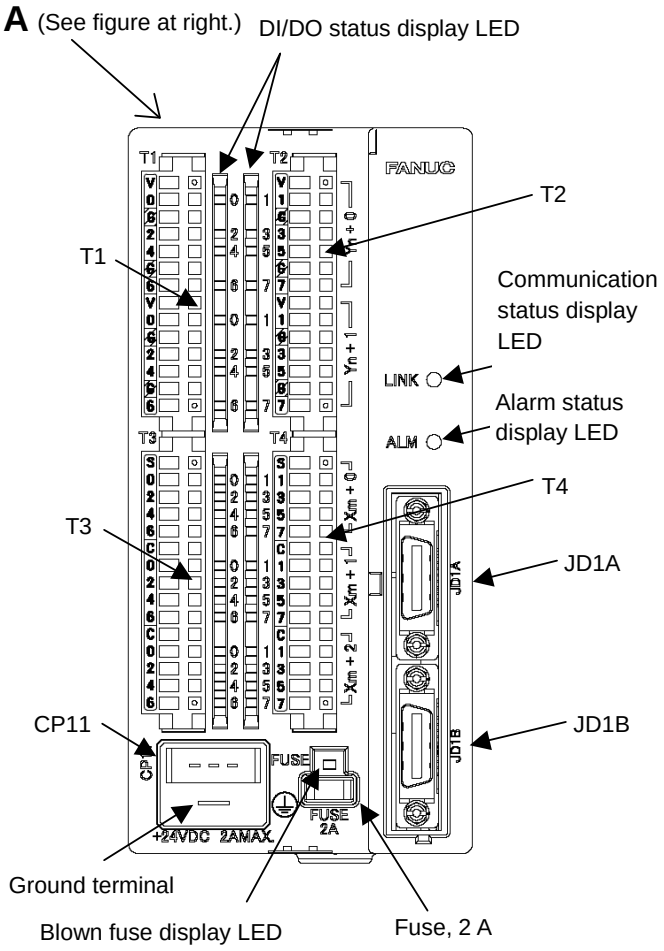

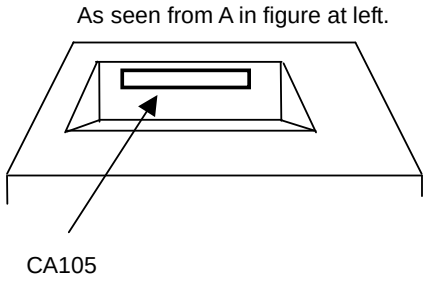

Connector / terminal board number	Use
CP11	24-VDC power supply input
JD1A	Second I/O link stage
JD1B	First I/O link stage
CA105	Extension module connection
T1	DO terminal board with aqua label
T2	DO terminal board with lime green label
T3	DI terminal board with yellow label
T4	DI terminal board with pink label

© MyFANUC B5B0D8428C0144A78A5F4CA87F2C262E

Extension module A A03B－0823－C012

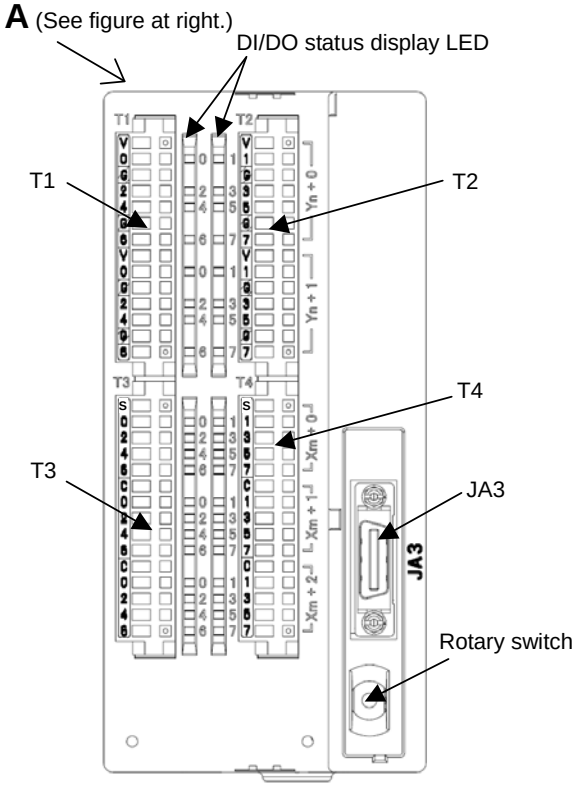

As seen from A in figure at left.

(Common to A03B-0823-C012 and A03B-0823-C013)

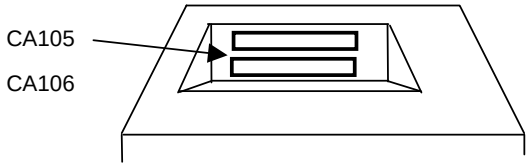

Connector / terminal board number	Use
JA3	MPG interface
CA105	Extension module connection (to next-stage extension module)
CA106	Extension module connection (to previous-stage basic module)
T1	DO terminal board with aqua label
T2	DO terminal board with lime green label
T3	DI terminal board with yellow label
T4	DI terminal board with pink label

Extension module B A03B－0823－C013

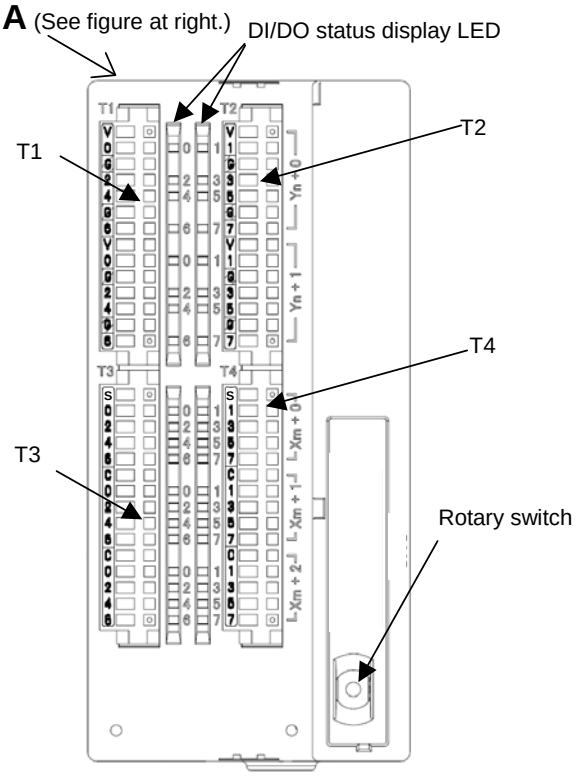

Connector / terminal board number	Use
CA105	Extension module connection (to next-stage extension module)
CA106	Extension module connection (to previous-stage basic module)
T1	DO terminal board with aqua label
T2	DO terminal board with lime green label
T3	DI terminal board with yellow label
T4	DI terminal board with pink label

NOTE

Be sure to connect extension module A next to the basic module.

© MyFANUC B5B0D8428C0144A78A5F4CA87F2C262E

Extension module C A03B－0823－C014

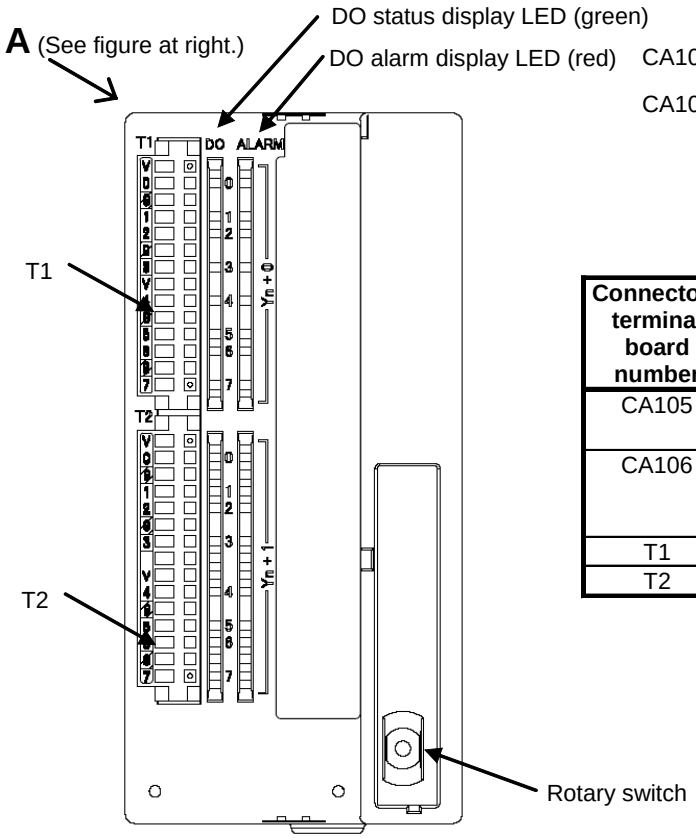

As seen from A in figure at left. (Common to A03B-0823-C014 and A03B-0823-C015)

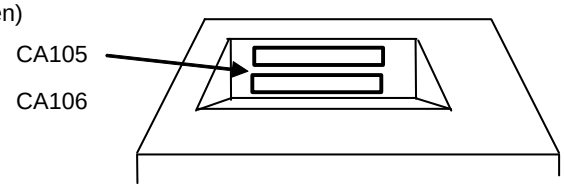

Connector / terminal board number	Use
CA105	Extension module connection (to next-stage expansion module)
CA106	Extension module connection (to previous-stage basic or extension module)
T1	DO terminal board with aqua label
T2	DO terminal board with lime green label

Extension module D A03B－0823－C015

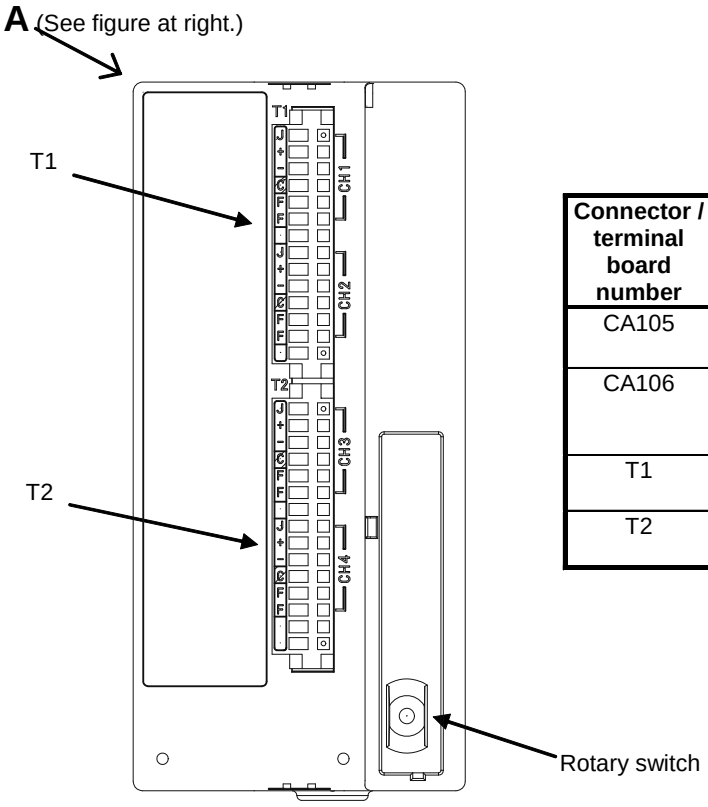

Connector / terminal board number	Use
CA105	Extension module connection (to next-stage expansion module)
CA106	Extension module connection (to previous-stage basic or extension module)
T1	Analog input CH1 and CH2 terminal board with yellow label
T2	Analog input CH3 and CH4 terminal board with pink label

© MyFANUC B5B0D8428C0144A78A5F4CA87F2C262E

Extension module E A03B-0823-C016

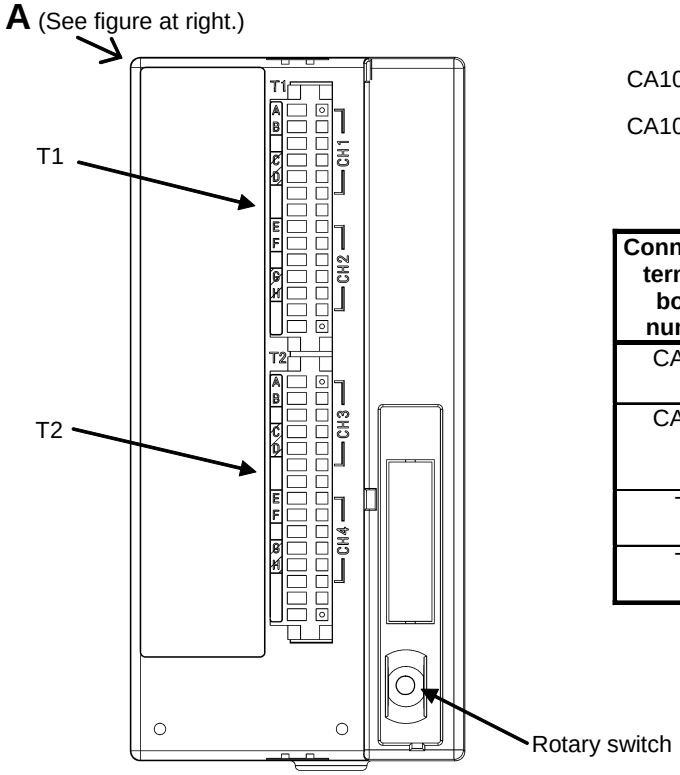

As seen from A in figure at left.

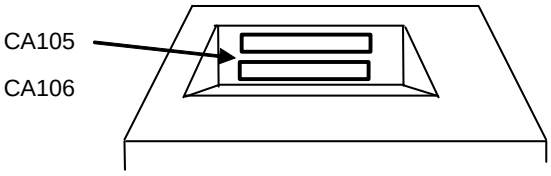

Connector / terminal board number	Use
CA105	Extension module connection (to next-stage expansion module)
CA106	Extension module connection (to previous-stage basic or extension module)
T1	Analog output CH1 and CH2 terminal board with lime green label
T2	Analog output CH3 and CH4 terminal board with sky blue label

Basic module (DCS-enabled version) A03B-0823-C021

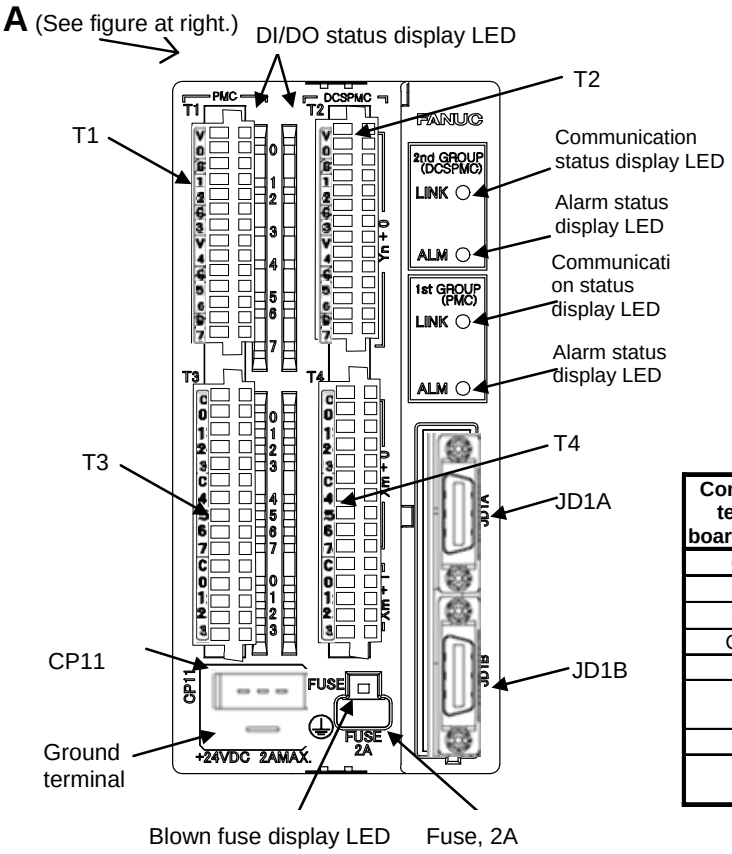

As seen from A in figure at left.

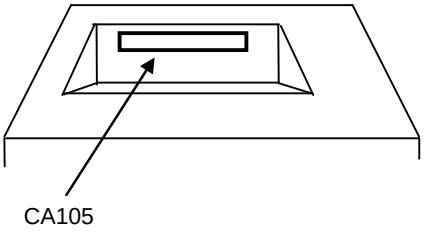

Connector / terminal board number	Use
CP11	24-VDC power supply input
JD1A	Second I/O Link *i* stage
JD1B	First I/O Link *i* stage
CA105	Extension module connection
T1	DO terminal board with orange label
T2	DO terminal board (DCS) with white label
T3	DI terminal board with orange label
T4	DI terminal board (DCS) with white label

© MyFANUC B5B0D8428C0144A78A5F4CA87F2C262E

8.6.4 Installation

Mounting holes for screwing

Front view of the module

Unit: mm

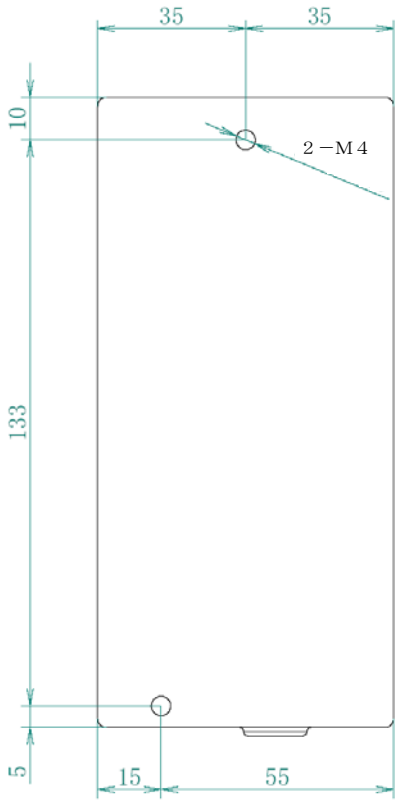

Using a DIN rail for mounting

1) Method of mounting

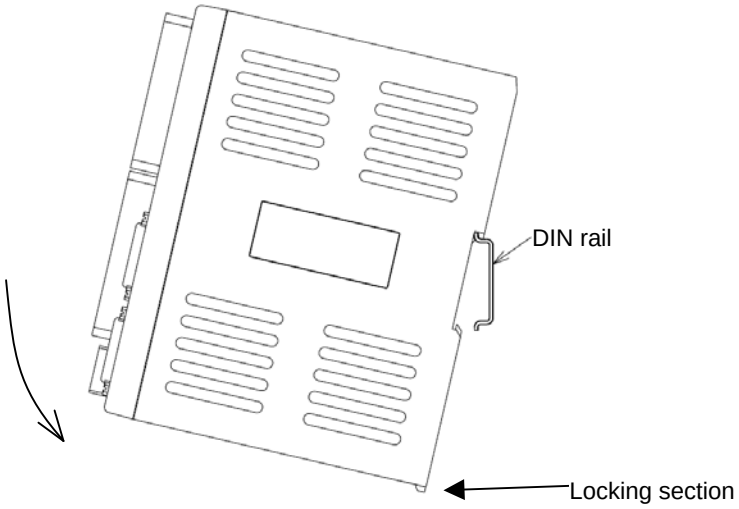

1) Place the hook of the module onto the top of the DIN rail.
2) Push the module until it clicks into place.

NOTE
Ensure that the locking section is not left lowered.

© MyFANUC B5B0D8428C0144A78A5F4CA87F2C262E

2) Method of dismounting

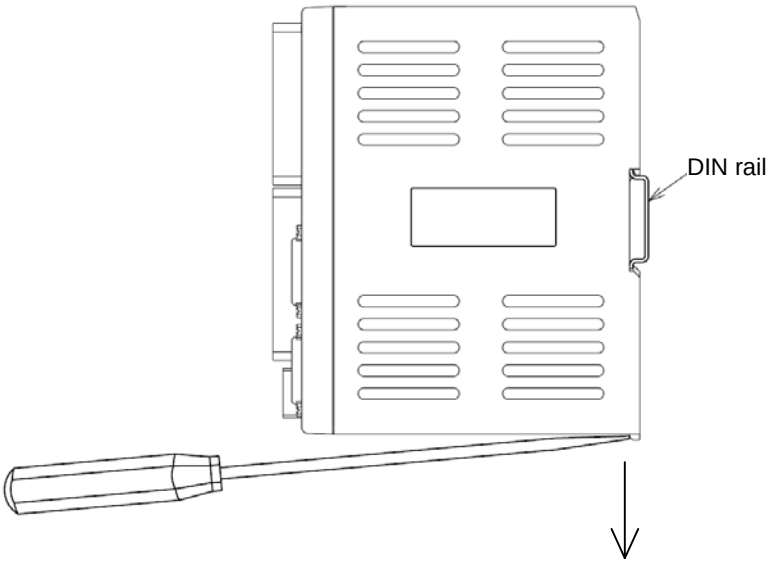

1) Lower the locking section with a flat-blade screwdriver.
2) Pull the lower part of the module toward you.

NOTE
When dismounting the module, be careful not to damage the locking section by applying an excessive force.

© MyFANUC B5B0D8428C0144A78A5F4CA87F2C262E

8.6.5 Connection

8.6.5.1 Overall connection diagram

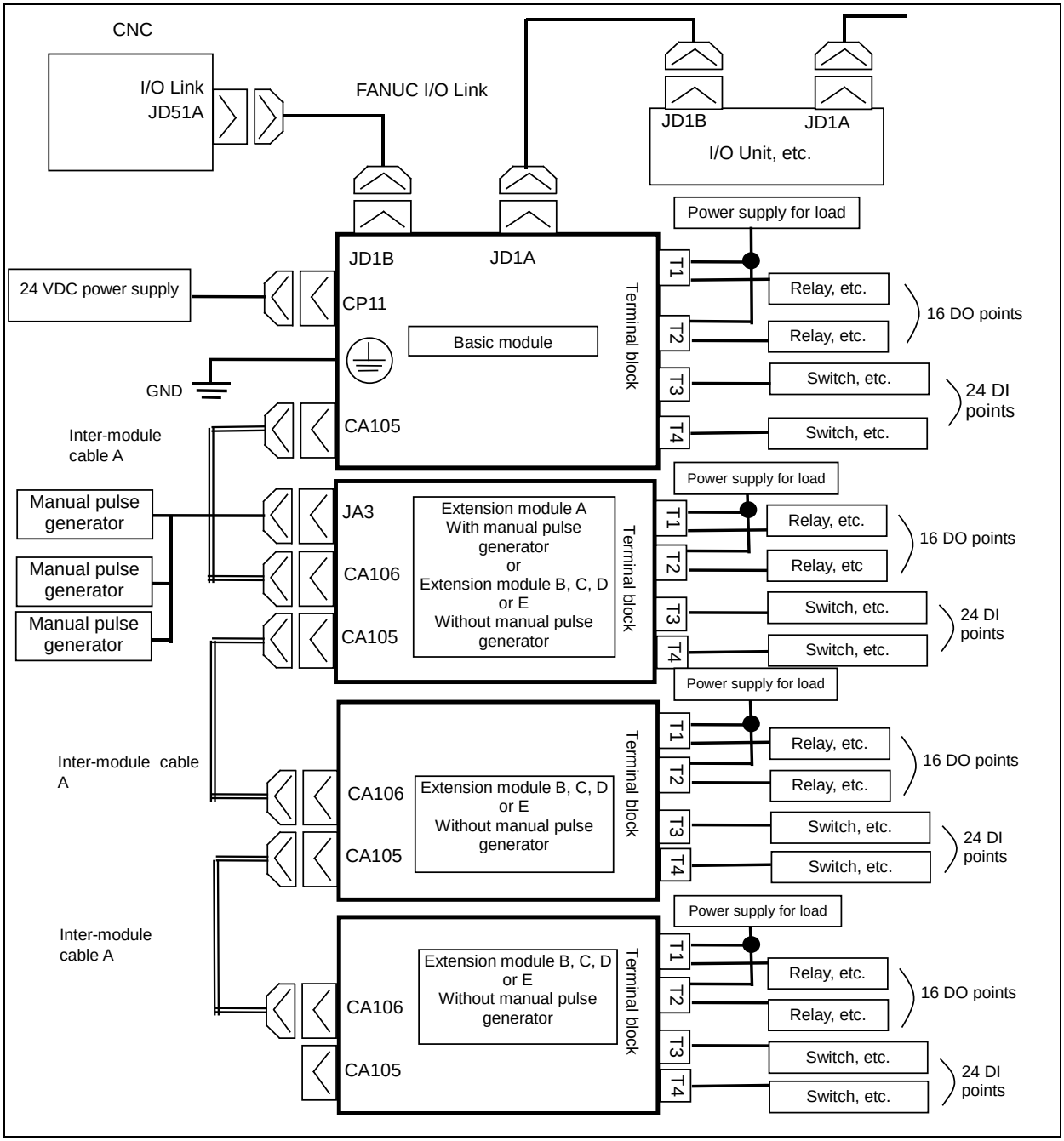

NOTE

1 Extension module C does not have DI points. Only the terminal blocks for DO, T1 and T2, are available.

2 With extension module D, only the terminal blocks for analog input, T1 and T2, are available.

3 With extension module E, only the terminal blocks for analog output, T1 and T2, are available.

© MyFANUC B5B0D8428C0144A78A5F4CA87F2C262E

8.6.5.2 Power connection

Supply power to the basic module from the CNC or an external 24 VDC regulated power supply.

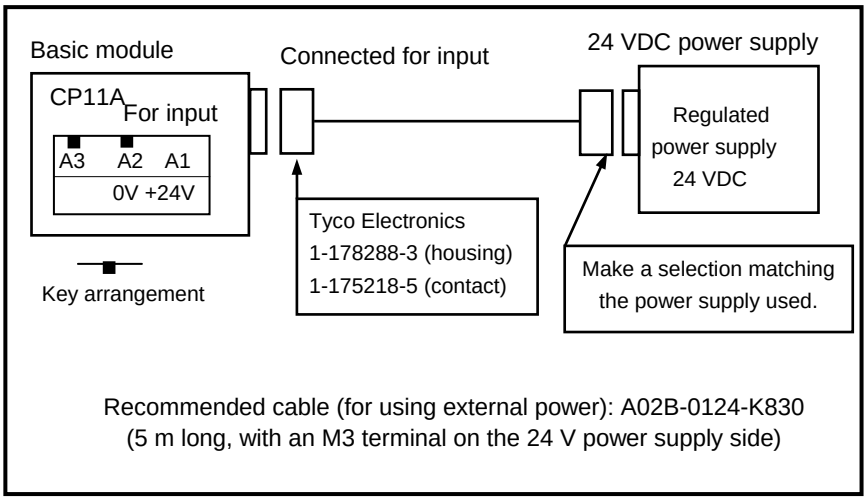

NOTE

1 Ensure that +24 V is supplied either when or before the power to the CNC is turned on, and that +24 V is removed either when or after the power to the CNC is turned off.

2 When turning off the power to the CNC control unit, be sure to turn off the power to the terminal type I/O module and other slave I/O units connected via the I/O Link as well.

© MyFANUC B5B0D8428C0144A78A5F4CA87F2C262E

8.6.5.3 Signal assignment on terminal blocks

Basic module, Extension modules A and B

- **Assignment of signals for output**

T1 (Label color: Light blue)

		Label indication
1	DOCOM0	V
2	Yn+0.0	0
3	0V	G
4	Yn+0.2	2
5	Yn+0.4	4
6	0V	G
7	Yn+0.6	6
8	DOCOM1	V
9	Yn+1.0	0
10	0V	G
11	Yn+1.2	2
12	Yn+1.4	4
13	0V	G
14	Yn+1.6	6

T2 (Label color: Yellow green)

		Label indication
1	DOCOM0	V
2	Yn+0.1	1
3	0V	G
4	Yn+0.3	3
5	Yn+0.5	5
6	0V	G
7	Yn+0.7	7
8	DOCOM1	V
9	Yn+1.1	1
10	0V	G
11	Yn+1.3	3
12	Yn+1.5	5
13	0V	G
14	Yn+1.7	7

- **Assignment of signals for input**

T3 (Label color: Yellow)

		Label indication
1	DICOM0	S
2	Xm+0.0	0
3	Xm+0.2	2
4	Xm+0.4	4
5	Xm+0.6	6
6	DICOM1	C
7	Xm+1.0	0
8	Xm+1.2	2
9	Xm+1.4	4
10	Xm+1.6	6
11	DICOM1	C
12	Xm+2.0	0
13	Xm+2.2	2
14	Xm+2.4	4
15	Xm+2.6	6

T4 (Label color: Pink)

		Label indication
1	DICOM0	S
2	Xm+0.1	1
3	Xm+0.3	3
4	Xm+0.5	5
5	Xm+0.7	7
6	DICOM1	C
7	Xm+1.1	1
8	Xm+1.3	3
9	Xm+1.5	5
10	Xm+1.7	7
11	DICOM1	C
12	Xm+2.1	1
13	Xm+2.3	3
14	Xm+2.5	5
15	Xm+2.7	7

- **Terminal block specification**

Terminal block name	Terminal block specification on cable side	Remarks
T1 T2	Weidmuller BLZF3.5/14F	Each of terminal blocks T1 and T2 has a different color assigned by the label attached to the main unit.
T3 T4	Weidmuller BLZF3.5/15F	Each of terminal blocks T3 and T4 has a different color assigned by the label attached to the main unit.

NOTE

The terminal blocks on the cable side are shipped with the terminal type I/O module.

© MyFANUC B5B0D8428C0144A78A5F4CA87F2C262E

Extension module C

- Assignment of signals for output

T1 (Label color: Light blue)

		Label indication
1	DOCOM0	V
2	Yn+0.0	0
3	0V-0	G
4	Yn+0.1	1
5	Yn+0.2	2
6	0V-0	G
7	Yn+0.3	3
8	DOCOM1	V
9	Yn+0.4	4
10	0V-1	G
11	Yn+0.5	5
12	Yn+0.6	6
13	0V-1	G
14	Yn+0.7	7

T2 (Label color: Yellow green)

		Label indication
1	DOCOM2	V
2	Yn+1.0	0
3	0V-2	G
4	Yn+1.1	1
5	Yn+1.2	2
6	0V-2	G
7	Yn+1.3	3
8		
9	DOCOM3	V
10	Yn+1.4	4
11	0V-3	G
12	Yn+1.5	5
13	Yn+1.6	6
14	0V-3	G
15	Yn+1.7	7

- Terminal block specification

Terminal block name	Terminal block specification on cable side
T1	Weidmuller BLZF3.5/14F
T2	Weidmuller BLZF3.5/15F

Extension module D

- Assignment of signals for analog input

T1 (Label color: Yellow)

		Label indication
1	JMP0	J
2	INP0	+
3	INM0	-
4	COM0	C
5	FG0I	F
6	FG0O	F
7		
8	JMP1	J
9	INP1	+
10	INM1	-
11	COM1	C
12	FG1I	F
13	FG1O	F
14		

T2 (Label color: Pink)

		Label indication
1	JMP2	J
2	INP2	+
3	INM2	-
4	COM2	C
5	FG2I	F
6	FG2O	F
7		
8	JMP3	J
9	INP3	+
10	INM3	-
11	COM3	C
12	FG3I	F
13	FG3O	F
14		
15		

- Terminal block specification

Terminal block name	Terminal block specification on cable side
T1	Weidmuller BLZF3.5/14F
T2	Weidmuller BLZF3.5/15F

NOTE

The terminal blocks on the cable side are shipped with the terminal type I/O module.

© MyFANUC B5B0D8428C0144A78A5F4CA87F2C262E

Extension module E

- Assignment of signals for analog output

T1 (Label color: Yellow green) Label indication

1	VP1	A
2	VN1	B
3		
4	IP1	C
5	IN1	D
6		
7		
8	VP2	E
9	VN2	F
10		
11	IP2	G
12	IN2	H
13		
14		

T2 (Label color: Light blue) Label indication

1	VP3	A
2	VN3	B
3		
4	IP3	C
5	IN3	D
6		
7		
8	VP4	E
9	VN4	F
10		
11	IP4	G
12	IN4	H
13		
14		
15		

- Terminal block specification

Terminal block name	Terminal block specification on cable side
T1	Weidmuller BLZF3.5/14F
T2	Weidmuller BLZF3.5/15F

NOTE

The terminal blocks on the cable side are shipped with the terminal type I/O module.

© MyFANUC B5B0D8428C0144A78A5F4CA87F2C262E

Basic module (DCS-enabled version)

For PMC For DCS-PMC

- Assignment of signals for output

T1 (Label color:orange) Label indication

1	DOCOM0	V
2	Y1N+0.0	0
3	0V	G
4	Y1N+0.1	1
5	Y1N+0.2	2
6	0V	G
7	Y1N+0.3	3
8	DOCOM0	V
9	Y1N+0.4	4
10	0V	G
11	Y1N+0.5	5
12	Y1N+0.6	6
13	0V	G
14	Y1N+0.7	7

T2 (Label color: White) Label indication

1	DOCOM0	V
2	Yn+0.1	0
3	0V	G
4	Yn+0.3	1
5	Yn+0.5	2
6	0V	G
7	Yn+0.7	3
8	DOCOM1	V
9	Yn+1.1	4
10	0V	G
11	Yn+1.3	5
12	Yn+1.5	6
13	0V	G
14	Yn+1.7	7

- Assignment of signals for input

T3 (Label color:orange) Label indication

1	DICOM	C
2	X1M+0.0	0
3	X1M+0.1	1
4	X1M+0.2	2
5	X1M+0.3	3
6	DICOM	C
7	X1M+0.4	4
8	X1M+0.5	5
9	X1M+0.6	6
10	X1M+0.7	7
11	DICOM	C
12	X1M+1.0	0
13	X1M+1.1	1
14	X1M+1.2	2
15	X1M+1.3	3

T4 (Label color: White) Label indication

1	DICOM	C
2	X2M+0.0	0
3	X2M+0.1	1
4	X2M+0.2	2
5	X2M+0.3	3
6	DICOM	C
7	X2M+0.4	4
8	X2M+0.5	5
9	X2M+0.6	6
10	X2M+0.7	7
11	DICOM	C
12	X2M+1.0	0
13	X2M+1.1	1
14	X2M+1.2	2
15	X2M+1.3	3

- Terminal block specification

Terminal block name	Terminal block specification on cable side	Remarks
T1 T2	Weidmuller BLZF3.5/14F	Each of terminal blocks T1 and T2 has a different color assigned by the label attached to the main unit.
T3 T4	Weidmuller BLZF3.5/15F	Each of terminal blocks T3 and T4 has a different color assigned by the label attached to the main unit.

NOTE

The terminal blocks on the cable side are shipped with the terminal type I/O module.

© MyFANUC B5B0D8428C0144A78A5F4CA87F2C262E

8.6.5.4 DI/DO connection

Basic module, Extension modules A and B

DI connection (When sink type input is selected in Xm+0.0 to Xm+0.7.)

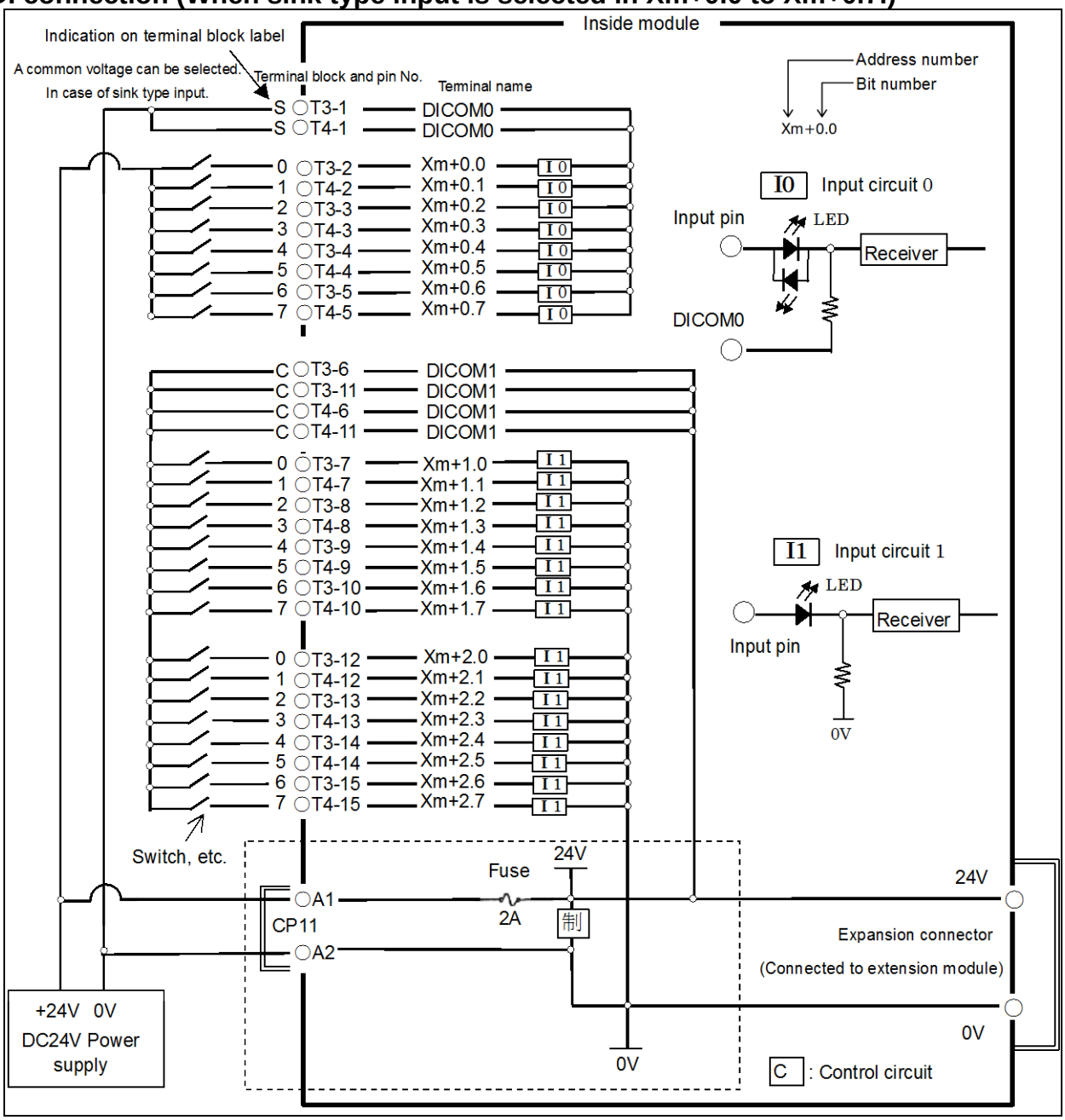

Fig. 8.6.5.4 (a) DI connection of Basic module and Extension module A and B.
(When sink type input is selected in Xm+0.0 to Xm+0.7.)

> **NOTE**
> The circuitry enclosed in the dashed rectangle shown above is mounted on the basic module only. In the case of an extension module, 24 V for DICOM1 is supplied via the extension cable from the basic module or the extension module at the preceding stage.

© MyFANUC B5B0D8428C0144A78A5F4CA87F2C262E

DI connection (When source type input is selected in Xm+0.0 to Xm+0.7.)

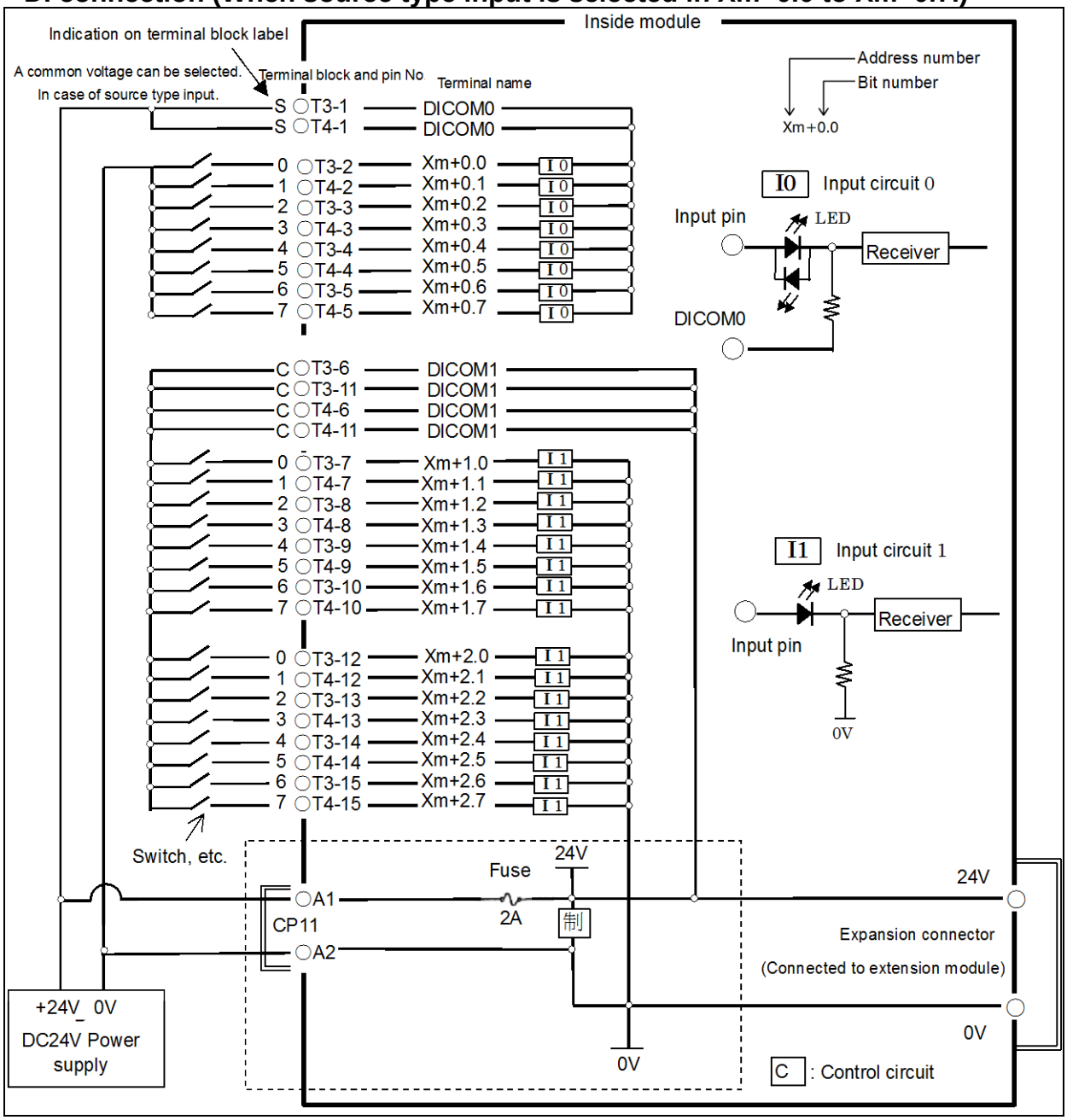

Fig. 8.6.5.4 (b) DI connection of Basic module and Extension module A and B.
(When source type input is selected in Xm+0.0 to Xm+0.7.)

NOTE

The circuitry enclosed in the dashed rectangle shown above is mounted on the basic module only. In case of an extension module, 24 V for DICOM1 is supplied via the extension cable from the basic module or the extension module at the preceding stage.

© MyFANUC B5B0D8428C0144A78A5F4CA87F2C262E

NOTE

As listed in the table below, Xm+0.0 through Xm+0.7 are DI terminals for which a common voltage can be selected. That is, by connecting DICOM0 (T3-1 and T4-1 pins) to +24 V, a DI signal can be input with its logical state reversed. If, however, a cable is connected to ground, it has the same effect as inputting an ON state DI signal. From the safety viewpoint, the connection of DICOM0 (T3-1 and T4-1 pins) to 0 V is recommended wherever possible. Even in the above case, related input signals may become unstable and an incorrect state could be input if the wiring of DICOM0 (Pin No. T3-1 or T4-1) is disconnected. To avoid this situation, we recommend using the DI of which common voltage is fixed at 24 V, and creating a logic (ladder) that ensures safety if a ground fault or disconnection occurs on a signal line.

For the unconnected pins at the addresses for which the common voltage is fixed (from Xm+1.0 to Xm+1.7 and from Xm+2.0 to Xm+2.7), the input is “0”. For the unconnected terminals at the addresses for which a common voltage can be selected (from Xm+0.0 to Xm+0.7), the input is “0” when DICOM0 (T3-1 and T4-1 pins) is connected to 0 V or “1” when it is connected to +24. Connect DICOM0 when used. When addresses from Xm+0.0 to Xm+0.7 are not used, connect DICOM0 to the 0 V power supply.

Common voltage for the basic module, and extension modules A and B

Address	Common voltage
Xm	Can externally be selected with DICOM0.
Xm+1	Cannot be selected.
Xm+2	Cannot be selected.

© MyFANUC B5B0D8428C0144A78A5F4CA87F2C262E

DO connection

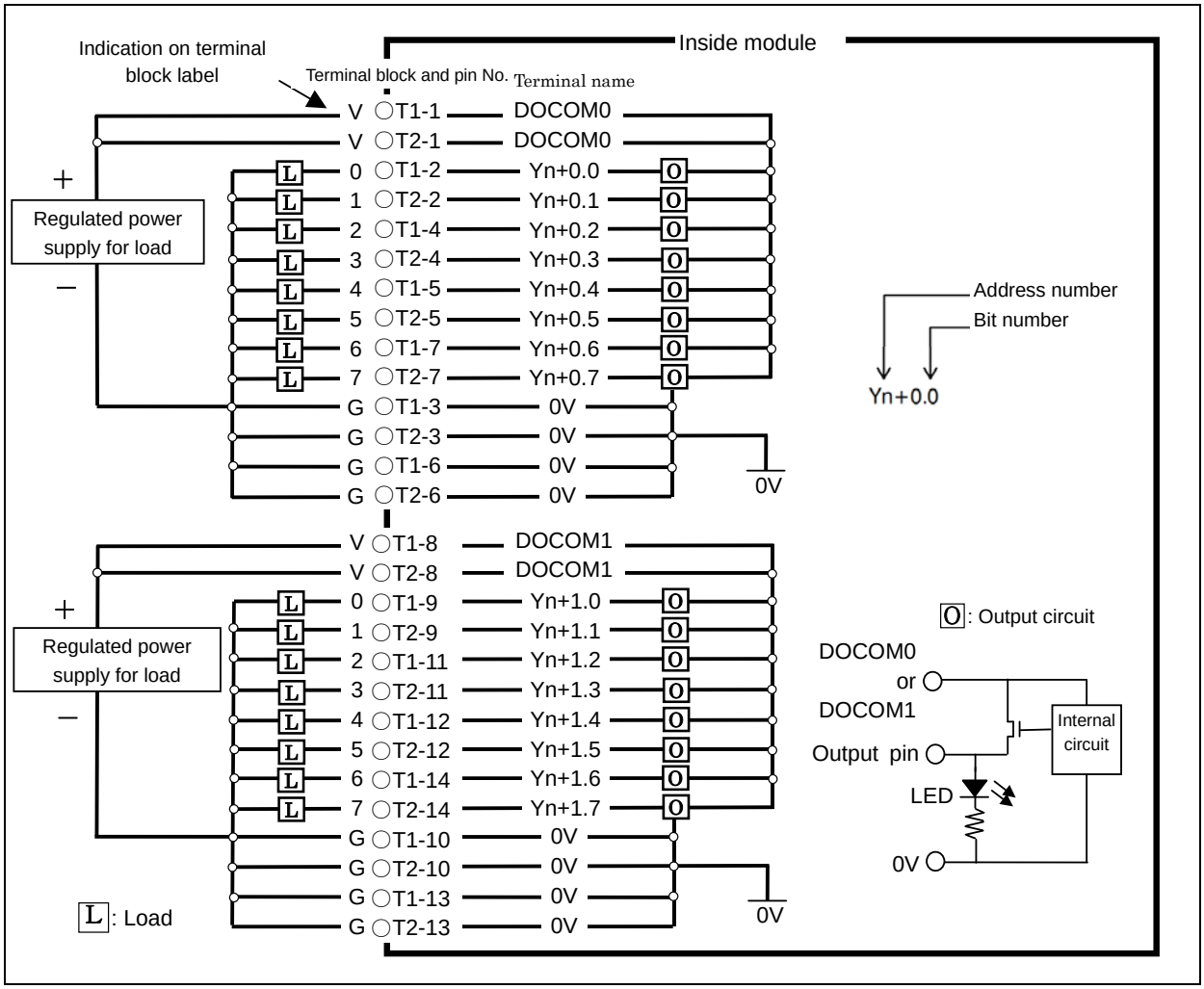

Fig. 8.6.5.4 (c) DO connection of Basic module and Extension module A and B.

> ⚠ **CAUTION**
> Be sure to connect the 0 V signal from the regulated power supply for load to the 0 V terminal (with label indication "G") of the module. Otherwise, a load error can occur.

© MyFANUC B5B0D8428C0144A78A5F4CA87F2C262E

Extension module C

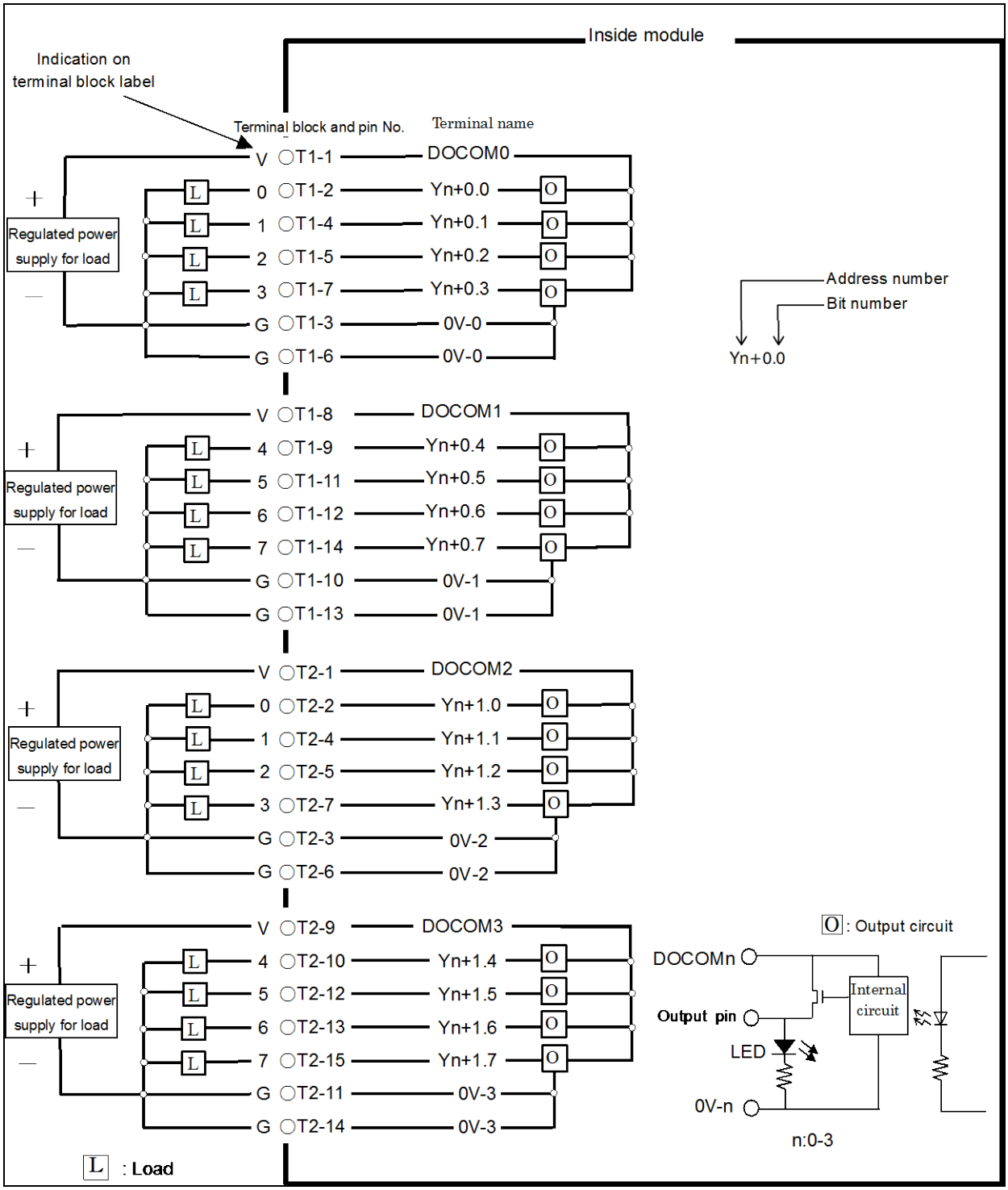

Fig. 8.6.5.4 (d) DO connection of Extension module C.

> ⚠ **CAUTION**
> Be sure to connect the 0 V signal from the regulated power supply for load to the 0 V terminal (with label indication "G") of the module. Otherwise, a load error can occur.

© MyFANUC B5B0D8428C0144A78A5F4CA87F2C262E

Extension module D

In the example of connection below, CH1 is used for voltage input, CH3 is used for current input, and CH2 and CH4 are not used.

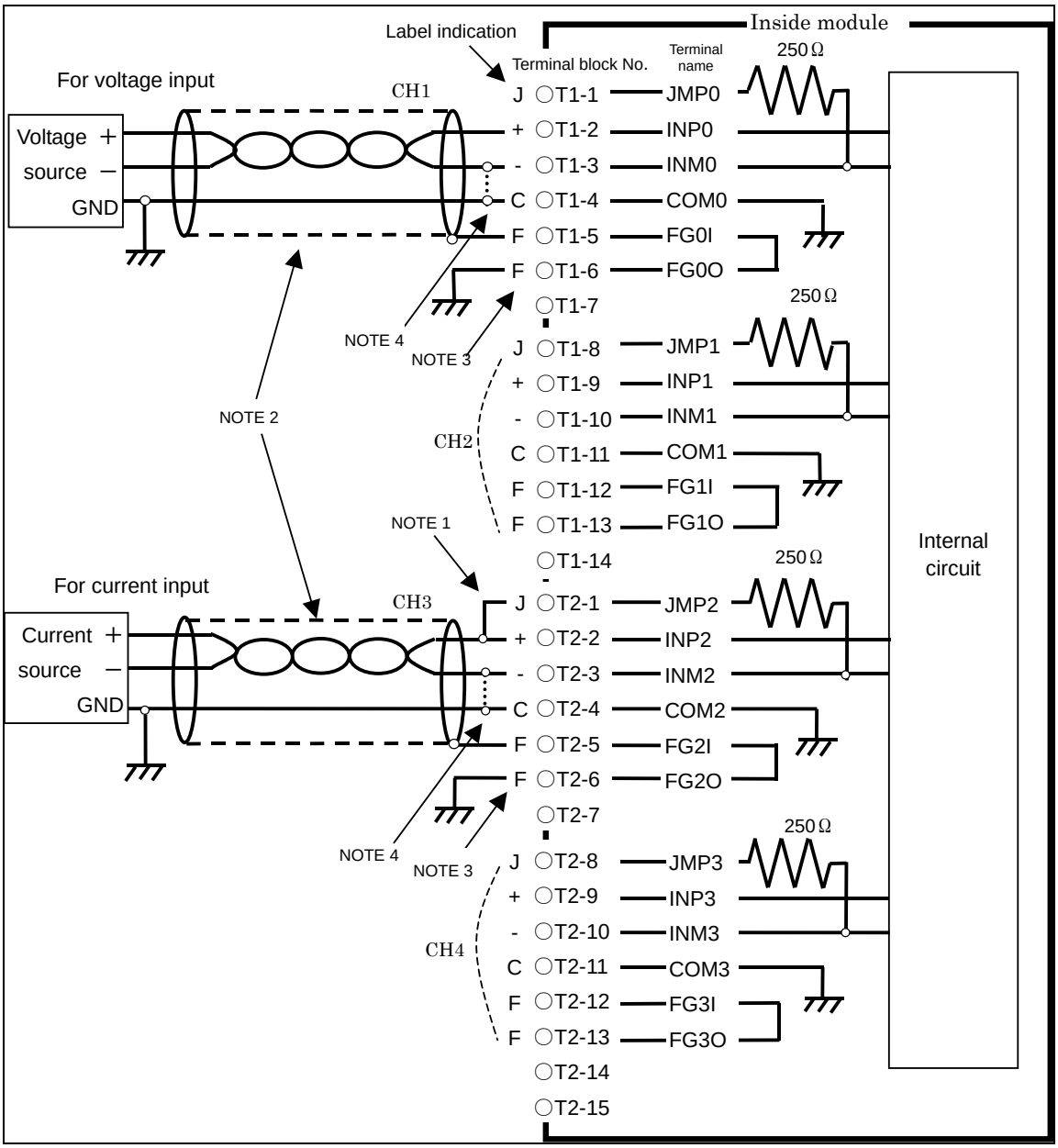

Fig. 8.6.5.4 (e) Analog input connection of Extension module D.

NOTE

1 When JMPn and INPn (n=0, 1, 2, 3) are connected with each other, the channel becomes a current input channel.
2 For the connection cable, use a shielded twisted pair.
3 In the figure above, the shield is connected to FGnI for grounding to FGnO. However, the shield may be directly connected to frame ground by using a cable clamp without using FGnI and FGnO.
4 When a voltage source (current source) has a GND terminal as shown above, connect COMn to the terminal. When no GND terminal is provided, connect INMn and COMn with each other on the analog input module as indicated by the dotted line. COMn of each channel is connected to the common analog ground inside the module.

© MyFANUC B5B0D8428C0144A78A5F4CA87F2C262E

Extension module E

In the example of connection below, CH1 is used for voltage input, CH3 is used for current input, and CH2 and CH4 are not used.

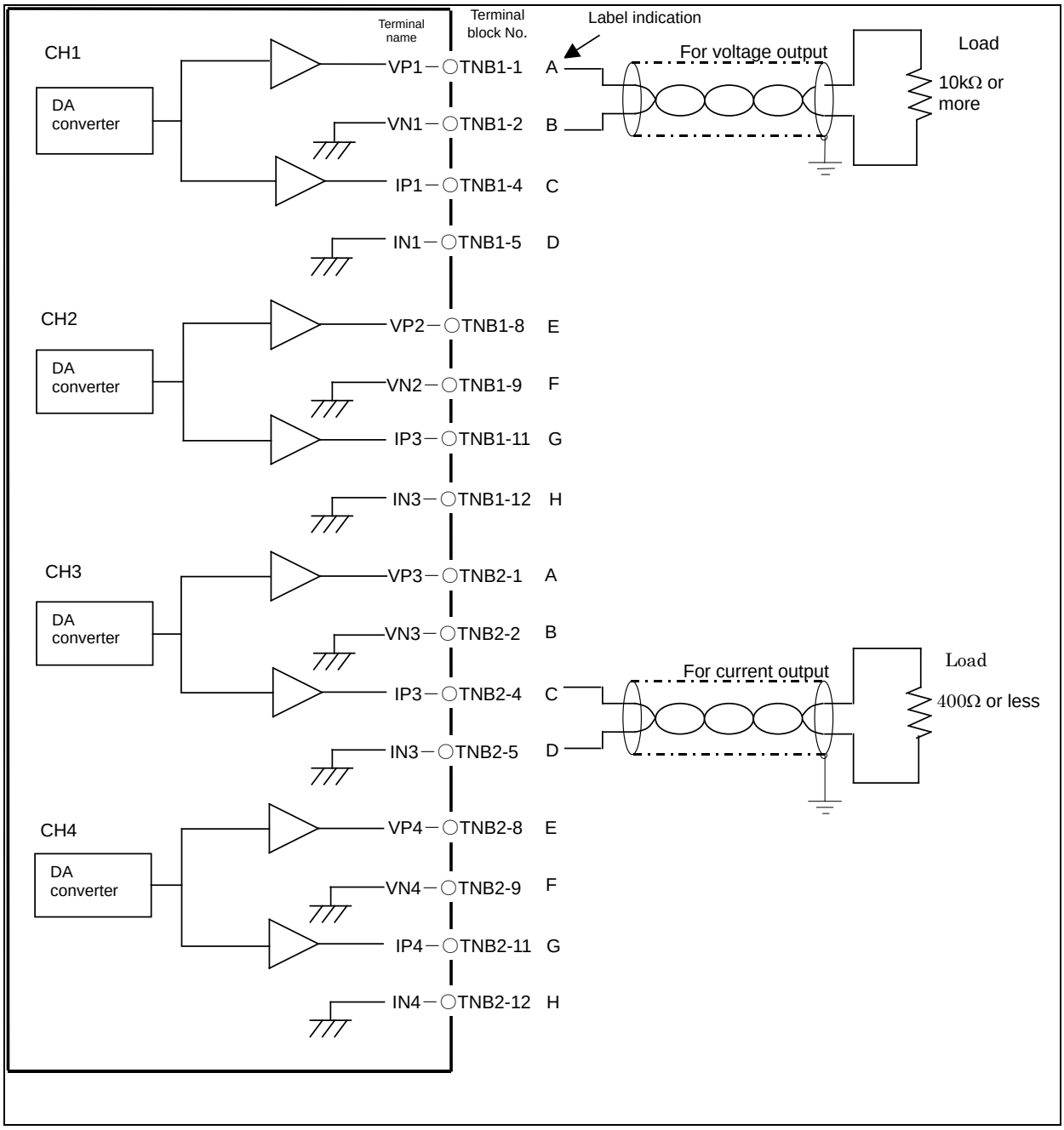

Fig.8.6.5.4 (f) Analog output connection of Extension module E.

⚠ CAUTION

1 For connection, use a shielded two-core twisted pair.
2 Ground the shield of the cable on the load side.
3 When another unit requiring a power supply is connected to this module, turn the power to the basic module on first. If the power to the unit connected to this module is turned on first, invalid output or malfunction may cause an accident.

© MyFANUC B5B0D8428C0144A78A5F4CA87F2C262E

Basic module (DCS-enabled version)

DI connection

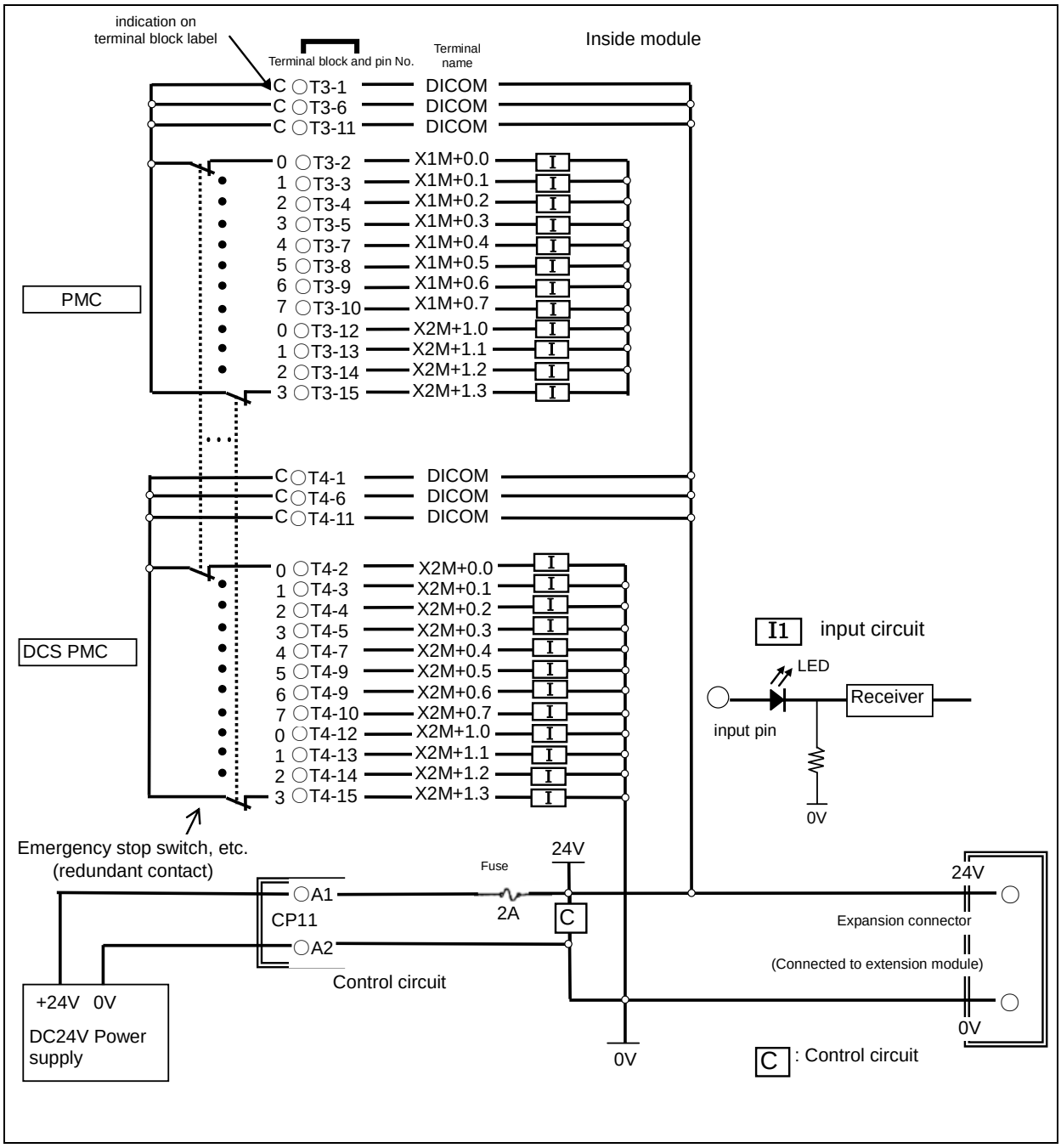

Fig.8.6.5.4 (g) Basic module (for DCS).

© MyFANUC B5B0D8428C0144A78A5F4CA87F2C262E

DO connection

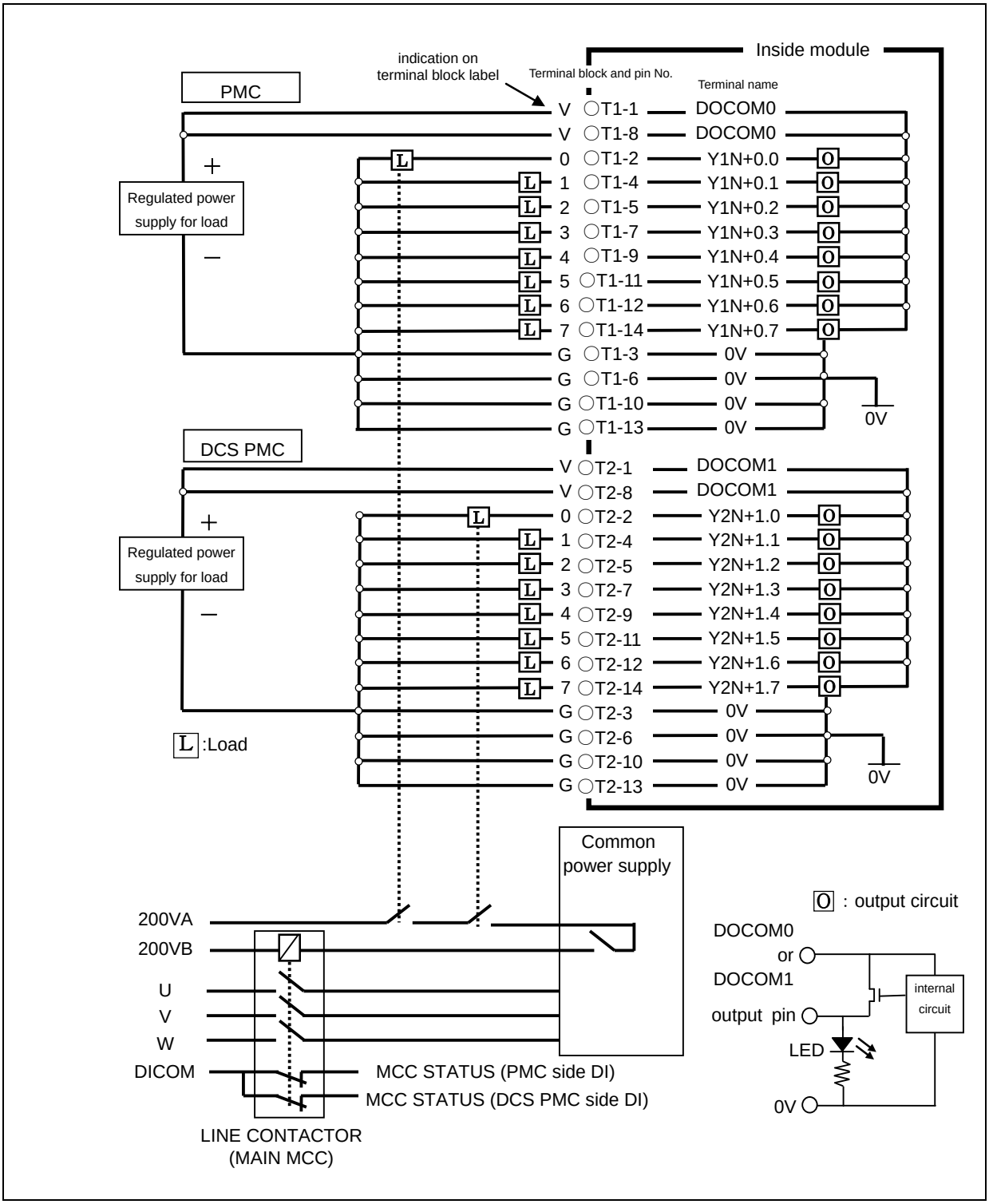

Fig. 8.6.5.4(h) DO connection of basic module (DCS-enabled version)

NOTE

For details of the above circuit example, refer to the Dual Check Safety Connection Manual (B-64483EN-2).

© MyFANUC B5B0D8428C0144A78A5F4CA87F2C262E

8.6.5.5 Manual pulse generator connection

Up to three manual pulse generators can be connected to extension module A.
For details, see Subsection 7.4.1.

8.6.5.6 Inter-module connection

The same inter-module connection method is applied to between the basic module and an extension module and between extension modules. For inter-module connection, connect a 52-pin flat cable connector to the expansion connectors CA105 and CA106 provided on each module as shown below. At this time, connect all 52 pins, paying attention to the connector orientation.

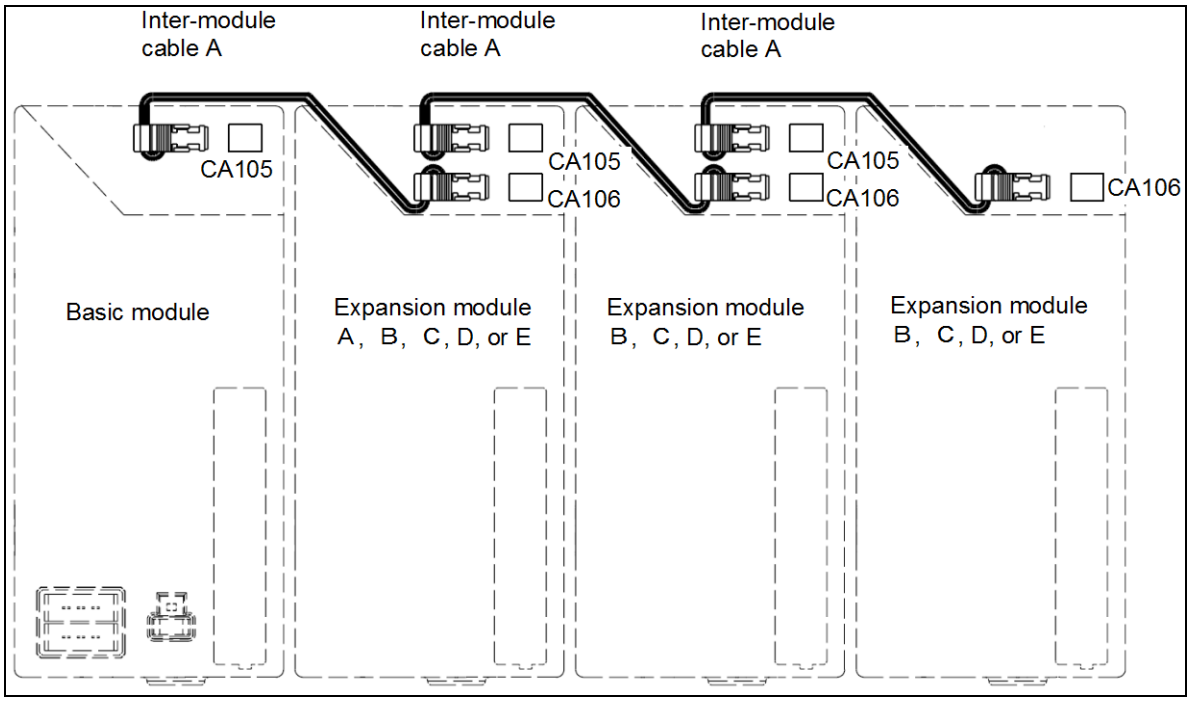

<Cross sectional view>

Method of detaching a connected cable

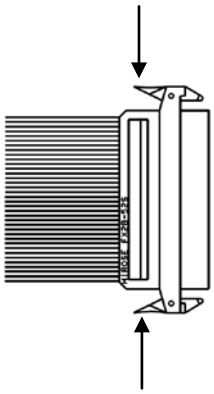

When detaching a connected cable from a module, release the lock by pushing the latch of the connector on the cable side in the arrow directions shown at the left.

© MyFANUC B5B0D8428C0144A78A5F4CA87F2C262E

8.6.5.7 Cable connection to a terminal block

(1) Insert a flat-blade screwdriver with a tip width of about 2.5 mm into a clamp of a terminal block to open the fixing bracket.

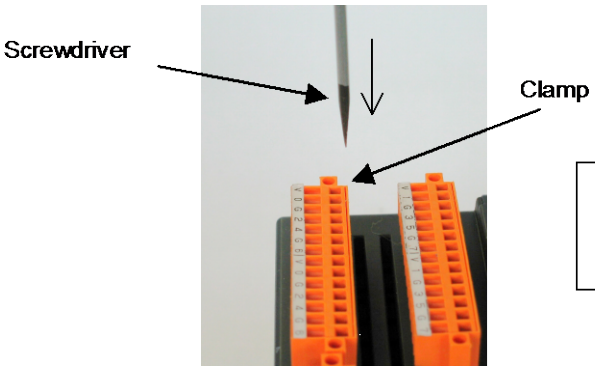

Recommended screwdriver
Weidmuller
Product number: SDI 0.4X2.5X80

(2) Insert a cable with a ferrule terminal.

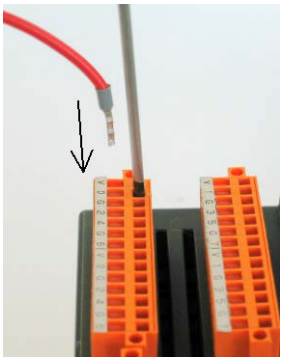

(3) Extract the screwdriver from the clamp to complete cabling.

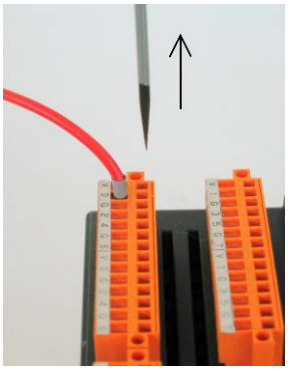

NOTE
Do not pry the screwdriver in a clamp. Otherwise, the terminal block can be damaged.

© MyFANUC B5B0D8428C0144A78A5F4CA87F2C262E

8.6.5.8 Detaching a terminal block

A terminal block can be detached from the main module by loosening the mounting screws at the both ends of the terminal block.

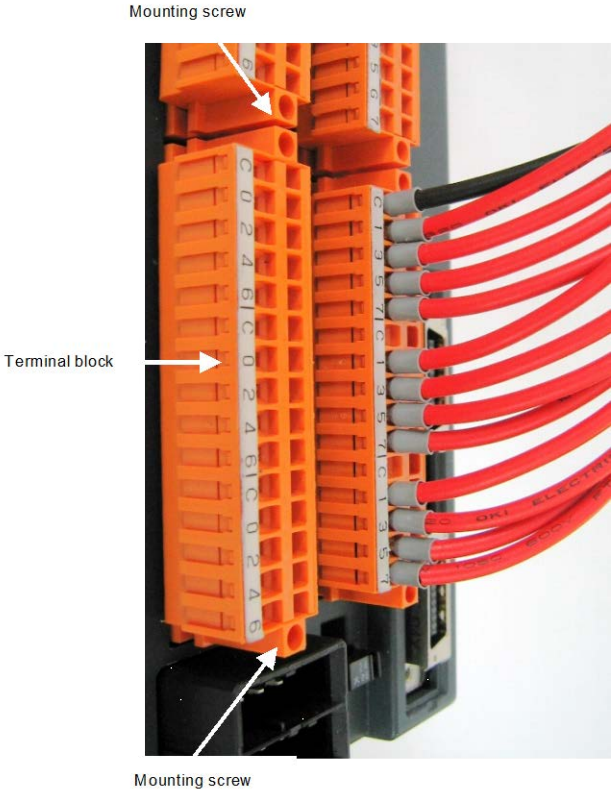

Tightening torque for the mounting screw: 0.4 Nm maximum

© MyFANUC B5B0D8428C0144A78A5F4CA87F2C262E

8.6.5.9 Connection of the ground terminal

Ground the ground terminal of a basic module.

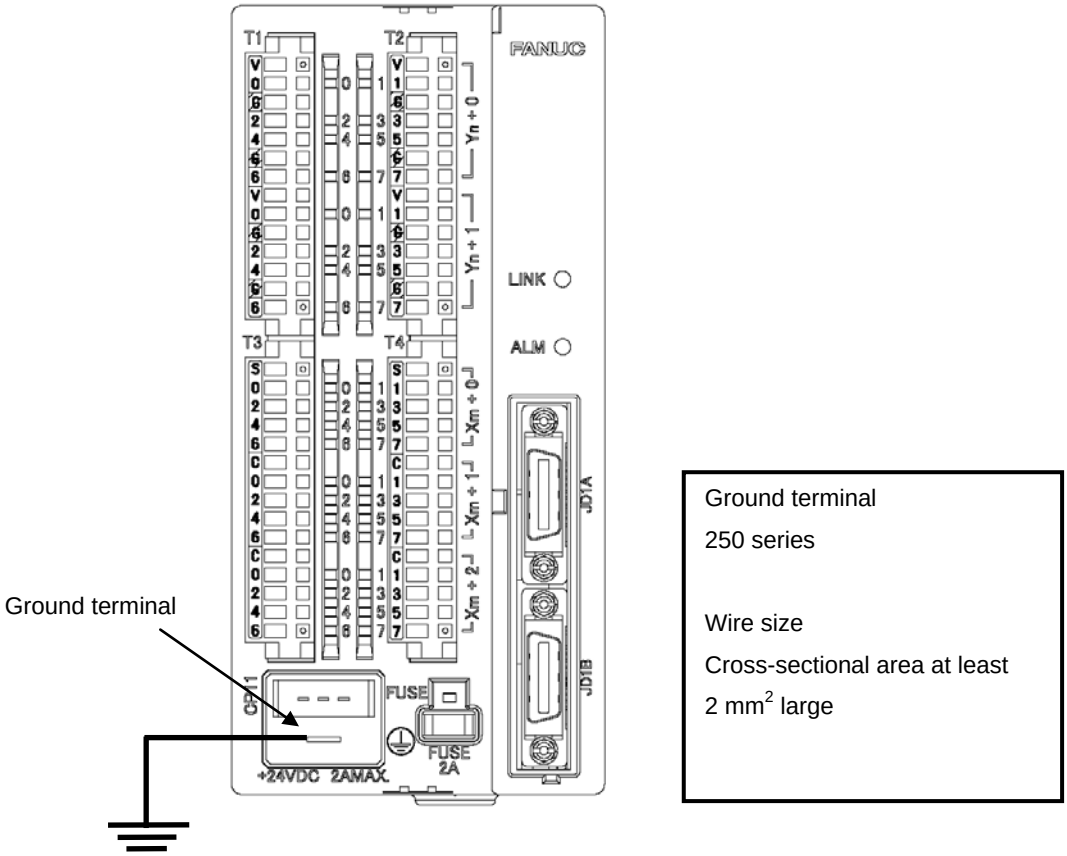

© MyFANUC B5B0D8428C0144A78A5F4CA87F2C262E

8.6.6 Settings

8.6.6.1 Address map

Address allocation

For terminal type I/O module, I/O addresses are mapped as follows.

DI space map

Xm_1	Basic module	Slot 1
$Xm_1 + 1$		
$Xm_1 + 2$		
Xm_2	Extension module 1	Slot 2
$Xm_2 + 1$		
$Xm_2 + 2$		
Xm_3	Extension module 2	Slot 3
$Xm_3 + 1$		
$Xm_3 + 2$		
Xm_4	Extension module 3	Slot 4
$Xm_4 + 1$		
$Xm_4 + 2$		
Xm_{mpg} (For 1st MPG)	Extension module 1	Slot MPG
$Xm_{mpg} + 1$(For 2nd MPG)		
$Xm_{mpg} + 2$(For 3rd MPG)		

DO space map

Yn_1	Basic module	Slot 1
$Yn_1 + 1$		
Yn_2	Extension module 1	Slot 2
$Yn_2 + 1$		
Yn_3	Extension module 2	Slot 3
$Yn_3 + 1$		
Yn_4	Extension module 3	Slot 4
$Yn_4 + 1$		

Xm_1, Xm_2, Xm_3, Xm_4, Xm_{mpg}, Yn_1, Yn_2, Yn_3, and Yn_4 indicate the start address at allocation.

Each module is treated as a slot and addresses are allocated for each module. When only the basic module is used, allocate 3-byte DI addresses and 2-byte DO addresses to slot 1. When extension modules are added, allocate 3-byte DI addresses and 2-byte DO addresses to slots 2, 3, and 4.

NOTE

1 Extension module A has an interface for three manual pulse generators. To use manual pulse generators, allocate addresses to slot MPG. With this setting, addresses can be allocated to the three manual pulse generators at a time (addresses cannot be allocated individually to manual pulse generators). Do not use the DI space with the ladder because the CNC processes the manual pulse generator signals directly.

2 Extension modules C (2A output module) has no DI signals. However when a DO error occurs, the DO alarm is transferred in the area at the DI address in spite of connection to the I/O Link i. (With the I/O Link i, the DO alarm is not transferred to the system relay (R or Z) area.) For this reason, it is necessary to allocate addresses to the DI section of extension modules C.

3 Extension modules E (analog output module) have no DI signals. For connection to the I/O Link i, it is not necessary to allocate addresses to the DI section of extension modules E.

© MyFANUC B5B0D8428C0144A78A5F4CA87F2C262E

8.6.6.2 Channel selection and A/D conversion data for extension module D

<Channel selection>

With extension module D, which of the four analog input channels is to be the target of A/D conversion must be determined with a PMC program. The DO points used for this selection are CHA and CHB (two-byte occupied output points). These are mapped as indicated below.

Address in the module	7	6	5	4	3	2	1	0
Yn	×	×	×	×	×	×	×	×
Yn+1	×	×	×	×	×	×	CHB	CHA

Yn is the first address to which the analog input module is allocated.

By setting the values listed below to CHA and CHB, the corresponding channel is selected, and the A/D conversion data of the channel and the data of the selected channel are written in the DI area. The character X above represents an unused bit, so either 1 or 0 may be written in place of X.

CHB	CHA	Channel selected
0	0	Channel 1
0	1	Channel 2
1	0	Channel 3
1	1	Channel 4

<Address>

A/D conversion data of the channel selected by the above setting is output to two bytes of the three bytes of DI (input signals) of the slot to which this module is allocated. The A/D conversion data output addresses are as shown below, depending on where extension module D (analog input module) is installed.

NOTE

Be sure to allocate the start address of the slot as shown below, according to where the extension module D is installed:

When connected to extension module 1 (slot 2):

Xm_2 must always be allocated at an odd-numbered address.

When connected to extension module 2 (slot 3):

Xm_3 must always be allocated at an even-numbered address.

When connected to extension module 3 (slot 4):

Xm_4 must always be allocated at an odd-numbered address.

- When extension module D (analog input module) is installed in extension module 1 (slot 2)

Address	7	6	5	4	3	2	1	0
Xm_2(odd-numbered address)	Undefined							
Xm_2+1(even-numbered address)	D07	D06	D05	D04	D03	D02	D01	D00
Xm_2+2(odd-numbered address)	0	0	CHB	CHA	D11	D10	D09	D08

Xm_2 is the start address of slot 2.

- When extension module D (analog input module) is installed in extension module 2 (slot 3)

Address	7	6	5	4	3	2	1	0
Xm_3(even-numbered address)	D07	D06	D05	D04	D03	D02	D01	D00
Xm_3+1(odd-numbered address)	0	0	CHB	CHA	D11	D10	D09	D08
Xm_3+2(even-numbered address)	Undefined							

Xm_3 is the start address of slot 3.

© MyFANUC B5B0D8428C0144A78A5F4CA87F2C262E

- When extension module D (analog input module) is installed in extension module 3 (slot 4)

Address	7	6	5	4	3	2	1	0
Xm_4(odd-numbered address)	Undefined							
Xm_4+1(even-numbered address)	D07	D06	D05	D04	D03	D02	D01	D00
Xm_4+2(odd-numbered address)	0	0	CHB	CHA	D11	D10	D09	D08

Xm_4 is the start address of slot 4.

< A/D conversion data>

A/D conversion data for the selected channel is output to the above address as 12-bit data in the following format.

Address in the module D	7	6	5	4	3	2	1	0
Xm	D07	D06	D05	D04	D03	D02	D01	D00
Xm+1	0	0	CHB	CHA	D11	D10	D09	D08

Xm is the first address to which extension module D is allocated.

D00 to D11 represent 12-bit digital output data (complement representation). D00 corresponds to weighting of 2^0 and D11 corresponds to that of -2^{11}. That is, D11 is a sign bit represented as a two's complement. (Refer to following table.)

Digital data			Analog data	
Decimal	**Hexadecimal**	**Binary (D11~D00)**	**Voltage input**	**Current input**
2047	7 F F h	0 1 1 1 1 1 1 1 1 1 1 1	Outside of the specification range	Outside of the specification range
2001	7 D 1 h	0 1 1 1 1 1 0 1 0 0 0 1		
2000	7 D 0 h	0 1 1 1 1 1 0 1 0 0 0 0	10V	
1999	7 C F h	0 1 1 1 1 1 0 0 1 1 1 1	9.995V	
1001	3 E 9 h	0 0 1 1 1 1 1 0 1 0 0 1	5.005V	
1000	3 E 8 h	0 0 1 1 1 1 1 0 1 0 0 0	5V	20mA
999	3 E 7 h	0 0 1 1 1 1 1 0 0 1 1 1	4.995V	19.98mA
2	0 0 2 h	0 0 0 0 0 0 0 0 0 0 1 0	10mV	40μA
1	0 0 1 h	0 0 0 0 0 0 0 0 0 0 0 1	5mV	20μA
0	0 0 0 h	0 0 0 0 0 0 0 0 0 0 0 0	0V	0mA
-1	F F F h	1 1 1 1 1 1 1 1 1 1 1 1	-5mV	-20μA
-2	F F E h	1 1 1 1 1 1 1 1 1 1 1 0	-10mV	-40μA
-999	C 1 9 h	1 1 0 0 0 0 0 1 1 0 0 1	-4.995V	-19.98mA
-1000	C 1 8 h	1 1 0 0 0 0 0 1 1 0 0 0	-5V	-20mA
-1001	C 1 7 h	1 1 0 0 0 0 0 1 0 1 1 1	-5.005V	Outside of the specification range
-1999	8 3 1 h	1 0 0 0 0 0 1 1 0 0 0 1	-9.995V	
-2000	8 3 0 h	1 0 0 0 0 0 1 1 0 0 0 0	-10V	
-2001	8 2 F h	1 0 0 0 0 0 1 0 1 1 1 1	Outside of the specification range	
-2048	8 0 0 h	1 0 0 0 0 0 0 0 0 0 0 0		

CHA and CHB represent the channel of which data is converted. This means that when the two bytes above are read with a ladder program, the A-D converted data of the input channel represented by CHA and CHB can be read from D11 to D00.

NOTE
When two-byte digital output addresses are to be referenced with a ladder program, a read must always be performed word-by-word (16 bits).

© MyFANUC B5B0D8428C0144A78A5F4CA87F2C262E

8.6.6.3 Channel selection and D/A conversion data for extension module E

<Channel selection>

Extension module E has four analog output channels. Which of the four analog output channels is to be output must be determined with a ladder program. CHA and CHB, which are used to select a channel, are allocated in the DO address area for the module as shown below.

Address in the module	7	6	5	4	3	2	1	0
Yn（even-numbered address）	D07	D06	D05	D04	D03	D02	D01	D00
Yn+1（odd-numbered address）	CHB	CHA	0	0	D11	D10	D09	D08

Yn is the start address of the extension module E connected to this module.

By setting the values listed below to CHA and CHB, the corresponding channel is selected.

CHB	CHA	Channel selected
0	0	Channel 1
0	1	Channel 2
1	0	Channel 3
1	1	Channel 4

< D/A conversion data>

By writing 12-bit digital data in D00 to D11 in the above address map, desired voltage and current are output.D11 is a sign bit represented as a two's complement. (Refer to following table.)

Digital data			Analog data	
Decimal	Hexadecimal	Binary (D11~D00)	Voltage output	Current output
2047	7 F F h	0 1 1 1 1 1 1 1 1 1 1 1	Outside of the specification range	Outside of the specification range
2001	7 D 1 h	0 1 1 1 1 1 0 1 0 0 0 1		
2000	7 D 0 h	0 1 1 1 1 1 0 1 0 0 0 0	10V	
1999	7 C F h	0 1 1 1 1 1 0 0 1 1 1 1	9.995V	
1001	3 E 9 h	0 0 1 1 1 1 1 0 1 0 0 1	5.005V	
1000	3 E 8 h	0 0 1 1 1 1 1 0 1 0 0 0	5V	20mA
999	3 E 7 h	0 0 1 1 1 1 1 0 0 1 1 1	4.995V	19.98mA
2	0 0 2 h	0 0 0 0 0 0 0 0 0 0 1 0	10mV	40μA
1	0 0 1 h	0 0 0 0 0 0 0 0 0 0 0 1	5mV	20μA
0	0 0 0 h	0 0 0 0 0 0 0 0 0 0 0 0	0V	0mA
-1	F F F h	1 1 1 1 1 1 1 1 1 1 1 1	-5mV	Outside of the specification range
-2	F F E h	1 1 1 1 1 1 1 1 1 1 1 0	-10mV	
-1999	8 3 1 h	1 0 0 0 0 0 1 1 0 0 0 1	-9.995V	
-2000	8 3 0 h	1 0 0 0 0 0 1 1 0 0 0 0	-10V	
-2001	8 2 F h	1 0 0 0 0 0 1 0 1 1 1 1	Outside of the specification range	
-2048	8 0 0 h	1 0 0 0 0 0 0 0 0 0 0 0		

NOTE

1 When an extension module E is used, be sure to allocate the start address of the slot which assigned the extension module E at an even-numbered address.

NOTE

1 Be sure to write the target data for D-A conversion with a PMC program word-by-word (16 bits).
2 The output value of each channel is held until another data is written in that channel.
3 Multiple channels cannot be selected within the same ladder scan period. After selecting a channel, wait at least the ladder scan period before selecting another channel.

© MyFANUC B5B0D8428C0144A78A5F4CA87F2C262E

DO alarm detection

The DO driver of the basic module and extension modules A, B, and C is capable of detecting an overcurrent and measuring its own temperature. If an accident, such as connecting the cable to ground, causes an abnormal increase in the load current or in the driver temperature, a protection circuit, which is provided for each DO driver, is activated and keeps the DO signal in the OFF state until the cause of the problem is eliminated. Even if this occurs, the CNC and I/O module continue operating without entering the alarm status, but the PMC is notified of the location of the error detected by the DO driver. This information can be checked on the PMC status screen or alarm processing can be performed in advance using a ladder to help error check and recovery.
Eliminate a cause after checking the location of the detected error.

Basic module, Extension module A and B

A DO error such as a ground fault is detected for each signal. This DO error is transferred to the PMC system relay area as a status alarm. The following table lists system relay area information and corresponding DO data related to a status alarm. When an alarm data bit is set to “1”, the DO driver corresponding to the bit detects an error. Also see Subsection 7.3.3, “Status Alarm”.

Information output to the system relay area and corresponding location where an error occurred

Information output to the system relay area						Faulty location
Type	Group number	PMC path	Slot number	Alarm information number (Intra-slot byte address)	Y address (DO address)	
0	0 to 23	1 to 5, 9	1	0	Yn_1	0th byte DO of Basic module
				1	Yn_1+1	1st byte DO of Basic module
			2	0	Yn_2	0th byte DO of Extension module1
				1	Yn_2+1	1st byte DO of Extension module1
			3	0	Yn_3	0th byte DO of Extension module2
				1	Yn_3+1	1st byte DO of Extension module2
			4	0	Yn_4	0th byte DO of Extension module3
				1	Yn_4+1	1st byte DO of Extension module3

Output values of “Group number”, “PMC path”, and “Y address” depends on unit connection and I/O address assignment.
Yn_1, Yn_2, Yn_3 and Yn_4 indicate the start address at allocation.

Description of “Alarm data” in the system relay area

Alarm data							
#7	#6	#5	#4	#3	#2	#1	#0
DO ground fault at bit 7	DO ground fault at bit 6	DO ground fault at bit 5	DO ground fault at bit 4	DO ground fault at bit 3	DO ground fault at bit 2	DO ground fault at bit 1	DO ground fault at bit 0

Extension module C

With extension module C, a DO error such as a ground fault is detected for each signal. The DO error is input not in the PMC system relay area, but in the area at the DI address listed in the table below.

- DO alarm bit addresses when extension module C is allocated as extension modules 1 to 3 (0: No DO alarm issued, 1: DO alarm issued).

© MyFANUC B5B0D8428C0144A78A5F4CA87F2C262E

Address	Bit								Module
	7	6	5	4	3	2	1	0	
Xm_1	Bit 7 of Yn_1	Bit 6 of Yn_1	Bit 5 of Yn_1	Bit 4 of Yn_1	Bit 3 of Yn_1	Bit 2 of Yn_1	Bit 1 of Yn_1	Bit 0 of Yn_1	DO alarm on extension module 1
Xm_1+1	Bit 7 of Yn_1+1	Bit 6 of Yn_1+1	Bit 5 of Yn_1+1	Bit 4 of Yn_1+1	Bit 3 of Yn_1+1	Bit 2 of Yn_1+1	Bit 1 of Yn_1+1	Bit 0 of Yn_1+1	
Xm_2	Bit 7 of Yn_2	Bit 6 of Yn_2	Bit 5 of Yn_2	Bit 4 of Yn_2	Bit 3 of Yn_2	Bit 2 of Yn_2	Bit 1 of Yn_2	Bit 0 of Yn_2	DO alarm on extension module 2
Xm_2+1	Bit 7 of Yn_2+1	Bit 6 of Yn_2+1	Bit 5 of Yn_2+1	Bit 4 of Yn_2+1	Bit 3 of Yn_2+1	Bit 2 of Yn_2+1	Bit 1 of Yn_2+1	Bit 0 of Yn_2+1	
Xm_3	Bit 7 of Yn_3	Bit 6 of Yn_3	Bit 5 of Yn_3	Bit 4 of Yn_3	Bit 3 of Yn_3	Bit 2 of Yn_3	Bit 1 of Yn_3	Bit 0 of Yn_3	DO alarm on extension module 3
Xm_3+1	Bit 7 of Yn_3+1	Bit 6 of Yn_3+1	Bit 5 of Yn_3+1	Bit 4 of Yn_3+1	Bit 3 of Yn_3+1	Bit 2 of Yn_3+1	Bit 1 of Yn_3+1	Bit 0 of Yn_3+1	

How to view the table above

DO alarm data assigned to bit 5 of address Yn_1+1 is written to bit 5 of Xm_1+1.

States when the protection function is activated in extension module C

The following table lists the DO output and alarm data states when a DO error occurs in extension module C and the protection function is activated.

State	PMC output	Module DO output	DO state indication LED (green)	DO alarm LED (red)	Alarm data
Normal operation	0	OFF	Turned off	Turned off	0
	1	ON	Turned on	Turned off	0
Overheat protection function operation	0	OFF	Turned off	Turned off	0
	1	OFF	Turned off	Turned on	1
Over voltage protection function operation	0	OFF	Turned off	Turned off	0
	1	OFF	Turned off	Turned off	0
Disconnection detection	0	OFF	Turned off	Turned off	0
	1	ON	Turned on	Turned on	1

NOTE

1 If the overheat protection function or over voltage protection function among the protection functions above is activated, the DO bit is kept OFF until the cause is eliminated. When the cause is eliminated, the DO bit is set to ON without restarting the system.

2 Disconnection detection is performed by monitoring, with an output element in the module, the current flowing through a load when DO output is ON. When the detected current value is about 200 mA or less, disconnection detection is assumed. So, when a device (such as an LED) with a small load current is connected, the DO alarm state results, assuming disconnection detection. Unlike the other protection functions, however, this function does not turn off DO output. If a connection is reactivated after the state of disconnection is once set, disconnection detection is canceled without restarting the system.

3 When the ratings current value of the load is larger than the disconnection detection current value, and the rise time of the current that flows to the connected load (such as an solenoid) is late, the disconnection detection function might work. For that case, the disconnection detecting function when DO output is ON can be evaded by programming it to refer to DO alarm allocated to DI after the fixed time has passed since DO was turned on.

© MyFANUC B5B0D8428C0144A78A5F4CA87F2C262E

8.6.6.4 Setting the rotary switch

NOTE
In the description in this subsection, slots are applicable only for the I/O Link *i*.

By changing the setting (rotary switch) for the extension modules, connections can be made by omitting some extension modules (slots). Use the same setting method as for I/O modules for connector panel. For details, see Subsection 8.2.11.

Location of the rotary switch

As shown below, the control (rotary switch) is located on an extension module. To change the setting, turn the switch with a flat-bladed screwdriver with a tip width of about 2.5 mm.

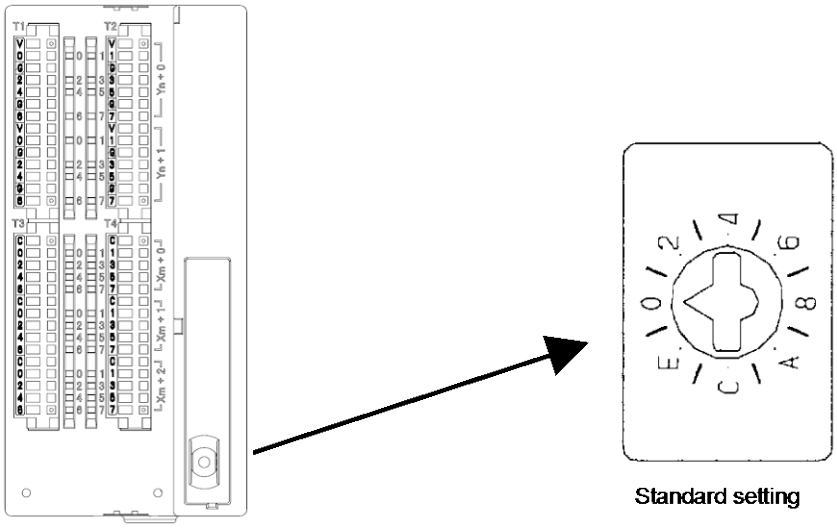

© MyFANUC B5B0D8428C0144A78A5F4CA87F2C262E

8.6.7 Others

8.6.7.1 Method of common pin expansion

Additional common pins can be provided by mounting (screwing) a commercially available terminal block on the top cover of an extension module.

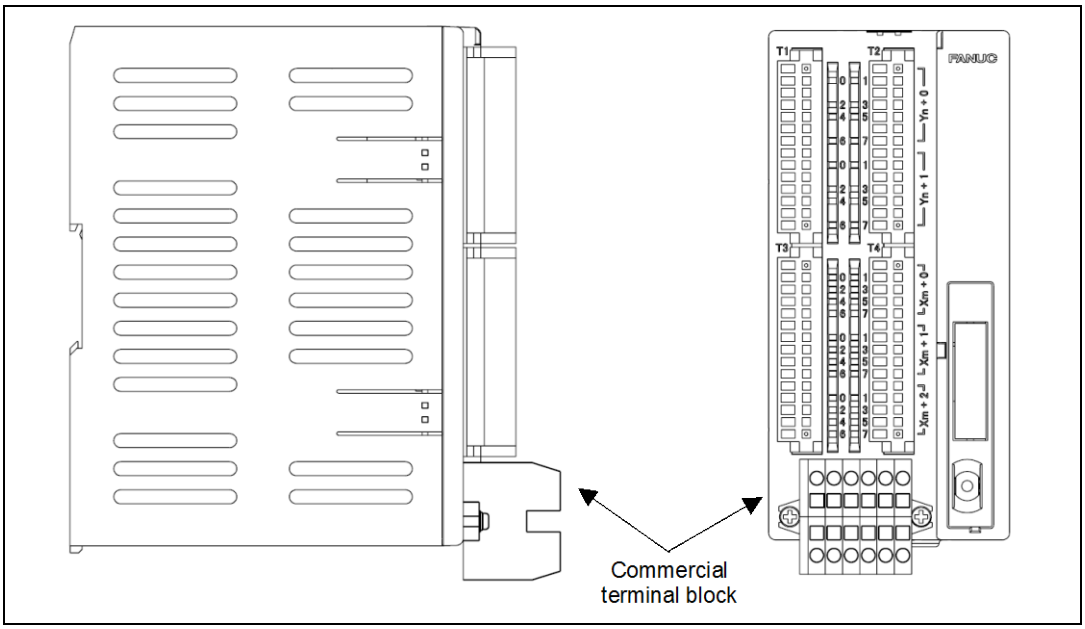

Examples of commercial terminal blocks

Manufacturer	Model	Maximum number of poles
WAGO	869 series	12
Weidmuller	ZDUB2.5 series	10
OSADA	TWM10B series	14

For details of the terminal blocks, contact the respective manufacturers.

© MyFANUC B5B0D8428C0144A78A5F4CA87F2C262E

Mounting dimensions of a commercial terminal block

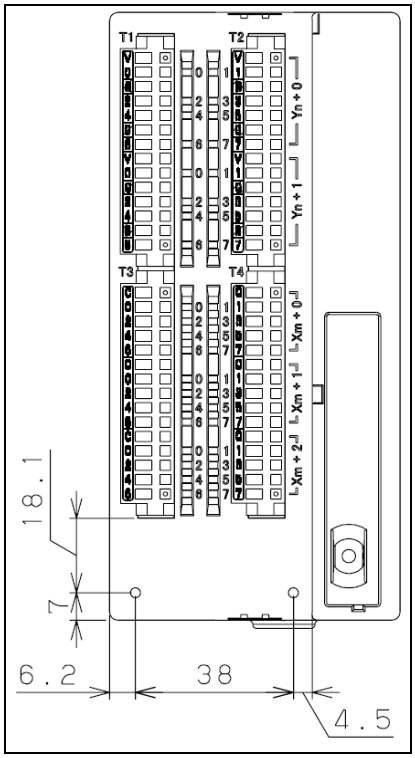

Unit: mm

NOTE
To fasten a terminal block, use M3 tap screws not longer than 10 mm.

© MyFANUC B5B0D8428C0144A78A5F4CA87F2C262E

8.6.7.2 Parallel DO (output signal) connection

Basic module, Extension modules A and B

With the basic module and extension modules A and B, a DO load current two times larger can be obtained by connecting DO points in parallel and exercising ON/OFF control at the same time in the sequence as shown below. Namely, the maximum load current per DO point is 200 mA, but 400 mA can be obtained by connecting two DO points in parallel and turning on the two DO points at the same time. In this case, however, the leakage current is also doubled up to 40 μA when the DO points are turned off.

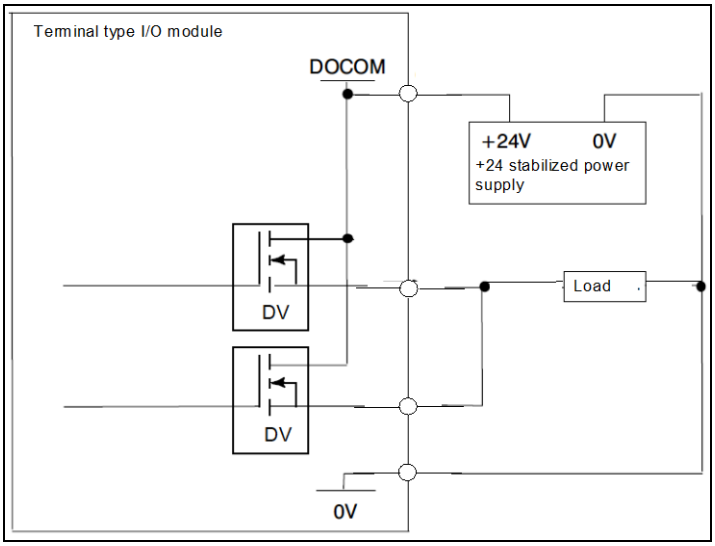

NOTE

1 Be sure to connect the bit at the same address for parallel connection. Three or more signals cannot be connected in parallel.
2 Extension module C does not allow parallel DO connection.

© MyFANUC B5B0D8428C0144A78A5F4CA87F2C262E

8.7 I/O Link CONNECTION UNIT

The I/O Link connection unit connects I/O Link *i* master devices such as CNCs via an I/O Link to enable the transfer of DI/DO data between I/O Link master devices on different systems.

8.7.1 Overview

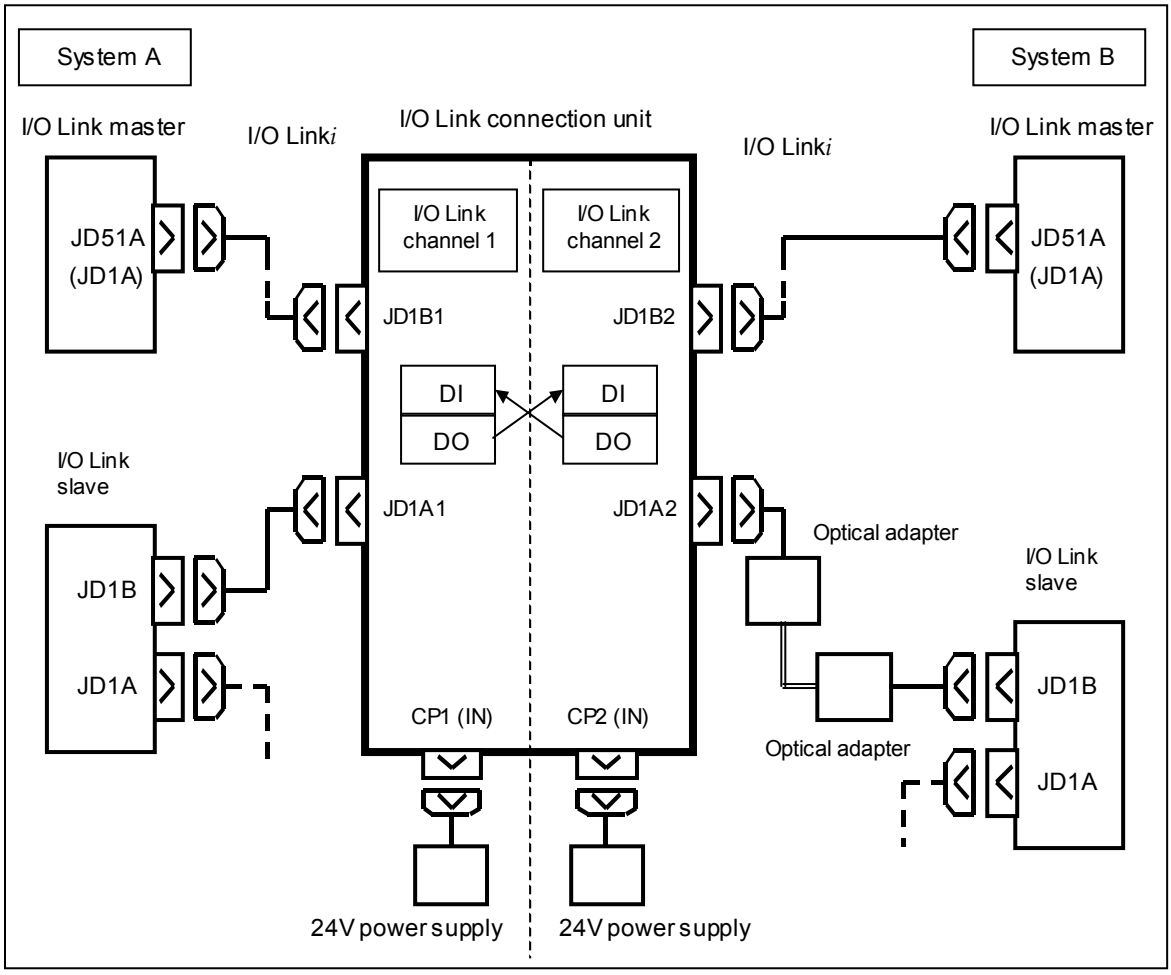

Specification of operation

1) The I/O Link connection unit has two channels of I/O Link slave interfaces.
2) The two I/O Link slave channels can independently operate, and the power to each channel can also turned on and off independently.
3) When both systems operate normally, DO data of one system is transferred as DI data to the other system.
4) When either system stops (NOTE 1), DI data of the other system that is operating is automatically set to all zeros.
5) When both systems normally operate, then either system stops (NOTE 1), it takes up to 200 ms until DI data of the other system that is operating is automatically set to all zeros. During this period, DO data immediately before that system stops is transferred as DI data.
6) When either system that has stopped starts operation, DI data is transferred after the I/O Link communication is established.In the meantime, all the DI data is "0".
7) If an alarm is issued due to a failure in the I/O Link connection unit itself, the I/O Link enters an alarm state in both I/O Link channels.

© MyFANUC B5B0D8428C0144A78A5F4CA87F2C262E

NOTE
1 The stopped state here means the status in which the power to the system is off for adjustment or maintenance or that in which the I/O Link stops due to an error in the I/O Link master device or another slave device.
2 The specification of operation does not guarantee that the system always operates according to the specification. Therefore, for the signals related to safety, configure a safety circuit outside the I/O Link connection unit.

8.7.2 Specification

Ordering information

Item	Specification
I/O Link connection unit	A02B-0333-C250
Fuse, 1A (one as a spare part)	A03B-0815-K001

Installation conditions

(1) When installing the I/O Link connection unit, satisfy the CNC installation conditions.
(2) Install this unit on a vertical surface, and provide a space of at least 100 mm above and below the unit. Do not place any device that generates a large amount of heat below this unit.

Power supply rating

Item	Specification	Remarks
Voltage	24VDC±10%	±10% includes momentary variations and ripples.
Current	0.3A/channel	When two or less optical adapters are connected
	0.4A/channel	When three or more optical adapters are connected
Heat output	7.5W	When two or less optical adapters are connected
	10W	When three or more optical adapters are connected

I/O Link specification

Item	Specification
Number of DI/DO data items	For each I/O Link slave channel DI: Up to 256, DO: Up to 256 (The number of data items actually used varies depending on the amount of data assigned in the I/O Link master device.)

NOTE
Note the following points when assigning DI/DO data items to each channel:
- The number of DI data items assigned to channel 1 is the same as that of DO data items assigned channel 2.
- The number of DO data items assigned to channel 1 is the same as that of DI data items assigned to channel 2.

© MyFANUC B5B0D8428C0144A78A5F4CA87F2C262E

External dimensions/weight

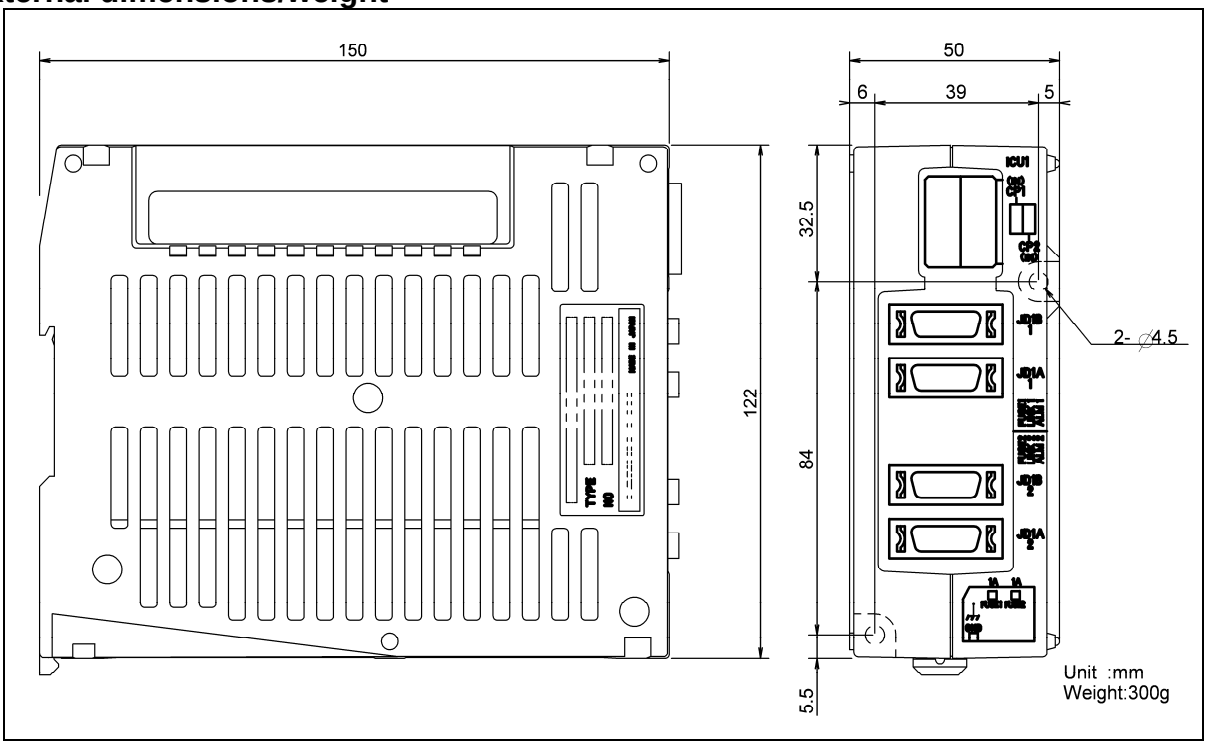

Connector layout

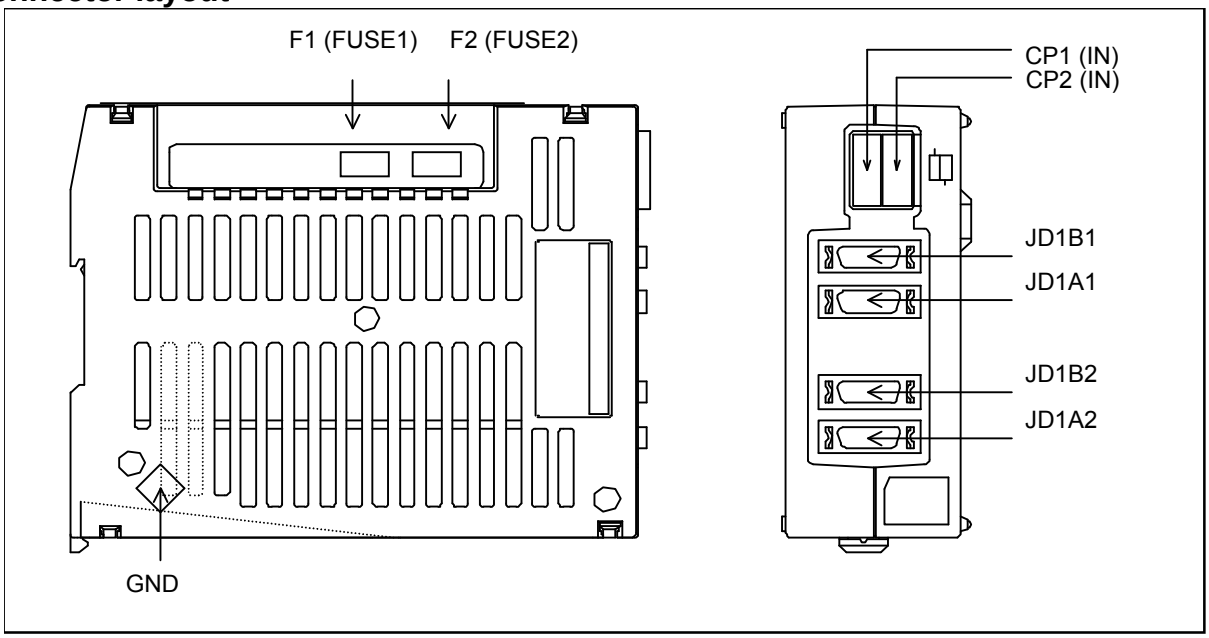

Connector number and fuse number	Purpose
CP1 (IN)	24VDC power input (channel 1)
CP2 (IN)	24VDC power input (channel 2)
JD1B1, JD1A1	I/O Link interface (channel 1)
JD1B2, JD1A2	I/O Link interface (channel 2)
GND	Ground terminal for signals
F1 (FUSE1)	Fuse for channel 1
F2 (FUSE2)	Fuse for channel 2

© MyFANUC B5B0D8428C0144A78A5F4CA87F2C262E

8.7.3 Installation

Mounting hole for screwing

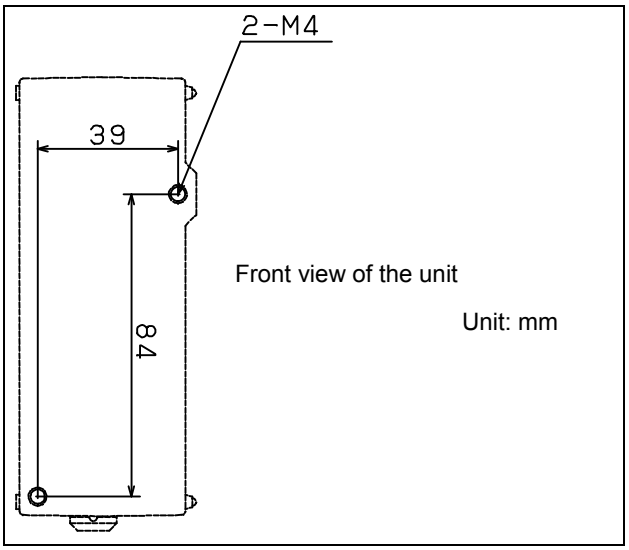

NOTE

1 A screwdriver is inserted on a slant to mount and dismount the unit, so that a sufficient maintenance space is required on both sides of the unit. When the front face of an adjacent unit is flush with the front face of the unit or is recessed, provide a clearance of about 20 mm from the adjacent unit. When the front face of an adjacent unit is more projected toward you than the front face of the unit, provide a clearance of about 70 mm from the adjacent unit.

2 When the unit is to be installed near a side plane of the cabinet, provide a clearance of about 70 mm between the unit and the side plane of the cabinet.

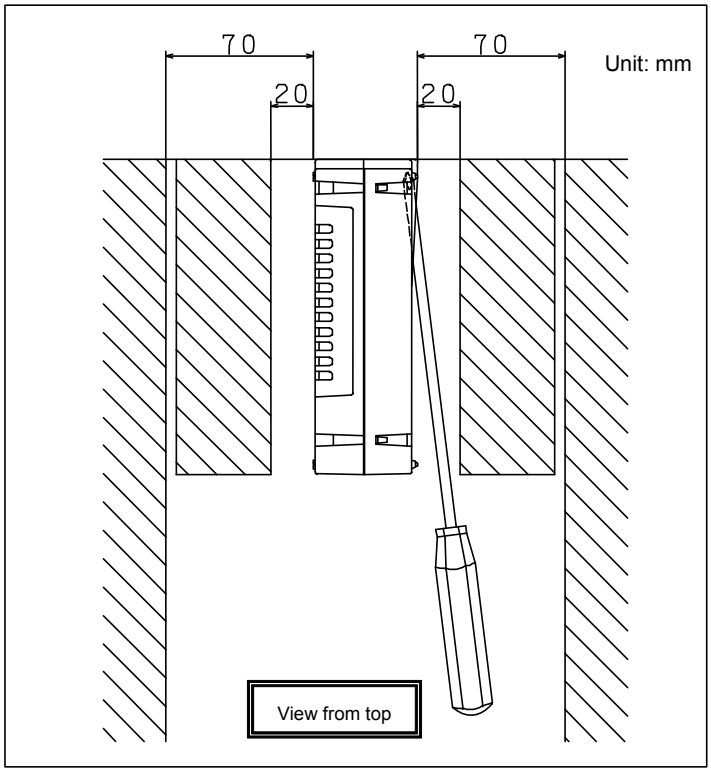

© MyFANUC B5B0D8428C0144A78A5F4CA87F2C262E

Using a DIN rail for mounting

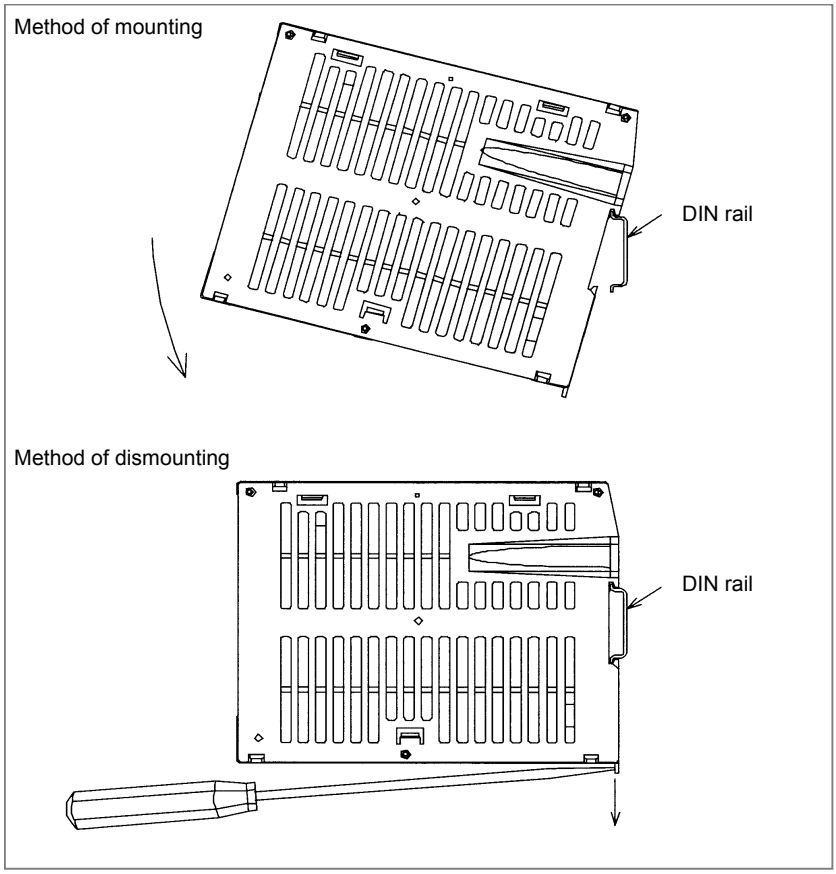

Method of mounting
1 Place the hook of the unit onto the top of the DIN rail.
2 Push the unit until it clicks into place.
Method of dismounting
1 Lower the locking section with a flat-blade screwdriver.
2 Pull the lower part of the unit toward you.

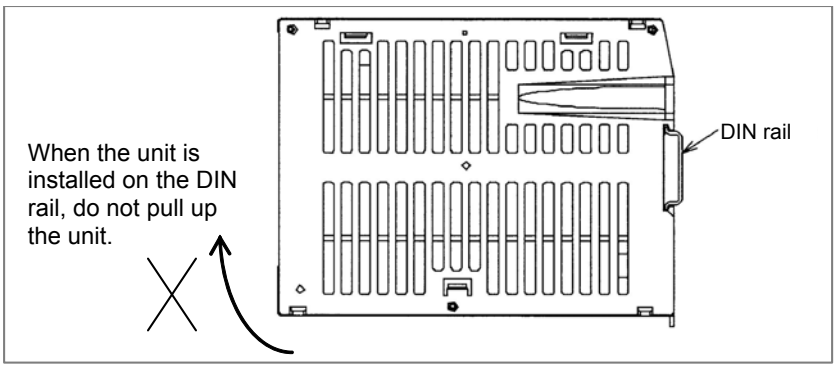

⚠ CAUTION
When the unit is installed, be careful not to damage the lock by applying excessive force.
When installing and removing the unit, hold the upper and lower ends of the unit so that stress is not applied to the side (that surface with the slits) of the unit.
When the unit is installed on the DIN rail, do not pull up the unit. Pulling up the unit may damage the case.

© MyFANUC B5B0D8428C0144A78A5F4CA87F2C262E

8.7.4 Connection

8.7.4.1 I/O Link connection

Sample connection

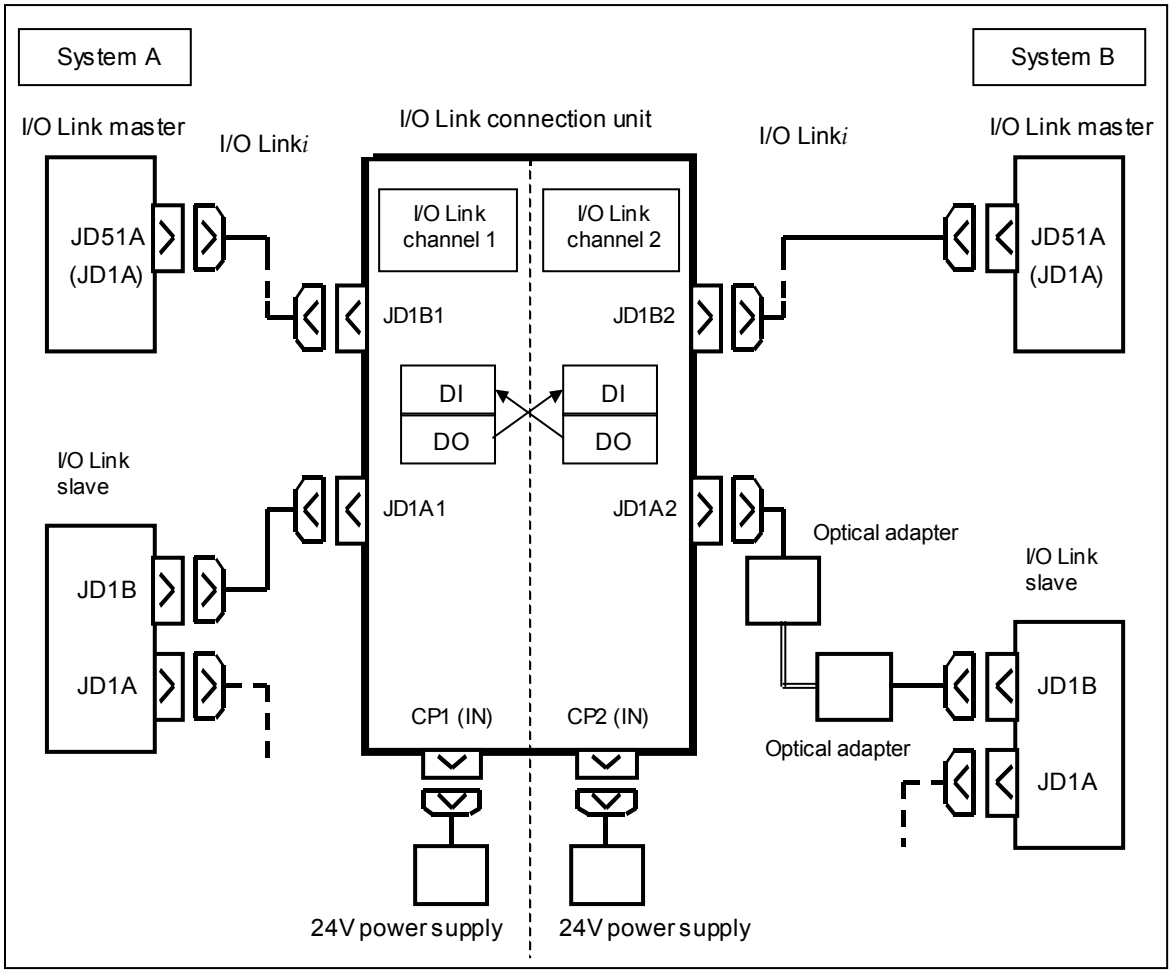

For details of I/O Link connection, see Section 7.2.

NOTE

1 A conventional I/O Link connection unit has an optical interface. This model has electric interfaces only. When an optical interface is required, use an optical adapter for connection.

2 To an electric interface on this unit, 5 V power is supplied for an optical adapter, though it is not supplied for an optical adapter to an electric interface on a conventional I/O Link connection unit.

3 When optical adapters are connected, the power supply rating of the 24 V power supply differs depending on the number of optical adapters connected to the I/O Link connection unit. For the power supply rating, see Subsection 8.7.2.

© MyFANUC B5B0D8428C0144A78A5F4CA87F2C262E

8.7.4.2 Power connection

Supply the power required for operation of this unit to the connectors shown in the figure below, CP1(IN) and CP2(IN).
Supplying the power to CP1(IN) operates the I/O Link of channel 1.
Supplying the power to CP2(IN) operates the I/O Link of channel 2.

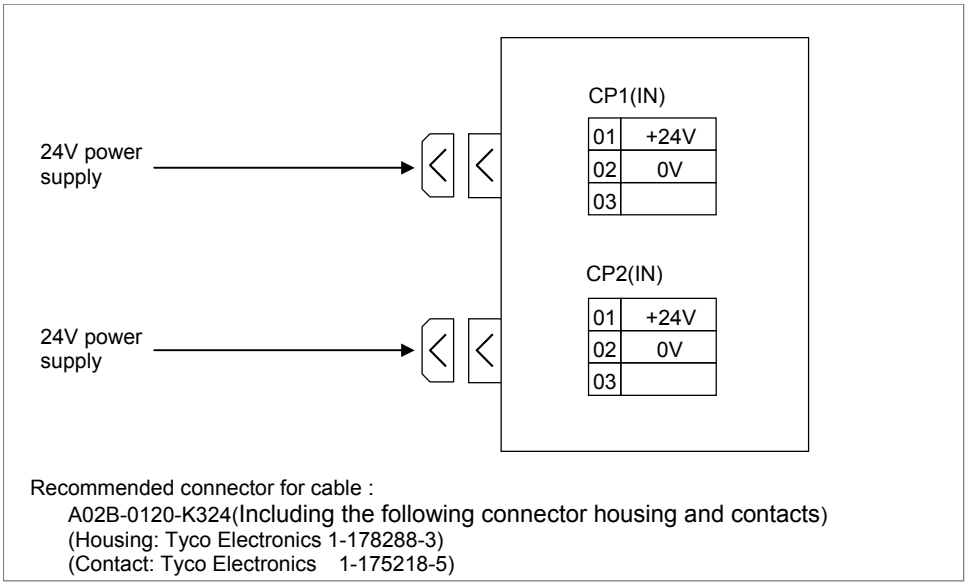

Ground terminal for signals

Secure the ground line to the ground terminal (GND) for signals, which is located at the bottom of each unit, with an M3 screw as shown in the figure below. Connect the ground line to the ground plate of the cabinet.

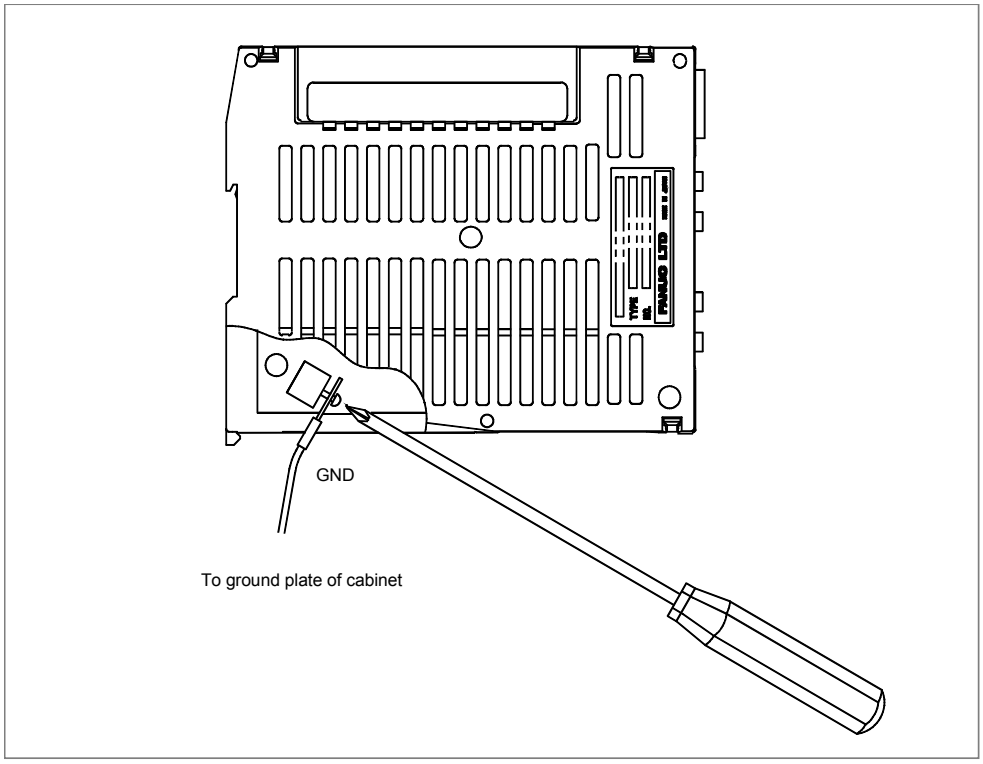

NOTE
The torque with which a screw is tightened is 0.5 N·m or less.

© MyFANUC B5B0D8428C0144A78A5F4CA87F2C262E

8.8 CONNECTION TO MACHINE OPERATOR'S PANEL

8.8.1 Overview

0*i*-F Plus following machine operator's panel

- Standard machine operator's panel main panel
  The standard machine operator's panel main panel is connected. It has 55 key switches and 55 LED displays. All key tops are detachable.

- Safety machine operator's panel
  The safety machine operator's panel is connected. It has 55 key switches and 55 LED displays. All key tops are detachable.
  Moreover, all the key switches are dual contacts.
  The general-purpose input signals of 8 pair are inputted into dual circuit.
  By using dual check safety function (DCS function), the signal of the key switch and the external dual input signal can use as the safety-related input signal.
  Conforming with the safety standard like ISO23125 or EN12417 is easy.

- Safety machine operator's panel type B
  Safety machine operator's panel type B has the same function as safety machine operator's panel. Width is the same 400mm as 15" color LCD. It is designed so that it can be used combining 15" color LCD.
  It has 55 key switches, 55 LED displays, an emergency stop switch, a power ON/OFF control switch, a feed rate override switch and a spindle override switch.

- Safety machine operator's panel-BK10
  Safety machine operator's panel-BK10 has the same function as safety machine operator's panel. It is designed so that it can be used combining 10.4" color LCD/MDI vertical.

- Safety machine operator's panel-BK15
  Safety machine operator's panel-BK15 has the same function as safety machine operator's type B. It is designed so that it can be used combining 10.4" color LCD/MDI horizontal.

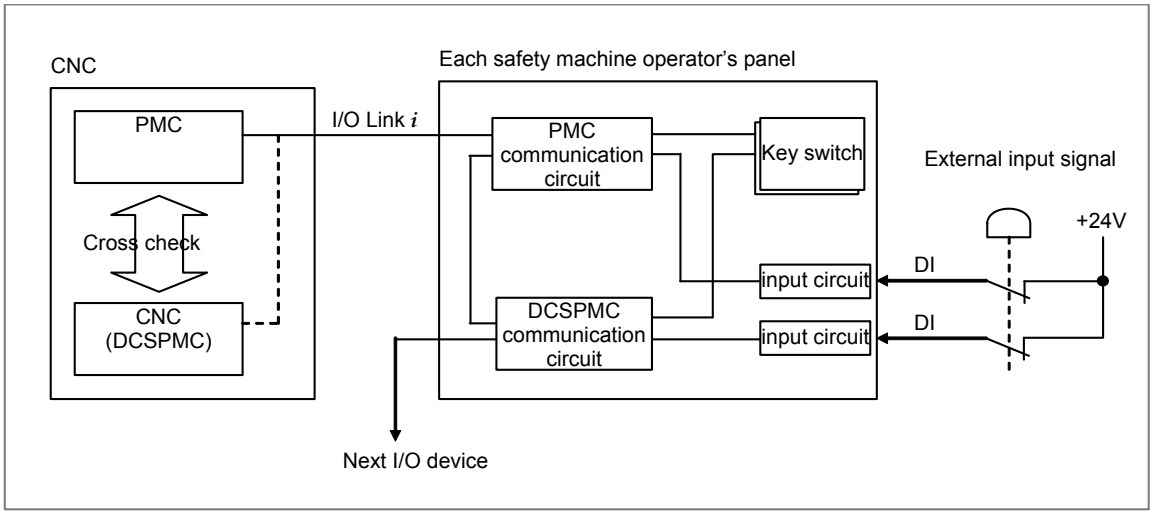

© MyFANUC B5B0D8428C0144A78A5F4CA87F2C262E

The standard machine operator's panel main panel, safety machine operator's panel and safety machine operator's panel-BK10 can be use with the following sub panel.

- Sub panel AA, D
  Sub panel AA and D are operator's panels with a power ON/OFF switch, an emergency stop switch, a program protect switch, a feed rate override switch and a spindle override switch.
  The signal from each switch can be transmitted to the power magnetics cabinet via the main panel, safety machine operator's panel or safety machine operator's panel-BK10. ON-switch has a LED.

Safety machine operator's panel-BK10 can be use with the following sub panel.

- Sub panel-BK10
  Sub panel-BK10 is operator's panels with a power ON/OFF control switch, an emergency stop switch, a program protect switch, an axis override switch and a spindle override switches.
  ON-switch has a LED.
  This sub panel has one reserved hole for mounting a 22-diameter switch. On the hole, a mounting hole plug is mounted at shipment.

© MyFANUC B5B0D8428C0144A78A5F4CA87F2C262E

The following figure is the example of composition when using the standard machine operator's panel main panel or the safety machine operator's panel.

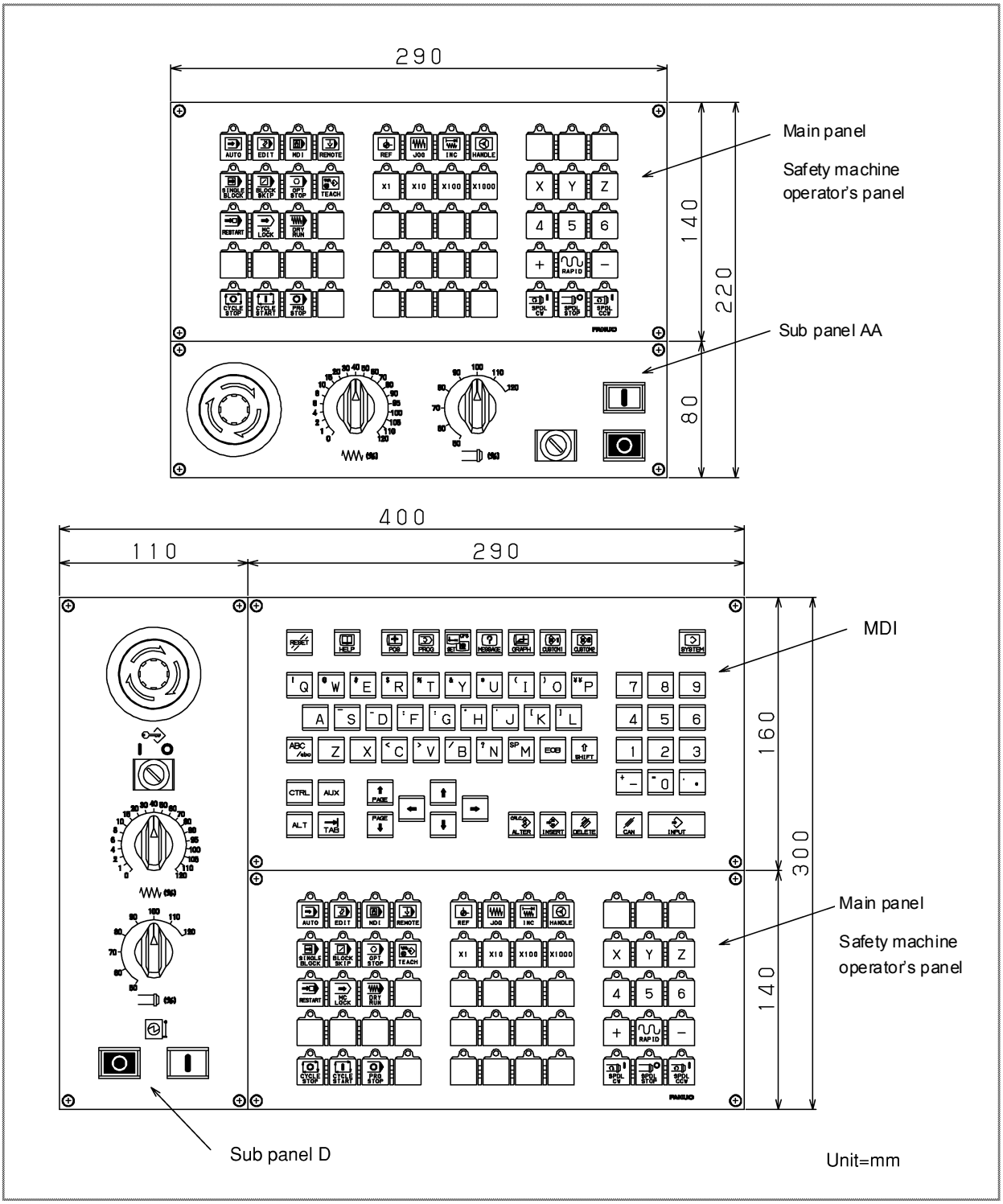

© MyFANUC B5B0D8428C0144A78A5F4CA87F2C262E

The following figure is the example of composition when using the safety machine operator's panel type B.

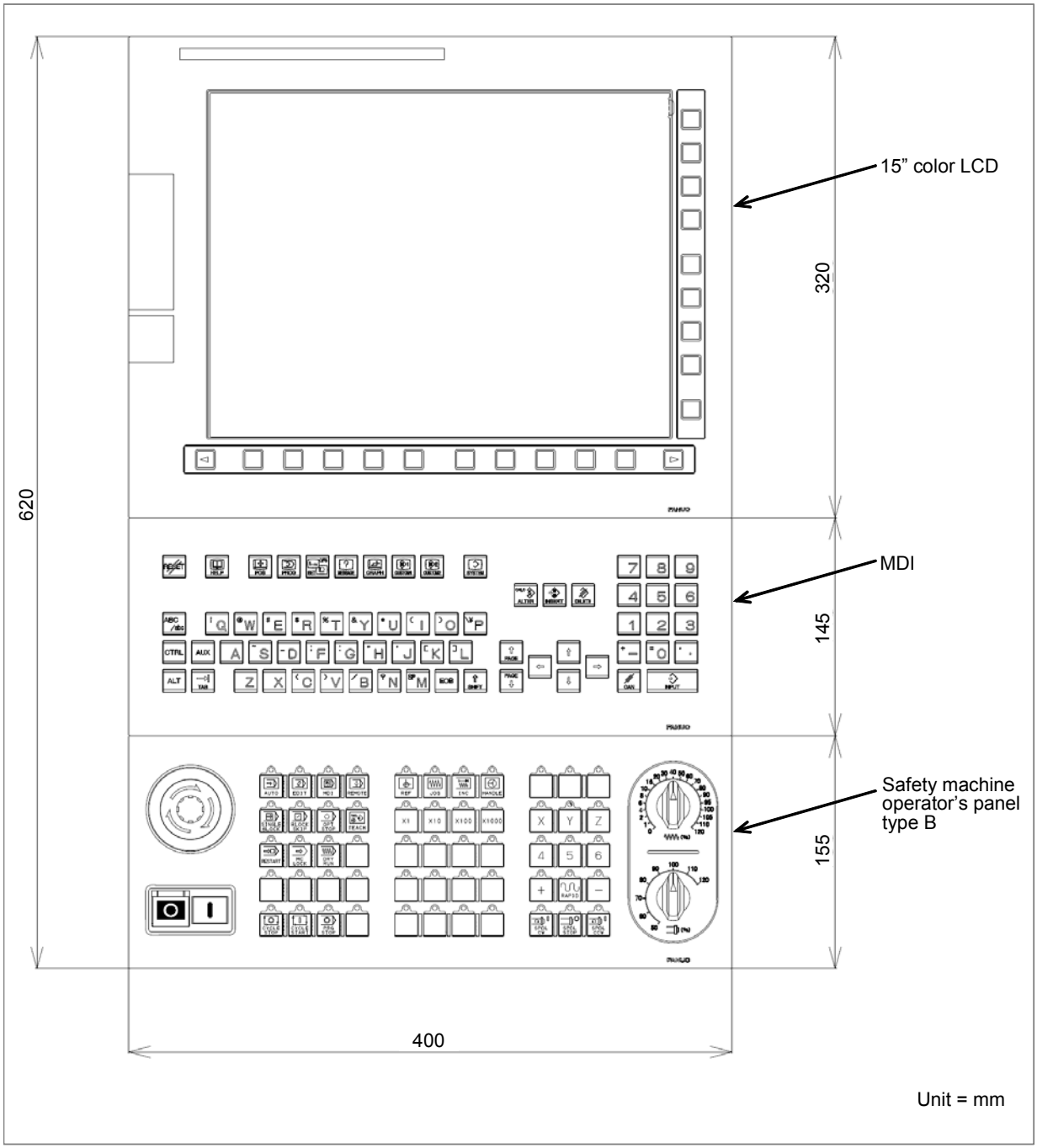

© MyFANUC B5B0D8428C0144A78A5F4CA87F2C262E

The following figure is the example of composition when using the safety machine operator's panel -BK10.

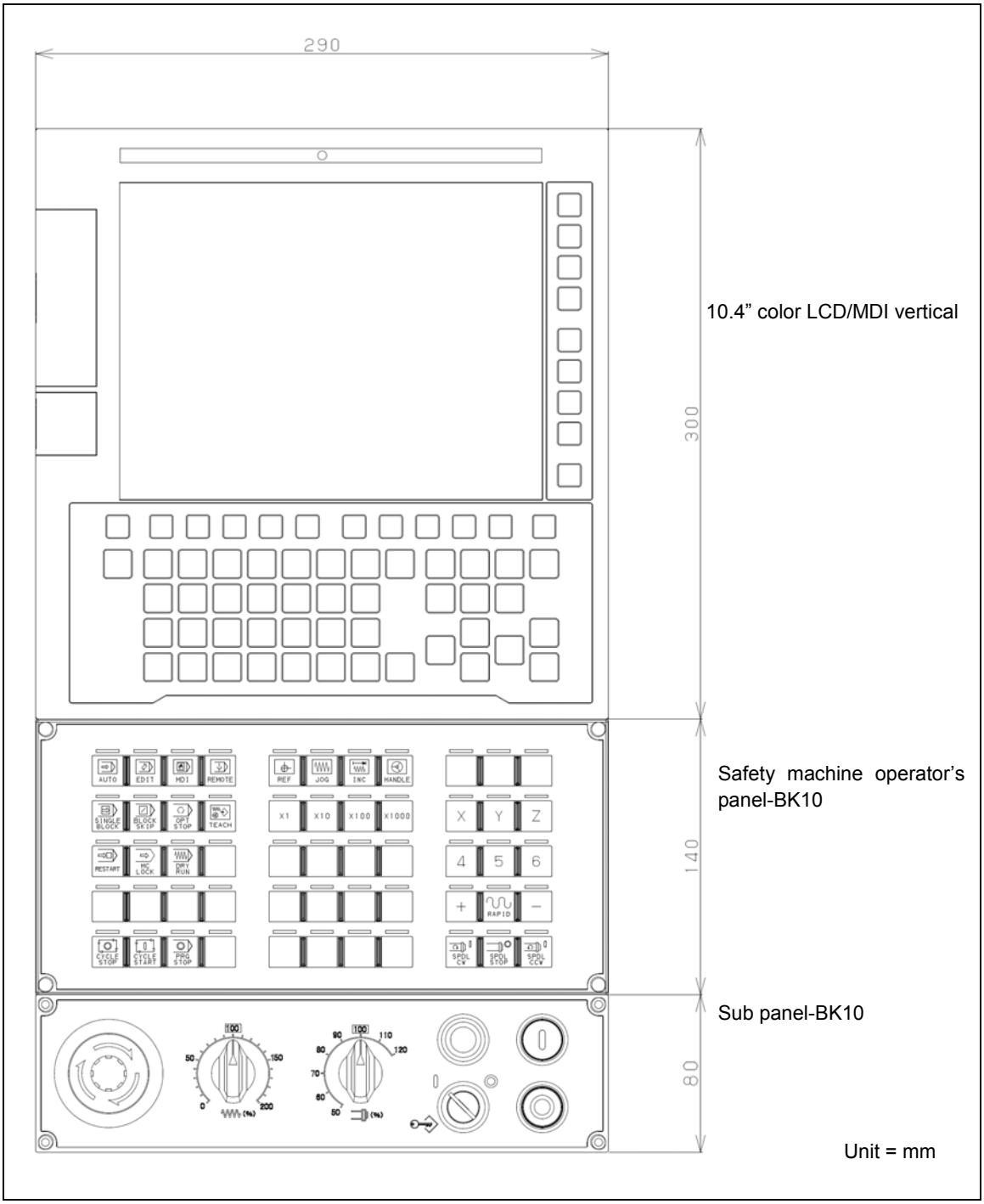

© MyFANUC B5B0D8428C0144A78A5F4CA87F2C262E

The following figure is the example of composition when using the safety machine operator's panel-BK15.

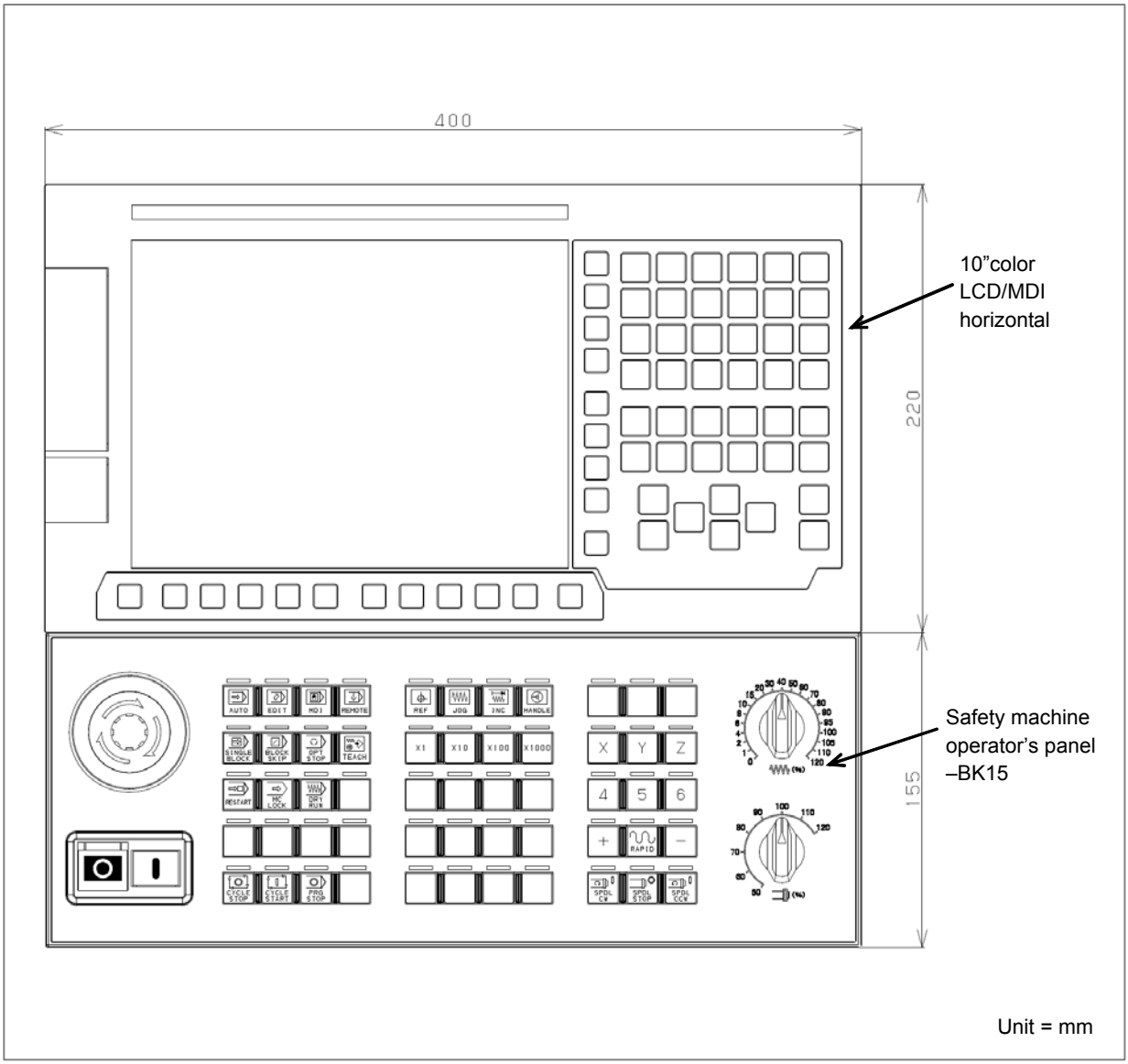

© MyFANUC B5B0D8428C0144A78A5F4CA87F2C262E

8.8.2 Total Connection Diagram

Standard machine operator's panel main panel

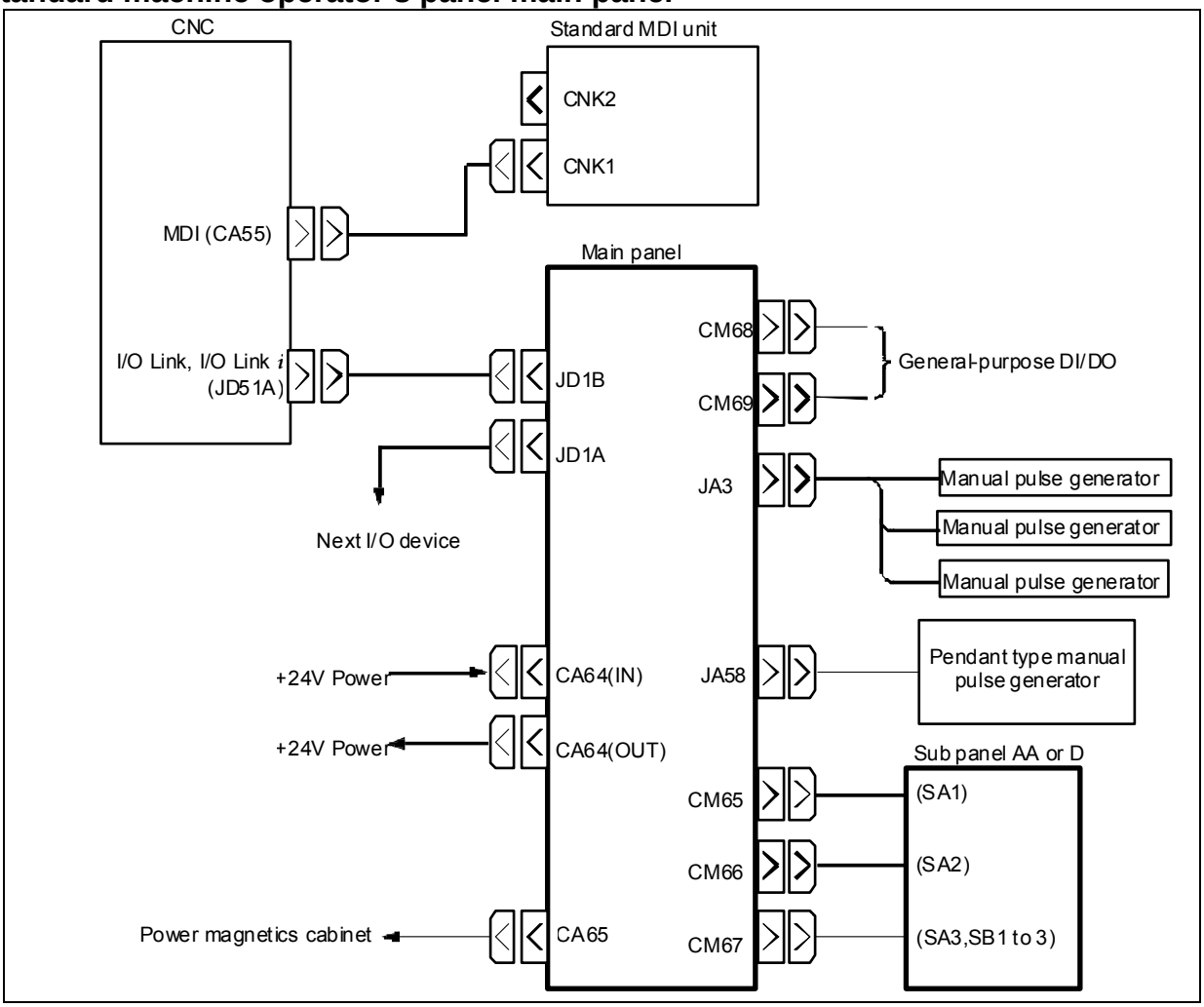

NOTE
Manual pulse generators cannot be connected to JA3 and JA58 simultaneously.

© MyFANUC B5B0D8428C0144A78A5F4CA87F2C262E

Safety machine operator's panel and Safety machine operator's panel-BK10

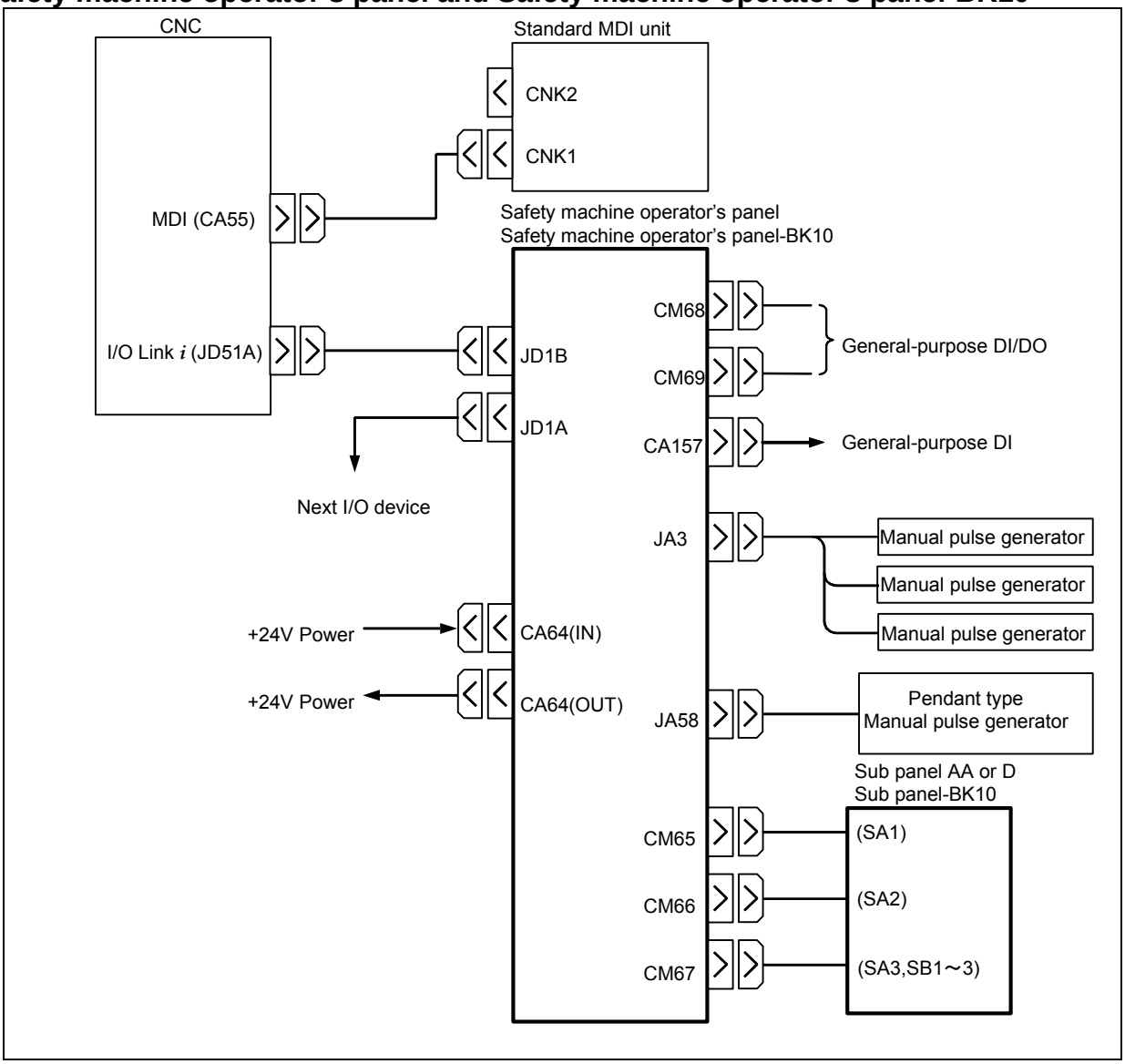

NOTE
Manual pulse generators cannot be connected to JA3 and JA58 simultaneously.

© MyFANUC B5B0D8428C0144A78A5F4CA87F2C262E

Safety machine operator's panel type B and Safety machine operator's panel-BK15

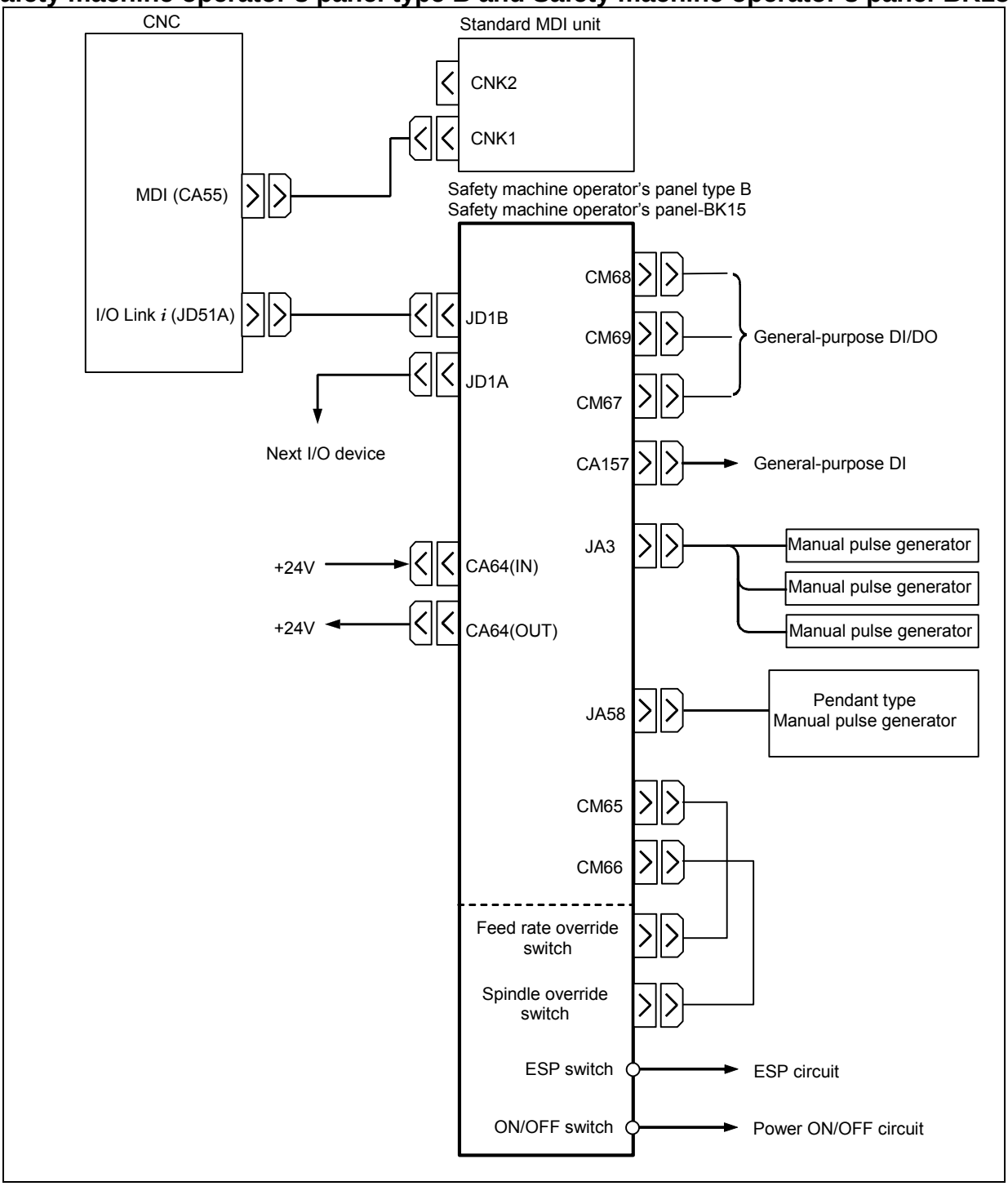

NOTE
Manual pulse generators cannot be connected to JA3 and JA58 simultaneously.

© MyFANUC B5B0D8428C0144A78A5F4CA87F2C262E

8.8.3 DI/DO Address Map

Standard machine operator's panel main panel

Address map

DI space map

Xm_1	General purpose input signal	Slot 1
$Xm_1 + 1$		
$Xm_1 + 2$		
$Xm_1 + 3$		
$Xm_1 + 4$	Matrix input signal (key switch)	
$Xm_1 + 5$		
$Xm_1 + 6$		
$Xm_1 + 7$		
$Xm_1 + 8$		
$Xm_1 + 9$		
$Xm_1 + 10$		
$Xm_1 + 11$		

Xm_{mpg} (for 1st MPG)	Manual pulse generator	Slot MPG
$Xm_{mpg} + 1$ (for 2nd MPG)		
$Xm_{mpg} + 2$ (for 3rd MPG)		

DO space map

Yn_1	Matrix output signal (key LED) Including general-purpose output signal	Slot 1
$Yn_1 + 1$		
$Yn_1 + 2$		
$Yn_1 + 3$		
$Yn_1 + 4$		
$Yn_1 + 5$		
$Yn_1 + 6$		
$Yn_1 + 7$		

Xm_1, Xm_{mpg}, and Yn_1 indicate the start address at allocation.

For the main panel, allocate 12-byte DI addresses to slot 1 and 8-byte DO addresses to slot 1. The main panel has an interface for three manual pulse generators. To use manual pulse generators, allocate addresses to slot MPG. With this setting, addresses can be allocated to the three manual pulse generators at a time (addresses cannot be allocated individually to manual pulse generators). Do not use the addresses with the ladder because the CNC processes the manual pulse generator signals directly.

Each Safety machine operator's panel

Adress map

1st group (PMC DI/DO) address

DI space map

X_1m	General purpose input signal	Slot-1
$X_1m + 1$		
$X_1m + 2$		
$X_1m + 3$		
$X_1m + 4$	Matrix input signal (Key switch input signal of the 1st contact)	
$X_1m + 5$		
$X_1m + 6$		
$X_1m + 7$		
$X_1m + 8$		
$X_1m + 9$		
$X_1m + 10$		
$X_1m + 11$		

X_1m_{mpg} (for 1st MPG)	Manual pulse generator	Slot-MPG
$X_1m_{mpg} + 1$ (for 2nd MPG)		
$X_1m_{mpg} + 2$ (for 3rd MPG)		

DO space map

Y_1n	Matrix output signal (key LED) Including general-purpose output signal	Slot-1
$Y_1n + 1$		
$Y_1n + 2$		
$Y_1n + 3$		
$Y_1n + 4$		
$Y_1n + 5$		
$Y_1n + 6$		
$Y_1n + 7$		

X_1m, X_1m_{mpg}, and Y_1n indicate the start address at allocation.

© MyFANUC B5B0D8428C0144A78A5F4CA87F2C262E

2nd group (DCSPMC DI/DO) address

DI space map

X2m	General purpose input signal	Slot-1
X2m + 1	Matrix input signal (Key switch input signal of the 2nd contact)	
X2m + 2		
X2m + 3		
X2m + 4		
X2m + 5		
X2m + 6		
X2m + 7		
X2m + 8		

DO space map

X2m indicate the start address at allocation.

Each safety machine operator's panel allocated to two continuous group of I/O Link ***i***. In I/O Link ***i***, allocate 12-byte DI address and 8-byte DO address to slot-1 of 1st group as PMC DI/DO, and allocate 9-byte DI address to slot-1 of 2nd group as DCSPMC DI.
Each safety machine operator's panel have an interface for three manual pulse generators. To use manual pulse generators, allocate addresses to slot-MPG. With this setting, addresses can be allocated to the three manual pulse generators at a time (addresses cannot be allocated individually to manual pulse generators). Do not use the addresses with the ladder because the CNC processes the manual pulse generator signals directly.

© MyFANUC B5B0D8428C0144A78A5F4CA87F2C262E

8.8.4 Each Connections

8.8.4.1 Pin assignment

Standard machine operator's panel main panel

CA64 (Power source)

A3		A2	0V	A1	+24V
B3		B2	0V	B1	+24V

Recommended connector for cable:
Housing : Tyco Electronics 1-178288-3 (3 pins type)
Contact : Tyco Electronics 1-175218-5

CA65 (Power magnetic cabinet)

A01	EON	B01	EOFF
A02	COM1	B02	COM2
A03	*ESP	B03	ESPCM1
A04	TR1	B04	TR2
A05	TR3	B05	TR4
A06	TR5	B06	TR6
A07	TR7	B07	TR8
A08		B08	
A09		B09	
A10		B10	

Recommended connector for cable:
Hirose electric : HIF3BA-20D-2.54R

CM67 (ON/OFF, Program protect, ESP)

A01	EON	B01	EOFF
A02	COM1	B02	COM2
A03	Xm+1.4	B03	KEYCOM
A04	*ESP	B04	ESPCM1
A05	TR1	B05	TR2

Recommended connector for cable:
Housing : Tyco Electronics 178289-5
Contact : Tyco Electronics 1-175218-5

CM65 (General-purpose DI)

A01		B01	
A02		B02	Xm+0.5
A03	Xm+0.1	B03	Xm+0.3
A04	+24V	B04	Xm+0.4
A05	Xm+0.2	B05	Xm+0.0

Recommended connector for cable:
Hirose electric : HIF3BA-10D-2.54R

CM66 (General-purpose DI)

A01		B01	
A02		B02	Xm+1.3
A03	Xm+0.7	B03	Xm+1.1
A04	+24V	B04	Xm+1.2
A05	Xm+1.0	B05	Xm+0.6

Recommended connector for cable:
Hirose electric : HIF3BA-10D-2.54R

CM68 (General-purpose DI/DO)

A01	+24V	B01	Xm+1.5
A02	Xm+1.6	B02	Xm+1.7
A03	Xm+2.0	B03	Xm+2.1
A04	Xm+2.2	B04	Xm+2.3
A05	Xm+2.4	B05	Xm+2.5
A06	TR3	B06	TR4
A07	TR5	B07	TR6
A08	Yn+5.3	B08	Yn+5.7
A09	Yn+6.3	B09	Yn+6.7
A10	DOCOM	B10	0V

Recommended connector for cable:
Housing : Tyco Electronics 178289-8
Contact : Tyco Electronics 1-175218-5

CM69 (General-purpose DI/DO)

A01	+24V	B01	Xm+2.6
A02	Xm+2.7	B02	Xm+3.0
A03	Xm+3.1	B03	Xm+3.2
A04	Xm+3.3	B04	Xm+3.4
A05	Xm+3.5	B05	Xm+3.6
A06	Xm+3.7	B06	DICOM
A07	TR7	B07	TR8
A08	Yn+7.3	B08	Yn+7.4
A09	Yn+7.5	B09	Yn+7.6
A10	DOCOM	B10	0V

Recommended connector for cable:
Housing : Tyco Electronics 178289-8
Contact : Tyco Electronics 1-175218-5

© MyFANUC B5B0D8428C0144A78A5F4CA87F2C262E

JA3 (Manual pulse generator)

1	HA1	11	
2	HB1	12	0V
3	HA2	13	
4	HB2	14	0V
5	HA3	15	
6	HB3	16	0V
7		17	
8		18	+5V
9	+5V	19	
10		20	+5V

JA58 (Pendant type manual pulse generator)

1	HA1	11	Xm+1.5
2	HB1	12	0V
3	Xm+2.2	13	Xm+1.6
4	Xm+2.3	14	0V
5	Xm+2.4	15	Xm+1.7
6	Xm+2.5	16	0V
7	Yn+5.3	17	Xm+2.0
8	Xm+2.1	18	+5V
9	+5V	19	+24V
10	+24V	20	+5V

Recommended connector for cable of JA3 and JA58
When the depth of the main panel is 60mm min.
Recommended connector for cable:
Hirose electric FI30-20S (Connector)
FI-20-CV7 (Case)
When the depth of the main panel is 80mm min.
Recommended connector for cable of JA3:
Hirose electric : FI40B-2015S (Connector)
FI-20-CV (Case)
Recommended connector for cable of JA58:
Honda : PCR-E20FA (Connector)
PCR-V20LA (Case)
Hirose electric : FI30-20S (Connector)
FI-20-CV2 (Case)
Fujitsu : FCN-247J020-G/E (Connector)
FCN-240C020-Y/S (Case)
Molex : 52622-2011 (Connector)
52624-2015 (Case)

NOTE

1 DI/DO pins and MPG signal pins (1 axis) in shaded by ▭ are in pairs. Main panel has connector ‘JA58’ to connect the pendant-type MPG. In this connector, there are DIs (9 points) used to selection of axes and multiplier, DO (1 point) for LED, and signals for MPG (1 axis). These signals are in CM68 for general-purpose DI/DO and JA3 for MPG too. Only one in each pair is usable.

2 Pins shaded by ■ are used for the relay. There are two uses in these signals as follows.
(1) When a sub panel is connected to the main panel, signals in CM67 from the sub panel are out to CA65.
(2) Open pins (TR1-TR8) in CM68, CM69 for general-purpose DI/DO and CM67 for connection to the sub panel are connected directly to CA65.
These signals can be relayed to the power magnetic cabinet by using a flat cable.

© MyFANUC B5B0D8428C0144A78A5F4CA87F2C262E

Each safety machine operator's panel

CA64 (Power source)

A3		A2	0V	A1	+24V
B3		B2	0V	B1	+24V

Recommended connector for cable:
Housing : Tyco Electronics 1-178288-3 (3 pins type)
Contact : Tyco Electronics 1-175218-5

CM67(General-purpose DI, Relay)

A01	EON	B01	EOFF
A02	COM1	B02	COM2
A03	Xm+1.4	B03	KEYCOM
A04	*ESP	B04	ESPCM1
A05	TR1	B05	TR2

Recommended connector for cable:
Housing : Tyco Electronics 178289-5
Contact : Tyco Electronics 1-175218-5

CM65 (General-purpose DI)

A01		B01	
A02		B02	X1m+0.5
A03	X1m+0.1	B03	X1m+0.3
A04	+24V	B04	X1m+0.4
A05	X1m+0.2	B05	X1m+0.0

Recommended connector for cable:
Hirose electric : HIF3BA-10D-2.54R

CM68 (General-purpose DI/DO, Relay)

A01	+24V	B01	X1m+1.5
A02	X1m+1.6	B02	X1m+1.7
A03	X1m+2.0	B03	X1m+2.1
A04	X1m+2.2	B04	X1m+2.3
A05	X1m+2.4	B05	X1m+2.5
A06	TR3	B06	TR4
A07	TR5	B07	TR6
A08	Y1n+5.3	B08	Y1n+5.7
A09	Y1n+6.3	B09	Y1n+6.7
A10	DOCOM	B10	0V

Recommended connector for cable:
Housing : Tyco Electronics 178289-8
Contact : Tyco Electronics 1-175218-5

CA157 (General-purpose DI, Relay)

A01	EON	B01	EOFF
A02	COM1	B02	COM2
A03	*ESP	B03	ESPCM1
A04	TR1	B04	TR2
A05	TR3	B05	TR4
A06	TR5	B06	TR6
A07	X2m+0.0	B07	X2m+0.1
A08	X2m+0.2	B08	X2m+0.3
A09	X2m+0.4	B09	X2m+0.5
A10	X2m+0.6	B10	X2m+0.7

Recommended connector for cable:
Housing : Tyco Electronics 178289-8
Contact : Tyco Electronics 1-175218-5

CM66 (General-purpose DI)

A01		B01	
A02		B02	X1m+1.3
A03	X1m+0.7	B03	X1m+1.1
A04	+24V	B04	X1m+1.2
A05	X1m+1.0	B05	X1m+0.6

Recommended connector for cable:
Hirose electric : HIF3BA-10D-2.54R

CM69 (General-purpose DI/DO)

A01	+24V	B01	X1m+2.6
A02	X1m+2.7	B02	X1m+3.0
A03	X1m+3.1	B03	X1m+3.2
A04	X1m+3.3	B04	X1m+3.4
A05	X1m+3.5	B05	X1m+3.6
A06	X1m+3.7	B06	DICOM
A07		B07	
A08	Y1n+7.3	B08	Y1n+7.4
A09	Y1n+7.5	B09	Y1n+7.6
A10	DOCOM	B10	0V

Recommended connector for cable:
Housing : Tyco Electronics 178289-8
Contact : Tyco Electronics 1-175218-5

© MyFANUC B5B0D8428C0144A78A5F4CA87F2C262E

JA3 (Manual pulse generator)

1	HA1	11	
2	HB1	12	0V
3	HA2	13	
4	HB2	14	0V
5	HA3	15	
6	HB3	16	0V
7		17	
8		18	+5V
9	+5V	19	
10		20	+5V

JA58 (Pendant type manual pulse generator)

1	HA1	11	X1m+1.5
2	HB1	12	0V
3	X1m+2.2	13	X1m+1.6
4	X1m+2.3	14	0V
5	X1m+2.4	15	X1m+1.7
6	X1m+2.5	16	0V
7	Y1n+5.3	17	X1m+2.0
8	X1m+2.1	18	+5V
9	+5V	19	+24V
10	+24V	20	+5V

Recommended connector for cable of JA3 and JA58

When the depth of each safety machine operator's panel are 50mm min.
Recommended connector for cable:
Hirose electric FI30-20S (Connector)
FI-20-CV7 (Case)
When the depth of each safety machine operator's panel are 70mm min.
Recommended connector for cable of JA3:
Hirose electric : FI40B-2015S (Connector)
FI-20-CV (Case)
Recommended connector for cable of JA58:
Honda : PCR-E20FA (Connector)
PCR-V20LA (Case)
Hirose electric : FI30-20S (Connector)
FI-20-CV2 (Case)
Fujitsu : FCN-247J020-G/E (Connector)
FCN-240C020-Y/S (Case)
Molex : 52622-2011 (Connector)
52624-2015 (Case)

NOTE

1 DI/DO pins and MPG signal pins (1 axis) in shaded by ▭ are in pairs. Each safety machine operator's panel has connector 'JA58' to connect the pendant-type MPG. In this connector, there are DIs (9 points) used to selection of axes and multiplier, DO (1 point) for LED, and signals for MPG (1 axis). These signals are in CM68 for general-purpose DI/DO and JA3 for MPG too. Only one in each pair is usable.

2 From the pins shaded by ▬, relay signals to the power magnetics cabinet are output. There are the following two types of relay signals.

(1) When sub panel AA or D is used, signals in CM67 connected to the sub panel are output to CA157. (EON, EOFF, COM1, COM2, *ESP, and ESPCOM1)
When sub panel-BK10 is used, no wiring from sub panel-BK10 is provided. To relay signals to the power magnetics cabinet, connect the signal from each switch on sub panel-BK10 to CM67.

(2) Open pins in CM68 and CM69 for general-purpose DI/DO, open pins in CM67 for connection to the sub panel, and open pins in CA157 are connected in the standard machine operator's panel main panel on a one-to-one basis. (TR1 to TR8)

3 X1m is PMC DI. Y1n is PMC DO. X2m is DCSPMC DI.

© MyFANUC B5B0D8428C0144A78A5F4CA87F2C262E

8.8.4.2 Power supply connection

The power required for the operation of the machine operator's panel and for a general DI must be supplied to connector CA64 (IN) in the following figure. Since the power input from CA64 (IN) is output to CA64 (OUT) for easy branching, use the power from CA64 (OUT) when the power must be branched. Up to 1.0 A can be supplied by branching.

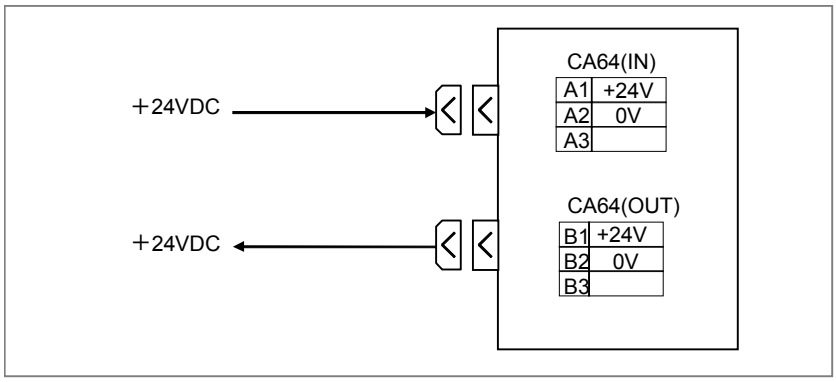

NOTE

1 Both connectors CA64(IN) and CA64(OUT) are same specification. And there is not indication of (IN) and (OUT) on the PCB.

2 Power supply for the machine operator’s panel must not turn off at operation. If +24V is turned off at operation, CNC happen to get system alarm (Communication alarm between CNC and machine operator’s panel). +24V for operator’s panel must be supplied before or same time CNC power on.

© MyFANUC B5B0D8428C0144A78A5F4CA87F2C262E

8.8.4.3 I/O Link *i* connection

For I/O Link *i* connection, see Section 7.2.

8.8.4.4 Using the channel 2 of I/O Link *i*

The signal for two channels of I/O Link *i* is located at the connector of the machine operator' panel. The 2ch I/O Link signal divider is connectable after the machine operator's panel. When using only channel 1, see Subsection 7.2.

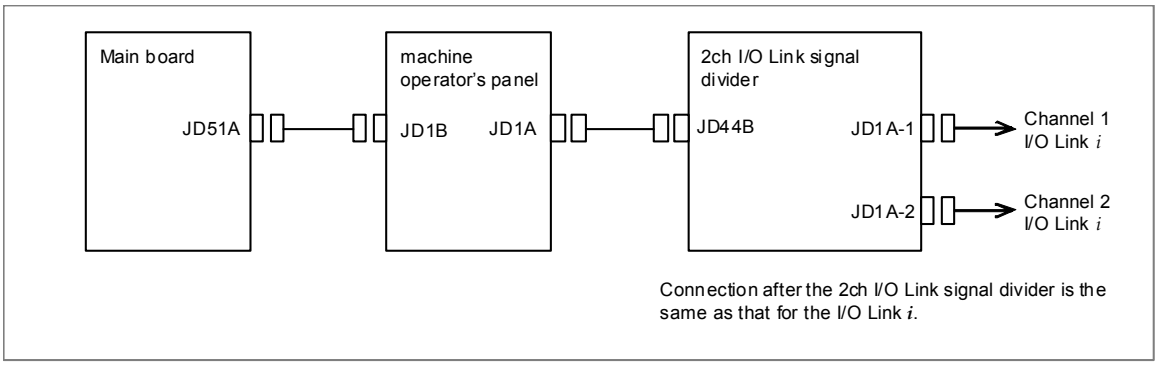

Connection between the main board and machine operator's panel

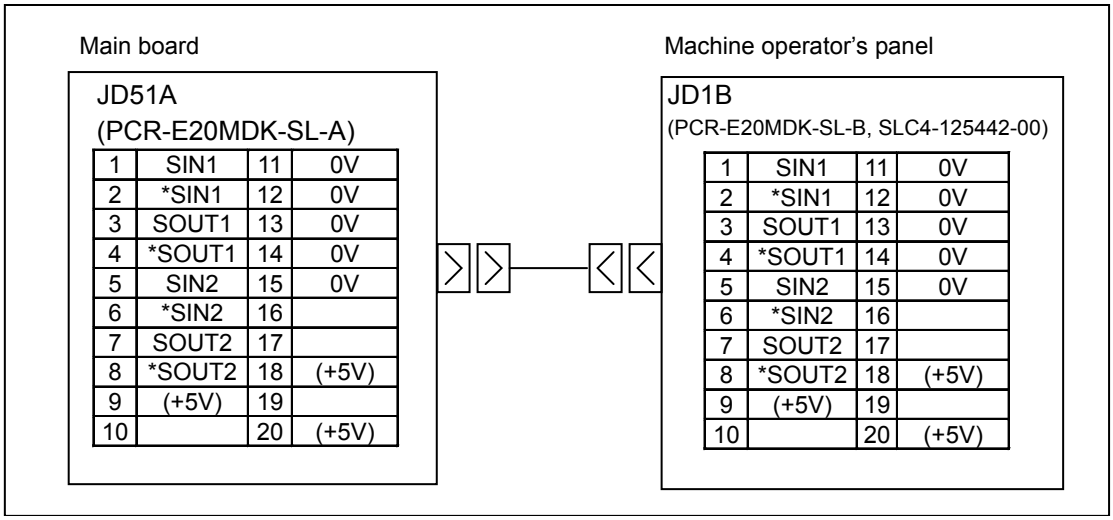

1	SIN1	11	0V
2	*SIN1	12	0V
3	SOUT1	13	0V
4	*SOUT1	14	0V
5	SIN2	15	0V
6	*SIN2	16	
7	SOUT2	17	
8	*SOUT2	18	(+5V)
9	(+5V)	19	
10		20	(+5V)

1	SIN1	11	0V
2	*SIN1	12	0V
3	SOUT1	13	0V
4	*SOUT1	14	0V
5	SIN2	15	0V
6	*SIN2	16	
7	SOUT2	17	
8	*SOUT2	18	(+5V)
9	(+5V)	19	
10		20	(+5V)

NOTE

1 The +5 V terminals in parentheses are for supplying the power to an optical adapter to be used for connection by an optical fiber cable. Do not connect the +5 V terminals when using no optical adapter after the 2ch I/O Link signal divider.

2 Do not connect any pin for which no signal is assigned.

© MyFANUC B5B0D8428C0144A78A5F4CA87F2C262E

Cable connection between the main board and machine operator's panel

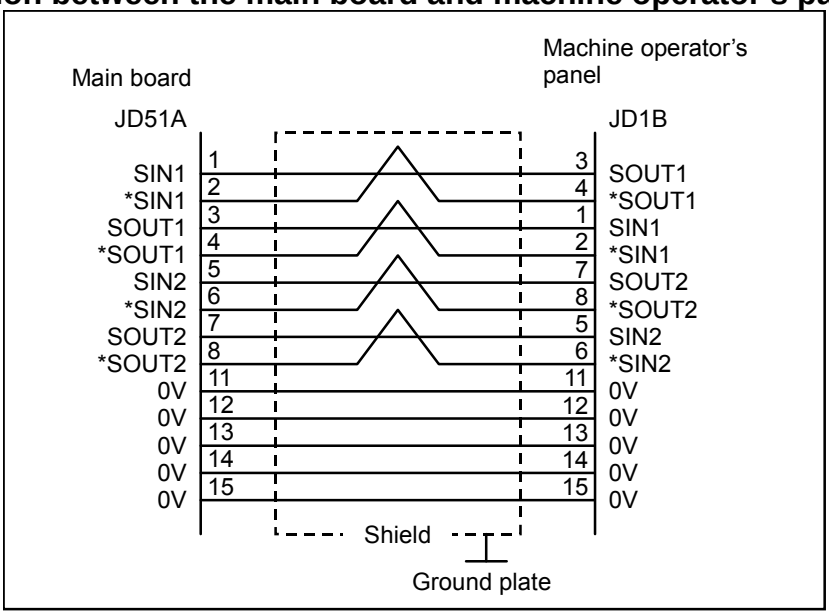

Recommended wire material:
A66L-0001-0284#10P (#28AWG × 10 pairs)

When the depth of the main panel is 60mm min,
When the depth of each safety machine operator's panel are 50mm min.

Recommended connector for cable:
Hirose electric FI30-20S (Connector)
FI-20-CV7 (Case)

When the depth of the main panel is 80mm min,
When the depth of each safety machine operator's panel are 70mm min.

Recommended connector for cable:
Honda : PCR-E20FA (Connector)
PCR-V20LA (Case)
Hirose electric : FI30-20S (Connector)
FI-20-CV2 (Case)
Fujitsu : FCN-247J020-G/E (Connector)
FCN-240C020-Y/S (Case)
Molex : 52622-2011 (Connector)
52624-2015 (Case)

Connection between the machine operator's panel and 2ch I/O Link signal divider

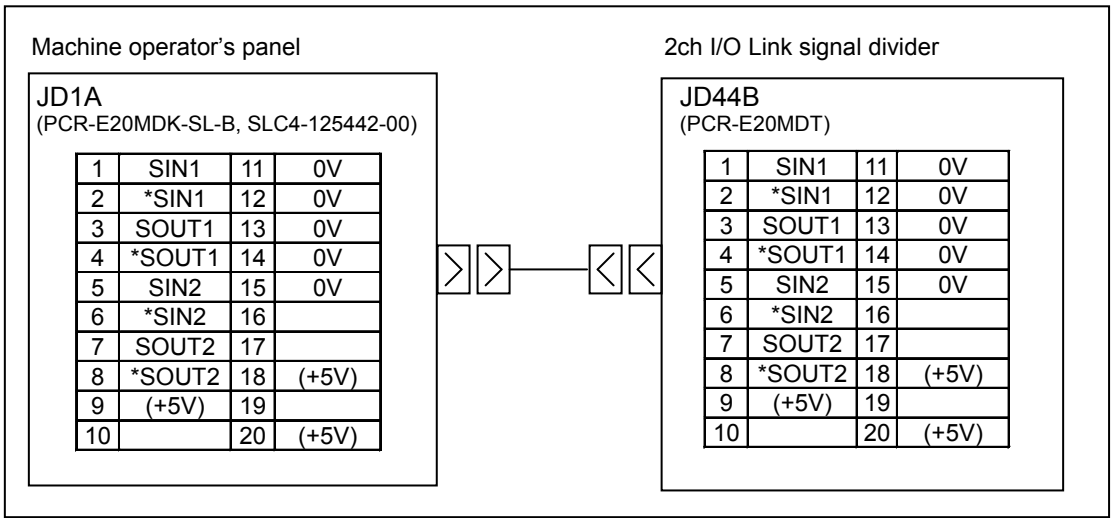

1	SIN1	11	0V
2	*SIN1	12	0V
3	SOUT1	13	0V
4	*SOUT1	14	0V
5	SIN2	15	0V
6	*SIN2	16	
7	SOUT2	17	
8	*SOUT2	18	(+5V)
9	(+5V)	19	
10		20	(+5V)

1	SIN1	11	0V
2	*SIN1	12	0V
3	SOUT1	13	0V
4	*SOUT1	14	0V
5	SIN2	15	0V
6	*SIN2	16	
7	SOUT2	17	
8	*SOUT2	18	(+5V)
9	(+5V)	19	
10		20	(+5V)

NOTE

1 The +5 V terminals in parentheses are for supplying the power to an optical adapter to be used for connection by an optical fiber cable. Do not connect the +5 V terminals when using no optical adapter after the 2ch I/O Link signal divider.

2 Do not connect any pin for which no signal is assigned.

© MyFANUC B5B0D8428C0144A78A5F4CA87F2C262E

Cable connection between the machine operator's panel and 2ch I/O Link signal divider

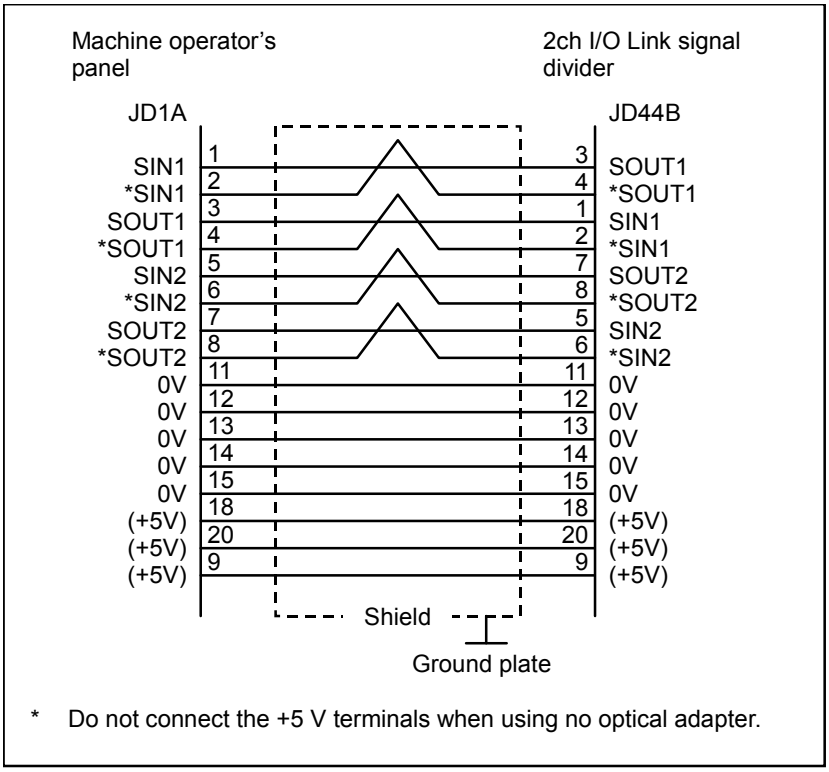

Recommended wire material:
A66L-0001-0284#10P (#28AWG × 10 pairs)

When the depth of the main panel is 60mm min,
When the depth of each safety machine operator's panel are 50mm min.

Recommended connector for cable:
Hirose electric FI30-20S (Connector)
FI-20-CV7 (Case)

When the depth of the main panel is 80mm min,
When the depth of each safety machine operator's panel are 70mm min.

Recommended connector for cable:
Honda : PCR-E20FA (Connector)
PCR-V20LA (Case)
Hirose electric : FI30-20S (Connector)
FI-20-CV2 (Case)
Fujitsu : FCN-247J020-G/E (Connector)
FCN-240C020-Y/S (Case)
Molex : 52622-2011 (Connector)
52624-2015 (Case)

Cable length

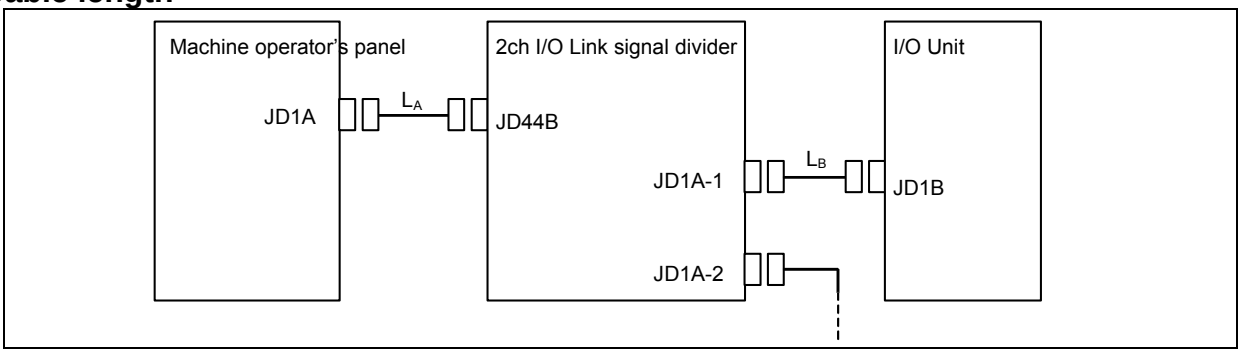

NOTE

The total of L_A and L_B must not exceed 10 m, where L_A is the length of the cable between connector JD1A on the machine operator's panel and connector JD44B on the 2ch I/O Link signal divider, and L_B is the length of the cable between connector JD1A-1 or JD1A-2 on the 2ch I/O Link signal divider and connector JD1B on the I/O unit. When all cables are laid within the same cabinet, however, a total cable length of up to 15 m is allowed.

© MyFANUC B5B0D8428C0144A78A5F4CA87F2C262E

8.8.4.5 Emergency stop signal connection

Standard machine operator's panel main panel (For sub panel AA and D is used)

The signal from the emergency stop switch on the sub panel AA and D can be connected to the power magnetics cabinet via the main panel. (This signal is not sent to the CNC via the I/O Link).
In the sub panel AA and D, wirings had been connected to the connector form the emergency stop switch. (1 contact) Then, connect this connector to CM67 in the main panel.

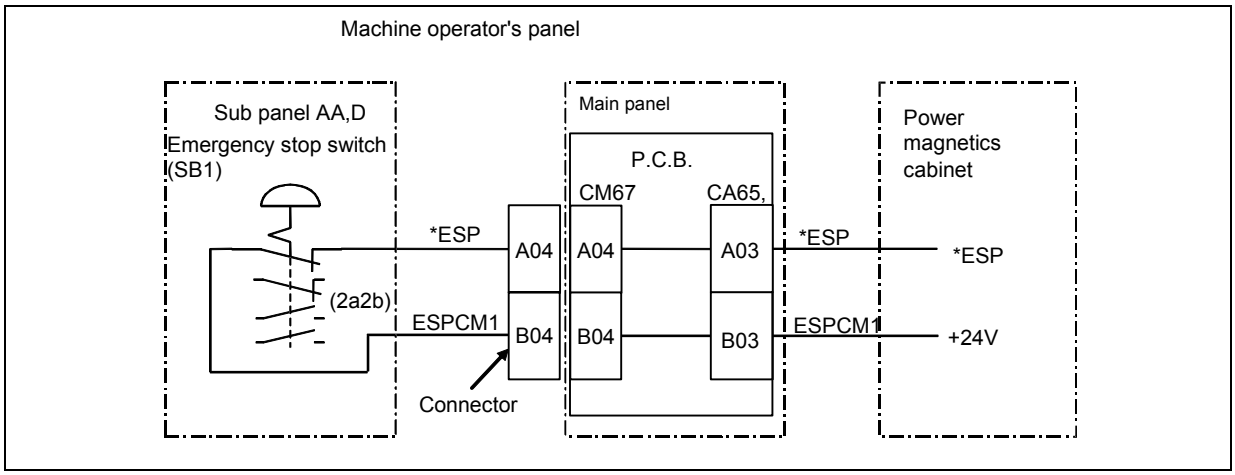

NOTE
When using two contacts of an emergency stop switch, Do wiring form an emergency stop switch.

Safety machine operator's panel (For sub panel AA and D is used)

The signal from the emergency stop switch on the sub panel AA and D can be connected to the power magnetics cabinet via the safety machine operator's panel. (This signal is not sent to the CNC via the I/O Link).
In the sub panel AA and D, wirings had been connected to the connector form the emergency stop switch. (1 contact) Then, connect this connector to CM67 in the safety machine operator's panel.

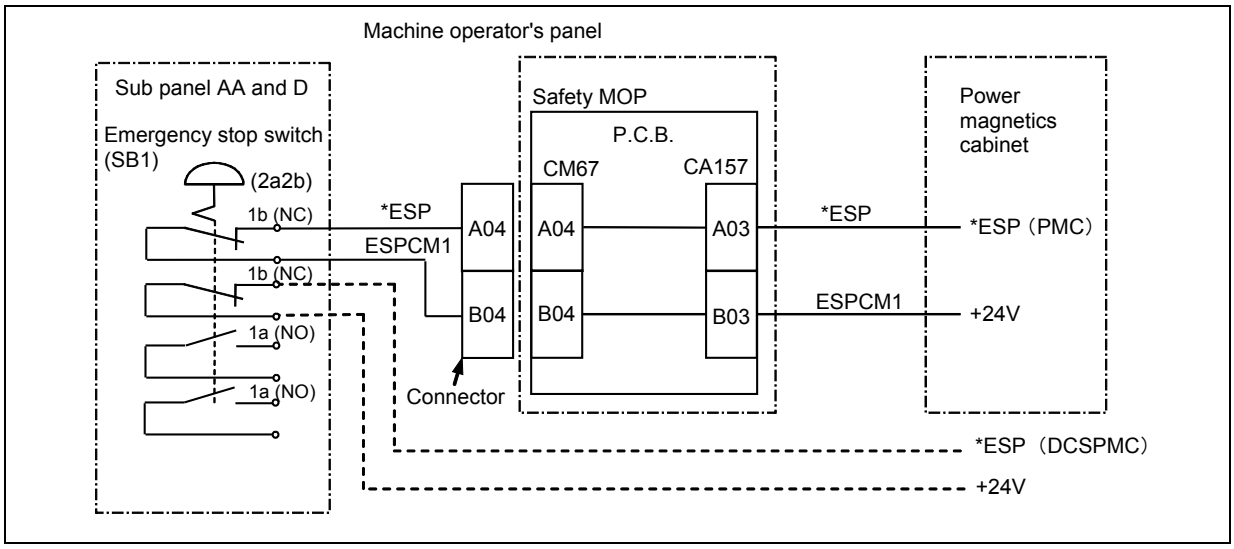

NOTE
To use the emergency stop signal by DCS function, do wiring of the dotted line part.

© MyFANUC B5B0D8428C0144A78A5F4CA87F2C262E

Safety machine operator's panel-BK10 (For sub panel-BK10 is used)

The sub panel-BK10 does not have the wiring from emergency stop switch. Do wiring from the emergency stop switch. The emergency stop switch on the safety machine operator's panel-BK10 has 2 b-contacts.

As follows, input dual emergency stop signal into PMCDI and DCSPMCDI of the safety machine operator's panel-BK10. And monitor the emergency stop signal by DCS function.

Example of connection of emergency stop switch

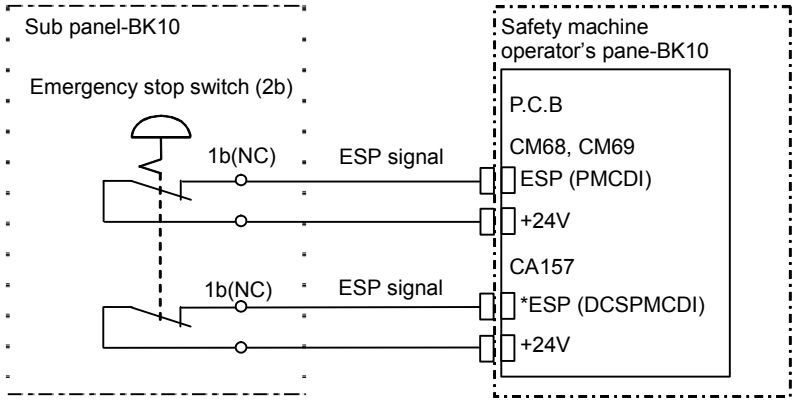

Safety machine operator's panel type B and Safety machine operator's pane-BK15

The safety machine operator's panel type B or Safety machine operator's panel-BK15 does not have the wiring from emergency stop switch. Do wiring from the emergency stop switch. The emergency stop switch on the safety machine operator's panel type B has 1 a-contact and 2 b-contacts.

As follows, input dual emergency stop signal into PMCDI and DCSPMCDI of the safety machine operator's panel type B or Safety machine operator's pane-BK15. And monitor the emergency stop signal by DCS function.

Example of connection of emergency stop switch

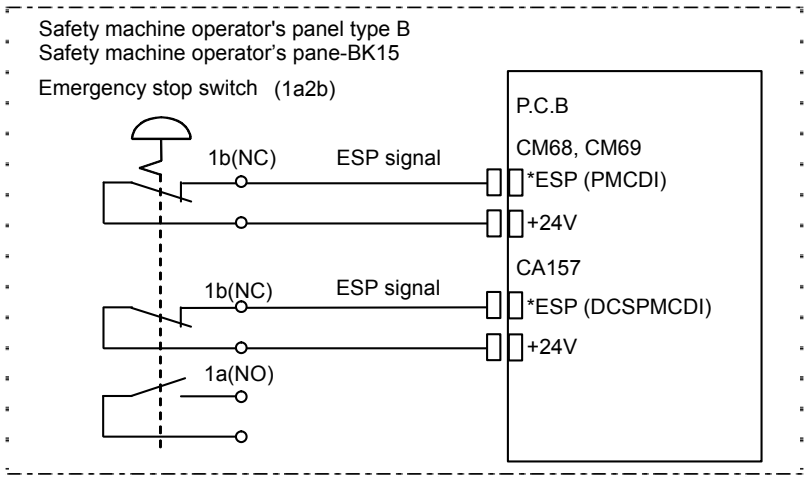

© MyFANUC B5B0D8428C0144A78A5F4CA87F2C262E

8.8.4.6 Power ON/OFF control signal connection

Standard machine operator's panel main panel, Safety machine operator's panel (For sub panel AA and D is used)

The signal from the ON/OFF switch on the sub panel can be connected to the power magnetics cabinet via the main panel, safety machine operator's panel. (This signal is not sent to the CNC via the I/O Link).
In the sub panel AA and D, wirings had been connected to the connector form the ON/OFF switch. (1 contact) Then, connect this connector to CM67 in the main panel, safety machine operator's panel.

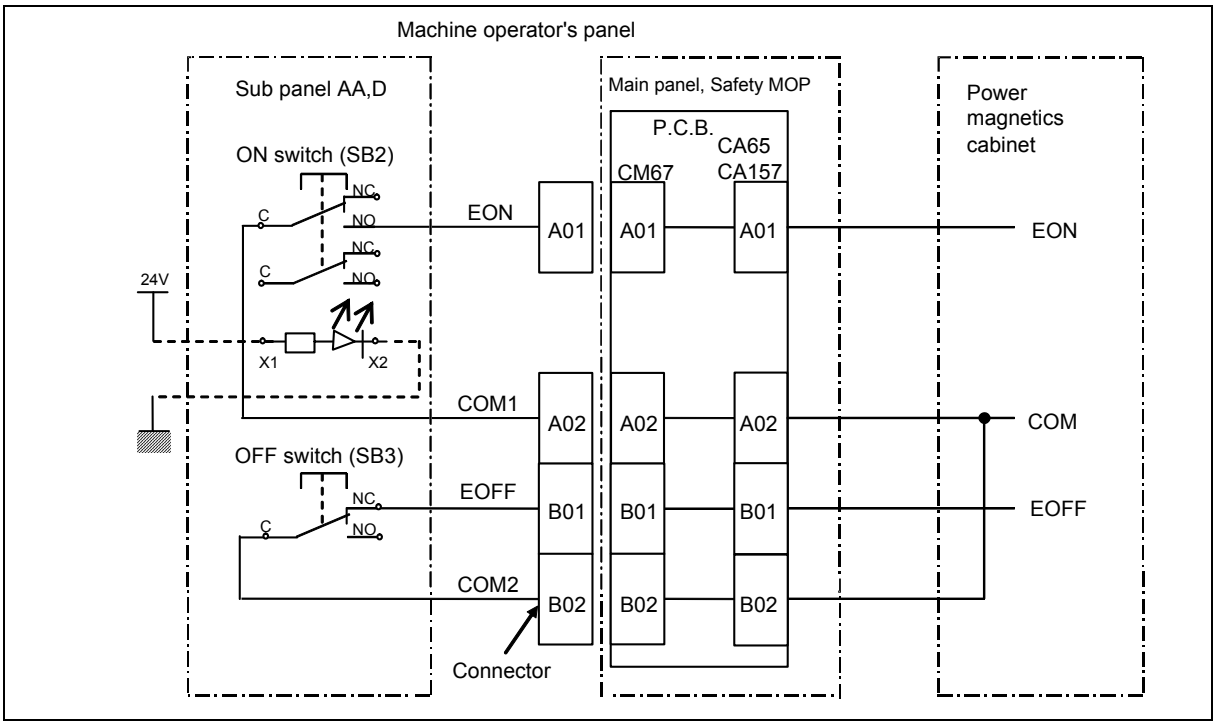

NOTE

1 ON switch of Sub panel AA and D has 2 c-contacts and LED.
To make luminous of LED, the power supply of 24V±10% DC must be supplied to X1 and X2 pin of ON switch.
(Circuit of LED part of ON switch built in the limitation current resistance.
Rated current of circuit of LED part is 10mA.)

2 OFF switch has 1 c-contact and no LED.

© MyFANUC B5B0D8428C0144A78A5F4CA87F2C262E

Safety machine operator's panel-BK10 (For sub panel-BK10 is used)

The sub panel-BK10 does not have the wiring from power ON/OFF control switch. Do wiring from the power ON/OFF control switch.

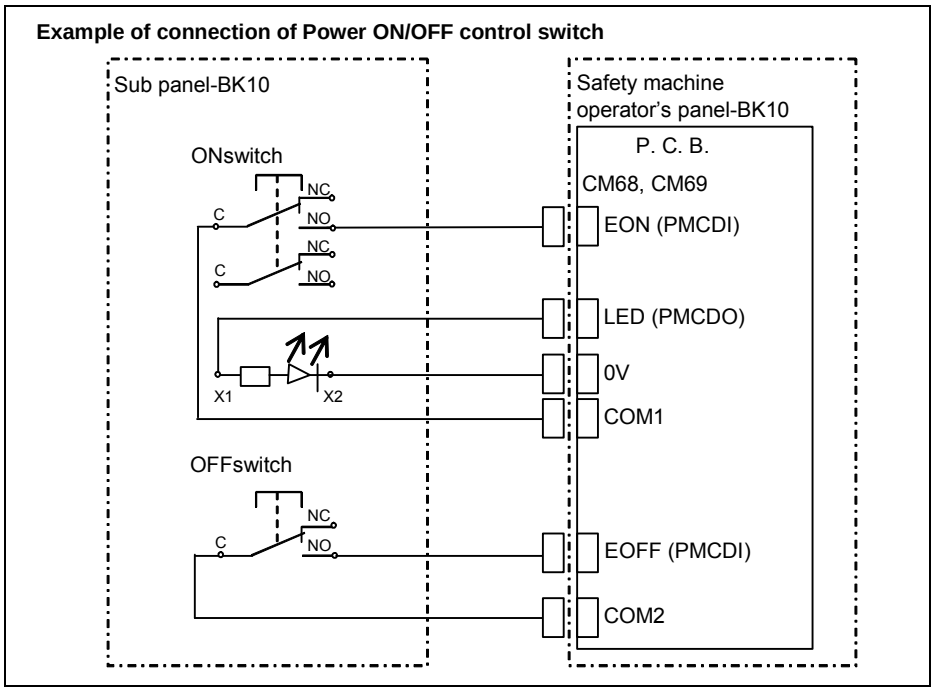

NOTE

1 ON switch has 2 c-contacts and LED.
To make luminous of LED, the power supply of 24V±10% DC must be supplied to X1 and X2 pin of ON switch.
(Circuit of LED part of ON switch built in the limitation current resistance.
Rated current of circuit of LED part is 10mA.)

2 OFF switch has 1 c-contact and no LED.

3 When fast on terminal is used, use 110 series, and conformity tab thickness 0.5mm. Wire size uses the cross-sectional area 0.2~0.5mm^2.

© MyFANUC B5B0D8428C0144A78A5F4CA87F2C262E

Safety machine operator's panel type B and Safety machine operator's panel-BK15

The safety machine operator's panel type B and safety machine operator's panel-BK15 does not have the wiring from power ON/OFF control switch. Do wiring from the power ON/OFF control switch.

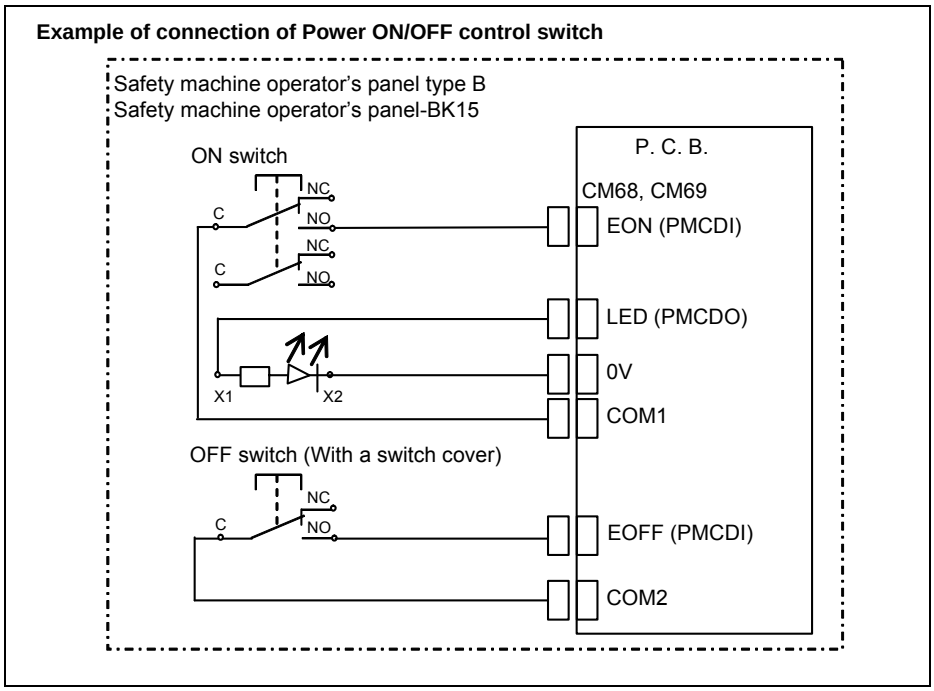

NOTE

1 ON switch has 2 c-contacts and LED.
To make luminous of LED, the power supply of 24V±10% DC must be supplied to X1 and X2 pin of ON switch.
(Circuit of LED part of ON switch built in the limitation current resistance.
Rated current of circuit of LED part is 10mA.)

2 OFF switch has 1 c-contact and no LED.

3 When fast on terminal is used, use 110 series, and conformity tab thickness 0.5mm. Wire size uses the cross-sectional area 0.2~0.5mm^2.

© MyFANUC B5B0D8428C0144A78A5F4CA87F2C262E

8.8.4.7 General-purpose DI signal connection

Standard machine operator's panel main panel

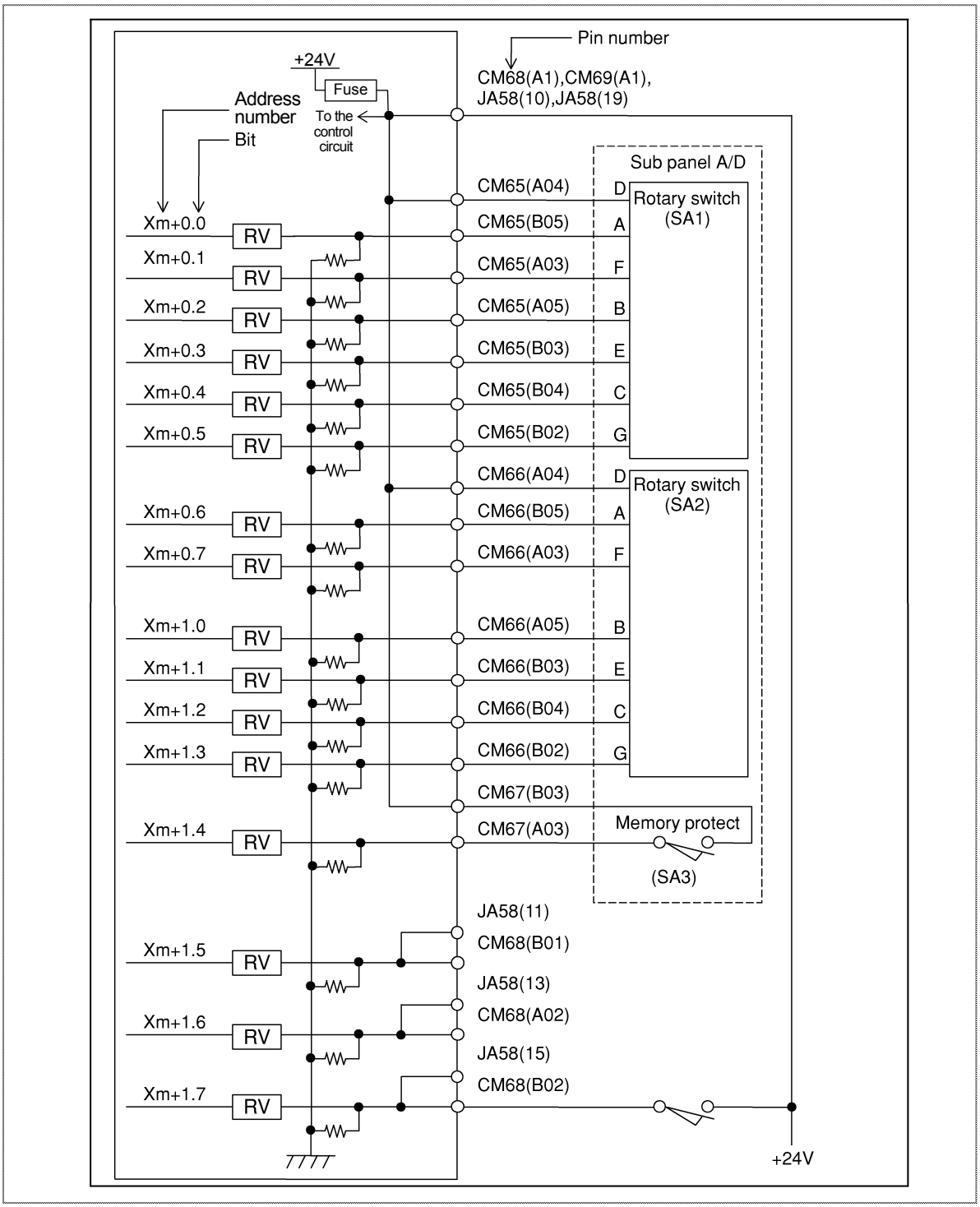

© MyFANUC B5B0D8428C0144A78A5F4CA87F2C262E

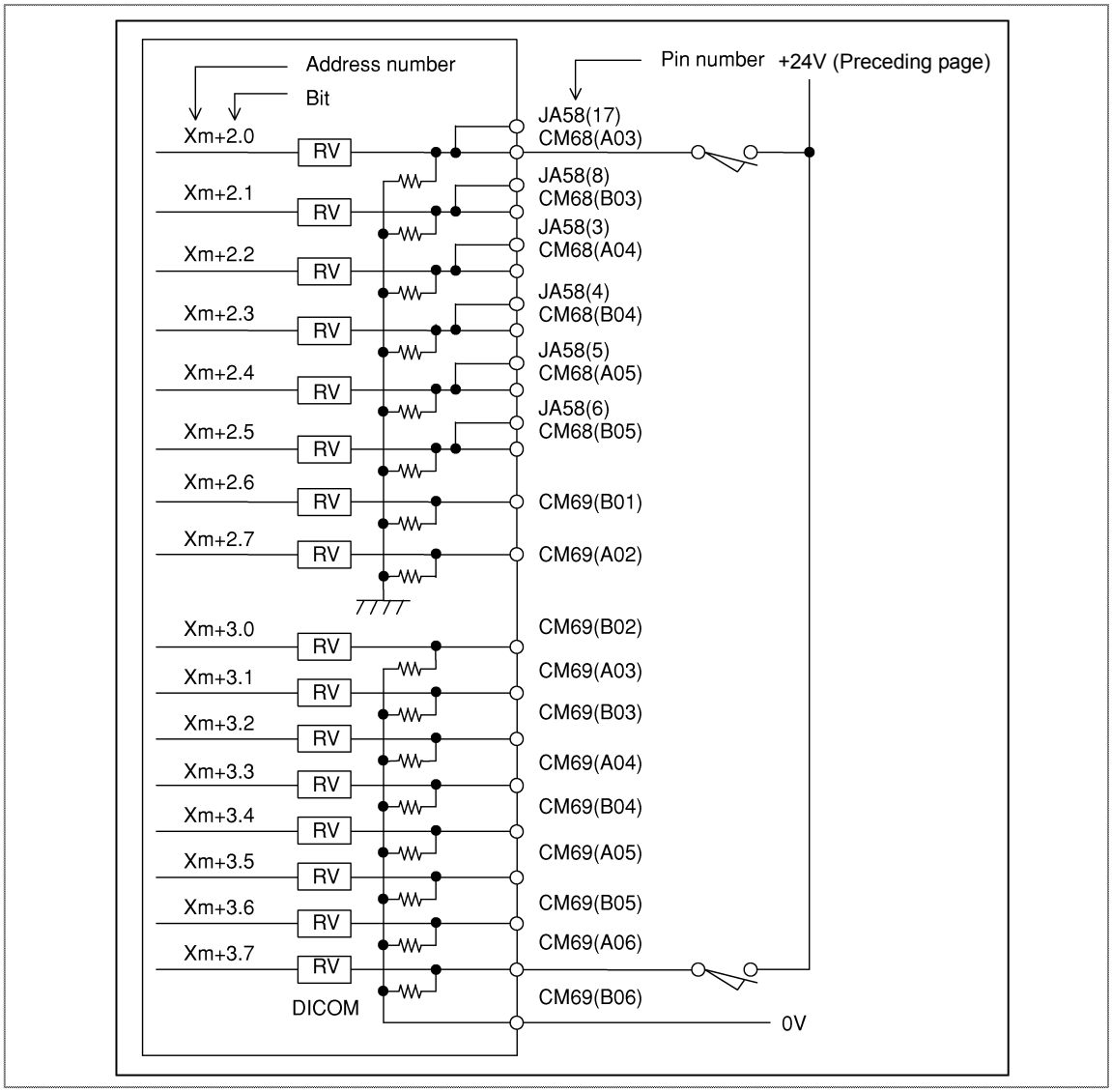

⚠ CAUTION

An output DC voltage of +24 V at CM68 (A1), CM69 (A1), CM65 (A04), CM66 (A04), CM67 (B03), JA58 (10), and JA58 (19) is for DI signals. Do not supply 24 VDC to these pins from the outside.

© MyFANUC B5B0D8428C0144A78A5F4CA87F2C262E

NOTE

1 Connection of Xm+0.0 to Xm+0.7, Xm+1.0 to Xm+1.4 shows when the Sub panel AA or D is used.
2 As for sub panel AA and D, the wiring form the program protect switch is connected to the connector. Connect this connector to CM67 in the main panel. And wiring form rotary switches is connected to the connector. Connect this connector to CM65, CM66 in the main panel.
3 JA58 DI signals can be used as a signal for axis selection or multiplier setting when a pendant type manual pulse generator is connected. Do not connect any DI signal used for axis selection or multiplier setting to CM68.
4 Xm+3.0 to 3.7 have a common line that is possible to select the source/sink type. If DICOM (CM69-B06pin) is connected to +24V, the DI signal logic is negative. But in this connection, if the DI signal wires happen to drop the ground level, the status of the DI signal is same as the DI signal is "ON". From the safety viewpoint, DICOM should be connected 0V.
5 From the safety viewpoint, Emergency Stop signal must be assigned on the address Xm+0.0 to 0.7 or Xm+1.0 to 1.7 or Xm+2.0 to 2.7. As refer to the Subsection 8.8.3, assign the Emergency stop DI.
6 For the unconnected pins at addresses for which the common voltage is fixed (from Xm+0.0 to Xm+0.7, from Xm+1.0 to Xm+1.7, and from Xm+2.0 to Xm+2.7), the input is “0”. For the unconnected pins at the addresses for which a common voltage can be selected (from Xm+3.0 to Xm+3.7), the input is “0” when the DICOM (CM69 (B06) pin) is connected to 0 V or “1” when it is connected to +24 V. Connect DICOM (CM69 (B06) pin) when used. When addresses from Xm+3.0 to Xm+3.7 are not used, connect DICOM to 0 V.

© MyFANUC B5B0D8428C0144A78A5F4CA87F2C262E

Each safety machine operator's panel

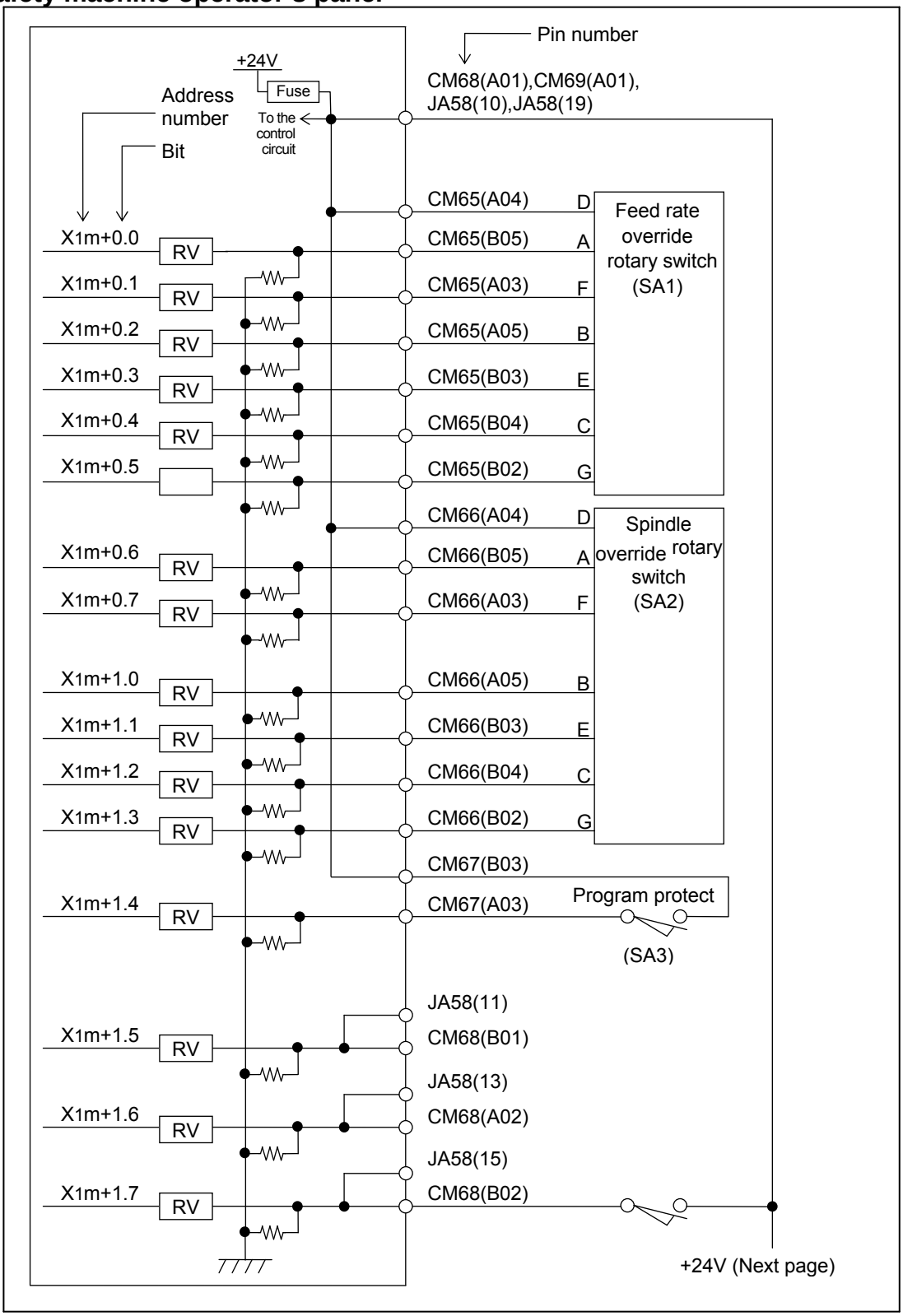

© MyFANUC B5B0D8428C0144A78A5F4CA87F2C262E

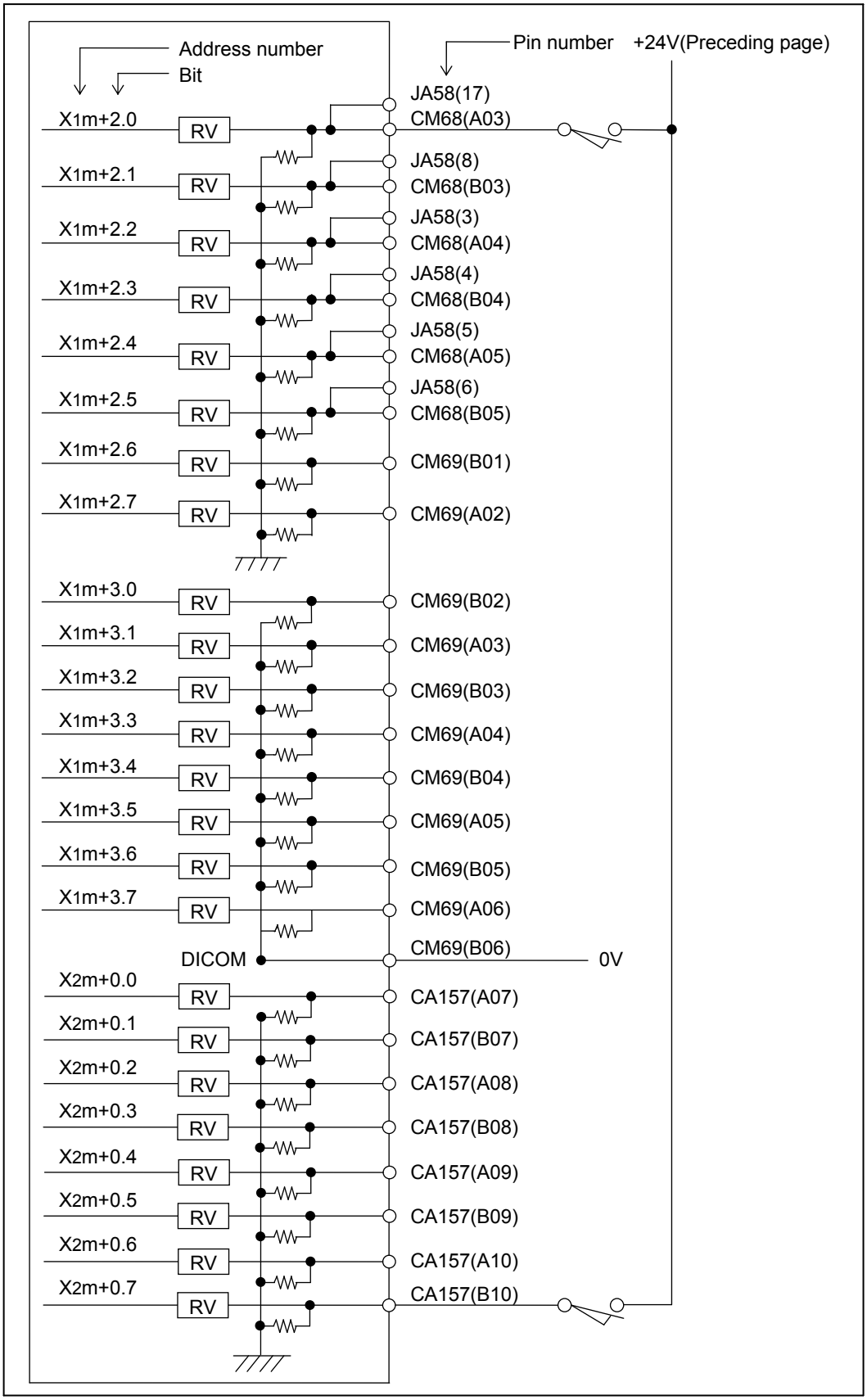

© MyFANUC B5B0D8428C0144A78A5F4CA87F2C262E

⚠ **CAUTION**
An output DC voltage of +24 V at CM68 (A01), CM69 (A01), CM65 (A04), CM66 (A04), CM67 (B03), JA58 (10), and JA58 (19) is for DI signals. Do not supply 24 VDC to these pins from the outside.

NOTE

1 X1m+0.0 to X1m+0.7 and X1m+1.0 to X1m+1.3 are connections when rotary switches are used.
2 As for sub panels AA and D, and sub panel-BK10, wirings from rotary switches are connected to the relevant connectors. Connect these connectors to CM65 and CM66 in the safety machine operator's panel and safety machine operator's panel-BK10.
In safety machine operator's panel type B and safety machine operator's panel-BK15, wirings from rotary switches are connected to CM65 and CM66 in advance.
3 X1m+1.4 is the connection when the program protect switch is used. Since no program protect switch is provided on safety machine operator's panel type B and safety machine operator's panel-BK15, use X1m+1.4 as general-purpose DI.
4 As for sub panels AA and D, the wiring from the program protect switch is connected to the relevant connector in advance. Connect the connector to CM67 in the safety machine operator's panel.
5 For sub panel-BK10, no wiring from the program protect switch is provided. Connect the wiring from the program protect switch.
6 JA58 DI signals can be used as axis and multiplier selection signals when a pendant type manual pulse generator is connected. However, do not connect any DI signal used for axis or multiplier selection to CM68.
7 X1m+3.0 to X1m+3.7 are DI signals for which a common voltage can be selected. That is, the logic of each DI signal can be inverted and input by connecting the DICOM pin (CM69-B06) to +24V. In this connection, however, if a cable ground fault occurs, the status of the DI signal is the same as when the ON state is input to the DI signal. From the safety viewpoint, the use of DICOM connected to 0V wherever possible is recommended.
8 From the safety viewpoint, the emergency stop signal must be assigned to the relevant bit (bit 4) at address X1m+0.0 to X1m+0.7, X1m+1.0 to X1m+1.7, or X1m+2.0 to X1m+2.7 for which the common voltage is fixed. While referring to Subsection 8.8.3, determine the assignment of the emergency stop signal.
9 At addresses X1m+0.0 to X1m+0.7, X1m+1.0 to X1m+1.7, X1m+2.0 to X1m+2.7, and X2m+0.0 to X2m+0.7, for which the common voltage is fixed, the input of each unconnected pin is "0". At addresses X1m+3.0 to X1m+3.7 for which a common voltage can be selected, the input of each unconnected pin is "0" when DICOM pin CM69 (B06) is connected to 0V or "1" when it is connected to +24V. Connect DICOM pin CM69 (B06) when used. When addresses X1m+3.0 to X1m+3.7 are not used, connect the DICOM pin to 0V.
10 X1m is the PMC DI and X2m is DCSPMC DI. Connect one of a duplicated safety input signal such as the emergency stop signal to the PMC DI and the other to the DCSPMC DI.

© MyFANUC B5B0D8428C0144A78A5F4CA87F2C262E

8.8.4.8 General-purpose DO signal connection

Standard machine operator's panel main panel

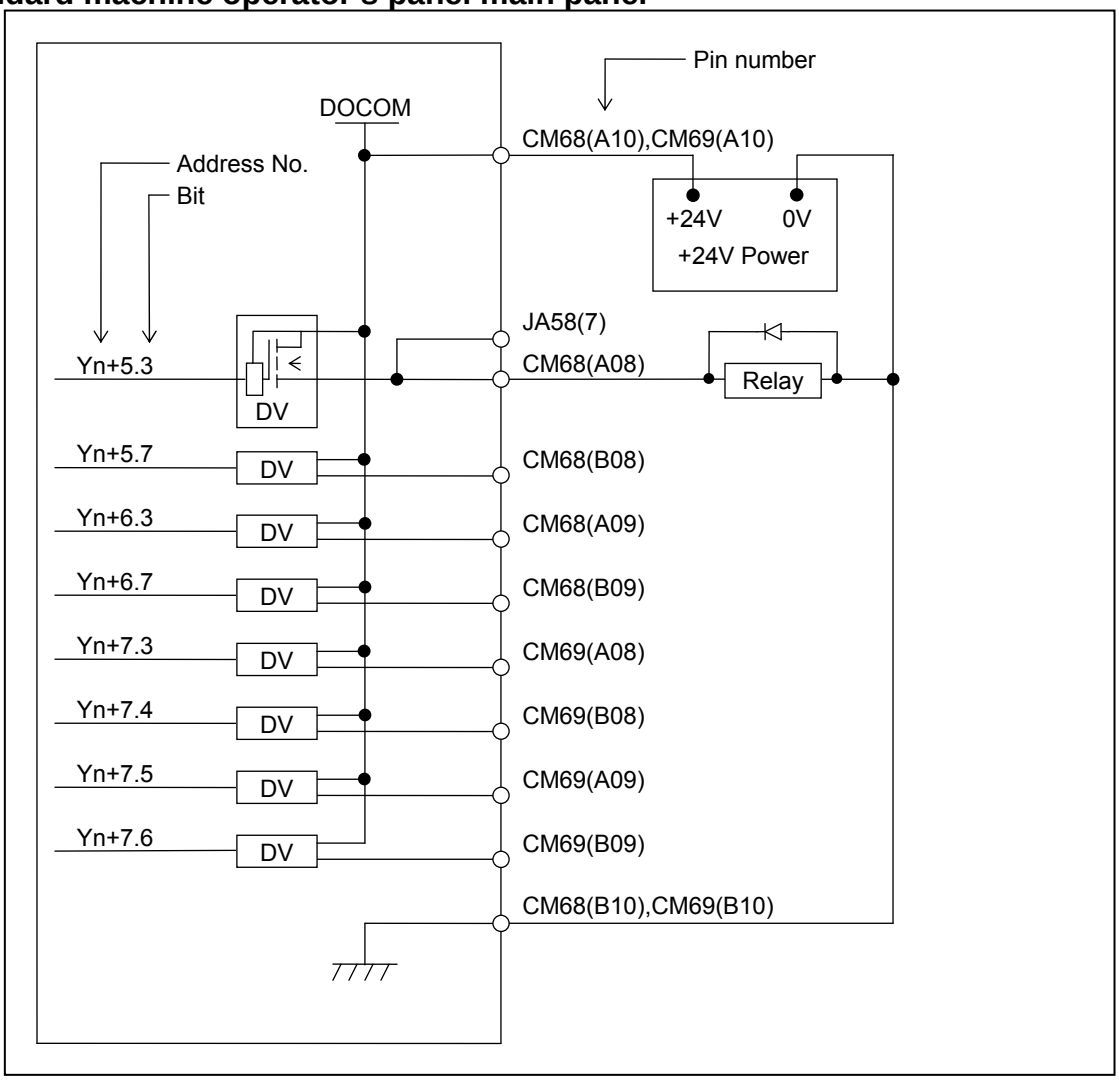

NOTE

Yn+5.3 can be used when a pendant type manual pulse generator is connected to JA58. In this case, however, do not connect Yn+5.3 to CM68.

© MyFANUC B5B0D8428C0144A78A5F4CA87F2C262E

Each safety machine operator's panel

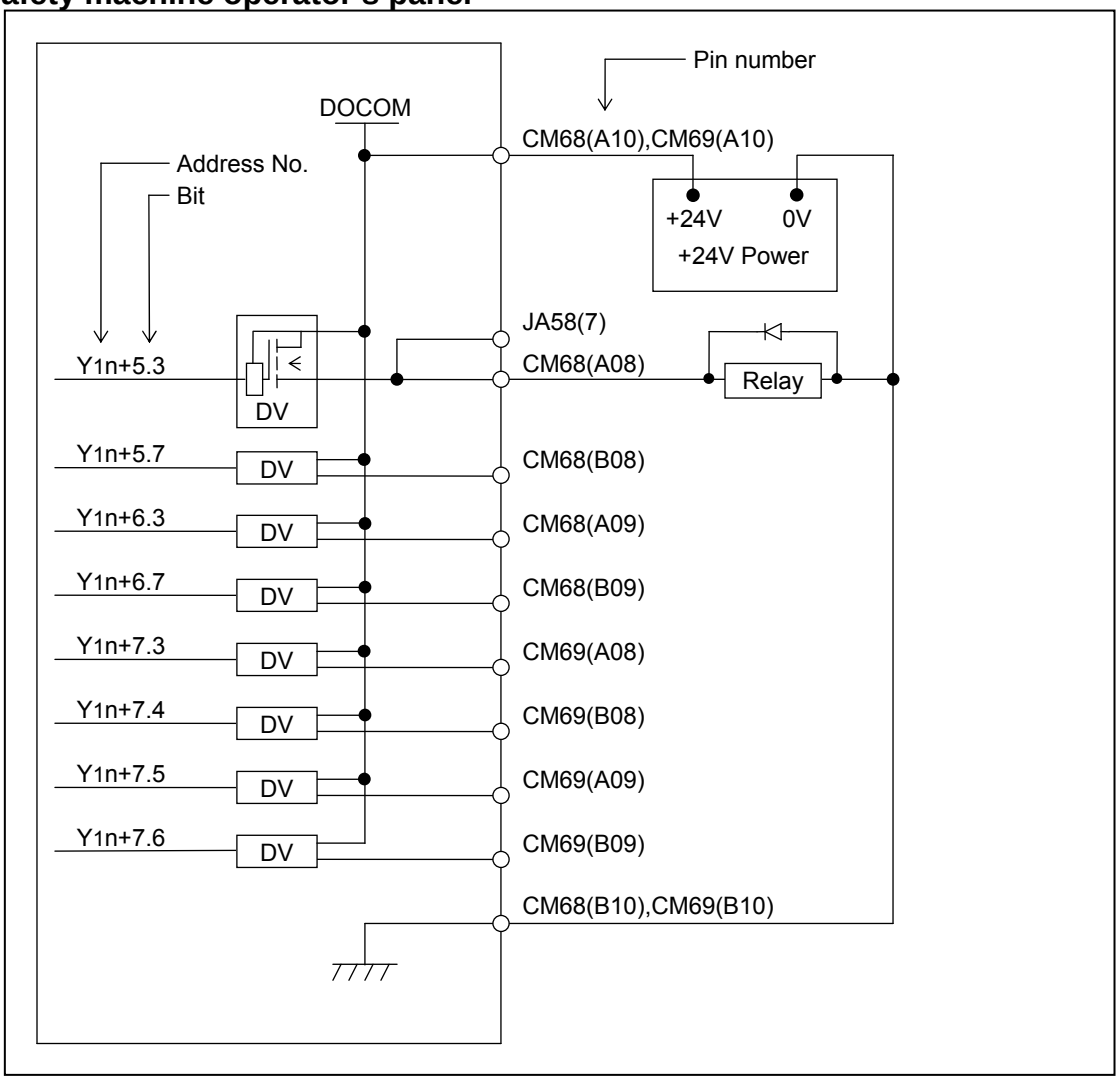

NOTE

Y1n+5.3 can be used when a pendant type manual pulse generator is connected to JA58. In this case, however, do not connect Y1n+5.3 to CM68.

© MyFANUC B5B0D8428C0144A78A5F4CA87F2C262E

8.8.5 Manual Pulse Generator

8.8.5.1 Manual pulse generator connection

When a manual pulse generator is connected using JA3, see Subsection 7.4.1.

8.8.5.2 Pendant type manual pulse generator connection

To use a pendant type manual pulse generator, connect it to JA58.

Standard machine operator's panel main panel

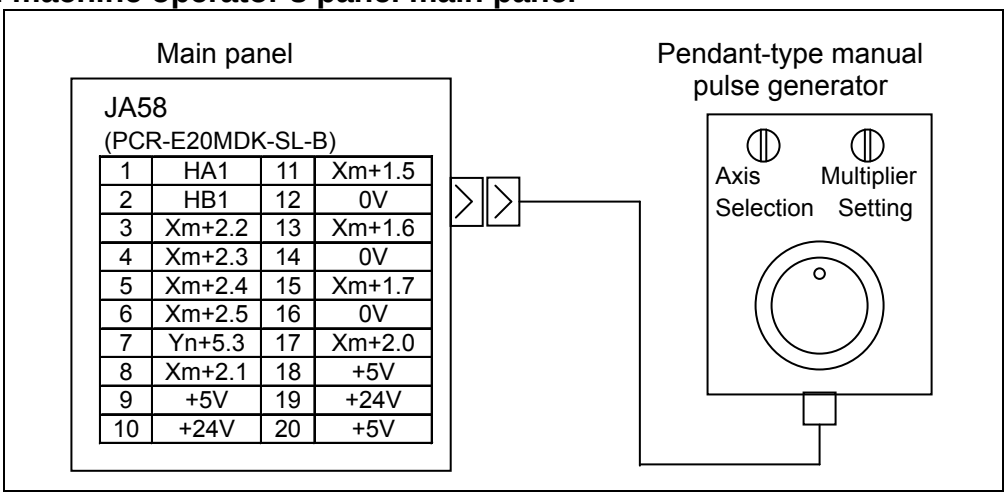

1	HA1	11	Xm+1.5
2	HB1	12	0V
3	Xm+2.2	13	Xm+1.6
4	Xm+2.3	14	0V
5	Xm+2.4	15	Xm+1.7
6	Xm+2.5	16	0V
7	Yn+5.3	17	Xm+2.0
8	Xm+2.1	18	+5V
9	+5V	19	+24V
10	+24V	20	+5V

NOTE

1 When Xm+1.5 to Xm+2.5 of connector JA58 are allocated as the DIs used for the axis selection and multiplier setting, Xm+1.5 to Xm+2.5 of connector CM68 cannot be used.

2 One DO is available for the manual pulse generator side at the user's direction. When this is used, Yn+5.3 of CM68 cannot be used, as in the case for DIs above.

Each safety machine operator's panel

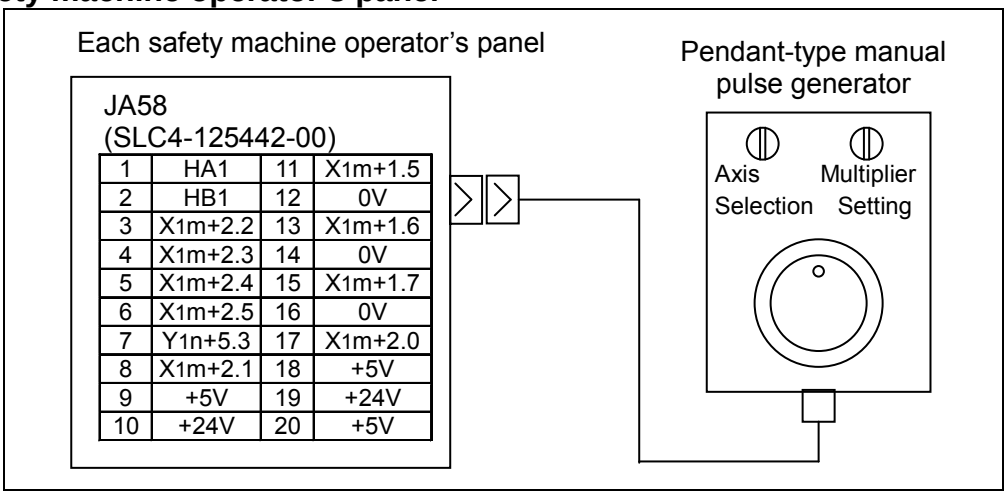

1	HA1	11	X1m+1.5
2	HB1	12	0V
3	X1m+2.2	13	X1m+1.6
4	X1m+2.3	14	0V
5	X1m+2.4	15	X1m+1.7
6	X1m+2.5	16	0V
7	Y1n+5.3	17	X1m+2.0
8	X1m+2.1	18	+5V
9	+5V	19	+24V
10	+24V	20	+5V

© MyFANUC B5B0D8428C0144A78A5F4CA87F2C262E

NOTE

1 When X1m+1.5~X1m+2.5 of connector JA58 are allocated as the DIs used for the axis selection and multiplier setting, X1m+1.5~X1m+2.5 of connector CM68 cannot be used.

2 One DO is available for the manual pulse generator side at the user's direction. When this is used, Y1n+5.3 of CM68 cannot be used, as in the case for DIs above.

8.8.6 Connector (on the cable side) Specifications

Connector	Manufacture specification		Order specification
JD1A, JD1B, JA3, JA58 (Main panel depth=60 mm min, Each safety machine operator's panel depth=50 mm min)	Stand wire press-mount type	Hirose FI30-20S (Connector) FI-20-CV7 (Case)	A02B-0236-K302
JD1A, JD1B, JA58 (Main panel depth=80 mm min, Each safety machine operator's panel depth=70 mm min)	Soldering type	Honda PCR-E20FS (Connector) PCR-V20LA (Case)	A02B-0120-K301
		Hirose FI40B-20S (Connector) FI-20-CV2 (Case)	
	Stand wire press-mount type	Honda PCR-E20FA (Connector) PCR-V20LA (Case)	A02B-0120-K302
		Hirose FI30-20S (Connector) FI-20-CV2 (Case)	
JA3 (Main panel depth=80 mm min, Each safety machine operator's panel depth=70 mm min)	Soldering type	Hirose FI40B-2015S (Connector) FI-20-CV (Case)	A02B-0120-K303
CA64 (IN), CA64 (OUT)	Tyco Electronics 1-178288-3 (Housing) 1-175218-5 (Contact)		A02B-0120-K324
CM67	Tyco Electronics 178289-5 (Housing) 1-175218-5 (Contact)		A02B-0236-K312
CM68, CM69, CA157	Tyco Electronics 178289-8 (Housing) 1-175218-5 (Contact)		A02B-0236-K313
CM65, CM66	Hirose HIF3BA-10D-2.54R		A02B-0236-K314
CA65	Hirose HIF3BA-20D-2.54R		A02B-0120-K343

© MyFANUC B5B0D8428C0144A78A5F4CA87F2C262E

8.8.7 DI/DO Addresses for the Keyboard

Standard machine operator's panel main panel

DI/DO address of Key switches (matrix input) and LED (matrix output) on the keyboard of Main panel are as follows.

BIT / Key/LED	7	6	5	4	3	2	1	0
Xm+4/Yn+0	B4	B3	B2	B1	A4	A3	A2	A1
Xm+5/Yn+1	D4	D3	D2	D1	C4	C3	C2	C1
Xm+6/Yn+2	A8	A7	A6	A5	E4	E3	E2	E1
Xm+7/Yn+3	C8	C7	C6	C5	B8	B7	B6	B5
Xm+8/Yn+4	E8	E7	E6	E5	D8	D7	D6	D5
Xm+9/Yn+5		B11	B10	B9		A11	A10	A9
Xm+10/Yn+6		D11	D10	D9		C11	C10	C9
Xm+11/Yn+7						E11	E10	E9

Each safety machine operator's panel

DI/DO address of key switches of dual contact and LED on the keyboard is as follows.

1st group (PMC DI/DO) address

BIT / Key/LED	7	6	5	4	3	2	1	0
X1m+4/Y1n+0	B4	B3	B2	B1	A4	A3	A2	A1
X1m+5/Y1n+1	D4	D3	D2	D1	C4	C3	C2	C1
X1m+6/Y1n+2	A8	A7	A6	A5	E4	E3	E2	E1
X1m+7/Y1n+3	C8	C7	C6	C5	B8	B7	B6	B5
X1m+8/Y1n+4	E8	E7	E6	E5	D8	D7	D6	D5
X1m+9/Y1n+5		B11	B10	B9		A11	A10	A9
X1m+10/Y1n+6		D11	D10	D9		C11	C10	C9
X1m+11/Y1n+7						E11	E10	E9

2nd group (DCSPMC DI/DO) address

BIT / Key	7	6	5	4	3	2	1	0
X2m+1	B4	B3	B2	B1	A4	A3	A2	A1
X2m+2	D4	D3	D2	D1	C4	C3	C2	C1
X2m+3	A8	A7	A6	A5	E4	E3	E2	E1
X2m+4	C8	C7	C6	C5	B8	B7	B6	B5
X2m+5	E8	E7	E6	E5	D8	D7	D6	D5
X2m+6		B11	B10	B9		A11	A10	A9
X2m+7		D11	D10	D9		C11	C10	C9
X2m+8						E11	E10	E9

NOTE

1 All the key switches have dual contacts, and the input signal of the key is inputted into the address of PMC and DCSPMC. Monitor only the safety-related input signal by DCS function.

2 When a signal state changes, the signals of pair may not match for some period. Set the value of safety-related I/O check timer (Parameter number 1945) or more 500.

© MyFANUC B5B0D8428C0144A78A5F4CA87F2C262E

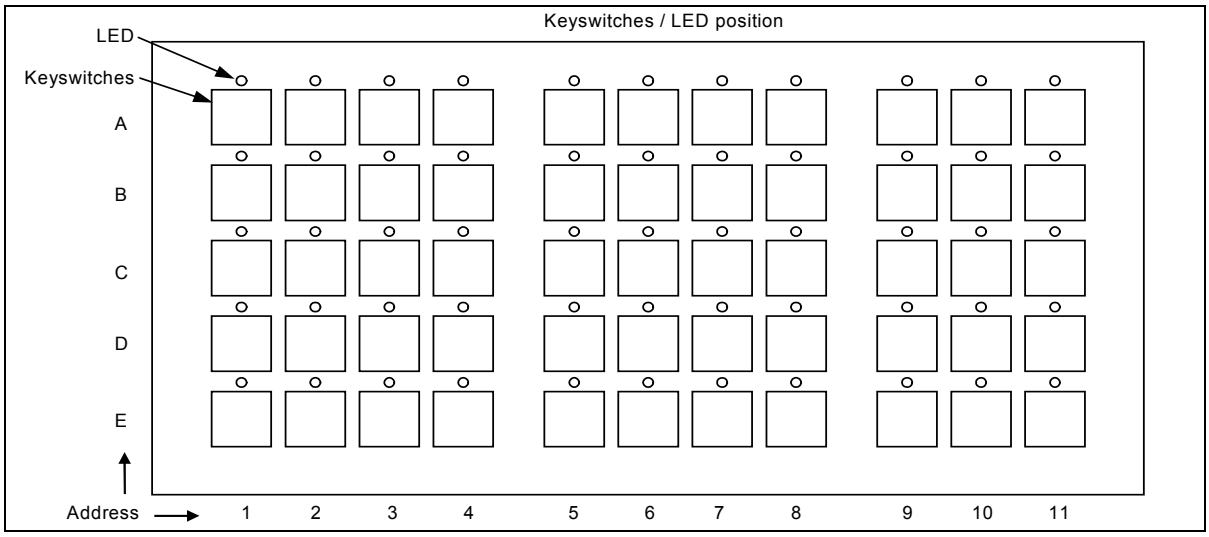

8.8.8 Code Output for the Rotary Switch

Standard machine operator's panel main panel

When sub panel AA or D is used, a real Gray code is output from the rotary switches as listed in the tables below.

Feed rate override rotary switch (SA1)

%	0	1	2	4	6	8	10	15	20	30	40	50	60	70	80	90	95	100	105	110	120
Xm+0.0		●	●			●	●			●	●			●	●			●	●		
Xm+0.1			●	●	●	●					●	●	●	●					●	●	●
Xm+0.2					●	●	●	●	●	●	●	●									●
Xm+0.3									●	●	●	●	●	●	●	●	●	●	●	●	●
Xm+0.4																	●	●	●	●	●
Xm+0.5		●		●		●		●		●		●		●		●		●		●	

Spindle override rotary switch (SA2)

%	50	60	70	80	90	100	110	120
Xm+0.6		●	●			●	●	
Xm+0.7			●	●	●	●		
Xm+1.0					●	●	●	●
Xm+1.1								
Xm+1.2		●		●		●		●
Xm+1.3								

NOTE
Xm+0.5 and Xm+1.2 are parity bits.

Each safety machine operator's panel

When sub panel AA or D is used with safety machine operator's panel or safety machine operator's panel-BK10 or when safety machine operator's panel type B or safety machine operator's panel-BK15 is used, a real Gray code is output from the rotary switches as listed in the tables below.

© MyFANUC B5B0D8428C0144A78A5F4CA87F2C262E

Feed rate override rotary switch (SA1)

%	0	1	2	4	6	8	10	15	20	30	40	50	60	70	80	90	95	100	105	110	120
X1m+0.0		●	●			●	●			●	●			●	●			●	●		
X1m+0.1			●	●	●	●					●	●	●	●					●	●	●
X1m+0.2					●	●	●	●	●	●	●	●									●
X1m+0.3									●	●	●	●	●	●	●	●	●	●	●	●	●
X1m+0.4																	●	●	●	●	●
X1m+0.5		●		●		●		●		●		●		●		●		●		●	

Spindle override rotary switch (SA2)

%	50	60	70	80	90	100	110	120
X1m+0.6		●	●			●	●	
X1m+0.7			●	●	●	●		
X1m+1.0					●	●	●	●
X1m+1.1								
X1m+1.2		●		●		●		●
X1m+1.3								

NOTE

X1m+0.5 and X1m+1.2 are parity bits.

© MyFANUC B5B0D8428C0144A78A5F4CA87F2C262E

8.8.9 Outline

8.8.9.1 Outline of main panel

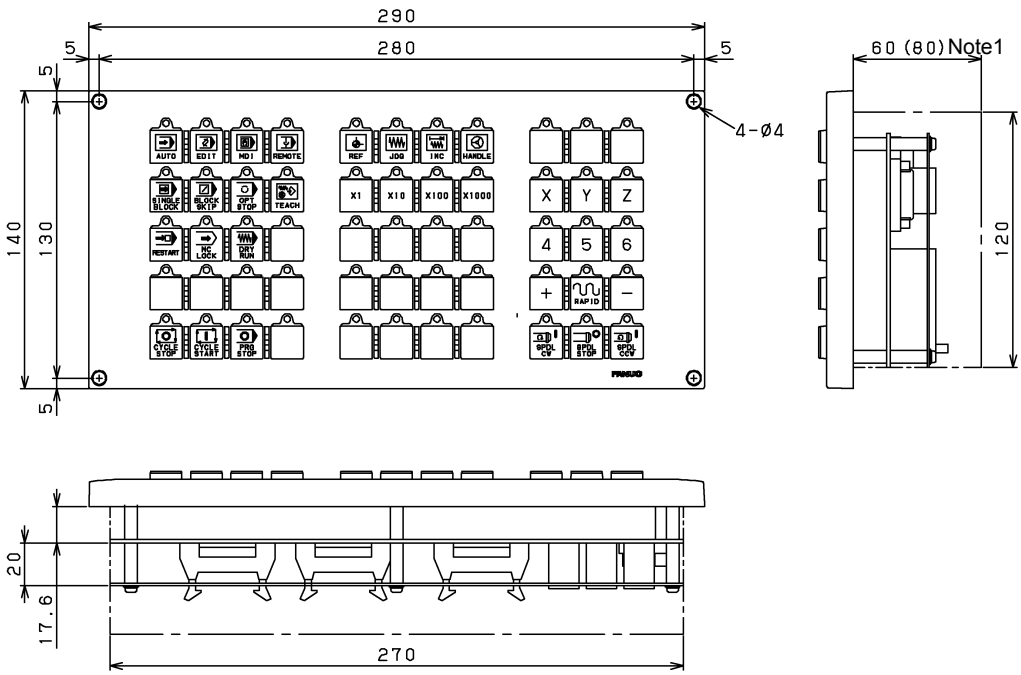

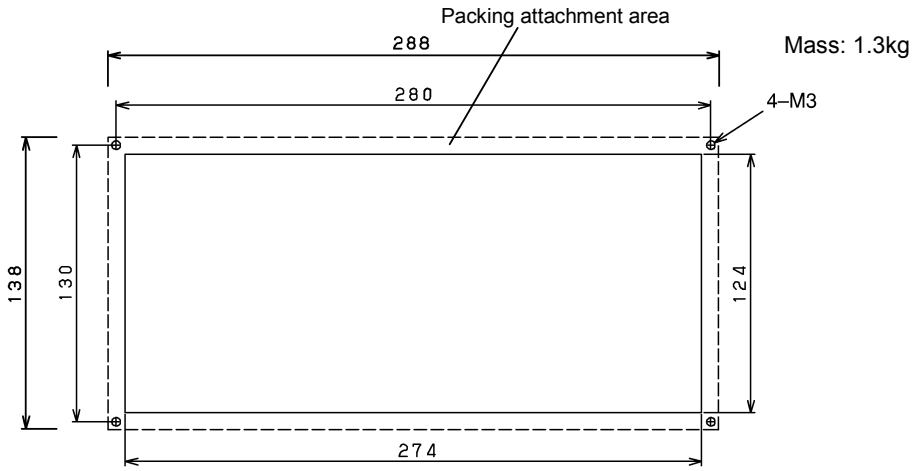

Panel cut drawing

Unit: mm

NOTE

1 When a low screw-fixing housing “HIROSE FL-20-CV7” is used, the depth is 60mm.
When a usual housing is used, the depth is 80mm.

2 Secure the unit with the screws from outside of the cabinet and then attach the caps.

3 Install the main panel in a vertical direction.

© MyFANUC B5B0D8428C0144A78A5F4CA87F2C262E

8.8.9.2 Outline of Safety machine operator's panel

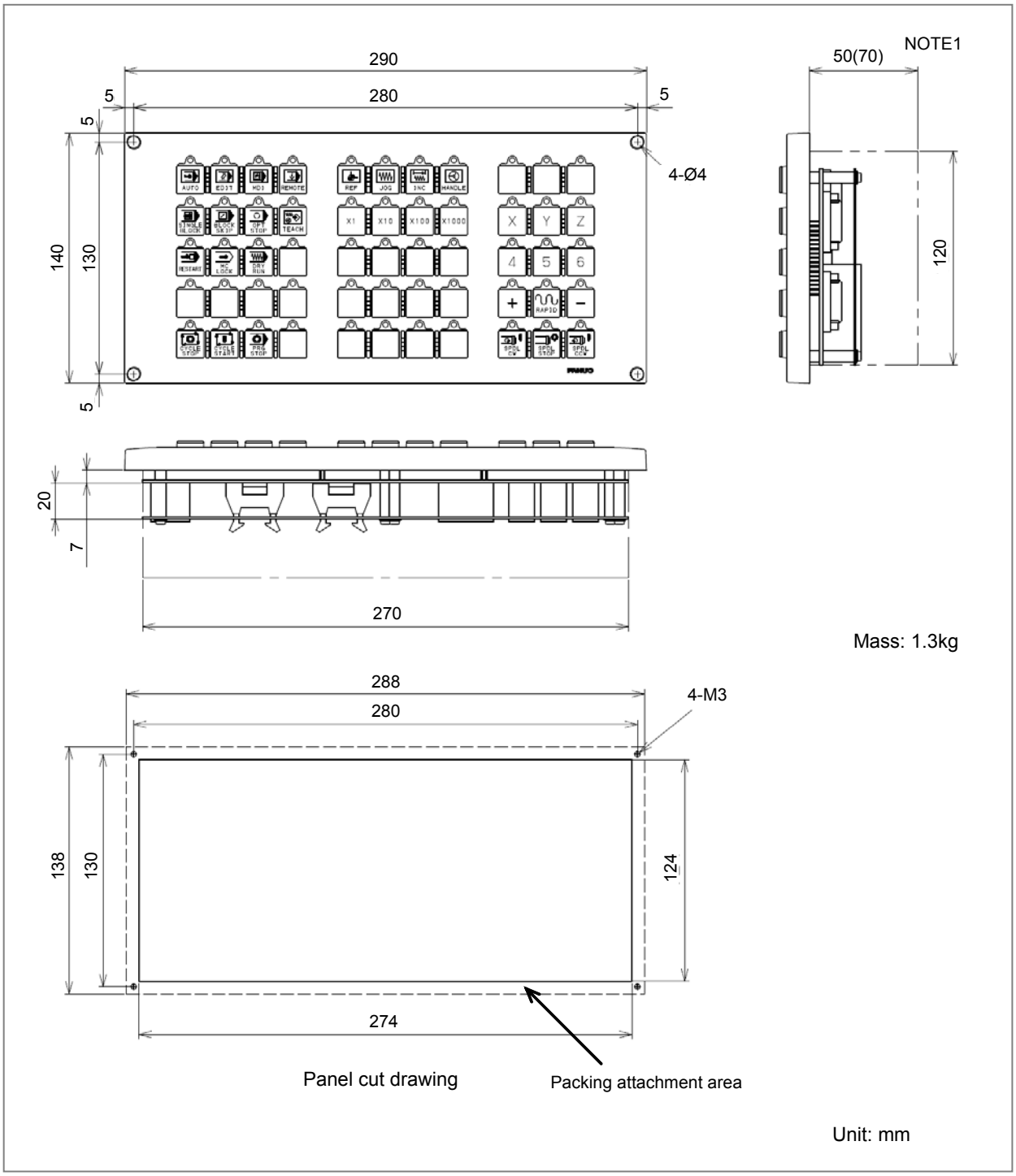

NOTE

1 When a low screw-fixing housing "HIROSE FL-20-CV7" is used, the depth is 50mm.
When a usual housing is used, the depth is 70mm.

2 Secure the unit with the screws from outside of the cabinet and then attach the caps.

3 Install the safety machine operator's panel in a vertical direction.

© MyFANUC B5B0D8428C0144A78A5F4CA87F2C262E

8.8.9.3 Outline of Safety machine operator's panel type B

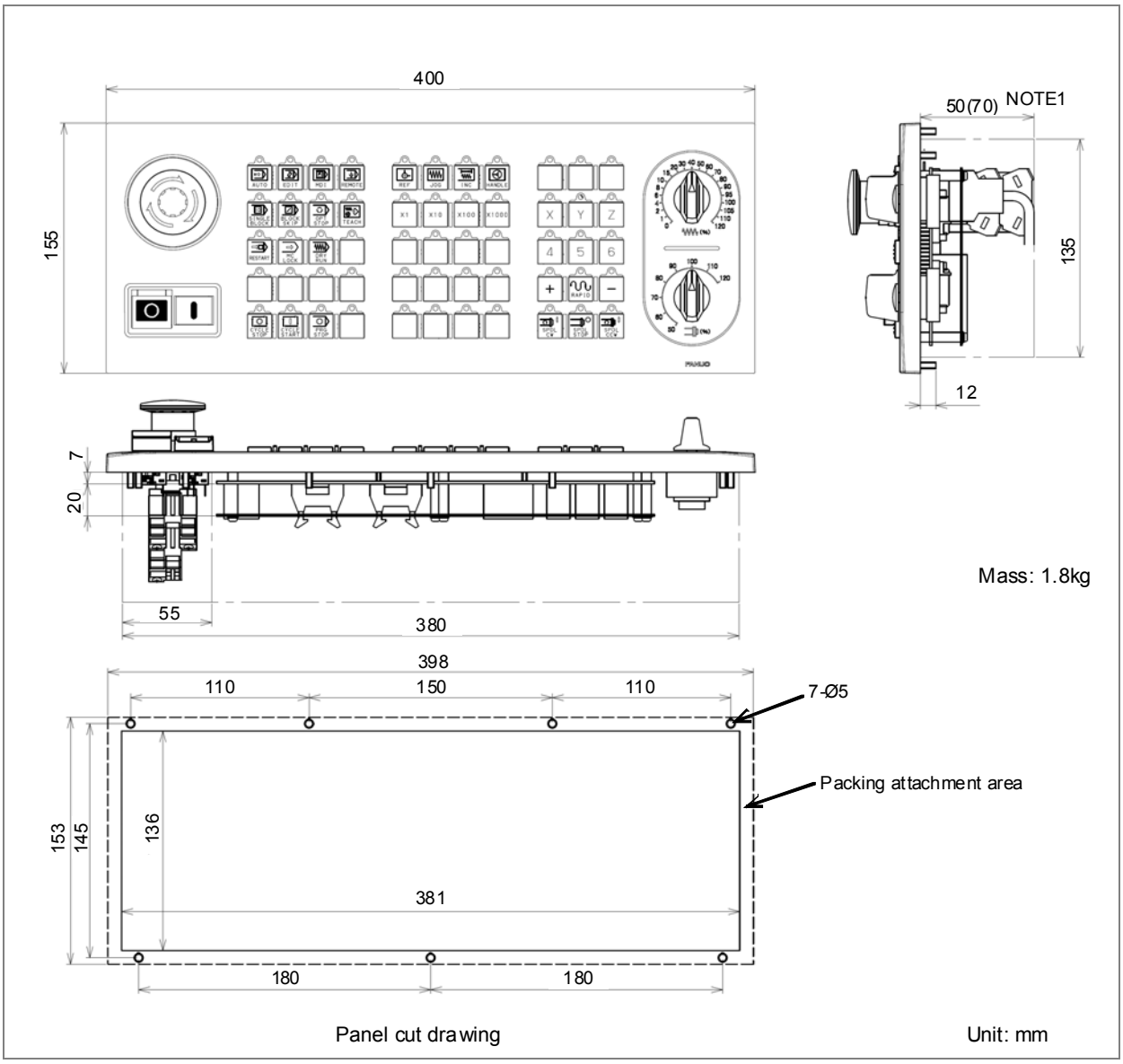

NOTE

1 When a low screw-fixing housing "HIROSE FL-20-CV7" is used, the depth is 50mm.
When a usual housing is used, the depth is 70mm.
The depth of emergency stop switch is 70mm.

2 This unit is mounted on the outside of a cabinet and a nut fastens it from the inside.

3 Install the safety machine operator's panel type B in a vertical direction.

© MyFANUC B5B0D8428C0144A78A5F4CA87F2C262E

8.8.9.4 Outline of safety machine operator's panel-BK10

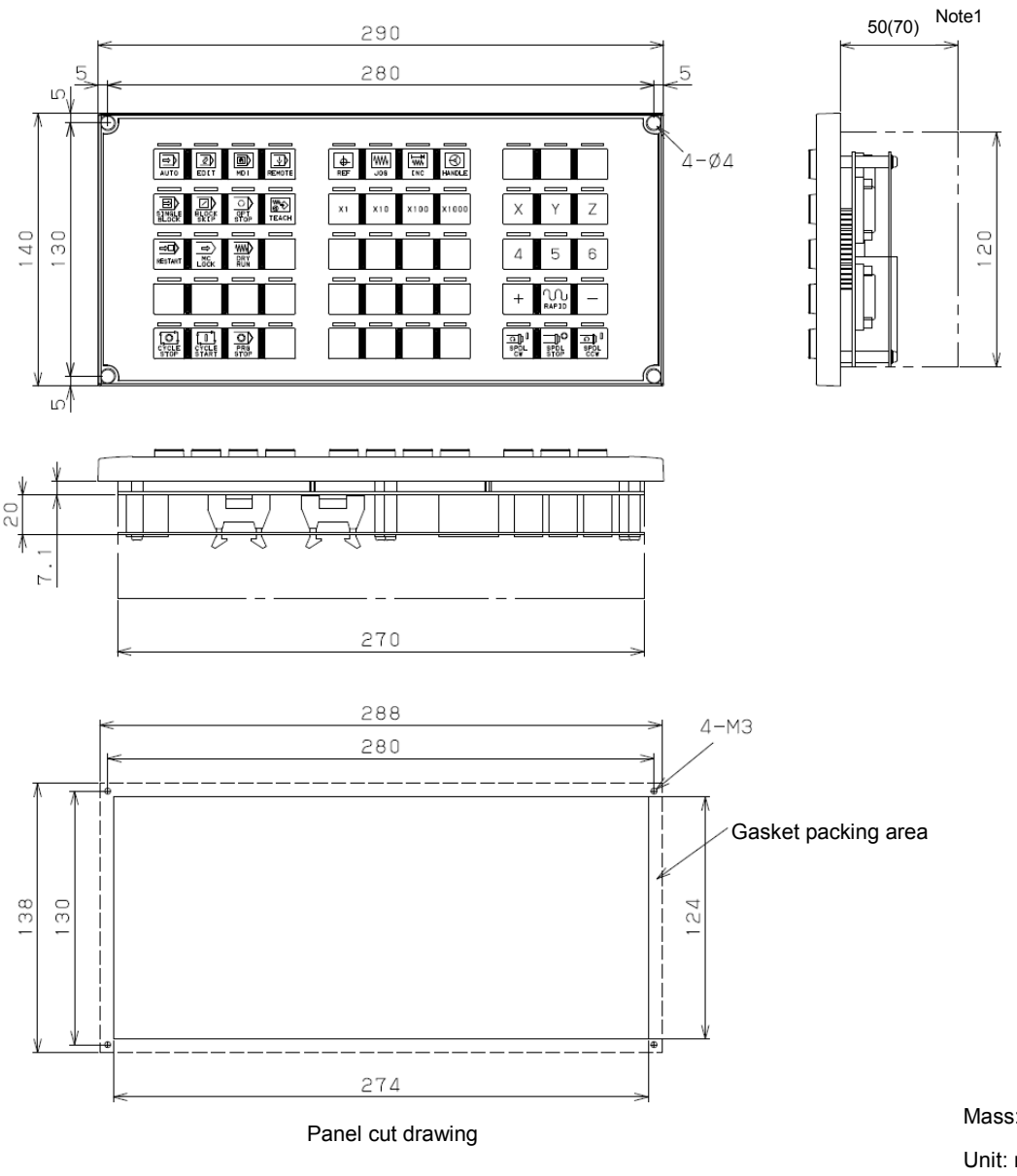

Panel cut drawing

Mass: 1.3kg

Unit: mm

NOTE

1 When a low screw-fixing housing "HIROSE FL-20-CV7" is used, the depth is 50mm.
When a usual housing is used, the depth is 70mm.

2 Secure the unit with the screws from outside of the cabinet and then attach the caps.

3 Install the safety machine operator's panel-BK10 in a vertical direction.

© MyFANUC B5B0D8428C0144A78A5F4CA87F2C262E

8.8.9.5 Outline of safety machine operator's panel-BK15

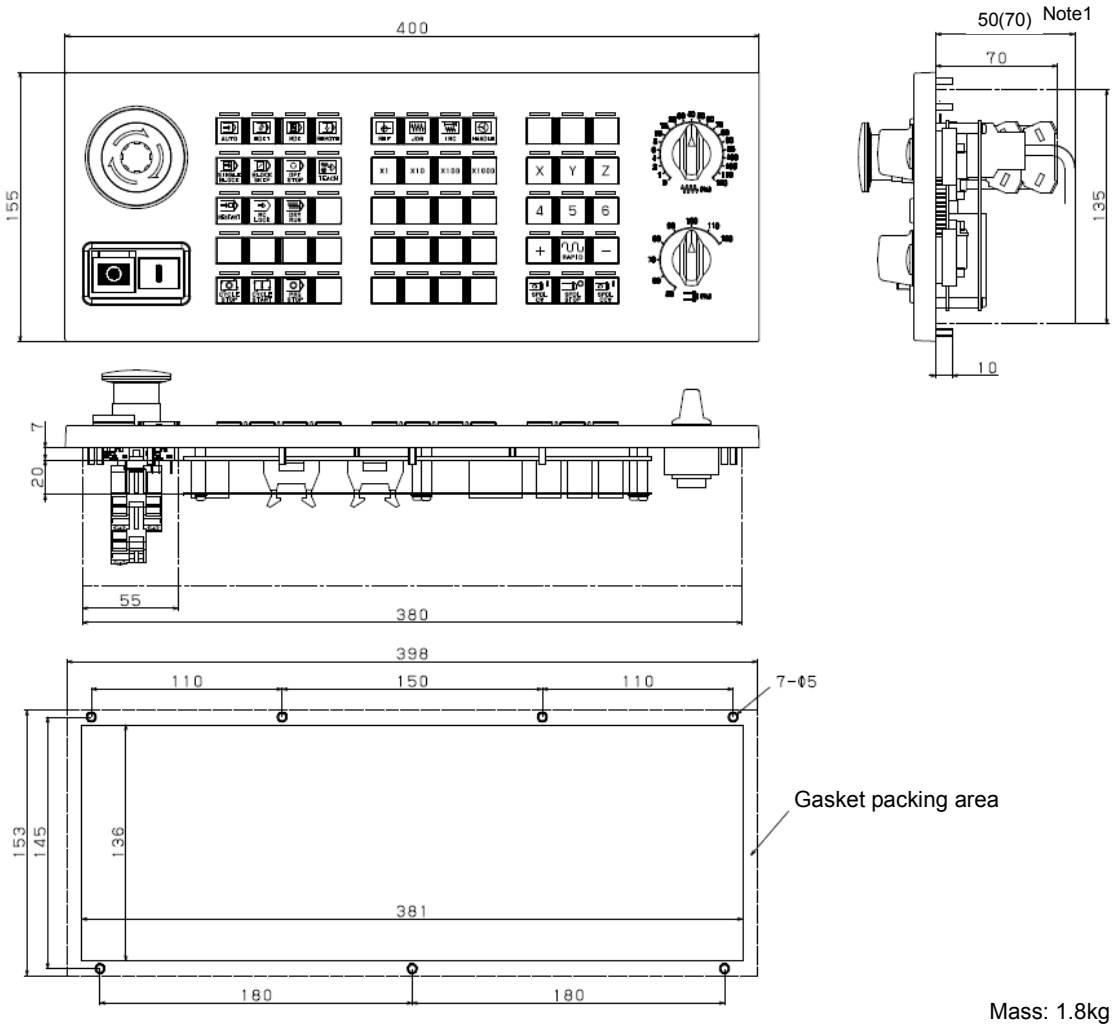

Panel cut drawing

Mass: 1.8kg

Unit: mm

NOTE

1 When a low screw-fixing housing "HIROSE FL-20-CV7" is used, the depth is 50mm.
When a usual housing is used, the depth is 70mm.
The depth of emergency stop switch is 70mm.

2 This unit is mounted on the outside of a cabinet and a nut fastens it from the inside.

3 Install the safety machine operator's panel-BK15 in a vertical direction.

© MyFANUC B5B0D8428C0144A78A5F4CA87F2C262E

8.8.9.6 Outline of sub panel AA

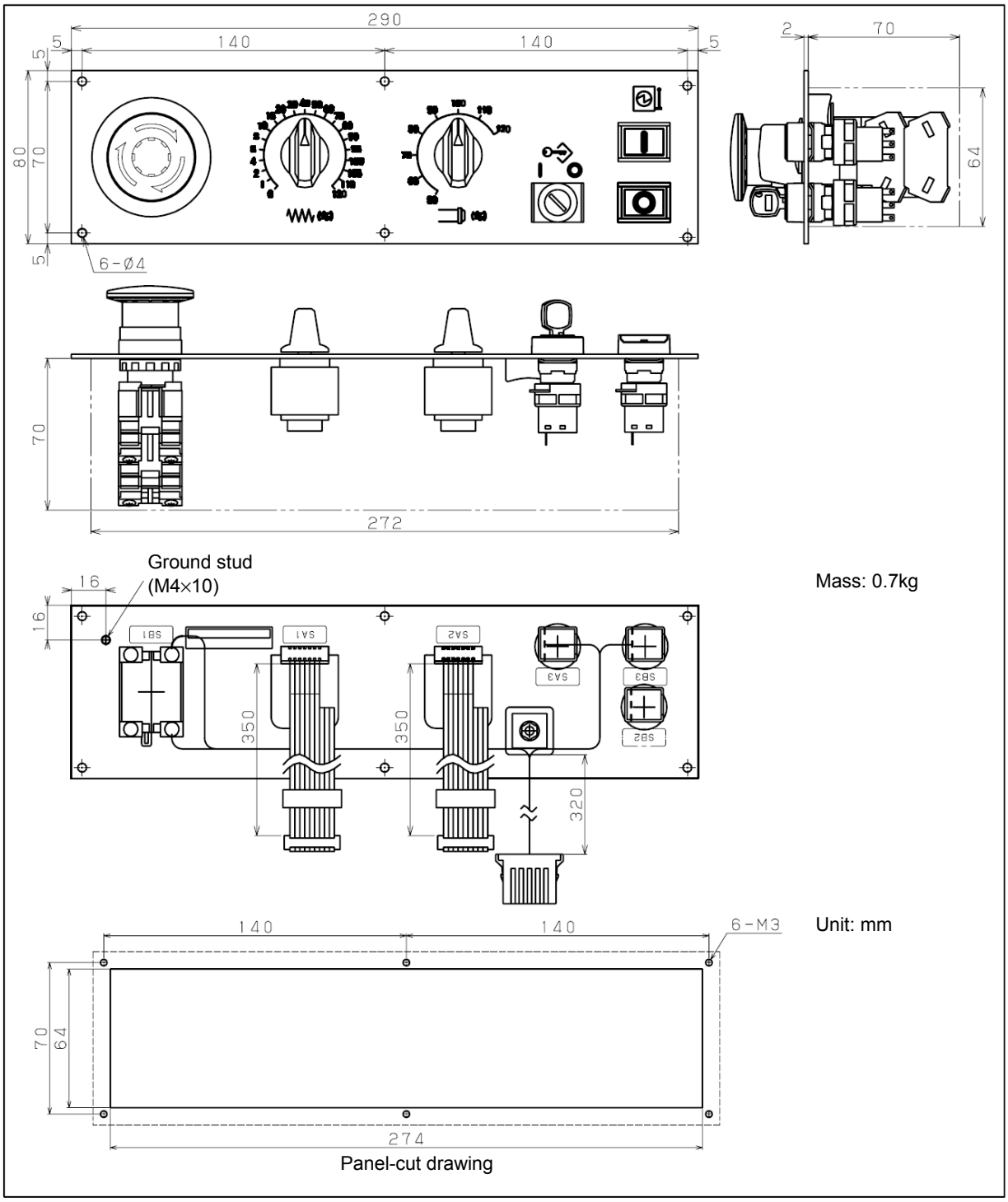

© MyFANUC B5B0D8428C0144A78A5F4CA87F2C262E

8.8.9.7 Outline of sub panel D

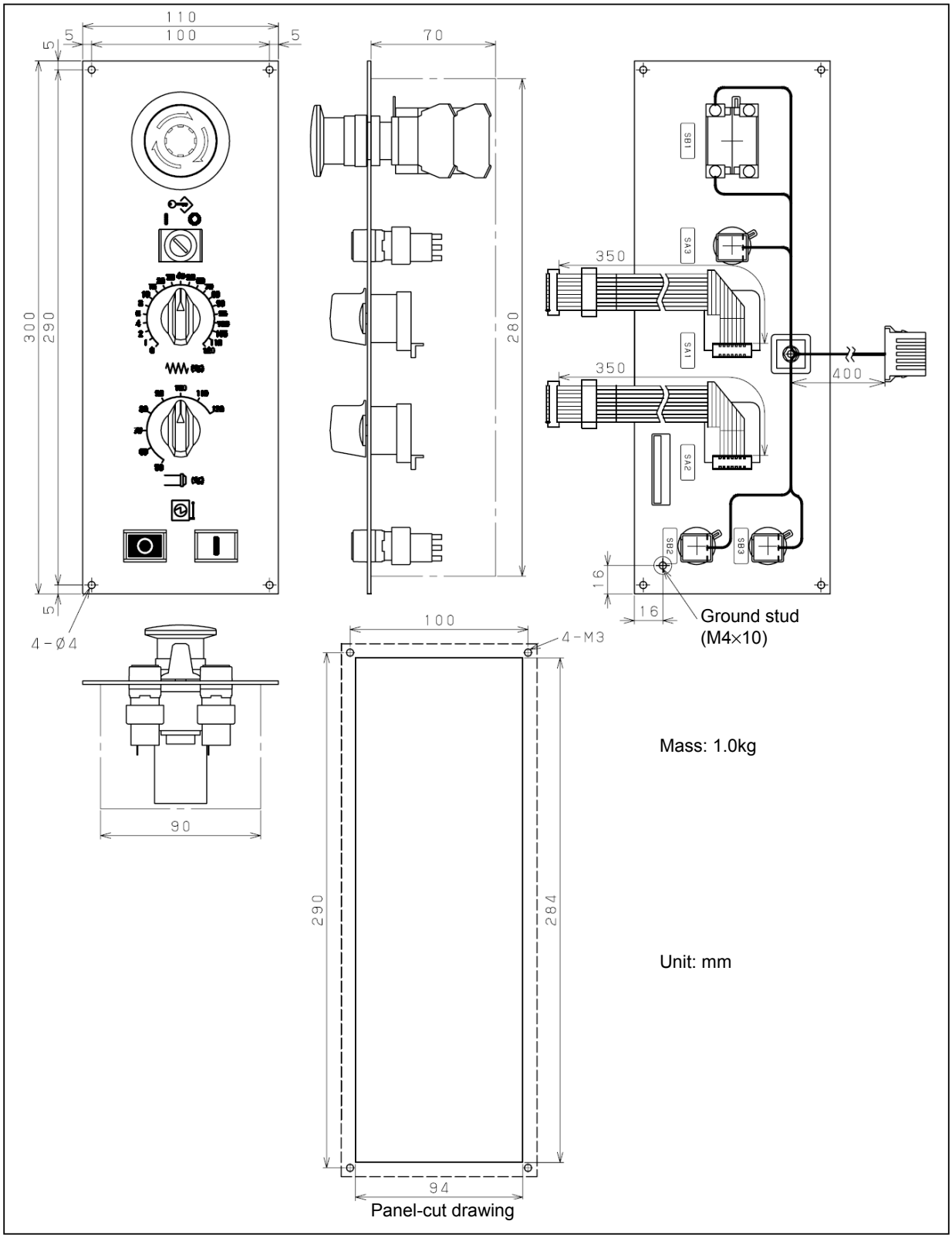

© MyFANUC B5B0D8428C0144A78A5F4CA87F2C262E

8.8.9.8 Outline of sub panel-BK10

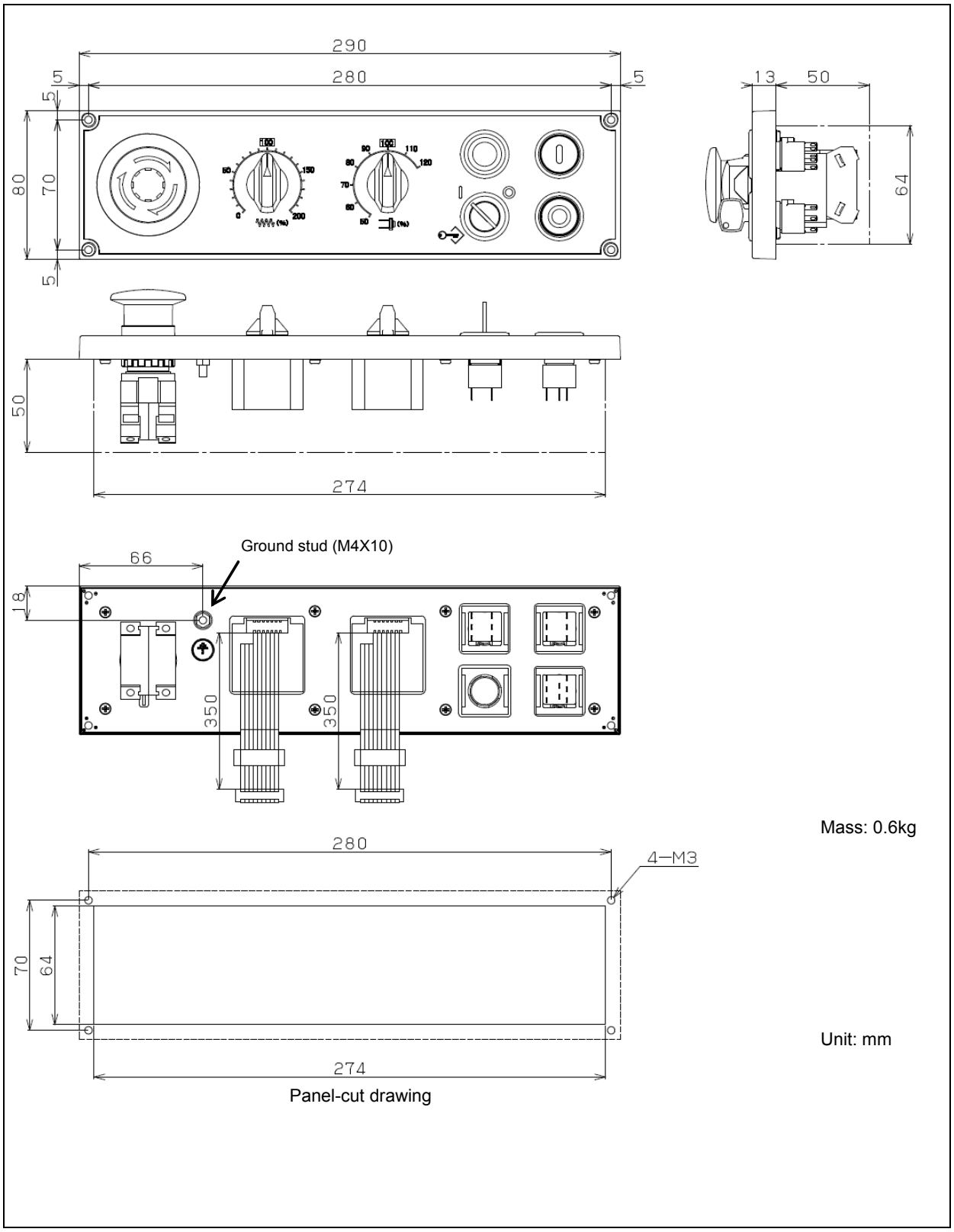

© MyFANUC B5B0D8428C0144A78A5F4CA87F2C262E

8.8.9.9 Connector locations of main panel

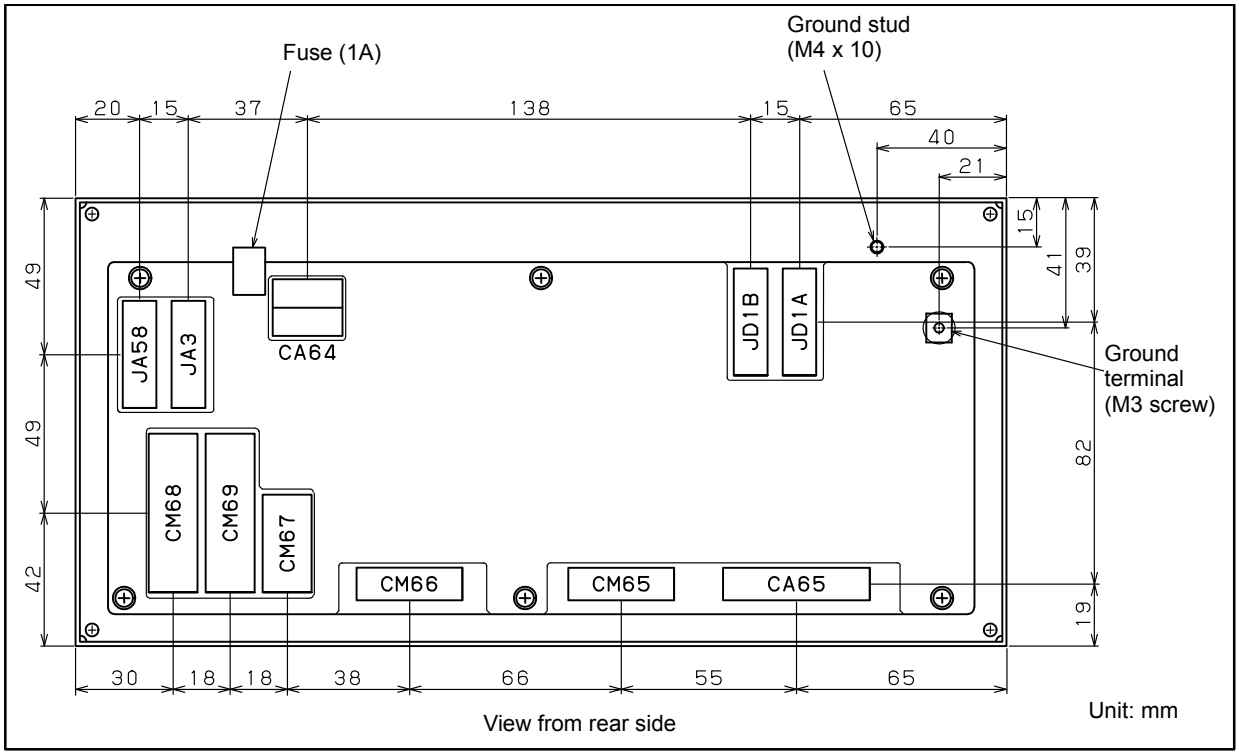

8.8.9.10 Connector locations of safety machine operator's panel and safety machine operator's panel-BK10

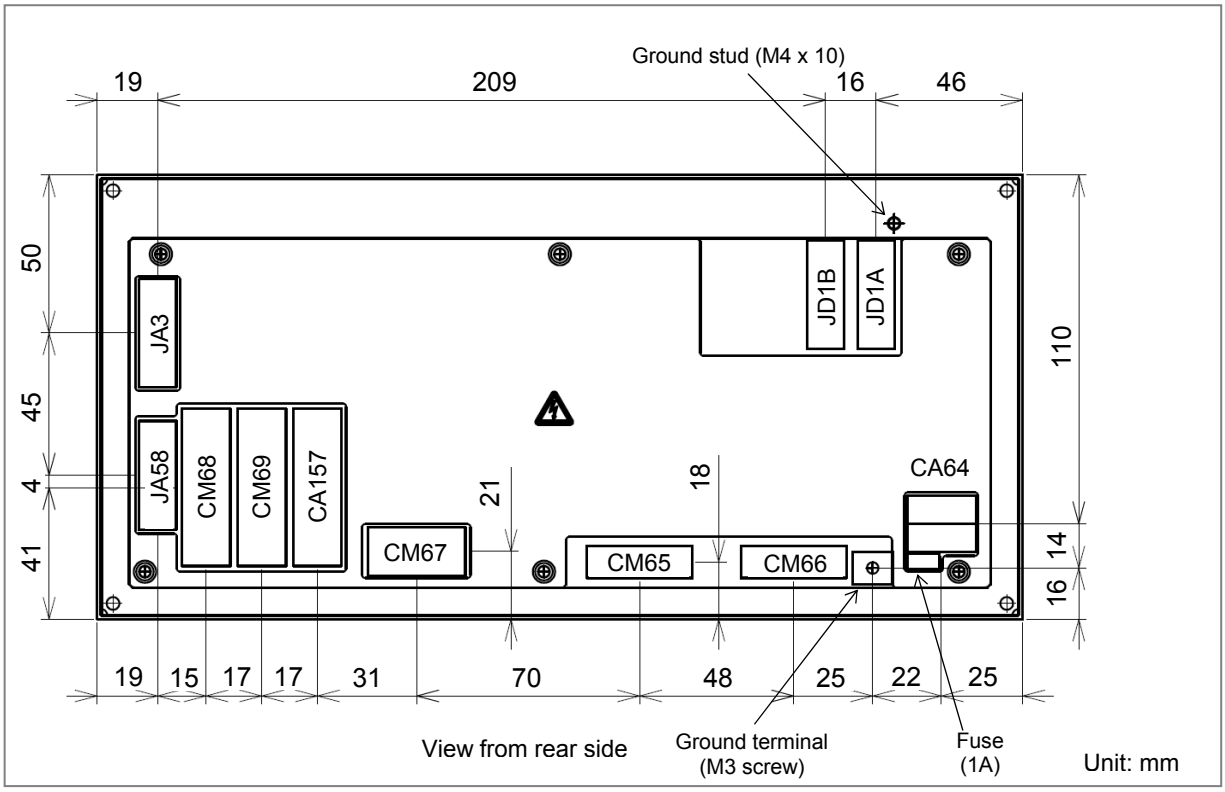

NOTE
The locations of connector CM65 and CM66 is different from the main panel.

© MyFANUC B5B0D8428C0144A78A5F4CA87F2C262E

8.8.9.11 Connector locations of safety machine operator's panel type B and safety machine operator's panel-BK15

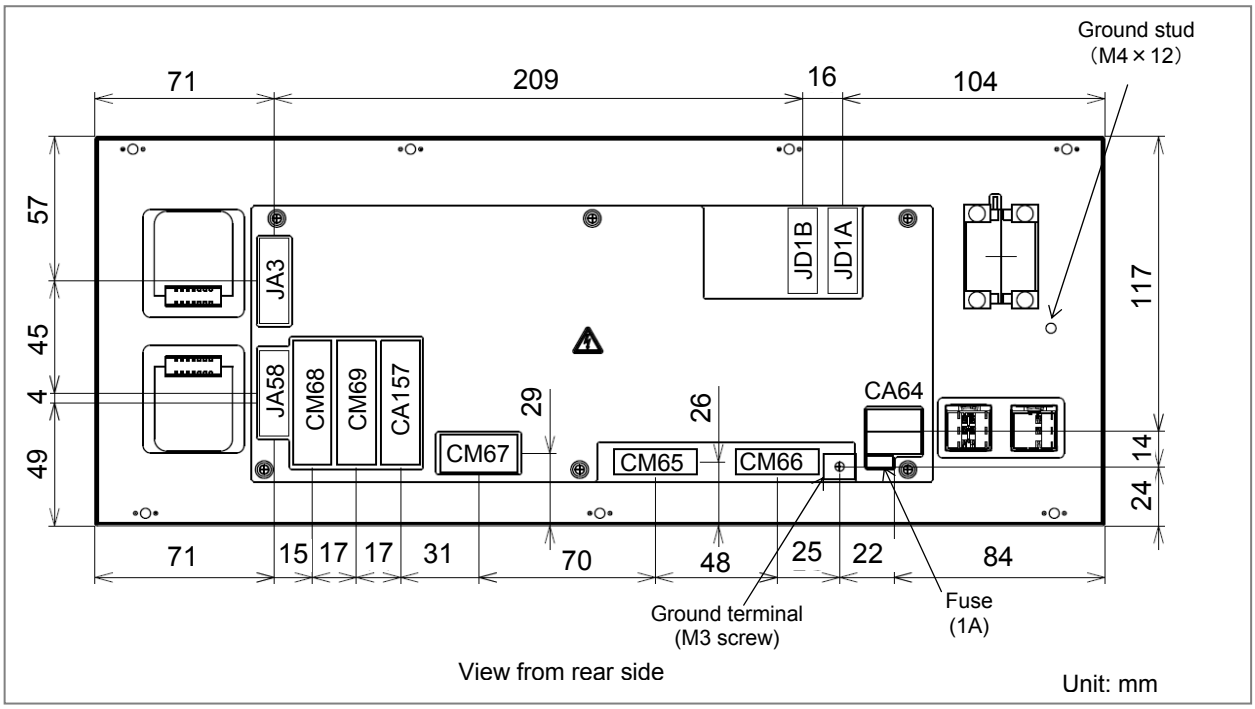

8.8.10 Specifications of the Machine Operator's Panel

8.8.10.1 Installation conditions

Install the machine operator's panel in a fully enclosed cabinet of flat side.
For other installation conditions, conform to the CNC installation conditions.

8.8.10.2 Order specification

Name	Order specification	Remarks
Standard machine operator's panel main panel	A02B-0323-C231	I/O Link *i* connection Symbol and alphabet keys
Safety machine operator's panel	A02B-0323-C234	I/O Link *i* connection only Symbol and alphabet keys
Safety machine operator's panel type B	A02B-0323-C235	
Safety machine operator's panel-BK10	A02B-0323-C236	For 10.4" color LCD/MDI I/O Link *i* connection only Symbol and alphabet key
Safety machine operator's panel-BK15	A02B-0323-C237	
Standard machine operator's panel Sub panel AA	A02B-0236-C237	
Standard machine operator's panel Sub panel D	A02B-0236-C244	
Standard machine operator's panel Sub panel-BK10	A02B-0323-C240	For 10.4" color LCD/MDI
Set of transparent key tops	A02B-0236-K170	For Standard machine operator's panel main panel, 55 key tops
	A02B-0323-K170	For safety machine operator's panel and safety machine operator's panel type B, 55 key tops

© MyFANUC B5B0D8428C0144A78A5F4CA87F2C262E

Name	Order specification	Remarks
Set of blank key tops	A02B-0236-K171	For Standard machine operator's panel main panel, 55 key tops
	A02B-0323-K171	For Each safety machine operator's panel, 55 key tops
Set of symbol English key tops	A02B-0236-K174	For Standard machine operator's panel main panel, 34 labeled key tops + 21 blank key tops
	A02B-0323-K174	For safety machine operator's panel and safety machine operator's panel type B, 34 labeled key tops + 21 blank key tops
Set of blank key tops (color: red)	A02B-0236-K175	For Standard machine operator's panel main panel, 100 red blank key tops
	A02B-0323-K175	For Each safety machine operator's panel, 100 red blank key tops
Set of blank key tops (color: green)	A02B-0236-K176	For Standard machine operator's panel main panel, 100 green blank key tops
	A02B-0323-K176	For Each safety machine operator's panel, 100 green blank key tops
Set of blank key tops (color: blue)	A02B-0236-K177	For Standard machine operator's panel main panel, 100 blue blank key tops
	A02B-0323-K177	For Each safety machine operator's panel, 100 blue blank key tops
Set of blank key tops (color: yellow)	A02B-0236-K178	For Standard machine operator's panel main panel, 100 yellow blank key tops
	A02B-0323-K178	For Each safety machine operator's panel, 100 yellow blank key tops
Set of black blank key tops	A02B-0323-K179	55 black blank key tops For Each safety machine operator's panel
Set of Symbolic/English key tops (For Safety machine operator's panel-BK10, BK15)	A02B-0323-K180	55 black labeled key tops For safety machine operator's panel-BK10, BK15
Keyboard cover	A02B-0323-K041	For main panel, safety machine operator's panel and safety machine operator's panel type B, Protection from dust and coolant.
	A02B-0323-K046	For Safety machine operator's panel-BK10 and Safety machine operator's panel-BK15 Protection from dust and coolant
Screw caps (with 5 pieces included)	A02B-0319-K191	For Standard machine operator's panel main panel and Safety machine operator's panel
	A02B-0323-K191	For Safety machine operator's panel-BK10
Fuse (spare parts)	A02B-0815-K001	1A

8.8.10.3 Main panel specification

Item	Specification	Remarks
General-purpose DI points	32 points	24VDC type input
General-purpose DO points	8 points	12VDC to 24VDC type output
Key switches	55 keys	Matrix DI
LED	Green	Attached to all key switches, Matrix DO
Manual pulse generator interface	Max. 3 units	
Interface to CNC	I/O Link *i* connection	

© MyFANUC B5B0D8428C0144A78A5F4CA87F2C262E

8.8.10.4 Each safety machine operator's panel

Item	Specification		Remarks
	C234 C236	C235 C237	
General-purpose DI points	40 points		24VDC type input
General-purpose DO points	8 points		12VDC to 24VDC type output
Key switches	55 keys		All key switch is dual contacts, Matrix DI
LED	Green		Attached to all key switches, Matrix DO
Manual pulse generator interface	Max. 3 units		
Interface to CNC	I/O Link *i* connection		
Feed rate override switch	-	1	5 bit real gray code output (with a parity bit)
Spindle override switch	-	1	
Emergency stop switch	-	1	Number of contact: 3 (contact a x 1, contact b x 2) M3.5 Screw
ON switch	-	1	Contact c x 2, illumination type (24 VDC, resistance contained, LED color: Milk white)
OFF switch	-	1	Contact c x 1, With a switch cover

8.8.10.5 Sub panel AA and D,Sub panel-BK10 specification

Item	Specification of Sub panel			Remarks
	AA	D	BK10	
Feed rate override switch	1	1	1	5 bit real gray code output (with a parity bit)
Spindle override switch	1	1	1	
Emergency stop switch	1	1	-	Number of contact: 4 (contact a x 2, contact b x 2), M3.5 Screw
	-	-	1	Number of contact: 4 (contact b x 2), M3.5 Screw
Program protect key	1	1	1	The key cannot be removed in the program protect off state.
ON switch	1	1	1	Contact c x 2, illumination type (24 VDC, resistance contained)
OFF switch	1	1	1	Contact c x 1
Mounting hole	-	-	1	Reserved hole for mounting a 22-diameter switch

8.8.10.6 Power supply specification

Item	Voltage	Specification	Remarks
Standard machine operator's panel main panel	DC24V±10% (from Power connector CA64, including momentary values)	0.6A	Including all DI consumption. The power supply rating does not include that to be input to DOCOM for DO output.
Each safety machine operator's panel			

8.8.10.7 Heat output

Item	Heat output	Remarks
Standard machine operator's panel main panel	15W	When 50% of general-purpose input signals and key LEDs on the main panel are on
Each safety machine operator's panel		

© MyFANUC B5B0D8428C0144A78A5F4CA87F2C262E

8.8.10.8 General-purpose DI signal definition

Number of points	Standard machine operator's panel main panel: 32 points Each safety machine operator's panel: 40 points
Rated input voltage	24VDC (+10%, -10%)
Rated input current	7.3mA (average)
Polarity	Standard machine operator's panel main panel: Xm+0.0 to Xm+0.7, Xm+1.0 to Xm+1.7, Xm+2.0 to Xm+2.7: Sink type Xm+3.0 to Xm+3.7: Sink or source type selectable Each safety machine operator's panel: X1m+0.0 to X1m+0.7, X1m+1.0 to X1m+1.7, X1m+2.0 to X1m+2.7, X2m+0.0 to X2m+0.7: Sink type X1m+3.0 to X1m+3.7: Sink or source type selectable
ON voltage/current	18VDC or more, 6mA or more
OFF voltage/current	6VDC or less, 1.5mA or less
Permission self-diagnostics pulse width	Pulse width: 150μs or less, Cycle: 4ms or more
Response time	The receiver delay time is 2ms (maximum). In addition, [I/O Link transfer time between CNC and I/O module] and [ladder scan period (depending on CNC)] needs to be considered.

8.8.10.9 General-purpose DO signal definition

Number of points	8 points
Rated output voltage	12VDC to 24VDC (+20%, -15%)
Rated output current	200mA/pt (An instant is contained)
Polarity	Source type
Maximum voltage decrease when ON	28mV
Maximum leakage current when OFF	5μA
Output protection function	Protection against overheat, over current, and short circuit
Response time	The driver delay time is 50μs (maximum). In addition, [I/O Link transfer time between CNC and I/O module] and [ladder scan period (depending on CNC)] needs to be considered.

⚠ **CAUTION**

1 The protection function is intended to protect the components internal rather than external units.

2 No protection function can protect their internal components in all cases. Once any protection function has worked, remove the cause promptly. If an absolute maximum rating is exceeded, for example, it is likely that protection functions may not work or an IC may break down before the related protection function works, depending on the way or situation in which the modules are used.

3 If an output protection function is defective, it is likely that, if the load current exceeds its rating continuously for a long time, smoke or ignition may occur.

© MyFANUC B5B0D8428C0144A78A5F4CA87F2C262E

8.8.11 Keyboard

8.8.11.1 Meaning of key symbols

Symbol	English	Meaning of key
	AUTO	AUTO mode selection signal; Sets automatic operation mode.
	EDIT	EDIT mode selection signal; Sets program edit operation mode.
	MDI	MDI mode selection; Sets MDI mode.
	REMOTE	DNC operation mode; Sets DNC operation mode.
	REF RETURN	Reference position return mode selection; Sets reference position return mode.
	JOG	JOG feed mode selection; Sets jog feed mode.
	INC JOG	Step feed mode selection; Sets step feed mode.
	HANDLE	Manual handle feed mode selection; Sets manual handle feed mode.
	TEACH	Teach-in jog (reach-in handle) mode selection signal; Sets teach-in jog (teach-in handle) mode.
	SINGLE BLOCK	Single block signal; Executes program one by one. This key is used to check a program.
	BLOCK DELETE	Block delete; Skips the execution of the blocks d ending with the end of block (;) when this button is pressed during automatic operation.
	PRG STOP	Program stop(output only); Turns on the LED on the button when automatic operation is stopped by M00 specified in the program.
	OPT STOP	Optional stop; Stops automatic operation after execution of the block of a program where M01 is specified in the program.
	RESTART	Program restart; A program may be restart at a block by specifying the sequence number of the block, after automatic operation is stopped because of a broken tool or for holidays.
	DRY RUN	Dry run; Sets the axis feedrate to the jog feedrate instead of a programmed feedrate when automatic operation is performed by setting this button to on. This function is used to check only the movement of the tool when no workpiece is mounted.
	MC LOCK	Machine lock; Updates only position display on the screen without making any axis movement, when automatic operation is performed by setting this button to on. This function is used to check a program.
	CYCLE START	Cycle start; Start automatic operation.
	CYCLE STOP	Cycle stop; Stops automatic operation.
X1 X10 X100 X1000		Manual handle feed magnification: Magnification for manual handle feed. Magnified by 1, 10, 100, 1000.
X Y Z 4 5 6		Manual feed axis selection; Axes are selected, when these buttons are set to on in the jog feed mode or step feed mode.
+ −		Manual feed operation; Performs movement along selected axes when these buttons are set on in the jog feed mode or step feed mode.

© MyFANUC B5B0D8428C0144A78A5F4CA87F2C262E

Symbol	English	Meaning of key
	RAPID	Traverse; Performs jog feed at rapid traverse rate when this button is set to on.
	SPDL CW	Positive spindle rotation direction; Rotates the spindle motor in the positive direction.
	SPDL CCW	Negative spindle rotation direction; Rotates the spindle motor in the negative direction.
	SPDL STOP	Spindle stop; Stops the spindle motor rotation.

8.8.11.2 Detachable key top on the main panel

All key tops on the machine operator's panel are detachable, which allows you to make your original key layout easily. A transparent key top (available as an option) can be used to insert a film sheet with marking into the key.

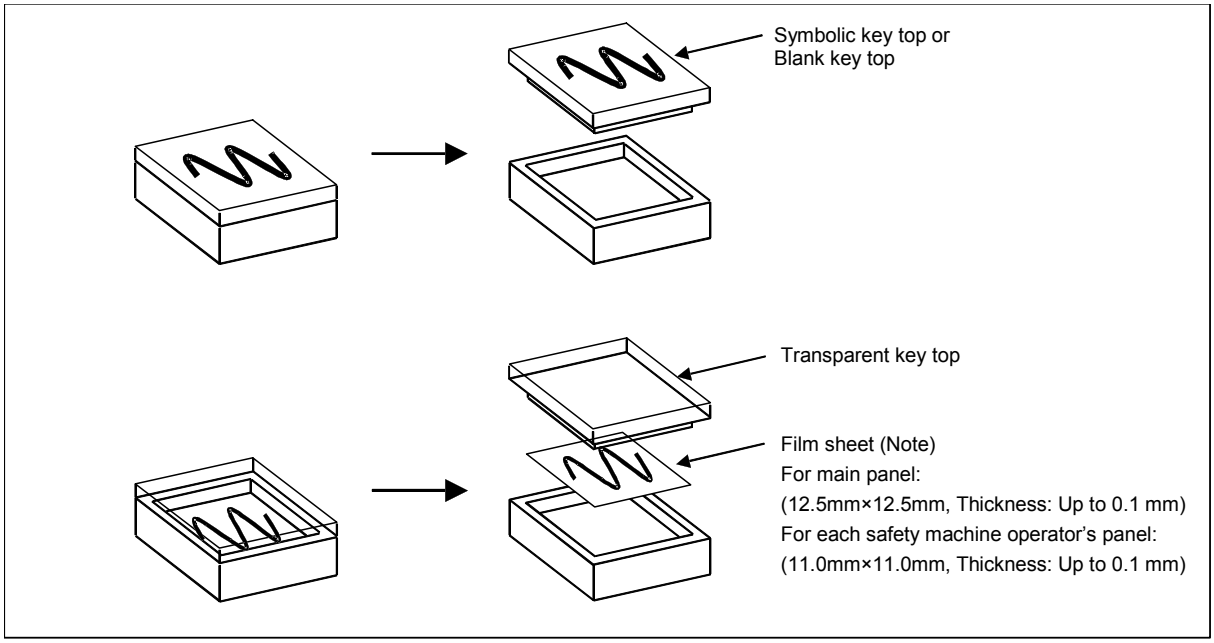

NOTE
1 Use the coolant-proof sheet in the environment which coolant is used for.
2 The size of film sheet changes with kinds of machine operator's panel.

© MyFANUC B5B0D8428C0144A78A5F4CA87F2C262E

8.8.11.3 Keyboard cover

Use the keyboard cover when using the system under environments with higher degree of dust or coolant.

Keyboard cover (A02B-0323-K041)

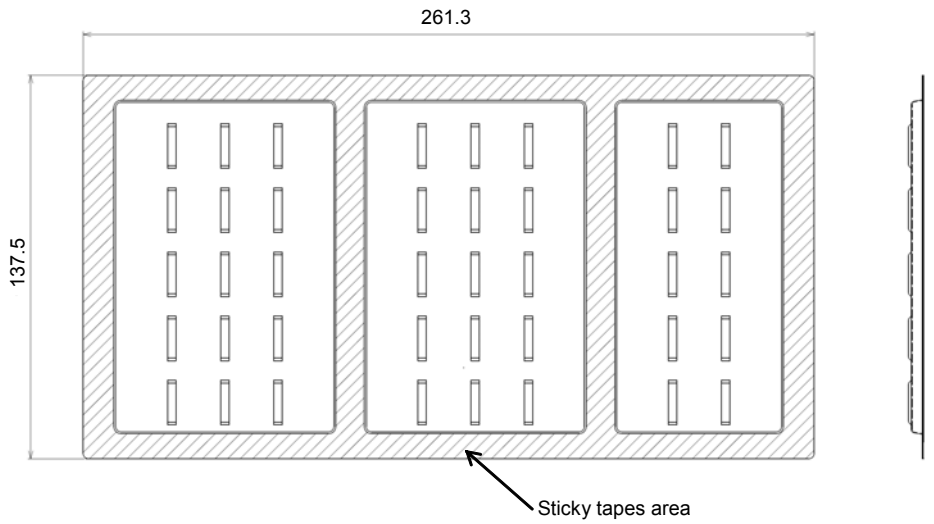

Keyboard cover (A02B-0323-K046)

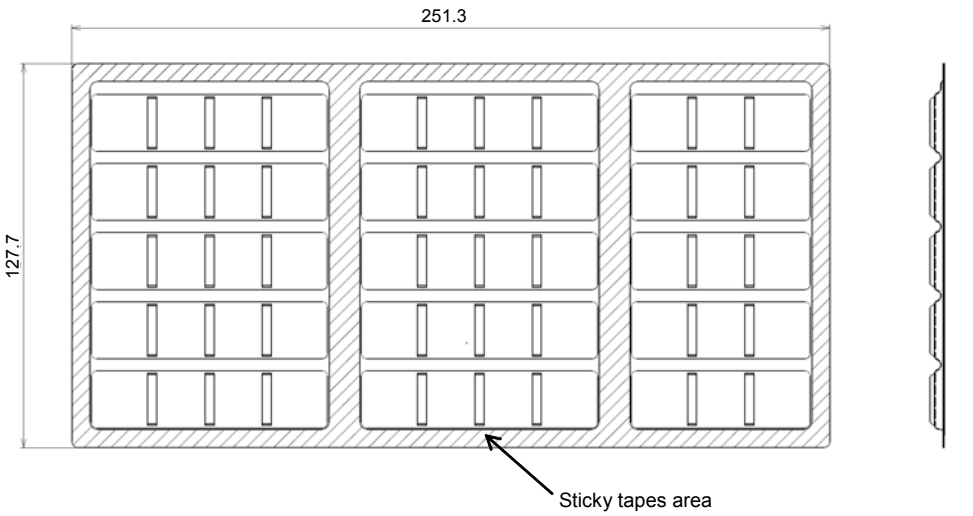

Unit: mm

How to setting

1 Clean the face of machine operator's panel.
2 Confirm the cover direction for setting.
3 Remove the all of sheets from sticky tapes on the outline of this cover.
4 Paste a keyboard cover so as to cover all key switches.

See Appendix F for more information.

> ⚠ **WARNING**
> Use the keyboard cover, when it may become impossible to operate key switch because the dust, cutting chips, etc. get in the crevice between keyboards.

© MyFANUC B5B0D8428C0144A78A5F4CA87F2C262E

8.8.12 DO (Output Signal) Error Detection

The DO driver of the main panel has the output protection function for each output signal. If an accident, such as connecting the cable to ground, causes an abnormal increase in the load current or in the driver temperature, a protection circuit, which is provided for each DO driver, is activated and keeps the DO signal in the OFF state. Even if this occurs, the CNC and I/O module continue operating without entering the alarm status, but the PMC is notified of the location of the error detected by the DO driver. This information can be checked on the PMC status screen or alarm processing can be performed in advance using a ladder to help error check and recovery.

Standard machine operator's panel main panel

When the above protection function is activated by the DO driver, the relevant error is output as a status alarm and transferred to the PMC system relay area. The following table lists system relay area information and corresponding DO data related to a status alarm. When an alarm data bit is set to "1", the DO driver corresponding to the bit detects an error. For details of the status alarm, see Subsection 7.3.3, "Status Alarm".

Information output to the system relay area and corresponding location where an error occurred

Information output to the system relay area						Faulty location
Type	Group number	PMC path	Slot number	Alarm information number (Intra-slot byte address)	Y address (DO address)	
0	0 to 23	1 to 5, 9	1	5	Yn+5	5th byte DO
				6	Yn+6	6th byte DO
				7	Yn+7	7th byte DO

Output values of "Group number", "PMC path", and "Y address" depends on unit connection and I/O address assignment.
Yn indicates the start address at allocation.

Description of "Alarm data" in the system relay area

Alarm data							
#7	#6	#5	#4	#3	#2	#1	#0
DO ground fault at bit 7	DO ground fault at bit 6	DO ground fault at bit 5	DO ground fault at bit 4	DO ground fault at bit 3	DO ground fault at bit 2	DO ground fault at bit 1	DO ground fault at bit 0

© MyFANUC B5B0D8428C0144A78A5F4CA87F2C262E

Each safety machine operator's panel

When the above protection function is activated by the DO driver, the relevant error is output as a status alarm and transferred to the PMC system relay area. The following table lists system relay area information and corresponding DO data related to a status alarm. When an alarm data bit is set to "1", the DO driver corresponding to the bit detects an error. For details of the status alarm, see Subsection 7.3.3, "Status Alarm".

Information output to the system relay area and corresponding location where an error occurred

Information output to the system relay area						Faulty location
Type	Group number	PMC path	Slot number	Alarm information number (Intra-slot byte address)	Y address (DO address)	
0	0 to 23	1 to 5, 9	1	5	Y1n+5	5th byte DO
				6	Y1n+6	6th byte DO
				7	Y1n+7	7th byte DO

Output values of "Group number", "PMC path", and "Y address" depends on unit connection and I/O address assignment.
Yn indicates the start address at allocation.

Description of "Alarm data" in the system relay area

Alarm data							
#7	#6	#5	#4	#3	#2	#1	#0
DO ground fault at bit 7	DO ground fault at bit 6	DO ground fault at bit 5	DO ground fault at bit 4	DO ground fault at bit 3	DO ground fault at bit 2	DO ground fault at bit 1	DO ground fault at bit 0

© MyFANUC B5B0D8428C0144A78A5F4CA87F2C262E

8.9 CONNECTION OF OPERATOR'S PANEL CONNECTION UNIT (SOURCE DO)

Two operator's panel connection units are available according to the number of I/Os.

Specification	Input	Output
A16B-2204-0260	96	64
A16B-2204-0261	64	32

8.9.1 Overall Connection Diagram

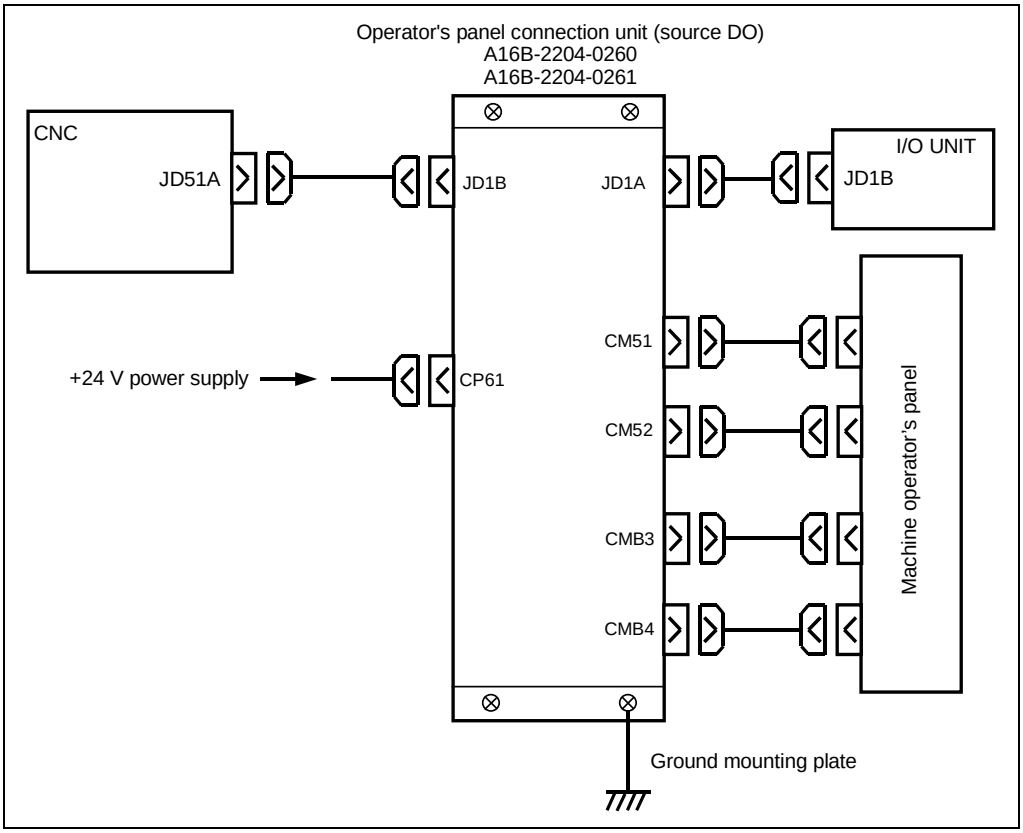

8.9.2 Power Connection

Provide the CP61 connector, shown below, with the power necessary for the printed circuit board operation and that for DI operation.

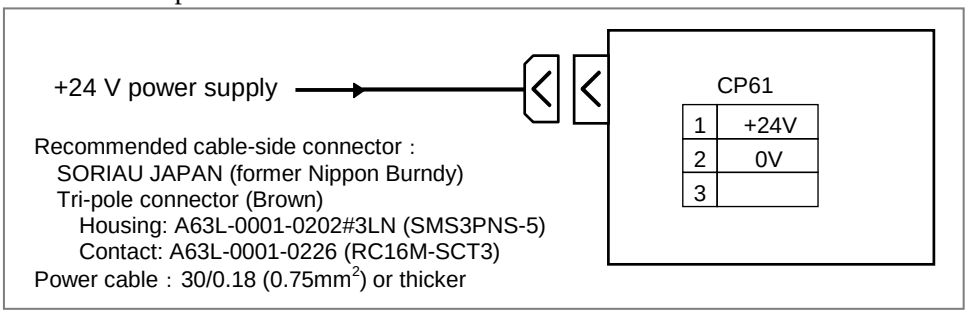

© MyFANUC B5B0D8428C0144A78A5F4CA87F2C262E

8.9.3 DI/DO Connector Pin Arrangement

CM51

33	DICOM1			01	Xm+0.0
34	Xm+0.2	19	Xm+0.1	02	Xm+0.3
35	Xm+0.5	20	Xm+0.4	03	Xm+0.6
36	Xm+1.0	21	Xm+0.7	04	Xm+1.1
37	Xm+1.3	22	Xm+1.2	05	Xm+1.4
38	Xm+1.6	23	Xm+1.5	06	Xm+1.7
39	Xm+2.1	24	Xm+2.0	07	Xm+2.2
40	Xm+2.4	25	Xm+2.3	08	Xm+2.5
41	Xm+2.6	26	Xm+3.0	09	Xm+2.7
42	Xm+3.1	27	Xm+3.3	10	Xm+3.2
43	Xm+3.4	28	Xm+3.6	11	Xm+3.5
44	Xm+3.7	29	Xm+4.1	12	Xm+4.0
45	Xm+4.2	30	Xm+4.4	13	Xm+4.3
46	Xm+4.5	31	Xm+4.7	14	Xm+4.6
47	Xm+5.0	32	Xm+5.2	15	Xm+5.1
48	Xm+5.3			16	Xm+5.4
49	Xm+5.5			17	Xm+5.6
50	Xm+5.7			18	24V

CM52

33	0V			01	Xm+6.0
34	Xm+6.2	19	Xm+6.1	02	Xm+6.3
35	Xm+6.5	20	Xm+6.4	03	Xm+6.6
36	Xm+7.0	21	Xm+6.7	04	Xm+7.1
37	Xm+7.3	22	Xm+7.2	05	Xm+7.4
38	Xm+7.6	23	Xm+7.5	06	Xm+7.7
39	Xm+8.1	24	Xm+8.0	07	Xm+8.2
40	Xm+8.4	25	Xm+8.3	08	Xm+8.5
41	Xm+8.6	26	Xm+9.0	09	Xm+8.7
42	Xm+9.1	27	Xm+9.3	10	Xm+9.2
43	Xm+9.4	28	Xm+9.6	11	Xm+9.5
44	Xm+9.7	29	Xm+10.1	12	Xm+10.0
45	Xm+10.2	30	Xm+10.4	13	Xm+10.3
46	Xm+10.5	31	Xm+10.7	14	Xm+10.6
47	Xm+11.0	32	Xm+11.2	15	Xm+11.1
48	Xm+11.3			16	Xm+11.4
49	Xm+11.5			17	Xm+11.6
50	Xm+11.7			18	24V

CMB3

33	0V			01	Yn+0.0
34	Yn+0.2	19	Yn+0.1	02	Yn+0.3
35	Yn+0.5	20	Yn+0.4	03	Yn+0.6
36	Yn+1.0	21	Yn+0.7	04	Yn+1.1
37	Yn+1.3	22	Yn+1.2	05	Yn+1.4
38	Yn+1.6	23	Yn+1.5	06	Yn+1.7
39	Yn+2.1	24	Yn+2.0	07	Yn+2.2
40	Yn+2.4	25	Yn+2.3	08	Yn+2.5
41	Yn+2.6	26	Yn+3.0	09	Yn+2.7
42	Yn+3.1	27	Yn+3.3	10	Yn+3.2
43	Yn+3.4	28	Yn+3.6	11	Yn+3.5
44	Yn+3.7	29	Yn+4.1	12	Yn+4.0
45	Yn+4.2	30	Yn+4.4	13	Yn+4.3
46	Yn+4.5	31	Yn+4.7	14	Yn+4.6
47	Yn+5.0	32	Yn+5.2	15	Yn+5.1
48	Yn+5.3			16	Yn+5.4
49	Yn+5.5			17	DOCOM
50	DOCOM			18	DICOM2

CMB4

14	Yn+6.0			01	Yn+6.1
15	Yn+6.3	8	Yn+6.2	02	Yn+6.4
16	Yn+6.6	9	Yn+6.5	03	Yn+6.7
17	Yn+7.1	10	Yn+7.0	04	Yn+7.2
18	Yn+7.4	11	Yn+7.3	05	Yn+7.5
19	Yn+7.7	12	Yn+7.6	06	Yn+5.6
20	DOCOM	13	Yn+5.7	07	0V

(Note)
1. Xm+8 through Xm+11 and Yn+4 through Yn+7 can be used only for the A16B-2204-0260.
2. Connector CMB4 is not mounted when A16B-2204-0261 is selected.

NOTE

CM51, CM52, CMB3: Recommended cable-side connector: A63L-0001-0134#01
(Connector: HONDA MR-50F, Case: HONDA MR-50L)
Recommended wire material: A66L-0001-0042
(7/0.18, 50 pins)

CMB4: Recommended cable-side connector: A63L-0001-0134#02
(Connector: HONDA MR-20F, Case: HONDA MR-20L)
Recommended wire material: A66L-0001-0041
(7/0.18, 20 pins)

⚠ CAUTION

An output DC voltage of +24 V at CM51 (18) and CM52 (18) is for DI signals. Do not supply 24 V DC to these pins from the outside.

© MyFANUC B5B0D8428C0144A78A5F4CA87F2C262E

8.9.4 DI (Input Signal) Connection

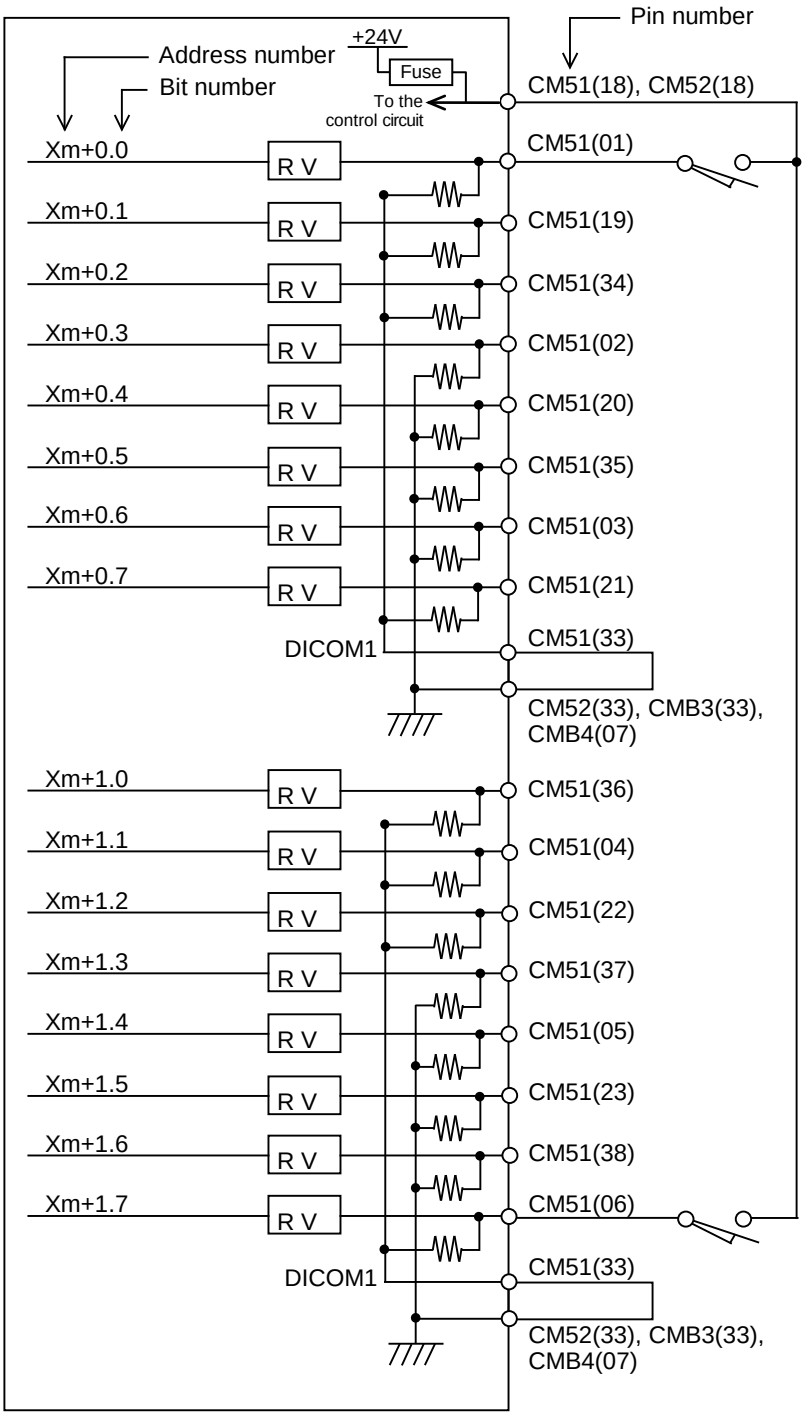

© MyFANUC B5B0D8428C0144A78A5F4CA87F2C262E

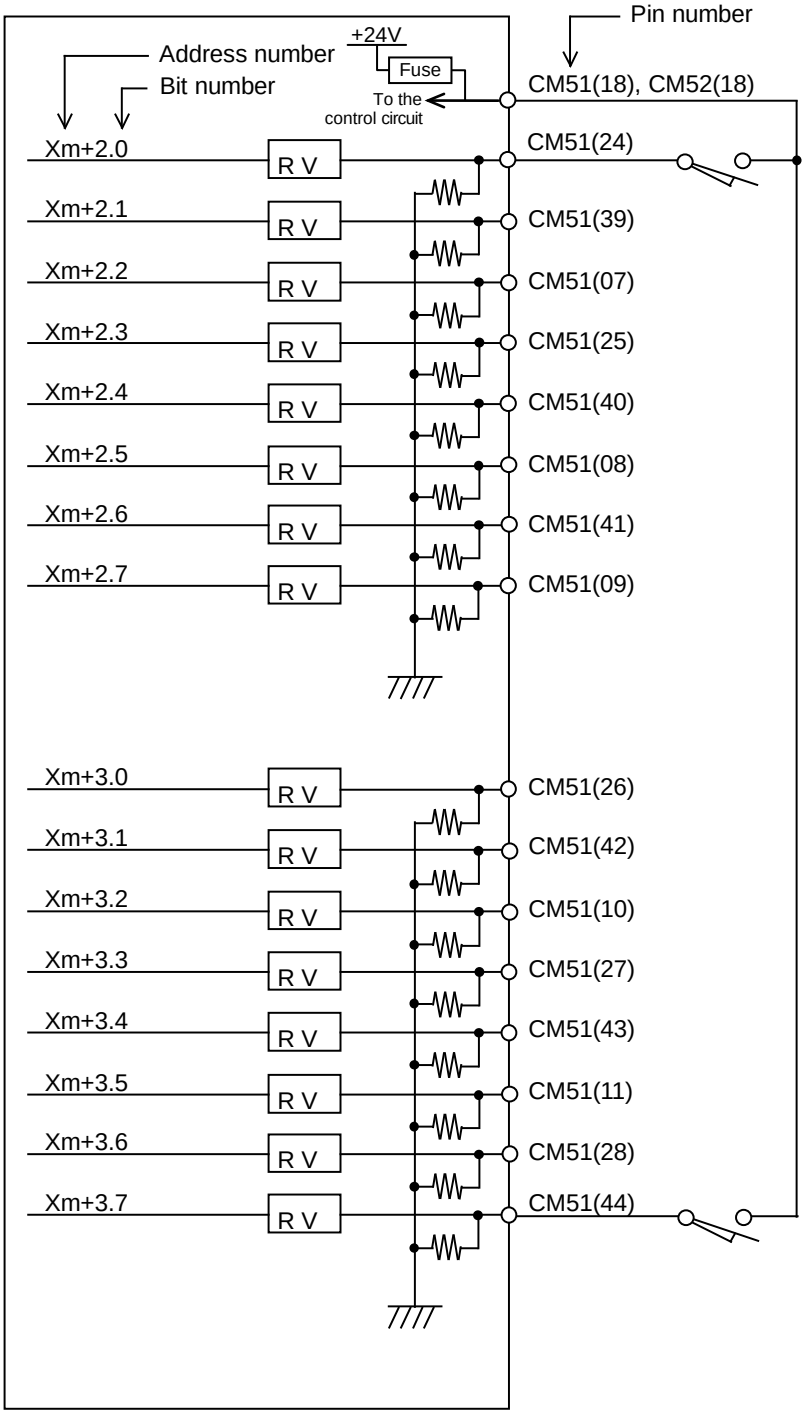

© MyFANUC B5B0D8428C0144A78A5F4CA87F2C262E

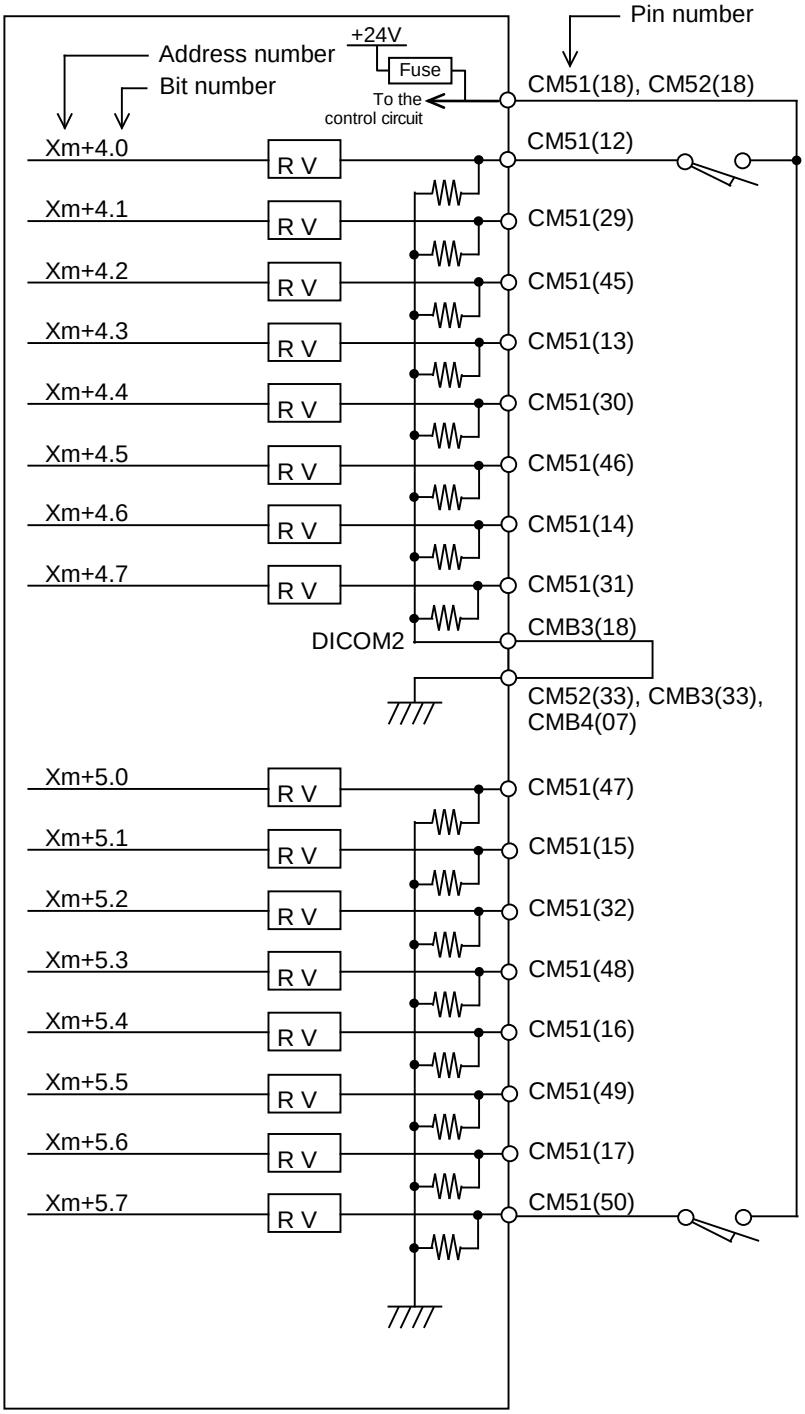

© MyFANUC B5B0D8428C0144A78A5F4CA87F2C262E

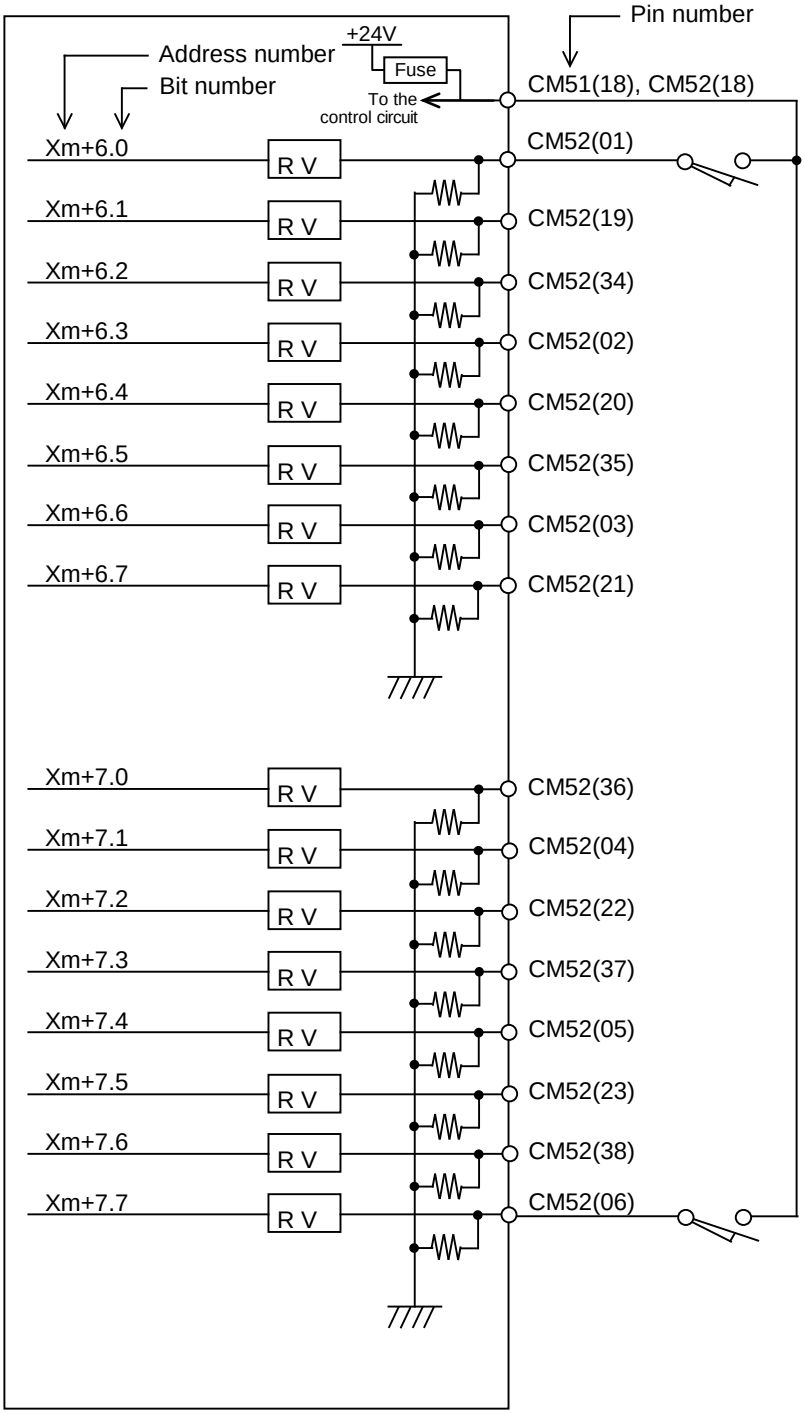

© MyFANUC B5B0D8428C0144A78A5F4CA87F2C262E

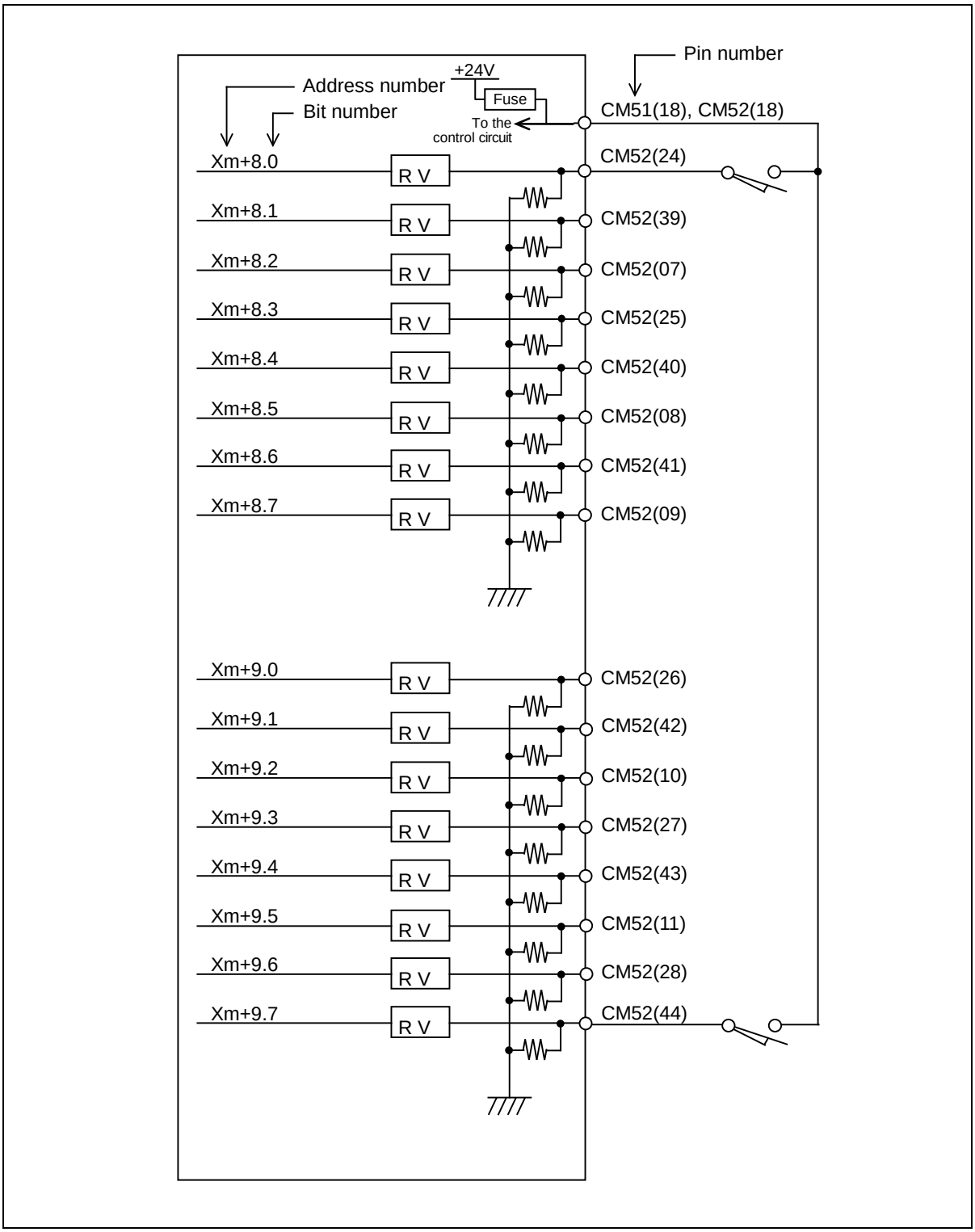

© MyFANUC B5B0D8428C0144A78A5F4CA87F2C262E

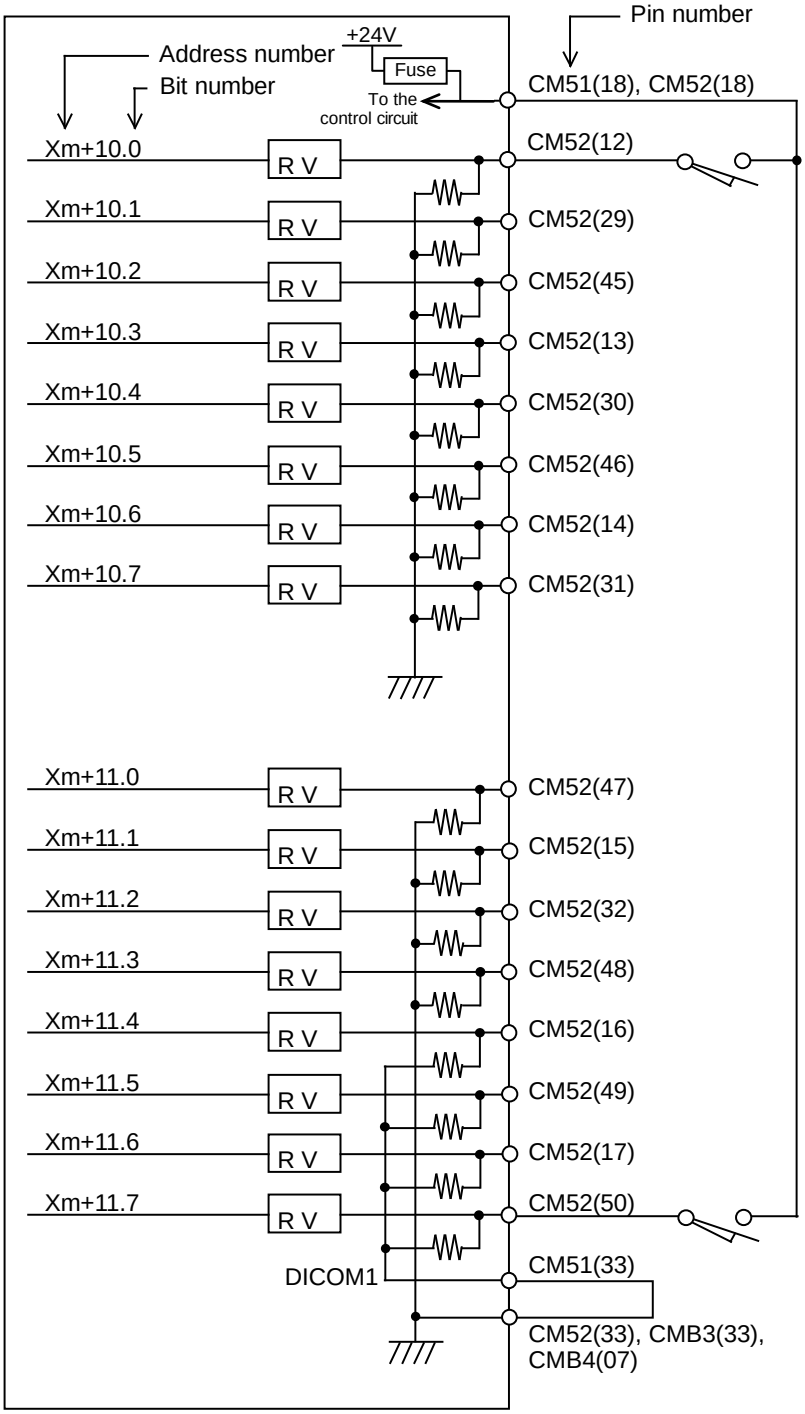

© MyFANUC B5B0D8428C0144A78A5F4CA87F2C262E

NOTE

Xm+0.0 through Xm+0.2, Xm+0.7, Xm+1.0 through Xm+1.2, Xm+1.7, Xm+11.4 through Xm+11.7, and Xm+4.0 through Xm+4.7 are DI pins for which a common voltage can be selected. That is, by connecting the DICOM1 CM51(33) or DICOM2 CMB3(18) pin to the +24 V power supply, a DI signal can be input with its logical state reversed. If, however, a cable is connected to ground, it has the same effect as inputting an ON state DI signal. To prevent this from occurring, the connection of the DICOM1 CM51 (33) and DICOM2 CMB3(18) pins to the 0 V power supply is recommended whereever possible.
For the unconnected pins at the addresses for which the common voltage is fixed, the input is “0”. For the unconnected pins at the addresses for which a common voltage can be selected, the input is “0” when the DICOMx common select pin is connected to the 0 V power supply or “1” when it is connected to the +24 V power supply. Connect DICOM1 and DICOM2 when used. When addresses Xm+0.0 through Xm+0.2, Xm+0.7, Xm+1.0 through Xm+1.2, Xm+1.7, Xm+11.4 through Xm+11.7, and Xm+4.0 through Xm+4.7 are not used, connect DICOM1 and DICOM2 to the 0 V power supply.

Common voltage for DI

Address	Common voltage
Xm	Bit 0, 1, 2, and 7 can be selected with DICOM1. The others cannot be selected.
Xm+1	Bit 0, 1, 2, and 7 can be selected with DICOM1. The others cannot be selected.
Xm+2	Cannot be selected.
Xm+3	Cannot be selected.
Xm+4	Can be selected with DICOM2
Xm+5	Cannot be selected.
Xm+6	Cannot be selected.
Xm+7	Cannot be selected.
Xm+8	Cannot be selected.
Xm+9	Cannot be selected.
Xm+10	Cannot be selected.
Xm+11	Bit 4, 5, 6, and 7 can be selected with DICOM1. The others cannot be selected.

⚠ **CAUTION**

An output DC voltage of +24 V at CM51 (18) and CM52 (18) is for DI signals. Do not supply 24 V DC to these pins from the outside.

© MyFANUC B5B0D8428C0144A78A5F4CA87F2C262E

8.9.5 DO (Output Signal) Connection

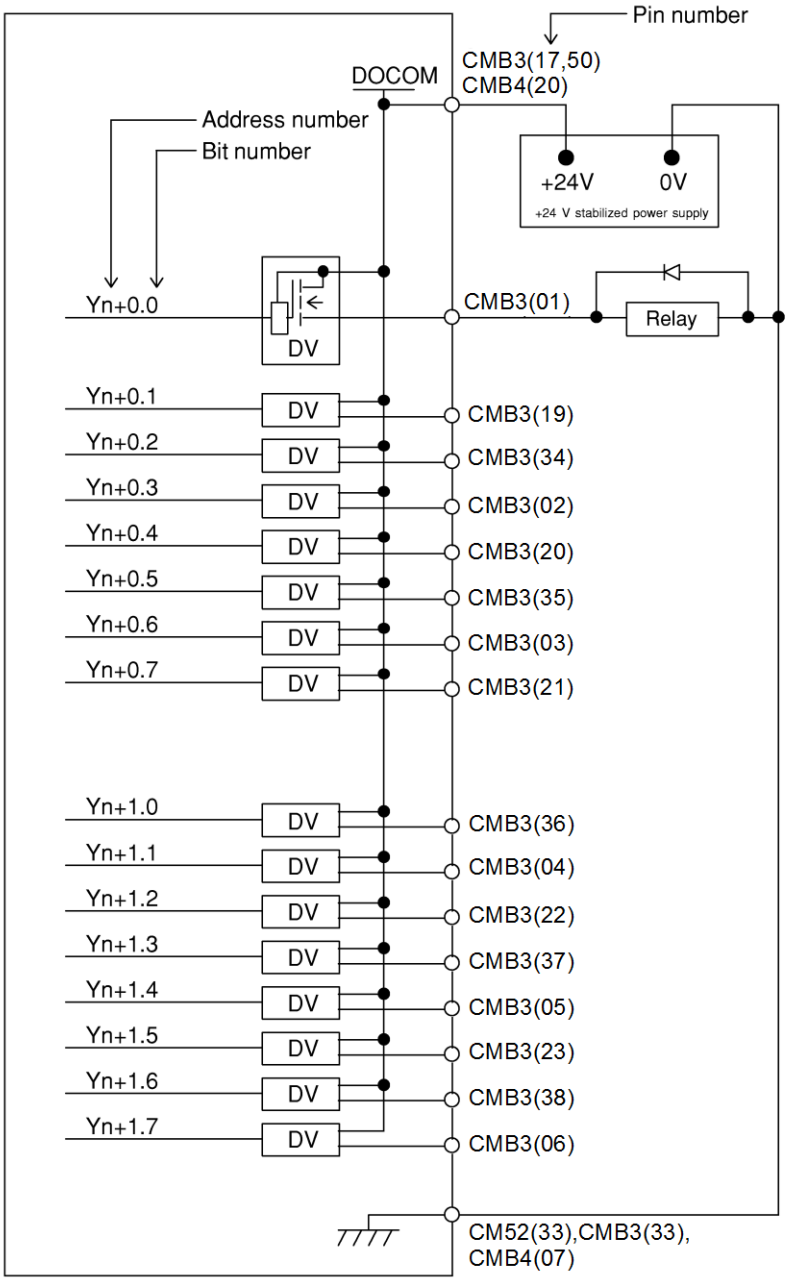

© MyFANUC B5B0D8428C0144A78A5F4CA87F2C262E

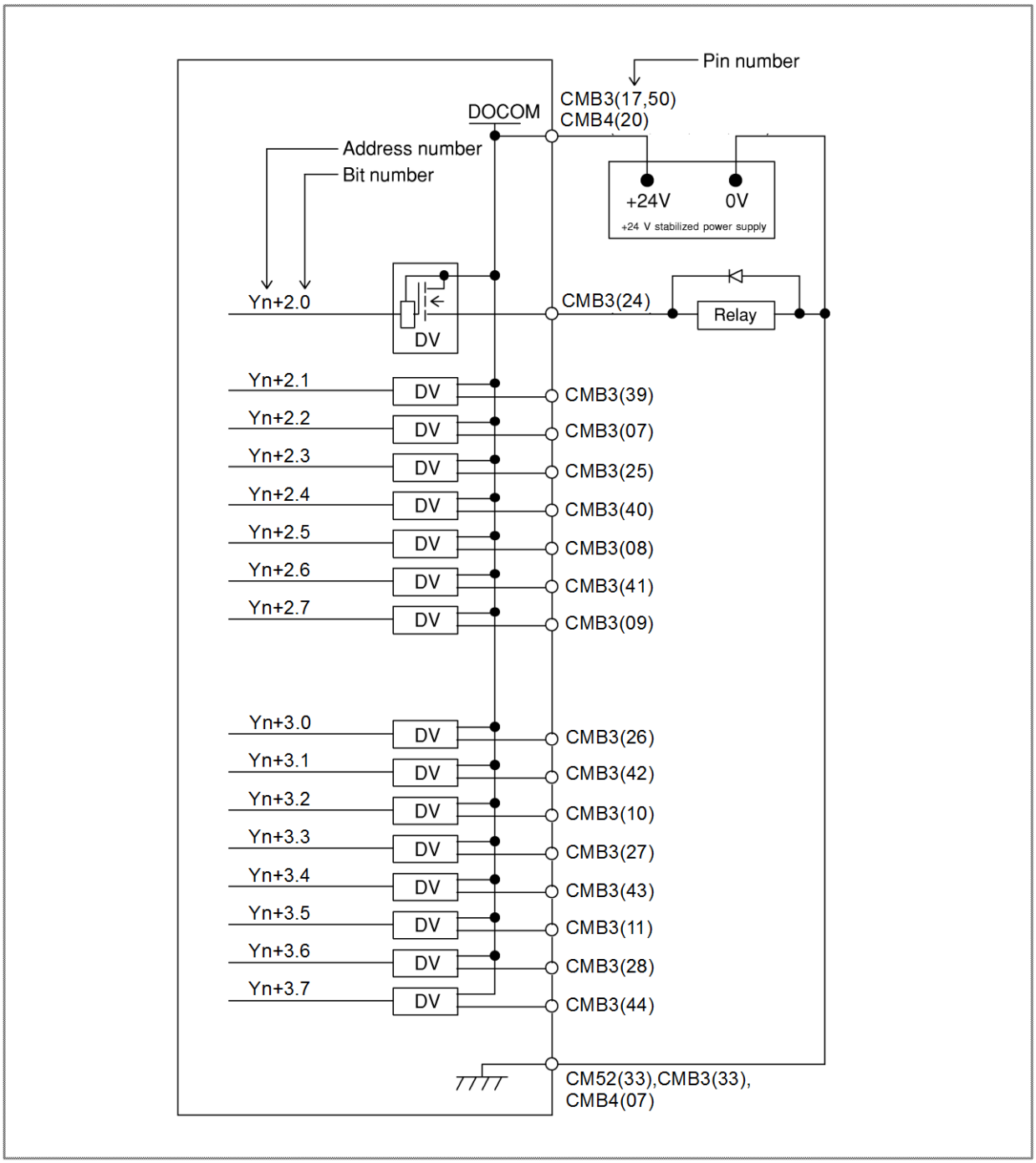

© MyFANUC B5B0D8428C0144A78A5F4CA87F2C262E

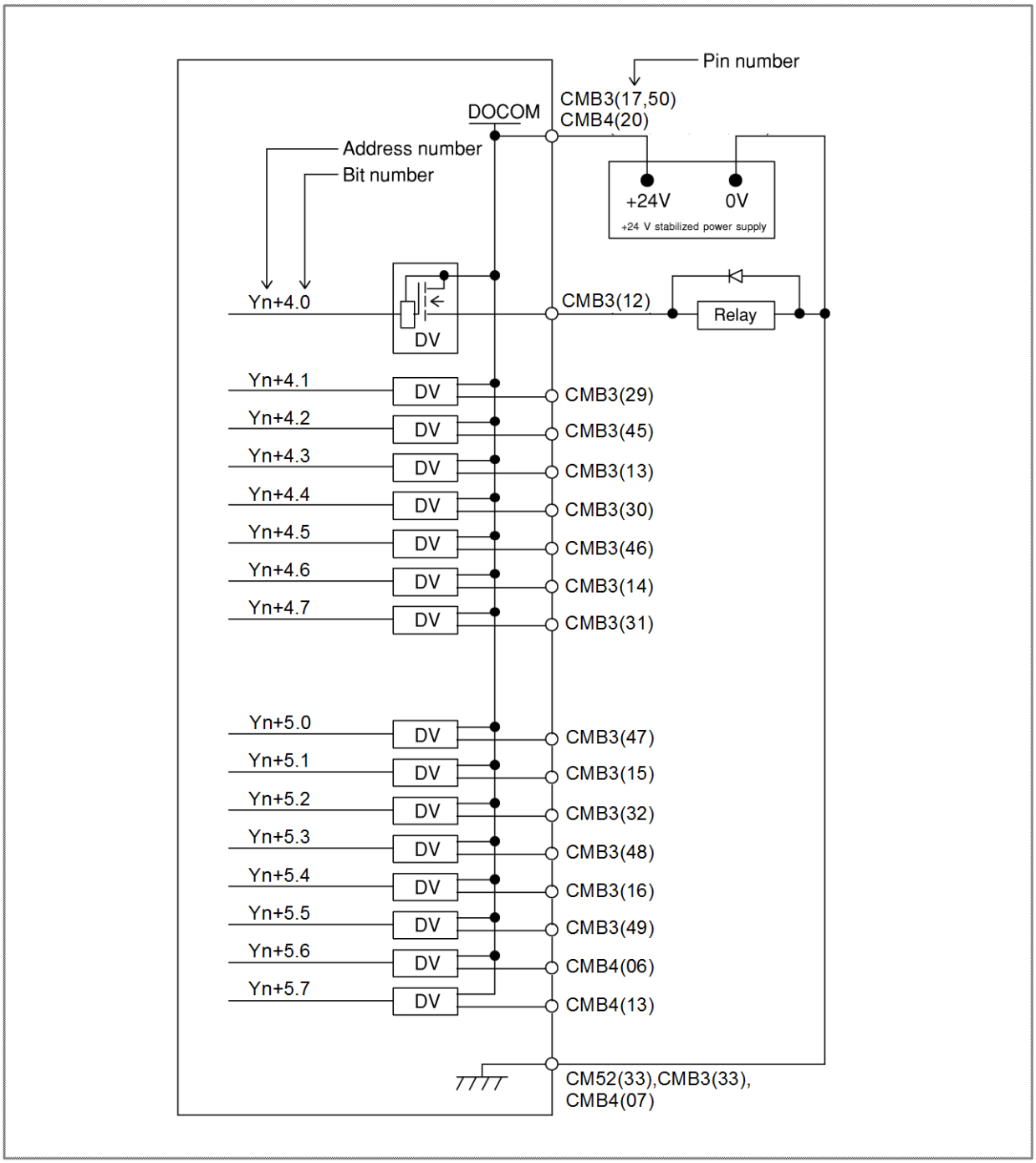

© MyFANUC B5B0D8428C0144A78A5F4CA87F2C262E

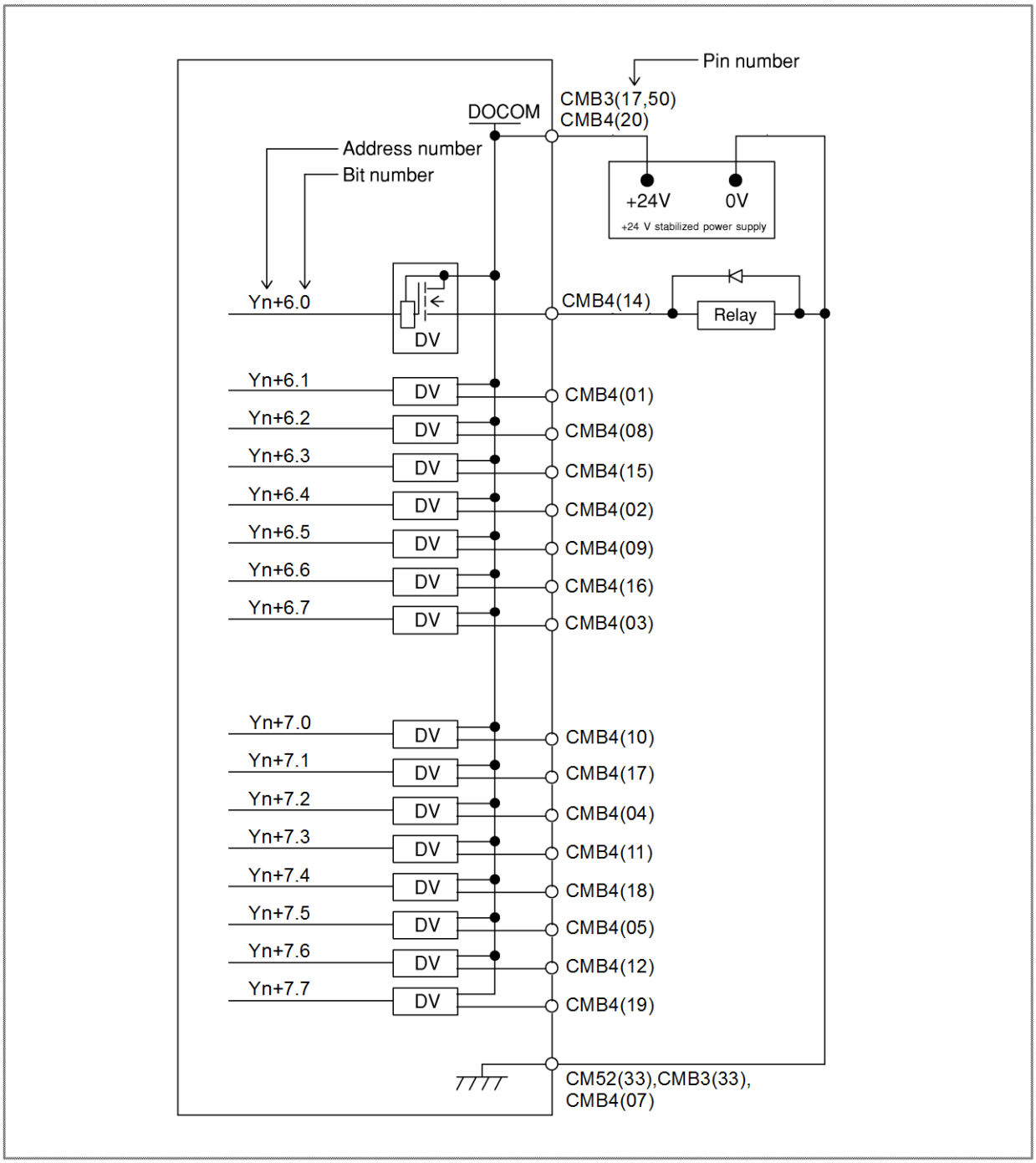

© MyFANUC B5B0D8428C0144A78A5F4CA87F2C262E

8.9.6 External View

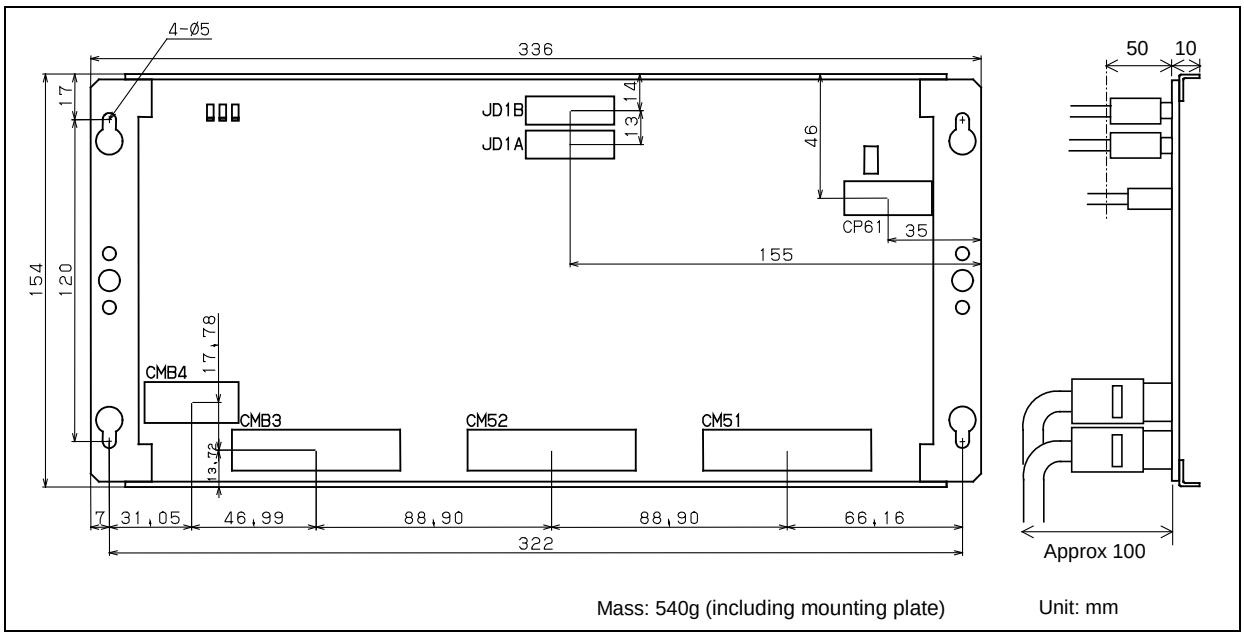

© MyFANUC B5B0D8428C0144A78A5F4CA87F2C262E

8.9.7 Specifications

Installation specifications

Install this unit in a fully enclosed cabinet.
For other installation conditions, conform to the CNC installation conditions.

Specifications of operator's panel connection unit (source DO)

Item	Ordering specifications	Specification
Operator's panel connection unit (source DO)	A16B-2204-0260	DI : 96 points DO : 64 points
Operator's panel connection unit (source DO)	A16B-2204-0261	DI : 64 points DO : 32 points
Fuse (spare parts)	A02B-0163-K111	3.2A

Power supply rating

Supply voltage	Power supply rating	Remarks
24 VDC ±10% supplied from the power supply connector CP61. The allowance of ±10% should include instantaneous voltage and ripple voltage.	0.5A+7.3mA×DI	DI = number of DI points in the ON state

As a guideline for heat dissipation, assume [power supply rating 24 (W)].

NOTE
1 The above power supply rating does not include that to be input to DOCOM for DO output.
2 To connect an optical adapter for the I/O Link *i* to both connectors JD1A and JD1B, the above power supply rating + 70 mA is required.

DI (input signal specifications)

Contact rating	30 VDC, 16 mA or more
Leakage current between contacts when opened	1 mA or less (26.4 V)
Voltage decrease between contacts when closed	2 V or less (including a cable voltage decrease)
Delay time	The receiver delay time is 22 ms (maximum). In addition, [I/O Link transfer time between CNC and this unit] and [ladder scan period (depending on CNC)] must be considered.

DO (output signal specifications)

Maximum load current when ON	200 mA or less including momentary current per signal. 6.0 A or less for DO signals in all (For A16B-2204-0260) 4.0 A or less for DO signals in all (For A16B-2204-0261)
Saturation voltage when ON	1 V (maximum) when the load current is 200 mA
Withstand voltage	24 V +20% or less including momentary variations
Leakage current when OFF	20μA or less
Delay time	The driver delay time is 50 μs (maximum). In addition, [I/O Link transfer time between CNC and this unit] and [ladder scan period (depending on CNC)] must be considered.

NOTE
Be sure to connect all DO power supply pins DOCOM. The maximum current that is allowed to pass to each DOCOM terminal pin is 2.0 A, and care must be paid to prevent the sum of the load current from exceeding the current that is allowed to pass via the DOCOM terminal.

© MyFANUC B5B0D8428C0144A78A5F4CA87F2C262E

8.9.8 Other Notes

Address allocation

For this unit, I/O addresses are mapped as follows.

For A16B-2204-0260

DI space map

Xm_1	Input signal	Slot 1
$Xm_1 + 1$		
$Xm_1 + 2$		
$Xm_1 + 3$		
$Xm_1 + 4$		
$Xm_1 + 5$		
$Xm_1 + 6$		
$Xm_1 + 7$		
$Xm_1 + 8$		
$Xm_1 + 9$		
$Xm_1 + 10$		
$Xm_1 + 11$		

DO space map

Yn_1	Output signal	Slot 1
$Yn_1 + 1$		
$Yn_1 + 2$		
$Yn_1 + 3$		
$Yn_1 + 4$		
$Yn_1 + 5$		
$Yn_1 + 6$		
$Yn_1 + 7$		

For A16B-2204-0261

DI space map

Xm_1	Input signal	Slot 1
$Xm_1 + 1$		
$Xm_1 + 2$		
$Xm_1 + 3$		
$Xm_1 + 4$		
$Xm_1 + 5$		
$Xm_1 + 6$		
$Xm_1 + 7$		

DO space map

Yn_1	Output signal	Slot 1
$Yn_1 + 1$		
$Yn_1 + 2$		
$Yn_1 + 3$		

Xm_1 and Yn_1 indicate the start address at allocation.

Basically, for this unit, allocate 12-byte DI addresses to slot 1 and 8-byte DO addresses to slot 1 for A16B-2204-0260, or 8-byte DI addresses to slot 1 and 4-byte DO addresses to slot 1 for A16B-2204-0261.

ON/OFF of the power supply (DO common) for DO signals (output signals)

For ON/OFF of the power supply pin (DOCOM) for the DO signals (output signals), see Subsection 8.2.4.4.

Parallel DO (output signal) connection

For parallel connections of DO signals (output signals), see Subsection 8.2.4.4.

DO (output signal) alarm detection

The DO driver of this unit capable of detecting an overcurrent and measuring its own temperature. If an accident, such as the connecting of the cable to ground, causes an abnormal increase in the load current or in the driver temperature, a protection circuit, which is provided for each DO driver, is activated and keeps the DO signal for the relevant 1 byte in the OFF state until the cause of the problem is eliminated. Even if this occurs, the CNC and I/O continues operating without entering the alarm status, but the DO driver which detected the error can be checked. If a DO error occurs, this information can be checked on the CNC DGN screen or alarm processing can be performed in advance using a ladder to help error check and recovery.

A DO error such as a ground fault is detected for each point. This DO error is transferred to the PMC system relay area as a status alarm. The following table lists system relay area information and corresponding DO data related to a status alarm. When an alarm data bit is set to “1”, the DO driver corresponding to the bit detects an error. Also see Subsection 7.3.3, “Status Alarm”.

© MyFANUC B5B0D8428C0144A78A5F4CA87F2C262E

Information output to the system relay area and corresponding location where an error occurred

For A16B-2204-0260

Information output to the system relay area						Faulty location
Type	Group number	PMC path	Slot number	Alarm information number (Intra-slot byte address)	Y address (DO address)	
0	0 to 23	1 to 5, 9	1	0	Yn	0th byte DO
				1	Yn+1	1st byte DO
				2	Yn+2	2nd byte DO
				3	Yn+3	3rd byte DO
				4	Yn+4	4th byte DO
				5	Yn+5	5th byte DO
				6	Yn+6	6th byte DO
				7	Yn+7	7th byte DO

For A16B-2204-0261

Information output to the system relay area						Faulty location
Type	Group number	PMC path	Slot number	Alarm information number (Intra-slot byte address)	Y address (DO address)	
0	0 to 23	1 to 5, 9	1	0	Yn	0th byte DO
				1	Yn+1	1st byte DO
				2	Yn+2	2nd byte DO
				3	Yn+3	3rd byte DO

Output values of “Group number”, “PMC path”, and “Y address” depends on unit connection and I/O address assignment.
Yn indicates the start address at allocation.

Description of “Alarm data” in the system relay area

Alarm data							
#7	#6	#5	#4	#3	#2	#1	#0
DO ground fault at bit 7	DO ground fault at bit 6	DO ground fault at bit 5	DO ground fault at bit 4	DO ground fault at bit 3	DO ground fault at bit 2	DO ground fault at bit 1	DO ground fault at bit 0

© MyFANUC B5B0D8428C0144A78A5F4CA87F2C262E

8.10 CONNECTION OF SAFETY IO UNIT

8.10.1 Overview

Safety IO unit is a unit which can be used only with I/O Link *i*, and has the interface to connect duplicated input and output signals from the safety circuit when the Dual Check Safety (DCS) function is used.

> ⚠ **CAUTION**
> Safety IO unit is a unit dedicated to I/O Link *i*. It cannot be used for I/O Link connection.

8.10.2 Total Connection Diagram

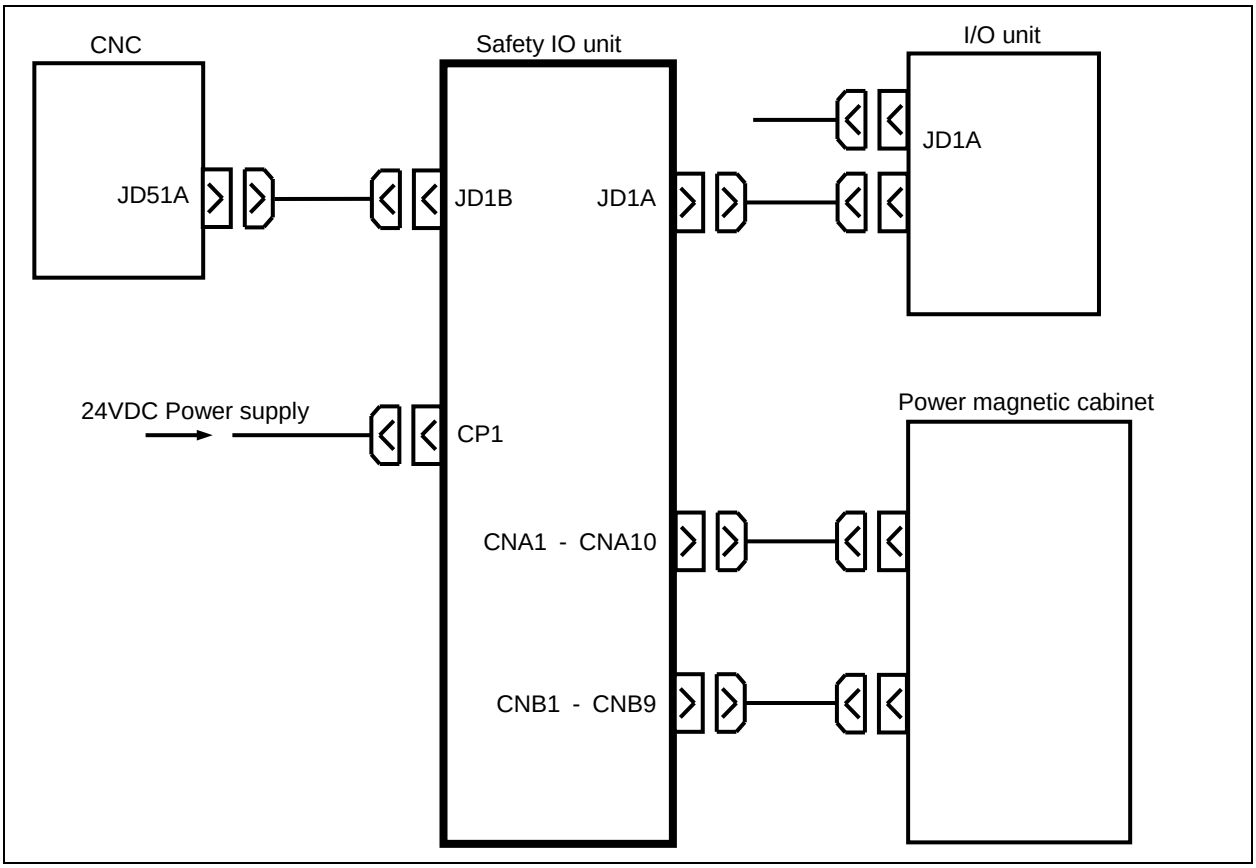

8.10.3 Power Supply Connection

The power required for the operation of this safety IO unit and for DI/DO must be supplied to connector CP1 in the following figure.

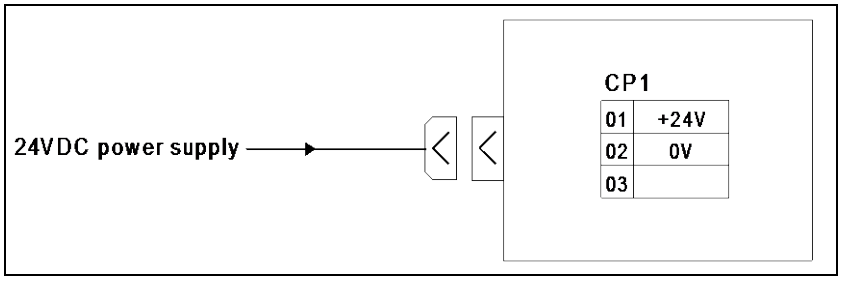

© MyFANUC B5B0D8428C0144A78A5F4CA87F2C262E

8.10.4 I/O Link *i* Connection

For I/O Link *i* connection, see Section 7.2.

8.10.5 DI/DO Address

Safety IO unit must be used in “safety I/O mode”, and allocated to two continuous groups of I/O Link ***i***. In I/O Link ***i***, allocate 6-byte DI address and 2-byte DO address to slot 1 of 1st group as PMC DI/DO, and allocate 4-byte DI address and 2-byte DO address to slot 1 of 2nd group as DCSPMC DI/DO.
DI/DO addresses are as follows.

1st group (PMC DI/DO) address

Address	bit 7	bit 6	bit 5	bit 4	bit 3	bit 2	bit 1	bit 0	
X1m+0		MONI				MONI			DI: 6-byte
X1m+1		MONI				MONI			
X1m+2									
X1m+3									
X1m+4	MONI	MONI	MONI	MONI	MONI	MONI	MONI		
X1m+5	MONI	MONI	MONI	MONI	MONI	MONI	MONI	MONI	
Y1n+0									DO: 2-byte
Y1n+1									

2nd group (DCSPMC DI/DO) address

Address	bit 7	bit 6	bit 5	bit 4	bit 3	bit 2	bit 1	bit 0	
X2m+0									DI: 4-byte
X2m+1									
X2m+2									
X2m+3									
Y2n+0									DO: 2-byte
Y2n+1									

NOTE
1 DI shaded by ■ cannot use.
2 DI written “MONI” is signal to monitor DO status. So it cannot be used as an input signal from machine side.

© MyFANUC B5B0D8428C0144A78A5F4CA87F2C262E

8.10.6 Pin Assignment of DI/DO

CNA1

	B	A
01	X1m+0.0	0V
02	X1m+0.1	X2m+0.0
03	Y1n+0.0 (X1m+0.2)	
04	+24V	+24V

CNA2

	B	A
01		0V
02	X1m+2.0	X2m+2.0
03		+24V

CNA3

	B	A
01	X1m+2.6	0V
02	X2m+2.6	+24V
03	+24V	+24V

CNA4

	B	A
01	X1m+0.4	0V
02	X1m+0.5	X2m+0.4
03	Y1n+1.0 (X1m+0.6)	
04	+24V	+24V

CNA5

	B	A
01		0V
02	X1m+2.1	X2m+2.1
03		+24V

CNA6

	B	A
01	X1m+2.7	0V
02	X2m+2.7	+24V
03	+24V	+24V

CNA7

	B	A
01	X1m+1.0	0V
02	X1m+1.1	X2m+1.0
03	Y1n+0.1 (X1m+1.2)	
04	+24V	+24V

CNA8

	B	A
01	X1m+2.2	0V
02	X1m+2.3	X2m+2.2
03	X1m+2.4	X2m+2.3
04	Y2n+1.2 (X1m+4.1)	X2m+2.4
05	+24V	+24V
06	+24V	+24V

CNA9

	B	A
01	X1m+2.5	0V
02	Y1n+0.5 (X1m+4.2)	X2m+2.5
03	+24V	+24V

CNA10

	B	A
01	X1m+1.4	0V
02	X1m+1.5	X2m+1.4
03	Y1n+1.1 (X1m+1.6)	
04	+24V	+24V

CNB1

	B	A
01	Y1n+1.4 (X1m+5.0)	0V
02	X1m+3.4	X2m+3.4
03	Y2n+1.4 (X1m+5.1)	+24V

CNB2

	B	A
01	X1m+3.5	0V
02	Y1n+1.5 (X1m+5.2)	Y2n+1.5 (X1m+5.3)
03	X2m+3.5	+24V

CNB3

	B	A
01	X1m+3.6	0V
02	Y1n+1.6 (X1m+5.4)	Y2n+1.6 (X1m+5.5)
03	X2m+3.6	+24V

CNB4

	B	A
01	X1m+3.0	0V
02	X2m+3.0	+24V
03	+24V	+24V

CNB5

	B	A
01	X1m+3.1	0V
02	X2m+3.1	+24V
03	+24V	+24V

CNB6

	B	A
01	X1m+3.2	0V
02	X2m+3.2	+24V
03	+24V	+24V

CNB7

	B	A
01	X1m+1.7	0V
02	Y1n+0.2 (X1m+4.3)	Y2n+0.2 (X1m+5.6)
03	X2m+1.7	+24V

CNB8

	B	A
01	X1m+3.3	0V
02	Y1n+1.3 (X1m+4.5)	Y2n+1.3 (X1m+5.7)
03	X2m+3.3	+24V

CNB9

	B	A
01	0V	0V
02	Y2n+0.3 (X1m+4.7)	Y1n+0.3 (X1m+4.4)
03	Y1n+1.2 (X1m+4.6)	0V

- X1m, Y1n: PMC DI/DO
- X2m, Y2n: DCSPMC DI/DO
- Signals in ( ) are DI to monitor DO status. When DO is ON, DI in ( ) is “1”. When DO is OFF, DI in ( ) is “0”.

© MyFANUC B5B0D8428C0144A78A5F4CA87F2C262E

8.10.7 DI/DO Connection

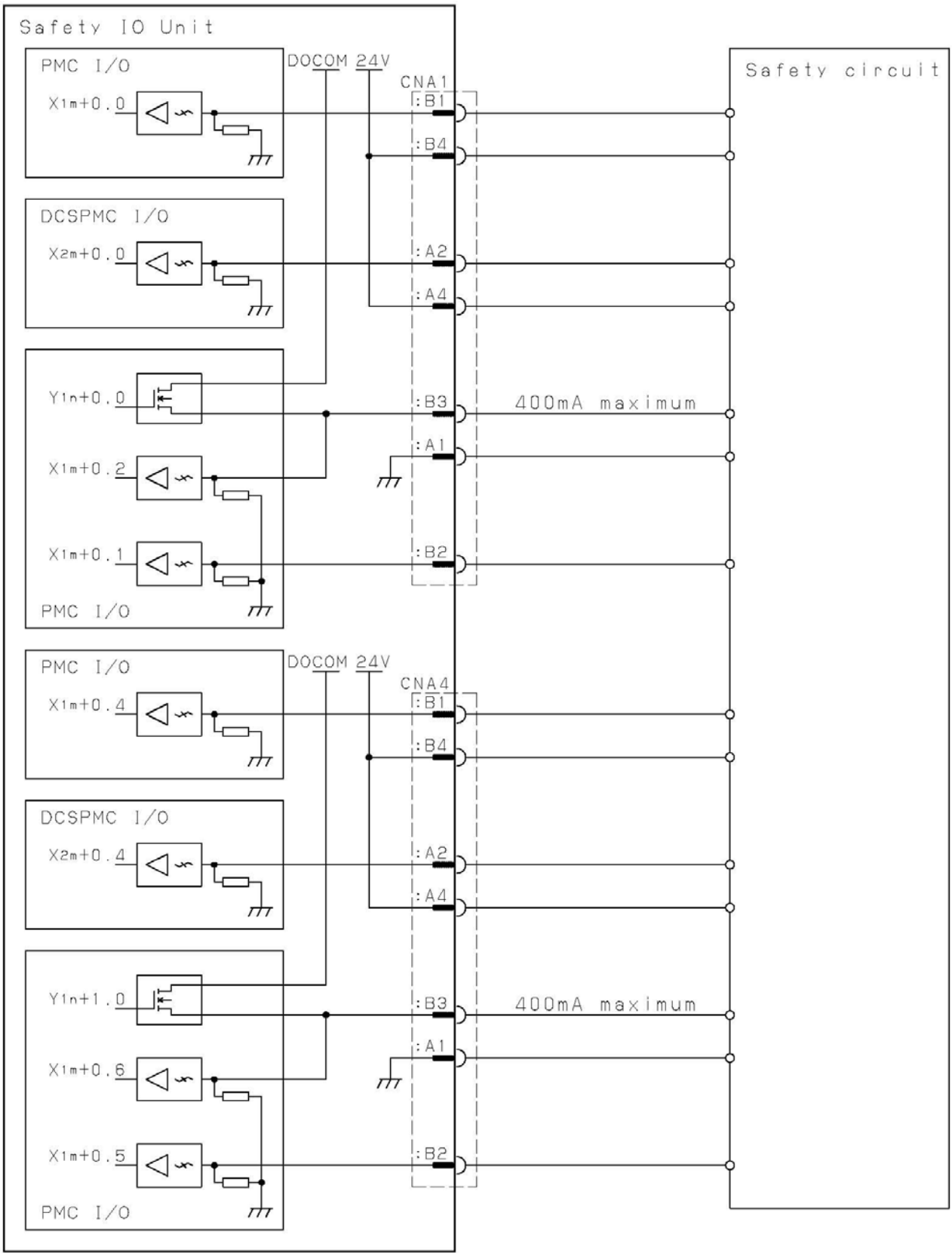

Duplicated input and output signals are connected to Safety IO Unit as PMC I/O and DCSPMC I/O.

© MyFANUC B5B0D8428C0144A78A5F4CA87F2C262E

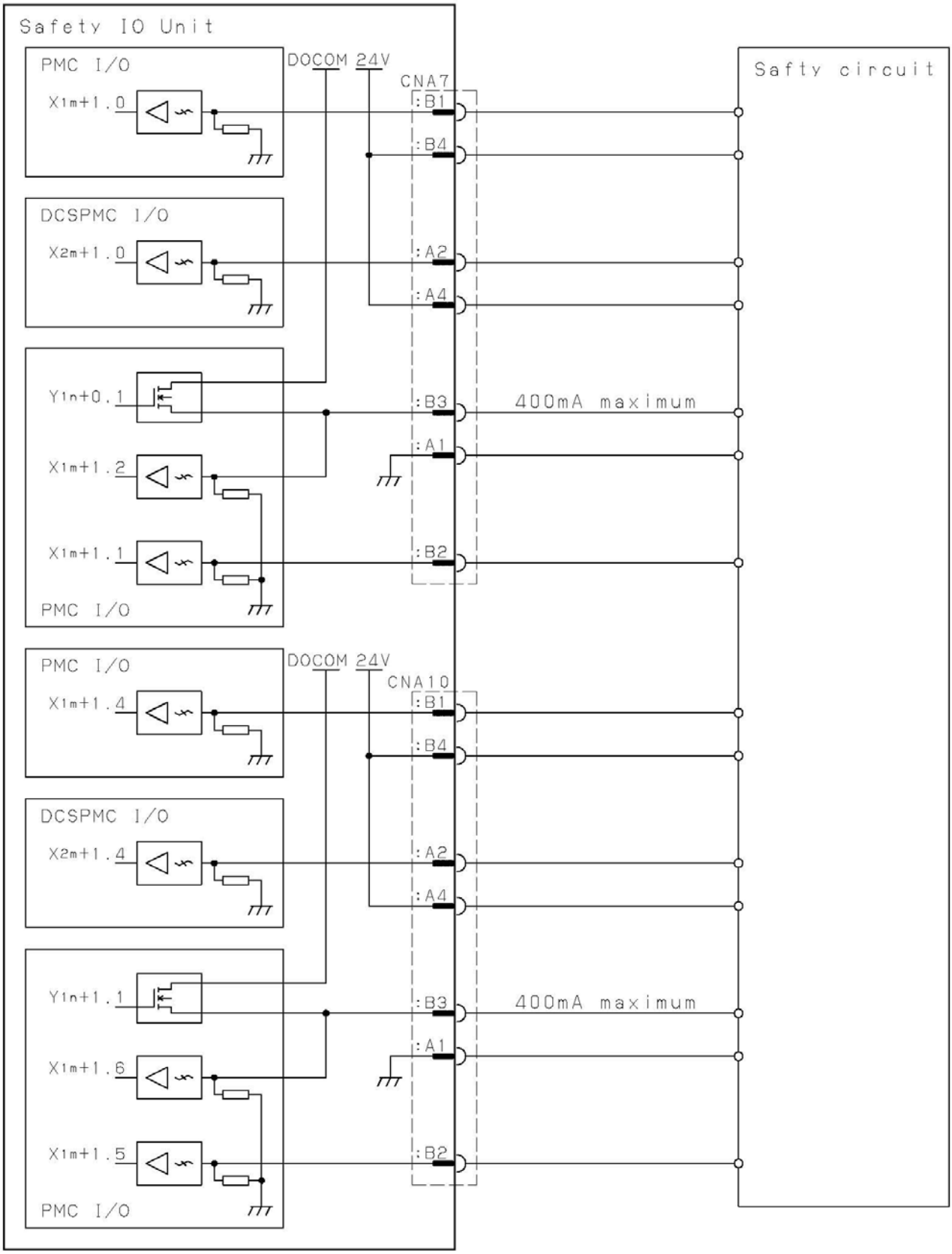

Duplicated input and output signals are connected to Safety IO Unit as PMC I/O and DCSPMC I/O.

© MyFANUC B5B0D8428C0144A78A5F4CA87F2C262E

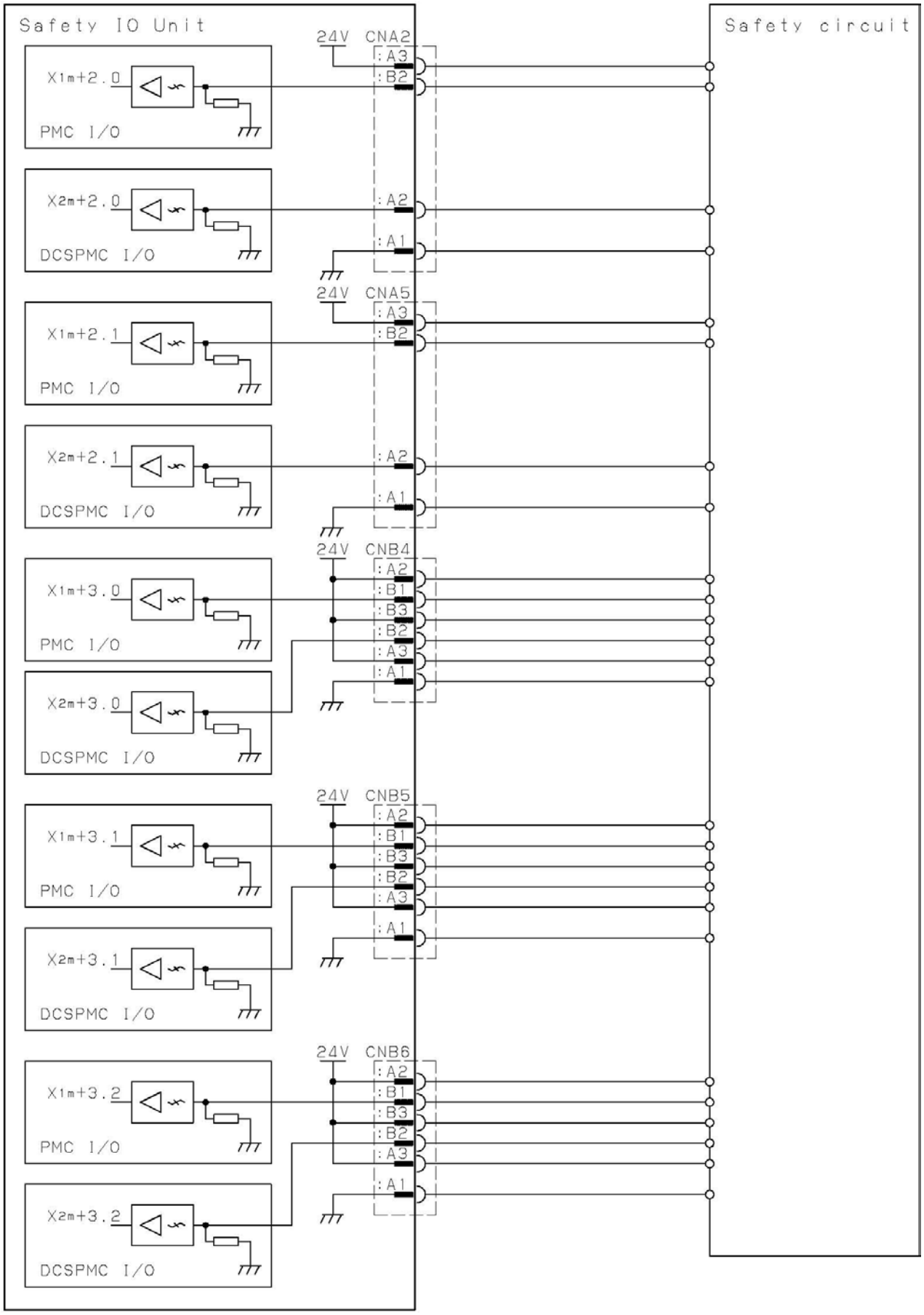

Duplicated input and output signals are connected to Safety IO Unit as PMC I/O and DCSPMC I/O.

© MyFANUC B5B0D8428C0144A78A5F4CA87F2C262E

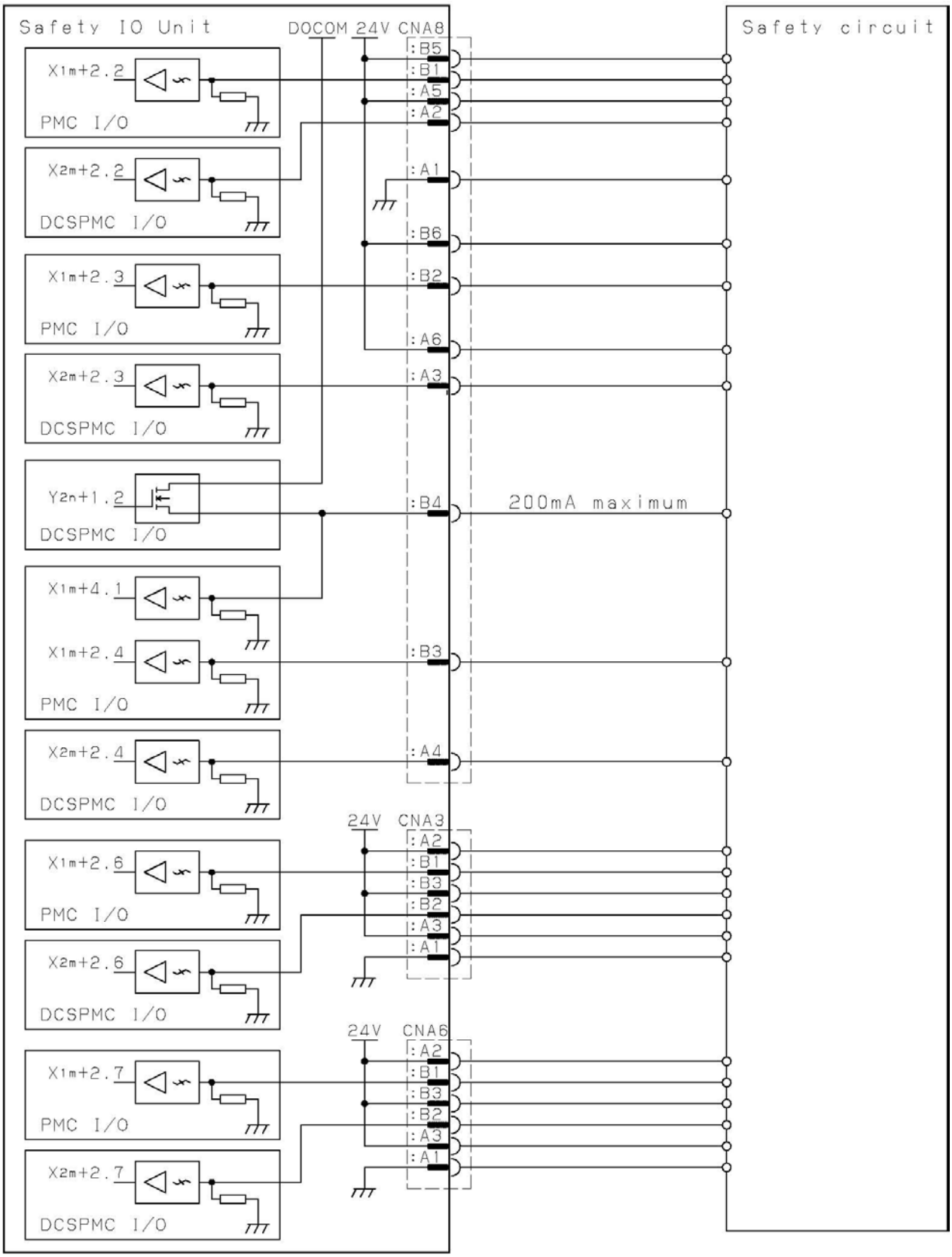

Duplicated input and output signals are connected to Safety IO Unit as PMC I/O and DCSPMC I/O.

© MyFANUC B5B0D8428C0144A78A5F4CA87F2C262E

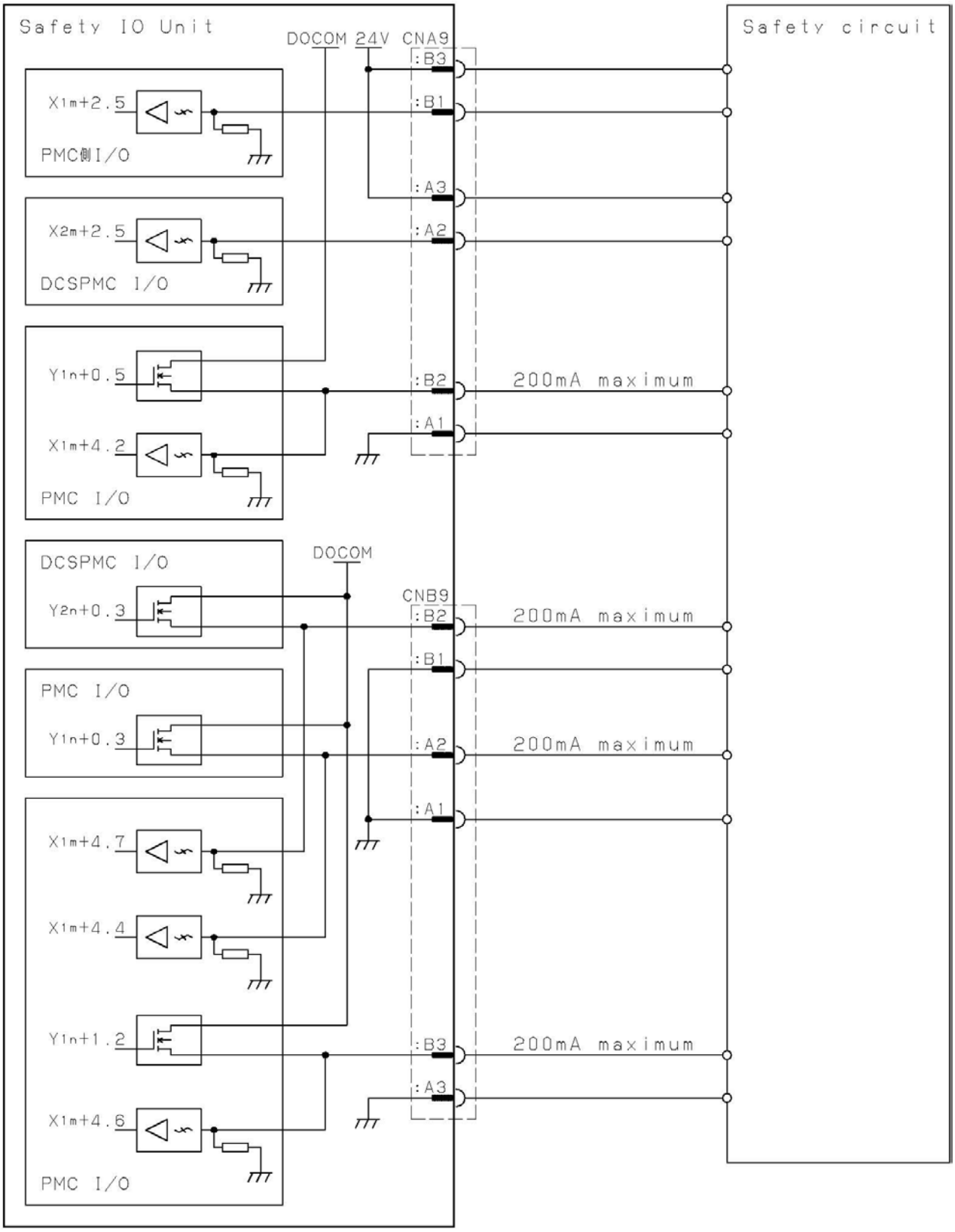

Duplicated input and output signals are connected to Safety IO Unit as PMC I/O and DCSPMC I/O.

© MyFANUC B5B0D8428C0144A78A5F4CA87F2C262E

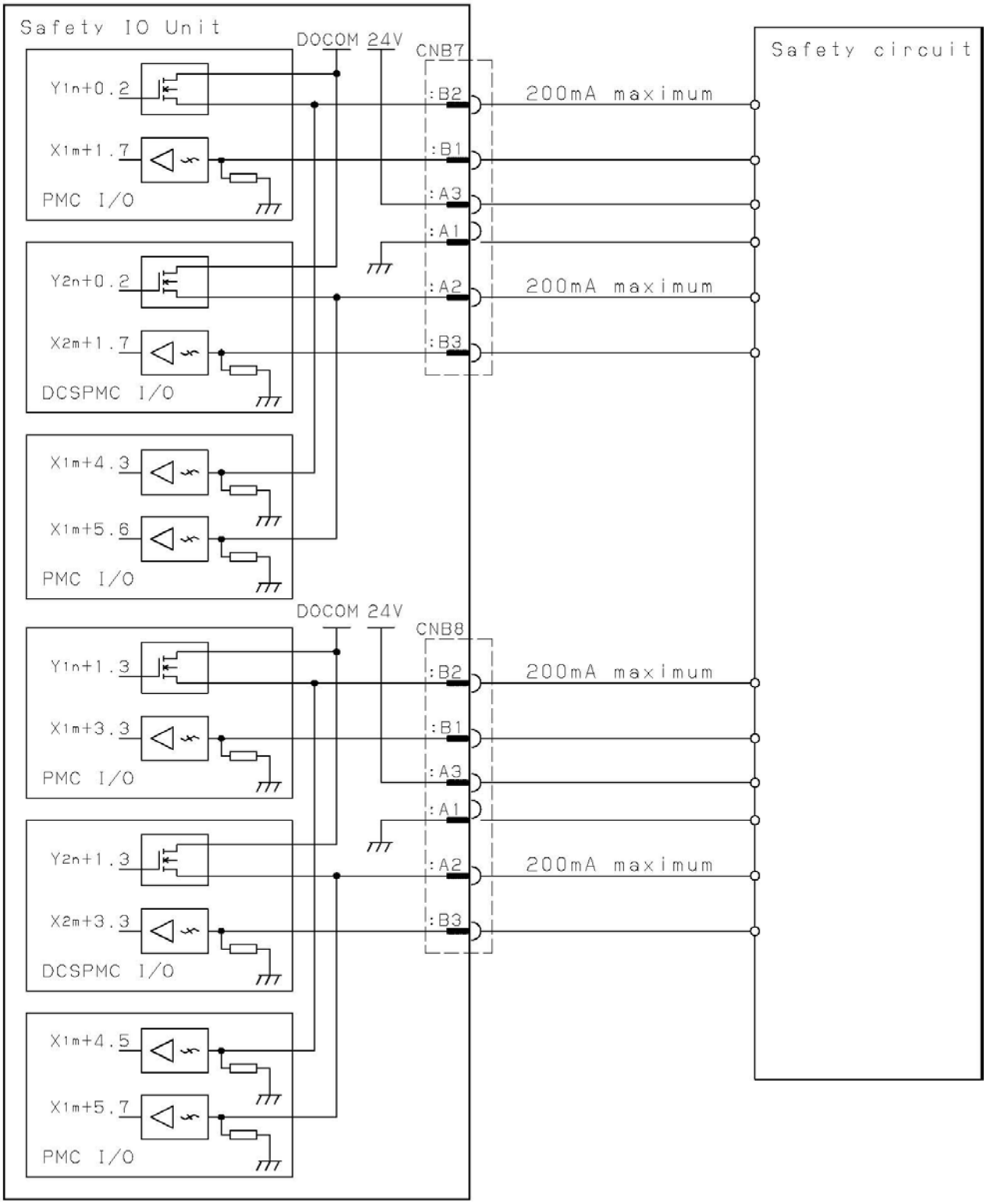

Duplicated input and output signals are connected to Safety IO Unit as PMC I/O and DCSPMC I/O.

© MyFANUC B5B0D8428C0144A78A5F4CA87F2C262E

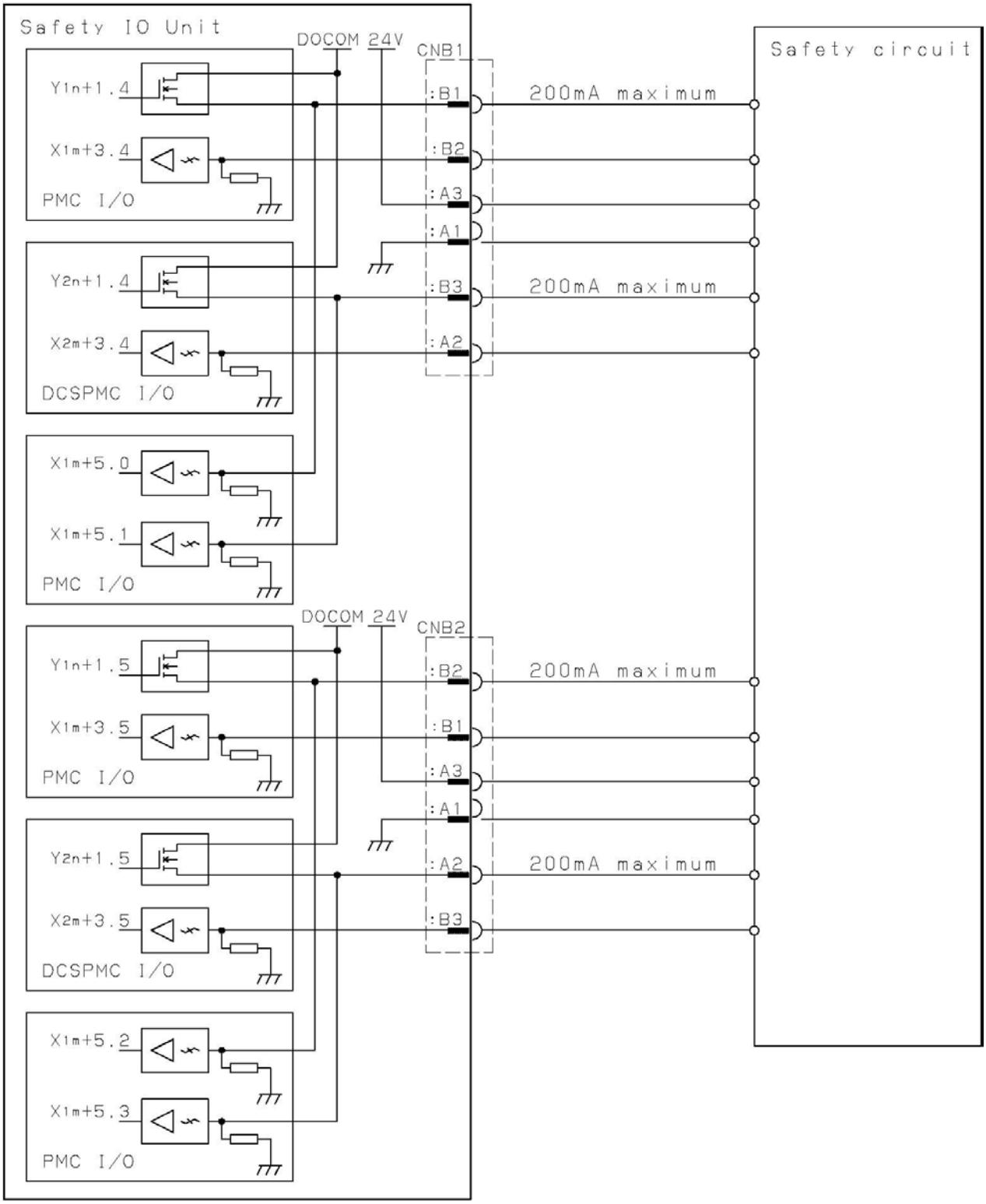

Duplicated input and output signals are connected to Safety IO Unit as PMC I/O and DCSPMC I/O.

© MyFANUC B5B0D8428C0144A78A5F4CA87F2C262E

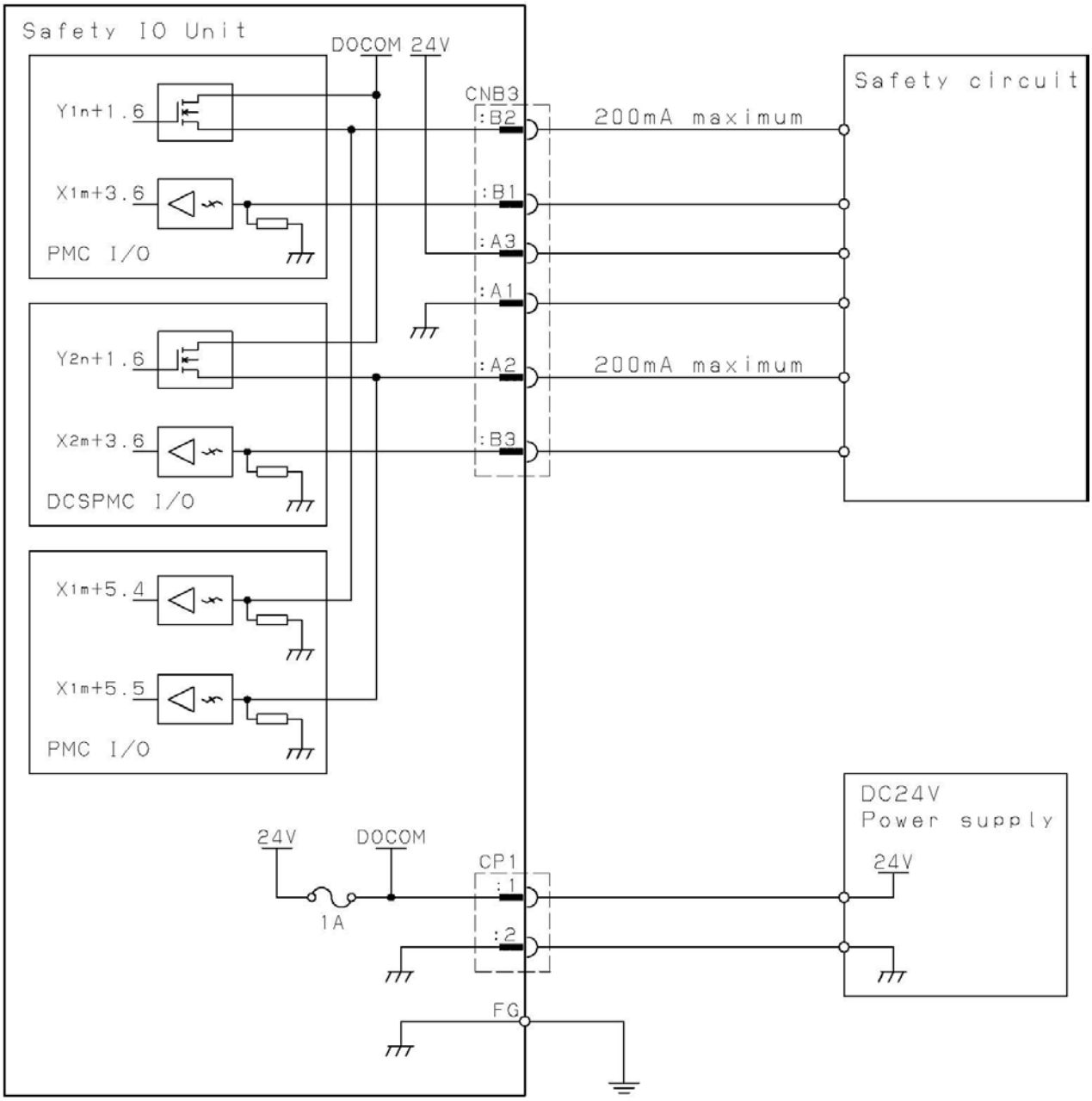

Duplicated input and output signals are connected to Safety IO Unit as PMC I/O and DCSPMC I/O.

© MyFANUC B5B0D8428C0144A78A5F4CA87F2C262E

8.10.8 Outline of Safety IO Unit

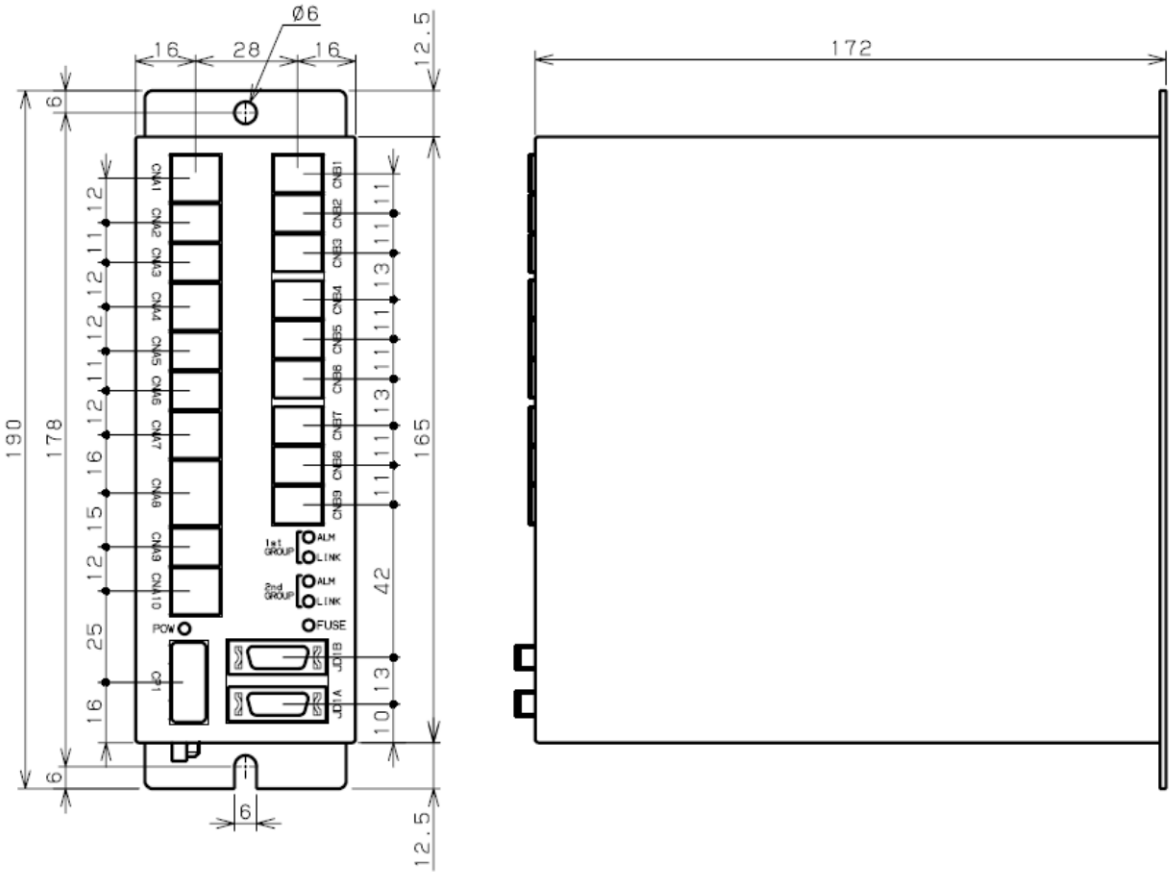

Weight: 1.4Kg

Unit: mm

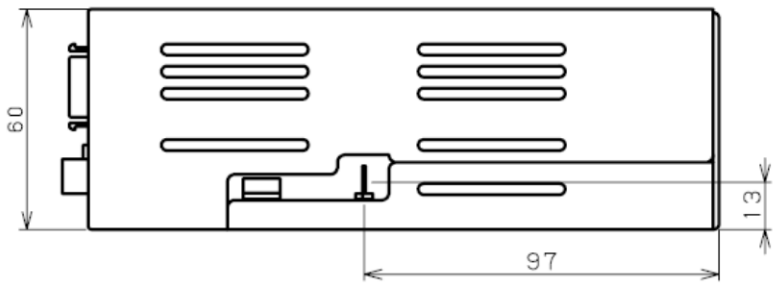

© MyFANUC B5B0D8428C0144A78A5F4CA87F2C262E

8.10.9 Connector locations of Safety IO Unit

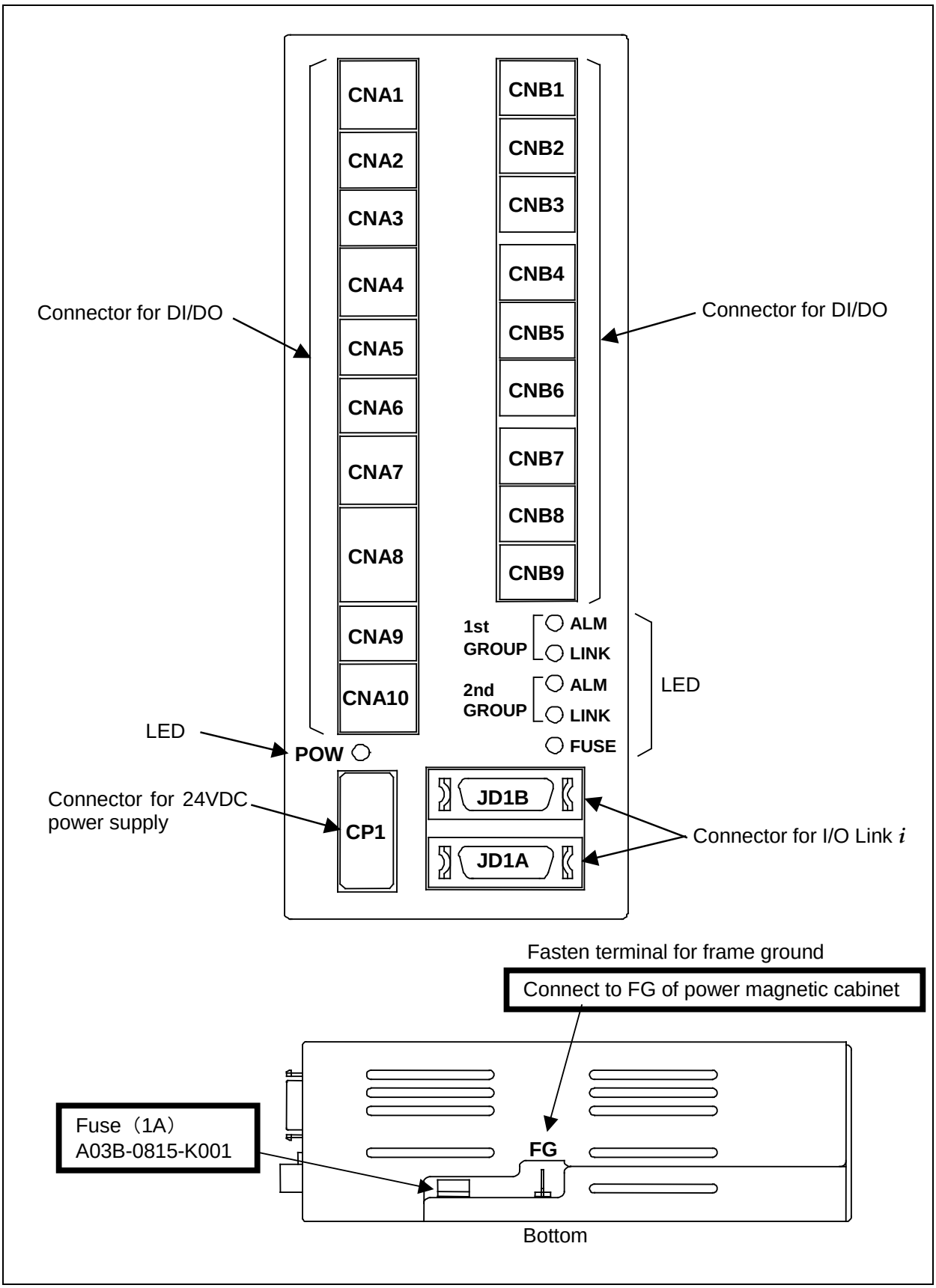

© MyFANUC B5B0D8428C0144A78A5F4CA87F2C262E

8.10.10 Color labels for connectors of Safety IO Unit

There is color labels placed beside the Tyco Electronics connectors of the safety IO unit.
Attached color labels for the connectors on the cable side are to be affixed to the connectors on the cable side.

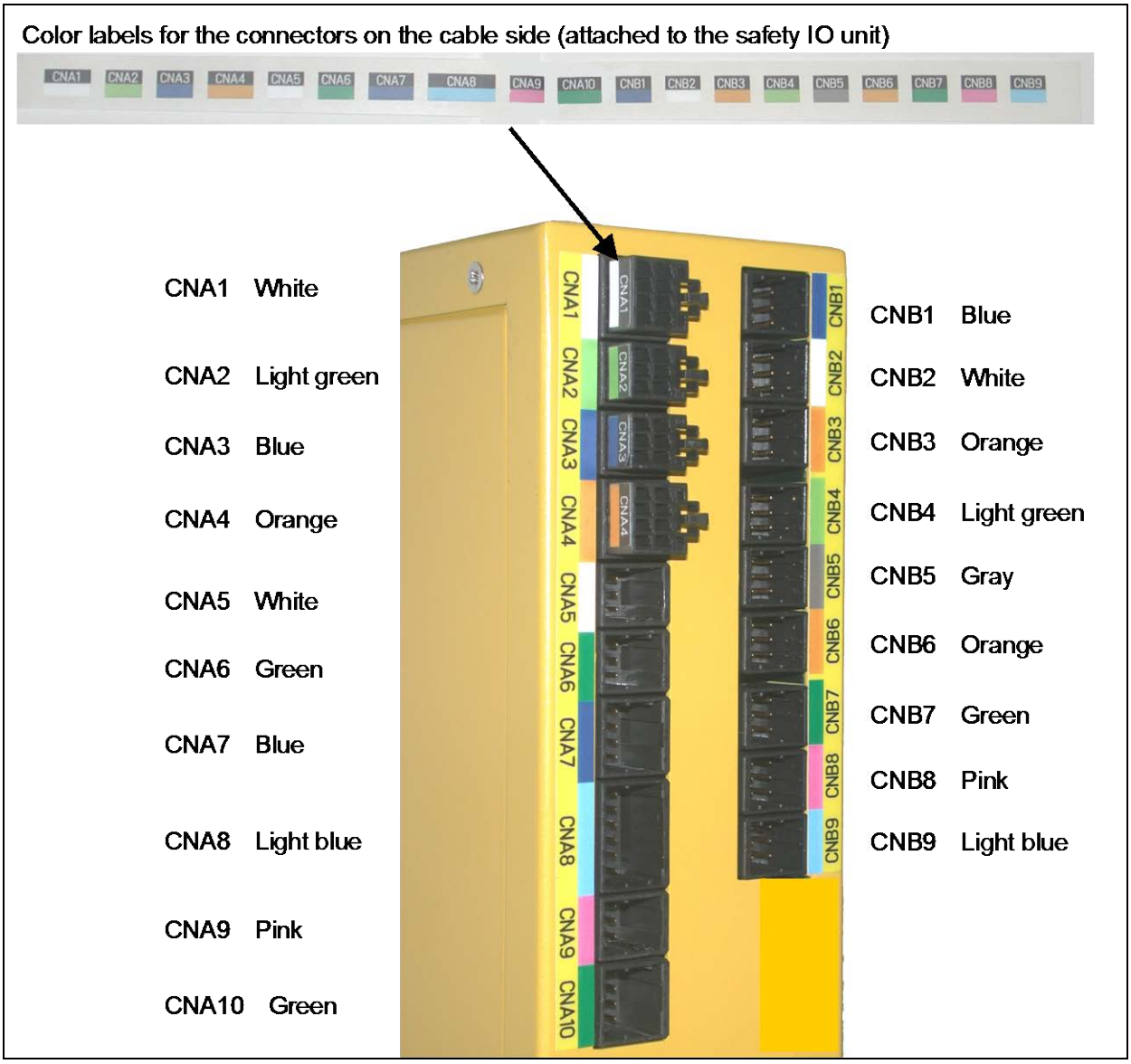

© MyFANUC B5B0D8428C0144A78A5F4CA87F2C262E

8.10.11 Connector specification of Safety IO Unit

Connector name	Name	Specification of cable-side connector	Order number
CP1	3-pin female connector Housing D-3100 (X key)	Tyco Electronics 1-178288-3	A02B-0120-K324 (Housing and three contacts of 1-175218-5)
	Contact (AWG20-16)	Tyco Electronics 1-175218-5	
	Contact (AWG24-20)	Tyco Electronics 1-175217-5	
CNA2, CNA5, CNA9, CNB1, CNB3, CNB5, CNB7, CNB9	6-pin female connector Housing D-2100 (X key)	Tyco Electronics 1-1318119-3	A03B-0821-K100 (For one unit)
CNA3, CNA6, CNB2, CNB4, CNB6, CNB8	6-pin female connector Housing D-2100 (Y key)	Tyco Electronics 2-1318119-3	
CNA1, CNA4, CNA7, CNA10	8-pin female connector Housing D-2100 (Y key)	Tyco Electronics 2-1318119-4	
CNA8	12-pin female connector Housing D-2100 (X key)	Tyco Electronics 1-1318118-6	
CNA1 - CNA10 CNB1 - CNB9	Contact (AWG28-24)	Tyco Electronics 1318108-1	A03B-0821-K101 (1000 contacts of 1318107-1) A03B-0821-K102 (150 contacts of 1318107-1)
	Contact (AWG22-18)	Tyco Electronics 1318107-1	
JD1A, JD1B	Soldering type connector (20 pins, female)	Connector: Honda Tsushin Kogyo PCR-E20FS Case: Honda Tsushin Kogyo PCR-V20LA or Connector: Hirose Denki FI40B-20S Case: Hirose Denki FI-20-CV2	A02B-0120-K301
	Press-mount connector (20 pins, female)	Connector: Honda Tsushin Kogyo PCR-E20FA Case: Honda Tsushin Kogyo PCR-V20LA or Connector: Hirose Denki FI30-20S Case: Hirose Denki FI-20CV2	A02B-0120-K302
FG	Fasten terminal	Tyco Electronics 170604-1 or JST FVDDF 2-250 TYPE I Blue	A02B-0166-K330

© MyFANUC B5B0D8428C0144A78A5F4CA87F2C262E

8.10.12 Specifications of Safety IO Unit

Installation conditions

(1) Use this unit in a completely sealed cabinet.
(2) Use the unit under the following ambient temperature conditions:
Operation: 0°C to 55°C
Storage transportation: -20°C to 80°C
(3) For other installation conditions, conform to the CNC installation conditions.
(4) Be sure to install the unit on a vertical face. Moreover for ventilation, allow a clearance of 100mm or more above and below. And never place a device that generates a large amount of heat below the safety IO unit.

Order specification

Name	Order specification	Remarks
Safety IO Unit	A03B-0821-C002	
Fuse (Spare parts)	A03B-0815-K001	1A

Power supply capacity

Power supply voltage	Power supply capacity	Remarks
24V±10% (±10% includes momentary variations and ripples.)	5.2A maximum	0.5A + 7.3mA x DI + Load current of DO

Heat output

Heat output	Remarks
19W	Value when 50% on input signal are on.

Input signal specification

Number of points	63 points (include DI to monitor DO status)
Rated input voltage	24VDC (±10%)
Rated input current	7.3mA (average)
Polarity	Sink type
ON voltage/current	18VDC or more, 6mA or more
OFF voltage/current	6VDC or less, 1.5mA or less
Allowable self-diagnosis pulse width	Pulse width: 150μs or less, Cycle: 4ms or more
Delay time	Receiver delay time: 2ms (maximum) In addition, [I/O Link transfer time between CNC and Safety IO unit] and [ladder scan period (depending on CNC)] must be considered.

Output signal specification

Number of points	19 points
Rated output voltage	24VDC (±10%)
Rated output current	200mA (15 points), 400mA (4 points), including momentary variations
Polarity	Source type
Maximum voltage decrease ON	28mV (output current is 200mA), 56mV (output current is 400mA)
Maximum leakage current when OFF	5μA
Output protection function	Protection against overheat, over current, short-circuiting
Delay time	The driver delay time is 50μs (maximum) In addition, [I/O Link transfer time between CNC and Safety IO unit] and [ladder scan period (depending on CNC)] must be considered.

© MyFANUC B5B0D8428C0144A78A5F4CA87F2C262E

⚠ CAUTION

1 The protection function is intended to protect the components internal rather than external units.
2 No protection function can protect their internal components in all cases. Once any protection function has worked, remove the cause promptly. If an absolute maximum rating is exceeded, for example, it is likely that protection functions may not work or an IC may break down before the related protection function works, depending on the way or situation in which the modules are used.
3 If an output protection function is defective, it is likely that, if the load current exceeds its rating continuously for a long time, smoke or ignition may occur.

8.10.13 DO (Output Signal) Error Detection

The DO driver of the safety IO unit has the output protection function for each output signal. If an accident, such as connecting the cable to ground, causes an abnormal increase in the load current or in the driver temperature, a protection circuit, which is provided for each DO driver, is activated and keeps the DO signal in the OFF state. Even if this occurs, the CNC and safety IO unit continue operating without entering the alarm status, but the PMC is notified of the location of the error detected by the DO driver. This information can be checked on the PMC status screen or alarm processing can be performed in advance using a ladder to help error check and recovery.

When the above protection function is activated by the DO driver, the relevant error is output as a status alarm and transferred to the PMC system relay area. The following table lists system relay area information and corresponding DO data related to a status alarm. When an alarm data bit is set to ”1”, the DO driver corresponding to the bit detects an error. For details of the status alarm, see Subsection 7.3.3, “Status Alarm”.

Information output to the system relay area and corresponding location where an error occurred

Information output to the system relay area						Faulty location
Type	**Group number**	**PMC path**	**Slot number**	**Alarm information number (Intra-slot byte address)**	**Y address (DO address)**	
0	0 to 23 (1st group in PMC)	1 to 5	1	0	Y_1n	DO alarm at 0th byte DO in PMC
				1	Y_1n+1	DO alarm at 1st byte DO in PMC
	0 to 23 (2nd group in DCSPMC)	9	1	0	Y_2n	DO alarm at 0th byte DO in DCSPMC
				1	Y_2n+1	DO alarm at 1st byte DO in DCSPMC

Output values of “Group number”, “PMC path”, and “Y address” depends on unit connection and I/O address assignment.
Y_1n, and Y_2n indicate the start address at allocation.

Description of “Alarm data” in the system relay area

Alarm data							
#7	**#6**	**#5**	**#4**	**#3**	**#2**	**#1**	**#0**
DO ground fault at bit 7	DO ground fault at bit 6	DO ground fault at bit 5	DO ground fault at bit 4	DO ground fault at bit 3	DO ground fault at bit 2	DO ground fault at bit 1	DO ground fault at bit 0

© MyFANUC B5B0D8428C0144A78A5F4CA87F2C262E

8.11 CONNECTION OF I/O MODULE FOR OPERATOR'S PANEL SUPPORTING SAFETY FUNCTION

8.11.1 Overview

"I/O module for operator's panel supporting safety function" is a unit dedicated to I/O Link *i*, which has an interface for duplicated input signals of safety circuits in using dual check safety (DCS) function.
There are two types of I/O modules for operator's panel supporting safety function.

Name	Ordering specification	Remarks
I/O module for operator's panel supporting safety function (type B)	A20B-2200-0470	General-purpose DI: 21 points DO: 16 points Safety input signal: 3 points One manual pulse generator can be connected.
I/O module for operator's panel supporting safety function (type A)	A20B-2200-0471	General-purpose DI: 24 points DO: 16 points Safety input signal: 4 points Three manual pulse generators can be connected.

⚠ CAUTION
I/O module for operator's panel supporting safety function is a unit dedicated to I/O Link *i*. Do not connect it to channels used for I/O Link.

8.11.2 Connection Diagram

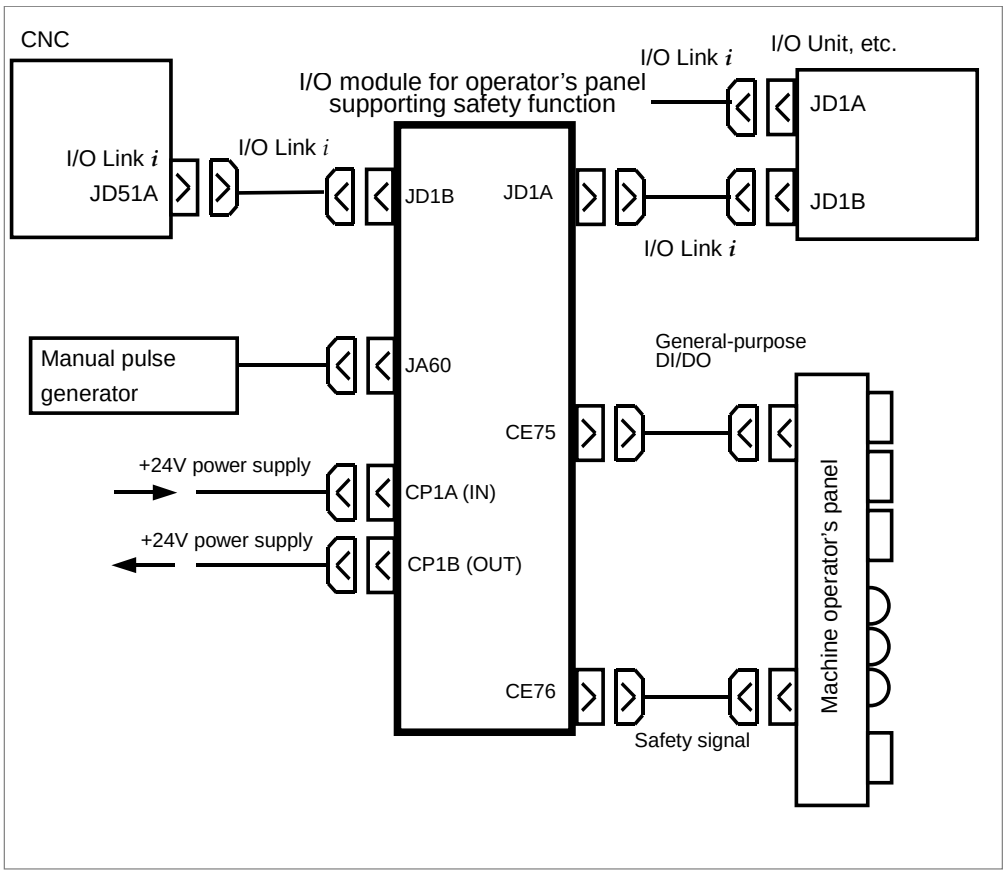

© MyFANUC B5B0D8428C0144A78A5F4CA87F2C262E

8.11.3 Power Connection

Provide the CP1B (IN) connector, shown below, with the power necessary for printed circuit board operation and that for DI/DO operation. To facilitate power division, the power is output to CP1A(OUT) exactly as it is input from CP1B (IN). When power division is required, use CP1A (OUT). Up to 2.5 A can be supplied by branching.

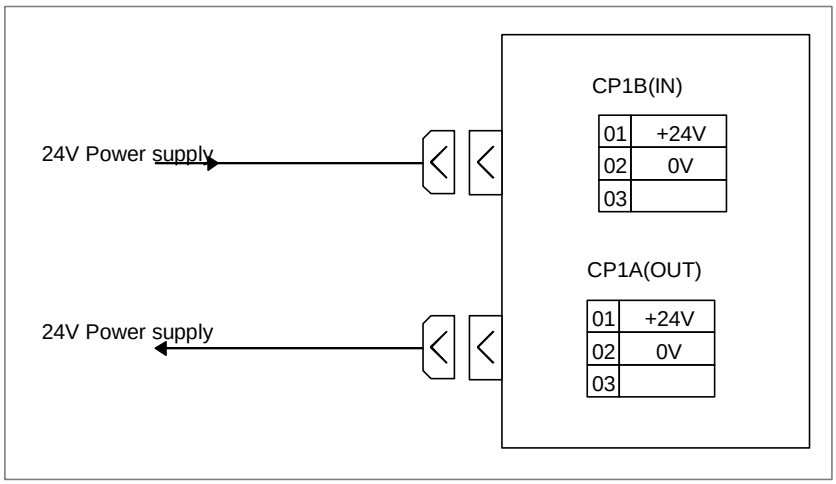

Connector name	Cable-side connector	Cable-side connector specification
CP1A, CP1B	Housing	Tyco Electronics AMP1-178288-3
	Contacts	Tyco Electronics AMP1-175218-5

NOTE

1 This unit doesn't have a pin (DOCOM) which supplies power to a driver which outputs DO.
Power is also supplied for DO through this connector. Use a power supply, considering DO power supply rating.

2 Both connectors CP1B (IN) and CP1A (OUT) are same specification.
And there is not indication of (IN) and (OUT) on the PCB.

© MyFANUC B5B0D8428C0144A78A5F4CA87F2C262E

8.11.4 DI/DO Address Map

I/O module for operator's panel supporting safety function is assigned to X addresses (input) and Y addresses (output) in two successive groups. Assign for I/O Link *i* as described below.

For Type B
Allocate 4-byte DI addresses and 2-byte DO addresses to PMC-side (group 1) slot1, and 2-byte DI addresses to DCS-side (group 2) slot1.
For Type A
Allocate 4-byte DI addresses and 2-byte DO address to PMC-side (group 1) slot1, and 1-byte DI address to DCS-side (group 2) slot1.

DI/DO address maps are as follows for Type A and Type B.

For A20B-2200-0470 (TypeB)
− PMC-side (group 1) address map

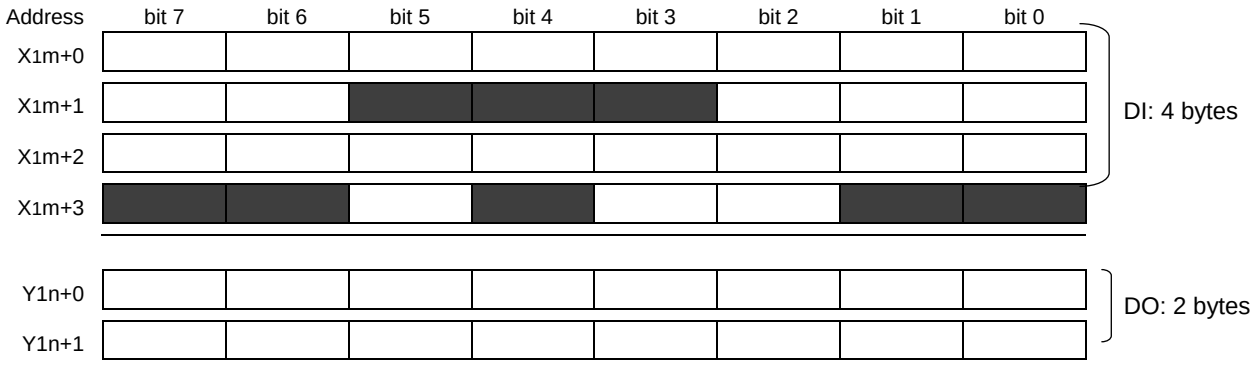

- DCS-side (group 2) address map

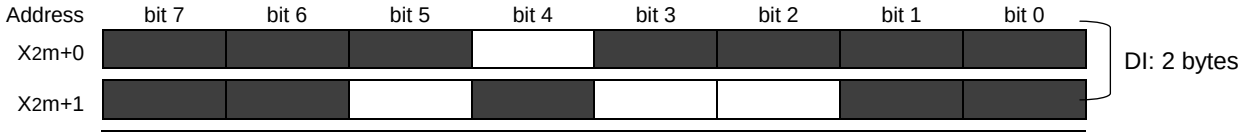

For A20B-2200-0471 (Type A)
− PMC-side (group 1) address map

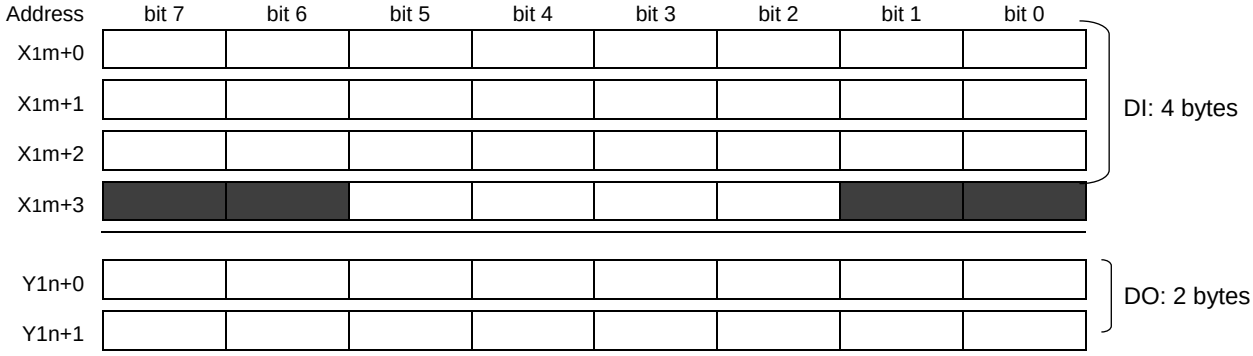

− DCS-side (group 2) address map

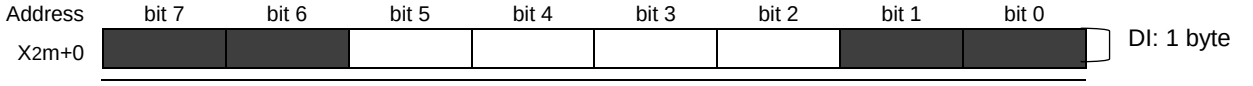

NOTE
Signals in shaded area ( ) can not be used.

© MyFANUC B5B0D8428C0144A78A5F4CA87F2C262E

8.11.5 DI/DO Connector Pin Arrangement

CE75

Pin Arrangement for A20B-2200-0470 (Type B)

	A	B
01	0V	+24V
02	X1m+0.0	X1m+0.1
03	X1m+0.2	X1m+0.3
04	X1m+0.4	X1m+0.5
05	X1m+0.6	X1m+0.7
06	X1m+1.0	X1m+1.1
07	X1m+1.2	
08		
09	X1m+1.6	X1m+1.7
10	X1m+2.0	X1m+2.1
11	X1m+2.2	X1m+2.3
12	X1m+2.4	X1m+2.5
13	X1m+2.6	X1m+2.7
14	0V	0V
15	0V	0V
16	Y1n+0.0	Y1n+0.1
17	Y1n+0.2	Y1n+0.3
18	Y1n+0.4	Y1n+0.5
19	Y1n+0.6	Y1n+0.7
20	Y1n+1.0	Y1n+1.1
21	Y1n+1.2	Y1n+1.3
22	Y1n+1.4	Y1n+1.5
23	Y1n+1.6	Y1n+1.7
24	+24V	+24V
25	+24V	+24V

Pin Arrangement for A20B-2200-0471 (Type A)

	A	B
01	0V	+24V
02	X1m+0.0	X1m+0.1
03	X1m+0.2	X1m+0.3
04	X1m+0.4	X1m+0.5
05	X1m+0.6	X1m+0.7
06	X1m+1.0	X1m+1.1
07	X1m+1.2	X1m+1.3
08	X1m+1.4	X1m+1.5
09	X1m+1.6	X1m+1.7
10	X1m+2.0	X1m+2.1
11	X1m+2.2	X1m+2.3
12	X1m+2.4	X1m+2.5
13	X1m+2.6	X1m+2.7
14	0V	0V
15	0V	0V
16	Y1n+0.0	Y1n+0.1
17	Y1n+0.2	Y1n+0.3
18	Y1n+0.4	Y1n+0.5
19	Y1n+0.6	Y1n+0.7
20	Y1n+1.0	Y1n+1.1
21	Y1n+1.2	Y1n+1.3
22	Y1n+1.4	Y1n+1.5
23	Y1n+1.6	Y1n+1.7
24	+24V	+24V
25	+24V	+24V

Connector name	Cable-side connector	Cable-side connector specification
CE75	Two-piece connector, series HIF3B, complying with MIL standards.	Hirose Electric: HIF3BB-50D-2.54R

© MyFANUC B5B0D8428C0144A78A5F4CA87F2C262E

CE76

Pin Arrangement for A20B-2200-0470 (Type B)

	A	B
01	0V	X_1m+3.2
02	X_2m+1.2	X_1m+3.3
03	X_2m+1.3	X_1m+3.5
04	X_2m+1.5	X_2m+0.4
05	+24V	+24V
06	+24V	+24V

Pin Arrangement for A20B-2200-0471 (TypeA)

	A	B
01	0V	X_1m+3.2
02	X_2m+0.2	X_1m+3.3
03	X_2m+0.3	X_1m+3.4
04	X_2m+0.4	X_1m+3.5
05	X_2m+0.5	+24V
06	+24V	+24V

Connector name	Cable-side connector	Cable-side connector specification
CE76	12 pin female connector housing D-2100 X key	Tyco Electronics AMP1-1318118-6
	Contact	Tyco Electronics AMP1318107-1

⚠ CAUTION

In case of Type B, address X^1m+1.6 to address X^1m+2.7 are assigned to pins of JA60 as well as CE75. If address X^1m+1.6 to address X^1m+2.7 are used in one type of a connector, do not connect to these addresses in the other type of connector.

NOTE

Blank pins cannot be used. Do not connect to these pins.

© MyFANUC B5B0D8428C0144A78A5F4CA87F2C262E

8.11.6 DI (General-purpose Input Signal) Connection

DI connection for CE75

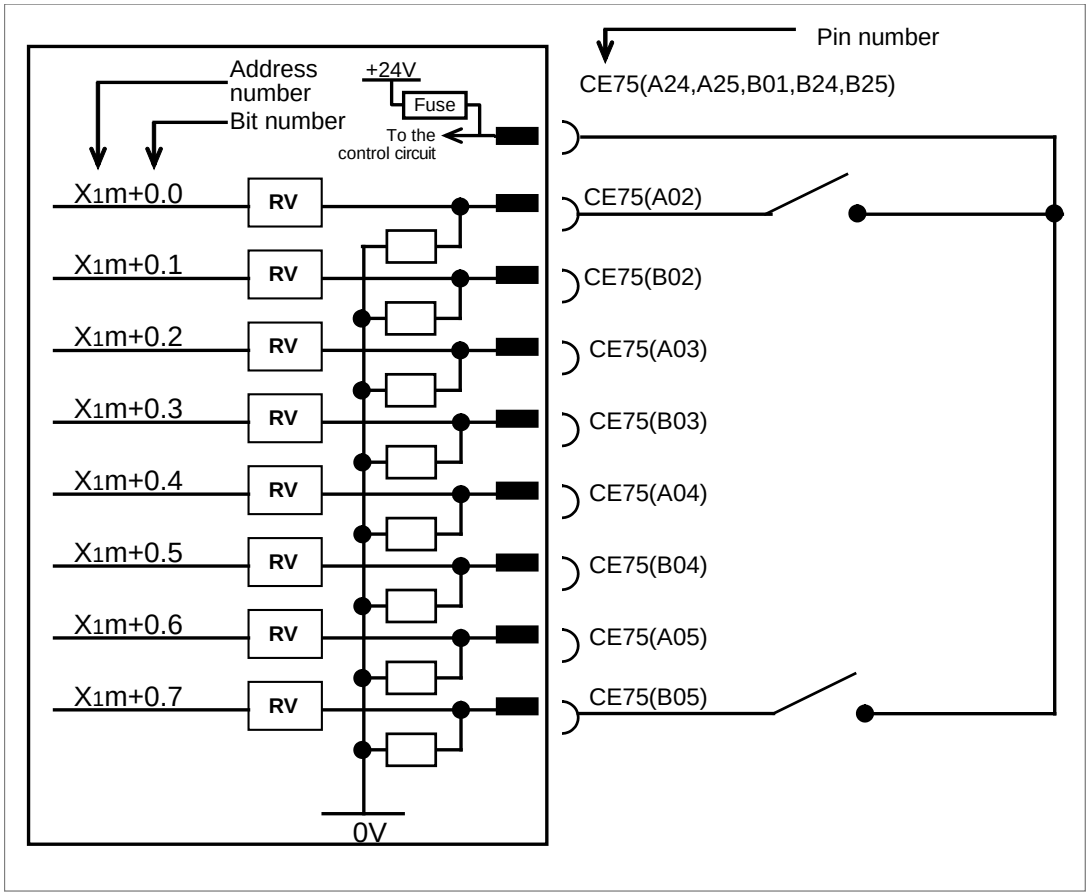

© MyFANUC B5B0D8428C0144A78A5F4CA87F2C262E

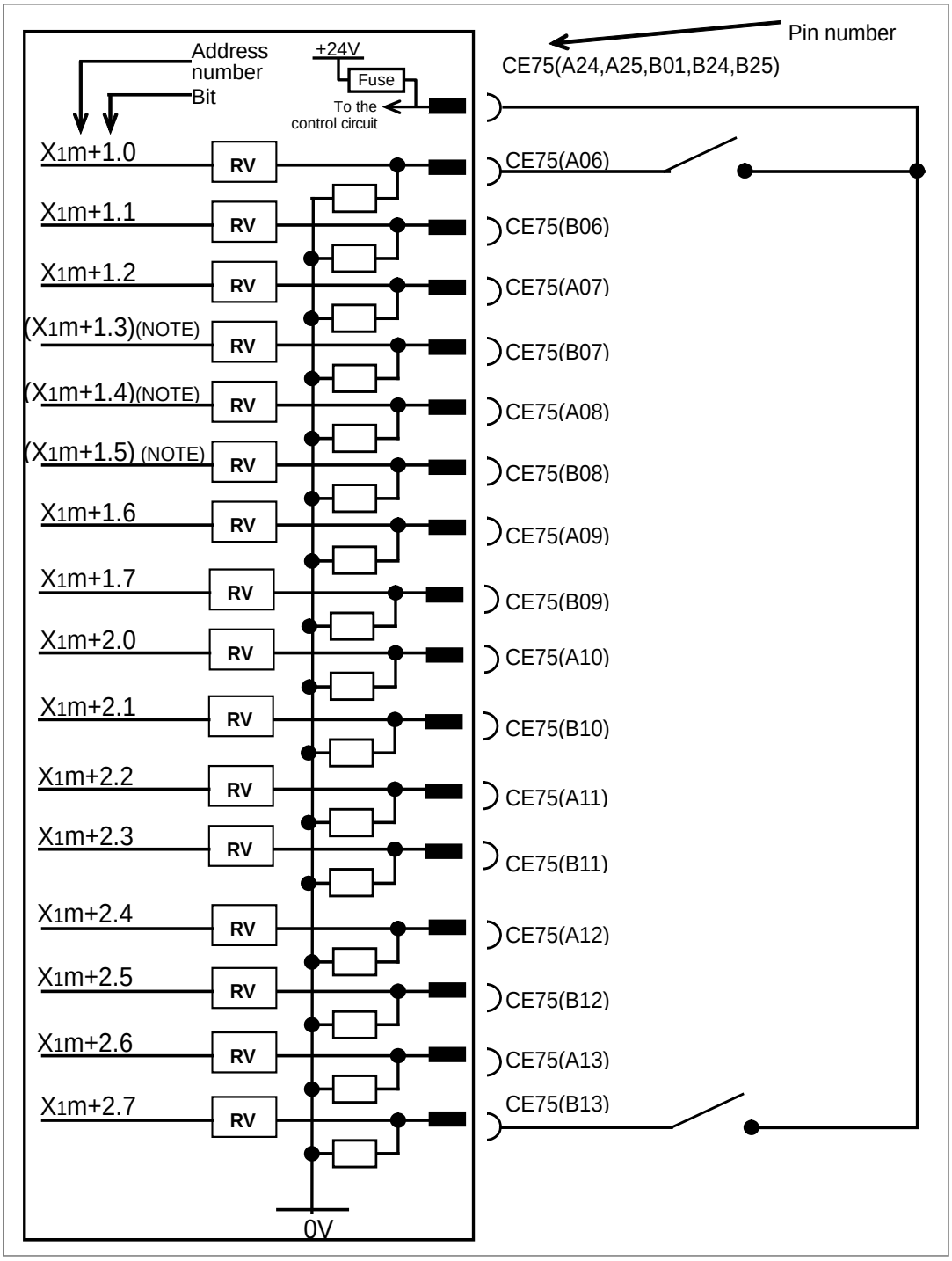

⚠ CAUTION

+24V (A24, A25, B01, B24, B25) are output signals which are used as a common voltage for input signals.
Do not use these except for a common voltage for input signals. Do not supply 24V to these pins from the outside.

NOTE

X1m+1.3, X1m+1.4, X1m+1.5 can not be used for type B. These addresses can be used only for Type A.

© MyFANUC B5B0D8428C0144A78A5F4CA87F2C262E

DI connection for CE76

DI connection for A20B-2200-0470 (Type B)

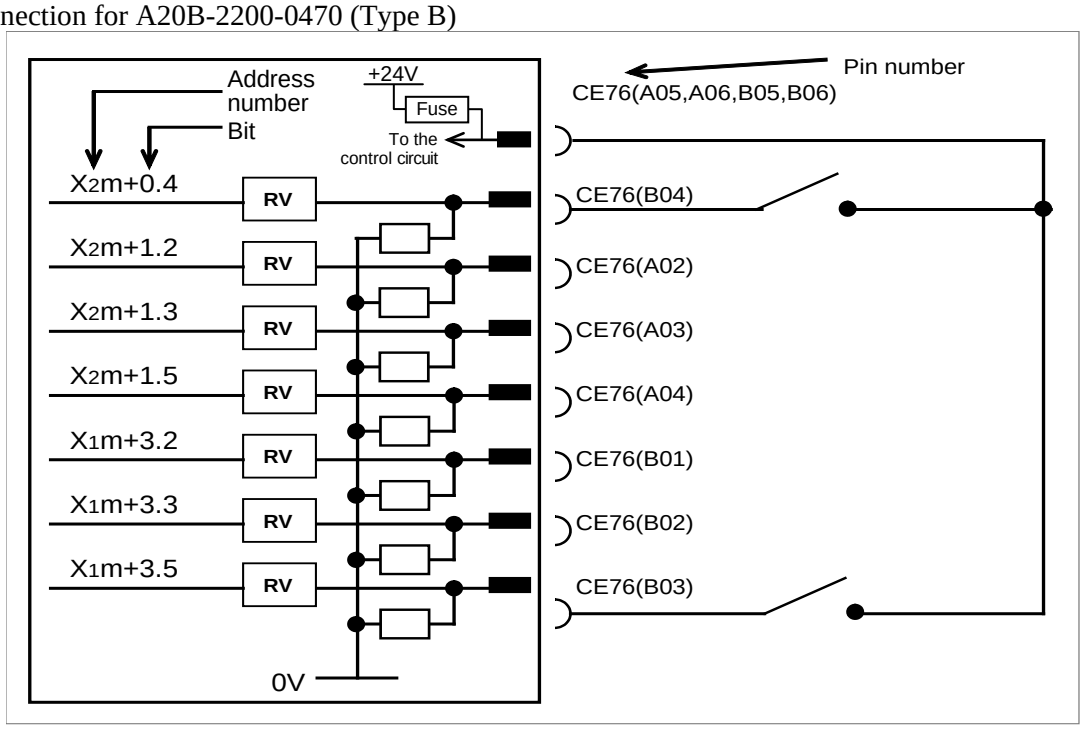

DI connection for A20B-2200-0471 (Type A)

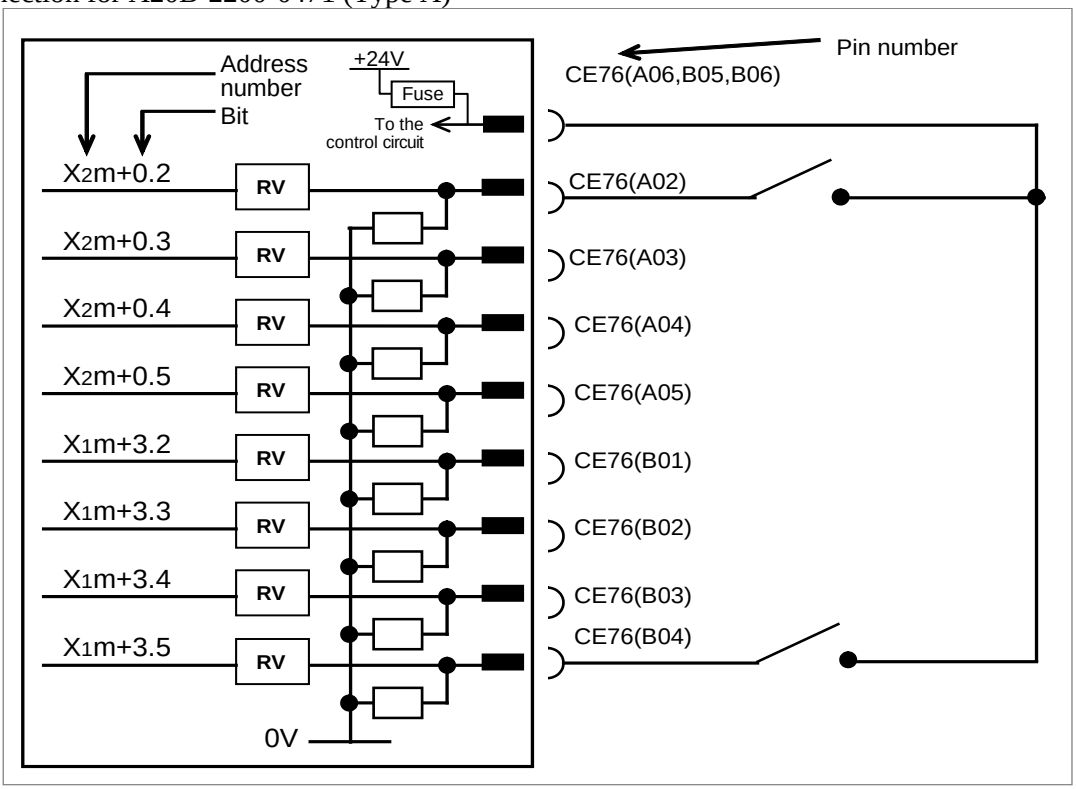

⚠ CAUTION

+24V (A05 (in Type B), A06, B05 and B06) are output signals which are used as a common voltage for input signals. Do not use these except for a common voltage for input signals. Do not supply 24V to these pins from the outside.

© MyFANUC B5B0D8428C0144A78A5F4CA87F2C262E

8.11.7 DO (Output Signal) Connection

DO connection for CE75

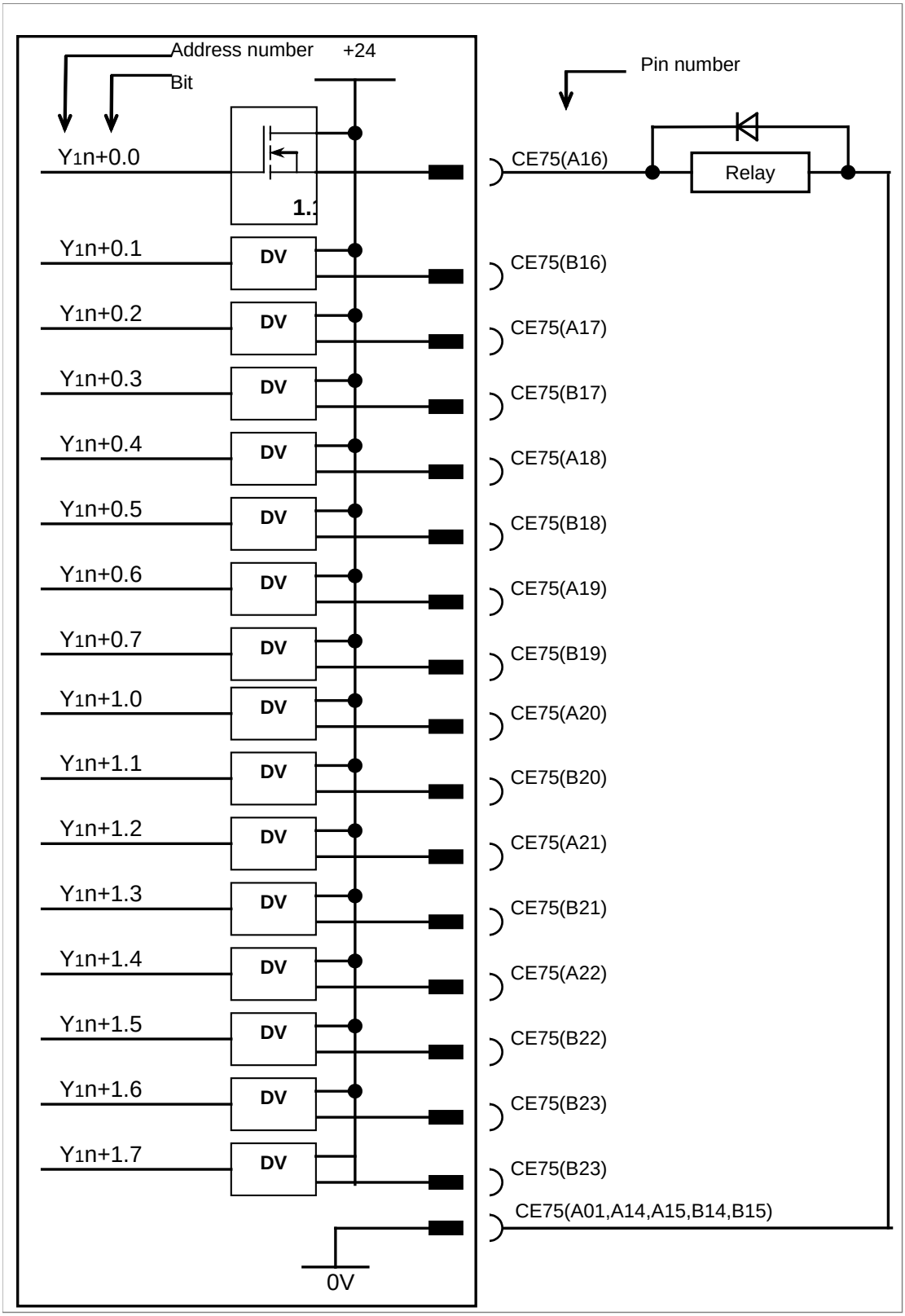

© MyFANUC B5B0D8428C0144A78A5F4CA87F2C262E

8.11.8 Manual Pulse Generator Connection

Connection of JA60 to manual pulse generators

Connection for type B

One manual pulse generator can be connected. Ten input signals can be used on the connector.

For A20B-2200-0470(Type B)

1	HA1	11	X1m+2.0
2	HB1	12	X1m+2.1
3	+5V	13	X1m+2.2
4	0V	14	X1m+2.3
5	+5V	15	X1m+2.4
6	0V	16	X1m+2.5
7	+5V	17	X1m+2.6
8	0V	18	X1m+2.7
9	X1m+1.6	19	X1m+1.7
10	0V	20	+24V

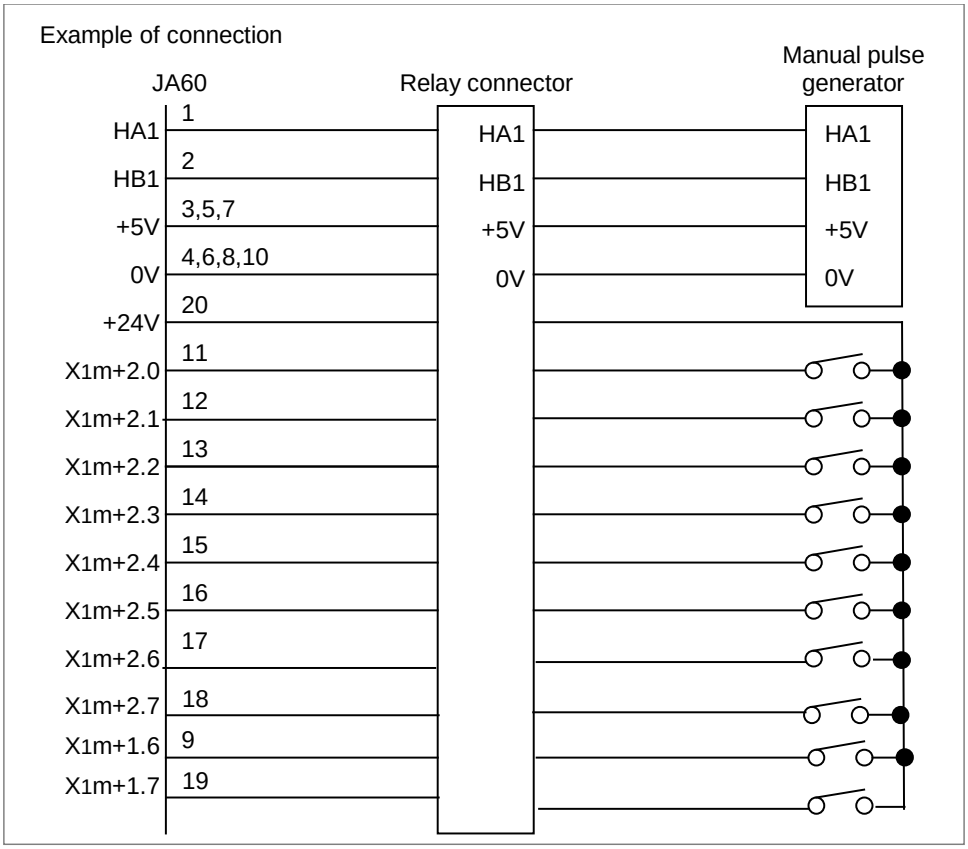

© MyFANUC B5B0D8428C0144A78A5F4CA87F2C262E

Connection for type A
Three manual pulse generators can be connected.
Please refer to section 7.4.1 about the connection.

For A20B-2200-0471(Type A)

1	HA1	11	
2	HB1	12	0V
3	HA2	13	
4	HB2	14	0V
5	HA3	15	
6	HB3	16	0V
7		17	
8		18	5V
9	5V	19	
10		20	5V

Connector name	Cable-side connector	Cable-side connector specification
JA60	20 pin half-pitch connector Solder type connector (20pin, female)	Connector: Hirose Electric FI40B-20S Case : Hirose Electric FI-20-CV5

CAUTION
In case of I/O module for operator's panel supporting safety function type B, address X1m+1.6 to address X1m+2.7 are also assigned to pins of CE75. If address X1m+1.6 to address X1m+2.7 are used in one type of a connector, do not connect to these addresses in the other type of connector.

8.11.9 External View

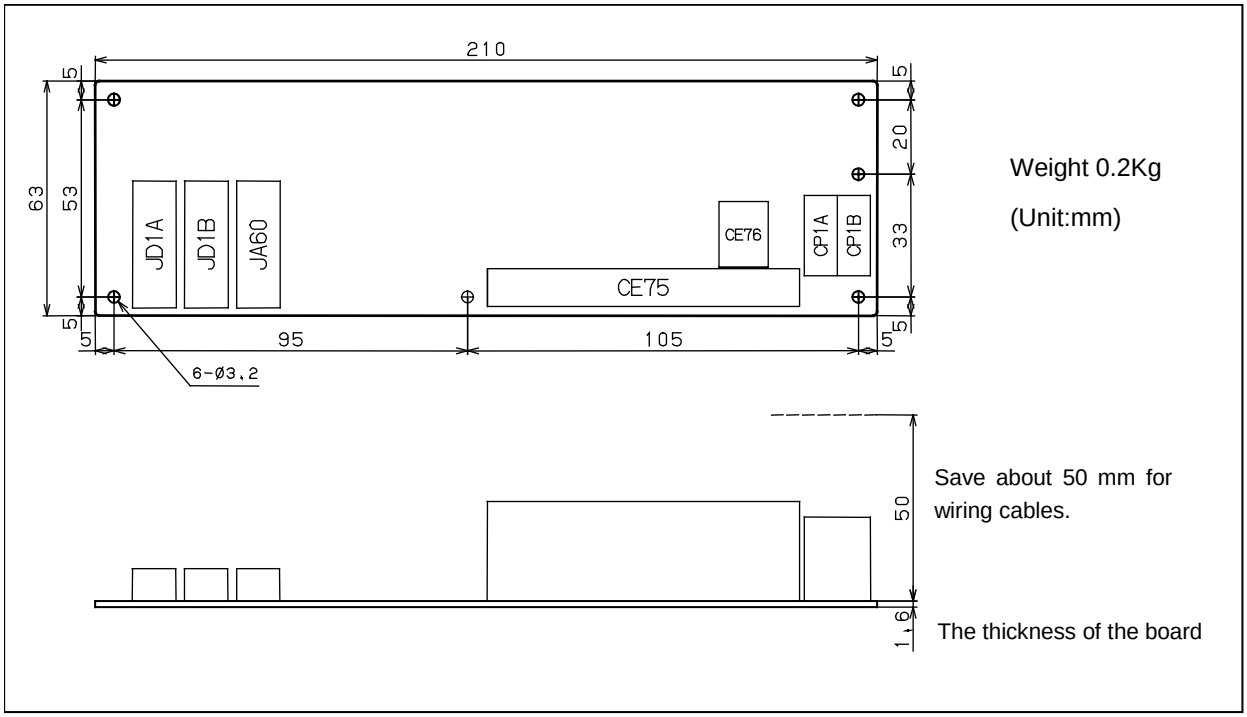

© MyFANUC B5B0D8428C0144A78A5F4CA87F2C262E

8.11.10 Specifications

Installation specifications

Install the I/O module in a fully enclosed cabinet.
For other installation conditions, conform to the CNC installation conditions.

Ordering specifications

Name	Ordering specification	Remarks
I/O module for operator's panel supporting safety function (type B)	A20B-2200-0470	General-purpose DI: 21 points DO: 16 points Safety input signal: 3 points One manual pulse generator can be connected
I/O module for operator's panel supporting safety function (type A)	A20B-2200-0471	General-purpose DI: 24 points DO: 16 points Safety input signal: 4 points Three manual pulse generators can be connected
Fuse (spare parts)	A03B-0815-K001	1A

Power supply rating

Power supply voltage	Power supply rating	Remarks
24VDC±10% is fed through the I/O connector (CPD1) ±10% includes momentary variation and ripples.	0.40A	The total power consumption of DI points is included. The power consumption of DO points is not included. Use a power supply, considering DO power supply rating.

NOTE

To connect an optical adapter for the I/O Link *i* to JD1A, the above power supply rating +35mA is required. An optical adapter for the I/O Link *i* can not be connected to JD1B.

Heat dissipation

Unit name	Heat dissipation	Remarks
I/O module for operator's panel supporting safety function type A and B	4.3W	DI ; 8 points when ON

NOTE

The details of the method of calculating heat dissipation are as follows.

2.9 (W) + 0.18 (W) × N

(N: Number of DI points turned on)

The above heat dissipation is only what this unit produces. This does not include the power dissipation of peripherals, optical adapters for the I/O Link i, manual pulse generators and so on.

© MyFANUC B5B0D8428C0144A78A5F4CA87F2C262E

DI (input signal specifications)

Contact rating	30VDC, 16mA or more
Leakage current between contacts when opened	1mA or less (26.4 V)
Voltage decrease between contacts when closed	2V or less (including a cable voltage decrease)
Delay time	The receiver delay time is 2ms (maximum) In addition, [I/O Link transfer time between CNC and I/O module (2ms or less)] and [ladder scan period (depending on CNC)] must be considered.

DO (output signal specifications)

Maximum load current when ON	200mA or less including momentary current per signal.
Saturation voltage when ON	1V (maximum) when the load current is 200mA.
Withstand voltage	24 V +20% or less including momentary variations.
Leakage current when OFF	20μA or less
Delay time	The driver delay time is 50μs (maximum). In addition, [I/O Link transfer time between CNC and I/O module (2ms or less)] and [ladder scan period (depending on CNC)] must be considered.

8.11.11 DO (output signal) Error Detection

The DO driver of this unit has output protection functions for each output signal. If an accident, such as an ground fault, causes an abnormal increase in the load current or in the driver temperature, a protection circuit, which is provided for each DO driver, is activated and keeps the relevant DO signal in the OFF state. Even if this occurs, the CNC and I/O module continue operating without entering the alarm status, but the PMC is notified of the location of the error detected by the DO driver. This information can be checked on the PMC status screen or alarm processing can be performed in advance using a ladder to help error check and recovery.

When the above protection function is activated by the DO driver, the relevant error is output as a status alarm and transferred to the PMC relay area. The following table lists relay area information and corresponding DO data related to a status alarm. When an alarm data bit is set to ‘1’, the DO driver corresponding to the bit detects an error. For detail of the status alarm, see Subsection 7.3.3, “Status Alarm”.

Information output to the relay area and corresponding location where an error occurred

Information output to the system relay area						Faulty location
Type	**Group number**	**PMC path**	**Slot number**	**Alarm information number (Intra-slot byte address)**	**Y address (DO address)**	
0	0 to 23 (1st group in PMC)	1 to 5	1	0	Y_1n	DO alarm at 0th byte DO in PMC
				1	Y_1n+1	DO alarm at 1st byte DO in PMC

Output values of “Group number”, “PMC path”, and “Y address” depends on unit connection and I/O address assignment.
Y_1n indicates the start address at allocation.

Description of “Alarm data” in the system relay area

Alarm data							
#7	**#6**	**#5**	**#4**	**#3**	**#2**	**#1**	**#0**
DO ground fault at bit 7	DO ground fault at bit 6	DO ground fault at bit 5	DO ground fault at bit 4	DO ground fault at bit 3	DO ground fault at bit 2	DO ground fault at bit 1	DO ground fault at bit 0

© MyFANUC B5B0D8428C0144A78A5F4CA87F2C262E

8.12 I/O UNIT FOR POWER MAGNETICS CABINET

8.12.1 Overall Connection Diagram

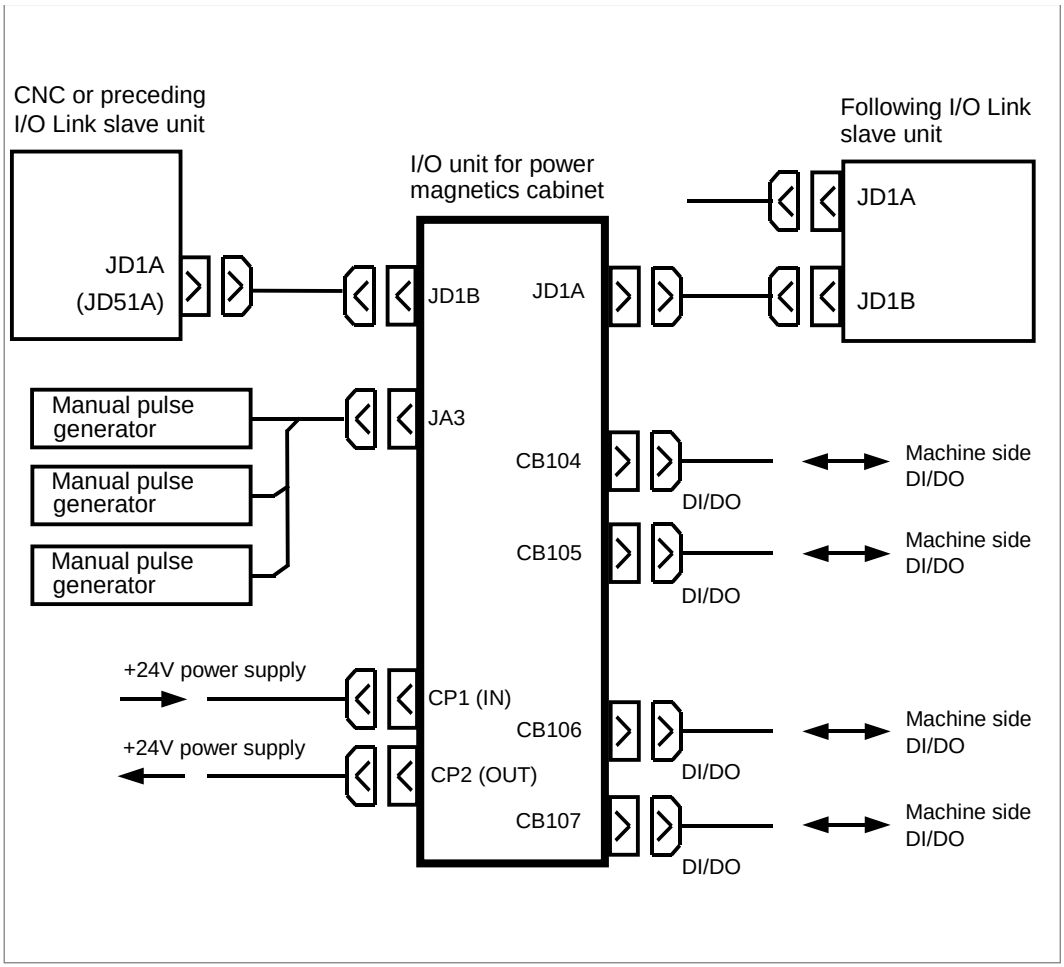

NOTE

The following screw type connectors cannot be used to connect the I/O Link *i* or manual pulse generator.

Connectors that cannot be used on the cable side

	Specification	Manufacturer
Connector case	FI-20-CV7	Hirose Electric Co., Ltd.
Connector case and connector	FI30-20S-CV7	Hirose Electric Co., Ltd.

© MyFANUC B5B0D8428C0144A78A5F4CA87F2C262E

8.12.2 Power Connection

Supply power to the I/O unit for power magnetics cabinet from external power.

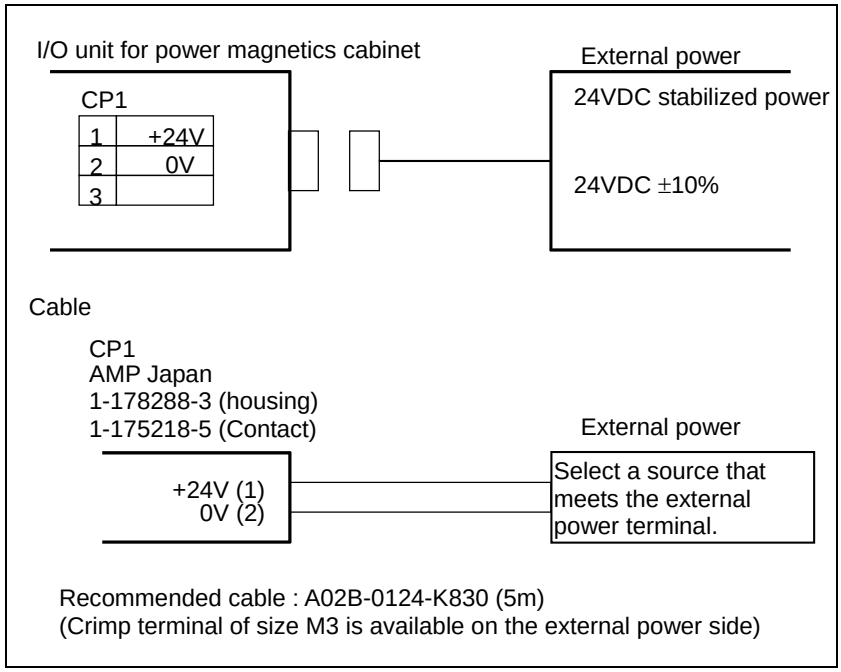

Part of the 24 VDC power input to CP1 can be taken out from CP2 by branching. CP2 should be connected as shown below. In this case, the rating of the external 24 VDC power supplied to CP1 must be the sum of the power consumed within the control unit and that supplied to external equipment via CP2. The maximum capacity of power that can be obtained from a branch is 1.0 A.

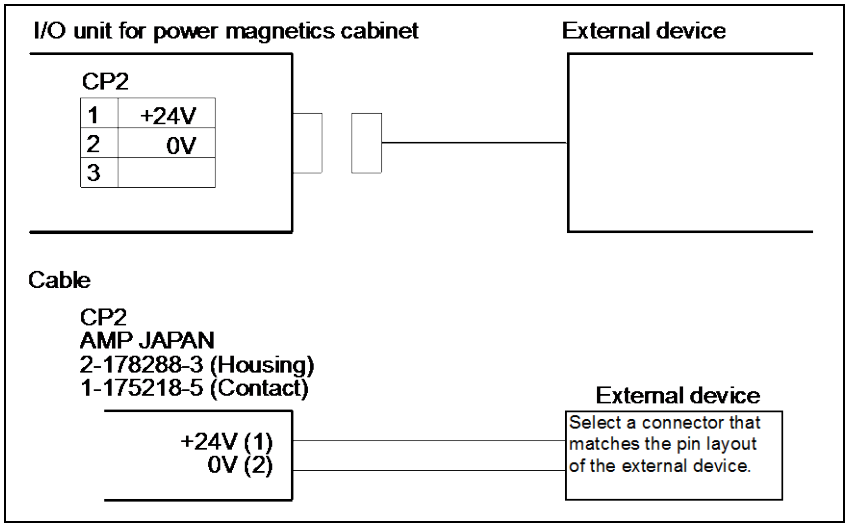

NOTE

Do not interrupt +24V supplied to this connector during operation. Otherwise, an alarm about communication with the CNC is issued. A voltage of +24V must not be supplied after power-on of the CNC and +24V must not be interrupted before power-off of the CNC. When powering off the CNC control unit, be sure to power off the I/O unit for power magnetics cabinet.

© MyFANUC B5B0D8428C0144A78A5F4CA87F2C262E

8.12.3 DI/DO Connector Pin Arrangement

CB104
HIROSE 50PIN

	A	B
01	0V	+24V
02	Xm+0.0	Xm+0.1
03	Xm+0.2	Xm+0.3
04	Xm+0.4	Xm+0.5
05	Xm+0.6	Xm+0.7
06	Xm+1.0	Xm+1.1
07	Xm+1.2	Xm+1.3
08	Xm+1.4	Xm+1.5
09	Xm+1.6	Xm+1.7
10	Xm+2.0	Xm+2.1
11	Xm+2.2	Xm+2.3
12	Xm+2.4	Xm+2.5
13	Xm+2.6	Xm+2.7
14		
15		
16	Yn+0.0	Yn+0.1
17	Yn+0.2	Yn+0.3
18	Yn+0.4	Yn+0.5
19	Yn+0.6	Yn+0.7
20	Yn+1.0	Yn+1.1
21	Yn+1.2	Yn+1.3
22	Yn+1.4	Yn+1.5
23	Yn+1.6	Yn+1.7
24	DOCOM	DOCOM
25	DOCOM	DOCOM

CB105
HIROSE 50PIN

	A	B
01	0V	+24V
02	Xm+3.0	Xm+3.1
03	Xm+3.2	Xm+3.3
04	Xm+3.4	Xm+3.5
05	Xm+3.6	Xm+3.7
06	Xm+8.0	Xm+8.1
07	Xm+8.2	Xm+8.3
08	Xm+8.4	Xm+8.5
09	Xm+8.6	Xm+8.7
10	Xm+9.0	Xm+9.1
11	Xm+9.2	Xm+9.3
12	Xm+9.4	Xm+9.5
13	Xm+9.6	Xm+9.7
14		
15		
16	Yn+2.0	Yn+2.1
17	Yn+2.2	Yn+2.3
18	Yn+2.4	Yn+2.5
19	Yn+2.6	Yn+2.7
20	Yn+3.0	Yn+3.1
21	Yn+3.2	Yn+3.3
22	Yn+3.4	Yn+3.5
23	Yn+3.6	Yn+3.7
24	DOCOM	DOCOM
25	DOCOM	DOCOM

CB106
HIROSE 50PIN

	A	B
01	0V	+24V
02	Xm+4.0	Xm+4.1
03	Xm+4.2	Xm+4.3
04	Xm+4.4	Xm+4.5
05	Xm+4.6	Xm+4.7
06	Xm+5.0	Xm+5.1
07	Xm+5.2	Xm+5.3
08	Xm+5.4	Xm+5.5
09	Xm+5.6	Xm+5.7
10	Xm+6.0	Xm+6.1
11	Xm+6.2	Xm+6.3
12	Xm+6.4	Xm+6.5
13	Xm+6.6	Xm+6.7
14	COM4	
15		
16	Yn+4.0	Yn+4.1
17	Yn+4.2	Yn+4.3
18	Yn+4.4	Yn+4.5
19	Yn+4.6	Yn+4.7
20	Yn+5.0	Yn+5.1
21	Yn+5.2	Yn+5.3
22	Yn+5.4	Yn+5.5
23	Yn+5.6	Yn+5.7
24	DOCOM	DOCOM
25	DOCOM	DOCOM

CB107
HIROSE 50PIN

	A	B
01	0V	+24V
02	Xm+7.0	Xm+7.1
03	Xm+7.2	Xm+7.3
04	Xm+7.4	Xm+7.5
05	Xm+7.6	Xm+7.7
06	Xm+10.0	Xm+10.1
07	Xm+10.2	Xm+10.3
08	Xm+10.4	Xm+10.5
09	Xm+10.6	Xm+10.7
10	Xm+11.0	Xm+11.1
11	Xm+11.2	Xm+11.3
12	Xm+11.4	Xm+11.5
13	Xm+11.6	Xm+11.7
14		
15		
16	Yn+6.0	Yn+6.1
17	Yn+6.2	Yn+6.3
18	Yn+6.4	Yn+6.5
19	Yn+6.6	Yn+6.7
20	Yn+7.0	Yn+7.1
21	Yn+7.2	Yn+7.3
22	Yn+7.4	Yn+7.5
23	Yn+7.6	Yn+7.7
24	DOCOM	DOCOM
25	DOCOM	DOCOM

⚠ **CAUTION**
An output DC voltage of +24V at CB104 (B01), CB105(B01), CB106(B01) and CE107 (B01) is for DI signals. Do not supply 24 VDC to these pins from the outside.

© MyFANUC B5B0D8428C0144A78A5F4CA87F2C262E

8.12.4 DI(General-purpose Input Signal)Connection

○96 points maximum

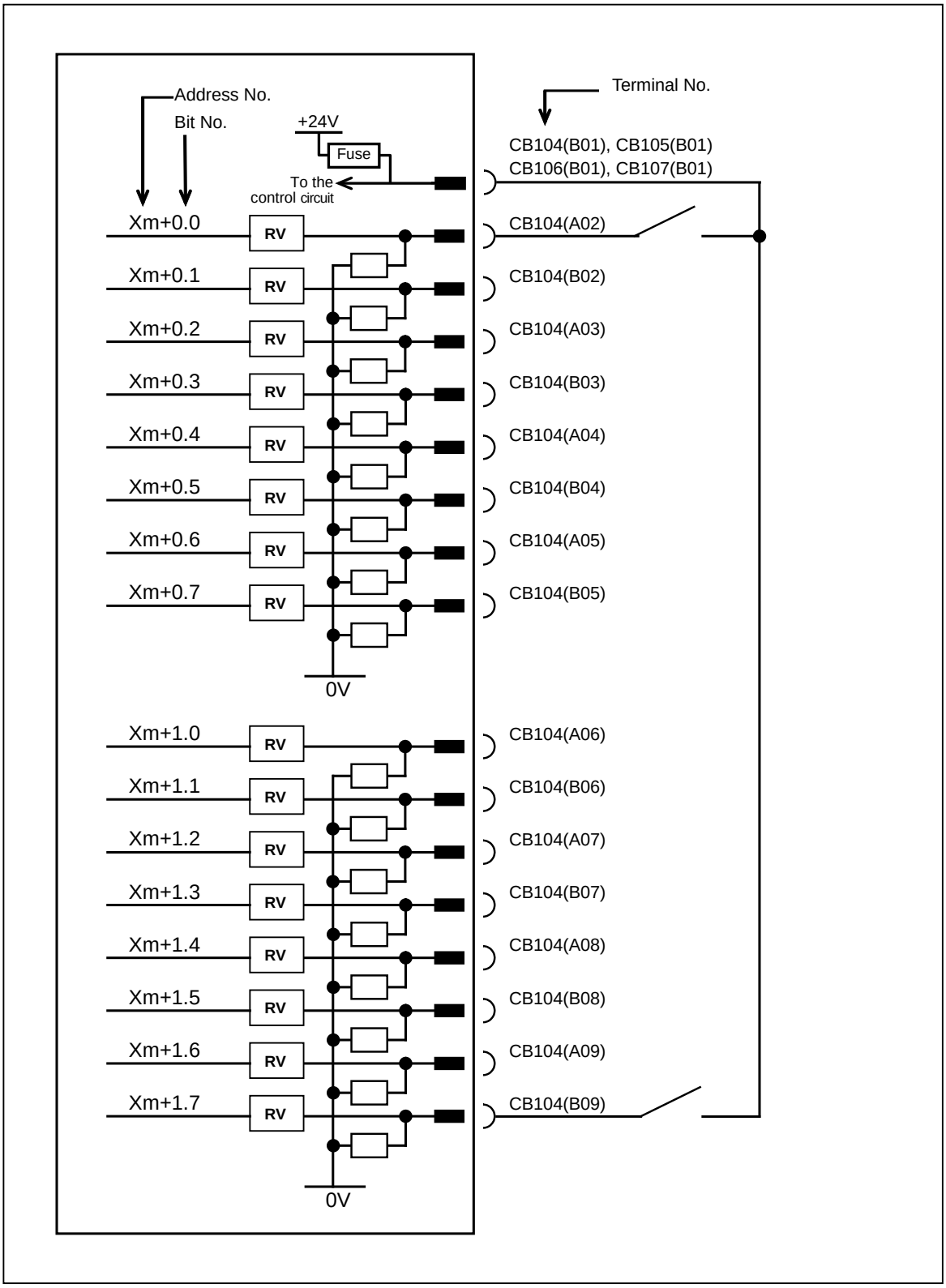

© MyFANUC B5B0D8428C0144A78A5F4CA87F2C262E

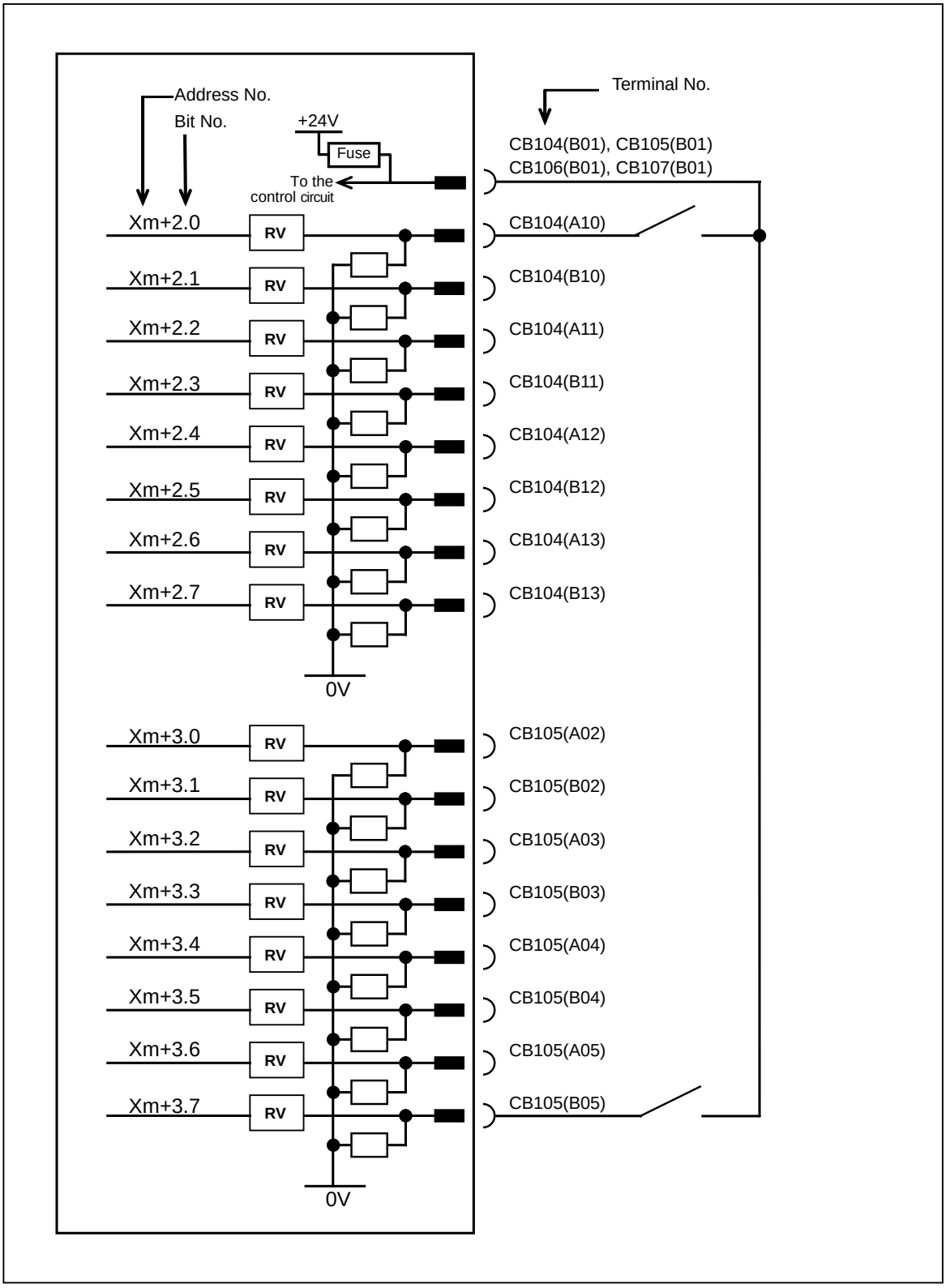

© MyFANUC B5B0D8428C0144A78A5F4CA87F2C262E

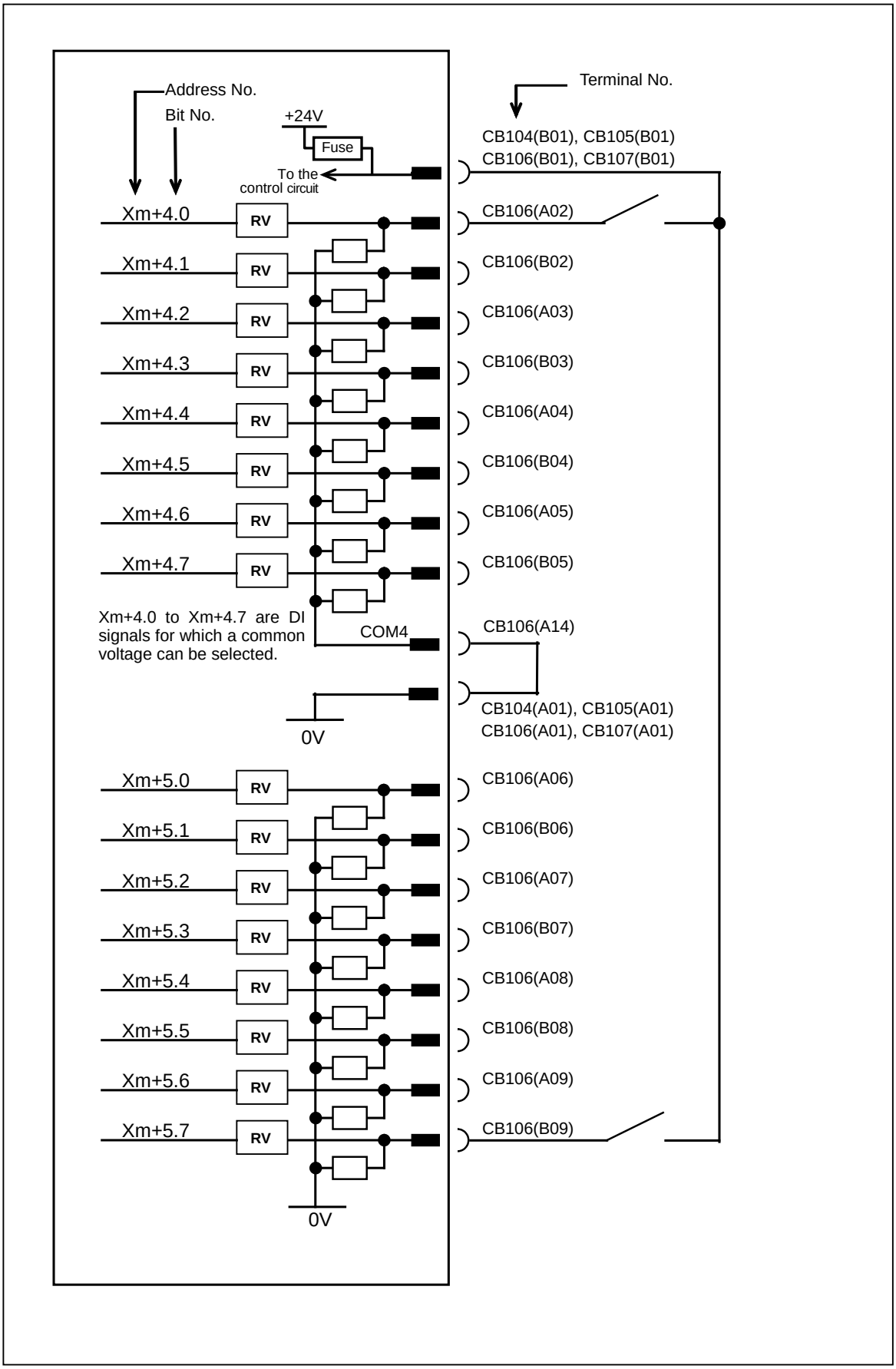

© MyFANUC B5B0D8428C0144A78A5F4CA87F2C262E

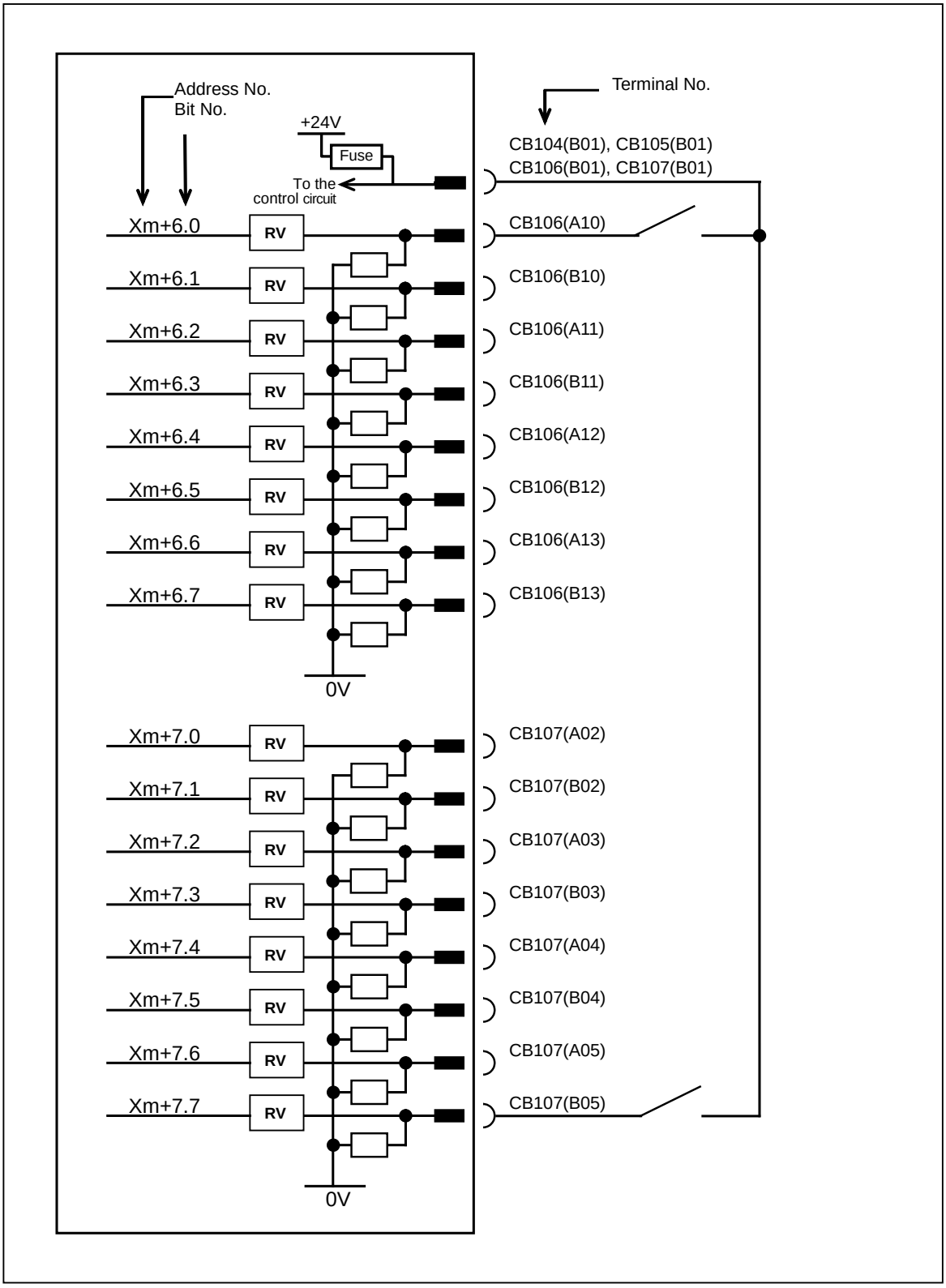

© MyFANUC B5B0D8428C0144A78A5F4CA87F2C262E

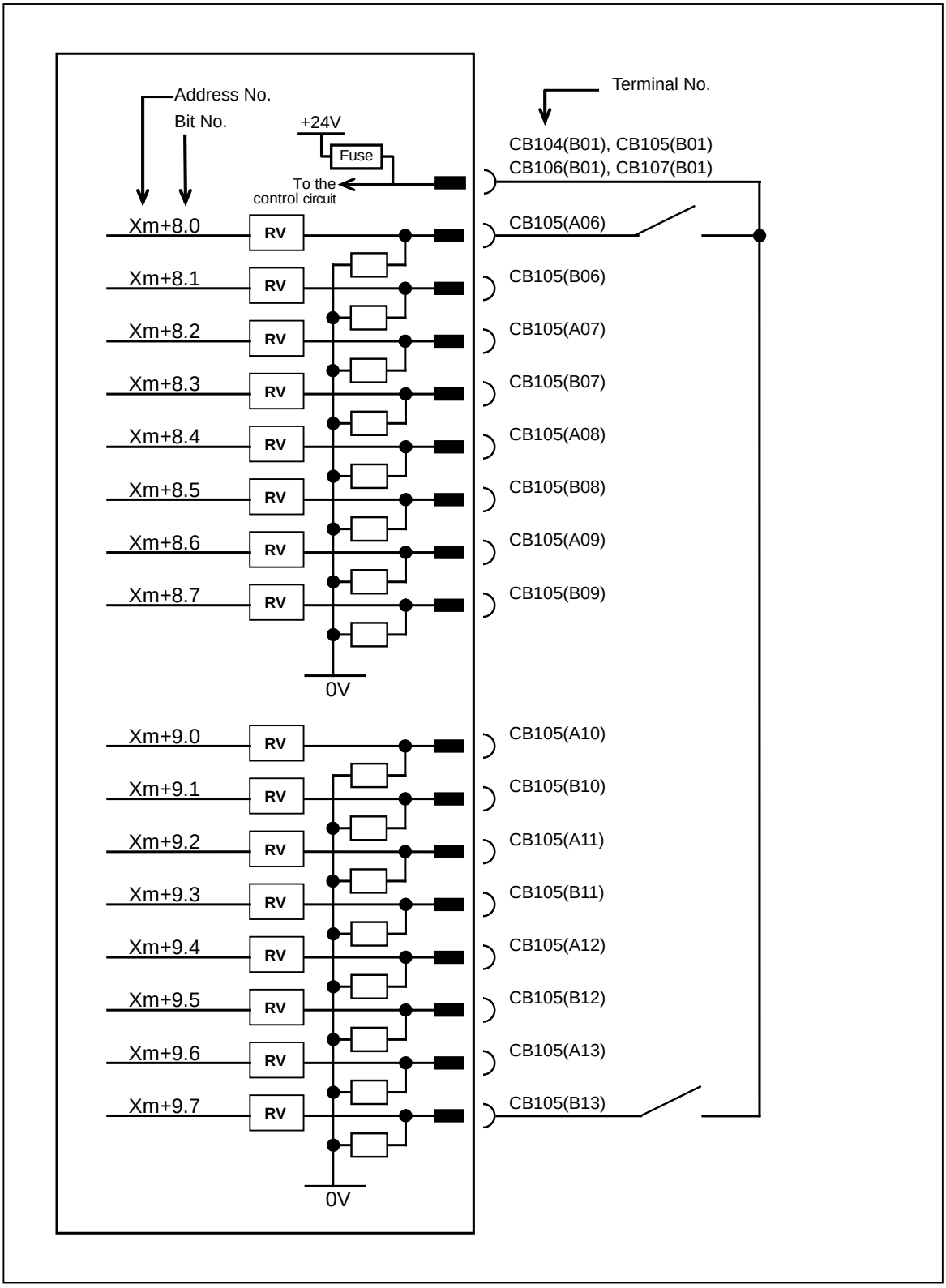

NOTE

The delay time of the receiver for input Xm+9 is 5-22ms.
The delay time of the receiver for the other input is 2ms (MAX).

© MyFANUC B5B0D8428C0144A78A5F4CA87F2C262E

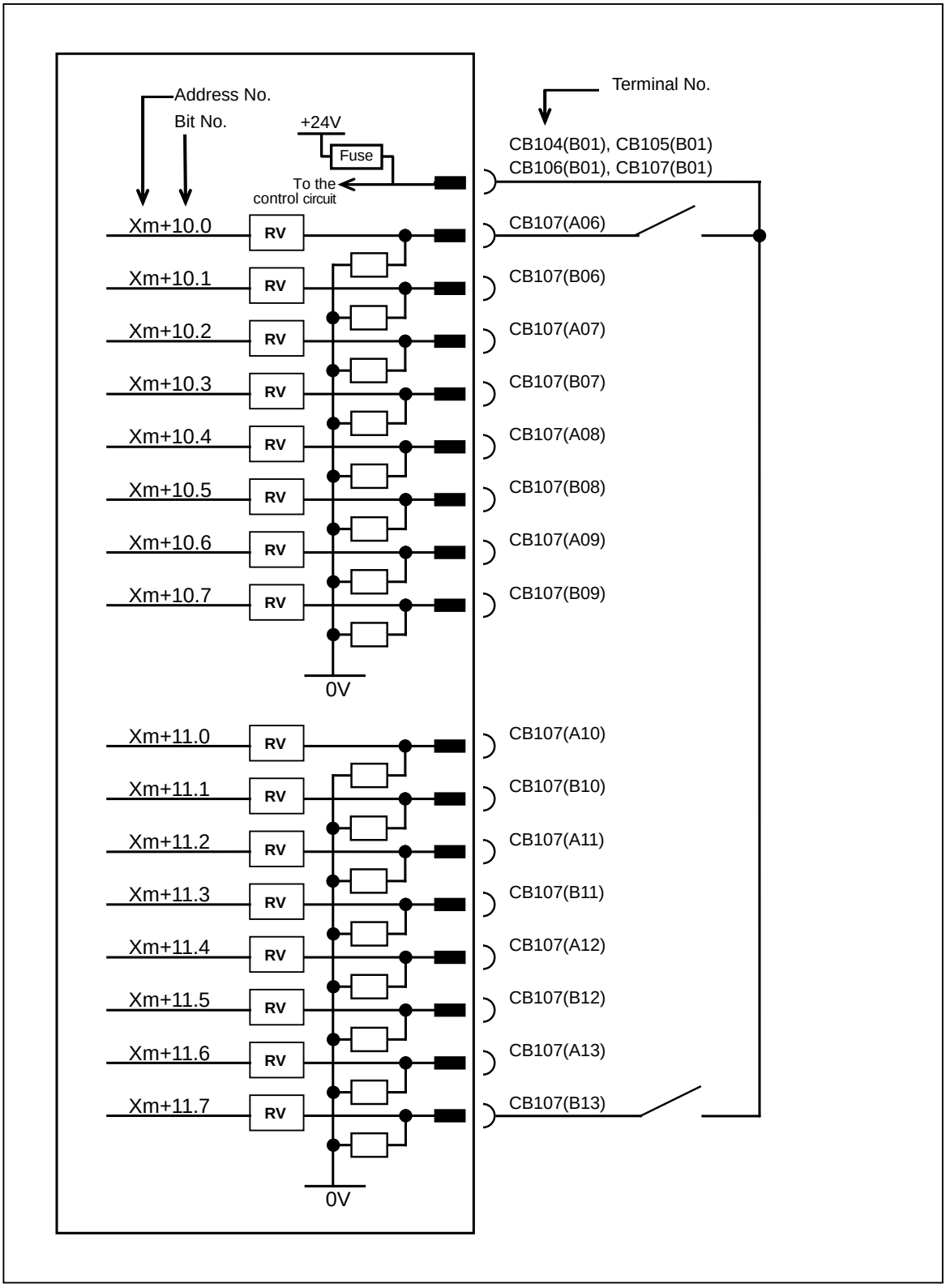

© MyFANUC B5B0D8428C0144A78A5F4CA87F2C262E

NOTE

Xm+4.0 through Xm+4.7 are DI pins for which a common voltage can be selected. That is, by connecting the COM4 (CB106-A14) pin to the +24V power supply, these DI signals can be input with them logical state reversed. If, however, some cable wires of them are connected to ground, they have the same effect as inputting an ON state DI signal. To prevent this from occurring, the connection of the COM4 (CB106-A14) pin to the 0V power supply is recommended wherever possible in terms of safety.

For the unconnected pins at the addresses for which the common voltage is fixed, the input is “0”. For the unconnected pins at the addresses for which a common voltage can be selected (from Xm+4.0 to Xm+4.7), the input is “0” when the COM4 (CB106-A14) pin is connected to the 0 V power supply or “1” when it is connected to the +24V power supply. Connect COM4 when used. When addresses from Xm+4.0 to Xm+4.7 are not used, connect COM4 to the 0V power supply.

Common voltage for general-purpose DI

Address	Common voltage
Xm	Internally fixed to 0V.
Xm+1	Internally fixed to 0V.
Xm+2	Internally fixed to 0V.
Xm+3	Internally fixed to 0V.
Xm+4	Externally can be selected with COM4.
Xm+5	Internally fixed to 0V.
Xm+6	Internally fixed to 0V.
Xm+7	Internally fixed to 0V.
Xm+8	Internally fixed to 0V.
Xm+9	Internally fixed to 0V.
Xm+10	Internally fixed to 0V.
Xm+11	Internally fixed to 0V.

⚠ **CAUTION**

An output DC voltage of +24V at CB104 (B01), CB105(B01), CB106(B01) and CE107 (B01) is for DI signals. Do not supply 24 VDC to these pins from the outside.

© MyFANUC B5B0D8428C0144A78A5F4CA87F2C262E

8.12.5 DO(Output Signal) Connection

○ 64 points maximum

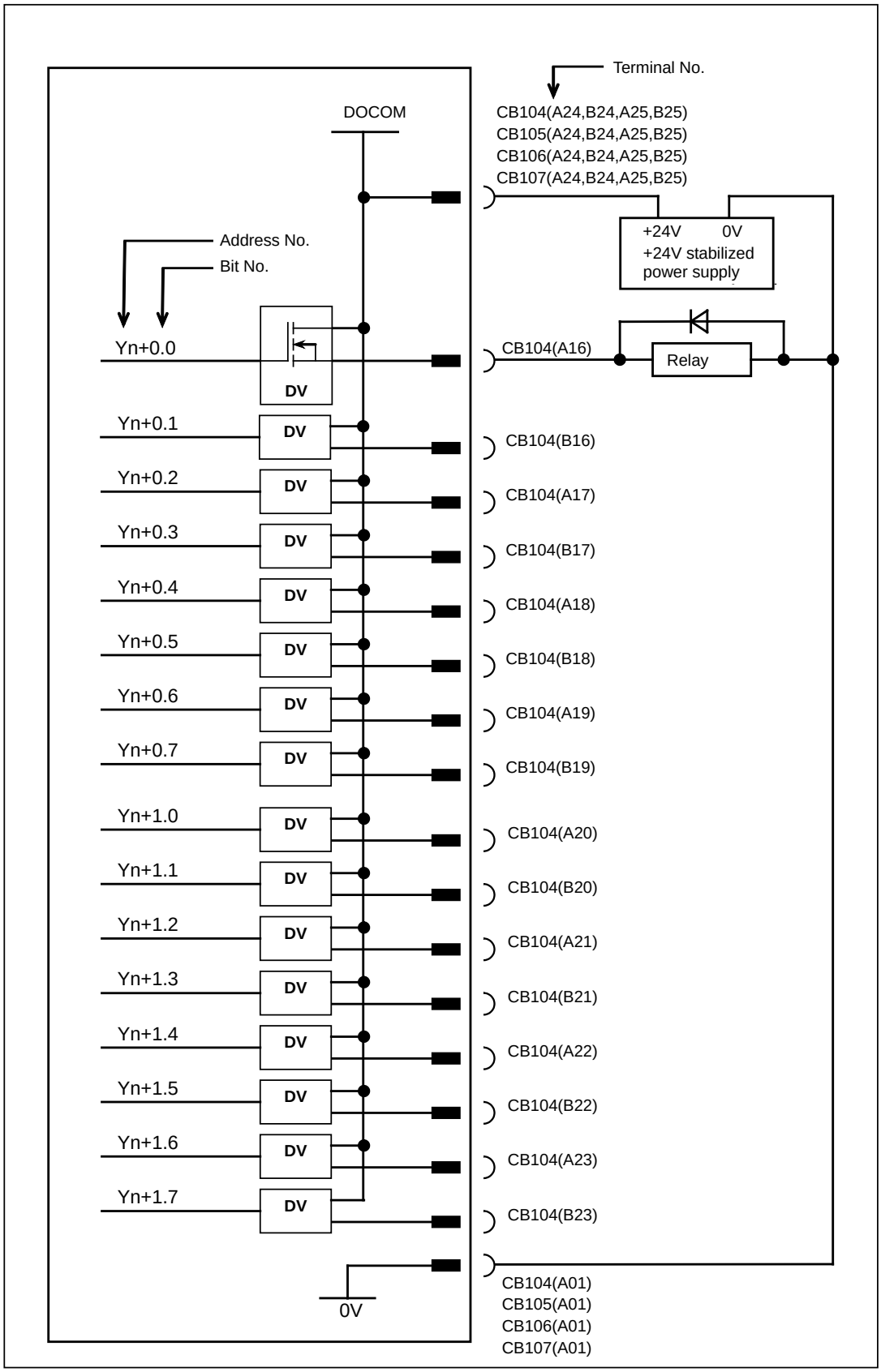

© MyFANUC B5B0D8428C0144A78A5F4CA87F2C262E

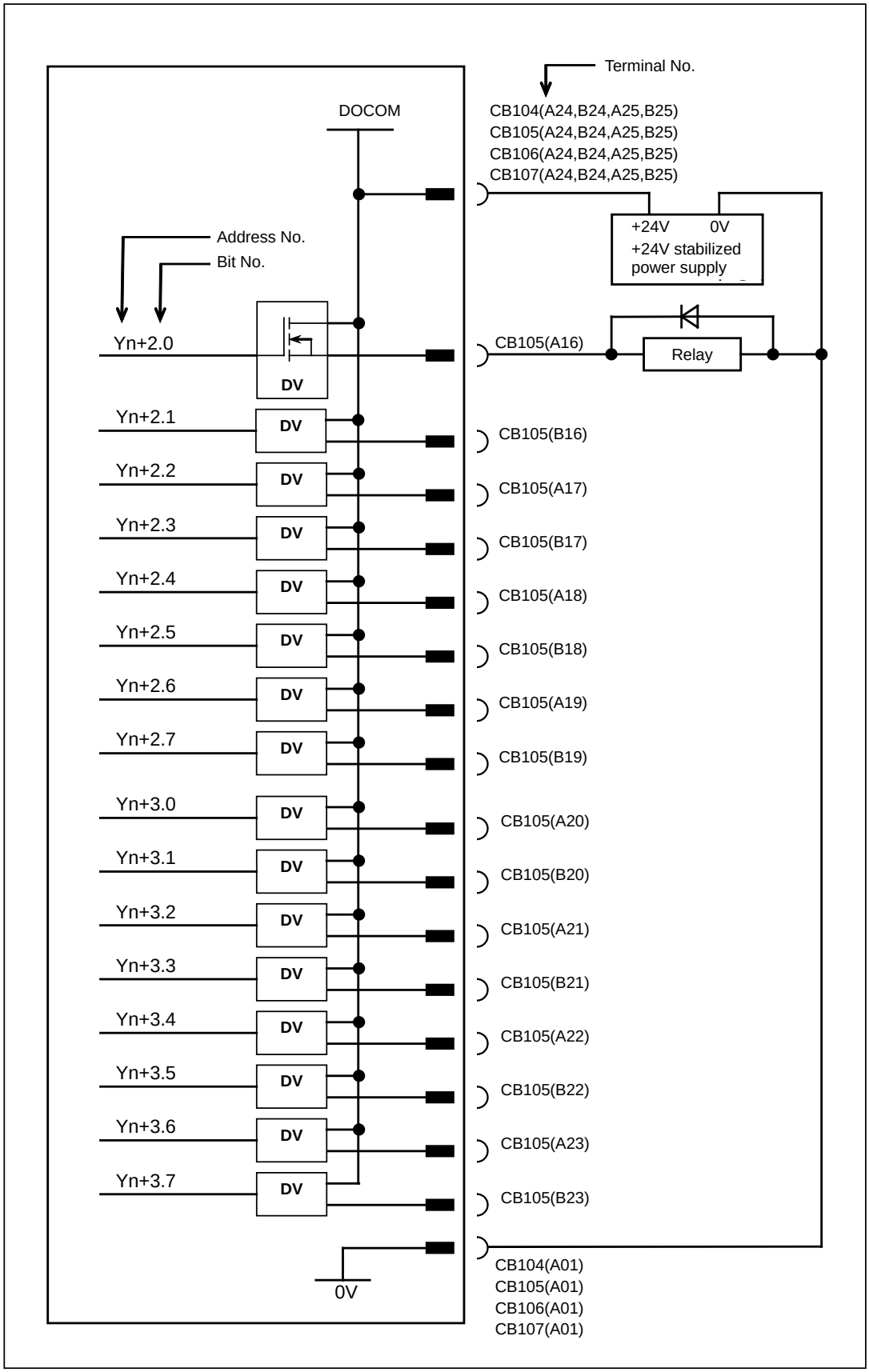

© MyFANUC B5B0D8428C0144A78A5F4CA87F2C262E

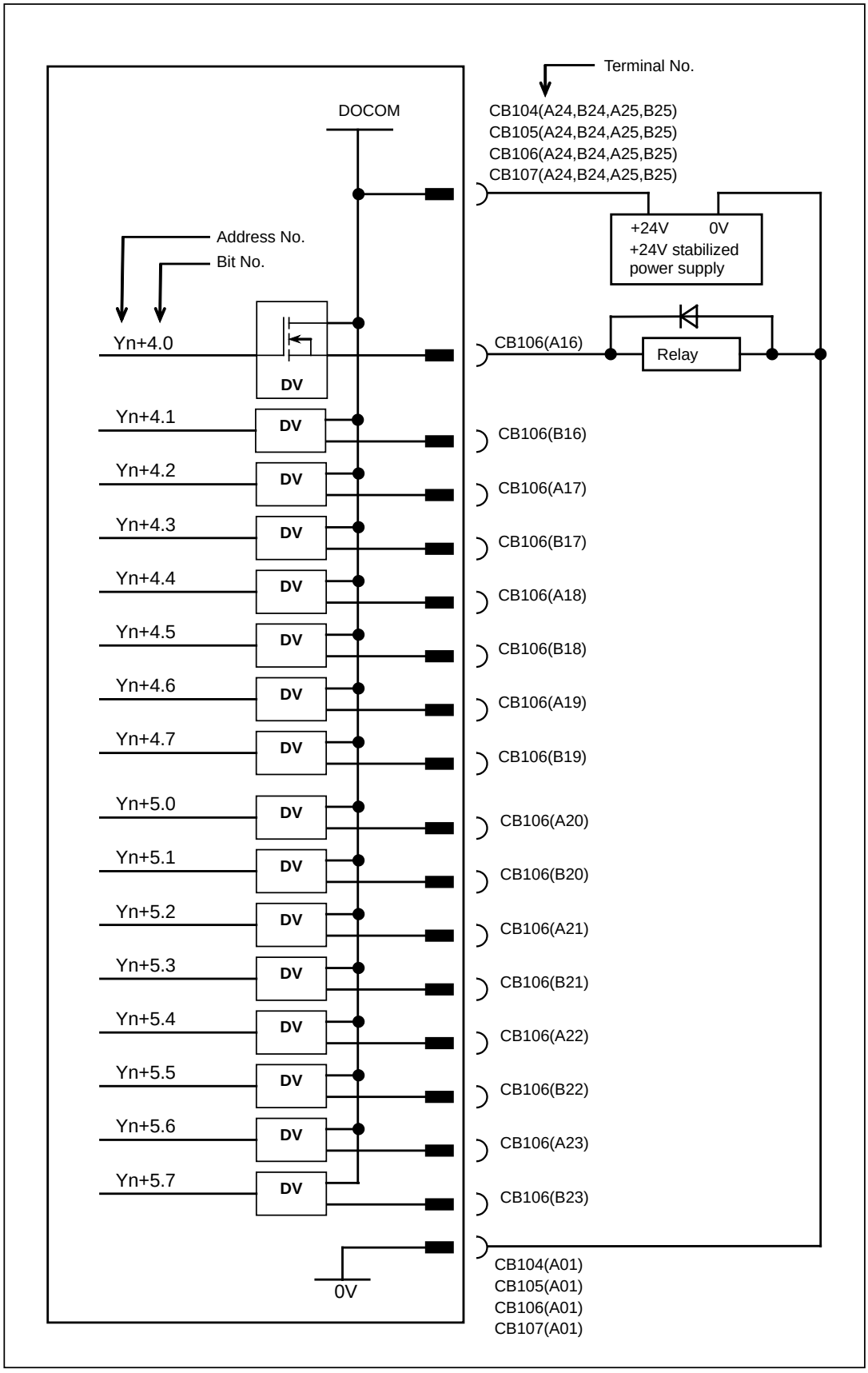

© MyFANUC B5B0D8428C0144A78A5F4CA87F2C262E

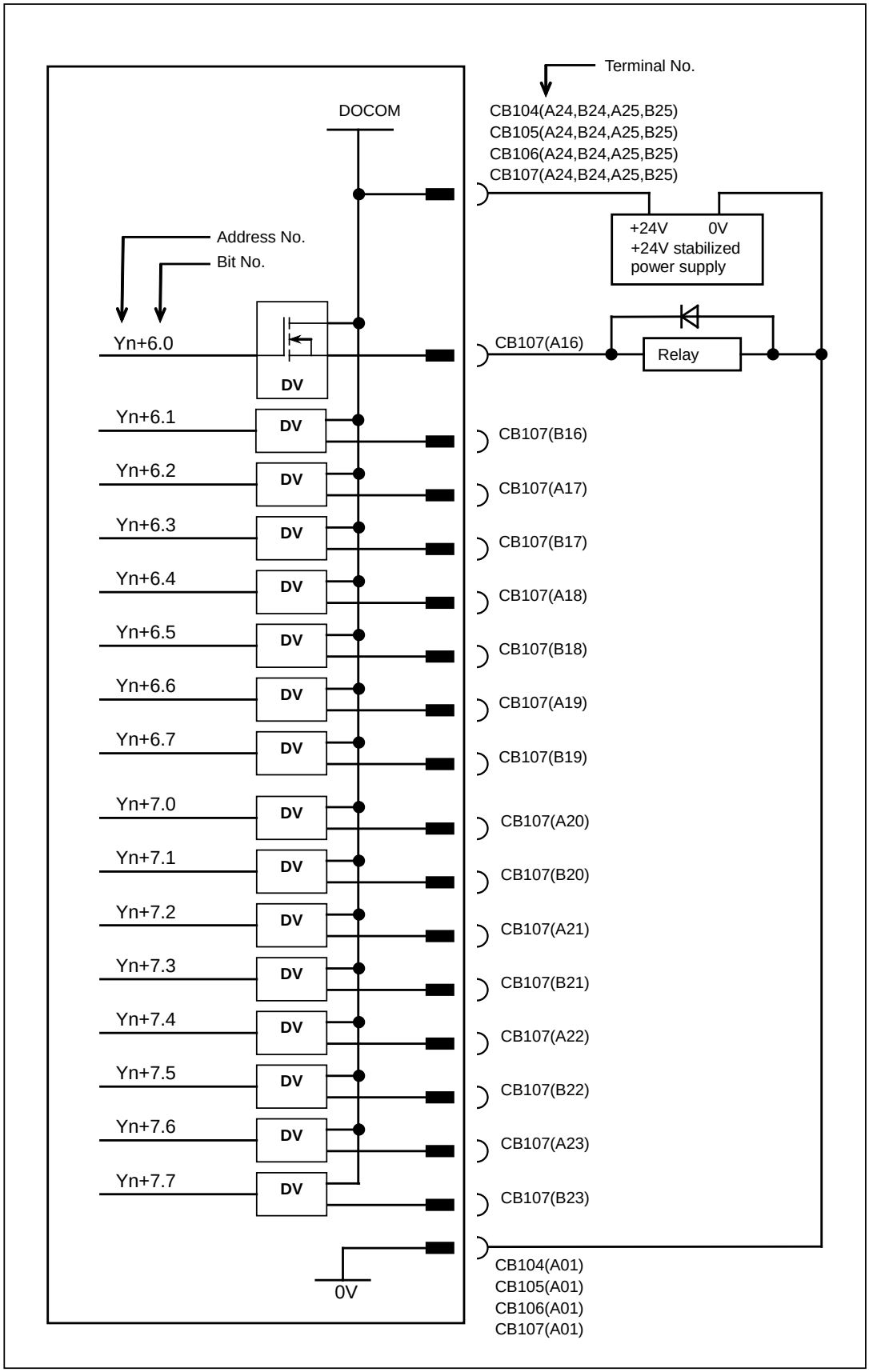

© MyFANUC B5B0D8428C0144A78A5F4CA87F2C262E

8.12.6 Manual Pulse Generator Connection

For an I/O unit for power magnetics cabinet, three manual pulse generators can be connected.
For the connection, see Subsection 7.4.1.

8.12.7 External View

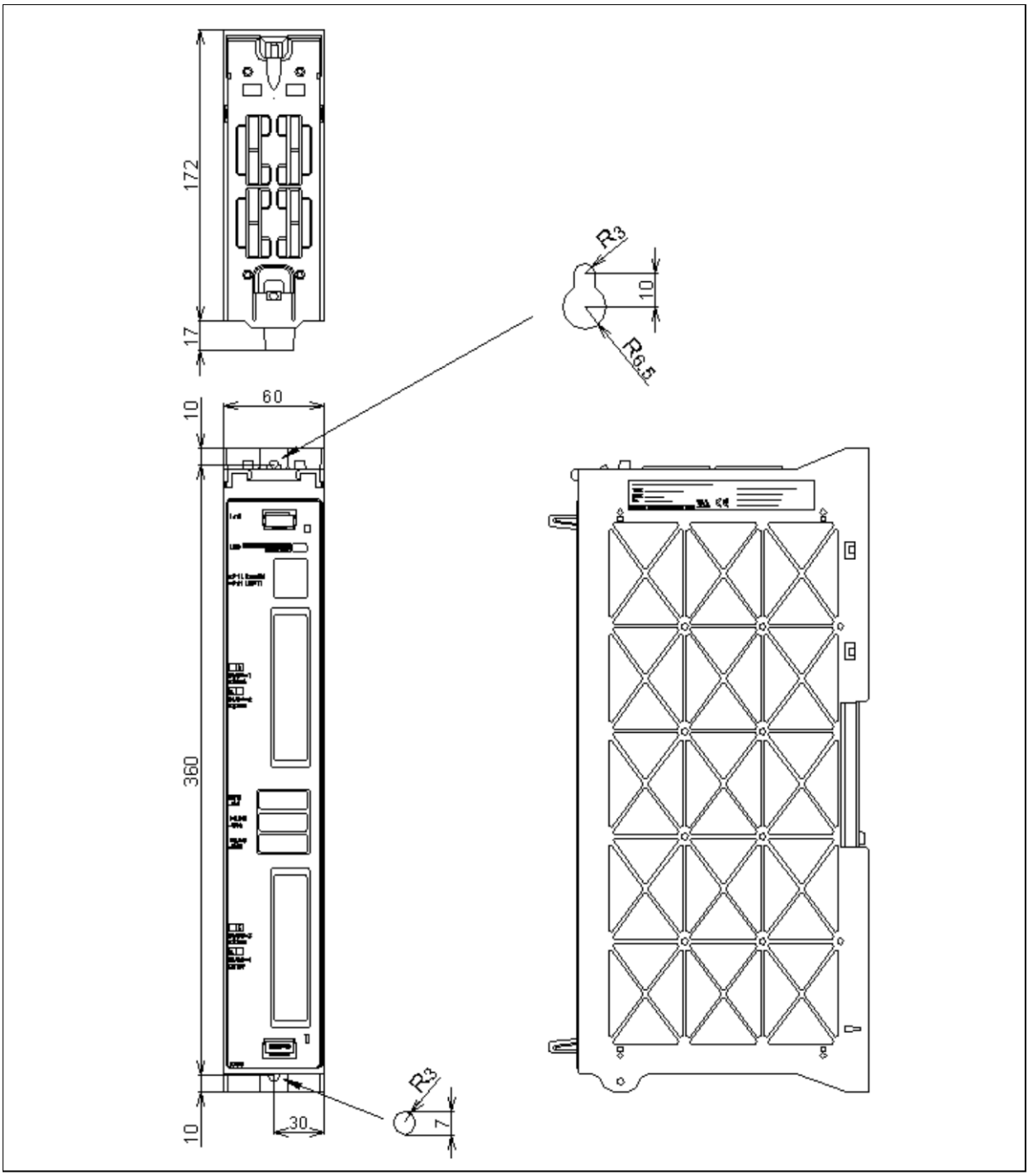

© MyFANUC B5B0D8428C0144A78A5F4CA87F2C262E

8.12.8 GND Cable Connection

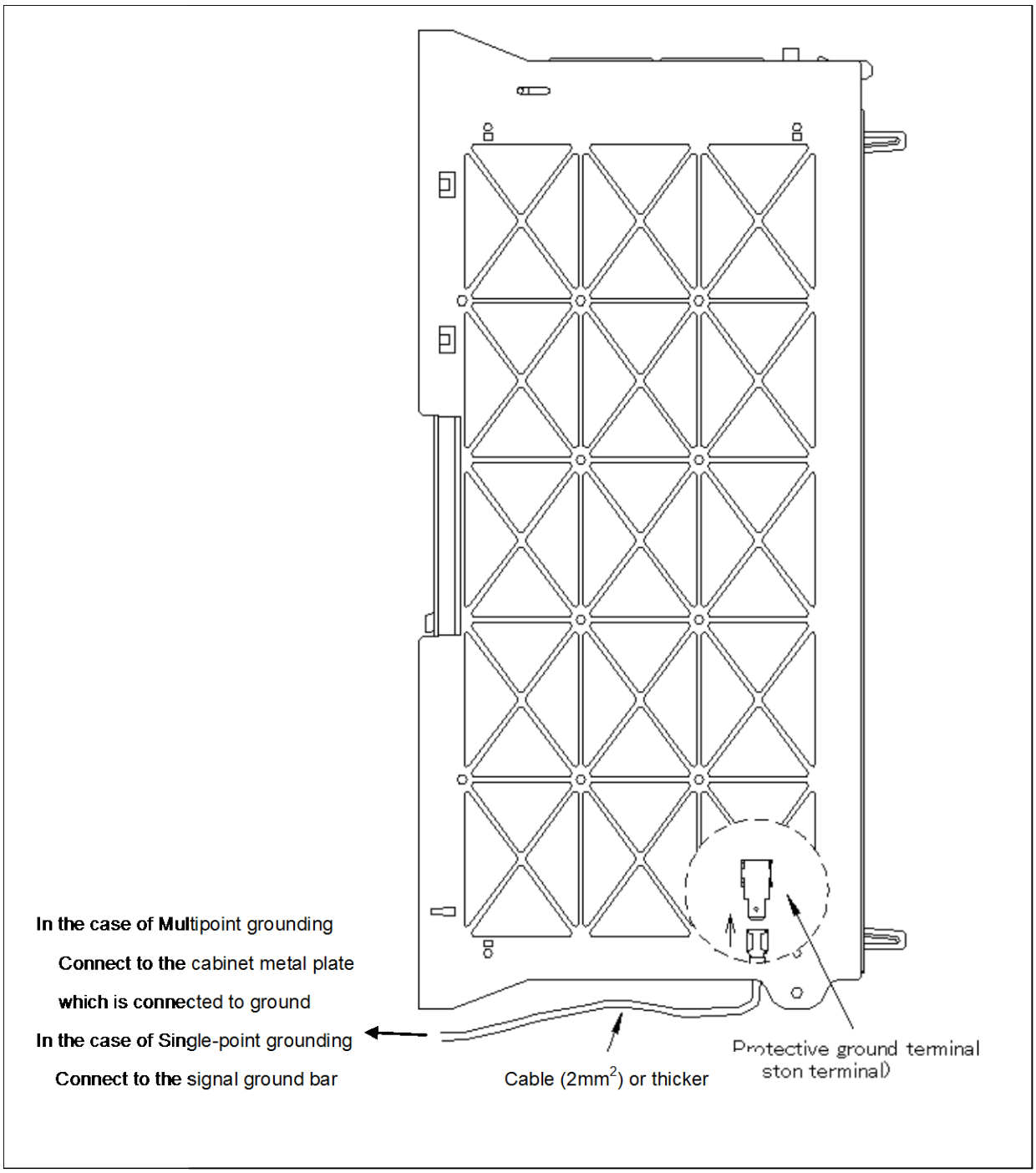

Connect the 0V line of this unit to the cabinet's metal plate which is connected to ground or signal ground bar nearby via the protective ground terminal. Ground cable can be connected to the terminal from the bottlom of the unit case. Refer to Item 3.4.1.1 about Multipoint grounding or Single-point grounding.
Use a faston terminal for series 250 as cable terminal.

© MyFANUC B5B0D8428C0144A78A5F4CA87F2C262E

8.12.9 Specifications

Installation specifications

Install the I/O module in a fully enclosed cabinet.
Use the units under the following ambient temperature conditions:

Operation: 0°C to 55°C
Storage and transportation: -20°C to 80°C

For other installation conditions, conform to the CNC installation conditions.

Ordering specifications

Item	Ordering specifications	Remarks
I/O unit for power magnetics cabinet	A02B-0319-C001	
Fuse (spare parts)	A03B-0815-K001	1A

Module specifications

Item	Specification	Remarks
DI points	96 points	24 V input
DO points	64 points	24 V source type output
MPG interface	Up to 3 units	

Power supply rating

Module	Supply voltage	Current rating	Remarks
I/O unit for power magnetics cabinet	24 VDC ±10% supplied from the power supply connector CP1. The allowance of ±10% should include instantaneous voltage and ripple voltage.	0.3A + 7.3mA × DI	DI = number of DI points in the ON state.

As a guideline for heat dissipation, assume [power supply rating 24 (W)].

NOTE

To connect an optical adapter for the I/O Link *i* to both connectors JD1A and JD1B, the above power supply rating + 70mA is required.
If you use the power supply which is output from CP2, add the amount to the above current rating .

DI (intput signal specifications)

Number of points	24 points (per module)
Rated input	DC24V, 7.3mA
Delay time	The receiver delay time is 2 ms (maximum). In addition, [I/O Link transfer time between CNC and I/O module] and [ladder scan period (depending on CNC)] must be considered. However,the receiver delay time is 22 ms (maximum) for only Xm+9.

DI (contact specifications)

Contact rating	30 VDC, 16 mA or more
Leakage current between contacts when opened	1mA or less(26.4V)
Voltage decrease between contacts when closed	2 V or less (including a cable voltage decrease)

© MyFANUC B5B0D8428C0144A78A5F4CA87F2C262E

DO (output signal specifications)

Maximum load current when ON	200 mA or less including momentary current per signal. 11.2 A or less for DO signals in all.
Saturation voltage when ON	1 V (maximum) when the load current is 200 mA
Withstand voltage	24 V +20% or less including momentary variations
Leakage current when OFF	20μA or less
Delay time	The driver delay time is 50 μs (maximum). In addition, [I/O Link transfer time between CNC and I/O module] and [ladder scan period (depending on CNC)] must be considered.

⚠ **CAUTION**

1 When inductive load is connected to DO teminal, connect a diode in parallel in order to reduce the noise..
2 When capacitive load is connected to DO teminal, connect a resistor in series in order to diminish the rush current.

Power supply for DO load (DOCOM)

Input voltage : min 0V, max 26.4V
Be sure to connect all power supply for DO load (DOCOM) pins.
Turn on the power supply for DO load (DOCOM) at the same time as or later than the power for the control unit.
Turn off the power supply for DO load (DOCOM) when or before the power for the control unit is turned off.

⚠ **WARNING**

For the safety of the system, don’t supply the power for the load (DOCOM) when the power for the I/O Unit is off. If the power for the load (DOCOM) is supplied when the power for the I/O Unit is off, invalid output or malfunction may cause an accident.

© MyFANUC B5B0D8428C0144A78A5F4CA87F2C262E

8.12.10 Other Notes

Address allocation

For the I/O unit for power magnetics cabinet, I/O addresses are mapped as follows.

DI space map

Xm_1	General-purpose input signal	Slot 1
$Xm_1 + 1$		
$Xm_1 + 2$		
$Xm_1 + 3$		
$Xm_1 + 4$		
$Xm_1 + 5$		
$Xm_1 + 6$		
$Xm_1 + 7$		
$Xm_1 + 8$		
$Xm_1 + 9$		
$Xm_1 + 10$		
$Xm_1 + 11$		
Xm_{mpg} (for 1st MPG)	Manual pulse generator	Slot MPG
$Xm_{mpg} + 1$ (for 2nd MPG)		
$Xm_{mpg} + 2$ (for 3rd MPG)		

DO space map

Yn_1	Output signal	Slot 1
$Yn_1 + 1$		
$Yn_1 + 2$		
$Yn_1 + 3$		
$Yn_1 + 4$		
$Yn_1 + 5$		
$Yn_1 + 6$		
$Yn_1 + 7$		

Xm_1, Xm_{mpg}, and Yn_1 indicate the start address at allocation.

Basically, for an I/O unit for power magnetics cabinet, allocate 12-byte DI addresses to slot 1 and 8-byte DO addresses to slot 1.

An I/O unit for power magnetics cabinet has an interface for three manual pulse generators. To use manual pulse generators, allocate addresses to slot MPG. With this setting, addresses can be allocated to the three manual pulse generators at a time (addresses cannot be allocated individually to manual pulse generators). Do not use the addresses with the ladder because the CNC processes the manual pulse generator signals directly.

ON/OFF of the power supply (DO common) for DO signals (output signals)

For ON/OFF of the power supply pin (DOCOM) for the DO signals (output signals), see Subsection 8.2.4.4.

Parallel DO (output signal) connection

For parallel connections of DO signals (output signals), see Subsection 8.2.4.4.

DO (output signal) alarm detection

The DO driver of the I/O unit for power magnetics cabinet is capable of detecting an overcurrent and measuring its own temperature. If an accident, such as the connecting of the cable to ground, causes an abnormal increase in the load current or in the driver temperature, a protection circuit, which is provided for each DO driver, is activated and keeps the DO signal in the OFF state until the cause of the problem is eliminated. Even if this occurs, the CNC and I/O module continue operating without entering the alarm status, but the PMC is notified of the location of the error detected by the DO driver. This information can be checked on the PMC status screen or alarm processing can be performed in advance using a ladder to help error check and recovery.

A DO error such as a ground fault is detected for each point. This DO error is transferred to the PMC system relay area as a status alarm. The following table lists system relay area information and corresponding DO data related to a status alarm. When an alarm data bit is set to “1”, the DO driver corresponding to the bit detects an error. Also see Subsection 7.3.3, “Status Alarm”.

© MyFANUC B5B0D8428C0144A78A5F4CA87F2C262E

Information output to the relay area and corresponding location where an error occured

Information output to the system relay area						Faulty location
Type	**Group number**	**PMC path**	**Slot number**	**Alarm information number (Intra-slot byte address)**	**Y address (DO address)**	
0	0 to 23	1 to 5	1	0	Yn	0th byte DO
				1	Yn+1	1st byte DO
				2	Yn+2	2nd byte DO
				3	Yn+3	3rd byte DO
				4	Yn+4	4th byte DO
				5	Yn+5	5th byte DO
				6	Yn+6	6th byte DO
				7	Yn+7	7th byte DO

Output values of “Group number”, “PMC path”, and “Y address” depends on unit connection and I/O address assignment.
Yn indicates the start address at allocation.

Description of “Alarm data” in the system relay area

Alarm data							
#7	**#6**	**#5**	**#4**	**#3**	**#2**	**#1**	**#0**
DO ground fault at bit 7	DO ground fault at bit 6	DO ground fault at bit 5	DO ground fault at bit 4	DO ground fault at bit 3	DO ground fault at bit 2	DO ground fault at bit 1	DO ground fault at bit 0

⚠ **CAUTION**

1 he output protection function is not for external equipment but for internal device of the module.
2 he output protection function can’t protect the internal device in any case. If the output protection function is activated, remove the cause immediately. If the output exceed the absolute maximum rating, the output protection function may not operate normally or the internal device may break before the output protection function operates.
3 f the over current is continued with a condition that the output protection function can’t operate normally, the output might emit smoke or take fire.

© MyFANUC B5B0D8428C0144A78A5F4CA87F2C262E

9 STOP AND EMERGENCY STOP

9.1 STOP MODES

If the control unit enters the alarm state, the servo and spindle motors stop (NOTE).

NOTE
A servo motor attached to a vertical axis or spindle which is not manufactured by FANUC may not stop. And, a stop of the spindle motor depends on a Ladder program.

There are the following stop modes:
1 Stop by shutting off the motor power
2 Controlled stop without shutting off the motor power
3 Stop by shutting off the motor power after a controlled stop

A controlled stop is the quickest. However, a stop may be made by immediately shutting off the motor power for safety reasons.

⚠ **WARNING**
Pressing the RESET key stops the running program. As a result, the servo axis stops and the spindle axis remains rotating without changing the speed. The RESET key may not function due to an MDI failure or the like, so, for safety, use the emergency stop button instead of the RESET key to stop the motor safely. When a failure of the control unit, machine contact, or connection is also assumed, further safety actions must be taken.

9.2 SHUTTING OFF THE MOTOR POWER

The motor power may be shut off through an IGBT (transistor) or an electromechanical scheme that controls mechanical contacts. When an amplifier is used, the motor power is shut off by an IGBT (transistor) based on the control unit alarm state (or Ladder program). To shut off the motor power through an electromechanical scheme, a line contactor must be installed on the power input line in the Power Supply, thereby providing a direct contactor shut-off route. (See Fig. 9.5 (a) in Section 9.5, "EMERGENCY STOP SIGNAL.")
The Power Supply provides MCC control signals (MCCOFF3 and MCCOFF4) for controlling the contactor. However, these signals are enabled only when the motor power to all servo and spindle amplifiers connected to the Common Power Supply is shut off through the IGBT.
Example 1)
When the *ESP signal is input to the Power Supply
The motor power to both servo and spindle amplifiers is shut off by the IGBT, after which MCC control signals are output.
Example 2)
When a servo alarm occurs
The motor power to the servo amplifier is shut off by the IGBT. When the spindle motor works without any trouble, however, the spindle motor can be controlled independently and the motor power to the spindle amplifier is not shut off by the IGBT. In this case, MCC control signals are not output. When a spindle emergency stop signal is input using the Ladder program, the spindle motor is decelerated to a stop. Then, the motor power is shut off through the IGBT, MCC control signals are output, and the motor power is shut off electromechanically.
A failure in the amplifier may disable MCC control signals. To ensure motor power shut-off, therefore, a circuit must be designed in a redundancy configuration having a route that is independent of the shut-off function of the amplifier.

© MyFANUC B5B0D8428C0144A78A5F4CA87F2C262E

9.3 STOPPING THE SPINDLE MOTOR

While the spindle motor is running, shutting off the motor power allows the spindle motor to coast at a speed maintained before shut-off and eventually stop (after a while). However, there may be cases where the spindle motor should be stopped as soon as possible for safety reasons. In such cases, a stop of the spindle motor depends on a Ladder program prepared by the machine tool builder. If the CNC detects an abnormal condition, it outputs an alarm to the PMC. The Ladder program should specify processing to be performed when an alarm is output: allowing the spindle motor to continue running, decelerating the spindle to a stop, or causing the spindle to coast, for example.
To decelerate the spindle motor to a stop, a spindle emergency stop signal (such as *ESPA (G71.1) or *ESPB (G75.1)) can be input in the PMC. Inputting this signal cause the spindle motor to be decelerated to a stop. (A Ladder program must be created so that this signal is input if an alarm occurs.) The same effect can be achieved by using the Power Supply emergency stop input (connector CX4). When an emergency stop signal is connected to the *EMGPSM emergency stop input (connector CX4), therefore, the spindle is decelerated to a stop if the CNC enters the emergency stop state.

⚠ CAUTION

1 If the control unit enters the system alarm state, the Ladder program does not run. In this case, the spindle amplifier can be decelerated to a stop. Make proper parameter settings because such a stop depends on the settings.
2 If the spindle motor cannot be controlled due to an alarm in the spindle amplifier itself or for some other reason, the motor power is shut off by the IGBT immediately. After the servo motor has stopped, an MCC control signal is output.

9.4 STOPPING THE SERVO MOTOR

Shutting off the motor power brings the servo motor to a dynamic brake stop. A dynamic brake stop is braking performed by separating the synchronous rotator from the driving power, and consuming generated electric energies with the coil as well as the built-in resistor of the servo amplifier. With this function, shutting off the motor power does not allow the servo motor to coast like the spindle motor.
Servo motor stop mode depends on the type of a control unit alarm.
Example)

1 PS alarm caused by an NC program error or the like
  The motor power is not shut off.
2 Control unit fan stop
  A single-block stop is made. The motor power is not shut off.
3 Emergency stop state
  A dynamic stop is made as a rule. By setting relevant parameters, however, it is also possible to decelerate the servo motor to a stop, and then to shut off the servo motor power.
4 System alarm
  A dynamic brake stop is made.

If the servo motor cannot be controlled, a dynamic brake stop is unconditionally made.

© MyFANUC B5B0D8428C0144A78A5F4CA87F2C262E

9.5 EMERGENCY STOP SIGNAL

> ⚠ **CAUTION**
> The safety machine should be designed based on the evaluation results of machine risk assessment. Use the emergency stop signal properly in order to design the safety machine.

To configure an emergency stop circuit in compliance with the safety standards of IEC60204-1 in which requirements for electrical components of machine are specified, observe the following cautions. IEC60204-1 specifies that an emergency stop circuit shall function as a category 0 or 1 stop.

Category 0 stop:
Stopping by immediate removal of power to the machine actuators(Uncontrolled stop)

Category 1 stop:
A controlled stop with power to the machine actuators available to achieve the stop and then removal of power when the stop is achieved
(Controlled stop)

Fig. 9.5(a) or Fig. 9.5(b) shows an example showing how to make connections for the emergency stop signal with this CNC controller and servo amplifier(α*i* series or β*i* series) to comply with the EU Machine Instructions. Fig. 9.5(c) shows a flow diagram of the emergency stop circuit signals.

The emergency stop signal is input to the Safety relay module. The output signal from the relay is input to the CNC controller and Power Supply(PS). The Power Supply outputs control signal for a motor power magnetic contactor, which can be used to switch the power applied to the Power Supply on and off. An emergency stop signal is usually generated by closing the B contact of a pushbutton switch.

When the emergency stop signal (*ESP) contact is closed, the CNC controller enters the emergency stop released state, such that the servo and spindle motors can be controlled and operated.

When the emergency stop signal (*ESP) contact opens, the CNC controller enters the emergency stop state, and the servo and spindle motors stop. In case of Fig. 9.5(a) or 9.5(b), the spindle motor power is shut off after the spindle motor is decelerated to a stop (Category 1 stop). Meanwhile, the servo motor is forced to be a dynamic stop as a rule (Category 0 stop). By setting relevant parameter, however, it is also possible to decelerate the servo motor to a stop, and then to shut off the servo motor power (Category 1 stop).

Regarding how the Spindle motor or the Servo motor stops when the emergency stop button is pushed, refer to the Item 9.3 and the Item 9.4. Regarding specifications of parameters related in these matters, refer to the FANUC AC SERVO parameters manual (B-65270JA).

The example of the emergency stop signal circuit showed in Fig. 9.5(a) or Fig. 9.5(b) complies with the requirements of the safety standard ISO13849-1, Performance Level (PL) c or d. However, when calculating PL value concretely, the calculation should be based on the safety standard ISO13849-1 with the reliability data provided by each parts supplier. In case for the reliability data of CNC, please contact FANUC sales office.

© MyFANUC B5B0D8428C0144A78A5F4CA87F2C262E

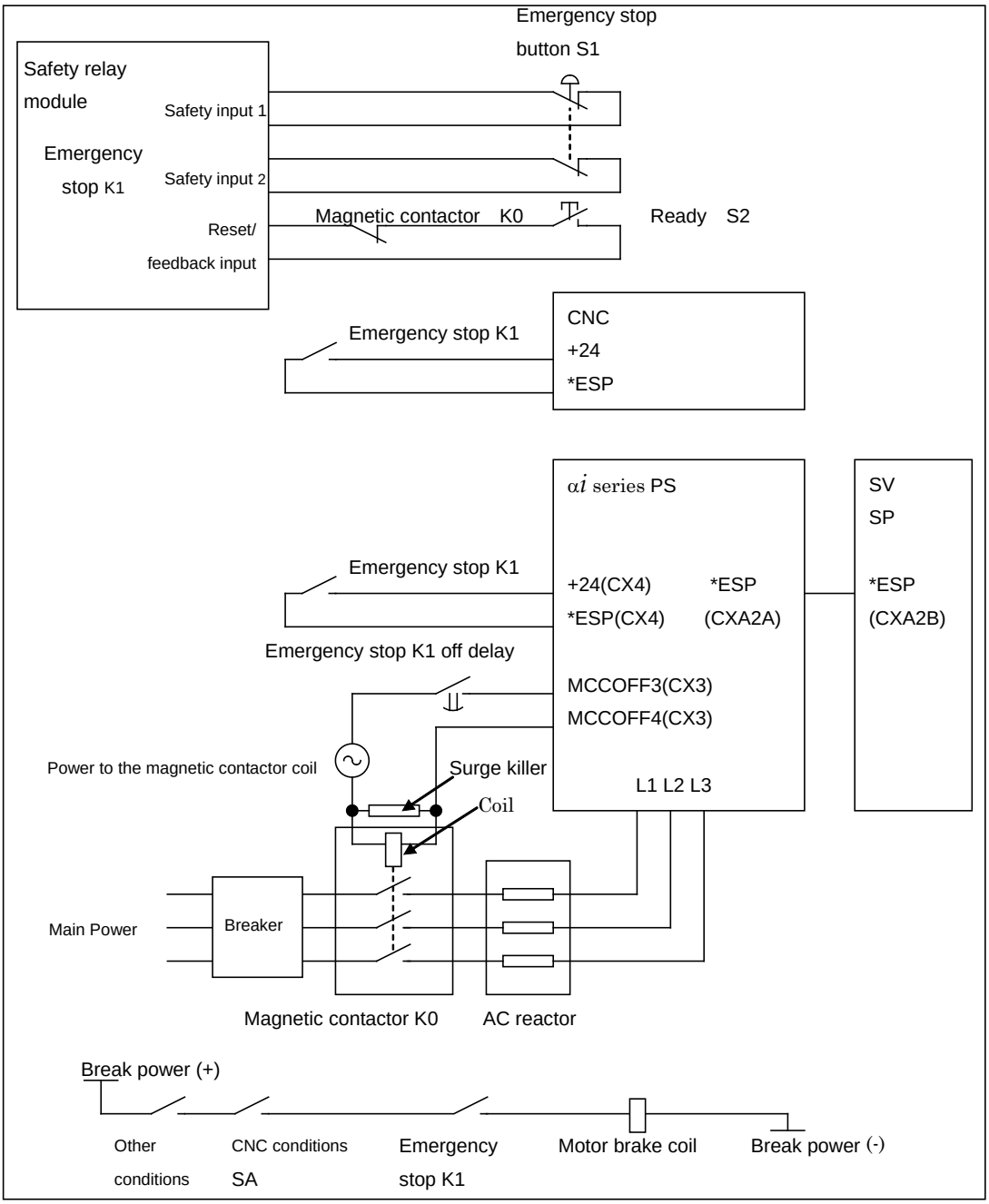

Fig. 9.5(a) Example of connections with an αi series servo amplifier

NOTE

1 When Emergency stop button S1 is pushed, Emergency stop K1 opens and Magnetic contactor K0 shuts off the power for Power Supply.

2 Set the off delay timer for shutting the power to the magnetic contactor coil in the above example as follows:
- Set a value which allows the time required to normally stop by the spindle.
- Set a value which allows the feed axis stop time also when the feed axis quick stop function and vertical axis fall prevention function are used.

3 Connect the auxiliary contact of Magnetic contactor K0 to feedback input of Safety relay in order to detect the failure of Magnetic contactor K0.

© MyFANUC B5B0D8428C0144A78A5F4CA87F2C262E

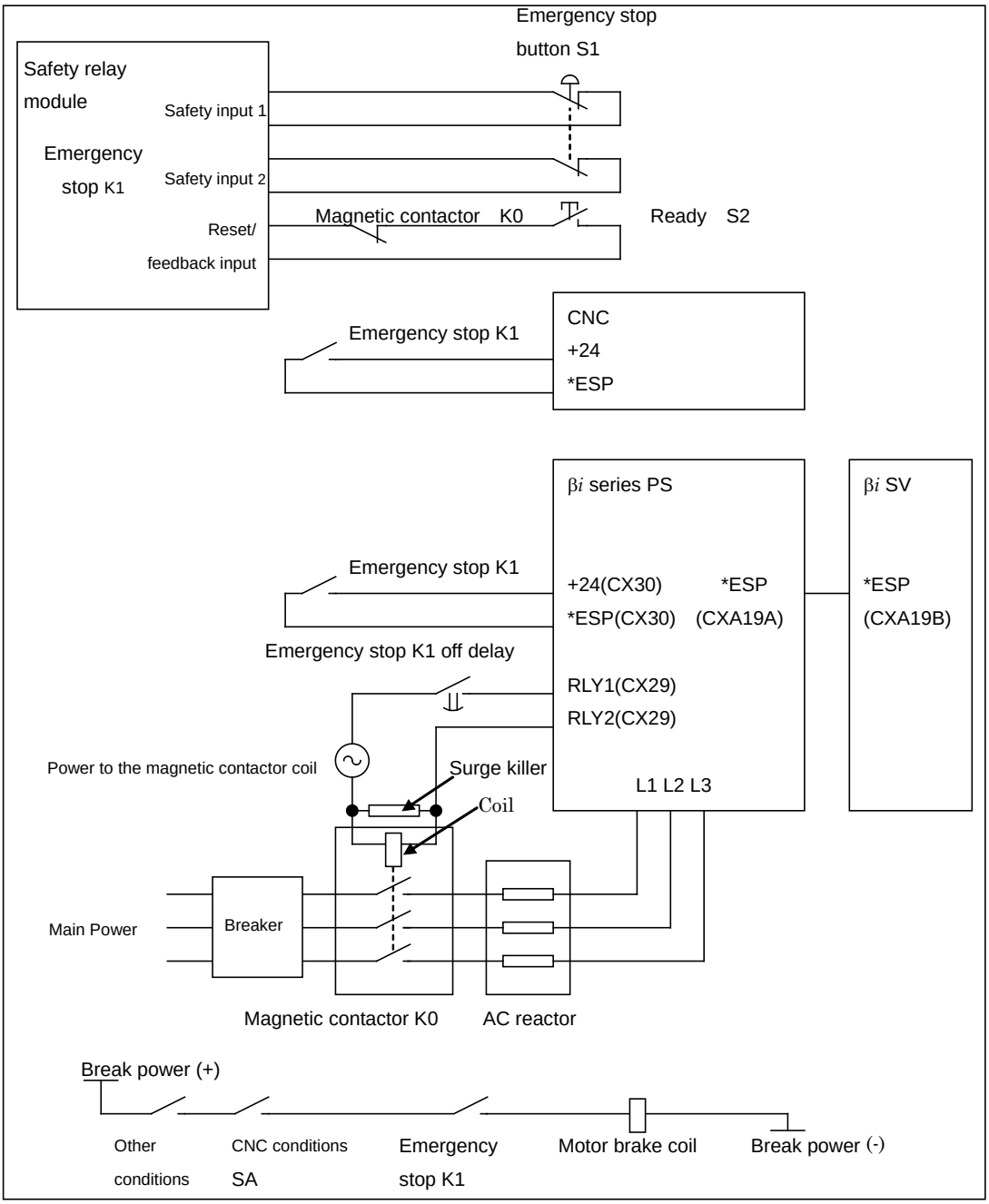

Fig. 9.5(b) Example of connections with an βi series servo amplifier

NOTE

1 When Emergency stop button S1 is pushed, Emergency stop K1 opens and Magnetic contactor K0 shuts off the power for Power Supply.

2 Set the off delay timer for shutting the power to the magnetic contactor coil in the above example as follows:
- Set a value which allows the time required to normally stop by the spindle.
- Set a value which allows the feed axis stop time also when the feed axis quick stop function and vertical axis fall prevention function are used.

3 Connect the auxiliary contact of Magnetic contactor K0 to feedback input of Safety relay in order to detect the failure of Magnetic contactor K0.

© MyFANUC B5B0D8428C0144A78A5F4CA87F2C262E

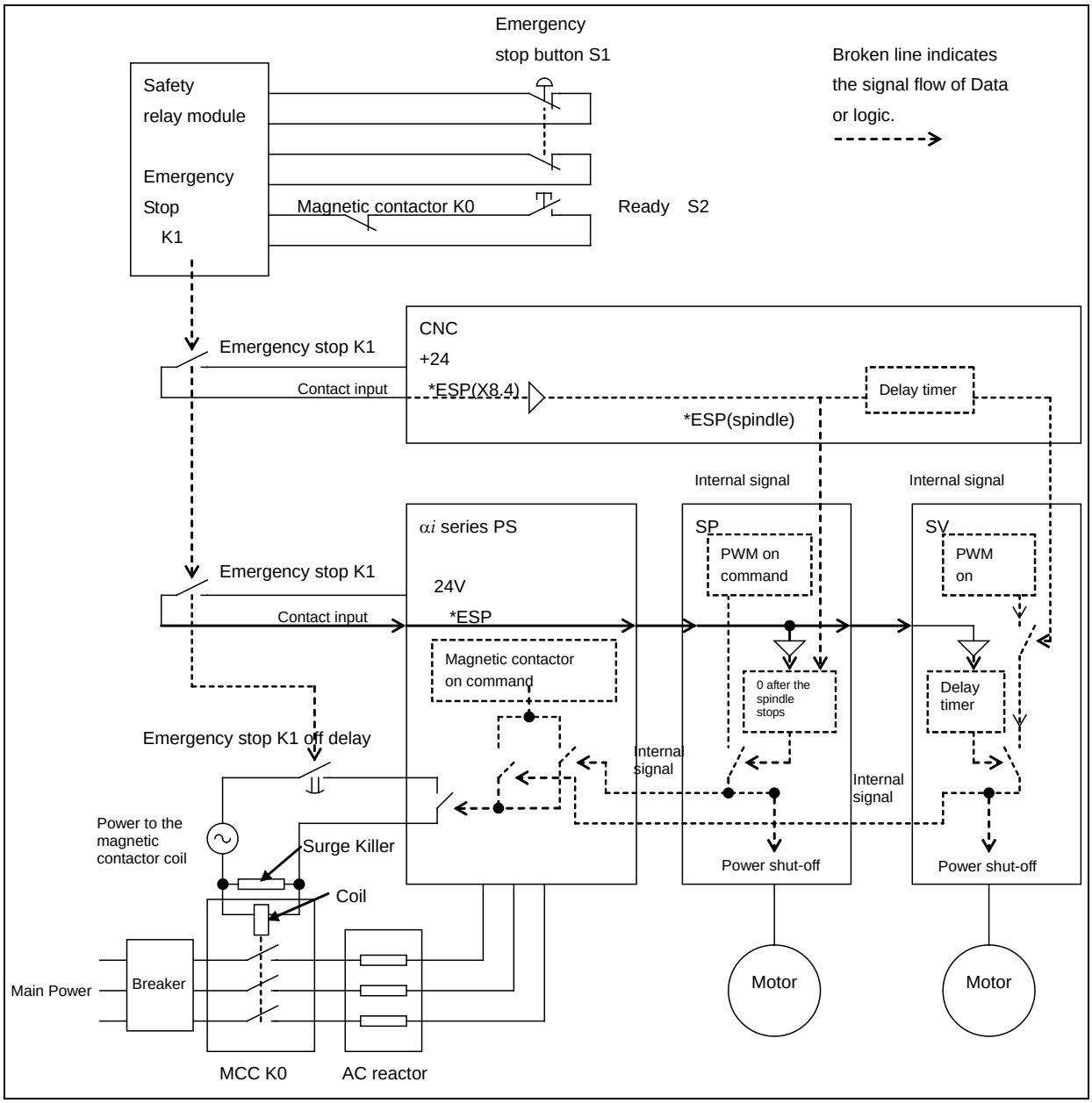

Fig. 9.5(c) Flow diagram of emergency stop circuit signals

⚠ CAUTION

1 This CNC controller can detect overtravel by using a software limit function. If the software limit function does not operate effectively due to a failure, resulting in a possible serious accident or loss, install a safety circuit, for example, a stroke end limit switch arranged in series with the emergency stop button.

2 To use a spindle motor and amplifier produced by a manufacturer other than FANUC, refer to the corresponding documentation as well as this manual. Design the emergency stop sequence such that, if the emergency stop signal contact opens while the spindle motor is rotating, the spindle motor is decelerated until it stops.

© MyFANUC B5B0D8428C0144A78A5F4CA87F2C262E

9.6 CAUTIONS ABOUT MULTI-PATH CONTROL

For multi-path control, multiple paths (up to 2 paths) belong to a machine group, and multiple machine groups (up to three groups) constitute a system.

Example) Multi-path control configuration

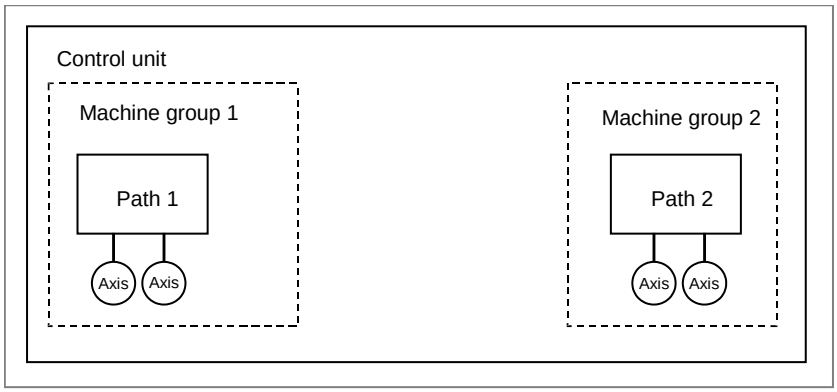

Fig. 9.6 (a)

To prevent an emergency stop in one machine group from affecting another within a multi-path control system, a separate emergency stop circuit (see Fig. 9.6 (b)) must be provided for each machine group.

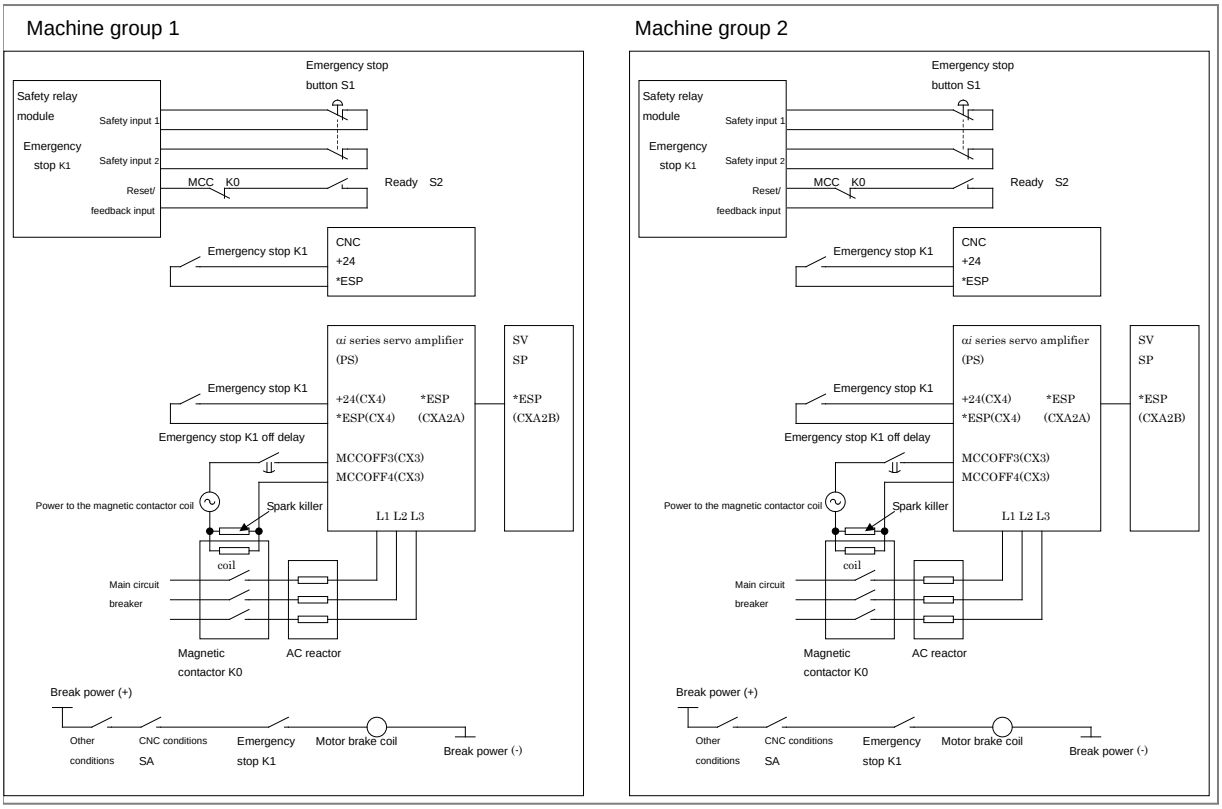

Fig. 9.6 (b)

© MyFANUC B5B0D8428C0144A78A5F4CA87F2C262E

10 CONNECTION TO OTHER NETWORKS

0*i*-F Plus can be connected to the following networks. For an explanation of how to make the connection, refer to the manuals listed below:

Manual title	Manual code
FANUC Fast Ethernet / Fast Data Server OPERATOR'S MANUAL	B-64014EN
FANUC PROFIBUS-DP Board CONNECTION MANUAL	B-63993EN
FANUC DeviceNet Board CONNECTION MANUAL	B-64043EN
FANUC CC-Link Board CONNECTION MANUAL	B-64463EN
FANUC Industrial Ethernet CONNECTION MANUAL	B-64013EN

© MyFANUC B5B0D8428C0144A78A5F4CA87F2C262E

11 CONNECTION WITH FANUC PANEL *i*H Pro AND COMMERCIAL PERSONAL COMPUTERS

11.1 OVERVIEW

This chapter describes how to connect the control unit to the FANUC PANEL *i*H Pro or a commercial personal computer, using the high-speed serial bus (HSSB) or Ethernet.

11.2 CAUTIONS

The FANUC PANEL *i*H Pro or a Windows-compatible personal computer commercially available is to be connected. The user (machine tool builder or end user) is required to procure and maintain a commercial personal computer if the user is to use it. FANUC owns the copyright for the driver used to connect a personal computer. The software mentioned above and the contents of the related manuals may not be used or reproduced in part or whole without the prior written permission of FANUC.

NOTE
1 IBM is a registered trademark of IBM Corp. of the US.
2 Windows is registered trademarks of Microsoft Corp. of the US.
3 The company and product names mentioned in this manual are trademarks or registered trademarks of the respective companies.

11.3 CONNECTION USING THE HIGH-SPEED SERIAL BUS (HSSB)

11.3.1 Overview

The high-speed serial bus (HSSB) enables the high-speed transfer of large amounts of data between a commercial personal computer and the control unit, by connecting them via a high-speed optical fiber. For an LCD-mounted type control unit, an HSSB interface board is inserted in an optional slot. For a stand-alone type control unit, the HSSB interface is provided as standard. On the personal computer, an appropriate interface board is installed. You can use the FANUC PANEL *i*H Pro instead of a commercial PC. The FANUC PANEL *i*H Pro comes standard with the HSSB interface.

© MyFANUC B5B0D8428C0144A78A5F4CA87F2C262E

11.3.2 Connection Diagram

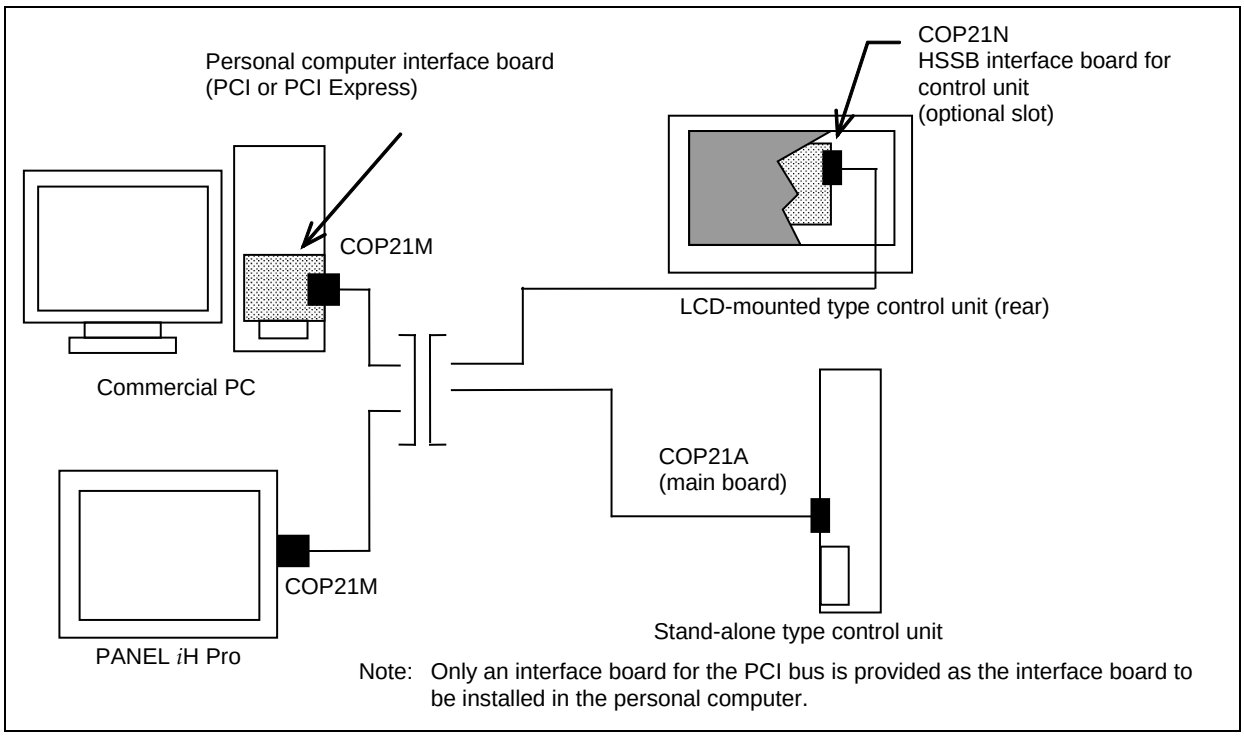

11.3.3 Specifications of a Commercial PC

NOTE

1 The machine tool builder or end user is required to procure and maintain the personal computer.
2 FANUC is not liable for any problems resulting from the operation of users' personal computers, regardless of whether the operations are normal or abnormal.
3 Perform a connection test between the PC and control unit before using the PC sufficiently.

(1) The PC must have a PCI slot (5 V, 32bit, and Rev 2.1 or later) or PCI Express x1 (x4, x8, or x16) slot (Rev 1.0a or later) to install an interface board.
(2) The housing of the personal computer is FG, and interface board on the PC is connected to the FG of housing. Please do not set the housing of PC to potential other than FG. Also, make sure that the FG is securely connected and that the electric potential does not swing by external noise.
(3) An HSSB driver must be installed on the PC. The HSSB driver is stored on the FOCAS1/2 library disk (ordering information: A02B-0207-K737).
(4) Following shows the required power of the interface board for PCI type.

Drawing No.	Specification	Power supply requirements
A20B-8101-0162	2ch specification (for PCI Slot)	+5V 1.5A
A20B-8101-0163	1ch specification (for PCI Slot)	+5V 1A
A13B-0204-C001	1ch specification, Low profile (for PCI Express Slot)	+3.3V 1A
A13B-0204-C002	1ch specification, Standard height (for PCI Express Slot)	+3.3V 1A

© MyFANUC B5B0D8428C0144A78A5F4CA87F2C262E

11.3.4 Installation Environment

(1) HSSB Interface Board For Personal Computer

Ambient temperature	Operating	0 to 55°C
	Non-operating	-20 to 60°C
Humidity	Usual	10 to 75% (non-condensing)
	Short-term (within one month)	10 to 95% (non-condensing)

If the environmental requirement of the using personal computer is different from the above, please keep the environmental requirement to be satisfied by the both equipments.

(2) Connect the bracket of PC side interface board to the chassis of PC which is securely connected to the Frame Ground. Ensure that the electrical potential of the Frame Ground is not fluctuate by external noise.

(3) HSSB Interface Board For control unit
Strictly keep environmental requirement about each control unit in which the interface boards are installed.

11.3.5 Handling Precautions

(1) Personal computer interface board
  (a) Electrostatic interference
  The personal computer interface board is shipped in an anti-static bag. To store or transport the interface board, always place it in the anti-static bag. Before removing the interface board from the anti-static bag, ground your body.
  (b) Protection of card edge terminals
  When handling the personal computer interface board, do NOT touch its card edge terminals (the gold-plated contacts which engage with a mating connector). If you accidentally touch any card edge terminal, wipe it gently with clean or ethyl alcohol-dipped tissue paper or absorbent cotton. Do not use any organic solvent other than ethyl alcohol.
  (c) The communication speed is different on the kind of the interface board to use, the function to use, and the communication data size.
  (d) HSSB interface board dose not support the sleep and suspend. Please disable the sleep and suspend.

(2) Optical connector and fiber cable
See Appendix D.

© MyFANUC B5B0D8428C0144A78A5F4CA87F2C262E

11.3.6 Procedure for Installing Personal Computer Interface Boards

⚠ WARNING
Before starting to mount or remove a personal computer interface board, switch off the personal computer and its peripheral devices, and disconnect their power supply cables. Otherwise, there is a serious danger of electric shock.

(1) Remove the covering plate of extension slot on the personal computer.
(2) Insert the interface board for the personal computer to the PCI connector or PCI Express connector tightly.
(3) Screw the plate of interface board to the computer.
(4) Confirm connection (in only case of HSSB multi-connection)
Confirm following items for installing drivers of HSSB interface board in case of HSSB multi-connection.
- PCI slot or PCI Express slot number which HSSB board is mounted (slot number is marked to PCB normally).
- Correspondence between HSSB channel and CNC

(5) Restore the covering plate.

NOTE
Do not touch the leads running to the card edge of the interface board (that match with connectors).

11.3.7 Cable Connection

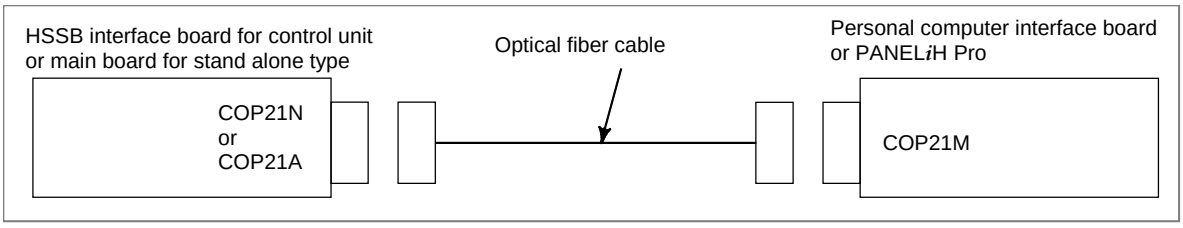

(1) Optical fiber cable for HSSB
Cable for inside wire
A66L-6001-0023#L~ (maximum cable length: 10m)
Cable for outside wire
A66L-6001-0026#L~ (maximum cable length: 50m)
Low-loss cable for outside wire (for relay only)
A66L-6001-0029#L~ (maximum total length of two cables: 35 m)
High-speed low-loss cable for outside wire
A66L-6001-0049#L~ (maximum cable length: 100m, maximum total length of two cables for relay: 55m)
(2) Low-loss optical junction adapter
A63L-0020-0004

NOTE
1 For explanations about how to specify the length of the underscored portion and the related cautions, see Appendix D.
2 The machine tool builder cannot cut or connect any optical fiber cable. Be sure to use the cables above.

© MyFANUC B5B0D8428C0144A78A5F4CA87F2C262E

11.4 CONNECTION USING Ethernet

11.4.1 Overview

You can connect the control unit with a commercial PC to use the PC as the display unit of the control unit and transfer data between the control unit and PC, using Ethernet. You can also use the Ethernet display function to perform maintenance and IPL operation for the control unit from the PC at power-on. You can use the FANUC PANEL *i*H Pro instead of a commercial PC.

11.4.2 Connection Diagram

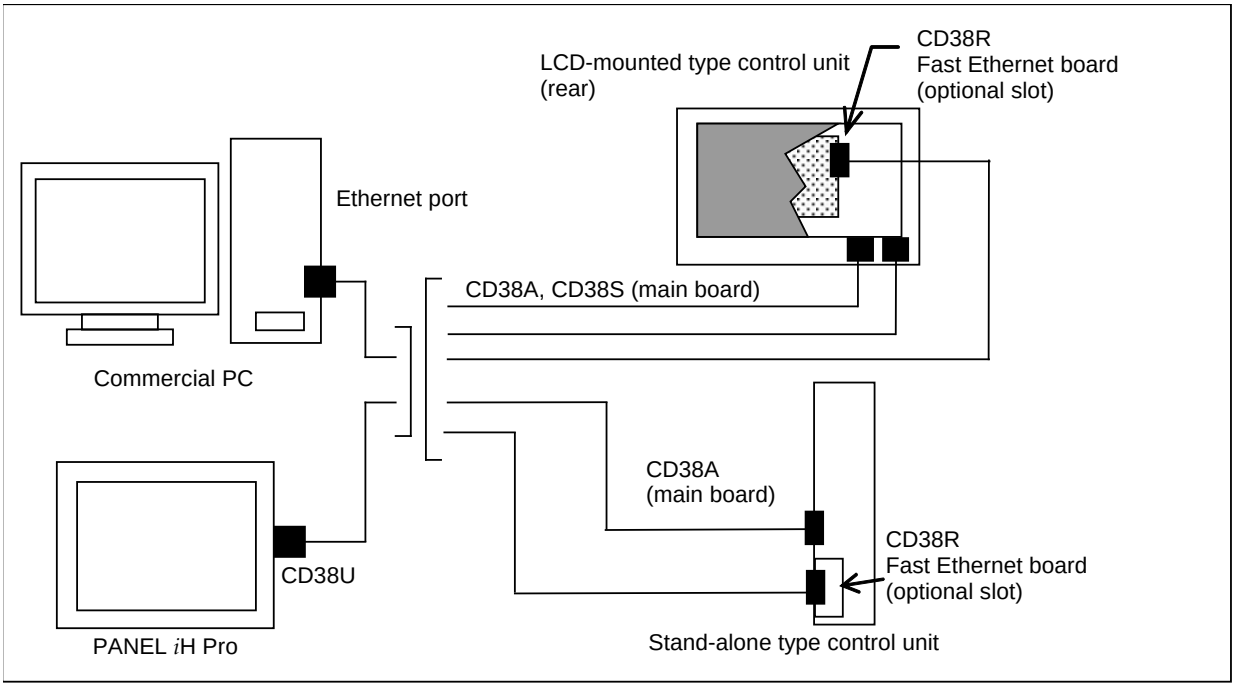

NOTE

1 For connection to the Ethernet interface, see Section 5.4.

2 For connection using the Fast Ethernet board, refer to the FANUC Fast Ethernet/Fast Data Server Operator's Manual (B-64014EN). When a PC is connected using Fast Ethernet, the Ethernet display function cannot be used to perform maintenance and IPL operation for the control unit from the PC at power-on.

3 For the Ethernet display function, refer to the PANEL *i* / *i*H Pro CONNECTION AND MAINTENANCE MANUAL (B-64683EN) or PANEL *i*H Pro CONNECTION AND MAINTENANCE MANUAL (B-64703EN). The Ethernet display function is available when a PC is connected using Embedded Ethernet on a stand-alone type control unit. The function cannot be used on any LCD-mounted type control unit or with Fast Ethernet.

© MyFANUC B5B0D8428C0144A78A5F4CA87F2C262E

12 PANEL *i*H Pro

The PANEL *i*H Pro is a panel computer with a built-in personal computer.
Connecting the PANEL *i*H Pro to the control unit via an optical fiber (high-speed serial bus) or Ethernet can provide a system with PC functions.

For details of the PANEL *i*H Pro (including installation environment conditions and connection), refer to the PANEL *i* / *i*H Pro CONNECTION AND MAINTENANCE MANUAL (B-64683EN) or PANEL *i*H Pro CONNECTION AND MAINTENANCE MANUAL (B-64703EN). For connection with the control unit, see Chapter 11.

© MyFANUC B5B0D8428C0144A78A5F4CA87F2C262E

APPENDIX

© MyFANUC B5B0D8428C0144A78A5F4CA87F2C262E

© MyFANUC B5B0D8428C0144A78A5F4CA87F2C262E

A OUTLINE DRAWINGS OF UNITS AND CONNECTORS

Outline drawings for LCD-mounted type control unit

Name		See
Control unit	10.4” LCD unit	Fig. A(a)
	10.4” LCD/MDI unit (Horizontal)	Fig. A(b)
	10.4” LCD/MDI unit (Vertical)	Fig. A(c)
	10.4” LCD unit * for PANEL *i*H	Fig. A(d)
	15” LCD unit * for PANEL *i*H	Fig. A(e)

Outline drawings for Stand-alone type control unit

Name		See
Control unit	2slots	Fig. A(f)

* Refer to the PANEL *i* / *i*H Pro CONNECTION AND MAINTENANCE MANUAL (B-64683EN) or PANEL *i*H Pro CONNECTION AND MAINTENANCE MANUAL (B-64703EN) for the outline drawing of PANEL *i*H Pro .

Other outline drawings

Name	See
MDI unit (for PANEL *i*H, ONG, horizontal, 220x230mm) (Please refer to Chapter 5 " Key Layout of MDI Unit " for Key Layout)	Fig. A(g)
MDI unit (for PANEL *i*H, ONG, vertical, 160x290mm) (Please refer to Chapter 5 " Key Layout of MDI Unit " for Key Layout)	Fig. A(h)
MDI unit (for PANEL *i*H, QWERTY type A, vertical, 160x290mm) (Please refer to Chapter 5 " Key Layout of MDI Unit " for Key Layout)	Fig. A(i)
MDI unit (for PANEL *i*H, QWERTY type B, vertical, 145x400mm) (Please refer to Chapter 5 " Key Layout of MDI Unit " for Key Layout)	Fig. A(j)
Manual Pulse Generator	Fig. A(k)
Pendant type Manual Pulse Generator	Fig. A(l)
Portable Manual Pulse Generator	Fig. A(m)
Separate detector interface unit or Analog input separate detector interface unit	Fig. A(n)
Battery case for separate absolute pulse coder	Fig. A(o)
Battery case for external installation	Fig. A(p)
Punch panel (for LCD-mounted type control unit)	Fig. A(q)
Punch panel (for Stand-alone type control unit)	Fig. A(r)
Ethernet Connector Panel	Fig. A(s)
HSSB interface board on the personal computer side (PCI slot type)	Fig. A(t)
HSSB interface board on the personal computer side (PCI Express slot type)	Fig. A(u)

© MyFANUC B5B0D8428C0144A78A5F4CA87F2C262E

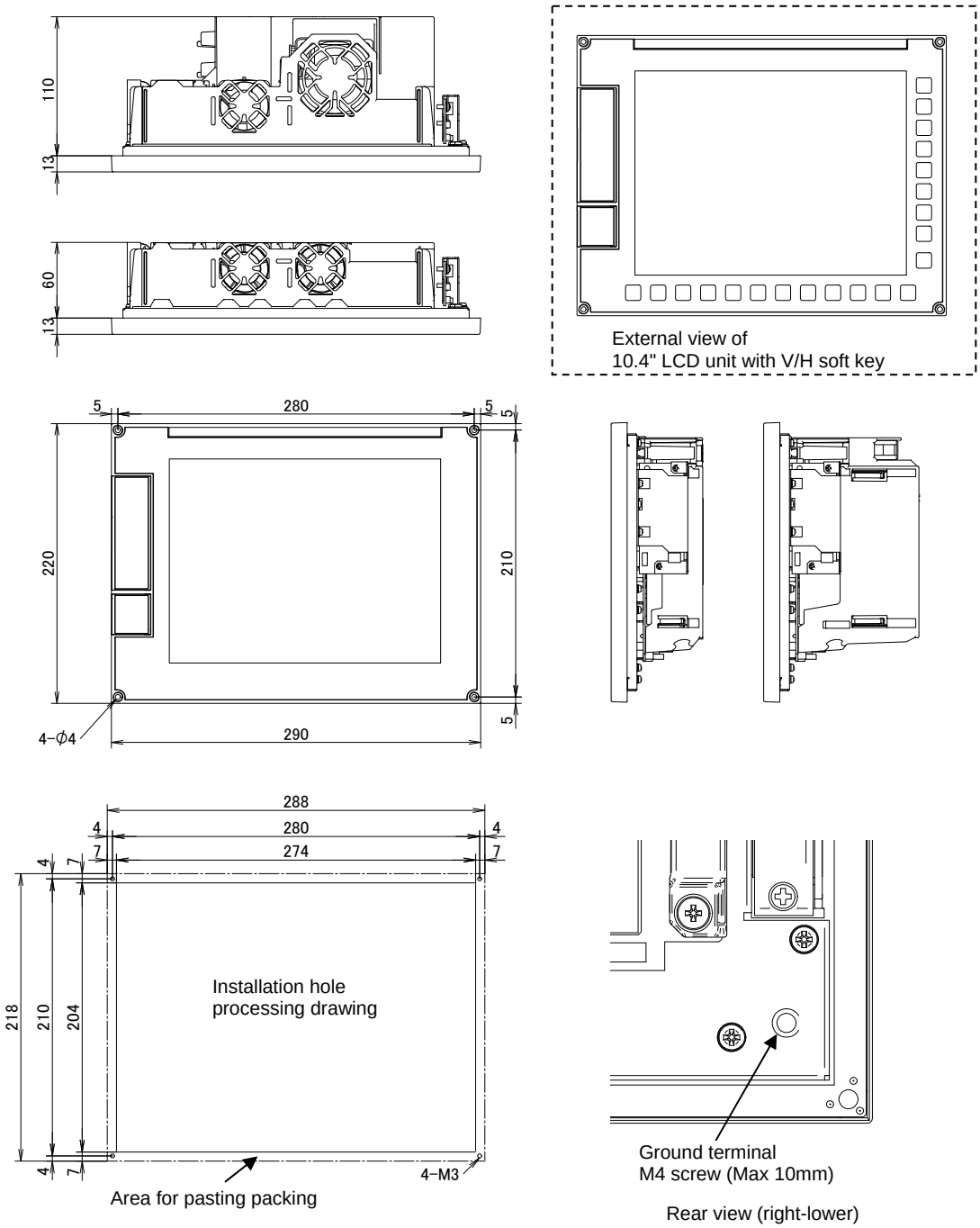

NOTE
- The unit is installed from outside cabinet. Cover with the cap after securing the unit with the M3 screw. The tightening torque is between 0.8 to 1.0 N.m.
- There is a sheet affixed to the surface of the unit is for protection during transport and assembly. Please peel off before use.
- Color : Since the top sheet contains metallic, color tastes vary depending on the angle, so it is difficult to show clear Munsell value, it is between N 2.5 to N 3.5.
- Weight : 2.6kg

Fig. A (a) LCD-mounted type control unit - 10.4” LCD unit

© MyFANUC B5B0D8428C0144A78A5F4CA87F2C262E

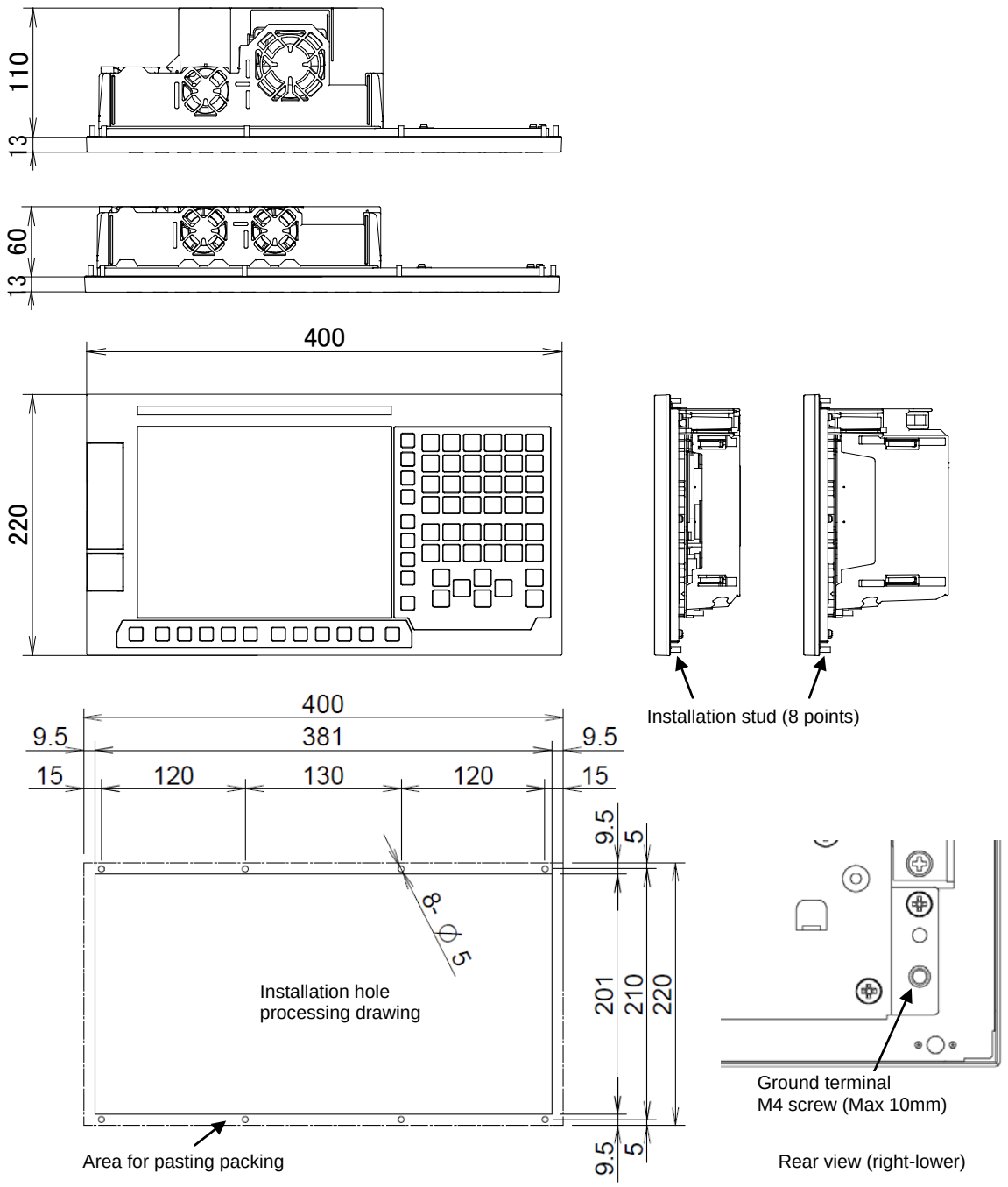

NOTE
- The unit is installed from outside cabinet. Fix with M4 nut from the reverse side. The tightening torque is between 1.6 to 2.0 N.m.
- There is a sheet affixed to the surface of the unit is for protection during transport and assembly. Please peel off before use.
- Color : Munsell value N2.5 half luster finishing
- Weight : 3kg

Fig. A (b) LCD-mounted type control unit - 10.4” LCD/MDI unit (Horizontal)

© MyFANUC B5B0D8428C0144A78A5F4CA87F2C262E

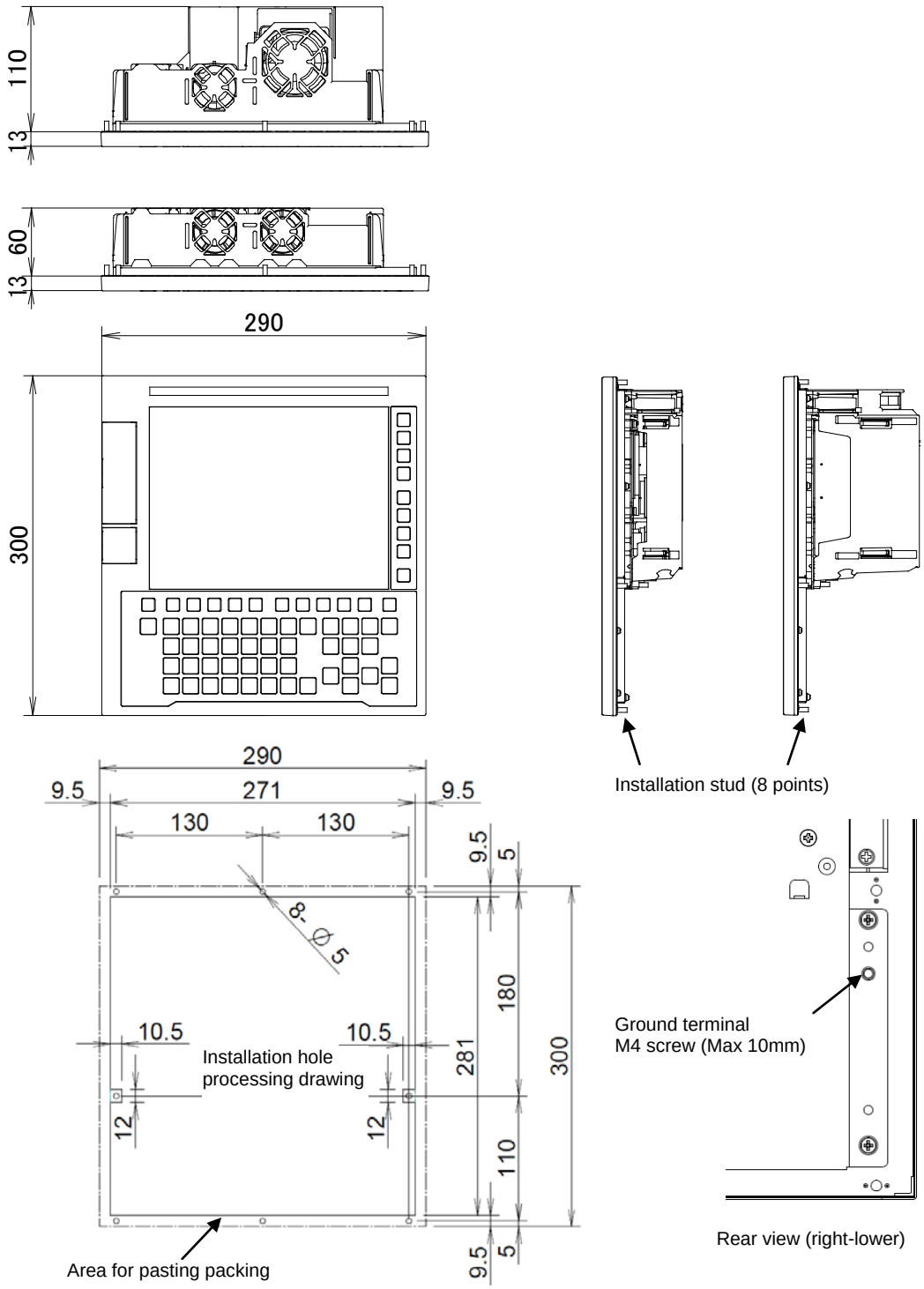

NOTE
- The unit is installed from outside cabinet. Fix with M4 nut from the reverse side. The tightening torque is between 1.6 to 2.0 N.m.
- There is a sheet affixed to the surface of the unit is for protection during transport and assembly. Please peel off before use.
- Color : Munsell value N2.5 half luster finishing
- Weight : 3kg

Fig. A (c) LCD-mounted type control unit - 10.4” LCD/MDI unit (Vertical)

© MyFANUC B5B0D8428C0144A78A5F4CA87F2C262E

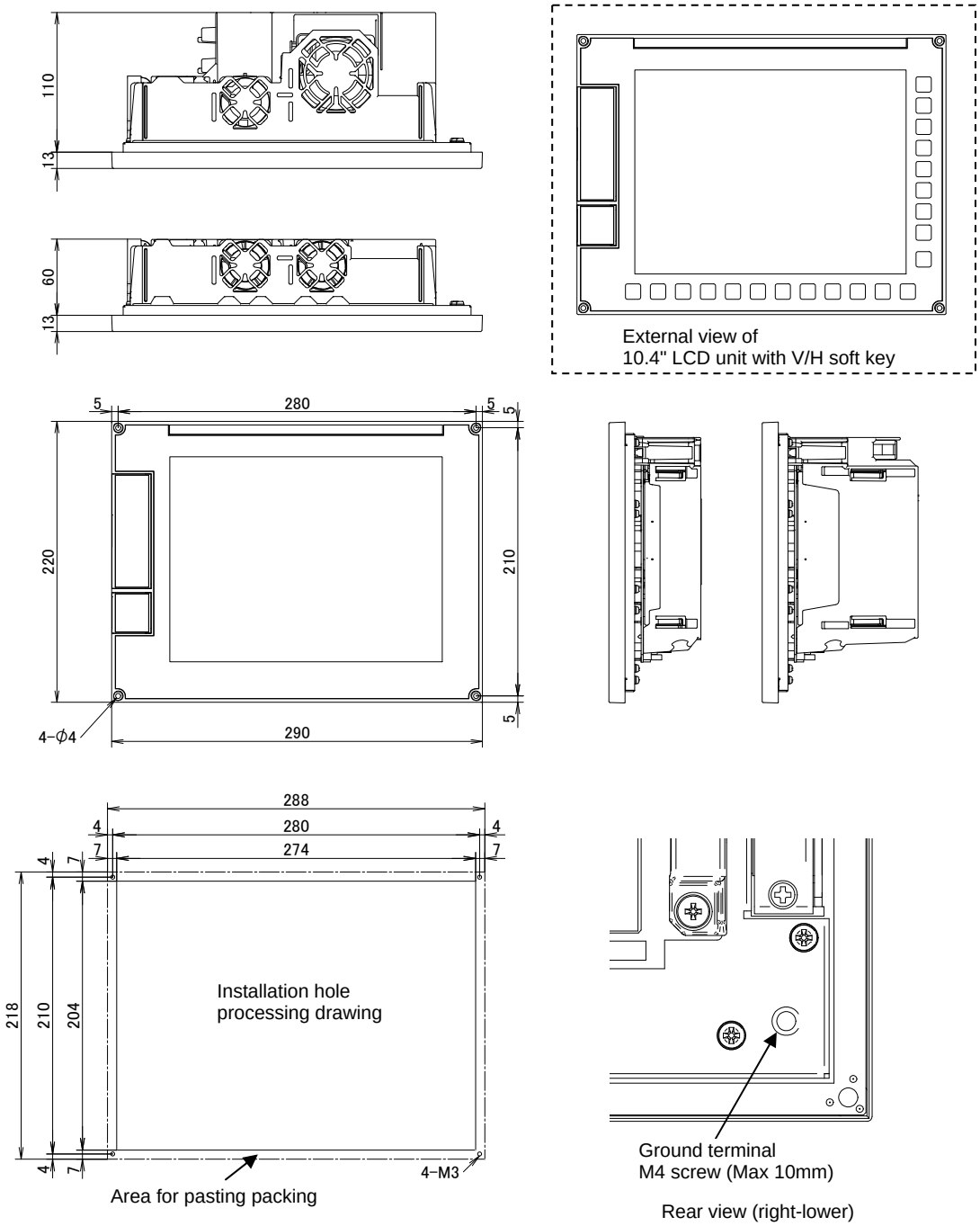

NOTE
- The unit is installed from outside cabinet. Cover with the cap after securing the unit with the M3 screw. The tightening torque is between 0.8 to 1.0 N.m.
- There is a sheet affixed to the surface of the unit is for protection during transport and assembly. Please peel off before use.
- Color : Since the top sheet contains metallic, color tastes vary depending on the angle, so it is difficult to show clear Munsell value, it is between N 2.5 to N 3.5.
- Weight : 2.6kg

Fig. A (d) LCD-mounted type control unit - 10.4" LCD unit * for PANEL *i*H

© MyFANUC B5B0D8428C0144A78A5F4CA87F2C262E

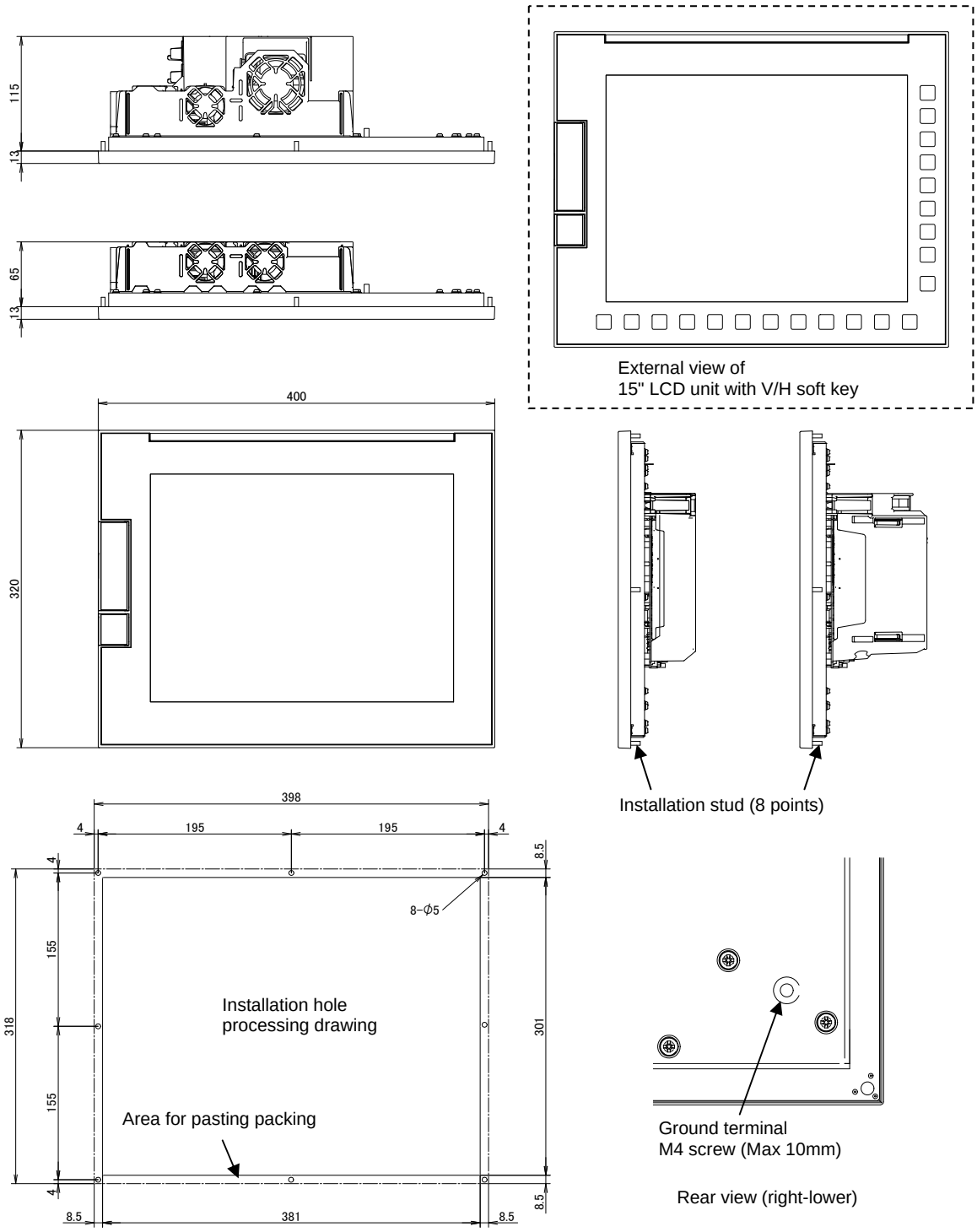

NOTE

- The unit is installed from outside cabinet. Fix with M4 nut from the reverse side. The tightening torque is between 1.6 to 2.0 N.m.
- There is a sheet affixed to the surface of the unit is for protection during transport and assembly. Please peel off before use.
- Color : Since the top sheet contains metallic, color tastes vary depending on the angle, so it is difficult to show clear Munsell value, it is between N 2.5 to N 3.5.
- Weight : 5.3kg

Fig. A (e) LCD-mounted type control unit - 15” LCD unit * for PANEL *i*H

© MyFANUC B5B0D8428C0144A78A5F4CA87F2C262E

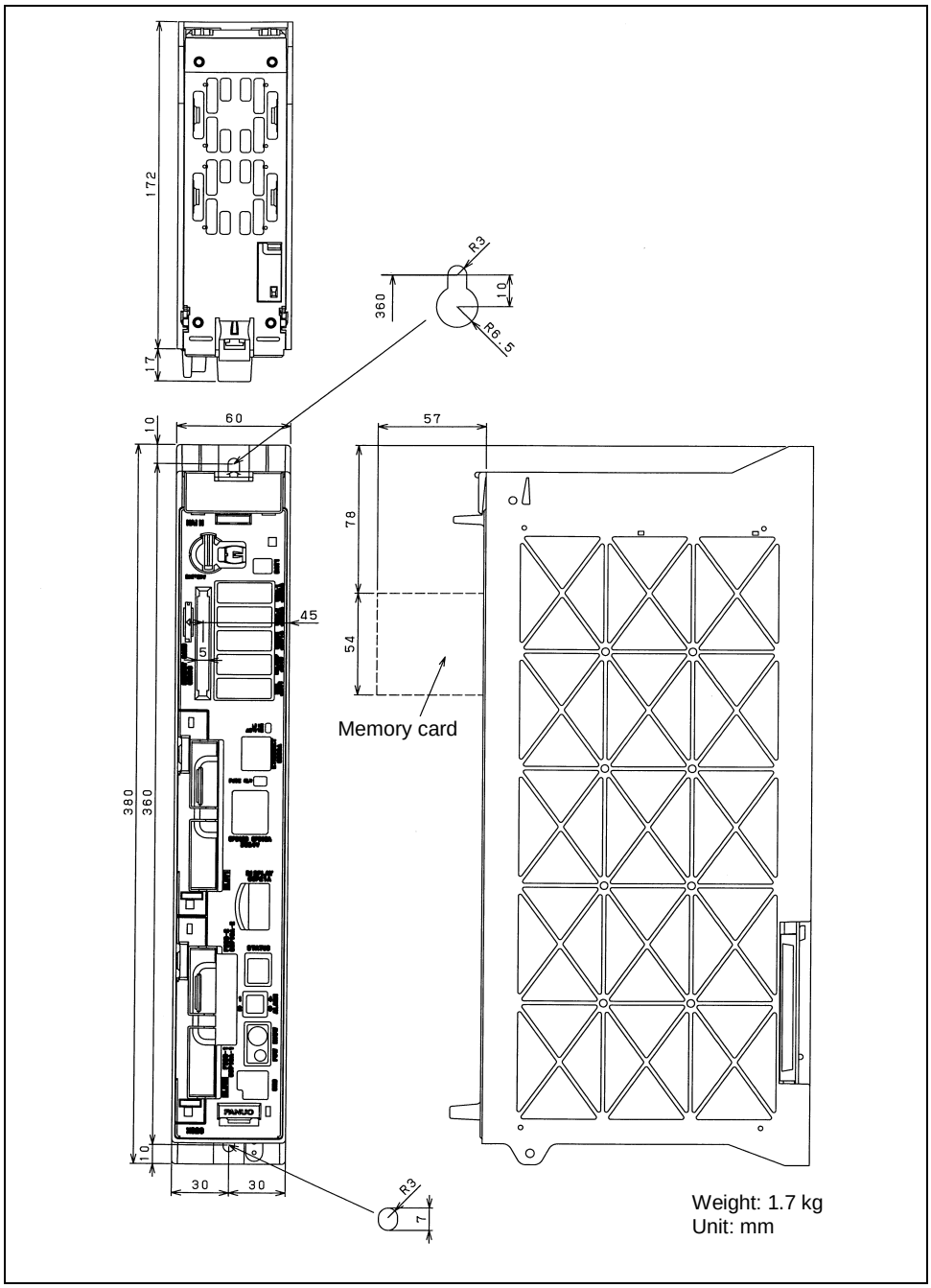

Fig. A (f) LCD-mounted type control unit – 2slots

© MyFANUC B5B0D8428C0144A78A5F4CA87F2C262E

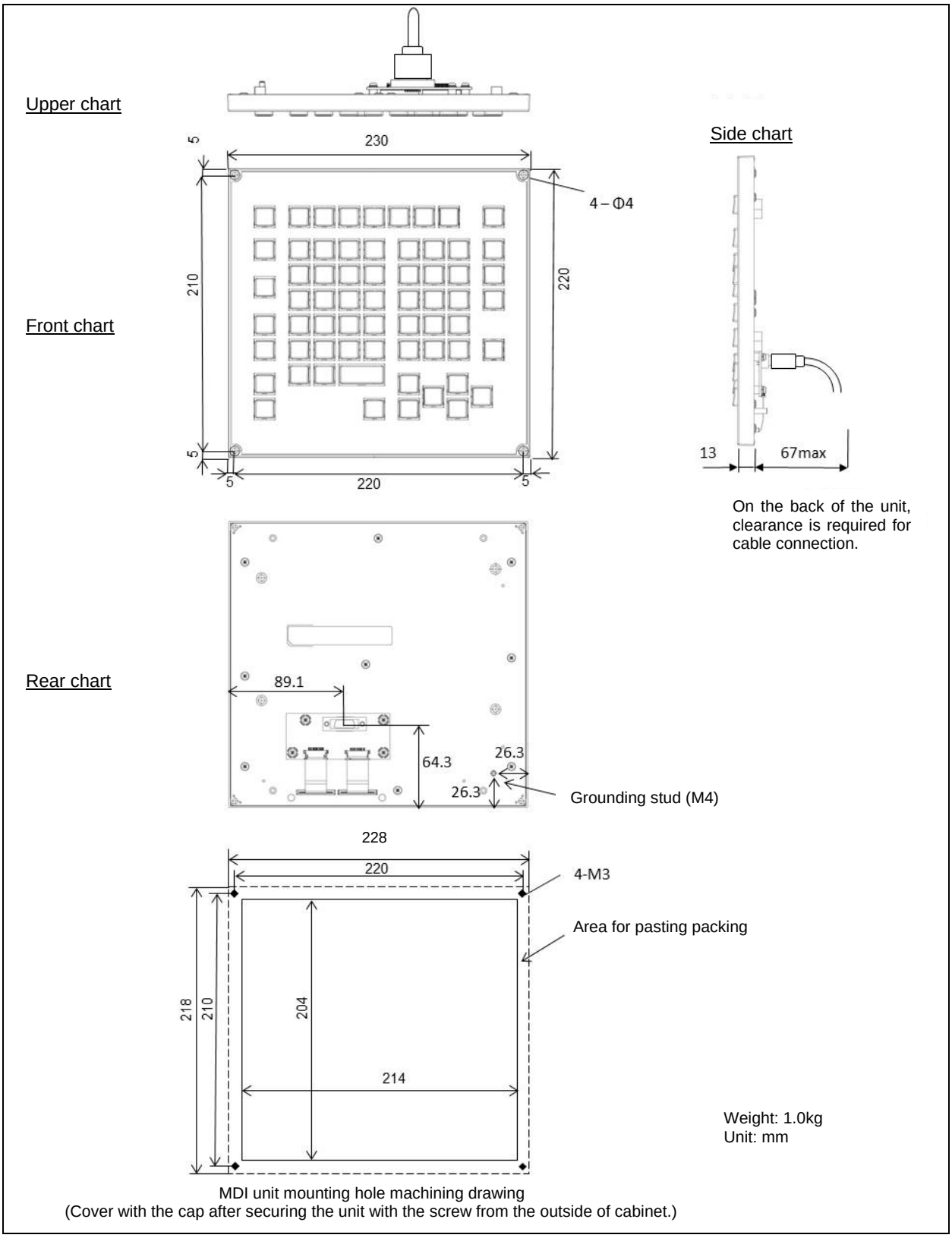

Fig. A (g) MDI unit (for PANEL *i*H, ONG, horizontal, 220x230mm)

© MyFANUC B5B0D8428C0144A78A5F4CA87F2C262E

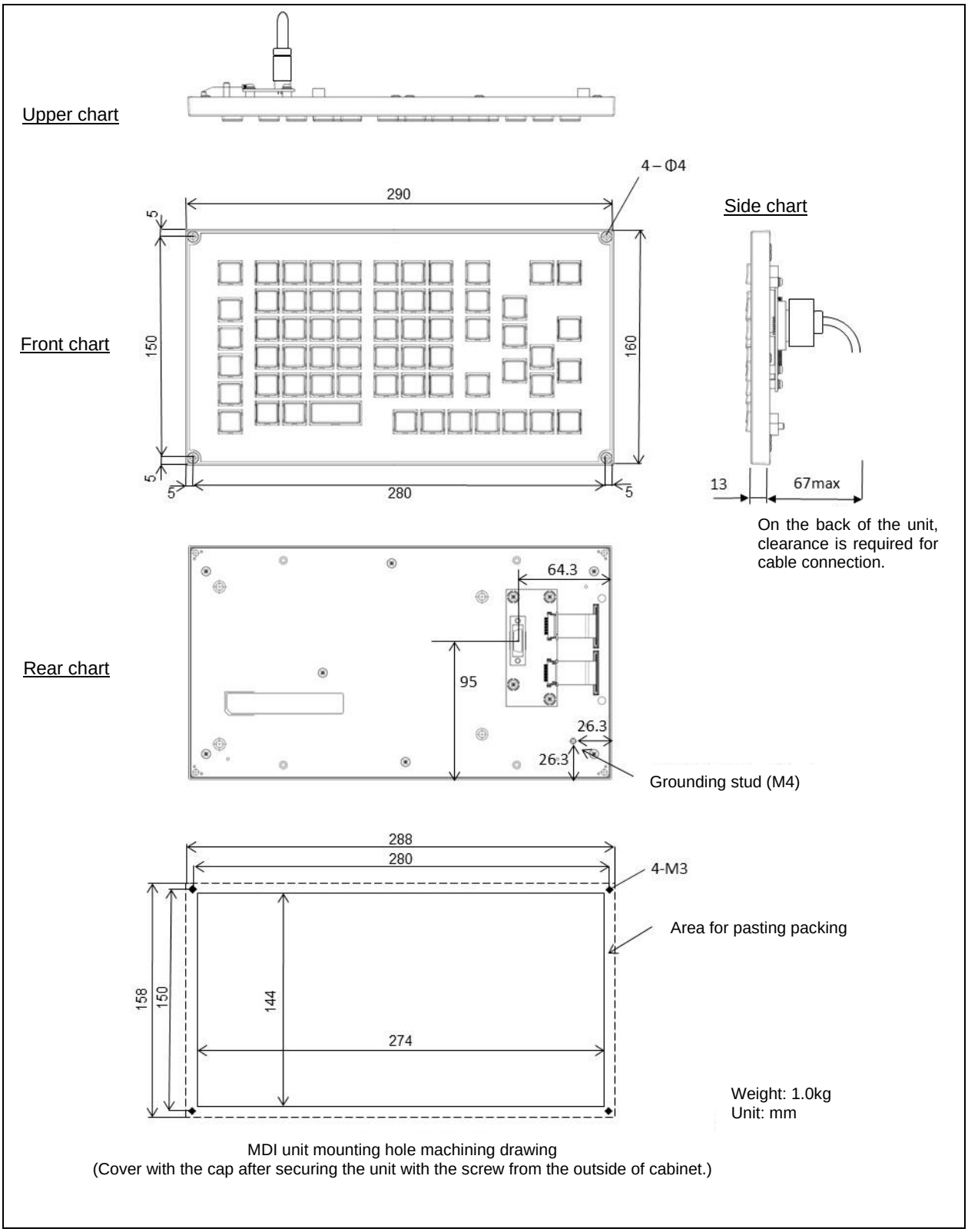

Fig. A (h) MDI unit (for PANEL *i*H, ONG, vertical, 160x290mm)

© MyFANUC B5B0D8428C0144A78A5F4CA87F2C262E

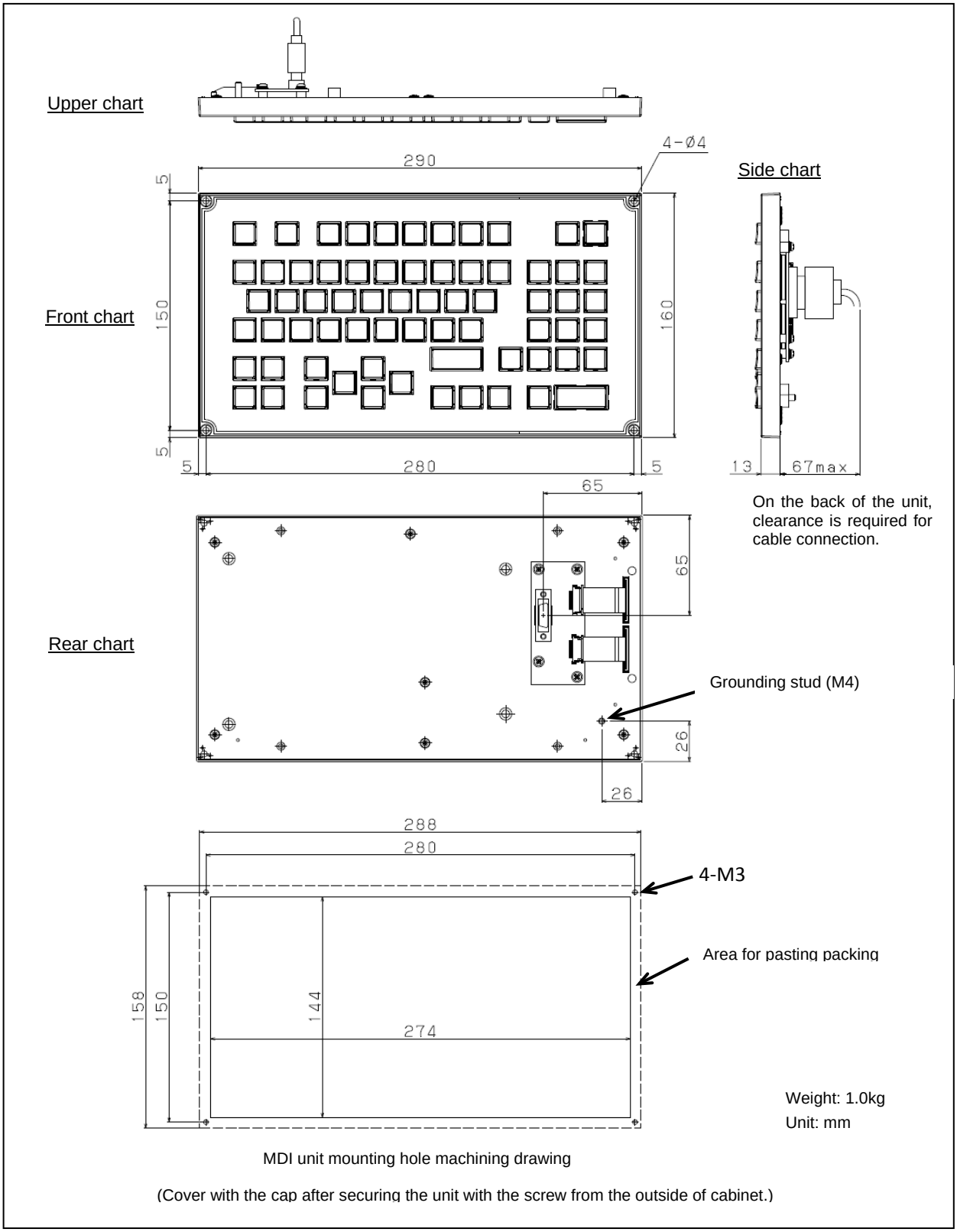

Fig. A (i) MDI unit (for PANEL *i*H, QWERTY type A, vertical, 160x290mm)

© MyFANUC B5B0D8428C0144A78A5F4CA87F2C262E

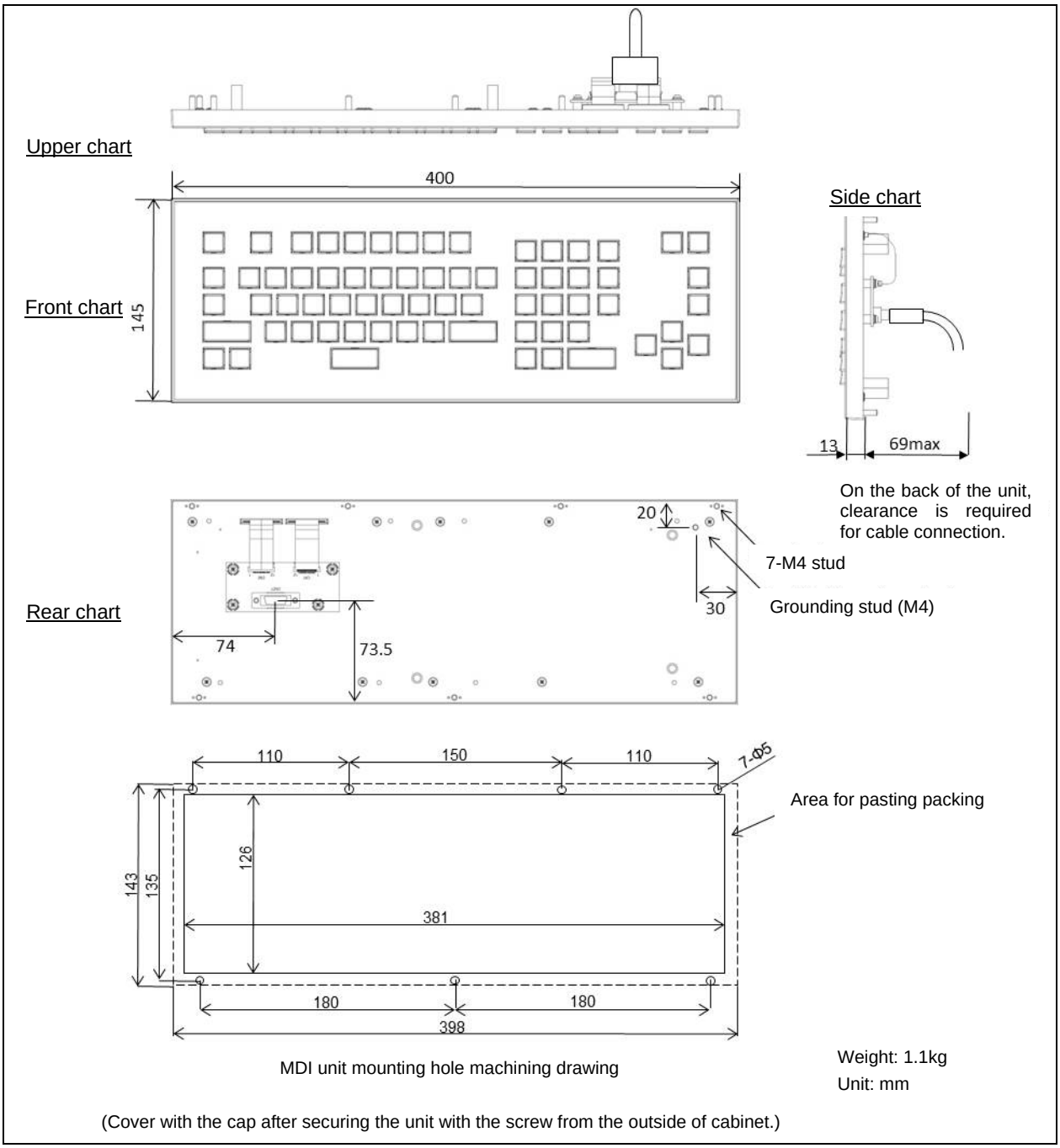

Fig. A (j) MDI unit (for PANEL *i*H, QWERTY type B, vertical, 145x400mm)

© MyFANUC B5B0D8428C0144A78A5F4CA87F2C262E

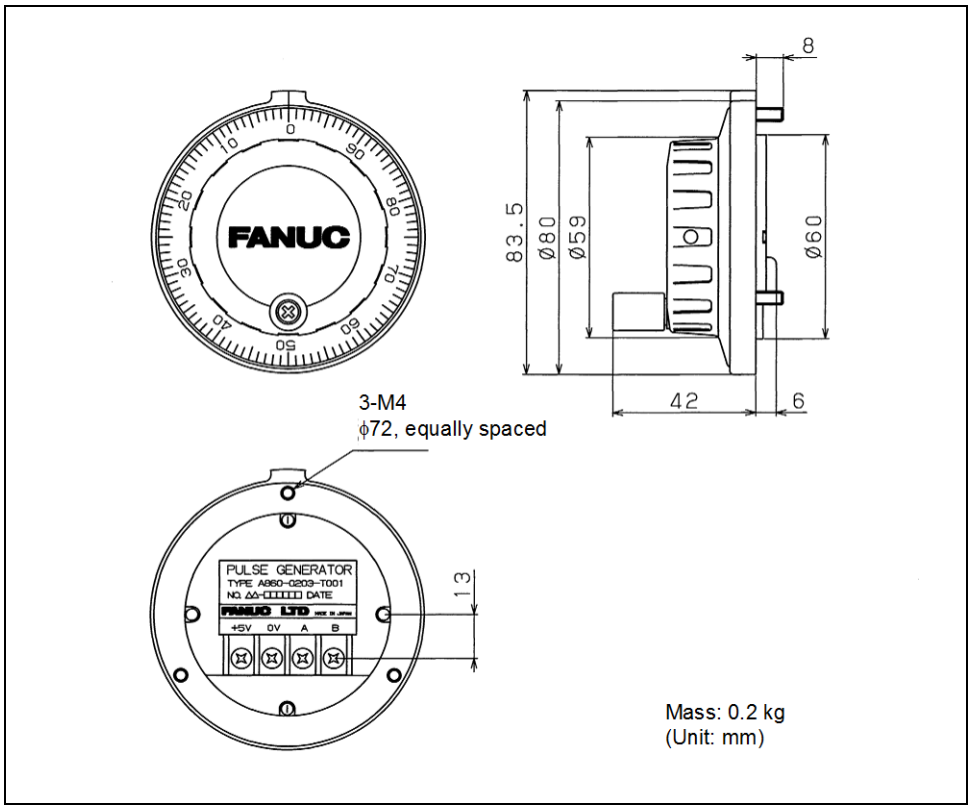

Fig. A (k) Manual Pulse Generator

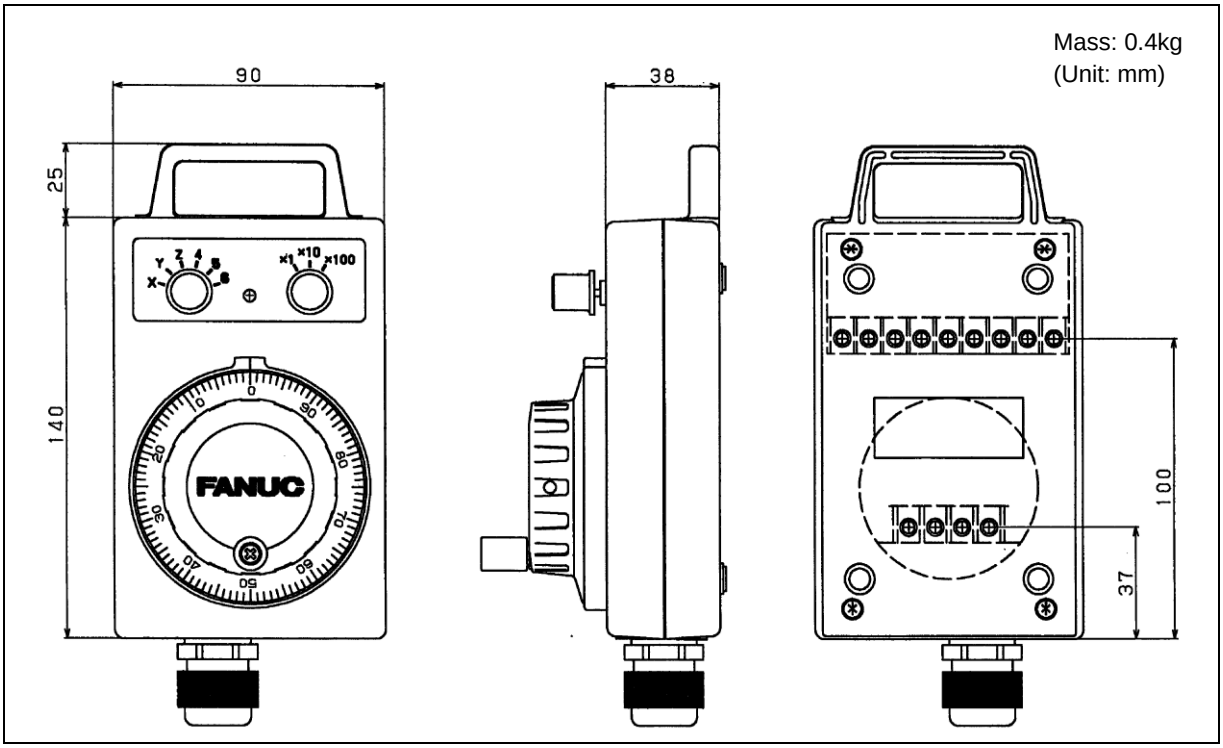

Fig. A (l) Pendant type Manual Pulse Generator

© MyFANUC B5B0D8428C0144A78A5F4CA87F2C262E

Without guard

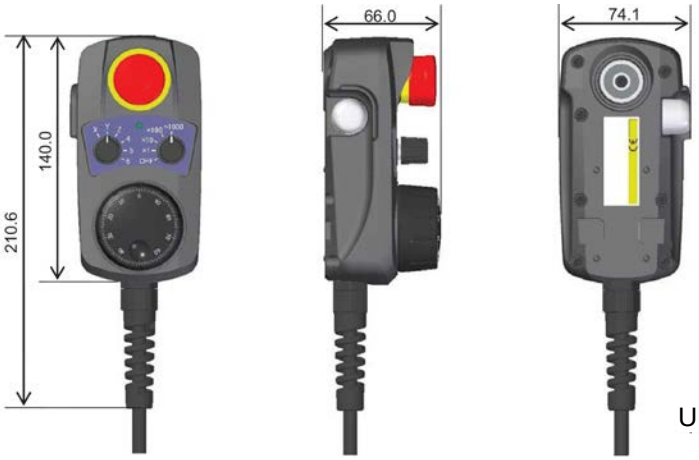

Unit: mm

With guard

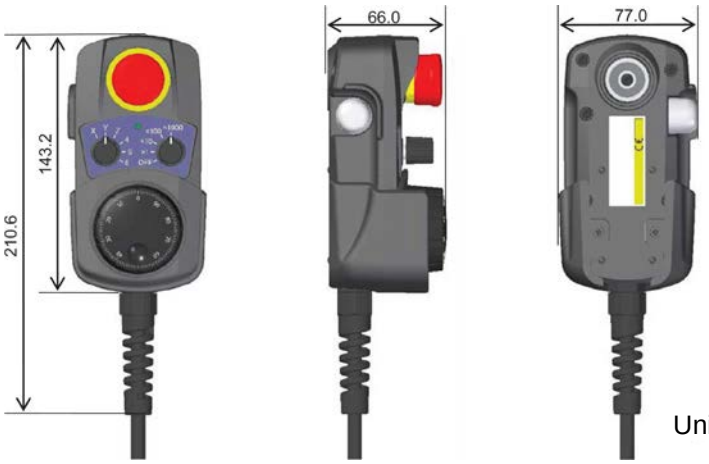

Unit: mm

Cable length (straight cable, connector at the end)

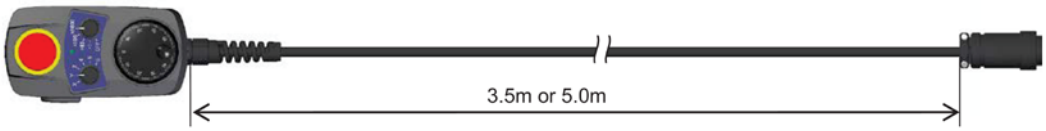

Cable length (coiled cable, connector at the end)

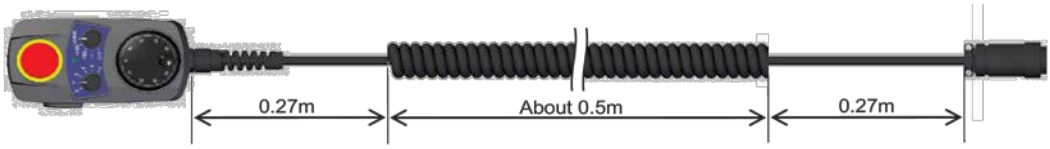

Weight

Option type	Cable type	Weight
Without guard	Straight, 3.5m	0.8 kg
	Straight, 5.0m	1 kg
	Coiled	0.81 kg
With guard	Straight, 3.5m	0.85 kg
	Straight, 5.0m	1.05 kg
	Coiled	0.86 kg

Fig. A (m) Portable Manual Pulse Generator

© MyFANUC B5B0D8428C0144A78A5F4CA87F2C262E

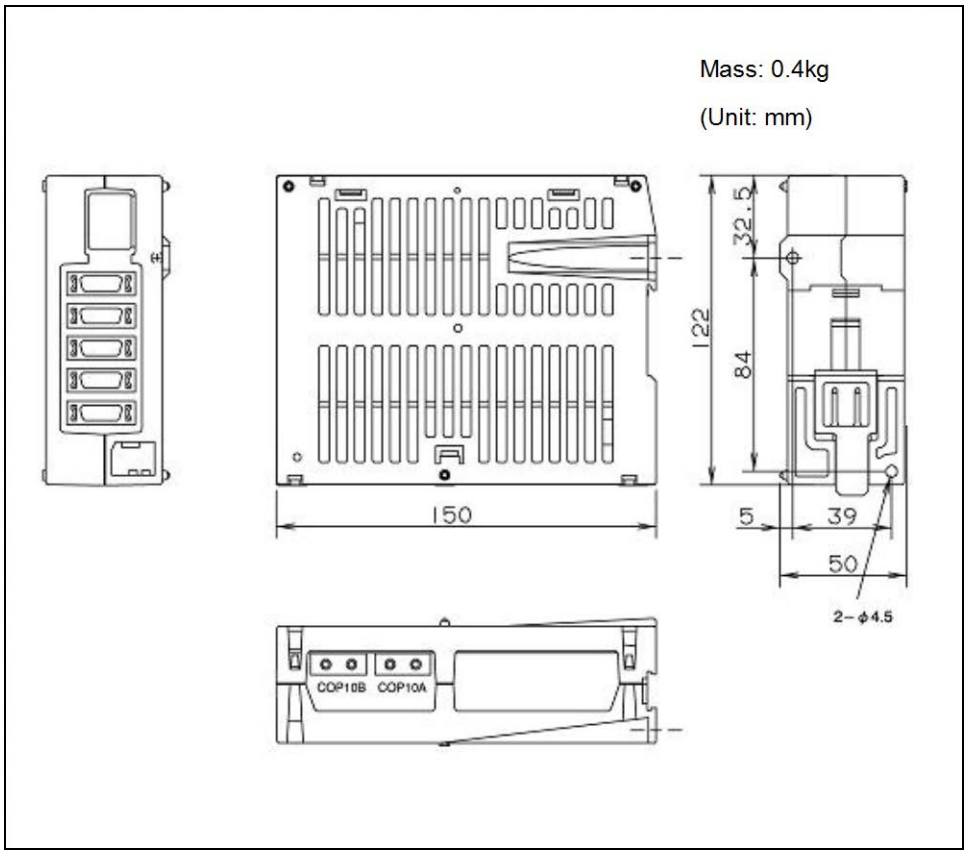

Fig. A (n) Separate detector interface unit or Analog input separate detector interface unit

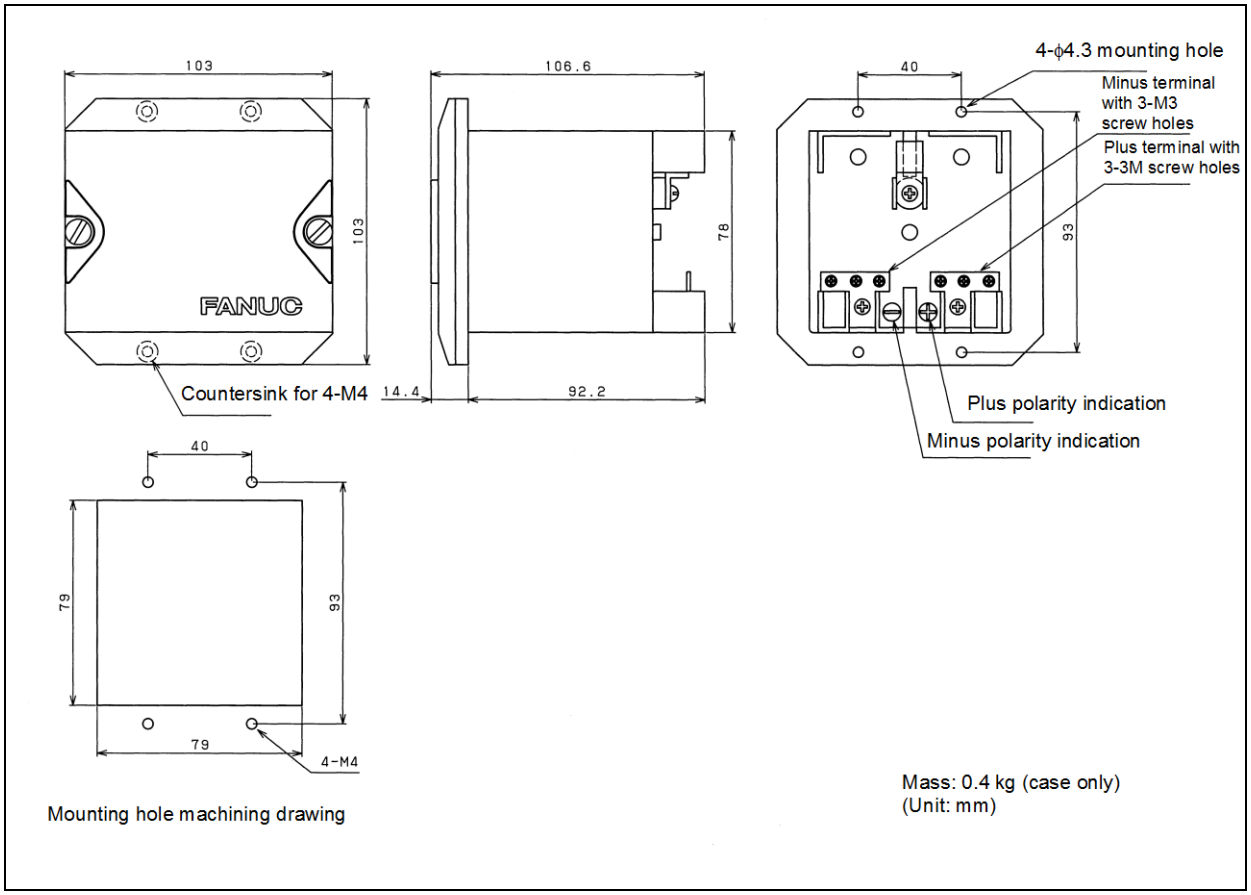

Fig. A (o) Battery case for separate absolute pulse coder

© MyFANUC B5B0D8428C0144A78A5F4CA87F2C262E

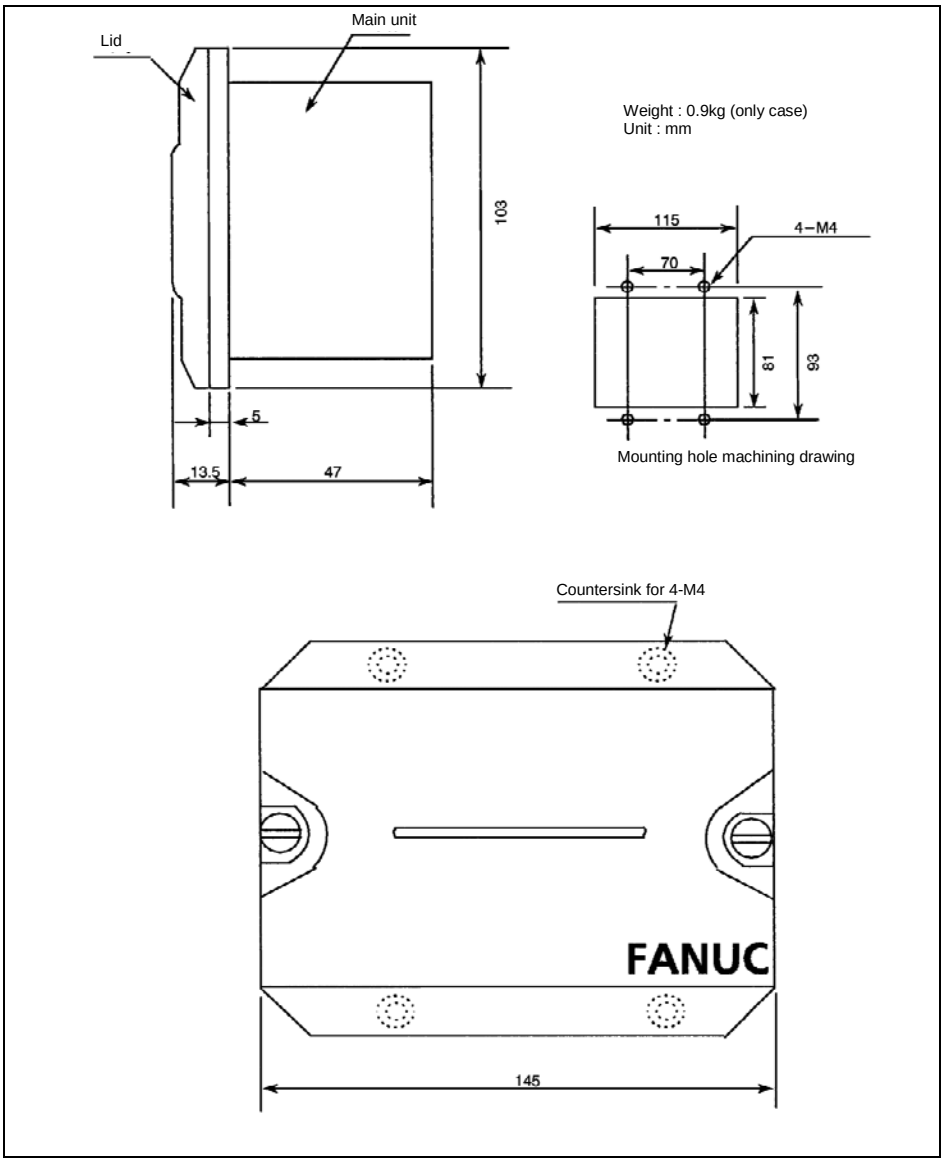

Fig. A (p) Battery case for external installation

© MyFANUC B5B0D8428C0144A78A5F4CA87F2C262E

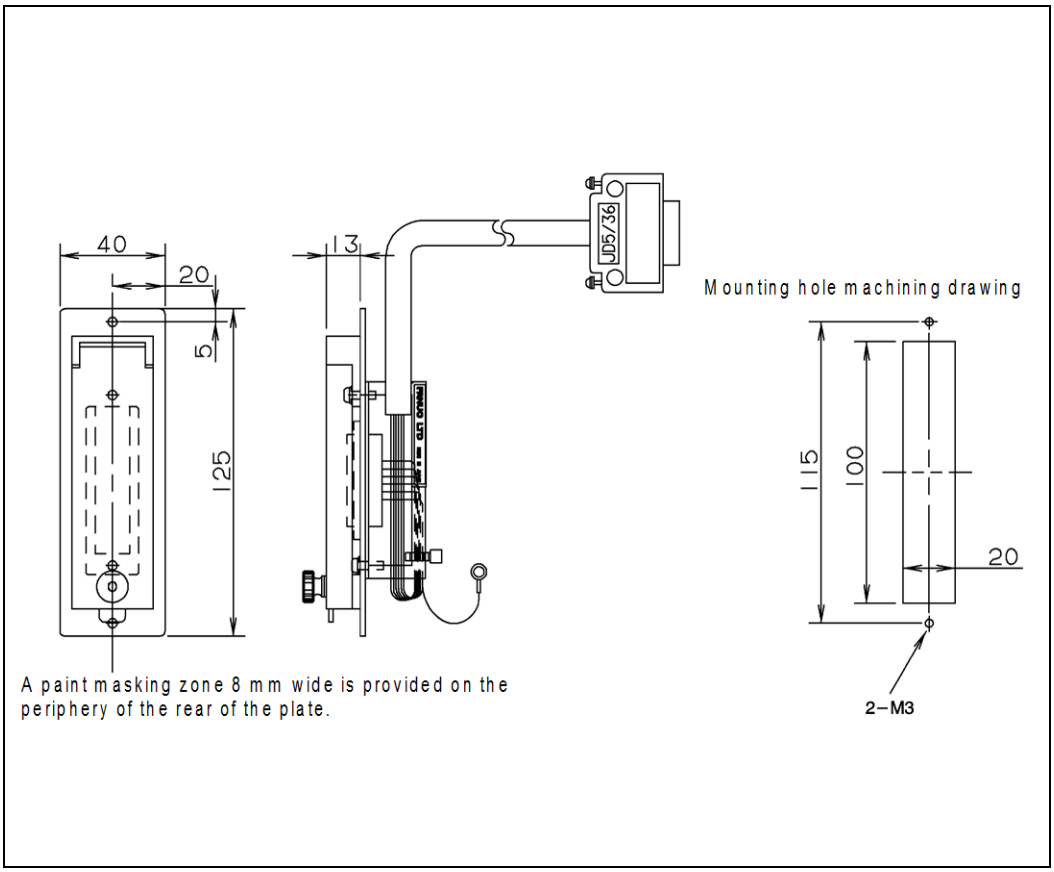

Fig. A (q) Punch panel (for LCD-mounted type control unit)

© MyFANUC B5B0D8428C0144A78A5F4CA87F2C262E

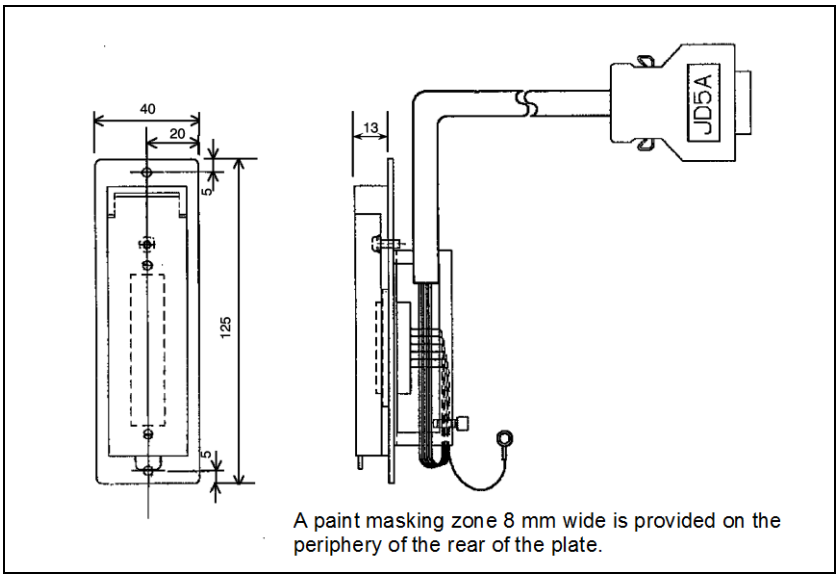

Fig. A (r) Punch panel (for Stand-alone type control unit)

The panel cut dimensions of this punch panel are indicated below.

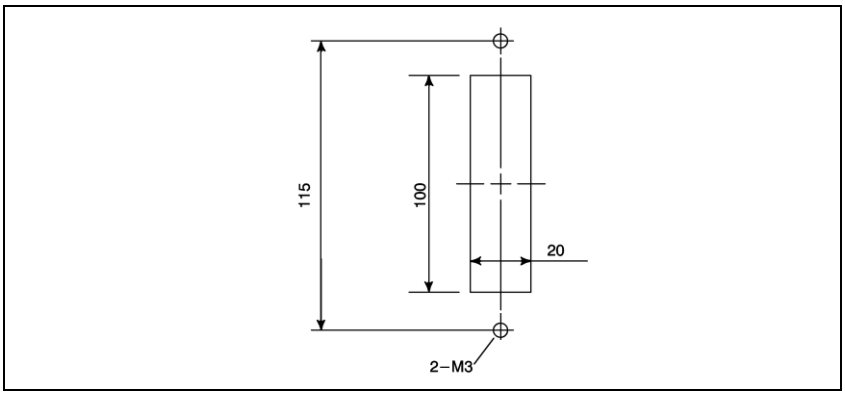

© MyFANUC B5B0D8428C0144A78A5F4CA87F2C262E

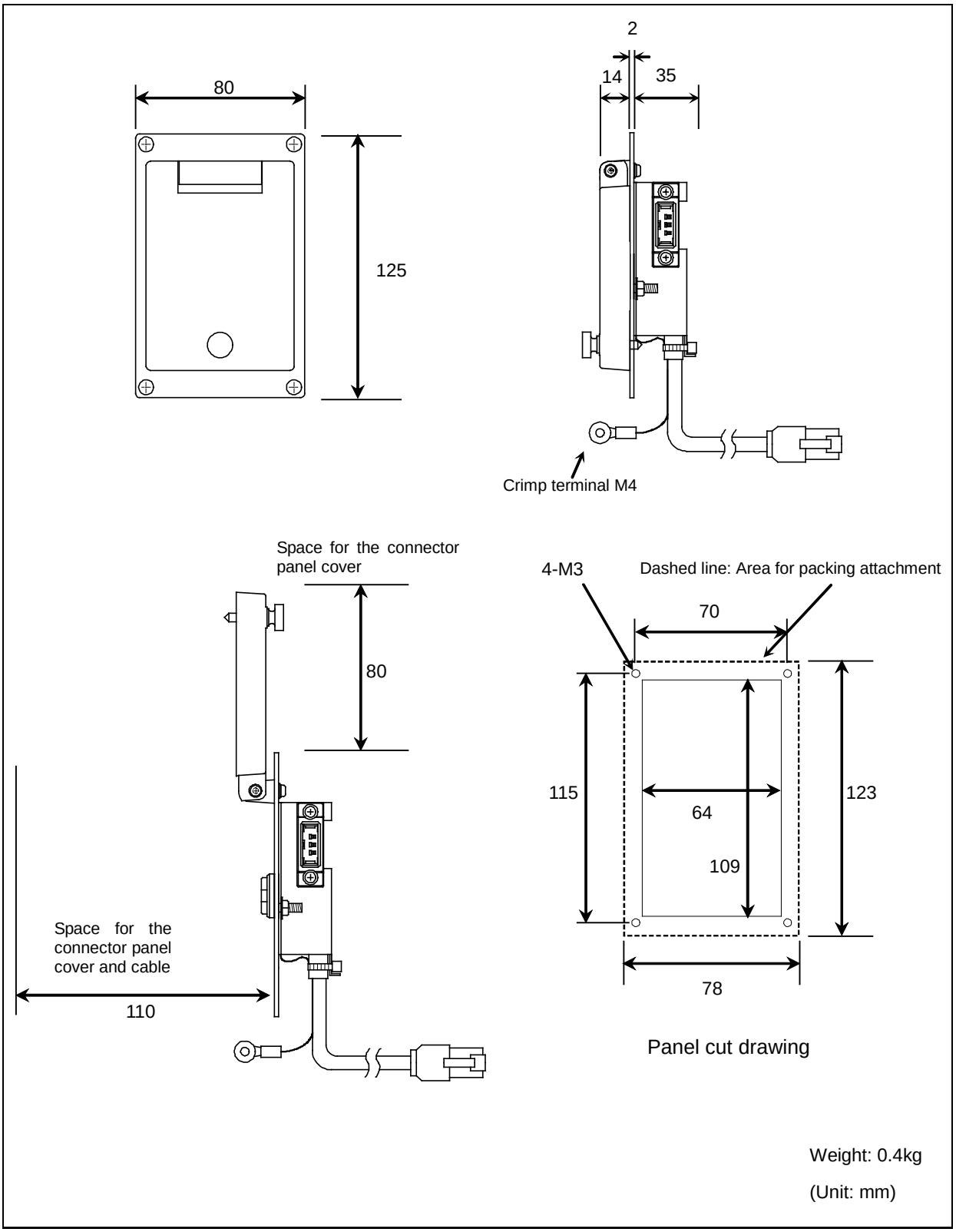

Fig. A (s) Ethernet Connector Panel

© MyFANUC B5B0D8428C0144A78A5F4CA87F2C262E

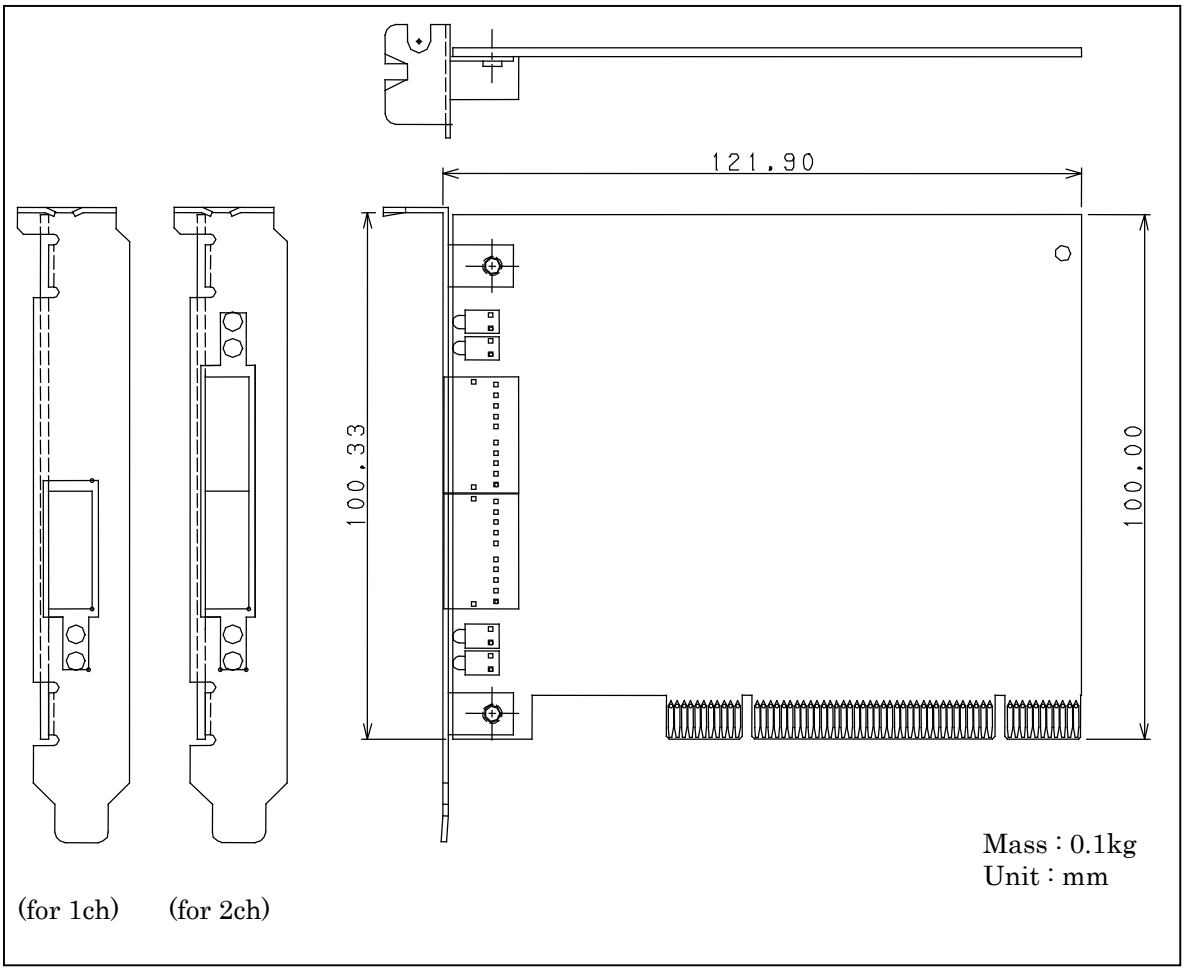

Fig. A (t) HSSB interface board on the personal computer side (PCI slot type)

© MyFANUC B5B0D8428C0144A78A5F4CA87F2C262E

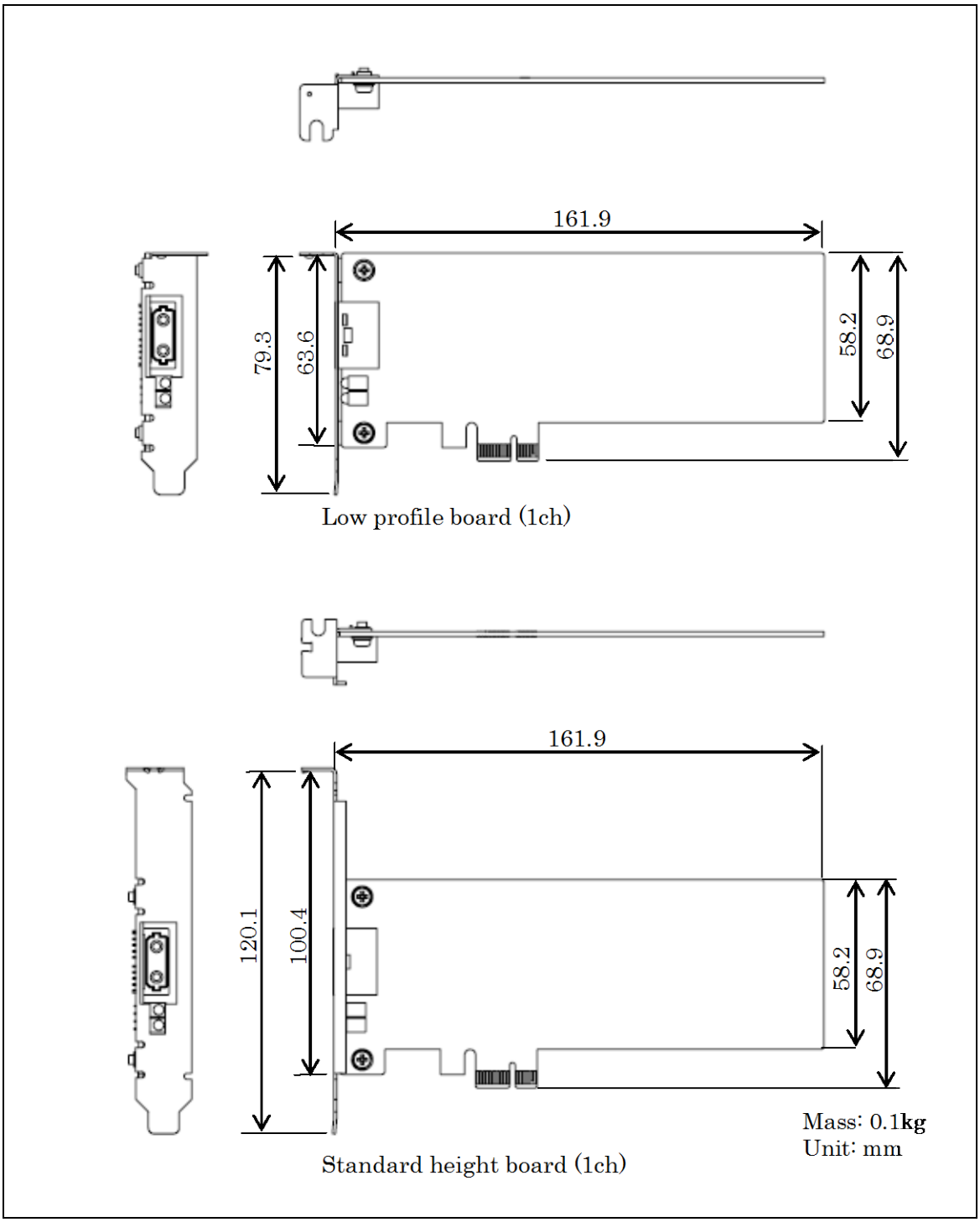

Fig. A (u) HSSB interface board on the personal computer side (PCI Express slot type)

© MyFANUC B5B0D8428C0144A78A5F4CA87F2C262E

Connectors

Fig. title	Specification No.	Fig. No.
PCR connector (soldering type)	PCR-E20FS	Fig. A (v)
FI40 connector	FI40-2015S	Fig. A (w)
Connector case (PCR type manufactured by HONDA TSUSHIN KOGYO)	PCR-V20LA/PCR-V20LB	Fig. A (x)
Connector case (FI type manufactured by HIROSE ELECTRIC)	FI-20-CV2	Fig. A (y)
Connector case (PCR type manufactured by HIROSE ELECTRIC)	FI-20-CV7	Fig. A (z)
Connector (1) for servo side manufactured by Tyco Electronics	AMP1-178128-3	Fig. A (aa)
Connector (2) for servo side manufactured by Tyco Electronics	AMP2-178128-3	Fig. A (ab)
Connector (3) for +24 V power supply manufactured by Tyco Electronics	AMP1-178288-3	Fig. A (ac)
Connector (4) for +24 V power supply manufactured by Tyco Electronics	AMP2-178288-3	Fig. A (ad)
Contact for connector manufactured by Tyco Electronics	AMP1-175218-2/5 AMP1-175196-2/5	Fig. A (ae)
Connector (case) manufactured by HONDA TSUSHIN KOGYO	MR-20L	Fig. A (af)
Connector (angled case) manufactured by HONDA TSUSHIN KOGYO	MR-50NSB	Fig. A (ag)
Connector (male) manufactured by HONDA TSUSHIN KOGYO	MR-20RM MR-50RM	Fig. A (ah)
Connector (female) manufactured by HONDA TSUSHIN KOGYO	MR-20RF MR-50RF	Fig. A (ai)
Connector (terminal layout) manufactured by HONDA TSUSHIN KOGYO	MR-50NSBM MR-50NSBF MR-20NSBM MR-20NSBF	Fig. A (aj)
Connector (3 pins/brown) manufactured by SOURIAU Japan KK	SMS3PN-5	Fig. A (ak)
Connector for flat cable manufactured by HIROSE ELECTRIC	HIF3BB-50D-2.54R HIF3BB-34D-2.54R	Fig. A (al)
Connector (for MDI) manufactured by Japan Aviation Electronics for CA55	LY10-DC20	Fig. A (am)
Contact (for MDI) manufactured by Japan Aviation Electronics for CA55	LY10-C2-3	Fig. A (an)
Punch panel connector for reader/punch interface	DB-25S-28874R	Fig. A (ao)
Locking plate for reader/punch interface connector	D20418-J7R	Fig. A (ap)
Connector (for distribution I/O connection printed circuit board) manufactured by HONDA TSUSHIN KOGYO	MRH-50FD	Fig. A (aq)
Faston terminal	A02B-0166-K330	Fig. A (ar)

© MyFANUC B5B0D8428C0144A78A5F4CA87F2C262E

TYPE : HONDA PCR–E20FS (SOLDERING TYPE)
USAGE : GENERAL
MATING
HOUSING : HONDA PCR–V20LA (PLASTIC)

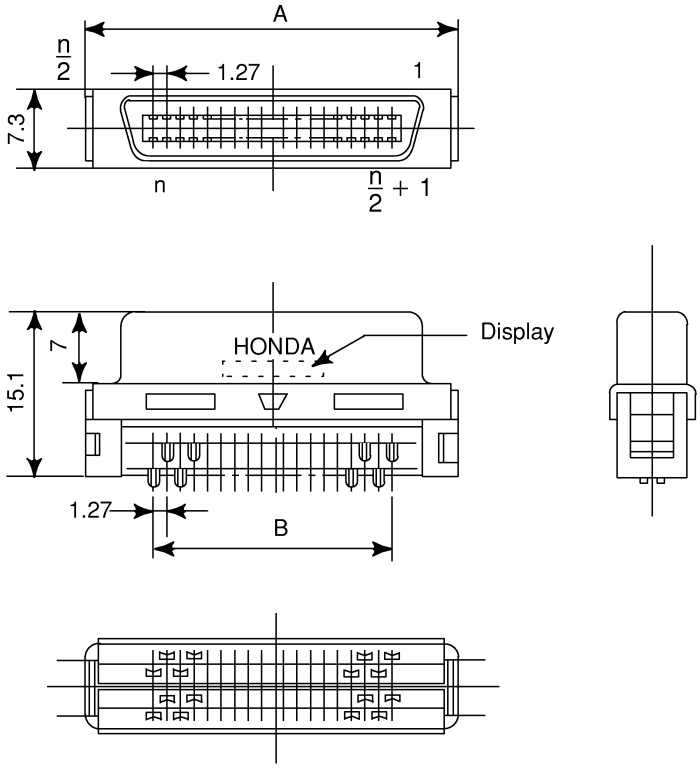

	A	B
PCR–E20FS	21.65	11.43

Fig. A (v) PCR connector (soldering type)

© MyFANUC B5B0D8428C0144A78A5F4CA87F2C262E

TYPE : HIROSE FI40–2015S
USAGE : PULSE CODER INTERFACE
LINEAR SCALE INTERFACE
MPG INTERFACE
MATING/HOUSING : HIROSE FI–20–CV

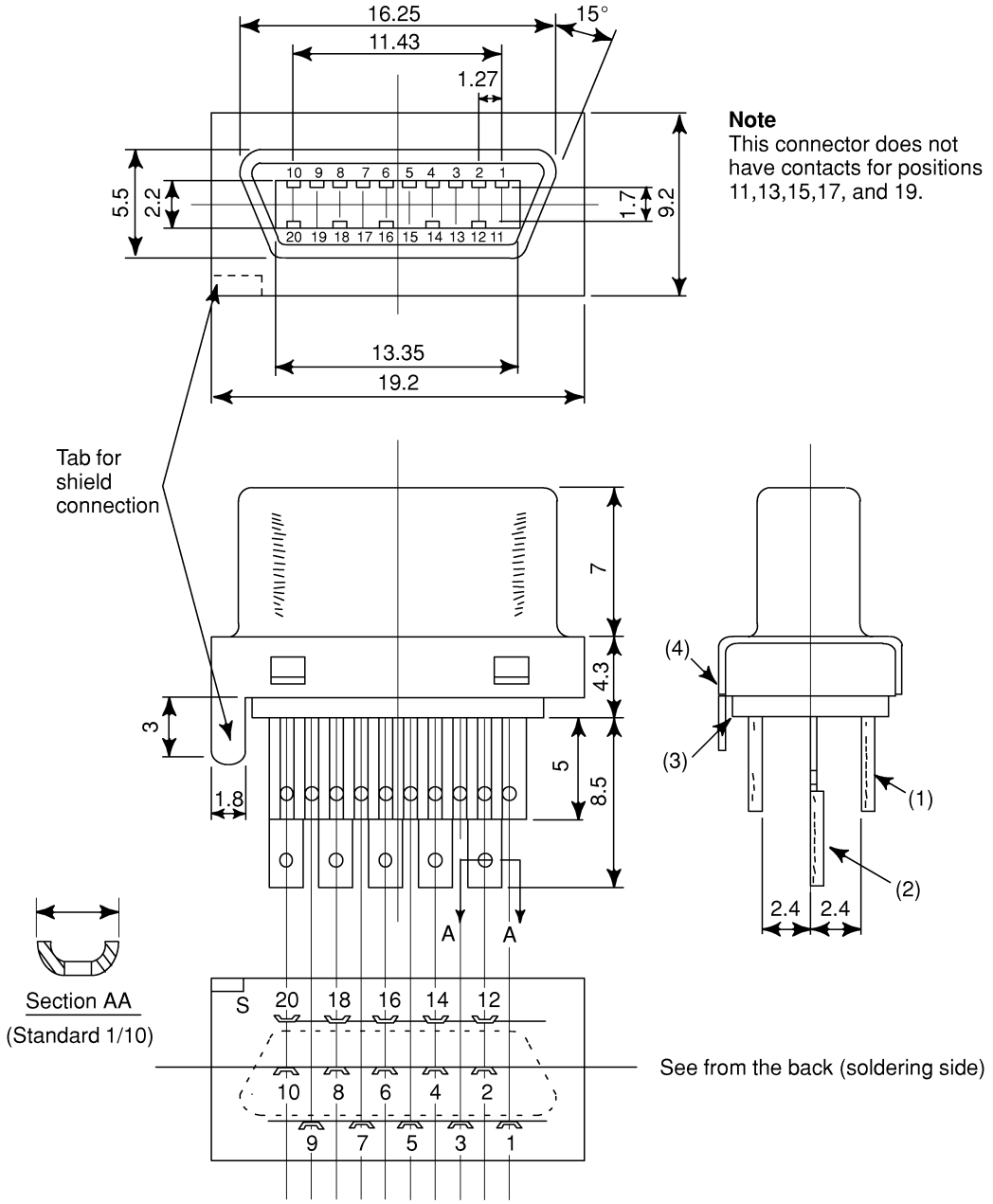

Note
This connector does not have contacts for positions 11,13,15,17, and 19.

Fig. A (w) FI40 connector

© MyFANUC B5B0D8428C0144A78A5F4CA87F2C262E

TYPE : HONDA PCR–V20LA (for 6 dia. cable)
USAGE : GENERAL

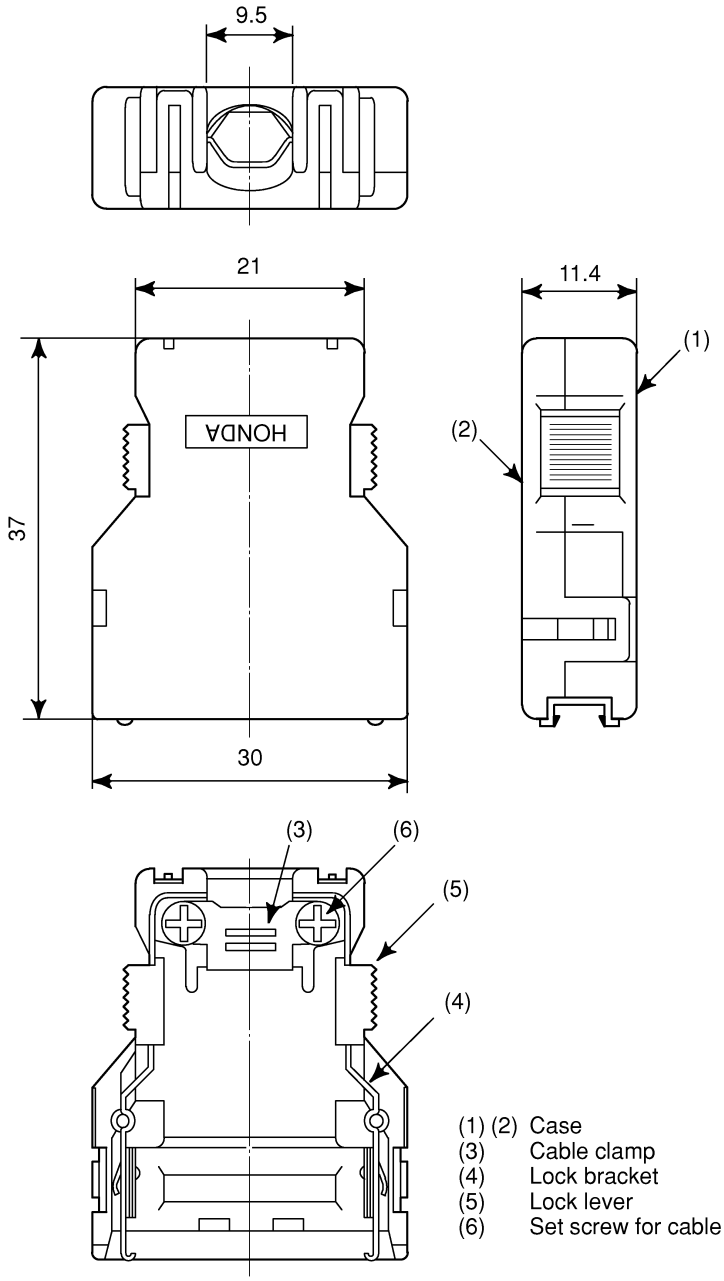

(1) (2) Case
(3) Cable clamp
(4) Lock bracket
(5) Lock lever
(6) Set screw for cable clamp

Fig. A (x) Connector case (PCR type manufactured by HONDA TSUSHIN KOGYO)

© MyFANUC B5B0D8428C0144A78A5F4CA87F2C262E

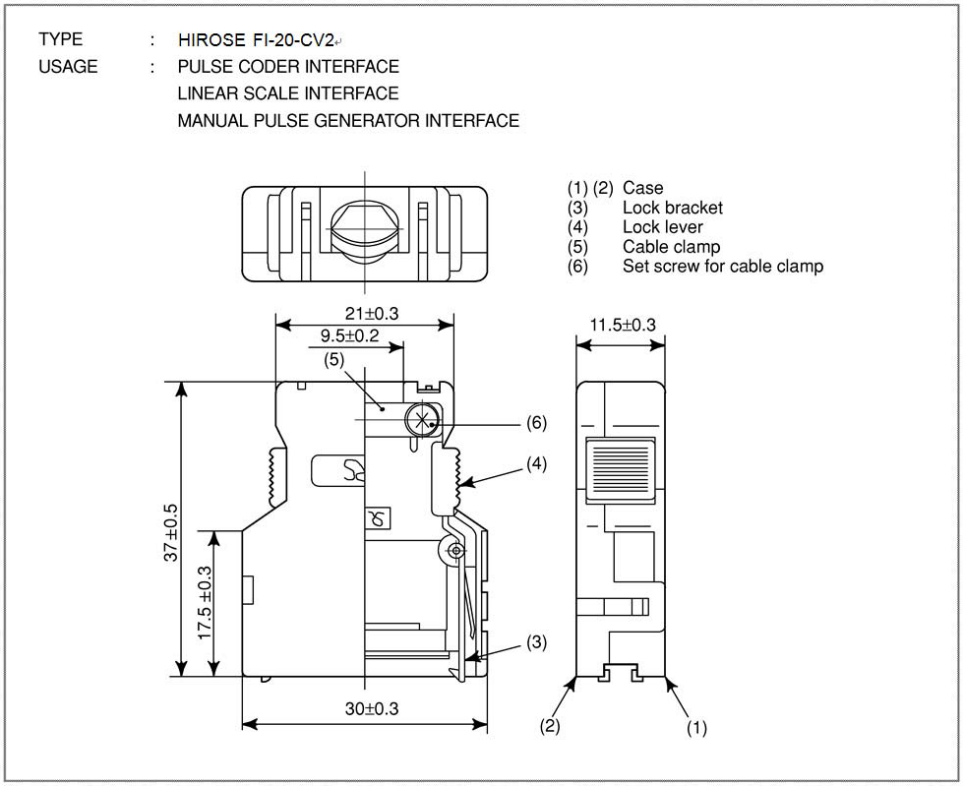

Fig. A (y) Connector case (FI type manufactured by HIROSE ELECTRIC)

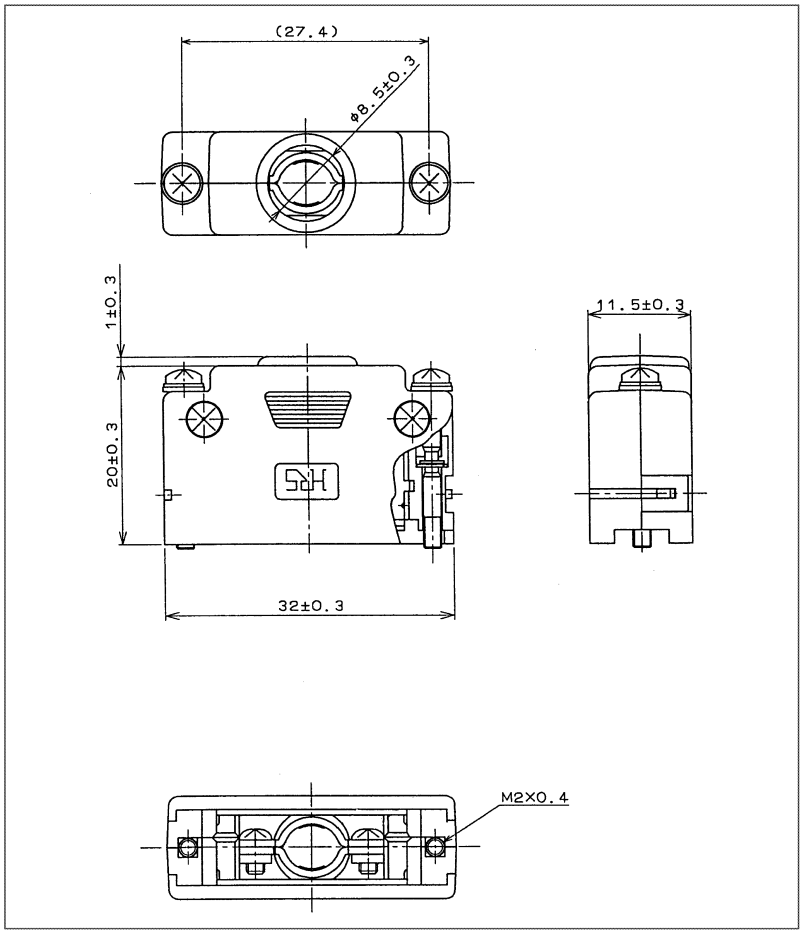

Fig. A (z) Connector case (PCR type manufactured by HIROSE ELECTRIC)

© MyFANUC B5B0D8428C0144A78A5F4CA87F2C262E

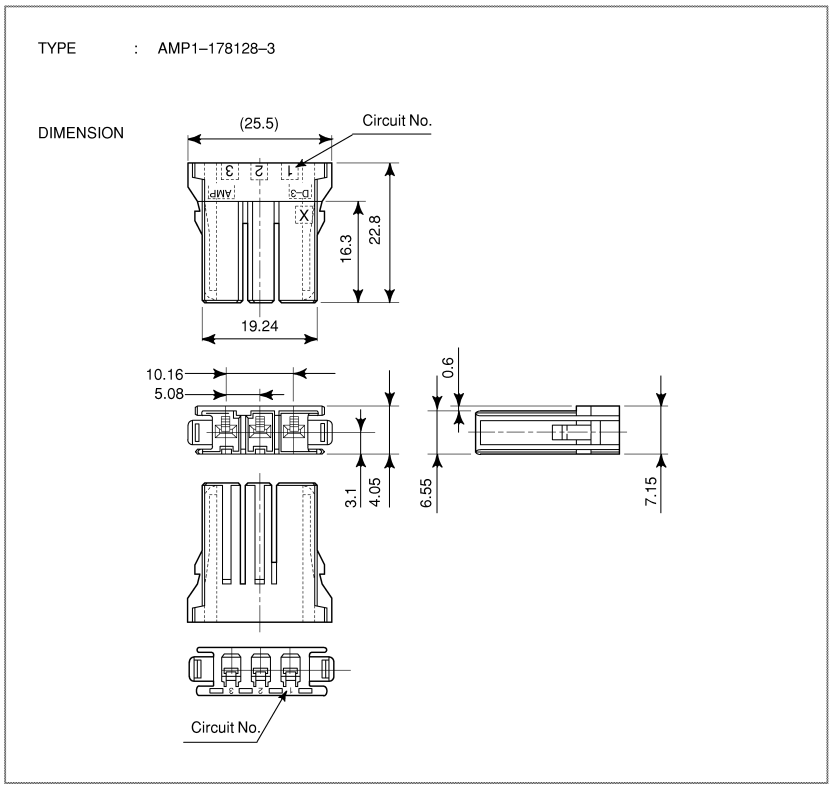

Fig. A (aa) Connector (1) for servo side manufactured by Tyco Electronics

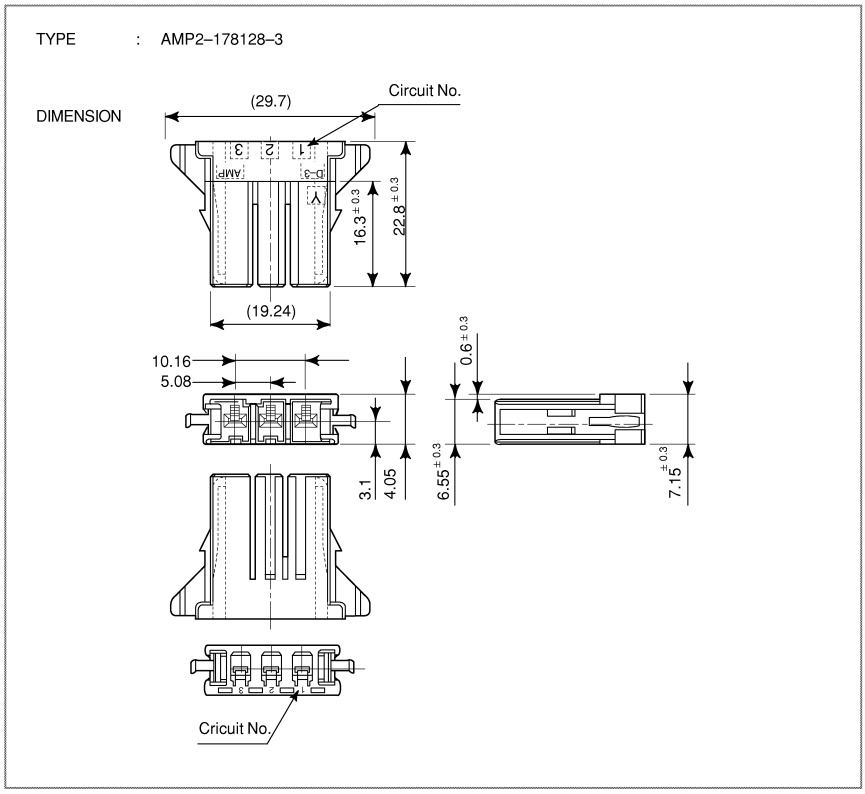

Fig. A (ab) Connector (2) for servo side manufactured by Tyco Electronics

© MyFANUC B5B0D8428C0144A78A5F4CA87F2C262E

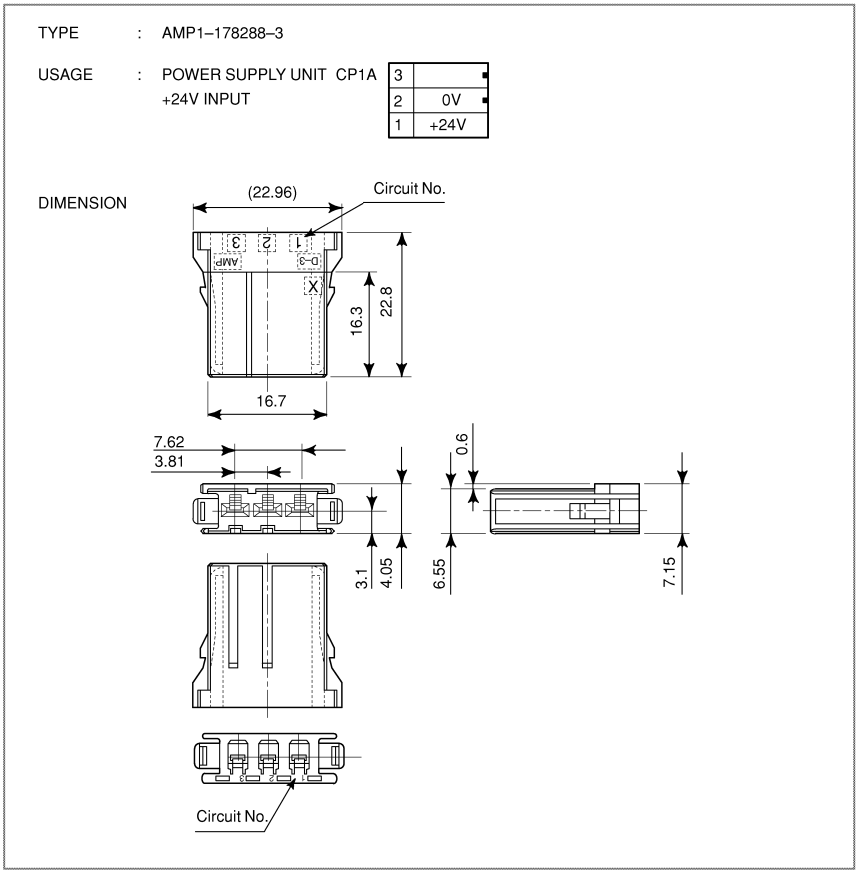

Fig. A (ac) Connector (3) for +24 V power supply manufactured by Tyco Electronics

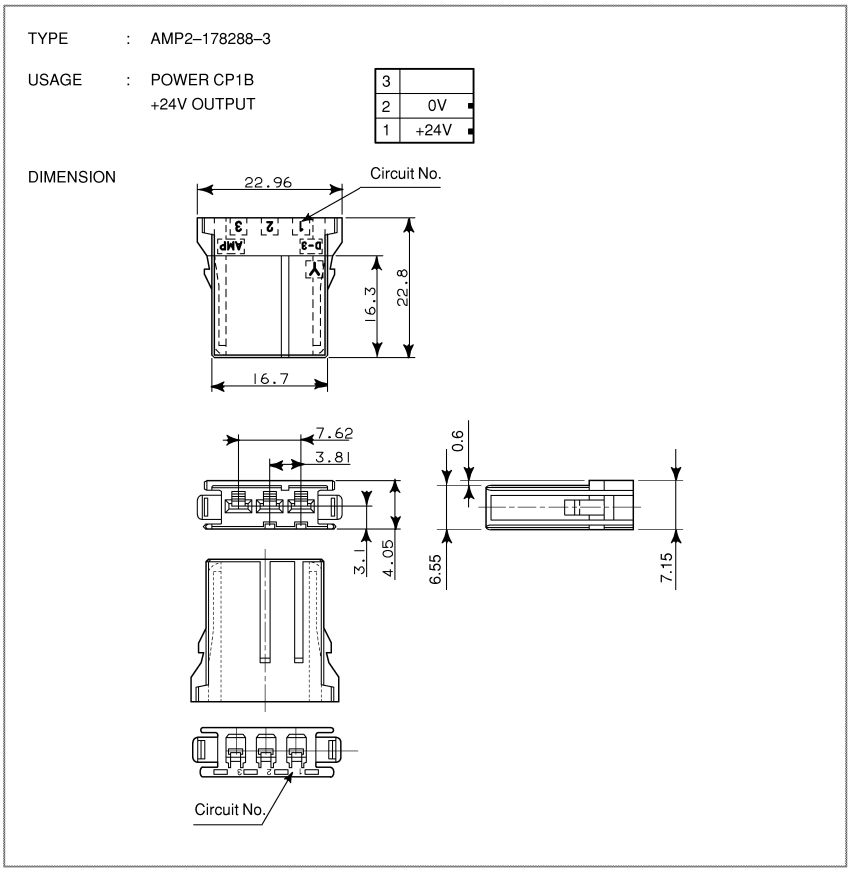

Fig. A (ad) Connector (4) for +24 V power supply manufactured by Tyco Electronics

© MyFANUC B5B0D8428C0144A78A5F4CA87F2C262E

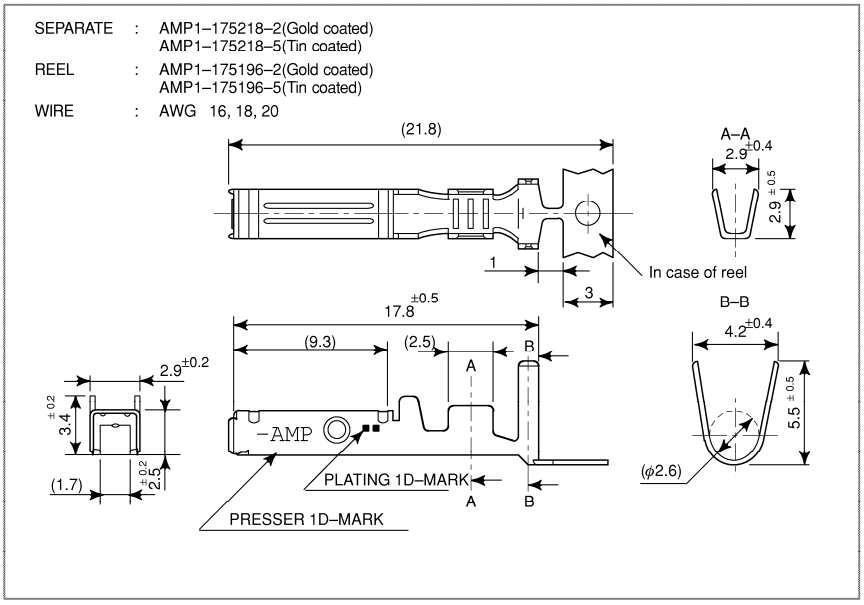

Fig. A (ae) Contact for connector manufactured by Tyco Electronics

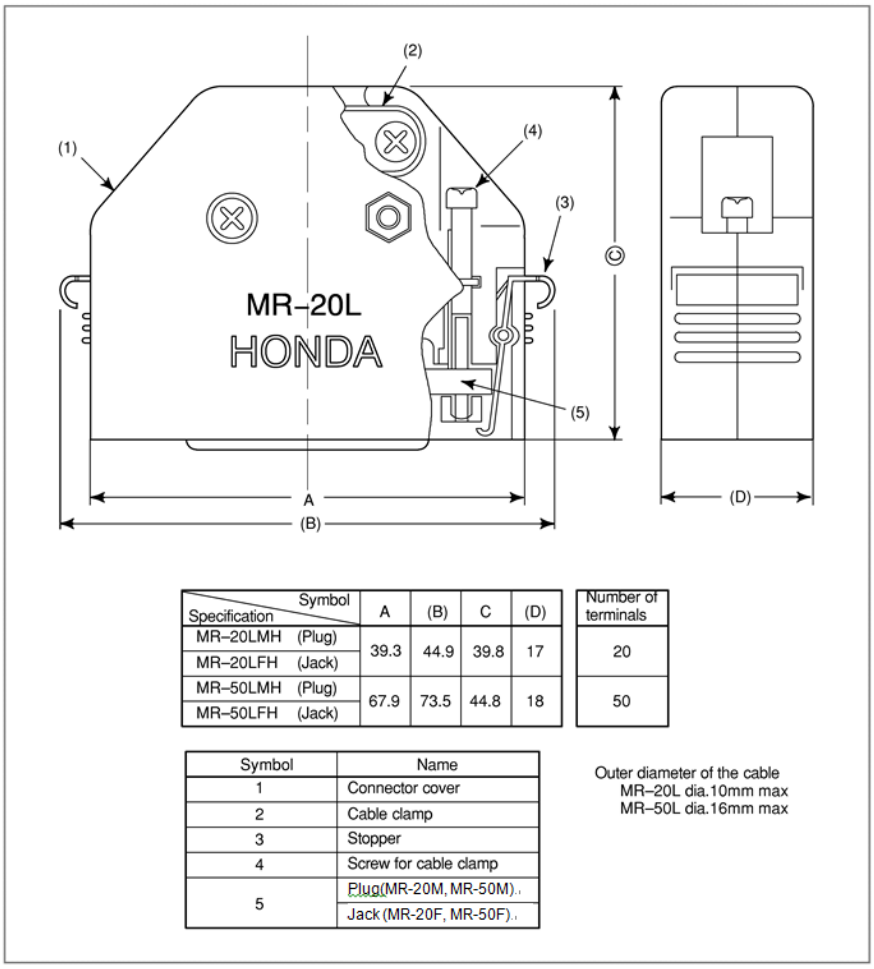

Specification \ Symbol	A	(B)	C	(D)	Number of terminals
MR–20LMH (Plug)	39.3	44.9	39.8	17	20
MR–20LFH (Jack)					
MR–50LMH (Plug)	67.9	73.5	44.8	18	50
MR–50LFH (Jack)					

Symbol	Name
1	Connector cover
2	Cable clamp
3	Stopper
4	Screw for cable clamp
5	Plug(MR-20M, MR-50M)
	Jack (MR-20F, MR-50F)

Outer diameter of the cable
MR–20L dia.10mm max
MR–50L dia.16mm max

Fig. A (af) Connector (case) manufactured by HONDA TSUSHIN KOGYO

© MyFANUC B5B0D8428C0144A78A5F4CA87F2C262E

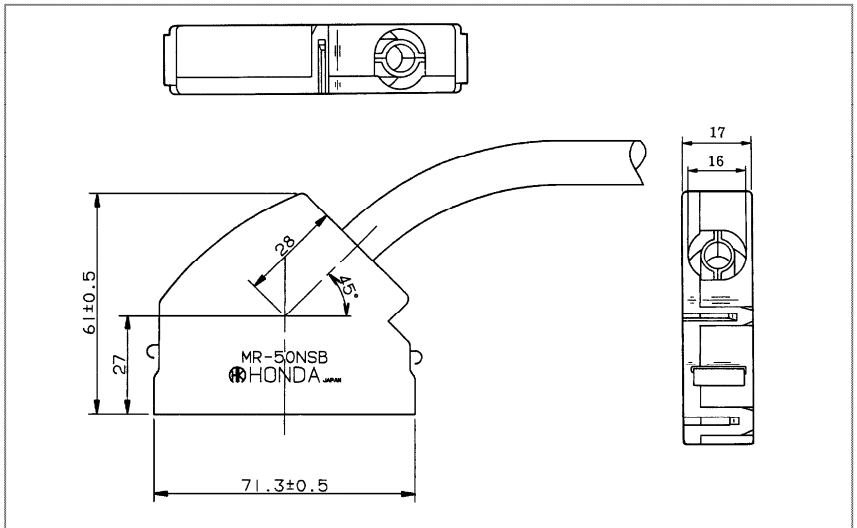

External dimensions of 50–pin connector

Fig. A (ag) Connector (angled case) manufactured by HONDA TSUSHIN KOGYO

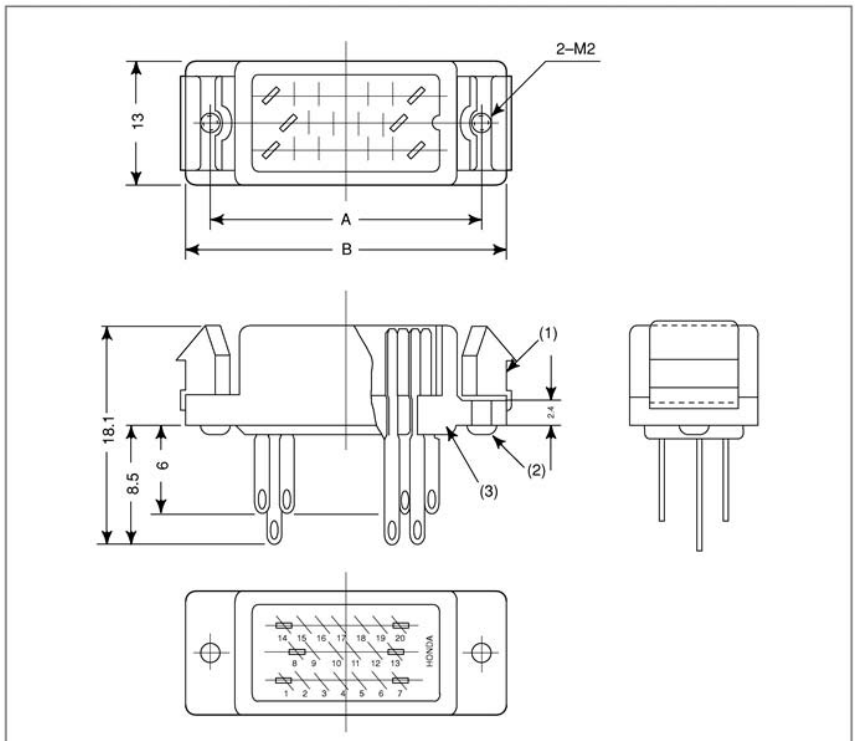

	A	B	Number of terminals
MR–20RMH	32.8	27.8	20
MR–50RHF	61.4	56.4	50

Symbol	Name
1	Cable clamp
2	Screw 2.6dia.×8
3	Connector (MR-20M, MR-50M)

Fig. A (ah) Connector (male) manufactured by HONDA TSUSHIN KOGYO

© MyFANUC B5B0D8428C0144A78A5F4CA87F2C262E

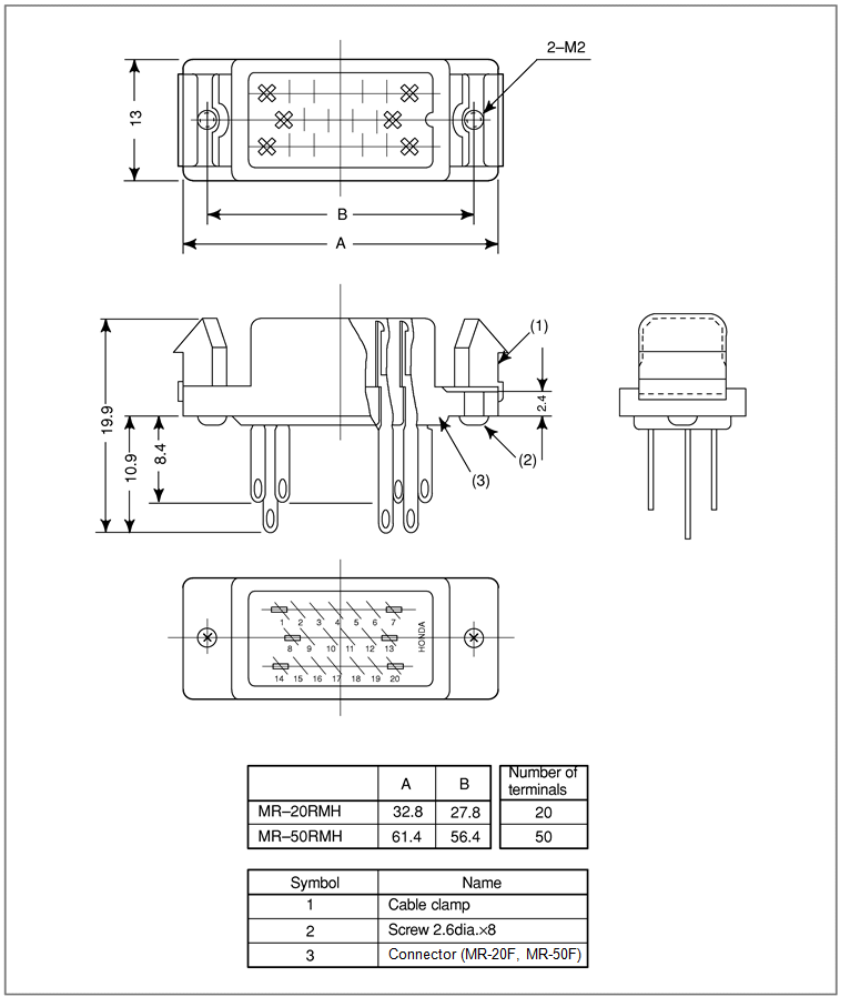

	A	B	Number of terminals
MR–20RMH	32.8	27.8	20
MR–50RMH	61.4	56.4	50

Symbol	Name
1	Cable clamp
2	Screw 2.6dia.×8
3	Connector (MR-20F, MR-50F)

Fig. A (ai) Connector (female) manufactured by HONDA TSUSHIN KOGYO

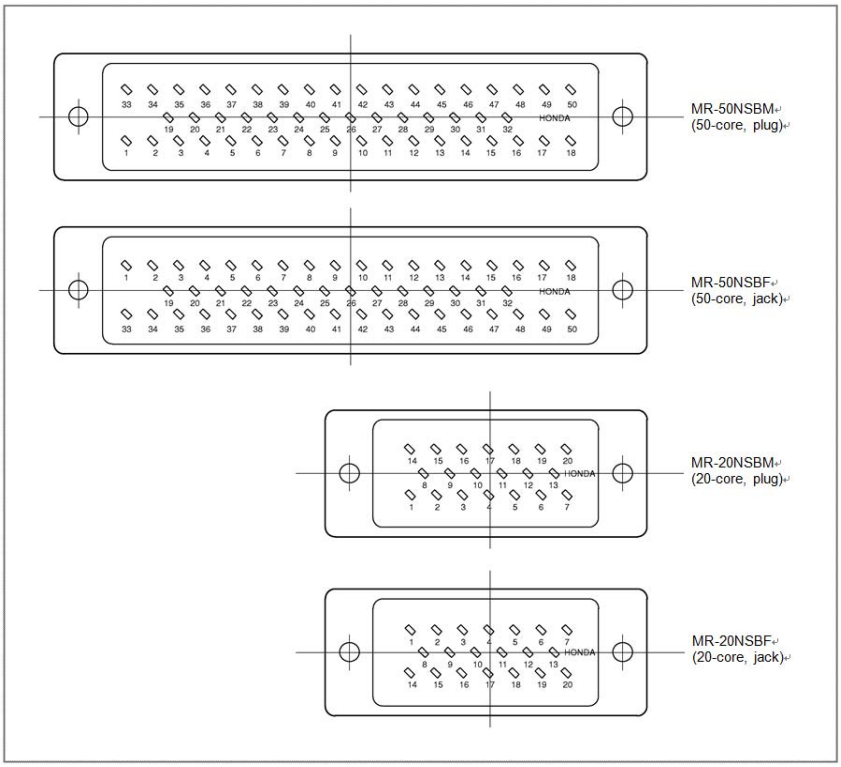

Fig. A (aj) Connector (terminal layout) manufactured by HONDA TSUSHIN KOGYO

© MyFANUC B5B0D8428C0144A78A5F4CA87F2C262E

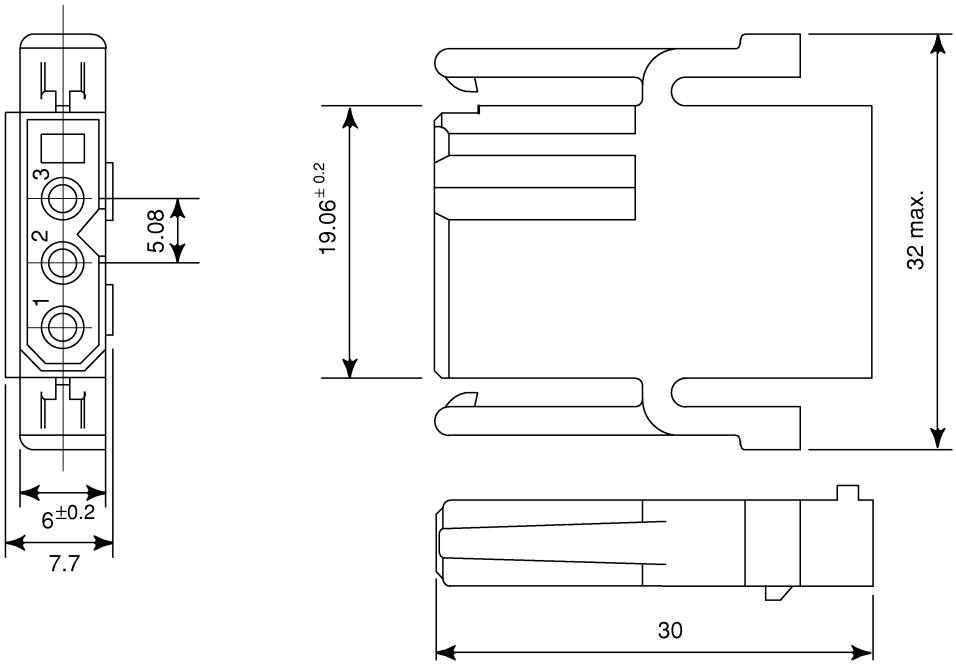

Manufacturer : Burndy Japan Corp.

Name		Specification (Connector maker number)	Remarks
Connector housing for cable		SMS3PNS–5	Brown
Contact	(Crimp type)	RC16M–23T3	For details on tools required for crimp terminals,contact the manufacturer.
	(Solder type)	RC16M–SCT3	

Cables : Cross sectional area : 0.75mm^2(30/0.18)
Insulation diameter : 2.8mm max
Peeling length : 7.2mm

Fig. A (ak) Connector (3 pins/brown) manufactured by Burndy Japan

© MyFANUC B5B0D8428C0144A78A5F4CA87F2C262E

CONNECTOR FOR FLAT CABLE (HIROSE ELEC. CO.)

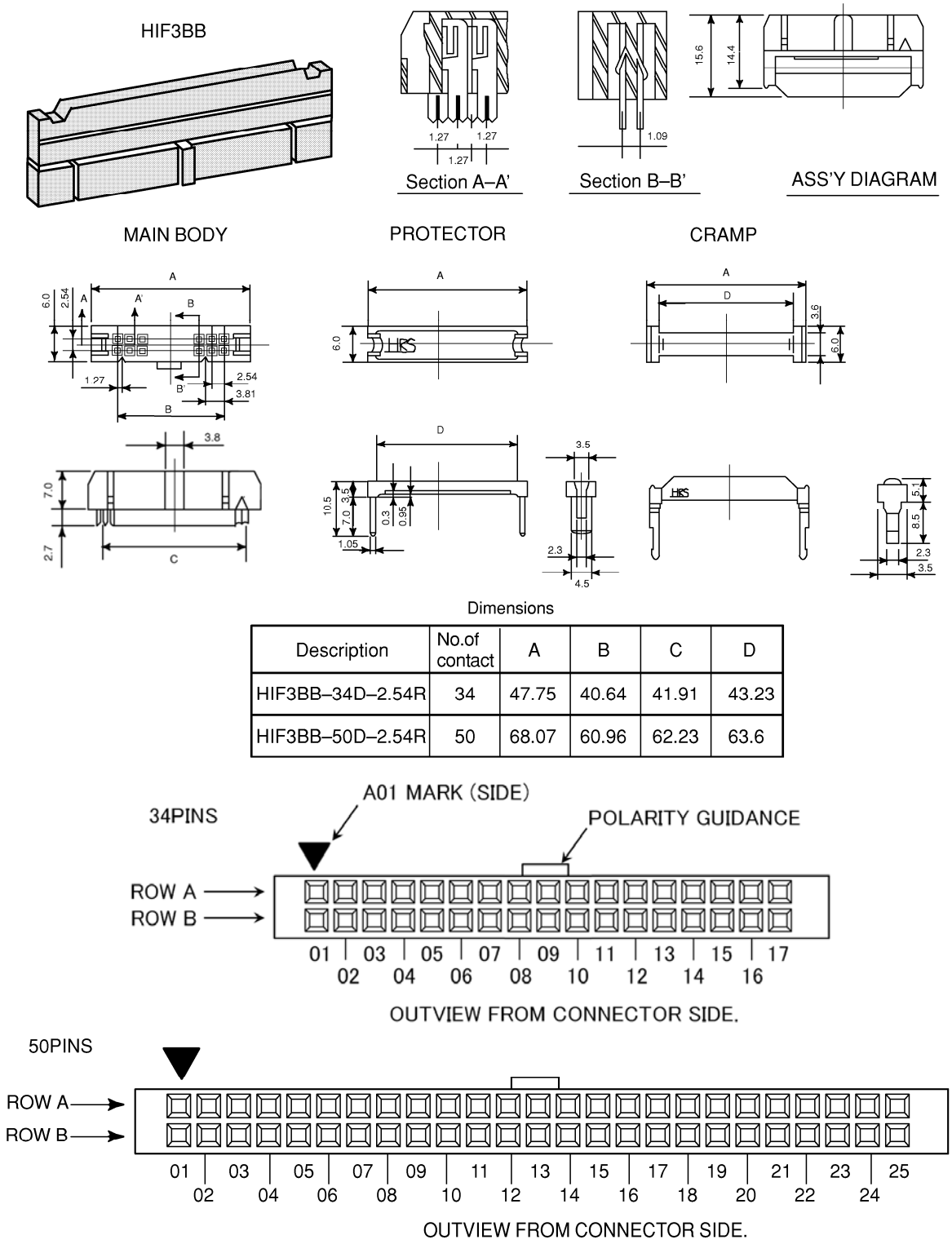

Description	No.of contact	A	B	C	D
HIF3BB–34D–2.54R	34	47.75	40.64	41.91	43.23
HIF3BB–50D–2.54R	50	68.07	60.96	62.23	63.6

Fig. A (al) Connector for flat cable manufactured by HIROSE ELECTRIC

© MyFANUC B5B0D8428C0144A78A5F4CA87F2C262E

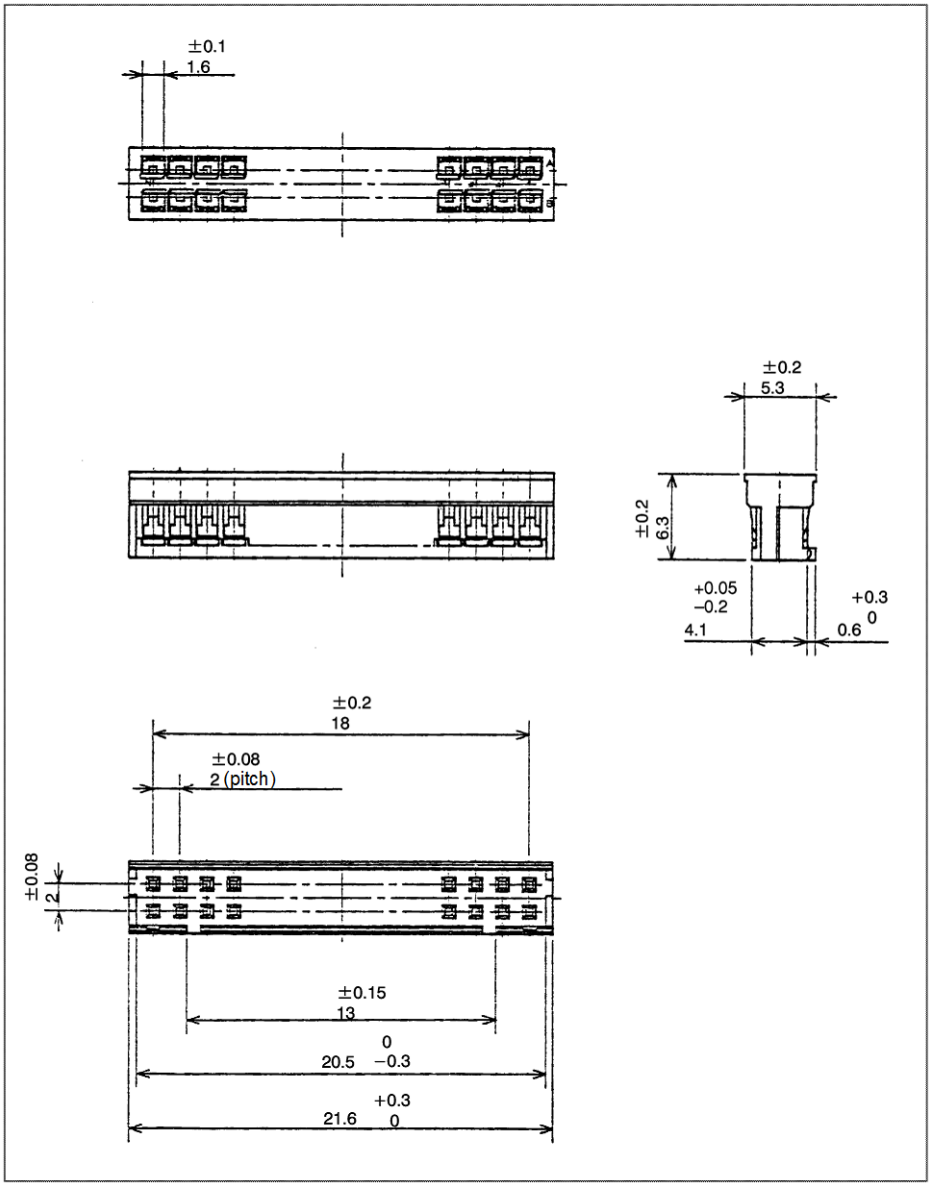

Fig. A (am) Connector (for MDI) manufactured by Japan Aviation Electronics

© MyFANUC B5B0D8428C0144A78A5F4CA87F2C262E

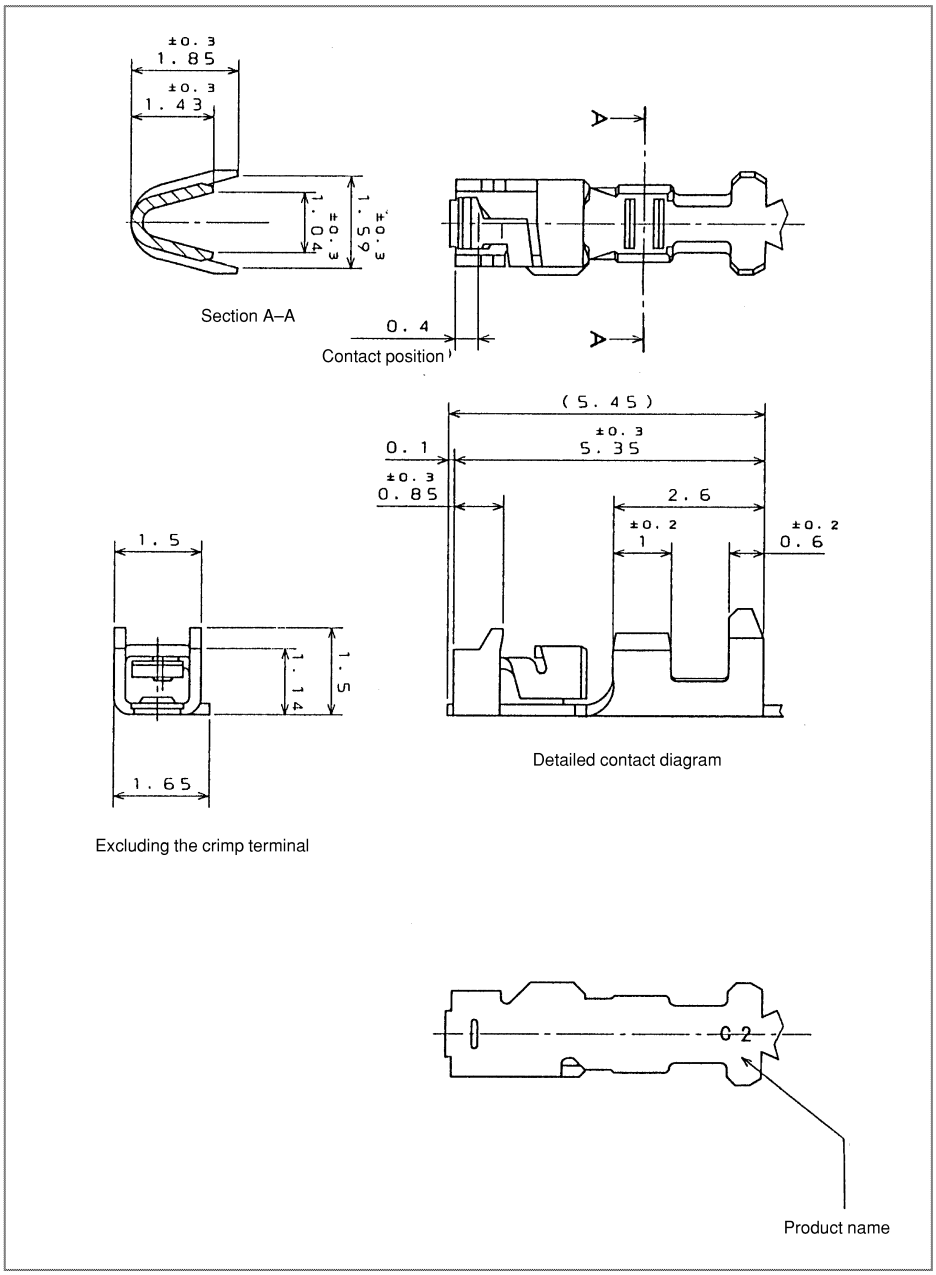

Fig. A (an) Contact (for MDI) manufactured by Japan Aviation Electronics

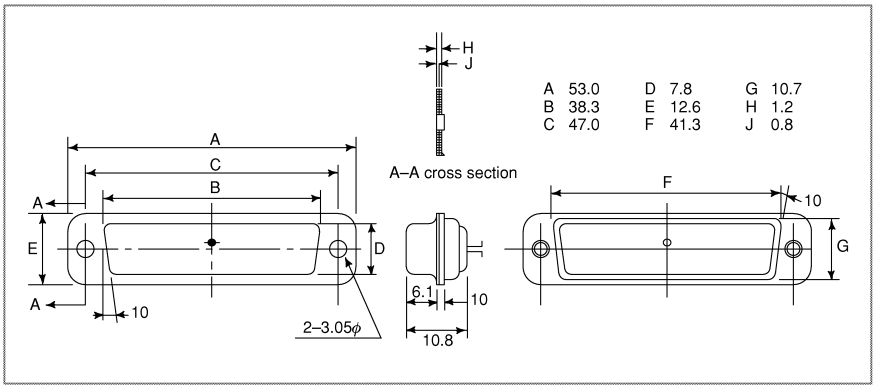

Fig. A (ao) Punch panel connector for reader/punch interface

© MyFANUC B5B0D8428C0144A78A5F4CA87F2C262E

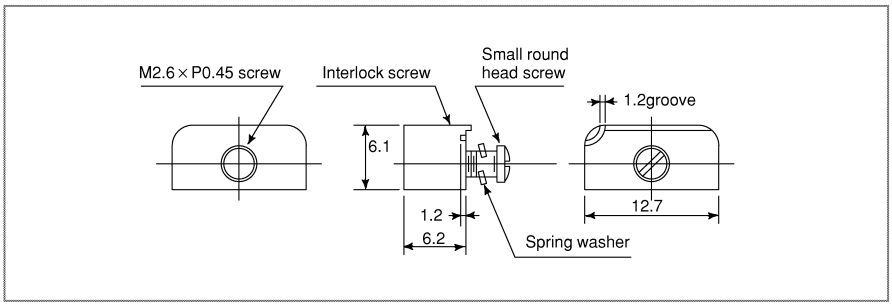

Fig. A (ap) Locking plate for reader/punch interface connector

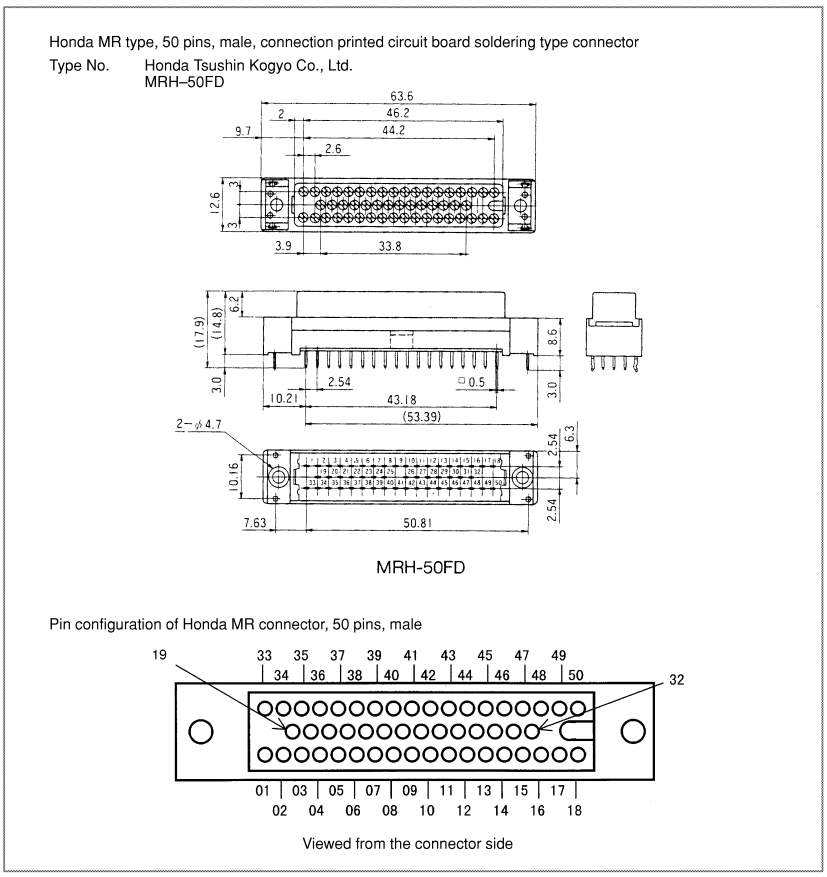

Fig. A (aq) Connector (for distribution I/O connection printed circuit board) manufactured by HONDA TSUSHIN KOGYO

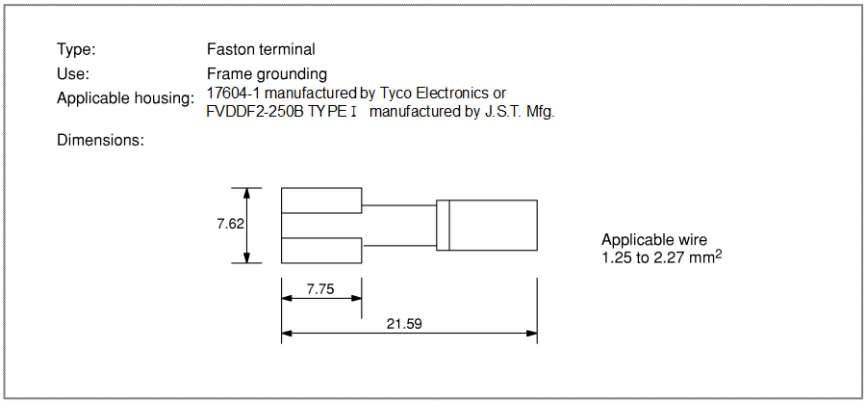

Fig. A (ar) Faston terminal

© MyFANUC B5B0D8428C0144A78A5F4CA87F2C262E

B 20-PIN INTERFACE CONNECTORS AND CABLES

B.1 BOARD-MOUNTED CONNECTORS

B.1.1 Vertical-type Connectors

Models: PCR-EV20MDT (Honda Tsushin)
52618-2011 (Molex Japan)

These board-mounted connectors have been specially developed to achieve the high packing density required for FANUC products. As explained in the following subsection, Honda PCR series connectors can be used as cable connectors because the mating mechanism of the newly developed connectors is compatible with that of the Honda PCR series connectors. To support this specification extensively, many connector manufacturers are now developing custom-tailored cable connectors. (Note that these cables cannot be used with screw-fixing cable connector housings.)

B.1.2 Straight and Right-angled Connectors (for Spring and Screw-fixing Connector Housings)

Models: FI80-20P (straight connector) (Hirose Electric)
DF1R020WB1 (straight connector) (Japan Aviation Electronics)
PCR-E20LMDETZ-SL+ (right-angled connector) (Honda Tsushin)

These connectors are used for the main and option boards. As cable connectors, they are compatible with screw-fixing connector housings as well as the spring locking connector housings.

© MyFANUC B5B0D8428C0144A78A5F4CA87F2C262E

B.2 CABLE CONNECTORS

Cable connectors consist of a connector main body and housing. The models listed below are available. Those connectors not marked with an asterisk are currently being mass-produced as manufacturer's standard models. Those marked with an asterisk are produced according to custom specifications by FANUC.

Table B.1 Cable connectors

Use	Type	Manufacture	Connector model	Housing model	Applicable cable outside diameter
General use MDI,IO Link *i*, etc.	Strand wire press-mount type	Honda Tsushin	PCR-E20FA	PCR-V20LA*	ϕ6mm(ϕ5.7 to 6.5)
		Hirose Electric	FI30-20S*	FI-20-CV2*	ϕ6.2mm(ϕ5.5 to 6.5)
		Molex Japan	52622-2011*	52624-2015*	ϕ6.2mm(ϕ5.9 to 6.5)
	Strand wire press-mount type (when a low screw-fixing housing is used)	Hirose Electric	FI30-20S*	FI-20-CV7* (Low screw-fixing housing)	ϕ6.2mm(ϕ5.5 to 6.5)
	Soldering type	Honda Tsushin	PCR-E20FS	PCR-V20LA*	ϕ6mm(ϕ5.7 to 6.5)
		Hirose Electric	FI40B-20S*	FI-20-CV2*	ϕ6.2mm(ϕ5.5 to 6.5)
			FI-40B-20S* (FI40A-20S*)	FI-20-CV5*	ϕ9.2mm(ϕ8.9 to 9.5)
			FI40B-20S*	FI-20-CV6*	ϕ10.25mm(ϕ9.5 to 11.0)
For Pulsecoder, coaxial cable, linear scale, manual pulse generator, etc.	Soldering type	Hirose Electric	FI40B-2015S* (FI40-2015S*)	FI-20-CV*	ϕ8.5mm(ϕ8.0 to 9.0)
			FI40B-20S* (FI40-20S*)	FI-20-CV5*	ϕ9.2mm(ϕ8.9 to 9.5)
			FI40B-20S*	FI-20-CV6*	ϕ10.25mm(ϕ9.5 to 11.0)
		Honda Tsushin	PCR-E20FS	PCR-V20LA*	ϕ6mm(ϕ5.7 to 6.5)

B.2.1 Strand Wire Press-mount Connector

With this connector, #28AWG wires are press-connected to each pin at the same time. The cost of producing a cable/connector assembly with this connector model is much lower than with connectors designed for crimping or soldering.

Connector model (manufacturer)	Supplementary description
FI-20-CV7 (Hirose Electric)	Low connector housing, more compact than conventional models. The housing can be fastened to a board-mounted connector by means of a screw lock. It is intended mainly for connecting the board-mounted connectors used on the main and option boards of the LCD-mounted type (see Section B.1.2). Note that this connector housing cannot be used for conventional board-mounted connectors.

© MyFANUC B5B0D8428C0144A78A5F4CA87F2C262E

B.2.2 Soldering Type Connector

Details of soldering type connectors and their housings are summarized below.

Table B.2 Details of soldering type connectors and housings

Connector model (manufacturer)	Supplementary description
PCR-E20FS+ (Honda Tsushin)	Soldering type connector for general signals. This is suitable for producing cable assemblies in small quantities, as well as on-site.
FI40-20S (Hirose Electric)	Equivalent to Honda Tsushin PCR-E20FS
FI40B-20S (Hirose Electric) (formerly, FI40A-20S)	Has the same number of pins as the FI40-20S, but features a wider soldering pitch, facilitating soldering and enabling the use of thicker wires. Its reinforced pins allow wires as thick as #17AWG to be soldered to the FI40B-20S (wires no thicker than #20AWG can be used with the FI40A-20S). Note, however, that a thick wire, such as #17AWG, should be used with a more robust housing like the FI-20-CV6.
FI40B-2015S (Hirose Electric) (formerly, FI40-2015S)	Features a wider soldering pitch, attained by using the space provided by thinning out some pins. Also features tougher pins, compared with its predecessor, the FI40-2015S. These pins can be soldered to wires as thick as #17AWG, provided that the cable diameter does not exceed 8.5 mm.

Housing model (manufacturer)	Supplementary description
FI-20-CV5 (Hirose Electric)	Should be used with the FI40B-20S. This is a plastic housing designed for use with a cable that is 9.2 mm in diameter.
FI-20-CV6 (Hirose Electric)	Should be used with the FI40B-20S. This housing, however, can be used with a thicker cable (such as 10.25 mm in diameter) than is possible with the FI-20-CV6. Its components are die cast.

In addition to the combinations shown in Table B.1, Hirose soldering-type connectors can be combined with the housings listed below. Ensure that the diameter of the cable used with each housing satisfies the requirements of that housing.

Connector model		Housing model (applicable cable diameter)
FI40B-2015S (formerly FI40-2015S)	⇔	FI-20-CV (8.5 mm in diameter) only
FI40-20S FI40B-20S (formerly FI40A-20S)	⇔	FI-20-CV2 (ϕ6.2mm) FI-20-CV5 (ϕ9.2mm) FI-20-CV6 (ϕ10.25mm)

Those listed on the left can be used.

© MyFANUC B5B0D8428C0144A78A5F4CA87F2C262E

B.3 RECOMMENDED CONNECTORS, APPLICABLE HOUSINGS, AND CABLES

Table B.3 Recommended connectors, applicable housings, and cables

Connector name referenced in the Connection Manual	FANUC-approved connector (manufacturer)	FANUC-approved housing (manufacturer)	Compatible cable (cable diameter) FANUC development Ordering specification	Remarks
PCR-E20FA Strand wire press-mount type	PCR-E20FA (Honda Tsushin)	PCR-V20LA (Honda Tsushin)	A66L-0001-0284#10P (6.2 mm in diameter)	Plastic housing
	FI30-20S (Hirose Electric)	FI-20-CV2 (Hirose Electric)		Metal housing
	52622-2011 (Molex Japan)	52624-2015 (Molex Japan)		Plastic housing
PCR-E20FA Strand wire press-mount type	FI30-20S (Hirose Electric)	FI-20-CV7 (Hirose Electric)		Plastic housing
PCR-E20FS Soldering type	PCR-E20FS (Honda Tsushin)	PCR-V20LA (Honda Tsushin)		Plastic housing
	FI40-20S (Hirose Electric)	FI-20-CV2 (Hirose Electric)		Plastic housing
FI40B-2015S (formerly I40-2015S) 15-pin soldering type	FI40B-2015S (formerly FI40-2015S) (Hirose Electric)	FI-20-CV (Hirose Electric)	A66L-0001-0286 (Note) A66L-0001-0402 (Note) (8.5 mm in diameter)	Plastic housing
FI40B-20S (formerly FI40A-20S) Soldering type	FI40B-20S (formerly FI40A-20S) (Hirose Electric)	FI-20-CV5 (Hirose Electric)	A66L-0001-0367 A66L-0001-0368 (9.2 mm in diameter)	Plastic housing
	FI40B-20S (Hirose Electric)	FI-20-CV6 (Hirose Electric)	A66L-0001-0403 (Note) (9.8 mm in diameter)	Metal housing

NOTE

As pulse coder cables, the following cables are available: Cable that can be up to 20 m long (A66L-0001-0286), cable that can be up to 30 m long (A66L-0001-0402), and cable that can be up to 50 m (A66L-0001-0403). Cables A66L-0001-0402 and A66L-0001-0403 have not only the same level of oil resistance as conventional cables, but also bending resistance (cable, 100 mm in diameter, capable of withstanding at least 10 million bending cycles), and are UL- and CSA-certified.

© MyFANUC B5B0D8428C0144A78A5F4CA87F2C262E

B.3.1 Recommended Connectors

Press-mount type connector assembly tools and jigs

Connector model referenced in the Connection Manual	FANUC-approved connector (manufacturer)	Wire forming tool	Press-mounting tool	Remark
PCR-E20FA	PCR-E20FA (Honda Tsushin)	PCS-K2A	FHPT-918A	
		JGPS-015-1/1-20 JGPS-014	MFC-K1 PCS-K1	(Note 1)
		FHAT-918A		
	FI30-20S (Hirose Electric)	FI30-20CAT	FI30-20/ID	
		FI30-20CAT1	HHP-502 FI30-20GP	
	52622-2011 (Molex Japan)	57829-5000	57830-5000	
		57823-5000	57824-5000	

NOTE
1 Those tools indicated by shading are available from FANUC (specification number A02B-0120-K391).
2 The tools available from each manufacturer are specifically designed for use with the connectors manufactured by that manufacturer.

B.3.2 Applicable Cables

Materials for cable assemblies

Machine tool builders are required to manufacture or procure the materials for the cable assemblies to be used with their products. FANUC recommends the following materials as being suitable for interface connectors. Individual machine tool builders are encouraged to contact each cable manufacturer for themselves, as required.

Material	Use	Constitution	FANUC specification number	Manufacturer	Remark
10-pair cable	General use	0.08mm^2 10-pair	A66L-0001-0284 #10P	Hitachi Metals Oki Electric Cable SHINKO ELECTRIC INDUSTRIES	
12-conductor composite cable	Pulsecoder, linear scale, manual pulse generator	0.5mm^2 6-conductor 0.18mm^2 3-pair	A66L-0001-0286	Hitachi Metals Oki Electric Cable SHINKO ELECTRIC INDUSTRIES	20 m or less
		0.75mm^2 6-conductor 0.18mm^2 3-pair	A66L-0001-0402	Oki Electric Cable	30 m or less Usable on movable parts
		1.25mm^2 6-conductor 0.18mm^2 3-pair	A66L-0001-0403	Oki Electric Cable	50 m or less Usable on movable parts

© MyFANUC B5B0D8428C0144A78A5F4CA87F2C262E

10-pair cable

(a) Specifications

Item		Unit	Specifications
Product No.		-	A66L-0001-0284#10P
Manufacturer		-	Hitachi Metals,Ltd. Oki Electric Cable, Co.,Ltd. SHINKO ELECTRIC INDUSTRIES CO., LTD.
Rating		-	80°C 30V : UL20276
Material	Conductor	-	Stranded wire of tinned annealed copper (ASTM B-286)
	Insulator	-	Cross-linked vinyl
	Shield braid	-	Tinned annealed copper wire
	Sheath	-	Heat-resistant oil-proof vinyl
Number of pairs		Pairs	10
Conductor	Size	AWG	28
	Structure	Conductors/mm	7/0.127
	Outside diameter	mm	0.38
Insulator	Thickness	mm	0.1 Thinnest portion : 0.08 (3.1mils)
	Outside diameter (approx.)	mm	0.58
Twisted pair	Outside diameter (approx.)	mm	1.16
	Pitch	mm	20 or less
Lay		-	Collect the required number of twisted pairs into a cable, then wrap binding tape around the cable. To make the cable round, apply a cable separator as required.
Lay diameter (approx.)		mm	3.5
Drain wire		Conductors/mm	Hitachi Metals : Not available Oki Electric Cable : Available,10/0.12 SHINKO ELECTRIC INDUSTRIES CO., LTD. : Not available
Shield braid	Element wire diameter	mm	0.12
	Braid density	%	85 or more
Sheath	Color	-	Black
	Thickness	mm	1.0
	Outside diameter (approx.)	mm	6.2
Standard length		m	200
Packing method		-	Bundle
Electrical performance	Electric resistance (at 20°C)	Ω/km	233 or less
	Insulation resistance (at 20°C)	MΩ-km	10 or less
	Dielectric strength (AC)	V/min.	300
Flame resistance		-	Shall pass flame resistance test VW-1SC of UL standards.

© MyFANUC B5B0D8428C0144A78A5F4CA87F2C262E

(b) Structure drawing

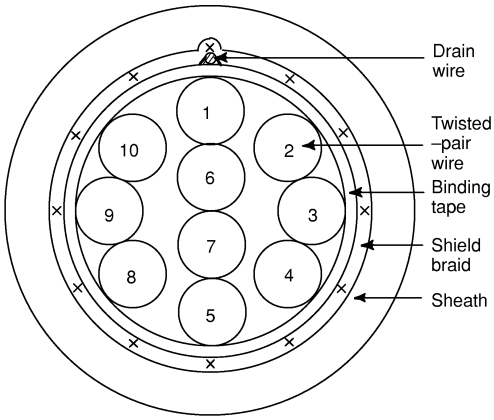

Wire identification table

Pair No.	Insulator color	Dot mark (1 pitch)	Dot mark color	
			First wire	Second wire
1	Orange	—	Red	Black
2	Gray	—	Red	Black
3	white	—	Red	Black
4	Yellow	—	Red	Black
5	Pink	—	Red	Black
6	Orange	— —	Red	Black
7	Gray	— —	Red	Black
8	White	— —	Red	Black
9	Yellow	— —	Red	Black
10	Pink	— —	Red	Black

The numbers assigned to the wires correspond to the numbers in the table at right.

Composite 12-core cable

(a) Specifications

Item		Unit	Specifications	
Product No.		-	A66L-0001-0286	
Manufacturer		-	Oki Cable, Ltd. Hitachi Metals, Ltd. SHINKO ELECTRIC INDUSTRIES CO., LTD.	
Rating		-	80°C, 30V	
Material	Conductor, braid-shielded wire, drain wire	-	Strand wire of tinned annealed copper (JIS C3152)	
	Insulator	-	Heat-resistant flame-retardant vinyl	
	Sheath	-	Oil-proof, heat-resistant, flame-retardant vinyl	
Number of wires (wire ons.)		Cores	6 (1 to 6)	6 (three pairs) (7 to 9)
Conductor	Size	mm^2	0.5	0.18
	Structure	Conductors/mm	20/0.18	7/0.18
	Outside diameter	mm	0.94	0.54
Insulator	Standard thickness (The minimum thickness is at least 80% of the standard thickness.)	mm	0.25	0.2
	Outside diameter	mm	1.50	0.94
Twisted pair	Outside diameter	mm		1.88
	Direction of lay	-		Left
	Pitch	mm		20 or less
Lay		-	Twist the wires at an appropriate pitch so the outermost layer is right-twisted, and wrap tape around the outermost layer. Apply a cable separator as required.	
Lay diameter (approx.)		mm	5.7	

© MyFANUC B5B0D8428C0144A78A5F4CA87F2C262E

Item		Unit	Specifications	
Drain wire	Size	mm^2	0.3	
	Structure	Wires/mm	12/0.18	
	Outside diameter	mm	0.72	
Shield braid	Element wire diameter	mm	0.12	
	Thickness	mm	0.3	
	Braid density	%	70	
	Outside diameter	mm	6.3	
Sheath	Color	-	Black	
	Standard thickness (The minimum thickness is at least 85% of the standard thickness.)	mm	1.1	
	Outside diameter	mm	8.5Max. 9.0 (Note)	
Standard length		m	100	
Packing method		-	Bundle	
Electrical performance	Electric resistance (at 20°C) (wire nos.)	Ω/km	39.4 (1 to 6)	113 (7 to 9)
	Insulation resistance (at 20°C)	MΩ-km	15	
	Dielectric strength (AC)	V/min.	500	
Flame resistance		-	Shall pass flame resistance test VW-1SC of UL standards.	

NOTE
The maximum outside diameter applies to portions other than the drain wire.

(b) Cable structure
The cable structure is shown below.

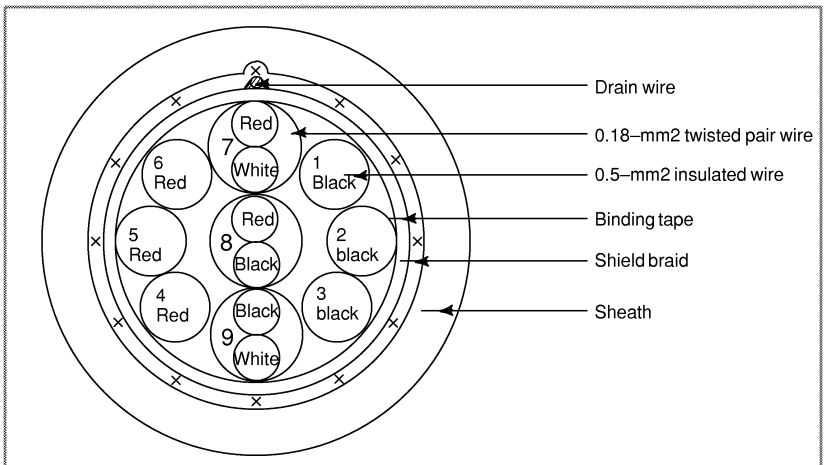

The colors in the figure indicate the colors of insulators.

© MyFANUC B5B0D8428C0144A78A5F4CA87F2C262E

(c) Specifications

Item		Specification			
FANUC specification number		A66L-0001-0402		A66L-0001-0403	
Manufacturer		Oki Electric Cable Co., Ltd.			
		A-conductor	B-conductor	A-conductor	B-conductor
Conductor	Constitution Number of conductors/ mm	16/0.12 (0.18mm^2)	3/22/0.12 (0.75mm^2)	16/0.12 (0.18mm^2)	7/16/0.12 (1.25mm^2)
	Typical outside diameter (mm)	0.55	1.20	0.55	1.70
Insulation (polyester)	Color	White, red, black	Red, black	White, red, black	Red, black
	Typical thickness (mm)	0.16	0.23	0.16	0.25
	Typical outside diameter (mm)	0.87	1.66	0.87	2.20
Pair twisting	Constitution	White-red, white-black, and black-red		White-red, white-black, and black-red	
	Direction of twisting	Left Typical pitch: 20 mm		Left Typical pitch: 20 mm	
Assembling by twisting	Number of strands or conductors	3	6	3	6
	Direction of twisting	Left		Left	
	Taping	Twisting is wrapped with washi, or Japanese paper, tape.		Twisting is wrapped with washi, or Japanese paper, tape.	
	Typical outside diameter (mm)	5.7		6.9	
Braided shielding	Typical strand diameter (mm)	0.14			
	Typical density (mm)	80			
	Drain	A 12/0.18 mm wire is roughly wrapped under braided shielding.			
	Typical outside diameter (mm)	6.4		7.6	
Sheath (polyurethane)	Color	Black (matted)			
	Typical thickness (mm)	1.05		1.1	
	Vertical taping	Vertically taped with washi under sheathing.			
	Outside diameter (mm)	8.5±0.3		9.8±0.3	
Finished assembly	Typical length (m)	100			
	Short size	Basically not approved.			
Finished assembly performance	Rating	80°C 30V			
	Standard	Shall comply with UL STYLE 20236 and CSA LL43109 AWM I/II A 80°C 30V FT-1.			
	Flame resistance	Shall comply with VW-1 and FT-1.			
Electrical performance	Conductor resistance Ω/km (20°C)	103 or lower	25.5 or lower	103 or lower	15.0 or lower
	Insulation resistance MΩ/km (20°C)	1 or higher			
	Dielectric strength V-min	A.C 500			
Insulation performance	Tensile strength N/mm^2	9.8 or higher			
	Elongation %	100 or higher			
	Tensile strength after aging %	At least 70% of that before aging			
	Elongation after aging %	At least 65% of that before aging			
	Aging condition	For 168 hours at 113°C			
Sheathing performance	Tensile strength N/mm^2	9.8 or higher			
	Elongation %	100 or higher			
	Tensile strength after aging %	At least 70% of that before aging			
	Elongation after aging %	At least 65% of that before aging			
	Aging condition	For 168 hours at 113°C			

© MyFANUC B5B0D8428C0144A78A5F4CA87F2C262E

Cable cross section	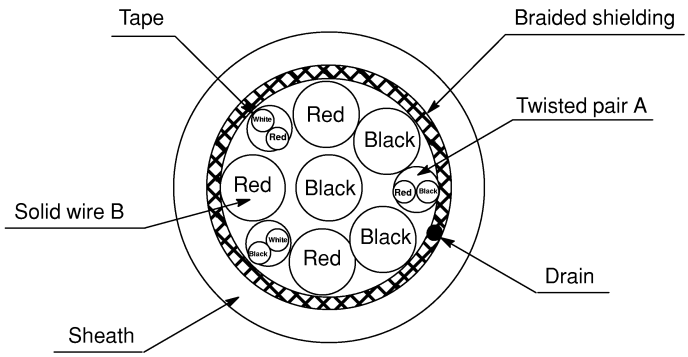

5-core coaxial cable

(a) Specifications

Item		Unit	Description
Specification		-	A66L-0001-0371
Manufacture		-	Hitachi Metals, LTD.
Number of Conductors		-	5
Inside Conductor	Size	mm^2	0.14
	Components	Conductors(PCS)/mm	7/0.16
	Material	-	Tin-coated Soft Copper Wire
	Diameter (approx.)	mm	0.48
Insulator	Material (Color)	-	Polyethylene (White), heat-resistant 80°C
	Thickness	mm	0.71
	Diameter (approx.)	mm	1.90
Outside Conductor	Material	-	Tin-coated Soft Copper Wire (Rolled)
	Diameter of Component-Wire	mm	0.08
	Density	%	95 or more
	Thickness	mm	0.2
Jacket	Material	-	Vinyl, heat-resistant 80°C
	Color	-	Black. White. Red. Green. Blue
	Thickness	mm	0.15
	Diameter (approx.)	mm	2.6
Twisted Assembly Diameter (approx.)		mm	7.1
Thickness of Paper Tape		mm	0.05
Shield braid	Wire dia. Material	mm	0.12 (Tin-coaded soft copper wire)
	Density	%	80 or more (typ 82%)
	Thickness	mm	0.3
	Diameter	mm	7.8
Sheath	Material, Color	-	Oil Tight Vinyl (A), Black, heat-resistant 80°C
	Thickness	mm	0.7 (Min. thickness: 0.56)
Finish Diameter		mm	9.2±0.3
Conductor Resistance (20°C)		Ω/km	143 or less
Dielectric strength (between internal conductor and external conductor)		-	1000 VAC must be withstood for one minute.
Insulation resistance (between internal conductor and external conductor, 20°C)		MΩ-km	1000 or more
Impedance (10MHz)		Ω	75±5
Standard Capacitance (1MHz)		nF/km	56
Standard Attention		dB/km	53
Weight		kg/km	105
Standard Length		m	200
Package form		-	Bundle

© MyFANUC B5B0D8428C0144A78A5F4CA87F2C262E

An example of circuit testing 20-pin interface cable

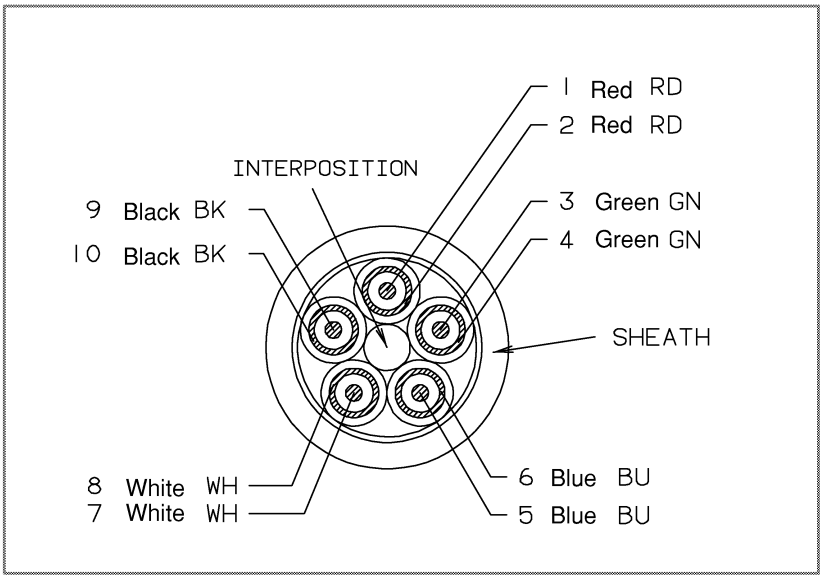

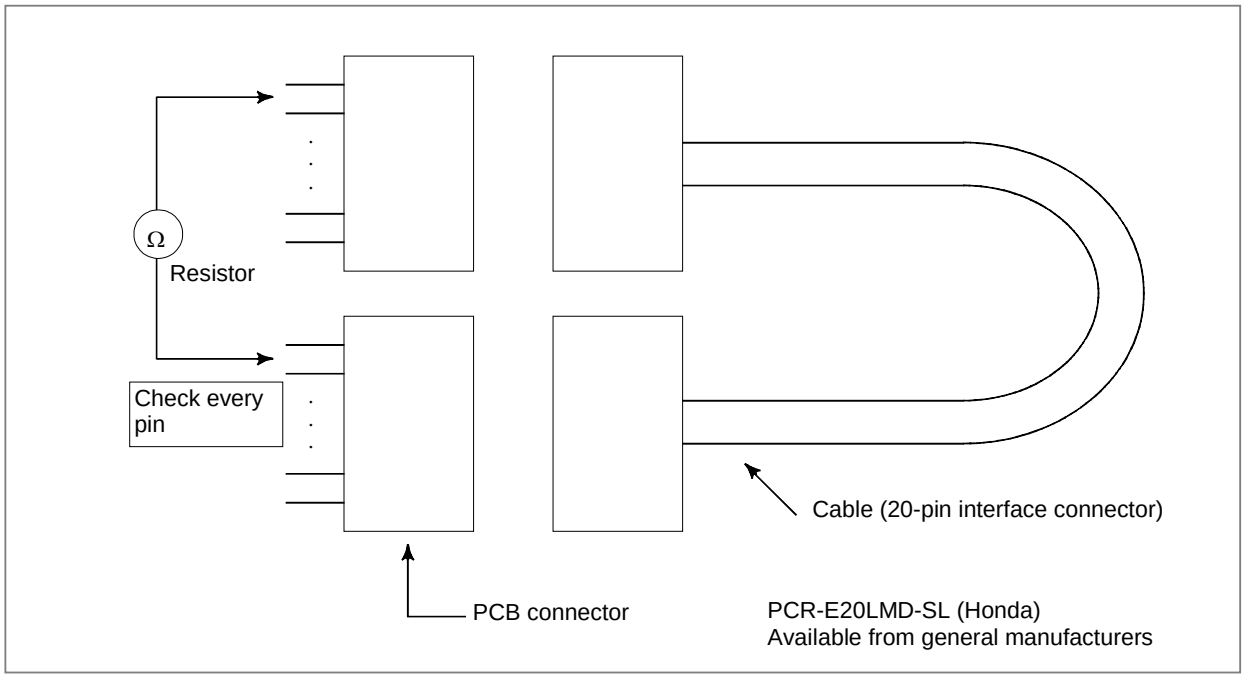

© MyFANUC B5B0D8428C0144A78A5F4CA87F2C262E

C CONNECTION CABLE (SUPPLIED FROM US)

Maximum allowable cable length between units

Cable type	Use and condition	Maximum cable length (m)
MDI cable	Control unit-to-MDI unit	20m
I/O Link *i* cable	Electrical cable	10m (Note 2)
	Electrical-to-optical conversion adapter	2m
	Optical fiber cable	200m
Position coder cable	Control unit-position coder	50m
Manual pulse generator cable	Connector panel I/O operator's panel I/O module-to-manual pulse generator	50m
FSSB cable	See Appendix D.	
HSSB cable	See Appendix D.	
RS232-C communication cable	4800 baud or less	100m
	9600 baud	50m

NOTE

1 The maximum cable lengths listed above apply only when the respective recommended cables stated in the text are used. If a non-recommended cable is used, the maximum cable length may not be guaranteed. Cables other than those listed above are used between units. See the respective descriptions in this manual for details of these cables.

2 This cable can be extended to up to 15 m if it is used within the cabinet.

Purpose	Description	Specification	Length
Power supply cable for I/O unit Control unit (CP1B) ↕ I/O Unit (CP31)	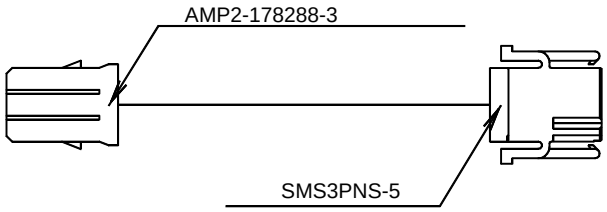	A02B-0236-K843	5m
MDI cable Control unit Type 0) (CA55) ↕ MDI unit (CK27) (for PANEL *i*H)	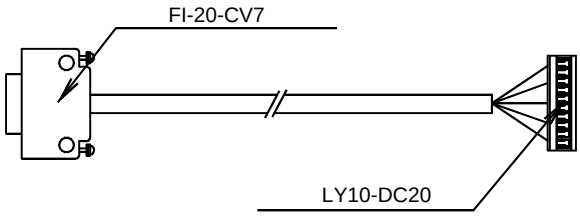	A02B-0236-K813 A02B-0236-K814	45cm 30cm
MDI signal cable Control unit (Type 1,3,5) (JA2) ↕ MDI unit (CK27)		A02B-0319-K813	45cm

© MyFANUC B5B0D8428C0144A78A5F4CA87F2C262E

Purpose	Description	Specification	Length
Manual pulse generator cable (for one unit) Control unit (JA3) ↕ Manual pulse generator terminal board	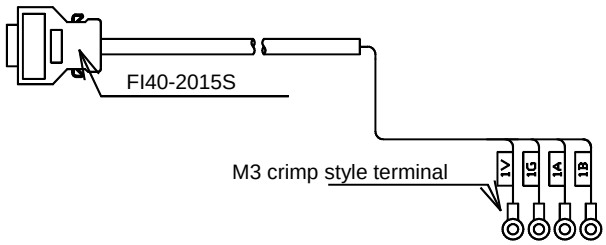	A02B-0120-K847	7m
Manual pulse generator cable (for two units) Control unit (JA3) ↕ Manual pulse generator terminal board	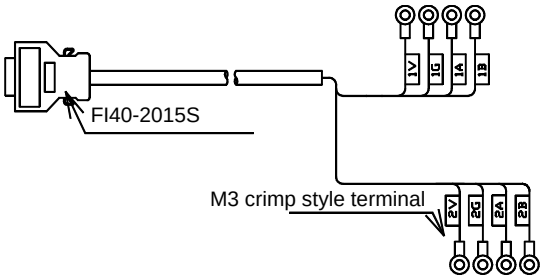	A02B-0120-K848	7m
Manual pulse generator cable (for three units) Control unit (JA3) ↕ Manual pulse generator terminal board	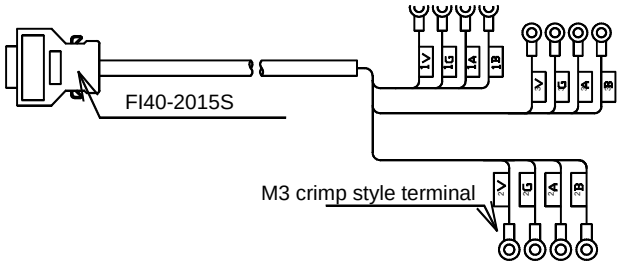	A02B-0120-K841	7m
I/O Link *i* cable Control unit (JD44A, JD51A) ↕ I/O unit (JD1B) I/O unit (JD1A) ↕ I/O unit (JD1B)	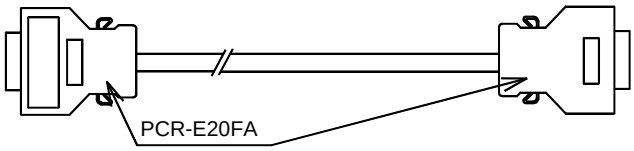	A02B-0120-K842	5m
I/O Link *i* cable Control unit (JD44A, JD51A) ↕ I/O Link signal divider (2 channels) (JD44B)	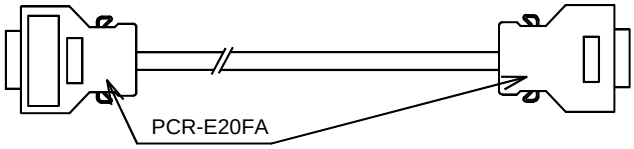	A02B-0236-K848	1m
I/O Link *i* cable between units (For optical I/O Link connection)	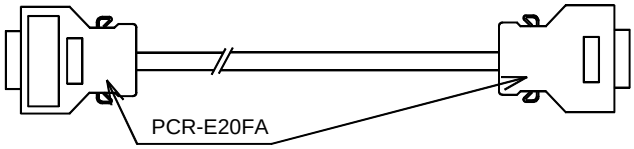	A03B-0807-K803	1m

© MyFANUC B5B0D8428C0144A78A5F4CA87F2C262E

Purpose	Description	Specification	Length
Control unit power supply cable Stabilized power supply (24 VDC) ↕ Control unit (CP1)	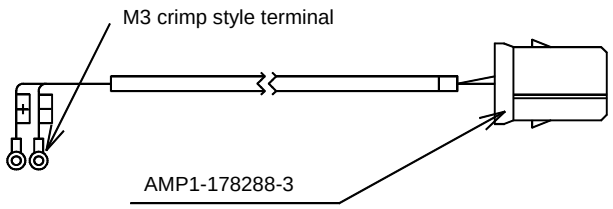	A02B-0124-K830	5m
Ethernet extension connector	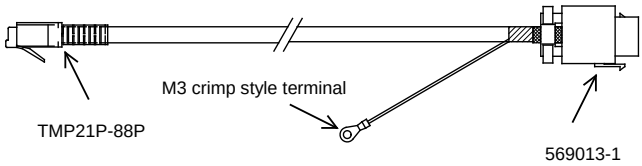	A02B-0323-K850	7m
Battery cable for an external LCD-mounted type control unit Control unit (CA131) ↕ Battery for an external control unit (terminal block)	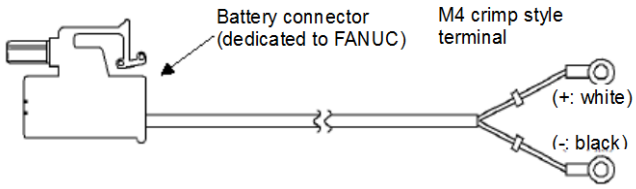	A02B-0323-K103	14m

© MyFANUC B5B0D8428C0144A78A5F4CA87F2C262E

D OPTICAL FIBER CABLE

0*i*-F Plus uses optical fiber cables for the following interfaces.
This table lists the usable combinations.

Interface	Junction	Recommended optical fiber cable	Maximum allowable transmission distance	Applicable junction adapter
I/O Link i interface *1	None	A66L-6001-0026#L -	200m	
	Exist	A66L-6001-0026#L -	100m *2	A63L-0020-0002
High-speed serial bus (HSSB) interface	None	A66L-6001-0023#L -	10m	
	None	A66L-6001-0026#L -	50m	
	None	A66L-6001-0049#L -	100m	
	Exist	A66L-6001-0029#L -	35m *2	A63L-0020-0004
	Exist	A66L-6001-0049#L -	55m *2	A63L-0020-0004
Serial servo bus (FSSB) interface	None	A66L-6001-0023#L -	10m	
	None	A66L-6001-0026#L -	50m *3	
	None	A66L-6001-0049#L -	100m *3	

⚠ **CAUTION**

1 When an optical fiber cable is used for connection.
2 Optical fiber cables can be relayed at up to one point. The total length of the two cables must not exceed the maximum transmission distance. The two cables must be optical fiber cables of the same type.
3 There are the following restrictions on the cable length for the FSSB:
- Between the control unit and 1st slave unit:
  - When A66L-6001-0026#L - is used: 50 m
  - When A66L-6001-0049#L - is used: 100 m
- Between slave units: 40 m
- Total cable length per FSSB line in each control mode:
  HRV2 · · · 500m
  HRV3 · · · 200m

© MyFANUC B5B0D8428C0144A78A5F4CA87F2C262E

Notes on the specifications of optical fiber cable

(1) Supported optical cables

<1> Internal cord type cable ..... A66L-6001-0023#L□R□□□
Length ..... 0.15 to 10m
Code diameter ..... ϕ2.2mm × 2 cords
Tensile strength
Optical fiber cord ..... 7kg per cord
Between optical fiber cord and connector 2kg
Minimum bending radius of optical fiber cord .. 25mm
Operating temperature ..... -20 to 70 °C

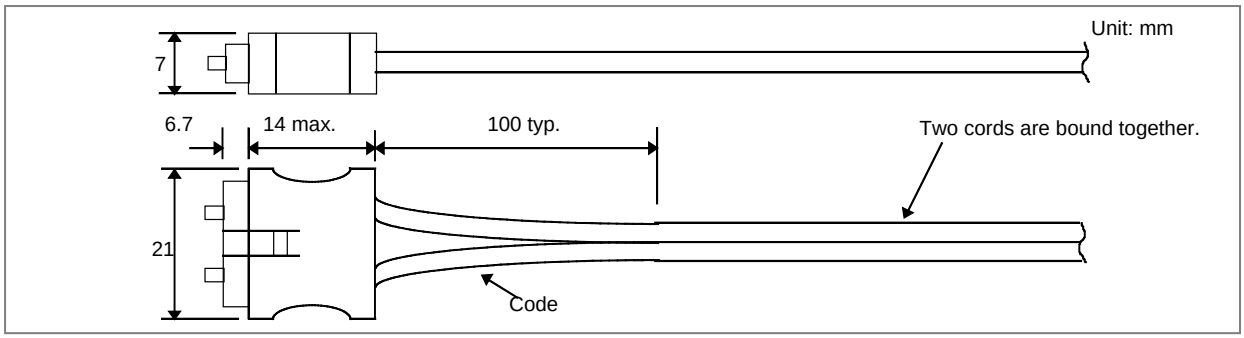

Fig. D (a) External dimensions of internal cord type cable

<2> External type cable ..... A66L-6001-0026#LxRxxx
..... A66L-6001-0029#LxRxxx
..... A66L-6001-0049#LxRxxx
Length ..... 1 to 200m
Optical fiber cord diameter ..... ϕ2.2mm × 2 cords
Diameter of cable with reinforced cover ..... ϕ7.6mm (A66L-6001-0026, -0029)
..... ϕ8.2mm (A66L-6001-0049)
Tensile strength
Cable with reinforced cover 75kg
Optical fiber cord ..... 7kg/1 cord
Between optical fiber cord and connector 2kg
Minimum bending radius of optical fiber cord 25mm
Minimum bending radius of cable with reinforced cover ... 50mm
Bending resistance (cable with reinforced cover) 10 million bending cycles at room temperature (when the bending radius is 100 mm)
Flame resistance ..... Equivalent to UL VW-1
Operating temperature ..... -20 to 70 °C

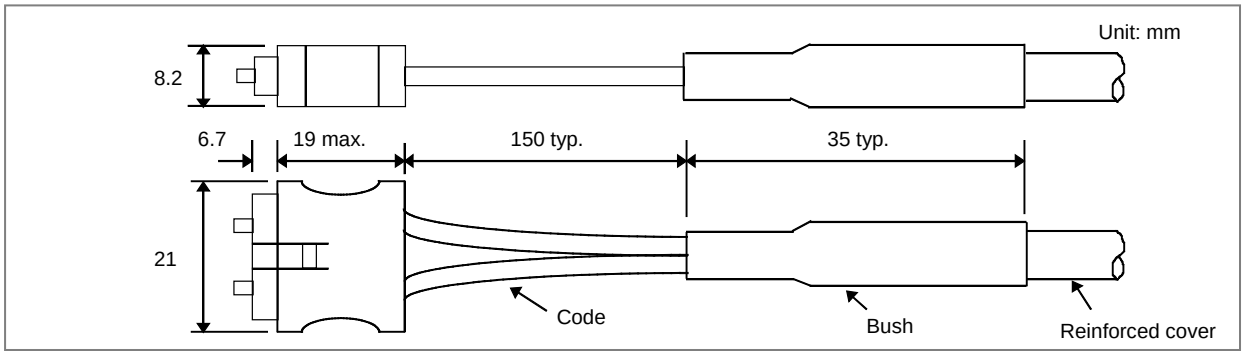

Fig. D (b) External dimensions of external cable

© MyFANUC B5B0D8428C0144A78A5F4CA87F2C262E

Table D (a) Standard cable length

Internal cord type cable			External cable	
A66L-6001-0023#			A66L-6001-0026#	
Specification	Length	Remarks	Specification	Length
L150R0	0.15m	For 60mm width of amplifier	L1R003	1.0 m
L200R0	0.2 m	For 90mm width of amplifier	L2R003	2.0 m
L250R0	0.25 m	For 150mm width of amplifier	L3R003	3.0 m
L300R0	0.3 m		L5R003	5.0 m
L400R0	0.4 m	For 300mm width of amplifier	L7R003	7.0 m
L500R0	0.5 m		L10R03	10.0m
L1R003	1.0 m		L15R03	15.0m
L2R003	2.0 m		L20R03	20.0m
L3R003	3.0 m		L30R03	30.0m
L5R003	5.0 m		L50R03	50.0m
L7R003	7.0 m		L100R3	100m
L10R03	10.0 m		L200R3	200m

(2) Cable selection

- Always use an external cable when the cable is to be laid outside the power magnetics cabinet or main unit cabinet, where it may be pulled, rubbed, or stepped on.
- Use an external cable when part of the cabling is to be subject to movement.
  For example, when connecting a movable operation pendant box to the power magnetics cabinet using an optical fiber cable, use an external cable because the cable is likely to be bent, pulled, or twisted repeatedly even if frequent system operation is not expected.
  The force likely to be applied when the cable is installed or moved for maintenance purposes does not need to be taken into consideration.
- Use an external cable in locations where sparks or flame are a danger. Although the internal cord type cable (A66L-6001-0023#~) is covered by nonflammable resin, the cover, if exposed to frame for a long time, may melt, allowing the fiber cable inside to burn.
- Use an external cable when the cable is expected to be pulled with considerable force during installation (the force applied to the cable must be within the specified tensile strength limit at all times). For example, even though installing a cable in a cable duct can be regarded as internal cabling, a cable of the appropriate type must be selected according to the tensile force to be applied to the cable during installation.
- Both the internal cord type and external cables have the same oil and heat resistance properties.

(3) Procuring the cable

All optical fiber cables mentioned above are special cable products with optical connectors, which are designed, produced, and tested to ensure the required system performance and reliability. The users cannot process and produce these cables on their own. The users cannot also cut or connect them after purchase on their own. Purchase cables of the necessary length.
Cables are available from either FANUC or any of the FANUC-approved manufacturers listed in Table D (b). (Purchase A66L-6001-0029#~ and A66L-6001-0049#~ from FANUC, however.)

Table D (b) FANUC-approved cable manufacturers and cable model numbers (retail)

<1> Internal cord type cable : A66L-6001-0023#L□R□□□

Manufacturer	Model number	Remark
Tyco Electronics	*-353373-*	
Japan Aviation Electronics Industry, Ltd.	PF-2HB209-**M-F-1	** indicates the cable length (m).

<2> External Cable : A66L-6001-0026#L□R□□□

Manufacturer	Model number	Remark
Tyco Electronics	*-353199-*	
Japan Aviation Electronics Industry, Ltd.	CF-2HB208-**M-F-1	** indicates the cable length (m).
Oki Electric Cable Co., Ltd.	OPC201HPXF-**MB	** indicates the cable length (m).

© MyFANUC B5B0D8428C0144A78A5F4CA87F2C262E

(4) Handling precautions

<1> Protection during storage

When the electrical/optical conversion module mounted on the printed circuit board and the optical fiber cable are not in use, their mating surfaces must be protected with the lid and caps with which they are supplied. If left uncovered, the mating surfaces are likely to become dirty, possibly resulting in a poor cable connection.

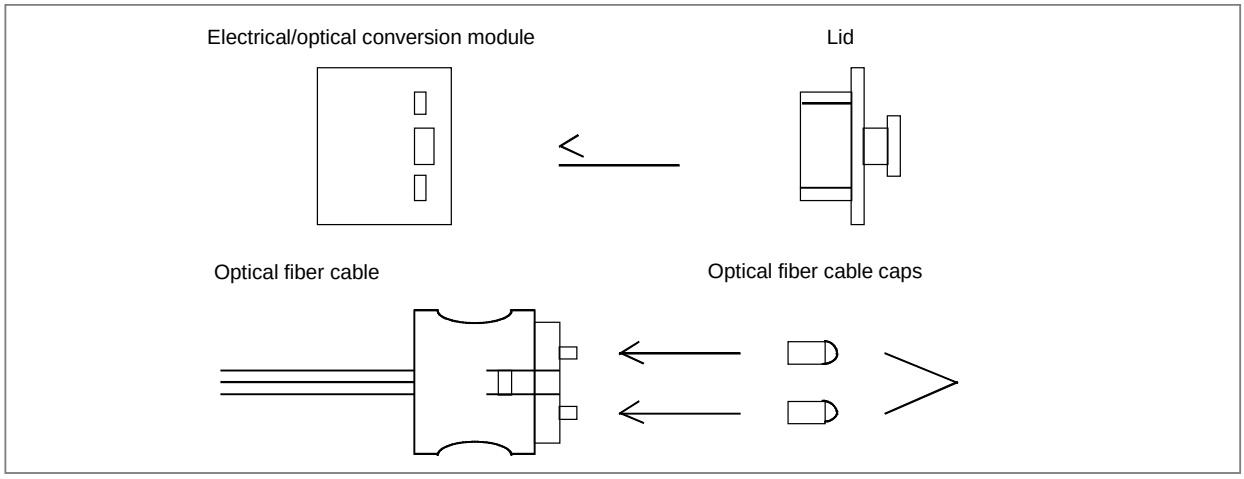

Fig. D (c) Protection of electrical/optical conversion module and optical fiber cable (when not in use)

<2> Optical fiber cable

- Make sure that the bending radius and tensile strength of the cable are always within their ranges described in the specifications (see the first item), regardless of whether the cable is stored or routed and whether operation is in progress or not.
- Although the reinforcing cover of the external cable has sufficient mechanical strength, be careful not to drop heavy objects on the cable.
- Grasp the optical connector firmly when connecting or disconnecting the cable. Do not pull on the optical fiber cord itself. (The maximum tensile strength between the fiber cord and connector is 2 kg. Applying greater force to the cord is likely to cause the connector to come off, making the cable unusable.)
- Once connected, the optical connector is automatically locked by the lock levers on its top. To remove the connector, release the lock levers and pull the connector.
- Although optical connectors cannot be connected in other than the correct orientation, always take note of the connector's orientation before making the connection.
- Before installing an external cable, fix either a wire with a hook or a tension member to the reinforcing cover of the optical connector and pull the wire or tension member, as shown in Fig. D (d). This is done to prevent a tensile force from being applied between the fiber cord and connector. If no tensile force is applied between the fiber cord and connector when installing the cable, you can hold the reinforcing cover of the connector directly and pull it. In the case of an internal cord, which does not have a reinforcing cover, apply the same protective measures, as instructed in Fig. D (d), for that portion of the cable where the two cords are bound together, in order to prevent a tensile force from being applied between the fiber cord and connector. In the same way as for an external cable, if no tensile force is applied between the fiber cord and connector during installation, you can hold the shielded part of the cable directly and pull it. Because the combined tensile strength of the two cords is only 14 kg, however, avoid applying too great a force to the cable during installation, regardless of whether you have taken the protective measures.

© MyFANUC B5B0D8428C0144A78A5F4CA87F2C262E

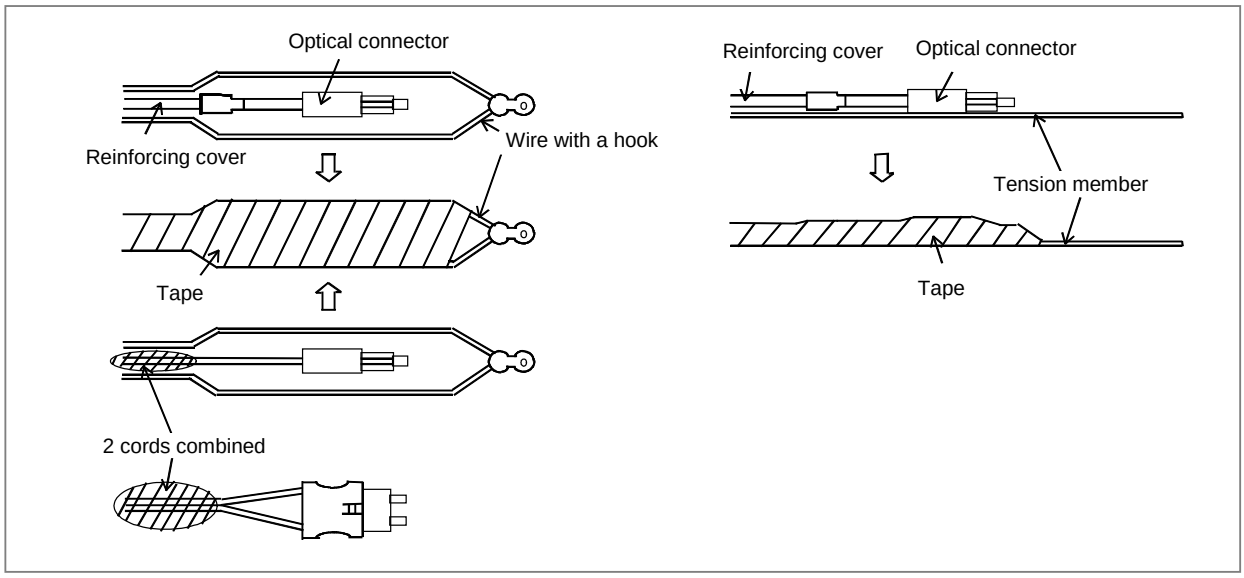

Fig. D (d) Prior to installing a cable

- Take care to keep both parts of the optical connector (cable side and PCB side) clean. If they become dirty, wipe them with tissue paper or absorbent cotton to remove dirt. The tissue paper or absorbent cotton may be moistened with ethyl alcohol. Do not use any organic solvent other than ethyl alcohol.
- Fix the reinforcing cover of the external cable or the cord binding portion of the internal cord type cable by using a cable clamp, as shown in Fig. D (e), to prevent the weight of the optical fiber cable from being applied directly to the connecting part of the optical connector.

  (Recommended cable clamp) Recommended cable clamps are listed below. Use a clamp that grasps the optical fiber cable lightly; the clamp should not apply excessive pressure to the cable.

  For an external cable CKN-13SP (with sponge) (Kitagawa Industry Co., Ltd.)

  For an internal cord type cable MN-1 (Kitagawa Industry Co., Ltd.)

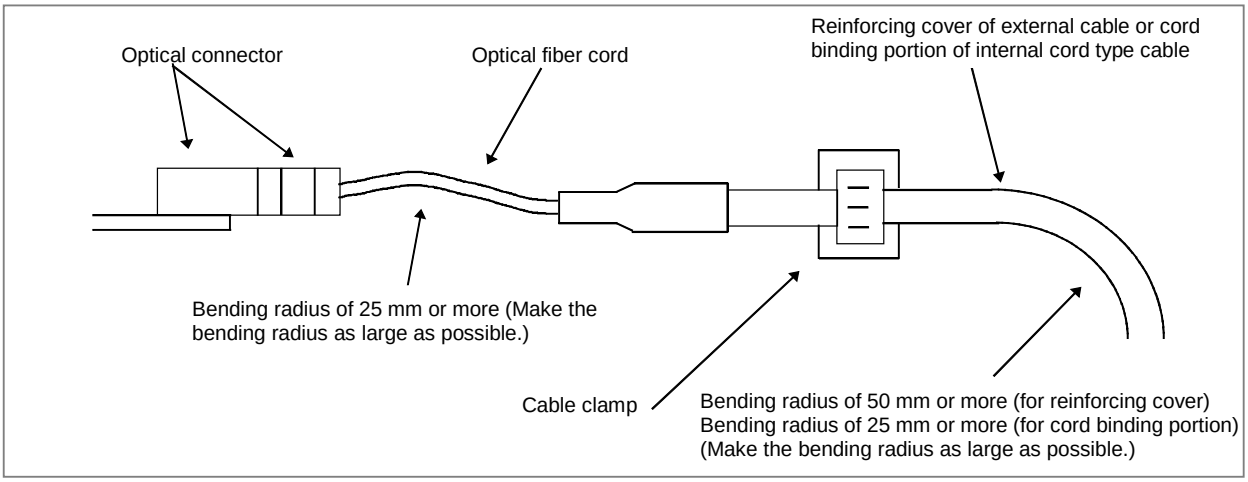

Fig. D (e) Fixing the optical fiber cable with a clamp

- Any superfluous portion of the cable may be wound into loops. Should this prove necessary, make sure the diameter of each loop is at least 150 mm (for an external cable) or at least 100 mm (for an internal cord type cable). Winding the cable into smaller loops may produce sharp curves that exceed the specified bending radius limit without the user being aware. Such bending can result in a greater transmission loss, ultimately leading to an optical communication failure.

© MyFANUC B5B0D8428C0144A78A5F4CA87F2C262E

- When using a nylon band (cable tie) as a cable clamp, follow the instructions given below. Also, take care not to apply a bending force to one particular part of the cable when fixing it with a clamp. Failing to clamp the cable correctly may cut or damage it.
  (External cable)
  Do not clamp the uncovered portion of the cable with a nylon band. When clamping the cable by the reinforcing cover, the clamping force is not an important factor to consider. However, ensure that the clamping force is as small as possible to ensure that the reinforcing cover is not deformed by the clamping. If possible, the clamping force should be 5 kg or less.
  (Internal cord type cable)
  Lightly clamp the optical able with a nylon band so that the cable shield is not deformed. If possible, the clamping force should be 1 or 2 kg (make sure that no force is applied to the cable). Due care is required when clamping the internal cord type cable because its cable shield is weaker than the reinforcing cover of the external cable.

(5) Optical fiber cable relay of I/O Link *i*

When used for the I/O Link *i* application, optical fiber cables can be connected by using an optical fiber adapter, as follows.

(a) External view of an optical fiber adapter

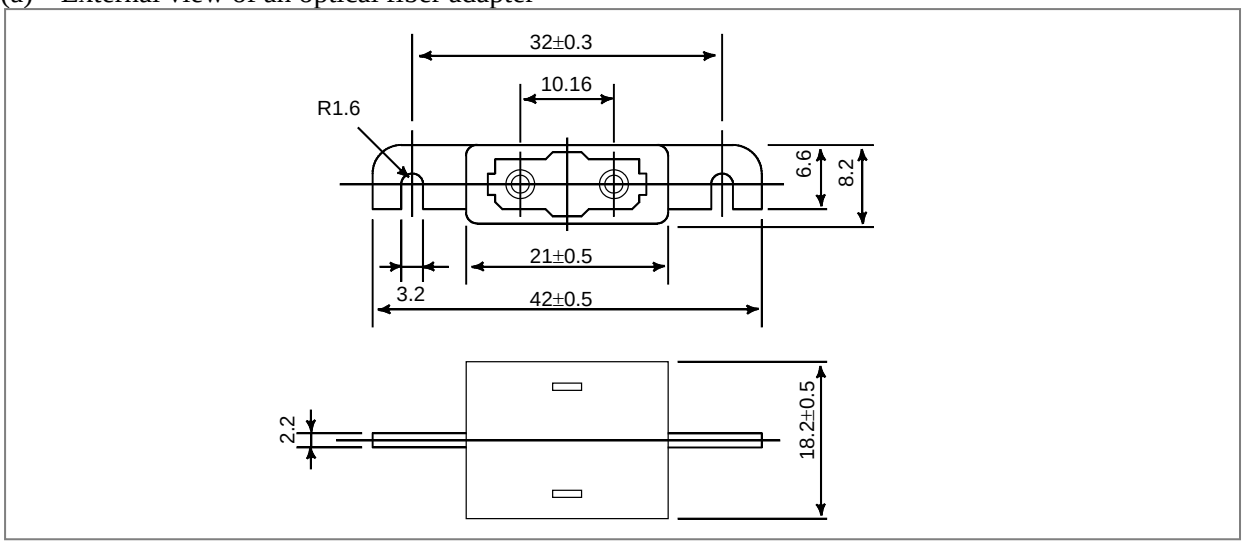

(b) Example of the use of an optical fiber adapter

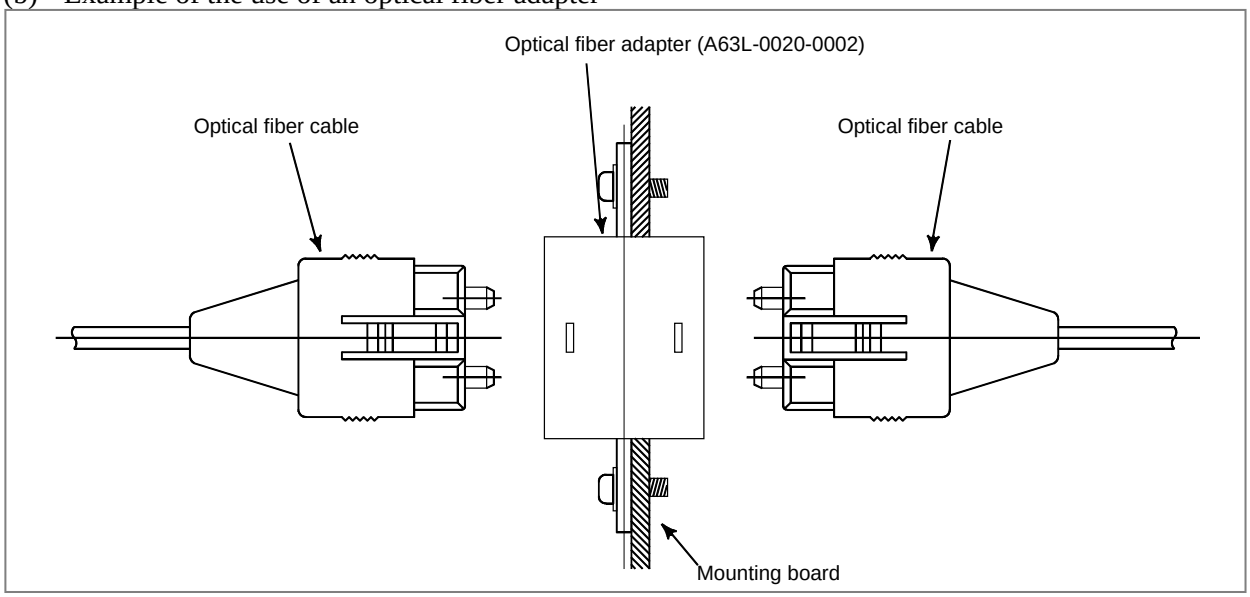

NOTE
Only one relay point is permitted.

© MyFANUC B5B0D8428C0144A78A5F4CA87F2C262E

(6) Optical fiber cable relay of FANUC high-speed serial bus

With the high-speed serial bus, special low-loss optical fiber cables can be connected by using a special low-loss optical relay adapter as an optical fiber relay adapter.

(a) External view of the low-loss optical relay adapter

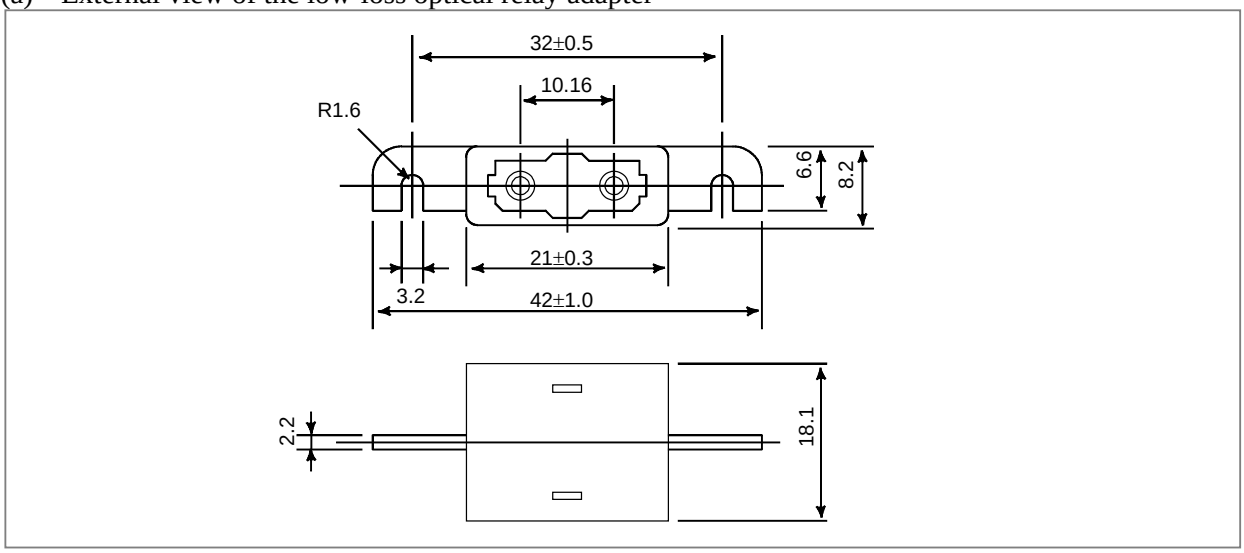

(b) Example of use of the optical fiber relay adapter

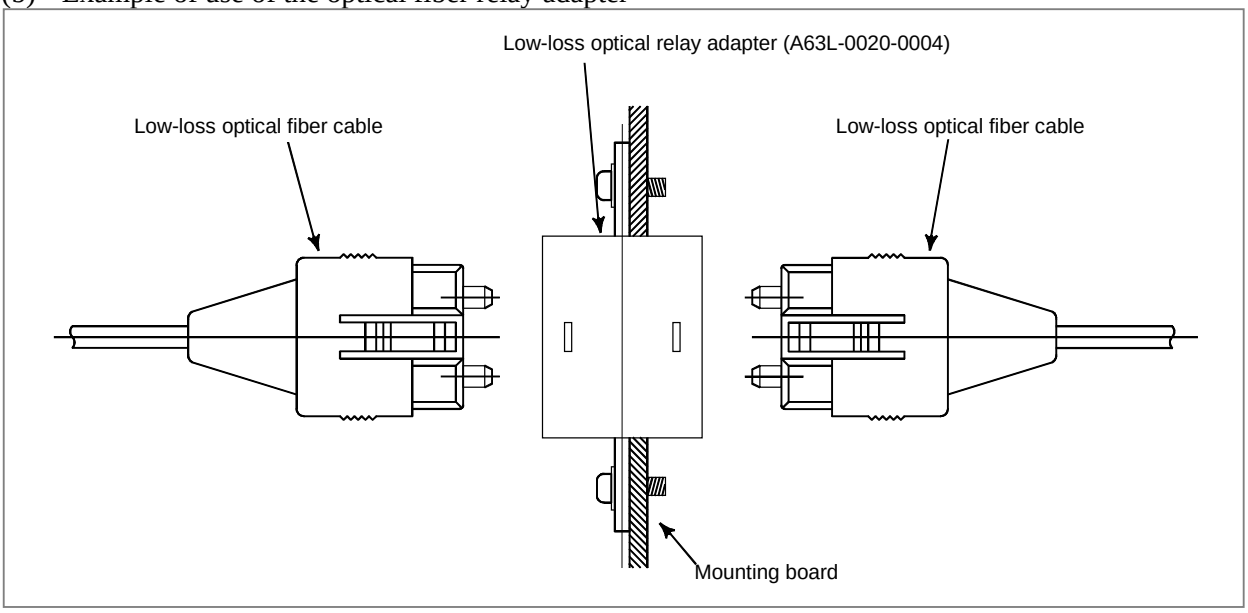

NOTE
Only one relay point is permitted.

© MyFANUC B5B0D8428C0144A78A5F4CA87F2C262E

(7) Precautions for connection with low-loss optical junction adapter

- Features and attention in use of low-loss optical junction adapter (A63L-0020-0004)
  When optical connectors for a conventional optical junction adapter (A63L-0020-0002) are jointed, the facing ferrules(NOTE) are located about 60 um from each other. This is because the optical fiber of conventional PCF (plastic clad silica fiber) cables (A66L-6001-0008, -0009, -0026) may protrude from the tip of the ferrules (by up to about several um), resulting in the fiber protrusion being damaged when the ferrules are butted against each other.
  In the low-loss optical junction adapter, the ferrules are butted against each other, thus greatly reducing the reduction in repeater loss. Therefore, the two optical cables used with the low-loss optical junction adapters must be dedicated to the adapters.
  If a conventional PCF (plastic clad silica fiber) cable (A66L-6001-0008, -0009, -0026) is used as even one of the two optical fiber cables for joining the low-loss optical junction adapter, both cables may be damaged, resulting in deteriorated characteristics.

NOTE
Ferrule: Movable metal at the tip of an optical connector; the fiber is bonded to the ferrule.

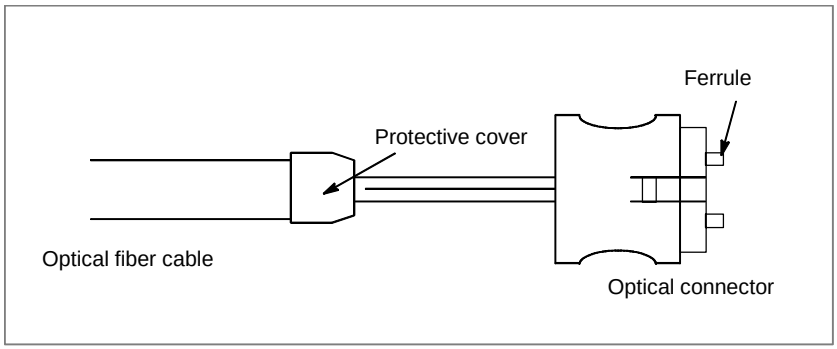

- Features of low-loss optical fiber cable (A66L-6001-0029#~)
  A low-loss optical fiber cable is selected from conventional PCF optical fiber cables (A66L-6001-0026). The selected cable offers low loss, and its connector section is given special treatment; the fiber ends are provided with a depression so that the ferrules can be butted against each other.
- Features of high-speed low-loss optical fiber cable (A66L-6001-0049#~)
  To achieve high-speed and long-distance communication, a high-speed low-loss optical cable is different from conventional PCF optical cables (A66L-6001-0026 and A66L-6001-0029) in optical properties. Therefore, the mode of propagation of light is also different. Connecting different types of optical fibers can result in a greater transmission loss, ultimately leading to an optical communication failure.
- The two optical cables used with a low-loss optical relay adapter must be the same type (two high-speed low-loss optical cables or two low-loss optical cables).
- Appearance of the low-loss relay adapter, low-loss optical fiber cable, and high-speed low-loss optical fiber cable (how to distinguish them from conventional types)
  While the body of the conventional optical relay adapter is black, that of the low-loss optical relay adapter is blue. While the protection cover (see the figure above) of the conventional PCF optical fiber cable is black, that of the low-loss optical fiber cable is blue, and that of the high-speed low-loss optical fiber cable is yellow.

(8) Installing the optical fiber junction adapter

The optical fiber junction adapter should be installed within a cabinet, as a rule. If it is impossible to avoid installing it within a cabinet, protect the adapter and the optical fiber cable portions (such as connectors and cords) not covered with reinforcement coating from the outside air by, for example, covering them with packing.

© MyFANUC B5B0D8428C0144A78A5F4CA87F2C262E

(9) Environmental resistance of the optical fiber junction adapter

- The optical fiber junction adapter is not waterproof. Even when optical fiber cables are attached to both ends of the adapter, there are very small gaps in the linked portions, so water resistance can not be expected.
- When optical fiber cables are attached to both ends of the junction adapter installed in a normal environment (such as within a cabinet), it is unlikely that dust will penetrate between the adapter and optical fiber to the degree that it may hamper normal optical linkage. If one or both ends of the adapter are left open, dust and dirt may accumulate even when the adapter is in a normal environment (such as within a cabinet). The dust and dirt on the adapter ends is likely to hamper normal optical linkage when the optical fiber cables are attached. In such a case, clean the junction adapter and the optical connector using the optical fiber junction adapter cleaning method described below.
- Do not allow cutting fluid to splash over the adapter or those optical fiber cable portions (such as connectors and cords) that are not covered with reinforcement coating. If the inside of the adapter and fiber end surfaces are contaminated with cutting fluid, a malfunction may occur.

(10) Cleaning

If the optical fiber junction adapter, optical-to-electrical conversion module, or optical fiber cable is soiled, clean them according to the following procedures.

- Cleaning the optical fiber junction adapter and optical-to-electrical conversion module
  First, clean the entire housing by wiping it with a cloth moistened with, or by washing it in, ethyl alcohol. Similarly, wash the two sleeves in the adapter or wipe them with a cotton swab or the like.
- Cleaning optical fiber cables
  For the optical fiber cables, it is important to clean the connectors at their ends. Any soiling on the optical fiber end surfaces will hamper optical transmission, resulting in a malfunction. Wipe the optical fiber end surfaces (that is, the ferrule end surfaces) thoroughly with a soft, clean cloth (like gauze) moistened with ethyl alcohol, in the same way as described above. The use of cotton swabs may prove convenient. The fiber end surfaces of low-loss optical fiber cables are lower than the ferrules. To remove any soiling from the fiber end surfaces completely, push the cotton swab or gauze into the depressions all the way through while rotating the ferrule. If the ferrules and optical connectors are contaminated with oily substances, and they may extend over a cleaned fiber end surface when it is attached to the optical-to-electrical conversion module, it is a good idea to wash them before wiping the optical fiber end surfaces, using the procedure stated above.

© MyFANUC B5B0D8428C0144A78A5F4CA87F2C262E

E MEMORY CARD INTERFACE

Overview

The memory card interface on the left side of the LCD-mounted control unit or the display unit allows input/output of data in the control unit and DNC operation. This appendix describes the memory card interface on the left side of the LCD-mounted control unit or the display unit.

Compact Flash Card

Use a compact flash card (called a CF card below) purchased from FANUC.

NOTE
1 If a CF card other than that purchased from FANUC is used, the operation is not guaranteed.
2 The flash ATA card uses a quick format.
3 In case of formatting flash ATA card using a personal computer, format the card in the FAT16 format or FAT32 format. Other formats are not supported.

Using the compact flash adapter

1 Attachment
- Attach the CF card to the compact flash card adapter (A02B-0303-K150, called the CF adapter later).
- Make sure lock lever A is in the upper position and then insert the CF adapter above into the memory card interface.
- Push lock lever A downward.
- Close the cover of the memory card interface.

NOTE
1 To perform continuous operation with the CF adapter attached, be sure to push lock lever A downward and then close the cover of the memory card interface.
2 The lock function is enabled only when the CF adapter (A02B-0303-K150) is used.
3 The CF adapter must be inserted with label surface facing toward the screen.

2 Removal
- Open the cover of the memory card interface.
- Push lock lever A upward.
- Push eject button B once to project the button.
- Push eject button B again to eject the CF adapter.
- Remove the CF card with your fingers.
- Close the cover of the memory card interface.

NOTE
When lock lever A is in the lower position (in the locked state), eject button B cannot be pushed.

© MyFANUC B5B0D8428C0144A78A5F4CA87F2C262E

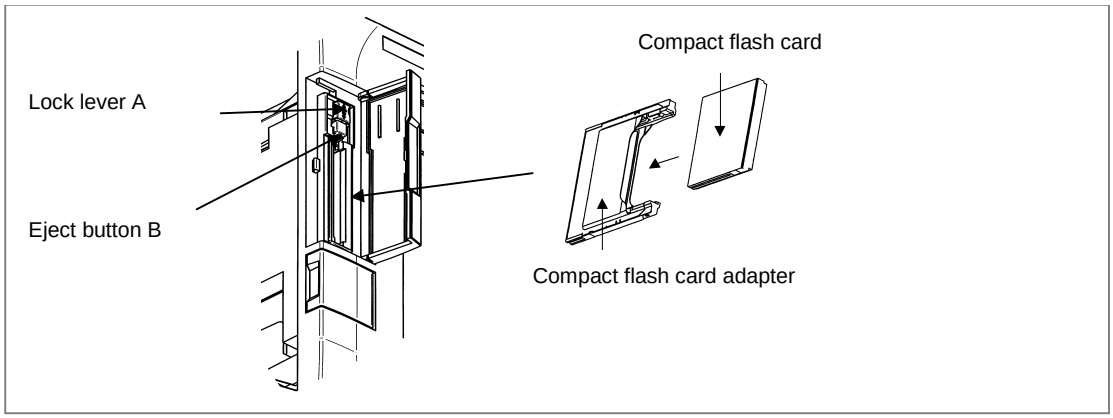

© MyFANUC B5B0D8428C0144A78A5F4CA87F2C262E

F HOW TO ATTACH THE KEYBOARD COVER

Overview

FANUC offers a keyboard cover to protect the MDI unit and the machine operator's panel main panel from dust and cutting oil.
If you want to use, attach in the following way. There are several type keyboard cover fitted to each unit, but the attachment method is the same. The following example shows how to attach to the standard MDI unit.

How to attach the keyboard cover

1 If the ornamental frame of the keyboard is dirty in the cutting fluid, etc., before attaching the keyboard cover, wipe off any soil and smear completely the ornamental frame using ethanol or diluted neutral detergent (such as kitchen detergent). If you used neutral detergent, remove any remaining detergent, using a cloth wetted with water. Any remaining oily substance or detergent causes the keyboard cover to come off easily. After making sure that the ornamental frame is dry, follow the procedure below to attach the keyboard cover.

2 There is no standard of position attach the keyboard cover. Peel off the release paper about 1-2 column of the key from the left or right, position the keyboard cover in such a way that interval of molding rising portion of the keyboard cover and key of the corner of the top and bottom to be the same.(Fig. F (a))

3 While peel off the release paper, attach the keyboard cover. At that time, be aware of the following.
   (a) Do not touch the adhesive portion of the double-sided tape.
   (b) The keyboard cover is made of soft material, it will be deformed by pulling. So attach to not to pull.

4 Press it firmly while stroking the both-side adhesive tape section. (Fig. F (b))

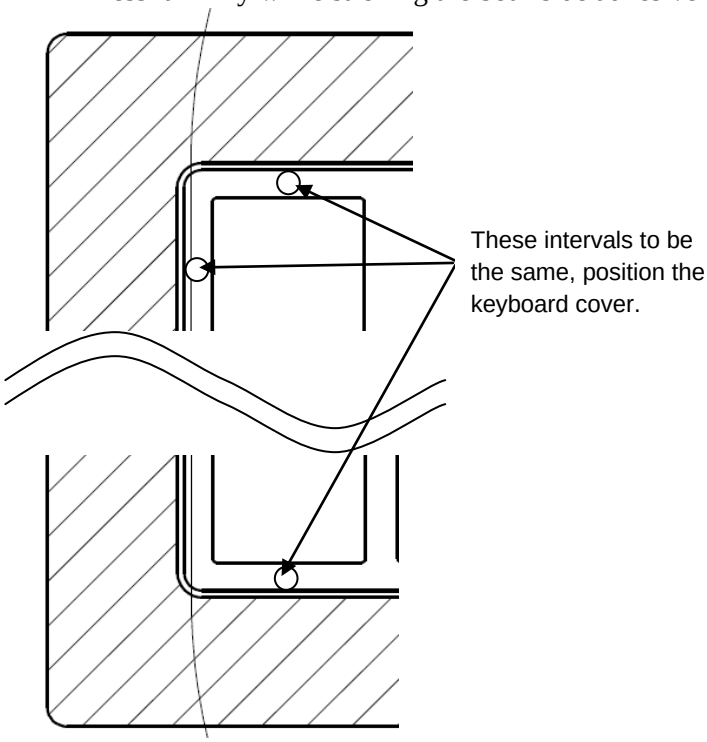

Fig. F (a)

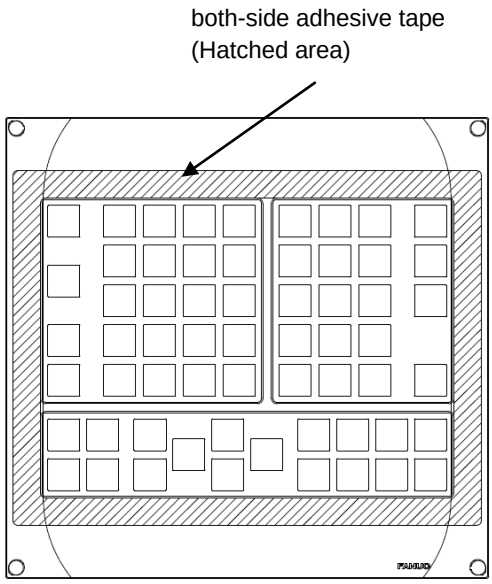

Fig. F (a)

© MyFANUC B5B0D8428C0144A78A5F4CA87F2C262E

© MyFANUC B5B0D8428C0144A78A5F4CA87F2C262E

INDEX

<Number>

20-PIN INTERFACE CONNECTORS AND CABLES470
24 VDC POWER (INSULATION AC/DC CONVERTOR) 41
24 VDC Power Supply Specification 43
2A Output signal connection 154
2A output signal specifications 155

<A>

Address map 280
Analog 1Vp-p interface 105
Analog Input connector pin allocation 155
Analog input signal connections 156
Analog input signal specifications 157
ANALOG SPINDLE 114
Applicable Cables 474
Applicable wire 253
ASSIGNMENT FOR I/O UNITS 133
Assignment of Signals 133
ATTACHING SCREW CAPS 39

<B>

BATTERIES 50
Battery for Absolute Pulse Coder Built into the Motor (6VDC) 56
Battery for Memory Backup in the Control Unit (3 VDC) 50
Battery for Separate Absolute Pulsecoders (6VDC) 55
BOARD-MOUNTED CONNECTORS 470

<C>

Cabinet 22
Cable Clamp and Shield Processing 30
Cable Connection 430
Cable connection to a terminal block 277
Cable connection to the terminal block 178
CABLE CONNECTORS 471
CABLE FOR POWER SUPPLY TO CONTROL UNIT 49
Cable Length for Manual Pulse Generator 136
CAUTIONS 427
CAUTIONS ABOUT MULTI-PATH CONTROL 425
CAUTIONS REGARDING THE INSTALLATION DESIGN OF MACHINE TOOL POWER MAGNETICS CABINETS 15
Channel selection and A/D conversion data 158
Channel selection and A/D conversion data for extension module D 281
Channel selection and D/A conversion data for extension module E 283
Code Output for the Rotary Switch 332
Color labels for connectors of Safety IO Unit 382
Component names 173,255
CONFIGURATION 1,142,217
Configurations of LCD-mounted Type Control Units 1
Configurations of Optional Boards 5
Configurations of Stand-alone Type Control Units 5
Connecting 24 VDC Power 41
Connecting I/O Devices 63
Connecting the Ground Terminal of the Control Unit 25
CONNECTING THE HIGH-SPEED SKIP (HDI) 73
CONNECTION 121,180,261,295
Connection between Modules 236
Connection Between the Basic Unit and Additional Unit 109
CONNECTION BETWEEN THE LCD-MOUNTED TYPE CONTROL UNIT AND MDI UNIT 57
CONNECTION BETWEEN THE STAND-ALONE TYPE CONTROL UNIT AND DISPLAY UNIT AND BETWEEN THE DISPLAY UNIT AND MDI UNIT 86
CONNECTION CABLE (SUPPLIED FROM US) 481
Connection Diagram 95,143,172,219,386,428,431
Connection Diagrams of an Analog Basic Unit 103
Connection of Basic and Extension Modules 160
Connection of Battery for Absolute Position Detector 108
Connection of Extension Module C (2A Output Module) 153
Connection of Extension Module D (Analog Input Module) 155
Connection of FANUC I/O Link *i* by Optical Fiber Cable 123
Connection of I/O Link *i* by Electric Cable 122
CONNECTION OF I/O MODULE FOR CONNECTOR PANEL 142
CONNECTION OF I/O MODULE FOR OPERATOR'S PANEL SUPPORTING SAFETY FUNCTION 386
CONNECTION OF I/O MODULE FOR OPERATOR'S PANEL (FOR MATRIX INPUT) 185
CONNECTION OF I/O MODULE FOR OPERATOR'S PANEL AND I/O MODULE FOR POWER MAGNETICS CABINET 202
CONNECTION OF I/O MODULE TYPE-2 FOR CONNECTOR PANEL 217
CONNECTION OF OPERATOR'S PANEL CONNECTION UNIT (SOURCE DO) 352
Connection of Power Supply 96
CONNECTION OF SAFETY IO UNIT 369
CONNECTION OF TERMINAL TYPE I/O MODULE245
Connection of the Basic Module, and Extension Modules A and B 146
Connection of the ground terminal 279
Connection of the Grounding Terminal of the Module 170,201,216,244
Connection of the LCD Unit with a Touch Panel 87
CONNECTION TO CNC PERIPHERALS 57
CONNECTION TO FANUC I/O Link *i* 120

© MyFANUC B5B0D8428C0144A78A5F4CA87F2C262E

CONNECTION TO MACHINE OPERATOR'S PANEL 297
CONNECTION TO OTHER NETWORKS 426
Connection to the Ethernet Interface 76
CONNECTION TO THE TOUCH PANEL 87
CONNECTION USING Ethernet 431
CONNECTION USING THE HIGH-SPEED SERIAL BUS (HSSB) 427
Connection When Multiple Channels of the I/O Link *i* is Used 125
CONNECTION WITH FANUC PANEL *i*H Pro AND COMMERCIAL PERSONAL COMPUTERS 427
CONNECTION WITH INPUT/OUTPUT DEVICES 63
Connection with the MDI Unit 58
Connector (on the cable side) Specifications 330
Connector Layout Diagram 218
Connector Locations 110
Connector locations of main panel 342
Connector locations of Safety IO Unit 381
Connector locations of safety machine operator's panel and safety machine operator's panel-BK10 342
Connector locations of safety machine operator's panel type B and safety machine operator's panel-BK15 343
Connector Panel Printed Circuit Board 239
Connector pin arrangement 146,153
Connector specification of Safety IO Unit 383
CONTROL UNIT CONFIGURATION AND COMPONENT NAMES 1
COUNTERMEASURES AGAINST NOISE AND GROUNDING 19

<D>

Detachable key top on the main panel 348
Detaching a terminal block 278
DI (General-purpose Input Signal) Connection 188,205,391
DI (General-purpose Input Signal)Connection 402
DI (Input Signal) connection 147,222,354
DI (Matrix Input Signal) Connection 190
DI/DO Address 370
DI/DO Address Map 306,388
DI/DO Addresses for the Keyboard 331
DI/DO connection 267,372
DI/DO Connector Pin Arrangement 187,204,353,389,401
DI/DO Connector Pin Assignment 221
DI/DO signal specifications 151,233
Dimensions (common to the modules) 254
Dimensions in a maximum configuration (one basic module + three extension modules) 254
DO (Output Signal) connection 150,191,209,229,361,394,409
DO (Output Signal) Error Detection 350,385,398
DUSTPROOF MEASURES FOR CABINETS AND PENDANT BOXES 36

<E>

Each Connections 308
Each safety machine operator's panel 345
EMERGENCY STOP SIGNAL 421
Emergency stop signal connection 316
Environmental Conditions outside the Cabinet 13
ENVIRONMENTAL REQUIREMENTS OUTSIDE THE CABINET 13
Ethernet Connector Panel 81
External Touch Panel Interface 88
External View 195,211,365,396,413
External view and dimensions 176,254

<F>

FANUC serial interface 98
Fixed Signals 133

<G>

GENERAL UNITS 138
General-purpose DI signal connection 321
General-purpose DI signal definition 346
General-purpose DO signal connection 327
General-purpose DO signal definition 346
GND Cable Connection 414
Grounding as Noise Suppression Measures 19
Grounding methods 19

<H>

Handling Precautions 429
HARDWARE OVERVIEW 7
Heat dissipation 252
Heat output 345
Heat Output of Each Unit 17
HOW TO ATTACH THE KEYBOARD COVER 495

<I>

I/O Link connection 295
I/O Link CONNECTION UNIT 290
I/O Link *i* connection 313,370
I/O signal specifications 247
I/O UNIT FOR POWER MAGNETICS CABINET 399
Input signal requirements (analog 1Vp-p interface) 106
Input signal requirements (parallel interface) 100
Input Signal Rules for the High-speed Skip (HDI) 75
INSTALLATION 13,111,177,259,293
INSTALLATION CONDITION FOR UL RECOGNITION 40
Installation conditions 247,343
Installation Conditions of the Control Unit 14
Installation Environment 429
INSTALLING THE CONTROL UNIT 34
Installing the LCD-mounted Type Control Unit 34
Installing the Stand-alone Type Control Unit 35
INTERFACE TO THE AMPLIFIERS 92
Inter-module connection 276

<K>

Key Layout of MDI Unit 60
Keyboard 347
Keyboard Cover 62,349

<L>

LCD-mounted Type Control Unit Overview 7

© MyFANUC B5B0D8428C0144A78A5F4CA87F2C262E

Lightning Surge Absorber Installation 32
LINKING THE ETHERNET INTERFACE 76

<M>

Main panel specification 344
MANUAL PULSE GENERATOR 135,329
Manual Pulse Generator Connection..... 135,160,194,210,235,276,329,395,413
Manual Pulse Generator Signal Specifications 136
Meaning of key symbols 347
MEMORY CARD INTERFACE 493
Method for checking the encoder signals.....107
Method of common pin expansion.....287
Module Installation 161
Module Specifications.....144,220,246
Mounting the Module.....238

<N>

Network Installation.....80
Noise Suppressor.....29
Notes on Installing a Separate Detector Interface Unit 112
Number of Units That Can Be Connected.....93

<O>

OPTICAL FIBER CABLE.....484
Order specification.....343
Other Notes 166,199,214,242,367,417
Others.....287
Outline.....334
OUTLINE DRAWINGS OF UNITS AND CONNECTORS 435
Outline of main panel.....334
Outline of Safety IO Unit.....380
Outline of Safety machine operator’s panel 335
Outline of Safety machine operator’s panel type B.....336
Outline of safety machine operator’s panel-BK10.....337
Outline of safety machine operator’s panel-BK15.....338
Outline of sub panel AA.....339
Outline of sub panel D 340
Outline of sub panel-BK10 341
Overall Connection Diagram 185,202,261,352,399
Overview..... 57,63,86,90,93,120,245,290,297,369,386,427,431
Overview of the Analog Basic Unit 102

<P>

PANEL *i*H Pro 432
Parallel DO (output signal) connection.....289
Parallel interface 99
Pendant type manual pulse generator connection.....329
Pin assignment 308
Pin Assignment of DI/DO 371
POSITION CODER 116
Power Capacity of 24 VDC Power Supplies.....45
Power Connection 186,203,262,296,352,387,400
Power ON/OFF control signal connection 318
POWER SUPPLY 137
POWER SUPPLY CONNECTION 41,235,312,369
Power supply rating 252
Power supply specification 345
Power-off Sequence 47
Power-on Sequence.....46
PREFACE p-1
Procedure for Installing Personal Computer Interface Boards 430
Protective Ground (Grounding for Protection against Indirect Contact).....24

<R>

Recommended Connectors.....474
RECOMMENDED CONNECTORS, APPLICABLE HOUSINGS, AND CABLES 473
Replacing commercially available alkaline dry cells (size D) 53
Replacing the lithium battery 51
Rotary Switch Setting 168
RS-232C Interface Specification.....66
RS232-C Serial Port.....64

<S>

SAFETY PRECAUTIONS s-1
SEPARATE DETECTOR INTERFACE 93
Separate Detector Interface (Analog Input) 105
Separate Detector Interface (Digital Input).....98
Separate Detector Interface Unit Specification 96
Separating Signal Lines 28
SERVO AND SPINDLE INTERFACES.....90
Setting the rotary switch 286
Settings.....280
SHUTTING OFF THE MOTOR POWER.....419
Signal assignment on terminal blocks.....263
Soldering Type Connector 472
Specification 291
Specification of Twisted-Pair Cable 78
Specifications..... 196,212,366,397,415
Specifications of a Commercial PC 428
Specifications of Safety IO Unit 384
Specifications of the Machine Operator’s Panel 343
Stand-alone Type Control Unit Overview.....8
Status Alarm.....134
STOP AND EMERGENCY STOP 419
STOP MODES.....419
STOPPING THE SERVO MOTOR.....420
STOPPING THE SPINDLE MOTOR 420
Straight and Right-angled Connectors (for Spring and Screw-fixing Connector Housings) 470
Strand Wire Press-mount Connector.....471
Sub panel AA and D,Sub panel-BK10 specification....345

<T>

Temperature Rise within the Machine Tool Magnetic Cabinet 17
Terminal Conversion Adapter.....171
Thermal Design of Operator's Panel 18
THERMAL DESIGN OF THE MACHINE TOOL MAGNETIC CABINET.....17

© MyFANUC B5B0D8428C0144A78A5F4CA87F2C262E

TIGHTENING TORQUE FOR FASTENING UNITS AND GROUND TERMINALS.....36
Total Connection Diagram.....303,369
TOTAL CONNECTION DIAGRAMS.....9
TURNING ON AND OFF THE POWER TO THE CONTROL UNIT.....46
Types of modules.....246

<U>

Unit Dimensions.....237
UNITS CONNECTED TO FANUC I/O Link *i* *138*
USB PORT.....84
Using the channel 2 of I/O Link *i*.....*313*

<V>

Vertical-type Connectors 470

<W>

Weight.....252
With the Display Unit 86

© MyFANUC B5B0D8428C0144A78A5F4CA87F2C262E

REVISION RECORD

Edition	Date	Contents
01	Feb., 2019	

© MyFANUC B5B0D8428C0144A78A5F4CA87F2C262E

B-64693EN/01

© MyFANUC B5B0D8428C0144A78A5F4CA87F2C262E