FANUC AC SERVO MOTOR αi-B/αi series
FANUC AC SPINDLE MOTOR αi-B series
FANUC SERVO AMPLIFIER αi-B series
FANUC AC SERVO MOTOR βi-B/βi series
FANUC AC SPINDLE MOTOR βi-B series
FANUC SERVO AMPLIFIER βi-B series

MAINTENANCE MANUAL

B-65515EN/01

• No part of this manual may be reproduced in any form.
• All specifications and designs are subject to change without notice.

The products in this manual are controlled based on Japan’s "Foreign Exchange and Foreign Trade Law." The export from Japan may be subject to an export license by the government of Japan. Furthermore, the product may also be controlled by re-export regulations of the United States government. Should you wish to export or re-export these products, please contact FANUC for advice.

In this manual we have done our best to describe all relevant matters.
However, we cannot describe all matters that must not be done or cannot be done, because there are too many possibilities.
Therefore, matters that have not been described as possible in this manual should be regarded as not possible.

- If operation is abnormal, for example, when an alarm is issued or a hardware failure occurs, the operation described in this manual is not guaranteed unless specifically noted otherwise. If operation is abnormal, take action according to the instructions specifically described in this manual or contact FANUC when there are no instructions.
- Generally, a "safety function" means a function that protects the operators from danger posed by the machine.
  The signals and functions described in this manual cannot be used separately for any "safety function" unless otherwise described as being [usable for the safety function]. Their specifications are not assumed to be used as the [safety function] in this case, unexpected danger may be caused. If you have any questions, contact FANUC.
- A device connection error or setting error can lead to unpredictable operation. When starting to operate the machine for the first time after assembling the machine, replacing parts, or changing parameter settings, exercise extreme care.

SAFETY PRECAUTIONS

The "Safety Precautions" section describes the safety precautions related to the use of FANUC servo motors, spindle motors, and servo amplifiers (Power Supply, Servo Amplifier, and Spindle Amplifier). Users of any servo motor or amplifier model are requested to read the "Safety Precautions" carefully before using the servo motor or amplifier.
Users are also requested to read applicable specification manuals carefully and understand each function of the motor or amplifier for correct use.
Users are basically forbidden from any behavior or action not mentioned in the "Safety Precautions." Users are invited to ask FANUC beforehand about what behaviors and actions are prohibited.

DEFINITION OF WARNING, CAUTION, AND NOTE

This manual includes safety precautions for protecting the user and preventing damage to the machine.
Precautions are classified into Warning and Caution according to their bearing on safety.
Also, supplementary information is described as a Note. Read all Warnings, Cautions, and Notes thoroughly before attempting to use the machine.

⚠ **WARNING**
Applied when there is a danger of the user being injured or when there is a danger of both the user being injured and the equipment being damaged if the approved procedure is not observed.

⚠ **CAUTION**
Applied when there is a danger of the equipment being damaged, if the approved procedure is not observed.

NOTE
Notes are used to indicate supplementary information other than Warnings and Cautions.

If a precaution described even as "CAUTION" is not followed, a serious result may be caused depending on the status. Be sure to follow the precautions described as "WARNING" and "CAUTION" since they give important information.

* Read this manual carefully and store it in a safe place.

FANUC AC SERVO MOTOR αi-B series
FANUC AC SPINDLE MOTOR αi-B series
FANUC AC SERVO MOTOR βi-B/βi series
FANUC AC SPINDLE MOTOR βi-B series

WARNING

⚠ WARNING

- **Be sure to ground a motor frame.**
  To avoid electric shocks, be sure to connect the grounding terminal in the terminal box to the grounding terminal of the machine.

- **Before starting to connect a motor to electric wires, make sure they are isolated from an electric power source.**
  Failure to observe this caution is very dangerous because you may get an electric shock.

- **Do not ground a motor power wire terminal or short-circuit it to another power wire terminal.**
  Failure to observe this caution may cause electric shocks or burned wiring.
  * Some motors require a special connection such as a winding changeover.
    For details, refer to FANUC AC SERVO MOTOR αi-B/αi series DESCRIPTIONS (B-65262EN).

- **When connecting a cord such as a power line to the terminal block, use the specified tightening torque to firmly connect the cord.**
  If an operation is performed with a loose terminal, the terminal block can overheat, resulting in a fire. Moreover, a terminal can be detached, resulting in a ground fault, short circuit, or electric shock.

- **Do not apply current when a terminal of the terminal block or the crimp terminal of a power line is exposed.**
  If a person's hand or conductive object touches a terminal of the terminal block or the crimp terminal of a power line, there is a risk of electric shock. Attach an insulation cover (accessory) onto the terminal block. Moreover, cover the crimp terminal at the tip of a power line with an insulation tube.

- **Assemble and install power connectors securely.**
  If a power line is detached due to poor crimping or screw tightening, or a conductive area is exposed due to poor shell assembly, you may get electric shocks.

- **Do not touch a motor with wet hands.**
  Failure to observe this caution is very dangerous because you may get an electric shock.

- **Before touching a motor, shut off the power to it.**
  Even if a motor is not rotating, there may be a voltage across the terminals of the motor. Take sufficient precautions especially before touching a power supply connection. Otherwise you may get electric shocks.

- **Do not touch any terminal of a motor for a while (at least 20 minutes) after the power to the motor is shut off.**
  High voltage remains across power line terminals of a motor for a while after the power to the motor is shut off. So, do not touch any terminal or connect it to any other equipment. Otherwise, you may get electric shocks or the motor and/or equipment may get damaged.

- **Install a stop device for securing safety on the machine.**
  The brake built into the servo motor is not a stop device for securing safety. The machine may not be held if a failure occurs.

- **Do not enter the area directly under the vertical axis without securing safety first.**
  If a vertical axis drop occurs unexpectedly, you may be injured.

- **Fasten a motor firmly before driving the motor.**
  If a motor is driven when the motor is not fastened firmly or is fastened insufficiently, the motor can tumble or come off, resulting in danger. If the motor mounting section is not sufficiently strong, the machine may be damaged or the user may be injured.

⚠ WARNING

- **Do not touch or get close to a rotary section of a motor when it is rotating.**
  Clothes or fingers can get caught in the rotating part of a motor, resulting in the risk of suffering an injury.

- **Do not drive a motor with an object such as a key exposed.**
  An object such as a key can be thrown, resulting in an injury. Before turning a motor on, check that there are no objects that could be thrown by operating the motor.

- **Do not apply a radial load exceeding the allowable radial load.**
  The shaft can break, and components can be thrown, resulting in danger. When the vertical axis is involved, a vertical axis drop can occur.

- **Use the specified amplifier and parameters to drive a motor.**
  An incorrect combination of a motor, amplifier, and parameters may cause the motor to behave unexpectedly. This is dangerous and it may damage the motor.

- **Do not bring any dangerous stuff near a motor.**
  Motors are connected to a power line and may get hot. If a flammable is placed near a motor, it may be ignited, catch fire, or explode.

- **Be safely dressed when handling a motor.**
  Wear safety shoes and gloves when handling a motor as you may get hurt on its edges or protrusions or electric shocks.

- **Use a crane or lift to move a motor from one place to another.**
  Motors are heavy. If you lift a motor by hand, you may be exposed to various risks. For example, you could hurt your back, or the motor could fall and injure you. Use equipment such as a crane as needed. (For information about the weight of the motor, refer to the DESCRIPTIONS manual of the motor.)

CAUTION

⚠ CAUTION

- **Do not touch a motor when it is running or immediately after it stops.**
  A motor may get hot when it is running. Take care not to touch the motor before it cools down. Otherwise, you may get burned.

- **Be careful not get your hair or cloths caught in a fan.**
  Be especially careful of fans used to generate an inward air flow. Also be careful of fans even when the motor is stopped, because they continue to rotate while the amplifier is on.

- **Install the components around a motor securely.**
  If a component is displaced or comes off while a motor is rotating, danger can result.

- **Only use the eyebolts of a motor to move the motor.**
  When a motor is installed on a machine, take care not to move the machine by using the eyebolt of the motor. Otherwise, the eyebolt and motor can be damaged.

- **Do not disassemble a motor.**
  Do not disassemble a motor because doing so may cause a malfunction or failure. If a motor needs to be disassembled for maintenance or repair, please contact FANUC. For pulse coder replacement, refer to Subsection VII. MOTOR/DETECTOR/AMPLIFIER PREVENTIVE MAINTENANCE.

- **Do not machine or modify a motor.**
  Do not machine or modify a motor under any circumstances except when motor machining or modification is specified by FANUC. Modifying a motor may cause a malfunction or failure.

- **Do not conduct dielectric strength or insulation tests on a sensor.**
  Such tests can damage sensors.

- **Be sure to connect motor cables correctly.**
  An incorrect connection of a cable cause abnormal heat generation, equipment malfunction, or failure. Always use a cable with an appropriate current carrying capacity (or thickness) and withstand voltage. For details on how to connect to a motor, refer to the DESCRIPTIONS manual of the motor.

- **Do not apply shocks to a motor or scratch it.**
  If a motor is subjected to shocks or is scratched, its components may be adversely affected, resulting in normal operation being impaired. Plastic components and sensors can be damaged easily. Handle such components very carefully. In particular, do not lift a motor by one of its plastic components, connectors, the terminal block, and so forth. Otherwise, the motor may be broken.

- **Do not step or sit on a motor, and do not put a heavy object on a motor.**
  If you step or sit on a motor, it may get deformed or broken. Do not stack motors unless they are in packages.

- **When attaching a rotating component, such as a pulley, to the shaft, ensure that any imbalance between the motor and component is minimized.**
  If there is a large imbalance, too much vibration during motor rotation may result in the motor being broken.

- **Be sure to attach a key to a motor with a keyed shaft.**
  If a motor with a keyed shaft runs with no key attached, it may impair torque transmission or cause too much vibration during motor rotation, resulting in the motor being broken.

- **Use a motor under appropriate environmental conditions.**
  Using a motor in an adverse environment may cause a malfunction or failure. For details on the usage environment, usage conditions, and so forth, refer to the DESCRIPTIONS manual of the motor.

- **Do not apply a commercial power source voltage directly to a motor.**
  Applying a commercial power source voltage directly to a motor may result in its windings being burned. Be sure to use the specified amplifier to supply voltage to the motor.

- **Do not use the brake built into a motor for braking.**
  The brake built into a servo motor is designed for holding. Using the brake while the motor is rotating may cause it to fail.

- **Ensure that motors are cooled if they are of a type that requires forced cooling.**
  If a motor that requires forced cooling is not cooled normally, it may cause a malfunction or failure. For a fan-cooled motor, ensure that it is not clogged or blocked with dust, dirt, or cutting fluid. For a liquid-cooled motor, ensure that the amount of liquid is appropriate and that the liquid piping is not clogged. For both types, perform regular cleaning and inspection.

- **When storing a motor, put it in a dry (no condensation) place at room temperature (0 to 40°C).**
  If a motor is stored in a humid or hot place, its components may get damaged or deteriorated. In addition, keep a motor in such a position that its shaft remains horizontal and its terminal box is at the top.

- **FANUC motors are designed for use with machines. Do not use them for any other purpose.**
  If a FANUC motor is used for an unintended purpose, it may cause an unexpected symptom or trouble. If you want to use a motor for an unintended purpose, consult with FANUC beforehand.

NOTE

NOTE

- **Ensure that the base or frame on which a motor is mounted is strong enough.**
  Motors are heavy. If a base or frame on which a motor is mounted is not strong enough, it is impossible to achieve the required precision.

- **Do not remove a nameplate from a motor.**
  If a nameplate comes off, be careful not to lose it. If the nameplate is lost, the motor becomes unidentifiable, resulting in maintenance becoming impossible.

- **When testing the winding or insulation resistance of a motor, satisfy the conditions stipulated in IEC60034.**
  Testing a motor under conditions severer than those specified in IEC60034 may damage the motor.

- **For a motor with a terminal box, make a conduit hole for the terminal box in the specified position.**
  When making a conduit hole, be careful not to break or damage unspecified portions. Refer to the DESCRIPTIONS manual of the motor.

- **Before using a motor, measure its winding and insulation resistances, and make sure they are normal.**
  Be sure to conduct these checks, especially when mounting a motor that had been in storage for a long time into a system. To measure the winding resistance, use a milliohmmeter to measure the resistance between windings, and to measure the insulation resistance, use a megohmmeter (500 VDC) to measure the resistance between a winding and the frame. To measure each resistance value, remove the power line and measure the value for a single motor unit.
  A motor may deteriorate depending on the conditions under which it is stored or for how long it is stored. For the winding resistances of motors, refer to the DESCRIPTIONS manual of the motor, or ask FANUC. For insulation resistances, see the following judgment table.

  If a motor mounted in a system has been stopped for a prolonged period of time, it is recommended that the insulation resistance value be checked by using the insulation deterioration detection function of the αi-B Amplifier. You can measure the insulation resistance value between a motor winding and the frame without removing the motor itself or the motor power line. For details, refer to Chapter 12 of the FANUC SERVO AMPLIFIER αi-B series DESCRIPTIONS (B-65412EN), or ask FANUC.

- **To keep a motor in good working condition as long as possible, perform periodic maintenance and inspections on it, and check its winding and insulation resistances.**
  Be careful, however, because excessively severe inspection (dielectric strength test, etc.) can damage its windings. For the winding resistances of motors, refer to the DESCRIPTIONS manual of the motor, or ask FANUC. For insulation resistances, see the following table.

Insulation resistance	Judgment
100 MΩ or higher	Acceptable
10 to 100 MΩ	The winding has begun deteriorating. There is no problem with the performance at present. Be sure to perform periodic inspection.
1 to 10 MΩ	The winding has considerably deteriorated. Special care is in need. Be sure to perform periodic inspection.
Lower than 1 MΩ	Unacceptable. Replace the motor.

FANUC SERVO AMPLIFIER αi-B series
FANUC SERVO AMPLIFIER βi-B series

WARNINGS AND CAUTIONS RELATING TO MOUNTING

WARNING

⚠ WARNING

- **Check the specification code of the amplifier.**
  Check that the delivered amplifier is as originally ordered.

- **Mount a ground fault interrupter.**
  To guard against fire and electric shock, be sure to fit the factory power supply or machine with a breaker with ground fault interrupter (designed for use with an inverter).

- **Securely ground the amplifier.**
  Securely connect the ground terminal and metal frame of the amplifier and motor to a common ground plate of the power magnetics cabinet.

- **Be aware of the weight of the amplifier and other components.**
  Control motor amplifiers and AC reactors are heavy. Be careful not to drop them when transporting them or mounting them in the magnetics cabinet. Be particularly careful not to let your fingers get caught between the cabinet and amplifier.

- **Never ground or short-circuit the power supply lines or power lines.**
  Protect the lines from any stress such as bending. Handle the ends appropriately.

- **Ensure that the power supply lines, power lines, and signal lines are securely connected.**
  A loose screw, loose connection, or the like will cause a motor malfunction or overheating, or a ground fault. Be extremely careful with power supply lines, motor power lines, and DC link connections through which a large amount of current passes, because a loose screw (or poor contact in a connector or poor connection between a connector terminal and a cable) may cause a **fire**.

- **Insulate all exposed current-carrying parts.**

- **Never touch the regenerative discharge resistor or amplifier radiator directly.**
  The surface of the amplifier radiator and regenerative discharge unit become extremely hot. Never touch them directly. Otherwise, you may get burned. An appropriate structure should also be considered.

- **Close the amplifier cover after completing the wiring.**
  Leaving the cover open presents a danger of electric shock.

- **Confirm that the input voltage meets the specifications of the amplifier before making a connection.**
  If the input voltage exceeds the specified value (for example, if the input voltage for a 200-V input amplifier is 400 V), an internal component may be damaged and burnt out.

- **Take measures to prevent electroconductive, flammable, and corrosive materials as well as mist and water droplets from getting into the unit.**
  The entry of an electroconductive material or a flammable material may cause the unit to rupture, break, etc.
  Corrosive or electroconductive mist or water getting on an electronic circuit may cause it to behave in unexpected ways.
  Install the electronic circuit part in an environment corresponding to Pollution Degree 2 provided in IEC60664-1. To achieve Pollution Degree 2 under a severe environment for machine tools, generally, they need to be installed in a cabinet that satisfies IP54.

CAUTION

⚠ CAUTION

- **Do not step or sit on the amplifier.**
  Also, do not stack unpacked amplifiers on top of each other.

- **Use the amplifier in an appropriate environment.**
  See the allowable ambient temperatures and other requirements given in the corresponding amplifier DESCRIPTIONS manual.

- **Protect the amplifier from impacts.**
  Do not place anything on the amplifier.

- **Do not disassemble the amplifier.**

- **Take appropriate measures to prevent coolant, oil mist, or chips from getting on the radiator and fan motors that are exposed to the outside of the power magnetics cabinet.**
  Coolant, oil mist, or chips on the air inlet will result in a reduction in the cooling efficiency. In some cases, the required efficiency would no longer be achieved. The service lives of the fan motor and semiconductors can also be reduced. Especially, when outside air is drawn in, mount filters on both the air inlet and outlet. These filters must be replaced regularly. For this reason, a filter that is easy to replace should be used.

- **Connect the power supply lines and power lines to the appropriate terminals and connectors.**

- **Connect the signal lines to the appropriate connectors.**

- **Ensure that the cables used for the power supply lines and power lines are of the appropriate diameter and temperature ratings.**

- **Do not apply an excessively large force to plastic parts.**
  If a plastic section breaks, it may cause internal damage, thus interfering with normal operation. The edge of a broken section is likely to be sharp, leading to a risk of injury.

- **Before connecting the power supply wiring, check the supply voltage.**
  Check that the supply voltage is within the range specified in this manual, then connect the power supply lines.

- **Ensure that the combination of motor and amplifier is appropriate.**

- **Ensure that valid parameters are specified.**
  Note that specifying an invalid parameter for the combination of motor and amplifier may not only prevent normal operation of the motor but also result in damage to the amplifier.

- **Ensure that the amplifier and peripheral equipment are securely connected.**
  Check that the magnetic contactor, circuit breaker, and other devices mounted outside the amplifier are securely connected to each other and that those devices are securely connected to the amplifier.

- **Check that the amplifier is securely mounted in the power magnetics cabinet.**
  If any clearance is left between the power magnetics cabinet and the surface on which the amplifier is mounted, dust entering the gap may build up and prevent the normal operation of the amplifier.

- **Apply appropriate countermeasures against noise.**
  Adequate countermeasures against noise are required to maintain normal operation of the amplifier. For example, signal lines must be routed away from power supply lines and power lines.

- **Notes related to storage, transportation and usage environment of this product**
  This servo amplifier uses electronic parts that are corroded by halogens (fluorine, chlorine, bromine, iodine, etc.).
  Do not storage, transport, or use this servo amplifier in a halogen (fluorine, chlorine, bromine, iodine, etc.) atmosphere.
  Fumigant and industrial cleaning solvent, and pesticide might contain the halogen.

NOTE

NOTE

- **Keep the nameplate clearly visible.**

- **Keep the legend on the nameplate clearly visible.**

- **After unpacking the amplifier, carefully check for any damage.**

- **Mount the amplifier in a location where it can be easily accessed for periodic inspection and daily maintenance.**

- **Leave sufficient space around the doors of the machine and equipment to enable maintenance to be performed easily.**
  Do not place any heavy objects where they could interfere with the opening of the doors.

- **Keep the parameter table and spare parts at hand.**
  Also, keep the specifications at hand. These items must be stored in a location where they can be retrieved immediately.

- **Provide adequate shielding.**
  A cable to be shielded must be securely connected to the ground plate using a cable clamp or the like.

WARNINGS AND CAUTIONS RELATING TO A PILOT RUN

WARNING

⚠ WARNING

- **Before turning on the power, check that the cables connected to the power magnetics cabinet and amplifier, the power lines, and the power supply lines, are securely connected. Also, check that no lines are slack.**

- **Before turning on the power, ensure that the power magnetics cabinet is securely grounded.**

- **Before turning on the power, check that the door of the power magnetics cabinet and all other doors are closed.**
  Ensure that the door of the power magnetics cabinet containing the amplifier, and all other doors, are securely closed. During operation, all doors must be closed and locked.

- **Use extreme caution if the door of the power magnetics cabinet or another door must be opened.**
  The door should be opened only after shutting off the power supply to the power magnetics cabinet (by opening both the input circuit breaker of the power magnetics cabinet and the factory switch used to supply power to the cabinet). If the machine must be operated with the door open for adjustment or some other purpose, the operator must keep his or her hands and tools well away from parts with dangerous voltages. Such work must only be done by a person trained in the maintenance of the machine or equipment.

- **When operating the machine for the first time, check that the machine operates as instructed.**
  To check whether the machine operates as instructed, first specify a small value for the motor and then increase the value gradually. If the motor operates abnormally, perform an emergency stop immediately.

- **After turning on the power, check the operation of the emergency stop circuit.**
  When pressing the emergency stop button, check that the motor stops immediately, and that the power being supplied to the amplifier is shut off by the magnetic contactor.

- **Before opening a door or protective cover of a machine to adjust the machine, first place the machine in the emergency stop state and check that the motor has stopped.**

CAUTION

⚠ CAUTION

- **Note whether an alarm status related to the amplifier is displayed at power-up or during motor operation.**
  If an alarm is displayed, take appropriate action as explained in this manual. If the work to be done requires that the door of the power magnetics cabinet be left open, the work must be carried out by a person trained in the maintenance of the machine or equipment. Note that if some alarms are forcibly reset to enable operation to continue, the amplifier may be damaged. Take appropriate action if an alarm is displayed and confirm that the alarm has been canceled.

- **Before operating the motor for the first time, mount and adjust the position and speed sensors.**
  Adjust the position and speed sensors for the spindle according to this manual so that an appropriate waveform is obtained. If the sensors are not properly adjusted, the motor may not rotate normally or the spindle may fail to stop as desired.

- **If the motor causes any abnormal noise or vibration while operating, stop it immediately.**
  Note that if operation is continued in spite of there being some abnormal noise or vibration, the amplifier or motor may be damaged. Take appropriate corrective action, then resume operation.

- **Observe the ambient temperature and output rating requirements.**
  The continuous output rating or continuous operation period of some amplifiers may fall as the ambient temperature increases. If the amplifier is used continuously with an excessive load applied, the amplifier may be damaged.

- **Unless otherwise instructed, do not unplug a connector and plug it back in with the power on. Doing so may cause the servo amplifier or fan motor unit to fail.**

WARNINGS AND CAUTIONS RELATING TO MAINTENANCE

WARNING

⚠ WARNING

- **Read this manual carefully to understand the content.**
  This manual describes actions to be taken during maintenance or when an alarm is displayed. Understand the content before taking such actions.

- **Notes on replacing a fuse or PC board**
  1) Before starting the replacement work, ensure that the circuit breaker protecting the power magnetics cabinet is open.
  2) Check that the LED (red) that indicates that DC link voltage charging is in progress is not lit. The position of the charging LED (red) on each model of amplifier is given in the manual for the amplifier. While the LED (red) is lit, electric charges are present inside the DC link unit, and thus there is a danger of **electric shock**.
  3) Some PC board components become extremely hot. Be careful not to touch such components.
  4) Ensure that a fuse with the appropriate rating is used.
  5) Check the specification code of a PC board to be replaced. If a modification drawing number is indicated, contact FANUC before replacing the PC board. Also, before and after replacing a PC board, check its pin settings.
  6) After replacing the fuse, ensure that the screws are firmly tightened. For a socket-type fuse, ensure that the fuse is inserted correctly.
  7) After replacing the PC board, ensure that it is securely connected.
  8) Ensure that all power lines, power supply lines, and connectors are securely connected.

- **Be careful not to lose any screws.**
  When removing the case or PC board, take care not to lose any screws. If a screw is lost inside the unit and the power is turned on, the machine may be damaged.

- **Notes on replacing the battery of the absolute Pulsecoder**
  Replace the battery only while the power is on. If the battery is replaced while the power is turned off, the stored absolute positioning data will be lost. Some α*i*-B amplifier models have the battery installed inside the servo amplifier. When using one of these models, open the door of the power magnetics cabinet and enter the emergency stop state without turning off the control power of the power supply module. Interrupt the input of the power system of the amplifier and then replace the battery. The power magnetics cabinet in which the amplifier is mounted has a high-voltage section and this section presents a risk of electric shock. Replacement work should be done only by a person who is trained in the related maintenance of such machines and equipment.

- **Check the number of alarms.**
  If the machine stops upon an alarm being issued, check the alarm number. Depending on the alarm issued, if the power is supplied without replacing the failed component, another component may be damaged, making it difficult to identify the original cause of the alarm.

- **Before resetting an alarm, ensure that the original cause of the alarm has been removed.**

- **Contact FANUC whenever a question related to maintenance arises.**

CAUTION

⚠ CAUTION

- **Ensure that all required components are mounted.**
  When replacing a component or PC board, check that all components, including the snubber capacitor, are correctly mounted. If the snubber capacitor is not mounted, for example, the IPM will be damaged.

- **Tighten all screws firmly.**

- **Check the specification code of the fuse, PC board, and other components.**
  When replacing a fuse or PC board, first check the specification code of the fuse or PC board, then mount it in the correct position. The amplifier will not operate normally or may break if a fuse or PC board that does not have the correct specification code is mounted, or if a fuse or PC board is mounted in the wrong position.

- **Mount the correct cover.**
  The cover on the front of the amplifier carries a label indicating a specification code. When mounting a previously removed front cover, take care to mount it on the unit from which it was removed.

- **Notes on cleaning the heat sink and fan**
  1) A dirty heat sink or fan results in reduced semiconductor cooling efficiency, which degrades reliability. Periodic cleaning is necessary.
  2) Caution is required when using compressed air for cleaning as it scatters the dust. A deposit of conductive dust on the amplifier or peripheral equipment will result in the amplifier failing.
  3) To clean the heat sink, do so only after turning the power off and ensuring that the heat sink has cooled enough. The heat sink becomes extremely hot. Touching it during operation or immediately after power-off is likely to cause a **burn**. Be extremely careful when touching the heat sink.

- **Before removing the amplifier**
  Before removing the amplifier, make sure that it is isolated from the power supply and that the DC link charge lamp is completely off (Fig. 1). When the DC link cover is opened to confirm the above, take care not to touch the DC link. Be careful not to get your fingers caught between the amplifier and power magnetics cabinet.

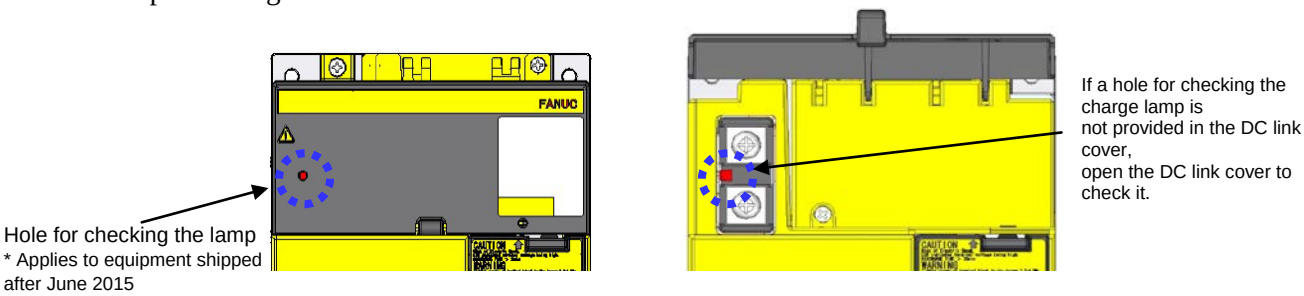

Fig. 1 Checking DC Link Charge Lamp

- **Notes on unplugging and plugging a connector**
  Unless otherwise instructed, do not unplug a connector and plug it back in with the power on as doing so may cause the amplifier or fan motor unit to fail.

NOTE

NOTE

- **Ensure that the battery connector is correctly inserted.**
  If the power is shut off while the battery connector is not connected correctly, the position data for the machine will be lost.

- **Store the manuals in a safe place.**
  The manuals should be stored in a location where they can be accessed immediately as required during maintenance work.

- **Notes on contacting FANUC**
  Inform FANUC of the details of an alarm and the specification code of the amplifier so that any components required for maintenance can be quickly obtained, and any other necessary actions can be taken without delay.

PREFACE

Organization of this manual

This manual describes information necessary to maintain FANUC Servo Amplifier α*i*-B series products, such as a Power Supply, Servo Amplifier, and Spindle Amplifier and FANUC Servo Motor α*i*-B series, FANUC Spindle Motor α*i*-B series, FANUC Servo Amplifier β*i*SV-B series, FANUC Servo Amplifier β*i*SVSP-B series, FANUC Servo Motor β*i*-B/β*i* series, and FANUC Spindle Motor β*i*-B series products.
Part I and part II explain the start-up procedure and the troubleshooting procedure for the α*i*-B.
Part III and part IV explain the start-up procedure and the troubleshooting procedure for the β*i*SV-B.
Part V and part VI explain the start-up procedure and the troubleshooting procedure for the β*i*SVSP-B.
Part VII and part VIII explain the maintenance of servo motors and spindle motors.

* The abbreviations listed below are used in this manual.

Product name	Abbreviations
FANUC Series 30*i*-MODEL B	FS30*i*-B
FANUC Series 30 *i*-B	
FANUC Series 31 *i*-MODEL B	FS31*i*-B
FANUC Series 31 *i*-B	
FANUC Series 32 *i*-MODEL B	FS32*i*-B
FANUC Series 32 *i*-B	
FANUC Series 35 *i*-MODEL B	FS35*i*-B
FANUC Series 35*i*-B	
FANUC Series Power Motion *i*-MODEL A	PM*i*-A
FANUC Series 30*i*-MODEL A	FS 30*i*-A
FANUC Series 31*i*-MODEL A	FS 31*i*-A
FANUC Series 32*i*-MODEL A	FS 32*i*-A
FANUC Series 0*i*-MODEL F	FS 0*i* -F
FANUC Series 0*i*/0*i* Mate-MODEL D	FS 0*i*/0*i* Mate-D
FANUC SERVO AMPLIFIER β*i*SV-B series	β*i*SV-B
FANUC SERVO AMPLIFIER β*i*SVSP-B series	β*i*SVSP-B
Power Supply	PS
Servo Amplifier	SV
Spindle Amplifier	SP

* The manuals shown below are related to this manual.
This manual may refer you to these manuals.

1) FANUC SERVO AMPLIFIER α*i*-B series DESCRIPTIONS B-65412EN
2) FANUC AC SERVO MOTOR α*i*-B/α*i* series DESCRIPTIONS B-65262EN
3) FANUC AC SPINDLE MOTOR α*i*-B/β*i*-B series DESCRIPTIONS B-65452EN
4) FANUC SERVO AMPLIFIER β*i*-B series DESCRIPTIONS B-65422EN
5) FANUC AC SERVO MOTOR β*i*-B/β*i* series DESCRIPTIONS B-65302EN
6) FANUC AC SERVO MOTOR α*i*-B/α*i* series/
FANUC AC SERVO MOTOR β*i*-B/β*i* series/
FANUC LINEAR MOTOR L*i*S series/
FANUC SYNCHRONOUS BUILT-IN SERVO MOTOR D*i*S series
PARAMETER MANUAL B-65270EN
7) FANUC AC SPINDLE MOTOR α*i*/β*i* series/
FANUC BUILT-IN SPINDLE MOTOR B*i* series
PARAMETER MANUAL B-65280EN

TABLE OF CONTENTS

SAFETY PRECAUTIONS s-1

PREFACE p-1

I. START-UP PROCEDURE FOR THE αi-B AMPLIFIER

1 OVERVIEW 3

2 CONFIGURATIONS 4
2.1 CONFIGURATIONS 4
2.2 SPECIFICATION 6
2.2.1 Power Supply 6
2.2.2 Servo Amplifier 7
2.2.3 Spindle Amplifier 9
2.2.4 Servo and Spindle Multi-Axis Amplifier 10

3 START-UP PROCEDURE 11
3.1 LIST OF ITEMS TO BE CHECKED 11
3.2 CONNECTING THE POWER 12
3.2.1 Checking the Voltage and Capacity of the Power Supply 12
3.2.2 Connecting a Protective Ground 13
3.2.3 Leakage Current and Selecting the Ground Fault Interrupter 13
3.2.4 Checking the Phase Sequence of the AC Fan Motor Power Supply 13
3.3 INITIAL PARAMETER SETTINGS 14
3.4 START-UP OF A MULTI-AXIS AMPLIFIER 14

4 CONFIRMATION OF THE OPERATION 17
4.1 POWER SUPPLY 17
4.1.1 Checking the Status Display (Power Supply) 18
4.1.2 Initial Parameter Settings 19
4.1.2.1 Amplifier group number 19
4.1.2.2 PS control axis 19
4.1.2.3 Parameter setting for specifying the PS control axis 20
4.1.3 Things to Be Checked if the Status LED Is Off 21
4.1.4 If the Magnetic Contactor Is Not Turned ON 21
4.1.5 Pre-charge Failure Alarm 21
4.2 SERVO AMPLIFIER 22
4.2.1 Checking the Status Display (Servo Amplifier) 23
4.2.2 If the Status LED Does Not Light up 23
4.2.3 V Ready-off Alarm Indicated on the CNC Screen 24
4.2.4 Method for Observing Motor Current 26
4.3 SPINDLE AMPLIFIER 27
4.3.1 Checking the Status Display (Spindle Amplifier) 28
4.3.2 Troubleshooting at Startup 29
4.3.2.1 If the LED (green) does not light up 29
4.3.2.2 If the status LED keeps blinking and displaying "--" 30

4.3.2.3 When the motor does not turn 30
4.3.2.4 When the specified speed cannot be obtained 30
4.3.2.5 When cutting is not performed, the spindle vibrates, making noise 31
4.3.2.6 When an overshoot or hunting occurs 31
4.3.2.7 When cutting power weakens or acceleration/deceleration slows down 31
4.3.3 Status Error Indication 32
4.3.4 Observing Data Using the SERVO GUIDE 37
4.3.4.1 Overview 37
4.3.4.2 Usable series and editions 37
4.3.4.3 List of spindle data that can be observed using the SERVO GUIDE 37
4.3.4.4 About the spindle control and spindle status signals 39
4.3.4.5 Example of observing data 40
4.3.5 Spindle Check Board 41
4.3.5.1 Spindle check board specifications 41
4.3.5.2 Connection of the spindle check board 41
4.3.5.3 Check terminal output signal 42
4.3.6 Checking the Feedback Signal Waveform 43
4.3.6.1 α*i*M SENSOR, α*i*MZ SENSOR 44
4.3.6.2 α*i*BZ SENSOR 45
4.3.6.3 α*i*CZ SENSOR (serial output) 47
4.3.6.4 α POSITIONCODER S 49
4.3.7 Amplitude and Offset Information Display of the Spindle Sensor 50
4.3.7.1 α*i*BZ SENSOR 50
4.3.7.2 α*i*CZ SENSOR (serial output) 52

II. TROUBLESHOOTING FOR THE α*i*-B AMPLIFIER

1 OVERVIEW 57

2 TROUBLE DIAGNOSIS FUNCTION 58
2.1 TROUBLESHOOTING PROCEDURES 58
2.1.1 Troubleshooting Procedure 58
2.2 TROUBLE DIAGNOSIS FUNCTION 59
2.2.1 Trouble Diagnosis Guidance 60
2.2.2 Trouble Diagnosis Monitor 65
2.2.2.1 How to check the data at an alarm or just before an alarm 65
2.2.2.2 Details of monitor screens related to servo amplifiers 66
2.2.2.3 Details of monitor screens related to spindle amplifiers 69
2.2.3 How to Switch the Trouble Diagnosis Guidance and Trouble Diagnosis Monitor to the "SAMPLING" State 72

3 ALARM NUMBERS AND BRIEF DESCRIPTIONS 73
3.1 SERVO ALARM 73
3.2 SPINDLE ALARM 76

4 TROUBLESHOOTING AND ACTION 79
4.1 POWER SUPPLY 79
4.1.1 LEDs Do Not Light up. 79
4.1.2 Alarm Code 01 (SV0437, SP9030) 79
4.1.3 Alarm Code 03 (SV0431, SP9058) 80
4.1.4 Alarm Code 04 (SV0433, SP9051) 80
4.1.5 Alarm Code 05 (SV0442, SP9033) 81
4.1.6 Alarm Code 06 (SV0432, SP9111) 81
4.1.7 Alarm Code 07 (SV0439, SP9011) 82
4.1.8 Alarm Code 10 (SV0606, SP9113) 82

4.1.9 Alarm Code 14 (SV0607, SP9004) 82
4.1.10 Alarm Code 15 (SV0024, SP9204) 82
4.1.11 Alarm Code 23 (SV0031, SP9211) 83
4.1.12 Alarm Code 24 (SV0034, SP9212) 83
4.1.13 Alarm Code 25 (SV0040, SP9213) 83
4.1.14 Alarm Code 26 (SV0041, SP9214) 83
4.1.15 Alarm Code 27 (SV0042, SP9215) 84
4.1.16 Alarm Code 28 (SV0043, SP9216) 84
4.1.17 Alarm Code A2 (SV0604, SP9110) 84
4.2 SERVO AMPLIFIER 85
4.2.1 Blinking Alarm Code 1, 1 (SV0444) 85
4.2.2 Alarm Code 2 (SV0434) 85
4.2.3 Alarm Code 3 (SV0013) 85
4.2.4 Alarm Code 4 (SV0012) 86
4.2.5 Alarm Code 5 (SV0435) 86
4.2.6 Alarm Code 6 (SV0602) 86
4.2.7 Alarm Code 7 (SV0654) 86
4.2.8 Alarm Code 8 (SV0600) 87
4.2.9 Alarm Code 11 (SV0017) 87
4.2.10 Alarm Code 8., 9., A. (SV0449) 87
4.2.11 Alarm Code 8., 9., A. (SV0603) 88
4.2.12 Blinking Alarm Code 2 (SV0015) 88
4.2.13 Blinking Alarm Code 7 (SV0659) 88
4.2.14 Blinking Alarm Code 8 (SV0039) 88
4.2.15 Blinking Alarm Code 9 (SV0037) 88
4.2.16 Blinking Alarm Code 11 (SV0018) 88
4.2.17 Alarm Code b, c, d (SV0438) 89
4.2.18 Blinking Alarm Code F, F (SV0601) 89
4.2.19 Alarm Code J (SV0014) 89
4.2.20 Alarm Code P (SV0604) 90
4.2.21 Alarm Code U 90
4.2.22 Alarm Code L 91
4.2.23 Alarm Code b., c., d. (SV0016) 91
4.2.24 Blinking Alarm Code A (SV0036) 91
4.3 SERVO SOFTWARE 92
4.4 SPINDLE AMPLIFIER 95
4.4.1 Alarm Code 01 (SP9001) 95
4.4.2 Alarm Code 02 (SP9002) 96
4.4.3 Alarm Code 03 (SP9003) 96
4.4.4 Alarm Code 06 (SP9006) 97
4.4.5 Alarm Code 07 (SP9007) 97
4.4.6 Alarm Code 09 (SP9009) 98
4.4.7 Alarm Code 10 (SP9010) 98
4.4.8 Alarm Code 12 (SP9012) 99
4.4.9 Alarm Code 13 (SP12XX) 99
4.4.10 Alarm Code 14 (SP9014) 100
4.4.11 Alarm Code 15 (SP9015) 100
4.4.12 Alarm Code 16 (SP9016) 100
4.4.13 Alarm Code 17 (SP9017) 100
4.4.14 Alarm Code 18 (SP12XX) 100
4.4.15 Alarm Code 19, 20 (SP9019, SP9020) 101
4.4.16 Alarm Code 21 (SP9021) 101
4.4.17 Alarm Code 22 (SP9022) 101
4.4.18 Alarm Code 24 (SP12XX) 101

4.4.19 Alarm Code 27 (SP9027) 102
4.4.20 Alarm Code 29 (SP9029) 103
4.4.21 Alarm Code 31 (SP9031) 103
4.4.22 Alarm Code 32 (SP12XX) 104
4.4.23 Alarm Code 34 (SP9034) 104
4.4.24 Alarm Code 35 (SP9035) 105
4.4.25 Alarm Code 36 (SP9036) 106
4.4.26 Alarm Code 37 (SP9037) 106
4.4.27 Alarm Code 41 (SP9041) 107
4.4.28 Alarm Code 42 (SP9042) 107
4.4.29 Alarm Code 43 (SP9043) 108
4.4.30 Alarm Code 46 (SP9046) 108
4.4.31 Alarm Code 47 (SP9047) 108
4.4.32 Alarm Code 49 (SP9049) 109
4.4.33 Alarm Code 50 (SP9050) 109
4.4.34 Alarm Code 52, 53 (SP9052, SP9053) 109
4.4.35 Alarm Code 54 (SP9054) 109
4.4.36 Alarm Code 55 (SP9055) 109
4.4.37 Alarm Code 56 (SP9056) 110
4.4.38 Alarm Code 61 (SP9061) 110
4.4.39 Alarm Code 65 (SP9065) 110
4.4.40 Alarm Code 66 (SP9066) 111
4.4.41 Alarm Code 67 (SP9067) 111
4.4.42 Alarm Code 68 (SP9068) 111
4.4.43 Alarm Code 69 (SP9069) 111
4.4.44 Alarm Code 70 (SP9070) 111
4.4.45 Alarm Code 71 (SP9071) 112
4.4.46 Alarm Code 72 (SP9072) 112
4.4.47 Alarm Code 73 (SP9073) 112
4.4.48 Alarm Code 74 (SP9074) 114
4.4.49 Alarm Code 75 (SP9075) 114
4.4.50 Alarm Code 76 (SP9076) 114
4.4.51 Alarm Code 77 (SP9077) 114
4.4.52 Alarm Code 78 (SP9078) 114
4.4.53 Alarm Code 79 (SP9079) 114
4.4.54 Alarm Code 80 (SP9080) 114
4.4.55 Alarm Code 81 (SP9081) 115
4.4.56 Alarm Code 82 (SP9082) 116
4.4.57 Alarm Code 83 (SP9083) 118
4.4.58 Alarm Code 84 (SP9084) 119
4.4.59 Alarm Code 85 (SP9085) 119
4.4.60 Alarm Code 86 (SP9086) 119
4.4.61 Alarm Code 87 (SP9087) 119
4.4.62 Alarm Code 88 (SP9088) 119
4.4.63 Alarm Code 89 (SP9089) 120
4.4.64 Alarm Code 90 (SP9090) 120
4.4.65 Alarm Code 91 (SP9091) 121
4.4.66 Alarm Code 92 (SP9092) 121
4.4.67 Alarm Codes A, A1, and A2 121
4.4.68 Alarm Code b0 (SP9110) 122
4.4.69 Alarm Code b4 (SP9114) 122
4.4.70 Alarm Code b5 (SP9115) 122
4.4.71 Alarm Codes C0, C1, C2 (SP9120, SP9121, SP9122) 122
4.4.72 Alarm Code C3 (SP9123) 122
4.4.73 Alarm Code C4 (SP9124) 123

4.4.74 Alarm Code C5 (SP9125) 123
4.4.75 Alarm Code C6 (SP9126) 123
4.4.76 Alarm Code C7 (SP9127) 123
4.4.77 Alarm Code C8 (SP9128) 123
4.4.78 Alarm Code C9 (SP9129) 123
4.4.79 Alarm Code d0 (SP9130) 123
4.4.80 Alarm Code d1 (SP9131) 124
4.4.81 Alarm Code d2 (SP9132) 124
4.4.82 Alarm Code d3 (SP9133) 124
4.4.83 Alarm Code d4 (SP9134) 124
4.4.84 Alarm Code d5 (SP9135) 124
4.4.85 Alarm Code d6 (SP9136) 125
4.4.86 Alarm Code d7 (SP9137) 125
4.4.87 Alarm Code d8 (SP9138) 125
4.4.88 Alarm Code d9 (SP9139) 125
4.4.89 Alarm Code E0 (SP9140) 125
4.4.90 Alarm Code E1 (SP9141) 125
4.4.91 Alarm Code E2 (SP9142) 125
4.4.92 Alarm Code E3 (SP9143) 126
4.4.93 Alarm Code E4 (SP9144) 126
4.4.94 Alarm Code E5 (SP9145) 126
4.4.95 Alarm Code E8 (SP9148) 126
4.4.96 Alarm Code E9 (SP9149) 126
4.4.97 Alarm Code F0 (SP9150) 126
4.4.98 Alarm Code F1 (SP9151) 126
4.4.99 Alarm Code F2 (SP9152) 126
4.4.100 Alarm Code F3 (SP9153) 127
4.4.101 Alarm Code F4 (SP9154) 127
4.4.102 Alarm Code F5 (SP9155) 127
4.4.103 Alarm Code F6 (SP9156) 127
4.4.104 Alarm Code F7 (SP9157) 127
4.4.105 Alarm Code F8 (SP9158) 127
4.4.106 Alarm Code G0 (SP9160) 127
4.4.107 Alarm Code G1 (SP9161) 127
4.4.108 Alarm Code G2 (SP9162) 128
4.4.109 Alarm Code G3 (SP9163) 128
4.4.110 Alarm Code G4 (SP9164) 128
4.4.111 Alarm Code G5 (SP9165) 128
4.4.112 Alarm Code G6 (SP9166) 128
4.4.113 Alarm Code G7 (SP9167) 128
4.4.114 Alarm Code G8 (SP9168) 128
4.4.115 Alarm Code G9 (SP9169) 129
4.4.116 Alarm Code H0 (SP9170) 129
4.4.117 Alarm Code UU 129
4.4.118 Alarm Code LL 129
4.4.119 Other Alarms 129

5 REPLACING AMPLIFIER COMPONENTS 130

5.1 REPLACEMENT OF A FAN MOTOR 130
5.1.1 Replacement of Fan Units of 60 or 90 mm Width Units 130
5.1.2 Replacement of Fan Units of 150 or 300 mm Width Units 132
5.1.3 Dismantling the Fan Motor from the Internal Cooling Fan Unit 133
5.1.4 Dismantling the Fan Motor from the Radiator Cooling Fan Unit 134
5.1.5 Ordering Numbers of Fan Units and Fan Motors for Maintenance 136

5.2 REPLACING BATTERY FOR ABSOLUTE PULSECODERS 140
5.2.1 OVERVIEW 140
5.2.2 Replacing Batteries 140
5.2.3 Replacing the Batteries in a Separate Battery Case 141
5.2.4 Replacing the Battery Built into the Servo Amplifier 142
5.2.5 Notes on Replacing a Battery (Supplementary Explanation) 143
5.3 HOW TO REPLACE THE FUSES 144
5.3.1 Fuse Locations 145

III. START-UP PROCEDURE FOR βiSV-B

1 OVERVIEW 149

2 CONFIGURATIONS 150
2.1 CONFIGURATIONS 150
2.2 SPECIFICATION 151
2.2.1 Servo Amplifier 151

3 START-UP PROCEDURE 152
3.1 LIST OF ITEMS TO BE CHECKED 152
3.2 CONNECTING THE POWER 153
3.2.1 Checking the Voltage and Capacity of the Power Supply 153
3.2.2 Connecting a Protective Ground 154
3.2.3 Selecting the Ground Fault Interrupter That Matches the Leakage Current 154
3.3 INITIALIZING PARAMETERS (SWITCHES AND DUMMY CONNECTORS) 155
3.4 INITIAL PARAMETER SETTINGS 155

4 CONFIRMATION OF THE OPERATION 156
4.1 SERVO AMPLIFIER 156
4.1.1 Check Procedure 156
4.1.2 V Ready-off Alarm Indicated on the CNC Screen 159
4.1.3 Method for Observing Motor Current 160

IV. TROUBLESHOOTING FOR βiSV-B

1 OVERVIEW 163

2 ALARM NUMBERS AND BRIEF DESCRIPTIONS 164
2.1 FOR Series 30*i*/31*i*/32*i*/35*i*-B, Power Motion *i*-A, 0*i*-F 164
2.1.1 Servo Alarm 164
2.2 FOR Series 30*i*/31*i*/32*i*-A 165
2.2.1 Servo Alarm 165
2.3 FOR Series 0*i*/0*i* Mate-D 166
2.3.1 Servo Alarm 166

3 TROUBLESHOOTING AND ACTION 167
3.1 SERVO AMPLIFIER 167
3.1.1 Converter: DC Link Undervoltage 167
3.1.2 Converter: DC Link Overvoltage 168
3.1.3 Converter: Excessive Deceleration Power 168
3.1.4 Converter: Control Power Supply Undervoltage 169

3.1.5 Inverter: Internal Cooling Fan Stopped 169
3.1.6 Inverter: Cooling Fan Stopped of the Radiator 169
3.1.7 Inverter: IPM Alarm 169
3.1.8 Inverter: IPM Alarm (OH) 170
3.1.9 Inverter: Motor Current Alarm 170
3.1.10 FSSB Communication Error 171
3.2 SERVO CONTROL SOFTWARE 172
3.2.1 Servo Adjustment Screen 172
3.2.2 Diagnosis Screen 173
3.2.3 Overload Alarm (Soft Thermal, OVC) 173
3.2.4 Feedback Disconnected Alarm 174
3.2.5 Overheat Alarm 175
3.2.6 Invalid Servo Parameter Setting Alarm 175
3.2.7 Alarms Related to Pulsecoder and Separate Serial Detector 175
3.2.8 Other Alarms 177

4 REPLACING AMPLIFIER COMPONENTS 179
4.1 REPLACEMENT OF A FAN MOTOR 179
4.1.1 Dismantling the Fan Unit of β*i*SV4-B or β*i*SV20-B 179
4.1.2 Dismantling the Internal Cooling Fan Unit of β*i*SV40-B, β*i*SV80-B, β*i*SV10HV-B, β*i*SV20HV-B, β*i*SV40HV-B, or β*i*SV20/20-B 180
4.1.3 Dismantling the Fan Unit of β*i*SV40/40-B 181
4.1.4 Dismantling the Radiator Cooling Fan Unit of β*i*SV80-B or β*i*SV40HV-B 182
4.1.5 Dismantling the Fan Motor from the Fan Unit (β*i*SV4-B, β*i*SV20-B) 183
4.1.6 Dismantling the Fan Motor from the Fan Unit (β*i*SV40-B, β*i*SV80-B, β*i*SV10HV-B, β*i*SV20HV-B, β*i*SV40HV-B, β*i*SV20/20-B) 184
4.1.7 Dismantling the Fan Motor from the Fan Unit (β*i*SV40/40-B) 185
4.1.8 Specifications of Fan Units for Maintenance 186
4.2 REPLACING BATTERY FOR ABSOLUTE PULSECODERS 187
4.2.1 Overview 187
4.2.2 Replacing Batteries 187
4.2.3 Replacing the Batteries in a Separate Battery Case 188
4.2.4 Replacing the Battery Built into the Servo Amplifier 189
4.2.5 Notes on Replacing a Battery (Supplementary Explanation) 191
4.2.5.1 Battery connection modes 191
4.2.5.2 Replacing Batteries for β*i*S 0.2 to β*i*S 0.3 193
4.2.5.3 Notes on attaching connectors 194
4.3 HOW TO REPLACE THE FUSES AND PRINTED CIRCUIT BOARDS 195
4.3.1 How to Replace the Fuses and Printed Circuit Boards 195
4.3.2 Fuse Locations 198

V. START-UP PROCEDURE FOR β*i*SVSP-B

1 OVERVIEW 201

2 CONFIGURATIONS 202
2.1 CONFIGURATIONS 202
2.2 SPECIFICATION 204

3 START-UP PROCEDURE 205
3.1 LIST OF ITEMS TO BE CHECKED 205
3.2 CONNECTING THE POWER 206
3.2.1 Checking the Voltage and Capacity of the Power Supply 206
3.2.2 Connecting a Protective Ground 208
3.2.3 Selecting the Ground Fault Interrupter That Matches the Leakage Current 208
3.3 INITIAL PARAMETER SETTINGS 209
3.3.1 βiSVSP-B Power Supply Section 209
3.3.1.1 Amplifier group number 209
3.3.1.2 PS control axis 209
3.3.1.3 Parameter setting for specifying the PS control axis 210
3.3.2 βiSVSP-B Servo Section 211
3.3.2.1 Servo parameter initialization procedure 211
3.3.2.2 Start-up of an individual servo axis 212
3.3.3 βiSVSP-B Spindle Section 214
3.3.3.1 Parameters related to spindle serial output 214
3.3.3.2 Automatic spindle parameter initialization 214

4 CONFIRMATION OF THE OPERATION 216
4.1 OUTLINE OF βiSVSP-B 216
4.1.1 Connector and Status LED Locations 216
4.1.2 Start-up Procedure 218
4.2 βiSVSP-B POWER SUPPLY SECTION 219
4.2.1 The Status LED Is Off. 219
4.3 βiSVSP-B SPINDLE SECTION 220
4.3.1 Status 1 Indicator 220
4.3.2 Troubleshooting at Startup 221
4.3.2.1 The STATUS 1 indicator is blinking with "--." 221
4.3.2.2 When the motor does not turn 221
4.3.2.3 When the specified speed cannot be obtained 221
4.3.2.4 When cutting is not performed, the spindle vibrates, making noise 222
4.3.2.5 When an overshoot or hunting occurs 222
4.3.2.6 When cutting power weakens or acceleration/deceleration slows down 222
4.3.3 Status Error Indication Function 223
4.3.4 Observing Data Using the SERVO GUIDE 228
4.3.4.1 Overview 228
4.3.4.2 List of spindle data that can be observed using the SERVO GUIDE 228
4.3.4.3 About the spindle control and spindle status signals 229
4.3.4.4 Example of Observing Data 230
4.4 βiSVSP-B SERVO SECTION 231
4.4.1 Checking the STATUS 2 Indicator 231
4.4.2 V Ready-off Alarm Indicated on the CNC Screen 232
4.4.3 Method for Observing Motor Current 233

VI. TROUBLESHOOTING FOR βiSVSP-B

1 OVERVIEW 237

2 ALARM NUMBERS AND BRIEF DESCRIPTIONS 238
2.1 SERVO ALARM 238
2.2 SPINDLE ALARM 241

3 TROUBLESHOOTING AND ACTION 244

3.1 TROUBLESHOOTING PROCEDURES 244
3.1.1 Troubleshooting Procedure 244
3.2 TROUBLE DIAGNOSIS FUNCTION 245
3.2.1 Trouble Diagnosis Guidance 246
3.2.2 Trouble Diagnosis Monitor 252
3.2.3 How to Switch the Trouble Diagnosis Guidance and Trouble Diagnosis Monitor to the "SAMPLING" State 259

4 REPLACING AMPLIFIER COMPONENTS 260
4.1 REPLACEMENT OF A FAN MOTOR 260
4.1.1 Replacement of the Fan Unit 260
4.1.2 Dismantling the Fan Motor from the Fan Unit 262
4.1.3 Specifications of Fan Units and Fan Motors for Maintenance 263
4.2 REPLACING BATTERY FOR ABSOLUTE PULSECODERS 263
4.2.1 Overview 263
4.2.2 Replacing Batteries 264
4.2.3 Replacing the Batteries in a Separate Battery Case 264
4.2.4 Replacing the Battery Built into the Servo Amplifier 265
4.2.5 Notes on Replacing a Battery (Supplementary Explanation) 266
4.2.5.1 Battery connection modes 266
4.2.5.2 Replacing Batteries for β*i*S 0.2 to β*i*S 0.3 268
4.2.6 Notes on Attaching Connectors 269
4.3 HOW TO REPLACE THE FUSES AND PRINTED CIRCUIT BOARDS 270
4.3.1 How to Replace the Fuses and Printed Circuit Boards 270
4.3.2 Fuse Locations 271

VII. MOTOR/DETECTOR/AMPLIFIER PREVENTIVE MAINTENANCE

1 MOTOR/ DETECTOR/ AMPLIFIER PREVENTIVE MAINTENANCE . 275
1.1 LIST OF MANUALS RELATED TO MOTORS AND AMPLIFIERS 275
1.2 PREVENTIVE MAINTENANCE OF MOTORS AND DETECTORS 276
1.2.1 Warnings, Cautions, and Notes on Preventive Maintenance of Motors and Detectors 276
1.2.2 Preventive Maintenance of a Motor (Common to All Models) 278
1.2.2.1 Main inspection items 278
1.2.2.2 Periodic cleaning of a motor 280
1.2.2.3 Notes on motor cleaning 281
1.2.2.4 Notes on the cutting fluid (informational) 281
1.2.3 Routine Inspection of a Spindle Motor with a Through Hole 282
1.2.4 Preventive Maintenance of a Built-in Spindle Motor and Spindle Unit 283
1.2.4.1 Routine inspection of the FANUC-NSK spindle unit 283
1.2.4.2 Maintenance of the FANUC-NSK spindle unit 284
1.2.4.3 Test run of the FANUC-NSK spindle unit 284
1.2.4.4 Storage method of the FANUC-NSK spindle unit 284
1.2.5 Preventive Maintenance of a Linear Motor 284
1.2.5.1 Appearance inspection of the linear motor (magnet plate) 285
1.2.6 Maintenance of a Detector 285
1.2.6.1 Alarms for built-in detectors (α*i* and β*i* Pulsecoders) and troubleshooting actions 286
1.2.6.2 Alarms for separate detectors and troubleshooting actions 287

1.2.6.3 Detailed troubleshooting methods 288
1.2.6.4 Maintenance of the Pulsecoder of βiS-B/βiS servo motors (□40 and □60) 289
1.3 PREVENTIVE MAINTENANCE OF SERVO AMPLIFIERS 290
1.3.1 Warnings, Cautions, and Notes on Operation of Servo Amplifiers 290
1.3.2 Preventive Maintenance of a Servo Amplifier 293
1.3.3 Maintenance of a Servo Amplifier 294
1.3.3.1 Display of the servo amplifier operation status 294
1.3.3.2 Replacement of a fan motor 295
1.4 REPLACING BATTERY FOR ABSOLUTE PULSECODERS 295

VIII. MOTOR MAINTENANCE

1 SERVO MOTOR MAINTENANCE 299
1.1 SERVO MOTOR MAINTENANCE PARTS 299
1.1.1 Pulsecoder 299
1.1.2 Cooling Fan 301
1.2 REPLACING COOLING FANS 303
1.2.1 Cooling Fan Replacement Procedure 303
1.2.1.1 With αiS 50-B fan, with αiS 60-B fan, with αiF 40-B fan, with αiS 50 fan, with αiS 60 fan, with αiF 40 fan (including HV) 303
1.2.1.2 αiS 150-B to αiS 500-B (including HV) 305
1.2.1.3 αiS 100 FAN, αiS 200 FAN (including HV) 307
1.2.1.4 αiS 300, αiS 500 (including HV) 308
1.2.1.5 αiS 1000HV-B, αiS 1500HV-B 308
1.2.1.6 αiS 1000HV 311
1.2.1.7 αiS 2000HV, αiS 3000HV 311

2 SPINDLE MOTOR MAINTENANCE PARTS 312
2.1 MAINTENANCE PARTS 312

APPENDIX

A MEASURING SERVO MOTOR WAVEFORMS (TCMD, VCMD) 319

B HOW TO USE THE SPINDLE CHECK BOARD 323
B.1 OBSERVING DATA USING THE SPINDLE CHECK BOARD 323
B.1.1 Overview 323
B.1.2 Major Characteristics 323
B.1.3 How to Observe Data 323
B.1.4 Specifying Data to Be Monitored 323
B.1.5 Description and Initial Value of Each Address 324
B.1.6 Principles in Outputting the Internal Data of the Serial Spindle 325
B.1.7 Data Numbers 328
B.1.8 Example of Observing Data 330
B.2 CHECKING PARAMETERS USING THE SPINDLE CHECK BOARD 331
B.2.1 Overview 331
B.2.2 Checking Parameters 331

C MEASURING INTERNAL DATA FOR THE POWER SUPPLY USING THE SERVO GUIDE 332
C.1 OVERVIEW 332

C.2 SERIES AND EDITION OF APPLICABLE SOFTWARE 332
C.3 MEASUREMENT SPECIFICATION 332
C.4 SETTING OF CHANNELS..... 333
C.5 LIST OF INTERNAL DATA FOR THE POWER SUPPLY..... 334

D TROUBLESHOOTING OF PS PRE-CHARGE FAILURES..... 336
D.1 OVERVIEW 336
D.2 PS PRE-CHARGE FAILURE..... 336
D.3 TROUBLESHOOTING OF PS PRE-CHARGE FAILURE 337
D.3.1 Troubleshooting Using the Trouble Diagnosis Guidance 337
D.3.2 Troubleshooting Using the Trouble Diagnosis Guidance 340

ADDITIONAL INFORMATION

I. START-UP PROCEDURE FOR THE αi-B AMPLIFIER

1 OVERVIEW

This part describes the units and components of the servo amplifier. It also explains the following information necessary to start up the servo amplifier:

- Configurations
- Start-up procedure
- Confirmation of the operation
- Periodic maintenance of servo amplifier

2 CONFIGURATIONS

2.1 CONFIGURATIONS

The αi-B series servo amplifier (called the αi-B amplifier below) consists of the units and components listed below:

(1)	Power Supply (PS)	(basic)
(2)	Servo amplifier (SV)	(basic)
(3)	Spindle amplifier (SP)	(basic)
(4)	AC reactor	(basic)
(5)	Connectors (for connection cables)	(basic)
(6)	Fuse	(optional)

Basic configuration of the 200 V input series (example)

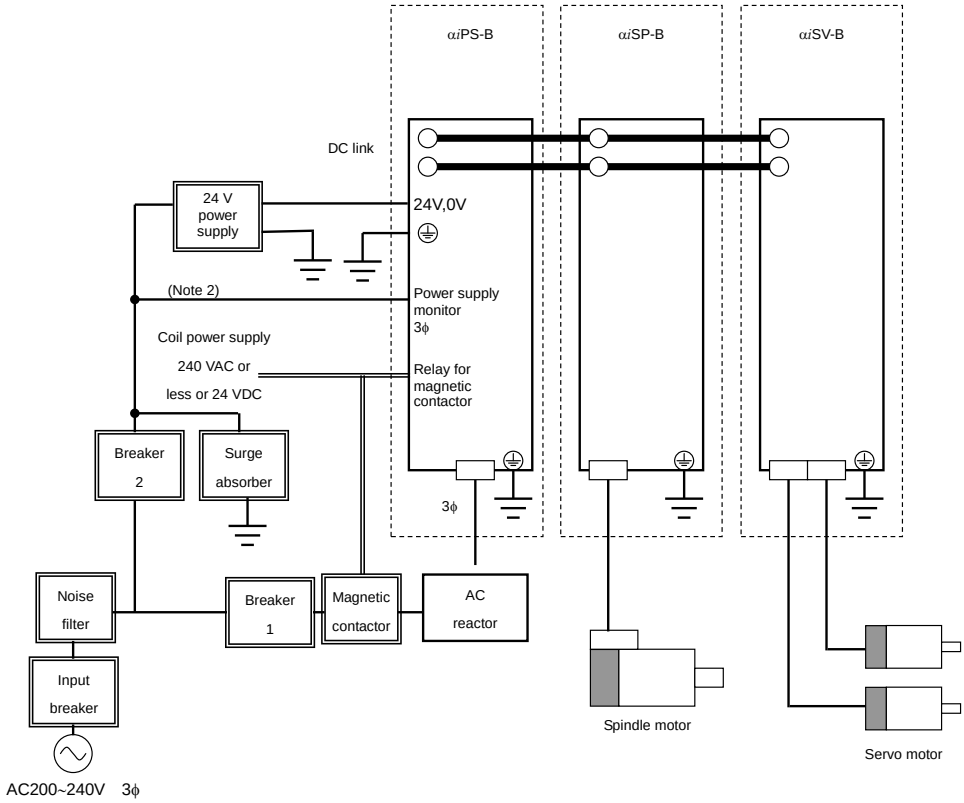

NOTE

1 The αi-B amplifier and the αi amplifier cannot be combined.
2 For cable protection, connect cables to the power supply monitor after breaker 2. (The fuse can be used as an alternative.)
3 For how to select the Power Supply, Servo Amplifier, and Spindle Amplifier, see Chapter 4 in the FANUC SERVO AMPLIFIER αi-B series DESCRIPTIONS (B-65412EN).
4 Breaker 1, breaker 2, magnetic contactor, and AC reactor are always required.
5 To protect the unit from surge currents caused by lightning, connect surge absorbers between lines, and between the lines and ground, at the power inlet of the power magnetics cabinet. For details, see Appendix A, "INSTALLATION OF SURGE ABSORBERS" in the FANUC SERVO AMPLIFIER αi-B series DESCRIPTIONS (B-65412EN).
6 When you use a 3 ϕ fan motor for the spindle motor, breaker 2 can be shared if it has a large enough capacity.
7 When using the αiPSs-B, install an input filter instead of an AC reactor.

2.2 SPECIFICATION

2.2.1 Power Supply

(1) αiPS-B series (200 V input type)

Model	Order specification
αiPS 3-B	A06B-6200-H003
αiPS 7.5-B	A06B-6200-H008
αiPS 11-B	A06B-6200-H011
αiPS 15-B	A06B-6200-H015
αiPS 26-B	A06B-6200-H026
αiPS 30-B	A06B-6200-H030
αiPS 37-B	A06B-6200-H037
αiPS 55-B	A06B-6200-H055

(2) αiPS-B series (400 V input type)

Model	Order specification
αiPS 11HV-B	A06B-6250-H011
αiPS 18HV-B	A06B-6250-H018
αiPS 30HV-B	A06B-6250-H030
αiPS 45HV-B	A06B-6250-H045
αiPS 60HV-B	A06B-6250-H060
αiPS 75HV-B	A06B-6250-H075
αiPS 100HV-B	A06B-6250-H100

(3) Upgrade version of the αiPS-B series (200 V input type)

Model	Order specification
αiPS 3-B	A06B-6202-H003
αiPS 7.5-B	A06B-6202-H008
αiPS 11-B	A06B-6202-H011
αiPS 15-B	A06B-6202-H015
αiPS 26-B	A06B-6202-H026
αiPS 30-B	A06B-6202-H030
αiPS 37-B	A06B-6202-H037
αiPS 55-B	A06B-6202-H055

(4) Upgrade version of the αiPS-B series (400 V input type)

Model	Order specification
αiPS 11HV-B	A06B-6252-H011
αiPS 18HV-B	A06B-6252-H018
αiPS 30HV-B	A06B-6252-H030
αiPS 45HV-B	A06B-6252-H045
αiPS 60HV-B	A06B-6252-H060
αiPS 75HV-B	A06B-6252-H075
αiPS 100HV-B	A06B-6252-H100
αiPS 125HV-B	A06B-6252-H125

(5) αiPSs-B series (200 V input type)

Model	Order specification
αiPSs 15-B	A06B-6212-H015
αiPSs 37-B	A06B-6212-H037

(6) αiPSs-B series (400 V input type)

Model	Order specification
αiPSs 18HV-B	A06B-6262-H018
αiPSs 45HV-B	A06B-6262-H045
αiPSs 75HV-B	A06B-6262-H075
αiPSs 100HV-B	A06B-6262-H100

2.2.2 Servo Amplifier

(1) αiSV-B series single-axis servo amplifier (200 V input type)

Model	Order specification
αiSV 4-B	A06B-6240-H101
αiSV 20-B	A06B-6240-H103
αiSV 40-B	A06B-6240-H104
αiSV 80-B	A06B-6240-H105
αiSV 160-B	A06B-6240-H106
αiSV 360-B	A06B-6240-H109

(2) αiSV-B series two-axis servo amplifier (200 V input type)

Model	Order specification
αiSV 4/4-B	A06B-6240-H201
αiSV 4/20-B	A06B-6240-H203
αiSV 20/20-B	A06B-6240-H205
αiSV 20/40-B	A06B-6240-H206
αiSV 40/40-B	A06B-6240-H207
αiSV 40/80-B	A06B-6240-H208
αiSV 80/80-B	A06B-6240-H209
αiSV 80/160-B	A06B-6240-H210
αiSV 160/160-B	A06B-6240-H211

(3) αiSV-B series three-axis servo amplifier (200 V input type)

Model	Order specification
αiSV 4/4/4-B	A06B-6240-H301
αiSV 20/20/20-B	A06B-6240-H305
αiSV 20/20/40-B	A06B-6240-H306
αiSV 40/40/40-B	A06B-6240-H308

(4) αiSV-B series single-axis servo amplifier (400 V input type)

Model	Order specification
αiSV 10HV-B	A06B-6290-H102
αiSV 20HV-B	A06B-6290-H103
αiSV 40HV-B	A06B-6290-H104
αiSV 80HV-B	A06B-6290-H105
αiSV 180HV-B	A06B-6290-H106
αiSV 360HV-B	A06B-6290-H109
αiSV 540HV-B	A06B-6290-H110

(5) αiSV-B series two-axis servo amplifier (400 V input type)

Model	Order specification
αiSV 10/10HV-B	A06B-6290-H202
αiSV 10/20HV-B	A06B-6290-H204
αiSV 20/20HV-B	A06B-6290-H205
αiSV 20/40HV-B	A06B-6290-H206
αiSV 40/40HV-B	A06B-6290-H207
αiSV 40/80HV-B	A06B-6290-H208
αiSV 80/80HV-B	A06B-6290-H209

(6) αiSV-B series three-axis servo amplifier (400 V input type)

Model	Order specification
αiSV 10/10/10HV-B	A06B-6290-H302
αiSV 10/10/20HV-B	A06B-6290-H303
αiSV 20/20/20HV-B	A06B-6290-H305

(7) Upgrade version of the αiSV-B series single-axis servo amplifier (200 V input type)

Model	Order specification
αiSV 4-B	A06B-6240-H121
αiSV 20-B	A06B-6240-H123
αiSV 40-B	A06B-6240-H124
αiSV 80-B	A06B-6240-H125
αiSV 160-B	A06B-6240-H126
αiSV 360-B	A06B-6240-H129
αiSV 360S-B	A06B-6240-H169

(8) Upgrade version of the αiSV-B series three-axis servo amplifier (200 V input type)

Model	Order specification
αiSV 4/4/4-B	A06B-6240-H321
αiSV 20/20/20-B	A06B-6240-H325
αiSV 20/20/40-B	A06B-6240-H326
αiSV 40/40/40-B	A06B-6240-H328
αiSV 80/80/80-B	A06B-6240-H331

(9) Upgrade version of the αiSV-B series single-axis servo amplifier (400 V input type)

Model	Order specification
αiSV 10HV-B	A06B-6290-H122
αiSV 20HV-B	A06B-6290-H123
αiSV 40HV-B	A06B-6290-H124
αiSV 80HV-B	A06B-6290-H125
αiSV 180HV-B	A06B-6290-H126
αiSV 360HV-B	A06B-6290-H129
αiSV 540HV-B	A06B-6290-H130
αiSV 180HVS-B	A06B-6290-H166

(10) Upgrade version of the αiSV-B series three-axis servo amplifier (400 V input type)

Model	Order specification
αiSV 10/10/10HV-B	A06B-6290-H322
αiSV 10/10/20HV-B	A06B-6290-H323
αiSV 20/20/20HV-B	A06B-6290-H325
αiSV 40/40/40HV-B	A06B-6290-H328

2.2.3 Spindle Amplifier

The upgrade version of the αiSP-B series can only be connected with the FS30i/31i/32i-B, FS0i-F CNC.

(1) αiSP-B series (200 V input type)

Model	Order specification
αiSP 2.2-B	A06B-6220-H002#H600
αiSP 5.5-B	A06B-6220-H006#H600
αiSP 11-B	A06B-6220-H011#H600
αiSP 15-B	A06B-6220-H015#H600
αiSP 22-B	A06B-6220-H022#H600
αiSP 26-B	A06B-6220-H026#H600
αiSP 30-B	A06B-6220-H030#H600
αiSP 37-B	A06B-6220-H037#H600
αiSP 45-B	A06B-6220-H045#H600
αiSP 55-B	A06B-6220-H055#H600

(2) αiSP-B series (400 V input type)

Model	Order specification
αiSP 5.5HV-B	A06B-6270-H006#H600
αiSP 11HV-B	A06B-6270-H011#H600
αiSP 15HV-B	A06B-6270-H015#H600
αiSP 22HV-B	A06B-6270-H022#H600
αiSP 30HV-B	A06B-6270-H030#H600
αiSP 45HV-B	A06B-6270-H045#H600
αiSP 75HV-B	A06B-6270-H075#H600
αiSP 100HV-B	A06B-6270-H100#H600

(3) Upgrade version of the αiSP-B series (200 V input type)

Model	Order specification
αiSP 2.2-B	A06B-6222-H002#H610
αiSP 5.5-B	A06B-6222-H006#H610
αiSP 11-B	A06B-6222-H011#H600
αiSP 15-B	A06B-6222-H015#H610
αiSP 22-B	A06B-6222-H022#H610
αiSP 26-B	A06B-6222-H026#H610
αiSP 30-B	A06B-6222-H030#H610
αiSP 37-B	A06B-6222-H037#H610
αiSP 45-B	A06B-6222-H045#H610
αiSP 55-B	A06B-6222-H055#H610

(4) Upgrade version of the αiSP-B series (400 V input type)

Model	Order specification
αiSP 5.5HV-B	A06B-6272-H006#H610
αiSP 11HV-B	A06B-6272-H011#H610
αiSP 15HV-B	A06B-6272-H015#H610
αiSP 22HV-B	A06B-6272-H022#H610
αiSP 30HV-B	A06B-6272-H030#H610
αiSP 45HV-B	A06B-6272-H045#H610
αiSP 60HV-B	A06B-6272-H060#H610
αiSP 75HV-B	A06B-6272-H075#H610
αiSP 100HV-B	A06B-6272-H100#H610
αiSP 100HV(SiC)-B	A06B-6272-H100#H610#S

2.2.4 Servo and Spindle Multi-Axis Amplifier

The servo and spindle multi-axis amplifier is an amplifier that combines three servo axes and one spindle. The servo and spindle multi-axis amplifier can only be connected with the FS30*i*/31*i*/32*i*-B, FS0*i*-F CNC.

(1) αiSVP-B series (200 V input type)

Model	Order specification
αiSVP 20/20/20-5.5-B	A06B-6230-H001#H600

(2) αiSVP-B series (400 V input type)

Model	Order specification
αiSVP 10/10/10-5.5HV-B	A06B-6280-H001#H600

(3) Upgrade version of the αiSVP-B series (200 V input type)

Model	Order specification
αiSVP 20/20/20-5.5-B	A06B-6232-H001#H610
αiSVP 20/20/20-2.2-B	A06B-6232-H003#H610
αiSVP 40/40/40-2.2-B	A06B-6232-H004#H610

(4) Upgrade version of the αiSVP-B series (400 V input type)

Model	Order specification
αiSVP 10/10/10-5.5HV-B	A06B-6282-H001#H610

3 START-UP PROCEDURE

3.1 LIST OF ITEMS TO BE CHECKED

Make sure that the specifications of the servo amplifier, servo motor, CNC, and other units you received are exactly what you ordered, and that these units are connected correctly. Then, turn on the power. The items to be checked are described below.

No.	Description	Check method
Checking the installation of the servo amplifier		
1	Specification and selection of the servo amplifier and servo motor	Check that the combination of the servo amplifier and the servo motor is appropriate. For details, see Chapter 4 in the FANUC SERVO AMPLIFIER αi-B series DESCRIPTIONS (B-65412EN).
2	Packing of the flange	Check that the provided packing is properly attached. Check that there is no clearance between the power magnetics cabinet and the flange of the amplifier. For details, see Chapter 5 in the FANUC SERVO AMPLIFIER αi-B series DESCRIPTIONS (B-65412EN).
3	Leaving space for maintenance	Leave space for maintenance above and below the amplifier. For details, see Chapter 8 in the FANUC SERVO AMPLIFIER αi-B series DESCRIPTIONS (B-65412EN).
4	Prevention of contact with conductive section	Check that a protective plate is attached to the DC link terminal block and that the terminal block cover is locked. For details, see Appendix F in the FANUC SERVO AMPLIFIER αi-B series DESCRIPTIONS (B-65412EN).
5	Amplifier arrangement order	The amplifier arrangement order is restricted in the spindle amplifier of αiSP45HV-B or later. For details, see Chapter 5 in the FANUC SERVO AMPLIFIER αi-B series DESCRIPTIONS (B-65412EN).
6	Measure against entry of coolant	Take measures to prevent electroconductive, flammable, and corrosive materials as well as mist and water droplets from getting into the unit. For how to ensure the seal of the power magnetics cabinet, see Appendix G in the FANUC SERVO AMPLIFIER αi-B series DESCRIPTIONS (B-65412EN).
Checking the wiring for the servo amplifier		
7	Screwing to the terminal block	When connecting wires to the servo amplifier terminal board, be sure to tighten the screws to the proper torque. For the screw tightening torque for the terminal block, see Chapter 5 in the FANUC SERVO AMPLIFIER αi-B series DESCRIPTIONS (B-65412EN).
8	Connecting a protective ground	To prevent electric shock when connecting the ground, wire the ground cable with an appropriate wire rod. For details, see Chapter 9 in the FANUC SERVO AMPLIFIER αi-B series DESCRIPTIONS (B-65412EN).
9	Installing the lightning surge absorber	In order to prevent damage to the amplifier due to a surge voltage applied to the input power supply, install a lightning surge absorber. For details, see Appendix A in the FANUC SERVO AMPLIFIER αi-B series DESCRIPTIONS (B-65412EN).
10	Measure against noise	Check that ground wires, including feedback cable shielding clamps, are connected to the proper places to maintain stable operation of the machine. For details, see Chapter 5 in the FANUC SERVO AMPLIFIER αi-B series DESCRIPTIONS (B-65412EN). To share the 24 V power supply with the CNC, see Chapter 9 as well.
11	Phase order of motor power lines	If the phase order of motor power lines is incorrect, the motor may operate unexpectedly. Check that they are connected correctly.
12	Checking the axis to which the motor feedback wire and power wire are connected	If the axis to which the motor feedback wire and power wire are connected is incorrect, the motor may operate unexpectedly. Check that they are connected correctly.
13	Connection of batteries	Do not connect the built-in batteries in parallel. If the built-in batteries are to be used with an amp-to-amp battery connection cable (CXA2A/B, BATL (B3)) attached, they may be connected in parallel. For details, see Chapter 9 in the FANUC SERVO AMPLIFIER αi-B series DESCRIPTIONS (B-65412EN).

No.	Description	Check method
Checking during startup of operation		
14	Checking the power supply voltage	Check that the power supply voltage is within the appropriate range before turning on the power. For details of the power voltage specifications, see Chapter 2 in the FANUC SERVO AMPLIFIER αi-B series DESCRIPTIONS (B-65412EN).
15	Checking the ground potential	The 400 V servo amplifier supports only neutral grounding. For details, see Chapter 2 in the FANUC SERVO AMPLIFIER αi-B series DESCRIPTIONS (B-65412EN).
16	Setting the ground fault breaker	Use a breaker with ground fault interrupter that supports inverters. For details of the leakage current, see Chapter 5 in the FANUC SERVO AMPLIFIER αi-B series DESCRIPTIONS (B-65412EN).
17	Checking the control power	Check that the voltage of the 24 V power supply supplied to the amplifier is within the appropriate range and that the current capacity is appropriate. For details, see Chapter 4 or 9 in the FANUC SERVO AMPLIFIER αi-B series DESCRIPTIONS (B-65412EN).
18	Setting parameters	Set initial parameters, seeing Section 3.3, "INITIAL PARAMETER SETTINGS."
19	Handling early failures	To solve initial problems (e.g., The power does not turn on. The motor does not rotate. An alarm occurs.), see Chapter 4, "CONFIRMATION OF THE OPERATION."

3.2 CONNECTING THE POWER

3.2.1 Checking the Voltage and Capacity of the Power Supply

Check the specifications of the input power supply to make sure the specifications in Tables 3.2.1 (a), (b), (c), and (d) are satisfied before connecting the input power supply.
Use a power source (main circuit) with sufficient capacity so that the system will not malfunction due to a voltage drop even during peak loads.

Table 3.2.1 (a) αiPS-B input power supply specifications (200 V input type)

Model	αiPS 3-B	αiPS 7.5-B	αiPS 11-B	αiPS 15-B	αiPS 26-B	αiPS 30-B	αiPS 37-B	αiPS 55-B
Power supply voltage (main circuit)	200 VAC - 15% to 240 VAC + 10% (including power supply voltage variation during acceleration or deceleration)							
Power source frequency	47Hz~63Hz							
Power source capacity (main circuit)	5kVA	12 kVA	16 kVA	22 kVA	38 kVA	44 kVA	54 kVA	80 kVA

Table 3.2.1 (b) αiPS-B input power supply specifications (400 V input type)

Model	αiPS 11HV-B	αiPS 18HV-B	αiPS 30HV-B	αiPS 45HV-B	αiPS 60HV-B	αiPS 75HV-B	αiPS 100HV-B	αiPS 125HV-B
Power supply voltage (main circuit)	380 VAC - 10% to 480 VAC + 10% (including power supply voltage variation during acceleration or deceleration)							
Power source frequency	47Hz~63Hz							
Power source capacity (main circuit)	16 kVA	26 kVA	44 kVA	65 kVA	87 kVA	108 kVA	144 kVA	159 kVA

Table 3.2.1 (c) αiPSs-B input power supply specifications (200 V input type)

Model	αiPSs 15-B	αiPSs 37-B
Power supply voltage (main circuit)	200 VAC - 15% to 240 VAC + 10% (including power supply voltage variation during acceleration or deceleration) Allowable voltage range in the PWM rectification mode Maximum input voltage: 242 VAC (220 VAC + 10%) Minimum input voltage: 170 VAC (200 VAC - 15%) Nominal input voltage: 200 VAC to 220 VAC	
Power source frequency	47Hz~63Hz	
Power source capacity (main circuit)	22kVA	54 kVA

Table 3.2.1 (d) αiPSs-B input power supply specifications (400 V input type)

Model	αiPSs 18HV-B	αiPSs 45HV-B	αiPSs 75HV-B	αiPSs 100HV-B
Power supply voltage (main circuit)	380 VAC - 10% to 480 VAC + 10% (including power supply voltage variation during acceleration or deceleration) Allowable voltage range in the PWM rectification mode Maximum input voltage: 440 VAC (400 VAC + 10%, 415 VAC + 6%) Minimum input voltage: 340 VAC (380 VAC - 10%) Nominal input voltage: 380 VAC to 415 VAC			
Power source frequency	47Hz~63Hz			
Power source capacity (main circuit)	26 kVA	65 kVA	108 kVA	144 kVA

⚠ **CAUTION**

1 The αiPS-B and the upgrade version of the αiPS-B have the same input power supply specifications. See Tables 3.2.1 (a) and 3.2.1 (b) above for both.

2 Note that the αiPS-B and the αiPSs-B have different input power supply specifications.

3.2.2 Connecting a Protective Ground

For details of the connection of a protective ground in the amplifier and motor, check that the protective ground is connected correctly with reference to Chapter 5 in the FANUC SERVO AMPLIFIER αi-B series DESCRIPTIONS (B-65412EN).

3.2.3 Leakage Current and Selecting the Ground Fault Interrupter

For details of the leakage current and selection of the protective ground, check that an appropriate breaker with ground fault interrupter is selected with reference to Chapter 5 in the FANUC SERVO AMPLIFIER αi-B series DESCRIPTIONS (B-65412EN).

3.2.4 Checking the Phase Sequence of the AC Fan Motor Power Supply

Check that the phase sequence of the power supply connection of the AC fan motor in the spindle motor or servo motor is correct. If the phase sequence is incorrect, the fan motor rotates in the reverse direction, which may decrease cooling efficiency or the AC fan motor may stop due to overheating.

3.3 INITIAL PARAMETER SETTINGS

(1) Power Supply
You must set parameters for the Power Supply.
For details, see Subsection 4.1.2 in this manual and Chapter 15 in the FANUC SERVO AMPLIFIER αi-B series DESCRIPTIONS (B-65412EN).

(2) Servo amplifier
For the initial settings of servo amplifiers or servo motors, see the following manual:
FANUC AC SERVO MOTOR αi-B/αi series PARAMETER MANUAL: B-65270EN

(3) Spindle amplifier
For the initial settings of spindle parameters, see the following manual:
FANUC AC SPINDLE MOTOR αi/βi series PARAMETER MANUAL: B-65280EN

3.4 START-UP OF A MULTI-AXIS AMPLIFIER

In servo amplifiers before the αi series, a multi-axis amplifier would not become ready until the start-up conditions of all the axes were satisfied. However, in the αi-B series servo amplifier, you can make each axis of the multi-axis amplifier ready if the start-up conditions of that axis are satisfied.

Ready status indicator for the multi-axis amplifier

The 7-segment LED indicator for the servo amplifier supports "0." (dotted zero) which indicates that a multi-axis amplifier has some axes ready and some not ready, in addition to "0" which indicates that all axes are in the ready status and "-" which indicates that all axes are in the not-ready status.

7-segment LED indicator	Amplifier status	Description
-	Not-ready status (All axes are in the not-ready status.)	All axes are in the not-ready status (same as before). All axes are braked dynamically. Inoperable.
0	Ready status (All axes are in the ready status.)	All axes are in the ready status (same as before). All axes are operable.
0.	Ready status (Some axes are in the not-ready status.)	Some axes are in the ready status, while some are in the not-ready status. The difference from the status in which all axes are in the ready status is that a dot is lit. Only the axes in the ready status are operable. The axes in the not-ready status are braked dynamically.

・Operation of the multi-axis amplifier when an alarm occurs

In servo amplifiers before the αi series, the amplifier dynamically breaks all the axes making them not-ready if an alarm is detected on one axis of the multi-axis amplifier regardless of the details of the alarm. However, in the αi-B series servo amplifier, if an alarm related to each axis (such as IPM alarm) occurs, only the axis on which the alarm occurred becomes non-ready while the amplifier keeps the other axes ready.

・No restrictions imposed in the event of an alarm in the multi-axis amplifier

In the αi-B series servo amplifier, there are no restrictions on the multi-axis amplifier in applications where axes on which an alarm has not occurred are operated if an alarm occurs in the break control function, the quick stop function, or the lifting function against gravity at emergency stop.

[Behavior of normal axes in the event of an alarm]

	Alarm	Behavior of normal axes	
		Conventional servo amplifier	**αiSV-B**
<1>	Alarm detected by the servo software or CNC software (such as the excess error alarm)	Possible to delay the ready status of the servo amplifier. (*)	Possible to delay the ready status of the servo amplifier. (*)
<2>	Alarm on each axis detected by the servo amplifier <1> SV motor failure <2> SV IPM alarm <3> DB relay abnormal alarm	Possible to delay the ready status of the servo amplifier only in a single-axis amplifier. (*) (It is not possible to delay the ready status of the servo amplifier if an alarm occurs on the same amplifier axis in a multi-axis amplifier.)	Possible to delay the ready status of the servo amplifier in all amplifiers. (*)
<3>	Alarms other than <1> or <2> above	Becomes Not ready instantly.	Becomes Not ready instantly.

* It is possible to lift the normal vertical axes or perform some other operation while the ready status of the servo amplifier is being delayed.

· Support for the detach function in the multi-axis amplifier

In servo amplifiers before the αi series, the axis removal (detach) function only applied to the axes that use a single-axis amplifier. However, in the αi-B series servo amplifier, this function can be set to each axis of a multi-axis amplifier.

· Setting of a dummy axis in the multi-axis amplifier

Starting up a specific axis in a multi-axis amplifier of the servo amplifier of the αi series or earlier requires attaching a dummy connector to each axis that is not in use. With the servo amplifier of the αi-B series, it is possible to start up any axis by itself, thus eliminating the need to attach dummy connectors to unused axes.

· Sharing the amplifier among multiple paths in the multi-axis amplifier

When a multi-axis amplifier is shared among multiple paths in the servo amplifier of the αi series or earlier models, the signal to ignore the V ready off alarm must be input to prevent other paths from becoming not ready if an axis used for one path becomes not ready. This operation is no longer necessary in the αi-B series servo amplifier.

⚠ **CAUTION**

1 Notes on synchronization control and tandem control
If an alarm occurs in one of the axes used under synchronization control or tandem control, it is necessary for the amplifier to immediately become not ready for the other axes as well in order to prevent machine distortion. To meet this requirement, be sure to enable the servo software's "servo alarm two-axis simultaneous monitor function" for the axes under synchronization control or tandem control.
In some cases where synchronization control or tandem control is implemented using two axes of a multi-axis amplifier of a conventional servo amplifier, the amplifier becomes not ready for both axes simultaneously in the event of an alarm and this plays a similar role to that of the servo alarm two-axis simultaneous monitor function.
Because the ready status conditions for the multi-axis amplifier for each axis are independent of one another in the servo amplifier, the multi-axis amplifier does not substitute for the servo alarm two-axis simultaneous monitor function. Therefore, be sure to enable the servo alarm two-axis simultaneous monitor function for axes under synchronization control or tandem control even in the multi-axis amplifier.
See the Parameter Manual for detailed descriptions of the servo alarm two-axis simultaneous monitor function and the related parameter settings.

2 If an alarm common to all axes occurs (such as a DC link low-voltage alarm), all the axes driven by the multi-axis amplifier are affected by the alarm in the same manner as in previous amplifiers, resulting in the amplifier becoming not ready simultaneously for all the axes and a dynamic brake being applied to bring them all to a halt.

3 If an emergency stop signal (input signal to the connector CX4 of the Power Supply) is input, the amplifier becomes not ready for all axes and applies a dynamic brake to bring them all to a halt.

4 CONFIRMATION OF THE OPERATION

4.1 POWER SUPPLY

Check each item according to the procedure described below.

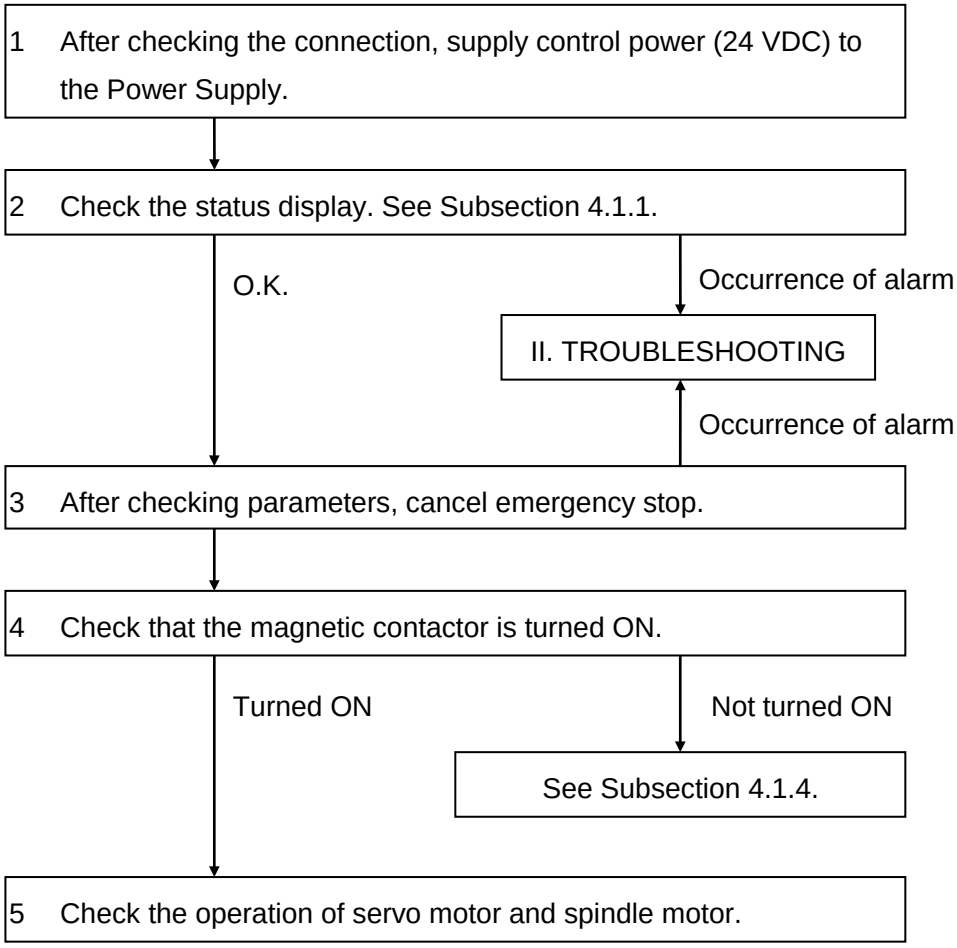

4.1.1 Checking the Status Display (Power Supply)

The operation status of the Power Supply can be checked on the status display (7-segment LED and three-color LEDs on its left) on the front of the Power Supply.

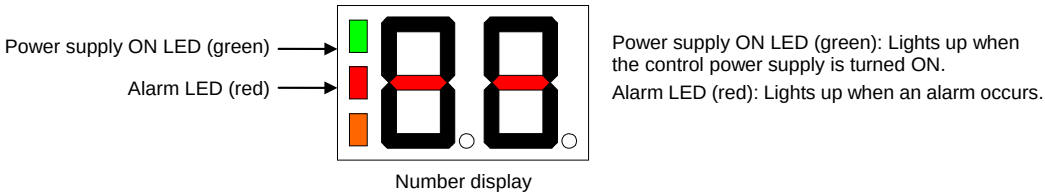

Alarm LED	Error LED	Number display	Description
		Not displayed	The control power is not on, or the hardware is faulty. For details, see Subsection 4.3.1, "Power Supply."
		Alphanumeric	During a period of approximately four seconds after the power is turned on, the information about the software series and edition is displayed broken up into four parts. First 1 second: First 2 digits of the software series Next 1 second: Last 2 digits of the software series Next 1 second: First 2 digits of the software edition Next 1 second: Last 2 digits of the software edition Example) When the software series and edition are 9G00/01.0 9 G → 0 0 → 0 1 → _ 0
		-- Blinking	Serial communication is being established with the servo amplifier or spindle amplifier.
		SC Blinking	The trouble diagnosis function is conducting self-diagnosis of the servo amplifier or spindle amplifier.
		FC Blinking	Software compatibility check is being conducted in the Power Supply, servo amplifier, or spindle amplifier. Usually, this check processing is completed instantaneously and -- is displayed. If FC continues to blink, one of the following connections may not be correct: <1> Between the Power Supply, servo amplifier, and spindle amplifier (cables CXA2A, CXA2B) <2> Between the CNC and servo amplifier or spindle amplifier (FSSB connection) Double check the cabling.
		--	Serial communication is established with the servo amplifier or spindle amplifier.
		00 Blinking	During the pre-charge operation
		00	The main power supply is ready.
ON		01 or above is displayed.	Alarm status
		01 or above is displayed.	Warning status

4.1.2 Initial Parameter Settings

The Power Supply is controlled by software. This allows power supply information to be monitored on the CNC. Using this information, it is possible to diagnose failures resulting from power supply fluctuations.
However, the Power Supply cannot directly communicate with the CNC unlike the servo or spindle amplifier, so power supply information is transferred to the CNC via the servo or spindle amplifier.

4.1.2.1 Amplifier group number

The set of one Power Supply and the servo amplifiers and spindle amplifiers connected to it is collectively called an amplifier group. A system that has multiple Power Supplies has multiple amplifier groups. A unique number is assigned to each of these amplifier groups, and such numbers are called amplifier group numbers.

4.1.2.2 PS control axis

The Power Supply is connected to each amplifier via the CXA2x connector. The axis driven by the servo or spindle amplifier connected the closest to the Power Supply in this connection is called the PS control axis.
The above-mentioned power supply information is transferred to the CNC via this PS control axis.

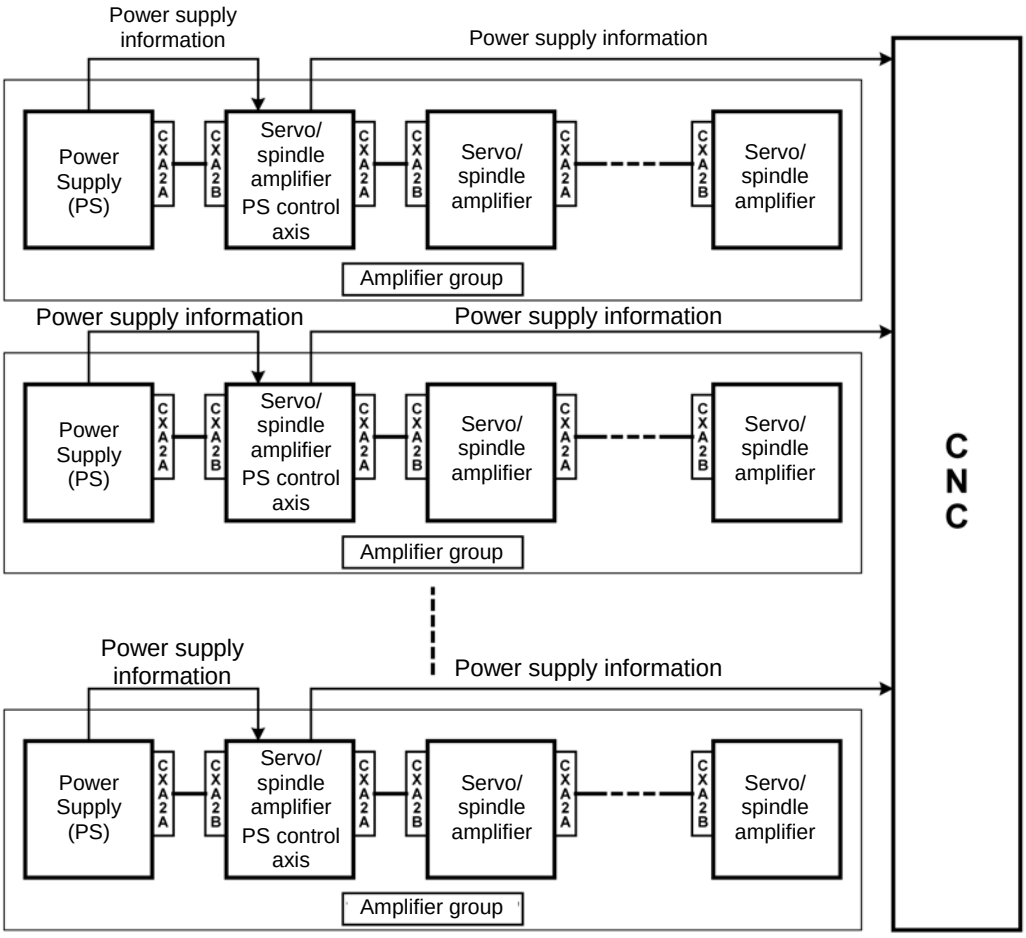

4.1.2.3 Parameter setting for specifying the PS control axis

The following steps are required to use the αi-B amplifier.

(1) Parameter setting procedure
You must set an amplifier group number to each parameter as follows so that the CNC software recognizes the PS control axis.
When the PS control axis is the servo axis: Parameter No. 2557
When the PS control axis is the spindle axis: Parameter No. 4657
This setting can be made automatically with the following procedure.
(a) Set 1 to bit 0 of parameter No. 11549 (APS).
(b) On ALARM MESSAGE screen, "PW0000 POWER MUST BE OFF" will be displayed. When the CNC is turned OFF and then turned ON, a value is automatically set in parameter No. 2557 or 4657, completing the PS control axis parameter setting.
* Upon completion of the automatic parameter setting, bit 0 of No. 11549 returns to 0.
* If the amplifier configuration is changed, the alarm "PS CONTROL AXIS ERROR" occurs immediately after the CNC starts up, in which case the automatic setting needs to be performed again.

Related parameter	Description
No.11549#0(APS)	When you set 1 to this parameter, an amplifier group number is automatically set to parameter No. 2557 or 4657 for the PS control axis.
No.2557	Sets an amplifier group number value to the PS control axis when the servo axis is the PS control axis.
No.4657	Sets an amplifier group number value to the PS control axis when the spindle axis is the PS control axis.

(2) Specific setting example

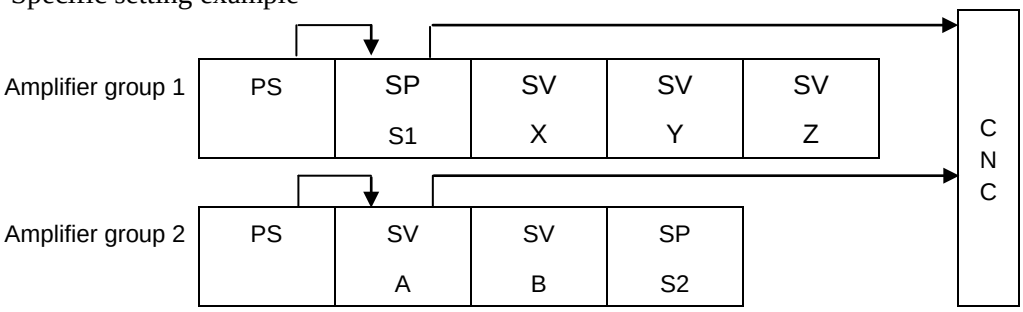

In the amplifier configuration shown in the above figure, the parameters are set as follows. 1 or 2 is automatically assigned as an amplifier group number.

Amplifier group 1

PS	SP S1	SV X	SV Y	SV Z

No.2557		0	0	0
No.4657	1			

Amplifier group 2

PS	SV A	SV B	SP S2

No.2557	2	0	
No.4657			0

4.1.3 Things to Be Checked if the Status LED Is Off

Table 4.1.3 Check methods and actions

No.	Cause of trouble	Check method	Action
1	The 24 VDC power supply for the control circuit is not input.	Check that the power is connected to connector CXA2D.	Make changes to input the 24 VDC power supply.
2	The fuse on the control printed circuit board has blown.	See Section 5.3, "HOW TO REPLACE THE FUSES" in Part II.	Replace fuse F1. If the replaced fuse blows again, replace the Power Supply.
3	The 24 V power supply output CXA2A is short-circuited.	Check that the 24 V power supply output is not short-circuited.	Remove the cause of short-circuiting.
4	A load beyond the output capacity of the 24 VDC power supply is connected to the load current of the amplifier.	Check the output capacity of the 24 VDC power supply.	Change the 24 VDC power supply.
5	Fault in the Power Supply		Replace the Power Supply.

4.1.4 If the Magnetic Contactor Is Not Turned ON

If the magnetic contactor is not turned ON, check the following items.

(1) Emergency stop signal
Check that the emergency stop input (CX4) is connected correctly.

(2) Communication interface between amplifiers
Check that the cable for the interface (CXA2A/B) between the amplifiers is connected correctly.

(3) Connection for driving the magnetic contactor
Check that the power supply cable for driving the magnetic contactor is connected correctly with CX3 of the Power Supply.

(4) Magnetic contactor
Fault of the magnetic contactor alone

(5) External sequence
- Check that emergency stop is canceled.
- Regarding the cable of the power supply for driving the magnetic contactor, if a switch or other component is connected with CX3 in series, check that that switch is turned ON when emergency stop is canceled.

(6) Fault in the Power Supply

4.1.5 Pre-charge Failure Alarm

See Appendix D, "TROUBLESHOOTING OF PS PRE-CHARGE FAILURES."

4.2 SERVO AMPLIFIER

Check each item according to the procedure described below.

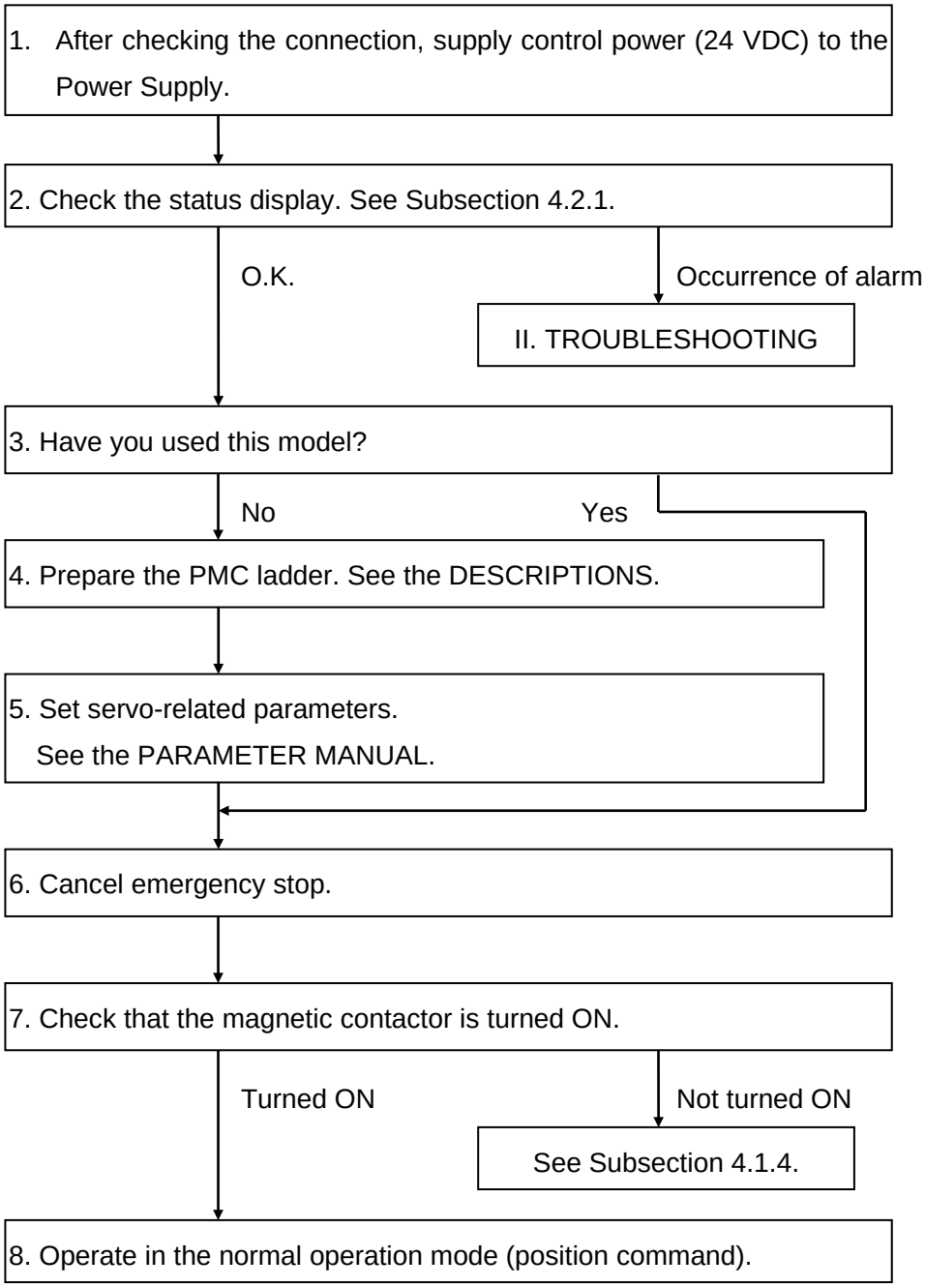

4.2.1 Checking the Status Display (Servo Amplifier)

The status display (a 7-segment LED) on the front of the servo amplifier indicates the operation status.

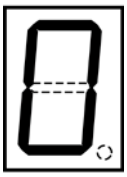

Number display

Status LED position	Number display	Description
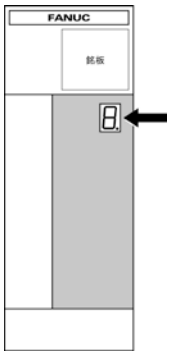	Not displayed	The status LED is off. Control power has not been supplied, cable is faulty, or control power circuit is defective.
	Alphanumeric	During a period of approximately four seconds after the power is turned on, the information about the software series and edition is displayed broken up into eight parts. Example) When the software series and edition are 9H00/01.0 9 → H → 0 → 0 → 0 → 1 → . → 0
	- ON	Waiting for READY signal from CNC
	0 Blinking	The insulation resistance is being measured.
	0 ON	Ready status The servo motor is excited.
	1 or above is displayed.	Alarm status The alarm type is indicated by the character displayed.
	- Blinking	Safe torque-off status

4.2.2 If the Status LED Does Not Light up

No.	Cause of trouble	Check method	Action
1	24 VDC power for the control circuit is not supplied.	Check that the power is connected to connector CXA2A.	Make changes to supply 24 VDC power.
2	The fuse on the control printed circuit board has blown.	See Section 5.3, "HOW TO REPLACE THE FUSES" in Part II.	Replace fuse F1. If the replaced fuse blows again, replace the servo amplifier.
3	Short-circuiting of the power supply outside the servo amplifier	"-" blinks on the LED when the power is turned ON. The LED lights up when the cable is removed from the servo amplifier.	Replace or repair the cable.
4	Fault in the spindle amplifier	Nos. 1 to 3 do not apply.	Replace the servo amplifier.

4.2.3 V Ready-off Alarm Indicated on the CNC Screen

When the V ready-off alarm is indicated on the CNC, check the items listed below.
In addition, V ready-off can also occur for reasons other than those listed below. If the following items turn out to have not caused V ready-off, check diagnosis information No. 358 (V ready-off information) on the diagnosis screen and report it to FANUC.

(1) Communication interface between amplifiers
Is the cable for the communication interface (CXA2A/B) between the amplifiers connected correctly?
(2) Emergency stop signal (ESP)
Has the emergency stop signal (connector: CX4) applied to the Power Supply been released? Alternatively, is the signal connected correctly?
(3) MCON signal
Has setting up the axis detach function disabled the transmission of the ready command signal MCON from the CNC to the servo amplifier?
(4) Control printed circuit board in the servo amplifier
The control printed circuit board in the servo amplifier may be poorly installed or faulty. Be sure to push the faceplate as far as it will go. If this does not improve the situation, replace the servo amplifier.

In the Series 30*i*-B, 31*i*-B, 32*i*-B, 35*i*-B, 0*i*-D, 0*i*-F, or Power Motion *i*-MODEL A, checking diagnosis information (DGN) No. 358 makes it possible to analyze the cause of the V ready-off alarm.

Diagnosis	358	V ready-off information

Convert the displayed value to binary form, and check bits 5 to 14 of the resulting binary number.
When the servo amplifier starts working, these bits become 1 sequentially, starting at bit 5. When the servo amplifier has started normally, all of bits 5 to 14 become 1.
Check bits 5 to 14 sequentially, starting from the lowest-order bit. The first lowest bit that is not 0 corresponds to the process that caused the V ready-off alarm.

#15	#14	#13	#12	#11	#10	#9	#8
	SRDY	DRDY	INTL	RLY	CRDY	MCOFF	MCONA
#7	**#6**	**#5**	**#4**	**#3**	**#2**	**#1**	**#0**
MCONS	*ESP	HRDY					

#06 (*ESP) : Emergency stop signal
#07, #08, #09 : MCON signal (NC → Servo amplifier → Power Supply)
#10 (CRDY) : Power Supply preparation completed signal
#11 (RLY) : Relay signal (DB relay drive)
#12 (INTL) : Interlock signal (DB relay cancellation status)
#13 (DRDY) : Amplifier preparation completed signal
The following table lists the values of diagnosis No. 358 and the main causes of problems. Do not insert or remove any connectors when the power is on.

Diagnosis No. 358 value	Problem	Check item
417	The system is still in an emergency stop state.	(1) Check whether the emergency stop signal input to CX4 of the Power Supply has been released. (2) Check if there is a problem with the connection or cable for the communication interface between the amplifiers. (3) Replace the servo amplifier.
993	The Power Supply preparation completed signal (CRDY) is not output.	(1) Check if there is a problem with the connection or cable for the communication interface (CXA2A/B) between the amplifiers. (2) Check whether the input power is supplied. (3) Check whether the power is supplied to the operation coil of the magnetic contactor. Check if there is a problem with the connection of CX3 of the Power Supply. (4) Replace the servo amplifier.
4065	The interlock signal is not input.	When a dynamic brake module (DBM) is used, check (1) to (4). When no DBM is used, replace the servo amplifier. (1) Check the connection between the servo amplifier and DBM. (2) Check the drive voltage of the DBM. (The drive voltage of the DBM is 24 VDC or 200 VAC.) (3) Check whether the fuse (FU2) on the control printed circuit board in the servo amplifier has blown. (4) Replace the servo amplifier.
225	-	Replace the servo amplifier.
481	-	Replace the servo amplifier.
2017	-	Replace the servo amplifier.
8161	-	Replace the servo amplifier.
97	-	Check whether the axis detach function is set.

4.2.4 Method for Observing Motor Current

This subsection explains how to observe the current that flows through the servo motor using the SERVO GUIDE. See the online help for explanations about how to connect to and use the servo adjustment tool, SERVO GUIDE.

Setting

Select the axis to be measured in the graph window channel setting. Also select IR or IS under Kind. Under Coef (conversion coefficient), set the maximum allowable current (Ap) for the amplifier in use.

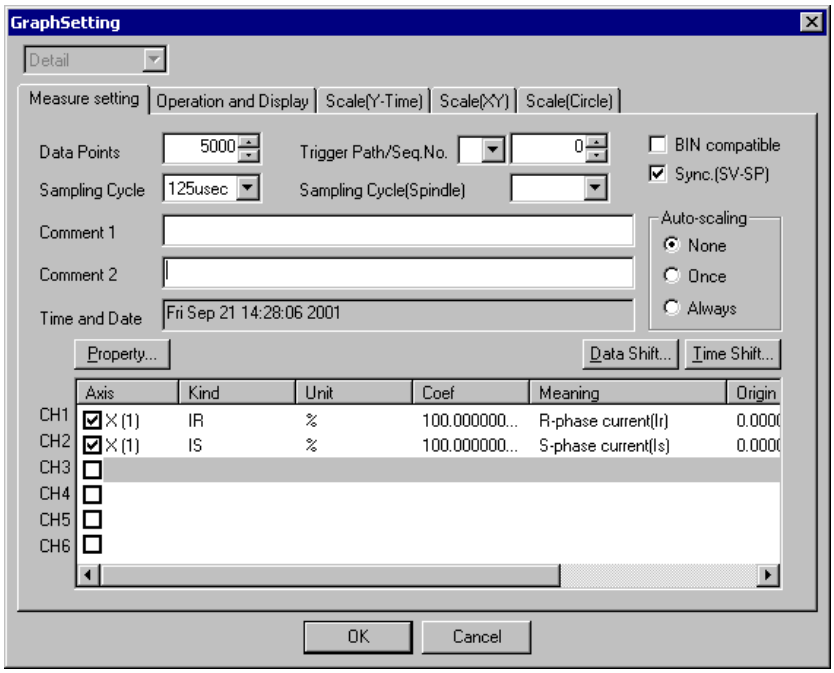

NOTE

The maximum settable motor current sampling cycle is 125 μsec in HRV2 and 62.5 μsec in HRV3 and HRV4.

Display

Select the XTYT mode from the graph window mode (M) menu to display waveforms.

4.3 SPINDLE AMPLIFIER

Check each item according to the procedure described below.

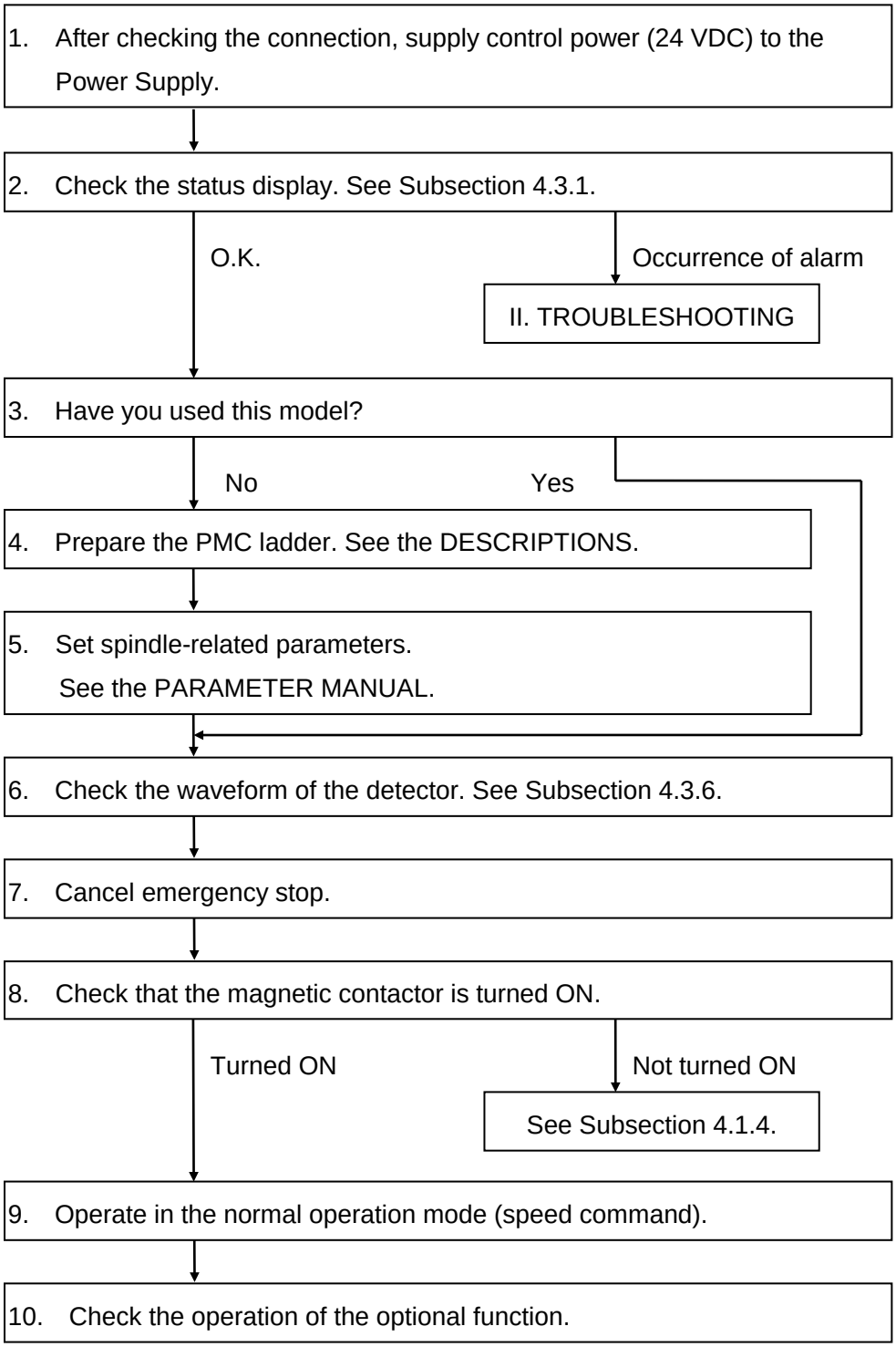

4.3.1 Checking the Status Display (Spindle Amplifier)

The operation status of the spindle amplifier can be checked on the status display (7-segment LED and three-color LEDs on its left) on the front of the spindle amplifier.

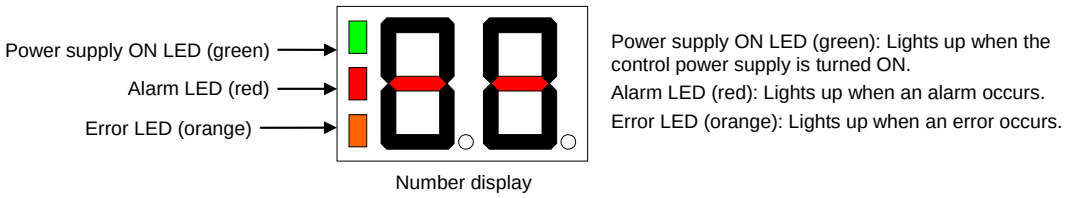

Alarm LED	Error LED	Number display	Description
		Not displayed (OFF)	The control power supply may not be input or the spindle amplifier hardware may be faulty. For details, see Subsection 4.3.2.1, "If the LED (green) does not light up."
		Alphanumeric ON	For about three seconds after the control power is turned on, the series and edition of the spindle control software are displayed. First approx. 1 second: A Next 1 second: Last 2 digits of the software series Next 1 second: 2-digit software edition Example) For spindle control software Series 9DA0 edition 04 [A][ ] → [A][0] → [0][4]
		-- at center Blinking	Indicates that the spindle amplifier is turned ON and that it waits for completion of establishment of serial communication with the CNC and loading of parameters. (This display also appears if power is not input to the CNC.)
		-- at center ON	Indicates that the parameters have been loaded. The motor is not supplied with power.
		00 ON	Indicates that the motor is supplied with power.
		00 Blinking	The isolation deterioration measurement function to measure the isolation resistance of the spindle motor, which starts after emergency stop, is operating. Be careful because current for measurement is flowing between the amplifier and the motor.
		-- at the top Blinking	Power is interrupted by the safe torque-off (STO) function. This status can coexist with the number display of other statuses. (Example: -- at the top and center blink when the amplifier is waiting for completion of establishment of serial communication with the CNC and loading of parameters.)
ON (red)		01 or above is displayed.	Indicates the alarm status. Because the spindle amplifier is inoperable, remove the cause of the alarm, while referring to "4.4 SPINDLE AMPLIFIER" in Part II.
ON (red)		UU, LL is displayed.	FSSB communication error.
ON (red)		A1, A2 is displayed.	An error occurred in the spindle software process. Check the generation status and contact FANUC.
ON (red)		A3 is displayed.	An error occurred in the safe torque-off (STO) function circuit. Check the generation status and contact FANUC.
	ON (orange)	01 or above is displayed.	Indicates the error status. The sequence is inappropriate or parameter settings are not correct. Remove the cause of the alarm, while referring to Subsection 4.3.3.

4.3.2 Troubleshooting at Startup

4.3.2.1 If the LED (green) does not light up

If the LED (green) does not light up after the spindle amplifier is turned ON, identify the cause of the problem and take appropriate action according to the following table.

No.	Cause of trouble	Check method	Action
1	24 VDC for control is not input to the spindle amplifier.	The status LEDs on the spindle amplifier do not light up.	Make changes to supply 24 VDC power.
2	Cable fault	The status LEDs on another amplifier light up.	Replace or repair the cable connected to connector CXA2A/B of the spindle amplifier.
3	Short-circuiting of the power supply outside the spindle amplifier	The power supply ON LED (green) lights up when the cable is removed from the spindle amplifier.	Replace or repair the cable.
4	Fuse blown on the control printed circuit board	The power supply ON LED (green) does not light up even after all the cables (except for connector CXA2A/B) are removed from the spindle amplifier. Check if the fuse on the control printed circuit board has blown, while referring to "5.3 HOW TO REPLACE THE FUSES" in Part II.	If this fuse has blown, a fault in the spindle amplifier hardware is highly suspected. Replace the spindle amplifier. However, this fuse could blow when the 24 V cable and 0 V cable of the connector CXA2A/B are connected backwards. In this case, restore the correct status by taking the following action. 1 Correct the 24 V and 0 V cables. 2 Replace the fuse.
5	Fault in the spindle amplifier	Nos. 1 to 4 do not apply.	Replace the spindle amplifier.

(*) You can check whether the fuse has blown by visually checking the elements inside the fuse or removing the fuse and checking its conductivity using a tester.

4.3.2.2 If the status LED keeps blinking and displaying "--"

(1) When no spindle alarm is indicated on the CNC
Make sure the CNC software option setting or bit setting is correct.

(2) When a spindle alarm is indicated on the CNC
Check each item according to the tables below. However, even with the αi-B series spindle amplifier, see "When using the electrical interface for connection" below when using the electrical interface to establish communication with the CNC.

- When using the optical interface for connection

No.	Cause of trouble	Check method	Action
1	Cable fault	The optical cable or the connector for optical cable COP10A/B is faulty.	Check the connector housing section or replace the cable.
2	Fault in the spindle amplifier	No. 1 does not apply.	Replace the spindle amplifier.

- When using the electrical interface for connection

No.	Cause of trouble	Check method	Action
1	Cable fault	The cable for CNC communication or connector JA7A/B is faulty (*).	Check the connector housing section or replace the cable.
2	Fault in the spindle amplifier	No. 1 does not apply.	Replace the spindle amplifier.

(*) Cable specifications are different when the optical adapter or serial spindle connector panel is used. In this case, check the cable specifications.

4.3.2.3 When the motor does not turn

(1) When the status LED on the spindle amplifier displays "--" (on)
Check whether spindle control signals are input.
(An example for the first spindle is shown below.)

	#7	#6	#5	#4	#3	#2	#1	#0
G070	MRDYA		SFRA	SRVA				
G071							*ESPA	
G029		*SSTP						
G030	SOV7	SOV6	SOV5	SOV4	SOV3	SOV2	SOV1	SOV0

(2) When the status LED on the spindle amplifier displays "00" (on)
No spindle speed command is input.
Check related parameters, while referring to the FANUC AC SPINDLE MOTOR αi/βi series PARAMETER MANUAL (B-65280EN).

(3) When an alarm number is indicated on the spindle amplifier
See the description of the relevant alarm number in Part II.

4.3.2.4 When the specified speed cannot be obtained

(1) If the spindle rotates at a speed other than that specified without generating an alarm
Check the parameter.
Check related parameters, while referring to the FANUC AC SPINDLE MOTOR αi/βi series PARAMETER MANUAL (B-65280EN).

(2) If an alarm occurs
See the description of the relevant alarm number in Part II.

4.3.2.5 When cutting is not performed, the spindle vibrates, making noise

(1) When the spindle vibrates at a particular speed
Check whether the spindle also vibrates when the motor is turning by inertia. If the same vibration occurs when the motor is turning by inertia, search for a source of mechanical vibration.
There are several methods for turning the spindle by inertia, as described below. Because these methods involve machine sequences, be sure to consult with the machine tool builder.
A Input signal MPOF (G73#2) to 1 immediately causes the spindle to turn by inertia.
B Set bit 2 (ALSP) of parameter No. 4009 to 1. Then, when the power to the CNC is turned off during spindle rotation, the spindle turns by inertia. At this time, on the spindle amplifier, Alarm 24 is indicated.

(2) When the spindle vibrates regardless of the speed (also during a control stop)
A Check and adjust the signal waveform of the spindle sensor. For details, see Subsection 4.3.6, "Checking the Feedback Signal Waveform."
B Check that the motor part number matches its parameters.
For details, see the FANUC AC SPINDLE MOTOR αi/βi series PARAMETER MANUAL (B-65280EN).
C Adjust the speed loop gain and other characteristics.
For details, see the FANUC AC SPINDLE MOTOR αi/βi series PARAMETER MANUAL (B-65280EN).

4.3.2.6 When an overshoot or hunting occurs

Adjust parameters, while referring to the FANUC AC SPINDLE MOTOR αi/βi series PARAMETER MANUAL (B-65280EN).

4.3.2.7 When cutting power weakens or acceleration/deceleration slows down

(1) When the load meter does not indicate the maximum output
A A mechanical cause such as a belt slip may occur.
(2) When the load meter indicates the maximum output
A The torque-limiting signal could be inadvertently input.

	#7	#6	#5	#4	#3	#2	#1	#0
G070							TLMHA	TLMLA

B When the αiBZ SENSOR is used, the sensor gear could slip in the space with the spindle during acceleration.
C The motor part number may not be appropriate for the specific parameters.
For details, see the FANUC AC SPINDLE MOTOR αi/βi series PARAMETER MANUAL (B-65280EN).
D The output limit pattern may be set incorrectly.
For details, see the FANUC AC SPINDLE MOTOR αi/βi series PARAMETER MANUAL (B-65280EN).

4.3.3 Status Error Indication

The status error indication function is provided to facilitate troubleshooting for example when the machine starts up. If parameter settings or sequences are not appropriate, the error LED (yellow) lights up in the display section of the spindle amplifier and an error number is displayed.

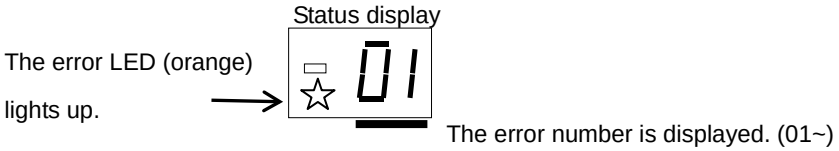

The error number of the status error is also displayed on the CNC diagnosis screen.

Diagnosis No.	Description
710	Status error code

If the spindle amplifier does not operate even though an alarm does not occur when a specific function is used, check if a status error is displayed in the display section of the spindle amplifier or on the CNC diagnosis screen.

Display	Description	Action
01	Although neither *ESP (emergency stop signal) (there are two types of signals, input signal and Power Supply (PS) contact signal) nor MRDY (machine ready signal) has been input, SFR (forward rotation command), SRV (reverse rotation command), or ORCM (orientation command) is input.	Check the *ESP and MRDY sequences. For MRDY, pay attention to the parameter that specifies whether to use the MRDY signal (bit 0 of parameter No. 4001).
03	Although parameter settings are such that there is no position sensor (bits 3, 2, 1, 0 of No. 4002 = 0, 0, 0, 0), a Cs axis contour control command has been issued. In this case, the motor is not activated.	Check the parameter settings.
04	Although parameter settings are such that there is no position sensor (bits 3, 2, 1, 0 of No. 4002 = 0, 0, 0, 0), a servo mode (such as rigid tapping or Cs axis control) command or spindle synchronization control command has been issued. In this case, the motor is not activated.	Check the parameter settings.
05	An ORCM (orientation command) is input even though the optional parameter for the orientation function is not set.	Check the setting of the parameter for orientation.
06	Low-speed winding is selected (RCH = 1) even though the optional parameter for the output switching option is not set.	Check the setting of the parameter for output switching and the power line status signal (RCH).
07	Although a Cs contour control command is input, neither SFR (forward rotation command) nor SRV (reverse rotation command) is input.	Check the sequence.
08	Although a servo mode (rigid tapping or spindle positioning) control command is input, neither SFR (forward rotation command) nor SRV (reverse rotation command) is input.	Check the sequence.
09	Although a spindle synchronization control command is input, neither SFR (forward rotation command) nor SRV (reverse rotation command) is input.	Check the sequence.

Display	Description	Action
10	Although Cs contour control command is input, another operation mode (servo mode, spindle synchronization, or orientation) is specified.	Do not specify another mode during execution of the Cs contour control command. Cancel execution of the Cs contour control command before entering into another mode.
11	Although servo mode (rigid tapping or spindle positioning) is input, another operation mode (Cs contour control, spindle synchronization, or orientation) is specified.	Do not specify another mode during execution of the servo mode command. Cancel execution of the servo mode command before entering into another mode.
12	Although spindle synchronization is input, another operation mode (Cs contour control, servo mode, or orientation) is specified.	Do not specify another mode during execution of the spindle synchronization control command. Cancel execution of the spindle synchronization control command before entering into another mode.
13	Although orientation specification is input, another operation mode (Cs contour control, servo mode, or synchronization control) is specified.	Do not specify another mode during execution of the orientation command. Cancel execution of the orientation command before entering into another mode.
14	The SFR (forward rotation command) and SRV (reverse rotation command) are input at the same time.	Only specify one of them.
16	Although the parameter not to use the differential speed control function (bit 5 of parameter No. 4000 = 0) is set, DEFMD (differential speed mode command) is input.	Check the setting of the parameter and the differential speed mode command.
17	The parameter settings for the speed detector (bits 2, 1, and 0 of parameter No. 4011) are invalid. There is no speed detector that matches the settings.	Check the parameter settings.
18	Although parameter settings are such that there is no position sensor (position control is not to be performed), that is, "bits 3, 2, 1, and 0 of parameter No. 4002 = 0, 0, 0, and 0," a position coder-based orientation command has been issued.	Check the parameter settings and the input signal.
19	Although magnetic sensor orientation command is input, another operation mode (Cs contour control, servo mode, or spindle synchronization) is specified.	Do not specify another mode during execution of the orientation command. Cancel execution of the orientation command before entering into another mode.
21	The tandem operation command was input in the spindle synchronization control enable state.	Input the tandem operation command when spindle synchronization control is canceled.
22	Spindle synchronization control was specified in the tandem operation enable state.	Specify spindle synchronization control when the torque tandem operation is canceled.
23	The tandem operation command is input without the required option.	Torque tandem control requires a CNC software option. Check the option.
24	Although continuous indexing in position coder-based orientation is to be performed, an absolute position command (INCMD = 0) is issued after incremental operation (INCMD = 1).	Check INCMD (incremental command). Be sure to perform absolute position command-based orientation before an absolute position command.
26	The parameter settings are such that both spindle switch and three-stage speed range switch are used.	Check the parameter settings and the input signal.
29	Parameter settings are such that the shortest-time orientation function is to be used (bit 6 of parameter No. 4018 is 0 and parameter Nos. 4320 to 4323 are nonzero).	The shortest-time orientation function cannot be used in the αiSP-B series. The use of the optimum orientation function is recommended.

Display	Description	Action
30	The magnetic pole has not been detected, but a command is input.	In the magnetic pole undetected state (EPFIXA = 0), the motor cannot be driven even when a command is input. Input a command in the magnetic pole detected state (EPFIXA = 1). When EPFSTR is set to 1, all commands are ignored and this error is displayed even in the magnetic pole detected state. After the completion of magnetic pole detection, set EPFSTR to 0.
31	This hardware configuration does not support the use of the spindle FAD function. In this case, the motor is not activated.	Check the CNC model.
32	S0 is not specified in the velocity mode, but the disturbance input function is enabled (bit 7 of parameter No. 4395 is set to 1).	Specify S0 in the velocity mode before enabling the disturbance input function (bit 7 of parameter No. 4395 to 1).
33	This hardware configuration does not support the use of the spindle EGB function. In this case, the motor is not activated.	Check the CNC model.
34	Both spindle FAD function and spindle EGB function are enabled. In this case, the motor is not activated.	These functions cannot be used at the same time. Enable either of the functions.
35	Spindle amplifier ID information cannot be obtained.	Replace the spindle amplifier with one with correct ID information.
36	The submodule SM (SSM) is faulty. 1) The interface signal between the spindle amplifier and SSM is disconnected. 2) The SSM is faulty.	For details on how to address this status error, see Section 1.4, "SUBMODULE SM" in Part III in the FANUC AC SPINDLE MOTOR αi series PARAMETER MANUAL (B-65280EN).
37	The current loop setting (No. 4012) has been changed.	Check the setting of parameter No. 4012, and turn the power off, then on again.
38	A parameter related to communication between spindle amplifiers is specified incorrectly. Alternatively, a function unavailable with the torque tandem function is set.	Check the parameter.
39	The DSCN (disconnection detection disable signal) is input with the SFR (forward rotation command), SRV (reverse rotation command) or ORCM (orientation command) input.	Check the sequence. Do not input the DSCN (disconnection detection disable signal) while the command to supply power for the motor is input.
43	A setting not supported by the αiCZ SENSOR (serial output) is made. (*1)	Check the parameter settings.
44	The spindle amplifier does not support the control period setting.	Check the setting of parameter No. 4012.
45	The setting of the maximum output limit during cutting is not supported.	This is a status error concerning the function for output limit during cutting. This function cannot be used in a system in which this error occurs. Disable this function by setting bit 6 of parameter No. 4011 to 0.
46	The CNC system software does not support spindle synchronous control using a nano-command.	The CNC system software does not support a nano-command. Check the series and edition of the CNC system software.
54 +SP9068	The FSSB high-speed rigid tapping and the servo EGB (FSSB method) cannot be used at the same time.	Disable the FSSB high-speed rigid tapping (bit 1 of No. 4549 = 0) or the servo EGB (FSSB method) (bit 2 of No. 4549 = 0).
57 +SP9068	The parameter setting for concurrent use of optimum orientation and servo mode reference position return is not correct.	Set a non-zero value to the parameter for the servo mode reference position return speed (parameter No. 4074).
58 +SP9068	Parameter settings that do not support safe speed monitoring using the spindle speed are made.	Check the settings of bits 3 to 0 of parameter No. 4002.

Display	Description	Action
59 +SP9068	The setting for the spindle orientation stop position least setting unit 360/32768deg is not correct.	• The CNC system software does not support the spindle orientation stop position least setting unit 360/32768deg. Check the series and edition of the CNC system software. • Concurrent use with the orientation function in spindle synchronization control (bit 6 of parameter No. 4014 is 1) is invalid.
60 +SP9167	The sequence for using spindle phase synchronous control is not correct.	Check the sequence for phase matching of spindle synchronous control. When bit 3 of parameter No. 4006 is set to 1 (to not detect the one-rotation signal automatically), if the spindle phase synchronous command is entered in a state where the one-rotation signal is not detected, this error occurs. Check this point.
63 +SP9068	Spindle DC-link stabilizer during power failure is not supported.	The spindle control software does not support spindle DC-link stabilizer during power failure. Check the series and edition of the spindle control software.
64 +SP9167	The sequence is not correct in the servo EGB (FSSB) method.	Do not change the gear during servo EGB with the setting to use the servo EGB (FSSB method) and the arbitrary gear ratio function together.
67	The smart load meter cannot be used.	The CNC system software does not support the smart load meter. Check the series and edition of the CNC system software.
68 +SP9068	The setting for the terminating resistance for third-party analog sensors is not correct.	The setting for the terminating resistance for third-party analog sensors is enabled under the setting to use FANUC analog sensors. Check the settings for the sensor (bits 3 to 0 of No. 4002, bits 2 to 0 of No. 4010) and the settings for the terminating resistance for third-party analog sensors (bits 7 and 6 of No. 4004).
69 +SP9068	The smart rigid tapping cannot be used.	- Constant parameters for magnetic flux control (No. 4105 and No. 4107) are not input. - The sensor-less motor drive and the smart rigid tapping cannot be used together. - The spindle differential speed control and the smart rigid tapping cannot be used together.
70 +SP9068	The setting for third-party temperature sensors is not correct.	Third-party temperature sensor KTY-84 and the setting for using Pt1000 are enabled at the same time. Check the settings for the third-party temperature sensor (bit 4 of No. 4397 and No. 4587).
71 +SP9068	The parameter settings related to current detection are incorrect.	The settings related to current detection are not available in your spindle amplifier. Set 0 to Parameter No. 4744.
72 +SP9167	The sequence of the power line reverse connection function is not correct.	Input the power line reverse connection permission signal before turning the power ON with the power line reverse connection function enabled (bit 6 of No. 4549 = 1).

Display	Description	Action
73 +SP9068	There is an error in the parameter settings or the amplifier status related to the disturbance elimination control or hybrid function of FSC and EGB.	<1> The current control cycle that cannot be used at the same time is set. Set bit 5 of parameter No. 4012 to 0. <2> Communication is not established between spindle amplifiers when the correction start signal of the disturbance elimination control and hybrid function of FSC and EGB is input. Check the settings for the master axis and slave axis (bits 7 and 6 of No. 4352) and communication connection between amplifiers.

NOTE

*1 When status error 43 is displayed, check the following items. The items to be checked differ depending on the series and edition of the spindle software.

Series 9D80 edition E (edition 05) or edition F (edition 06): Items <1> to <12>
Series 9D80 edition G (edition 07): Items <1> to <9>, <12>, and <13>
Series 9D80 edition H (edition 08): Items <1> to <9>, <13>, and <14>
Series 9D90 edition A (edition 01): Items <1> to <9>, <13>, and <14>
Series 9DA0 edition A (edition 01): Items <1> to <9>, <13>, and <14>

<1> For both the motor sensor and spindle sensor, the setting is made to use an αiCZ SENSOR (serial output). (Bits 2, 1, 0 of No. 4010 = 0, 1, 0 and bits 3, 2, 1, 0 of No. 4002 = 0, 1, 1, 0)
<2> Spindle HRV control is not set. (No.4012#7=0)
<3> The setting is made to use the differential speed control function. (No.4000#5=1)
<4> The setting is made to use the spindle switch control function. (No.4014#0=1)
<5> The setting is made so that an alarm related to position feedback is not detected. (No.4007#6=1 or No.4016#5=0)
<6> The setting is made so that the disconnection of the feedback signal is not detected. (No.4007#5=1)
<7> The setting is made so that an alarm related to position signal feedback is not detected during thread cutting. (No.4016#6=0)
<8> The setting is made to use an external one-rotation signal. (No.4004#2=1)
<9> The setting is made to use a position coder. (Bits 3, 2, 1, 0 of No. 4002 = 0, 0, 1, 0)
<10> The setting is made to drive a synchronous spindle motor. (No.4012#6=1)
<11> The setting is made to use communication between spindle amplifiers. (No.4352#7=1 or No.4352#6=1)
<12> The setting is made to use the Dual Check Safety function.
<13> The setting is made to use the spindle tandem function. (No.4015#3=1)
<14> Although the setting is made to use an αiCZ SENSOR (serial output) as the motor sensor, the Dual Check Safety function is enabled.

4.3.4 Observing Data Using the SERVO GUIDE

4.3.4.1 Overview

Using the SERVO GUIDE enables you to observe internal data for the spindle amplifier.
This subsection describes the data that can be observed using the SERVO GUIDE. It also presents examples of observed data. For details on how to use the SERVO GUIDE and other topics, see the FANUC SERVO GUIDE OPERATOR'S MANUAL (B-65404EN) or the SERVO GUIDE online manual.
Data for up to two channels could be measured on one spindle axis in the past, but with the αiSP-B, data for up to four channels can be measured on one spindle axis. For details, see the FANUC SERVO GUIDE OPERATOR'S MANUAL (B-65404EN).

4.3.4.2 Usable series and editions

Series 9DA0 edition A (edition 01) and subsequent editions Series 9DAA edition A (edition 01) and subsequent editions
Series 9DB0 edition A (edition 01) and subsequent editions

4.3.4.3 List of spindle data that can be observed using the SERVO GUIDE

The following table lists the spindle data that can be observed using the SERVO GUIDE. For the latest information on the data that can be observed using the SERVO GUIDE, see the SERVO GUIDE online manual.

Data type	Description	Remark
SPEED	Motor speed	
INORM	Motor current amplitude	
IRMS	Motor current (RMS value)	
IPEAK	Motor current (amplitude value)	
TCMD	Torque command	
TCMD2	Torque command 2	9DA0/14 or later
VCMD	Motor speed command	
VERR	Speed deviation	
MCMD	Move command for each communication cycle	
ERR	Position deviation	
ERRC	Position deviation (CNC)	
SYNC	Synchronization error	
ORERR	Position deviation at orientation	
ORSEQ	Orientation sequence data	
PCPOS	Cumulative position feedback value	
CSPOS	Cumulative position feedback value	
CSPOS2	Cumulative position feedback value	
POS3D	Cumulative position feedback value for 3D display (Cs)	
POS3DN, CSPOSN	Cumulative position feedback value except for correction data	9DA0/21 or later
MTPOS	Cumulative position feedback value (motor-end sensor)	9DA0/21 or later
WMDAT	Move command for each position loop	
ERR2	Position deviation 2	
ERR2C	Position deviation 2 (CNC)	
SPCMD	Speed command data from the CNC	
SPCMD2	Speed command data from the CNC (high	9DA0/16 or later

Data type	Description	Remark
	resolution version)	
SPSPD	Spindle speed	
SPCT1	Spindle control signal 1	
SPCT2	Spindle control signal 2	
SPCT3	Spindle control signal 3	
SPCT4	Spindle control signal 4	9DAA/10 or later, 9DB0/10 or later
SPST1	Spindle status signal 1	
SPST2	Spindle status signal 2	
SPST3	Spindle status signal 3	9DAA/10 or later, 9DB0/10 or later
SFLG1	Spindle flag 1	
SPPOS	Spindle position data (in one rotation)	
LMDAT	Load meter data	
DTRQ	Spindle load torque (unexpected disturbance torque detection function)	
LMDTC	Current value of the load meter (standard for continuous output)	9DAA/04 or later, 9DB0/02 or later
LMMAX	Maximum value of the load meter (standard for continuous output)	9DAA/04 or later, 9DB0/02 or later
DURTM	Time during which processing is possible	9DAA/04 or later, 9DB0/02 or later
AOVCLV	Amplifier OVC level	9DAA/10 or later, 9DB0/10 or later
MOVCLV	Motor OVC level	9DAA/10 or later, 9DB0/10 or later
FREQ	Frequency of disturbance torque (disturbance input function)	
GAIN	Gain data (disturbance input function)	
MTTMP	Motor winding temperature	
MFBDF	Feedback difference data on the motor side (for amplitude ratio and phase difference compensation)	
SFBDF	Feedback difference data on the spindle side (for amplitude ratio and phase difference compensation)	
PA1	AD data of Phase A of motor sensor	
PB1	AD data of B phase of motor sensor	
PA2	AD data of Phase A of spindle sensor	
PB2	AD data of B phase of spindle sensor	
VDC	DC link voltage	
SFERR	Semi-full error (dual position feedback function)	
SMERR	Semi-closed side error (dual position feedback function)	
SPACC	Spindle acceleration	

4.3.4.4 About the spindle control and spindle status signals

As stated in the previous item, the SERVO GUIDE can be used to observe the PMC signals (spindle control signals 1 to 4 and spindle status signals 1 to 3) used by the spindle.
Listed below is the data configuration for spindle control signals 1 to 4 and spindle status signals 1 to 3. For the details of each signal, see Chapter 3 in the FANUC AC SPINDLE MOTOR αi/βi series PARAMETER MANUAL (B-65280EN).

(a) Spindle control signal 1 (SPCT1)

#15	#14	#13	#12	#11	#10	#9	#8
RCH	RSL	INTG	SOCN	MCFN	SPSL	*ESP	ARST
#7	#6	#5	#4	#3	#2	#1	#0
MRDY	ORCM	SFR	SRV	CTH1	CTH2	TLMH	TLML

(b) Spindle control signal 2 (SPCT2)

#15	#14	#13	#12	#11	#10	#9	#8
			DSCN	SORSL	MPOF	SLV	
#7	#6	#5	#4	#3	#2	#1	#0
RCHHG	MFNHG	INCMD	OVR	DEFMD	NRRO	ROTA	INDX

(c) Spindle control signal 3 (SPCT3)

#15	#14	#13	#12	#11	#10	#9	#8
				HF4	HF3	HF2	HF1
#7	#6	#5	#4	#3	#2	#1	#0
FRFSM	INESTR				ARDRQ		

(d) Spindle control signal 4 (SPCT4)

#15	#14	#13	#12	#11	#10	#9	#8
#7	#6	#5	#4	#3	#2	#1	#0
					TDFCAN	PWMSE	

(e) Spindle status signal 1 (SPST1)

#15	#14	#13	#12	#11	#10	#9	#8
			SLVS	RCFN	RCHP	CFIN	CHP
#7	#6	#5	#4	#3	#2	#1	#0
ORAR	TLM	LDT2	LDT1	SAR	SDT	SST	ALM

(f) Spindle status signal 2 (SPST2)

#15	#14	#13	#12	#11	#10	#9	#8
			CSPEN		ARDST		
#7	#6	#5	#4	#3	#2	#1	#0
			EXOF	SOREN	MSOVR	INCST	PC1DT

(g) Spindle status signal 3 (SPST3)

#15	#14	#13	#12	#11	#10	#9	#8
					INESFN	XPFL	FRDTE
#7	#6	#5	#4	#3	#2	#1	#0
							STCST

4.3.4.5 Example of observing data

The following figure shows an example of data (synchronization error and motor speed at rigid tapping) observed using the SERVO GUIDE.

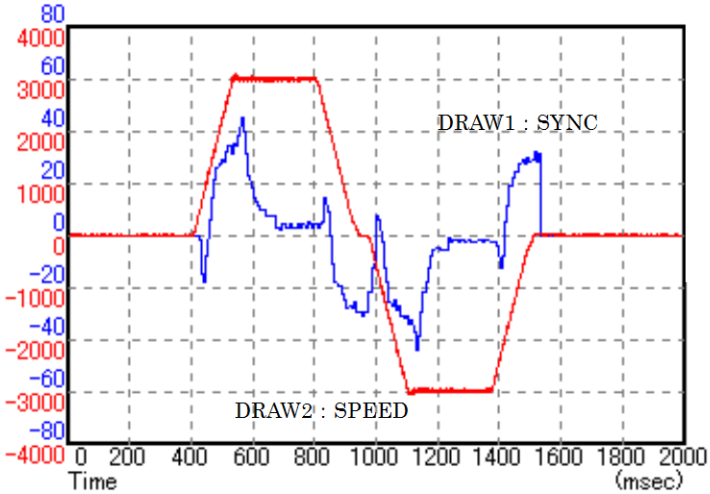

DRAW1 : SYNC (synchronization error) *1
DRAW2 : SPEED (motor speed)
*1 The synchronization error is servo axis output data.

4.3.5 Spindle Check Board

The spindle check board can be used to perform the following operations.

<1> Observation of each type of feedback signal waveform (4.3.6 Checking the Feedback Signal Waveform)
<2> Observation of data in the spindle amplifier (Appendix B.1)
<3> Spindle parameter value check (Appendix B.2)

<2> and <3> above can be performed more easily by using the SERVO GUIDE. The functions, observable data, and other features of the SERVO GUIDE are expanded as needed. For details on the SERVO GUIDE, see the FANUC SERVO GUIDE OPERATOR'S MANUAL (B-65404EN) or the SERVO GUIDE online manual.

4.3.5.1 Spindle check board specifications

Spindle check board specifications are shown below.

Table 4.3.5.1 Spindle check board specifications

Specification	Drawing No. of printed circuit board
A06B-6078-H001	A20B-2001-0830

4.3.5.2 Connection of the spindle check board

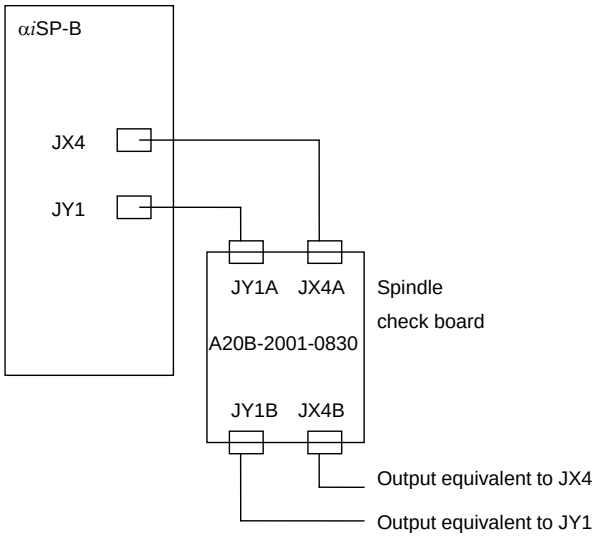

4.3.5.3 Check terminal output signal

(1) αiSP-B series

Check terminal	Signal name	Check terminal	Signal name
LM	Load meter signal	PA1	Phase A sine wave signal 1
SM	Speedometer signal	PB1	Phase B sine wave signal 1
CH1	Analog output for internal data observation (Phase U current: IU)	PS1	Phase Z sine wave signal 1
CH2	Analog output for internal data observation (Motor speed TSA: 1638 min^{-1}/V)	PA2	Phase A sine wave signal 2
CH1D	Output for internal data bit observation	PB2	Phase B sine wave signal 2
CH2D	Output for internal data bit observation	PS2	Phase Z sine wave signal 2
VRM	Unused	PA3	Unused
LSA1	Unused	PB3	Unused
EXTSC1	External one-rotation signal (main)	PA4	Unused
LSA2	Unused	PB4	Unused
EXTSC2	Unused	OVR2	Analog override command
PAD	Phase A of position coder signal output	15V	Unused
PBD	Phase B of position coder signal output	5V	+5 VDC power check
PSD	Phase Z of position coder signal output	-15V	Unused
		GND	0V

Check terminal arrangement

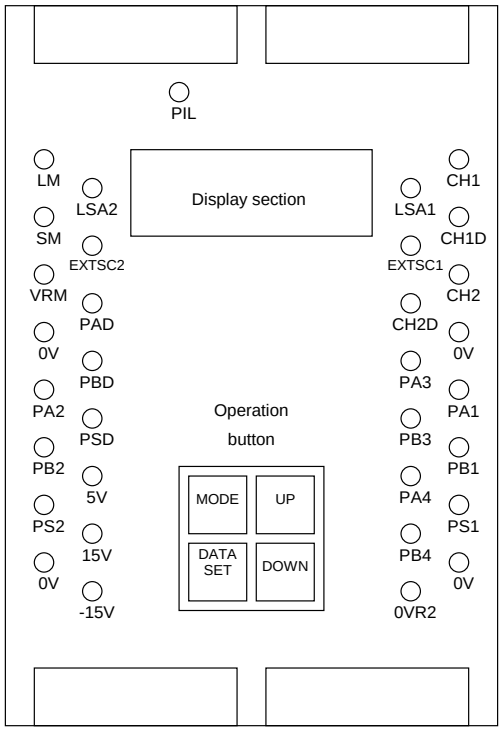

4.3.6 Checking the Feedback Signal Waveform

The spindle check board can be used to check the signal waveform from sensors (detectors). Because a signal is output to the check terminal on the spindle check board, check the waveform using the oscilloscope or other tool. Because the check terminal differs depending on the sensor used, see Table 4.3.6.

Table 4.3.6 List of correspondences between the check terminals on the spindle check board and the spindle amplifier input signals

Check terminal name	Spindle amplifier input signal (connector name-pin number)	Main sensor	Remark
PA1 **PB1**	JYA2-pin5, 6 JYA2-pin7, 8	αiM SENSOR, αiMZ SENSOR, αiBZ SENSOR αiCZ SENSOR (analog output)	
PA2 **PB2**	JYA4-pin5, 6 JYA4-pin7, 8	αiBZ SENSOR αiCZ SENSOR (analog output) α POSITIONCODER S (1024λ)	
PS1	JYA2-pin1, 2	αiMZ SENSOR, αiBZ SENSOR (one-rotation signal) αiCZ SENSOR (analog output) (one-rotation signal)	
PS2	JYA4-pin1, 2	αiBZ SENSOR (one-rotation signal) αiCZ SENSOR (analog output) (one-rotation signal)	
EXTSC1	JYA3-pin15	Proximity switch (external one-rotation signal)	

For the αi POSITIONCODER and α POSITIONCODER S (one-rotation signal), directly observe the input signal to the spindle amplifier using the servo check pin board A06B-6071-K290.

4.3.6.1 αiM SENSOR, αiMZ SENSOR

Measurement location	Measurement condition	Sample waveform
PA1, PB1	Speed: 1500 min^{-1} or less Rotation direction: CW 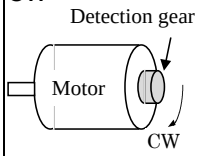	Phase A and B waveforms 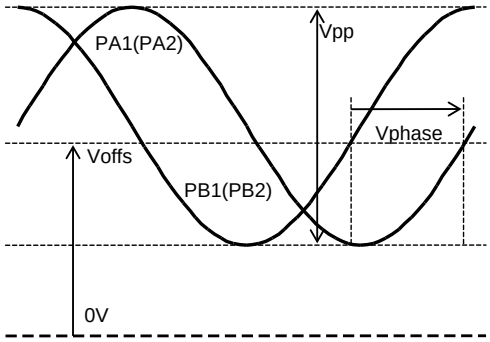
PS1		Phase A and B ripples 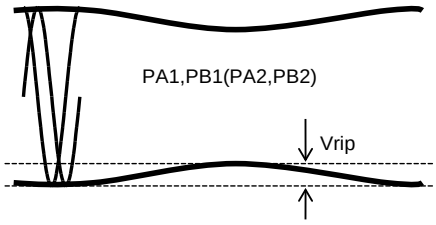
		αiMZ SENSOR only Phase Z waveform 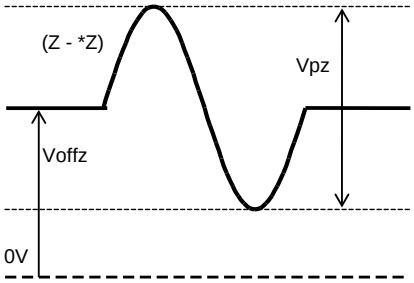

Measurement item	Specification	Measurement method	Adjustment method
Vpp	0.5 ~ 1.2V p-p		It is usually not necessary to adjust the αiM SENSOR or αiMZ SENSOR. Only level checks are possible for Voffs and Voffz. Adjustment is not possible.
Voffs, Voffz	2.5V ± 100mV	Use the DC range of the digital voltmeter.	
Vphase	90±3°		
Vrip	70 mV or less		
Vpz	0.5 V or more		

4.3.6.2 αiBZ SENSOR

The output signal level of the αiBZ SENSOR is designed to fall within the specified range if the sensor is correctly assembled into the machine. To prevent malfunction due to inappropriate assembly, check that the feedback signal waveform is correctly output from the sensor after assembling it. The signal can be checked at the check terminal on the check board below or on the CNC screen shown in Subsection 4.3.7.1.

NOTE
1 Set detector-related parameters before checking the feedback signal. The feedback signal is not correctly output until parameters are loaded from the CNC.
2 When adjusting the gap between the detection ring and the sensor head, be careful not to let the sensor head hit against the detection ring. The sensor could fail.

Check terminal for the feedback signal

The feedback signal from the αiBZ SENSOR can be checked at the following check terminals on the check board.

When used as the motor side sensor

Phase A/B signals	One-rotation signal	Sensor signal input connector
PA1, PB1	PS1	JYA2

When used as the spindle side sensor

Phase A/B signals	One-rotation signal	Sensor signal input connector
PA2, PB2	PS2	JYA4

Measurement location (on the check board)	Measurement condition	Sample waveform
Motor side sensor PA1, PB1 Spindle side sensor PA2, PB2	Rotation speed: 1500 min^{-1} or less Rotation direction: CW Detection ring 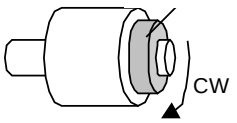 	Phase A and B waveforms 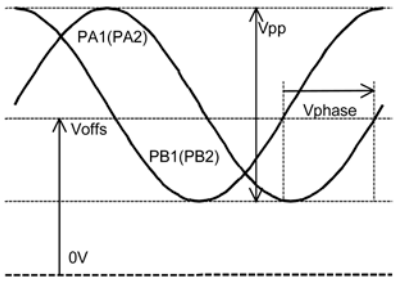 Phase A and B ripples 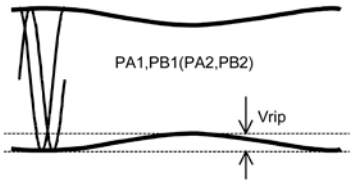

Measurement item	Specified value	Note
Vpp	0.5 ~ 1.2Vp-p	
Voffs	2.5 V ± 100 mV	Use the DC range of the digital voltmeter.
Vphase	90 ± 3°	
Vrip	70 mV or less	

Measurement location (on the check board)	Measurement condition	Sample waveform
Motor side sensor PS1 Spindle side sensor PS2	Rotation speed: 1500 min^{-1} or less Rotation direction: CW Detection ring 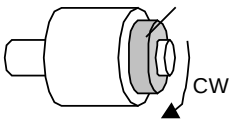 	One-rotation signal (phase Z) waveform 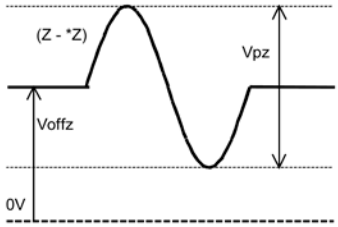

Measurement item	Specified value	Note
Vpz	0.5 V or more	
Voffz	2.5 V ± 100 mV	Use the DC range of the digital voltmeter.

4.3.6.3 αiCZ SENSOR (serial output)

The output signal level of the αiCZ SENSOR is designed to fall within the specified range if the sensor is correctly assembled into the machine. To prevent malfunction due to inappropriate assembly, check that the feedback signal waveform is correctly output from the sensor after assembling it. The signal can be checked at the check terminal in the detection circuit below or on the CNC screen shown in Subsection 4.3.7.2.

The signal waveform can be directly checked at the check terminal in the detection circuit. For the details of the arrangement of the check terminal, see the figure below.

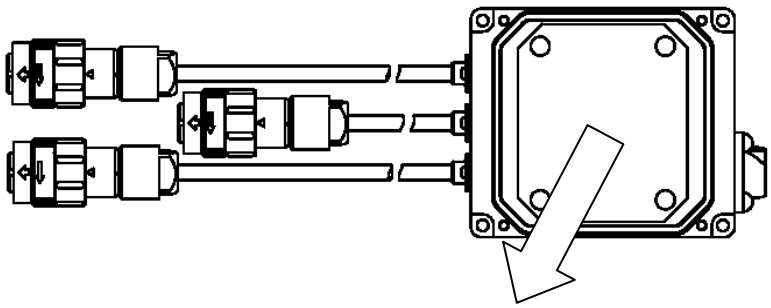

<Check terminal arrangement>

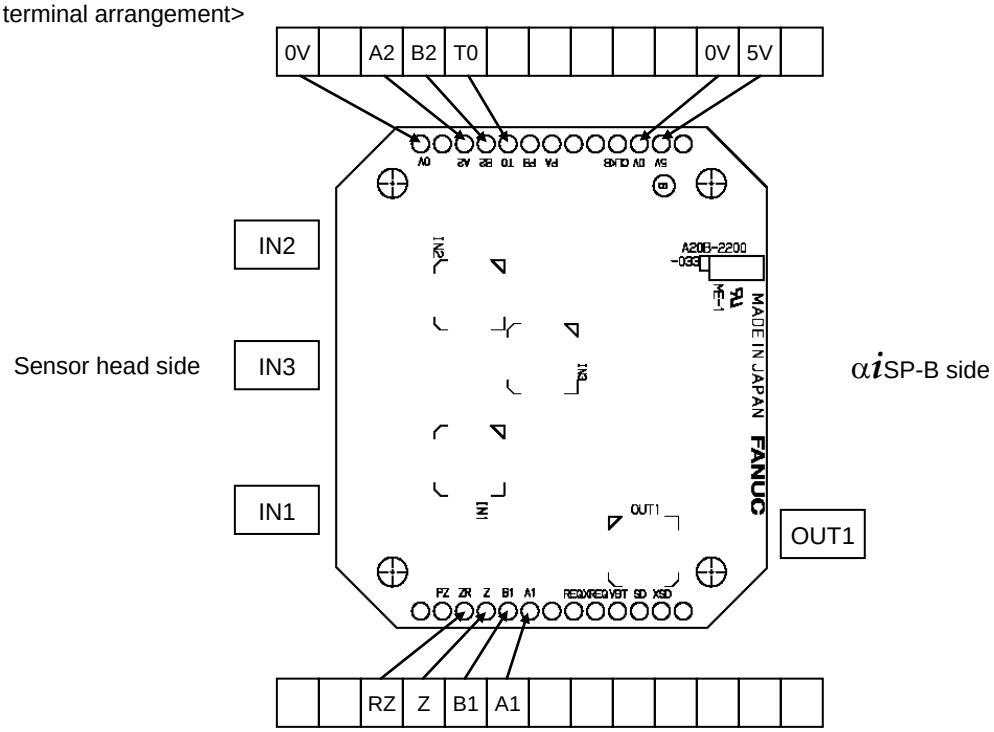

NOTE

1 After checking the signal waveform, be sure to close the cover of the detection circuit.
2 When checking the signal waveform without connecting to the αiSP-B, supply the power to 0 V and 5 V of the check terminal.
3 The Lissajous figure of the phase A/B output signal is a perfect circle.

Specified value of phase A/B and phase Z signal
(measured at the check terminal in the detection circuit at normal temperature at 500 min^{-1})

Signal name	Check terminal (T0 standards)	Output amplitude	Offset
Phase A signal of the sensor head 1 (after amplification) Phase B signal of the sensor head 1 (after amplification)	A1 B1	1,300~3,000 mVp-p	± 180 mV
Phase A signal of the sensor head 2 (after amplification) Phase B signal of the sensor head 2 (after amplification)	A2 B2	1,300~3,000 mVp-p	± 180 mV
Phase Z signal of the sensor head 1	Z	400~900 mVp-p	70 to 150 mV*
Phase RZ signal of the sensor head 1	RZ		

* Measure the DC elements of Z and RZ and regard their difference as the offset.

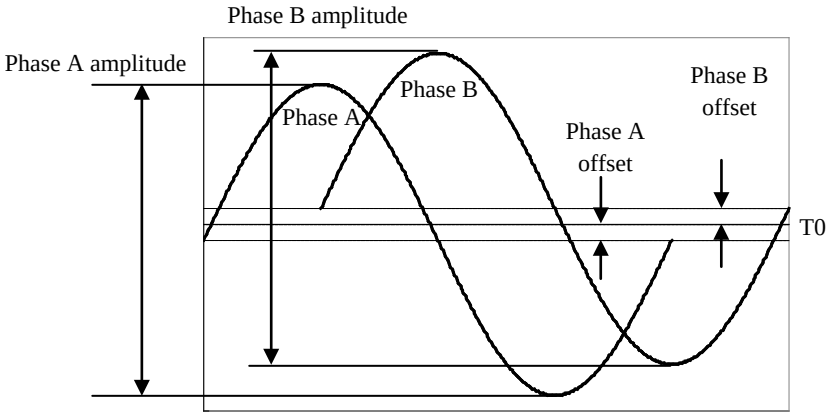

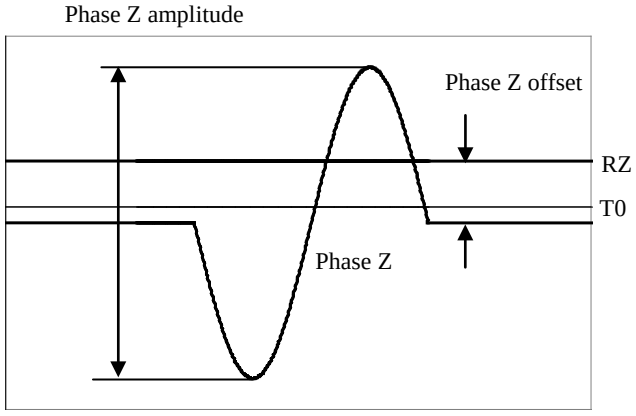

4.3.6.4 α POSITIONCODER S

Measurement location	Measurement condition	Sample waveform
PA2, PB2	Rotation direction viewed from the flange face: CW	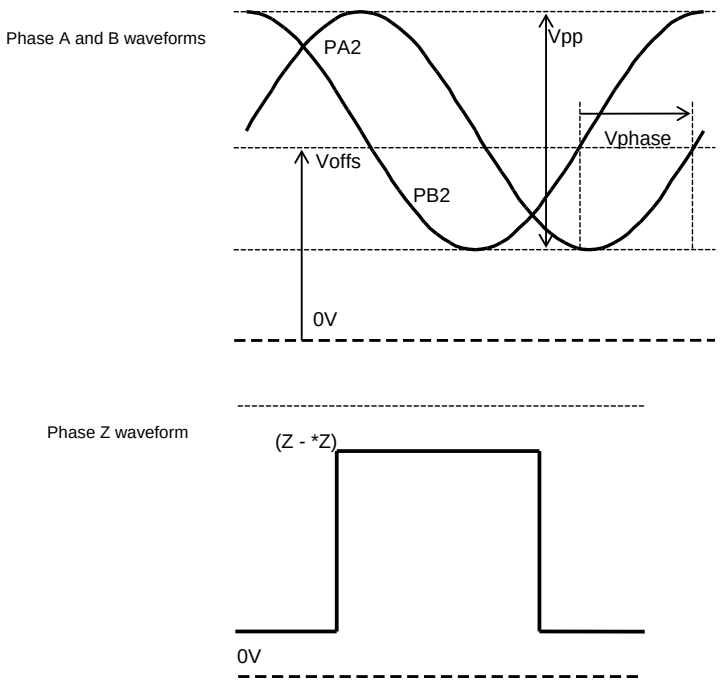

Measurement item	Specification	Measurement method	Adjustment method
Vpp	0.8 ~ 1.2V p-p		The level cannot be adjusted. Only check is possible.
Voffs	2.5V ± 100mV	Use the DC range of the digital voltmeter.	
Vphase	90±5°		

4.3.7 Amplitude and Offset Information Display of the Spindle Sensor

4.3.7.1 αiBZ SENSOR

The CNC diagnosis screen can display the amplitude and offset of phase A/B of the αiBZ SENSOR. This allows you to roughly check the sensor signal without using the oscilloscope or SERVO GUIDE when installing the αiBZ SENSOR, for example.

Target hardware

(Example 1 of sensor use)

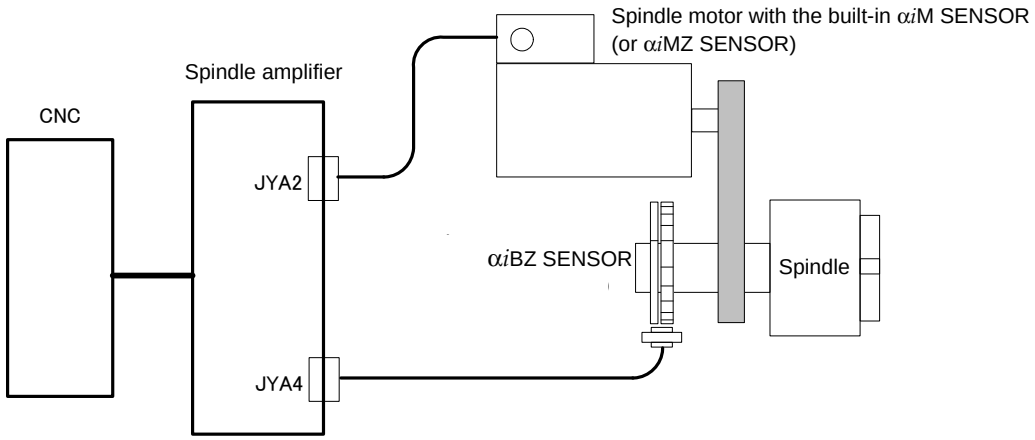

Information on the αiBZ SENSOR can be checked with 722 on the diagnosis

(Example 2 of sensor use)

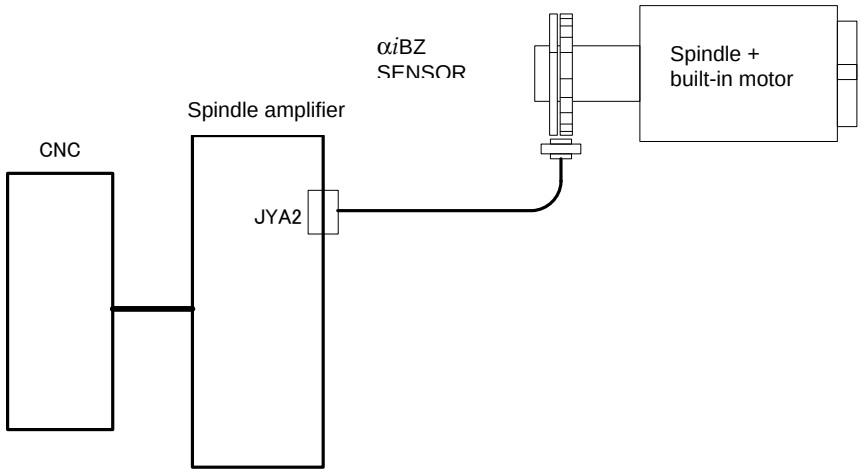

Information on the αiBZ SENSOR can be checked with 720 on the diagnosis

- Check method

The amplitude and offset information on the sensor signal can be checked on the CNC diagnosis screen with the following procedure.
Set detector-related parameters.
(Bits 3, 2, 1, 0 of No. 4002: Spindle sensor, bits 2, 1, 0 of No. 4010: Motor sensor)
Set 15 to parameter No. 4532.

FS30*i*-B / 0*i* -F	
4532	Arbitrary data output function number (for diagnosis screen display)

To check the amplitude and offset of the spindle analog sensor on the CNC diagnosis screen, set 15 to this parameter.

NOTE
- This parameter setting is valid in the spindle control software Series 9DA0 edition T (20) or later or Series 9DB0 edition A (01) or later.

Check the values of Nos. 720 and 722 on the diagnosis screen.

720	Information on the amplitude and offset of phase A/B of the motor sensor (JYA2 connection)

Thousands place: Indicates the motor sensor (JYA2 connection). = 1: Motor sensor
Hundreds place: Indicates the amplitude value with 1 to 9. 3 to 7 are the standard values.
Tens place: Indicates the offset value of Phase A with 1 to 9. 3 to 7 are the standard values.
Ones place: Indicates the offset value of Phase B with 1 to 9. 3 to 7 are the standard values.

722	Information on the amplitude and offset of phase A/B of the spindle sensor (JYA4 connection)

Thousands place: Indicates the spindle sensor (JYA4 connection). = 2: Spindle sensor
Hundreds place: Indicates the amplitude value with 1 to 9. 3 to 7 are the standard values.
Tens place: Indicates the offset value of Phase A with 1 to 9. 3 to 7 are the standard values.
Ones place: Indicates the offset value of Phase B with 1 to 9. 3 to 7 are the standard values.

NOTE
- Other information is displayed unless No. 4532 = 15. Check the display on the above diagnosis screen by checking the motor rotation status. (10 to 100 min^{-1})

Display example: 2 4 5 5

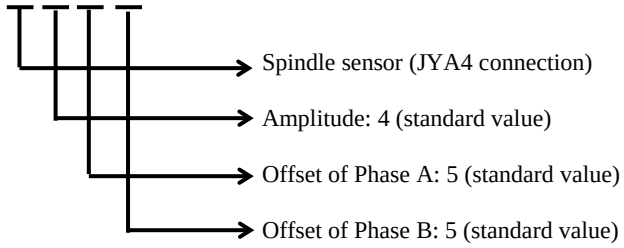

NOTE
- The above standard values are the values for evaluation based on the specifications of FANUC analog sensors. Although the amplitude and offset level are also displayed when a third-party analog sensor is connected, these cannot be used to check the third-party sensor because the standard values of third-party sensors are not known to FANUC.
- When using a third-party analog sensor, directly measure waveforms using the oscilloscope, SERVO GUIDE or other tool and check that they conform to the specifications of each analog sensor.

4.3.7.2 αiCZ SENSOR (serial output)

The CNC diagnosis screen can display the amplitude and offset of phase A/B of the αiCZ SENSOR. This allows you to roughly check the sensor signal without using the oscilloscope or SERVO GUIDE when installing the αiCZ SENSOR, for example.

Target hardware

- αiCZ SENSOR (for built-in spindle motor): A860-2161-T***

Name and specification

Model	Specification
αiCZ SENSOR 512 I	A860-2161-T411
αiCZ SENSOR 768 I	A860-2161-T511
αiCZ SENSOR 1024 I	A860-2161-T611

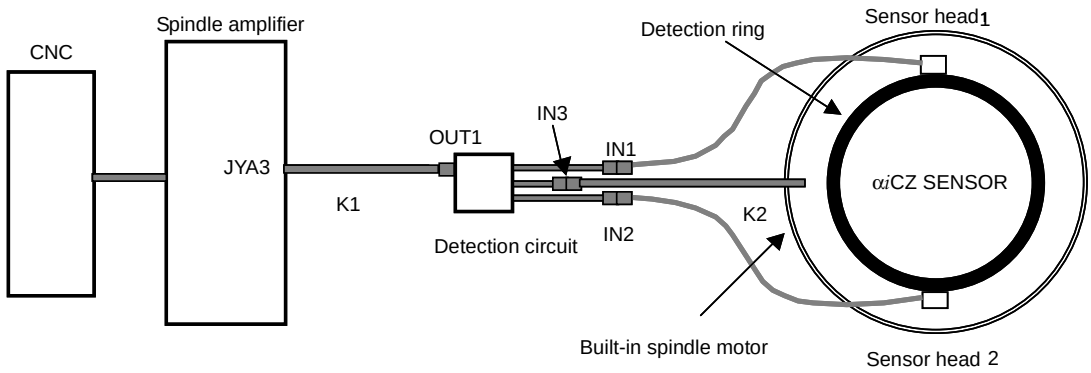

- αiCZ SENSOR (for spindle): A860-2163-T***

Name and specification

Model	Specification
αiCZ SENSOR 512 IS	A860-2163-T411
αiCZ SENSOR 768 IS	A860-2163-T511
αiCZ SENSOR 1024 IS	A860-2163-T611

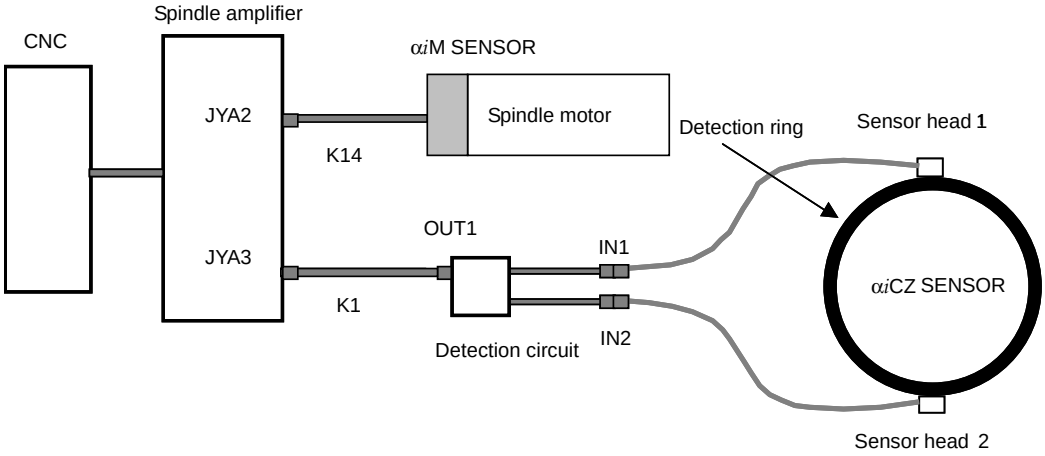

Check method

The amplitude and offset information on the sensor signal can be roughly checked on the CNC diagnosis screen with the following procedure.

<1> Set 9 to parameter No. 4532.

FS30*i*−B / 0*i*−F	
4532	9

<2> For the first spindle, check the values of Nos. 720 and 722 on the diagnosis screen.

720	Information on the amplitude and offset of phase A/B of sensor head 1

Thousands place: Indicates the sensor head number. 1: Sensor head 1, 2: Sensor head 2
Hundreds place: Indicates the amplitude value with 1 to 9. 3 to 7 are the standard values.
Tens place: Indicates the offset value of Phase A with 1 to 9. 3 to 7 are the standard values.
Ones place: Indicates the offset value of Phase B with 1 to 9. 3 to 7 are the standard values.

722	Information on the amplitude and offset of phase A/B of sensor head 2

Thousands place: Indicates the sensor head number. 1: Sensor head 1, 2: Sensor head 2
Hundreds place: Indicates the amplitude value with 1 to 9. 3 to 7 are the standard values.
Tens place: Indicates the offset value of Phase A with 1 to 9. 3 to 7 are the standard values.
Ones place: Indicates the offset value of Phase B with 1 to 9. 3 to 7 are the standard values.

NOTE

- Other information is displayed unless No. 4532 = 15. Check the display on the above diagnosis screen by checking the motor rotation status. (10 to 100 min^{-1})

Display example: 1 4 5 5

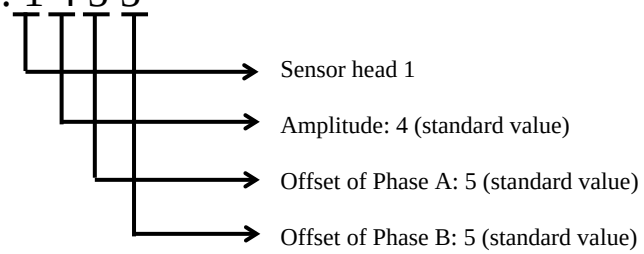

Spindle	Diagnosis No.			
	FS30*i*-B		FS0*i*-F	
	Sensor head 1	Sensor head 2	Sensor head 2	Sensor head 2
First spindle	720 (Each spindle type)	722 (Each spindle type)	720 (Each spindle type)	722 (Each spindle type)
Second spindle				
Third spindle			-	-
Fourth spindle				

II. TROUBLESHOOTING FOR THE αi-B AMPLIFIER

1 OVERVIEW

This part describes the troubleshooting procedure for each amplifier. Read the section related to your current trouble to locate it and take an appropriate action.

The trouble diagnosis function is available for the combination of the 30*i*-B/31*i*-B/32*i*-B/35*i*-B/0*i*-F/Power Motion *i*-A series CNC and the α*i*-B amplifier. The function analyzes causes of alarms and shows how to remove them. If an alarm occurs, switch from the CNC screen to the trouble diagnosis guidance screen and remove the cause of the alarm according to what is displayed on the screen. For details, see Chapter 2, "TROUBLE DIAGNOSIS FUNCTION."

Even when you do not use the trouble diagnosis function, you can track down the cause by referring to Chapter 3, "ALARM NUMBERS AND BRIEF DESCRIPTIONS" and checking the alarm number (indicated by the CNC) and the status display of each amplifier. Take an appropriate action according to the corresponding description in Chapter 4, "TROUBLESHOOTING AND ACTION."

2 TROUBLE DIAGNOSIS FUNCTION

2.1 TROUBLESHOOTING PROCEDURES

2.1.1 Troubleshooting Procedure

The trouble diagnosis function is available for the combination of the 30*i*-B/31*i*-B/32*i*-B/35*i*-B/0*i*-F/Power Motion *i*-A series CNC and the α*i*-B amplifier. The function analyzes causes of alarms and shows how to remove them.
If an alarm occurs, switch from the CNC screen to the trouble diagnosis guidance screen and remove the cause of the alarm according to what is displayed on the screen.

⇒ 2.2 TROUBLE DIAGNOSIS FUNCTION
⇒ 2.2.1 Trouble Diagnosis Guidance

IMPORTANT
- To use the trouble diagnosis guidance requires keeping the trouble diagnosis monitor in the "SAMPLING" state. For details on the operation for switching the state to the "SAMPLING" state, see Subsection 2.2.3, "How to Switch the Trouble Diagnosis Guidance and Trouble Diagnosis Monitor to the 'SAMPLING' State."

The servo amplifier-related data acquired before and at the time of alarm occurrence (concerning the power supply, motor current, and detector) is sent to the CNC. This data can be used for troubleshooting.

⇒ 2.2.2 Trouble Diagnosis Monitor

IMPORTANT
- The trouble diagnosis monitor can be in either of the following two states: "SAMPLING" and "LATCHED."
  To monitor data of new alarms, perform the "CLEAR" operation. To save the status observed when alarms were issued in the past, do not perform the "CLEAR" operation. For details on the operation, see Subsection 2.2.3, "How to Switch the Trouble Diagnosis Guidance and Trouble Diagnosis Monitor to the 'SAMPLING' State."

For a list of servo-related CNC alarm numbers and that of LED display numbers on the servo amplifier, see Part II.

NOTE
- Depending on the content of a failure, it may be difficult to analyze its cause correctly by using the trouble diagnosis function alone. In such a case, check the alarm number, the program associated with the alarm, and the procedure being performed, and contact your FANUC service representative.

2.2 TROUBLE DIAGNOSIS FUNCTION

The 30*i*-B/31*i*-B/32*i*-B/35*i*-B/0*i*-F/Power Motion *i*-A series CNC have a trouble diagnosis function, which allows you to check diagnostic information useful to know the status when a servo, spindle, or CNC alarm is issued, on the CNC screen.
The trouble diagnosis function has the following main features:

- "TROUBLE DGN. GUIDANCE screen": Allows you to determine the cause of an alarm according to the trouble diagnosis flow.
- "TROUBLE DGN. MONITOR screen": Allows you to retain data when an alarm is issued as well as monitor the status of servo and spindle amplifiers during normal operation.
- "TROUBLE DGN. GRAPHIC screen": Can display waveforms when a servo or spindle alarm is issued.

Among these features, the TROUBLE DGN. GUIDANCE screen can be used to determine the cause of an alarm and the action to be taken for it for a short time, which can be expected to reduce the down time of the machines.

The following figure shows a sample display of the TROUBLE DGN. GUIDANCE screen.

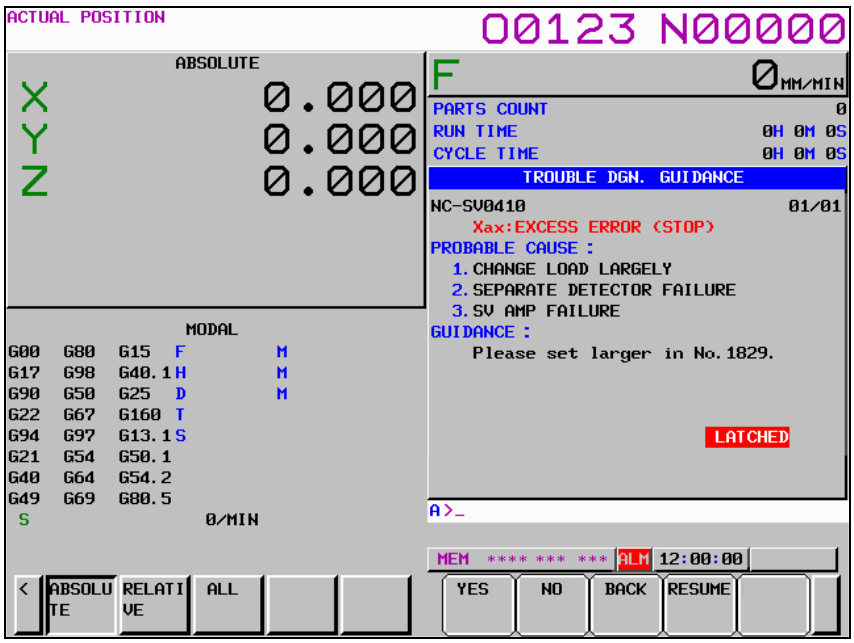

TROUBLE DGN. GUIDANCE screen

As the trouble diagnosis guidance, the trouble diagnosis function executes a diagnosis flow for determining the cause of an alarm. In most steps, the function automatically makes a decision based on information available in the CNC, but it may ask a question on the GUIDANCE screen in some cases. Press soft key [YES] or [NO] in response to the question to proceed to the next step in the guidance flow.

NOTE

- The most possible cause(s) and action to be taken based on obtained information are displayed as the cause(s) and guidance (action to be taken). Before any replacement, make a double check using another method (for example, measuring insulation resistance or checking conductivity).

2.2.1 Trouble Diagnosis Guidance

IMPORTANT

- To use the trouble diagnosis guidance requires keeping the trouble diagnosis monitor in the "SAMPLING" state. For details on the operation for switching the state to the "SAMPLING" state, see Subsection 2.2.3, "How to Switch the Trouble Diagnosis Guidance and Trouble Diagnosis Monitor to the 'SAMPLING' State."

Examples of determining the cause of an alarm using the trouble diagnosis guidance are shown below using diagnosis of SV0411, "EXCESS ERROR (MOVING)" and SV0449, "SV IPM ALARM."

Example 1) When SV0411, "EXCESS ERROR (MOVING)" is issued

(1) When this alarm is issued, perform the following steps to display the TROUBLE DGN. GUIDANCE screen:
<1> When the ALARM MESSAGE screen is not displayed, press the Message key.
<2> Press the continuous menu key [>] until soft key [GUIDE] appears.
<3> Press the soft key [GUIDE].

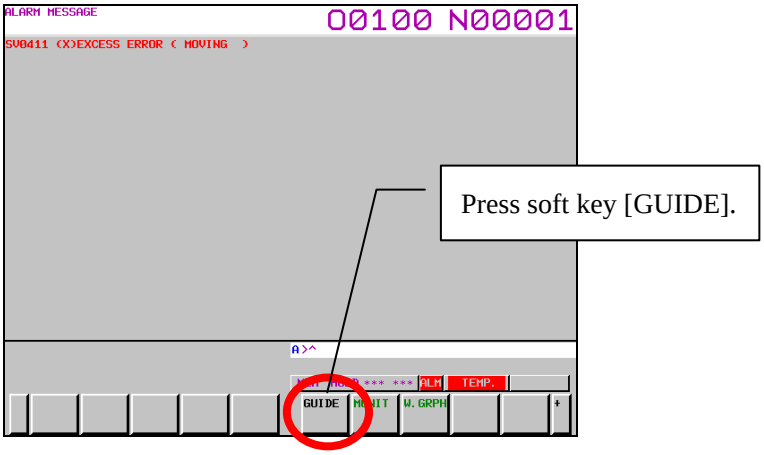

(2) Possible causes of the alarm, "EXCESS ERROR (MOVING)" are:
- Failure in the amplifier
- Short-circuit on the power cable or motor winding
- Disconnected power cable or motor winding
- Malfunction of the servo-off signal
- Large load change
- Failure in the brake
- Commanded speed exceeding the specification

As the trouble diagnosis guidance, the trouble diagnosis function executes a diagnosis flow for determining the cause of an alarm. In most steps, the function automatically makes a decision based on information available in the CNC, but it may ask a question on the GUIDANCE screen in some cases. Press soft key [YES] or [NO] in response to the question to proceed to the next step in the guidance flow.

Example) When the disconnected power cable causes the alarm, "EXCESS ERROR (MOVING)" to be issued

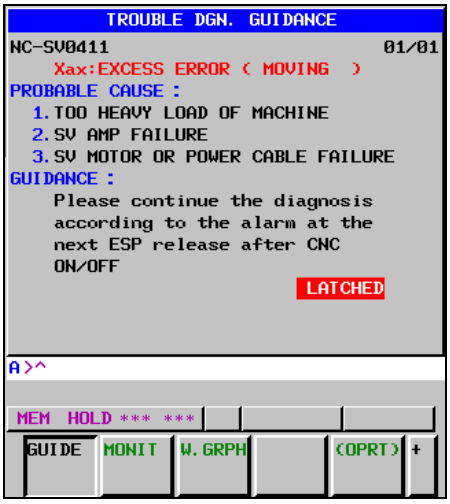

When soft key [GUIDE] is pressed, the message shown at left is displayed. The guidance shows an instruction to "turn the power off." The function performs a self-diagnosis to check the servo amplifier for a failure when the power to the CNC is turned off, then on again.

The function performs a self-diagnosis immediately after power on of the CNC. Then, the PHASE OPEN alarm is issued. Press the soft key [GUIDE] again to display the TROUBLE DGN. GUIDANCE screen.

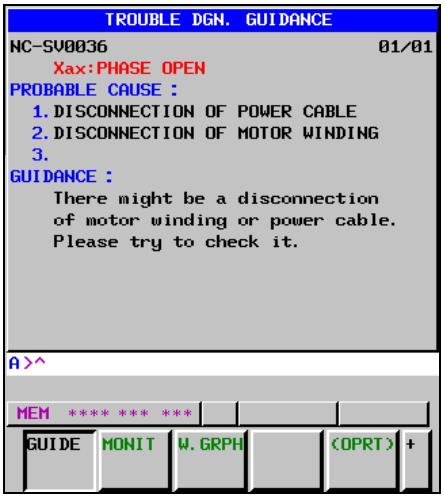

On the TROUBLE DGN. GUIDANCE screen, a message appears, which indicates that a possible cause is the disconnected power cable or motor winding.

Take action according to the instruction in the message.

Example 2) When SV0449, "SV IPM ALARM" is issued

(1) When this alarm is issued, perform the following steps to display the TROUBLE DGN. GUIDANCE screen:

<1> When the ALARM MESSAGE screen is not displayed, press the Message key.
<2> Press the continuous menu key [>] until soft key [GUIDE] appears.
<3> Press the soft key [GUIDE].

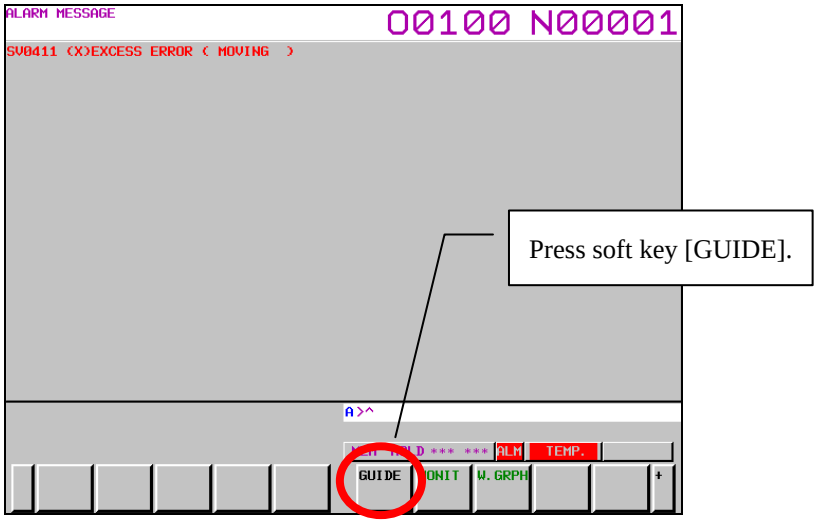

(2) Possible causes of the alarm, "SV IPM ALARM" are:

- Failure in the amplifier
- Short-circuit on the power cable or motor winding
- Disconnected power cable or motor winding
- Current control disturbance

As the trouble diagnosis guidance, the trouble diagnosis function executes a diagnosis flow for determining the cause of an alarm. In most steps, the function automatically makes a decision based on information available in the CNC, but it may ask a question on the GUIDANCE screen in some cases. Press soft key [YES] or [NO] in response to the question to proceed to the next step in the guidance flow.

Example) Example of the IPM alarm resulting from a short-circuited power cable

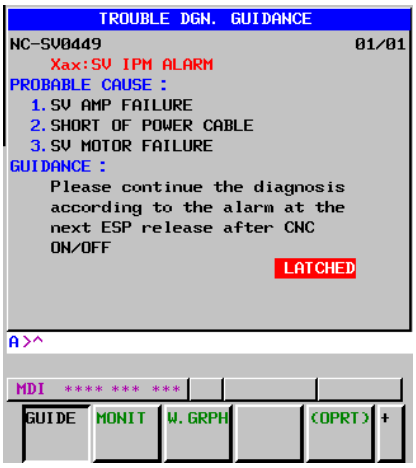

When soft key [GUIDE] is pressed, the message shown at left is displayed. The guidance shows an instruction to "turn the power off." The function performs a self-diagnosis to check the servo amplifier for a failure when the power to the CNC is turned off, then on again.

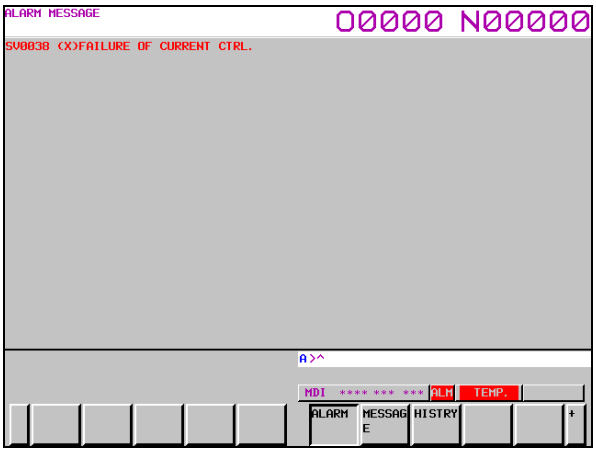

Self-diagnosis was conducted immediately after the servo amplifier was turned on, and the "FAILURE OF CURRENT CTL" alarm occurred. The trouble diagnosis guidance screen is displayed again.

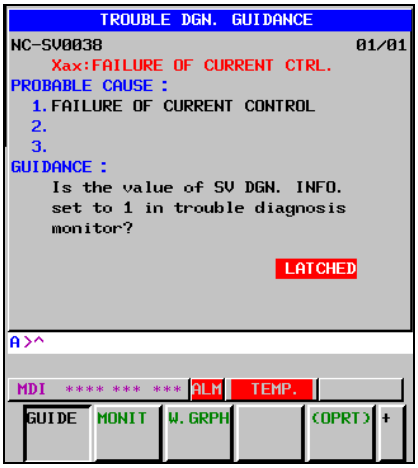

The guidance displays "Is the value of SV DGN. INFO. set to 1 in trouble diagnosis monitor." See the trouble diagnosis monitor screen.

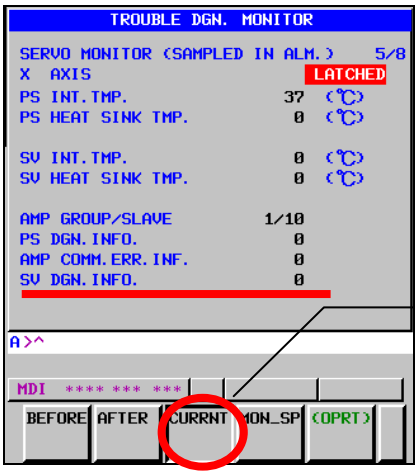

Press [Current].

Display the trouble diagnosis monitor screen, go to the page containing the item "SV DNG. INFO.," and then press the "CURRENT" button.

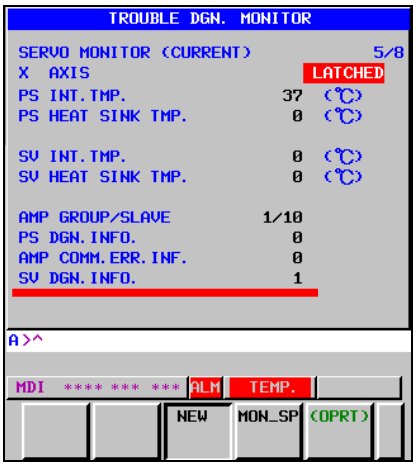

Check the value of "SV DNG INFO.," which is either "0" or "1."
"1" means that a short-circuited power cable or motor winding was detected during the servo amplifier self-diagnosis.

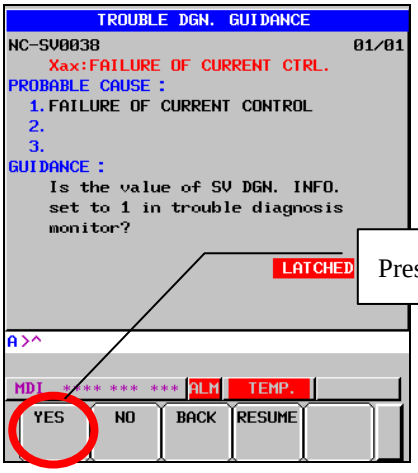

Press [YES].

Display the trouble diagnosis guidance screen, and press "YES."

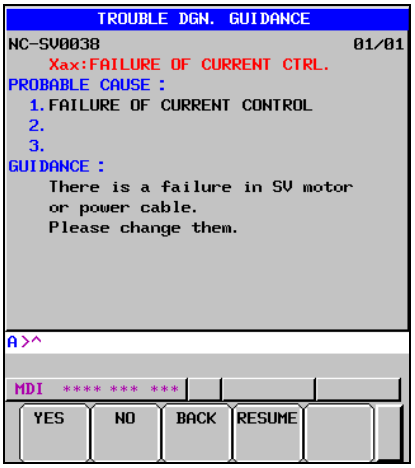

The guidance suggests a possibility of a short-circuited power cable or motor winding.
Take action according to the instruction in the message.

2.2.2 Trouble Diagnosis Monitor

IMPORTANT

- The trouble diagnosis monitor can be in either of the following two states: "SAMPLING" and "LATCHED."
  To monitor data of new alarms, perform the "CLEAR" operation. To save the status observed when alarms were issued in the past, do not perform the "CLEAR" operation. For details on the operation, see Subsection 2.2.3, "How to Switch the Trouble Diagnosis Guidance and Trouble Diagnosis Monitor to the 'SAMPLING' State."

The trouble diagnosis monitor can display the information described below.
The procedures to display the TROUBLE DGN. MONITOR screen are below,

- Press the Message key to display the ALARM MESSAGE screen.
- Press the continuous menu key [>] until the soft key [MONITOR] appears.
- Press the soft key [MONITOR] to display the TROUBLE DGN. MONITOR screen.

2.2.2.1 How to check the data at an alarm or just before an alarm

On the TROUBLE DGN. MONITOR screen, the following items can be seen:

- Current data
- Data at an alarm
- Data just before an alarm during several sampling cycles

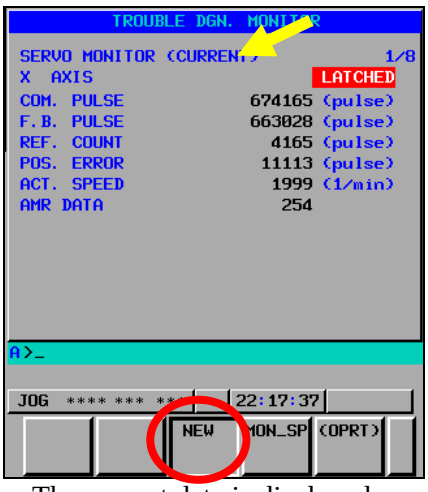

The current data is displayed.

When an alarm is issued and the soft key [NEW] is pressed, the value when this alarm is issued is displayed.

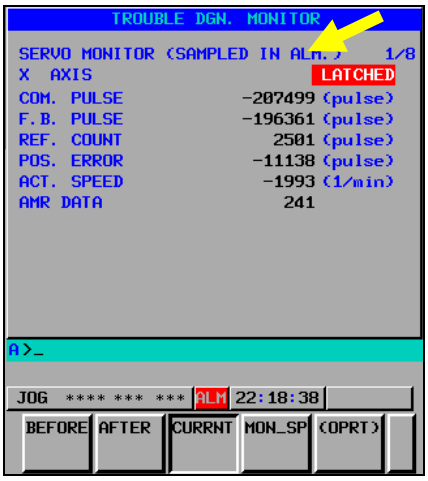

The data at the alarm is displayed.

By pressing the soft key [BEFORE], the data up to four sampling cycles before the alarm can be displayed.

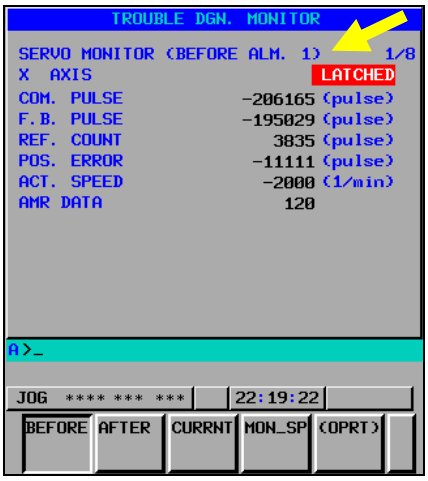

The data just one sampling cycle before are displayed.

2.2.2.2 Details of monitor screens related to servo amplifiers

```
TROUBLE DGN. MONITOR
SERVO MONITOR (SAMPLED IN ALM.)    1/8
X  AXIS                        LATCHED
COM. PULSE              200166 (pulse)
F.B. PULSE                  -1 (pulse)
REF. COUNT                 166 (pulse)
POS. ERROR              200166 (pulse)
ACT. SPEED                   0 (1/min)
AMR DATA                   248
```

```
TROUBLE DGN. MONITOR
SERVO MONITOR (SAMPLED IN ALM.)    2/8
X  AXIS                        LATCHED
TORQUE CMD                  89   (%)
EFFECTIVE CURRENT            0   (%)
MOTOR CURRENT            0.000   (A)
DISTURBANCE LEVEL            0   (%)
HEAT SIMLT                   0   (%)

ARBITRARY DATA 1          6554
ARBITRARY DATA 2          6554
```

```
TROUBLE DGN. MONITOR
SERVO MONITOR (SAMPLED IN ALM.)    3/8
X  AXIS                        LATCHED
DC LINK VOLT.              294   (V)
PS VOLTAGE RMS             211 (Vrms)
PS VOLT.UMBALANCE          0.5   (%)
PS VOLTAGE THD             0.5   (%)
PS CURRENT                   0   (A)
PS STATUS FLAG1              0
PS STATUS FLAG2              0
PS STATUS FLAG3              0
PS STATUS FLAG4              0
PS INPUT FREQ             50.0  (Hz)
```

```
TROUBLE DGN. MONITOR
SERVO MONITOR (SAMPLED IN ALM.)    4/8
X  AXIS                        LATCHED
SV INS.INFO.                 0
SV INS.RESISTANCE          0.0  (MΩ)
```

```
TROUBLE DGN. MONITOR
SERVO MONITOR (SAMPLED IN ALM.)    5/8
X  AXIS                        LATCHED
PS INT.TMP.                 36  (℃)
PS HEAT SINK TMP.            0  (℃)

SV INT.TMP.                  0  (℃)
SV HEAT SINK TMP.            0  (℃)

AMP GROUP/SLAVE           1/10
PS DGN.INFO.                 0
AMP COMM.ERR.INF.            0
SV DGN.INFO.                 0
```

```
TROUBLE DGN. MONITOR
SERVO MONITOR (SAMPLED IN ALM.)    6/8
X  AXIS                        LATCHED
SV FSSB UPR.ERR.           0 0
SV FSSB LWR.ERR.           0 0
SV FSSB UPR.JTR.     6D74 3F00
SV FSSB LWR.JTR.     71B4 373E

SDU FSSB UPR.ERR.          0 0
SDU FSSB LWR.ERR.          0 0
SDU FSSB UPR.JTR.          0 0
SDU FSSB LWR.JTR.          0 0
```

```
TROUBLE DGN. MONITOR
SERVO MONITOR (SAMPLED IN ALM.)    7/8
X  AXIS                        LATCHED
INT.DTCT.INTP.CNT            0
INT.DTCT.COM.CNT             0
INT.DETECTOR WRN.            0
EXT.DTCT.INTP.CNT            0
EXT.DTCT.COM.CNT             0
EXT.DETECTOR WRN.            0
SV DATA1                     0
SV DATA2                     0
SV DATA3                     0
SV DATA4                     0
```

```
TROUBLE DGN. MONITOR
SERVO MONITOR (SAMPLED IN ALM.)    8/8
X  AXIS                        LATCHED
LAST LATCH DATE            04/06/08
LAST LATCH TIME            14:37:43
EXECUTED FILE NAME
                               0100
EXECUTED N-NUM.                   1
```

Data (unit)	Description	Display page No.
COM. PULSE (pulse)		1/8
F.B. PULSE (pulse)	(Note 3)	1/8
REF COUNTER (pulse)		1/8
POS. ERROR (pulse)		1/8
ACT. SPEED (1/min)		1/8
AMR DATA	Magnetic pole position data of the motor rotor (256/rotation in electrical angle)	1/8
TORQUE COMMAND (%)	Maximum torque = 100%	2/8
EFFECTIVE CURRENT (%)	Maximum amplifier current = 100%	2/8
MOTOR CURRENT (A)		2/8
DISTURBANCE LEVEL (%)	Alarm level when unexpected torque detection is used = 100%	2/8
HEAT SIMULATION (%)	OVC alarm level = 100%	2/8
ARBITRARY DATA 1	(Note 2)	2/8
ARBITRARY DATA 2	(Note 2)	2/8
DC LINK VOLTAGE (V)	Instantaneous DC link voltage value (Note 3)	3/8
PS VOLTAGE RMS (Vrms)	Average PS input voltage value during one power cycle (Note 3)	3/8
PS VOLT. UMBALANCE (%)	Average PS input voltage value during one power cycle (Note 3)	3/8
PS VOLTAGE THD (%)	Average PS input voltage THD (Total Harmonic Distortion) during one power cycle (Note 3)	3/8
PS CURRENT (A)	Average current amplitude during one power cycle (Note 3)	3/8
PS STATUS FLAG1	(Note 4)	3/8
PS STATUS FLAG2	(Note 4)	3/8
PS STATUS FLAG3	(Note 4)	3/8
PS STATUS FLAG4	(Note 4)	3/8
PS INPUT FREQ (Hz)	Average frequency value during one power cycle (Note 3)	3/8
SV INS. INFO.	Status flag of the Insulation deterioration detection function	4/8
SV INS.RESISTANCE (MΩ)	Motor insulation resistance when the Insulation deterioration detection function is enabled (Note 3)	4/8
PS INT. TMP. (°C)	(Note 3)	4/8
PS HEAT SINK TEMP (°C)	(Note 3)	5/8
SV INT. TMP. (°C)	(Note 3)	5/8
SV HEAT SINK TEMP (°C)	(Note 3)	5/8
AMP GROUP/SLAVE	Group number and slave number for each Power Supply (PS)	5/8
PS DGN. INFO.	Status flag of the Power Supply (PS)	5/8
INTER-AMP COM. ERROR INFO.	Error status flag of inter-amplifier communication	5/8
SV DGN. INFO.	Status flag of the servo amplifier (SV)	5/8
SV FSSB UPR. ERR.	(Note 5)	6/8
SV FSSB LWR. ERR.	(Note 5)	6/8
SV FSSB UPR. JTR.	(Note 5)	6/8
SV FSSB LWR. JTR.	(Note 5)	6/8
SDU FSSB UPR. ERR.	(Note 5)	6/8
SDU FSSB LWR. ERR.	(Note 5)	6/8
SDU FSSB UPR. JTR.	(Note 5)	6/8
SDU FSSB LWR. JTR.	(Note 5)	6/8
INT. DTCT. INTP. CNT	Number of disturbances of built-in sensor data due to noise (Number of data error detections)	7/8
INT. DTCT. COM. CNT	Number of disturbances of built-in sensor data due to noise (Number of communication errors)	7/8
INT. DETECTOR WRN.	Built-in sensor warning information	7/8

Data (unit)	Description	Display page No.
EXT. DTCT. INTP. CNT	Number of disturbances of separate sensor data due to noise (Number of data error detections)	7/8
EXT. DTCT. COM. CNT	Number of disturbances of separate sensor data due to noise (Number of communication errors)	7/8
EXT. DETECTOR WRN.	Separate sensor warning information	7/8
SV DATA1	(Note 2)	7/8
SV DATA2	(Note 2)	7/8
SV DATA3	(Note 2)	7/8
SV DATA4	(Note 2)	7/8
LAST LATCH DATE		8/8
LAST LATCH TIME		8/8
EXECUTED FILE NAME		8/8
EXECUTED N-NUM.		8/8

NOTE

1 The specified range in this list is just the range within which the monitor function can display data, and does not indicate the performance or rating of the system.
2 ARBITRARY DATA 1 and ARBITRARY DATA 2, and SV DATA1 to SV DATA4 are used by FANUC for maintenance.
3 The displayed values related to voltage, current, frequency, and temperature are approximate and contain some errors. If you require a precise value, measure the target item using a specific measurement instrument.
4 PS STATUS FLAG1 to PS STATUS FLAG4 are used by FANUC for maintenance.
5 FSSB error and jitter data items indicate the FSSB communication status and are used by FANUC for maintenance.

2.2.2.3 Details of monitor screens related to spindle amplifiers

```
TROUBLE DGN. MONITOR
SPINDLE MONIT (SAMPLED IN ALM.)    1/9
SPINDLE :S1                     LATCHED
OPERATION        SPEED CONTROL
GEAR/OUT SEL     1 / HIGH OUT
COMMAND PULSE                  0 (pulse)
COMMAND SPEED                500 (1/min)
CONTROL INPUT SFR  MRDY *ESP

CONTROL OUTPUTSAR
```

```
TROUBLE DGN. MONITOR
SPINDLE MONIT (SAMPLED IN ALM.)    2/9
SPINDLE :S1                     LATCHED
SPINDLE SPEED                 496 (1/min)
ACT.MOTOR SPEED               496 (1/min)
LOAD METER                      0   (%)
TORQUE CMD                      0   (%)
MOTOR CURRENT               0.125   (A)
HEAT SIMU.(MOTOR)               0   (%)
HEAT SIMU.(AMP)                 3   (%)
POS. ERROR                      0 (pulse)
SYN ERR                         0 (pulse)
```

```
TROUBLE DGN. MONITOR
SPINDLE MONIT (SAMPLED IN ALM.)    3/9
SPINDLE :S1                     LATCHED
DC LINK VOLT.                 300   (V)
PS VOLTAGE RMS                212 (Vrms)
PS VOLT.UMBALANCE             0.5   (%)
PS VOLTAGE THD                0.5   (%)
PS CURRENT                      0   (A)
PS STATUS FLAG1                 0
PS STATUS FLAG2                 0
PS STATUS FLAG3                 0
PS STATUS FLAG4                 0
PS INPUT FREQ                50.0  (Hz)
```

```
TROUBLE DGN. MONITOR
SPINDLE MONIT (SAMPLED IN ALM.)    4/9
SPINDLE :S1                     LATCHED
SP INS.INFO.                    0
SP INS.RESISTANCE             100.0  (MΩ)
```

```
TROUBLE DGN. MONITOR
SPINDLE MONIT (SAMPLED IN ALM.)    5/9
SPINDLE :S1                     LATCHED
PS INT.TMP.                    34  (℃)
PS HEAT SINK TMP.               0  (℃)

SP INT.TMP.                    34  (℃)
SP HEAT SINK TMP.               0  (℃)

AMP GROUP/SLAVE              1/10
PS DGN.INFO.                    0
AMP COMM.ERR.INF.               0
SP DGN.INFO.                    0
```

```
TROUBLE DGN. MONITOR
SPINDLE MONIT (SAMPLED IN ALM.)    6/9
SPINDLE :S1                     LATCHED
SP FSSB UPR.ERR.                0 0
SP FSSB LWR.ERR.                0 0
SP FSSB UPR.JTR.         6476 4000
AMP FSSB LWR.JTR.        7A81 3E47
```

```
TROUBLE DGN. MONITOR
SPINDLE MONIT (SAMPLED IN ALM.)    7/9
SPINDLE :S1                     LATCHED
INT.A/B AMPLITUDE            0.00   (V)
INT.A/B MAX FLUCT               0   (%)
INT.A/B OFFSET A                0  (mV)
INT.A/B OFFSET B                0  (mV)
INT.A/B NOISE CNT               0
EXT.A/B AMPLITUDE            0.00   (V)
EXT.A/B MAX FLUCT               0   (%)
EXT.A/B OFFSET A                0  (mV)
EXT.A/B OFFSET B                0  (mV)
EXT.A/B NOISE CNT               0
```

```
TROUBLE DGN. MONITOR
SPINDLE MONIT (SAMPLED IN ALM.)    8/9
SPINDLE :S1                     LATCHED
INT.SRAL INTP.CNT               0
INT.SRAL COM.CNT                0
INT.SRAL WRN.                   0
EXT.SRAL INTP.CNT               0
EXT.SRAL COM.CNT                0
EXT.SRAL WRN.                   0
SP DATA1                        0
SP DATA2                        0
SP DATA3                        0
SP DATA4                        0
```

```
TROUBLE DGN. MONITOR
SPINDLE MONIT (SAMPLED IN ALM.)    9/9
SPINDLE :S1                     LATCHED
LAST LATCH DATE                 12/12/14
LAST LATCH TIME                 16:56:02
EXECUTED FILE NAME
                                      00
EXECUTED N-NUM.                        5
```

Data (unit)	Description	Display page No.
OPERATION MODE		1/9
GEAR/OUT SEL		1/9
COMMAND PULSE (pulse)		1/9
COMMAND SPEED (1/min)	(Note 2)	1/9
CONTROL INPUT		1/9
CONTROL OUTPUT		1/9
SPINDLE SPEED (1/min)		2/9
ACT. MOTOR SPEED (1/min)	(Note 2)	2/9
LOAD METER (%)		2/9
TORQUE COMMAND (%)	Maximum torque = 100%	2/9
MOTOR CURRENT (A)		2/9
HEAT SIMULATION (motor) (%)	OVC alarm level = 100%	2/9
HEAT SIMULATION (amplifier) (%)	OVC alarm level = 100%	2/9
POS. ERROR (pulse)		2/9
SYN ERR (pulse)		2/9
DC LINK VOLTAGE (V)	Instantaneous DC link voltage value (Note 3)	3/9
PS VOLTAGE RMS (Vrms)	Average PS input voltage value during one power cycle (Note 3)	3/9
PS VOLT. UMBALANCE (%)	Average PS input voltage value during one power cycle (Note 3)	3/9
PS VOLTAGE THD (%)	Average PS input voltage THD (Total Harmonic Distortion) during one power cycle (Note 3)	3/9
PS CURRENT (A)	Average current amplitude during one power cycle (Note 3)	3/9
PS STATUS FLAG1	(Note 5)	3/9
PS STATUS FLAG2	(Note 5)	3/9
PS STATUS FLAG3	(Note 5)	3/9
PS STATUS FLAG4	(Note 5)	3/9
PS INPUT FREQ (Hz)	Average frequency value during one power cycle	3/9
SP INS. INFO.	Status flag of the Insulation deterioration detection function	4/9
SP INS.RESISTANCE (MΩ)	Motor insulation resistance when the Insulation deterioration detection function is enabled (Note 3)	4/9
PS INT. TMP. (°C)	(Note 3)	5/9
PS HEAT SINK TEMP (°C)	(Note 3)	5/9
SP INT.TMP. (°C)	(Note 3)	5/9
SP HEAT SINK TEMP (°C)	(Note 3)	5/9
AMP GROUP/SLAVE	Group number and slave number for each Power Supply (PS)	5/9
PS DGN. INFO.	Status flag of the Power Supply (PS)	5/9
INTER-AMP COM. ERROR INFO.	Error status flag of inter-amplifier communication	5/9
SP DGN. INFO.	Status flag of the spindle amplifier (SP)	5/9
SP FSSB UPR. ERR.	(Note 6)	6/9
SP FSSB LWR. ERR.	(Note 6)	6/9
SP FSSB UPR. JTR.	(Note 6)	6/9
SP FSSB LWR. JTR.	(Note 6)	6/9
INT.A/B AMPLITUDE (V)	Built-in analog sensor A/B phase signal amplitude	7/9

Data (unit)	Description	Display page No.
INT.A/B MAX FLUCT (%)	Maximum fluctuation rate of the built-in analog sensor A/B phase signal	7/9
INT.A/B OFFSET A (mV)	Phase A offset of the built-in analog sensor	7/9
INT.A/B OFFSET B (mV)	Phase B offset of the built-in analog sensor	7/9
INT.A/B NOISE CNT	Number of disturbances of built-in analog sensor data due to noise (Number of data error detections)	7/9
EXT.A/B AMPLITUDE (V)	Separated analog sensor A/B phase signal amplitude	7/9
EXT.A/B MAX FLUCT (%)	Maximum fluctuation rate of the separated analog sensor A/B phase signal	7/9
EXT.A/B OFFSET A (mV)	Phase A offset of the separated analog sensor	7/9
EXT.A/B OFFSET B (mV)	Phase B offset of the separated analog sensor	7/9
EXT.A/B NOISE CNT	Number of disturbances of separated analog sensor data due to noise (Number of data error detections)	7/9
INT. SERIAL INTP. CNT	Number of disturbances of built-in serial sensor data due to noise (Number of data error detections)	8/9
INT. SERIAL COMMUNICATION CNT	Number of disturbances of built-in serial sensor data due to noise (Number of communication errors)	8/9
INT. SERIAL WRN.	Built-in serial sensor warning information	8/9
EXT. SERIAL INTP. CNT	Number of disturbances of separated serial sensor data due to noise (Number of data error detections)	8/9
EXT. SERIAL COMMUNICATION CNT	Number of disturbances of separated serial sensor data due to noise (Number of communication errors)	8/9
EXT. SERIAL WRN.	Separated serial sensor warning information	8/9
SP DATA1	(Note 4)	8/9
SP DATA2	(Note 4)	8/9
SP DATA3	(Note 4)	8/9
SP DATA4	(Note 4)	8/9
LAST LATCH DATE		9/9
LAST LATCH TIME		9/9
EXECUTED FILE NAME		9/9
EXECUTED N-NUM.		9/9

NOTE

1 The specified range in this list is just the range within which the monitor function can display data, and does not indicate the performance or rating of the system.

2 To display COMMAND SPEED and ACT.MOTOR SPEED, set the parameters related to the maximum motor speed:
- No. 4020: Maximum motor speed of the main spindle
- No. 4196: Maximum motor speed of the sub-spindle (when the spindle switching function is used)

3 The displayed values related to voltage, current, frequency, and temperature are approximate and contain some errors. If you require a precise value, measure the target item using a specific measurement instrument.

4 SP DATA1 to SP DATA4 are used by FANUC for maintenance.

5 PS STATUS FLAG1 to PS STATUS FLAG4 are used by FANUC for maintenance.

6 FSSB error and jitter data items indicate the FSSB communication status and are used by FANUC for maintenance.

2.2.3 How to Switch the Trouble Diagnosis Guidance and Trouble Diagnosis Monitor to the "SAMPLING" State

The trouble diagnosis monitor can be in either of the following two states: "SAMPLING" and "LATCHED."

When an alarm is issued, it enters into the "LATCHED" state.
When "CLEAR" operation is performed at the "LATCHED" state, the saved data when the alarm was issued are erased and the CNC returns to the "SAMPLING" state.

To perform "CLEAR" operation to switch back to the "SAMPLING" state, follow the procedure below:

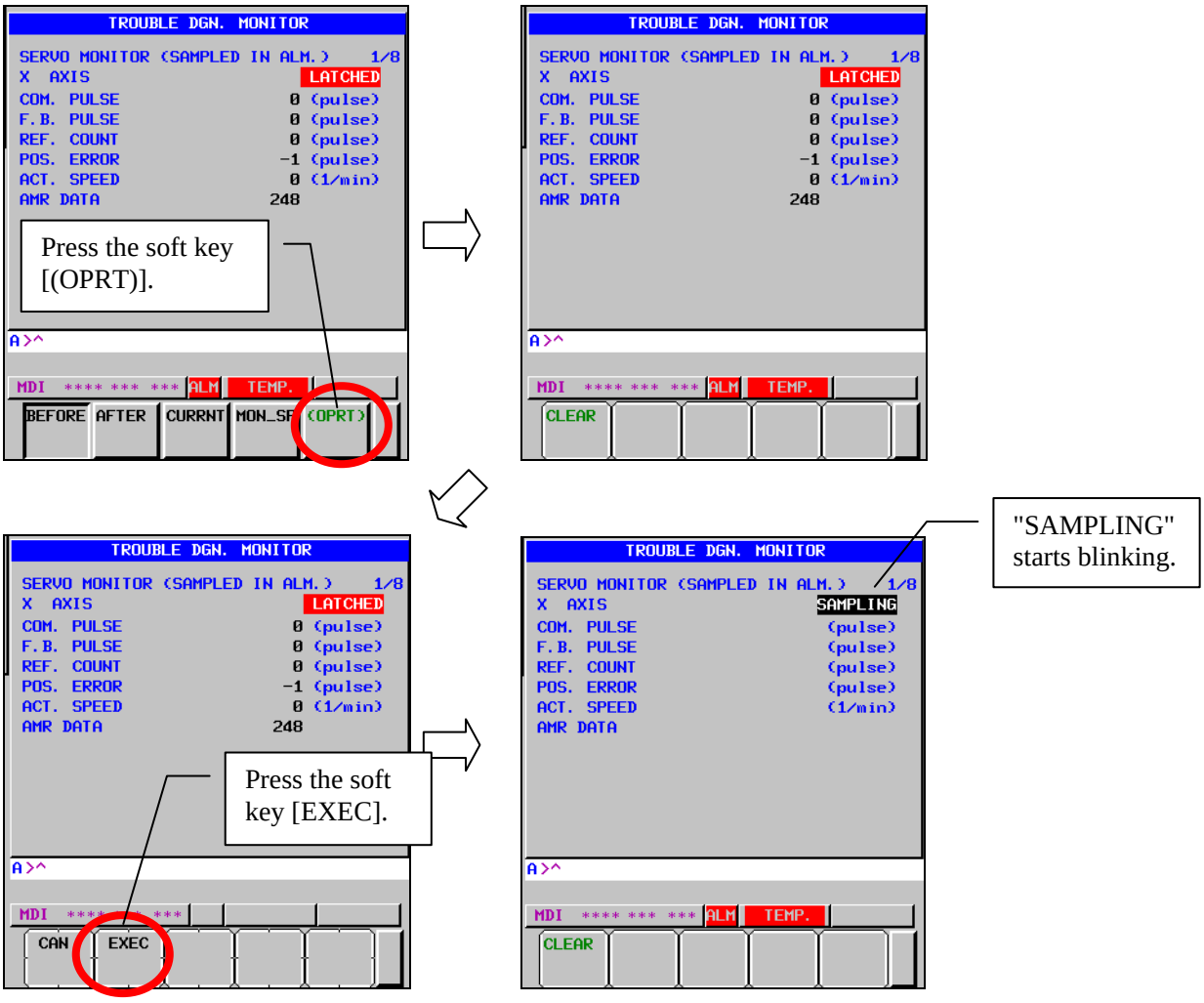

3 ALARM NUMBERS AND BRIEF DESCRIPTIONS

3.1 SERVO ALARM

Alarm No.	SV	PS	Description	Remarks
SV0001			SYNC ALIGNMENT ERROR	
SV0002			SYNC EXCESS ERROR ALM 2	
SV0003			SYNCHRONOUS/COMPOSITE/SUPERIMPOSED CONTROL MODE CAN'T BE CONTINUED	
SV0004			G31 EXCESS ERROR	
SV0005			SYNC EXCESS ERROR (MCN)	
SV0006			ILLEGAL TANDEM AXIS	
SV0007			SV ALM ANOTHER PATH(MULTI AMP.)	
SV0010			SV OVERHEAT	
SV0011			SV MOTOR OVER CURRENT(SOFT)	
SV0012	4		SV DRIVE OFF CIRCUIT FAILURE	4.2.4
SV0013	3		SV CPU BUS FAILURE	4.2.3
SV0014	J		SV CPU WATCH DOG	4.2.19
SV0015	2 (Blinking)		SV LOW VOLT DRIVER	4.2.12
SV0016	b. C. d.		SV CURRENT DETECT ERROR	4.2.23
SV0017	11		SV INTERNAL SERIAL BUS FAILURE	4.2.9
SV0018	11 (Blinking)		SV ROM DATA FAILURE	4.2.16
SV0024		15	PS SOFT THERMAL	4.1.2.11
SV0031		23	PS ILLEGAL PARAMETER	4.1.2.12
SV0034		24	PS HARDWARE ERROR	4.1.2.13
SV0035	-		SV NO FAILURE	
SV0036	A (Blinking)		PHASE OPEN	4.2.24
SV0037	9 (Blinking)		SV FAILURE (OPEN)	4.2.15
SV0038	-		FAILURE OF CURRENT CTRL.	
SV0039	8 (Blinking)		SV FAILURE (SHORT)	4.2.14
SV0040		25	PS EXT-COMP. ERROR	4.1.2.14
SV0041		26	PS PFB-R ERROR	4.1.2.15
SV0042		27	PS PFB-C ERROR	4.1.2.16
SV0043		28	PS SUB MODULE ERROR	4.1.2.17
SV0301			APC ALARM: COMMUNICATION ERROR	
SV0302			APC ALARM: OVERTIME ERROR	
SV0303			APC ALARM: FRAMING ERROR	
SV0304			APC ALARM: PARITY ERROR	
SV0305			APC ALARM: PULSE ERROR	
SV0306			APC ALARM: OVERFLOW	
SV0307			APC ALARM: MOVEMENT EXCESS ERROR	
SV0360			PULSECODER CHECK SUM ERROR (INT.)	
SV0361			PULSECODER PHASE ERROR (INT.)	4.3
SV0363			CLOCK ERROR (INT.)	

Alarm No.	SV	PS	Description	Remarks
SV0364			SOFT PHASE ALARM (INT.)	4.3
SV0365			LED ERROR (INT.)	4.3
SV0366			PULSE ERROR (INT.)	4.3
SV0367			COUNT ERROR (INT.)	4.3
SV0368			SERIAL DATA ERROR (INT.)	4.3
SV0369			DATA TRANSFER ERROR (INT.)	4.3
SV0380			LED ERROR (EXT)	4.3
SV0381			PULSECODER PHASE ERROR (EXT)	4.3
SV0382			COUNT ERROR (EXT)	4.3
SV0383			PULSE ERROR (EXT)	4.3
SV0384			SOFT PHASE ALARM (EXT)	4.3
SV0385			SERIAL DATA ERROR (EXT)	4.3
SV0386			DATA TRANSFER ERROR (EXT)	4.3
SV0387			ABNORMAL ENCODER (EXT)	4.3
SV0401			V READY-OFF	I-4.2.3
SV0403			CARD/SOFT MISMATCH	
SV0404			V READY-ON	
SV0407			EXCESS ERROR	
SV0409			DETECT ABNORMAL TORQUE	
SV0410			EXCESS ERROR (STOP)	
SV0411			EXCESS ERROR (MOVING)	
SV0413			LSI OVERFLOW	
SV0415			MOTION VALUE OVERFLOW	
SV0417			INVALID SERVO PARAMETER	4.3
SV0420			SYNC TORQUE EXCESS	
SV0421			EXCESS ERROR (SEMI-FULL)	4.3
SV0422			EXCESS VELOCITY IN TORQUE	
SV0423			EXCESS ERROR IN TORQUE	
SV0430			SERVO MOTOR OVERHEAT	4.3
SV0431		03	PS OVERLOAD	4.1.2.4
SV0432		06	PS LOW VOLT. CONTROL	4.1.2.7
SV0433		04	PS LOW VOLT. DC LINK	4.1.2.5
SV0434	2		SV LOW VOLT CONTROL	4.2.2
SV0435	5		SV LOW VOLT DC LINK	4.2.5
SV0436			SOFT THERMAL (OVC)	4.3.3
SV0437		01	PS OVERCURRENT	4.1.2.2
SV0438	b		L AXIS SV CURRENT ERROR	4.2.17
SV0438	C		M AXIS SV CURRENT ERROR	4.2.17
SV0438	d		N AXIS SV CURRENT ERROR	4.2.17
SV0439		07	PS OVER VOLT. DC LINK	4.1.2.8
SV0441			CURRENT OFFSET ERROR	4.3.8
SV0442		05	PS PRE-CHARGE FAILURE	4.1.2.6
SV0443		02	PS INTERNAL FAN FAILURE	4.1.2.3
SV0444	1 (Blinking)		SV INTERNAL FAN FAILURE (FAN DECELERATION)	4.2.1
SV0445			SOFT DISCONNECT ALARM	4.3
SV0446			HARD DISCONNECT	
SV0447			HARD DISCONNECT (EXT)	4.3
SV0448			UNMATCHED FEEDBACK ALARM	4.3
SV0449	8.		L AXIS SV IPM ALARM	4.2.10
SV0449	9.		M AXIS SV IPM ALARM	4.2.10
SV0449	A.		N AXIS SV IPM ALARM	4.2.10
SV0453			SPC SOFT DISCONNECT ALARM	4.3
SV0454			ILLEGAL ROTOR POS DETECT	
SV0456			ILLEGAL CURRENT LOOP	

Alarm No.	SV	PS	Description	Remarks
SV0458			CURRENT LOOP ERROR	
SV0459			HI HRV SETTING ERROR	
SV0460			FSSB DISCONNECT	
SV0462			SEND CNC DATA FAILED	
SV0463			SEND SLAVE DATA FAILED	
SV0465			READ ID DATA FAILED	
SV0466			MOTOR/AMP. COMBINATION	
SV0468			HI HRV SETTING ERROR (AMP)	
SV0474			EXCESS ERROR (STOP:SV)	
SV0475			EXCESS ERROR (MOVE:SV)	
SV0476			ILLEGAL SPEED CMD. (SV)	
SV0477			ILLEGAL MACHINE POS. (SV)	
SV0478			ILLEGAL AXIS DATA (SV)	
SV0481			SAFETY PARAM ERROR (SV)	
SV0484			SAFETY FUNCTION ERROR (SV)	
SV0488			SELF TEST OVER TIME	
SV0489			SAFETY PARAM ERROR (CNC)	
SV0490			SAFETY FUNCTION ERROR (CNC)	
SV0494			ILLEGAL SPEED CMD. (CNC)	
SV0496			ILLEGAL AXIS DATA (CNC)	
SV0498			AXIS NUMBER NOT SET (CNC)	
SV0600	8		SV DC LINK OVER CURRENT	4.2.8
SV0601	F (Blinking)		SV HEAT SINK FAN FAILURE (FAN DECELERATION)	4.2.18
SV0602	6		SV HEAT SINK OVERHEAT	4.2.6
SV0603	8.		L AXIS SV IPM ALARM (OH)	4.2.11
SV0603	9.		M AXIS SV IPM ALARM (OH)	4.2.11
SV0603	A.		N AXIS SV IPM ALARM (OH)	4.2.11
SV0604	P	A2	AMP COMMUNICATION ERROR	4.2.20 4.1.2.18
SV0606		10	PS EXTERNAL FAN FAILURE	4.1.2.9
SV0607		14	PS IMPROPER INPUT POWER	4.1.2.10
SV0646			ABNORMAL ANALOG SIGNAL (EXT)	
SV0652			TEMP.ERROR	
SV0654	7		DB RELAY FAILURE	4.2.7
SV0659	7 (Blinking)		SSM FAILURE	4.2.13
SV1025			V_READY ON (INITIALIZING)	
SV1026			ILLEGAL AXIS ARRANGE	
SV1055			ILLEGAL TANDEM AXIS	
SV1067			FSSB: CONFIG ERROR (SOFT)	
SV1068			DUAL CHECK SAFETY ALARM	
SV1069			EXCESS ERROR (SERVO OFF:CNC)	
SV1070			EXCESS ERROR (SERVO OFF:SV)	
SV1071			EXCESS ERROR (MOVE:CNC)	
SV1072			EXCESS ERROR (STOP:CNC)	
SV1100			S-COMP. VALUE OVERFLOW	
SV5134			FSSB:OPEN READY TIME OUT	
SV5136			FSSB:NUMBER OF AMP. IS INSUFFICIENT	
SV5137			FSSB:CONFIG ERROR	
SV5139			FSSB:ERROR	
SV5197			FSSB:OPEN TIME OUT	
SV5311			FSSB:ILLEGAL CONNECTION	

3.2 SPINDLE ALARM

Alarm No.	SP	PS	Description	Remarks
SP9001	01		MOTOR OVERHEAT	4.4.1
SP9002	02		VELOCITY ERROR EXCESS	4.4.2
SP9003	03		DC-LINK FUSE IS BROKEN	4.4.3
SP9004		14	PS IMPROPER INPUT POWER	4.1.10
SP9006	06		TEMP. SENSOR DISCONNECTED	4.4.4
SP9007	07		OVER SPEED	4.4.5
SP9009	09		OVERHEAT MAIN CIRCUIT	4.4.6
SP9010	10		LOW INPUT POWER VOLT	4.4.7
SP9011		07	PS OVER VOLT. DC LINK	4.1.8
SP9012	12		OVER CUR. DC LINK	4.4.8
SP12xx	13		CPU INT DATA MEMORY ERROR	4.4.9
SP9014	14		INVALID SOFTWARE SERIES	4.4.10
SP9015	15		SPINDLE/OUTPUT SWITCHING ALARM	4.4.11
SP9016	16		RAM ERROR	4.4.12
SP9017	17		ID NO. PARITY ERROR	4.4.13
SP12xx	18		SUMCHECK ERROR PROGRAM ROM	4.4.14
SP9019	19		EXCESS OFFSET CURRENT DETECTION U	4.4.15
SP9120	20		EXCESS OFFSET CURRENT DETECTION V	4.4.15
SP9021	21		INCORRECT POS SENSOR POLARITY SETTING	4.4.16
SP9022	22		SP AMP OVER CURRENT	4.4.17
SP12xx	24		SERIAL TRANSFER DATA ERROR	4.4.18
SP9027	27		DISCONNECT POSITION CODER	4.4.19
SP9029	29		SHORT-PERIOD OVERLOAD	4.4.20
SP9030		01	PS OVERCURRENT	4.1.2
SP9031	31		MOTOR LOCK	4.4.21
SP12xx	32		SERIAL LSI RAM ERROR	4.4.22
SP9033		05	PS PRE-CHARGE FAILURE	4.1.6
SP9034	34		ILLEGAL PARAMETER	4.4.23
SP9035	35		EXCESS GEAR RATIO SETTING DATA	4.4.24
SP9036	36		OVERFLOW ERROR COUNTER	4.4.25
SP9037	37		SPEED DETECTION PARAMETER ERROR	4.4.26
SP9041	41		1-ROT PC ERROR	4.4.27
SP9042	42		NO 1-ROT PC	4.4.28
SP9043	43		DISCONNECT POSITION CODER DEF. SPEED	4.4.29
SP9046	46		1-ROT PC ERROR DURING THREAD CUTTING	4.4.30
SP9047	47		POSITION CODER SIGNAL ERROR	4.4.31
SP9049	49		EXCESS CUMULATIVE DIFFERENTIAL SPEED	4.4.32
SP9050	50		SPINDLE CONTROL EXCESS VELOCITY	4.4.33
SP9051		04	PS LOW VOLT. DC LINK	4.1.5
SP9052	52		ITP FAULT I	4.4.34
SP9053	53		ITP FAULT II	4.4.34
SP9054	54		AMP OVER CURRENT	4.4.35
SP9055	55		POWER LEAD ERROR AT SWITCHING	4.4.36
SP9056	56		INTERNAL FAN FAILURE	4.4.37
SP9058		03	PS OVERLOAD	4.1.4
SP9059		02	PS INTERNAL FAN FAILURE	4.1.3
SP9061	61		SEMI-FULL ERROR EXCESS	4.4.38
SP9065	65		SERIAL SPINDLE ALARM	4.4.39
SP9066	66		SPINDLE AMP COMMUNICATION ERROR	4.4.40
SP9067	67		FSC/EGB COMMAND ERROR	4.4.41

Alarm No.	SP	PS	Description	Remarks
SP9068	68		ILLEGAL SPINDLE PARAMETER Note) For details on the error, see the status error number in the diagnosis number No. 710 and Subsection 4.3.3, "Status Error Indication" in Part I.	4.4.42
SP9069	69		SAFETY SPEED EXCEEDED	4.4.43
SP9070	70		ABNORMAL AXIS DATA	4.4.44
SP9071	71		SAFETY PARAM ERROR	4.4.45
SP9072	72		MOTOR SPEED MISMATCH	4.4.46
SP9073	73		MOTOR SENSOR DISCONNECTED	4.4.47
SP9074	74		CPU TEST ERROR	4.4.48
SP9075	75		CRC ERROR	4.4.49
SP9076	76		SAFETY FUNCTION NOT EXECUTED	4.4.50
SP9077	77		AXIS NO. MISMATCH	4.4.51
SP9078	78		SAFETY PARAM MISMATCH	4.4.52
SP9079	79		INITIAL TEST OPERATION ERROR	4.4.53
SP9080	80		DESTINATION SPINDLE AMP ERROR	4.4.54
SP9081	81		1-ROT MOTOR SENSOR ERROR	4.4.55
SP9082	82		NO 1-ROT MOTOR SENSOR	4.4.56
SP9083	83		MOTOR SENSOR SIGNAL ERROR	4.4.57
SP9084	84		SPNDL SENSOR DISCONNECTED	4.4.58
SP9085	85		1-ROT SPNDL SENSOR ERROR	4.4.59
SP9086	86		NO 1-ROT SPNDL SENSOR	4.4.60
SP9087	87		SPNDL SENSOR SIGNAL ERROR	4.4.61
SP9088	88		EXTERNAL FAN FAILURE	4.4.62
SP9089	89		SUBMODULE SM (SSM) ERROR	4.4.63
SP9090	90		UNEXPECTED ROTATION ALARM	4.4.64
SP9091	91		POLE POSITION COUNT MISS	4.4.65
SP9092	92		OVERSPEED (SPEED COMMAND STANDARDS)	4.4.66
	A		PROGRAM ROM ERROR	4.4.67
	A1		PROGRAM ROM ERROR	4.4.67
	A2		PROGRAM ROM ERROR	4.4.67
SP9110	b0	A2	AMP COMMUNICATION ERROR	4.4.68 4.1.18
SP9111		06	PS LOW VOLT. CONTROL	4.1.7
SP9113		10	PS EXTERNAL FAN FAILURE	4.1.9
SP9114	b4		PS CONTROL AXIS ERROR 1	4.4.69
SP9115	b5		PS CONTROL AXIS ERROR 2	4.4.70
SP9120	C0		COMMUNICATION DATA ALARM	4.4.71
SP9121	C1		COMMUNICATION DATA ALARM	4.4.71
SP9122	C2		COMMUNICATION DATA ALARM	4.4.71
SP9123	C3		SPNDL SWITCHING CIRCUIT ERROR	4.4.72
SP9124	C4		LEARNING CTRL ROTATION CMD ERROR	4.4.73
SP9125	C5		LEARNING CTRL INVALID DYNAMIC CHARACTERISTIC COMPENSATION DEGREE	4.4.74
SP9126	C6		SPNDL SPEED EXCEEDED	4.4.75
SP9127	C7		INVALID LEARNING CYCLE	4.4.76
SP9128	C8		SP SYNC CTRL VELOCITY ERROR EXCESS	4.4.77
SP9129	C9		SP SYNC CTRL POSITION ERROR EXCESS	4.4.78
SP9130	d0		POLARITY ERROR BETWEEN TORQUE TANDEM MASTER AND SLAVE	4.4.79
SP9131	d1		SPNDL ADJUSTMENT FUNCTION ALARM	4.4.80
SP9132	d2		SER.SENSOR DATA ERROR	4.4.81
SP9133	d3		SER.SENSOR TRANSFER ERROR	4.4.82
SP9134	d4		SER.SENSOR SOFT PHASE ERROR	4.4.83
SP9135	d5		SAFE SPEED ZERO ALARM	4.4.84

Alarm No.	SP	PS	Description	Remarks
SP9136	d6		SAFE SPEED ZERO MONITOR MISMATCH	4.4.85
SP9137	d7		SP DEVICE COMMUNICATION ERROR	4.4.86
SP9138	d8		CURRENT LIMIT SETTING ERROR	4.4.87
SP9139	d9		SER.SENSOR PULSE MISS	4.4.88
SP9140	E0		SER.SENSOR COUNT MISS	4.4.89
SP9141	E1		NO 1-ROT SERIAL SENSOR	4.4.90
SP9142	E2		SER.SENSOR ABNORMAL	4.4.91
SP9143	E3		CS HIGH SPEED CHANGE CMD ERROR	4.4.92
SP9144	E4		CURRENT DETECT CIRCUIT ERROR	4.4.93
SP9145	E5		LOW VOLTAGE DRIVER	4.4.94
SP9148	E8		AXIS NUMBER NOT SET	4.4.95
SP9149	E9		EXCESS EXTERNAL CURRENT DETECTION PHASE U OFFSET	4.4.96
SP9150	F0		EXCESS EXTERNAL CURRENT DETECTION PHASE V OFFSET	4.4.97
SP9151	F1		FILTER MODULE ERROR	4.4.98
SP9152	F2		EXTERNAL CURRENT SENSOR DISCONNECTED	4.4.99
SP9153	F3		SP NO FAILURE	4.4.100
SP9154	F4		PHASE OPEN	4.4.101
SP9155	F5		SP FAILURE (OPEN)	4.4.102
SP9156	F6		FAILURE OF CURRENT CTRL.	4.4.103
SP9157	F7		SP FAILURE (SHORT)	4.4.104
SP9158	F8		MODE MISMATCH (DCS)	4.4.105
SP9160	G0		THERMISTOR DISCONNECTION	4.4.106
SP9161	G1		POW. CABLE SHORT CIRCUIT	4.4.107
SP9162	G2		DELAY OF SP POS. DATA	4.4.108
SP9163	G3		ILLEGAL SP POS. DATA	4.4.109
SP9164	G4		MASTER AXIS SENSOR SIGNAL ERROR	4.4.110
SP9165	G5		CONTROL METHOD CHANGED	4.4.111
SP9166	G6		SPINDLE SYNC FUNCTION FOR GUIDE BUSH: SYNC EXCESS ERROR	4.4.112
SP9167	G7		SPINDLE CTRL SEQUENCE ERROR Note) For details on the error, see the status error number in the diagnosis number No. 710 and Subsection 4.3.3, "Status Error Indication" in Part I.	4.4.113
SP9168	G8		CONNECTION ERROR BETWEEN SP AND MOTOR	4.4.114
SP9169	G9		DRIVE OFF CIRCUIT FAILURE (STO)	4.4.115
SP9170	H0		EXCESS ERROR AT SPINDLE STOP (SMART RIGID TAP)	4.4.116
	UU		FSSB MASTER PORT WIRE BREAK	4.4.117
	LL		FSSB SLAVE PORT WIRE BREAK	4.4.118
SP9204		15	PS SOFT THERMAL	4.1.11
SP9211		23	PS ILLEGAL PARAMETER	4.1.12
SP9212		24	PS HARDWARE ERROR	4.1.13
SP9213		25	PS EXT-COMP. ERROR	4.1.14
SP9214		26	PS PFB-R ERROR	4.1.15
SP9215		27	PS PFB-C ERROR	4.1.16
SP9216		28	PS SUB MODULE ERROR	4.1.17

4 TROUBLESHOOTING AND ACTION

4.1 POWER SUPPLY

If an alarm is issued, the alarm LED (red) on the status display at the front of the Power Supply lights up and the 2-digit 7-segment LED displays an alarm code. The meaning of each alarm and the corresponding action for restoration are described below.
The meaning of each warning code is the same as that of the corresponding alarm code. Although operation can be continued while a warning code is displayed, the warning becomes an alarm after a certain time. If a warning code is displayed, promptly stop the machine and remove the cause.
In some cases, the Power Supply or other equipment must be replaced. Be sure to turn off the whole machine and check safety before starting the replacement work. After the replacement, check that the cabling is correct and the safety in the surrounding area and turn on the machine again.

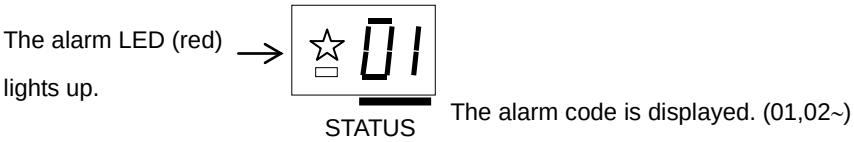

4.1.1 LEDs Do Not Light up.

(1) Meaning
24 VDC voltage (CXA2D) for the control power supply is not supplied.
Or, 24 VDC voltage is short-circuited.

(2) Cause and troubleshooting
(a) If the 7-segment LED lights up when you remove the cable from connector CXA2A and turn on the control power supply (24 VDC), the 24 VDC power supply of a servo or spindle amplifier may be short-circuited.
→ Detect the amplifier which causes the power to be short-circuited by sequentially connecting the cable from the Power Supply and replace it.
(b) If the 7-segment LED does not light up when you remove the cable from the connector CXA2A and turn on the control power supply (24 VDC), the Power Supply may be damaged.
→ gReplace the Power Supply.

4.1.2 Alarm Code 01 (SV0437, SP9030)

(1) Meaning
The main circuit power module has detected an abnormal condition.

(2) Cause and troubleshooting
(a) Unbalanced input power supply voltage → Check the specifications of the input power supply.
(b) Different AC reactor specifications → Check the specifications of the Power Supply and AC reactor.
(c) Fault in the power module → Replace the Power Supply.

Alarm Code 02 (SV0443, SP9059)

(1) Meaning
An abnormal condition has been detected in the internal cooling fan.

(2) Cause and troubleshooting
(a) Failure in the internal cooling fan
Check the rotation of the internal cooling fan.
→ If the internal cooling fan has stopped rotating, replace it.
(b) The internal cooling fan is not correctly attached.
Push the internal cooling fan into the top of the Power Supply as far as it will go.
If it does not go in easily, pull it out and then push it in again.
(c) The control printed circuit board is not correctly attached.
Push in the control printed circuit board in the front section of the Power Supply as far as it will go. If it does not go in easily, pull it out and then push it in again.
(d) The Power Supply is defective.
Replace the Power Supply.

4.1.3 Alarm Code 03 (SV0431, SP9058)

(1) Meaning
The temperature of the main circuit heat sink has risen abnormally.

(2) Cause and troubleshooting
(a) Failure in the heat sink cooling fan
Check the rotation state of the heat sink cooling fan.
→ Replace the heat sink cooling fan.
(b) Degradation of the cooling capacity due to dust in the heat sink
→ Clean the heat sink and cooling system using factory air or a vacuum cleaner.
(c) Overloaded operation
→ Review the operating conditions.
(d) The control printed circuit board is not correctly attached.
Push in the control printed circuit board in the front section of the Power Supply as far as it will go. If it does not go in easily, pull it out and then push it in again.

4.1.4 Alarm Code 04 (SV0433, SP9051)

(1) Meaning
In the main circuit, the DC voltage (DC link) has dropped.

(2) Cause and troubleshooting
(a) A small power dip has occurred.
→ Check the power supply.
(b) Drop in input power
→ Check the power supply specification.
(c) The main circuit was disconnected with emergency stop canceled
→ Check the sequence, cable or magnetic contactor.

4.1.5 Alarm Code 05 (SV0442, SP9033)

(1) Meaning

The PS pre-charge failure alarm is issued if the DC link capacitor is not normally pre-charged.

(2) Cause and troubleshooting

(a) No voltage is supplied to the power supply monitor (connector CX48) and main circuit of the Power Supply.
→ Check the power supply monitor (connector CX48) and its cabling, magnetic contactor, or breaker.
A phase of the power supply monitor (connector CX48) is disconnected.
→ Check the power supply monitor (connector CX48) and its cabling.

(b) A voltage outside of the specified range is input into the input power supply (three-phase AC).
→ An open-phase, unbalanced status, or low voltage is suspected. Check the power supply voltage.
A phase of the power supply monitor (connector CX48) is disconnected.
→ Check the power supply monitor (connector CX48) and its cabling.

(c) A voltage beyond the specification is input into the input power supply (three-phase AC).
→ Check the power supply voltage.

(d) The magnetic contactor is OFF.
→ See "4.1.4 If the Magnetic Contactor Is Not Turned ON" in Part I.

(e) Pre-charge was not completed within the specified time because the delay time from emergency stop cancellation to power-on of magnetic contactor was too long.
→ The ON sequence of the magnetic contactor is inappropriate. Check the PMC ladder.

(f) Pre-charge was not completed within the specified time because many spindle and servo amplifiers were connected.
→ Review the number of connected amplifiers.

(g) The voltage value of the power supply monitor (connector CX48) in the Power Supply does not match the input of the main circuit (L1, L2, L3).
→ Check the power supply monitor (connector CX48) and its cabling.

(h) The phase sequence of the power supply monitor (connector CX48) in the Power Supply does not match the input of the main circuit (L1, L2, L3).
→ Check the power supply monitor (connector CX48) and its cabling.

(i) The DC link is short-circuited.
→ Remove the cause of the short circuit of the DC link.

(3) Cause identification using the SERVO GUIDE

The SERVO GUIDE allows you to identify the cause of this alarm by observing the internal data of the Power Supply immediately after emergency stop is canceled.
For details on how to observe the internal data of the Power Supply using the SERVO GUIDE, see Appendix C, "MEASURING INTERNAL DATA FOR THE POWER SUPPLY USING THE SERVO GUIDE."

4.1.6 Alarm Code 06 (SV0432, SP9111)

(1) Meaning

The control power supply voltage decrease.
The 24 V power input to the connector (CXA2D) is abnormal. (Internal fuse blown)

(2) Cause and troubleshooting

(a) Abnormal condition of the power supply
→ The 24 V power input to the connector (CXA2D) is abnormal. Check the output voltage and output capacity of the power supply.

(b) Failure in the Power Supply
→ Replace the Power Supply.

4.1.7 Alarm Code 07 (SV0439, SP9011)

(1) Meaning
In the main circuit, the DC voltage at the DC link is abnormally high.

(2) Cause and troubleshooting
(a) Excessive regenerative power
The capacity of the Power Supply is insufficient.
→ Check the specifications of the Power Supply and review the operation of the motor.
(b) The impedance of the power supply is high.
→ Check the impedance of the power supply. (Normal if the voltage variation at maximum output time is within 7%)
(c) The main circuit was disconnected with emergency stop canceled
→ Check the sequence or magnetic contactor.

4.1.8 Alarm Code 10 (SV0606, SP9113)

(1) Meaning
The heat sink cooling fan has stopped.

(2) Cause and troubleshooting
(a) Failure in the heat sink cooling fan
Check the rotation state of the heat sink cooling fan.
→ Replace the heat sink cooling fan.
(b) The control printed circuit board is not correctly attached.
→ Push in the control printed circuit board in the front section of the Power Supply as far as it will go. If it does not go in easily, pull it out and then push it in again.
(c) The Power Supply is defective.
→ Replace the Power Supply.

4.1.9 Alarm Code 14 (SV0607, SP9004)

(1) Meaning
The input power supply is abnormal (abnormal power source frequency, open-phase, or unbalanced power supply)

(2) Cause and troubleshooting
(a) The input power supply is abnormal
→ Check the power supply voltage and connection.

4.1.10 Alarm Code 15 (SV0024, SP9204)

(1) Meaning
The estimated temperature value of the power element (IGBT) in the main circuit has become abnormal.
Or, the estimated winding temperature value of the AC reactor has become abnormal.

(2) Cause and troubleshooting
(a) Overloaded operation
→ Review the operation of the motor.

4.1.11 Alarm Code 23 (SV0031, SP9211)

(1) Meaning
The setting parameters for the Power Supply are abnormal.

(2) Cause and troubleshooting
(a) Parameters may not have been automatically updated.
→ Turn off the CNC and then turn it on.
(b) The setting parameters for the Power Supply are abnormal.
→ Set the parameters according to Chapter 15 in the FANUC SERVO AMPLIFIER αi-B series DESCRIPTIONS (B-65412EN).

4.1.12 Alarm Code 24 (SV0034, SP9212)

(1) Meaning
The setting parameters for the Power Supply or the Power Supply are abnormal. Or, a submodule that does not support the Power Supply (such as PFB-R or PFB-C) is connected.

(2) Cause and troubleshooting
(a) The setting parameters for the Power Supply are abnormal.
→ Set the parameters according to Chapter 15 in the FANUC SERVO AMPLIFIER αi-B series DESCRIPTIONS (B-65412EN).
(b) The selected Power Supply and submodule cannot be used together.
→ Connect the Power Supply and submodule with the correct ordering numbers according to Appendix I in the FANUC SERVO AMPLIFIER αi-B series DESCRIPTIONS (B-65412EN).
(c) Failure in the Power Supply
→ Replace the Power Supply.

4.1.13 Alarm Code 25 (SV0040, SP9213)

(1) Meaning
The setting parameters or cable of the Power Supply, the Power Supply, or external input equipment such as the transformer or input filter are abnormal.

(2) Cause and troubleshooting
(a) The setting parameters for the Power Supply are abnormal.
→ Set the parameters according to Chapter 15 in the FANUC SERVO AMPLIFIER αi-B series DESCRIPTIONS (B-65412EN).
(b) Abnormal condition of external input equipment (transformer or input filter)
→ Check external input equipment. (such as overheating or connection)
(c) Disconnection of communication path
→ Check the connector and cable (CX61, CX62).
(d) Fault in the Power Supply
→ Replace the Power Supply.

4.1.14 Alarm Code 26 (SV0041, SP9214)

(1) Meaning
An alarm has occurred in the PFB-R.

(2) Cause and troubleshooting
See the Appendix I in the FANUC SERVO AMPLIFIER αi-B series DESCRIPTIONS (B-65412EN).

4.1.15 Alarm Code 27 (SV0042, SP9215)

(1) Meaning
An alarm has occurred in the PFB-C.

(2) Cause and troubleshooting
See the Appendix in the FANUC SERVO AMPLIFIER αi-B series DESCRIPTIONS (B-65412EN).

4.1.16 Alarm Code 28 (SV0043, SP9216)

(1) Meaning
Connection error in the power failure backup module

(2) Cause and troubleshooting
(a) Check if more than eight PFB-Rs are connected.
(b) Check if more than two PFB-Cs are connected.
(c) Check if more than 15 slaves for communication between the amplifiers are connected.
(d) Check the connection order of PFB-Rs and PFB-Cs.
(e) Check whether PFB-Rs or PFB-Cs in the power supply voltage series that are different from the αiPS-B are connected.
(f) PFB-R or PFB-C communication error between the amplifiers Check the connector and cable (CXA2A, CXA2B).
When multiple PFB-Rs are connected, check the connector and cable (CXA2A, CX55).

4.1.17 Alarm Code A2 (SV0604, SP9110)

(1) Meaning
An error occurred in communication between the Power Supply, spindle amplifiers, and servo amplifiers.

(2) Cause and troubleshooting
(a) Disconnection of communication path
→ Check the connector and cable (CXA2A).
(b) Fault in the Power Supply
→ Replace the Power Supply.

4.2 SERVO AMPLIFIER

If an alarm is issued, the CNC screen displays an alarm number (SVxxxx), the alarm LED (red) on the status display on the front of the servo amplifier lights up and the 7-segment LED displays an alarm code. The meaning of each alarm and the corresponding action for restoration are described below.
In some cases, the servo amplifier or other equipment must be replaced. Be sure to turn off the whole machine and check safety before starting the replacement. After the replacement, check that the cabling is correct and the safety in the surrounding area and turn on the machine again.

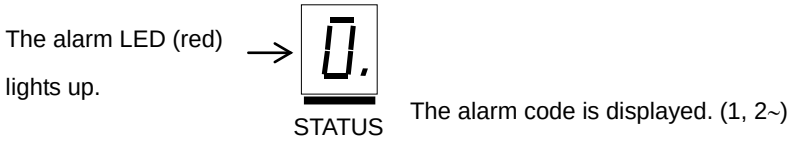

4.2.1 Blinking Alarm Code 1, 1 (SV0444)

(1) Meaning
The internal cooling fan in the servo amplifier has stopped (alarm code 1).
The speed of the internal cooling fan in the servo amplifier has decelerated (blinking alarm code 1).
(2) Cause and troubleshooting
(a) Check whether there is any foreign material in the fan.
(b) Be sure to push the faceplate (control printed circuit board) as far as it will go.
(c) Check that the fan connector is attached correctly.
(d) Replace the fan motor.
(e) Replace the servo amplifier.

4.2.2 Alarm Code 2 (SV0434)

(1) Meaning
The voltage has dropped in the control power supply of the servo amplifier.
(2) Cause and troubleshooting
(a) Check the voltage of the control power supply (24 VDC).
(b) Check the communication cable between the amplifiers.
(c) Replace the servo amplifier.

4.2.3 Alarm Code 3 (SV0013)

(1) Meaning
The CPU bus inside the servo amplifier is abnormal.
(2) Cause and troubleshooting
(a) Replace the servo amplifier.

4.2.4 Alarm Code 4 (SV0012)

(1) Meaning
Settings for the safe torque-off function are incorrect or the circuit is abnormal.

(2) Cause and troubleshooting
- (a) Check the parameter settings.
- (b) Check if the STO-A and STO-B cables are disconnected.
- (c) Check if the input time is off by more than 10 s between the STO-A and the STO-B.
- (d) Replace the servo amplifier.
- (e) Replace the safety PLC or other component.

(3) Details of LED indicators
- (a) If the first axis of the servo amplifier is abnormal, 4 is displayed and the top horizontal bar blinks.
- (b) If the second axis of the servo amplifier is abnormal, 4 is displayed and the bottom horizontal bar blinks.
- (c) If the third axis of the servo amplifier is abnormal, 4 is displayed and the bottom left vertical bar blinks.

4.2.5 Alarm Code 5 (SV0435)

(1) Meaning
The voltage has dropped in the DC link of the servo amplifier.

(2) Cause and troubleshooting
- (a) Check that the connection cable (bar) for DC link is tightened with the screw.
- (b) If a DC link low voltage alarm condition occurs in more than one module, see Subsection 4.1.4, "Alarm code 4" for explanations about how to troubleshoot the Power Supply.
- (c) If a DC link low voltage alarm condition occurs in only one servo amplifier, be sure to push the control printed circuit board of that servo amplifier in as far as it will go.
- (d) Replace the servo amplifier corresponding to the alarm.

4.2.6 Alarm Code 6 (SV0602)

(1) Meaning
The servo amplifier has overheated.

(2) Cause and troubleshooting
- (a) Check that the motor is being used at or below its continuous rating.
- (b) Check that the cooling capacity of the power magnetics cabinet is sufficient (inspect the fans and filters).
- (c) Check that the ambient temperature is not too high.
- (d) Be sure to push the control printed circuit board in as far as it will go.
- (e) Replace the servo amplifier.

4.2.7 Alarm Code 7 (SV0654)

(1) Meaning
The DB relay inside the servo amplifier is abnormal.

(2) Cause and troubleshooting
- (a) Check if the power lead is short-circuited.
- (b) Replace the servo amplifier or dynamic brake module.
- (c) When using a dynamic brake module, replace the connection cable between it and the servo amplifier.

4.2.8 Alarm Code 8 (SV0600)

(1) Meaning
The DC link current in the servo amplifier is abnormal.

(2) Cause and troubleshooting
(a) Remove the motor power leads from the servo amplifier and cancel the emergency stop.
<1> If no abnormal DC link current alarm condition has occurred
→ Go to (b).
<2> If an abnormal DC link current alarm condition has occurred in the amplifier.
→ Replace the servo amplifier.
(b) Remove the motor power leads from the servo amplifier and check the isolation between the U, V, or W motor power lead and the PE.
<1> If the insulation is deteriorated
→ Go to (c).
<2> If the insulation is normal
→ Replace the servo amplifier.
(c) Disconnect the motor from its power leads, and check whether the insulation of the motor or power leads is deteriorated.
<1> If the insulation of the motor is deteriorated
→ Replace the motor.
<2> If the insulation of any power lead is deteriorated
→ Replace the power lead.

4.2.9 Alarm Code 11 (SV0017)

(1) Meaning
There is a communication error in the servo amplifier.

(2) Cause and troubleshooting
(a) Check that the control printed circuit board is properly inserted.
(b) Replace the servo amplifier.

4.2.10 Alarm Code 8., 9., A. (SV0449)

(1) Meaning
An alarm has been output from the IPM of the servo amplifier.

(2) Cause and troubleshooting
(a) Be sure to push the control printed circuit board as far as it will go.
(b) Remove the motor power leads from the servo amplifier and cancel the emergency stop.
<1> If no IPM alarm condition has occurred
→ Go to (c).
<2> If an IPM alarm condition has occurred
→ Replace the servo amplifier.
(c) Remove the motor power leads from the servo amplifier and check the isolation between the U, V, or W motor power lead and the PE.
<1> If the insulation is deteriorated
→ Go to (d).
<2> If the insulation is normal
→ Replace the servo amplifier.
(d) Disconnect the motor from its power leads, and check whether the insulation of the motor or power leads is deteriorated.
<1> If the insulation of the motor is deteriorated
→ Replace the motor.
<2> If the insulation of any power lead is deteriorated
→ Replace the power lead.

4.2.11 Alarm Code 8., 9., A. (SV0603)

(1) Meaning
An overheat alarm has been output from the IPM of the servo amplifier.
(2) Cause and troubleshooting
(a) Be sure to push the control printed circuit board as far as it will go.
(b) Check that the heat sink cooling fan is running.
(c) Check that the motor is being used at or below its continuous rating.
(d) Check that the cooling capacity of the power magnetics cabinet is sufficient (inspect the fans and filters).
(e) Check that the ambient temperature is not too high.
(f) Replace the servo amplifier.

4.2.12 Blinking Alarm Code 2 (SV0015)

(1) Meaning
The power supply voltage in the driver for driving power elements inside the servo amplifier has dropped.
(2) Cause and troubleshooting
(a) Check the 24 V input voltage.
(b) Replace the servo amplifier.

4.2.13 Blinking Alarm Code 7 (SV0659)

(1) Meaning
The SSM is abnormal.
(2) Cause and troubleshooting
(a) Check the 24 V input voltage.
(b) Check the connection between the servo amplifier and SSM.
(c) Replace the SSM.
(d) Replace the servo amplifier.

4.2.14 Blinking Alarm Code 8 (SV0039)

(1) Meaning
An element is short-circuited in the servo amplifier.
(2) Cause and troubleshooting
(a) Replace the servo amplifier.

4.2.15 Blinking Alarm Code 9 (SV0037)

(1) Meaning
Output is open due to a failure in the servo amplifier.
(2) Cause and troubleshooting
(a) Replace the servo amplifier.

4.2.16 Blinking Alarm Code 11 (SV0018)

(1) Meaning
The ROM in the amplifier is abnormal.
(2) Cause and troubleshooting
(a) Replace the servo amplifier.

4.2.17 Alarm Code b, c, d (SV0438)

(1) Meaning
An abnormal motor current has been detected.

(2) Cause and troubleshooting
(a) Checking the servo parameters
Check whether the following parameters have the default values described in FANUC AC SERVO MOTOR αi-B/αi series PARAMETER MANUAL (B-65270EN).

Series 30*i*-B, 31*i*-B, 32*i*-B, 35*i*-B, 0*i*-D, 0*i*-F Power Mortion *i* -A	No.2004	No.2040	No.2041

Alternatively, if an abnormal motor current alarm condition occurs only on rapid acceleration/deceleration, it is likely that the motor is being used under too harsh a condition. Increase the acceleration/deceleration time constant, and see what will occur.
(b) Be sure to push the control printed circuit board as far as it will go.
(c) Remove the motor power leads from the servo amplifier and cancel the emergency stop.
<1> If no abnormal motor current occurs
→ Go to (d).
<2> If an abnormal motor current occurs
→ Replace the servo amplifier.
(d) Remove the motor power leads from the servo amplifier and check the isolation between the U, V, or W motor power lead and the PE.
<1> If the insulation is deteriorated
→ Go to (e).
<2> If the insulation is normal
→ Replace the servo amplifier.
(e) Disconnect the motor from its power leads, and check whether the insulation of the motor or power leads is deteriorated.
<1> If the insulation of the motor is deteriorated
→ Replace the motor.
<2> If the insulation of any power lead is deteriorated
→ Replace the power lead.

4.2.18 Blinking Alarm Code F, F (SV0601)

(1) Meaning
The heat sink cooling fan in the servo amplifier has stopped (alarm code F).
The speed of the heat sink cooling fan in the servo amplifier has decelerated (blinking alarm code F).

(2) Cause and troubleshooting
(a) Check whether there is any foreign material in the heat sink cooling fan.
(b) Be sure to push the control printed circuit board as far as it will go.
(c) Check that the heat sink cooling fan connector is attached correctly.
(d) Replace the heat sink cooling fan.
(e) Replace the servo amplifier.

4.2.19 Alarm Code J (SV0014)

(1) Meaning
A CPU watchdog alarm has occurred in the servo amplifier.

(2) Cause and troubleshooting
(a) Replace the servo amplifier.

4.2.20 Alarm Code P (SV0604)

(1) Meaning
There is a communication error between the amplifiers.
(2) Cause and troubleshooting
(a) Check the communication cable between the amplifiers.
(b) Replace the servo amplifier.

4.2.21 Alarm Code U

(1) Meaning
SV FSSB communication error (COP10B) (Note)
(2) Cause and troubleshooting
(a) Replace the optical cable (COP10B) of the servo amplifier that is the closest to the CNC of those displaying U. (In Fig. 4.2.21, the cable between UNIT2 and UNIT3.)
(b) Replace the servo amplifier that is the closest to the CNC of those displaying U. (In Fig. 4.2.21, UNIT3.)
(c) Replace the servo amplifier on the COP10B side that is the closest to the CNC of those displaying U. (In Fig. 4.2.21, UNIT2.)
(d) Replace the CNC servo card.

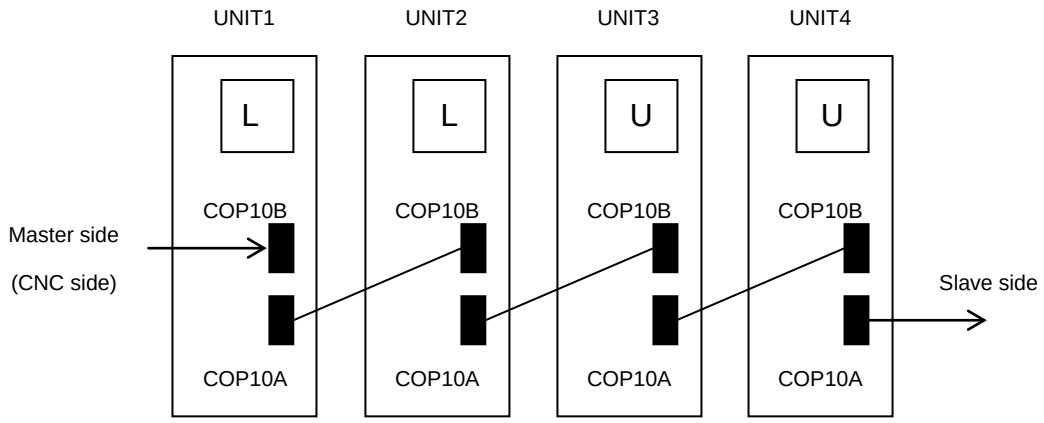

Fig. 4.2.21

NOTE
When the CNC power is turned on, "U" blinks momentarily, and then "-" steadily lights. This is not a failure, though.

4.2.22 Alarm Code L

(1) Meaning
SV FSSB communication error (COP10A)

(2) Cause and troubleshooting
(a) Replace the optical cable (COP10A) of the servo amplifier that is the furthest from the CNC of those displaying L. (In Fig. 4.2.22, the cable between UNIT2 and UNIT3.)
(b) Replace the servo amplifier that is the furthest from the CNC of those displaying L. (In Fig. 4.2.22, UNIT2.)
(c) Replace the servo amplifier on the COP10A side that is the furthest from the CNC of those displaying L. (In Fig. 4.2.22, UNIT3.)

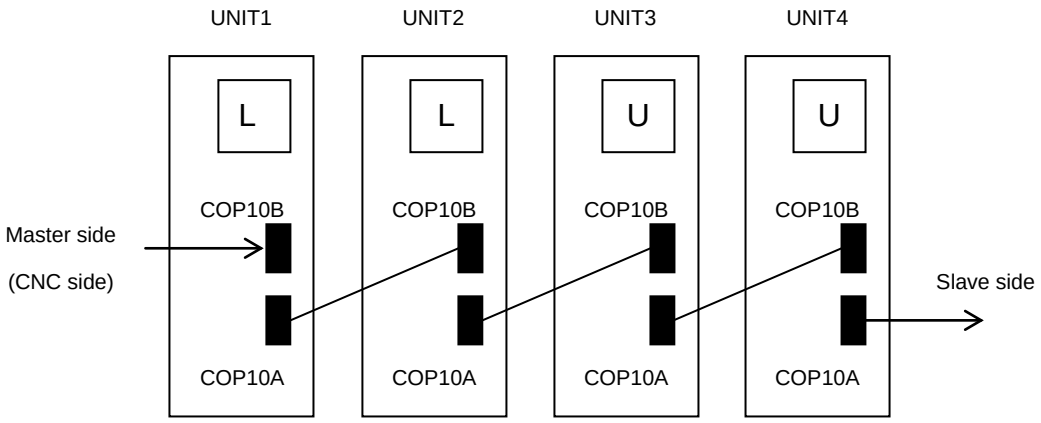

Fig. 4.2.22

4.2.23 Alarm Code b., c., d. (SV0016)

(1) Meaning
The current detection circuit in the servo amplifier is abnormal.

(2) Cause and troubleshooting
(a) Check the voltage of the control power supply (24 VDC).
(b) Replace the servo amplifier.

4.2.24 Blinking Alarm Code A (SV0036)

(1) Meaning
A power lead is disconnected or the motor is defective.

(2) Cause and troubleshooting
(a) Check that the power leads are connected.
(b) Check whether a power lead is disconnected. If there is a disconnected power lead, replace it.
(c) Check whether a motor winding is disconnected. If there is a disconnected motor winding, replace the motor.

4.3 SERVO SOFTWARE

The following table lists alarms related to the servo software. Take appropriate action according to the alarm number.

No.	Message	Description
SV0011	Abnormal SV motor current (software) SV MOTOR OVER CURRENT(SOFT)	The digital servo control software has detected an abnormal command value. An abnormality such as unconnected power cable, disconnection (open-phase), or short circuit is suspected.
SV0417	Invalid servo parameter ILL DGTL SERVO PARAMETER	The setting value of the digital servo parameter is not correct. When diagnosis data (bit 4 of No. 0203) is 1, the servo software has detected an invalid parameter. → See Note 1.
SV0436	Software thermal error (OVC) SOFTTHERMAL(OVC)	The digital servo control software has detected a software thermal error (OVC). → See Note 2.
SV0445	Software disconnection alarm SOFT DISCONNECT ALARM	The digital servo control software has detected disconnection of the pulsecoder. → See Note 3.
SV0447	Hardware disconnect alarm (separate) HARD DISCONNECT(EXT)	The hardware has detected disconnection of the separate detector. This alarm is issued when a separate phase A/B scale is used. Check if the phase A/B detector is connected correctly.
SV0453	αPulsecoder soft disconnection SPC SOFT DISCONNECT ALARM	αPulsecoder soft disconnection alarm. Turn off the power to the CNC, detach the pulsecoder cable, and then attach it again. If this alarm is still issued, replace the pulsecoder. → See Note 4.
DS0306	APC alarm: Battery voltage 0 APC ALARM: BATTERY VOLTAGE 0	The battery voltage of the absolute position detector has dropped to a level at which data cannot be retained. Or, power is being supplied to the pulsecoder for the first time. It may be a malfunction of the battery or cable. Replace the battery with the machine turned on. → See Note 5.
DS0307	APC alarm: Battery voltage drop 1 APC ALARM: BATTERY LOW 1	The battery voltage of the absolute position detector has dropped to the level where it needs to be replaced. Replace the battery with the machine turned on. → See Note 5.
DS0308	APC alarm: Battery voltage drop 2 APC ALARM: BATTERY LOW2	The battery voltage of the absolute position detector has dropped to the level where it needs to be replaced in the past (including the period while the voltage was off). Replace the battery with the machine turned on. → See Note 5.

Note 1: Invalid servo parameter setting alarm

The invalid servo parameter setting alarm is issued when a setting outside of the specifiable range is specified.
When an invalid parameter is detected on the servo side, diagnosis data (bit 4 of No. 0203) is 1.
(Alarm identification method)

	#7	#6	#5	#4	#3	#2	#1	#0
0203	DTE	CRC	STB	PRM				

For details and action required when the invalid servo parameter setting alarm is issued on the servo side, refer to the FANUC AC SERVO MOTOR αi series Parameter Manual (B-65270EN).

(Reference information)
No. 352 on the diagnosis screen displays a number so that details of the invalid parameter detected on the servo side can be checked.
For details, see the FANUC AC SERVO MOTOR αi-B/αi series PARAMETER MANUAL (B-65270EN).

Note 2: OVC alarm-related

If the OVC alarm has occurred, check that the following parameters are set to their default values. If these parameters are correct, increase the time constant, increase the stop time in the program, or take other action to relax the operating conditions.

Parameter No.	Details
2062	Overload protection coefficient (POVC1)
2063	Overload protection coefficient (POVC2)
2065	Overload protection coefficient (POVCLMT)
2161	OVC magnification at stop (OVCSTP)
2162	Second overload protection coefficient (POVC21)
2163	Second overload protection coefficient (POVC22)
2164	Second overload protection coefficient (POVCLMT2)
2574	Second overload protection coefficient (VELOVC)

The diagnosis screen displays OVC data. (The OVC alarm is issued if OVC data is 100%.)

	Diagnosis No.
OVC data (%)	No.750

Note 3: Software disconnection alarm

This alarm is issued when the position feedback pulse variation that can be obtained from the separate pulsecoder is small relative to the velocity feedback pulse variation that can be obtained from the built-in detector. This means that this alarm is not issued when a semi-closed is used. Check whether the separate detector outputs position feedback pulses correctly if this alarm is issued. If position feedback pulses are output correctly, it is thought that the motor alone is rotating in the reverse direction at the start of machine operation because of a large backlash between the motor position and scale position. In this case, you can avoid the alarm during normal operation by increasing the alarm level to the amount equivalent to the backlash.

To check the position feedback pulse

<1> Specify the data type on the channel setting screen in the SERVO GUIDE.
CH1: ABS (cumulative position feedback value for the detector built-in the motor)
CH2: POSF (cumulative position feedback value on the separate detector side)

<2> Set Synchro with calculation in the calculation graph display dialog box, set CH1 to input 1 and CH2 to input 2.

<3> Obtain data and display the semi-full error (input 2 - input 1) in the graph.

<4> Check the graph.

- If the semi-full error increases at the time of reversion, adjust the servo to decrease it or set a value a bit larger than the semi-full error to No. 2064 to avoid the alarm.
- If the semi-full error is too large at a time other than reversion, check whether the parameters on the separate detector side are correctly set.

Related parameter

	#7	#6	#5	#4	#3	#2	#1	#0
2003							**TGAL**	

TGAL(#1) 1: Uses the parameter for the soft disconnection alarm detection level.
Detected at 1/32 rev when bit 1 of No. 2003 is 0.
Detected at No.2064/32 rev when bit 1 of No. 2003 is 1.

2064	**Soft disconnection alarm level**

Standard setting value 4: Alarm issued for a 1/8 rotation of the motor.
Increase this value.

Note 4: αPulsecoder soft disconnection alarm

This alarm is issued when synchronization between the absolute position data sent from the built-in Pulsecoder and phase data is lost. Turn off the power to the CNC, detach the pulsecoder cable, and attach it again about 10 minutes later. If this alarm is still issued, replace the pulsecoder.

When using the absolute type linear encoder in the linear motor or when using the synchronization built-in servo motor, ignore this alarm because the detector does not have phase data. Set the following bits.

	#7	#6	#5	#4	#3	#2	#1	#0
2013	APTG							

APTG(#7) 1: Ignores α pulsecoder soft disconnection.

Note 5: Battery-related

Check the connection and voltage of battery. If the voltage has dropped, replace the battery. An alarm may be issued when you turn on the CNC for the first time after enabling absolute position detection. In this case, turn OFF the CNC and then turn it ON again.

4.4 SPINDLE AMPLIFIER

If an alarm is issued, the CNC screen displays an alarm number (SPxxxx), the alarm LED (red) on the status display on the front of the spindle amplifier lights up and the 2-digit 7-segment LED displays an alarm code. The meaning of each alarm and the corresponding action for restoration are described below. In some cases, the spindle amplifier or other equipment must be replaced. Be sure to turn off the whole machine and check safety before starting the replacement. After the replacement, check that the cabling is correct and the safety in the surrounding area and turn on the machine again.

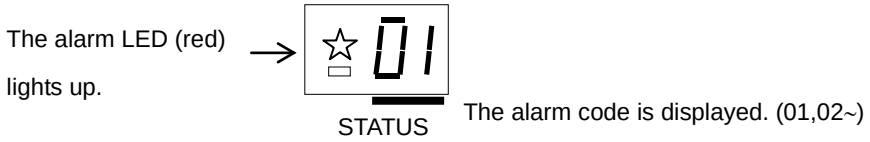

4.4.1 Alarm Code 01 (SP9001)

It has been detected that the internal temperature of the motor is higher than the specified value.

(1) If this alarm is issued during cutting (the motor temperature is high)
  (a) The cooling status of the motor is abnormal.
    <1> If the fan motor for cooling the spindle motor has stopped, check that the power supply cable for the fan motor is connected correctly and that the cable is free of flaws such as scratches. If this does not resolve the situation, replace the fan motor.
    <2> If the spindle motor is liquid-cooled, check that the cooling system is free of faults.
    <3> If the ambient temperature of the spindle motor is high (higher than the specified range), make improvements so that the ambient temperature falls within the specified range.
  (b) Check the processing conditions.

(2) If this alarm is issued under a light load (the motor temperature is high)
  (a) The spindle motor frequently accelerates and decelerates.
    Make improvements so that the average output of the spindle motor including output during acceleration or deceleration is within the continuous rating output.
  (b) Motor-specific parameters are incorrect.
    Check the motor-specific parameters while referring to the FANUC AC SPINDLE MOTOR αi/βi series PARAMETER MANUAL (B-65280EN).

(3) If this alarm is issued immediately after power-on or even if the motor temperature is low
  (a) Motor-specific parameters are incorrect.
    Check the motor-specific parameters while referring to the FANUC AC SPINDLE MOTOR αi/βi series PARAMETER MANUAL (B-65280EN).

Parameter No.	α motor	αi motor
4134	0	Motor-specific parameter

  (b) The feedback cable of the spindle motor is abnormal.
    Replace the feedback cable.
  (c) The temperature sensor inside the spindle motor is defective.
    Replace the spindle motor.
  (d) Cable connection of the temperature sensor is incorrect.
    The cable connection is different when a thermostat is used for the temperature sensor in the spindle motor in the αi-B series spindle amplifier. (Connect to pin Nos. 3 and 4 of connector JYA2.) For details, see the FANUC SERVO AMPLIFIER αi-B series DESCRIPTIONS (B-65412EN).
  (e) The spindle amplifier may be defective.
    Replace the spindle amplifier.

4.4.2 Alarm Code 02 (SP9002)

It has been detected that the detected motor speed value was very different from the specified speed.

(1) If this alarm is issued during motor acceleration
  (a) The parameter setting of an acceleration/deceleration time is not acceptable.
  Set the acceleration/deceleration time of the actual machine with some margin to the following parameter.

Parameter No.	Description
4082	Setting of acceleration/deceleration time

  (b) Setting parameters for the speed detector are incorrect.
  Set correct values while referring to the FANUC AC SPINDLE MOTOR αi/βi series PARAMETER MANUAL (B-65280EN).

(2) If this alarm is issued at a heavy cutting load
  (a) The cutting load is more than the maximum output of the motor.
  Check the load meter display and review the use conditions.
  (b) An incorrect output limit parameter is set.
  Check that the following parameters match the specifications of the machine and motor.

Parameter No.	Description
4028	Output restriction pattern setting
4029	Output restriction value

  (c) Motor-specific parameters are incorrect.
  Check the motor-specific parameters while referring to the FANUC AC SPINDLE MOTOR αi/βi series PARAMETER MANUAL (B-65280EN).

(3) If this alarm is issued even during unloaded rotation
  (a) A motor winding is disconnected.
  Check the conductivity of motor windings.
  (b) A power lead is disconnected.
  Check the conductivity of power leads.
  (c) If the alarm is issued after checking (a) and (b) above, replace the spindle amplifier.

4.4.3 Alarm Code 03 (SP9003)

It has been detected that the voltage in the DC link is low. This alarm is checked when emergency stop is canceled.

(1) If this alarm is displayed while the spindle is operating (rotating)
  A fuse in the DC link in the spindle amplifier is likely to have blown. Replace the spindle amplifier. The following causes are suspected for this alarm. Therefore, perform the following steps before turning on the power again after replacing the spindle amplifier.
  (a) Check that the power lead is not grounded.
  (b) Check that motor windings are not grounded.
(2) When you turn on the magnetic contactor in the input section of the Power Supply and then turn it off with this alarm when the emergency stop is canceled (The magnetic contactor may not to be turned off in the configuration where two or more axes of the spindle amplifiers are connected.)
  (a) A cable is not connected in the DC link.
  Check and correct the cabling in the DC link.
  (b) The control printed circuit board is not correctly attached.
  Push in the control printed circuit board in the front section of the spindle amplifier as far as it will go. If it does not go in easily, pull it out and push it in again. (This alarm may be displayed due to poor contact of the connector that connects the control printed circuit board and the power printed circuit board.)
  (c) If the alarm is issued after checking (a) and (b) above, replace the spindle amplifier.

4.4.4 Alarm Code 06 (SP9006)

An error in the temperature sensor in the spindle motor or disconnection of the temperature sensor cable has been detected.

(1) Motor-specific parameters are incorrect.
Check the motor-specific parameters while referring to the FANUC AC SPINDLE MOTOR αi/βi series PARAMETER MANUAL (B-65280EN).
(2) The feedback cable is defective.
Replace the feedback cable.
The temperature sensor inside the spindle motor is abnormal.
Replace the internal temperature sensor or spindle motor.
(4) The ambient temperature of the spindle motor is outside of the specified range (low).
Set the ambient temperature of the spindle motor within the specified range during use.
(5) The temperature sensor inside the spindle motor and winding are short-circuited.
Cutting fluid or some other foreign matter may have entered into the spindle motor, short-circuiting the internal temperature sensor and winding. Check if cutting fluid or other foreign matter has gotten into the spindle motor.
(6) The spindle amplifier may be defective.
Replace the spindle amplifier.

4.4.5 Alarm Code 07 (SP9007)

It has been detected that the spindle motor had rotated exceeding the highest speed by more than 15% (standard parameter setting).

(1) If this alarm is issued during spindle synchronization
If you deactivate a motor on either side (SFR or SRV) and reactivate it during spindle synchronization, the spindle motor may accelerate to eliminate the position error accumulated during this period and consequently reach the highest speed, causing the alarm.
Correct the ladder to avoid this sequence.
(2) The spindle amplifier may be defective.
Replace the spindle amplifier.
(3) The detector may be defective.
Replace the detector.

4.4.6 Alarm Code 09 (SP9009)

It has been detected that the temperature of the heat sink or power element (IPM) in the αiSP-B had abnormally risen.

(1) If this alarm is issued during cutting (the heat sink temperature is high)
  (a) If this alarm is issued when the load meter indicates a value that is less than or equal to the continuous rating of the amplifier, check the cooling status of the heat sink.
    <1> If the filter of the air inlet port in the power magnetics cabinet is dirty or there is an obstacle that interrupts the air flow to the heat sink, the heat sink is not sufficiently cooled. Make improvements to ensure sufficient air flow to the heat sink.
    <2> If the ambient temperature of the spindle amplifier is outside of the specified range (high), make improvements so that the temperature falls within the specified range.
  (b) If this alarm is issued when the load meter indicates a value that is greater than or equal to the continuous rating of the amplifier, review the cutting conditions.
  (c) If the heat sink in the spindle amplifier is very dirty, clean it with air or some other tool. In addition, consider the structure of the power magnetics cabinet that prevents cutting fluid or other foreign matter from getting directly on the heat sink.
(2) If this alarm is issued under a light load (the heat sink temperature is high)
  (a) The acceleration/deceleration frequency is high.
  Make improvements so that the average output of the spindle motor including output during acceleration or deceleration is within the continuous rating output.
  (b) Motor-specific parameters are incorrect.
  Check the motor-specific parameters while referring to the FANUC AC SPINDLE MOTOR αi/βi series PARAMETER MANUAL (B-65280EN).
(3) If this alarm is issued immediately after power-on
  (a) The control printed circuit board is not correctly attached.
  Push in the control printed circuit board in the front section of the spindle amplifier as far as it will go. If it does not go in easily, pull it out and push it in again. (This alarm may be displayed due to poor contact of the connector that connects the control printed circuit board and the power printed circuit board.)
  (b) If the alarm is issued after checking (a) above, replace the spindle amplifier.

4.4.7 Alarm Code 10 (SP9010)

It has been detected that the voltage of the control power supply (24 VDC) input to the connector CXA2B has dropped.

(1) Check the voltage of the control power supply (24 VDC).
(2) Check if there is a problem with the cable for the communication interface between the amplifiers.
(3) If the alarm is issued after checking (1) and (2) above, replace the spindle amplifier.

4.4.8 Alarm Code 12 (SP9012)

It has been detected that excessive current has flowed through the main circuit in the spindle amplifier.

(1) If this alarm is issued immediately after power-on
  (a) The control printed circuit board is not correctly attached.
  Push in the control printed circuit board in the front section of the spindle amplifier as far as it will go. If it does not go in easily, pull it out and push it in again. (This alarm may be displayed due to poor contact of the connector that connects the control printed circuit board and the power printed circuit board.)
  (b) If the alarm is issued after checking (a) above, replace the spindle amplifier.
(2) If this alarm is issued immediately after the spindle rotation command is input
  (a) A power lead of the spindle motor is defective.
  Check for a short circuit between power leads or grounding of a power lead. If there is a fault, replace the power lead.
  (b) The spindle motor has poor isolation.
  Check for grounding of a motor winding. If there is a fault, replace the spindle motor.
  The αiSP-B is equipped with the isolation deterioration detection function for the spindle motor. For details, see the FANUC SERVO AMPLIFIER αi-B series DESCRIPTIONS (B-65412EN).
  (c) Motor-specific parameters are incorrect.
  Check the motor-specific parameters while referring to the FANUC AC SPINDLE MOTOR αi/βi series PARAMETER MANUAL (B-65280EN).
  (d) If the alarm is issued after checking (a) to (c) above, replace the spindle amplifier.
(3) If this alarm is issued during spindle rotation
  (a) Motor-specific parameters are incorrect.
  Check the motor-specific parameters while referring to the FANUC AC SPINDLE MOTOR αi/βi series PARAMETER MANUAL (B-65280EN).
  (b) The spindle sensor signal is abnormal.
  Check the signal waveform of the spindle sensor while referring to “4.3.6 Checking the Feedback Signal Waveform” in Part I. If there is an error, adjust the sensor assembly or replace the spindle sensor.
  (c) A power lead or motor winding may be disconnected.
  Check the conductivity of power leads and motor windings. If there is an abnormality, replace the motor.
  (d) The belt between the spindle and the motor may have slipped.
  This alarm may be issued due to this cause in the spindle motor βIic series. Clean the pulleys and adjust the belt tension.
  (e) If the alarm is issued after checking (a) to (d) above, replace the spindle amplifier.
  If the installation conditions of the spindle amplifier do not satisfy the specifications or if the heat sink is not sufficiently cooled due to contamination, a power element in the spindle amplifier may fail. In this case, replace the spindle amplifier and review the installation conditions. In addition, consider the structure of the power magnetics cabinet that prevents cutting fluid or other foreign matter from directly getting on the heat sink. For details on the installation conditions, see the FANUC SERVO AMPLIFIER αi-B series DESCRIPTIONS (B-65412EN).

4.4.9 Alarm Code 13 (SP12XX)

It has been detected that the internal RAM of the CPU in the spindle amplifier is abnormal.
Replace the spindle amplifier.

4.4.10 Alarm Code 14 (SP9014)

It has been detected that the ID data for the spindle amplifier does not match the spindle control software series. Replace the spindle amplifier.

4.4.11 Alarm Code 15 (SP9015)

It has been detected that the sequence is not correctly executed during switching operation under output switching control or spindle switching control.
For output switching control, this alarm is issued if the magnetic contactor status signal (RCH, RCHHG) does not change within one second after the power lead switching signal (RCHP) changes.
For spindle switching control, this alarm is issued if the magnetic contactor status signal (MCFN, MFNHG) does not change within one second after the spindle switching request signal (SPSL) changes.

(1) The magnetic contactor for power lead switching is defective.
If the contact of the magnetic contactor in the power lead switching unit or the magnetic contactor that the customer prepared does not operate, check the power supply of the magnetic contactor. If this does not resolve the situation, replace the power lead switching unit or the magnetic contactor that the customer prepared.
(2) The I/O unit or wiring for checking the contact of the magnetic contactor is defective.
Check the cabling. If this does not resolve the situation, replace the I/O unit.
(3) The sequence (ladder) is incorrect.
Correct the processing to complete switching within one second.

4.4.12 Alarm Code 16 (SP9016)

An error was detected when the internal RAM of the CPU in the spindle amplifier was tested. This alarm is checked only when the Dual Check Safety function is used.
Replace the spindle amplifier.

4.4.13 Alarm Code 17 (SP9017)

It has been detected that the ID data for the spindle amplifier is abnormal.

(1) The control printed circuit board is not correctly attached.
Push in the control printed circuit board in the front section of the spindle amplifier as far as it will go. If it does not go in easily, pull it out and push it in again. (This alarm may be displayed due to poor contact of the connector that connects the control printed circuit board and the power printed circuit board.)
(2) If the alarm is issued after checking (1) above, replace the spindle amplifier.

4.4.14 Alarm Code 18 (SP12XX)

A sum check error has been detected in communication between the CPU and the ROM in the spindle amplifier.
Replace the spindle amplifier.

4.4.15 Alarm Code 19, 20 (SP9019, SP9020)

It has been detected that the offset for the current detection circuit is excessive. Alarm code 19 corresponds to the Phase U side while alarm code 20 corresponds to the Phase V side. This alarm is checked immediately after power-on

(1) The control printed circuit board is not correctly attached.
Push in the control printed circuit board in the front section of the spindle amplifier as far as it will go. If it does not go in easily, pull it out and push it in again. (This alarm may be displayed due to poor contact of the connector that connects the control printed circuit board and the power printed circuit board.)
(2) If the alarm is issued after checking (1) above, replace the spindle amplifier.

4.4.16 Alarm Code 21 (SP9021)

It has been detected that the polarity (rotation direction) of the position sensor is not correctly set.

(1) The setting of a parameter is incorrect.
Check the parameter to set the polarity of the position sensor (bit 4 of No. 4001). For details, see the FANUC AC SPINDLE MOTOR αi/βi series PARAMETER MANUAL (B-65280EN).
(2) The feedback cable of the position sensor is not correctly wired.
If the phase A/B signals are connected in reverse, correct the cabling.
(3) If the spindle is connected with the V belt, check if the belt slips.
(4) Check whether the signal from the position sensor is normal.
(5) If the alarm is issued after checking (1) to (4) above, replace the spindle amplifier.

4.4.17 Alarm Code 22 (SP9022)

A larger current than the short-time rating of the spindle amplifier continuously flowed.
Possible causes are a high frequency of acceleration/deceleration and high cutting load.

(1) The operating conditions of the spindle are stringent.
Possible causes include a high acceleration/deceleration frequency of the spindle and a high cutting load. Review the operating conditions of the spindle.
(2) Motor-specific parameters are incorrect.
Check the motor-specific parameters while referring to the FANUC AC SPINDLE MOTOR αi/βi series PARAMETER MANUAL (B-65280EN).

4.4.18 Alarm Code 24 (SP12XX)

An error has been detected in serial communication data transferred between the CNC and spindle amplifier. (Note)

(1) The optical communication cable between the CNC and the spindle amplifier is defective. Replace the cable.
(2) If the alarm is issued after replacing the cable, replace the spindle amplifier.
(3) If the alarm is issued after replacing the cable or spindle amplifier, replace the CNC board or module related to optical communication.

NOTE
This alarm is issued also if the CNC power is off. This is not a failure, though.

4.4.19 Alarm Code 27 (SP9027)

An error has been detected in communication between the αi POSITIONCODER and spindle amplifier.

(1) If an alarm is issued while the motor is inactive
  (a) The setting of a parameter is incorrect.
  Check the detector setting parameters while referring to the FANUC AC SPINDLE MOTOR αi/βi series PARAMETER MANUAL (B-65280EN).
  (b) The connection position on the spindle amplifier side of the feedback cable of the αi POSITIONCODER is incorrect.
  Check the connection position while referring to the FANUC SERVO AMPLIFIER αi-B series DESCRIPTIONS (B-65412EN).
  (c) The feedback cable of the αi POSITIONCODER is disconnected.
  Replace the feedback cable.
  (d) If the alarm is issued after checking (a) to (c) above, replace the spindle amplifier.

(2) If an alarm is issued when the feedback cable is moved (such as when the spindle is moved)
  (a) The control printed circuit board is not correctly attached.
  Push in the control printed circuit board in the front section of the spindle amplifier as far as it will go. If it does not go in easily, pull it out and then push it in again.
  (b) The feedback cable of the αi POSITIONCODER is disconnected.
  Replace the feedback cable.
  (c) Cutting fluid has entered into the connector.
  If cutting fluid has entered into the connector, wash it off.
  (d) If the alarm is issued after checking (a) to (c) above, replace the spindle amplifier.

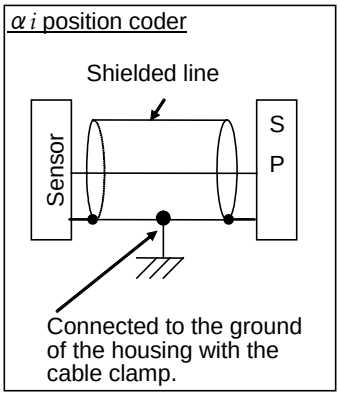

(3) If this alarm is issued when the motor rotates
  (a) The feedback cable is not sufficiently shielded.
  Read the chapter about connections in the FANUC SERVO AMPLIFIER αi-B series DESCRIPTIONS (B-65412EN) and check the shield processing of the feedback cable.
  (b) The feedback cable is bundled with the motor power leads.
  If the feedback cable is bundled with the motor power leads, read the chapter about installation in the FANUC SERVO AMPLIFIER αi-B series DESCRIPTIONS (B-65412EN) and separate them.

4.4.20 Alarm Code 29 (SP9029)

An excessive load (standard setting: load meter reading of 9 V) has been applied continuously for a certain period (standard setting: 30 seconds).

(1) If the alarm is issued during cutting
  (a) Check the load meter and consider the cutting conditions.
(2) If this alarm is issued during a stop
  (a) The spindle is locked.
  Check the sequence to see if the spindle is locked when a command for very slow movement is specified or orientation is specified for the spindle.
(3) If the spindle does not rotate as specified (the spindle rotates at a very low speed) and this alarm is issued
  (a) The setting of a parameter is incorrect.
  Check the detector setting parameters while referring to the FANUC AC SPINDLE MOTOR αi/βi series PARAMETER MANUAL (B-65280EN).
  (b) The phase sequence of the motor power lead is incorrect.
  Check the phase sequence of the motor power leads again.
  (c) The connection position of the feedback cable of the motor is incorrect.
  Make sure that the phase A/B signal of the spindle sensor is not connected in reverse.
  (d) The feedback cable of the motor or spindle sensor (or motor) is defective.
  Manually turn the motor and check the motor speed on the CNC diagnosis screen or whether the spindle check board displays the speed. If the speed is not displayed, replace the feedback cable or spindle sensor (or motor).
(4) If the spindle does not rotate as specified (the spindle does not rotate at all) and this alarm is issued
  (a) A power lead is abnormal.
  Check that the power lead is correctly connected from the spindle amplifier to the motor. When switching the output or spindle, check whether the magnetic contactor on the side to be used is on.
  (b) If the alarm is issued after checking (1) to (4-a) above, replace the spindle amplifier.

4.4.21 Alarm Code 31 (SP9031)

The motor failed to rotate as specified, and has stopped or is rotating at a very low speed.

(1) If the motor rotates at a very low speed and this alarm is issued
  (a) The setting of a parameter is incorrect.
  Check the detector setting parameters while referring to the FANUC AC SPINDLE MOTOR αi/βi series PARAMETER MANUAL (B-65280EN).
  (b) The phase sequence of the motor power lead is incorrect.
  Check whether the phase sequence of the motor power lead is correct.
  (c) The feedback cable of the motor has a problem.
  Make sure that the phase A/B signal of the spindle sensor is not connected in reverse.
  (d) The feedback cable of the motor or spindle sensor (or motor) is defective.
  Manually turn the motor and check the motor speed on the CNC diagnosis screen or whether the spindle check board displays the speed. If the speed is not displayed, replace the feedback cable or spindle sensor (or motor).
(2) If the motor does not rotate at all and this alarm is issued
  (a) The sequence for locking the spindle is incorrect.
  Check the sequence to see if the spindle is locked.
  (b) The power lead is defective.
  Check that the power lead is correctly connected from the spindle amplifier to the motor. When switching the output or spindle, check whether the magnetic contactor on the side to be used is on.
  (c) If the alarm is issued after checking (1) to (2-b) above, replace the spindle amplifier.

4.4.22 Alarm Code 32 (SP12XX)

The LSI memory for serial communication of the spindle amplifier contains an error.
Replace the spindle amplifier.

4.4.23 Alarm Code 34 (SP9034)

A parameter outside the specifiable range was set. Correct the parameter with (1) or (2) below.

(1) Connect the spindle check board (A06B-6078-H001) to the connector JY1.
The spindle check board (A06B-6078-H001) alternately displays AL-34 and F-xxx. F-xxx indicates the parameter number outside the specifiable range. For the correspondence between the CNC parameter numbers and F-xxx, see "Internal number F-xxx" in Appendix "SPINDLE PARAMETER LIST" in the FANUC AC SPINDLE MOTOR αi/βi series PARAMETER MANUAL (B-65280EN). Correct the setting value of the relevant parameter.

(2) A parameter outside the specifiable range can be identified with the status error number. The status error number in the diagnosis number No. 710 indicates the internal number of the relevant parameter. For the correspondence between the internal numbers and actual parameters, see "Internal number F-xxx" in Appendix "SPINDLE PARAMETER LIST" in the FANUC AC SPINDLE MOTOR αi/βi series PARAMETER MANUAL (B-65280EN). Correct the setting value of the relevant parameter.

If the alarm is issued after checking (1) and (2) above, replace the spindle amplifier.

4.4.24 Alarm Code 35 (SP9035)

This alarm can be issued only in the sensor-less model (βI*i*c series).
The motor speed calculated from the position coder is different from the motor speed estimated with the spindle control software.

(1) If an alarm is issued when a rotation command is entered

(a) Error in the position coder setting parameter
Correctly specify the bits representing the relationships between the direction of position coder rotation and that of spindle rotation and between the direction of spindle rotation and that of motor rotation.

Parameter No.	Description
4000#0	Spindle and spindle motor rotation directions
4001#4	Spindle sensor (position coder) mounting direction

(b) Invalid gear ratio parameter setting
Check to see if an incorrect gear ratio has been specified.
This value is used to convert the position coder speed to the motor speed. Be sure to specify the correct value.

Parameter No.	Description
4056~4059	Gear ratio between the spindle and motor

(c) Clutch/gear signal error
Make sure that the entered clutch/gear signals (CTH1A, CTH2A) are correct with respect to the actually selected gear.

		#7	#6	#5	#4	#3	#2	#1	#0
First spindle	G070					CTH1A	CTH2A		
Second spindle	G074					CTH1B	CTH2B		

(d) Belt slippage between the spindle and spindle motor
Make adjustments so that the belt between the spindle and the spindle motor does not slip.

(2) If the alarm is issued during cutting
The load is excessive and the motor speed decelerates.
Review the cutting conditions.

4.4.25 Alarm Code 36 (SP9036)

The error counter overflowed.

(1) The setting of a parameter is incorrect.
  (a) The gear ratio set in a parameter is incorrect.
  Check if an excessively large gear ratio is set.
  (b) The setting of a position gain is incorrect.
  If the gear ratio data is correct, increase the position gain.

Parameter No.	Description
4056~4059	Gear ratio between the spindle and motor
4060~4063	Position gain at orientation
4065~4068	Position gain in the servo mode/spindle synchronization
4069~4072	Position gain in Cs contour control

(2) The sequence is incorrect.
  (a) Check if the motor is deactivated (by turning off SFR/SRV) in a position control mode (rigid tapping, Cs contour control, or spindle synchronization control).

4.4.26 Alarm Code 37 (SP9037)

After emergency stop signal input, the motor is accelerated without being decelerated. This alarm is issued also when the motor is not deactivated (the motor is not decelerated completely) when the acceleration/deceleration time (initial parameter setting: 10 seconds) has elapsed after emergency stop signal input.

(1) The parameter setting of the speed detector is incorrect.
  Set correct values while referring to the FANUC AC SPINDLE MOTOR αi/βi series PARAMETER MANUAL (B-65280EN).
(2) The parameter setting of an acceleration/deceleration time is not acceptable.
  Check the parameter-set value and actual acceleration/ deceleration time, then set an actual acceleration/deceleration time plus some margin.

Parameter No.	Description
4082	Setting of acceleration/deceleration time

4.4.27 Alarm Code 41 (SP9041)

The position where the one-rotation signal of the αi POSITIONCODER is generated is incorrect.

(1) The setting of a parameter is incorrect.
Check the detector setting parameters while referring to the FANUC AC SPINDLE MOTOR αi/βi series PARAMETER MANUAL (B-65280EN).

(2) The αi POSITIONCODER is defective.
If you observe the phase Z signal for the αi POSITIONCODER but the signal does not occur at each rotation, replace the αi POSITIONCODER.

(3) The frame ground is not sufficiently grounded.
Ground the equipment flange, cable shield or other component with a low impedance. Keep a distance of 10 cm or more between the ground of the signal system and the ground of the power system. Connect the grounding wire to an unpainted surface.

(4) The feedback cable is not sufficiently shielded.
Read the chapter about connections in the FANUC SERVO AMPLIFIER αi-B series DESCRIPTIONS (B-65412EN) and check the shield processing of the feedback cable.

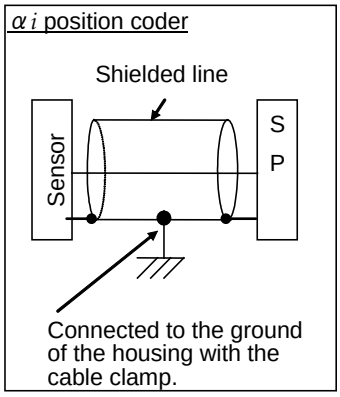

(5) The feedback cable is routed parallel to the motor power leads over a long distance or is bundled with them.
Noise may be induced in the feedback cable by the power lead. Read the chapter about installation in the FANUC SERVO AMPLIFIER αi-B series DESCRIPTIONS (B-65412EN) and separately wire the power leads and the feedback cable.

(6) The specifications of the feedback cable are incorrect.
Use the twisted pair line for the sensor signal. Use the shielded cable for the feedback cable.

(7) The spindle amplifier is defective.
If the alarm is issued after checking (1) to (6) above, replace the spindle amplifier.

4.4.28 Alarm Code 42 (SP9042)

The one-rotation signal of the αi POSITIONCODER is not generated.

(1) The setting of a parameter is incorrect.
Check the detector setting parameters while referring to the FANUC AC SPINDLE MOTOR αi/βi series PARAMETER MANUAL (B-65280EN).

(2) The feedback cable or αi POSITIONCODER is defective.
If you observe the phase Z signal for the αi POSITIONCODER but the signal does not occur at each rotation, replace the feedback cable or αi POSITIONCODER.

(3) If the alarm is issued after checking (1) and (2) above, replace the spindle amplifier.

4.4.29 Alarm Code 43 (SP9043)

The position coder signal of the master spindle used in differential spindle speed control is disconnected.
For troubleshooting when this alarm is issued, see the subsection about alarm code 27.

4.4.30 Alarm Code 46 (SP9046)

The one-rotation signal of the position coder cannot be detected normally during thread cutting.
For troubleshooting when this alarm is issued, see the subsection about alarm code 41.

4.4.31 Alarm Code 47 (SP9047)

The count value of αi POSITIONCODER signal pulses is abnormal.
Phases A and B for the position coder have a feedback pulse count of 4,096 p/rev per spindle rotation. The spindle control software checks the pulse counts of phases A and B equivalent to the position coder each time a one-rotation signal is generated. The alarm is issued when a pulse count beyond the specified range is detected.

(1) If the alarm is issued when the cable is moved (such as when the spindle is moved)
  (a) The feedback cable of the αi POSITIONCODER is disconnected.
  Replace the feedback cable.
  (b) Cutting fluid has gotten into the connector.
  If cutting fluid has entered into the connector, wash it off.
(2) In other cases
  (a) The setting of a parameter is incorrect.
  Check the detector setting parameters while referring to the FANUC AC SPINDLE MOTOR αi/βi series PARAMETER MANUAL (B-65280EN).
  (b) The frame ground is not sufficiently grounded.
  Ground the equipment flange, cable shield or other component with a low impedance. Keep a distance of 10 cm or more between the ground of the signal system and the ground of the power system. Connect the grounding wire to an unpainted surface.
  (c) The feedback cable is not sufficiently shielded.
  Read the chapter about connections in the FANUC SERVO AMPLIFIER αi-B series DESCRIPTIONS (B-65412EN) and check the shield processing of the feedback cable.

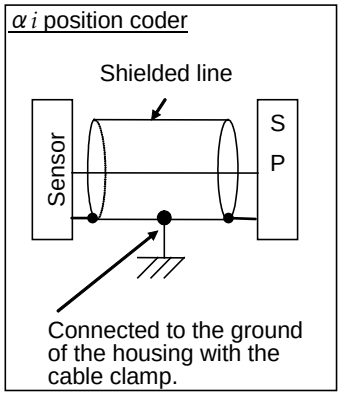

  (d) The feedback cable is routed parallel to the motor power leads over a long distance or is bundled with them.
  Noise may be induced in the feedback cable by the power lead. Read the chapter about installation in the FANUC SERVO AMPLIFIER αi-B series DESCRIPTIONS (B-65412EN) and separately wire the power leads and the feedback cable.
  (e) The specifications of the feedback cable are not sufficient.
  Use the twisted pair line for the sensor signal. Use the shielded cable for the feedback cable.
  (f) The spindle amplifier is defective.
  If the alarm is issued after checking (a) to (e) above, replace the spindle amplifier.

4.4.32 Alarm Code 49 (SP9049)

In differential spindle speed control, the speed of the master spindle converted to the motor speed of the slave spindle exceeded the allowable range.
The master spindle speed is converted to the motor speed of the slave spindle by multiplying the master spindle speed by the gear ratio between the slave spindle and motor. Check whether the converted spindle speed exceeds the maximum motor speed and operate the machine so that the maximum motor speed is not exceeded.

4.4.33 Alarm Code 50 (SP9050)

A value obtained by internal calculation in spindle synchronization exceeded the allowable range.

(1) The gear ratio set in a parameter is incorrect.
Check if an excessively large gear ratio is set.
(2) The parameter setting of a position gain is incorrect.
If the gear ratio data is correct, decrease the position gain during spindle synchronization.

Parameter No.	Description
4056~4059	Gear ratio between the spindle and motor
4065~4068	Position gain in the servo mode/spindle synchronization

4.4.34 Alarm Code 52, 53 (SP9052, SP9053)

The synchronization signal (ITP) in communication data transferred to and from the CNC stopped.

(1) The spindle amplifier is defective.
Replace the spindle amplifier.
(2) The CNC is defective.
(3) Replace the board or module related to the serial spindle.

4.4.35 Alarm Code 54 (SP9054)

A large current flowing in the motor for a long time was detected.
For troubleshooting when this alarm is issued, see the subsection about alarm code 29.

4.4.36 Alarm Code 55 (SP9055)

In output switching control or spindle switching control, a mismatch between the switching request signal (SPSL or RSL) and the power lead state check signal (MCFN, MFNHG or RCH, RCHHG) continues during motor activation.

(1) The magnetic contactor for power lead switching is defective.
If the contact of the magnetic contactor in the power lead switching unit or the magnetic contactor that the customer prepared does not operate, check the power supply of the magnetic contactor. If this does not resolve the situation, replace the power lead switching unit or the magnetic contactor that the customer prepared.
(2) The I/O unit or wiring for checking the contact of the magnetic contactor is defective.
Check the cabling. If this does not resolve the situation, replace the I/O unit.
(3) The sequence (ladder) is incorrect.
Correct the processing to complete switching within 1 second.

4.4.37 Alarm Code 56 (SP9056)

The spindle amplifier has detected that the fan motor (internal cooling fan) for cooling the inside of the amplifier is stopped.

(1) The internal cooling fan is not correctly attached.
Push in the internal cooling fan in the top section of the spindle amplifier as far as it will go.
If it does not go in easily, pull it out and then push it in again.
(2) The control printed circuit board is not correctly attached.
Push in the control printed circuit board in the front section of the spindle amplifier as far as it will go. If it does not go in easily, pull it out and then push it in again.
(3) The internal cooling fan is abnormal.
Read "REPLACEMENT PARTS AND REPLACEMENT PROCEDURE" in this manual and replace the internal cooling fan.
(4) If the alarm is issued after checking (1) to (3) above, replace the spindle amplifier.

4.4.38 Alarm Code 61 (SP9061)

The difference in position between the semi-closed side and closed side exceeded the setting level (parameter No. 4354) for the dual position feedback function.

(1) When this alarm is issued at the start of the machine, there may be a setting error in a detector-related parameter or motor-end position feedback conversion coefficient parameter.
Check whether the settings for the arbitrary gear ratio between the motor sensor and the spindle, No. 4171 and No. 4172 (when in high gear) and No. 4173 and No. 4174 (when in low gear) are correct.
Check the detector setting parameters while referring to the FANUC AC SPINDLE MOTOR αi/βi series PARAMETER MANUAL (B-65280EN).
(2) If the arbitrary gear ratio between the motor sensor and the spindle is correct, the setting level of No. 4354 is too low.
(3) When this alarm is issued for a system which has been operating normally, there may be slippage between the motor and spindle. Check the machine.
(4) When this alarm is intermittently issued for a system which has been operating normally, the position feedback signals may be miscounted at the motor end or spindle end due to noise or other cause.
Take appropriate countermeasures against noise.

4.4.39 Alarm Code 65 (SP9065)

A magnetic pole detection error occurred. This spindle alarm is issued for the BiS series spindle motors (synchronous spindle motors).
When this alarm is issued at the start, possible causes are all of (1) to (6) below. When the machine has been operating normally, possible causes are (4) to (6).

(1) There is a setting error in a parameter (number of teeth of a motor sensor or number of phases of a motor).
Check whether the settings of the parameters for the number of teeth of the motor sensor (bits 2, 1, and 0 of parameter No. 4011 and parameter No. 4334) and the number of phases of the motor (bits 7 and 3 of parameter No. 4011 and parameter No. 4368) are correct.
(2) The phase sequence of the motor power lead differs from that of connection of motor sensor feedback.
(3) The motor power lead is not connected.
(4) The motor is locked and inoperable. Or, the motor cannot operate due to friction because the excitation current is too small.
Detect the magnetic pole when the motor can move smoothly.
(5) The motor sensor or rotor shaft slipped and the phase relationship between the motor sensor and the rotor changed.
(6) A count error occurs in the motor feedback signal due to the effect of noise. Take appropriate countermeasures against noise.

4.4.40 Alarm Code 66 (SP9066)

An error occurred during communication (connector JX4) between spindle and amplifier.

(1) The communication cable between the spindle amplifiers (K88) is disconnected.
Push in the connector of the communication cable between the spindle amplifiers (K88) connected to the spindle amplifier (connector JX4) as far as it will go.
(2) The communication cable between the spindle amplifiers (K88) is too long or installed in a different cabinet.
Read the chapter on connections in the FANUC SERVO AMPLIFIER αi-B series DESCRIPTIONS (B-65412EN).
(3) The communication cable between the spindle amplifiers (K88) is defective.
Replace the communication cable between the spindle amplifiers (K88).
(4) If the alarm is issued after checking (1) to (3) above, replace the spindle amplifier.

4.4.41 Alarm Code 67 (SP9067)

Reference position return is specified for the slave axis on which the spindle electric gear box (EGB) is being executed.
Reference position return cannot be performed in the spindle EGB mode (G81). Before performing reference position return, turn the EGB mode off (G80).

4.4.42 Alarm Code 68 (SP9068)

The setting of a parameter is abnormal.
Details of the abnormal condition can be identified with the status error number. Correct the relevant parameter setting while referring to the status error number in the diagnosis number No. 710 and "4.3.3 Status Error Display" in Part I.

4.4.43 Alarm Code 69 (SP9069)

This alarm can be issued only when Dual Check Safety is in use.
In safety signal mode C (a guard open request was entered to open the protective door), the alarm is issued if the spindle motor rotation speed exceeds the safety speed.

(1) If the protective door is open, operate the spindle motor at the safety speed or slower.
(2) Check the safety speed parameter.
(3) If the alarm is issued after checking (1) and (2) above, replace the spindle amplifier.

4.4.44 Alarm Code 70 (SP9070)

This alarm can be issued only when Dual Check Safety is in use.
The spindle amplifier connection status does not match the hardware setting.

(1) Check the connection and settings of the spindle amplifier.
(2) Replace the CPU card in the CNC.
(3) The spindle amplifier ID is not written.
If the amplifier ID cannot be read on the CNC screen, replace the spindle amplifier.

4.4.45 Alarm Code 71 (SP9071)

This alarm can be issued only when Dual Check Safety is in use.
A safety parameter error occurred.

(1) Set the safety parameter again.
(2) Replace the CPU card in the CNC.
(3) If the alarm is issued after checking (1) and (2) above, replace the spindle amplifier.

4.4.46 Alarm Code 72 (SP9072)

This alarm can be issued only when Dual Check Safety is in use.
The result of the spindle amplifier speed check does not match the result of the CNC speed check.
If this alarm is issued, replace the CPU card or spindle amplifier in the CNC.

4.4.47 Alarm Code 73 (SP9073)

The motor sensor signal is abnormal.

(1) If this alarm is issued when the motor is deactivated
  (a) The setting of a parameter is incorrect.
  Check the detector setting parameters while referring to the FANUC AC SPINDLE MOTOR αi/βi series PARAMETER MANUAL (B-65280EN).
  (b) The feedback cable is disconnected.
  Replace the feedback cable.
  (c) The motor sensor (αiBZ SENSOR or αiMZ SENSOR) is not correctly adjusted.
  Adjust the motor sensor signal. If adjustment is impossible or the signal is not observed, replace the connection cable and motor sensor.
  (d) If the alarm is issued after checking (1) and (2) above, replace the spindle amplifier.
(2) If the alarm is issued when the cable is moved (such as when the spindle is moved)
  (a) Cutting fluid has entered into the connector.
  If cutting fluid has entered into the connector, wash it off.
  (b) The feedback cable is disconnected.
  Replace the feedback cable.
(3) If this alarm is issued when the motor rotates
  (a) The frame ground is not sufficiently grounded.
  Ground the equipment flange, cable shield or other component with a low impedance. Keep a distance of 10 cm or more between the ground of the signal system and the ground of the power system. Connect the grounding wire to an unpainted surface.
  (b) The feedback cable is not sufficiently shielded.
  Read the chapter about connections in the FANUC SERVO AMPLIFIER αi-B series DESCRIPTIONS (B-65412EN) and securely connect the shield for sensor or thermistor. Pay extra attention so that there are no breaks in the shield in the relay section. Ensure that the unshielded ends of the cable are as short as possible.

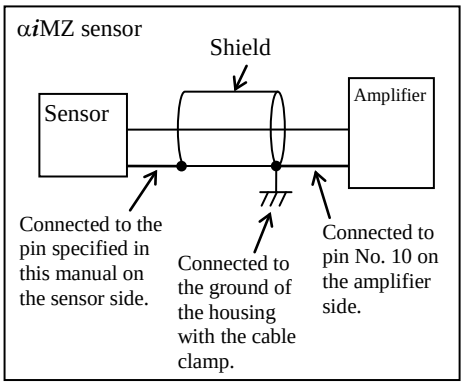

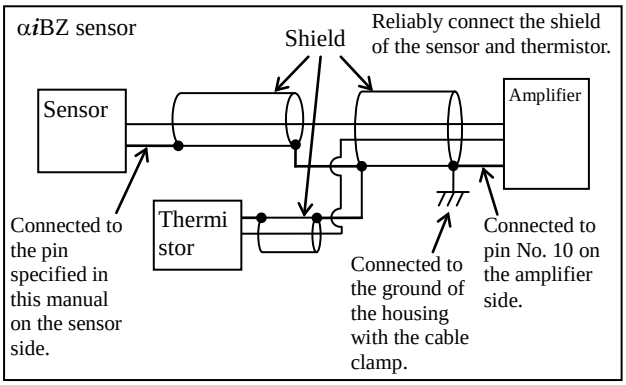

(c) The feedback cable is routed parallel to the motor power leads over a long distance or is bundled with them.
Noise may be induced in the feedback cable by the power lead. Read the chapter about installation in the FANUC SERVO AMPLIFIER αi-B series DESCRIPTIONS (B-65412EN) and separately wire the power leads and the feedback cable.

(d) The specifications of the feedback cable are incorrect.
Use the twisted pair line for the sensor signal and thermistor signal. Use the shielded cable for the feedback cable. If the shield of the sensor or thermistor is not grounded and the sensor and thermistor cables are connected adjacent to each other in a bundled cable like that for the αiBZ SENSOR, noise superimposed over the thermistor signal may affect the sensor signal in the cable. Route the sensor signal and thermistor signal cables so that they are not adjacent to each other in the bundled cable to the extent possible as shown in the figure below.

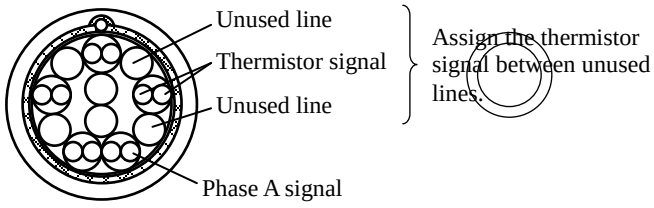

Cross-sectional surface of signal cable
(good example)

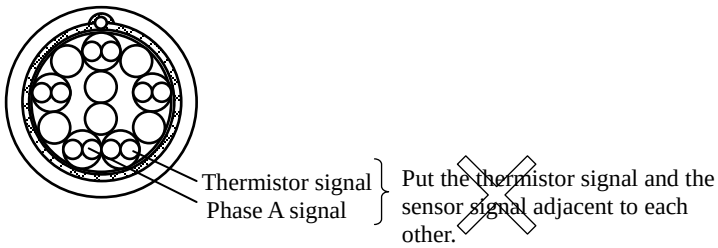

Cross-sectional surface of signal cable
(bad example)

4.4.48 Alarm Code 74 (SP9074)

This alarm can be issued only when Dual Check Safety is in use.
Replace the spindle amplifier.

4.4.49 Alarm Code 75 (SP9075)

This alarm can be issued only when Dual Check Safety is in use.
Replace the spindle amplifier.

4.4.50 Alarm Code 76 (SP9076)

This alarm can be issued only when Dual Check Safety is in use.
The spindle safety function has not been executed.
Replace the spindle amplifier.

4.4.51 Alarm Code 77 (SP9077)

This alarm can be issued only when Dual Check Safety is in use.
The result of the spindle amplifier axis number check does not match the result of the CNC axis number check.
Replace the CPU card or spindle amplifier in the CNC.

4.4.52 Alarm Code 78 (SP9078)

This alarm can be issued only when Dual Check Safety is in use.
The result of spindle amplifier safety parameter check does not match the result of the CNC safety parameter check.
Replace the CPU card or spindle amplifier in the CNC.

4.4.53 Alarm Code 79 (SP9079)

An error was detected during initialization of the control program.
Replace the spindle amplifier.

4.4.54 Alarm Code 80 (SP9080)

An alarm was issued in the counterpart spindle amplifier in communication between the spindle amplifiers (connector JX4).
The spindle amplifier for which this alarm is issued is normal.
Check the meaning of the alarm in the counterpart spindle amplifier and take action.

4.4.55 Alarm Code 81 (SP9081)

The position where the one-rotation signal of the motor sensor is generated is incorrect.

(1) When using the external one-rotation signal (proximity switch)

(a) The settings of parameters are incorrect. Check that the gear ratio data matches the specifications of the machine.

Parameter No.	Description
4171 4173	Denominator of gear ratio between motor sensor and spindle
4172 4174	Numerator of gear ratio between motor sensor and spindle

(b) There is a slippage between the spindle and the motor.
Check for slippage between the spindle and the motor. The external one-rotation signal is not applicable to V-belt connection.

(2) Troubleshooting in other cases

(a) The setting of a parameter is incorrect.
Check the detector setting parameters while referring to the FANUC AC SPINDLE MOTOR αi/βi series PARAMETER MANUAL (B-65280EN).

(b) The motor sensor (αiBZ SENSOR or αiMZ SENSOR) is not correctly adjusted.
Adjust the motor sensor signal. If adjustment is impossible or the signal is not observed, replace the connection cable and motor sensor.

(c) The frame ground is not sufficiently grounded.
Ground the equipment flange, cable shield or other component with a low impedance. Keep a distance of 10 cm or more between the ground of the signal system and the ground of the power system. Connect the grounding wire to an unpainted surface.

(d) The feedback cable is not sufficiently shielded.
Read the chapter about connections in the FANUC SERVO AMPLIFIER αi-B series DESCRIPTIONS (B-65412EN) and securely connect the shield for sensor or thermistor. Pay extra attention so that there are no breaks in the shield in the relay section. Ensure that the unshielded ends of the cable are as short as possible.

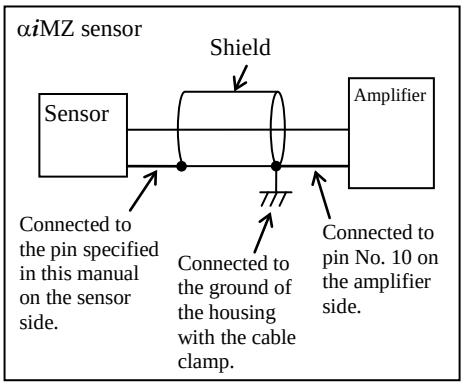

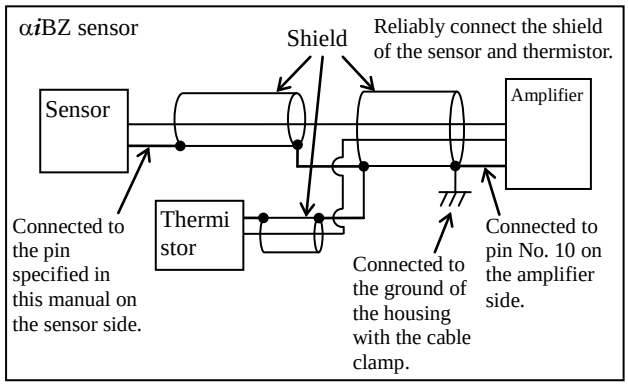

(e) The feedback cable is routed parallel to the motor power leads over a long distance or is bundled with them.
Noise may be induced in the feedback cable by the power lead. Read the chapter about installation in the FANUC SERVO AMPLIFIER αi-B series DESCRIPTIONS (B-65412EN) and separately wire the power leads and the feedback cable.

(f) The specifications of the feedback cable are incorrect.
Use the twisted pair line for the sensor signal and thermistor signal. Use the shielded cable for the feedback cable. If the shield of the sensor or thermistor is not grounded and the sensor and thermistor cables are connected adjacent to each other in a bundled cable like that for the αiBZ SENSOR, noise superimposed over the thermistor signal may affect the sensor signal in the cable. Route the sensor signal and thermistor signal cables so that they are not adjacent to each other in the bundled cable to the extent possible as shown in the figure below.

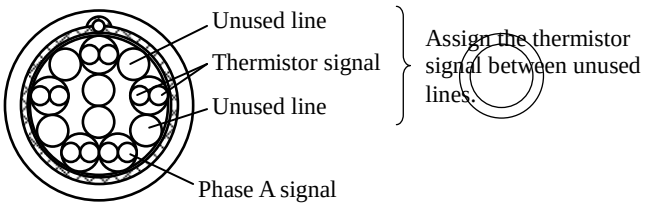

Cross-sectional surface of signal cable
(good example)

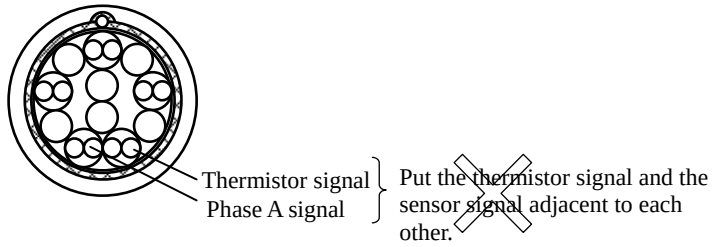

Cross-sectional surface of signal cable
(bad example)

(g) The spindle amplifier is defective.
If the alarm is issued after checking (a) to (f) above, replace the spindle amplifier.

4.4.56 Alarm Code 82 (SP9082)

The one-rotation signal of the motor sensor cannot be detected.

(1) When using the external one-rotation signal (proximity switch)

(a) The external one-rotation signal is defective.
Check the check pin EXTSC1 on the spindle check board. If the signal is not generated per rotation, replace the connection cable and position coder.

(2) Troubleshooting in other cases

(a) The setting of a parameter is incorrect.
Check the detector setting parameters while referring to the FANUC AC SPINDLE MOTOR αi/βi series PARAMETER MANUAL (B-65280EN).
The motor sensor (αiBZ SENSOR or αiMZ SENSOR) is not correctly adjusted.
Adjust the motor sensor signal. If adjustment is impossible or the signal is not observed, replace the connection cable and motor sensor.

(c) The frame ground is not sufficiently grounded.
Ground the equipment flange, cable shield or other component with a low impedance. Keep a distance of 10 cm or more between the ground of the signal system and the ground of the power system. Connect the grounding wire to an unpainted surface.

(d) The feedback cable is not sufficiently shielded.
Read the chapter about connections in the FANUC SERVO AMPLIFIER αi-B series DESCRIPTIONS (B-65412EN) and securely connect the shield for sensor or thermistor. Pay extra attention so that there are no breaks in the shield in the relay section. Ensure that the unshielded ends of the cable are as short as possible.

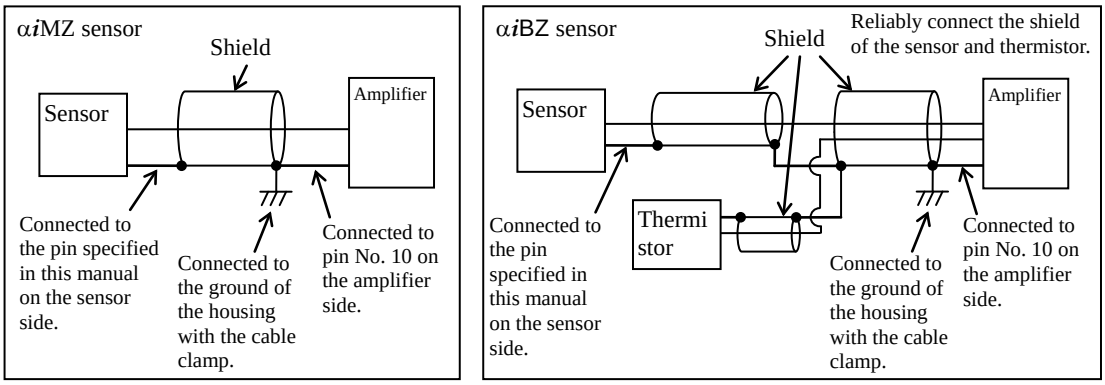

(e) The feedback cable is routed parallel to the motor power leads over a long distance or is bundled with them.
Noise may be induced in the feedback cable by the power lead. Read the chapter about installation in the FANUC SERVO AMPLIFIER αi-B series DESCRIPTIONS (B-65412EN) and separately wire the power leads and the feedback cable.

(f) The specifications of the feedback cable are incorrect.
Use the twisted pair line for the sensor signal and thermistor signal. Use the shielded cable for the feedback cable. If the shield of the sensor or thermistor is not grounded and the sensor and thermistor cables are connected adjacent to each other in a bundled cable like that for the αiBZ SENSOR, noise superimposed over the thermistor signal may affect the sensor signal in the cable. Route the sensor signal and thermistor signal cables so that they are not adjacent to each other in the bundled cable to the extent possible as shown in the figure below.

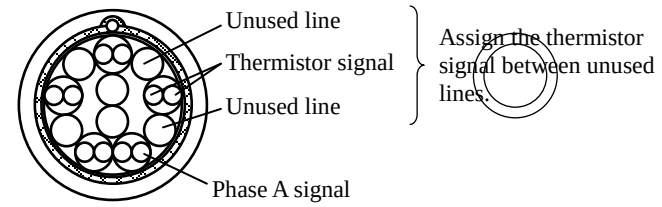

Cross-sectional surface of signal cable
(good example)

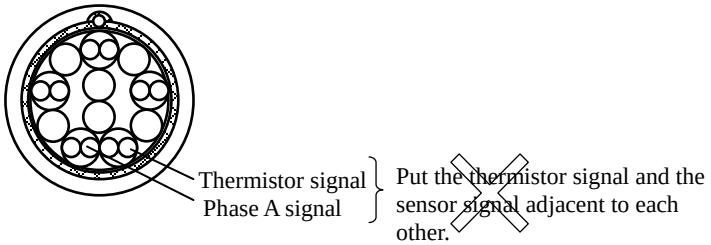

Cross-sectional surface of signal cable
(bad example)

(g) The spindle amplifier is defective.
If the alarm is issued after checking (a) to (f) above, replace the spindle amplifier.

4.4.57 Alarm Code 83 (SP9083)

The spindle control software checks the pulse counts of phases A and B each time a one-rotation signal is generated. The alarm is issued when a pulse count beyond the specified range is detected.

(1) If the alarm is issued when the cable is moved (such as when the spindle is moved)
  (a) Cutting fluid has entered into the connector.
  If cutting fluid has entered into the connector, wash it off.
  (b) The feedback cable is disconnected.
  Replace the feedback cable.

(2) Troubleshooting in other cases
  (a) The setting of a parameter is incorrect.
  Check the detector setting parameters while referring to the FANUC AC SPINDLE MOTOR αi/βi series PARAMETER MANUAL (B-65280EN).
  (b) The motor sensor (αiBZ SENSOR or αiMZ SENSOR) is not correctly adjusted.
  Adjust the motor sensor signal. If adjustment is impossible or the signal is not observed, replace the connection cable and motor sensor.
  (c) The frame ground is not sufficiently grounded.
  Ground the equipment flange, cable shield or other component with a low impedance. Keep a distance of 10 cm or more between the ground of the signal system and the ground of the power system. Connect the grounding wire to an unpainted surface.
  (d) The feedback cable is not sufficiently shielded.
  Read the chapter about connections in the FANUC SERVO AMPLIFIER αi-B series DESCRIPTIONS (B-65412EN) and securely connect the shield for sensor or thermistor. Pay extra attention so that there are no breaks in the shield in the relay section. Ensure that the unshielded ends of the cable are as short as possible.

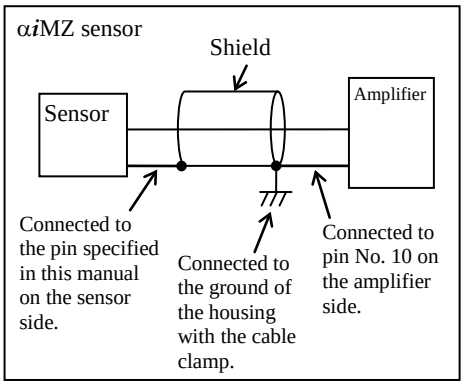

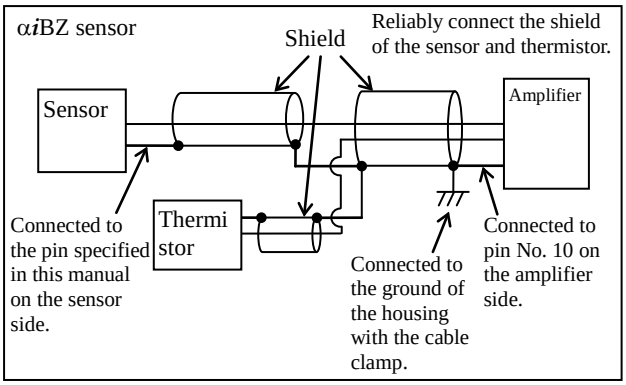

  (e) The feedback cable is routed parallel to the motor power leads over a long distance or is bundled with them.
  Noise may be induced in the feedback cable by the power lead. Read the chapter about installation in the FANUC SERVO AMPLIFIER αi-B series DESCRIPTIONS (B-65412EN) and separately wire the power leads and the feedback cable.
  (f) The specifications of the feedback cable are incorrect.
  Use the twisted pair line for the sensor signal and thermistor signal. Use the shielded cable for the feedback cable. If the shield of the sensor or thermistor is not grounded and the sensor and thermistor cables are connected adjacent to each other in a bundled cable like that for the αiBZ SENSOR, noise superimposed over the thermistor signal may affect the sensor signal in the cable. Route the sensor signal and thermistor signal cables so that they are not adjacent to each other in the bundled cable to the extent possible as shown in the figure below.

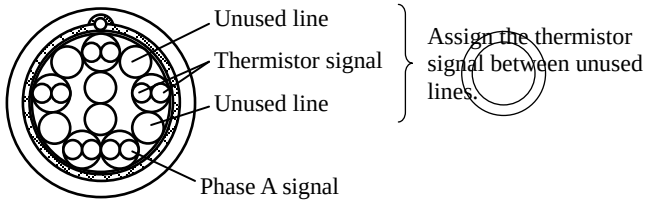

Cross-sectional surface of signal cable
(good example)

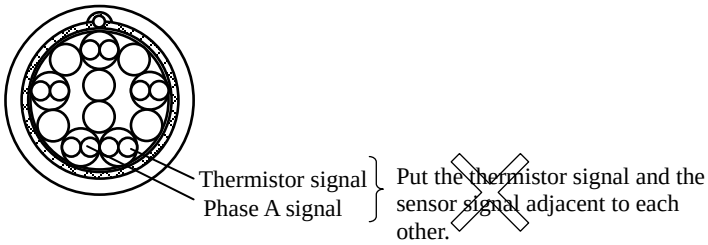

Cross-sectional surface of signal cable
(bad example)

(g) The spindle amplifier is defective.
If the alarm is issued after checking (a) to (f) above, replace the spindle amplifier.

4.4.58 Alarm Code 84 (SP9084)

The spindle sensor signal is abnormal.
For troubleshooting when this alarm is issued, see the subsection about alarm code 73.

4.4.59 Alarm Code 85 (SP9085)

The one-rotation signal of the spindle sensor occurred in an incorrect location.
For troubleshooting when this alarm is issued, see the subsection about alarm code 81.

4.4.60 Alarm Code 86 (SP9086)

The one-rotation signal of the motor sensor is not generated.
For troubleshooting when this alarm is issued, see the subsection about alarm code 82.

4.4.61 Alarm Code 87 (SP9087)

The spindle sensor signal is abnormal.
For troubleshooting when this alarm is issued, see the subsection about alarm code 83.

4.4.62 Alarm Code 88 (SP9088)

The heat sink cooling fan is not running.

(1) The heat sink cooling fan is abnormal.
Read "REPLACEMENT PARTS AND REPLACEMENT PROCEDURE" in this manual and replace the heat sink cooling fan.
(2) If the alarm is issued after checking the above item, replace the spindle amplifier.

4.4.63 Alarm Code 89 (SP9089)

An error related to the submodule SM (SSM) used when driving the synchronization spindle motor has been detected.
When this alarm is issued at the start, the possible causes are (1) to (4) below. When the machine has been operating normally, the possible causes are (3) and (4).

(1) The SSM is not connected.
Check the connection of the interface signal cable between JYA4 (spindle amplifier) and CX31 (SSM).
(2) The cable is disconnected.
Replace the interface signal cable between JYA4 (spindle amplifier) and CX31 (SSM).
(3) The SSM is defective.
Replace the SSM.
(4) If the alarm is issued after checking (1) to (3) above, replace the spindle amplifier.

4.4.64 Alarm Code 90 (SP9090)

An unexpected rotation state (state in which the polarity in the torque command differs that of acceleration) was detected. This spindle alarm is issued for the B*i*S series spindle motors (synchronous spindle motors).
When this alarm is issued at the start, the possible causes are (1) to (4) below. When the machine has been operating normally, the possible causes are (3) and (4).

(1) There is a setting error in a parameter (number of teeth of a motor sensor or number of phases of a motor).
Check the parameter while referring to the FANUC AC SPINDLE MOTOR α*i*/β*i* series PARAMETER MANUAL (B-65280EN).
(2) The setting of the AMR offset-related parameter (No. 4084 or 4085) is incorrect.
Parameter No. 4084 (AMR offset) is adjusted for each machine. If the phase relationship between the rotor magnetic pole 0° position and the one-rotation signal position of the detector changes due to detector replacement or because the shaft slipped or if you load parameters from another machine, readjustment is required.
Parameter No. 4085 is provided for AMR offset adjustment. Normally, this parameter must be set to "0".
(3) If this alarm is issued for example when the spindle hits against something, the motor sensor or rotor shaft may have slipped, shifting the phase relationship between the motor sensor and the rotor.
(4) A count error occurs in the motor sensor due to noise.
Read the chapter on installation in the FANUC SERVO AMPLIFIER α*i*-B series DESCRIPTIONS (B-65412EN) and take appropriate countermeasures against noise.

4.4.65 Alarm Code 91 (SP9091)

A count error occurred for the magnetic pole position (a large difference between the magnetic pole position at the one-rotation signal position and the setting of parameter No. 4084 (AMR offset) was detected). This spindle alarm is issued for the BiS series spindle motors (synchronous spindle motors). This spindle alarm is issued for the BiS series spindle motors (synchronous spindle motors).
When this alarm is issued at the start, possible causes are both (1) and (2) below. When the machine has been operating normally, check (2) and take appropriate action.

(1) There is a setting error in a parameter (number of teeth of a motor sensor or number of phases of a motor).
Check the parameter while referring to the FANUC AC SPINDLE MOTOR αi/βi series PARAMETER MANUAL (B-65280EN).
(2) An unnecessary one-rotation signal is generated or a count error occurs for feedback pulses due to slippage of the sensor ring or noise.
Check if the motor sensor has slipped. If there is no problem, read the chapter on installation in the FANUC SERVO AMPLIFIER αi-B series DESCRIPTIONS (B-65412EN) and take appropriate countermeasures against noise.

4.4.66 Alarm Code 92 (SP9092)

The actual motor speed exceeded the overspeed level corresponding to the velocity command.
When this alarm is issued at the start, possible causes are all of (1) to (3) below. When the machine has been operating normally, it is highly possible that the cause is (3).

(1) There is a setting error in a parameter (number of teeth of a motor sensor or number of phases of a motor).
Check parameters while referring to the FANUC AC SPINDLE MOTOR αi/βi series PARAMETER MANUAL (B-65280EN).
(2) When a BiS series spindle motor (synchronous spindle motor) is driven, there is a setting error in an AMR offset-related parameter (No. 4084 or 4085).
Parameter No. 4084 (AMR offset) is adjusted for each machine. If the phase relationship between the rotor magnetic pole 0° position and the one-rotation signal position of the detector changes due to detector replacement or because the shaft slipped or if you load parameters from another machine, readjustment is required.
Parameter No. 4085 is provided for AMR offset adjustment. Normally, this parameter must be set to "0".
(3) A count error occurs in the motor sensor due to noise.
Read the chapter on installation in the FANUC SERVO AMPLIFIER αi-B series DESCRIPTIONS (B-65412EN) and take appropriate countermeasures against noise.

4.4.67 Alarm Codes A, A1, and A2

The control program is not running. An error was detected when the control program was running.
(1) If this alarm is issued when the spindle amplifier power is switched on
Replace the spindle amplifier.
(2) If this alarm is issued when the motor is active.
(a) Effects of noise
Read the chapter on installation in the FANUC SERVO AMPLIFIER αi-B series DESCRIPTIONS (B-65412EN) and check the ground-related cabling.

4.4.68 Alarm Code b0 (SP9110)

An error occurred in communication between amplifiers (spindle amplifier, servo amplifier, and Power Supply).

αiPS-B αiSP-B αiSV-B

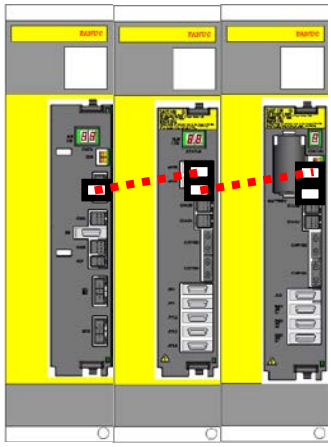

(1) Check the connector to which the communication cable between the amplifiers is connected.
Normally, CXA2A and CXA2B must be coupled.
(The figure to the right is an example.)
(2) The communication cable between the amplifiers is defective.
Replace the communication cable between the amplifiers.
(3) Effects of noise
Check that the communication cable between the amplifiers is not wired in parallel with the DC link short bar and power leads.
(4) If the alarm is issued after checking (1) to (3) above, replace the spindle amplifier, servo amplifier or Power Supply.

4.4.69 Alarm Code b4 (SP9114)

A non-zero value is set to No. 4657 even though the spindle axis is not the PS control axis.
Set 0 to No. 4657 when the spindle axis is not the PS control axis.

4.4.70 Alarm Code b5 (SP9115)

0 is set to No. 4657 even though the spindle axis is the PS control axis.
Set the amplifier group number (non-zero value) to No. 4657 for the PS control axis when the spindle axis is the PS control axis.

4.4.71 Alarm Codes C0, C1, C2 (SP9120, SP9121, SP9122)

Serial communication data transferred between the CNC and Spindle Amplifier contains an error.

(1) The spindle amplifier is defective.
Replace the spindle amplifier.
(2) The CNC is defective.
(3) Replace the board or module related to the serial spindle.

4.4.72 Alarm Code C3 (SP9123)

In spindle switching, a mismatch is found between the switching request signal (SPSL) and the internal status of the motor/spindle sensor signal switching circuit (submodule SW: SSW).

(1) The SSW is defective.
Replace the SSW.
(2) The cable is defective.
Replace the cable that connects the spindle amplifier and SSW.
(3) If the alarm is issued after checking (1) and (2) above, replace the spindle amplifier.

4.4.73 Alarm Code C4 (SP9124)

An invalid repetition cycle is set under repetition control with the time synchronization method.
(1) Check whether the specified speed value is appropriate.
(2) Check that a value between 20 and 4800 is set as the repetition cycle (No. 4425).

4.4.74 Alarm Code C5 (SP9125)

An invalid value is set for the highest or lowest degree of a dynamic characteristic compensation element in repetition control.
Set a smaller value to the highest or lowest degree of a dynamic characteristic compensation element Gx (No. 4427, 4428).

4.4.75 Alarm Code C6 (SP9126)

The spindle speed exceeds the spindle monitoring speed five times in a row.
(1) The sequence is incorrect. Check the sequence and command speed.
(2) The setting of a parameter is incorrect. Check No. 4512.

4.4.76 Alarm Code C7 (SP9127)

The reference angle cycle is inappropriate under repetition control with the angle synchronization method.
Increase the setting value of the parameter for the number of divisions per cycle under repetition control (No. 4425).

4.4.77 Alarm Code C8 (SP9128)

In spindle synchronization, the speed deviation (difference between the specified speed at the spindle end calculated based on the position error and position gain and the actual speed) exceeded the alarm detection level (parameter No. 4515).
(1) When this alarm is issued immediately after the motor excitation (SFR, SRV) is turned off, then on again in spindle synchronization
This alarm may be issued because the spindle motor is accelerated to eliminate the accumulated position error while the motor excitation is off. After canceling spindle synchronization control, correct the sequence to deactivate the motor.
(2) When this alarm is issued during cutting
(a) A possible cause is overload. Review the cutting conditions. Review the cutting conditions.
(b) When no overload occurs, review whether the alarm detection level setting is appropriate.

4.4.78 Alarm Code C9 (SP9129)

In spindle synchronization, the position error exceeded the alarm detection level (parameter No. 4516).
For troubleshooting when this alarm is issued, see the subsection about alarm code C8.

4.4.79 Alarm Code d0 (SP9130)

In torque tandem control, the speed polarity relationship between the master motor and slave motor is abnormal.
Check the setting related to the rotation direction (bit 2 of No. 4353).

4.4.80 Alarm Code d1 (SP9131)

An error occurred during spindle adjustment function operation.
See the description of the error and action to be taken that are displayed on the SERVO GUIDE.

4.4.81 Alarm Code d2 (SP9132)

An error occurred in communication between the (serial) detector and the spindle amplifier.
When this alarm is issued at the start, possible causes are (1) to (5) below. When the machine has been operating normally, possible causes are (3) and (5).

(1) The setting of a parameter is incorrect.
Check the detector setting parameters while referring to the section on startup in the FANUC AC SPINDLE MOTOR αi/βi series PARAMETER MANUAL (B-65280EN).
(2) The spindle amplifier does not support your detector.
Read the section on the detector in the FANUC SERVO AMPLIFIER αi-B series DESCRIPTIONS (B-65412EN).
(3) The cable is disconnected or incorrectly connected.
Replace the cable or check connection.
(4) If the alarm is issued after checking (1) to (3) above, the detector could be defective.
Replace the detector.
(5) If the alarm is issued after checking (1) to (4) above, replace the spindle amplifier.

4.4.82 Alarm Code d3 (SP9133)

It has been detected that serial data between the (serial) detector and the spindle amplifier received on the spindle amplifier side became abnormal due to noise.
Check the shield processing of the cables of the (serial) detector and spindle amplifier.
Read the section on the detector in the FANUC SERVO AMPLIFIER αi-B series DESCRIPTIONS (B-65412EN).

4.4.83 Alarm Code d4 (SP9134)

A change to position data from the (serial) detector was detected exceeding the expected range.
When this alarm is issued at the start, possible causes are (1) and (2) below. When the machine has been operating normally, the possible cause is (2).

(1) The setting of a parameter is incorrect.
Check the detector setting parameters while referring to the section on startup in the FANUC AC SPINDLE MOTOR αi/βi series PARAMETER MANUAL (B-65280EN).
(2) Check the shield processing of the cables of the (serial) detector and spindle amplifier.
Read the section on the detector in the FANUC SERVO AMPLIFIER αi-B series DESCRIPTIONS (B-65412EN).

4.4.84 Alarm Code d5 (SP9135)

This alarm can be issued only when Dual Check Safety is in use.
With the safety speed zero monitor request signal input, the move amount of the spindle motor exceeded the setting value.

(1) The sequence is incorrect. Check the sequence.
(2) The setting of a parameter is incorrect. Check No. 4460 and No. 4462.

4.4.85 Alarm Code d6 (SP9136)

This alarm can be issued only when Dual Check Safety is in use.
The safety speed zero monitor status of the spindle amplifier does not match the safety speed zero monitor status of the CNC.
Replace the CPU card or spindle amplifier in the CNC.

4.4.86 Alarm Code d7 (SP9137)

An error occurred during bus communication in the spindle amplifier.

(1) The control printed circuit board is not correctly attached.
Push in the control printed circuit board in the front section of the spindle amplifier as far as it will go. If it does not go in easily, pull it out and then push it in again.
(2) If the alarm is issued after checking the above item, replace the spindle amplifier.

4.4.87 Alarm Code d8 (SP9138)

The setting value of the current limit level is outside of the specifiable current range of the amplifier.
Check the parameter setting (No. 4526).

4.4.88 Alarm Code d9 (SP9139)

An error occurred in the interpolation circuit in the (serial) detector.
An error occurred in the detection circuit in the (serial) detector. Replace the detection circuit.

4.4.89 Alarm Code E0 (SP9140)

The number of pulses between one-rotation signals in the (serial) detector goes outside of the specified range.
An error occurred in the detection circuit in the (serial) detector. Replace the detection circuit.

4.4.90 Alarm Code E1 (SP9141)

A one-rotation signal for the (serial) detector did not occur within five rotations after power-on.
When this alarm is issued at the start, possible causes are (1) to (3) below. When the machine has been operating normally, possible causes are (2) and (3).

(1) The setting of a parameter is incorrect.
If the number of teeth for the detector is not correctly set, this alarm may be issued because the actual speed does not match the speed calculated with the spindle amplifier. Check the detector setting parameters while referring to the section on startup in the FANUC AC SPINDLE MOTOR αi/βi series PARAMETER MANUAL (B-65280EN).
(2) The detector is not correctly adjusted.
Adjust the sensor signal while referring to the section on the detector in the FANUC SERVO AMPLIFIER αi-B series DESCRIPTIONS (B-65412EN).
(3) An error occurred in the detection circuit in the (serial) detector.
Replace the detection circuit.

4.4.91 Alarm Code E2 (SP9142)

An error occurred in the (serial) detector. This alarm is output if a third-party (serial) detector is used.
For details on the error, contact the detector manufacturer.

4.4.92 Alarm Code E3 (SP9143)

The Cs contour control high-speed switching function starts dividing the command with one-rotation signal not detected.
The sequence is incorrect. Correct the sequence.

4.4.93 Alarm Code E4 (SP9144)

The current detection circuit section in the spindle amplifier is abnormal.
Replace the spindle amplifier.

4.4.94 Alarm Code E5 (SP9145)

The power in the driver circuit in the spindle amplifier has dropped.

(1) The contact between the control printed circuit board and the spindle amplifier unit is poor.
Push in the control printed circuit board in the front section of the spindle amplifier as far as it will go. If it does not go in easily, pull it out and then push it in again.
(2) An error such as momentary drop occurred in the 24 VDC power input to the Power Supply.
Check the 24 VDC power supply.
(3) The communication cable (connector CXA2A, CXA2B) is not connected correctly.
Correct the incorrect connection of the communication cable. If this does not solve the problem, replace the communication cable.
(4) If the alarm is issued after checking (1) to (3) above, replace the spindle amplifier.

4.4.95 Alarm Code E8 (SP9148)

The spindle control software has detected that the spindle axis number is not set. Turn off the power supply and then turn it on.

4.4.96 Alarm Code E9 (SP9149)

An error has been detected in the feedback signal from the external current sensor.
Replace the cable between the filter module and the spindle amplifier, filter module, or spindle amplifier.

4.4.97 Alarm Code F0 (SP9150)

An error has been detected in the feedback signal from the external current sensor.
Replace the cable between the filter module and the spindle amplifier, filter module, or spindle amplifier.

4.4.98 Alarm Code F1 (SP9151)

An error has been detected in the filter module.
Replace the cable between the filter module and the spindle amplifier, filter module, or spindle amplifier.

4.4.99 Alarm Code F2 (SP9152)

An error has been detected in the feedback signal from the external current sensor.
Replace the cable between the filter module and the spindle amplifier, filter module, or spindle amplifier.

4.4.100 Alarm Code F3 (SP9153)

A component other than the spindle amplifier is abnormal.

(1) The speed feedback cable is disconnected, has poor contact, or is not connected correctly.
Correct the connection of the speed feedback cable or replace the cable.
(2) The speed feedback signal is abnormal.
Replace the detector.
(3) An external force is being applied to the spindle motor.
Remove or decrease the external force.

4.4.101 Alarm Code F4 (SP9154)

A power lead is open.
(1) The magnetic contactor is defective.
Check and replace the magnetic contactor.
(2) A power lead is disconnected.
Replace the power lead.
(3) The spindle motor winding is disconnected.
Replace the spindle motor.

4.4.102 Alarm Code F5 (SP9155)

The spindle amplifier is defective.
Replace the spindle amplifier.

4.4.103 Alarm Code F6 (SP9156)

The current control of the spindle amplifier is defective. After checking the location of the program where the alarm was issued and the operation procedure, save the parameters, and contact FANUC.

4.4.104 Alarm Code F7 (SP9157)

The spindle amplifier is defective.
Replace the spindle amplifier.

4.4.105 Alarm Code F8 (SP9158)

This alarm can be issued only when Dual Check Safety is in use.
The acceptance test mode status of the spindle amplifier does not match the acceptance test mode of the CNC. Replace the CPU card or spindle amplifier in the CNC.

4.4.106 Alarm Code G0 (SP9160)

The spindle amplifier is defective.
Replace the spindle amplifier.

4.4.107 Alarm Code G1 (SP9161)

It has been detected that the power lead of the spindle motor is short-circuited.
(1) Check the connection of the power lead of the spindle motor.
(2) If connection of the power lead is normal, a motor may be defective. Replace the motor.

4.4.108 Alarm Code G2 (SP9162)

It failed to transfer spindle position data.
After checking the location of the program where the alarm was issued and the operation procedure, save the parameters, and contact FANUC.

4.4.109 Alarm Code G3 (SP9163)

Spindle position data has not been updated.
After checking the location of the program where the alarm was issued and the operation procedure, save the parameters, and contact FANUC.

4.4.110 Alarm Code G4 (SP9164)

The master axis sensor signal input to the slave axis amplifier is abnormal in the master axis sensor signal direct input method EGB. For input of the master axis sensor signal (JYA4), troubleshoot while referring to the subsection about alarm code 83.

4.4.111 Alarm Code G5 (SP9165)

The setting value for bit 7 of No. 4000 has been changed.
Check bit 7 of No. 4000 and turn OFF the CNC and amplifier and turn them ON again.

4.4.112 Alarm Code G6 (SP9166)

This alarm is issued only when the spindle synchronization function for the guide bush is used.

(1) Overload.
Review the operating conditions.

(2) The spindle amplifier is defective.
Replace the spindle amplifier.

(3) A power lead or the spindle motor is defective.
Replace the power lead or spindle motor.

4.4.113 Alarm Code G7 (SP9167)

The ladder sequence is abnormal.
Details of the abnormal condition can be identified with the status error number. Correct the ladder sequence while referring to the status error number in the diagnosis number No. 710 and "4.3.3 Status Error Display" in Part I. If the displayed status error number is not specified, contact FANUC.

4.4.114 Alarm Code G8 (SP9168)

The belt or other connection mechanism that connects the spindle and the motor is abnormal (loosened or severed).
Check a connection error.

4.4.115 Alarm Code G9 (SP9169)

The safe torque-off (STO) function has detected an error in the interruption circuit.

(1) Check whether the settings for setting switch SW1 are correct.
  (a) Setting switch SW1 for the spindle amplifier is off (use the STO function) even though the STO function is not used (bit 1 of parameter No. 4542 = 0).
  (b) Setting switch SW1 for the spindle amplifier is on (do not use the STO function) even though the STO function is used (bit 1 of parameter No. 4542 = 1).
(2) Check if the STO-A and STO-B input cables are disconnected.
(3) Check if the input time is off by more than 10 s between the STO-A and the STO-B.
(4) The spindle amplifier is defective.
  Replace the spindle amplifier.
(5) External equipment used for the STO function such as the safety PLC is abnormal.
  Check external equipment.

4.4.116 Alarm Code H0 (SP9170)

Overrun has been detected on the hole bottom or at return to the R position during rigid tapping. After checking the location of the program where the alarm was issued and the operation procedure, save the parameters, and contact FANUC.

4.4.117 Alarm Code UU

FSSB communication error (connector COP10B).
For details, see "4.2.21 Alarm Code U."

4.4.118 Alarm Code LL

FSSB communication error (connector COP10A).
For details, see "4.2.22 Alarm Code L."

4.4.119 Other Alarms

If the status display in the spindle amplifier displays 4, 11, 30, 33, 51, 57, 58, b1, b2, or b3 or the status display does not display data, check the status display of the Power Supply and see Section 3.1.

5 REPLACING AMPLIFIER COMPONENTS

This chapter describes how to replace a fan motor, absolute Pulsecoder battery, and fuses.

> ⚠ **WARNING**
> Because the amplifier uses a large-capacitance electrolytic capacitor internally, the amplifier remains charged for a while even after the power is turned off. Before touching the servo amplifier for maintenance or other purposes, ensure your safety by measuring the residual voltage in the DC link with a tester and confirming that the charge indication LED (red) is off.

5.1 REPLACEMENT OF A FAN MOTOR

5.1.1 Replacement of Fan Units of 60 or 90 mm Width Units

(1) Hold the two handles of the internal cooling fan unit and pull up them upward. (Dismantling of the internal cooling fan unit is complete.)
(2) Unlock the cover of the DC link terminal block, open the cover, check that the DC link is discharged (that the LED is off), and dismantle the DC link short bar.
(3) Insert the screwdriver from the opening beside the DC link terminal block, and loosen the lower screw (one place) of the heat sink cooling fan unit.
(4) Loosen the upper screws (one place in the 60 mm width unit and two places in the 90 mm width unit) of the radiator cooling fan unit.
(5) Pull out the radiator cooling fan unit toward front. (Dismantling of the radiator cooling fan unit is complete.)
(6) When mounting the fan unit, perform the procedure in reverse order.

Note: Replace the fan motor with the main power supply and control power supply (DC24V) turned OFF. When mounting the internal cooling fan unit, the connecting position of the connector may get misaligned, making it difficult to mount the fan unit. In this case, mount the fan unit by pressing the handle on the back of the unit to the left.

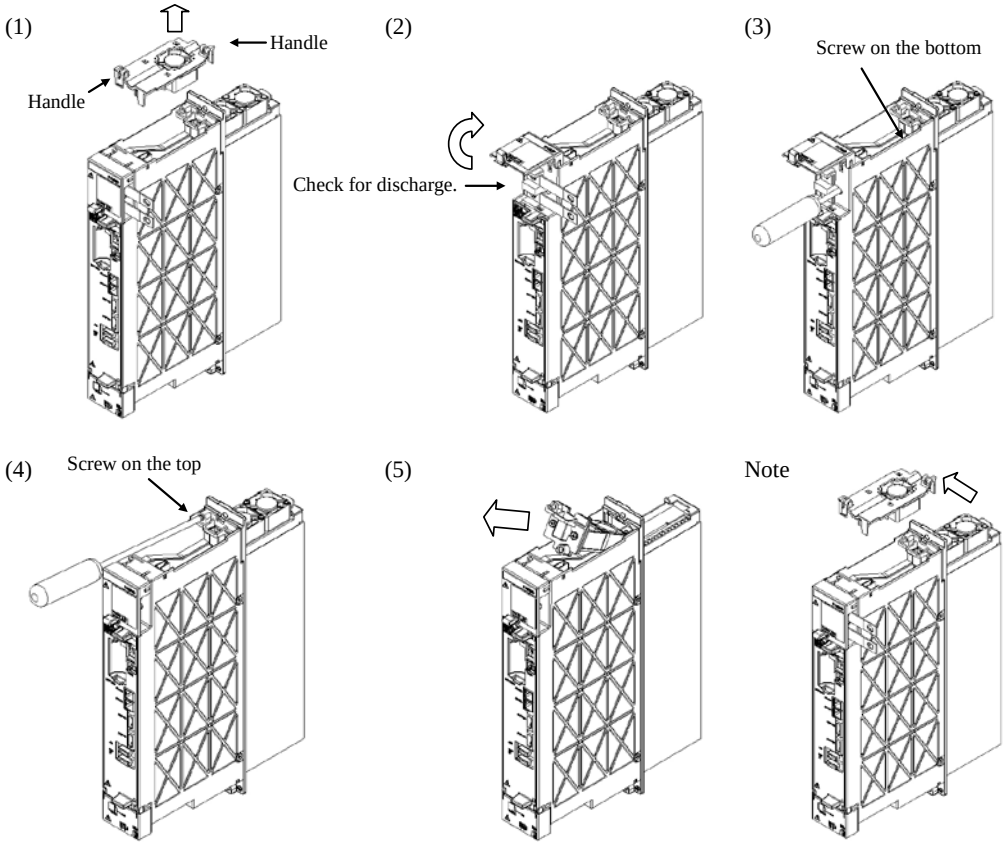
(1)
Handle
Handle
(2)
Check for discharge.
(3)
Screw on the bottom
(4)
Screw on the top
(5)
Note

5.1.2 Replacement of Fan Units of 150 or 300 mm Width Units

(1) Hold the two handles of the internal cooling fan unit and pull up them upward. (Dismantling of the internal cooling fan unit is complete.)
(2) Unlock the cover of the DC link terminal block, open the cover, check that the DC link is discharged (that the LED is off), and dismantle the DC link short bar.
(3) Insert the screwdriver from the opening beside the DC link terminal block, and loosen the lower screw (one place) of the radiator cooling fan unit.
(4) Loosen the upper screw (one place) of the radiator cooling fan unit.
(5) Pull out the radiator cooling fan unit toward front. (Dismantling of the radiator cooling fan unit is complete.)
(6) When mounting the fan unit, perform the procedure in reverse order.

Note: Replace the fan motor with the main power supply and control power supply (DC24V) turned OFF.

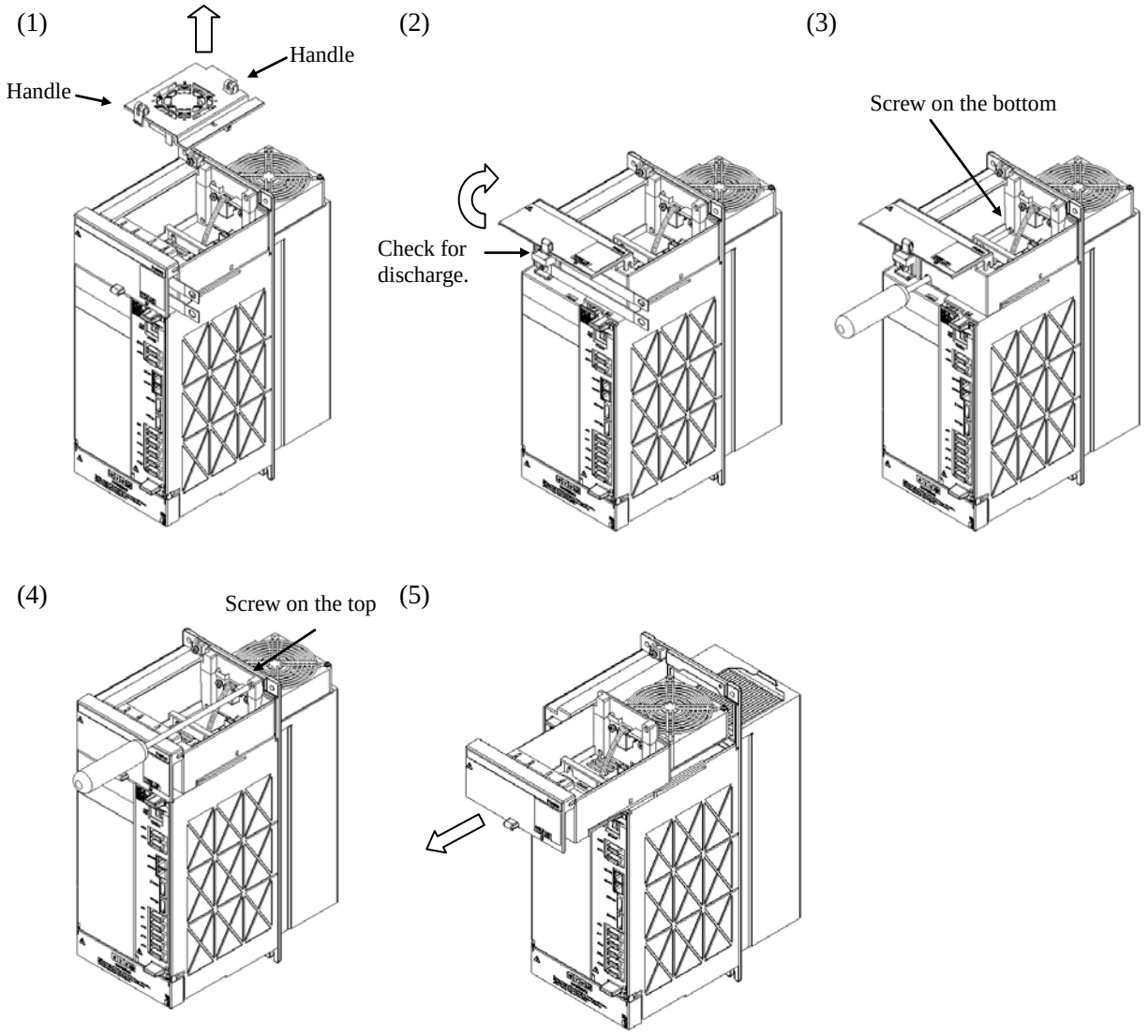

5.1.3 Dismantling the Fan Motor from the Internal Cooling Fan Unit

(1) Dismantle the connectors (one or two places) from the case. For details, see the figure below.
<1> Insert a 3 mm or less flat-blade screwdriver into the gap between the case and the connector.
<2> Tilt the flat-blade screwdriver in the direction of the arrow.
<3> Dismantle the connector in the direction of the arrow.

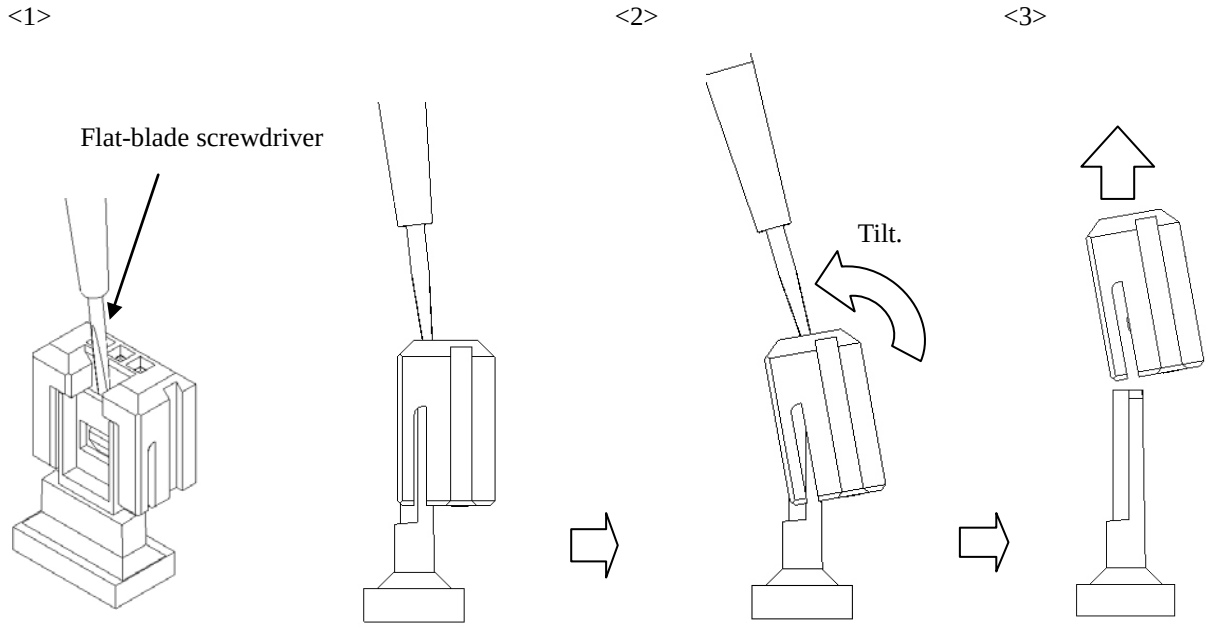

(2) Dismantle the fan motor from the case.

Internal cooling fan units for the 60 mm width unit (three types with different connectors)

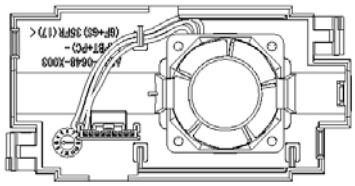

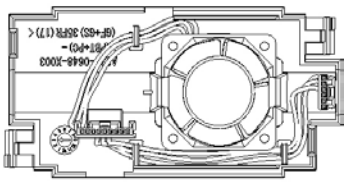

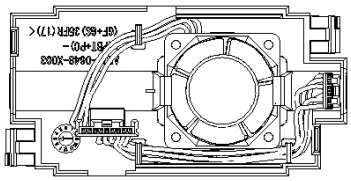

Internal cooling fan unit for the 90 mm width unit

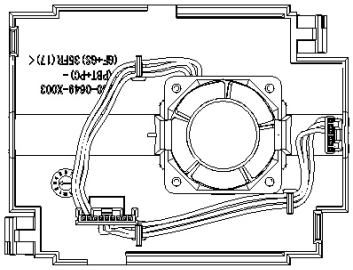

Internal cooling fan unit for the 150 and 300 mm width unit

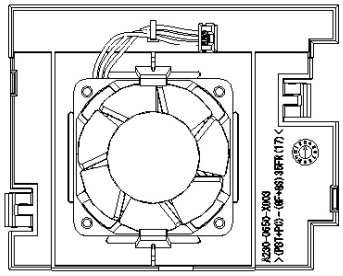

When replacing the fan motor, pay attention to its orientation (when the fan motor is mounted in an amplifier, its label is facing upward) as well as to the orientation of the connector.

5.1.4 Dismantling the Fan Motor from the Radiator Cooling Fan Unit

(1) Dismantle the relay connector from the fan connector in the 150 or 300 mm width unit. For details, see the figure below. (The 60 and 90 mm width units do not have a relay connector.)
<1> Insert a flat-blade screwdriver into the gap between the case and the connector.
<2> Tilt the flat-blade screwdriver in the direction of the arrow.
<3> Dismantle the connector in the direction of the arrow.

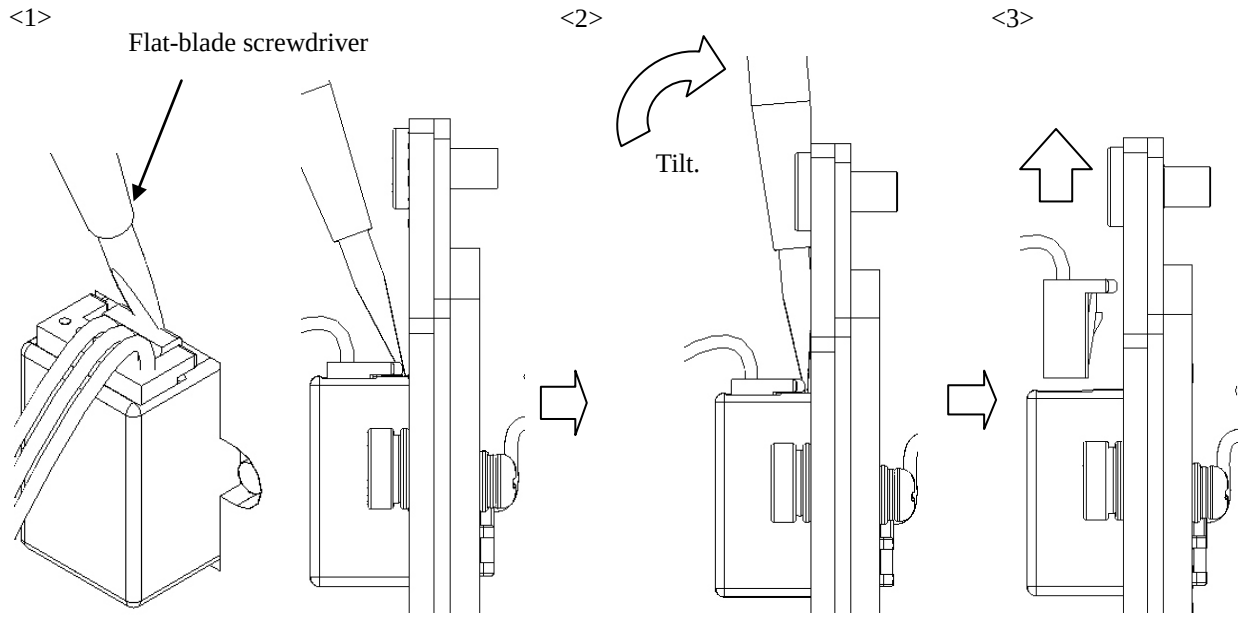

(2) Dismantle the two or four screws fastening the fan motor.
(3) Dismantle the two screws fastening the fan motor connector.

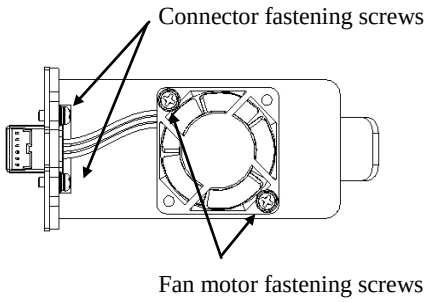

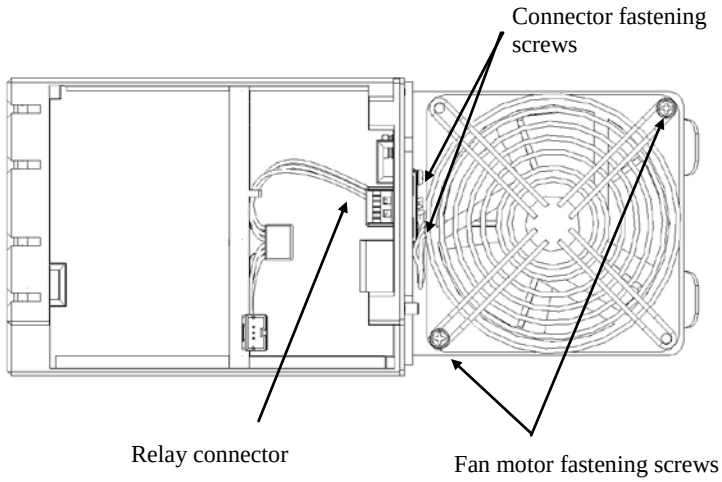

Radiator cooling fan units for the 60 mm width unit (two types with different connectors)

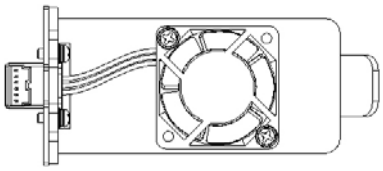

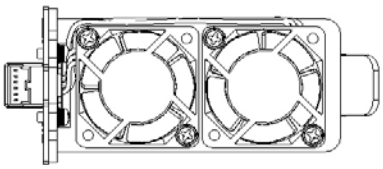

Radiator cooling fan unit for the 90 mm width unit

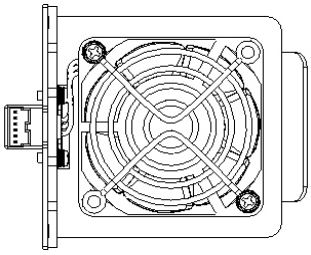

Radiator cooling fan unit for the 150 and 300 mm width unit

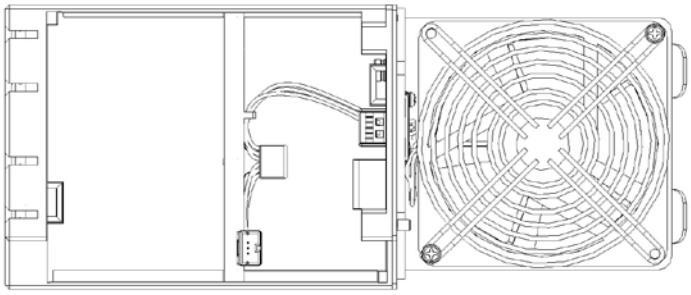

When replacing the fan motor, pay attention to its orientation (when the fan motor is mounted in an amplifier, its label is facing upward) as well as to the orientation of the connector.

5.1.5 Ordering Numbers of Fan Units and Fan Motors for Maintenance

Usually, maintain the fan motor by itself. If the plastic cover for the fan mounting section is damaged, order the fan unit. A fan unit is a set of a fan motor and a cover for mounting it. (See Section 5.1, "REPLACEMENT OF A FAN MOTOR.")

- Power Supply

(1) αiPS-B

Model name	Internal cooling fan		Radiator cooling fan	
	Fan unit	Fan motor	Fan unit	Fan motor
αiPS 3-B	A06B-6200-C607	A90L-0001-0580#B	-	-
αiPS 7.5-B	A06B-6200-C607	A90L-0001-0580#B	A06B-6200-C601	A90L-0001-0575#A
αiPS 11-B αiPS 15-B	A06B-6200-C609	A90L-0001-0580#B	A06B-6200-C603	A90L-0001-0576
αiPS 26-B αiPS 30-B αiPS 37-B	A06B-6200-C610	A90L-0001-0581	A06B-6200-C604	A90L-0001-0577
αiPS 55-B	A06B-6200-C610 Two are used.	A90L-0001-0581 Two are used.	A06B-6200-C604 Two are used.	A90L-0001-0577 Two are used.
αiPS 11HV-B αiPS 18HV-B	A06B-6200-C609	A90L-0001-0580#B	A06B-6200-C603	A90L-0001-0576
αiPS 30HV-B αiPS 45HV-B αiPS 60HV-B	A06B-6200-C610	A90L-0001-0581	A06B-6200-C604	A90L-0001-0577
αiPS 75HV-B αiPS 100HV-B	A06B-6200-C610 Two are used.	A90L-0001-0581 Two are used.	A06B-6200-C604 Two are used.	A90L-0001-0577 Two are used.
αiPS 125HV-B	A06B-6200-C610 Two are used.	A90L-0001-0581 Two are used.	A06B-6200-C605 Two are used.	A90L-0001-0578 Two are used.

(2) αiPSs-B

Model name	Internal cooling fan		Radiator cooling fan	
	Fan unit	Fan motor	Fan unit	Fan motor
αiPSs 15-B	A06B-6200-C609	A90L-0001-0580#B	A06B-6200-C603	A90L-0001-0576
αiPSs 37-B	A06B-6200-C610	A90L-0001-0581	A06B-6200-C605	A90L-0001-0578
αiPSs 18HV-B	A06B-6200-C609	A90L-0001-0580#B	A06B-6200-C603	A90L-0001-0576
αiPSs 45HV-B	A06B-6200-C610	A90L-0001-0581	A06B-6200-C605	A90L-0001-0578
αiPSs 75HV-B αiPSs 100HV-B	A06B-6200-C610 Two are used.	A90L-0001-0581 Two are used.	A06B-6200-C605 Two are used.	A90L-0001-0578 Two are used.

- Servo amplifier

(1) 1-axis

Model name	Internal cooling fan		Radiator cooling fan	
	Fan unit	Fan motor	Fan unit	Fan motor
αiSV 4-B αiSV 20-B αiSV 40-B αiSV 80-B	A06B-6200-C606	A90L-0001-0580#A	-	-
αiSV 160-B	A06B-6200-C608	A90L-0001-0580#C	A06B-6200-C602	A90L-0001-0575#B
αiSV 360S-B	A06B-6200-C609	A90L-0001-0580#B	A06B-6200-C603	A90L-0001-0576
αiSV 360-B	A06B-6200-C610	A90L-0001-0581	A06B-6200-C605	A90L-0001-0578
αiSV 10HV-B αiSV 20HV-B αiSV 40HV-B	A06B-6200-C606	A90L-0001-0580#A	-	-
αiSV 80HV-B	A06B-6200-C608	A90L-0001-0580#C	A06B-6200-C602	A90L-0001-0575#B
αiSV 180HVS-B	A06B-6200-C609	A90L-0001-0580#B	A06B-6200-C603	A90L-0001-0576
αiSV 180HV-B	A06B-6200-C610	A90L-0001-0581	A06B-6200-C605	A90L-0001-0578
αiSV 360HV-B	A06B-6200-C610 Two are used.	A90L-0001-0581 Two are used.	A06B-6200-C604 Two are used.	A90L-0001-0577 Two are used.
αiSV 540HV-B	A06B-6200-C610 Two are used.	A90L-0001-0581 Two are used.	A06B-6200-C605 Two are used.	A90L-0001-0578 Two are used.

(2) 2-axis

Model name	Internal cooling fan		Radiator cooling fan	
	Fan unit	Fan motor	Fan unit	Fan motor
αiSV 4/4-B αiSV 4/20-B αiSV 20/20-B αiSV 20/40-B	A06B-6200-C606	A90L-0001-0580#A	-	-
αiSV 40/40-B αiSV 40/80-B αiSV 80/80-B	A06B-6200-C607	A90L-0001-0580#B	A06B-6200-C601	A90L-0001-0575#A
αiSV 80/160-B αiSV 160/160-B	A06B-6200-C609	A90L-0001-0580#B	A06B-6200-C603	A90L-0001-0576
αiSV 10/10HV-B αiSV 10/20HV-B	A06B-6200-C606	A90L-0001-0580#A	-	-
αiSV 20/20HV-B αiSV 20/40HV-B αiSV 40/40HV-B	A06B-6200-C607	A90L-0001-0580#B	A06B-6200-C601	A90L-0001-0575#A
αiSV 40/80HV-B αiSV 80/80HV-B	A06B-6200-C609	A90L-0001-0580#B	A06B-6200-C603	A90L-0001-0576

(3) 3-axis

Model name	Internal cooling fan		Radiator cooling fan	
	Fan unit	Fan motor	Fan unit	Fan motor
αiSV 4/4/4-B αiSV 20/20/20-B αiSV 20/20/40-B	A06B-6200-C606	A90L-0001-0580#A	-	-
αiSV 40/40/40-B	A06B-6200-C608	A90L-0001-0580#C	A06B-6200-C602	A90L-0001-0575#B
αiSV 80/80/80-B	A06B-6200-C609	A90L-0001-0580#B	A06B-6200-C603	A90L-0001-0576
αiSV 10/10/10HV-B αiSV 10/10/20HV-B	A06B-6200-C606	A90L-0001-0580#A	-	-
αiSV 20/20/20HV-B	A06B-6200-C608	A90L-0001-0580#C	A06B-6200-C602	A90L-0001-0575#B
αiSV 40/40/40HV-B	A06B-6200-C609	A90L-0001-0580#B	A06B-6200-C603	A90L-0001-0576

- Spindle amplifier

In some αiSP-B series, the cooling fan to be used may be different before and after the upgrade.
Order the fan unit and fan motor that match the amplifier ordering number in the following table for maintenance.

Model name/ amplifier ordering number	Internal cooling fan		Radiator cooling fan	
	Fan unit	Fan motor	Fan unit	Fan motor
αiSP 2.2-B				
A06B-6220-H002#H600	A06B-6200-C606	A90L-0001-0580#A	-	-
A06B-6222-H002#H610	-	-	-	-
αiSP 5.5-B				
A06B-6220-H006#H600	A06B-6200-C607	A90L-0001-0580#B	A06B-6200-C601	A90L-0001-0575#A
A06B-6222-H006#H610	-	-	A06B-6200-C601	A90L-0001-0575#A
αiSP 11-B, αiSP 15-B				
A06B-6220-H011#H600 A06B-6220-H015#H600 A06B-6222-H011#H610 A06B-6222-H015#H610	A06B-6200-C609	A90L-0001-0580#B	A06B-6200-C603	A90L-0001-0576
αiSP 22-B, αiSP 26-B, αiSP 30-B				
A06B-6220-H022#H600 A06B-6220-H026#H600 A06B-6220-H030#H600 A06B-6222-H022#H610 A06B-6222-H026#H610 A06B-6222-H030#H610	A06B-6200-C610	A90L-0001-0581	A06B-6200-C604	A90L-0001-0577
αiSP 37-B				
A06B-6220-H037#H600 A06B-6222-H037#H610	A06B-6200-C610	A90L-0001-0581	A06B-6200-C605	A90L-0001-0578
αiSP 45-B				
A06B-6220-H045#H600 A06B-6222-H045#H610	A06B-6200-C610 Two are used.	A90L-0001-0581 Two are used.	A06B-6200-C604 Two are used.	A90L-0001-0577 Two are used.
αiSP 55-B				
A06B-6220-H055#H600 A06B-6222-H055#H610	A06B-6200-C610 Two are used.	A90L-0001-0581 Two are used.	A06B-6200-C605 Two are used.	A90L-0001-0578 Two are used.
αiSP 5.5HV-B				
A06B-6270-H006#H600	A06B-6200-C608	A90L-0001-0580#C	A06B-6200-C602	A90L-0001-0575#B
A06B-6272-H006#H610	-	-	A06B-6200-C602	A90L-0001-0575#B
αiSP 11HV-B, αiSP 15HV-B				
A06B-6270-H011#H600 A06B-6270-H015#H600	A06B-6200-C609	A90L-0001-0580#B	A06B-6200-C603	A90L-0001-0576
A06B-6272-H011#H610 A06B-6272-H015#H610	-	-	A06B-6200-C603	A90L-0001-0576
αiSP 22HV-B, αiSP 30HV-B				
A06B-6270-H022#H600 A06B-6270-H030#H600 A06B-6272-H022#H610 A06B-6272-H030#H610	A06B-6200-C610	A90L-0001-0581	A06B-6200-C604	A90L-0001-0577
αiSP 45HV-B, αiSP 60HV-B				
A06B-6270-H045#H600 A06B-6272-H045#H610 A06B-6272-H060#H610	A06B-6200-C610	A90L-0001-0581	A06B-6200-C605	A90L-0001-0578

Model name/ amplifier ordering number	Internal cooling fan		Radiator cooling fan	
	Fan unit	Fan motor	Fan unit	Fan motor
αiSP 75HV-B				
A06B-6270-H075#H600 A06B-6272-H075#H610	A06B-6200-C610 Two are used.	A90L-0001-0581 Two are used.	A06B-6200-C604 Two are used.	A90L-0001-0577 Two are used.
αiSP 100HV-B, αiSP 100HV(SiC)-B				
A06B-6270-H100#H600 A06B-6272-H100#H610 A06B-6272-H100#H610#S	A06B-6200-C610 Two are used.	A90L-0001-0581 Two are used.	A06B-6200-C605 Two are used.	A90L-0001-0578 Two are used.

- Servo and spindle multi-axis amplifier

Model name	Internal cooling fan		Radiator cooling fan	
	Fan unit	Fan motor	Fan unit	Fan motor
αiSVP 20/20/20-2.2-B	A06B-6200-C607	A90L-0001-0580#B	A06B-6200-C601	A90L-0001-0575#A
αiSVP 40/40/40-2.2-B	A06B-6200-C608	A90L-0001-0580#C	A06B-6200-C602	A90L-0001-0575#B
αiSVP 20/20/20-5.5-B	A06B-6200-C609	A90L-0001-0580#B	A06B-6200-C603	A90L-0001-0576
αiSVP 10/10/10-5.5HV-B	A06B-6200-C609	A90L-0001-0580#B	A06B-6200-C603	A90L-0001-0576

5.2 REPLACING BATTERY FOR ABSOLUTE PULSECODERS

5.2.1 OVERVIEW

- When the voltage of the batteries for absolute Pulsecoders becomes low, alarm 307 or 306 occurs, with the following indication in the CNC state display at the bottom of the CNC screen.
  Alarm 307 (battery voltage decrease alarm):"APC" is highlighted and the highlight blinks.
  Alarm 306 (battery zero alarm): "ALM" is highlighted and the highlight blinks.
- When alarm 307 (battery voltage decrease alarm) occurs, replace the batteries promptly.
  In general, the battery should be replaced within one or two weeks, however, this depends on the number of Pulsecoders used.
- When alarm 306 (battery zero alarm) occurs, Pulsecoders are reset to the initial state, in which absolute positions are not held. Alarm 300 (reference position return request alarm) also occurs, indicating that reference position return is required.
- In general, replace the batteries periodically within the service life listed below.
  - When A06B-6050-K061 or D-size alkaline dry cells (LR20) are used : 2 years (per 6 axes)
  - When A06B-6073-K001 is used : 2 years (per 3 axes)
  - When A06B-6114-K504 is used : 1 year (per 3 axes)

NOTE
The above values indicate the estimated service life of batteries used with FANUC absolute Pulsecoders. The actual battery service life depends on the machine configuration based on, for example, detector types. For details, contact the machine tool builder.

5.2.2 Replacing Batteries

To prevent absolute position information in absolute Pulsecoders from being lost, turn on the machine power before replacing the battery. The replacement procedure is described below.
<1> Ensure that the power to the servo amplifier is turned on.
<2> Ensure that the machine is in the emergency stop state (the motor is inactive).
<3> Ensure that the DC link charge LED of the servo amplifier is off.
<4> Detach the old batteries and insert new ones.
The replacement of the batteries in a separate battery case and the replacement of the battery built into the servo amplifier are described below in detail.

NOTE
- The absolute Pulsecoder of the αi-B/αi series servo motors and βi-B/βi series servo motors (βiS0.4-B to βiS40-B, βiSc-B, βiF-B, βiS0.4 to βiS40, βiSc, βiF) has a built-in backup capacitor. Therefore, even when the power to the servo amplifier is off and the batteries are replaced, reference position return is not required if the replacement completes within less than 10 minutes. Turn the power on and replace the batteries if the replacement will take 10 minutes or more.

⚠ WARNING

- To prevent electric shock, be careful not to touch metal parts in the power magnetics cabinet when replacing the batteries.
- Because the servo amplifier uses a large-capacitance electrolytic capacitor internally, the servo amplifier remains charged for a while even after the power is turned off. Before touching the servo amplifier for maintenance or other purposes, ensure your safety by measuring the residual voltage in the DC link with a tester and confirming that the charge indication LED (red) is off.
- Do not replace the batteries with batteries other than the designated ones. Pay attention to the battery polarity. If a wrong type of battery is used or a battery is installed with incorrect polarity, the battery may overheat, blow out, or catch fire, or the absolute position information in the absolute Pulsecoders may be lost.
- Ensure that the battery connector is correctly inserted.

5.2.3 Replacing the Batteries in a Separate Battery Case

Use the following procedure to replace the batteries in the battery case.

<1> Loosen the screws on the battery case and detach the cover.
<2> Replace the batteries in the case (pay attention to the polarity).
<3> Attach the cover to the battery case.

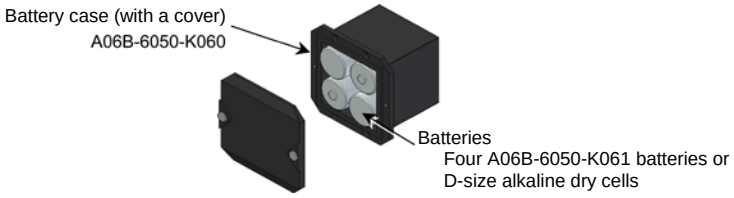

⚠ CAUTION

- Four D-size alkaline dry cells (LR20) that are commercially available can be used as batteries. A set of four A06B-6050-K061 batteries is optionally available from FANUC.
- Replace all the four batteries with new ones. If old and new batteries are mixed, the absolute position information in the absolute Pulsecoders may be lost.

5.2.4 Replacing the Battery Built into the Servo Amplifier

Use the following procedure to replace the special lithium battery.
<1> Detach the battery case.
<2> Replace the special lithium battery.
<3> Attach the battery case.

⚠CAUTION
- Purchase the battery from FANUC because it is not commercially available. For this reason, FANUC recommends preparation of spare batteries.
- When the built-in battery is used, do not connect BATL (B3) of connector CXA2A/CXA2B. Also, do not connect two or more batteries to the same BATL (B3) line. These connections are dangerous because battery output voltages may be short-circuited, causing the batteries to overheat.
- When installing batteries in the servo amplifier, do so starting from the position in which the cable has slack. If the battery cable is under tension, a bad connection may occur.
- If the +6 V pin and 0 V pin of CX5X are short-circuited, the battery may overheat, blow out, or catch fire, or the absolute position information in the absolute Pulsecoders may be lost.
- When inserting the connector, align it to the connector pins.

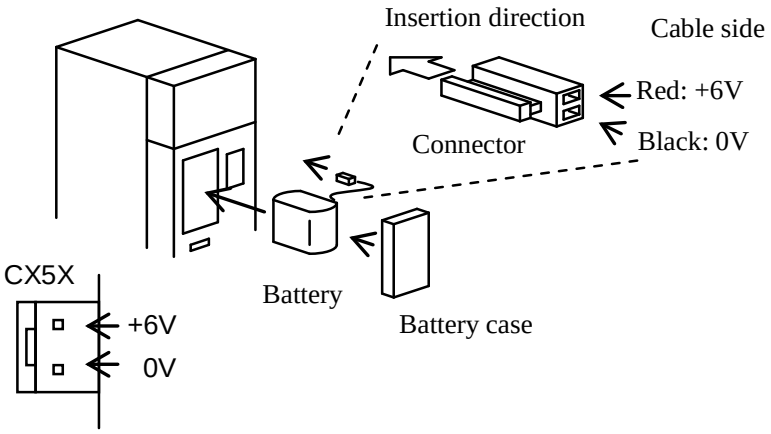

[Battery sets and outlines]

Battery order specification	Manufacturer model number	Applicable servo amplifier	Battery case order specification	Outline
A06B-6114-K504 (Note)	BR-2/3AGCT4A (Panasonic)	αi-B series 60/90 mm wide	A06B-6114-K505	
		αi-B series 150/300 mm wide	A06B-6114-K506	

NOTE
When using an old-type battery BR-CCF2TH, order a battery case applicable for battery A06B-6114-K504.

Used batteries

Old batteries should be disposed as "INDUSTRIAL WASTES" according to the regulations of the country or autonomy where your machine has been installed.

5.2.5 Notes on Replacing a Battery (Supplementary Explanation)

For absolute Pulsecoders, there are two types of battery connection modes: "Connecting batteries in a separate battery case" and "connecting batteries built into the servo amplifier. For details, see Chapter 9 in the FANUC SERVO AMPLIFIER αi-B series DESCRIPTIONS (B-63412EN).

[Batteries in a separate battery case]

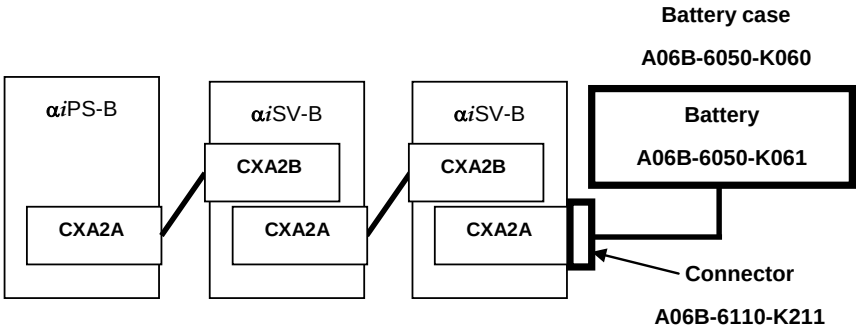

[Batteries built into the servo amplifier]

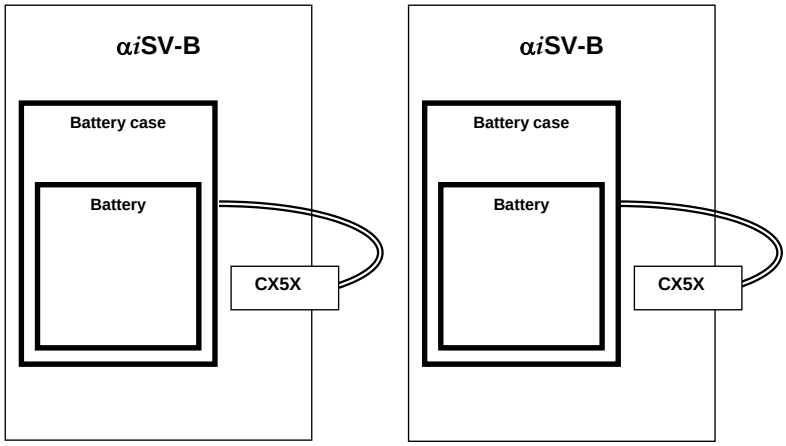

5.3 HOW TO REPLACE THE FUSES

In the αi-B amplifier, a control printed circuit board can be removed and inserted from the front of the servo amplifier.
The same procedure for removing or inserting the control printed circuit board applies to the Power Supply, servo amplifier, and spindle amplifier.

NOTE

1 If a fuse blows, it is likely that there is a short-circuit in the power supply for a device (such as a sensor) connected to the servo amplifier.
After checking that all devices connected to the servo amplifier are normal, replace the fuse.
If you do not remove the cause, it is very much likely that the fuse will blow again.
2 Do not use any fuse not supplied from FANUC.
3 Before replacing a fuse, check a marking on it with that on the printed circuit board. Be careful not to mount a fuse with an incorrect rating.
4 If the 24 V and 0 V lines are connected in reverse to the connector for 24 VDC power supply input (CXA2D) or the connector for communication between the amplifiers (CXA2A/B), the fuse may blow.
[Action]
1 Correct connection.
2 Replace the fuse.

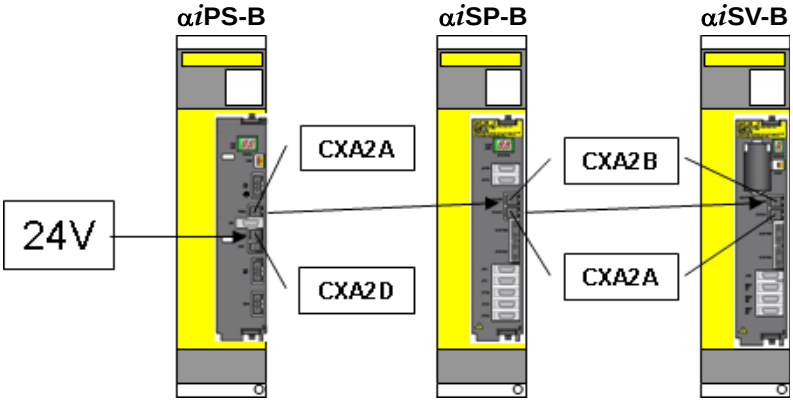

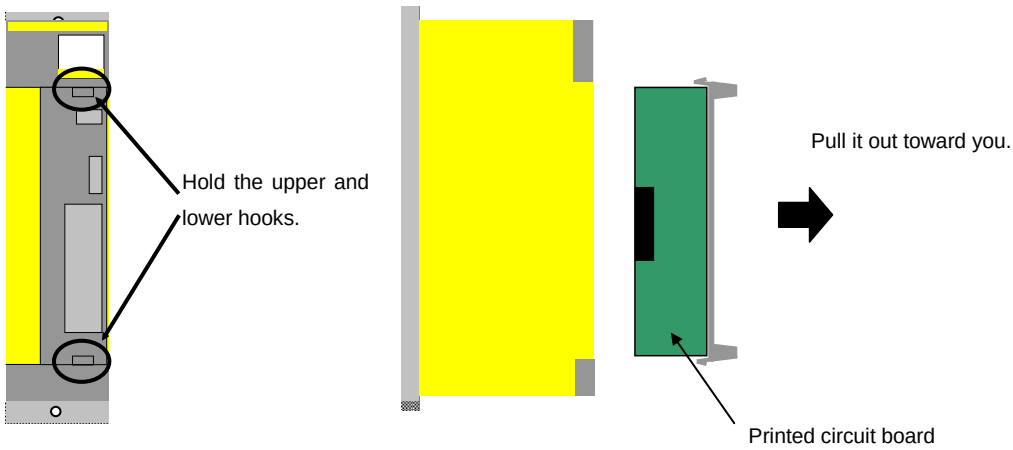

To insert the printed circuit board, reverse the above procedure. Ensure that the upper and lower hooks snap into the housing. If the printed circuit board is not inserted completely, the housing remains lifted. Pull out the printed circuit board and insert it again.

5.3.1 Fuse Locations

The fuse with the following specifications is mounted on each control printed circuit board.

Fuse specification

Symbol	Ordering number	Rating
FU1	A60L-0001-0290#LM32C	3.2A/48V

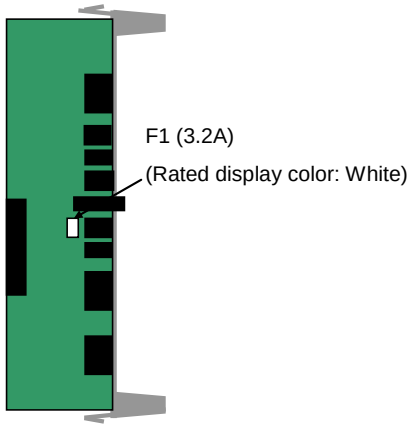

αiPS-B control printed circuit board

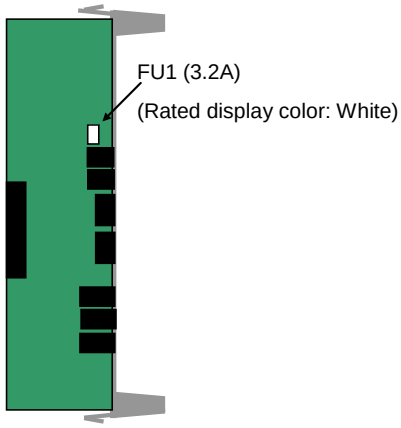

αiSV-B control printed circuit board

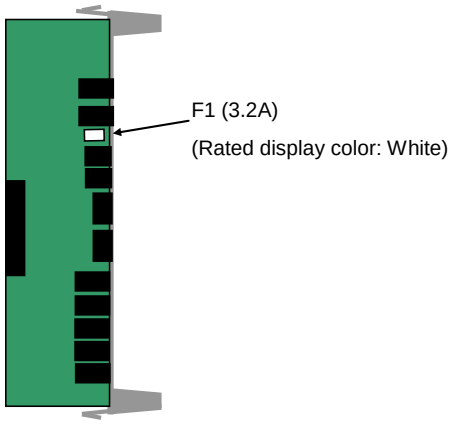

αiSP-B control printed circuit board

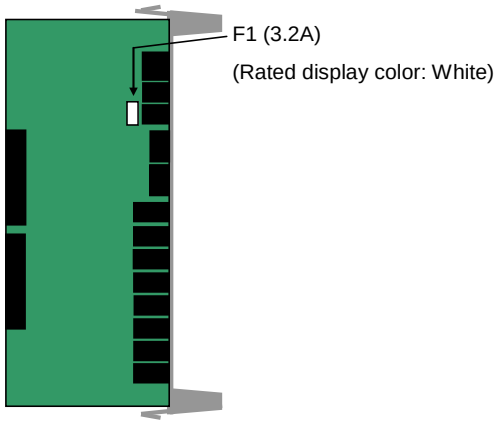

αiSVP-B control printed circuit board (A20B-2102-0110)

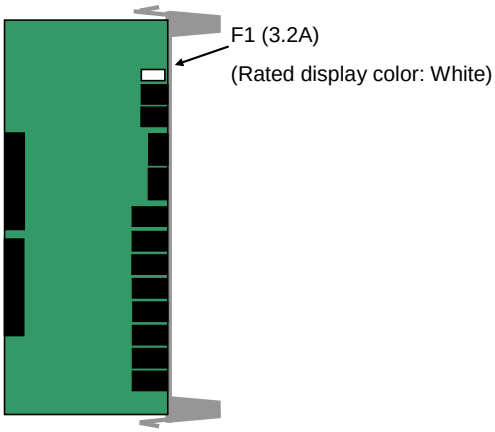

Upgrade version of the αiSVP-B control printed circuit board (A20B-2102-0730)

III. START-UP PROCEDURE FOR β*i*SV-B

1 OVERVIEW

This part describes the units and components of the servo amplifier. It also explains the following information necessary to start up the servo amplifier:

- Configurations
- Start-up procedure
- Confirmation of the operation
- Periodic maintenance of servo amplifier

2 CONFIGURATIONS

2.1 CONFIGURATIONS

The servo amplifier βiSV-B consists of the units and components listed below:

(1) Servo amplifier module (βiSV-B) (basic)
(2) AC line filter (basic)
(3) Connectors (for connection cables) (basic)
(4) Fuse (optional)
(5) Power transformer (optional)

Constituent (example)

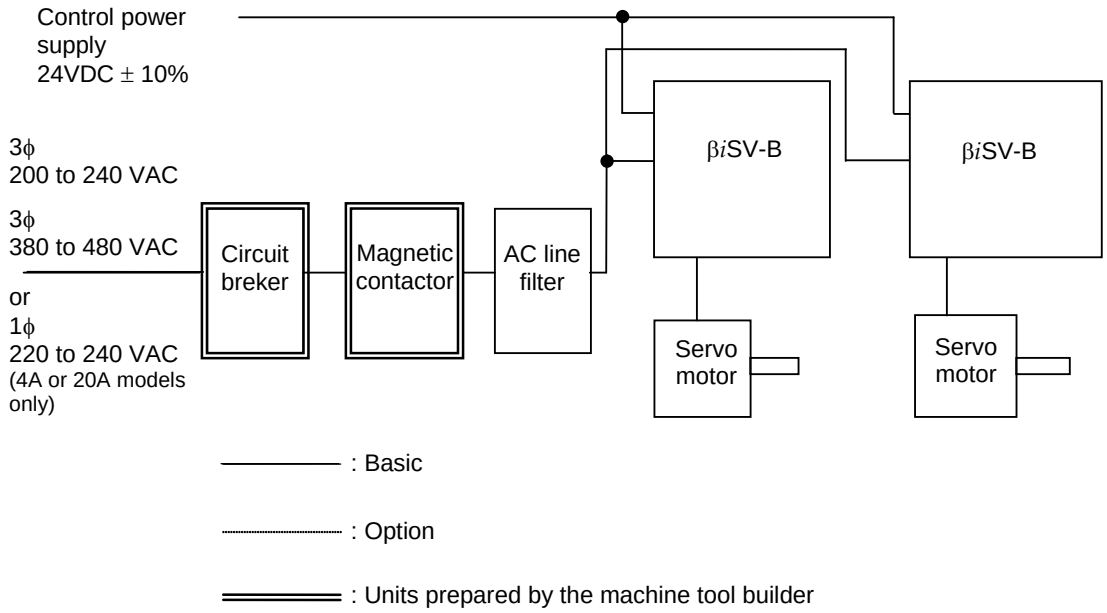

NOTE

1 Be sure to use a stabilized power supply as the 24 VDC amplifier power supply. Do not use the 24 VDC motor brake power supply as the 24 VDC amplifier power supply.
2 A circuit breaker, magnetic contactor, and AC line filter are always required.
3 To protect the equipment from lightning surge voltages, install a lightning surge absorber between each pair of power lines and between each power line and the grounding line at the power inlet of the power magnetics cabinet.

⚠ **WARNING**

Take great care to prevent incorrect operation of the motor or a ground fault caused by looseness of a screw, incorrect insertion of a connector, etc.
Take great care to prevent fire caused by looseness of a screw (or incorrect contact with a connector or incorrect connection between a connector terminal and a cable) in a power line or motor power line through which large current flows.

2.2 SPECIFICATION

2.2.1 Servo Amplifier

(1) Single-axis βiSV-B series (200 V type)

Model	Order specification
βiSV4-B	A06B-6160-H001
βiSV20-B	A06B-6160-H002
βiSV40-B	A06B-6160-H003
βiSV80-B	A06B-6160-H004

(2) Single-axis βiSV-B series (400 V type)

Model	Order specification
βiSV10HV-B	A06B-6161-H001
βiSV20HV-B	A06B-6161-H002
βiSV40HV-B	A06B-6161-H003

(3) Two-axis βiSV-B series (200 V type)

Model	Order specification
βiSV20/20-B	A06B-6166-H201
βiSV20/20-B	A06B-6166-H201#A
βiSV40/40-B	A06B-6166-H203

3 START-UP PROCEDURE

3.1 LIST OF ITEMS TO BE CHECKED

Make sure that the specifications of the CNC, servo motors, servo amplifiers, and other units you received are exactly what you ordered, and these units are connected correctly. Then, turn on the power.
The items to be checked are described below.

No.	Description	Check method
Checking the installation of the servo amplifier		
1	Specification of the servo amplifier and servo motor	Check that the combination of the servo amplifier and the servo motor is appropriate. Refer to the FANUC SERVO AMPLIFIER βi-B series DESCRIPTIONS (B-65422EN).
2	Packing of the flange	Check that the provided packing is properly attached. Check that there is no clearance between the control panel and the flange of the amplifier.
3	Leaving space for maintenance	Leave space for maintenance above and below the amplifier. For details, refer to the FANUC SERVO AMPLIFIER βi-B series DESCRIPTIONS (B-65422EN).
4	Prevention of contact with conductive section	Check that a protective plate is attached to the DC link terminal board. For details, refer to the FANUC SERVO AMPLIFIER βi-B series DESCRIPTIONS (B-65422EN).
5	Measure against ingress of coolant	Take measures to prevent electroconductive, flammable, and corrosive materials as well as mist and water droplets from getting into the unit. For keeping of the effective closeness of the control panel, refer to Appendix G "EXAMPLES OF RECOMMENDED POWER MAGNETICS CABINETS FOR FANUC SERVO AMPLIFIER βi-B series Descriptions (B-65422EN).
Checking the wiring for the servo amplifier		
6	Screwing to the terminal block	When connecting wires to the servo amplifier terminal board, be sure to tighten the screws to the proper torque. For the screw tightening torque for the terminal block, see the FANUC SERVO AMPLIFIER βi-B series DESCRIPTIONS (B-65422EN).
7	Connecting a Protective Ground	To prevent electric shock when connecting the ground, wire the ground cable with an appropriate wire rod. For details, refer to the FANUC SERVO AMPLIFIER βi-B series DESCRIPTIONS (B-65422EN).
8	Installing the lightning surge absorber	In order to prevent damage due to a surge voltage applied to the input power supply, install a lightning surge absorber. For details, refer to the FANUC SERVO AMPLIFIER βi-B series DESCRIPTIONS (B-65422EN).
9	Measure against noise	Check that ground wires, including feedback cable shielding clamps, are connected to the proper places to maintain stable operation of the machine. For details, refer to the FANUC SERVO AMPLIFIER βi-B series DESCRIPTIONS (B-65422EN).
10	Phase order of motor power lines	If the phase order of motor power lines is incorrect, the motor may operate unexpectedly. Check that they are connected correctly.
11	Checking the axis to which the motor feedback wire and power wire are connected	If the axis to which the motor feedback wire and power wire are connected is incorrect, the motor may operate unexpectedly. Check that they are connected correctly.
12	Connection of batteries	Do not connect the built-in batteries in parallel. Please make sure, if the built-in batteries are used with an amp-to-amp battery connection cable (CXA19A/B or BATL (B3)) attached, they may be connected in parallel. For details, refer to the FANUC SERVO AMPLIFIER βi-B series DESCRIPTIONS (B-65422EN).

No.	Description	Check method
Checking during startup of operation		
13	Checking the power supply voltage	Check that the power supply voltage is within the appropriate range before turning on the power. For details of the power voltage specifications, see the FANUC SERVO AMPLIFIER βi-B series DESCRIPTIONS (B-65422EN).
14	Checking the ground potential	The 400 V servo amplifier supports only neutral grounding. For details, refer to the FANUC SERVO AMPLIFIER βi-B series DESCRIPTIONS (B-65422EN).
15	Setting the ground fault breaker	Use a ground fault interrupter that supports inverters. For details of the leakage current, see the FANUC SERVO AMPLIFIER βi-B series DESCRIPTIONS (B-65422EN).
16	Checking the control power	Check that the voltage of the 24 V power supply supplied to the amplifier is within the appropriate range and that the appropriate current capacity has been selected. For details, refer to the FANUC SERVO AMPLIFIER βi-B series DESCRIPTIONS (B-65422EN).
17	Setting parameters	Set initial parameters, referring to "3.3 INITIAL PARAMETER SETTINGS."
18	Handling early failures	To solve initial problems (e.g., The power does not turn on. The motor does not rotate. An alarm occurs.), see "4 CONFIRMATION OF THE OPERATION."

3.2 CONNECTING THE POWER

3.2.1 Checking the Voltage and Capacity of the Power Supply

Before connecting the power, you should measure the AC power voltage.

(1) 1-axis βiSV-B series (200 V type), 2-axes βiSV-B series (200 V type)

Table 3.2.1 (a) Action for the AC power (200-V input type)

Permissible voltage fluctuation width	Nominal voltage	Action
-15%+10%	3-phase 200 to ~240VAC	**βiSV4-B, βiSV20-B, βiSV40-B, βiSV80-B, βiSV20/20-B, βiSV40/40-B** Permitted. Note) If the voltage is below the rated value, the rated output may not be obtained.
-15%+10%	1-phase 220 to 240VAC	**βiSV4-B, βiSV20-B** Single-phase input is permitted when the power supply is 380 to 415 VAC to neutral grounding.
Other than the above		**βiSV4-B, βiSV20-B, βiSV40-B, βiSV80-B, βiSV20/20-B, βiSV40/40-B** Not permitted. Use an insulating transformer to adjust the input voltage.

Table 3.2.1 (b) list the input power specification. Use a power source with sufficient capacity so that the system will not malfunction due to a voltage drop even during peak loads.

Table 3.2.1 (b) AC power voltage specifications (200-V input type)

Model	βiSV4-B	βiSV20-B	βiSV40-B	βiSV80-B	βiSV20/20-B	βiSV40/40-B
Nominal voltage rating	AC200V~240V -15%,+10%					
Power source frequency	50/60 Hz ±1 Hz					
Power source capacity (for the main circuit) [kVA]	0.2	2.8	4.7	6.5	2.7	4.8
Power source capacity (for the control circuit) [VA]	22				24	

(2) 1-axis βiSV-B series (400 V type)

Table 3.2.1 (c) Action for the AC power (400-V input type)

Permissible voltage fluctuation width	Nominal voltage	Action
-10%+10%	3-phase 380 to 480VAC	**(βiSV10HV-B, βiSV20HV-B, βiSV40HV-B)** Permitted.
-15%+10%	1-phase 220 to 240VAC	Not permitted.
Other than the above		Not permitted.

Table 3.2.2 (b) list the input power specification. Use a power source with sufficient capacity so that the system will not malfunction due to a voltage drop even during peak loads.

Table 3.2.1 (d) AC power voltage specifications (400-V input type)

Model	βiSV10HV-B	βiSV20HV-B	βiSV40HV-B
Nominal voltage rating	AC380V~480V -10%,+10%		
Power source frequency	50/60 Hz ±1 Hz		
Power source capacity (for the main circuit) [kVA]	1.9	3.9	6.2
Power source capacity (for the control circuit) [VA]	22		

3.2.2 Connecting a Protective Ground

Check that the protective ground is connected correctly with reference to each item of Chapter 6 INSTALLATION in the FANUC SERVO AMPLIFIER βi-B series DESCRIPTIONS (B-65422EN).

3.2.3 Selecting the Ground Fault Interrupter That Matches the Leakage Current

Check that an appropriate ground fault interrupter is selected with reference to each item of Chapter 6 INSTALLATION in the FANUC SERVO AMPLIFIER βi-B series DESCRIPTIONS (B-65422EN).

3.3 INITIALIZING PARAMETERS (SWITCHES AND DUMMY CONNECTORS)

(1) βiSV4-B, βiSV20-B

- When a regenerative resistor is not used
  Connect connector CXA20 by using a dummy connector.
  Refer to the FANUC SERVO AMPLIFIER βi-B series DESCRIPTIONS (B-65422EN).

(2) βiSV40-B, βiSV80-B

- Switch (SW) setting
  The regenerative resistor alarm level is set. The setting condition varies depending on the regenerative resistor used (the built-in regenerative resistor or separate regenerative resistor). Configure the setting correctly.

> ⚠ **WARNING**
> An incorrect setting can damage the regenerative resistor.

  Refer to the FANUC SERVO AMPLIFIER βi-B series DESCRIPTIONS (B-65422EN).

- When the built-in regenerative resistor is used
  Connect connector CXA20 by using a dummy connector.
  Connect connector CZ6 by using a dummy connector.
  Refer to the FANUC SERVO AMPLIFIER βi-B series DESCRIPTIONS (B-65422EN).

(3) βiSV20/20-B, βiSV40/40-B

- Switch (SW) setting
  The regenerative resistor alarm level is set. The setting condition varies depending on the regenerative resistor used (when the regenerative resistor is not used or a separate regenerative resistor is used). Configure the setting correctly.

> ⚠ **WARNING**
> An incorrect setting can damage the regenerative resistor.

  Refer to the FANUC SERVO AMPLIFIER βi-B series DESCRIPTIONS (B-65422EN).

- When a regenerative resistor is not used
  Connect connector CXA20 by using a dummy connector.
  Refer to the FANUC SERVO AMPLIFIER βi-B series DESCRIPTIONS (B-65422EN).

3.4 INITIAL PARAMETER SETTINGS

For the initialization of servo amplifiers or servo motors, refer to the following manual:

"FANUC AC SERVO MOTOR αi-B/αi series/
FANUC AC SERVO MOTOR βi-B/βi series/
FANUC LINEAR LiS series/
FANUC BUILT-IN SERVO MOTOR DiS series PARAMETER MANUAL (B-65270EN)"

4 CONFIRMATION OF THE OPERATION

4.1 SERVO AMPLIFIER

4.1.1 Check Procedure

1. Check Procedure

1. Turn on power.
   - ALM LED goes on. → See the servo adjustment screen of the host (CNC, etc.).
2. ALM LED does not go on.
3. Check CNC parameters, then release emergency stop state.
   - READY LED does not go on. → See the servo adjustment screen of the host (CNC, etc.).
4. READY LED goes on.
5. Check servo motor operation.
   - Alarm → See Part II “Troubleshooting”.
   - Abnormal motor operation → Refer to the "FANUC AC SERVO MOTOR αi-B/αi series/ FANUC AC SERVO MOTOR βi-B/βi series/ FANUC LINEAR LiS series/ FANUC BUILT-IN SERVO MOTOR DiS series PARAMETER MANUAL (B-65270EN)."

(1) βiSV4-B, βiSV20-B

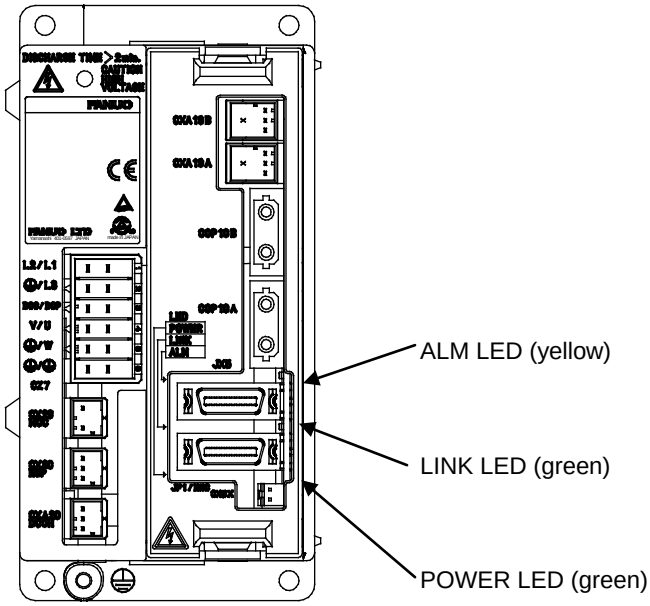

(2) βiSV40-B, βiSV80-B, βiSV10HV-B, βiSV20HV-B, βiSV40HV-B

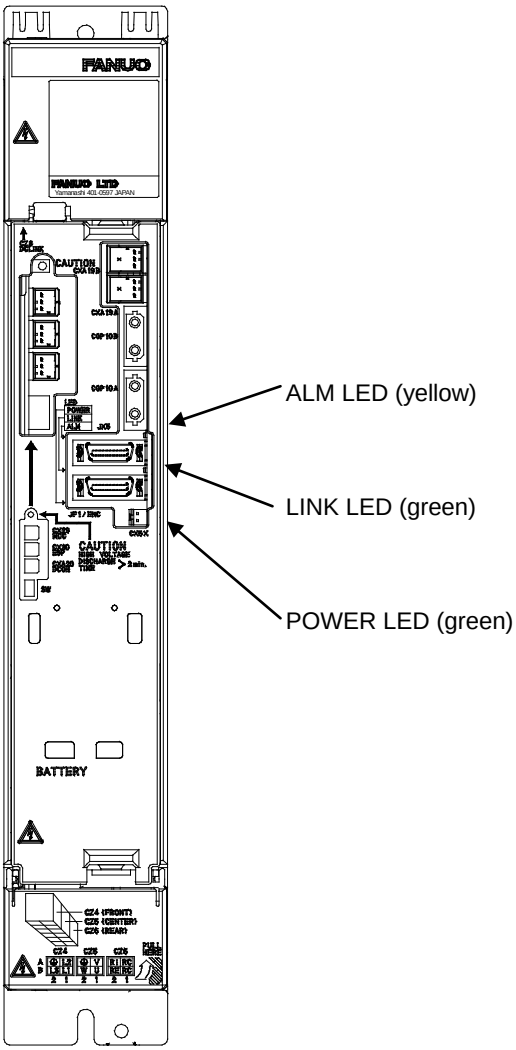

(3) βiSV20/20-B, βiSV40/40-B

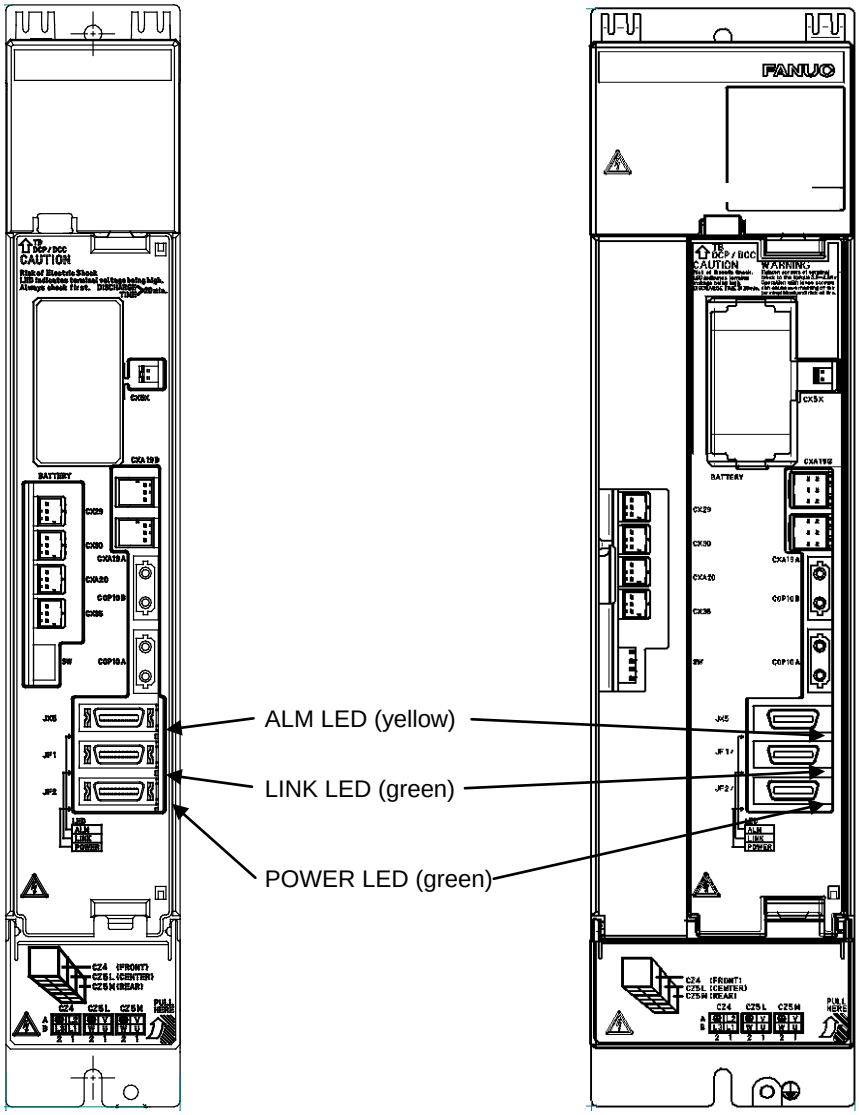

(a) βiSV20/20-B (b) βiSV40/40-B

4.1.2 V Ready-off Alarm Indicated on the CNC Screen

When the V ready-off alarm is indicated on the CNC, check the items listed below.
If the following items turn out to have not caused V ready-off, check diagnosis information No. 358 (V ready-off information) on the diagnosis screen and report it to FANUC.

(1) Emergency stop signal (ESP)
Has the emergency stop signal (connector: CX30) applied to the βiSV-B been released? Alternatively, is the signal connected correctly?

(2) MCON signal
Hasn't setting up the axis detach function disabled the transmission of the ready command signal MCON from the CNC to the βiSV-B?

(3) βiSV-B control printed circuit board
The βiSV-B control printed circuit board may be poorly installed or faulty. Be sure to push the faceplate as far in as it will go. If the problem persist, replace the control printed circuit board.

Checking diagnosis information (DGN) No. 358 makes it possible to analyze the cause of the V ready-off alarm.

Diagnosis	358	V ready-off information

Convert the displayed value to binary form, and check bits 5 to 14 of the resulting binary number.
When the servo amplifier starts working, these bits become 1 sequentially, starting at bit 5. When the servo amplifier has started normally, all of bits 5 to 14 become 1.
Check bits 5 to 14 sequentially, starting at the lowest-order bit. The first lowest bit that is not 0 corresponds to the processing that caused the V ready-off alarm.

#15	#14	#13	#12	#11	#10	#9	#8
	SRDY	DRDY	INTL	RLY	CRDY	MCOFF	MCONA
#7	**#6**	**#5**	**#4**	**#3**	**#2**	**#1**	**#0**
MCONS	*ESP	HRDY					

#06 (*ESP) : Emergency stop signal
#07, #08, #09 : MCON signal (NC→Amplifier→Converter)
#10 (CRDY) : Converter ready signal
#11 (RLY) : Relay signal (DB relay drive)
#12 (INTL) : Interlock signal (DB relay cancellation status)
#13 (DRDY) : Amplifier ready signal

The following table lists diagnosis information No. 358 values and main causes of problems. Do not insert or remove any connectors when the power is on.

Diagnosis No. 358 value	Problem	Check item
417	The system is still in an emergency stop state.	(1) Check that an emergency stop signal applied to CX30 of the common power supply has been released. (2) Check if there is a problem with the connection or cable for the communication interface between the amplifiers. (3) Replace the Servo Amplifier.
993	The βiSV-B ready signal has not been output.	(1) Check that there is no problem with the connection for communication (CXA2A/B) between the amplifiers or the related cable. (2) Check whether the input power is supplied. (3) Check whether the power is supplied to the operation coil of the magnetic contactor.β Check if there is a problem with the connection with the CX29 of the βiSV-B. (4) Replace the Servo Amplifier.

Diagnosis No. 358 value	Problem	Check item
4065	The interlock signal is not input.	Replace the Servo Amplifier.
225	-	Replace the Servo Amplifier.
481	-	Replace the Servo Amplifier.
2017	-	Replace the Servo Amplifier.
8161	-	Replace the Servo Amplifier.
97	-	Check whether the axis detach function is set.

4.1.3 Method for Observing Motor Current

This subsection explains how to observe the current that flows through the servo motor.

(1) Method of using the SERVO GUIDE

Refer to online help for information about how to connect to and use the servo adjustment tool "SERVO GUIDE" and applicable CNC systems.

Setting

Select the axis to be measured in the graph window channel setting. Also select IR and IS under Kind. Under Coef (conversion coefficient), set the maximum allowable current (Ap) for the amplifier in use.

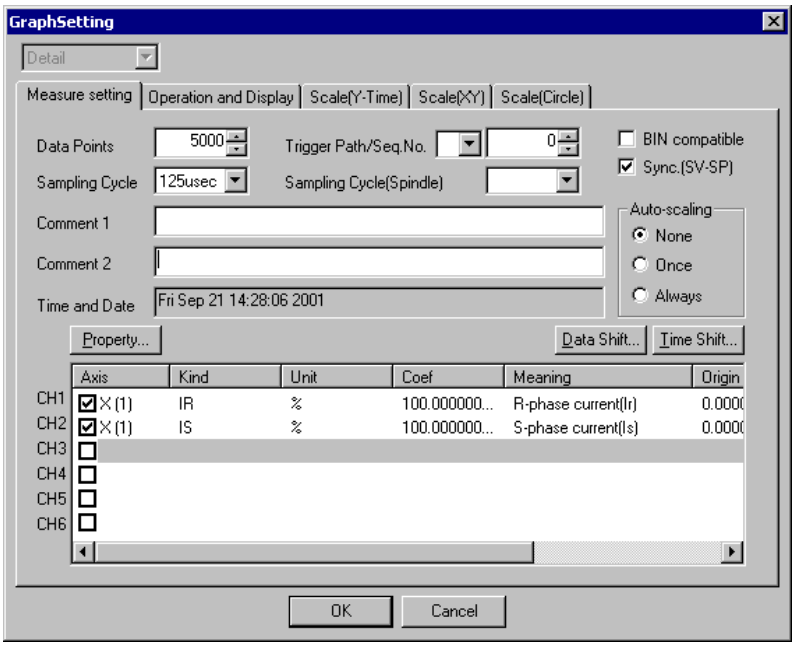

> **NOTE**
> The minimum motor current sampling cycle depends on the current control cycle.

Display

Select the XTYT mode from the graph window mode (M) menu to display waveforms.

IV. TROUBLESHOOTING FOR β*i*SV-B

1 OVERVIEW

This part describes the troubleshooting procedure. Read the section related to your current trouble to locate it and take an appropriate action.

First, check the alarm number (indicated by the CNC) and the βiSV-B indication in Chapter 2 ALARM NUMBERS AND BRIEF DESCRIPTIONS to find the cause.

Then, take an appropriate action according to the corresponding description in Chapter 3 TROUBLESHOOTING AND ACTION.

2 ALARM NUMBERS AND BRIEF DESCRIPTIONS

2.1 FOR Series 30*i*/31*i*/32*i*/35*i*-B, Power Motion *i*-A, 0*i*-F

2.1.1 Servo Alarm

Alarm No.	Description	Remarks
SV0361	Pulsecoder phase error (built-in)	3.2.7 (1)
SV0364	Soft phase alarm (built-in)	3.2.7 (1)
SV0365	LED error (built-in)	3.2.7 (1)
SV0366	Pulse error (built-in)	3.2.7 (1)
SV0367	Count error (built-in)	3.2.7 (1)
SV0368	Serial data error (built-in)	3.2.7 (3)
SV0369	Data transfer error (built-in)	3.2.7 (3)
SV0380	LED error (separate)	3.2.7 (2)
SV0381	Pulsecoder phase error (separate)	3.2.7 (2)
SV0382	Count error (separate)	3.2.7 (2)
SV0383	Pulse error (separate)	3.2.7 (2)
SV0384	Soft phase alarm (separate)	3.2.7 (2)
SV0385	Serial data error (separate)	3.2.7 (3)
SV0386	Data transfer error (separate)	3.2.7 (3)
SV0387	Sensor error (separate)	3.2.7 (2)
SV0417	Invalid parameter	3.2.6
SV0421	Excessive semi-full error	3.2.8
SV0430	Servo motor overheat	3.2.5
SV0432	PS: control undervoltage	3.1.4
SV0433	PS: DC link undervoltage	3.1.1
SV0436	Soft thermal (OVC)	3.2.3
SV0438	SV : current alarm	3.1.9
SV0439	PS : DC link overvoltage	3.1.2
SV0440	PS : Excessive regenerative power 2	3.1.3
SV0441	Current offset error	3.2.8
SV0444	SV: internal cooling fan stopped	3.1.5
SV0445	Soft disconnection alarm	3.2.4
SV0447	Hard disconnection alarm (separate)	3.2.4
SV0448	Feedback mismatch alarm	3.2.8
SV0449	SV: IPM alarm	3.1.7
SV0453	Soft disconnection alarm (α Pulsecoder)	3.2.4
SV0601	SV: cooling fan stopped of the radiator	3.1.6
SV0603	SV. IPM ALARM (OH)	3.1.8

2.2 FOR Series 30*i*/31*i*/32*i*-A

2.2.1 Servo Alarm

Alarm No.	Description	Remarks
SV0361	Pulsecoder phase error (built-in)	3.2.7 (1)
SV0364	Soft phase alarm (built-in)	3.2.7 (1)
SV0365	LED error (built-in)	3.2.7 (1)
SV0366	Pulse error (built-in)	3.2.7 (1)
SV0367	Count error (built-in)	3.2.7 (1)
SV0368	Serial data error (built-in)	3.2.7 (3)
SV0369	Data transfer error (built-in)	3.2.7 (3)
SV0380	LED error (separate)	3.2.7 (2)
SV0381	Pulsecoder phase error (separate)	3.2.7 (2)
SV0382	Count error (separate)	3.2.7 (2)
SV0383	Pulse error (separate)	3.2.7 (2)
SV0384	Soft phase alarm (separate)	3.2.7 (2)
SV0385	Serial data error (separate)	3.2.7 (3)
SV0386	Data transfer error (separate)	3.2.7 (3)
SV0387	Sensor error (separate)	3.2.7 (2)
SV0417	Invalid parameter	3.2.6
SV0421	Excessive semi-full error	3.2.8
SV0430	Servo motor overheat	3.2.5
SV0432	Converter: control power supply low voltage	3.1.4
SV0433	Converter: DC link undervoltage	3.1.1
SV0436	Soft thermal (OVC)	3.2.3
SV0438	Inverter: motor current alarm	3.1.9
SV0439	Converter: DC link overvoltage	3.1.2
SV0440	Converter: excessive deceleration power	3.1.3
SV0441	Current offset error	3.2.8
SV0444	Inverter: internal cooling fan stopped	3.1.5
SV0445	Soft disconnection alarm	3.2.4
SV0447	Hard disconnection alarm (separate)	3.2.4
SV0448	Feedback mismatch alarm	3.2.8
SV0449	Inverter: IPM alarm	3.1.7
SV0453	Soft disconnection alarm (α Pulsecoder)	3.2.4
SV0601	Inverter: cooling fan stopped of the radiator	3.1.6
SV0603	Inverter: IPM alarm (OH)	3.1.8

2.3 FOR Series 0*i*/0*i* Mate-D

2.3.1 Servo Alarm

Alarm No.	Description	Remarks
SV0361	Pulsecoder phase error (built-in)	3.2.7 (1)
SV0364	Soft phase alarm (built-in)	3.2.7 (1)
SV0365	LED error (built-in)	3.2.7 (1)
SV0366	Pulse error (built-in)	3.2.7 (1)
SV0367	Count error (built-in)	3.2.7 (1)
SV0368	Serial data error (built-in)	3.2.7 (3)
SV0369	Data transfer error (built-in)	3.2.7 (3)
SV0380	LED error (separate)	3.2.7 (2)
SV0381	Pulsecoder phase error (separate)	3.2.7 (2)
SV0382	Count error (separate)	3.2.7 (2)
SV0383	Pulse error (separate)	3.2.7 (2)
SV0384	Soft phase alarm (separate)	3.2.7 (2)
SV0385	Serial data error (separate)	3.2.7 (3)
SV0386	Data transfer error (separate)	3.2.7 (3)
SV0387	Sensor error (separate)	3.2.7 (2)
SV0417	Invalid parameter	3.2.6
SV0421	Excessive semi-full error	3.2.8
SV0430	Servo motor overheat	3.2.5
SV0432	Converter: control power supply low voltage	3.1.4
SV0433	Converter: DC link undervoltage	3.1.1
SV0436	Soft thermal (OVC)	3.2.3
SV0438	Inverter: DC link current alarm	3.1.9
SV0439	Converter: DC link overvoltage	3.1.2
SV0440	Converter: excessive deceleration power	3.1.3
SV0441	Current offset error	3.2.8
SV0444	Inverter: internal cooling fan stopped	3.1.5
SV0445	Soft disconnection alarm	3.2.4
SV0447	Hard disconnection alarm (separate)	3.2.4
SV0448	Feedback mismatch alarm	3.2.8
SV0449	Inverter: IPM alarm	3.1.7
SV0453	Soft disconnection alarm (α Pulsecoder)	3.2.4
SV0601	Inverter: cooling fan stopped of the radiator	3.1.6
SV0603	Inverter: IPM alarm (OH)	3.1.8

3 TROUBLESHOOTING AND ACTION

3.1 SERVO AMPLIFIER

The following table lists alarms related to the servo amplifier module.
See this table and the CNC alarm code indicated in Chapter 2, "ALARM NUMBERS AND BRIEF DESCRIPTIONS."

Alarm	ALM LED display	Major cause	Remarks
Converter: DC link undervoltage PS: DC link undervoltage	ON	Voltage drop at the DC link in the main circuit	3.1.1
Converter: DC link overvoltage PS : DC link overvoltage	ON	Voltage rise at the DC link in the main circuit	3.1.2
Converter: excessive deceleration power PS : Excessive regenerative power 2	ON	· Too large regenerative discharge amount · Abnormal regenerative discharge circuit	3.1.3
Converter: control power supply low voltage PS: control undervoltage	ON	· Drop in external control power supply (24 V) · Connector/cable (CXA19A, CXA19B) defective · βiSV-B failure	3.1.4
Inverter: internal cooling fan stopped SV: internal cooling fan stopped	ON	· Fan not running. · Fan motor connector or cable defective · βiSV-B failure	3.1.5
Inverter: cooling fan stopped of the radiator SV: cooling fan stopped of the radiator	ON	· Fan not running. · Fan motor connector or cable defective · βiSV-B failure	3.1.6
Inverter: IPM alarm SV: IPM alarm	ON	· Short-circuit between power lead phases or ground fault in them · Short-circuit between motor winding phases or ground fault in them · βiSV-B failure	3.1.7
Inverter: IPM alarm (OH) INV. IPM ALARM(OH)	ON	· The motor is being used under a harsh condition. · The ambient temperature is high. · βiSV-B failure	3.1.8
Inverter: motor current alarm SV : current alarm	ON	· Short-circuit between power lead phases or ground fault in them · Short-circuit between motor winding phases or ground fault in them · Incorrect motor ID setting · βiSV-B or motor failure	3.1.9
FSSB communication error	ON	· Connector or cable failure · βiSV-B or CNC failure	3.1.10

3.1.1 Converter: DC Link Undervoltage

(1) Meaning
The voltage at the DC link of the converter is low.

(2) Cause and troubleshooting
(a) A small power dip has occurred.
→ Check the power supply voltage.
(b) Low input power supply voltage
→ Check the power supply specification.
(c) Insert the βiSV-B face plate (control printed circuit board) securely.
(d) Replace the βiSV-B.

3.1.2 Converter: DC Link Overvoltage

(1) Meaning
In the main circuit, the DC voltage at the DC link is abnormally high.

(2) Cause and troubleshooting
(a) βiSV4-B, βiSV20-B, βiSV20/20-B and βiSV40/40-B
Use a regenerative resistor.
(b) Excessive regenerated power
Increase the acceleration/deceleration time constant. If this alarm occurs less frequently, the regeneration capacity is not sufficient. Set the acceleration/deceleration time constant to such a level that does not cause any alarm.
(c) Insert the βiSV-B face plate (control printed circuit board) securely.
(d) Replace the βiSV-B.
(e) Check that the regenerative resistor is broken or poorly connected.

3.1.3 Converter: Excessive Deceleration Power

(1) Meaning
The converter deceleration power is too large.

(2) Cause and troubleshooting
For βiSV4-B, βiSV20-B, βiSV20/20-B and βiSV40/40-B

- When a separate regenerative resistor is not used
  (a) Connect CXA20 by using a dummy connector.
  (b) Insert the βiSV-B face plate (control printed circuit board) securely.
  (c) Replace the βiSV-B.
- When a separate regenerative resistor is used
  (a) Check the resistance at both ends of connector CXA20 on the regenerative resistor side to confirm that the resistance is 0Ω.
  (b) The average regenerative power may be high. Decrease the frequency of acceleration/deceleration, or review the resistor specification.
  (c) Insert the βiSV-B face plate (control printed circuit board) securely.
  (d) Replace the βiSV-B.

For βiSV40-B and βiSV80-B

- When the built-in regenerative resistor is used
  (a) Connect CXA20 and CZ6 by using a dummy connector.
  (b) The average regenerative power may be high. Decrease the frequency of acceleration/deceleration, or review the resistor specification.
  (c) Insert the βiSV-B face plate (control printed circuit board) securely.
  (d) Replace the βiSV-B.

- When a separate regenerative resistor is used
  (a) Check the resistance at both ends of connector CXA20 on the regenerative resistor side to confirm that the resistance is 0 Ω.
  (b) The average regenerative power may be high. Decrease the frequency of acceleration/deceleration, or review the resistor specification.
  (c) Insert the βiSV-B face plate (control printed circuit board) securely.
  (d) Replace the βiSV-B.

3.1.4 Converter: Control Power Supply Undervoltage

(1) Meaning
The external control power supply (24 VDC) voltage is low.

(2) Cause and troubleshooting
(a) Check the voltage level of the external power supply (24 VDC). (Normal voltage: 21.6 V or higher)
(b) Check the connector and cable (CXA19A, CXA19B).
(c) Replace the βiSV-B.

3.1.5 Inverter: Internal Cooling Fan Stopped

(1) Meaning
Inverter: internal cooling fan stopped

(2) Cause and troubleshooting
(a) Check whether there is any foreign material in the fan.
(b) Be sure to push the faceplate (control printed circuit board) as far as it will go.
(c) Check that the fan connector is attached correctly.
(d) Replace the fan.
(e) Replace the βiSV-B.

3.1.6 Inverter: Cooling Fan Stopped of the Radiator

(1) Meaning
Inverter: cooling fan stopped of the radiator

(2) Cause and troubleshooting
(a) Check whether there is any foreign material in the fan.
(b) Be sure to push the faceplate (control printed circuit board) as far as it will go.
(c) Check that the fan connector is attached correctly.
(d) Replace the fan.
(e) Replace the βiSV-B.

3.1.7 Inverter: IPM Alarm

(1) Meaning
Inverter: IPM alarm

(2) Cause and troubleshooting
(a) Be sure to push the faceplate (control printed circuit board) as far as it will go.
(b) Disconnect the motor power leads from the βiSV-B, and release the βiSV-B from an emergency stop condition.
<1> If no IPM alarm condition has occurred
→ Go to (c).
<2> If an IPM alarm condition has occurred
→ Replace the βiSV-B.
(c) Disconnect the motor power leads from the βiSV-B, and check the insulation between PE and the motor power lead U, V, or W.
<1> If the insulation is deteriorated
→ Go to (d).
<2> If the insulation is normal
→ Replace the βiSV-B.

(d) Disconnect the motor from its power leads, and check whether the insulation of the motor or power leads is deteriorated.
<1> If the insulation of the motor is deteriorated
→ Replace the motor.
<2> If the insulation of any power lead is deteriorated
→ Replace the power lead.

3.1.8 Inverter: IPM Alarm (OH)

(1) Meaning
Inverter: IPM alarm (OH)
(2) Cause and troubleshooting
(a) Be sure to push the faceplate (control printed circuit board) as far as it will go.
(b) Check that the heat sink cooling fan is running.
(c) Check that the motor is being used at or below its continuous rating.
(d) Check that the cooling capacity of the cabinet is sufficient (inspect the fans and filters).
(e) Check that the ambient temperature is not too high.
(f) Replace the βiSV-B.

3.1.9 Inverter: Motor Current Alarm

(1) Meaning
Inverter: motor current alarm
(2) Cause and troubleshooting
(a) Checking the servo parameters
Referring to "FANUC AC SERVO MOTOR βi-B/βi series Parameter Manual (B-65270EN)," check whether the following parameters have default values.

No.2004	No.2040	No.2041

Alternatively, if an abnormal motor current alarm condition occurs only on rapid acceleration/deceleration, it is likely that the motor is being used under too harsh a condition. Increase the acceleration/deceleration time constant, and see what will occur.
(b) Be sure to push the faceplate (control printed circuit board) as far as it will go.
(c) Disconnect the motor power leads from the βiSV-B, and release the βiSV-B from an emergency stop condition.
<1> If no abnormal motor current occurs
→ Go to (d).
<2> If an abnormal motor current occurs
→ Replace the βiSV-B.
(d) Disconnect the motor power leads from the βiSV-B, and check the insulation between PE and the motor power lead U, V, or W.
<1> If the insulation is deteriorated
→ Go to (e).
<2> If the insulation is normal
→ Replace the βiSV-B.
(e) Disconnect the motor from its power leads, and check whether the insulation of the motor or power leads is deteriorated.
<1> If the insulation of the motor is deteriorated
→ Replace the motor.
<2> If the insulation of any power lead is deteriorated
→ Replace the power lead.

3.1.10 FSSB Communication Error

(1) Meaning
Inverter: FSSB communication error

(2) Cause and troubleshooting
(a) Replace the optical cable (COP10A) of the βiSV-B that is nearest to the CNC among the amplifiers on which the ALM LED is lit (in Fig. 3.1.10, the cable between UNIT2 and UNIT3)
(b) Replace the βiSV-B that is the second nearest to the CNC among the amplifiers on which the ALM LED is lit (in Fig. 3.1.10, UNIT3)
(c) Replace the βiSV-B that is the nearest to the CNC among the amplifiers on which the ALM LED is lit (in Fig. 3.1.10, UNIT2)
(d) Replace the servo card in the CNC.

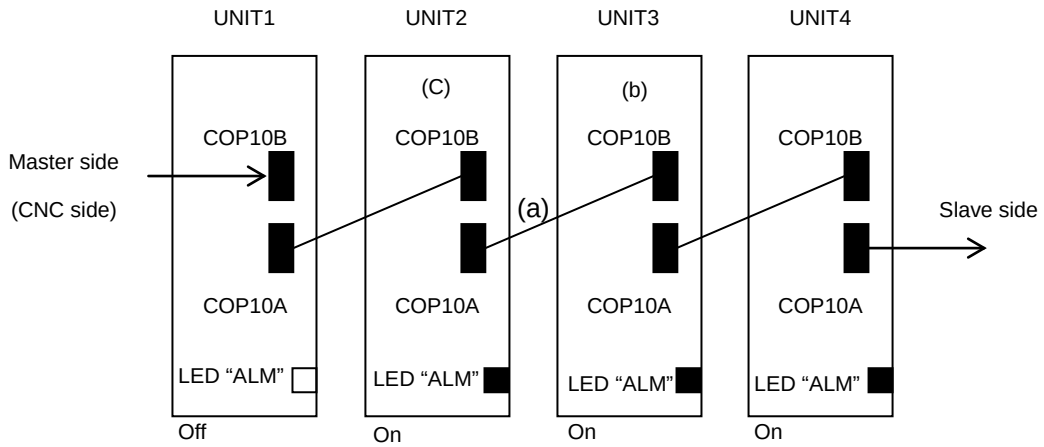

Fig. 3.1.10

3.2 SERVO CONTROL SOFTWARE

If a servo alarm is issued, an alarm message is output, and details of the alarm are also displayed on the servo adjustment screen or the diagnosis screen. Using the alarm identification table given in this section, determine the alarm, and take a proper action.

3.2.1 Servo Adjustment Screen

The following procedure can be used to display the servo adjustment screen.

SYSTEM → [SYSTEM] → [▷]→ [SV-PRM] → [SV-TUN]

If the servo setting screen does not appear, specify the following parameter, then switch the CNC off and on again.

	#7	#6	#5	#4	#3	#2	#1	#0
3111								SVS

SVS(♯0) 1: (to display the servo setting screen)

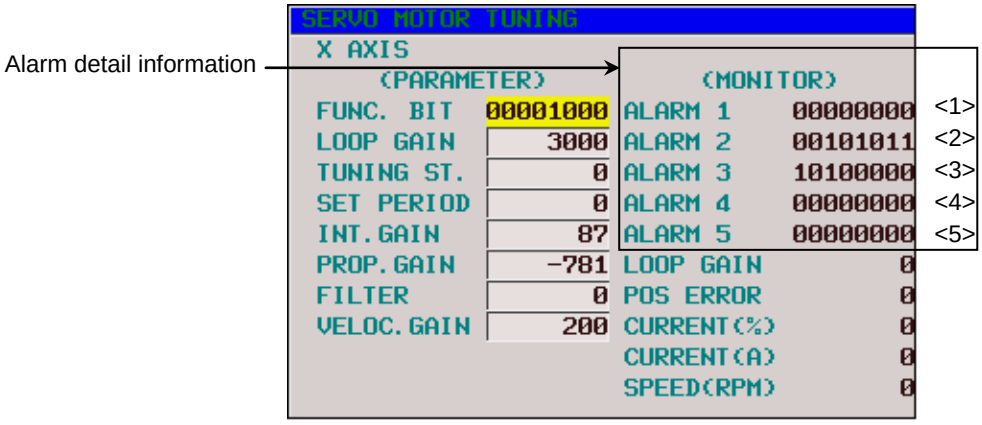

Fig. 3.2.1 (a) Servo adjustment screen

The table below indicates the names of the alarm bits.

Table 3.2.1 List of alarm bit names

	#7	#6	#5	#4	#3	#2	#1	#0
<1> Alarm 1	OVL	LVA	OVC	HCA	HVA	DCA	FBA	OFA
<2> Alarm 2	ALD			EXP				
<3> Alarm 3		CSA	BLA	PHA	RCA	BZA	CKA	SPH
<4> Alarm 4	DTE	CRC	STB	PRM				
<5> Alarm 5		OFS	MCC	LDM	PMS	FAN	DAL	ABF
<6> Alarm 6					SFA			
<7> Alarm 7	OHA	LDA	BLA	PHA	CMA	BZA	PMA	SPH
<8> Alarm 8	DTE	CRC	STB	SPD				
<9> Alarm 9		FSD			SVE	IDW	NCE	IFE

NOTE
The empty fields do not represent alarm codes.

3.2.2 Diagnosis Screen

The alarm items of the servo adjustment screen correspond to the diagnosis screen numbers indicated in the table below.

Table 3.2.2 Correspondence between the servo adjustment screen and diagnosis screen

Alarm No.		Parameter	
<1>	Alarm 1	No	200
<2>	Alarm 2		201
<3>	Alarm 3		202
<4>	Alarm 4		203
<5>	Alarm 5		204
<6>	Alarm 6		——
<7>	Alarm 7		205
<8>	Alarm 8		206
<9>	Alarm 9		——

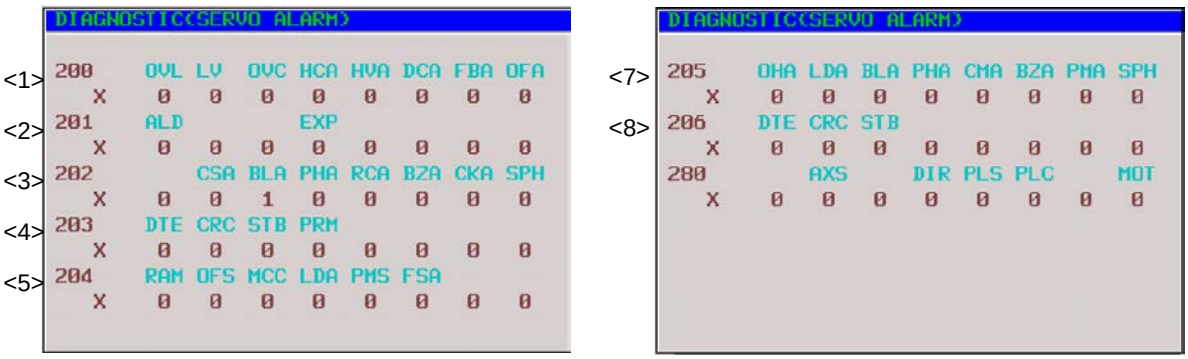

Fig. 3.2.2 Diagnosis screen

3.2.3 Overload Alarm (Soft Thermal, OVC)

(Alarm identification method)

	#7	#6	#5	#4	#3	#2	#1	#0
<1> Alarm 1	**OVL**	**LVA**	**OVC**	**HCA**	**HVA**	**DCA**	**FBA**	**OFA**

(Action)

(1) Make sure that the motor is not vibrating.
⇒ If a motor vibrates, the current flowing in it becomes more than necessary, resulting in an alarm.

(2) Make sure that the power lead to the motor is connected correctly.
⇒ If the connection is incorrect, an abnormal current flows in the motor, resulting in an alarm.

(3) Make sure that the following parameters are set correctly.
⇒ An overload alarm is issued based on the result of calculation of these parameters. Be sure to set them to the standard values. For details of the standard values, refer to the FANUC AC SERVO MOTOR βi-B/βi series Parameter Manual (B-65270EN).

No. 2062	**Overload protection coefficient (OVC1)**
No. 2063	**Overload protection coefficient (OVC2)**
No. 2065	**Overload protection coefficient (OVCLMT)**
No. 2162	**Overload protection coefficient (OVC21)**
No. 2163	**Overload protection coefficient (OVC22)**
No. 2164	**Overload protection coefficient (OVCLMT2)**

(4) Attach the check pin board to connector JX5 to measure the waveform of the actual current (IR and IS) of the servo amplifier module. (This check pin board differs from that for the α series.)
Run the motor and measure its actual currents (IR and IS). Then compare the measurement results with the overload duty curve shown in "FANUC AC SERVO MOTOR βi-B/βi series Descriptions (B-65302EN)," and see whether the machine load is too heavy compared with the motor capacity. If the actual current is high on acceleration/deceleration, it is likely that the time constant is too small.

3.2.4 Feedback Disconnected Alarm

(Alarm identification method)

	#7	#6	#5	#4	#3	#2	#1	#0
<1> Alarm 1	OVL	LVA	OVC	HCA	HVA	DCA	FBA	OFA
<2> Alarm 2	ALD			EXP				
<6> Alarm 6					SFA			

FBA	ALD	EXP	SFA	Description	Action
1	1	1	0	Hard disconnection (separate phase A/B)	1
1	0	0	0	Soft disconnection (closed loop)	2
1	0	0	1	Soft disconnection (αi Pulsecoder)	3

(Action)

Action 1:

This alarm is issued when a separate phase A/B scale is used. Check if the phase A/B detector is connected correctly. Check if the phase A/B detector is connected correctly. Ensure that valid parameters are specified.

Action 2:

This alarm is issued when the position feedback pulse variation is small relative to the velocity feedback pulse variation. This means that this alarm is not issued when a semi-full is used. This means that this alarm is not issued when a semi-closed is used. Check if the separate detector outputs position feedback pulses correctly. If position feedback pulses are output correctly, it is considered that the motor alone is rotating in the reverse direction at the start of machine operation because of a large backlash between the motor position and scale position.

	#7	#6	#5	#4	#3	#2	#1	#0
No. 2003							TGAL	

TGAL(#1) 1: Uses the parameter for the soft disconnection alarm detection level.

No. 2064	Soft disconnection alarm level

Standard setting 4: Alarm issued for a 1/8 rotation of the motor.
Increase this value.

Action 3:

This alarm is issued when synchronization between the absolute position data sent from the built-in Pulsecoder and phase data is lost. Turn off the power to the CNC, then detach the Pulsecoder cable then attach it again. If this alarm is still issued, replace the Pulsecoder.

3.2.5 Overheat Alarm

(Alarm identification method)

	#7	#6	#5	#4	#3	#2	#1	#0
<1> Alarm 1	OVL	LVA	OVC	HCA	HVA	DCA	FBA	OFA
<2> Alarm 2	ALD			EXP				

OVL	ALD	EXP	Description	Action
1	1	0	Motor overheat	1
1	0	0	Amplifier overheat	1

(Action)

Action 1:

If this alarm is issued after a long-time of continuous operation, it is considered that the motor and amplifier are overheated. Stop operation for a while, then make a check. If this alarm is still issued after the power is off for about 10 minutes then is turned on again, the thermostat is considered to be faulty.

If this alarm is issued intermittently, increase the time constant or increase stop time in the program to suppress the rise in temperature.

3.2.6 Invalid Servo Parameter Setting Alarm

The invalid servo parameter setting alarm is issued when a setting out of the specifiable range is specified, or an overflow has occurred in an internal calculation.

When an invalid parameter is detected on the servo side, alarm 4#4(PRM)=1 results.

(Alarm identification method)

	#7	#6	#5	#4	#3	#2	#1	#0
<4> Alarm 4	DTE	CRC	STB	PRM				

For details and action required when the invalid servo parameter setting alarm is issued on the servo side, refer to the FANUC AC SERVO MOTOR βi-B/βi series Parameter Manual (B-65270EN).

(Reference information)

Method of checking details of an invalid parameter detected on the servo side

・A number is indicated in No. 352 of the diagnosis screen.

3.2.7 Alarms Related to Pulsecoder and Separate Serial Detector

(Bits for alarm identification)

	#7	#6	#5	#4	#3	#2	#1	#0
<1> Alarm 1	OVL	LVA	OVC	HCA	HVA	DCA	FBA	OFA
<2> Alarm 2	ALD			EXP				
<3> Alarm 3		CSA	BLA	PHA	RCA	BZA	CKA	SPH
<4> Alarm 4	DTE	CRC	STB	PRM				
<5> Alarm 5		OFS	MCC	LDM	PMS	FAN	DAL	ABF
<6> Alarm 6					SFA			
<7> Alarm 7	OHA	LDA	BLA	PHA	CMA	BZA	PMA	SPH
<8> Alarm 8	DTE	CRC	STB	SPD				
<9> Alarm 9		FSD			SVE	IDW	NCE	IFE

(1) For a built-in Pulsecoder
An alarm is determined from the bits of alarms 1, 2, 3, and 5. The table below indicates the meaning of each bit.

Alarm 3							Alarm 5		1	Alarm 2		Description	Action
CSA	BLA	PHA	RCA	BZA	CKA	SPH	LDM	PMA	FBA	ALD	EXP		
						1						Soft phase alarm	2
				1								Zero battery voltage	1
			1						1	1	0	Count error alarm	2
		1										Phase alarm	2
	1											Battery voltage decrease (warning)	1
								1				Pulse error alarm	
							1					LED error alarm	

⚠ CAUTION
An alarm for which no action number is given is considered to be caused by a Pulsecoder failure. Replace the Pulsecoder.

(2) For a separate serial detector
An alarm is determined from the bits of alarm 7. The table below indicates the meaning of each bit.

Alarm 7								Description	Action
OHA	LDA	BLA	PHA	CMA	BZA	PMA	SPH		
							1	Soft phase alarm	2
						1		Pulse error alarm	
					1			Zero battery voltage	1
				1				Count error alarm	2
			1					Phase alarm	2
		1						Battery voltage decrease (warning)	1
	1							LED error alarm	
1								Separate detector alarm	3

NOTE
An alarm for which no action number is given is considered to be caused by a detector failure. Replace the detector.

(Action)

Action 1: Battery-related alarms
Check if a battery is connected. When the power is turned on for the first time after a battery is connected, the zero battery voltage alarm is issued. In such a case, turn off the power, then turn on the power again. If the alarm is still issued, check the battery voltage. If the battery voltage decrease alarm is issued, check the voltage, and replace the battery as required.

Action 2: Alarms that may be issued for noise
If an alarm is issued intermittently or after emergency stop cancellation, noise is probably the cause. So, provide noise protection. If the same alarm is still issued after noise protection is provided, replace the detector.

Action 3: Alarm condition detected by the separate detector
If the separate detector detects an alarm condition, contact the manufacturer of the detector for information on troubleshooting.

(3) Alarms related to serial communication
An alarm is determined from the bits of alarms 4 and 8.

Alarm 4			Alarm 8			Description
DTE	CRC	STB	DTE	CRC	STB	
1						Serial Pulsecoder communication alarm
	1					
		1				
			1			Separate serial Pulsecoder communication alarm
				1		
					1	

Action:
Serial communication is not performed correctly. Check if the cable is connected correctly and is not broken. If CRC or STB is issued, noise may be the cause. So, provide noise protection. So, provide noise protection. If CRC or STB is always issued after the power is turned on, the Pulsecoder or amplifier control board or the pulse module may be faulty.

3.2.8 Other Alarms

(Alarm identification method)

	#7	#6	#5	#4	#3	#2	#1	#0
<5> Alarm 5		OFS	MCC	LDM	PMS	FAN	DAL	ABF

OFS	DAL	ABF	Description	Action
		1	Feedback mismatch alarm	1
	1		Excessive semi-full error alarm	2
1			Current offset error alarm	3

(Action)
Action 1:
This alarm is issued when the move direction of the position detector is opposite to the move direction of the speed detector. Check the rotation direction of the separate detector. If the rotation direction of the separate detector is opposite to the rotation direction of the motor, take the following action:
For a phase A/B detector:
Reverse the connections of A and XA.
For a serial detector:
Reverse the setting of the signal direction of the separate detector.
In the Series 90B0/G(07) and subsequent editions, the following settings enable signal directions in the A/B phase detector to be inverted.

	#7	#6	#5	#4	#3	#2	#1	#0
No. 2018								RVRSE

RVRSE (#0) Reverses the signal direction of the separate detector.
0: Does not reverse the signal direction of the separate detector.
1: Reverses the signal direction of the separate detector.

If a large distortion exists between the motor and separate detector, this alarm may be issued in the case of abrupt acceleration/deceleration. In such a case, modify the detection level.

	#7	#6	#5	#4	#3	#2	#1	#0
No. 2201							RNLV	

RNLV (#1) Modifies the feedback mismatch alarm detection level.
1: Detected with 1000 min-1 or more
0: Detected with 600 min-1 or more

Action 2:

This alarm is issued when the difference between the motor position and separate detector position exceeds the excessive semi-full error level. Check if the conversion efficient for dual position feedback is set correctly. If the conversion efficient is set correctly, increase the alarm level. If this alarm is still issued after the level is modified, check the connection direction of the scale.

No. 2078	Dual position feedback conversion coefficient (numerator)

No. 2079	Dual position feedback conversion coefficient (denominator)

$$\text{Conversion coefficient} = \frac{\left(\text{Number of feedback pulses per motor revolution (detection unit)}\right)}{1{,}000{,}000}$$

No. 2118	Dual position feedback semi-full error level

[Setting] Detection unit. When 0 is set, no detection is made.

Action 3:

The current offset value of the current detector (equivalent to the current value in the emergency stop state) is abnormally high. If this alarm is still issued after the power is turned off then back on, the current detector is faulty. For the β*i* series, replace the amplifier. Replace the amplifier.

4 REPLACING AMPLIFIER COMPONENTS

This chapter describes how to replace a fan motor, absolute Pulsecoder battery, fuses, and printed circuit board.

> ⚠ **WARNING**
> Because the Servo Amplifier uses a large-capacitance electrolytic capacitor internally, the Servo Amplifier remains charged for a while even after the power is turned off. Before touching the Servo Amplifier for maintenance or other purposes, ensure your safety by measuring the residual voltage in the DC link with a tester and confirming that the charge indication LED (red) is off.

> ⚠ **CAUTION**
> Turn off the control power to βiSV-B before assembling the fan motor.

4.1 REPLACEMENT OF A FAN MOTOR

4.1.1 Dismantling the Fan Unit of βiSV4-B or βiSV20-B

<1> Pull out the fan connector upward.
<2> Push the front of the fan unit to disengage the lug.
<3> Disengage the rear of the fan unit.
<4> Lift the fan unit in a slant direction.

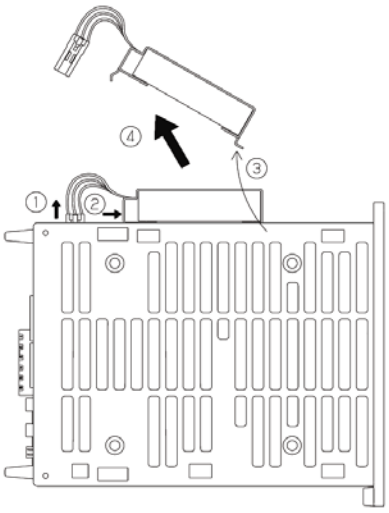

When replacing the fan motor, pay attention to its orientation and the place where the cable passes through.

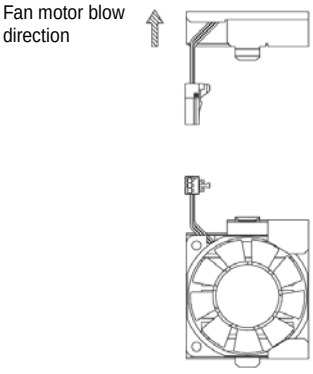

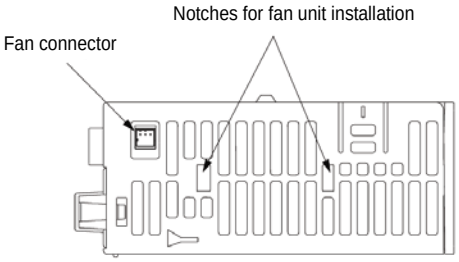

4.1.2 Dismantling the Internal Cooling Fan Unit of βiSV40-B, βiSV80-B, βiSV10HV-B, βiSV20HV-B, βiSV40HV-B, or βiSV20/20-B

1 Hold the two handles of the fan unit and pull up them in the direction (the upward direction of the figure) of the arrow.

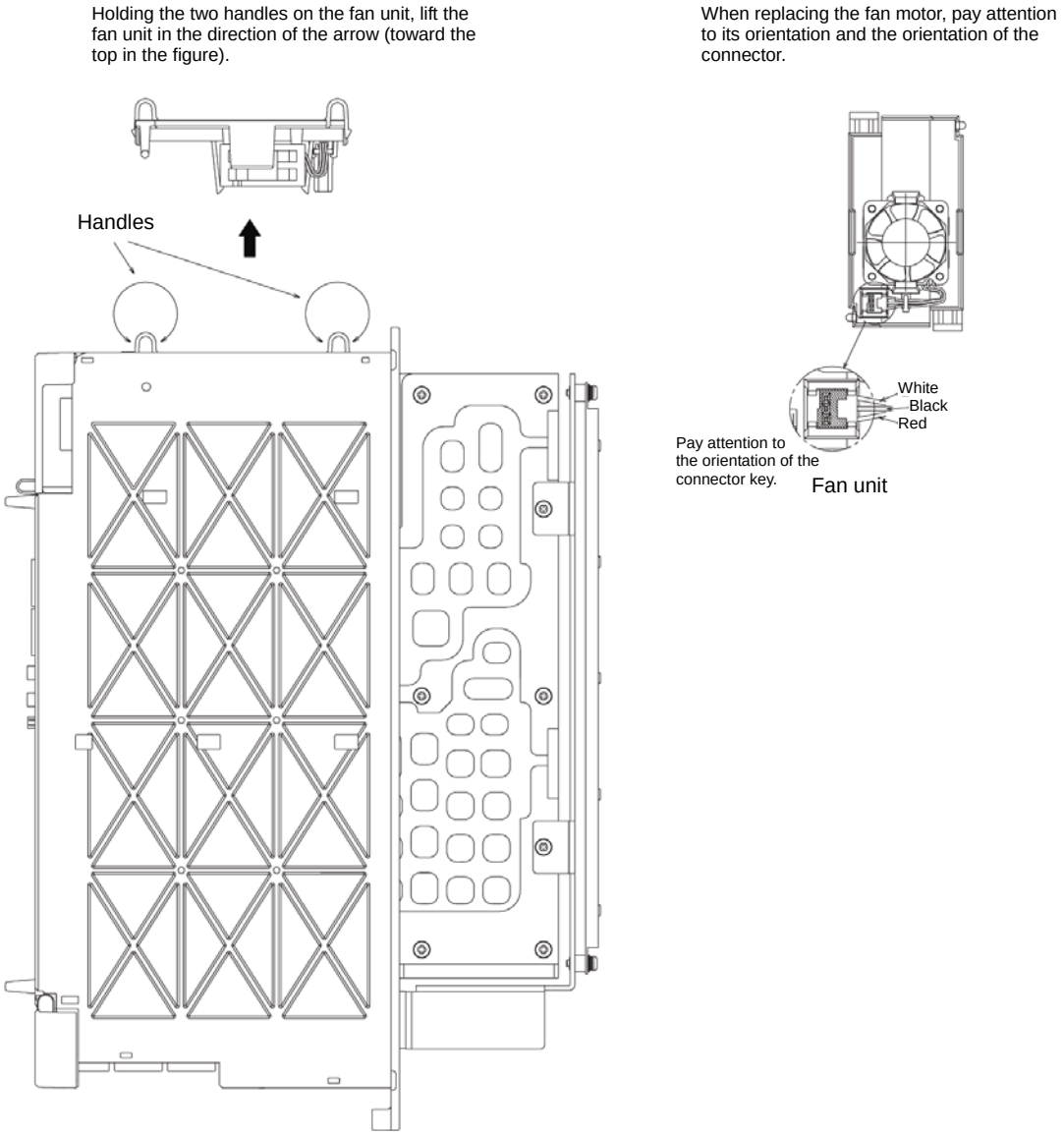

4.1.3 Dismantling the Fan Unit of βiSV40/40-B

1 Hold the two handles of the fan unit and pull up them in the direction (the upward direction of the figure) of the arrow.

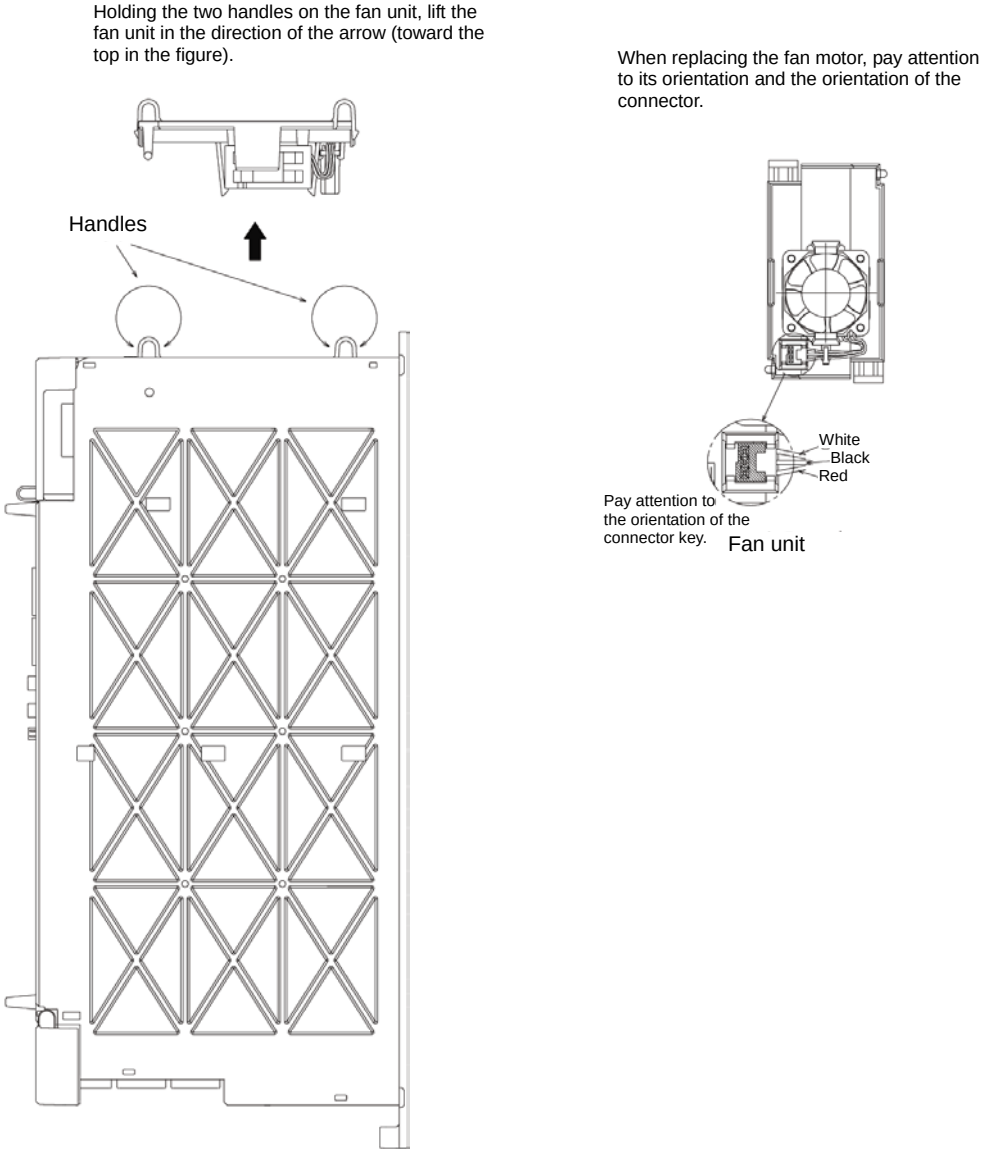

4.1.4 Dismantling the Radiator Cooling Fan Unit of βiSV80-B or βiSV40HV-B

1 Dismantle the four mounting screws on the sheet metal and pull out the fan unit.

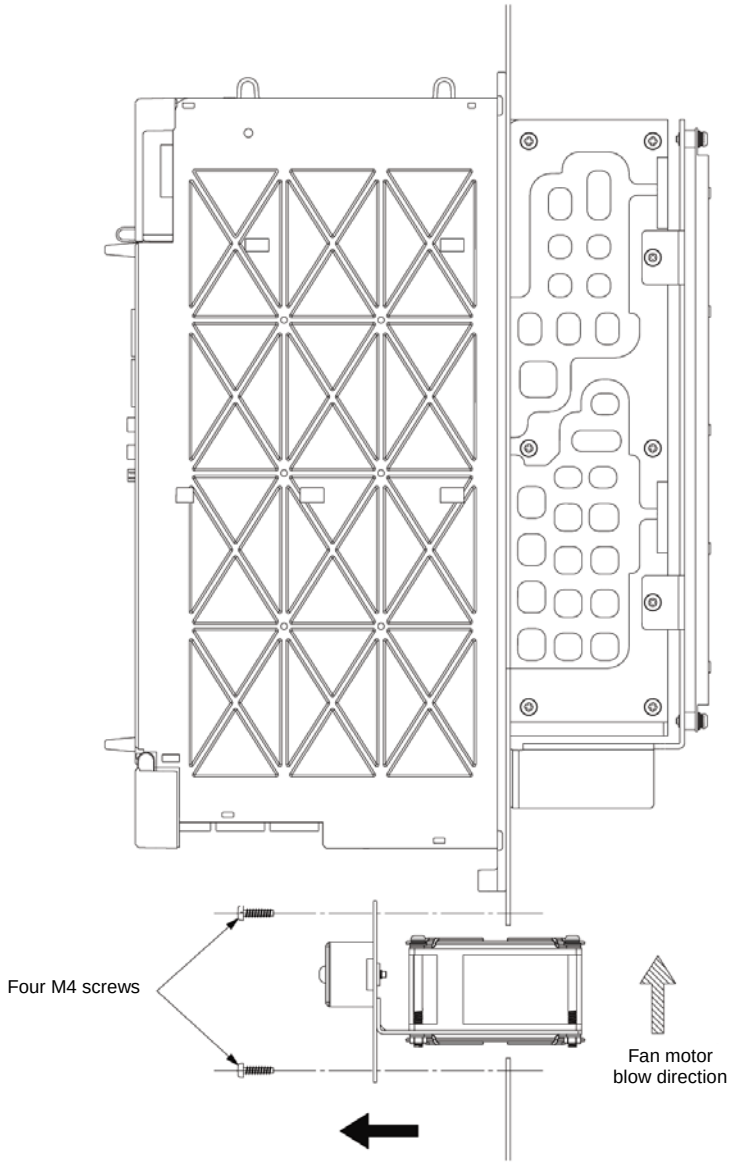

4.1.5 Dismantling the Fan Motor from the Fan Unit (βiSV4-B, βiSV20-B)

(a) A06B-6134-K003

(1) Dismantle the fan motor from the case.

<1> Pull up the side of the fan motor (the side without the case stoppers) away from the case.

<2> While pulling up the fan motor, push it toward its center from the side where the case stoppers are located.

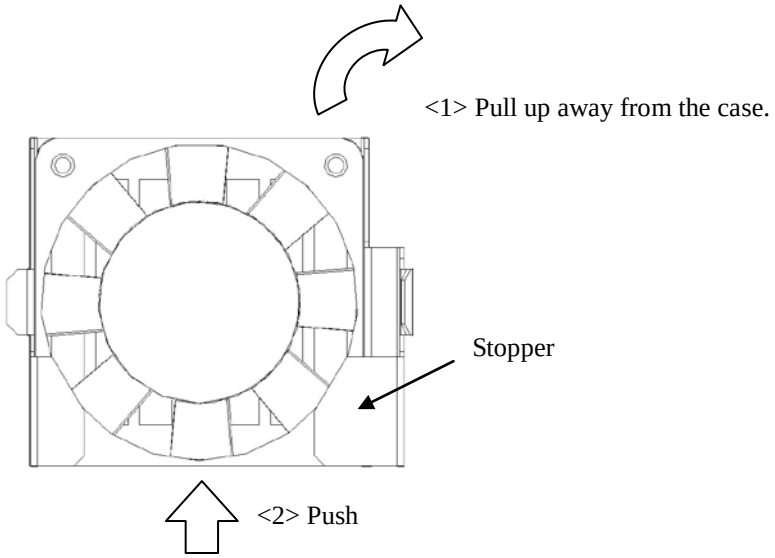

When replacing the fan motor, pay attention to its orientation (when the fan motor is mounted in an amplifier, its label is facing upward).

(b) A06B-6134-K005

(1) Dismantle the fan motor from the case.

<1> Pull one of the lugs on the case.

<2> While pulling the lug, dismantle the fan using a flat-blade screwdriver or some other tool.

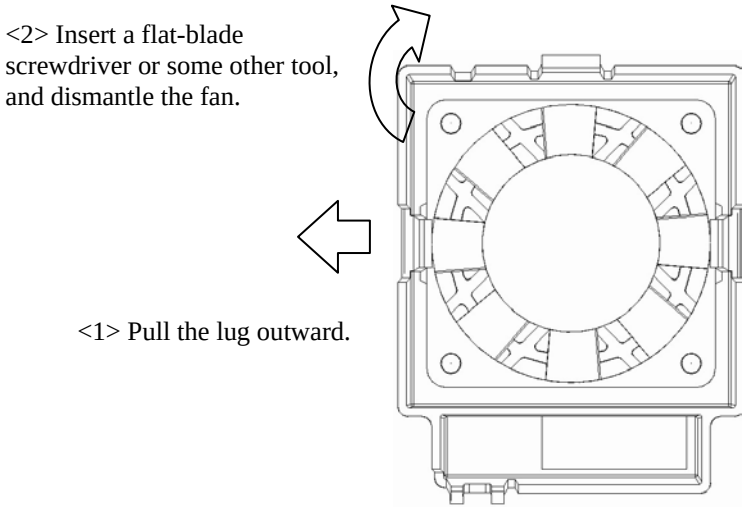

When replacing the fan motor, pay attention to its orientation (when the fan motor is mounted in an amplifier, its label is facing upward).

4.1.6 Dismantling the Fan Motor from the Fan Unit (βiSV40-B, βiSV80-B, βiSV10HV-B, βiSV20HV-B, βiSV40HV-B, βiSV20/20-B)

(1) Remove the connector from the case.
<1> Insert a flat-blade screwdriver or some other tool between the case and the connector.
<2> Tilt the inserted screwdriver or tool.

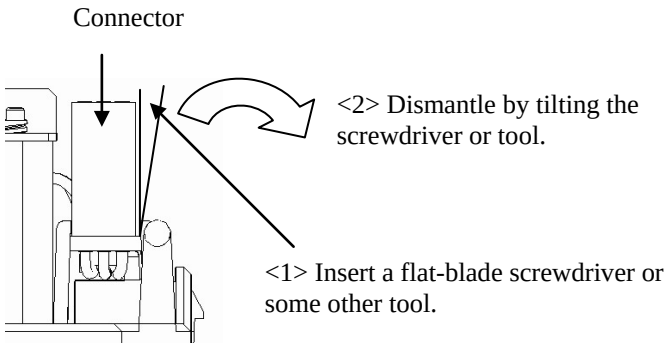

(2) Pull the lugs on the case outwardly, and dismantle the fan motor.

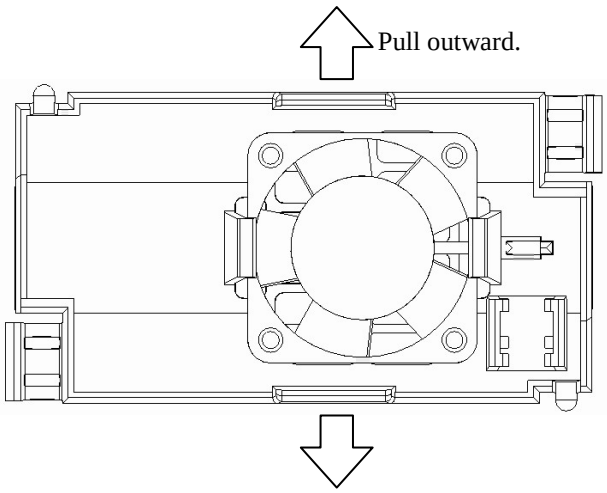

When replacing the fan motor, pay attention to its orientation (when the fan motor is mounted in an amplifier, its label is facing upward) as well as to the orientation of the connector.

4.1.7 Dismantling the Fan Motor from the Fan Unit (βiSV40/40-B)

(1) Dismantle the connector from the case.
<1> Insert a flat-blade screwdriver or some other tool between the case and the connector.
<2> Tilt the inserted screwdriver or tool.

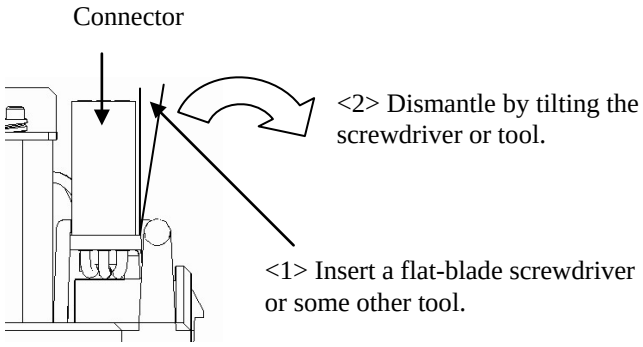

(2) Dismantle the two screws fastening the fan motor.

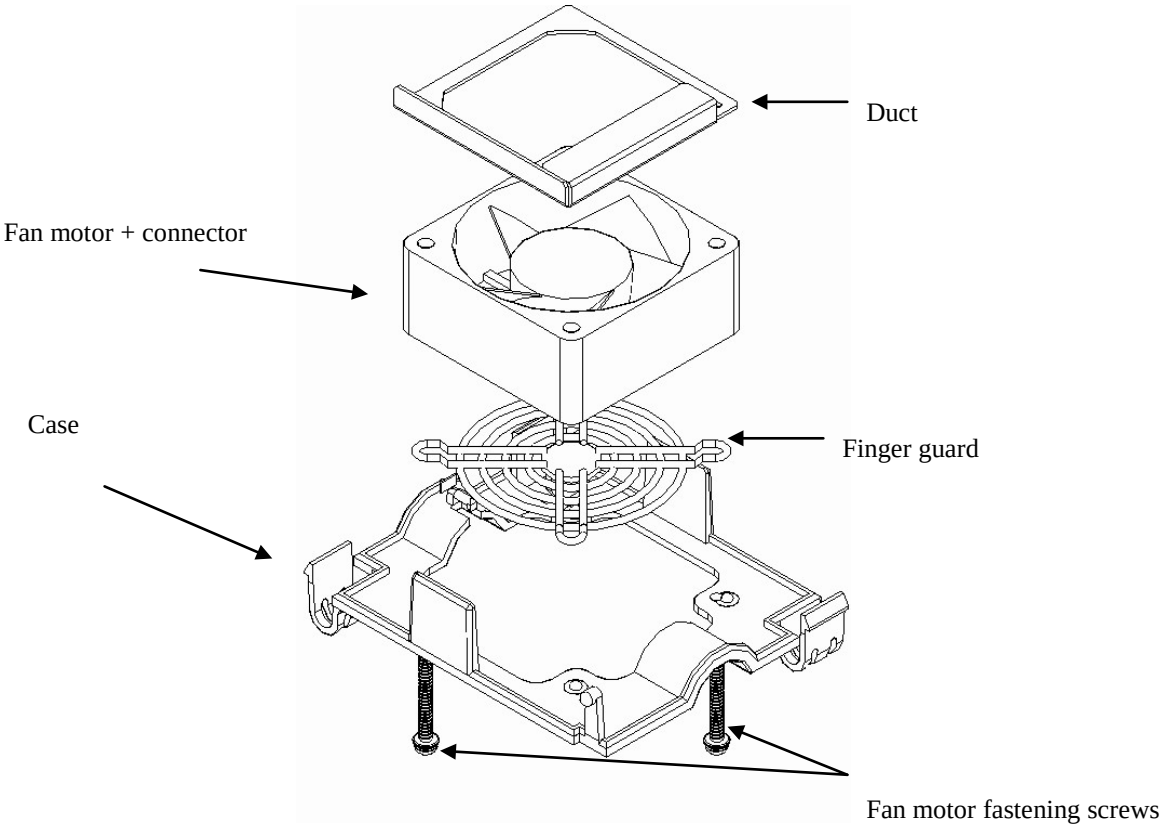

When replacing the fan motor, pay attention to its orientation (when the fan motor is mounted in an amplifier, its label is facing upward), the orientation of the connector, and the orientation of the duct (its turned edge is facing the opposite direction of the connector).

4.1.8 Specifications of Fan Units for Maintenance

(1) 1-axis

Model name	Internal cooling fan		Radiator cooling fan	
	Fan unit	Fan motor	Fan unit	Fan motor
βiSV4-B βiSV20-B	A06B-6134-K003 (Sheet metal type) A06B-6134-K005 (Resin type)	A90L-0001-0423#50	-	-
βiSV40-B	A06B-6110-C605	A90L-0001-0510	-	-
βiSV80-B	A06B-6110-C605	A90L-0001-0510	A06B-6134-K002	A90L-0001-0445#B
βiSV10HV-B βiSV20HV-B	A06B-6110-C605	A90L-0001-0510	-	-
βiSV40HV-B	A06B-6110-C605	A90L-0001-0510	A06B-6134-K002	A90L-0001-0445#B

(2) 2-axis

Model name	Internal cooling fan		Radiator cooling fan	
	Fan unit	Fan motor	Fan unit	Fan motor
βiSV20/20-B (A06B-6166-H201)	A06B-6110-C605	A90L-0001-0510	-	-
βiSV20/20-B (A06B-6166-H201#A)	-	-	-	-
βiSV40/40-B	A06B-6110-C641	A90L-0001-0569	-	-

4.2 REPLACING BATTERY FOR ABSOLUTE PULSECODERS

4.2.1 Overview

- When the voltage of the batteries for absolute Pulsecoders becomes low, alarm 307 or 306 occurs, with the following indication in the CNC state display at the bottom of the CNC screen.
  Alarm 307 (battery voltage decrease alarm): "APC" is highlighted and the highlight blinks.
  Alarm 306 (battery zero alarm): "ALM" is highlighted and the highlight blinks.
- When alarm 307 (battery voltage decrease alarm) occurs, replace the batteries promptly.
  In general, the battery should be replaced within one or two weeks, however, this depends on the number of Pulsecoders used.
- When alarm 306 (battery zero alarm) occurs, Pulsecoders are reset to the initial state, in which absolute positions are not held. Alarm 300 (reference position return request alarm) also occurs, indicating that reference position return is required.
- In general, replace the batteries periodically within the service life listed below.
  - When A06B-6050-K061 or D-size alkaline dry cells (LR20) are used: 2 years (per 6 spindles)
  - When A06B-6093-K001 is used: two years (per one axis)
  - When A06B-6114-K504 is used: one year (per three axes)

NOTE
The above values indicate the estimated service life of batteries used with FANUC absolute Pulsecoders. The actual battery service life depends on the machine configuration based on, for example, detector types. For details, contact the machine tool builder.

4.2.2 Replacing Batteries

To prevent absolute position information in absolute Pulsecoders from being lost, turn on the machine power before replacing the battery. The replacement procedure is described below.

<1> Ensure that the power to the servo amplifier is turned on.
<2> Ensure that the machine is in the emergency stop state (the motor is inactive).
<3> Ensure that the DC link charge LED of the servo amplifier is off.
<4> Detach the old batteries and attach new ones.

The replacement of the batteries in a separate battery case and the replacement of the battery built into the servo amplifier are described below in detail.

NOTE
- The absolute Pulsecoder of the αi-B/αi series servo motors and βi-B/βi series servo motors (βiS0.4-B to βiS40-B, βiSc-B, βiF-B, βiS0.4 to βiS40, βiSc, βiF) has a built-in backup capacitor. Therefore, even when the power to the servo amplifier is off and the batteries are replaced, reference position return is not required if the replacement completes within less than 10 minutes. Turn the power on and replace the batteries if the replacement will take 10 minutes or more.

⚠WARNING

- To prevent electric shock, be careful not to touch metal parts in the power magnetics cabinet when replacing the batteries.
- Because the Servo Amplifier uses a large-capacitance electrolytic capacitor internally, the Servo Amplifier remains charged for a while even after the power is turned off. Before touching the Servo Amplifier for maintenance or other purposes, ensure your safety by measuring the residual voltage in the DC link with a tester and confirming that the charge indication LED (red) is off.
- Do not replace the batteries with batteries other than the designated ones. Pay attention to the battery polarity. If a wrong type of battery is used or a battery is installed with incorrect polarity, the battery may overheat, blow out, or catch fire, or the absolute position information in the absolute Pulsecoders may be lost.
- Ensure that the battery connector is correctly inserted.

4.2.3 Replacing the Batteries in a Separate Battery Case

Use the following procedure to replace the batteries in the battery case.

<1> Loosen the screws on the battery case and detach the cover.
<2> Replace the batteries in the case (pay attention to the polarity).
<3> Attach the cover to the battery case.

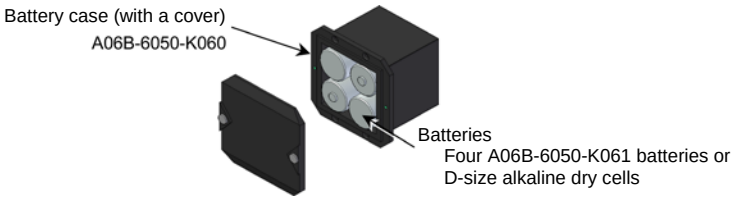

⚠ CAUTION

- Four D-size alkaline dry cells (LR20) that are commercially available can be used as batteries. A set of four A06B-6050-K061 batteries is optionally available from FANUC.
- Replace all the four batteries with new ones. If old and new batteries are mixed, the absolute position information in the absolute Pulsecoders may be lost.

4.2.4 Replacing the Battery Built into the Servo Amplifier

Use the following procedure to replace the special lithium battery.

<1> Detach the battery case.
<2> Replace the special lithium battery.
<3> Attach the battery case.

⚠ CAUTION

- Purchase the battery from FANUC because it is not commercially available. For this reason, FANUC recommends preparation of spare batteries.
- When the built-in battery is used, do not connect BATL (B3) of connector CXA19B/CXA19A. Also, do not connect two or more batteries to the same BATL (B3) line. These connections are dangerous because battery output voltages may be short-circuited, causing the batteries to overheat.
- When installing batteries in the servo amplifier, do so starting from the position in which the cable has slack. If the battery cable is under tension, a bad connection may occur.
- If the +6 V pin and 0 V pin of CX5X are short-circuited, the battery may overheat, blow out, or catch fire, or the absolute position information in the absolute Pulsecoders may be lost.
- When inserting the connector, align it to the connector pins.

(1) For βiSV4-B and βiSV20-B

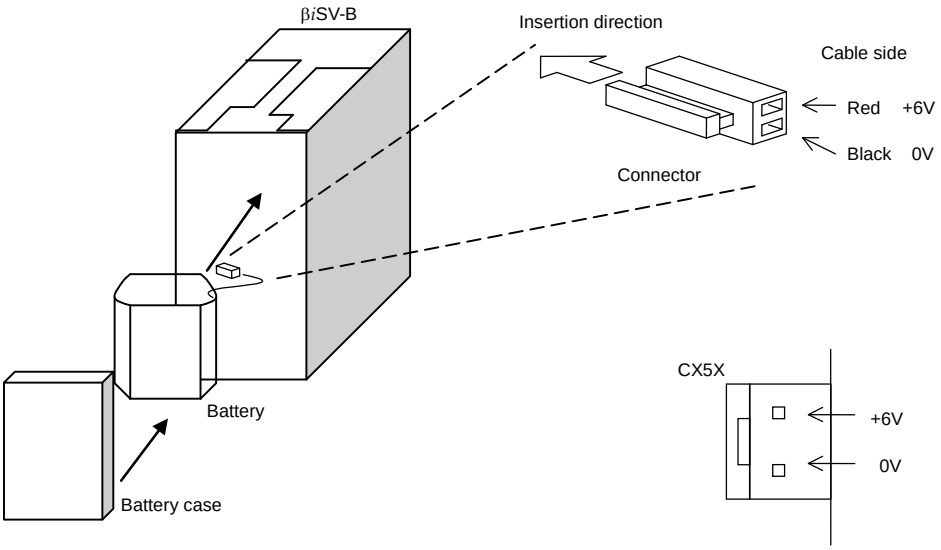

(2) For βiSV40-B, βiSV80-B, βiSV10HV-B, βiSV20HV-B, and βiSV40HV-B

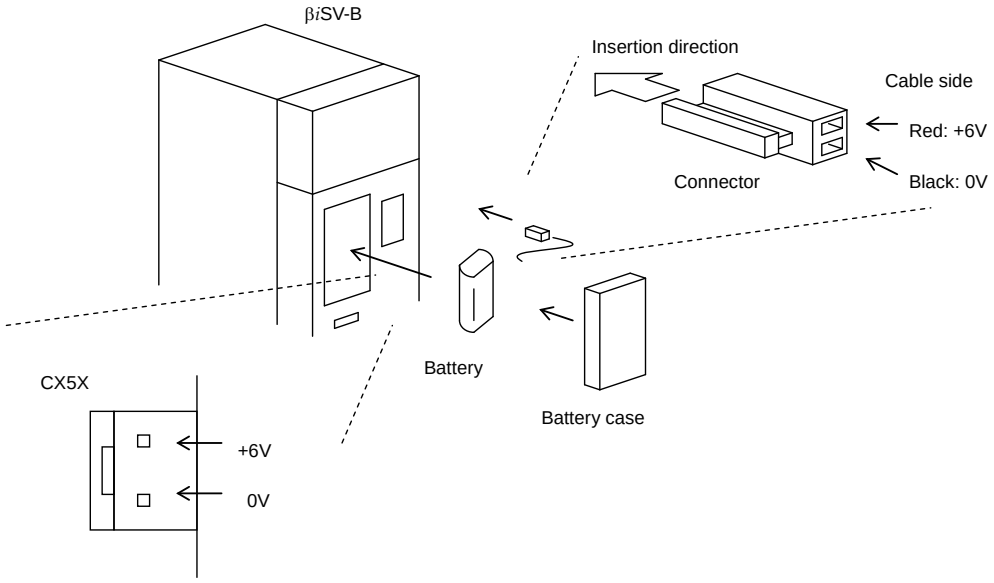

(3) For βiSV20/20-B and βiSV40/40-B

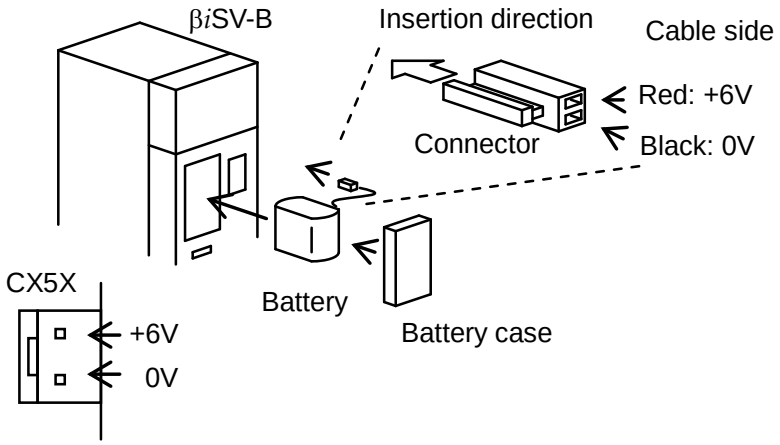

Used batteries

Old batteries should be disposed as "INDUSTRIAL WASTES" according to the regulations of the country or autonomy where your machine has been installed.

4.2.5 Notes on Replacing a Battery (Supplementary Explanation)

4.2.5.1 Battery connection modes

The battery for the absolute Pulsecoder can be connected using [Connection method 1] and [Connection method 2] explained below.
For details, see the section about battery connection in FANUC SERVO AMPLIFIER βi-B series DESCRIPTIONS (B-65422JA).

[Connection method 1] Method of supplying battery power from one battery to multiple βiSV-B amplifiers

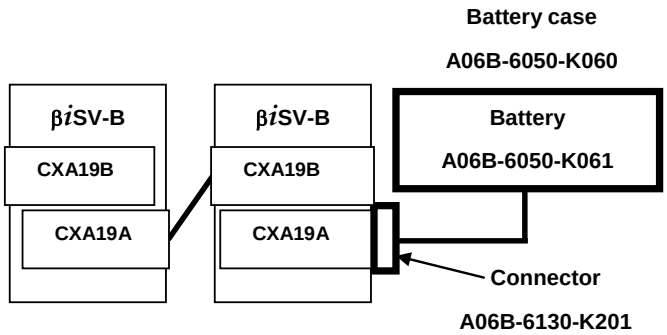

- If a low battery voltage or a battery voltage of 0 V is indicated by an APC (absolute Pulsecoder) alarm, replace the battery. If a battery voltage of 0 V is indicated, you need to make a zero point return.
- The absolute Pulsecoder of the αi-B/αi series servo motors and βi-B/βi series servo motors (βiS0.4-B to βiS40-B, βiSc-B, βiF-B, βiS0.4 to βiS40, βiSc, βiF) has a built-in backup capacitor as standard. This backup capacitor enables an absolute position detection to be continued for about 10 minutes. Therefore, no zero point return need be performed if the time during which servo amplifier power is kept off for battery replacement is within 10 minutes.
  Note that the Pulsecoder of some βiS series servo motors (βiS 0.2 to βiS0.3) does not have a built-in backup capacitor. For details, see Section 4.2.5.2, "Replacing Batteries for βiS 0.2 to βiS 0.3".
- The battery service life during 6-spindle connection of the servo motor for the αi-B/αi series servo motors and βi-B/βi series servo motors (βiS0.4-B to βiS40-B, βiSc-B, βiF-B, βiS0.4 to βiS40, βiSc, βiF) is approximately 2 years. The battery service life for some βiS series servo motors (βiS 0.2 to βiS0.3) is approximately 1 year. FANUC recommends that you replace the batteries periodically according to the battery service life.
- The battery unit consists of four LR20 alkaline batteries. Commercial batteries can be used in the battery unit. The optional battery offered by FANUC is A06B-6050-K061.

⚠ **WARNING**
1 Do not connect more than one battery to the same BAT (B3) line. If the output voltage is different between the batteries, they may be short-circuited, resulting in the batteries becoming very hot.
2 Pay attention to the polarity (positive/negative) when connecting batteries. If the battery is installed with incorrect polarity, it may overheat, blow out, or catch fire.

[Connection method 2] Method of building a built-in battery into each βiSV-B

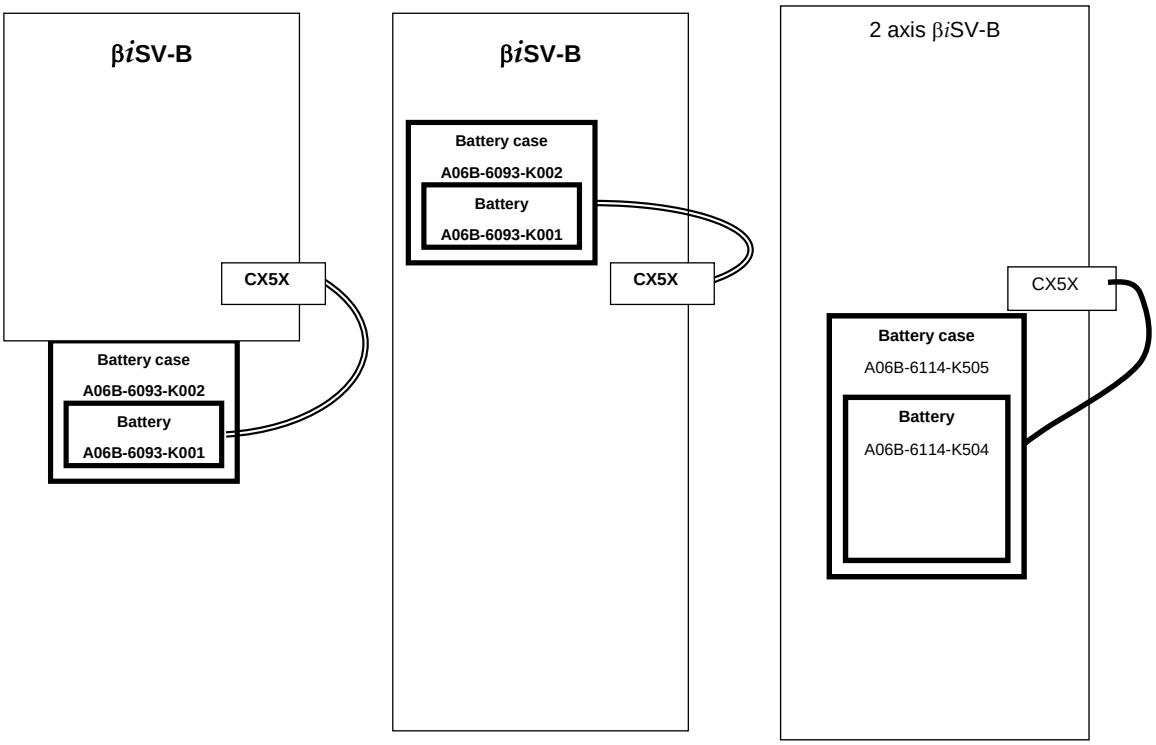

- If a low battery voltage or a battery voltage of 0 V is indicated by an APC (absolute Pulsecoder) alarm, replace the battery (A06B-6093-K001 or A06B-6114-K504).
  If a battery voltage of 0 V is indicated, you need to make a zero point return.
- The absolute Pulsecoder of the αi-B/αi series servo motors and βi-B/βi series servo motors (βiS0.4-B to βiS40-B, βiSc-B, βiF-B, βiS0.4 to βiS40, βiSc, βiF) has a built-in backup capacitor as standard. This backup capacitor enables an absolute position detection to be continued for about 10 minutes. Therefore, no zero point return need be performed if the time during which servo amplifier power is kept off for battery replacement is within 10 minutes.
  Note that the Pulsecoder of some βiS series servo motors (βiS 0.2 to βiS0.3) does not have a built-in backup capacitor. For details, see Section 4.2.5.2, "Replacing Batteries for βiS 0.2 to βiS 0.3".
- The battery service life for the αi-B/αi series servo motors and βi-B/βi series servo motors (βiS0.4-B to βiS40-B, βiSc-B, βiF-B, βiS0.4 to βiS40, βiSc, βiF) is approximately two years. That for some βiS series servo motors (βiS 0.2 to βiS0.3) is approximately one year. FANUC recommends that you replace the batteries periodically according to the battery service life.
- Purchase built-in batteries from FANUC because they are not commercially available. For this reason, FANUC recommends preparation of spare batteries.

⚠ WARNING

1 When using the built-in batteries (A06B-6073-K001 or A06B-6114-K504), do not connect them to the BAT (B3) of connector CXA19B/CXA19A.
  If the output voltage is different between the batteries, they may be short-circuited, resulting in the batteries becoming very hot.
2 Do not connect more than one battery to the same BAT (B3) line. If the output voltage is different between the batteries, they may be short-circuited, resulting in the batteries becoming very hot.
3 Pay attention to the polarity (positive/negative) when connecting batteries. If the battery is installed with incorrect polarity, it may overheat, blow out, or catch fire.

4.2.5.2 Replacing Batteries for βiS 0.2 to βiS 0.3

The Pulsecoder of some βi series servo motors (βiS 0.2 to βiS 0.3) does not have a backup capacitor as standard. To keep the absolute position information in the absolute Pulsecoder, you need to keep the control power turned on during battery replacement. Follow the procedure explained below. The replacement procedure is described below.

[Replacing procedure for the battery]

1 Ensure that the power of the βiSV-B is on (the "POWER" LED on the front side of the βiSV-B is on).
2 Make sure that the emergency stop button of the system has been pressed.
3 Make sure that the motor is not activated.
4 Ensure that the DC link charge LED of the βiSV-B is off.
5 Remove the old battery, and install a new battery.
6 The replacement has been completed. You can turn off the power to the system.

⚠ WARNING

1 When replacing the battery, be careful not to touch bare metal parts in the panel. In particular, touching the high-voltage part could cause an electric shock.
2 Before replacing the battery, check that the DC link charge confirmation LED on the front of the servo amplifier is off. Note that there is a possibility of an electric shock when the LED is not off.
3 Pay attention to the polarity (positive/negative) when connecting batteries. If the battery is installed with incorrect polarity, it may overheat, blow out, or catch fire.
4 Avoid a short-circuit between the +6 V and 0 V lines of a battery or cable. A short-circuit may lead to a hot battery, an explosion, or fire.

4.2.5.3 Notes on attaching connectors

If an excessive strain is applied to a connector when it is inserted or removed, a poor contact may result. When inserting and removing the battery connector, therefore, be careful not to apply an excessive wrenching force to it; just follow the instructions given in the following table.

(1) Attaching connectors

<1>		Check the attachment position.
<2>	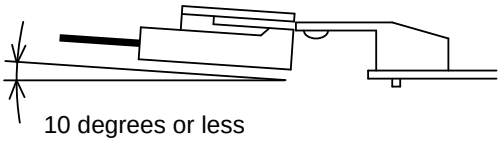	Plug the cable connector while raising it slightly.
<3>	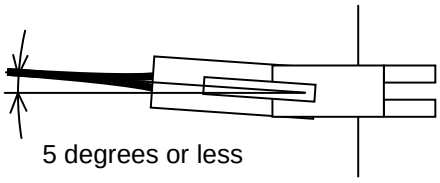	Here, the angle of the cable connector to the horizontal must be 5 degrees or less.
<4>	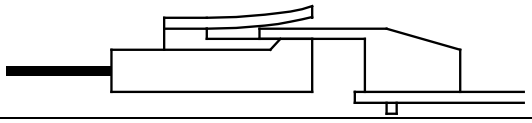	When it goes beyond the lock pin, push it straight in.
<5>	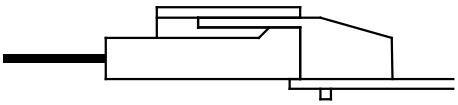	The attachment of the connector is completed.

(2) Detaching the connector

<1>	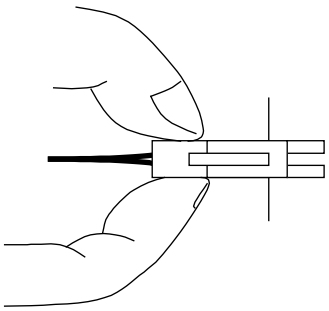	Hold both the sides of the cable insulator and the cable, and pull them horizontally.
<2>	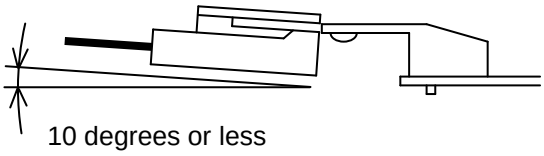	Pull out the cable side while raising it slightly.
<3>	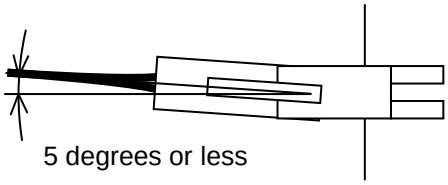	Here, the angle of the cable connector to the horizontal must be 5 degrees or less.

4.3 HOW TO REPLACE THE FUSES AND PRINTED CIRCUIT BOARDS

4.3.1 How to Replace the Fuses and Printed Circuit Boards

In the βiSV-B series, a printed circuit board can be removed and inserted from the front of the servo amplifier.

NOTE

1 If a fuse blows, it is likely that there is a short-circuit in the power supply for a device (such as a sensor) connected to the Servo Amplifier.
After checking that all devices connected to the Servo Amplifier are normal, replace the fuse.
If you do not remove the cause, it is very much likely that the fuse will blow again.

2 Do not use any fuse not supplied from FANUC.

3 Before replacing a fuse, check a marking on it with that on the printed circuit board. Be careful not to mount a fuse with an incorrect rating.

(1) For βiSV4-B and βiSV20-B

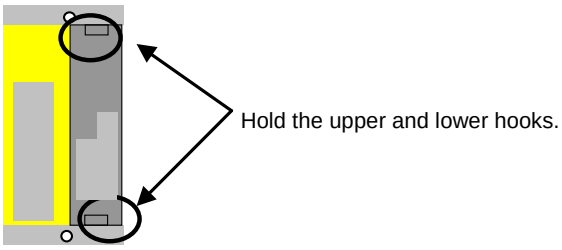

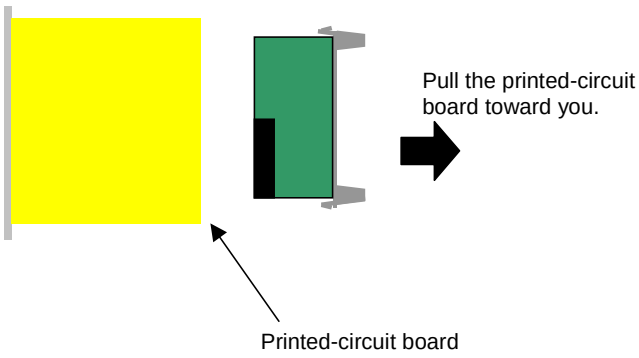

To insert the printed circuit board, reverse the above procedure.
Ensure that the upper and lower hooks snap into the housing.
If the printed circuit board is not inserted completely, the housing remains lifted. Pull out the printed circuit board and insert it again.

(2) For βiSV40-B, βiSV80-B, βiSV10HV-B, βiSV20HV-B, and βiSV40HV-B

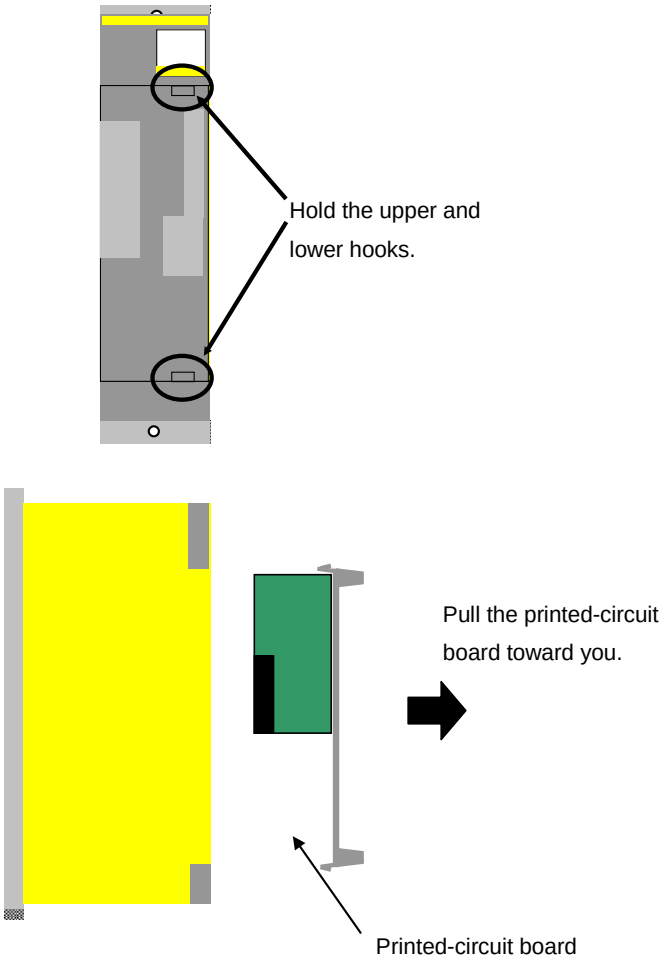

To insert the printed circuit board, reverse the above procedure.
Ensure that the upper and lower hooks snap into the housing.
If the printed circuit board is not inserted completely, the housing remains lifted. Pull out the printed circuit board and insert it again.

(3) For βiSV20/20-B and βiSV40/40-B

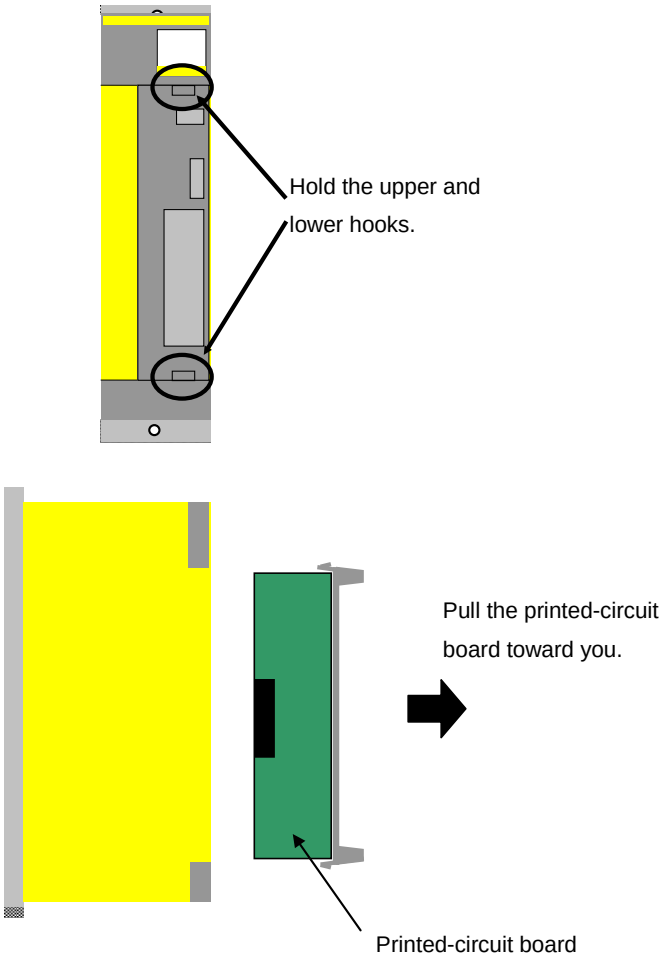

To insert the printed circuit board, reverse the above procedure.
Ensure that the upper and lower hooks snap into the housing.
If the printed circuit board is not inserted completely, the housing remains lifted. Pull out the printed circuit board and insert it again.

4.3.2 Fuse Locations

There is one fuse on the βiSV-B printed circuit board.

(1) A20B-2102-0081

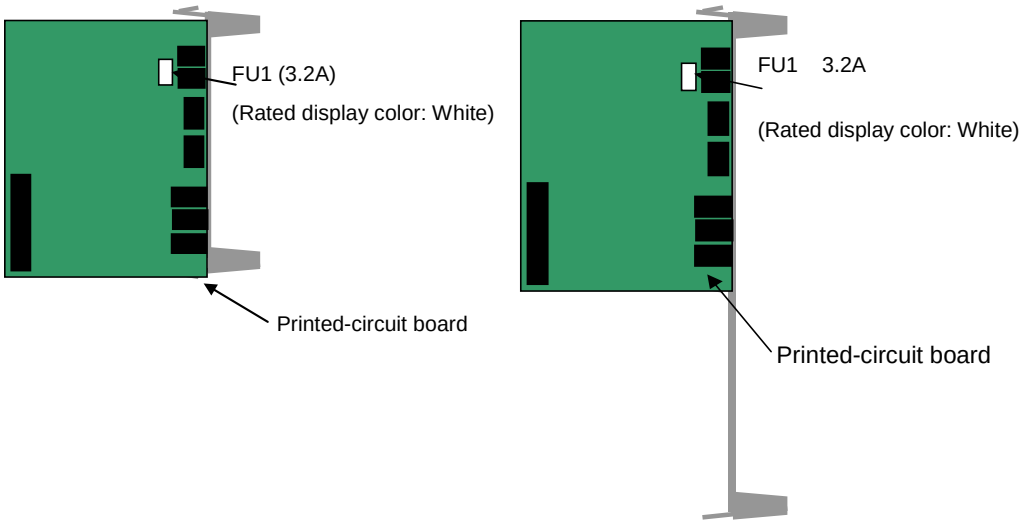

(2) A20B-2101-0881

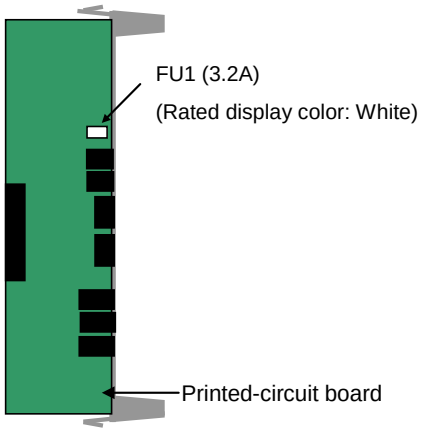

Fuse specification

Symbol	Ordering number
FU1	A60L-0001-0290#LM32C

V. START-UP PROCEDURE FOR β*i*SVSP-B

1 OVERVIEW

This part describes the units and components of the Servo Amplifier. It also explains the following information necessary to start up the Servo Amplifier:

- Configurations
- Start-up procedure
- Confirmation of the operation
- Periodic maintenance of servo amplifier

2 CONFIGURATIONS

2.1 CONFIGURATIONS

The servo amplifier βiSVSP-B consists of the units and components listed below:

(1) βi SVSP-B (basic)
(2) AC reactor (basic)
(3) Connectors (for connection cables) (basic)
(4) Fuse (optional)
(5) Power transformer (optional)

Constituent (example)

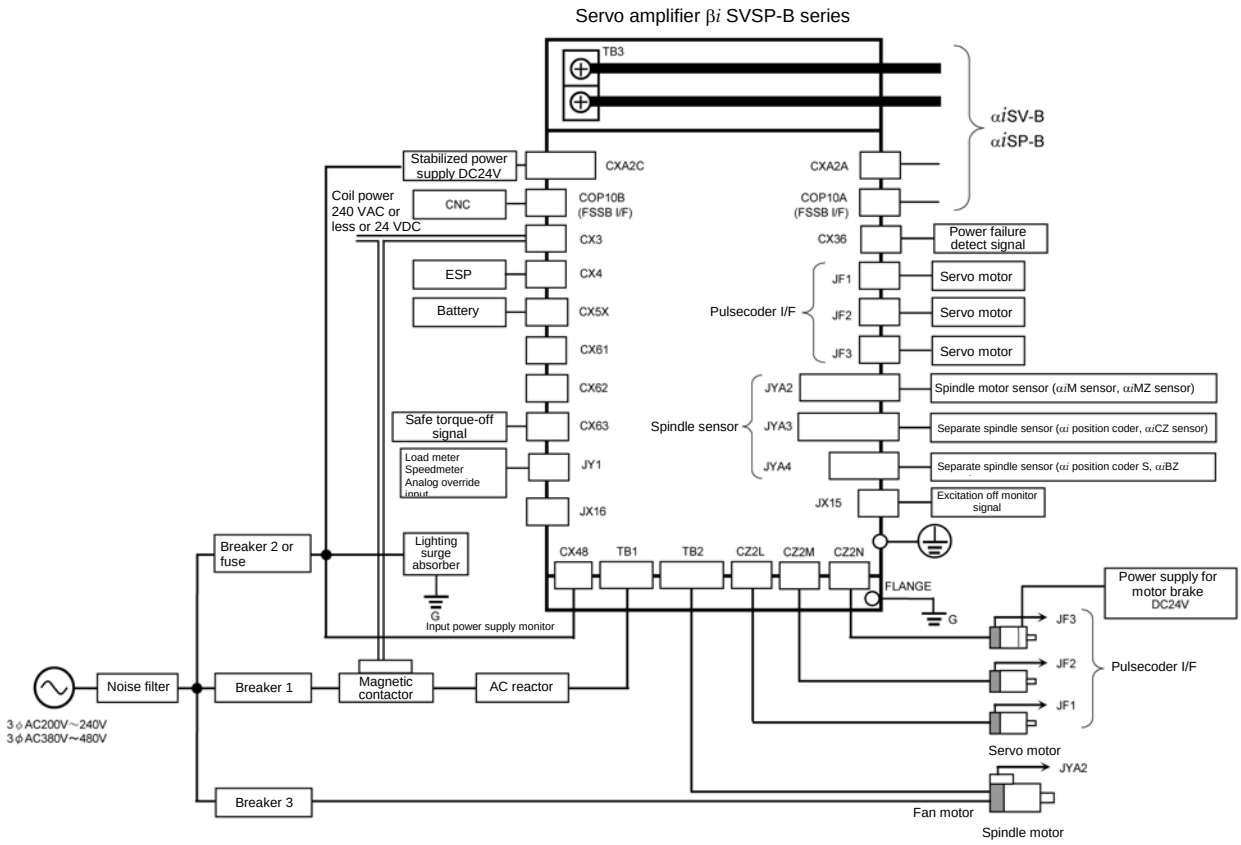

⚠CAUTION

1 Circuit breakers, magnetic contactor, and AC reactor are always required.
2 Install the noise filter closer to the power supply than the magnetic contactor for the βiSVSP-B series.
3 Be sure to use a stabilized power supply as the 24 VDC amplifier power supply. Do not use the 24 VDC motor brake power supply as the 24 VDC amplifier power supply.
4 To protect the equipment from lightning surge voltages, install a lightning surge absorber between each pair of power lines and between each power line and the grounding line at the power inlet of the power magnetics cabinet.
5 Be sure to ground the tapped hole for flange grounding.
6 Connect a circuit breaker or fuse rated 5 A or less in the input section of the lightning surge absorber to prevent the absorber from being burnt out due to a short-circuit when a surge voltage higher than its rating is applied. For details, see Appendix A, "INSTALLATION OF SURGE ABSORBERS" in the FANUC SERVO AMPLIFIER βi-B series DESCRIPTIONS (B-65422EN).
7 Connect a circuit breaker or fuse in the input section of the cooling fan motor to prevent burnout due to a short-circuit of the cooling fan motor or connecting cable.
8 When you use a 3ϕ fan motor for the spindle motor, breaker 2 can be shared if its capacity is sufficient.
9 For cable protection, connect a cable to the input power supply monitor (CX48) after breaker 2 or the fuse.
10 The phase order of the cable of the input power supply monitor (CX48) must be the same as that of TB1. For details, refer to Subsection 7.3.1.8, "Details of cable K124" in the FANUC SERVO AMPLIFIER βi-B series DESCRIPTIONS (B-65422EN).
11 If the breaker of the input section of the lightning surge absorber trips, the lightning surge absorber does not operate normally. Make sure that the trip is detected and that an alarm is issued.

2.2 SPECIFICATION

(1) 260-mm width models

Model	Order specification
βiSVSP20/20-7.5-B	A06B-6320-H201
βiSVSP20/20-11-B	A06B-6320-H202
βiSVSP40/40-15-B	A06B-6320-H223
βiSVSP40/40-18-B	A06B-6320-H224
βiSVSP80/80-18-B	A06B-6320-H244
βiSVSP40/40-18HV-B	A06B-6330-H244
βiSVSP20/20/40-7.5-B	A06B-6320-H311
βiSVSP20/20/40-11-B	A06B-6320-H312
βiSVSP40/40/40-11-B	A06B-6320-H332
βiSVSP40/40/40-15-B	A06B-6320-H333
βiSVSP40/40/80-15-B	A06B-6320-H343
βiSVSP40/40/80-18-B	A06B-6320-H344
βiSVSP80/80/80-18-B	A06B-6320-H364
βiSVSP40/40/40-18HV-B	A06B-6330-H364

(2) 180-mm width models

Model	Order specification
βiSVSP20/20-7.5-B	A06B-6321-H201
βiSVSP20/20-11-B	A06B-6321-H202
βiSVSP10/10-11HV-B	A06B-6331-H202
βiSVSP20/20/40-7.5-B	A06B-6321-H311
βiSVSP20/20/40-11-B	A06B-6321-H312
βiSVSP40/40/40-11-B	A06B-6321-H332
βiSVSP20/20/20-11HV-B	A06B-6331-H332

3 START-UP PROCEDURE

3.1 LIST OF ITEMS TO BE CHECKED

Make sure that the specifications of the CNC, servo motors, spindle motors, servo amplifiers, and other units you received are exactly what you ordered, and these units are connected correctly. Then, turn on the power.
The items to be checked are described below.

No.	Description	Check method
Checking the installation of the servo amplifier		
1	Specification of the servo amplifier and servo motor	Check that the combination of the servo amplifier and the servo motor is appropriate. Refer to the FANUC SERVO AMPLIFIER βi-B series DESCRIPTIONS (B-65422EN).
2	Packing of the flange	Check that the provided packing is properly attached. Check that there is no clearance between the control panel and the flange of the amplifier.
3	Leaving space for maintenance	Leave space for maintenance above and below the amplifier. For details, refer to the FANUC SERVO AMPLIFIER βi-B series DESCRIPTIONS (B-65422EN).
4	Prevention of contact with conductive section	Check that a protective plate is attached to the DC link terminal block and that the terminal block cover is locked. For details, refer to the FANUC SERVO AMPLIFIER βi-B series DESCRIPTIONS (B-65422EN).
5	Measure against ingress of coolant	Take measures to prevent electroconductive, flammable, and corrosive materials as well as mist and water droplets from getting into the unit. For keeping of the effective closeness of the control panel, refer to Appendix G "EXAMPLES OF RECOMMENDED POWER MAGNETICS CABINETS FOR SERVO AMPLIFIER" in the FANUC SERVO AMPLIFIER βi-B series Descriptions (B-65422EN).
Checking the wiring for the servo amplifier		
6	Screwing to the terminal block	When connecting wires to the servo amplifier terminal board, be sure to tighten the screws to the proper torque. For the screw tightening torque for the terminal block, refer to the FANUC SERVO AMPLIFIER βi-B series DESCRIPTIONS (B-65422EN).
7	Connecting a protective ground	To prevent electric shock when connecting the ground, wire the ground cable with an appropriate wire rod. For details, refer to the FANUC SERVO AMPLIFIER βi-B series DESCRIPTIONS (B-65422EN).
8	Installing the lightning surge absorber	In order to prevent damage due to a surge voltage applied to the input power supply, install a lightning surge absorber. For details, refer to the FANUC SERVO AMPLIFIER βi-B series DESCRIPTIONS (B-65422EN).
9	Measure against noise	Check that ground wires, including feedback cable shielding clamps, are connected to the proper places to maintain stable operation of the machine. For details, refer to the FANUC SERVO AMPLIFIER βi-B series DESCRIPTIONS (B-65422EN).
10	Phase order of motor power lines	If the phase order of motor power lines is incorrect, the motor may operate unexpectedly. Check that they are connected correctly.
11	Checking the axis to which the motor feedback wire and power wire are connected	If the axis to which the motor feedback wire and power wire are connected is incorrect, the motor may operate unexpectedly. Check that they are connected correctly.
12	Connection of batteries	Do not connect the built-in batteries in parallel. If the built-in batteries are to be used with an amp-to-amp battery connection cable (CXA2A/C, BATL (B3)) attached, they may be connected in parallel. For details, refer to the FANUC SERVO AMPLIFIER βi-B series DESCRIPTIONS (B-65422EN).

No.	Description	Check method
Checking during startup of operation		
13	Checking the power supply voltage	Check that the power supply voltage is within the appropriate range before turning on the power. For details of the power voltage specifications, refer to the FANUC SERVO AMPLIFIER βi-B series DESCRIPTIONS (B-65422EN).
14	Setting the ground fault breaker	Use a ground fault interrupter that supports inverters. For details of the leakage current, refer to the FANUC SERVO AMPLIFIER βi-B series DESCRIPTIONS (B-65422EN).
15	Checking the control power	Check that the voltage of the 24 V power supply supplied to the amplifier is within the appropriate range and that the appropriate current capacity has been selected. For details, refer to the FANUC SERVO AMPLIFIER βi-B series DESCRIPTIONS (B-65422EN).
16	Setting parameters	Set initial parameters, referring to Section 3.3, "INITIAL PARAMETER SETTINGS."
17	Handling early failures	To solve initial problems (e.g., The power does not turn on. The motor does not rotate. An alarm occurs.), see Chapter 4, "CONFIRMATION OF THE OPERATION."

3.2 CONNECTING THE POWER

3.2.1 Checking the Voltage and Capacity of the Power Supply

Before connecting the power, you should measure the AC power voltage.
Tables 3.2.1 (b) list the input power specification. Use a power source with sufficient capacity so that the system will not malfunction due to a voltage drop even during peak loads.

(1) βiSVSP-B

Table 3.2.1 (a) AC power voltage specifications (200-V input type)

Specification	260-mm width model	A06B-6320-H201	A06B-6320-H202	A06B-6320-H223	A06B-6320-H224	A06B-6320-H244
	180-mm width model	A06B-6321-H201	A06B-6321-H202	-	-	-
Model		βiSVSP 20/20-7.5-B	βiSVSP 20/20-11-B	βiSVSP 40/40-15-B	βiSVSP 40/40-18-B	βiSVSP 80/80-18-B
Nominal voltage rating		AC200V~240V -15%,+10%				
Power source frequency		47Hz~63Hz				
Power source capacity (for the main circuit) [kVA]		12	16	22	29	29
Power source capacity (for the control circuit)		24V±10% / 2.7Amax.				

Specifi-cation	260-mm width model	A06B-6320-H311	A06B-6320-H312	A06B-6320-H332	A06B-6320-H333
	180-mm width model	A06B-6321-H311	A06B-6321-H312	A06B-6321-H332	-
Model		βiSVSP20/20/40-7.5-B	βiSVSP20/20/40-11-B	βiSVSP40/40/40-11-B	βiSVSP40/40/40-15-B
Nominal voltage rating		AC200V~240V -15%,+10%			
Power source frequency		47Hz~63Hz			
Power source capacity (for the main circuit) [kVA]		12	16	16	22
Power source capacity (for the control circuit)		24V±10% / 2.7Amax.			

Specifi-cation	260-mm width model	A06B-6320-H343	A06B-6320-H344	A06B-6320-H364
	180-mm width model	-	-	-
Model		βiSVSP40/40/80-15-B	βiSVSP40/40/80-18-B	βiSVSP80/80/80-18-B
Nominal voltage rating		AC200V~240V -15%,+10%		
Power source frequency		47Hz~63Hz		
Power source capacity (for the main circuit) [kVA]		22	29	29
Power source capacity (for the control circuit)		24V±10% / 2.7Amax.		

(2) βiSVSP HV-B

Table 3.2.1 (b) AC power voltage specifications (400-V input type)

Specifi-cation	260-mm width model	-	A06B-6330-H244
	180-mm width model	A06B-6331-H202	-
Model		βiSVSP10/10-11 HV-B	βiSVSP40/40-18 HV-B
Nominal voltage rating		AC380V~480V -10%,+10%	
Power source frequency		47Hz~63Hz	
Power source capacity (for the main circuit) [kVA]		16	29
Power source capacity (for the control circuit)		24V±10% / 2.7Amax.	

Specifi-cation	**260-mm width model**	**-**	**A06B-6330-H364**
	180-mm width model	**A06B-6331-H332**	**-**
Model		**βiSVSP20/20/20-11 HV-B**	**βiSVSP40/40/40-18 HV-B**
Nominal voltage rating		AC380V~480V -10%,+10%	
Power source frequency		47Hz~63Hz	
Power source capacity (for the main circuit) [kVA]		16	29
Power source capacity (for the control circuit)		24V±10% / 2.7Amax.	

3.2.2 Connecting a Protective Ground

Check that the protective ground is connected correctly with reference to each item of Chapter 6 INSTALLATION in the FANUC SERVO AMPLIFIER β*i*-B series DESCRIPTIONS (B-65422EN).

3.2.3 Selecting the Ground Fault Interrupter That Matches the Leakage Current

Check that an appropriate ground fault interrupter is selected with reference to each item of Chapter 6 INSTALLATION in the FANUC SERVO AMPLIFIER β*i*-B series DESCRIPTIONS (B-65422EN).

3.3 INITIAL PARAMETER SETTINGS

3.3.1 βiSVSP-B Power Supply Section

The Power Supply section of the βiSVSP-B series is controlled by software. This allows power supply information to be monitored on the CNC. Using this information, it is possible to diagnose failures resulting from power supply fluctuations.

3.3.1.1 Amplifier group number

When a servo/spindle amplifier is connected to the βiSVSP-B series as an additional axis, all of them are defined collectively as a single "amplifier group." This means that a system having multiple βiSVSP-B series or two or more βiSVSP-B series and αiPS-B series amplifiers has more than one amplifier group. A unique number is assigned to each of these amplifier groups, and such numbers are called amplifier group numbers.

3.3.1.2 PS control axis

In an amplifier group, "slave numbers", such as 10, 20, 30..., and 150, are assigned to the servo/spindle amplifiers connected to the βiSVSP-B in order of connection*NOTE. In each amplifier group, the axis with the smallest slave number "10" is defined as a "PS control axis."
Data communication between the Power Supply section and CNC is performed via the PS control axis.

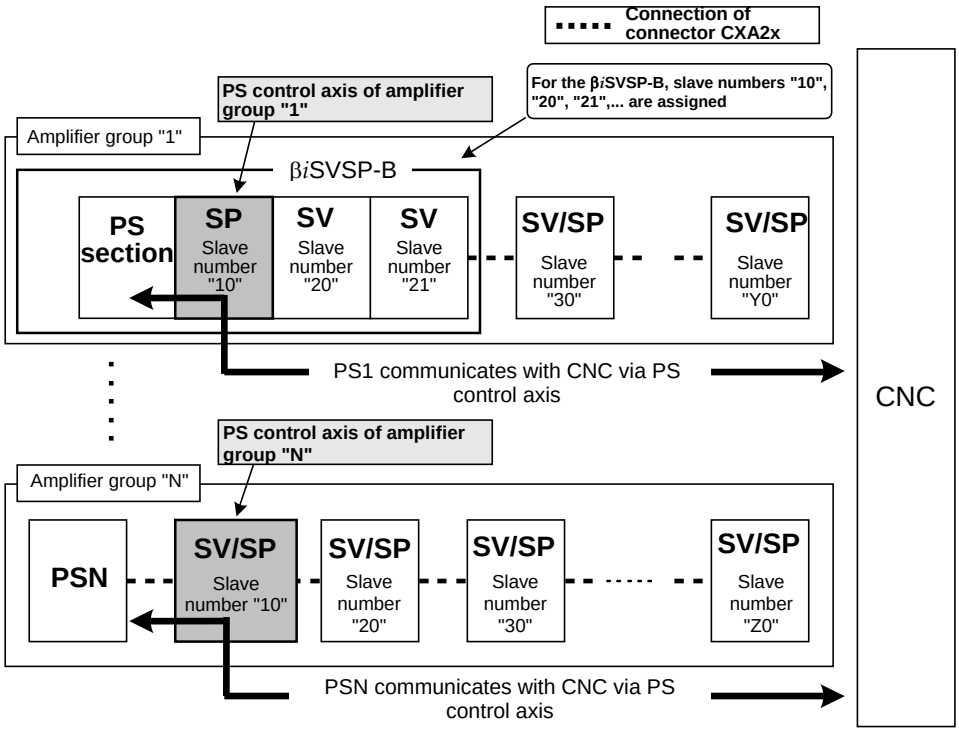

NOTE
This means the connection of inter-amplifier communication linked by connector CXA2x.
Note that it does not mean the FSSB connection order.
With the βiSVSP-B series, the spindle axis of the amplifier is always the PS control axis.

3.3.1.3 Parameter setting for specifying the PS control axis

Using the βiSVSP-B series requires the following procedure.

Parameter setting procedure

For the βiSVSP-B series, set the PS control axis as follows, so that the CNC software recognizes the PS control axis.

PS control axis setting: For the spindle axis, an amplifier group number needs to be set in parameter No. 4657.

This setting can be made automatically with the following procedure.
<1> Set No. 11549#0(APS) = 1.
<2> On CNC ALARM MESSAGE screen, "PW0000 POWER MUST BE OFF" will be displayed.
<3> To change multiple parameters, continue to set other parameters.
When all the parameter have been changed, turn the power to the CNC off, then on again. When the CNC is restarted, a value is automatically set in parameter No. 4657, completing the PS control axis parameter setting.

* Upon completion of the automatic parameter setting, bit 0 of No. 11549 returns to 0.
* If the amplifier configuration is changed, the alarm "PS CONTROL AXIS ERROR" occurs immediately after the CNC starts up, in which case the automatic setting needs to be performed again.

3.3.2 βiSVSP-B Servo Section

3.3.2.1 Servo parameter initialization procedure

The procedure for initializing the servo section of the servo amplifier of the βiSVSP-B series is described below. For details of each item, see the FANUC AC SERVO MOTOR βi-B/βi series PARAMETER MANUAL (B-65270EN).

Preparation
- Turn on the power in the emergency stop state.
- Set parameter write enable.
- Display the servo setting screen.

↓

Servo parameter setting

Setting
Initialization bit
Motor number
AMR
CMR
Flexible feed gear
Motor movement direction
Number of velocity pulses
Reference counter
Full closed loop
Servo loop gain

↓

Restart the CNC

↓

Set absolute position detection

↓

End of servo parameter initialization

3.3.2.2 Start-up of an individual servo axis

The conventional servo amplifiers of the βiSVSP series do not become ready unless all axes satisfy the start-up conditions. With the servo amplifier of the βiSVSP-B series, by contrast, any axis that satisfies the start-up conditions can become ready independently.

Ready status indicator for the βiSVSP-B servo section

The 7-segment LED indicator for the servo section of the βiSVSP-B series servo amplifier supports "0." (dotted zero) that indicates a multi-axis amplifier has some of its axes ready and some not ready, in addition to "0" indicating that all axes are in the ready status and "-" indicating that all axes are in the not-ready status.

7-segment LED indicator	Amplifier status	Description
-	Not-ready status (All axes are in the not-ready status.)	All axes are in the not-ready status (same as before). All axes are braked dynamically. Inoperable.
0	Ready status (All axes are in the ready status.)	All axes are in the ready status (same as before). All axes are operable.
0.	Ready status (Some axes are in the not-ready status.)	Some axes are in the ready status, while some are in the not-ready status. The difference from the status in which all axes are in the ready status is that a dot is lit. Only the axes in the ready status are operable. The axes in the not-ready status are braked dynamically.

Behavior in the event of an alarm

With the conventional servo amplifiers of the βiSVSP series, if an alarm is detected for any of the servo axes, all the axes are placed in the not-ready status and a dynamic brake is applied to them, regardless of the content of the alarm. A change has been made in the servo amplifier of the βiSVSP-B series so that, if an alarm is concerned in a specific axis (e.g., IPM alarm), only that axis is placed in the not-ready status while the servo amplifier keeps the other servo axes ready.

No restrictions imposed in the event of an alarm

The servo amplifier of the βiSVSP-B series is immune to the restrictions that are imposed on the conventional servo amplifiers of the βiSVSP series in the event of an alarm occurring in the brake control function, stop distance reduction function, or lifting function against gravity at emergency stop, even with an application that uses the operation of the normal axes.

[Behavior of normal axes in the event of an alarm]

	Alarm	Behavior of normal axes	
		Conventional servo amplifier βiSVSP series	Servo amplifier βiSVSP-B series
<1>	Alarm detected by the servo software or CNC software (such as the excess error alarm)	Possible to delay the ready status. (*)	Possible to delay the ready status. (*)
<2>	Alarm on each axis detected by the servo amplifier <1> Abnormal motor current <2> IPM alarm <3> DB relay abnormal alarm	Not possible to delay the ready status if an alarm is generated in βiSVSP.	Possible to delay the ready status. (*)
<3>	Alarms other than <1> or <2> above	Becomes Not ready instantly.	Becomes Not ready instantly.

* It is possible to lift the normal vertical axes or perform some other operation while the ready status of the servo amplifier is being delayed.

Supporting the axis detach function

With the servo amplifier of the βiSVSP-B series, the axis detach function, which is not available for the conventional servo amplifiers of the βiSVSP series, can be set individually for each servo axis.

Setting dummy axes

Starting up a specific servo axis in a conventional servo amplifier of the βiSVSP series requires attaching a dummy connector to each servo axis that is not in use. With the servo amplifier of the βiSVSP-B series, it is possible to start up any arbitrary servo axis alone, thus eliminating the need to attach dummy connectors to unused axes.

Sharing the amplifier among multiple paths

If a conventional amplifier of the βiSVSP series is shared among multiple paths when the amplifier enters the not-ready status for a servo axis used by one path, it is necessary to input the signal for ignoring the V ready-off alarm to prevent the amplifier from becoming not ready for the axes used by the other paths. This is not necessary for the servo amplifier of the βiSVSP-B series.

⚠ CAUTION

1 Notes on synchronization control
If an alarm occurs on one of the axes used under synchronization control, it is necessary for the amplifier to become not ready immediately for the other axes as well in order to prevent machine distortion. To meet this requirement, be sure to enable the servo software's "servo alarm two-axis simultaneous monitor function" for the axes under synchronization control.
In some cases where synchronization control or tandem control is implemented using two axes of a conventional amplifier of the βiSVSP series, the amplifier becomes not ready for both axes simultaneously in the event of an alarm and this plays a similar role to that of the "servo alarm two-axis simultaneous monitor function."
Because the ready status conditions for the servo amplifier of the βiSVSP-B series for each axis are independent of one another, there is no substitute for the "servo alarm two-axis simultaneous monitor function." Therefore, be sure to enable the "servo alarm two-axis simultaneous monitor function" for axes under synchronization control. See the Parameter Manual for detailed descriptions of the servo alarm two-axis simultaneous monitor function and the related parameter settings.

2 If an alarm common to all axes occurs (such as a DC link low-voltage alarm), all the axes driven by the multi-axis amplifier are affected by the alarm in the same manner as in previous amplifiers, resulting in the amplifier becoming not ready simultaneously for all the axes and a dynamic brake being applied to bring them all to a halt.

3 If an emergency stop signal (input signal to the connector CX4 of the PS) is input, the amplifier becomes not ready for all axes and applies a dynamic brake to bring all of them to a halt.

3.3.3 βiSVSP-B Spindle Section

3.3.3.1 Parameters related to spindle serial output

This subsection provides a list of the parameters related to spindle serial output only. For details of each parameter, refer to the following manuals.
FANUC Series 30*i*/31*i*/32*i*-MODEL B CONNECTION MANUAL (FUNCTION) (B-64483EN-1)

Section 11.2, "SPINDLE SERIAL OUTPUT"
FANUC Series 0*i*-MODEL F CONNECTION MANUAL (FUNCTION) (B-64603EN-1)

Section 11.2 "SPINDLE SERIAL OUTPUT"

Parameter No.	Description
3716#0	Selection of a spindle (analog/serial) (Set 1.)
3702#1	Multi-spindle control function (Whether to use the multi-spindle control function)
3717	Amplifier number of each spindle amplifier
3718	Spindle indication subscript (main spindle)
3719	Spindle indication subscript (sub-spindle)

NOTE
To use the spindle serial interface, the CNC software option is required.

For the FSSB setting, refer to one of the following manuals.
FANUC Series 30*i*/31*i*/32*i*-MODEL B CONNECTION MANUAL (FUNCTION) (B-64483EN-1)

Subsection 1.4.4, "FSSB Setting"
FANUC Series 0*i*-MODEL F CONNECTION MANUAL (FUNCTION) (B-64603EN-1)

Subsection 1.4.3 "FSSB Setting"

3.3.3.2 Automatic spindle parameter initialization

An automatic set up of the spindle parameters Nos. (4000 to 4799) is described below.

NOTE
If you do not want to initialize adjusted parameters, do not perform automatic initialization.

Parameter list

Parameter No.	Description
4019#7	Function for automatically initializing spindle parameters
4133	Spindle motor model code

Procedure for automatic spindle parameter initialization

Perform automatic spindle parameter initialization by following the procedure below.

<1> Set the model code for the desired motor for automatic parameter initialization.

Parameter No.	Setting value
4133	Model code

NOTE
1 The control method usable with the αi/βi series spindle is spindle HRV control only. The conventional control method is not supported.
2 For the model codes of individual motors, refer to the FANUC AC SPINDLE MOTOR αi series/FANUC AC SPINDLE MOTOR βi series/FANUC BUILT-IN SPINDLE MOTOR Bi series PARAMETER MANUAL (B-65280EN).
3 When using a spindle motor that has no model code, set model code "300" ("400" for a spindle motor with speed range switching control) for automatic parameter setting, then manually input data according to the parameter table for each motor model.

<2> Set the relevant parameter to enable automatic spindle parameter initialization.

Parameter No.	Setting value
4019#7	1

NOTE
This bit is reset to its original value after automatic parameter initialization.

<3> Turn the CNC off, then on again. Then, the spindle parameters specified with a model code are automatically initialized.

4 CONFIRMATION OF THE OPERATION

4.1 OUTLINE OF βiSVSP-B

4.1.1 Connector and Status LED Locations

(a) Connector location of 260-mm width models

No.	Name	Remark
1	STATUS1	Status LED : spindle
2	STATUS2	Status LED : servo
3	COP10B	FSSB optical input connector
4	COP10A	FSSB optical output connector
5	SW	Safe torque-off switch
6	CX63	Safe torque-off input/output connector
7	CX3	Main power magnetic contactor control connector
8	CX4	Emergency stop signal (ESP)
9	CX36	Power failure detection output connector
10	CX61	Not used
11	CX62	Not used
12	CXA2C	24-VDC power supply input connector
13	CXA2A	24-VDC power supply output connector
14	CX5X	Absolute Pulsecoder battery connector
15	JF1	Pulsecoder connector: L-axis
16	JF2	Pulsecoder connector: M-axis
17	JF3	Pulsecoder connector: N-axis
18	JX15	Connector for excitation off monitor signal
19	JX16	Not used
20	JY1	Load meter, speedometer, analog override
21	JYA2	Spindle sensor (αiM SENSOR, αiMZ SENSOR)
22	JYA3	Separated sensor for a spindle (αi POSITIONCODER, αiCZ SENSOR) External one-rotation signal
23	JYA4	Separated sensor for a spindle (α POSITIONCODER S, αiBZ SENSOR)
24	⏚	Ground terminal for signals
25	TB2	Spindle motor power line connector
26	CZ2L	Servo motor power line connector: L-axis
27	CZ2M	Servo motor power line connector: M-axis
28	CZ2N	Servo motor power line connector: N-axis
29	TB1	Main power supply connection terminal board
30	⏚	Tapped hole for grounding the flange
31	CX48	Connector for input power supply monitoring
32	TB3	DC link terminal block
33	LED	DC link charge LED (Warning)

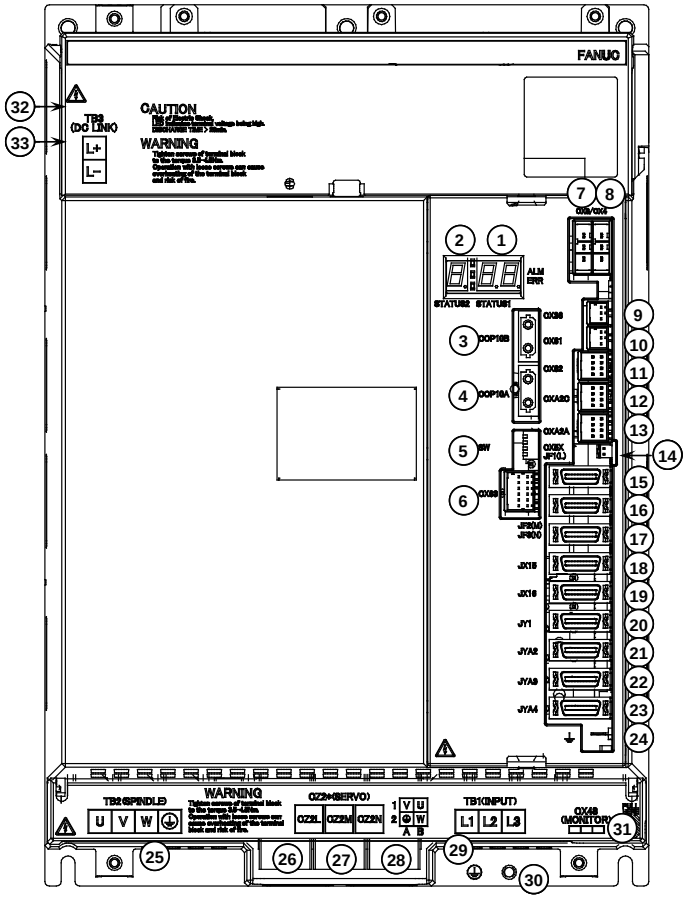

⚠ WARNING
Do not touch any component in the module or any connected cable when LED (33) is on, because it is dangerous.

(b) Connector location of 180-mm width models

No.	Name	Remark
1	STATUS1	Status LED : spindle
2	STATUS2	Status LED : servo
3	COP10B	FSSB optical input connector
4	COP10A	FSSB optical output connector
5	SW	Safe torque-off switch
6	CX63	Safe torque-off input/output connector
7	CX3	Main power magnetic contactor control connector
8	CX4	Emergency stop signal (ESP)
9	CX36	Power failure detection output connector
10	CX61	Not used
11	CX62	Not used
12	CXA2C	24-VDC power supply input connector
13	CXA2A	24-VDC power supply output connector
14	CX5X	Absolute Pulsecoder battery connector
15	JF1	Pulsecoder connector: L-axis
16	JF2	Pulsecoder connector: M-axis
17	JF3	Pulsecoder connector: N-axis
18	JX15	Connector for excitation off monitor signal
19	JX16	Not used
20	JY1	Load meter, speedometer, analog override
21	JYA2	Spindle sensor (αiM SENSOR, αiMZ SENSOR)
22	JYA3	Separated sensor for a spindle (αi POSITIONCODER, αiCZ SENSOR) External one-rotation signal
23	JYA4	Separated sensor for a spindle (α POSITIONCODER S, αiBZ SENSOR)
24	⏚	Ground terminal for signals
25	TB2	Spindle motor power line connector
26	CZ2L	Servo motor power line connector: L-axis
27	CZ2M	Servo motor power line connector: M-axis
28	CZ2N	Servo motor power line connector: N-axis
29	TB1	Main power supply connection terminal board
30	⏚	Tapped hole for grounding the flange
31	CX48	Connector for input power supply monitoring
32	TB3	DC link terminal block
33	LED	DC link charge LED (Warning)

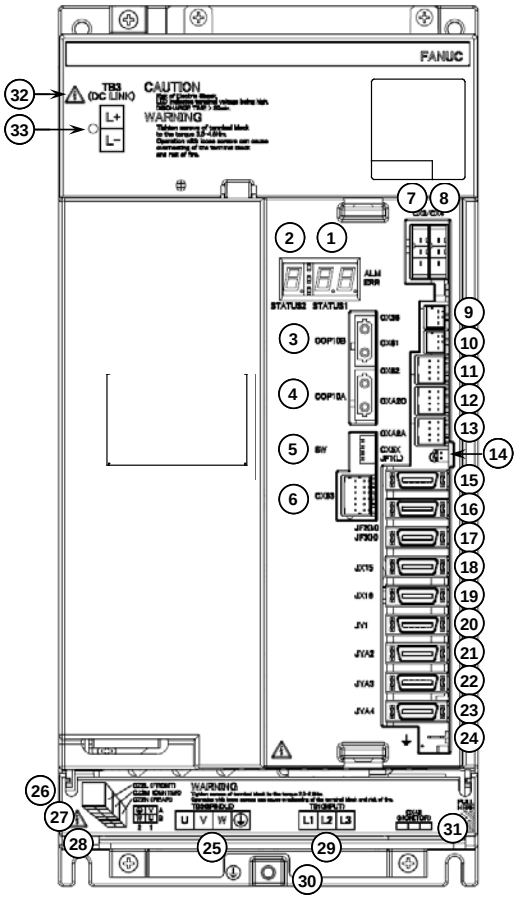

> ⚠ **WARNING**
> Do not touch any component in the module or any connected cable when LED (33) is on, because it is dangerous.

4.1.2 Start-up Procedure

Check each item according to the procedure described below.

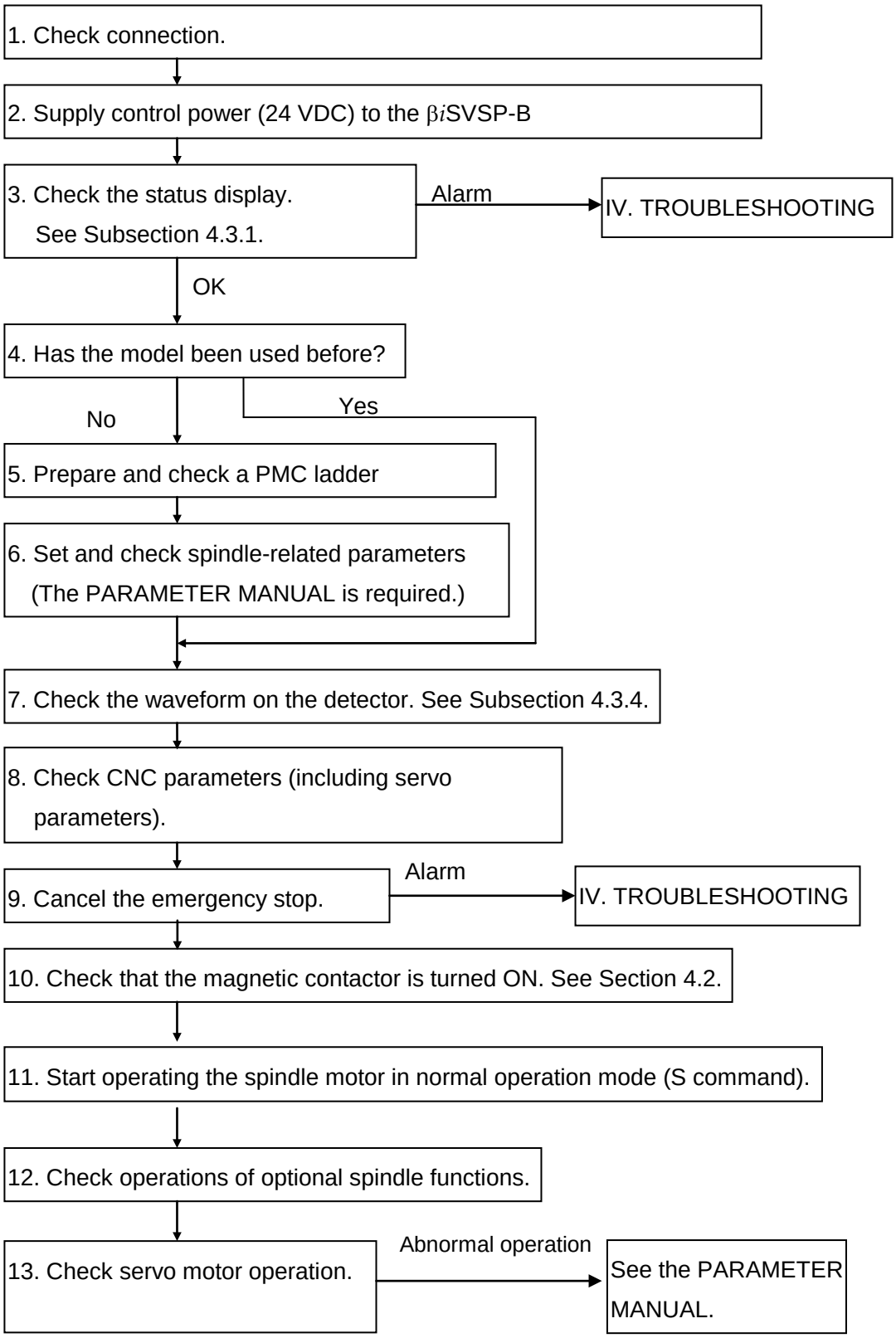

4.2 βiSVSP-B POWER SUPPLY SECTION

4.2.1 The Status LED Is Off.

Table 4.2.1 Check method and action

No.	Cause of trouble	Check method	Measure
1	The 24 VDC external control power is not supplied.	Check the voltage of the external power supply (24 VDC).	Check whether the external power supply is not faulty.
2	The cable is defective.	Check whether the cable attached to the connector CXA2A/2B is not disconnected or short-circuited.	Check the cable attached to the connector CXA2A/2B.
		Check whether the 5 V power supply is not short-circuited with the cable connected to the pulse coder.	Replace the cable connected to the pulse coder.
3	The power is externally connected to 0 V, GND, or the like.	Check whether the power cable is not short-circuited.	Replace or repair the cable.
4	There is a blown fuse on the control printed circuit board.	Check whether the fuse on the control printed circuit board has not blown. (See Subsection 4.3.2, "Fuse Locations" in Part VI) The fuse blow can be confirmed by checking the element of the fuse visually or removing the fuse and checking the connection of the element of the fuse by the tester.	If the fuse has blown, the control printed circuit board may be faulty. Replace the unit.
5	The printed circuit board is defective.	If the cause is not 1 to 4 above, the printed circuit board of the servo amplifier may be defective.	Replace the unit.

4.3 βiSVSP-B SPINDLE SECTION

4.3.1 Status 1 Indicator

(a) 260-mm width model **(b) 180-mm width model**

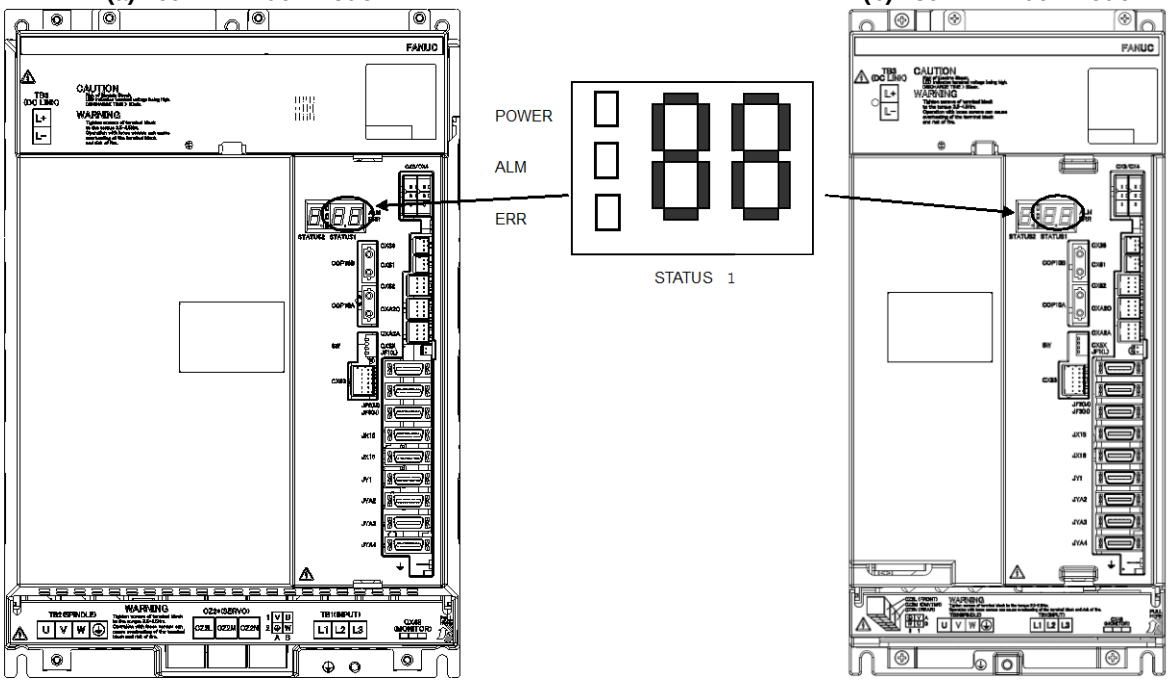

No.	POWER	ALM	ERR	STATUS1	Description
1				Not displayed	The control power is not on, or the hardware is faulty. See Subsection 1.3.3, "Spindle Amplifier" for details.
2	On			Alphanumeric On	During a period of approximately three seconds after the power is turned on, the information about the software series and edition is displayed in two installments. First approx. 1 second: A Next 1 second: Last 2 digits of the software series Next 1 second: 2-digit software edition Example) When the software series and edition are 9DB0/04 [A] → [B 0] → [0 4]
3	On			-- at center Blinking	The CNC has not been switched on. Waiting for serial communication and parameter loading completion.
4	On			-- at center On	Parameter loading has ended. The motor is not supplied with power.
5	On			00	The motor is supplied with power.
6	On			-- at the top Blinking	Power is interrupted by the safe torque-off (STO) function. This status can coexist with the number display of other statuses. (Example: -- at the top and center blink when the amplifier is waiting for completion of establishment of serial communication with the CNC and loading of parameters.)
7	On	On		01 or above is displayed.	Alarm status The βiSVSP-B is not operable. See Chapter 2, "ALARM NUMBERS AND BRIEF DESCRIPTIONS" in Part VI.
8	On	On		UU, LL is displayed.	FSSB communication error.
9	On	On		A1, A2 is displayed.	An error occurred in the spindle software process. Check the generation status and contact FANUC.
10	On	On		A3 is displayed.	An error occurred in the safe torque-off (STO) function circuit. Check the generation status and contact FANUC.
11	On		On	01 or above is displayed.	Error state Incorrect parameter setting or improper sequence.

4.3.2 Troubleshooting at Startup

4.3.2.1 The STATUS 1 indicator is blinking with "--."

(1) When no spindle communication alarm message is indicated on the CNC
Make sure the CNC software option setting or bit setting is correct.
(2) When a communication alarm message is indicated on the CNC

No.	Cause of trouble	Check method	Measure
1	The cable is defective.	Check the connector housing section, etc.	Replace the cable.
2	The printed circuit board is defective.		Replace the unit.

4.3.2.2 When the motor does not turn

(1) When "--" is indicated on the STATUS 1 indicator of the βiSVSP-B
Check whether spindle control signals are input.
(An example for the first spindle is shown below.)

	#7	#6	#5	#4	#3	#2	#1	#0
G070	MRDYA		SFRA	SRVA				
G071							*ESPA	
G029		*SSTP						
G030	SOV7	SOV6	SOV5	SOV4	SOV3	SOV2	SOV1	SOV0

(2) When "00" is indicated on the STATUS 1 indicator of the βiSVSP-B
No spindle speed command is input.
Check related parameters while referring to the FANUC AC SPINDLE MOTOR αi/βi series/BUILT-IN SPINDLE MOTOR Bi series PARAMETER MANUAL (B-65280EN).

(3) When an alarm number is indicated on the STATUS 1 indicator of the βiSVSP-B
See the description of the relevant alarm number in Part VI.

4.3.2.3 When the specified speed cannot be obtained

(1) When the speed always differs from a specified speed
Check parameters.

Refer to the FANUC AC SPINDLE MOTOR αi/βi series / FANUC BUILT-IN SPINDLE MOTOR Bi series PARAMETER MANUAL (B-65280EN)," and check related parameters.

(2) When an alarm number is indicated on the STATUS 1 indicator of the βiSVSP-B
See the description of the relevant alarm number in Part VI.

4.3.2.4 When cutting is not performed, the spindle vibrates, making noise

(1) When the spindle vibrates at a particular speed
Check whether the spindle also vibrates when the motor is turning by inertia. If the same vibration occurs when the motor is turning by inertia, search for a source of mechanical vibration.
There are several methods for turning the spindle by inertia, as described below. Because these methods involve machine sequences, be sure to consult with the machine tool builder.
A Input signal MPOF (G73#2) to 1 immediately causes the spindle to turn by inertia.
B Set bit 2 (ALSP) of parameter No. 4009 to 1. Then, when the power to the CNC is turned off during spindle rotation, the spindle turns by inertia. At this time, on the spindle amplifier, Alarm 24 is indicated.

(2) When the spindle vibrates regardless of the speed (also during a control stop)
A Check and adjust the signal waveform of the spindle sensor. For details, see Subsection 4.3.4., "Observing Data Using the SERVO GUIDE."
B Check that the motor part number matches its parameters.
For details, see the FANUC AC SPINDLE MOTOR αi/βi series / FANUC BUILT-IN SPINDLE MOTOR Bi series PARAMETER MANUAL (B-65280EN).
C ADJUST THE SPEED LOOP GAIN AND OTHER CHARACTERISTICS.
For details, see the FANUC AC SPINDLE MOTOR αi/βi series / FANUC BUILT-IN SPINDLE MOTOR Bi series PARAMETER MANUAL (B-65280EN).

4.3.2.5 When an overshoot or hunting occurs

Adjust parameters while referring to the FANUC AC SPINDLE MOTOR αi/βi series / FANUC BUILT-IN SPINDLE MOTOR Bi series PARAMETER MANUAL (B-65280EN).

4.3.2.6 When cutting power weakens or acceleration/deceleration slows down

(1) When the load meter does not indicate the maximum output
A A mechanical cause such as a belt slip may occur.
B Check whether the torque limit signal is input incorrectly.

FS0i	#7	#6	#5	#4	#3	#2	#1	#0
G070							TLMHA	TLMLA

(2) When the load meter indicates the maximum output
A When the αiBZ SENSOR is used, the sensor gear could be slipping in between it and the spindle during acceleration.
B The motor part number may not appropriate for the specific parameters.
For details, see the FANUC AC SPINDLE MOTOR αi/βi series / FANUC BUILT-IN SPINDLE MOTOR Bi series PARAMETER MANUAL (B-65280EN).
C The output limit pattern may be set incorrectly.
For details, see the FANUC AC SPINDLE MOTOR αi/βi series / FANUC BUILT-IN SPINDLE MOTOR Bi series PARAMETER MANUAL (B-65280EN).

4.3.3 Status Error Indication Function

When there is a sequence or parameter error, the error LED (yellow) in the STATUS 1 indicator of the βiSVSP-B goes on with an error code displayed. This can ease troubleshooting at the time of machine startup.
Shown below is an example of how the LED indicator looks when an error occurs.

Status	LED display
Error display	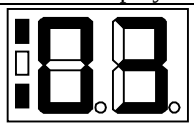 The error LED lights, and an error code is displayed.

If the βiSVSP-B spindle unit does not operate for a particular function, check whether a status error is indicated in βiSVSP-B STATUS 1 indicator.

Display	Description	Measure
01	Although neither *ESP (emergency stop signal) (there are two types of signals, a PMC signal and PSM contact signal) nor MRDY (machine ready signal) has been input, SFR (forward rotation signal), SRV (reverse rotation signal), or ORCM (orientation command) is input.	Check the *ESP and MRDY sequences. For MRDY, pay attention to the parameter that specifies whether to use the MRDY signal (bit 0 of parameter No. 4001).
03	Although parameter settings are such that there is no position sensor (position control is not to be performed, that is, bits 3, 2, 1, and 0 of parameter No. 4002 are, respectively, 0, 0, 0, and 0), a Cs axis contour control command has been issued. In this case, the motor is not activated.	Check the parameter settings.
04	Although parameter settings are such that there is no position sensor (position control is not to be performed, that is, bits 3, 2, 1, and 0 of parameter No. 4002 are, respectively, 0, 0, 0, and 0), a servo mode (such as rigid tapping or Cs axis control) command or spindle synchronization control command has been issued. In this case, the motor is not activated.	Check the parameter settings.
05	An ORCM (orientation command) is input even though the optional parameter for the orientation function is not set.	Check the setting of the parameter for orientation.
06	Low-speed winding is selected (RCH = 1) even though the optional parameter for the output switching option is not set.	Check the setting of the parameter for output switching and the power line status signal (RCH).
07	Although Cs contour control mode is input, neither SFR (forward rotation signal) nor SRV (reverse rotation signal) is input.	Check the sequence.
08	Although servo mode (rigid tapping or spindle positioning) control command is input, neither SFR (forward rotation signal) nor SRV (reverse rotation signal) is input.	Check the sequence.

Display	Description	Measure
09	Although a spindle synchronization control command is input, neither SFR (forward rotation command) nor SRV (reverse rotation command) is input.	Check the sequence.
10	Although Cs contour control command is input, another operation mode (servo mode, spindle synchronization, or orientation) is specified.	Do not specify another mode during execution of the Cs contour control command. Cancel execution of the Cs contour control command before entering into another mode.
11	Although servo mode (rigid tapping or spindle positioning) is input, another operation mode (Cs contour control, spindle synchronization, or orientation) is specified.	Do not specify another mode during execution of the servo mode command. Cancel execution of the servo mode command before entering into another mode.
12	Although spindle synchronization is input, another operation mode (Cs contour control, servo mode, or orientation) is specified.	Do not specify another mode during execution of the spindle synchronization control command. Cancel execution of the spindle synchronization control command before entering into another mode.
13	Although orientation specification is input, another operation mode (Cs contour control, servo mode, or synchronization control) is specified.	Do not specify another mode during execution of the orientation command. Cancel execution of the orientation command before entering into another mode.
14	The SFR (forward rotation command) and SRV (reverse rotation command) are input at the same time.	Only specify one of them.
16	Although the parameter not to use the differential speed control function (bit 5 of parameter No. 4000 = 0) is set, DEFMD (differential speed mode command) is input.	Check the setting of the parameter and the differential speed mode command.
17	The parameter settings for the speed detector (bits 2, 1, and 0 of parameter No. 4011) are invalid. There is no speed detector that matches the settings. There is no speed detector that matches the settings.	Check the parameter settings.
18	Although parameter settings are such that there is no position sensor (position control is not to be performed, that is, bits 3, 2, 1, and 0 of parameter No. 4002 are, respectively, 0, 0, 0, and 0), a position coder-based orientation command has been issued.	Check the parameter settings and the input signal.
19	Although magnetic sensor orientation command is input, another operation mode (Cs contour control, servo mode, or spindle synchronization) is specified.	Do not specify another mode during execution of the orientation command. Cancel execution of the orientation command before entering into another mode.
21	The tandem operation command was input in the spindle synchronization control enable state.	Input the tandem operation command when spindle synchronization control is canceled.
22	Spindle synchronization control was specified in the tandem operation enable state.	Specify spindle synchronization control when the torque tandem operation is canceled.
23	The tandem operation command is input without the required option.	Torque tandem control requires a CNC software option. Check the option.
24	Although continuous indexing in position coder-based orientation is to be performed, an absolute position command (INCMD = 0) is issued after incremental operation (INCMD = 1).	Check INCMD (incremental command). Be sure to perform absolute position command-based orientation before an absolute position command.

Display	Description	Measure
26	The parameter settings are such that both spindle switch and three-stage speed range switch are used.	Check the parameter settings and the input signal.
29	Parameter settings are such that the shortest-time orientation function is to be used (bit 6 of parameter No. 4018 is 0 and parameter Nos. 4320 to 4323 are nonzero).	The shortest-time orientation function cannot be used in the βiSVSP-B. The use of the optimum orientation function is recommended.
30	The magnetic pole has not been detected, but a command is input.	In the magnetic pole undetected state (EPFIXA = 0), the motor cannot be driven even when a command is input. Input a command in the magnetic pole detected state (EPFIXA = 1). When EPFSTR is set to 1, all commands are ignored and this error is displayed even in the magnetic pole detected state. After the completion of magnetic pole detection, set EPFSTR to 0.
31	This hardware configuration does not support the use of the spindle FAD function. In this case, the motor is not activated.	Check the CNC model.
32	S0 is not specified in the velocity mode, but the disturbance input function is enabled (bit 7 of parameter No. 4395 is set to 1).	Specify S0 in the velocity mode before enabling the disturbance input function (bit 7 of parameter No. 4395 to 1).
33	This hardware configuration does not support the use of the spindle EGB function. In this case, the motor is not activated.	Check the CNC model.
34	Both spindle FAD function and spindle EGB function are enabled. In this case, the motor is not activated.	These functions cannot be used at the same time. Enable only one of the functions.
35	Spindle amplifier ID information cannot be obtained.	Replace the spindle amplifier with one with correct ID information.
36	The submodule SM (SSM) is abnormal. 1) The interface signal between the spindle amplifier and SSM is disconnected. 2) SSM failure	For details on how to address this status error, see Section 1.4, "SUBMODULE SM" in Part IV in the FANUC AC SPINDLE MOTOR αi/βi series / FANUC BUILT-IN SPINDLE MOTOR Bi series PARAMETER MANUAL (B-65280EN).
37	The current loop setting (No. 4012) has been changed.	Check the setting of parameter No. 4012, and turn the power off, then on again.
38	A parameter related to communication between spindle amplifiers is specified incorrectly. Alternatively, a function unavailable with the torque tandem function is set.	Check the parameter.
39	The DSCN (disconnection detection disable signal) is input with the SFR (forward rotation command), SRV (reverse rotation command) or ORCM (orientation command) input.	Check the sequence. Do not input the DSCN (disconnection detection disable signal) while the command to supply power for the motor is input.
43	A setting not supported by the αiCZ SENSOR (serial) is made. (*1)	Check the parameter settings.
44	The spindle amplifier does not support the control period setting.	Check the setting of parameter No. 4012.
45	The setting of the maximum output limit during cutting is not supported.	This is a status error concerning the function for output limit during cutting. This function cannot be used in a system in which this error occurs. Disable this function by setting bit 6 of parameter No. 4011 to 0.
46	The CNC system software does not support spindle synchronous control using a nano-command.	The CNC system software does not support a nano-command. Check the series and edition of the CNC system software.

Display	Description	Measure
54 +SP9068	The FSSB high-speed rigid tapping and the servo EGB (FSSB method) cannot be used at the same time.	Disable the FSSB high-speed rigid tapping (bit 1 of No. 4549 = 0) or the servo EGB (FSSB method) (bit 2 of No. 4549 = 0).
57 +SP9068	The parameter setting for concurrent use of optimum orientation and servo mode reference position return is not correct.	Set a non-zero value to the parameter for the servo mode reference position return speed (parameter No. 4074).
58 +SP9068	Parameter settings that do not support safe speed monitoring using the spindle speed are made.	Check the settings of bits 3 to 0 of parameter No. 4002.
59 +SP9068	The setting for the spindle orientation stop position least setting unit 360/32768deg is not correct.	・ The CNC system software does not support the spindle orientation stop position least setting unit 360/32768deg. Check the series and edition of the CNC system software. ・ Concurrent use with the orientation function in spindle synchronization control (bit 6 of parameter No. 4014 is 1) is invalid.
60 +SP9167	The sequence for using spindle phase synchronous control is not correct.	Check the sequence for phase matching of spindle synchronous control. When bit 3 of parameter No. 4006 is set to 1 (not to detect the one-rotation signal automatically), if the spindle phase synchronous command is entered in a state where the one-rotation signal is not detected, this error occurs. Check this point.
63 +SP9068	Spindle DC-link stabilizer during power failure is not supported.	The spindle control software does not support spindle DC-link stabilizer during power failure. Check the series and edition of the spindle control software.
64 +SP9167	The gear is changed during EGB mode, when you use arbitrary gear ratio function for servo EGB (FSSB type).	Do not change the gear during servo EGB with the setting to use the servo EGB (FSSB method) and the arbitrary gear ratio function together.
67	The parameter for using the smart load meter is set when the CNC does not support the smart load meter. (No.4542#7)	The CNC system software does not support the smart load meter. Check the series and edition of the CNC system software.
68 +SP9068	The settings for the terminating resistance of the feedback are not correct. (No.4004#6,#7)	The setting for the terminating resistance for third-party analog sensors is enabled under the setting to use FANUC analog sensors. Check the settings for the sensor (bits 3 to 0 of No. 4002, bits 2 to 0 of No. 4010) and the settings for the terminating resistance for third-party analog sensors (bits 7 and 6 of No. 4004).
69 +SP9068	The smart rigid tapping cannot be used.	・ Constant parameters for magnetic flux control (No. 4105 and No. 4107) are not input. ・ The sensor-less motor drive and the smart rigid tapping cannot be used together. ・ The spindle differential speed control and the smart rigid tapping cannot be used together.
70 +SP9068	The setting for third-party temperature sensors is not correct.	Third-party temperature sensor KTY-84 and the setting for using Pt1000 are enabled at the same time. Check the settings for the third-party temperature sensor (bit 4 of No. 4397 and No. 4587).
71 +SP9068	The parameter settings related to current detection are incorrect.	The settings related to current detection are not available in your spindle amplifier. Set 0 to Parameter No. 4744.

Display	Description	Measure
72 +SP9167	The sequence of the power line reverse connection function is not correct.	Input the power line reverse connection permission signal before turning the power ON with the power line reverse connection function enabled (bit 6 of No. 4549 = 1).
73 +SP9068	There is an error in the parameter settings or the amplifier status related to the disturbance elimination control or hybrid function of FSC and EGB.	<1> The current control cycle that cannot be used at the same time is set. Set bit 5 of parameter No. 4012 to 0. <2> Communication is not established between spindle amplifiers when the correction start signal of the disturbance elimination control and hybrid function of FSC and EGB is input. Check the settings for the master axis and slave axis (bits 7 and 6 of No. 4352) and communication connection between amplifiers.

NOTE

*1 When status error 43 is displayed, check the following items.

<1> For both the motor sensor and spindle sensor, the setting is made to use an αiCZ SENSOR (serial). (No.4010#2,1,0=0,1,0 and No.4002#3,2,1,0=0,1,1,0)

<2> Spindle HRV control is not set. (No.4012#7=0)

<3> The setting is made to use the differential speed control function. (No.4000#5=1)

<4> The setting is made to use the spindle switch control function. (No.4014#0=1)

<5> The setting is made so that an alarm related to position feedback is not detected. (No.4007#6=1 or No.4016#5=0)

<6> The setting is made so that the disconnection of the feedback signal is not detected. (No.4007#5=1)

<7> The setting is made so that an alarm related to position signal feedback is not detected during thread cutting. (No.4016#5=0)

<8> The setting is made to use an external one-rotation signal. (No.4004#2=1)

<9> The setting is made to use a position coder. (No.4002#3,2,1,0=0,0,1,0)

<10> The setting is made to use the spindle tandem function. (No.4015#3=1)

<11> Although the setting is made to use an αiCZ SENSOR (serial output) as the motor sensor, the Dual Check Safety function is enabled.

4.3.4 Observing Data Using the SERVO GUIDE

4.3.4.1 Overview

Using the servo adjustment tool, SERVO GUIDE, enables you to observe internal data for the spindle. This subsection describes the spindle data that can be observed using the SERVO GUIDE. It also presents examples of observed data. Refer to online help for detailed explanations about how to use the SERVO GUIDE.

4.3.4.2 List of spindle data that can be observed using the SERVO GUIDE

The following table lists the spindle data that can be observed using the SERVO GUIDE.

Data type	Description	Remark
SPEED	Motor speed	
INORM	Motor current amplitude	
IRMS	Motor current (RMS value)	
IPEAK	Motor current (amplitude value)	
TCMD	Torque command	
TCMD2	Torque command 2	
VCMD	Motor speed command	
VERR	Speed deviation	
MCMD	Move command for each communication cycle	
ERR	Position deviation	
ERRC	Position deviation (CNC)	
SYNC	Synchronization error	
ORERR	Position error at orientation	
ORSEQ	Orientation sequence data	
PCPOS	Cumulative position feedback value	
CSPOS	Cumulative position feedback value	(*1)
CSPOS2	Cumulative position feedback value	(*1)
POS3D	Integration of position feedback value for 3D display	(*1)
POS3DN, CSPOSN	Cumulative position feedback value except for correction data	(*1)
MTPOS	Cumulative position feedback value (motor-end sensor)	(*1)
WMDAT	Move command for each position loop	
ERR2	Position deviation 2	
ERR2C	Position deviation 2 (CNC)	
SPCMD	Speed command data from the CNC	
SPSPD	Spindle speed	
SPCT1	Spindle control signal 1	
SPCT2	Spindle control signal 2	
SPCT3	Spindle control signal 3	
SPCT4	Spindle control signal 4	9DB0/10 or later
SPST1	Spindle status signal 1	
SPST2	Spindle status signal 2	
SPST3	Spindle status signal 3	9DB0/10 or later
SFLG1	Spindle flag 1	
SPPOS	Spindle position data	
LMDAT	Load meter data	
DTRQ	Spindle load torque (Unexpected disturbance torque detection function)	(*1)
LMDTC	Current value of the load meter (standard for continuous output)	9DB0/02 or later

Data type	Description	Remark
LMMAX	Maximum value of the load meter (standard for continuous output)	9DB0/02 or later
DURTM	Time during which processing is possible	9DB0/02 or later
AOVCLV	Amplifier OVC level	9DB0/10 or later
MOVCLV	Motor OVC level	9DB0/10 or later
FREQ	Frequency of disturbance torque (disturbance input function)	(*1)
GAIN	Gain data (disturbance input function)	(*1)
MTTMP	Motor winding temperature	
MFBDF	Feedback difference data on the motor side (for amplitude ratio and phase difference compensation)	(*1)
SFBDF	Feedback difference data on the spindle side (for amplitude ratio and phase difference compensation)	(*1)
PA1	AD data of Phase A of motor sensor	(*1)
PB1	AD data of B phase of motor sensor	(*1)
PA2	AD data of Phase A of spindle sensor	
PB2	AD data of B phase of spindle sensor	
VDC	DC link voltage	
SFERR	Semi-full error (dual position feedback function)	(*1)
SMERR	Semi-closed side error (dual position feedback function)	(*1)
SPACC	Spindle acceleration data	(*1)

NOTE
*1 The data cannot be observed when the spindle is driven by a speed sensor-less motor.

4.3.4.3 About the spindle control and spindle status signals

As stated in the previous item, the SERVO GUIDE can be used to observe the PMC signals (spindle control signals 1, 2, and 3 and spindle status signals 1 and 2) used by the spindle.
Listed below is the data configuration for spindle control signals 1 and 2 and spindle status signals 1 and 2. Refer to Chapter 3, "INPUT/OUTPUT SIGNALS (CNC ↔ PMC)" of "FANUC AC SPINDLE MOTOR αi/βi series / FANUC BUILT-IN SPINDLE MOTOR Bi series PARAMETER MANUAL (B-65280EN).

(a) Spindle control signal 1 (SPCT1)

#15	#14	#13	#12	#11	#10	#9	#8
RCH	RSL	INTG	SOCN	MCFN	SPSL	*ESP	ARST
#7	#6	#5	#4	#3	#2	#1	#0
MRDY	ORCM	SFR	SRV	CTH1	CTH2	TLMH	TLML

(b) Spindle control signal 2 (SPCT2)

#15	#14	#13	#12	#11	#10	#9	#8
			DSCN	SORSL	MPOF	SLV	
#7	#6	#5	#4	#3	#2	#1	#0
RCHHG	MFNHG	INCMD	OVR	DEFMD	NRRO	ROTA	INDX

(c) Spindle control signal 3 (SPCT3)

#15	#14	#13	#12	#11	#10	#9	#8
				HF4	HF3	HF2	HF1
#7	#6	#5	#4	#3	#2	#1	#0
FRFSM	INESTR				ARDRQ		

(d) Spindle control signal 4 (SPCT4)

#15	#14	#13	#12	#11	#10	#9	#8
#7	#6	#5	#4	#3	#2	#1	#0
					TDFCAN	PWMSE	

(e) Spindle status signal 1 (SPST1)

#15	#14	#13	#12	#11	#10	#9	#8
			SLVS	RCFN	RCHP	CFIN	CHP
#7	#6	#5	#4	#3	#2	#1	#0
ORAR	TLM	LDT2	LDT1	SAR	SDT	SST	ALM

(f) Spindle status signal 2 (SPST2)

#15	#14	#13	#12	#11	#10	#9	#8
			CSPEN		ARDST		
#7	#6	#5	#4	#3	#2	#1	#0
			EXOF	SOREN	MSOVR	INCST	PC1DT

(g) Spindle status signal 3 (SPST3)

#15	#14	#13	#12	#11	#10	#9	#8
					INESFN	XPFL	FRDTE
#7	#6	#5	#4	#3	#2	#1	#0
							STCST

4.3.4.4 Example of Observing Data

The following figure shows an example of data (synchronization error and motor speed at rigid tapping) observed using the SERVO GUIDE.

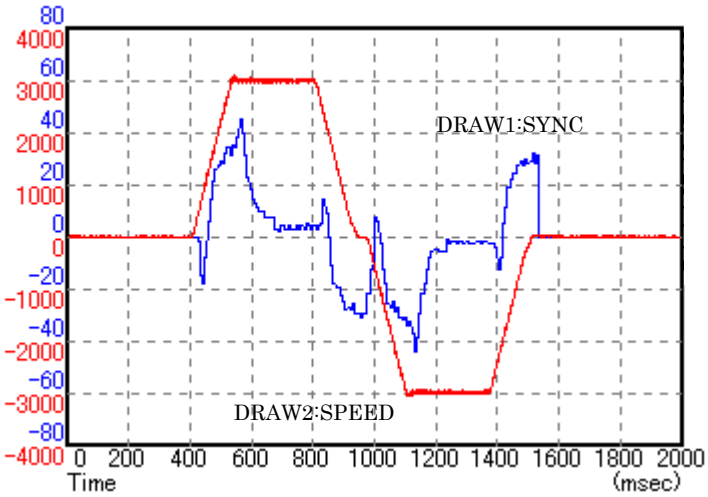

DRAW1 : SYNC (synchronization error)
DRAW2 : SPEED (motor speed)

4.4 βiSVSP-B SERVO SECTION

4.4.1 Checking the STATUS 2 Indicator

(a) 260-mm width model **(b) 180-mm width model**

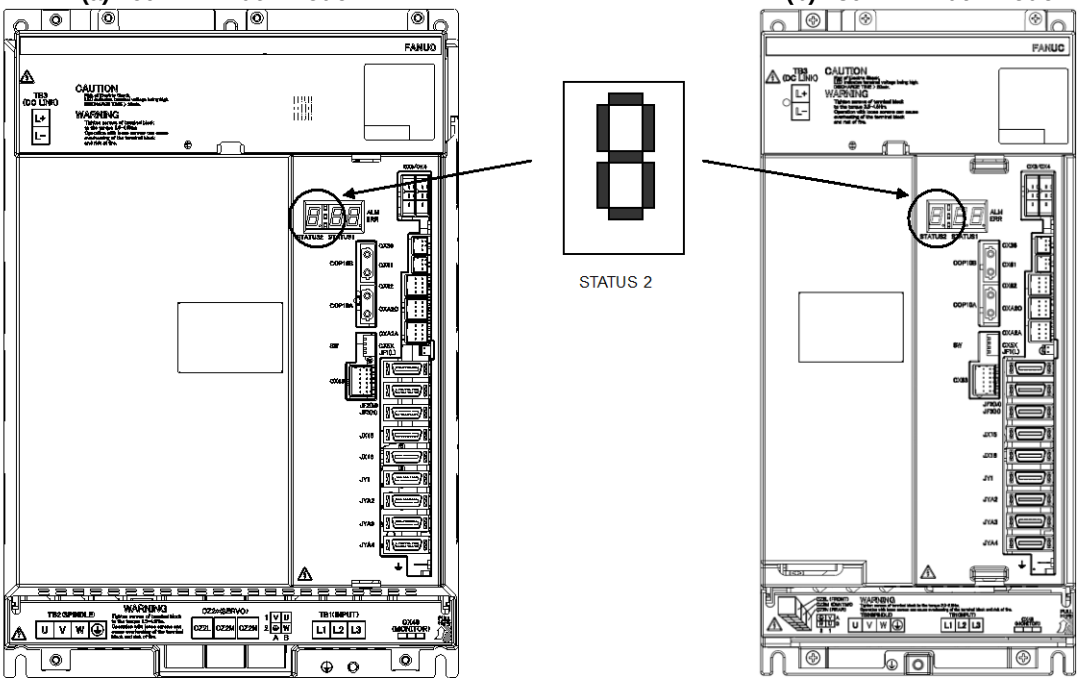

STATUS 2 display	Description
Not displayed	The control power is not on, or the hardware is faulty. See Subsection 1.3.2, "Servo Amplifier" for details.
Alphanumeric On	During a period of approximately four seconds after the power is turned on, the information about the software series and edition is displayed in eight installments. Example) When the software series and edition are 9H00/01.0 9 → H → 0 → 0 → 0 → 1 → . → 0
- Blinking	The servo amplifier is conducting a self-diagnosis.
- On	Waiting for READY signal from CNC
0 Blinking	The insulation resistance is being measured.
0	The servo amplifier is ready.
Display 1~	Alarm status

4.4.2 V Ready-off Alarm Indicated on the CNC Screen

When the V ready-off alarm is indicated on the NC, check the items listed below.
If the following items turn out to have not caused V ready-off, check diagnosis information No. 358 (V ready-off information) on the diagnosis screen and report it to FANUC.

(1) Emergency stop signal (ESP)
Has the emergency stop signal (connector: CX4) applied to the βiSVSP-B been released? Alternatively, is the signal connected correctly?

(2) MCON signal
Has setting up the axis detach function disabled the transmission of the ready command signal MCON from the NC to the βiSVSP-B?

(3) βiSVSP-B control printed circuit board
The βiSVSP-B control printed circuit board may be poorly installed or faulty. Be sure to push the faceplate as far as it will go. If the problem persist, replace the control printed circuit board.

Checking diagnosis information (DGN) No. 358 makes it possible to analyze the cause of the V ready-off alarm.

Diagnosis	358	V ready-off information

Convert the displayed value to binary form, and check bits 5 to 14 of the resulting binary number.
When the servo amplifier starts working, these bits become 1 sequentially, starting at bit 5. When the servo amplifier has started normally, all of bits 5 to 14 become 1.
Check bits 5 to 14 sequentially, starting at the lowest-order bit. The first lowest bit that is not 0 corresponds to the processing that caused the V ready-off alarm.

#15	#14	#13	#12	#11	#10	#9	#8
	SRDY	DRDY	INTL	RLY	CRDY	MCOFF	MCONA
#7	#6	#5	#4	#3	#2	#1	#0
MCONS	*ESP	HRDY					

#06 (*ESP) : Emergency stop signal
#07, #08, #09 : MCON signal (NC→Amplifier→Converter)
#10 (CRDY) : Converter ready signal
#11 (RLY) : Relay signal (DB relay drive)
#12 (INTL) : Interlock signal (DB relay cancellation status)
#13 (DRDY) : Amplifier ready signal

The following table lists the values of diagnosis No. 358 and the main causes of problems. Do not insert or remove any connectors when the power is on.

Diagnosis No. 358 value	Problem	Check item
417	The system is still in an emergency stop state.	(1) Check whether the emergency stop signal input to CX4 of the βiSVSP-B has been released. (2) Check if there is a problem with the connection or cable for the communication interface between the amplifiers. (3) Replace the servo amplifier.
993	The βiSVSP-B (Power Supply) preparation completed signal (CRDY) is not output.	(1) Check whether there is no problem with the connection or cable for communication (CXA2A/C) between the amplifiers. (2) Check whether the input power is supplied. (3) Check whether the power is supplied to the operation coil of the magnetic contactor. Check if there is a problem with the connection of CX3 of the Power Supply. (4) Replace the servo amplifier.

Diagnosis No. 358 value	Problem	Check item
4065	The interlock signal is not input.	Replace the servo amplifier.
225	-	Replace the servo amplifier.
481	-	Replace the servo amplifier.
2017	-	Replace the servo amplifier.
8161	-	Replace the servo amplifier.
97	-	Check whether the axis detach function is set.

4.4.3 Method for Observing Motor Current

This subsection explains how to observe the current that flows through the servo motor.

(1) Method of using the SERVO GUIDE

Refer to online help for information about how to connect to and use the servo adjustment tool "SERVO GUIDE" and applicable CNC systems.

Setting

Select an axis to be subjected to measurement in graph window channel setting. Also select IR and IS under Kind. Under Coef (conversion coefficient), set the maximum allowable current (Ap) for the amplifier in use.

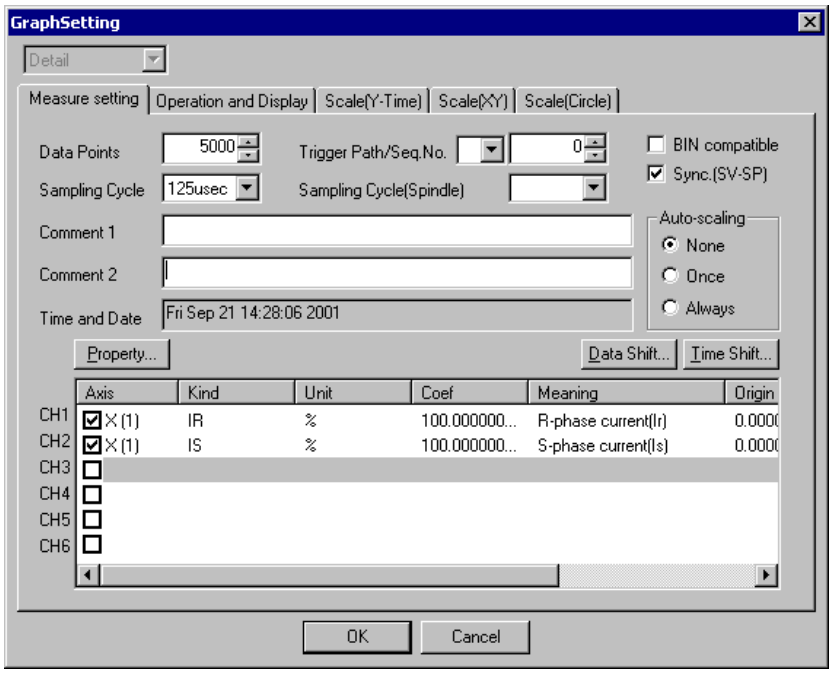

NOTE
The motor current sampling cycle depends on the current control cycle.

Display

Select the XTYT mode from the graph window mode (M) menu to display waveforms.

VI. TROUBLESHOOTING FOR β*i*SVSP-B

1 OVERVIEW

This part describes the troubleshooting procedure. Read the section related to your current trouble to locate it and take an appropriate action.

First, check the alarm number (indicated by the CNC), STATUS 1 display, and STATUS 2 display while referring to Chapter 2, "ALARM NUMBERS AND BRIEF DESCRIPTIONS" to find the cause.

Then, take an appropriate action according to the corresponding description in Chapter 3, "TROUBLESHOOTING AND ACTION."

2 ALARM NUMBERS AND BRIEF DESCRIPTIONS

2.1 SERVO ALARM

Alarm No.	LED display SV	Description
SV0001		SYNC ALIGNMENT ERROR
SV0002		SYNC EXCESS ERROR ALARM 2
SV0003		SYNCHRONOUS/COMPOSITE/SUPERIMPOSED CONTROL MODE CAN'T BE CONTINUED
SV0004		EXCESS ERROR (G31)
SV0005		SYNC EXCESS ERROR (MCN)
SV0006		ILLEGAL TANDEM AXIS
SV0007		SV ALM ANOTHER PATH(MULTI AMP.)
SV0010		SV OVERHEAT
SV0011		SV MOTOR OVER CURRENT(SOFT)
SV0012	4	SV DRIVE OFF CIRCUIT FAILURE
SV0013	3	SV CPU BUS FAILURE
SV0014	J	SV CPU WATCH DOG
SV0015	2 (Blinking)	SV LOW VOLT DRIVER
SV0016	b. C. d.	SV CURRENT DETECT ERROR
SV0017	11	SV INTERNAL SERIAL BUS FAILURE
SV0018	11 (Blinking)	SV ROM DATA FAILURE
SV0019	b C d (Blinking)	SV GROUND FAULT
SV0024		PS SOFT THERMAL
SV0031		PS ILLEGAL PARAMETER
SV0032		PS CONTROL AXIS ERROR 1
SV0033		PS CONTROL AXIS ERROR 2
SV0034		PS HARDWARE ERROR
SV0035	-	SV NO FAILURE
SV0036	A (Blinking)	PHASE OPEN
SV0037	9 (Blinking)	FAILURE OF SV(OPEN)
SV0038	-	FAILURE OF CURRENT CTRL.
SV0039	8 (Blinking)	FAILURE OF SV(SHORT)
SV0040		PS EXT-COMP. ERROR
SV0041		PS PFB-R ERROR
SV0042		PS PFB-C ERROR
SV0043		PS SUB MODULE ERROR
SV0044		MISMATCHED FUNCTION CODE

Alarm No.	LED display SV	Description
SV0301		APC ALARM: COMMUNICATION ERROR
SV0302		APC ALARM: OVER TIME ERROR
SV0303		APC ALARM: FRAMING ERROR
SV0304		APC ALARM: PARITY ERROR
SV0305		APC ALARM: PULSE ERROR
SV0306		APC ALARM: OVER FLOW ERROR
SV0307		APC ALARM: MOVEMENT EXCESS ERROR
SV0360		ABNORMAL CHECKSUM (INT)
SV0361		ABNORMAL PHASE DATA (INT)
SV0363		ABNORMAL CLOCK (INT)
SV0364		SOFT PHASE ALARM (INT)
SV0365		LED ERROR (INT)
SV0366		PULSE MISS (INT)
SV0367		COUNT MISS (INT)
SV0368		SERIAL DATA ERROR (INT)
SV0369		DATA TRANS. ERROR (INT)
SV0380		LED ERROR (EXT)
SV0381		ABNORMAL PHASE (EXT)
SV0382		COUNT MISS (EXT)
SV0383		PULSE MISS (EXT)
SV0384		SOFT PHASE ALARM (EXT)
SV0385		SERIAL DATA ERROR (EXT)
SV0386		DATA TRANS. ERROR (EXT)
SV0387		ABNORMAL ENCODER (EXT)
SV0401		IMPROPER V_READY OFF
SV0403		CARD/SOFT MISMATCH
SV0404		IMPROPER V_READY ON
SV0407		EXCESS ERROR
SV0409		DETECT ABNORMAL TORQUE
SV0410		EXCESS ERROR (STOP)
SV0411		EXCESS ERROR (MOVING)
SV0413		LSI OVERFLOW
SV0415		MOTION VALUE OVERFLOW
SV0417		ILL DGTL SERVO PARAMETER
SV0420		SYNC TORQUE EXCESS
SV0421		EXCESS ERROR (SEMI-FULL)
SV0422		EXCESS VELOCITY IN TORQUE
SV0423		EXCESS ERROR IN TORQUE
SV0430		SV MOTOR OVERHEAT
SV0431		PS OVERLOAD
SV0432		PS LOW VOLT. CONTROL
SV0433		PS LOW VOLT. DC LINK
SV0434	2	SV LOW VOLT CONTROL
SV0435	5	SV LOW VOLT DC LINK
SV0436		SOFT THERMAL (OVC)
SV0437		PS OVERCURRENT
SV0438	b C d	SV ABNORMAL CURRENT
SV0439		PS OVER VOLT. DC LINK

Alarm No.	LED display SV	Description
SV0441		ABNORMAL CURRENT OFFSET
SV0442		PS PRE-CHARGE FAILURE
SV0443		PS INTERNAL FAN FAILURE
SV0444	1	SV INTERNAL FAN FAILURE
SV0445		SOFT DISCONNECT ALARM
SV0446		HARD DISCONNECT ALARM
SV0447		HARD DISCONNECT (EXT)
SV0448		UNMATCHED FEEDBACK ALARM
SV0449	8. 9. A.	SV IPM ALARM
SV0453		αSPC SOFT DISCONNECT ALARM
SV0454		ILLEGAL ROTOR POS DETECT
SV0456		ILLEGAL CURRENT LOOP
SV0458		CURRENT LOOP ERROR
SV0459		HI HRV SETTING ERROR
SV0460		FSSB DISCONNECT
SV0462		SEND CNC DATA FAILED
SV0463		SEND SLAVE DATA FAILED
SV0465		READ ID DATA FAILED
SV0466		MOTOR/AMP. COMBINATION
SV0468		HI HRV SETTING ERROR (AMP)
SV0474		EXCESS ERROR (STOP:SV)
SV0475		EXCESS ERROR (MOVE:SV)
SV0476		ILLEGAL SPEED CMD. (SV)
SV0477		ILLEGAL MACHINE POS. (SV)
SV0478		ILLEGAL AXIS DATA (SV)
SV0481		SAFETY PARAM ERROR (SV)
SV0484		SAFETY FUNCTION ERROR (SV)
SV0488		SELF TEST OVER TIME
SV0489		SAFETY PARAM ERROR (CNC)
SV0490		SAFETY FUNCTION ERROR (CNC)
SV0494		ILLEGAL SPEED CMD. (CNC)
SV0496		ILLEGAL AXIS DATA (CNC)
SV0498		AXIS NUMBER NOT SET (CNC)
SV0600	8	SV DC LINK OVER CURRENT
SV0601	F	SV EXTERNAL FAN FAILURE
SV0602	6	SV RADIATOR OVERHEAT
SV0603	8. 9. A.	INV. IPM ALARM (OH)
SV0604	P	AMP COMMUNICATION ERROR
SV0606		PS EXTERNAL FAN FAILURE
SV0607		PS IMPROPER INPUT POWER
SV0646		ABNORMAL ANALOG SIGNAL (EXT)
SV0652		TEMP.ERROR
SV0654	7	DB RELAY FAILURE
SV1025		V_READY ON (INITIALIZING)
SV1026		ILLEGAL AXIS ARRANGE
SV1055		ILLEGAL TANDEM AXIS
SV1067		FSSB:CONFIGURATION ERROR (SOFT)

Alarm No.	LED display SV	Description
SV1068		DUAL CHECK SAFETY ALARM
SV1069		EXCESS ERROR (SERVO OFF:CNC)
SV1070		EXCESS ERROR (SERVO OFF:SV)
SV1071		EXCESS ERROR (MOVE:CNC)
SV1072		EXCESS ERROR (STOP:CNC)
SV1100		S-COMP. VALUE OVERFLOW
SV5134		FSSB:OPEN READY TIME OUT
SV5136		FSSB:NUMBER OF AMP. IS INSUFFICIENT
SV5137		FSSB:CONFIGURATION ERROR
SV5139		FSSB:ERROR
SV5197		FSSB:OPEN TIME OUT
SV5311		FSSB:ILLEGAL CONNECTION

2.2 SPINDLE ALARM

Alarm No.	LED display SP	Description
SP9001	01	MOTOR OVERHEAT
SP9002	02	VELOCITY ERROR EXCESS
SP9003	03	DC-LINK FUSE IS BROKEN
SP9004	04	PS IMPROPER INPUT POWER
SP9006	06	TEMP. SENSOR DISCONNECTED
SP9007	07	OVER SPEED
SP9009	09	OVERHEAT MAIN CIRCUIT
SP9010	10	LOW INPUT POWER VOLT
SP9011	11	PS OVER VOLT. DC LINK
SP9012	12	OVERCURRENT POWER CIRCUIT
	13	CPU DATA MEMORY FAULT
SP9014	14	AMPLIFIER ID NOT REGISTERED
SP9015	15	SPINDLE/OUTPUT SWITCHING ALARM
SP9016	16	RAM ERROR
SP9017	17	AMPLIFIER ID DATA ERROR
	18	SUMCHECK ERROR PROGRAM ROM
SP9019	19	EXCESS OFFSET CURRENT U
SP9020	20	EXCESS OFFSET CURRENT V
SP9021	21	INCORRECT POS SENSOR POLARITY SETTING
SP9022	22	SP AMP OVER CURRENT
	24	SERIAL TRANSFER DATA ERROR
SP9027	27	DISCONNECT POSITION CODER
SP9029	29	SHORT-PERIOD OVERLOAD
SP9030	30	PS OVERCURRENT
SP9031	31	MOTOR LOCK
SP9032	32	SIC-LSI RAM FAULT
SP9033	33	PS PRE-CHARGE FAILURE
SP9034	34	ILLEGAL PARAMETER
SP9036	36	OVERFLOW ERROR COUNTER
SP9037	37	ILLEGAL SETTING VELOCITY DETECTOR
SP9041	41	ILLEGAL 1REV SIGN OF POSITION CODER
SP9042	42	NO 1REV SIGN OF POSITION CODER
SP9043	43	DISCONNECT POSITION CODER DEF. SPEED
SP9046	46	ILLEGAL 1REV SIGN OF SCREW CUT
SP9047	47	POSITION CODER SIGNAL ERROR
SP9049	49	DEF. SPEED IS OVER VALUE

Alarm No.	LED display SP	Description
SP9050	50	EXCESSIVE SPEED COMMAND CALCULATION VALUE DURING SPINDLE SYNCHRONOUS CONTROL
SP9051	51	PS LOW VOLT. DC LINK
SP9052	52	ITP FAULT 1
SP9053	53	ITP FAULT 2
SP9054	54	CURRENT OVERLOAD ALARM
SP9055	55	ABNORMAL SWITCHING STATUS OF POWER LEADS
SP9056	56	COOLING FAN FAILURE
SP9058	58	PS OVERLOAD
SP9059	59	PS INTERNAL FAN FAILURE
SP9061	61	SEMI-FULL ERROR EXCESS
SP9065	65	SERIAL SPINDLE ALARM
SP9066	66	COMMUNICATION ALARM BETWEEN SPINDLE AND AMPLIFIER
SP9067	67	FSC/EGB COMMAND ERROR
SP9068	68	ILLEGAL SPINDLE PARAMETER Note) For details on the error, see the status error number in the diagnosis number No. 710 and Subsection 4.3.3, "Status Error Indication Function" in Part V.
SP9069	69	SAFETY SPEED EXCEEDED
SP9070	70	ABNORMAL AXIS DATA
SP9071	71	SAFETY PARAM ERROR
SP9072	72	MOTOR SPEED MISMATCH
SP9073	73	MOTOR SENSOR DISCONNECTED
SP9074	74	CPU TEST ERROR
SP9075	75	CRC ERROR
SP9076	76	SAFETY FUNCTION NOT EXECUTED
SP9077	77	AXIS NO. MISMATCH
SP9078	78	SAFETY PARAM MISMATCH
SP9079	79	INITIAL TEST OPERATION ERROR
SP9080	80	ALARM AT THE OTHER SP AMP.
SP9081	81	1-ROT MOTOR SENSOR ERROR
SP9082	82	NO 1-ROT MOTOR SENSOR
SP9083	83	MOTOR SENSOR SIGNAL ERROR
SP9084	84	SPNDL SENSOR DISCONNECTED
SP9085	85	1-ROT SPNDL SENSOR ERROR
SP9086	86	NO 1-ROT SPNDL SENSOR
SP9087	87	SPNDL SENSOR SIGNAL ERROR
SP9088	88	EXTERNAL FAN FAILURE
SP9089	89	SUB MODULE SM (SSM) ERROR
SP9090	90	UNEXPECTED ROTATION ALARM
SP9091	91	POLE POSITION COUNT MISS
SP9092	92	OVER SPEED TO VELOCITY COMMAND
	A	PROGRAM ROM ERROR
	A1	PROGRAM ROM ERROR
	A2	PROGRAM ROM ERROR
SP9110	b0	AMP COMMUNICATION ERROR
SP9111	b1	PS LOW VOLT. CONTROL
SP9113	b3	PS EXTERNAL FAN FAILURE
SP9114	b4	PS CONTROL AXIS ERROR 1
SP9115	b5	PS CONTROL AXIS ERROR 2
SP9120	C0	COMMUNICATION DATA ALARM
SP9121	C1	COMMUNICATION DATA ALARM
SP9122	C2	COMMUNICATION DATA ALARM
SP9123	C3	SPINDLE SWITCH CIRCUIT ERROR
SP9124	C4	LEARNING CTRL ROTATION CMD ERROR
SP9125	C5	LEARNING CTRL COMP ORDER ERROR

Alarm No.	LED display SP	Description
SP9127	C7	INVALID LEARNING CYCLE
SP9128	C8	SP SYNC VELOCITY ERROR EXCESS
SP9129	C9	SP SYNC POSITION ERROR EXCESS
SP9130	d0	SPEED POLARITY ERROR IN TORQUE TANDEM OPERATION
SP9131	d1	SPNDL ADJUSTMENT FUNCTION ALARM
SP9132	d2	SER.SENSOR DATA ERROR
SP9133	d3	SER.SENSOR TRANSFER ERROR
SP9134	d4	SER.SENSOR SOFT PHASE ERROR
SP9137	d7	SP DEVICE COMMUNICATION ERROR
SP9138	d8	CURRENT LIMIT SETTING ERROR
SP9139	d9	SER.SENSOR PULSE MISS
SP9140	E0	SER.SENSOR COUNT MISS
SP9141	E1	NO 1-ROT SERIAL SENSOR
SP9142	E2	SER.SENSOR ABNORMAL
SP9143	E3	CS HIGH SPEED CHANGE CMD ERROR
SP9144	E4	CURRENT DETECT CIRCUIT ERROR
SP9145	E5	LOW VOLTAGE DRIVER
SP9148	E8	AXIS NUMBER NOT SET
SP9153	F3	SP NO FAILURE
SP9154	F4	PHASE OPEN
SP9155	F5	FAILURE OF SP (OPEN)
SP9156	F6	FAILURE OF CURRENT CTRL.
SP9157	F7	FAILURE OF SP (SHORT)
SP9158	F8	MODE MISMATCH (DCS)
SP9159	F9	MISMATCHED FUNCTION CODE
SP9160	G0	THERMISTOR DISCONNECTION
SP9161	G1	POW. CABLE SHORT CIRCUIT
SP9162	G2	DELAY OF SP POS. DATA
SP9163	G3	ILLEGAL SP POS. DATA
SP9164	G4	FAILURE OF MASTER SENSOR
SP9165	G5	CONTROL METHOD CHANGED
SP9166	G6	SPINDLE SYNC FUNCTION FOR GUIDE BUSH: SYNC EXCESS ERROR
SP9167	G7	SPINDLE CTRL SEQUENCE ERROR Note) For details on the error, see the status error number in the diagnosis number No. 710 and Subsection 4.3.3, "Status Error Indication Function" in Part V.
SP9168	G8	CONNECTION ERROR BETWEEN SP AND MOTOR
SP9169	G9	DRIVE OFF CIRCUIT FAILURE (STO)
SP9170	H0	EXCESS ERROR AT SPINDLE STOP (SMART RIGID TAP)
	UU	FSSB MASTER PORT WIRE BREAK
	LL	FSSB SLAVE PORT WIRE BREAK
SP0756		ABNORMAL AXIS DATA
SP9204	M4	PS SOFT THERMAL
SP9211	L1	PS ILLEGAL PARAMETER
SP9212	L2	PS HARDWARE ERROR
SP9213	L3	PS EXT-COMP. ERROR
SP9214	L4	PS PFB-R ERROR
SP9215	L5	PS PFB-C ERROR
SP9216	L6	PS SUB MODULE ERROR

3 TROUBLESHOOTING AND ACTION

3.1 TROUBLESHOOTING PROCEDURES

3.1.1 Troubleshooting Procedure

The smart trouble shooting function is available for the combination of the 30*i*-B or 0*i*-F series CNC and the β*i*SVSP-B series servo amplifier. The function analyzes causes of alarms and shows how to remove them.
If an alarm occurs, switch from the CNC screen to the trouble diagnosis guidance screen and remove the cause of the alarm according to what is displayed on the screen.

⇒ 3.2 TROUBLE DIAGNOSIS FUNCTION
⇒ 3.2.1 Trouble Diagnosis Guidance

IMPORTANT
To use the trouble diagnosis guidance requires keeping the trouble diagnosis monitor in the "SAMPLING" state. For details on the operation for switching the state to the "SAMPLING" state, see Subsection 3.2.3, "How to Switch the Trouble Diagnosis Guidance and Trouble Diagnosis Monitor to the 'SAMPLING' State."

The servo amplifier-related data acquired before and at the time of alarm occurrence (concerning the power supply, motor current, and detector) is sent to the CNC. This data can be used for troubleshooting.

⇒ 3.2.2 Trouble Diagnosis Monitor

IMPORTANT
The trouble diagnosis monitor can be in either of the following two states: "SAMPLING" and "LATCHED."
To monitor data of new alarms, perform the "CLEAR" operation. To save the status observed when alarms were issued in the past, do not perform the "CLEAR" operation. For details on the operation, see Subsection 3.2.3, "How to Switch the Trouble Diagnosis Guidance and Trouble Diagnosis Monitor to the 'SAMPLING' State."

For a list of servo-related CNC alarm numbers and that of LED display numbers on the servo amplifier, see Chapter 2, "ALARM NUMBERS AND BRIEF DESCRIPTIONS."

NOTE
Depending on the content of a failure, it may be difficult to analyze its cause correctly by using the smart trouble shooting function alone. In such a case, check the alarm number, the program associated with the alarm, and the procedure being performed, and contact your FANUC service representative.

3.2 TROUBLE DIAGNOSIS FUNCTION

The 30*i*-B series CNC and 0*i*-F series CNC have a trouble diagnosis function, which allows you to check diagnostic information usefully for determining the status when a servo, spindle, or CNC alarm is issued, on the CNC screen.

The trouble diagnosis function has the following main features:

- "TROUBLE DGN. GUIDANCE screen": Allows you to determine the cause of an alarm according to the trouble diagnosis flow.
- "TROUBLE DGN. MONITOR screen": Allows you to latch data when an alarm is issued as well as monitor the status of servo and spindle amplifiers during normal operation.
- "TROUBLE DGN. GRAPHIC screen": Can display waveforms when a servo or spindle alarm is issued.

Among these features, the TROUBLE DGN. GUIDANCE screen can be used to determine the cause of an alarm and the action to be taken for it for a short time, which can be expected to reduce the down time of the machines.

The following figure shows a sample display of the TROUBLE DGN. GUIDANCE screen.

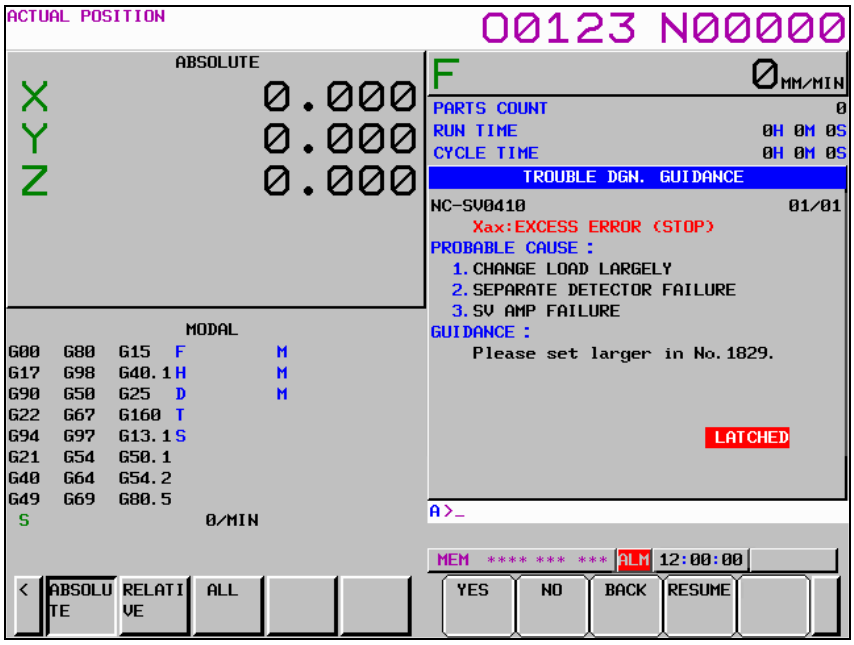

TROUBLE DGN. GUIDANCE screen

As the trouble diagnosis guidance, the trouble diagnosis function executes a diagnosis flow for determining the cause of an alarm. In most steps, the function automatically makes a decision based on information available in the CNC, but it may ask a question on the GUIDANCE screen in some cases. Press soft key [YES] or [NO] in response to the question to proceed to the next step in the guidance flow.

NOTE

- The most possible cause(s) and action to be taken based on obtained information are displayed as the cause(s) and guidance (action to be taken). Before any replacement, make a double check using another method (for example, detecting insulation resistance or checking conductivity).
- If the result of the diagnosis is "Failure in the amplifier" for the "SV ABNORMAL CURRENT" alarm (SV438), "OVERCURRENT POWER CIRCUIT" alarm (SP9012), or "SV IPM ALARM" (SV449), check the connection and ground insulation between the power cable and motor before replacing the amplifier.
- If the result of the diagnosis is "Short-circuit on the power cable or motor winding" for the "SV ABNORMAL CURRENT" alarm (SV438), "OVERCURRENT POWER CIRCUIT" alarm (SP9012), or "SV IPM ALARM" (SV449), check the ground insulation between the power cable and motor as well.

3.2.1 Trouble Diagnosis Guidance

IMPORTANT

To use the trouble diagnosis guidance requires keeping the trouble diagnosis monitor in the "SAMPLING" state. For details on the operation for switching the state to the "SAMPLING" state, see Subsection 3.2.3, "How to Switch the Trouble Diagnosis Guidance and Trouble Diagnosis Monitor to the 'SAMPLING' State."

Examples of determining the cause of an alarm using the trouble diagnosis guidance are shown below using diagnosis of SV0411, "EXCESS ERROR (MOVING)" and SV0449, "SV IPM ALARM."

Example 1) When SV0411, "EXCESS ERROR (MOVING)" is issued

(1) When this alarm is issued, perform the following steps to display the TROUBLE DGN. GUIDANCE screen:

<1> When the ALARM MESSAGE screen is not displayed, press the Message key.
<2> Press the continuous menu key [>] until soft key [GUIDE] appears.
<3> Press the soft key [GUIDE].

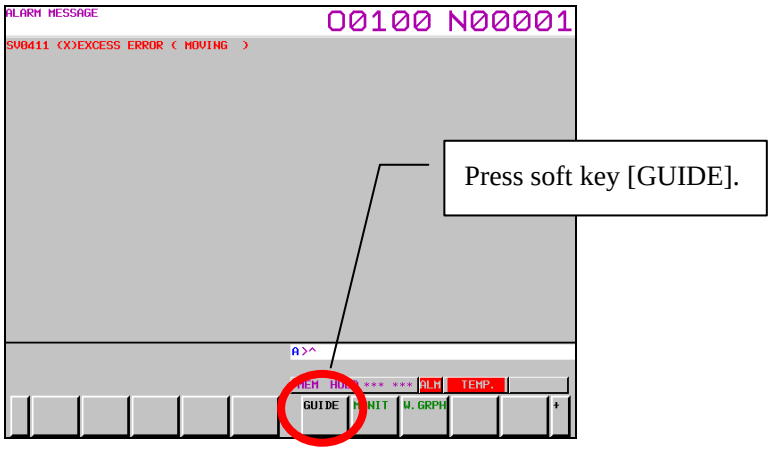

(2) Possible causes of the alarm, "EXCESS ERROR (MOVING)" are:

- Failure in the amplifier
- Short-circuit on the power cable or motor winding
- Disconnected power cable or motor winding
- Malfunction of the servo-off signal
- Large load change
- Failure in the brake
- Commanded speed exceeding the specification

As the trouble diagnosis guidance, the trouble diagnosis function executes a diagnosis flow for determining the cause of an alarm. In most steps, the function automatically makes a decision based on information available in the NC, but it may ask a question on the GUIDANCE screen in some cases. Press soft key [YES] or [NO] in response to the question to proceed to the next step in the guidance flow.

Example) When the disconnected power cable causes the alarm, "EXCESS ERROR (MOVING)" to be issued

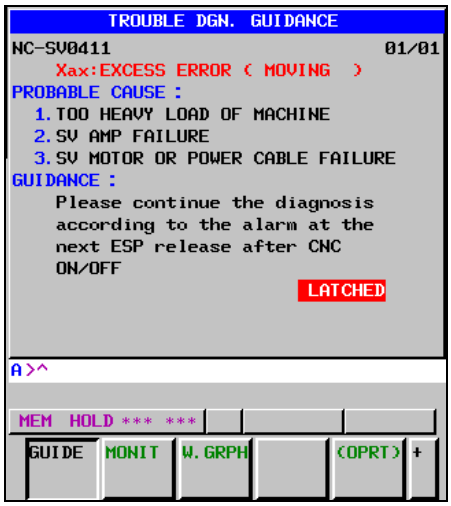

When soft key [GUIDE] is pressed, the message shown at left is displayed. The guidance shows an instruction to "turn the power off." The function performs a self-diagnosis to check the servo amplifier for a failure when the power to the CNC is turned off, then on again.

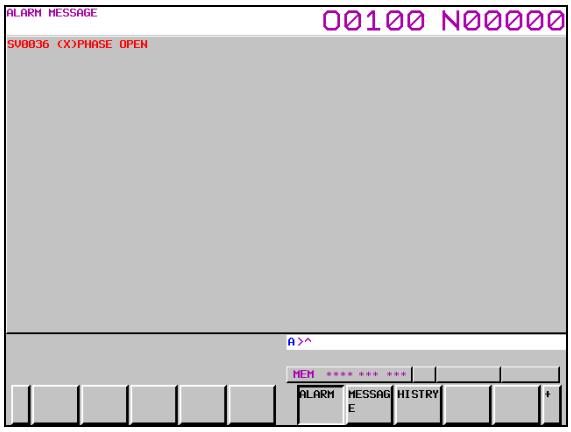

The function performs a self-diagnosis immediately after power on of the CNC. Then, the PHASE OPEN alarm is issued. Press the soft key [GUIDE] again to display the TROUBLE DGN. GUIDANCE screen.

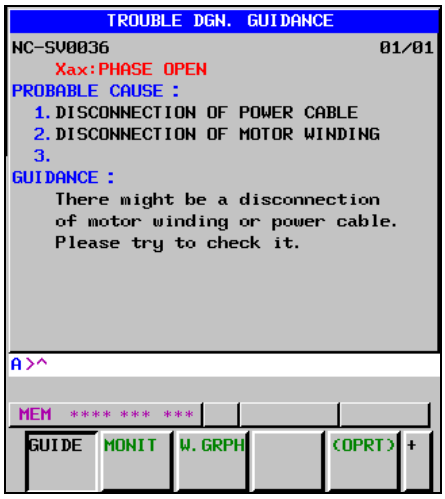

On the TROUBLE DGN. GUIDANCE screen, a message appears, which indicates that a possible cause is the disconnected power cable or motor winding.

Take action according to the instruction in the message.

Example 2) When SV0449, "SV IPM ALARM" is issued

(1) When this alarm is issued, perform the following steps to display the TROUBLE DGN. GUIDANCE screen:

<1> When the ALARM MESSAGE screen is not displayed, press the Message key.

<2> Press the continuous menu key [>] until soft key [GUIDE] appears.

<3> Press the soft key [GUIDE].

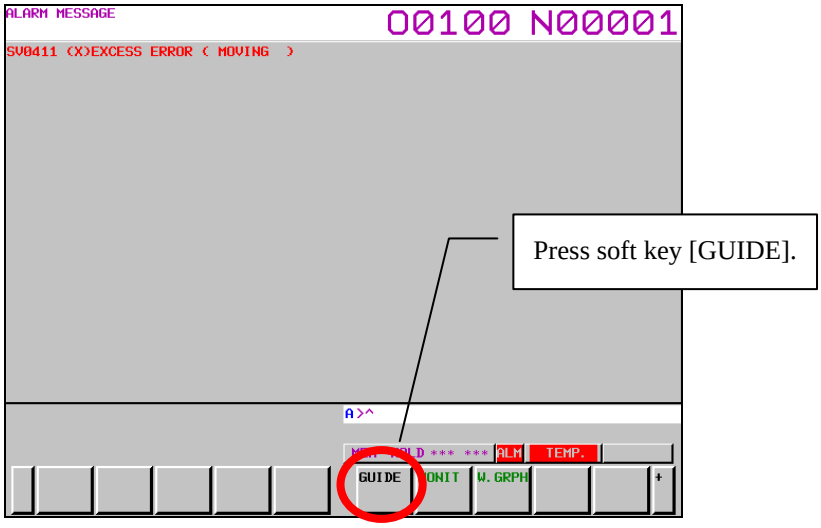

(2) Possible causes of the alarm, "SV IPM ALARM" are:

- Failure in the amplifier
- Short-circuit on the power cable or motor winding
- Disconnected power cable or motor winding
- Current control disturbance

As the trouble diagnosis guidance, the trouble diagnosis function executes a diagnosis flow for determining the cause of an alarm. In most steps, the function automatically makes a decision based on information available in the NC, but it may ask a question on the GUIDANCE screen in some cases. Press soft key [YES] or [NO] in response to the question to proceed to the next step in the guidance flow.

Example) Example of the IPM alarm resulting from a short-circuited power cable

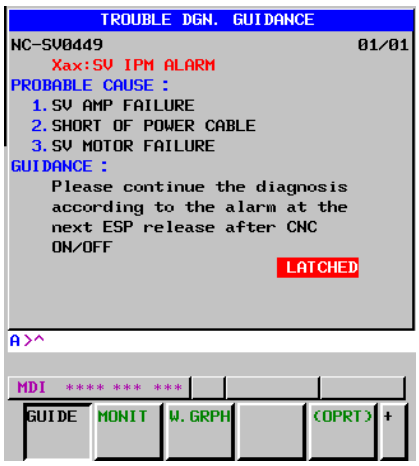

When soft key [GUIDE] is pressed, the message shown at left is displayed. The guidance shows an instruction to "turn the power off." The function performs a self-diagnosis to check the servo amplifier for a failure when the power to the CNC is turned off, then on again.

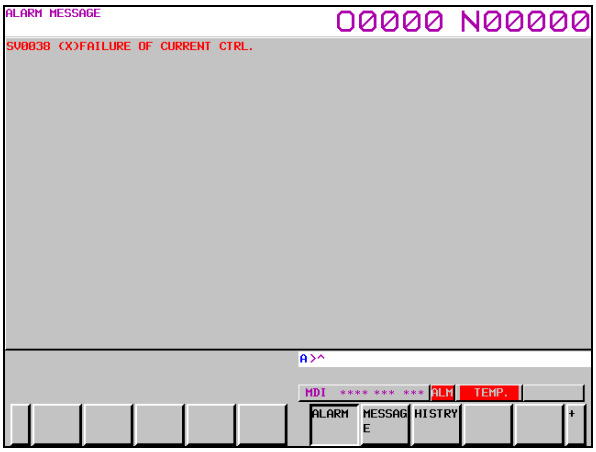

Self-diagnosis was conducted immediately after the servo amplifier was turned on, and the "FAILURE OF CURRENT CTL" alarm occurred. The trouble diagnosis guidance screen is displayed again.

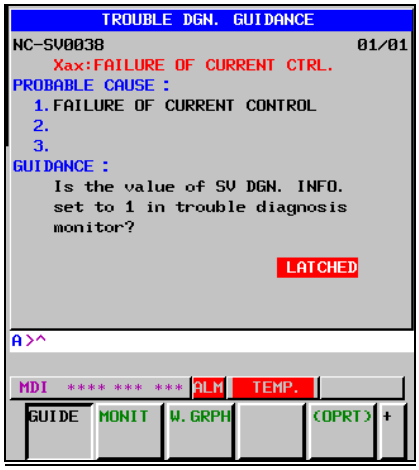

The guidance displays "Is the value of SV DGN. INFO. set to 1 in trouble diagnosis monitor." See the trouble diagnosis monitor screen.

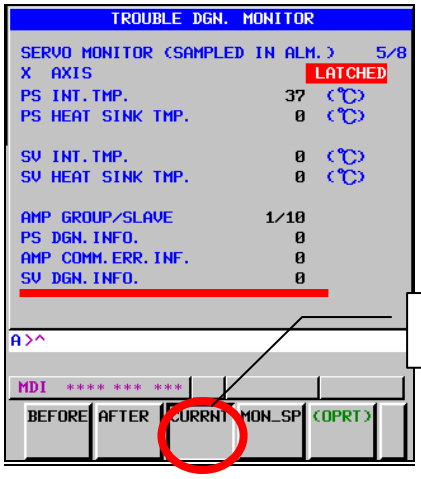

Display the trouble diagnosis monitor screen, go to the page containing the item "SV DNG. INFO.," and then press the "CURRENT" button.

Press [Current].

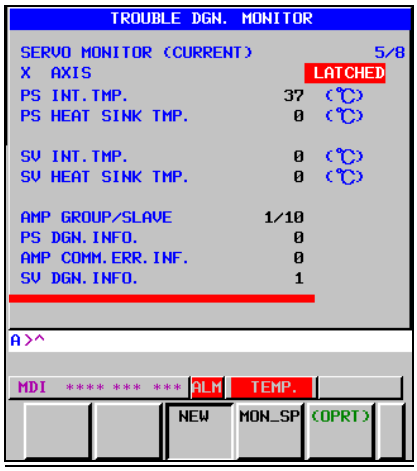

Check the value of "SV DNG INFO.," which is either "0" or "1."
"1" means that a short-circuited power cable or motor winding was detected during the servo amplifier self-diagnosis.

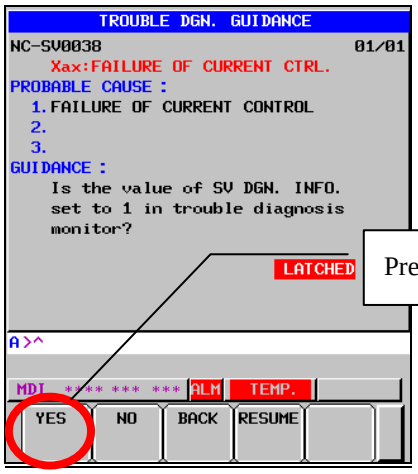

Display the trouble diagnosis guidance screen, and press "YES."

Press [YES].

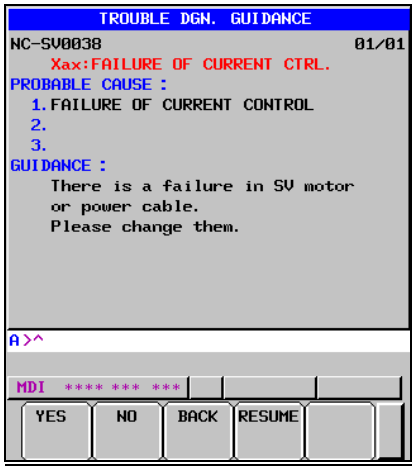

The guidance suggests a possibility of a short-circuited power cable or motor winding.
Take action according to the instruction in the message.

3.2.2 Trouble Diagnosis Monitor

IMPORTANT

The trouble diagnosis monitor can be in either of the following two states: "SAMPLING" and "LATCHED."
To monitor data of new alarms, perform the "CLEAR" operation. To save the status observed when alarms were issued in the past, do not perform the "CLEAR" operation. For details on the operation, see Subsection 3.2.3.

The trouble diagnosis monitor can display the information described below.
The procedures to display the TROUBLE DGN. MONITOR screen are below,

- Press the Message key to display the ALARM MESSAGE screen.
- Press the continuous menu key [>] until the soft key [MONITOR] appears.
- Press the soft key [MONITOR] to display the TROUBLE DGN. MONITOR screen.

How to check the data at an alarm or just before an alarm

On the TROUBLE DGN. MONITOR screen, the following items can be seen:

- Current data
- Data at an alarm
- Data just before an alarm during several sampling cycles

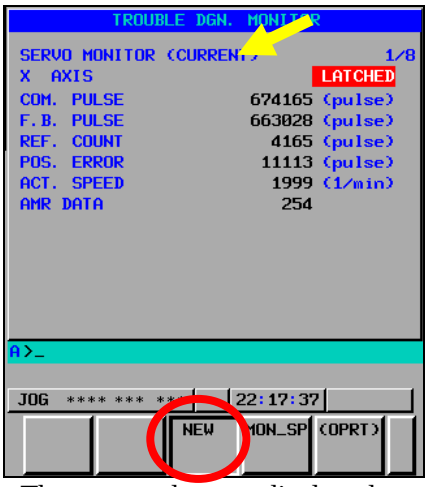

The current data are displayed.

When an alarm is issued and the soft key [NEW] is pressed

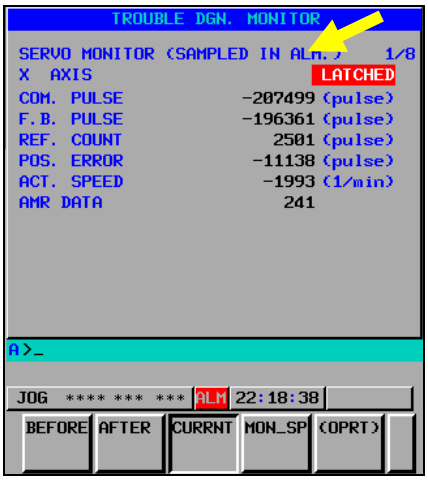

The data at the alarm are displayed.

By pressing the soft key [BEFORE], the data up to five sampling cycles before the alarm can be displayed.

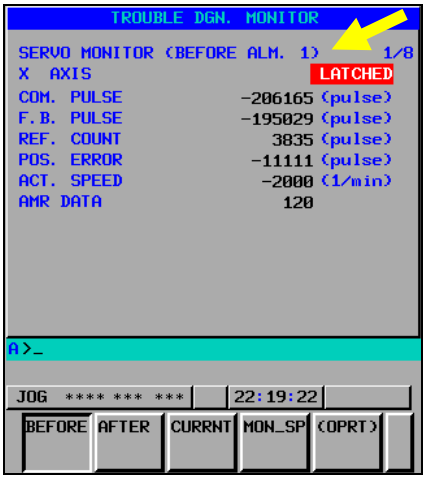

The data just one sampling cycle before are displayed.

Details of monitor screens related to servo amplifiers

```
TROUBLE DGN. MONITOR
SERVO MONITOR (SAMPLED IN ALM.)    1/8
X  AXIS                        LATCHED
COM. PULSE              200166 (pulse)
F.B. PULSE                  -1 (pulse)
REF. COUNT                 166 (pulse)
POS. ERROR              200166 (pulse)
ACT. SPEED                   0 (1/min)
AMR DATA                   248
```

```
TROUBLE DGN. MONITOR
SERVO MONITOR (SAMPLED IN ALM.)    2/8
X  AXIS                        LATCHED
TORQUE CMD                  89   (%)
EFFECTIVE CURRENT            0   (%)
MOTOR CURRENT            0.000   (A)
DISTURBANCE LEVEL            0   (%)
HEAT SIMLT                   0   (%)

ARBITRARY DATA 1          6554
ARBITRARY DATA 2          6554
```

```
TROUBLE DGN. MONITOR
SERVO MONITOR (SAMPLED IN ALM.)    3/8
X  AXIS                        LATCHED
DC LINK VOLT.              294   (V)
PS VOLTAGE RMS             211 (Vrms)
PS VOLT.UMBALANCE          0.5   (%)
PS VOLTAGE THD             0.5   (%)
PS CURRENT                   0   (A)
PS STATUS FLAG1              0
PS STATUS FLAG2              0
PS STATUS FLAG3              0
PS STATUS FLAG4              0
PS INPUT FREQ             50.0  (Hz)
```

```
TROUBLE DGN. MONITOR
SERVO MONITOR (SAMPLED IN ALM.)    4/8
X  AXIS                        LATCHED
SV INS.INFO.                 0
SV INS.RESISTANCE          0.0  (MΩ)
```

```
TROUBLE DGN. MONITOR
SERVO MONITOR (SAMPLED IN ALM.)    5/8
X  AXIS                        LATCHED
PS INT.TMP.                 36  (℃)
PS HEAT SINK TMP.            0  (℃)

SV INT.TMP.                  0  (℃)
SV HEAT SINK TMP.            0  (℃)

AMP GROUP/SLAVE           1/10
PS DGN.INFO.                 0
AMP COMM.ERR.INF.            0
SV DGN.INFO.                 0
```

```
TROUBLE DGN. MONITOR
SERVO MONITOR (SAMPLED IN ALM.)    6/8
X  AXIS                        LATCHED
SV FSSB UPR.ERR.           0 0
SV FSSB LWR.ERR.           0 0
SV FSSB UPR.JTR.     6D74 3F00
SV FSSB LWR.JTR.     71B4 373E

SDU FSSB UPR.ERR.          0 0
SDU FSSB LWR.ERR.          0 0
SDU FSSB UPR.JTR.          0 0
SDU FSSB LWR.JTR.          0 0
```

```
TROUBLE DGN. MONITOR
SERVO MONITOR (SAMPLED IN ALM.)    7/8
X  AXIS                        LATCHED
INT.DTCT.INTP.CNT            0
INT.DTCT.COM.CNT             0
INT.DETECTOR WRN.            0
EXT.DTCT.INTP.CNT            0
EXT.DTCT.COM.CNT             0
EXT.DETECTOR WRN.            0
SV DATA1                     0
SV DATA2                     0
SV DATA3                     0
SV DATA4                     0
```

```
TROUBLE DGN. MONITOR
SERVO MONITOR (SAMPLED IN ALM.)    8/8
X  AXIS                        LATCHED
LAST LATCH DATE            04/06/08
LAST LATCH TIME            14:37:43
EXECUTED FILE NAME
                               0100
EXECUTED N-NUM.                   1
```

Data (unit)	Description	Display page No.
COM. PULSE (pulse)		1/8
F.B. PULSE (pulse)	(Note 3)	1/8
REF. COUNT (pulse)		1/8
POS. ERROR (pulse)		1/8
ACT. SPEED (1/min)		1/8
AMR DATA	Magnetic pole position data of the motor rotor (256/rotation in electrical angle)	1/8
TORQUE CMD (%)	(Maximum torque =100%)	2/8
EFFECTIVE CURRENT (%)	Maximum amplifier current =100%	2/8
MOTOR CURRENT (A)		2/8
DISTURBANCE LEVEL (%)	Alarm level when unexpected torque detection is used =100%	2/8
HEAT SIMLT (%)	Result of heat simulation (OVC alarm level =100%)	2/8
ARBITRARY DATA 1	(Note 2)	2/8
ARBITRARY DATA 2	(Note 2)	2/8
DC LINK VOLT. (V)	Instantaneous DC link voltage value (Note 3)	3/8
PS VOLTAGE RMS (Vrms)	Average PS input voltage value during one power cycle (Note 3)	3/8
PS VOLT. UMBALANCE (%)	Average PS input voltage value during one power cycle (Note 3)	3/8
PS VOLTAGE THD (%)	Average PS input voltage THD (Total Harmonic Distortion) during one power cycle (Note 3)	3/8
PS CURRENT (A)	Average current amplitude during one power cycle (Note 3)	3/8
PS STATUS FLAG1	(Note 4)	3/8
PS STATUS FLAG2	(Note 4)	3/8
PS STATUS FLAG3	(Note 4)	3/8
PS STATUS FLAG4	(Note 4)	3/8
PS INPUT FREQ (Hz)	Average frequency value during one power cycle (Note 3)	3/8
SV INS. INFO.	Status flag of the Insulation deterioration detection function	4/8
SV INS.RESISTANCE (MΩ)	Motor insulation resistance when the Insulation deterioration detection function is enabled (Note 3)	4/8
PS INT. TMP. (°C)	(Note 3)	4/8
PS HEAT SINK TMP. (°C)	(Note 3)	5/8
SV INT.TMP. (°C)	(Note 3)	5/8
SV HEAT SINK TMP. (°C)	(Note 3)	5/8
AMP GROUP/SLAVE	Group number and slave number for each Power Supply (PS)	5/8
PS DGN. INFO.	Power Supply (PS) alarm cause determination data for use by the trouble diagnosis function (Note 5)	5/8
AMP COMM. ERR. INF.	Error status flag of inter-amplifier communication	5/8
SV DGN. INFO.	Status flag of the servo amplifier (SV)	5/8
SV FSSB UPR. ERR.	(Note 6)	6/8
SV FSSB LWR. ERR.	(Note 6)	6/8
SV FSSB UPR. JTR.	(Note 6)	6/8
SV FSSB LWR. JTR.	(Note 6)	6/8
SDU FSSB UPR. ERR.	(Note 6)	6/8
SDU FSSB LWR. ERR.	(Note 6)	6/8
SDU FSSB UPR. JTR.	(Note 6)	6/8
SDU FSSB LWR. JTR.	(Note 6)	6/8
INT. DTCT. INTP. CNT	Number of disturbances of built-in sensor data due to noise (Number of data error detections)	7/8
INT. DTCT. COM. CNT	Number of disturbances of built-in sensor data due to noise (Number of communication errors)	7/8
INT. DETECTOR WRN.	Built-in sensor warning information	7/8

Data (unit)	Description	Display page No.
EXT. DTCT. INTP. CNT	Number of disturbances of separate sensor data due to noise (Number of data error detections)	7/8
EXT. DTCT. COM. CNT	Number of disturbances of separate sensor data due to noise (Number of communication errors)	7/8
EXT. DETECTOR WRN.	Separate sensor warning information	7/8
SV DATA1	(Note 2)	7/8
SV DATA2	(Note 2)	7/8
SV DATA3	(Note 2)	7/8
SV DATA4	(Note 2)	7/8
LAST LATCH DATE		8/8
LAST LATCH TIME		8/8
EXECUTED FILE NAME		8/8
EXECUTED N-NUM.		8/8

NOTE

1 The specified range in this list is just the range within which the monitor function can display data, and does not indicate the performance or rating of the system.
2 ARBITRARY DATA 1 and ARBITRARY DATA 2, and SV DATA1 to SV DATA4 are used by FANUC for maintenance.
3 The displayed values related to voltage, current, frequency, and temperature are approximate and contain some errors. If you require a precise value, measure the target item using a specific measurement instrument.
4 PS STATUS FLAG1 to PS STATUS FLAG4 are used by FANUC for maintenance.
5 The data is used by the trouble diagnosis function inside the CNC to automatically determine the alarm cause if an alarm is issued in a Power Supply (PS). To use this data, operate the system in the "SAMPLING" state, as indicated on the trouble monitor screen. If an alarm is issued in the "SAMPLING" state, the trouble diagnosis guidance presents the cause, by using this data.
6 FSSB error and jitter data items indicate the FSSB communication status and are used by FANUC for maintenance.

Details of monitor screens related to spindle amplifiers

```
TROUBLE DGN. MONITOR
SPINDLE MONIT (SAMPLED IN ALM.)    1/9
SPINDLE :S1                     LATCHED
OPERATION        SPEED CONTROL
GEAR/OUT SEL     1 / HIGH OUT
COMMAND PULSE                 0 (pulse)
COMMAND SPEED               500 (1/min)
CONTROL INPUT SFR  MRDY *ESP

CONTROL OUTPUTSAR
```

```
TROUBLE DGN. MONITOR
SPINDLE MONIT (SAMPLED IN ALM.)    2/9
SPINDLE :S1                     LATCHED
SPINDLE SPEED               496 (1/min)
ACT.MOTOR SPEED             496 (1/min)
LOAD METER                    0   (%)
TORQUE CMD                    0   (%)
MOTOR CURRENT             0.125   (A)
HEAT SIMU.(MOTOR)             0   (%)
HEAT SIMU.(AMP)               3   (%)
POS. ERROR                    0 (pulse)
SYN ERR                       0 (pulse)
```

```
TROUBLE DGN. MONITOR
SPINDLE MONIT (SAMPLED IN ALM.)    3/9
SPINDLE :S1                     LATCHED
DC LINK VOLT.               300   (V)
PS VOLTAGE RMS              212 (Vrms)
PS VOLT.UMBALANCE           0.5   (%)
PS VOLTAGE THD              0.5   (%)
PS CURRENT                    0   (A)
PS STATUS FLAG1               0
PS STATUS FLAG2               0
PS STATUS FLAG3               0
PS STATUS FLAG4               0
PS INPUT FREQ              50.0  (Hz)
```

```
TROUBLE DGN. MONITOR
SPINDLE MONIT (SAMPLED IN ALM.)    4/9
SPINDLE :S1                     LATCHED
SP INS.INFO.                  0
SP INS.RESISTANCE         100.0  (MΩ)
```

```
TROUBLE DGN. MONITOR
SPINDLE MONIT (SAMPLED IN ALM.)    5/9
SPINDLE :S1                     LATCHED
PS INT.TMP.                  34  (℃)
PS HEAT SINK TMP.             0  (℃)

SP INT.TMP.                  34  (℃)
SP HEAT SINK TMP.             0  (℃)

AMP GROUP/SLAVE            1/10
PS DGN.INFO.                  0
AMP COMM.ERR.INF.             0
SP DGN.INFO.                  0
```

```
TROUBLE DGN. MONITOR
SPINDLE MONIT (SAMPLED IN ALM.)    6/9
SPINDLE :S1                     LATCHED
SP FSSB UPR.ERR.            0 0
SP FSSB LWR.ERR.            0 0
SP FSSB UPR.JTR.     6476 4000
AMP FSSB LWR.JTR.    7A81 3E47
```

```
TROUBLE DGN. MONITOR
SPINDLE MONIT (SAMPLED IN ALM.)    7/9
SPINDLE :S1                     LATCHED
INT.A/B AMPLITUDE          0.00   (V)
INT.A/B MAX FLUCT             0   (%)
INT.A/B OFFSET A              0  (mV)
INT.A/B OFFSET B              0  (mV)
INT.A/B NOISE CNT             0
EXT.A/B AMPLITUDE          0.00   (V)
EXT.A/B MAX FLUCT             0   (%)
EXT.A/B OFFSET A              0  (mV)
EXT.A/B OFFSET B              0  (mV)
EXT.A/B NOISE CNT             0
```

```
TROUBLE DGN. MONITOR
SPINDLE MONIT (SAMPLED IN ALM.)    8/9
SPINDLE :S1                     LATCHED
INT.SRAL INTP.CNT             0
INT.SRAL COM.CNT              0
INT.SRAL WRN.                 0
EXT.SRAL INTP.CNT             0
EXT.SRAL COM.CNT              0
EXT.SRAL WRN.                 0
SP DATA1                      0
SP DATA2                      0
SP DATA3                      0
SP DATA4                      0
```

```
TROUBLE DGN. MONITOR
SPINDLE MONIT (SAMPLED IN ALM.)    9/9
SPINDLE :S1                     LATCHED
LAST LATCH DATE             12/12/14
LAST LATCH TIME             16:56:02
EXECUTED FILE NAME
                                   00
EXECUTED N-NUM.                     5
```

Data (unit)	Description	Display page No.
OPERATION		1/9
GEAR/OUT SEL		1/9
COMMAND PULSE (pulse)		1/9
COMMAND SPEED (1/min)	(Note 2)	1/9
CONTROL INPUT		1/9
CONTROL OUTPUT		1/9
SPINDLE SPEED (1/min)		2/9
ACT.MOTOR SPEED (1/min)	(Note 2)	2/9
LOAD METER (%)		2/9
TORQUE CMD (%)	(Maximum torque =100%)	2/9
MOTOR CURRENT (A)		2/9
HEAT SIMU.(MOTOR) (%)	Result of heat simulation (OVC alarm level =100%)	2/9
HEAT SIMU.(AMP) (%)	Result of heat simulation (OVC alarm level =100%)	2/9
POS. ERROR (pulse)		2/9
SYN ERR (pulse)		2/9
DC LINK VOLT. (V)	Instantaneous DC link voltage value (Note 3)	3/9
PS VOLTAGE RMS (Vrms)	Average PS input voltage value during one power cycle (Note 3)	3/9
PS VOLT. UMBALANCE (%)	Average PS input voltage value during one power cycle (Note 3)	3/9
PS VOLTAGE THD (%)	Average PS input voltage THD (Total Harmonic Distortion) during one power cycle (Note 3)	3/9
PS CURRENT (A)	Average current amplitude during one power cycle (Note 3)	3/9
PS STATUS FLAG1	(Note 5)	3/9
PS STATUS FLAG2	(Note 5)	3/9
PS STATUS FLAG3	(Note 5)	3/9
PS STATUS FLAG4	(Note 5)	3/9
PS INPUT FREQ (Hz)	Average frequency value during one power cycle	3/9
SP INS.INFO.	Status flag of the Insulation deterioration detection function	4/9
SP INS.RESISTANCE (MΩ)	Motor insulation resistance when the Insulation deterioration detection function is enabled (Note 3)	4/9
PS INT. TMP. (°C)	(Note 3)	5/9
PS HEAT SINK TMP. (°C)	(Note 3)	5/9
SP INT.TMP. (°C)	(Note 3)	5/9
SP HEAT SINK TMP. (°C)	(Note 3)	5/9
AMP GROUP/SLAVE	Group number and slave number for each Power Supply (PS)	5/9
PS DGN. INFO.	Status flag of the Power Supply (PS)	5/9
AMP COMM. ERR. INF.	Error status flag of inter-amplifier communication	5/9
SP DGN.INFO.	Status flag of the spindle amplifier (SP)	5/9
SP FSSB UPR.ERR.	(Note 6)	6/9
SP FSSB LWR.ERR.	(Note 6)	6/9
SP FSSB UPR.JTR.	(Note 6)	6/9
AMP FSSB LWR.JTR.	(Note 6)	6/9
INT.A/B AMPLITUDE (V)	Built-in analog sensor A/B phase signal amplitude	7/9
INT.A/B MAX FLUCT (%)	Maximum fluctuation rate of the built-in analog sensor A/B phase signal	7/9
INT.A/B OFFSET A (mV)	Phase A offset of the built-in analog sensor	7/9
INT.A/B OFFSET B(mV)	Phase B offset of the built-in analog sensor	7/9
INT.A/B NOISE CNT	Number of disturbances of built-in analog sensor data due to noise (Number of data error detections)	7/9
EXT.A/B AMPLITUDE (V)	Separated analog sensor A/B phase signal amplitude	7/9
EXT.A/B MAX FLUCT (%)	Maximum fluctuation rate of the separated analog sensor A/B phase signal	7/9
EXT.A/B OFFSET A(mV)	Phase A offset of the separated analog sensor	7/9
EXT.A/B OFFSET B(mV)	Phase B offset of the separated analog sensor	7/9

Data (unit)	Description	Display page No.
EXT.A/B NOISE CNT	Number of disturbances of separated analog sensor data due to noise (Number of data error detections)	7/9
INT.SRAL INTP.CNT	Number of disturbances of built-in serial sensor data due to noise (Number of data error detections)	8/9
INT.SRAL COM.CNT	Number of disturbances of built-in serial sensor data due to noise (Number of communication errors)	8/9
INT.SRAL WRN.	Built-in serial sensor warning information	8/9
EXT.SRAL INTP.CNT	Number of disturbances of separated serial sensor data due to noise (Number of data error detections)	8/9
EXT.SRAL COM.CNT	Number of disturbances of separated serial sensor data due to noise (Number of communication errors)	8/9
EXT.SRAL WRN.	Separated serial sensor warning information	8/9
SP DATA1	(Note 4)	8/9
SP DATA2	(Note 4)	8/9
SP DATA3	(Note 4)	8/9
SP DATA4	(Note 4)	8/9
LAST LATCH DATE		9/9
LAST LATCH TIME		9/9
EXECUTED FILE NAME		9/9
EXECUTED N-NUM.		9/9

NOTE

1 The specified range in this list is just the range within which the monitor function can display data, and does not indicate the performance or rating of the system.
2 To display COMMAND SPEED and ACT.MOTOR SPEED, set the parameters related to the maximum motor speed:
- No. 4020: Maximum motor speed of the main spindle
- No. 4196: Maximum motor speed of the sub-spindle (when the spindle switching function is used)

3 The displayed values related to voltage, current, frequency, and temperature are approximate and contain some errors. If you require a precise value, measure the target item using a specific measurement instrument.
4 SP DATA1 to SP DATA4 are used by FANUC for maintenance.
5 PS STATUS FLAG1 to PS STATUS FLAG4 are used by FANUC for maintenance.
6 FSSB error and jitter data items indicate the FSSB communication status and are used by FANUC for maintenance.

3.2.3 How to Switch the Trouble Diagnosis Guidance and Trouble Diagnosis Monitor to the "SAMPLING" State

The trouble diagnosis monitor can be in either of the following two states: "SAMPLING" and "LATCHED."

When an alarm is issued, it enters into the "LATCHED" state.
When "CLEAR" operation is performed at the "LATCHED" state, the saved data when the alarm was issued are erased and the CNC returns to the "SAMPLING" state.

So,
To monitor data of new alarms, perform the "CLEAR" operation.
To save the status observed when alarms were issued in the past, do not perform the "CLEAR" operation.

To perform "CLEAR" operation to switch back to the "SAMPLING" state, follow the procedure below:

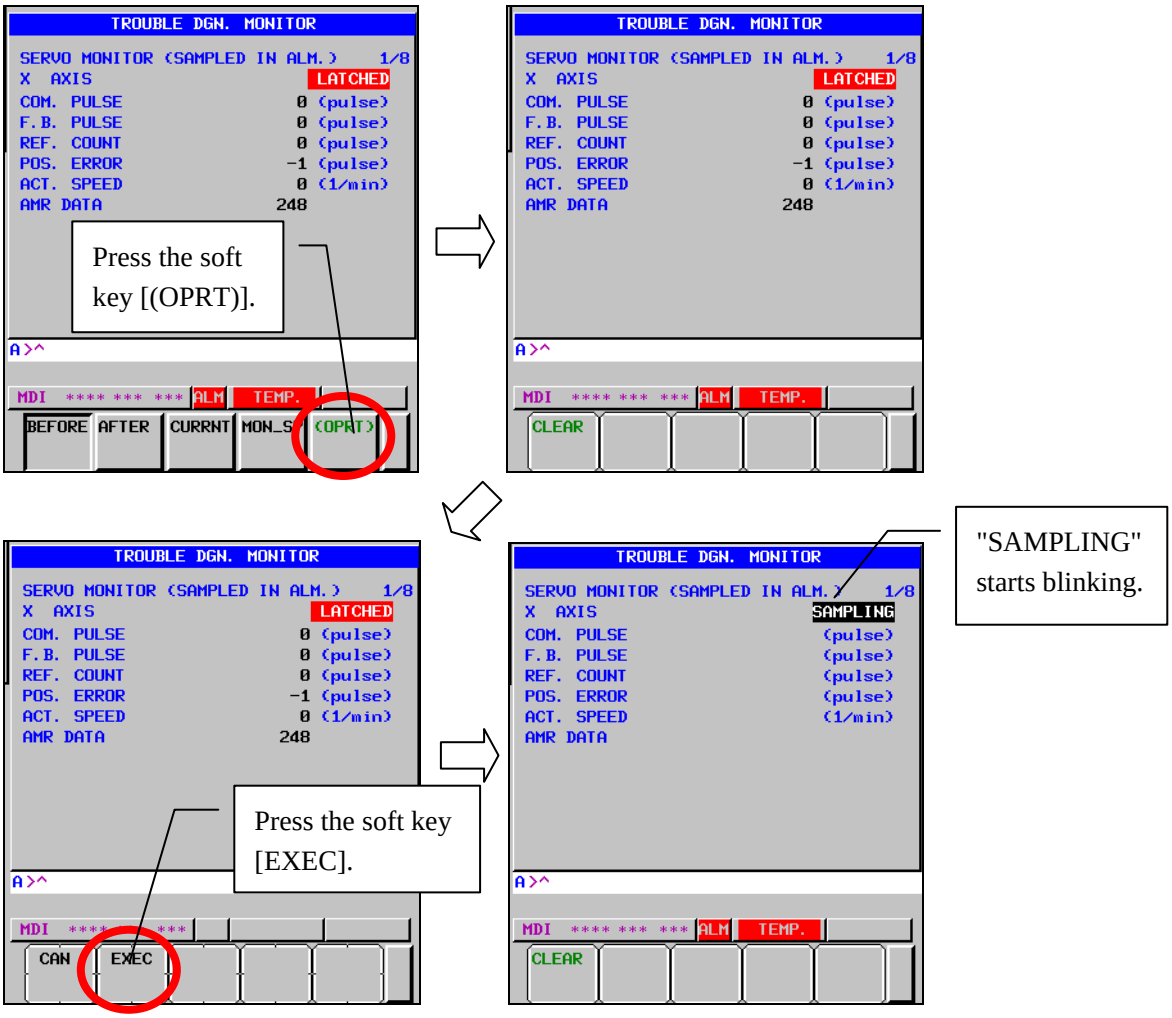

4 REPLACING AMPLIFIER COMPONENTS

This chapter describes how to replace a fan motor, absolute Pulsecoder battery, fuses, and printed circuit board.

> ⚠ **WARNING**
> Because the servo amplifier uses a large-capacitance electrolytic capacitor internally, the servo amplifier remains charged for a while even after the power is turned off. Before touching the servo amplifier for maintenance or other purposes, ensure your safety by measuring the residual voltage in the DC link with a tester and confirming that the charge indication LED (red) is off.

4.1 REPLACEMENT OF A FAN MOTOR

4.1.1 Replacement of the Fan Unit

(a) 260mm width model

(1) Unlock the cover of the DC link terminal block, open the cover, check that the DC link is discharged (that the LED is off), and dismantle the DC link short bar.
(2) Insert the screwdriver from the opening beside the DC link terminal block, and loosen the lower screws (three places) of the fan unit.
(3) Loosen the upper screws (three places) of the fan unit.
(4) Open the cover of the DC link terminal block, and pull out the fan unit toward front.
(5) When mounting the fan unit, perform the procedure in reverse order.

(1)

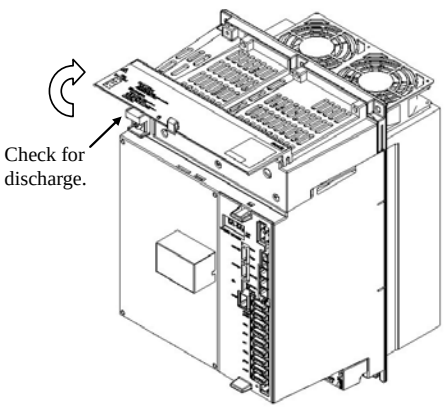

(2)

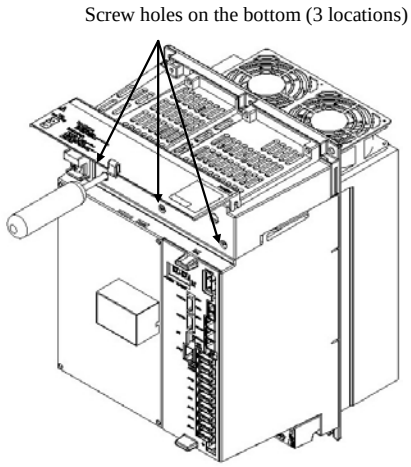

(3)

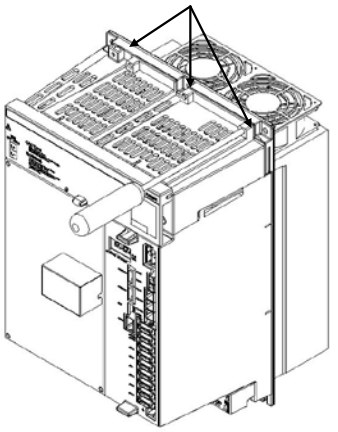

(4)

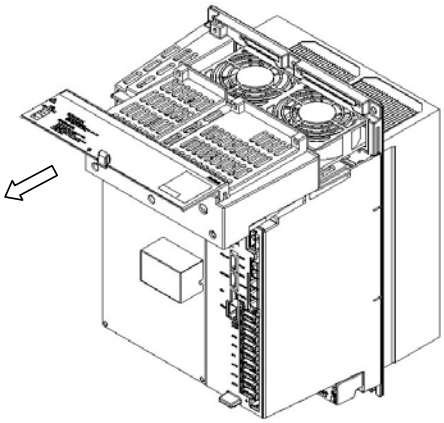

(b) 180mm width model

(1) Unlock the cover of the DC link terminal block, open the cover, check that the DC link is discharged (that the LED is off), and dismantle the DC link short bar.
(2) Insert the screwdriver from the opening beside the DC link terminal block, and loosen the lower screws (two places) of the fan unit.
(3) Loosen the upper screws (two places) of the fan unit.
(4) Open the cover of the DC link terminal block, and pull out the fan unit toward front.
(5) When mounting the fan unit, perform the procedure in reverse order.

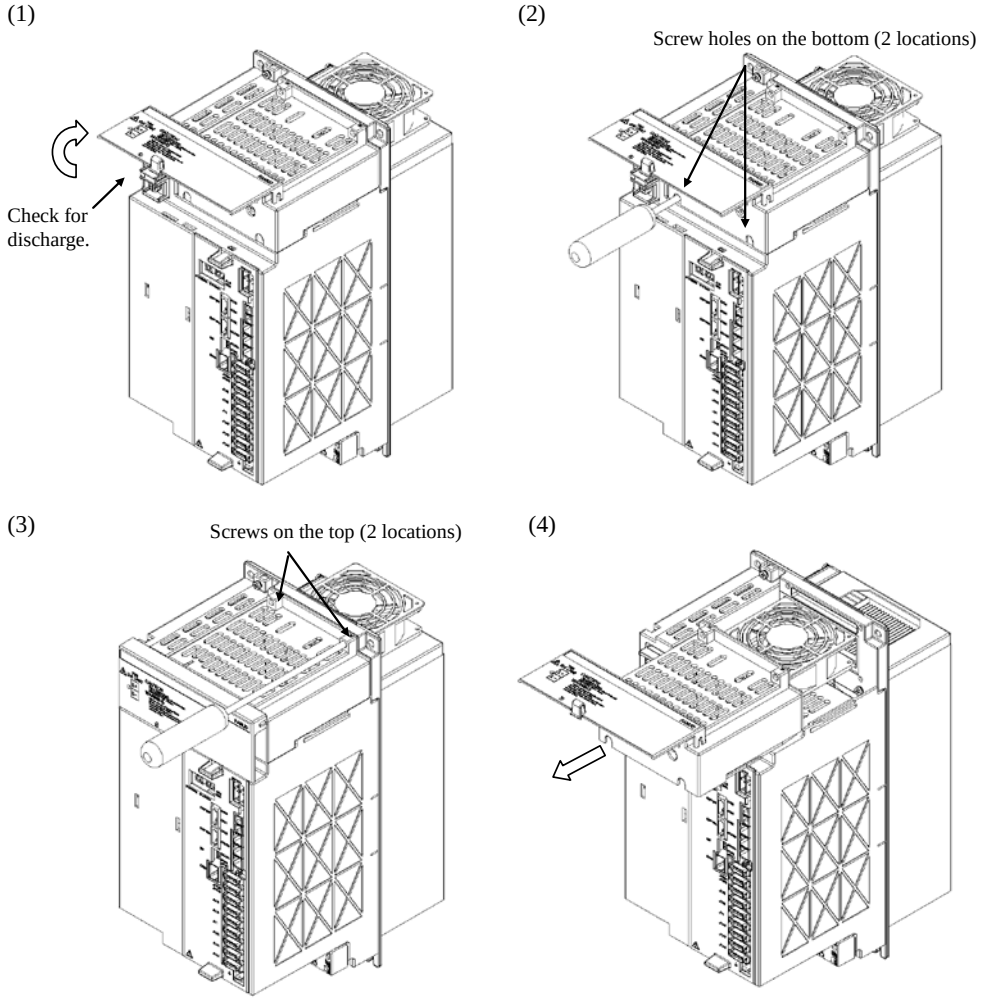

4.1.2 Dismantling the Fan Motor from the Fan Unit

(a) 260mm width model

(1) Dismantle the relay connector from the fan connector. For details, see the figure below.
(2) Dismantle the two or four screws fastening the fan motor. (A screwdriver whose shaft diameter is ϕ4 mm or less is needed.)
(3) Dismantle the two screws fastening the fan motor connector.

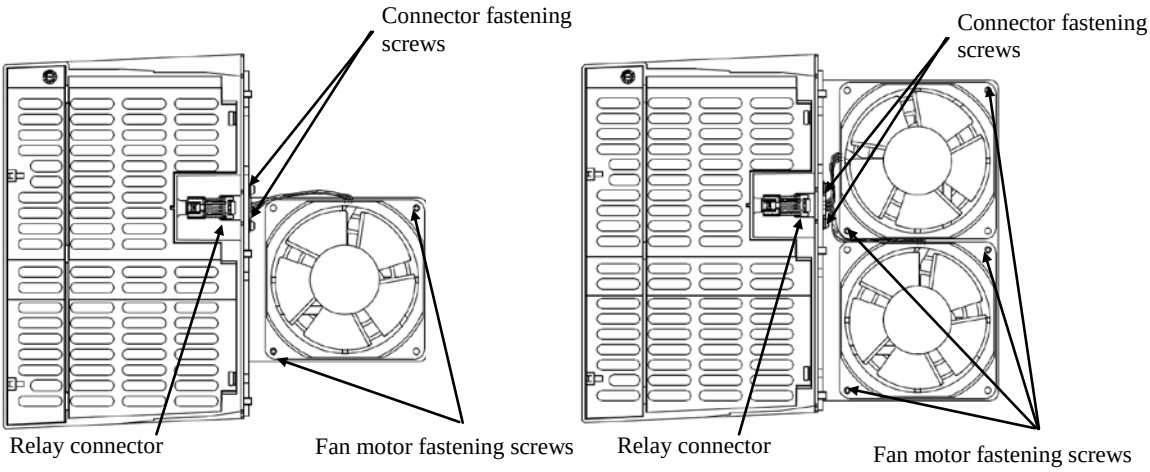

With a single fan motor (View from the bottom of the amplifier)

With two fan motors (View from the bottom of the amplifier)

(b) 180mm width model

(1) Dismantle the relay connector from the fan connector. For details, see the figure below.
(2) Dismantle the two screws fastening the fan motor. (A screwdriver whose shaft diameter is ϕ4 mm or less is needed.)
(3) Dismantle the two screws fastening the fan motor connector.

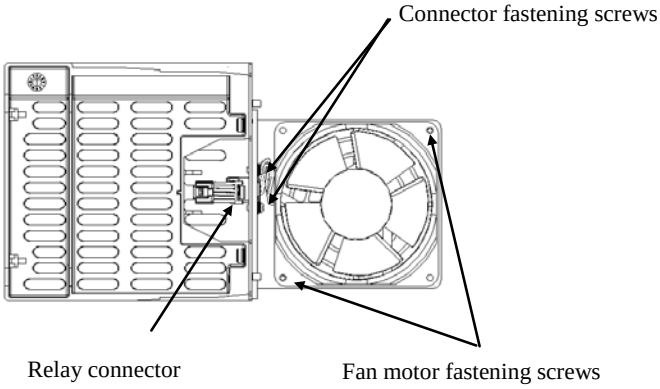

View from the bottom of the amplifier

4.1.3 Specifications of Fan Units and Fan Motors for Maintenance

(a) 260mm width model

Model name	Internal cooling fan		Radiator cooling fan	
	Fan unit	Fan motor	Fan unit	Fan motor
βiSVSP20/20-7.5-B βiSVSP20/20-11-B βiSVSP40/40-15-B βiSVSP20/20/40-7.5-B βiSVSP20/20/40-11-B βiSVSP40/40/40-11-B βiSVSP40/40/40-15-B βiSVSP40/40/80-15-B	-	-	A06B-6320-C601	A90L-0001-0598#A
βiSVSP40/40-18-B βiSVSP80/80-18-B βiSVSP40/40-18 HV-B βiSVSP40/40/80-18-B βiSVSP80/80/80-18-B βiSVSP40/40/40-18 HV-B	-	-	A06B-6320-C602	A90L-0001-0598#B

(b) 180mm width model

Model name	Internal cooling fan		Radiator cooling fan	
	Fan unit	Fan motor	Fan unit	Fan motor
βiSVSP20/20-7.5-B βiSVSP20/20-11-B βiSVSP10/10-11 HV-B βiSVSP20/20/40-7.5-B βiSVSP20/20/40-11-B βiSVSP40/40/40-11-B βiSVSP20/20/20-11 HV-B	-	-	A06B-6321-C601	A90L-0001-0598#A

4.2 REPLACING BATTERY FOR ABSOLUTE PULSECODERS

4.2.1 Overview

- When the voltage of the batteries for absolute Pulsecoders becomes low, alarm 307 or 306 occurs, with the following indication in the CNC state display at the bottom of the CNC screen.
  Alarm 307 (battery voltage decrease alarm): "APC" is highlighted and the highlight blinks.
  Alarm 306 (battery zero alarm): "ALM" is highlighted and the highlight blinks.
- When alarm 307 (battery voltage decrease alarm) occurs, replace the batteries promptly.
  In general, the battery should be replaced within one or two weeks, however, this depends on the number of Pulsecoders used.
- When alarm 306 (battery zero alarm) occurs, Pulsecoders are reset to the initial state, in which absolute positions are not held. Alarm 300 (reference position return request alarm) also occurs, indicating that reference position return is required.
- In general, replace the batteries periodically within the service life listed below.
- When A06B-6050-K061 or D-size alkaline dry cells (LR20) are used : 2 years (per 6 axes)
- When A06B-6114-K504 is used : 1 year (per 3 axes)

NOTE

The above values indicate the estimated service life of batteries used with FANUC absolute Pulsecoders. The actual battery service life depends on the machine configuration based on, for example, detector types. For details, contact the machine tool builder.

4.2.2 Replacing Batteries

To prevent absolute position information in absolute Pulsecoders from being lost, turn on the machine power before replacing the battery. The replacement procedure is described below.

<1> Ensure that the power to the servo amplifier is turned on.
<2> Ensure that the machine is in the emergency stop state (the motor is inactive).
<3> Ensure that the DC link charge LED of the servo amplifier is off.
<4> Remove the old batteries and insert new ones.

The replacement of the batteries in a separate battery case and the replacement of the battery built into the servo amplifier are described below in detail.

NOTE

- The absolute Pulsecoder of the αi-B/αi series servo motors and βi-B/βi series servo motors (βiS0.4-B to βiS40-B, βiSc-B, βiF-B, βiS0.4 to βiS40, βiSc, βiF) has a built-in backup capacitor. Therefore, even when the power to the servo amplifier is off and the batteries are replaced, reference position return is not required if the replacement completes within less than 10 minutes. Turn the power on and replace the batteries if the replacement will take 10 minutes or more.

⚠WARNING

- To prevent electric shock, be careful not to touch metal parts in the power magnetics cabinet when replacing the batteries.
- Because the servo amplifier uses a large-capacitance electrolytic capacitor internally, the servo amplifier remains charged for a while even after the power is turned off. Before touching the servo amplifier for maintenance or other purposes, ensure your safety by measuring the residual voltage in the DC link with a tester and confirming that the charge indication LED (red) is off.
- Do not replace the batteries with batteries other than the designated ones. Pay attention to the battery polarity. If a wrong type of battery is used or a battery is installed with incorrect polarity, the battery may overheat, blow out, or catch fire, or the absolute position information in the absolute Pulsecoders may be lost.
- Ensure that the battery connector is correctly inserted.

4.2.3 Replacing the Batteries in a Separate Battery Case

Use the following procedure to replace the batteries in the battery case.

<1> Loosen the screws on the battery case and detach the cover.
<2> Replace the batteries in the case (pay attention to the polarity).
<3> Attach the cover to the battery case.

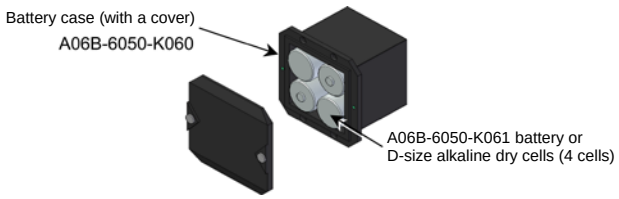

⚠ CAUTION

- Four commercially available D-size alkaline dry cells (LR20) can be used. A set of four A06B-6050-K061 batteries is optionally available from FANUC.
- Replace all four batteries with new ones. If old and new batteries are mixed, the absolute position information in the absolute Pulsecoders may be lost.

4.2.4 Replacing the Battery Built into the Servo Amplifier

Use the following procedure to replace the special lithium battery.
<1> Detach the battery case.
<2> Replace the special lithium battery.
<3> Attach the battery case.

⚠ CAUTION

- Purchase the battery from FANUC because it is not commercially available. For this reason, FANUC recommends preparation of spare batteries.
- When the built-in battery is used, do not connect BATL (B3) of connector CXA2C/CXA2A. Also, do not connect two or more batteries to the same BATL (B3) line. These connections are dangerous because battery output voltages may be short-circuited, causing the batteries to overheat.
- When installing batteries in the servo amplifier, do so starting from the position in which the cable has slack. If the battery cable is under tension, a bad connection may occur.
- If the +6 V pin and 0 V pin of CX5X are short-circuited, the battery may overheat, blow out, or catch fire, or the absolute position information in the absolute Pulsecoders may be lost.
- When inserting the connector, align it to the connector pins.

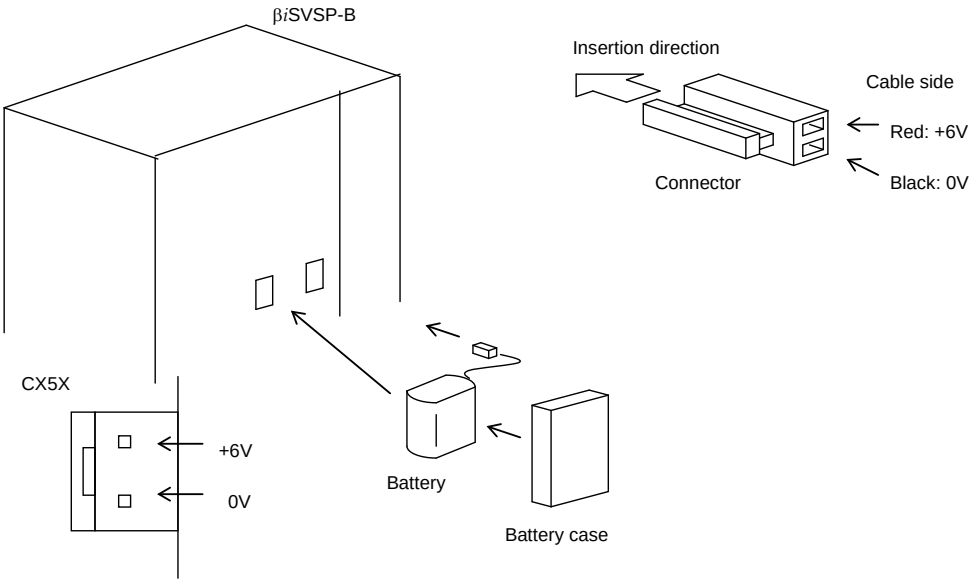

[Battery sets and outlines]

Battery order specification	Manufacturer model number	Battery case order specification	Outline
A06B-6114-K504	BR-2/3AGCT4A (Panasonic)	A06B-6114-K506	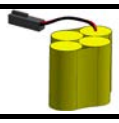

Used batteries

Old batteries should be disposed as "INDUSTRIAL WASTES" according to the regulations of the country or autonomy where your machine has been installed.

4.2.5 Notes on Replacing a Battery (Supplementary Explanation)

4.2.5.1 Battery connection modes

The battery for the absolute Pulsecoder can be connected using [Connection method 1] and [Connection method 2] explained below.
For details, see the section about battery connection in FANUC SERVO AMPLIFIER βi-B series DESCRIPTIONS (B-65422EN).

[Connection method 1] Method of supplying battery power from one battery to multiple βiSVSP-B amplifiers

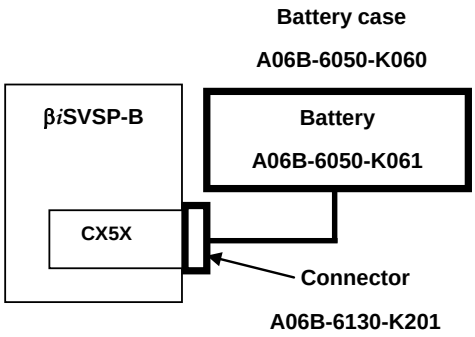

- If a low battery voltage or a battery voltage of 0 V is indicated by an APC (absolute Pulsecoder) alarm, replace the battery.
  If a battery voltage of 0 V is indicated, you need to make a zero point return.
- The absolute Pulsecoder of the αi-B/αi series servo motors and βi-B/βi series servo motors (βiS0.4-B to βiS40-B, βiSc-B, βiF-B, βiS0.4 to βiS40, βiSc, βiF) has a built-in backup capacitor as standard. This backup capacitor enables an absolute position detection to be continued for about 10 minutes. Therefore, no zero point return need be performed if the time during which servo amplifier power is kept off for battery replacement is within 10 minutes.
  Note that the Pulsecoder of some βiS series servo motors (βiS 0.2 to βiS0.3) does not have a built-in backup capacitor. For details, see Subsection 4.2.5.2, "Replacing Batteries for βiS 0.2 to βiS 0.3."
- The battery service life during 6-axis connection of the servo motor for the αi-B/αi series servo motors and βi-B/βi series servo motors (βiS0.4-B to βiS40-B, βiSc-B, βiF-B, βiS0.4 to βiS40, βiSc, βiF) is approximately 2 years. The battery service life for some βiS series servo motors (βiS 0.2 to βiS0.3) is approximately 1 year. FANUC recommends that you replace the batteries periodically according to the battery service life.
- The battery unit consists of four LR20 alkaline batteries. Commercial batteries can be used in the battery unit. The optional battery offered by FANUC is A06B-6050-K061.

⚠ WARNING

1 Do not connect more than one battery to the same BATL (B3) line. If the output voltage is different between the batteries, they may be short-circuited, resulting in the batteries becoming very hot.
2 Pay attention to the polarity (positive/negative) when connecting batteries. If the battery is installed with incorrect polarity, it may overheat, blow out, or catch fire.

[Connection method 2] Method of building a built-in battery into each βiSVSP-B

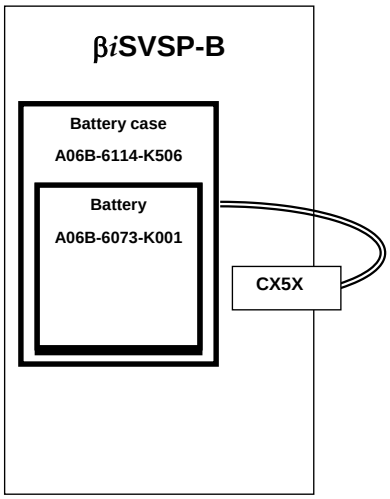

- If a low battery voltage or a battery voltage of 0 V is indicated by an APC (absolute Pulsecoder) alarm, replace the battery (A06B-6114-K504).
  If a battery voltage of 0 V is indicated, you need to make a zero point return.
- The absolute Pulsecoder of the αi-B/αi series servo motors and βi-B/βi series servo motors (βiS0.4-B to βiS40-B, βiSc-B, βiF-B, βiS0.4 to βiS40, βiSc, βiF) has a built-in backup capacitor as standard. This backup capacitor enables an absolute position detection to be continued for about 10 minutes. Therefore, no zero point return need be performed if the time during which servo amplifier power is kept off for battery replacement is within 10 minutes.
  Note that the Pulsecoder of some βiS series servo motors (βiS 0.2 to βiS0.3) does not have a built-in backup capacitor. For details, see Subsection 4.2.5.2, "Replacing Batteries for βiS 0.2 to βiS 0.3."
- The battery service life during 3-spindle connection of the servo motor for the βi-B/βi series servo motors (βiS0.4-B to βiS40-B, βiSc-B, βiF-B, βiS0.4 to βiS40, βiSc, βiF) is approximately 1 year. FANUC recommends that you replace the batteries periodically according to the battery service life.
- Purchase built-in batteries from FANUC because they are not commercially available. For this reason, FANUC recommends preparing spare batteries.

⚠ WARNING

1 When using the built-in batteries (A06B-6114-K504), do not connect them to the BATL (B3) of connector CXA2C.
  If the output voltage is different between the batteries, they may be short-circuited, resulting in the batteries becoming very hot.
2 Do not connect more than one battery to the same BATL (B3) line. If the output voltage is different between the batteries, they may be short-circuited, resulting in the batteries becoming very hot.
3 Pay attention to the polarity (positive/negative) when connecting batteries. If the battery is installed with incorrect polarity, it may overheat, blow out, or catch fire.

4.2.5.2 Replacing Batteries for βiS 0.2 to βiS 0.3

The Pulsecoder of some βi series servo motors (βiS 0.2 to βiS 0.3) does not have a backup capacitor as standard. To keep the absolute position information in the absolute Pulsecoder, you need to keep the control power turned on during battery replacement. Follow the procedure explained below. The replacement procedure is described below.

[Replacing procedure for the battery]

1 Ensure that the power of the βiSV-B is on (the "POWER" LED on the front side of the βiSV-B is on).
2 Make sure that the emergency stop button of the system has been pressed.
3 Make sure that the motor is not activated.
4 Ensure that the DC link charge LED of the βiSV-B is off.
5 Remove the old battery and insert a new battery.
6 The replacement has been completed. You can turn off the power to the system.

⚠ **WARNING**

1 When replacing the battery, be careful not to touch bare metal parts in the panel. In particular, touching the high-voltage part could cause an electric shock.
2 Before replacing the battery, check that the DC link charge confirmation LED on the front of the servo amplifier is off. Note that there is a possibility of an electric shock when the LED is not off.
3 Pay attention to the polarity (positive/negative) when connecting batteries. If the battery is installed with incorrect polarity, it may overheat, blow out, or catch fire.
4 Avoid a short-circuit between the +6 V and 0 V lines of a battery or cable. A short-circuit may lead to a hot battery, an explosion, or fire.

4.2.6 Notes on Attaching Connectors

If an excessive strain is applied to a connector when it is inserted or removed, a poor contact may result. When inserting and removing the battery connector, therefore, be careful not to apply an excessive wrenching force to it; just follow the instructions given in the following table.

(1) Attaching connectors

<1>	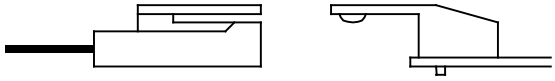	Check the attachment position.
<2>	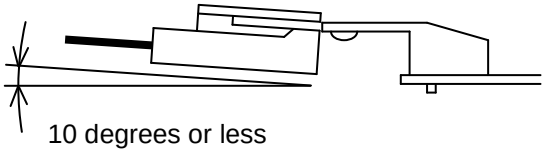	Plug the cable connector while raising it slightly.
<3>	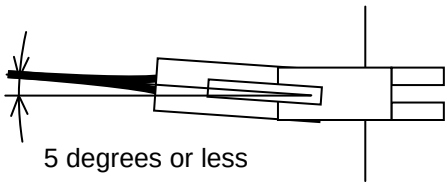	Here, the angle of the cable connector to the horizontal must be 5 degrees or less.
<4>	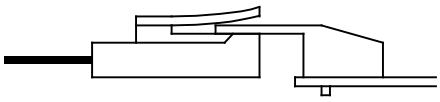	When it goes beyond the lock pin, push it straight in.
<5>	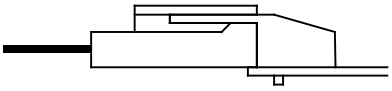	The attachment of the connector is completed.

(2) Detaching the connector

<1>	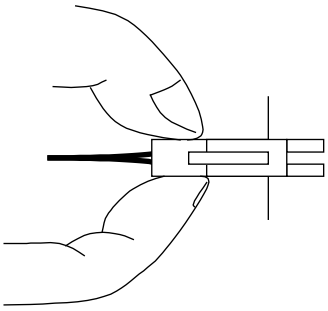	Hold both the sides of the cable insulator and the cable, and pull them horizontally.
<2>	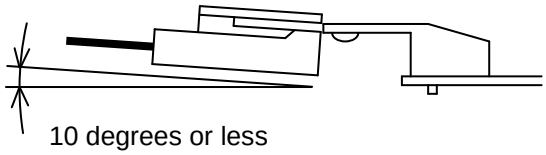	Pull out the cable side while raising it slightly.
<3>	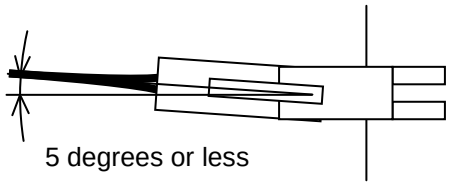	Here, the angle of the cable connector to the horizontal must be 5 degrees or less.

4.3 HOW TO REPLACE THE FUSES AND PRINTED CIRCUIT BOARDS

4.3.1 How to Replace the Fuses and Printed Circuit Boards

In the βiSVSP-B, a printed circuit board can be removed and inserted from the front of the servo amplifier.

NOTE

1 If a fuse blows, it is likely that there is a short-circuit in the power supply for a device (such as a sensor) connected to the servo amplifier.
After checking that all devices connected to the servo amplifier are normal, replace the fuse.
If you do not remove the cause, it is very much likely that the fuse will blow again.

2 Do not use any fuse not supplied from FANUC.

3 Before replacing a fuse, check a marking on it with that on the printed circuit board. Be careful not to mount a fuse with an incorrect rating.

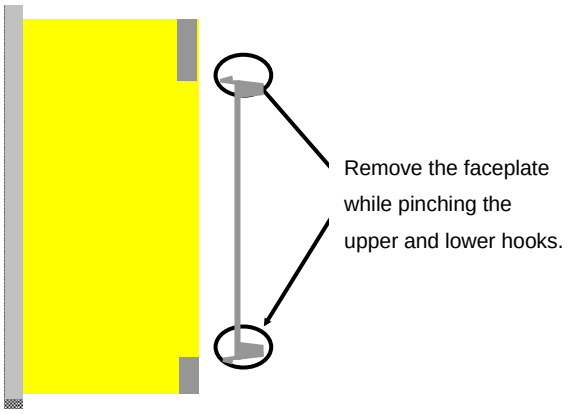

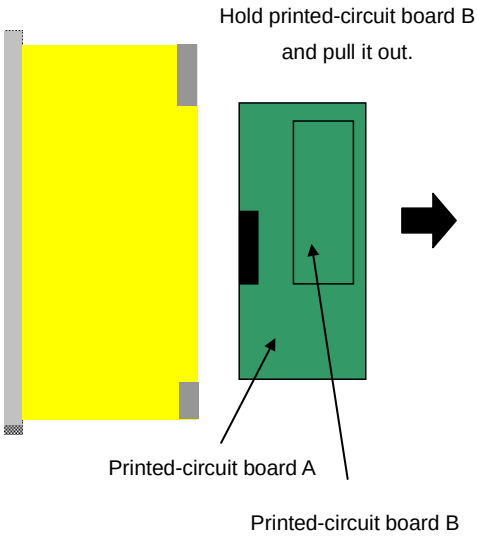

To remove the fuse

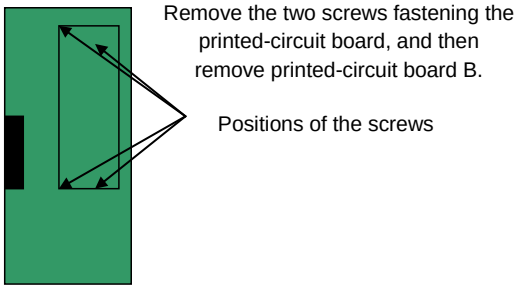

To insert the printed circuit board, reverse the above procedure.
Ensure that the upper and lower hooks snap into the housing.
If the printed circuit board is not inserted completely, the housing remains lifted. Pull out the printed circuit board and insert it again.
Poor connector contact may cause an unpredictable problem.

Fuse specification

Symbol	Ordering number
FU1	A60L-0001-0290#LM50C

Be careful not to make a specification mistake when replacing the fuse.
Insert the fuse in the fuse socket securely.
Securely tighten the screws for fixing the printed circuit board.
Poor connector contact may cause an unpredictable problem.

4.3.2 Fuse Locations

There is one fuse on the βiSVSP-B printed circuit board.

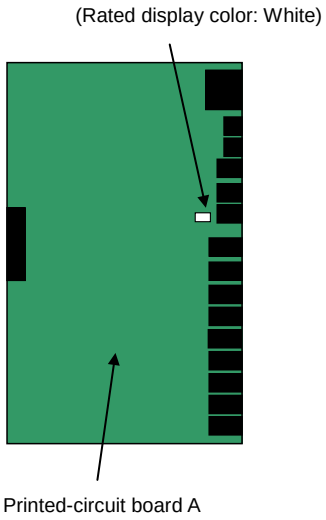

VII. MOTOR/DETECTOR/AMPLIFIER PREVENTIVE MAINTENANCE

1 MOTOR/ DETECTOR/ AMPLIFIER PREVENTIVE MAINTENANCE

This chapter describes preventive maintenance of motors, detectors, and amplifiers that is to be performed by the customer the machine uses.

1.1 LIST OF MANUALS RELATED TO MOTORS AND AMPLIFIERS

Details of individual motors and amplifiers are described in the manuals listed in the table below. Before performing periodic inspection or any other maintenance work, consult with the machine tool builder and, if necessary, obtain the latest version of the corresponding manual shown in the list. The information about the specifications of each device, such as the weight and winding resistance value, is given in the relevant "DESCRIPTIONS" manual.

Manual name	Type of manual	Specification number
FANUC AC SERVO MOTOR αi-B/αi series	DESCRIPTIONS	B-65262
FANUC AC SERVO MOTOR βi-B/βi series	DESCRIPTIONS	B-65302
FANUC SYNCHROUNOUS BUILT-IN SERVO MOTOR DiS series	DESCRIPTIONS	B-65332
FANUC LINEAR MOTOR LiS series	DESCRIPTIONS	B-65382
FANUC AC SPINDLE MOTOR αi-B/βi-B series	DESCRIPTIONS	B-65452
FANUC BUILT-IN SPINDLE MOTOR BiI series	DESCRIPTIONS	B-65292
FANUC SYNCHROUNOUS BUILT-IN SPINDLE MOTOR BiS series	DESCRIPTIONS	B-65342
FANUC - NSK SPINDLE UNIT series	DESCRIPTIONS	B-65352
FANUC SERVO AMPLIFIER αi-B series	DESCRIPTIONS	B-65412
FANUC SERVO AMPLIFIER βi series	DESCRIPTIONS	B-65322
FANUC SERVO AMPLIFIER βi-B series	DESCRIPTIONS	B-65422
FANUC AC SERVO MOTOR αi-B/αi series FANUC AC SERVO MOTOR βi-B/βi series FANUC LINEAR MOTOR LiS series FANUC SYNCHRONOUS BUILT-IN SERVO MOTOR DiS series	PARAMETER MANUAL	B-65270
FANUC AC SPINDLE MOTOR αi/βi series BUILT-IN SPINDLE MOTOR Bi series	PARAMETER MANUAL	B-65280
FANUC AC SERVO MOTOR αi series AC SPINDLE MOTOR αi series SERVO AMPLIFIER αi series	MAINTENANCE MANUAL	B-65285
FANUC AC SERVO MOTOR βi series AC SPINDLE MOTOR βi series SERVO AMPLIFIER βi series	MAINTENANCE MANUAL	B-65325
FANUC SERVO AMPLIFIER βi series	MAINTENANCE MANUAL	B-65395
FANUC AC SERVO MOTOR βi-B/βi series AC SPINDLE MOTOR βi series SERVO AMPLIFIER βi-B series	MAINTENANCE MANUAL	B-65425
FANUC SERVO GUIDE	OPERATOR'S MANUAL	B-65404
FANUC AC SERVO MOTOR αis/αi/βis series	SERVO TUNING PROCEDURE (BASIC)	B-65264

1.2 PREVENTIVE MAINTENANCE OF MOTORS AND DETECTORS

1.2.1 Warnings, Cautions, and Notes on Preventive Maintenance of Motors and Detectors

This subsection contains the safety precautions for motor and detector preventive maintenance, which are classified into "warnings," "cautions," and "notes" according to their bearing on safety. Make sure that you understand and comply with these precautions when carrying out the maintenance work.

⚠WARNING

- **Make sure that you are safely dressed and have a safe working environment when performing preventive maintenance for a motor.**
  - Be dressed safely, e.g. by wearing gloves and safety shoes, to protect against injury due to an edge or protrusion and electric shock.
  - Have the work done by more than one person, where possible, so that immediate action can be taken if an accident occurs when handling a motor.
  - A motor is heavy. When moving it, use a crane or other appropriate equipment to protect against injury. For information about the weight of the motor, refer to the DESCRIPTIONS manual of the motor (shown earlier).
  - Clothes or fingers can be caught in a rotating motor or come into contact with a moving part of it. Standing in the direction of motor rotation (direction of motion) can pose a risk of injury. Before rotating a motor, check that there is no object that is thrown away by motor rotation.

- **Be careful about electric shock, fire, and other accidents.**
  - Do not handle a motor with a wet hand.
  - To prevent electric shock, make sure that no conductive object, such as a terminal, is exposed when the motor is powered on.
  - Before touching a motor or any surrounding part, check that the power is shut off and take appropriate safety precautions.
  - High voltage remains across power line terminals of a motor even after the power is shut off (for at least twenty minutes). Do not touch a motor in such a condition or connect it to other equipment.
  - A loose or disconnected terminal, short-circuited terminals, or a terminal connected to the ground can cause overheating, spark, fire, or damage to the motor. Take appropriate precautions to prevent these accidents.
  - When placed near any inflammable object or material, a motor can be ignited, catch fire, or explode. Avoid placing it near such object or material.

- **Do not disassemble or modify a motor.**
  Motors such as linear motors, synchronous built-in servo motors, and synchronous built-in spindle motors contain very strong magnets. If electronic medical apparatus comes near, these motors can cause the apparatus to malfunction, potentially putting the user's life in danger. Also, disassembling or modifying a motor can cause a failure, regardless of the type of motor. Do not disassemble or modify a motor in any way not specified by FANUC.

⚠CAUTION

- **Ensure that the specified cooling conditions are met.**
  If the specified cooling conditions are not met (the motor is insufficiently or excessively cooled), the motor can fail. Problems that can cause a motor failure, such as liquid piping clog, leakage, and fan motor trouble, should be eliminated through periodic inspection. Do not drive the motor when the cooling system is in an abnormal condition.

- **Do not change the system configuration.**
  Do not change the configuration of the system when it is running normally. Doing so can cause an accident or failure. If you disconnect a cable for maintenance or some other purpose, take an appropriate measure, such as putting a mark on it, to ensure you can restore the original state.

- **Use the tapped holes of a motor only to move the motor.**
  Do not use the tapped holes of a motor to lift or move any other object along with the motor. Doing so can damage the motor. Depending on the type of motor, the place and direction in which the motor can be lifted may be predetermined. For details, refer to the DESCRIPTIONS manual of the motor (shown earlier).

- **Do not touch a motor in operation or immediately after it is stopped.**
  A motor may get hot when it is running. Do not touch the motor before it gets cool enough. Otherwise, you may get burned.

NOTE

- **Do not remove a nameplate from a motor.**
  The nameplate is used to identify the motor during maintenance work. If a nameplate comes off, be careful not to lose it.

- **Do not step or sit on a motor, and avoid applying shock to a motor.**
  Any of these acts can deform or break the motor or affect its component, crippling the normal motor operation. Do not put a motor on top of another motor

- **Comply with the specified conditions when conducting an electric test (winding resistance test, insulation resistance test, etc.) for a motor or other device or supplying power.**
  - Conduct an electric test according to the specified method. Conducting such a test by any method that is not specified can damage the motor.
  - Do not conduct a dielectric strength test or insulation test for a Pulsecoder or other detector, or do not apply a commercial power source voltage. Doing so can destroy the internal elements

- **Perform preventive maintenance (inspection of the external appearance, measurement of winding resistance, insulation resistance, etc.) and cleaning on a regular basis.**
  To use a motor safely throughout its entire service life, perform preventive maintenance and cleaning on a regular basis. Be careful, however, because excessively severe inspection (dielectric strength test, etc.) can damage its windings. For information about winding resistance values, refer to the DESCRIPTIONS manual of the motor (its specification number is shown in this manual). Information about insulation resistance is given later in this manual.

NOTE

- This manual is focused on the preventive maintenance work to be performed for a single FANUC motor or detector alone. The information contained herein may not apply depending on the type or configuration of the machine. When reading this manual, refer to the manual of the machine as well. If there are any unclear points or anything you feel unsure about, do not act on your own; please contact the machine tool builder or FANUC.
- For detailed information about a motor, see the manual list shown earlier and, if necessary, obtain the latest version of the corresponding manual.

1.2.2 Preventive Maintenance of a Motor (Common to All Models)

This subsection describes the common preventive maintenance items to be handled regardless of the model of the motor. For the items specific to a particular motor model, see one of the subsequent subsections that pertains to that particular motor model.

⚠CAUTION

- The preventive maintenance method differs from machine to machine in many respects. Depending on the machine in use, it may be difficult for the user to perform periodic inspection or cleaning. If you are not sure about anything as to preventive maintenance, consult with the machine tool builder and ensure that you can perform periodic inspection and cleaning.
- The machine should be used within the scope of specification defined by the machine tool builder. Using the machine in any way that is outside the specified scope can reduce the motor's service life or cause a failure.

1.2.2.1 Main inspection items

The following table summarizes the main inspection items for a motor. If any of these items is **found to be abnormal, stop the use of the machine immediately** and **fix the abnormal part** by repairing or replacing it. At the same time, identify and remove the cause and take a measure to prevent its recurrence. If it is difficult to take a preventive measure or to prevent its recurrence, contact the machine tool builder or FANUC.

Appearance of the motor	Crack or deformation	· Check the motor for any scar, crack, deformation, bulge, etc. · If the interior of the motor is visible or there is interference with a peripheral component, it is imperative to replace the motor or the peripheral component. · A light peel-off or scar of the surface may be repairable; contact FANUC.
	Wet or dirty part	· If you find any wet or dirty part, clean it immediately. · A preventive measure is needed if the part in question remains wet continually due to cutting fluid or dew condensation.
Crack or deformation	Wet or dirty part	· Comply with the operating conditions of the machine. For details of the operating conditions of a specific motor, refer to the corresponding DESCRIPTIONS manual. Generally, the ambient temperature should be 0°C to 40°C (or 30°C for a spindle unit) and dew condensation is not allowed. In a place subject to severe vibration, the components of the motor may be broken.

Connection state	Cable	· Check for any cable sheath damage, exposed conductor, damaged conduit or cable bearing, abnormal bending, loose terminal, etc. · If there is any trace of fluid flowing, the fluid may have entered the inside of the motor or connector. It is necessary to make a check and take a measure to prevent recurrence.
	Connector /terminal	· Check for any cracked, exposed, loose, or removed terminal or connector, etc. · Fluid causes a failure; be sure to remove fluid. · A scarred or damaged connector or terminal needs to be replaced. In the case of a resin molded motor, such as a linear motor, the motor needs to be replaced.
Operation of the motor	Noise/vibration	· Check for any abnormal noise or vibration not only when the motor is running (the spindle is rotating) but also when it is stopped. · Abnormal noise heard when the motor is rotating indicates an abnormality of the bearing or a failure inside the motor. · If abnormal noise is generated from the connection section of a spindle amplifier, check the following items: ✓ Belt connection: Check whether the belt tension is appropriate. ✓ Gear connection: Check whether an appropriate value is set for the gear backlash. ✓ Coupling connection: Check whether the coupling is free from deformation, crack, and looseness.
	Movement	· Check that the motor operates normally and smoothly. · If the circuit breaker trips at the same time the motor starts to operate, it indicates abnormal motor windings.
	Heat	Check whether the motor does not overheat during the normal operation cycle. Note: While the motor is running or immediately after it is stopped, the motor surface may become very hot. Instead of touching the motor directly by hand, use a thermolabel, surface thermometer, etc.
Electric characteristics of the motor	Winding resistance	If the resistance value exceeds the specified range, the motor needs to be replaced. Note: When conducting winding resistance measurement, disconnect the motor from the amplifier and measure the resistance at the power line or connector closest to the motor.
	Insulation resistance	For the measuring method and judgment criteria, see the table that follows.
Cooling fan (for a model with a fan motor)	Noise/vibration	· Check that the fan blows air normally without causing abnormal noise or vibration. · If abnormal noise is heard even when the motor is stopped, it indicates a fan motor failure.
	Movement	· If the power is on and if the fan does not operate or the fan blades cannot be moved even manually, or if the fan blades are rotating but no cooling wind is blown out, the fan motor may have cutting chips or sludge accumulated in it and needs to be cleaned. · If the fan does not operate normally for any other reason, the fan motor needs to be replaced.
Forcible cooling unit (when using an external cooling unit such as liquid cooling unit)	Dew condensation (over-cooling)	· Check that forcible cooling does not cause dew condensation on the motor surface. Dew condensation is likely particularly when the cooling unit continues to run after the machine is stopped. In that case, be sure to make this check. · Dew condensation or water drop on the motor surface can reduce the motor's service life. It is necessary to wipe it dry and take a measure to prevent recurrence.
	Liquid leakage/clog	· Check the cooling pipe for leakage or clog. Do not drive the motor unless the leakage or clog is fixed. · Liquid leakage from a spindle motor with a through hole indicates a failure of the coolant joint. In this case, the joint needs to be replaced. · In the case of liquid leakage from a linear motor (coil slider), the linear motor (coil slider) needs to be replaced. · If the motor gets wet due to liquid leakage or any other cause, it is necessary to clean and dry the motor and perform electric characteristic checks (winding resistance/insulation resistance).

Insulation resistance measurement

The following table shows the judgment criteria to be applied when measuring insulation resistance between winding and frame using a megohmmeter (500 VDC).

Insulation resistance	Judgment
100 MΩ or higher	Acceptable
10 to 100 MΩ	The winding has begun deteriorating. There is no problem with the performance at present. Be sure to perform periodic inspection.
1 to 10 MΩ	The winding has considerably deteriorated. Special care is in need. Be sure to perform periodic inspection.
Lower than 1 MΩ	Unacceptable. Replace the motor.

If insulation resistance drops sharply during a short period of time or if the circuit breaker trips, the cutting fluid or other foreign matter may have entered the inside of the motor or cable. Contact the machine tool builder or FANUC to discuss appropriate actions to take.

⚠CAUTION

- Let the motor dry and cool to room temperature before winding or insulation resistance is measured. Otherwise, not only an accurate measurement cannot be performed but also the motor may be damaged.
- The winding or insulation resistance measurement should be performed on the motor alone, with its power line disconnected.
  Measuring insulation resistance with the motor connected to the amplifier may damage the amplifier.
- During insulation resistance measurement, applying voltage to the motor for a long time may further deteriorate the insulation of the motor. Therefore, the measurement of insulation resistance should be performed in a minimum amount of time where possible.
- When disconnecting the power line and other cables, take an appropriate measure, such as labeling, to ensure that they can be restored to their original state.

1.2.2.2 Periodic cleaning of a motor

Periodic cleaning is necessary to remove an accumulation of cutting chips or sludge that may eventually cause a failure. Also, leaving the cutting fluid or other chemical substance attached for a long time can reduce the motor's service life substantially. When forcible cooling is provided by a liquid or air cooling unit, check the unit for pipe clog, fan failure, etc. and perform cleaning periodically to ensure that the coolant flows smoothly and that the motor is cooled properly.

⚠WARNING

Depending on the type of motor, the handling may involve a risk and require safety education in advance. Also, some machines are difficult for users to clean on their own. If you are to clean the motor, consult with the machine tool builder in advance with regard to the cleaning method, safety education, etc.

1.2.2.3 Notes on motor cleaning

A motor is an electric product, which is incompatible with most kinds of fluid. When removing cutting chips, sludge, cutting fluid, etc. during cleaning, note the following.

Note on cleaning	Measure
Do not sprinkle fluid. Do not wash by submerging.	Do not sprinkle or spray detergent or any other fluid over the motor (including its peripheral components), or do not wash the motor by submerging it in such fluid. When cleaning the motor, use a cloth moistened with a small amount of neutral detergent so that the fluid does not enter the inside the motor.
Do not use solvent.	Solvent may damage the motor; do not use one. If the dirt is difficult to remove with neutral detergent, use a cloth moistened with a small amount of industrial alcohol (e.g., IPA). Be careful, however, because rubbing with force or repeatedly may damage the coated or resin surface.
Do not leave the motor wet or moistened.	If the motor is wet or moistened after cleaning, dry it before supplying power and before performing electric tests. When drying the motor in an oven, make sure that the temperature is below 40°C and that hot air does not blow directly against the motor.

1.2.2.4 Notes on the cutting fluid (informational)

Depending on the type of cutting fluid used, the motor and amplifier may be affected greatly. Take due care because, even if you ensure that they do not come into direct contact with the fluid, a mist or atmosphere of the fluid can cause the problems described below.

Type of cutting fluid requiring care	Expected problem
Cutting fluid containing highly active sulfur	Some types of cutting fluid contain highly active sulfur. If such cutting fluid enters the inside of the motor or amplifier, it causes copper, silver, and other kinds of metal to corrode, leading to a component failure.
Synthetic cutting fluid with high permeability	Some types of cutting fluid containing such substance as polyalkylene glycol have very high permeability. Such cutting fluid permeates into the inside of the motor, causing insulation deterioration or component failure.
Highly alkaline, water-soluble cutting fluid	Some types of cutting fluid that enhance their alkaline property using such substance as alkanolamine remain highly alkaline - pH10 or higher - when diluted.

If such cutting fluid is left attached for a long time, its chemical change will deteriorate the resin and other materials of the motor and amplifier. If a problem occurs and the cutting fluid is the suspected cause, contact the machine tool builder or FANUC.

1.2.3 Routine Inspection of a Spindle Motor with a Through Hole

- Check whether coolant does not always leak from the drain on the rotation joint support housing. (See Fig. 2.)
- Check whether coolant does not always leak from the notch on the rotation joint support housing. (See Fig. 2.)
- Check whether coolant leaking from the coolant joint does not leak from the coupling. (See Fig. 3.)
- Check whether leaking coolant is not collected in the coupling box.

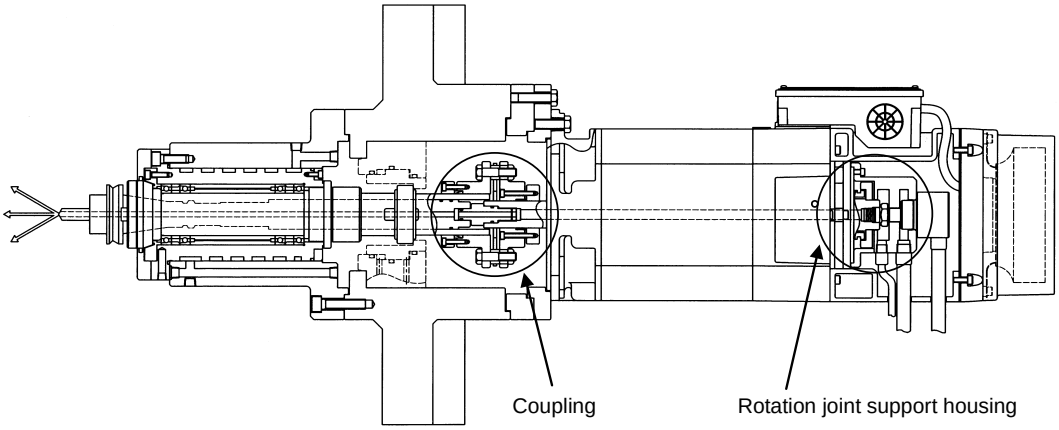

Fig. 1: Example of using a coolant through spindle motor

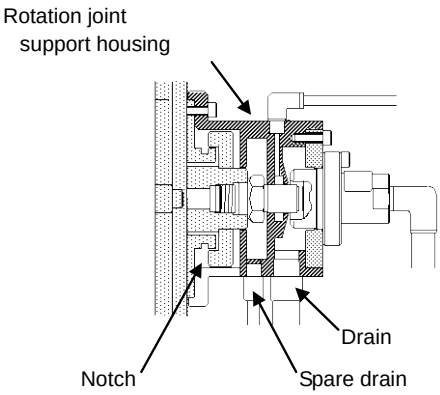

Fig. 2: Rotation joint support housing

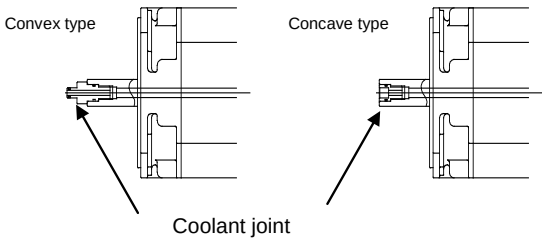

Fig. 3: Examples of coolant joints

1.2.4 Preventive Maintenance of a Built-in Spindle Motor and Spindle Unit

Notes on working with the built-in spindle motor (B*i*I series or B*i*S series) and the FANUC-NSK spindle unit are provided below. In some cases, the work may involve a life-threatening risk or cause substantial damage. Make sure that you fully understand these safety precautions before carrying out the work.

⚠WARNING

- Do not disassemble the spindle. Particularly, the rotor of a synchronous built-in spindle motor (B*i*S Series) uses strong permanent magnets. The strong magnet force may cause injury or medical appliance malfunction.
- Do not operate a synchronous built-in spindle motor with an external engine. Doing so is very dangerous because it makes the motor act as a power generator, generating high voltage. A power outage is also dangerous because the motor runs freely and, again, generates high voltage. As a safety precaution, a sub module SM (SSM) is connected between motor and amplifier. Do not disconnect the SSM under any circumstances. Also, connect the machine frame to the ground to prevent electric shock.
- A synchronous built-in spindle motor may perform a pole position detection operation when it receives the first rotation command after it is powered on or recovers from an alarm. The pole position detection operation takes 20 to 60 seconds to complete, during which the spindle behaves oddly, e.g., rotating clockwise and counterclockwise alternately in rapid succession. This phenomenon is not abnormal. During the detection operation, do not touch or look down at the spindle, which is a dangerous act.

⚠CAUTION

Performing a test run described in Chapter 3, "TEST RUN METHOD" in Part IV of "FANUC-NSK SPINDLE UNIT series DESCRIPTIONS (B-65352EN)" and the inspection and maintenance work described in this manual is the condition for guaranteeing the operation of the FANUC-NSK spindle unit. Be sure to perform the test run and inspection and maintenance work as instructed.

1.2.4.1 Routine inspection of the FANUC-NSK spindle unit

Perform the following **routine inspections** every day at the start of operation so that stable performance can be obtained from the spindle.

	Item	Check
1	Check if the axis, when turned manually, rotates lightly and smoothly. ⚠ When turning the axis manually, be sure to turn off the power to the machine.	
2	Check if cuttings and coolant residuals are attached to the periphery of a slinger.	
3	Check if dust such as cuttings is attached to the spindle taper portion.	
4	For operation at 15,000 min-1 or more immediately after power-up, increase the speed gradually by using the spindle override function. (This substitutes for a simple test run.)	
5	Check if an abnormal sound is generated.	
6	Check if an abnormal vibration is generated.	
7	Check if an abnormal heat is generated.	

1.2.4.2 Maintenance of the FANUC-NSK spindle unit

A FANUC-NSK spindle unit with a grease unit requires periodical maintenance for consumable/wear parts, such as supplying grease. Depending on the use frequency of and damage to parts, maintenance generally becomes necessary **after two years of machine operation or 10,000 hours of spindle operation**. Contact FANUC or the machine tool builder when maintenance becomes necessary. Also, an effective way to reduce the machine down time due to maintenance is to prepare spare parts; consult with the machine tool builder.

1.2.4.3 Test run of the FANUC-NSK spindle unit

If any of the following cases applies, be sure to contact the machine tool builder and perform a test run as described in Chapter 3, "TEST RUN METHOD" in Part IV of "FANUC-NSK SPINDLE UNIT series DESCRIPTIONS (B-65352EN)."

- If the spindle unit is rotated for the first time after it is unpacked or attached to the machine
- If the machine or spindle unit has been transported or relocated
- If the spindle unit alone has been stored for a period longer than six months or has not been used for one month or more after installation

⚠CAUTION
FANUC assumes no responsibility for any damage resulting from the failure to perform a test run or improper use of the spindle unit.

1.2.4.4 Storage method of the FANUC-NSK spindle unit

Apply rust-proof oil to the surface of the spindle unit, pack the spindle unit, and store the packed spindle unit at a location that satisfies the conditions described below. Also, follow the "This Side Up" and "No Pile Up" instructions indicated on the pack surface.

- Indoor well ventilated place not exposed to direct sunlight (place where the temperature varies little, the room temperature is within 5°C to 40°C, and the humidity is 35% to 85% RH)
- Place on the shelf subject to little vibration and dust (Do not place the spindle unit directly on the floor; vibration and dust can damage the bearing or other parts of the spindle.)

Before using the spindle unit after a storage period of one month or more, make necessary checks, such as measuring winding and insulation resistance, examining the appearance for rust and other problems, and checking whether the axis can be turned manually. Depending on the storage period, a test run may be necessary (described earlier).

1.2.5 Preventive Maintenance of a Linear Motor

The magnet plate of a linear motor contains very strong magnets. When performing the maintenance work, make sure all those engaged in the work fully understand the potential risks involved.

⚠WARNING

- The FANUC linear motors use very strong magnets. Improper handling of the motor is very dangerous and can lead to a serious accident. Particularly, a person wearing a pacemaker or other medical apparatus should stay away from the linear motor; otherwise, the apparatus may malfunction, potentially resulting in a life-threatening accident.
- Those who will come near or touch a linear motor for maintenance work should receive safety education in advance. For details, contact the machine tool builder or FANUC.

1.2.5.1 Appearance inspection of the linear motor (magnet plate)

Perform an appearance inspection as well during cleaning or other maintenance work. A crack, chip, deformation, or any other abnormality in appearance of the motor can lead to a serious failure in the not-so-distant future. If you find any such abnormality, be sure to report it to the machine tool builder. A scratch or other slight scar on the motor surface can also be a sign of future trouble and needs to be addressed with care. Some suggested appearance inspection items for the magnet plate are described below.

* For the coil slider (the side to which the power line is connected), see "Main inspection items" earlier in this manual

Appearance of the magnet plate (which may have a stainless cover)

Appearance inspection item	Measure
Crack or chip in the magnet plate resin Deformation or bulge of the magnet plate or softening of the resin	The magnet plate needs to be replaced. If unattended, it can cause trouble in the not-so-distant future. If the problem is extremely minor, consult with the machine tool builder or FANUC.
The magnet is exposed, or the resin or magnet is floating	The magnet plate needs to be replaced urgently.
Scratch on the magnet plate	Foreign matter may have entered into the motor, or interference between parts is likely. It is necessary to eliminate the cause and take a measure to prevent recurrence.
Floating, bulging, or deformed stainless cover	The cover or magnet plate needs to be replaced.

1.2.6 Maintenance of a Detector

⚠CAUTION

- Detectors such as Pulsecoders are precision equipment. When handling a detector, avoid applying shock to it. Also, exercise care to prevent cutting powder, dust, cutting fluid, or other foreign matter from attaching to it.
- Make sure that all connectors are connected properly and securely. A connection failure can cause an alarm or some other problem.
- If the detector and/or connectors are not installed securely, cutting fluid may enter the inside of the detector, making it necessary to replace the detector. In such cases, contact the machine tool builder or FANUC.

NOTE

If you use a detector not manufactured by FANUC, contact the machine tool builder or detector manufacturer for detailed information on the detector.

1.2.6.1 Alarms for built-in detectors (αi and βi Pulsecoders) and troubleshooting actions

These alarms concern built-in detectors that are connected directly to the control unit (CNC/servo amplifier).
Follow the "Detailed troubleshooting methods" described in the next section to take appropriate actions in accordance with the alarm number and description.

Alarm No.: Alarm	Description	Possible cause	Action	Detailed troubleshooting methods
361: ABNORMAL PHASE DATA(INT)	・ Communication error in the Pulsecoder ・ ID data error	・ Pulse coder failure ・ Noise	Replace the Pulsecoder.	(3) (4)
364: SOFT PHASE ALARM(INT)	Position data alarm	・ Noise ・ Entry of cutting fluid	Check the effect of noise. Replace the Pulsecoder.	(1) (3)
365: BROKEN LED(INT)	LED disconnection	・ Pulse coder failure	Replace the Pulsecoder.	(3)
366: PULSE MISS(INT)	Small internal signal amplitude	・ Pulse coder failure	Replace the Pulsecoder.	(3)
367: COUNT MISS(INT)	Position data count error	・ Pulse coder failure ・ Noise	Replace the Pulsecoder.	(3) (4)
368: SERIAL DATA ERROR(INT)	Communication interruption	・ Cable disconnection ・ Pulse coder failure ・ Noise	Check the cable. Replace the Pulsecoder.	(2) (3) (4)
369: DATA TRANS.	ERROR(INT)	・ Noise	Check the effect of noise.	(1)
453: SPC SOFT DISCONNECT ALARM	Position - pole data error	・ Pulse coder failure ・ Entry of cutting fluid	Replace the Pulsecoder.	(3)

1.2.6.2 Alarms for separate detectors and troubleshooting actions

These alarms concern separate detectors that are connected to the control unit via a separate detector interface unit (SDU).
Follow the "Detailed troubleshooting methods" described in the next section to take appropriate actions in accordance with the alarm number and description.

Alarm No.: Alarm	Description	Possible cause	Action	Detailed troubleshooting methods
380: BROKEN LED(EXT)	LED disconnection	· Detector failure	Replace the detector.	(4)
382: COUNT MISS(EXT)	Position data count error			
383: PULSE MISS(EXT)	Small internal signal amplitude			
384: SOFT PHASE ALARM(EXT)	Position data alarm			
385: SERIAL DATA ERROR(EXT)	Communication interruption	· Cable disconnection · Noise · Detector failure	Check the cable. Check the effect of noise. Replace the detector.	(2) (1) (4)
386: DATA TRANS. ERROR(EXT)	ERROR(INT)	· Noise	Check the effect of noise.	(1)
381: ABNORMAL PHASE (EXT) 387: ABNORMAL ENCODER(EXT)	Contact the machine tool builder or detector manufacturer for detailed information.			

1.2.6.3 Detailed troubleshooting methods

(1) Checking the effect of noise

Check CNC diagnosis information No. 356 (Built-in detector), No. 357 (Separate detector).
Normally, 0 is displayed. However, if the position data from the Pulsecoder becomes unstable due to noise or some other factor, this value is incremented. The value is cleared when the CNC unit is powered off. Immediately after the power is turned on, 0 is displayed.

(2) Checking the cable

Check whether the feedback cable is not disconnected and whether the connector is properly plugged.

(3) Replacing the Pulsecoder

(3)-1 Pulsecoder replacement procedure

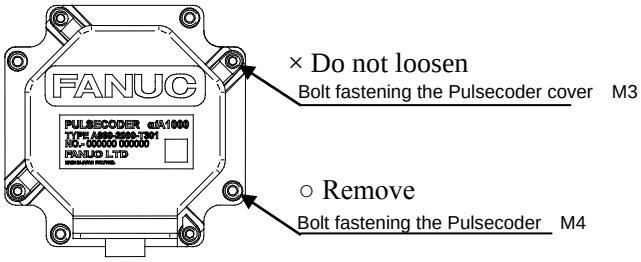

<1> Remove the four M4 hexagon socket head cap screws fastening the Pulsecoder. The M3 bolts fastening the Pulsecoder cover do not need to be loosed. (See the figure at right.)

<2> Remove the Pulsecoder and Oldham's coupling (see the following figure).

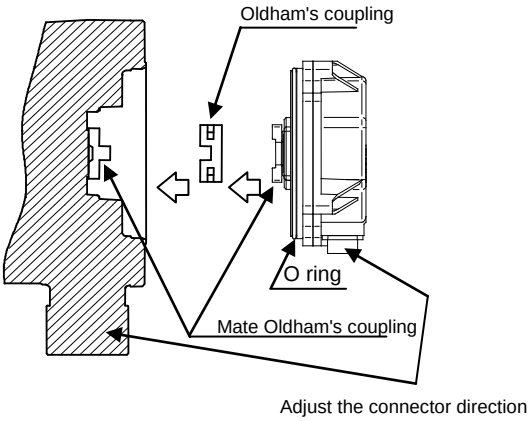

<3> Set the new Pulsecoder and Oldham's coupling on the motor. Adjust the direction of the mate Oldham's coupling to that of the Oldham's coupling so that the teeth are engaged.

Push in the Pulsecoder until the O ring fits in the joint between the motor and Pulsecoder. Take care so that the O ring of the Pulsecoder is not bitten.

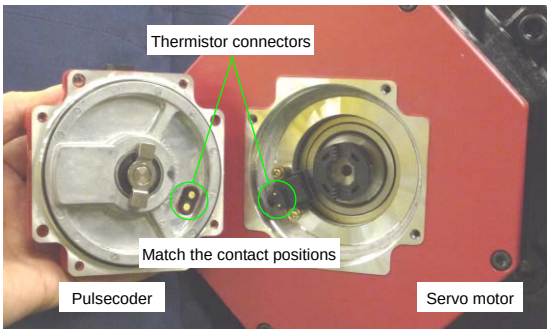

Attach the Pulsecoder in such a direction that the power connector of the servo motor and the feedback cable of the Pulsecoder face the same direction or that the thermistor connection parts of the servo motor and Pulsecoder match each other (see the figure at left).

<4> Fastening the Pulsecoder with the four M4 hexagon socket head cap screws in reverse order of <1>. (Appropriate torque: 1.5 Nm)

(3)-2 Feedback cable plugging procedure

Plug in the feedback cable connector, as instructed in the procedure below, and check that the connector is securely connected.

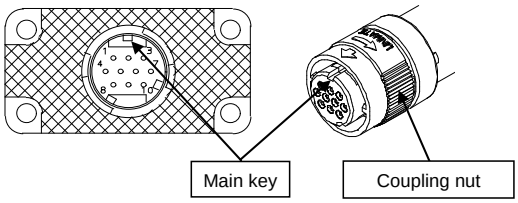

<1> Check the connecting surface and key direction.
Ensure that no foreign substances such as dust or oil are on the connecting part.

<2> Plug in the feedback cable connector.
Hold the connector, as shown in the figure at right. Plug in the connector until you hear a click.

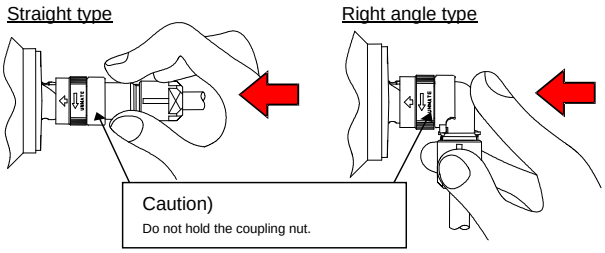

<3> Check the connection condition.

1 Check that the arrow mark of the connector is at the center, as shown in the figure at right. If the arrow mark is not at the center, turn the coupling nut manually until the mark comes to the appropriate position.

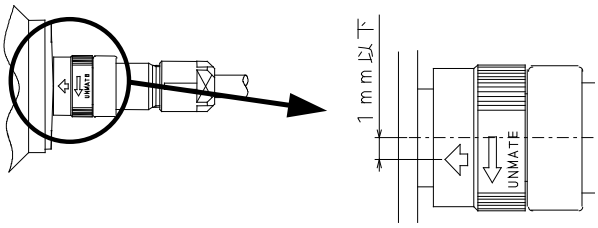

2 Hold the connector by the same part as in <2>, and pull it lightly to check that the connector does not come off. Do not pull the cable.

(4) If troubleshooting is difficult for the user

If it is not possible for the user to perform the troubleshooting for a problem related to an abnormality or noise from the detector, contact the machine tool builder or FANUC.

1.2.6.4 Maintenance of the Pulsecoder of βiS-B/βiS servo motors (□40 and □60)

Problems concerning the Pulsecoders of the motors listed in the table below require the maintenance (replacement) of the entire motor
(it is not possible to maintain the Pulsecoder alone).

Motor model	Motor specification	Remark
βiS 0.2/5000	A06B-0111-Bcc3#dddd	Frame size □40
βiS 0.3/5000	A06B-0112-Bcc3#dddd	
βiS 0.4/5000	A06B-0114-Bcc3#dddd	Frame size □60
βiS 0.4/5000-B	A06B-2114-Bcc3#dddd	
βiS 0.5/6000	A06B-0115-Bcc3#dddd	
βiS 0.5/6000-B	A06B-2115-Bcc3#dddd	
βiS 1/6000	A06B-0116-Bcc3#dddd	
βiS 1/6000-B	A06B-2116-Bcc3#dddd	
(cc, dddd : Any)		

1.3 PREVENTIVE MAINTENANCE OF SERVO AMPLIFIERS

1.3.1 Warnings, Cautions, and Notes on Operation of Servo Amplifiers

This subsection contains the safety precautions on preventive maintenance of a servo amplifier (a generic term to refer to the Power Supply, servo amplifier, spindle amplifier, and other sub modules of a motor drive unit). These precautions are classified into "warnings," "cautions," and "notes" according to their bearing on safety. Make sure that you understand and comply with these precautions when carrying out the maintenance work.

⚠WARNING

- **Make sure that you are safely dressed and have a safe working environment when performing preventive maintenance for a servo amplifier.**
  - Be dressed safely, e.g. by wearing gloves and safety shoes, to protect against injury due to an edge or protrusion and electric shock.
  - Have the work done by more than one person, where possible, so that immediate action can be taken if an accident occurs when handling a servo amplifier.
  - A servo amplifier and AC reactor contain heavy components. Be careful when transporting them or mounting them on the power magnetics cabinet. Be extremely careful when touching the heat sink.

- **Check the door of the power magnetics cabinet before powering it on.**
  - Ensure that the door of the power magnetics cabinet containing the servo amplifier, as well as all other doors, are closed and locked except during maintenance work.

- **Opening the power magnetics cabinet must be performed by a person who has been educated on the maintenance of the relevant machine or equipment. Such personnel must shut down both the input breaker of the power magnetics cabinet and the plant electric switch for supplying power to the power magnetics cabinet before opening the cabinet.**

- **Be careful about electric shock, fire, and other accidents.**
  - If the machine must be operated with the door open for adjustment or some other purpose, the operator must keep his or her hands and tools well away from any dangerous voltages. Such work must be done only by a person trained in the maintenance of the machine or equipment.
  - Ensure that the door of the power magnetics cabinet is locked so that the door cannot be opened by anyone, except service personnel or a qualified person trained in maintenance to prevent electric shock, when the servo amplifier is powered on.
  - When the need arises for an operator to open the door of the power magnetics cabinet and perform an operation, ensure that the operator is sufficiently educated in safety or that a protective cover is added to prevent the operator from touching any dangerous part.
  - Because the servo amplifier uses a large-capacitance electrolytic capacitor internally, the servo amplifier remains charged for a while even after the power is turned off. Before touching the servo amplifier for maintenance or other purposes, ensure your safety by measuring the residual voltage in the DC link with a tester and confirming that the charge indication LED (red) is off.
  - Close the servo amplifier cover after completing the wiring.
  - A loose screw or poor connector contact can cause a motor malfunction or overheating, connection to ground, or short-circuit. Be extremely careful with power supply lines, motor power lines, and DC link connections through which a large electric current flows, because a loose screw or poor connector contact may lead to a fire. Tighten screws and connectors using the specified screw tightening torque.
  - The surface of the radiator and regenerative discharge unit become extremely hot. Do not touch them directly.

- **When operating the machine for the first time, check that the machine operates as instructed.**
  - To check whether the machine operates as instructed, first specify a small value for the motor and then increase the value gradually. If the motor does not operate as instructed, perform an emergency stop on the motor immediately.
  - When pressing the emergency stop button, check that the motor stops immediately and that the power being supplied to the amplifier is shut off by the magnetic contactor.

- **Notes on alarms**
  - If the machine stops due to an alarm, check the alarm number. Depending on the alarm issued, if the power is supplied without replacing the failed component, another component may be damaged, making it difficult to identify the original cause of the alarm.
  - Before resetting an alarm, ensure that the original cause of the alarm has been removed.

- **If the motor causes any abnormal noise or vibration while operating, stop it immediately.**
  - Using the motor in spite of the abnormal noise or vibration may damage the servo amplifier.

- **Do not disassemble or modify a servo amplifier.**
  Do not disassemble or modify a servo amplifier in any way not specified by FANUC; doing so can lead to a failure.

⚠CAUTION

- **Notes on servo amplifier replacement and wiring**
  - The work of servo amplifier replacement and wiring should be carried out by a person trained in the maintenance of the machine and equipment concerned.
  - When replacing a servo amplifier, check that the combination of the amplifier and the motor is appropriate.
  - Check that the amplifier is securely mounted in the power magnetics cabinet. If there is any clearance between the power magnetics cabinet and the surface on which the amplifier is mounted, dust entering the gap may hinder the normal operation of the servo amplifier.
  - Ensure that the power supply lines, motor power lines, and signal lines are each connected to the correct terminal or connector.
  - Unless otherwise instructed, do not unplug a connector and plug it back with the power on; doing so may cause the servo amplifier to fail. The servo amplifier may be damaged.
  - When mounting or unmounting the servo amplifier, exercise care not to get your fingers caught between the servo amplifier and power magnetics cabinet.
  - Take care not to lose track of removed screws. If a screw is lost inside the unit and the power is turned on, the machine may be damaged.
  - Exercise care to prevent the power supply lines and motor power lines from being connected to the ground or being short-circuited.
  - Protect the lines from any stress such as bending. Handle the line ends appropriately.

- **Exercise care in the handling of the servo amplifier.**
  - Do not disassemble a servo amplifier. Doing so poses the risk of electric shock, because the capacitor may remain charged.
  - Do not apply shock to a servo amplifier. Doing so may damage its components, potentially causing the amplifier to malfunction.
  - Do not apply an excessively large force to plastic parts. If a plastic section breaks, it may damage internal parts, thus hindering normal operation or leading to a risk of injury due to a broken section.

- **Use a servo amplifier in an appropriate environment.**
  - Take a measure to prevent electroconductive, flammable, and corrosive material as well as mist and water drop from getting in the unit. The entry of any such material may cause the unit to explode, break, malfunction, etc.
  - Exercise care to prevent cutting fluid, oil mist, cutting chips, or other foreign matter from attaching to the radiator or fan motor exposed to the outside of the power magnetics cabinet. Otherwise, the servo amplifier may become unable to meet its specifications. The service lives of the fan motor and semiconductors can also be reduced.

- **Clean the heat sink and fan motor periodically.**
  - Replace the filter of the power magnetics cabinet periodically.
  - Before cleaning the heat sink, shut down the power and ensure that the temperature of the heat sink is as cool as the room temperature. The heat sink is very hot immediately after power shutdown, touching it may cause burn injury.
  - When cleaning the heat sink by blowing air, be careful about dust scattering. Conductive dust attached to the servo amplifier or its peripheral equipment can lead to a failure.

NOTE

- **Leave sufficient space around the doors of the machine and equipment to enable maintenance to be performed easily.**

- **Do not step or sit on the servo amplifier, or do not apply shock to it.**

- **Do not remove a nameplate from a motor.**
  - The nameplate is necessary to identify the servo amplifier during maintenance work.
  - If a nameplate comes off, be careful not to lose it.

NOTE

- This manual is focused on the preventive maintenance work to be performed for a FANUC servo amplifier. The information contained herein may not apply depending on the type or configuration of the machine. When reading this manual, refer to the manual of the machine as well. If there are any unclear points or anything you feel unsure about, do not act on your own; please contact the machine tool builder or FANUC.
- For detailed information about a servo amplifier, see the manual list shown earlier and, if necessary, obtain the latest version of the corresponding manual.

1.3.2 Preventive Maintenance of a Servo Amplifier

To use a servo amplifier safely throughout its entire service life, perform daily and periodic inspections.

⚠CAUTION

- The preventive maintenance method differs from machine to machine in many respects. Depending on the machine in use, it may be difficult for the user to perform periodic inspection or cleaning. If you are not sure about anything as to preventive maintenance, consult with the machine tool builder and ensure that you can perform periodic inspection and cleaning.
- The machine should be used within the scope of specification defined by the machine tool builder. Using the machine in any way that is outside the specified scope can reduce the servo amplifier's service life or cause a failure.

Inspection part	Inspection item	Inspection interval		Routine
		Periodic	Judgment criterion	
Operating environment	Ambient temperature	○		Around the power magnetics cabinet: 0 to 45°C, in the power magnetics cabinet: 0 to 55°C
	Humidity	○		90% or below RH (dew condensation not allowed)
	Dust/oil mist	○		There shall be no dust or oil mist attached near the servo amplifier.
	Cooling air path	○		The cooling fan shall be operating normally without the air flow being interrupted.
	Abnormal vibration/noise	○		No abnormal noise or vibration shall be present that has not been experienced in the past. Vibration near the servo amplifier shall be 0.5 G or less.
	Power supply voltage	○		200-V input type: Within 200 to 240 V 400-V input type: Within 380 to 480 V
Servo amplifier	General	○		There shall be no abnormal noise or smell, and there shall be no dust or oil mist attached.
	Screw		○	There shall be no loose screw.
	Fan motor (NOTE 1, 2)	○		There shall be no abnormal vibration or noise, and the fan blades shall be rotating normally. There shall be no dust or oil mist attached.
	Connector		○	There shall be no loose or broken connector.
	Cable		○	There shall be no sign of overheating or sheath deterioration (discoloration pr crack).
CNC	Absolute (NOTE 2) Pulsecoder battery	○		The machine operator's panel or screen shall not display the alarm indicating the battery voltage of the absolute Pulsecoder is low.
External equipment	Magnetic contactor		○	The contactor shall not rattle or chatter.
	Ground fault interrupter		○	The interrupter shall be able to trip.
	AC reactor		○	There shall be no hum.

NOTE

1 Fan motors are periodic-replacement parts. It is recommended to inspect fan motors on a routine basis and replace them in a preventive manner.
2 Fan motors and batteries are periodic-replacement parts. It is recommended to prepare spare parts.

1.3.3 Maintenance of a Servo Amplifier

1.3.3.1 Display of the servo amplifier operation status

The status LEDs on the front of the servo amplifier indicate the operation status of the servo amplifier (whether it is operating normally, the type of alarm, etc.). Use these LEDs for maintenance, inspection, troubleshooting, etc.

> ⚠**CAUTION**
> A servo amplifier failure may arise from a combination of multiple causes, in which case it can be difficult to identify all those causes. Handling the failure in an improper way may worsen the problem. It is therefore important to analyze the failure status minutely and identify the true cause or causes of the failure. There may be cases in which the failure appears to have been fixed but later recurs or cause a more serious trouble. If you are not sure about the root cause of or corrective action for a failure, do not act on your own; please contact the machine tool builder or FANUC for instructions on proper action.

αi-B/αi series

(1) Power Supply

Status LED position	Status display	Description
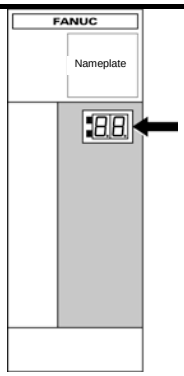	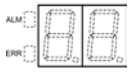	The status LED is off. Control power has not been supplied, cable is faulty, or control power circuit is defective.
	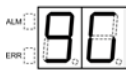	After control power is turned on, the Power Supply software series is displayed (for approx. 1 second). The last two digits of the software series number are displayed.
		The Power Supply software version is displayed (for approx. 1 second following the display of the spindle software series). [Example] 22→_1: Means version 1 of edition 22
	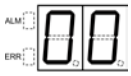	Ready status The main circuit is supplied with power (magnetic contactor is on); the Power Supply is ready for operation. When blinking: Power is off.
	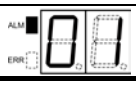	Alarm status The alarm type is indicated by the character displayed.

(2) Servo amplifier

Status LED position	Status display	Description
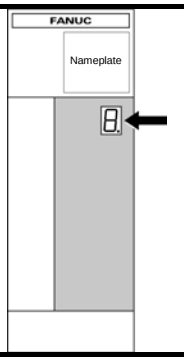		The status LED is off. Control power has not been supplied, cable is faulty, or control power circuit is defective.
		Waiting for READY signal from CNC
		Ready status The servo motor is excited.
		Alarm status The alarm type is indicated by the character displayed.

(3) Spindle amplifier

Status LED position	Status display	Description
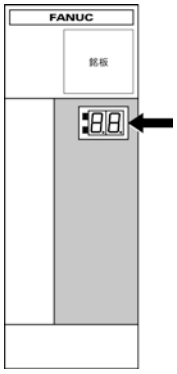	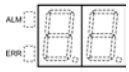	The status LED is off. Control power has not been supplied, cable is faulty, or control power circuit is defective.
		After control power is turned on, the spindle software series is displayed (for approx. 1 second). The last two digits of the software series number are displayed.
	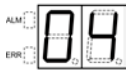	The spindle software version is displayed (for approx. 1 second following the display of the spindle software series). [Display] 01,02,03,・・・ → [Version] A, B, C,・・・
	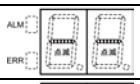	The CNC is not powered on (- - blinks). Waiting for serial communication and parameter loading completion.
	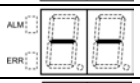	Parameter loading completed The motor is not excited.
	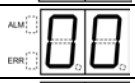	Ready status The spindle motor is excited.
	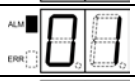	Alarm status The alarm type is indicated by the character displayed.
		Error status (invalid sequence or parameter setting error) The error type is indicated by the character displayed.

β*i*-B/β*i* series

(1) See Chapter 4, "CONFIRMATION OF THE OPERATION" in Part III of "β*i*SV-B."
(2) See Chapter 4, "CONFIRMATION OF THE OPERATION" in Part V of "β*i*SVSP-B."

1.3.3.2 Replacement of a fan motor

(1) See Section 4.1, "REPLACEMENT OF A FAN MOTOR" in Part IV of "β*i*SV-B."
(2) See Section 4.1, "REPLACEMENT OF A FAN MOTOR" in Part VI of "β*i*SVSP-B."

1.4 REPLACING BATTERY FOR ABSOLUTE PULSECODERS

(1) See Section 4.2, "REPLACING BATTERY FOR ABSOLUTE PULSECODERS" in Part IV of "β*i*SV-B."
(2) See Section 4.2, "REPLACING BATTERY FOR ABSOLUTE PULSECODERS" in Part VI of "β*i*SVSP-B."

VIII. MOTOR MAINTENANCE

1 SERVO MOTOR MAINTENANCE

1.1 SERVO MOTOR MAINTENANCE PARTS

1.1.1 Pulsecoder

The following lists the ordering specification numbers for maintenance.

(1) Pulsecoder: ordering specification

Motor model	Motor specification		Pulsecoder: ordering specification		
αiS-B series αiF-B series	A06B-2aaa-BccX A06B-2aaa-BccX #0100	X=0	A860-2050-T321	αiA4000	Standard specification IP67 specification Common
		X=2	A860-2051-T321	αiA32000	Standard specification IP67 specification Common
	A06B-2097-BccX#dddd A06B-2099-BccX#dddd	X=0	A860-2050-T351	αiA4000	Standard specification
βiS-B series βiF-B series	A06B-2aaa-BccX A06B-2aaa-BccX #0100	X=3	A860-2070-T321	βiA1000	Standard specification IP67 specification Common
βiSc-B series	A06B-2aaa-BccX A06B-2aaa-BccX #0100	X=7	A860-2070-T371	βiA1000 (Only for βiSc-B)	Standard specification IP67 specification Common

(aaa, cc , dddd: Can be any number except the above specified specification numbers.)

Motor model	Motor specification		Pulsecoder: ordering specification		
αiS series αiF series	A06B-0aaa-BccX	X=0	A860-2000-T301	αiA1000	Standard specification
		X=1	A860-2005-T301	αiI1000	Standard specification
		X=2	A860-2001-T301	αiA16000	Standard specification
	A06B-0097-BccX#dddd A06B-0099-BccX#dddd	X=0	A860-2000-T351	αiA1000	Standard specification
	A06B-0aaa-BccX #0100	X=0	A860-2000-T321	αiA1000	IP67 specification
		X=1	A860-2005-T321	αiI1000	IP67 specification
		X=2	A860-2001-T321	αiA16000	IP67 specification
βiS series βiF series	A06B-0aaa-BccX	X=3	A860-2020-T301	βiA128	Standard specification
	A06B-0aaa-BccX #0100	X=3	A860-2020-T321	βiA128	IP67 specification
βiSc series	A06B-0aaa-BccX	X=7	A860-2020-T361	βiA128 (Only for βiSc)	Standard specification
	A06B-0aaa-BccX #0100	X=7	A860-2020-T371	βiA128 (Only for βiSc)	IP67 specification

(aaa, cc ,dddd: Can be any number except the above specified specification numbers.)

(2) Oldham's coupling: ordering specification

Motor model	Motor specification	Oldham's coupling: ordering specification
αiS-B series αiF-B series βiS-B series βiSc-B series βiF-B series	A06B-2aaa-BccX	A290-0501-V535
αiS series αiF series βiS series βiSc series βiF series	A06B-0aaa-BccX	

(aaa, cc, X : Any)

NOTE

Problems concerning the Pulsecoders of the motors listed in the table below require the maintenance (replacement) of the entire motor
(It is not possible to maintain the Pulsecoder alone.)

Motor model	Motor specification	Remark
βiS 0.2/5000	A06B-0111-Bcc3#dddd	Frame size □40
βiS 0.3/5000	A06B-0112-Bcc3#dddd	
βiS 0.4/5000 βiS 0.4/5000-B	A06B-0114-Bcc3#dddd A06B-2114-Bcc3#dddd	Frame size □60
βiS 0.5/6000 βiS 0.5/6000-B	A06B-0115-Bcc3#dddd A06B-2115-Bcc3#dddd	
βiS 1/6000 βiS 1/6000-B	A06B-0116-Bcc3#dddd A06B-2116-Bcc3#dddd	

(cc, dddd : Any)

1.1.2 Cooling Fan

The following lists the ordering specification numbers of cooling fan units.

With αiS 50-B fan, with αiS 60-B fan, with αiF 40-B fan (including HV)

Motor model	Model name	Motor specification	Fan unit: order specification	Remark
αiS-B series αiF-B series	αiS 50/3000 FAN-B	A06B-2275-BXaX	A290-0241-T073	AC200V 1-phase
	αiS 60/3000 FAN-B	A06B-2278-BXaX		
	αiF 40/3000 FAN-B	A06B-2257-BXaX		
	αiS 50/3000HV FAN-B	A06B-2276-BXaX	A290-0241-T077	AC230V 1-phase
	αiS 60/3000HV FAN-B	A06B-2279-BXaX		
	αiF 40/3000HV FAN-B	A06B-2259-BXaX		

(X : Any, a=1 or 3)

With αiS 50 fan, with αiS 60 fan, with αiF 40 fan (including HV)

Motor model	Model name	Motor specification	Fan unit: order specification	Remark
αiS series αiF series	αiS 50/3000 FAN	A06B-0275-BXaX	A290-0241-T073	AC200V 1-phase
	αiS 60/3000 FAN	A06B-0278-BXaX		
	αiF 40/3000 FAN	A06B-0257-BXaX		
	αiS 50/3000HV FAN	A06B-0276-BXaX		
	αiS 60/3000HV FAN	A06B-0279-BXaX		
	αiF 40/3000HV FAN	A06B-0259-BXaX		

(X : Any, a=1 or 3)

αiS 150-B to αiS 500-B (including HV)

Motor model	Model name	Motor specification	Fan motor: order specification	Remark
αiS-B series	αiS 150/3000-B αiS 300/2000-B αiS 500/2000-B	A06B-2026-BXXX A06B-2292-BXXX A06B-2295-BXXX	A290-0281-V058	AC200V 3-phase
	αiS 150/3000HV-B αiS 300/2000HV-B αiS 300/3000HV-B αiS 500/2000HV-B αiS 500/3000HV-B	A06B-2027-BXXX A06B-2293-BXXX A06B-2290-BXXX A06B-2296-BXXX A06B-2297-BXXX	A290-0281-V059	AC400V 3-phase

(X : Any)

αiS 100 to αiS 500 (including HV)

Motor model	Model name	Motor specification	Fan unit: order specification	Remark
αiS series	αiS 100/2500 FAN αiS 200/2500 FAN αiS 300/2000 αiS 500/2000	A06B-0285-BX1X A06B-0288-BX1X A06B-0292-BX1X A06B-0295-BX1X	A290-0281-V053	AC200V 3-phase
	αiS 100/2500HV FAN αiS 200/2500HV FAN αiS 300/2000HV αiS 300/3000HV αiS 500/2000HV αiS 500/3000HV	A06B-0286-BX1X A06B-0289-BX1X A06B-0293-BX1X A06B-0290-BX1X A06B-0296-BX1X A06B-0297-BX1X	A290-0281-V054	AC400V 3-phase

(X : Any)

αiS 1000HV-B to αiS 1500HV-B

Motor model	Model name	Motor specification	Fan motor: order specification	Remark
αiS-B series	αiS 1000/2000HV-B	A06B-2098-BXXX	A290-0298-V058	AC400V 3-phase
	αiS 1000/3000HV-B αiS 1500/3000HV-B	A06B-2099-BXXX A06B-2097-BXXX	A290-0098-V058	AC400V 3-phase

(X : Any)

αiS 1000HV to αiS 3000HV

Motor model	Model name	Motor specification	Fan unit: order specification	Remark
αiS series	αiS 1000/2000HV	A06B-0298-BX1X (X : Any)	A290-0298-V054	AC400V 3-phase
	αiS 1000/2000HV	A06B-0098-BXXX (X : Any)	A290-0098-V051	
	αiS 1000/3000HV	A06B-0099-BXXX (X : Any)	A290-0098-V050	
	αiS 2000/2000HV αiS 3000/2000HV	A06B-0091-BX4X A06B-0092-BX4X (X : Any)	A290-0091-T054	

1.2 REPLACING COOLING FANS

This section describes how to replace cooling fan units.
For each motor, replace the cooling fan unit according to the procedure.

> ⚠**CAUTION**
> Before replacing a fan motor, remove the power lead to the fan motor and check that the rotation of the fan motor stops.
> If the load on the fan motor is high or an invalid phase sequence is made for a 3-phase fan motor, the fan motor may overheat and stop. If the power lead is connected, the fan motor suddenly starts rotating when recovered from overheating.

1.2.1 Cooling Fan Replacement Procedure

1.2.1.1 With αiS 50-B fan, with αiS 60-B fan, with αiF 40-B fan, with αiS 50 fan, with αiS 60 fan, with αiF 40 fan (including HV)

(1) Removing a cooling fan unit

<1> Remove the six M5 pan head machine screws fastening the fan cover and remove the front fan cover.
You need only to loosen the pan head machine screws indicated by the arrow in the figure.

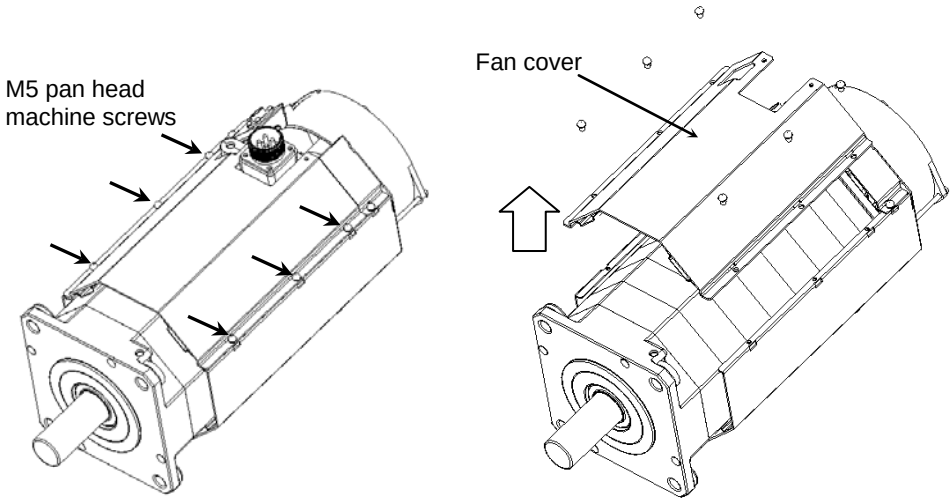

<2> Remove the cooling fan unit from the motor.

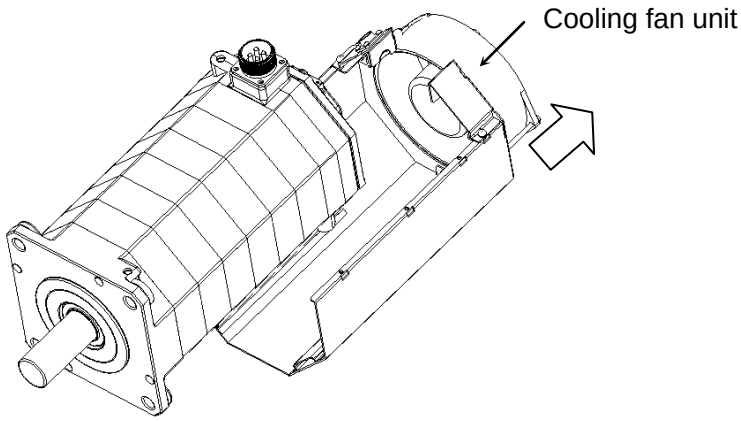

(2) Mounting a cooling fan unit

<1> Remove six M5 pan head machine screws from a new cooling fan unit and remove the front fan cover.
You need only to loosen the pan head machine screws indicated by the arrow in the figure.

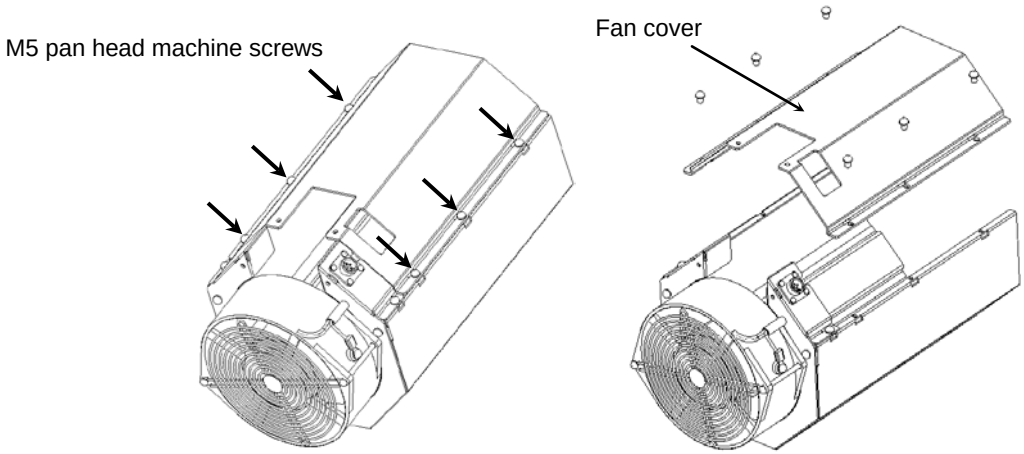

<2> Assemble the cooling fan unit and motor.
Align the inside of the sheet metal of the cooling fan unit with the side of the motor and touch the end of the sheet metal with the back of the motor. (See the figure below.)

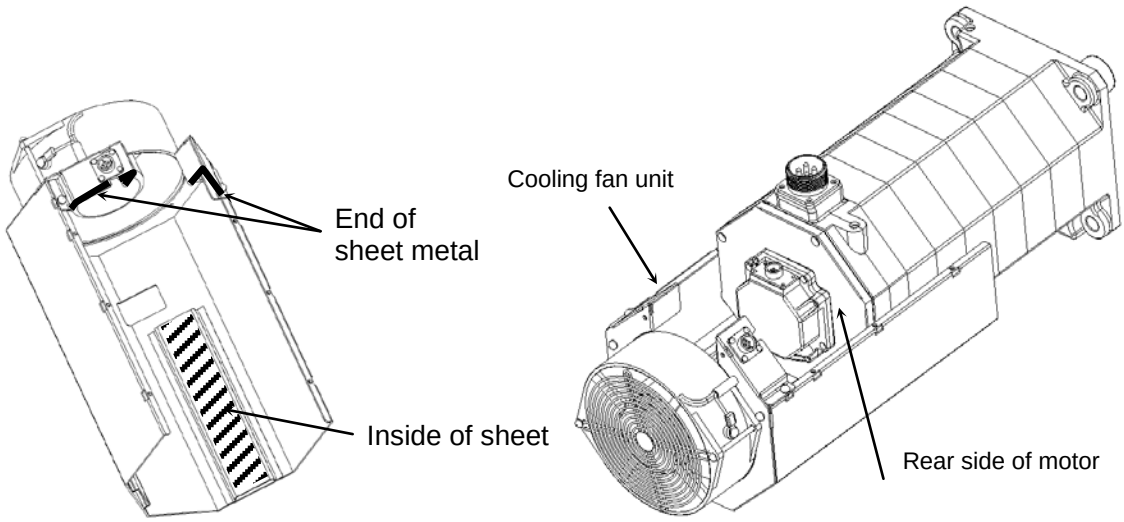

<3> Put the fan cover in place and tighten the six M5 pan head machine screws.
(Appropriate torque: 2.5 to 2.8 Nm)

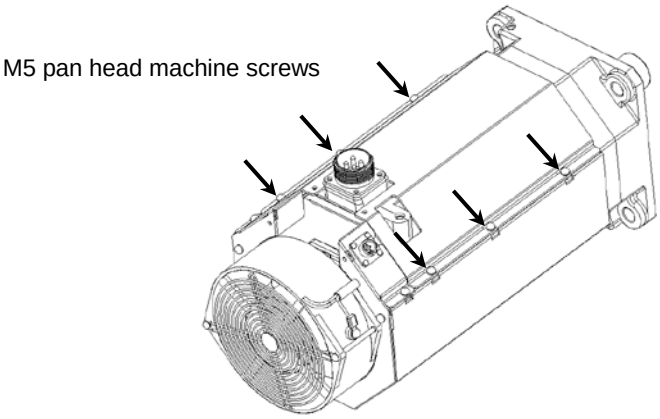

1.2.1.2 αiS 150-B to αiS 500-B (including HV)

(1) Removing a cooling fan
Remove the four M6 hexagon socket head cap screws and the three M4 tapping screws fastening the fan cover, and remove the fan cover.

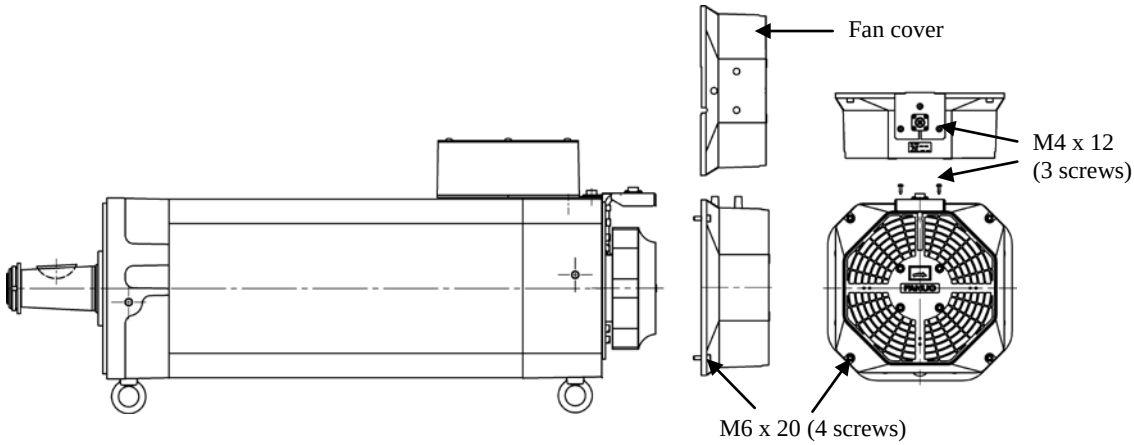

Remove the four M5 hexagon socket head cap screws fastening the fan motor base and remove the fan motor along with the base.

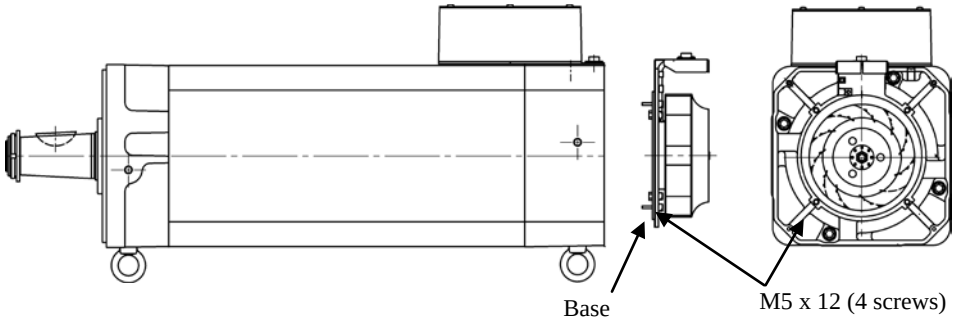

Remove the four M5 hexagon socket head cap screws fastening the fan motor and the four M3 pan head machine screws fastening the connector, and remove the fan motor.

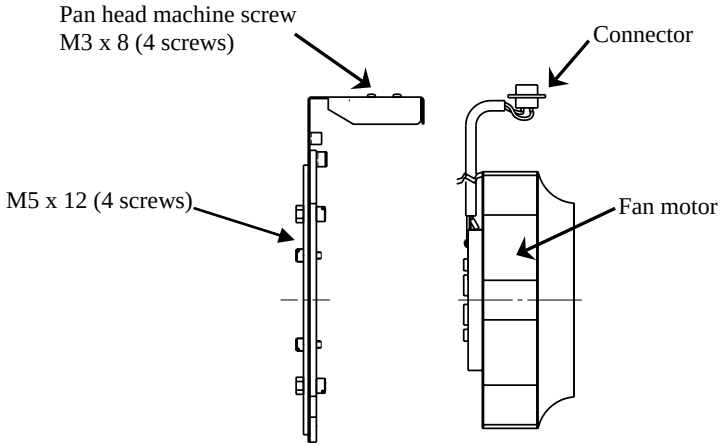

(2) Mounting a cooling fan

Pass the cable of the fan motor along the sheet metal guide. Run the cable along the back side of the connector attachment section so that the cable does not go over the sheet metal. Use four M5 hexagon socket head cap screws (appropriate torque: 2.0 to 2.5 Nm) to which adhesive for fastening (moderate strength) has been applied and four M3 pan head machine screws (appropriate torque: 0.7 to 1.1 Nm) to mount the fan motor. Be careful not to apply a force to the impeller of the fan motor when doing so.

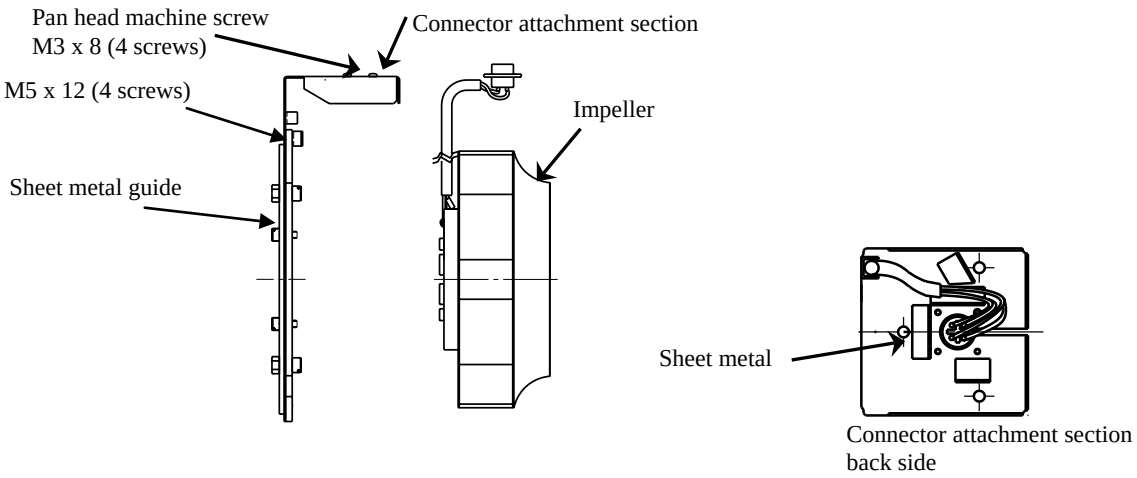

Apply adhesive for fastening (moderate strength) to the four M5 hexagon socket head cap screws, and assemble them while aligning the in-low of the base and that of the motor body (appropriate torque: 2.0 to 2.5 Nm).

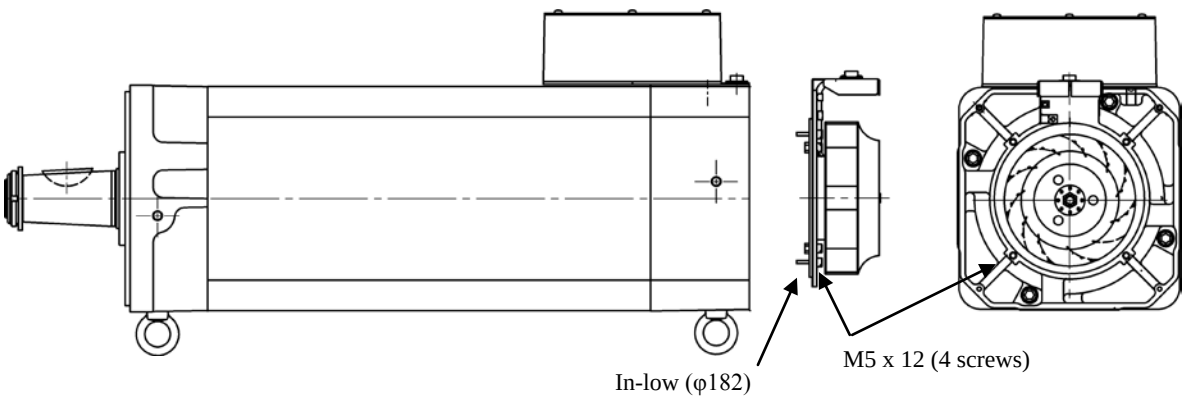

Use four M6 hexagon socket head cap screws (appropriate torque: 3.0 to 3.5 Nm) to which adhesive for fastening has been applied and three M4 tapping screws (appropriate torque: 1.6 to 2.3 Nm) to mount the fan cover. Pass the fan motor power cable through the notch on the fan cover at this time.

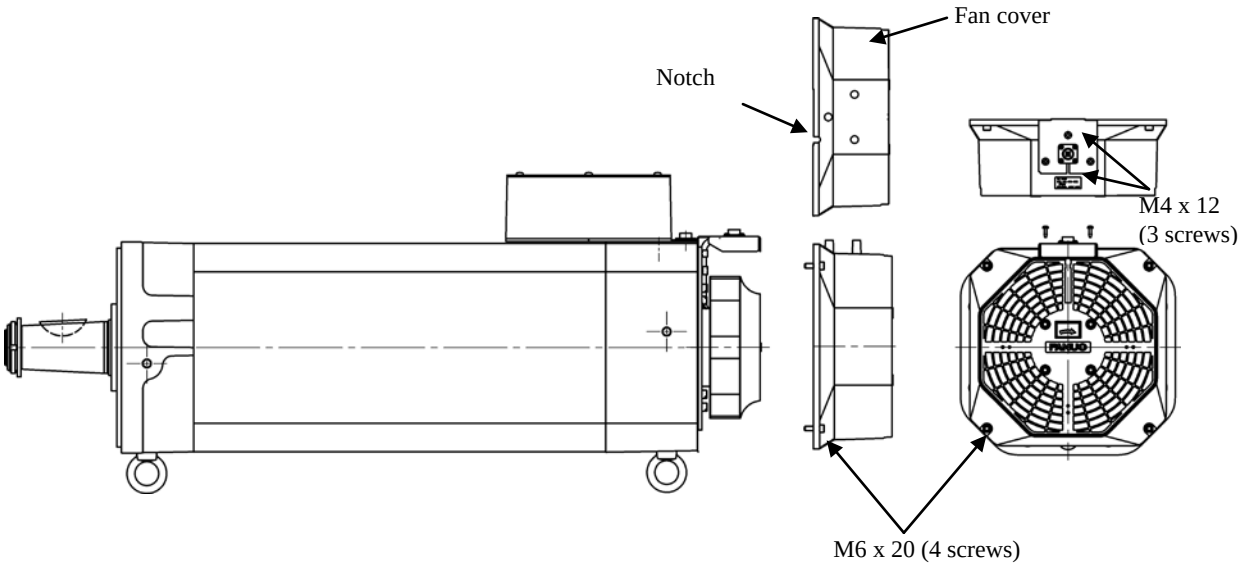

1.2.1.3 αiS 100 FAN, αiS 200 FAN (including HV)

(1) Removing a cooling fan unit
Remove the four M6 hexagon socket head cap screws fastening the fan unit and remove the fan unit.

(2) Mounting a cooling fan unit
Apply adhesive for fastening (moderate strength) to the four M6 hexagon socket head cap screws and mount the fan unit. (Appropriate torque: 3.0 to 3.5 Nm)

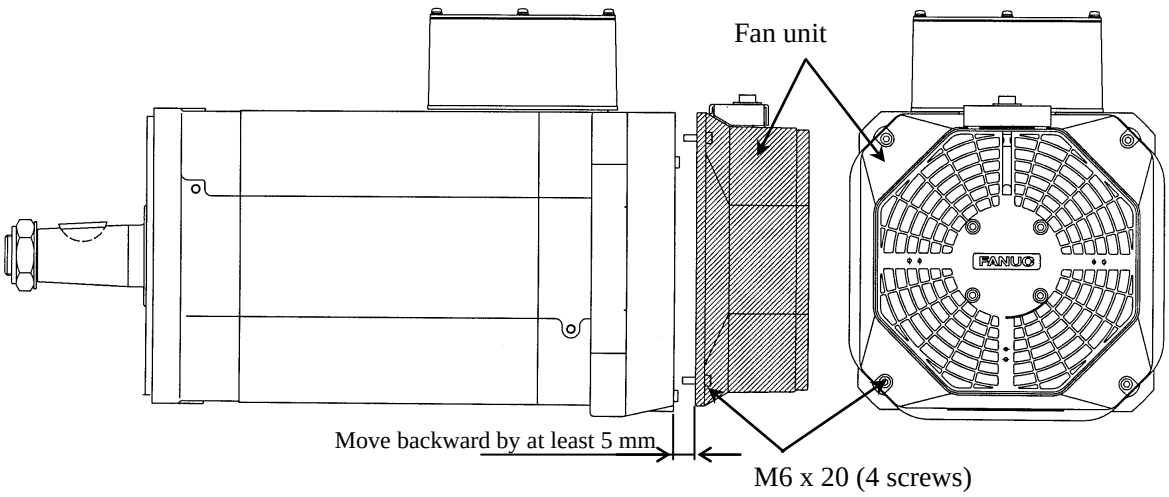

1.2.1.4 αiS 300, αiS 500 (including HV)

(1) Removing a cooling fan unit
Remove the four M6 hexagon socket head cap screws fastening the fan unit and remove the fan unit.

(2) Mounting a cooling fan unit
Apply adhesive for fastening (moderate strength) to the four M6 hexagon socket head cap screws and mount the fan unit. (Appropriate torque: 3.0 to 3.5 Nm)

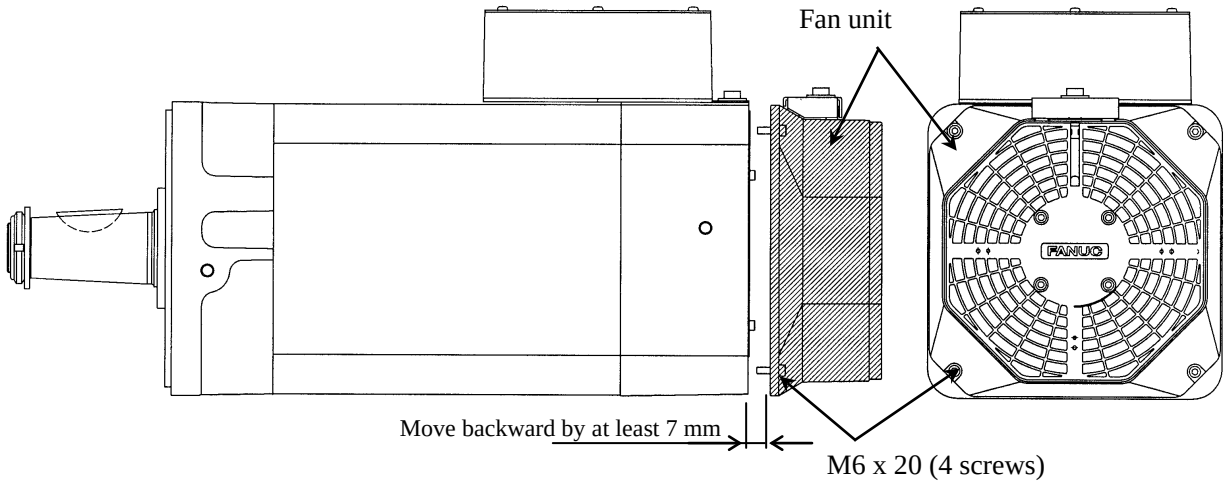

1.2.1.5 αiS 1000HV-B, αiS 1500HV-B

(1) Removing a cooling fan
Remove the four M10 hexagon socket head cap screws fastening the fan unit and remove the fan unit.

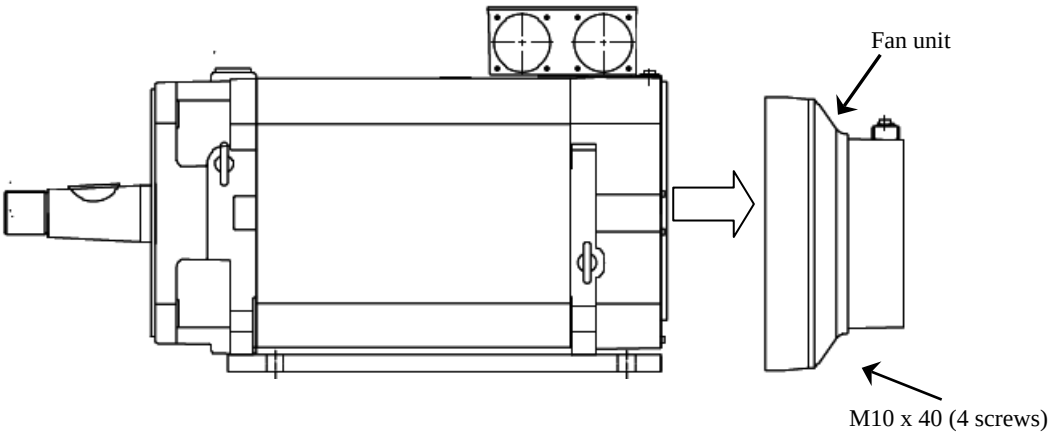

Remove the four M3 pan head machine screws fastening the connector and two M5 pan head machine screws fastening the connector plate.
Pass the lines through the groove of the connector plate and remove the connector plate.

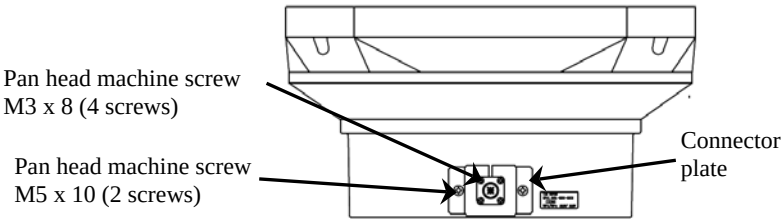

Mark screwing positions on the surface of the mesh (for reassembly), remove the three M4 pan head machine screws, and remove the mesh.
Remove the bolts (M10 or M5) fastening the fan motor and remove the fan motor. Pass the connector through the φ34 hole of the fan housing when removing the fan motor.

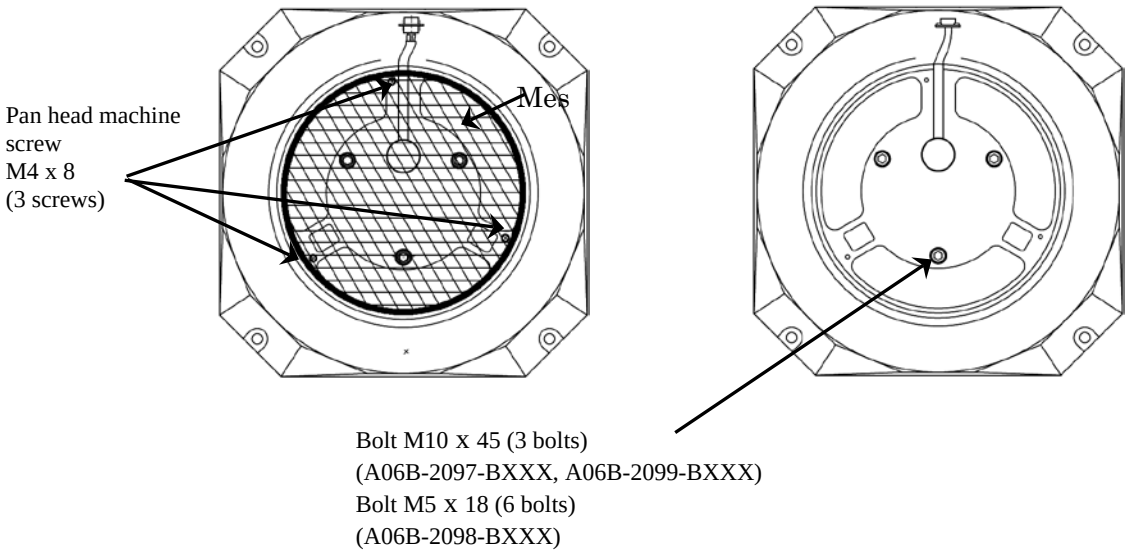

(4) Mounting a cooling fan
Pass the fan motor connector through the φ34 hole of the fan housing. Apply adhesive for fastening (moderate strength) to the bolts (M10 or M5) and fasten the fan motor onto the housing without applying excessive force to the impeller.
Appropriate torque: 19 to 26 Nm (M10), 2.3 to 3.3 Nm (M5)

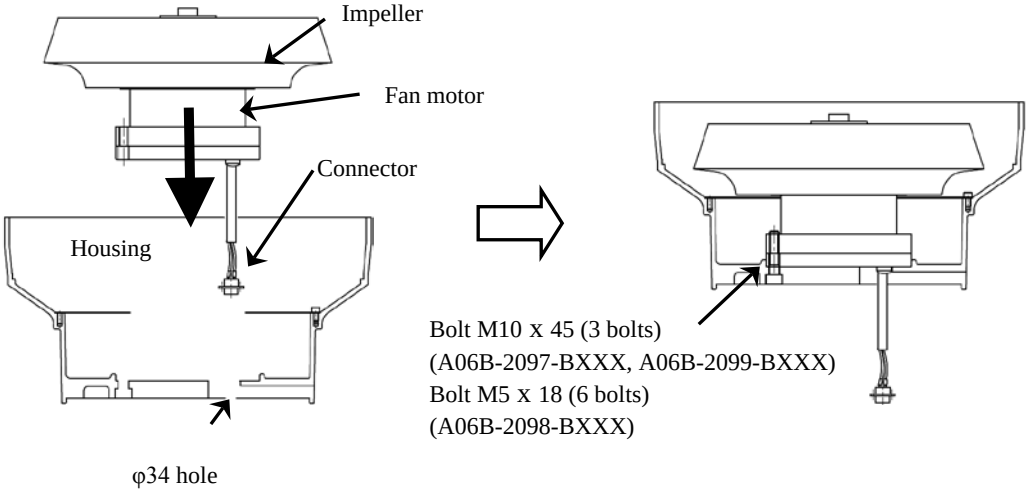

Mount the connector onto the connector plate using M3 pan head machine screws.
Mount the connector plate onto the housing using M5 pan head machine screws.
Mount the mesh onto the housing using M4 pan head machine screws.
Appropriate torque: 0.7 to 1.1 Nm (M3), 2.0 to 2.5 Nm (M5), 1.1 to 1.5 Nm (M4)

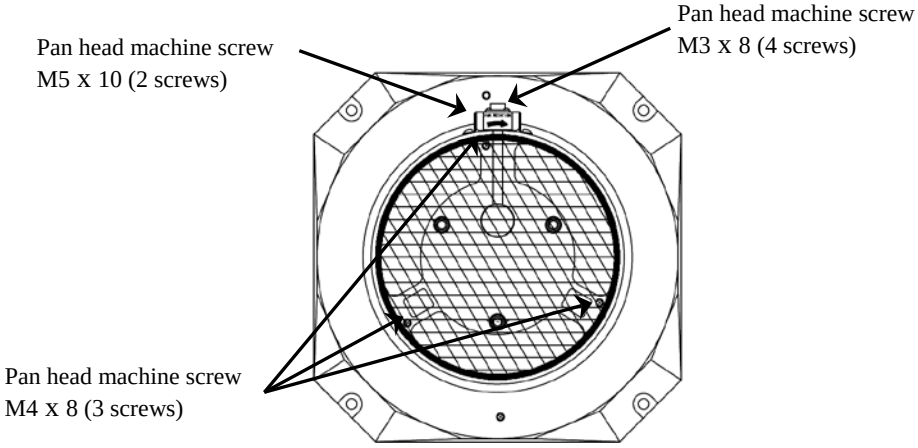

Apply adhesive for fastening (moderate strength) to the four M10 hexagon socket head cap screws and mount the fan unit.
Appropriate torque: 19 to 26 Nm (M10)

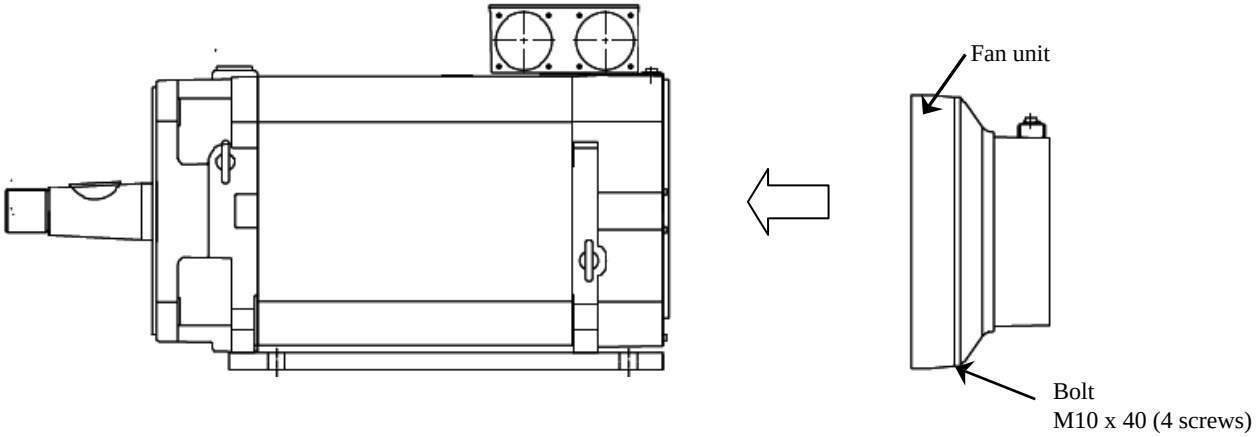

1.2.1.6 αiS 1000HV

(1) Removing a cooling fan unit
Remove the four hexagon socket head cap screws fastening the fan unit and remove the fan unit.
M6 x 40 4 bolts (A06B-0298-BXXX)
M10 x 40 4 bolts (A06B-0098-BXXX, A06B-0099-BXXX)

(2) Mounting a cooling fan unit
Apply adhesive for fastening (moderate strength) to the four hexagon socket head cap screws and mount the fan unit.
Appropriate torque: 9.6 to 13 Nm (M6), 19 to 26 Nm (M10)

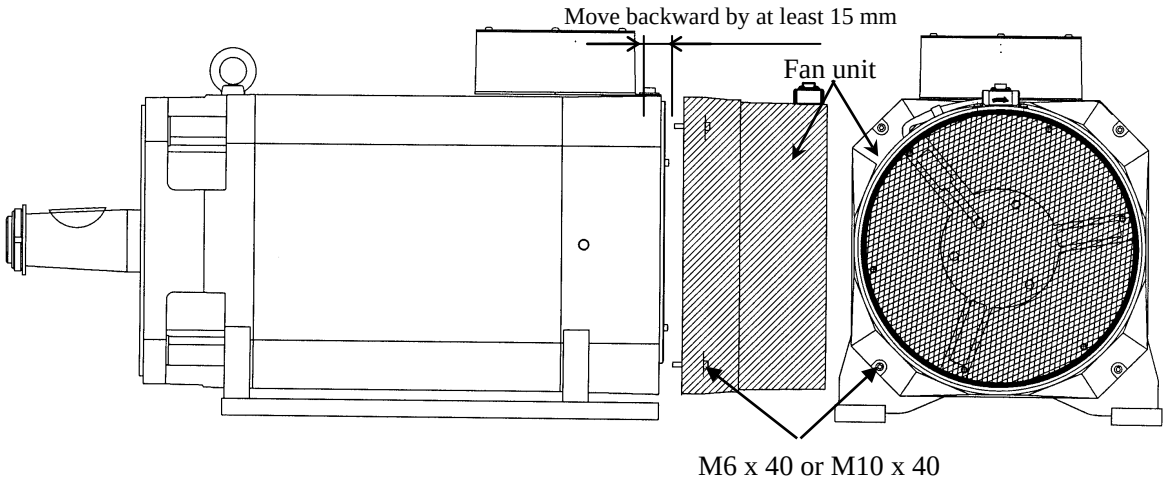

1.2.1.7 αiS 2000HV, αiS 3000HV

(1) Removing a cooling fan unit
Remove the eight M6 hexagon socket head cap screws fastening the fan unit and remove the fan unit.

(2) Mounting a cooling fan unit
Apply adhesive for fastening (moderate strength) to the eight M6 hexagon socket head cap screws and mount the fan unit. (Appropriate torque: 9.6 to 13 Nm)

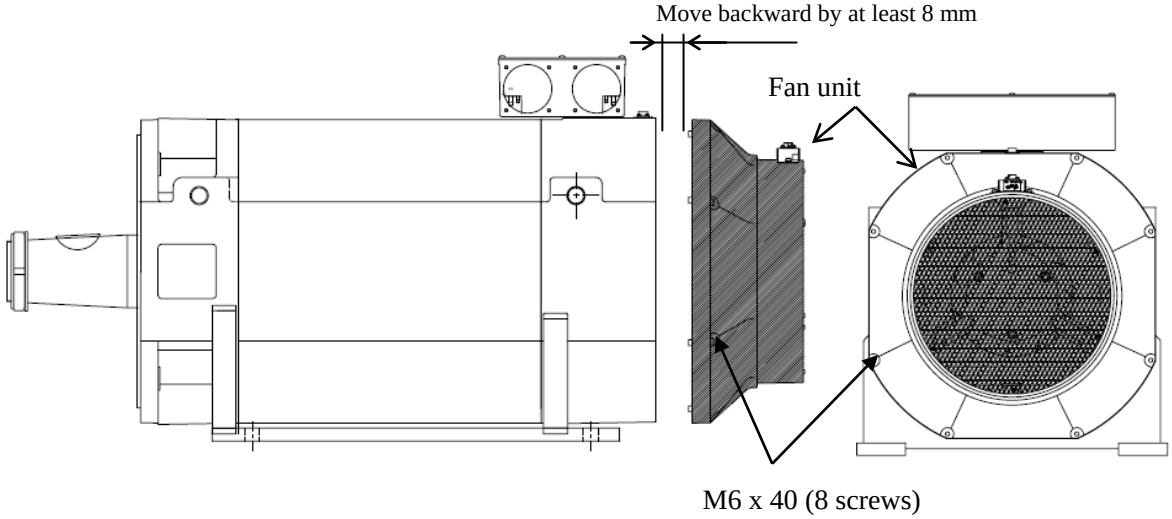

2 SPINDLE MOTOR MAINTENANCE PARTS

2.1 MAINTENANCE PARTS

(1) Terminal box ordering numbers (αiI-B, αiIP-B series)

Model	Terminal box assembly	Lid of terminal box
αiI 1/10000-B, αiI 1/15000-B αiI 1/24000-B, αiI 1.5/10000-B αiI 1.5/20000-B	A290-1402-T400	A290-1402-V410
αiI 2/10000-B, αiI 2/20000-B αiI 3/10000-B, αiI 3/12000-B αiI 3/15000-B	A290-1404-T400	A290-1402-V410
αiI 6/10000-B~αiI 15/8000-B αiI 6/12000-B~αiI 15/12000-B αiIP 12/8000-B~αiIP 22/8000-B	A290-1406-T400	A290-1406-V410
αiI 18/8000-B, αiI 22/8000-B	A290-1410-T400	A290-1410-V410
αiI 18/12000-B, αiI 22/12000-B αiIP 30/6000-B~αiIP 50/6000-B	A290-1410-T401	A290-1410-V410
αiI 30/7000-B, αiI 40/7000-B	A290-1412-T400	A290-1040-V402
αiIP 50/6000-B (specification for large terminal box) (*1)	A290-1454-T400	A290-1040-V402
αiI 50/5000-B	A290-1414-T400	A290-1040-V402
αiIP 60/5000-B	A290-0833-T400	A290-1040-V402

NOTE
1 The above table may not apply to motors of which motor drawing number ends with B9xx. Contact FANUC.
2 The motor of (*1) is a motor of which motor drawing number is A06B-2454-B5xx or A06B-2454–B6xx.

(2) Terminal box ordering numbers (αiIT-B, αiIL-B series)

Model name	Terminal box assembly	Lid of terminal box
αiIT 1/24000-B, αiIT 1.5/20000-B	A290-1402-T400	A290-1402-V410
αiIT 2/20000-B, αiIT 3/12000-B, αiIT 3/15000-B	A290-1404-T400	A290-1402-V410
αiIT 6/12000-B, αiIT 6/15000-B αiIT 8/12000-B, αiIT 8/15000-B αiIT 12/12000-B, αiIT 15/12000-B αiIPT 22/8000-B	A290-1406-T400	A290-1406-V410
αiIL 8/20000-B	A290-1487-T400	A290-1406-V410
αiIT 15/15000-B	A290-1410-T402	A290-1410-V410
αiIT 22/12000-B	A290-1410-T401	A290-1410-V410
αiIL 15/15000-B, αiIL 26/15000-B	A290-1489-T400	A290-1410-V410

NOTE
The above table may not apply to motors of which motor drawing number ends with B9xx. Contact FANUC.

(3) Terminal box ordering numbers (αiI-B/αiIP-B 400 V type series)

Model	Terminal box assembly	Lid of terminal box
αiI 1/10000HV-B, αiI 1.5/10000HV-B	A290-1502-T400	A290-1402-V410
αiI 2/10000HV-B, αiI 2/20000HV-B αiI 3/10000HV-B	A290-1504-T400	A290-1402-V410
αiI 6/10000HV-B~αiI 22/8000HV-B αiI 8/10000HV-B~αiI 22/12000HV-B αiIP 15/8000HV-B, αiIP 22/8000HV-B	A290-1406-T400	A290-1406-V410
αiI 30/7000HV-B, αiI 40/7000HV-B	A290-1412-T400	A290-1040-V402
αiIP 40/6000HV-B, αiIP 50/6000HV-B	A290-1410-T401	A290-1410-V410
αiI 50/5000HV-B	A290-1414-T400	A290-1040-V402
αiI 60/5000HV-B	A290-0860-T403	A290-1040-V402
αiIP 60/5000HV-B	A290-0833-T400	A290-1040-V402
αiI 75/5000HV-B	A290-1516-T400	A290-1040-V402
αiI 100/5000HV-B	A290-1516-T410	A290-1040-V402
αiI 100/5000HV-B (specification for large terminal box) (*1)	A290-1532-T410	A290-1532-V402
αiI 150/5000HV-B	A290-1532-T400	A290-1532-V402

NOTE
1 The above table may not apply to motors of which motor drawing number ends with B9xx. Contact FANUC.
2 The motor of (*1) is a motor of which motor drawing number is A06B-2518-B90x.

(4) Terminal box ordering numbers (αiIT-B/αiIL-B 400 V type series)

Model name	Terminal box assembly	Lid of terminal box
αiIT 1.5/20000HV-B	A290-1502-T400	A290-1402-V410
αiIT 2/20000HV-B, αiIT 3/12000HV-B	A290-1504-T400	A290-1402-V410
αiIT 6/12000HV-B, αiIT 8/12000HV-B αiIT 8/15000HV-B, αiIT 12/12000HV-B αiIT 15/12000HV-B, αiIT 15/15000HV-B αiIT 22/12000HV-B	A290-1406-T400	A290-1406-V410
αiIL 8/20000HV-B	A290-1597-T400	A290-1406-V410
αiIL 15/15000HV-B, αiIL 26/15000HV-B	A290-1595-T400	A290-1410-V410

NOTE
The above table may not apply to motors of which motor drawing number ends with B9xx. Contact FANUC.

(5) Terminal box ordering numbers (βiI, βiIP, βiIC series)

Model	Terminal box assembly	Lid of terminal box
βiI 3/12000-B, βiI 6/12000-B βiIC 3/6000-B, βiIC 6/6000-B	A290-1404-T400	A290-1402-V410
βiI 8/12000-B~βiI 15/8000-B βiIP 8/6000-B~βiIP 30/8000-B βiIC 8/6000-B	A290-1406-T400	A290-1406-V410
βiIP 40/6000-B	A290-1410-T400	A290-1410-V410

(6) Terminal box ordering numbers (βiIT series)

Model	Terminal box assembly	Lid of terminal box
βiIT 12/10000-B, βiIT 15/8000-B	A290-1406-T400	A290-1406-V410

(7) Fan motor parts (αiI-B, αiIP-B series)

Model	Fan assembly (*1)	Fan cover	Fan motor	Exhaust direction
αiI 1/10000-B, αiI 1/15000-B αiI 1.5/10000-B, αiI 1.5/20000-B	A290-1402-T500	A290-1402-X501	A90L-0001-0537/R	Rear
	A290-1402-T501		A90L-0001-0537/F	Front
αiI 1/24000-B	A290-1420-T520	A290-1402-X501	A90L-0001-0537/RKM	Rear
αiI 2/10000-B, αiI 2/20000-B αiI 3/10000-B, αiI 3/12000-B	A290-1404-T500	A290-1404-X501	A90L-0001-0538/R	Rear
	A290-1404-T501		A90L-0001-0538/F	Front
αiI 3/15000-B	A290-1404-T500	A290-1404-X501	A90L-0001-0538/R	Rear
αiI 6/10000-B, αiI 6/12000-B αiI 8/8000-B, αiI 8/10000-B αiI 8/12000-B	A290-1406-T500	A290-1406-X501	A90L-0001-0515/R	Rear
	A290-1406-T501		A90L-0001-0515/F	Front
αiI 6/15000-B	A290-1406-T500	A290-1406-X501	A90L-0001-0515/R	Rear
αiI 12/8000-B~αiI 22/8000-B αiI 12/12000-B~αiI 22/12000-B αiIP 12/8000-B~αiIP 22/8000-B	A290-1408-T500	A290-1408-X501	A90L-0001-0548/R	Rear
	A290-1408-T501		A90L-0001-0548/F	Front
αiI 30/7000-B, αiI 40/7000-B αiIP 30/6000-B~αiIP 50/6000-B	A290-1412-T510	A290-1412-X502	A90L-0001-0554/RW	Rear
	A290-1412-T511		A90L-0001-0554/FW	Front
αiI 50/5000-B	A290-1414-T510	-	-	Rear
	A290-1414-T511		-	Front
αiIP 60/5000-B (*2)	A290-0833-T510	-	-	Rear
	A290-0833-T511		-	Front

NOTE
1 These drawing numbers include fan motors.
2 In case of exchange these fan motors, please change fan assembly (fan motor with fan cover) unit.
3 The above table may not apply to motors of which motor drawing number ends with B9xx. Contact FANUC.

(8) Fan motor parts (αiIT-B series)

Model name	Fan assembly (*1)	Fan cover	Fan motor
αiIT 1/24000-B	A290-1460-T520	A290-1402-X501	A90L-0001-0537/RLM
αiIT 1.5/20000-B	A290-1463-T500	A290-1402-X501	A90L-0001-0537/RL
αiIT 2/20000-B, αiIT 3/12000-B αiIT 3/15000-B	A290-1464-T500	A290-1404-X501	A90L-0001-0538/RL
αiIT 6/12000-B, αiIT 6/15000-B αiIT 8/12000-B, αiIT 8/15000-B	A290-1466-T500	A290-1406-X501	A90L-0001-0515/RL
αiIT 12/12000-B, αiIT 15/12000-B αiIT 15/15000-B, αiIT 22/12000-B αiIPT 22/8000-B	A290-1469-T500	A290-1408-X501	A90L-0001-0548/RL

NOTE
1 These drawing numbers include fan motors.
2 The above table may not apply to motors of which motor drawing number ends with B9xx. Contact FANUC.

(9) Fan motor parts (αiI-B/αiIP-B 400 V type series)

Model	Fan assembly (*1)	Fan cover	Fan motor	Exhaust direction
αiI 1/10000HV-B αiI 1.5/10000HV-B	A290-1502-T500	A290-1402-X501	A90L-0001-0539/R	Rear
	A290-1502-T501		A90L-0001-0539/F	Front
αiI 2/10000HV-B αiI 3/10000HV-B	A290-1504-T500	A290-1404-X501	A90L-0001-0540/R	Rear
	A290-1504-T501		A90L-0001-0540/F	Front
αiI 6/10000HV-B αiI 8/8000HV-B	A290-1506-T500	A290-1406-X501	A90L-0001-0519/R	Rear
	A290-1506-T501		A90L-0001-0519/F	Front
αiI 12/8000HV-B αiI 15/8000HV-B αiI 22/8000HV-B αiIP 15/8000HV-B αiIP 22/8000HV-B	A290-1508-T500	A290-1408-X501	A90L-0001-0549/R	Rear
	A290-1508-T501		A90L-0001-0549/F	Front
αiI 30/7000HV-B αiI 40/7000HV-B αiIP 40/6000HV-B αiIP 50/6000HV-B	A290-1512-T510	A290-1412-X502	A90L-0001-0556/RW	Rear
	A290-1512-T511		A90L-0001-0556/FW	Front
αiI 50/5000HV-B(*2)	A290-1514-T510	-	-	Rear
	A290-1514-T511		-	Front
αiI 60/5000HV-B(*2) αiIP 60/5000HV-B(*2)	A290-0883-T510	-	-	Rear
	A290-0883-T511		-	Front
αiI 75/5000HV-B(*2) αiI 100/5000HV-B(*2)	A290-1516-T510	-	-	Rear
	A290-1516-T501	-	-	Front
αiI 150/5000HV-B	A290-1532-T500	A290-1532-X501	A90L-0001-0558/RW	Rear

NOTE
1 These drawing numbers include fan motors.
2 In case of exchange these fan motors, please change fan assembly (fan motor with fan cover) unit.
3 The above table may not apply to motors of which motor drawing number ends with B9xx. Contact FANUC.

(10) Fan motor parts (αiIT-B 400 V type series)

Model name	Fan assembly (*1)	Fan cover	Fan motor
αiIT 1.5/20000HV-B	A290-1563-T500	A290-1402-X501	A90L-0001-0539/RL
αiIT 2/20000HV-B, αiIT 3/12000HV-B	A290-1564-T500	A290-1404-X501	A90L-0001-0540/RL
αiIT 6/12000HV-B, αiIT 8/12000HV-B αiIT 8/15000HV-B	A290-1566-T500	A290-1406-X501	A90L-0001-0519/RL
αiIT 12/12000HV-B, αiIT 15/12000HV-B αiIT 15/15000HV-B, αiIT 22/12000HV-B	A290-1569-T500	A290-1408-X501	A90L-0001-0549/RL

NOTE
1 These drawing numbers include fan motors.
2 The above table may not apply to motors of which motor drawing number ends with B9xx. Contact FANUC.

(11) Fan motor parts (βiI, βiIP, βiIC series)

Model	Fan assembly (*1)	Fan cover	Fan motor	Exhaust direction
βiI 3/12000-B, βiI 6/12000-B βiIC 3/6000-B, βiIC 6/6000-B	A290-1404-T500	A290-1404-X501	A90L-0001-0538/R	Rear
	A290-1404-T501	A290-1404-X501(*2)	A90L-0001-0538/F	Front
βiI 8/12000-B~βiI 12/10000-B βiIP 8/6000-B, βiIP 12/6000-B βiIC 8/6000-B	A290-1406-T500	A290-1406-X501	A90L-0001-0515/R	Rear
	A290-1406-T501	A290-1406-X501(*2)	A90L-0001-0515/F	Front
βiI 15/8000-B βiIP 15/6000-B~βiIP 30/8000-B	A290-1408-T500	A290-1408-X501	A90L-0001-0548/R	Rear
	A290-1408-T501	A290-1408-X501(*2)	A90L-0001-0548/F	Front
βiIP 40/6000-B	A290-1412-T510	A290-1412-X502	A90L-0001-0554/RW	Rear
	A290-1412-T511	A290-1412-X502(*2)	A90L-0001-0554/FW	Front

NOTE
1 These drawing numbers include fan motors.
2 Performing maintenance on the fan covers only requires the label indicating the rotation direction (A370-1204-0006).

(12) Fan motor parts (βiIT series)

Model	Fan assembly (*1)	Fan cover	Fan motor
βiIT 12/10000-B	A290-1466-T500	A290-1406-X501	A90L-0001-0515/RL
βiIT 15/8000-B	A290-1469-T500	A290-1408-X501	A90L-0001-0548/RL

NOTE
1 These drawing numbers include fan motors.

APPENDIX

A MEASURING SERVO MOTOR WAVEFORMS (TCMD, VCMD)

To use a servo motor in a good performance condition for a long time and prevent any failure from occurring, the TCMD and VCMD waveforms of the servo motor can be checked as diagnosis.

(1) Observation of torque command (TCMD) and speed command (VCMD) waveforms

Check whether there is no abnormality in the waveforms.
For details on how to measure TCMD and VCMD waveforms, see the FANUC AC SERVO MOTOR, LINEAR MOTOR, SYNCHRONOUS BUILT-IN SERVO MOTOR PARAMETER MANUAL (B-65270EN).

Because waveforms appear differently according to conditions such as the load state and sending speed, it is recommended to compare them under the same conditions all the time. (for example, during fast traverse to the reference position or low-speed cutting)

(2) Waveform diagnosis

Check the measured waveforms to see whether:

<1> The peak current is within the limit to the current in the amplifier during rapid traverse, acceleration, or deceleration. (TCMD)

The limit on the current in the amplifier is as shown in Tables 1 and 2.

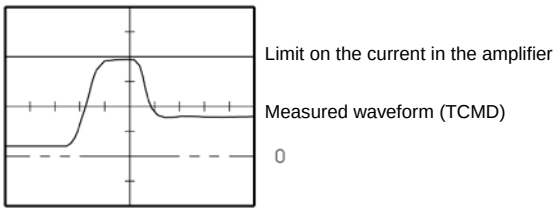

⇨The motor used to accelerate/decelerate with the amplifier current within the limit (the acceleration/deceleration torque used to be sufficient), but something is wrong now. If this is the case, the probable causes are:

- The load conditions in the machine have changed because of changed friction or reduced machine efficiency after long period of use.
- Motor failure

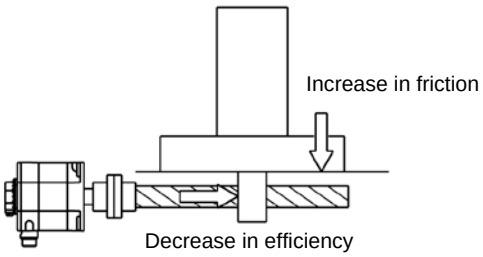

<2> The waveform has ripple during constant-speed feeding.
(VCMD)

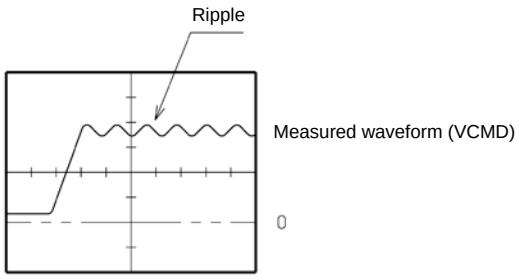

<3> The waveform has ripple when stopped.
(VCMD)

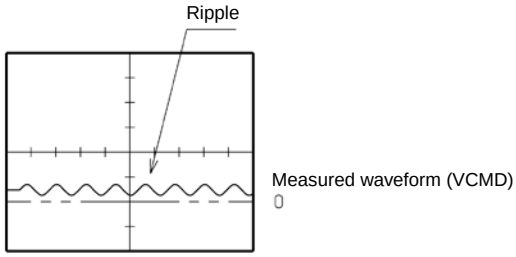

If you have a problem with regard to any of the items from <1> to <3> above, contact FANUC.

[Table 1] αiS-B/αiF-B (including HV)

Model name		Current value
200V	**400V**	
	αiS2/5000HV-B, αiS2/6000HV-B αiS4/5000HV-B, αiS4/6000HV-B	10Ap
αiS2/5000-B, αiS2/6000-B αiS4/5000-B, αiS4/6000-B αiF1/5000-B, αiF2/5000-B	αiF4/5000HV-B, αiF8/3000HV-B	20Ap
αiF4/5000-B, αiF8/3000-B	αiS8/4000HV-B, αiS8/6000HV-B, αiS12/4000HV-B αiF8/4000HV-B, αiF12/4000HV-B, αiF22/3000HV-B	40Ap
αiS8/4000-B, αiS8/6000-B, αiS12/4000-B αiF8/4000-B, αiF12/4000-B, αiF 22/3000-B	αiS12/6000HV-B, αiS22/4000HV-B, αiS22/6000HV-B αiS30/4000HV-B, αiS40/4000HV-B αiS50/2000HV-B, αiS60/2000HV-B αiF22/4000HV-B, αiF30/4000HV-B αiF40/3000HV-B, αiF40/3000HV FAN-B	80Ap
αiS12/6000-B, αiS22/4000-B, αiS22/6000-B αiS30/4000-B, αiS40/4000-B αiS50/2000-B, αiS60/2000-B αiF22/4000-B, αiF30/4000-B αiF40/3000-B, αiF40/3000 FAN-B		160Ap
	αiS50/3000HV FAN-B, αiS60/3000HV FAN-B αiS150/3000HV-B	180Ap
αiS50/3000 FAN-B, αiS60/3000 FAN-B αiS150/3000-B	αiS300/2000HV-B, αiS500/2000HV-B	360Ap
	αiS300/3000HV-B, αiS500/3000HV-B	540Ap
αiS300/2000-B, αiS500/2000-B	αiS1000/2000HV-B	360Ap x 2 (Note)
	αiS1000/3000HV-B	360Ap x 4 (Note)
	αiS1500/3000HV-B	540Ap x 4 (Note)

NOTE

More than one servo amplifier is used for one motor.

[Table 2] αiS/αiF (including HV)

Model name		Current value
200V	**400V**	
	αiS2/5000HV, αiS2/6000HV αiS4/5000HV, αiS4/6000HV	10Ap
αiS2/5000, αiS2/6000 αiS4/5000, αiS4/6000 αiF1/5000, αiF2/5000	αiF4/5000HV, αiF8/3000HV	20Ap
αiF4/5000, αiF8/3000	αiS8/4000HV, αiS8/6000HV, αiS12/4000HV αiF8/4000HV, αiF12/4000HV, αiF22/3000HV	40Ap
αiS8/4000, αiS8/6000, αiS12/4000 αiF8/4000, αiF12/4000, αiF 22/3000	αiS12/6000HV, αiS22/4000HV, αiS22/6000HV αiS30/4000HV, αiS40/4000HV αiS50/2000HV, αiS60/2000HV αiF22/4000HV, αiF30/4000HV αiF40/3000HV, αiF40/3000HV FAN	80Ap
αiS12/6000, αiS22/4000, αiS22/6000 αiS30/4000, αiS40/4000 αiS50/2000, αiS60/2000 αiF22/4000, αiF30/4000 αiF40/3000, αiF40/3000 FAN		160Ap
	αiS50/3000HV FAN, αiS60/3000HV FAN αiS100/2500HV, αiS100/2500HV FAN αiS 200/2500HV αiS 200/2500HV FAN	180Ap
αiS50/3000 FAN, αiS60/3000 FAN αiS100/2500-B, αiS100/2500 FAN αiS200/2500 αiS200/2500 FAN	αiS300/2000HV, αiS500/2000HV	360Ap
	αiS300/3000HV, αiS500/3000HV	540Ap
αiS300/2000, αiS500/2000	αiS1000/2000HV	360Ap x 2 (Note)
	αiS1000/3000HV αiS2000/2000HV, αiS3000/2000HV	360Ap x 4 (Note)

NOTE
More than one servo amplifier is used for one motor.

B HOW TO USE THE SPINDLE CHECK BOARD

B.1 OBSERVING DATA USING THE SPINDLE CHECK BOARD

B.1.1 Overview

Use of the spindle check board allows you to convert data in the spindle amplifier (digital values) into analog voltage values and observe the converted data with an oscilloscope or other equipment. For observing internal data, 2-channel analog output (CH1, CH2, output:-5 V to +5 V) and output (CH1D, CH2D) for observing specific bits such as bit data are available. In addition, the internal data can also be displayed on a 5-digit indicator.

B.1.2 Major Characteristics

Item		
Measurement point	CH1, CH2	CH1D,CH2D
Output voltage range	-5V~+5V	H:2Vmin L:0.8Vmax
Resolution	About 39 mV (10V/256)	-
External measuring instrument input impedance	10 k□min	10 k□min

B.1.3 How to Observe Data

By setting data using the four setting switches on the spindle check board, internal data can be output to the 5-digit indicator, analog voltage output circuit, and channel 1/channel 2 (LM, SM, or CH1, CH2).
Data to be output to channels 1 and 2 is output by the 8-bit D/A converter.
The correspondence between channel 1/2 and the check terminal is listed below.

Measurement point	Check terminal
Channel 1	CH1 CH1D, bit 0 of the data
Channel 2	CH2 CH2D, bit 0 of the data

B.1.4 Specifying Data to Be Monitored

<1> Press all four of the setting switches at the same time for at least one second to display "FFFFF" on the indicator.
<2> Turn off the switches and press the "MODE" switch. "d-00" will be displayed on the indicator and the system will enter the internal data observation mode. Even in this mode, the motor can be operated normally.
<3> Press the "UP" or "DOWN" switch while holding down the "MODE" switch. The displayed value changes in the range from "d-00" to "d-12."

<4> The following shows the correspondence between the destinations of the internal data of the serial spindle and addresses d-01 to d-12.

d-01 to 04: Specifies the data number, the amount of data shift, and the display format (decimal notation or hexadecimal notation) of the data to output to the indicator.

d-05 to d-08: Specifies the amount of data to be output to the channel 1, data shift, and whether an offset is provided.

d-09 to d-12: Specifies the amount of data to be output to the channel 2, data shift, and whether an offset is provided.

<5> To set the data, select the address "d-xx" using the method in <3>.

<6> Turn off the "MODE" switch. The display of "d-xx" will disappear in 0.5 seconds and the data will be displayed for one second. Use the "UP" or "DOWN" switch to change the data setting within one second.

<7> When more than a second elapses without pressing the "UP" or "DOWN" switch, data cannot be changed.
In such a case, you can start the procedure from the beginning of <6> by turning the "MODE" switch on or off.

B.1.5 Description and Initial Value of Each Address

[Output to the indicator]

Address	Description	Initial value
d-01	Specifies a data number.	0
d-02	Shift at data output (0 to 31 bits)	0
d-03	Data shift direction 0: Data is shifted right. 1: Data is shifted left.	0
d-04	Display format 0: Decimal notation 1: Hexadecimal notation (0 to F)	0

[Output to channel 1]

Address	Description	Initial value
d-05	Specifies a data number.	218(U-phase current)
d-06	Shift at data output (0 to 31 bits)	8
d-07	Data shift direction 0: Data is shifted right. 1: Data is shifted left.	0
d-08	Whether there is offset 0: No offset is provided 1: An offset is provided	1

[Output to channel 2]

Address	Description	Initial value
d-09	Specifies a data number.	19 (Motor speed)
d-10	Shift at data output (0 to 31 bits)	18
d-11	Data shift direction 0: Data is shifted right. 1: Data is shifted left.	0
d-12	Whether there is offset 0: No offset is provided 1: An offset is provided	1

B.1.6 Principles in Outputting the Internal Data of the Serial Spindle

The length of data is 32 bits (BIT31 to BIT00) unless it is described as 16 bits.

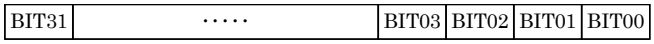

(1) Example of output to the indicator

Example 1. Example of decimal notation

When the number of digits to shift data (d-02)=0 and display format (d-04)=0 (decimal notation): The last 16 bits of data (BIT15 to BIT00) are converted into decimal (0 to 65535 max.) and displayed.

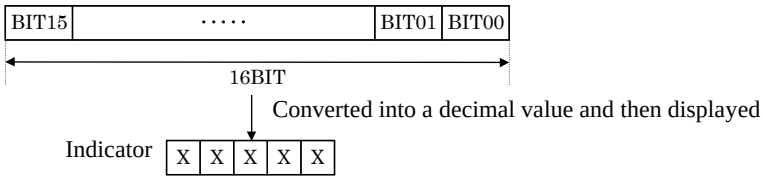

Example 2. Example of hexadecimal notation

When the number of digits to shift data (d-02)=0 and display format (d-04)=1 (hexadecimal notation): The last 16 bits of data (BIT15 to BIT00) are converted into hexadecimal (0 to FFFFF max.) and displayed.

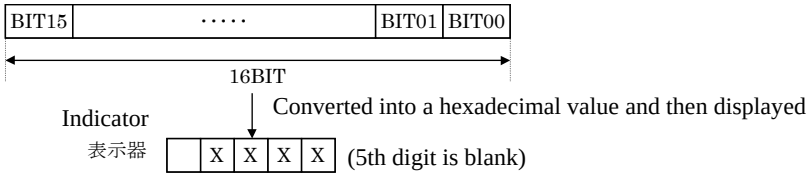

Example 3. Shifting data left

When the number of digits to shift data (d-02)=3, shift direction is left (d-03=1), and display format (d-04)=1 (hexadecimal notation): The last 16 bits of data (BIT12 to BIT00) and the last three bits of data (=0) are converted into hexadecimal (0 to FFFFF max.) and displayed.

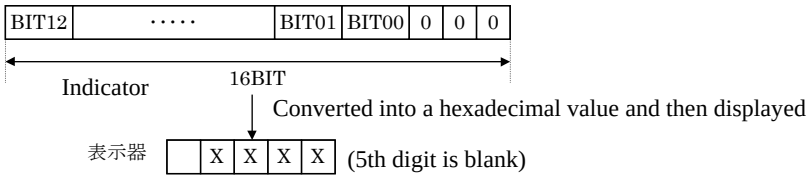

Example 4. Shifting data right

When the number of digits to shift data (d-02)=5, shift direction is right (d-03=0), and display format (d-04)=0 (decimal notation): Data in BIT20 to BIT05 is converted into decimal (0 to 65535 max.) and displayed.

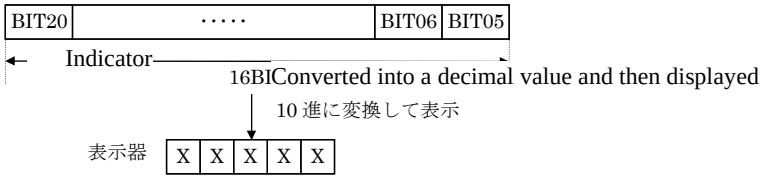

Example 5. Shifting data right when the data length is 16 bits

When the data length is 16 bits, data shift (d-02)=5, shift direction is right (d-03=0), and display format is decimal notation (d-04=0): The first five bits of data and data in BIT15 to BIT05 are converted into decimal and displayed.

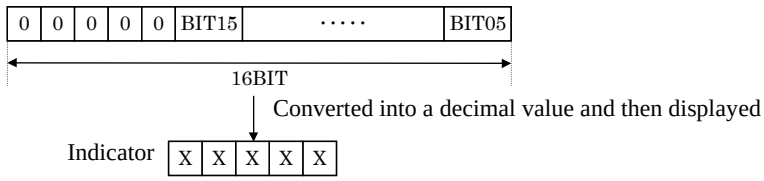

(2) Example of output to the channel 1

Internal data is output to channel 1 by setting the data to the 8-bit D/A converter.

The D/A converter output ranges from -5 to +5 V, depending on a set value of internal data. See the table below.

Internal data in binary (decimal)	Setting d-08 (whether there is offset)	Output on channel 1
00000000(0)	0	-5V
11111111(255)	0	+4.96V
10000000(-128)	1	-5V
00000000(0)	1	0V
01111111(127)	1	+4.96V

Example 1. Data set

When the number of digits to shift data (d-06)=0 and when no offset is provided (d-08=0): The last eight bits of data (BIT07 to BIT00) is set in the D/A converter.

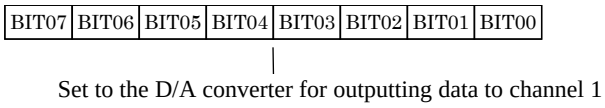

Example 2. Shifting data left

When the number of digits to shift data (d-06)=3, shift direction is left (d-07=1), and no offset is provided (d-08=0): Data in BIT04 to BIT00 and the last three bits of data (=0) are set in the D/A converter.

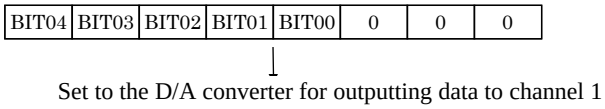

Example 3. Shifting data right

When the number of digits to shift data (d-06)=10, shift direction is right (d-07=0), and no offset is provided (d-08=0): Data in BIT17 to BIT10 is set in the D/A converter.

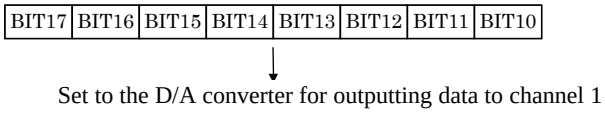

Example 4. Shifting data right when the data length is 16 bits

When the data length is 16 bits, data shift (d-06)=10, shift direction is right (d-07=0), and no offset is provided (d-08=0): The first two bits of data (=0) and data in BIT15 to BIT10 are set in the D/A converter.

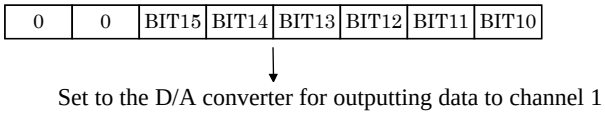

Example 5. If an offset is provided

When the number of digits to shift data (d-06)=10, shift direction is right (d-07=0), and an offset is provided (d-08=1): Data in most significant bit BIT17 (to which 1 is added) and data in BIT16 to BIT10 are set in the D/A converter.

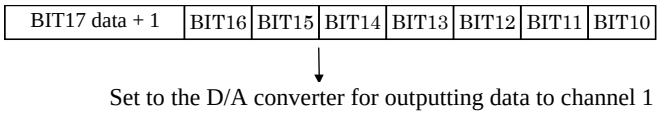

Example 6. Data bit observation

For data shift (d-06) = 0 with no offset (d-08=0), the lowest data bit (BIT00) can be observed as a high/low level at check terminal CH1D.

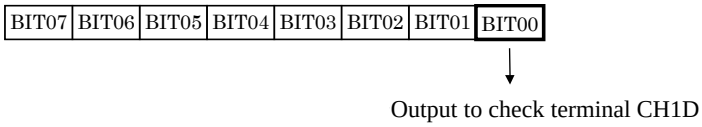

(3) Example of output to the channel 2

Output to the channel 2 is the same as that to the channel 1. However, the addresses for setting data (d-09 to d-12) are different from those for output to the channel 1.

Setting velocity information in the channel 1 and the number of errors in the channel 2 enables simultaneous monitoring of the change in each data item using the two channels.

B.1.7 Data Numbers

(1) List of data numbers

Data No.	Description	Data length	Remark
Main data			
16	Motor speed command	32	The 12th bit (BIT12) indicates a unit in min^{-1}.
19	Motor speed	32	The 12th bit (BIT12) indicates a unit in min^{-1}. (For the αC*i* series, the estimated value is used.)
25	Motor speed deviation	32	(Speed command - motor speed) The 12th bit (BIT12) indicates a unit in min^{-1}.
4	Move command	32	Number of command pulses for ITP (usually 8 ms)
9	Positioning error	32	Number of erroneous pulses (Spindle synchronous control, Cs contour control, rigid tapping mode)
90	Torque command	16	0 to ±16384
131	Speedometer data	16	SM terminal
132	Load meter data	16	LM terminal
136	Positioning error	32	Number of erroneous pulses (Position coder orientation)
Data between the spindle and CNC			
5	Speed command data	16	±16384 for the maximum speed command
6	Spindle control signal 1	16	See the command signal from the PMC to spindle in (3).
10	Load meter data	16	+32767 for maximum output
11	Motor speed data	16	±16384 for maximum speed
12	Spindle status signal 1	16	See the status signal from the spindle to PMC in (3).
66	Spindle control signal 2	16	See the command signal from the PMC to spindle in (3).
182	Spindle status signal 2	16	See the status signal from the spindle to PMC in (3).
Other data			
218	Phase U current (A/D conversion data)	16	10 V/FS by shifting 8 bits left
219	Phase V current (A/D conversion data)	16	
162	DC link voltage	16	1000 V/FS by shifting 8 bits left

(2) Internal data equivalents

Data No.	Signal name	Description (when data shift is set to 8)	
218	IU	Phase U current	The sign of the current in the amplifier input direction becomes "+."
219	IV	Phase V current	*1
162	VDC	DC link voltage signal 100 V/1 V (200 V system) 200 V/1 V (400 V system)	

*1 Converted current value with channels 218 and 219

Model	Conversion result
αiSP 2.2-B αiSP 5.5-B	16.7A/1V
αiSP 11-B	33.3A/1V
αiSP 15-B	50.0A/1V
αiSP 22-B	66.7A/1V
αiSP 26-B	100A/1V
αiSP 30-B αiSP 37-B	133A/1V
αiSP 45-B	150A/1V
αiSP 55-B	233A/1V
αiSP 5.5HV-B αiSP 11HV-B	16.7A/1V
αiSP 15HV-B αiSP 22HV-B	33.3A/1V
αiSP 30HV-B	50.0A/1V
αiSP 45HV-B	66.7A/1V
αiSP 60HV-B	100A/1V
αiSP 75HV-B	133A/1V
αiSP 100HV-B	150A/1V
αiSP 100HV(SiC)-B	150A/1V

(3) About the spindle control and spindle status signals

Shown below are the data numbers for the PMC signals used by the spindle and the configuration of each data item. For the description of each signal, see the FANUC AC SPINDLE MOTOR αi series, FANUC AC SPINDLE MOTOR βi series, or FANUC BUILT-IN SPINDLE MOTOR Bi series PARAMETER MANUAL (B-65280EN).

(a) Data number 6 : Spindle control signal 1

#15	#14	#13	#12	#11	#10	#9	#8
RCH	RSL	INTG	SOCN	MCFN	SPSL	*ESP	ARST
#7	#6	#5	#4	#3	#2	#1	#0
MRDY	ORCM	SFR	SRV	CTH1	CTH2	TLMH	TLML

(b) Data number 66 : Spindle control signal 2

#15	#14	#13	#12	#11	#10	#9	#8
			DSCN	SORSL	MPOF		
#7	#6	#5	#4	#3	#2	#1	#0
RCHHG	MFNHG	INCMD	OVR		NRRO	ROTA	INDX

(c) Data number 12 : Spindle status signal 1

#15	#14	#13	#12	#11	#10	#9	#8
				RCFN	RCHP	CFIN	CHP
#7	#6	#5	#4	#3	#2	#1	#0
ORAR	TLM	LDT2	LDT1	SAR	SDT	SST	ALM

(d) Data number 182 : Spindle status signal 2

#15	#14	#13	#12	#11	#10	#9	#8
#7	#6	#5	#4	#3	#2	#1	#0
			EXOF	SOREN		INCST	PC1DT

B.1.8 Example of Observing Data

(1) Example of observation of the position error using channel 1

Address	Description	Set Data			
d-05	Data No.	9	9	9	9
d-06	Data shift	0	1	1	2
d-07	Data shift direction	0	1	1	1
d-08	Whether there is offset	1	1	1	1
Data unit (NOTE)		256p/FS	512p/FS	128p/FS	64p/FS

NOTE
FS=10V(-5V~+5V)

(2) Example of observation of the motor speed using channel 2

Address	Description	Set Data		
d-09	Data No.	19	19	19
d-10	Data shift	12	13	11
d-11	Data shift direction	0	0	0
d-12	Whether there is offset	0	0	0
Data unit (NOTE)		256min^{-1}/FS	512min^{-1}/FS	128min^{-1}/FS

NOTE
FS=10V(-5V~+5V)

(3) α*i*SP 11-B U phase current observation

Settings of observation data

Data No.	218
Data shift	8
Shift direction	0
Offset	1

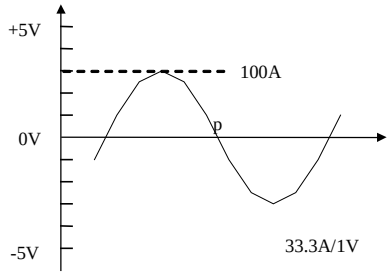

B.2 CHECKING PARAMETERS USING THE SPINDLE CHECK BOARD

B.2.1 Overview

Use of the spindle check board allows you to check the parameter values transferred to the spindle amplifier.
Specify a parameter number using the four setting switches on the spindle check board to check the parameter value on the 5-digit indicator.

B.2.2 Checking Parameters

<1> Press all four of the setting switches at the same time for at least one second to display "FFFFF" on the indicator.
<2> Turn off the switches and press the "MODE" switch. "d-00" will be displayed on the indicator and the system will enter the internal data observation mode.
<3> With "0" set for "d-00," press the "MODE" and "DATA SET" switches at the same time for at least one second. "CCCCC" will be displayed on the indicator.
<4> Turn off the switches and press the "MODE" switch. "F-xxx" will be displayed on the indicator and the system will enter the mode for checking spindle parameters (F-mode). Even in this mode, the motor can be operated normally.
<5> Press the "UP" or "DOWN" switch while holding down the "MODE" switch (with "F-xxx" displayed). The number of "F-xxx" increases or decreases. Set the internal number of a parameter you want to check. For correspondences between the parameter internal numbers and NC parameter numbers, see the parameter list in the appendix to the parameter manual.
<6> Turn off the switches. The parameter value corresponding to the set internal number is displayed for about one second. (Bit parameter values are displayed in hexadecimal.)

C MEASURING INTERNAL DATA FOR THE POWER SUPPLY USING THE SERVO GUIDE

C.1 OVERVIEW

The SERVO GUIDE can measure internal data for α*i*PS-B for up to two channels.

C.2 SERIES AND EDITION OF APPLICABLE SOFTWARE

SERVO GUIDE

Item	Series and edition
	Edition 8.30 or later

CNC Software

Item	Series and edition
Series 30*i* -B	Series G301 edition 10 or later, Series G311 edition 10 or later, Series G321 edition 10 or later, Series G331 edition 10 or later
Series 31*i* -B5	Series G421 edition 10 or later, G431 edition 10 or later
Series 31*i* -B	Series G401 edition 10 or later, Series G411 edition 10 or later
Series 32*i* -B	Series G501 edition 10 or later, Series G511 edition 10 or later
Series 35*i* -B	Series G601 edition 03 or later, Series G611 edition 03 or later
Power Motion *i* -A	Series 88H0 edition 01 or later

Control software

Item	Series and edition
Servo Software	Series 90G0 edition 09.0 or later, Series 90G3 edition 03.0 or later, Series 90J0 edition 01.0 or later, Series 90J3 edition 01.0 or later
Spindle Software	Series 9DA0 edition 11 or later, Series 9DAA edition 01 or later, Series 9DB0 edition 01 or later
Servo Amplifier Software	Series 9H00 edition 05.0 or later
Power Supply Software	Series 9G00 edition 09.0 or later, Series 9G10 edition 01.0 or later, Series 9G11 edition 01.0 or later

C.3 MEASUREMENT SPECIFICATION

The main measurement specifications are as follows.

Item	Description
Number of channels measured (Overall)	Maximum 8 channels (Servo axis, spindle axis, PMC, etc. combined)
Number of channels measured (PS)	Maximum 2 channels per PS The PS data is measured on the PS control axis and the number of channels measured is shared with the PS control axis.
Sampling cycle	Shared with the PS control axis sampling cycle. PS data can be measured when the sampling cycle is 1 ms or more. (Measurement is not possible with a sampling cycle faster than 1 ms.)
Setting of channels	Refer to the next section (SETTING OF CHANNELS).
PS data update cycle	Changes depending on the number of channels measured per PS. ・ 1 channel … 1 ms ・ 2 channels … 2 ms When the update cycle is 2 ms and the sampling cycle is 1 ms, data with the same value is stored twice.

C.4 SETTING OF CHANNELS

Set channels as follows to measure PS internal data.
Axis: Select PS Control Axis*.
Kind: Select "PSDATA."
PSDATA: Select data type to measure.

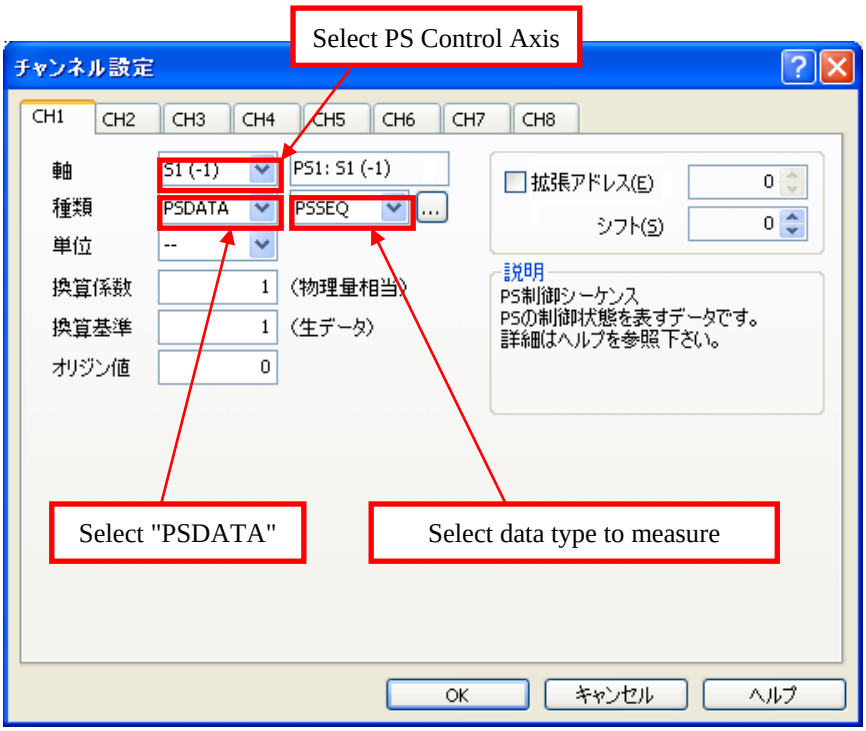

* As for the details of PS Control Axis, refer to Section 15.3, "CONNECTION AMONG SERVO AMPLIFIERS" in the "FANUC SERVO AMPLIFIER α*i*-B series (B-65412EN)."

If a selected axis has PS Control Axis, it is automatically selected after selecting PSDATA.
If a selected axis has no PS Control Axis, PSDATA is not indicated in the list of "Kind" and cannot be selected.
PSDATA is indicated at the bottom of the "Kind" list.

NOTE

- Select PS Control Axis corresponding to the Power Supply which you want to investigate. Do not select incorrect axis.

C.5 LIST OF INTERNAL DATA FOR THE POWER SUPPLY

The internal data for the Power Supply that can be measured using the SERVO GUIDE are as follows.

Data name	Data details	Remark
EPSNRM	Power supply voltage	Unit: V
EPSPHS	Power supply voltage phase	Unit: deg
EPSFRQ	Power source frequency	Unit: Hz
INORM	Power supply current amplitude	Unit: A
VDC	DC link voltage	Unit: V
PSPOW	PS input power	Unit: kW Series 9G00 edition 10.0 or later Series 9G10 edition 01.0 or later Series 9G11 edition 01.0 or later
PSENGY	PS electric energy	Unit: kJ, kWh Series 9G00 edition 12.0 or later Series 9G10 edition 01.0 or later Series 9G11 edition 01.0 or later
PSSEQ	PS control sequence	
PSSTS	PS status signal	Data for maintenance
SVCMD	SV command	Data for maintenance
CTRCMD	PS control axis command	Data for maintenance
PSALM1~4	PS alarm status signal 1 to 4	Data for maintenance
PSDGN	PS diagnostic information	Data for maintenance Series 9G00 edition 12.0 or later Series 9G10 edition 01.0 or later Series 9G11 edition 01.0 or later
PSFLG1~4	PS flag 1 to 4	Data for maintenance
PSFLG5,6	PS flag 5, 6	Data for maintenance Series 9G00 edition 12.0 or later Series 9G10 edition 01.0 or later Series 9G11 edition 01.0 or later
VDCCMD	DC link voltage command	Series 9G00 edition 12.0 or later Series 9G10 edition 01.0 or later Series 9G11 edition 01.0 or later
VDCERR	DC link voltage deviation	Series 9G00 edition 12.0 or later Series 9G10 edition 01.0 or later Series 9G11 edition 01.0 or later
IDCCMD	DC link current command	Series 9G00 edition 12.0 or later Series 9G10 edition 01.0 or later Series 9G11 edition 01.0 or later
PSIDCM	PS effective current command	Series 9G00 edition 12.0 or later Series 9G10 edition 01.0 or later Series 9G11 edition 01.0 or later
PSIQCM	PS reactive current command	Series 9G00 edition 12.0 or later Series 9G10 edition 01.0 or later Series 9G11 edition 01.0 or later
PSIDFB	PS effective current	Series 9G00 edition 12.0 or later Series 9G10 edition 01.0 or later Series 9G11 edition 01.0 or later
PSIQFB	PS reactive current	Series 9G00 edition 12.0 or later Series 9G10 edition 01.0 or later Series 9G11 edition 01.0 or later

Data name	Data details	Remark
PSVCMD	PS voltage command amplitude	Series 9G00 edition 12.0 or later Series 9G10 edition 01.0 or later Series 9G11 edition 01.0 or later
PSPTMP	PS power device estimated temperature	Series 9G00 edition 12.0 or later Series 9G10 edition 01.0 or later Series 9G11 edition 01.0 or later
PSIFTH	PS input filter thermistor estimated temperature	Series 9G00 edition 12.0 or later Series 9G10 edition 01.0 or later Series 9G11 edition 01.0 or later
ARB	Arbitrary data Used by setting an extended address.	Extended address range: 1-2047
MNTD1 MNTD2	Data for power supply information monitoring 20 kinds of power supply information can be obtained simultaneously.	Obtained with a 1 ms sampling cycle using two channels.

D TROUBLESHOOTING OF PS PRE-CHARGE FAILURES

D.1 OVERVIEW

Troubleshooting of "SV0442, SP9033 PS PRE-CHARGE FAILURE / PS LED: 05" is described in this document. Remove the cause of the alarm using the trouble diagnosis guidance or SERVO GUIDE.

D.2 PS PRE-CHARGE FAILURE

(1) Meaning

PS Ready is not completed in specified time due to no power supply and so on.

(2) Causes

Possible causes of PS PRE-CHARGE FAILURE are as follows.

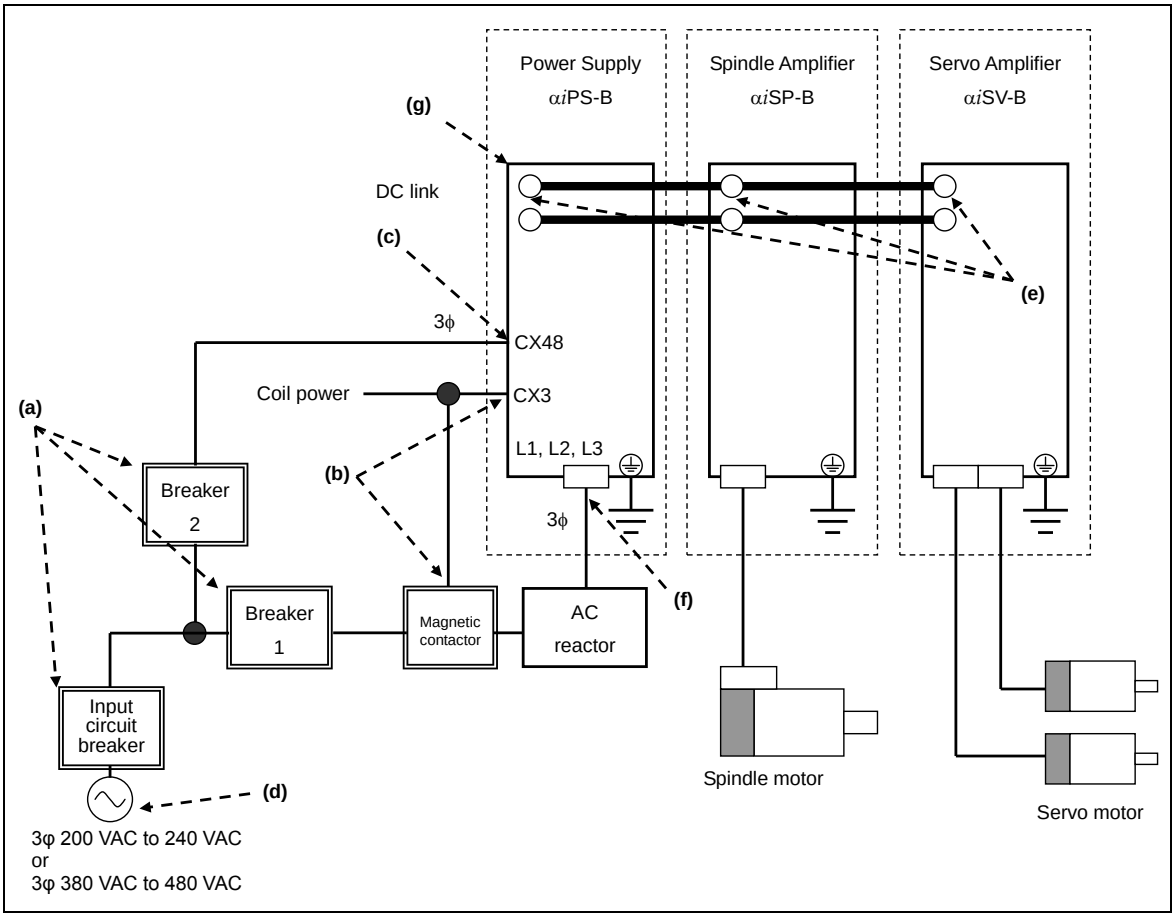

Fig. D.2 Check points

(a) Circuit breakers are turned off.
(b) The magnetic contactor does not turn on, or the turning on delay is too long.
(c) There is improper connection, loose connection or disconnection on CX48.
(d) Input power supply voltage is out of specified range.
(e) DC link is short-circuited.

(f) There is loose connection or disconnection in power line: circuit breaker, magnetic contactor, AC reactor and L1/L2/L3.
(g) The Power Supply has malfunction or is not selected correctly.

D.3 TROUBLESHOOTING OF PS PRE-CHARGE FAILURE

There are two ways to find the cause of the alarm as follows. The trouble diagnosis guidance is recommended. If the trouble diagnosis guidance is not available or the cause is not found by using it, use SERVO GUIDE.

(1) Troubleshooting using the trouble diagnosis guidance → refer to D.3.1
(2) Troubleshooting using SERVO GUIDE → refer to D.3.2

D.3.1 Troubleshooting Using the Trouble Diagnosis Guidance

Troubleshooting using the trouble diagnosis guidance is described in this section.
Check the items below according to result of diagnosis.

To use the trouble diagnosis guidance requires keeping the trouble diagnosis function in the "SAMPLING" state.
As for the details of the trouble diagnosis guidance, refer to Subsection 2.2.1, "Trouble Diagnosis Guidance" in Part II.

Result of diagnosis: Result of the trouble diagnosis guidance.
Cause : Possible causes from result of diagnosis.
Measure : To-do list. Try all items.
Check points : Refer to Fig. D.2.

Result of diagnosis	Power source is not supplied. Failure of PS, MCC, power cable, voltage sensing cable (CX48) or input power source.
Cause	Possible causes are as follows. - Power source is not supplied to CX48. - CX48 is not connected. - CX48 has a loose connection or disconnection. - Power supply voltage is lower than specified. - Breaker 2 is not turned on.
Measure	Check and remove the causes above.
Check points	(a), (c), (d)

Result of diagnosis	Power source voltage rose out of specified range. Check input power source.
Cause	Power supply voltage is higher than specified.
Measure	Check the power supply voltage.
Check points	(d)

Result of diagnosis	Improper connection of voltage sensing cable (CX48).
Cause	Connection inside CX48 is incorrect.
Measure	Correct connection inside CX48 according to Fig. 3.1.
Check points	(c), (f)

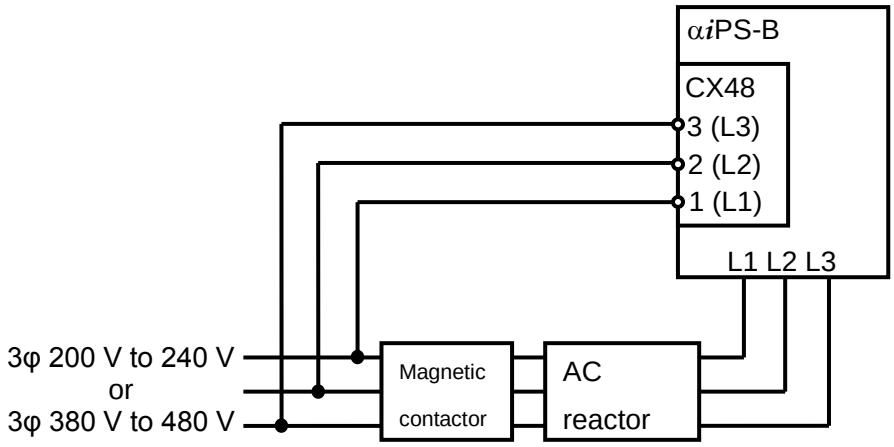

Fig. D.3.1 (a) Example of correct connection on CX48

Cables on CX48 must be connected in the order of Fig. D.3.1 (a).

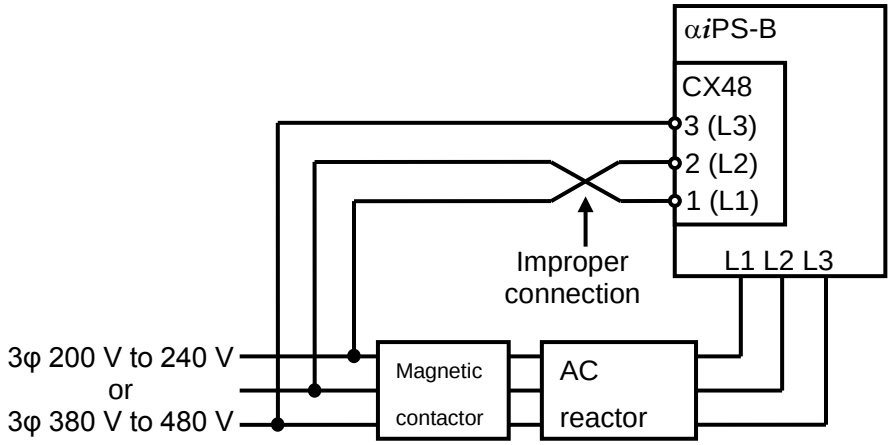

Fig. D.3.1 (b) Example 1 of incorrect connection on CX48

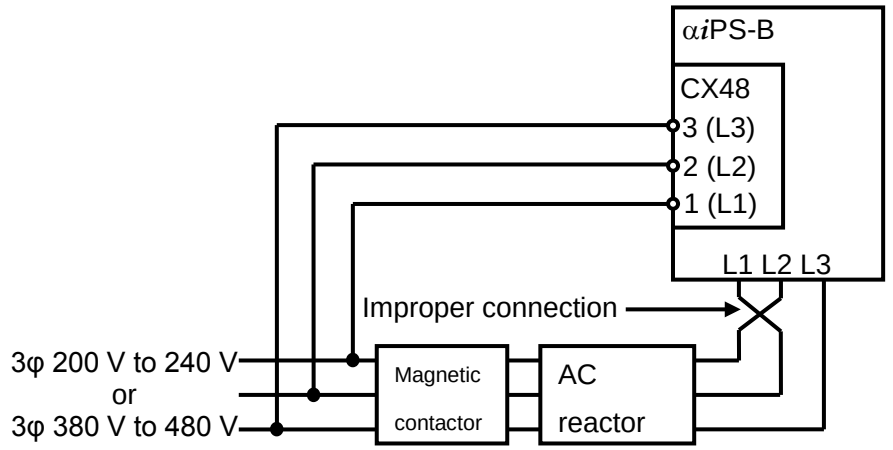

Fig. D.3.1 (c) Example 2 of incorrect connection on CX48

Result of diagnosis	DC-link is short-circuited. Replace SV, SP or PS.
Cause	DC-link is short-circuited.
Measure	Remove DC link short bars or cables. After that, check the DC link of the Power Supply, Spindle Amplifier, and Servo Amplifier by ohmmeter, and replace the defective unit.
Check points	(e)

Result of diagnosis	Failure of pre-charge resistor. Replace PS.
Cause	Possible causes are as follows. ・ Power source is not supplied to power cable L1, L2, L3. ・ Pre-charge resistor in the Power Supply is failed.
Measure	Check the following items. ・ Check if Breaker 1 is turned on. ・ Check if the magnetic contactor is turned on. If not, check the following items. ・ Check if connector CX3 is connected. ・ Check the cables from CX3 to the coil terminals of the magnetic contactor, and confirm if there is loose connection or disconnection. ・ Check the coil voltage of the magnetic contactor. ・ There is loose connection or disconnection in power line: circuit breaker, magnetic contactor, AC reactor and L1/L2/L3. ・ Check the delay of the magnetic contactor ON from release of emergency stop. If it is too long, control sequence should be changed so that the delay becomes shorter. Replace the Power Supply if the alarm is not cleared even if all of the above causes are removed.
Check points	(a), (b), (f), (g)

Result of diagnosis	Total output of SV and SP is more than the rated output of PS. Check combination of AMPs.
Cause	Possible causes are as follows. ・ The delay of the magnetic contactor ON from release of emergency stop is too long. ・ Too many spindle and servo amplifiers are connected.
Measure	Check the following items. ・ Control sequence of the magnetic contactor ON from release of emergency stop. ・ Check the selection of the Power Supply.
Check points	(b), (g)

D.3.2 Troubleshooting Using the Trouble Diagnosis Guidance

Troubleshooting using SERVO GUIDE is described in this section.
A specific cause is identified by monitoring PSSEQ (PS Control Sequence), VDC (DC link voltage), EPSNRM (power supply voltage) and INORM (power supply current amplitude).

(1) Setting of channels

Set channels as follows for troubleshooting of PS PRE-CHARGE FAILURE.
Up to two channels of PSDATA can be monitored at the same time.
First, monitor PSSEQ (PS Control Sequence), VDC (DC link voltage) and EPSNRM (power supply voltage).

For details on how to measure the Power Supply internal data PSSEQ, EPSNRM, and INORM, see Appendix C, "MEASURING INTERNAL DATA FOR THE POWER SUPPLY USING THE SERVO GUIDE."

- Setting of CH1 (PSDATA)

Axis:	Select PS Control Axis
Kind:	Select "PSDATA"
PSDATA:	Select "PSSEQ"

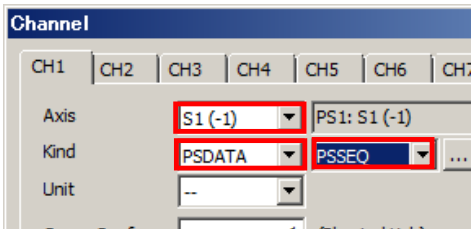

- Setting of CH2 (PSDATA)

Axis:	Select PS Control Axis
Kind:	Select "PSDATA"
PSDATA:	Select "EPSNRM"

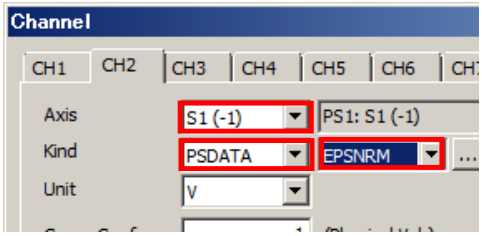

- Setting of CH3 (not PSDATA)

Axis:	Select a servo axis or a spindle axis
Kind:	Select "VDC"

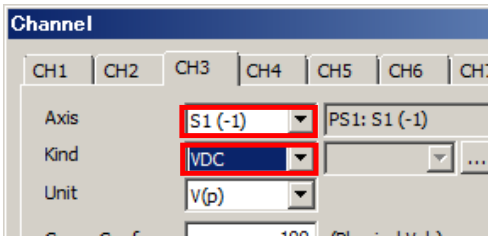

Then, monitor INORM (power supply current amplitude) in addition when PSSEQ changes from "7" to "0" and VDC is 0.

Axis:	Select PS Control Axis
Kind:	Select "PSDATA"
PSDATA:	Select "INORM"

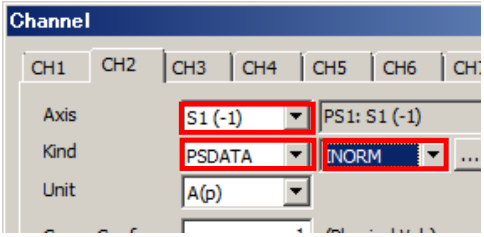

(2) PSSEQ (PS Control Sequence)

PSSEQ indicates internal state of the Power Supply.

Value of PSSEQ	Description
0	Alarm status
1	Waiting release of emergency stop or check of power supply voltage amplitude (overvoltage)
2	Phase sequence check of power supply voltage
3	Check of power supply voltage amplitude (low voltage)
4	Check of power supply voltage amplitude (overvoltage)
7	Check of charging voltage
8	Improper connection check for CX48
10	PS Ready

(3) Cause and measure according to measurements with Servo Guide

After setting channels in (1), measure the data at the time of emergency stop cancellation.
Refer to the corresponding example in "(4) Examples of troubleshooting of PS PRE-CHARGE FAILURES," based on which sequence PSSEQ is transitioning to 0 (Alarm) from.

PSSEQ	Examples
1 → 0 4 → 0	Example 1
2 → 0	Example 2, Example 3
3 → 0	Example 4
7 → 0	Example 5, Example 6, Example 7
8 → 0	Example 8

(4) Examples of troubleshooting of PS PRE-CHARGE FAILURES

Examples of troubleshooting about PS PRE-CHARGE FAILURES using SERVO GUIDE are shown below.

- SERVO GUIDE waveforms measured at normal sequence

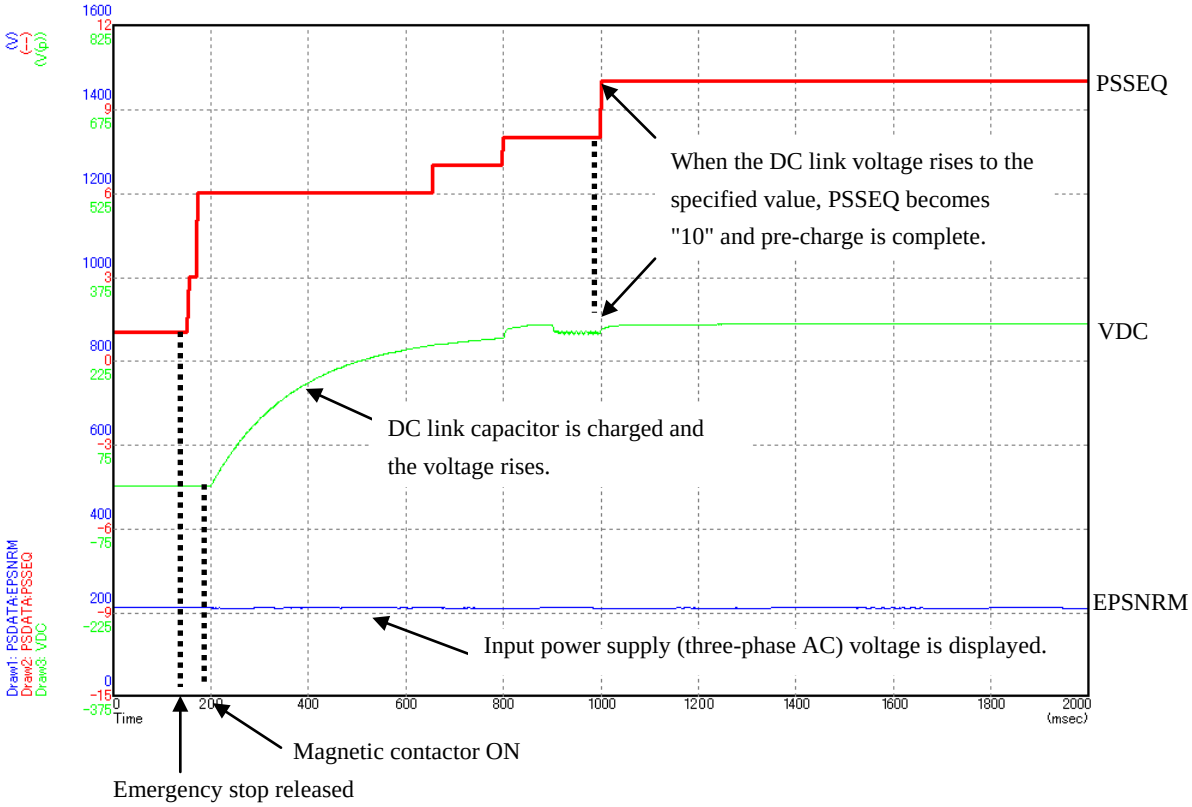

Example 1	PSSEQ: "1" → "0," EPSNRM > input voltage specification, VDC = 0
Cause	Power supply voltage is higher than specified.
Measure	Check the power supply voltage.
Check points	(d)

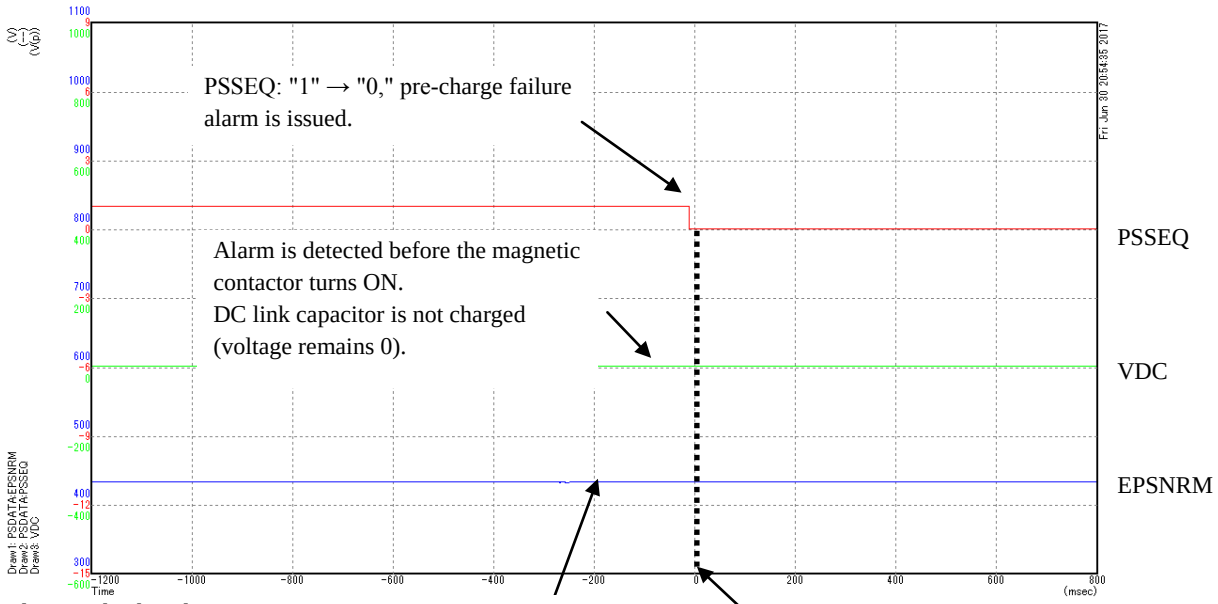

Applied voltage is displayed
(This waveform is an example of 430 VAC input to the Power Supply with 200 VAC input specification)

Cause, measure, and check points are the same for "PSSEQ: 4 → 0."

Example 2	PSSEQ: "2" → "0," EPSNRM = 0, VDC = 0
Cause	Possible causes are as follows. ・ No input voltage to CX48 and L1, L2, L3 ・ Input breaker is not turned on. ・ Breaker 1 and Breaker 2 are not turned on.
Measure	Check and remove the causes above.
Check points	(a)

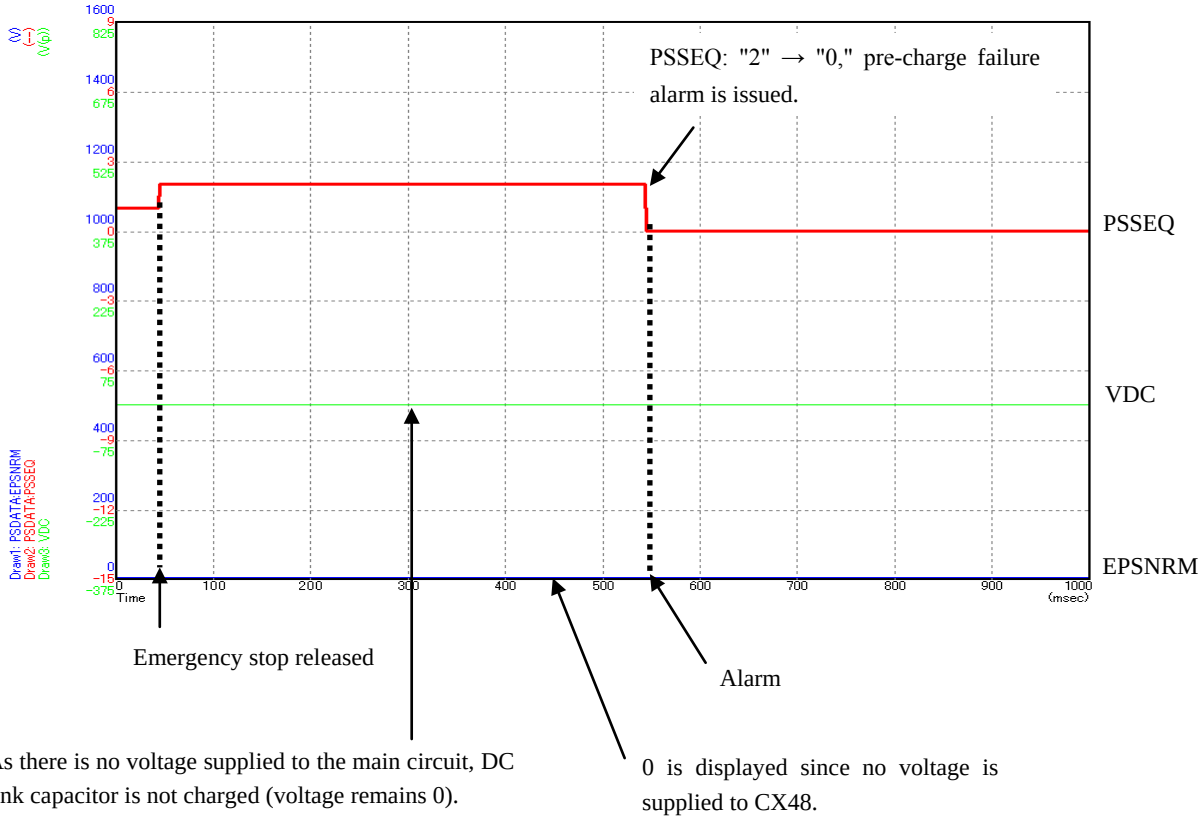

As there is no voltage supplied to the main circuit, DC link capacitor is not charged (voltage remains 0).

0 is displayed since no voltage is supplied to CX48.

Example 3	PSSEQ: "2" → "0," VDC rises, EPSNRM = 0
Cause	Possible causes are as follows. ・ No input voltage to CX48. ・ CX48 is not connected. ・ CX48 has a loose connection or disconnection. ・ Breaker 2 is not turned on.
Measure	Check and remove the causes above.
Check points	(a), (b)

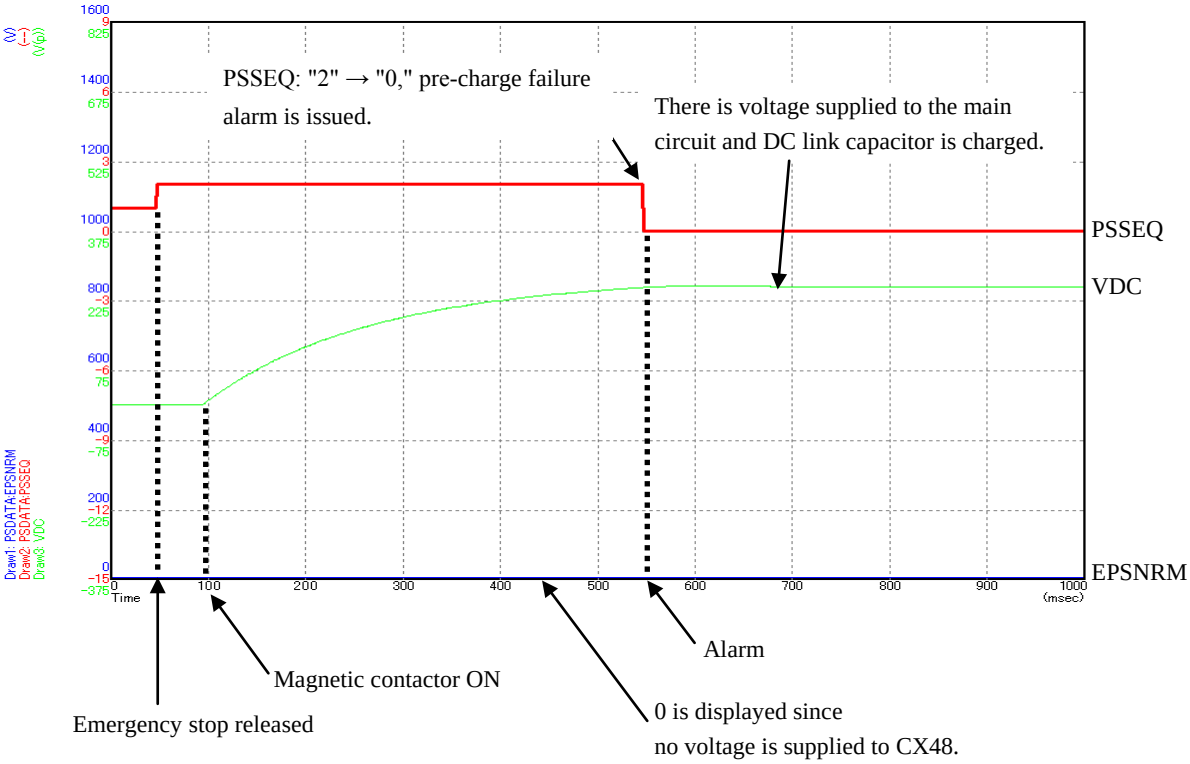

Example 4	PSSEQ: "3" → "0," VDC rises, EPSNRM < input voltage spec.
Cause	Possible causes are as follows. - Power supply voltage is lower than specified. ・ CX48 has a loose connection or disconnection.
Measure	Check and remove the causes above.
Check points	(c), (d)

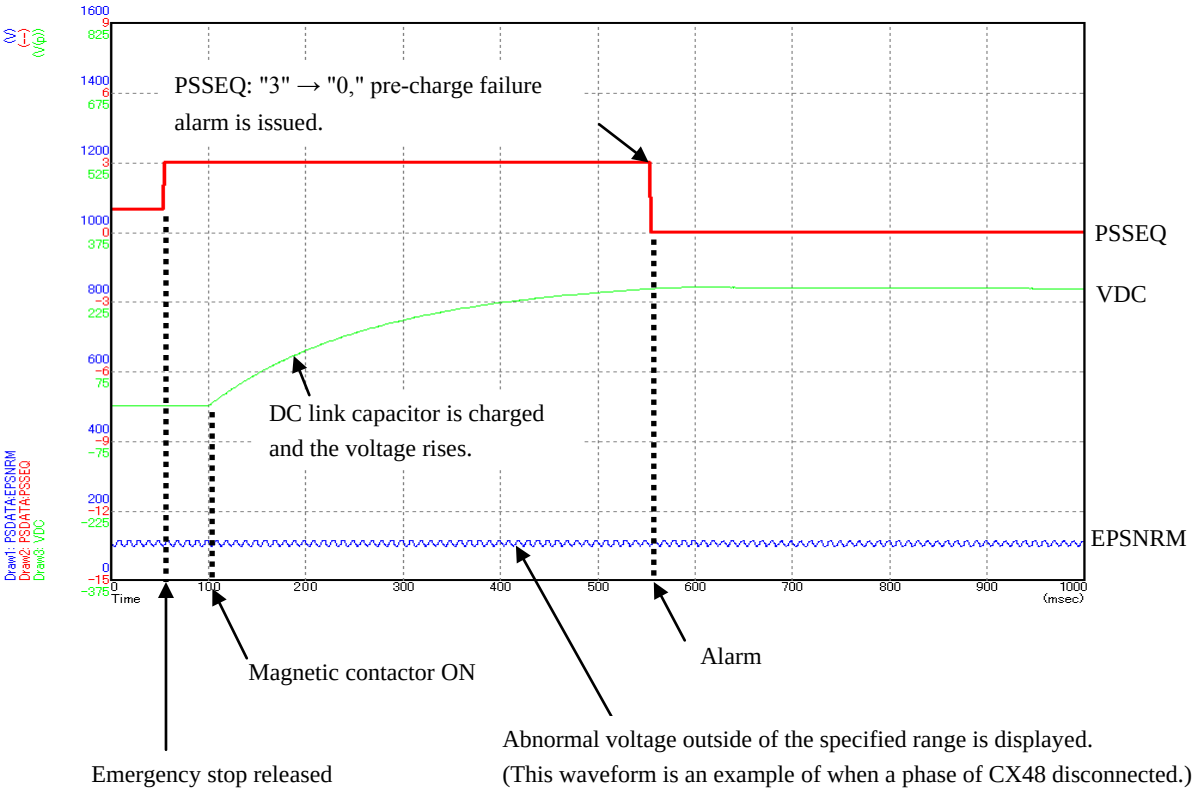

Example 5	PSSEQ: "7" → "0," VDC = 0
Cause	Possible causes are as follows. ・ No input voltage on L1, L2, L3. ・ Breaker 1 is not turned on. ・ The magnetic contactor does not turn ON. ・ CX3 is not connected. ・ CX3 has a loose connection or disconnection. ・ No voltage is supplied to the magnetic contactor coil. ・ There is loose connection or disconnection in power line: circuit breaker, magnetic contactor, AC reactor and L1/L2/L3. ・ Delay of the magnetic contactor ON is too long. ・ DC link short circuit. ・ Failure in the Power Supply
Measure	Check and remove the causes above. It is possible to check if DC link is short-circuited by observing the power supply current (INORM: power supply current amplitude) immediately after the emergency stop is canceled. Refer to Example 5-1.
Check points	(a), (b), (e), (f), (g)

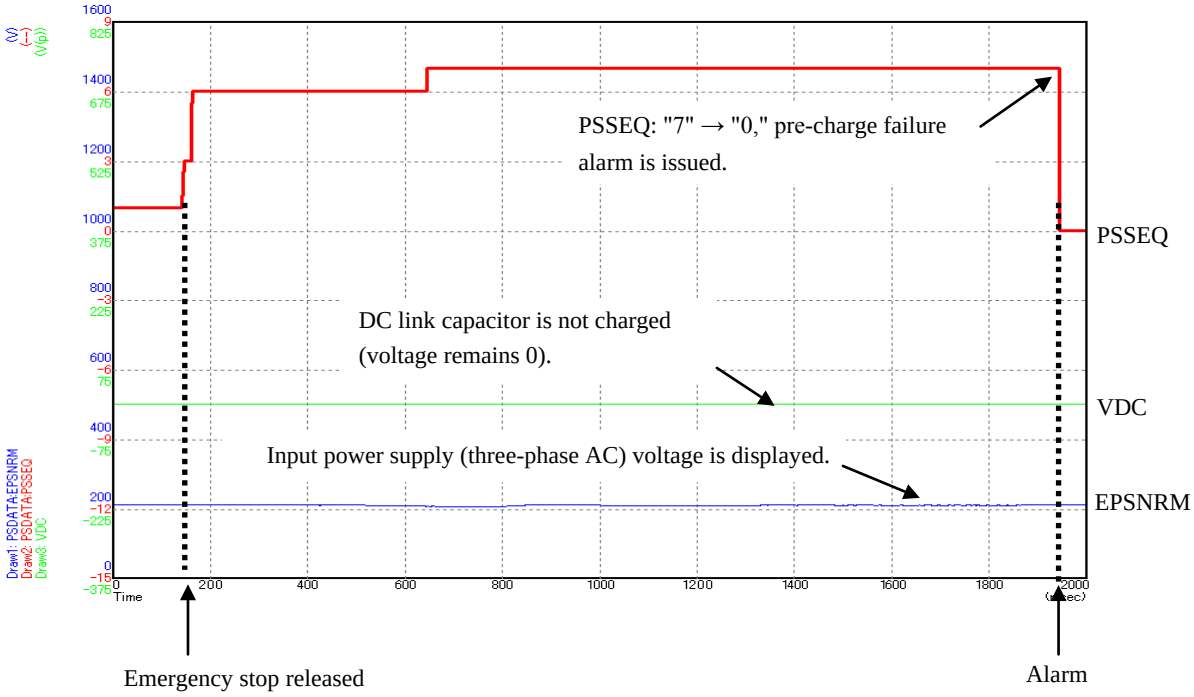

Example 5-1	PSSEQ: "7" → "0," VDC = 0, INORM ≠ 0 (current flowing in the Power Supply)
Cause	DC-link is short-circuited.
Measure	Remove DC link short bars or cables. After that, check the DC link of the Power Supply, Spindle Amplifier, and Servo Amplifier by ohmmeter, and replace the defective unit.
Check points	(e)

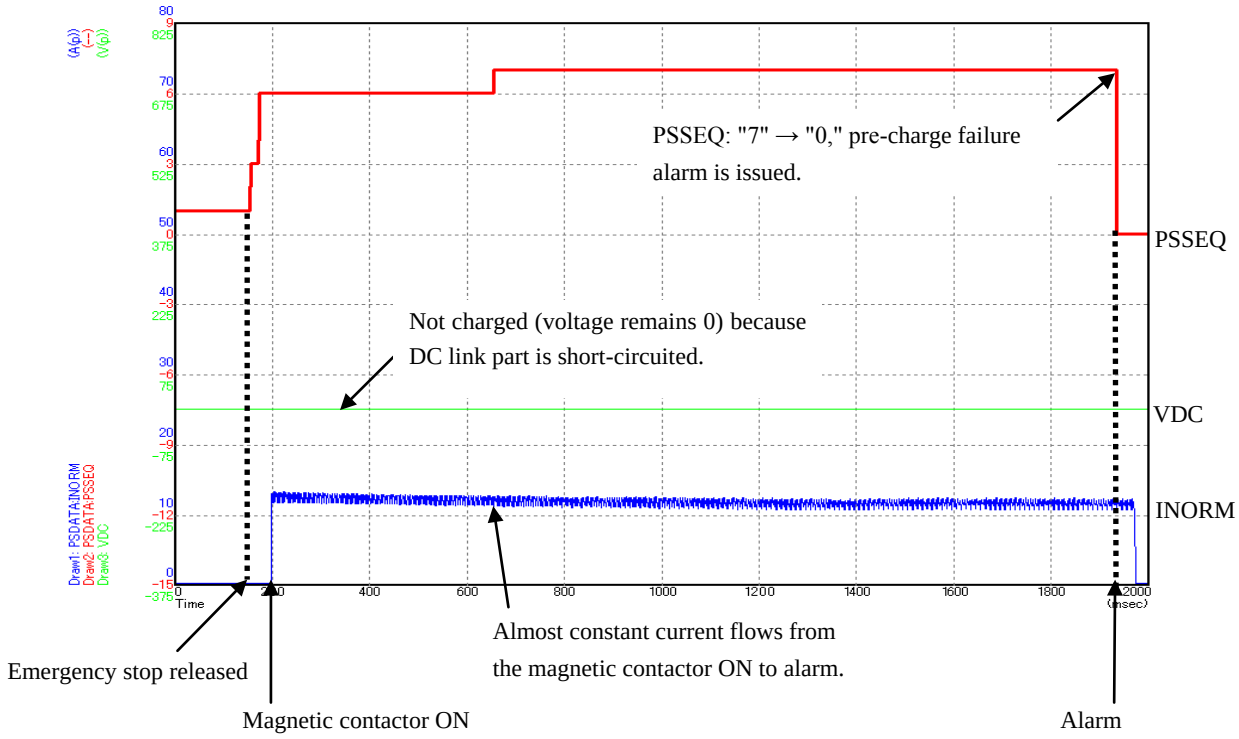

Example 6	PSSEQ: "7" → "0" Rise of VDC delayed from release of emergency stop
Cause	Pre-charge was not completed within the specified time because the delay time from emergency stop cancellation to the magnetic contactor ON was too long.
Measure	Change the sequence to eliminate the delay of the magnetic contactor ON.
Check points	(b)

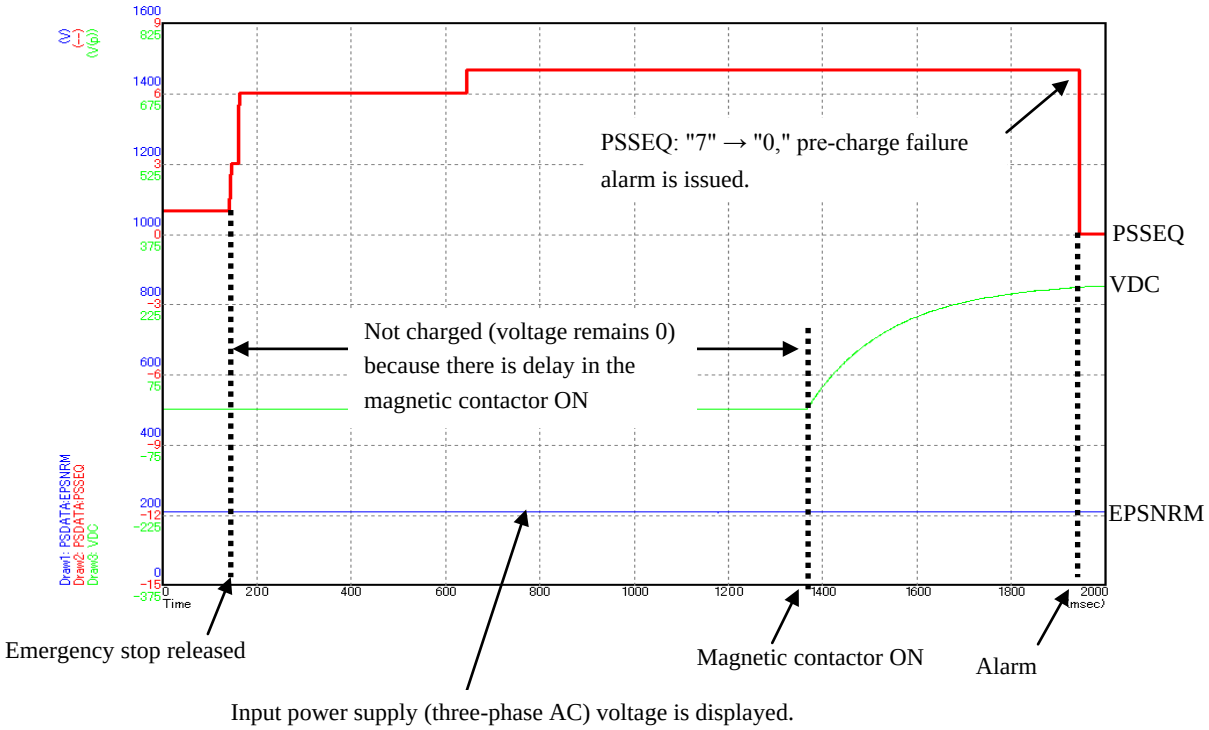

Example 7	PSSEQ: "7" → "0" VDC rises gradually
Cause	Too many spindle and servo amplifiers are connected.
Measure	Check if the Power Supply is correctly selected.
Check points	(g)

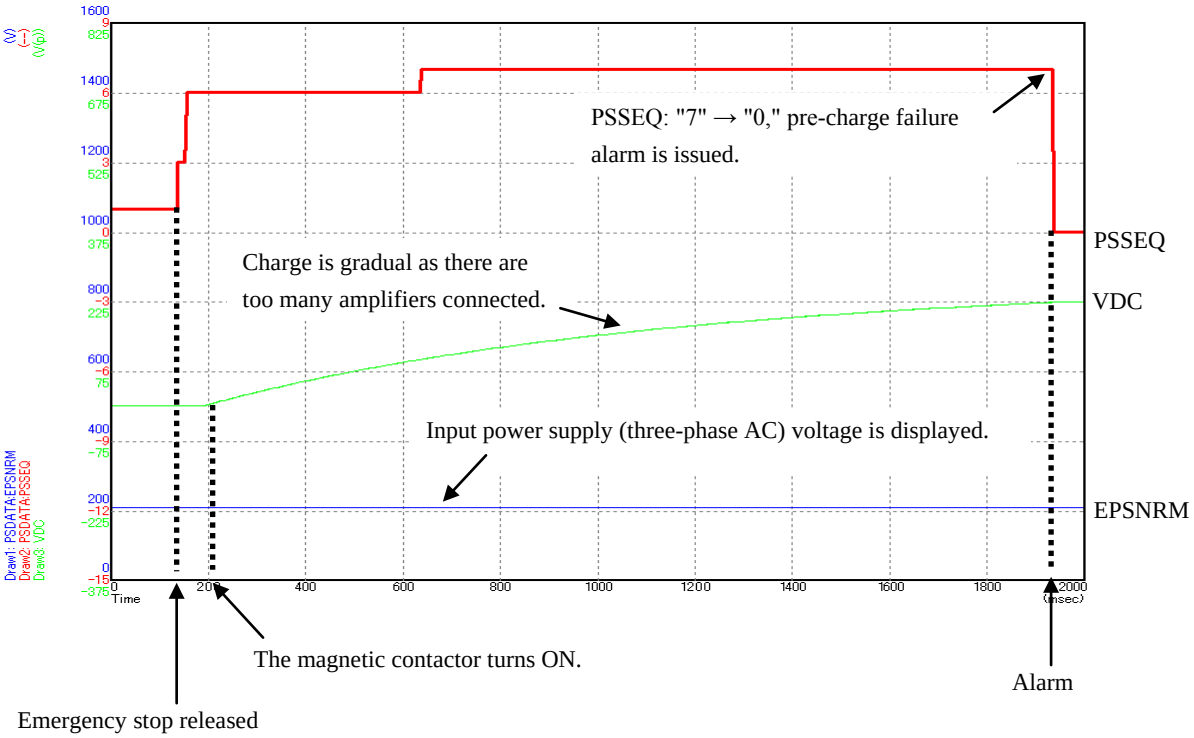

Example 8	PSSEQ: "8" → "0"
Cause	Connection inside CX48 is incorrect.
Measure	Correct connection inside CX48 according to Fig. 3.1.
Check points	(c)

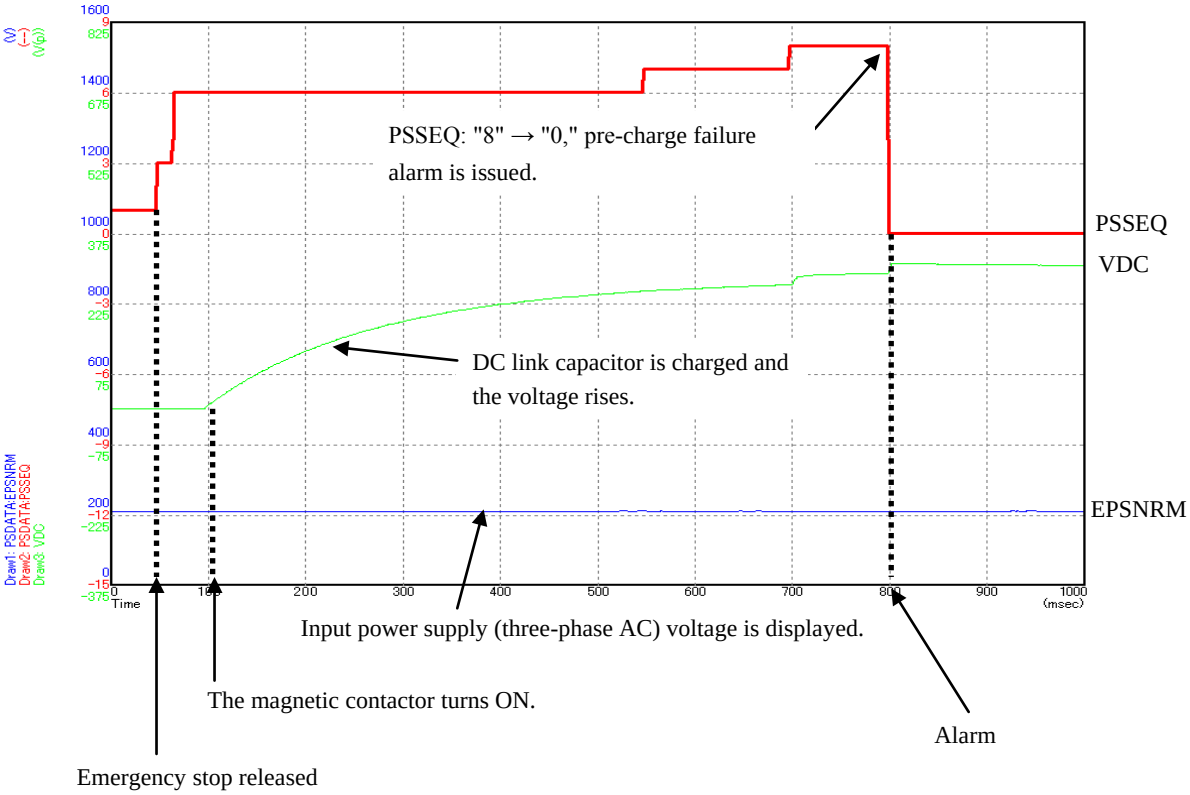

ADDITIONAL INFORMATION

Addition of the inspection item when the motor rotates abnormally

1. Type of applied technical documents

Title	FANUC AC SERVO MOTOR αi series, FANUC AC SPINDLE MOTOR αi series, FANUC SERVO AMPLIFIER αi series MAINTENANCE MANUAL FANUC AC SERVO MOTOR βi series, FANUC AC SPINDLE MOTOR βi series, FANUC SERVO AMPLIFIER βi series MAINTENANCE MANUAL FANUC AC SERVO MOTOR βi-B/βi series, FANUC AC SPINDLE MOTOR βi series, FANUC SERVO AMPLIFIER βi-B series MAINTENANCE MANUAL FANUC AC SERVO MOTOR αi-B/αi series, FANUC AC SPINDLE MOTOR αi -B series, FANUC SERVO AMPLIFIER αi-B series, FANUC AC SERVO MOTOR βi-B/βi series, FANUC AC SPINDLE MOTOR βi-B series, FANUC SERVO AMPLIFIER βi-B series MAINTENANCE MANUAL
Spec. No./Ver.	B-65285EN/04 B-65325EN/02 B-65425EN/02 B-65515EN/01

2. Summary of change

Group	Name／Outline	New・Add Correct・Del	Applicable Date
Basic Function			
Optional Function			
Unit			
Maintenance Parts			
Notice			
Correction	Addition of the inspection item when the motor rotates abnormally	Add	Jul, 2018
Another			

3. Outline

Noise and vibration from the motor may be occurred by the phase loss of power line, for example the connection failure, etc.

The confirmation of the cable connection is added to the inspection item when the motor rotates abnormally.

4. Details of correction

Items described in the following table need be checked when the motor rotates abnormally.

Table 1: Main inspection items when the motor rotates abnormally

Operation of the motor	Noise/vibration	- Check for any abnormal noise or vibration not only when the motor is running (the spindle is rotating) but also when it is stopped. - Abnormal noise heard when the motor is rotating indicates an abnormality of the bearing or a failure inside the motor. - Check the cable connections. Especially, check whether there is any phase loss of power line. - If abnormal noise is generated from the connection section of a Spindle Amplifier, check the following items: + Belt connection: Check whether the belt tension is appropriate. + Gear connection: Check whether an appropriate value is set for the gear backlash. + Coupling connection: Check whether the coupling is free from deformation, crack, and looseness.	Add
	Movement	- Check that the motor operates normally and smoothly. - If the circuit breaker trips at the same time the motor starts to operate, it indicates abnormal motor windings.	
	Heat	Check whether the motor does not overheat during the normal operation cycle. Note: While the motor is running or immediately after it is stopped, the motor surface may become very hot. Instead of touching the motor directly by hand, use a thermolabel, surface thermometer, etc.	

Edit	Date	Design	Description
01	18.07.09	A. Nishioka	New design

Title	Addition of the inspection item when the motor rotates abnormally
Draw.	B-65285EN/04-04, B-65325EN/02-01, B-65425EN/02-01, B-65515EN/01-01
FANUC CORPORATION	PAGE 2／2

INDEX

αiBZ SENSOR....45
αiCZ SENSOR (serial output)....47
αiM SENSOR, αiMZ SENSOR....44
α POSITIONCODER S....49

<A>

About the spindle control and spindle status signals....39,229
Alarm Code 01 (SP9001)....95
Alarm Code 01 (SV0437, SP9030)....79
Alarm Code 02 (SP9002)....96
Alarm Code 03 (SP9003)....96
Alarm Code 03 (SV0431, SP9058)....80
Alarm Code 04 (SV0433, SP9051)....80
Alarm Code 05 (SV0442, SP9033)....81
Alarm Code 06 (SP9006)....97
Alarm Code 06 (SV0432, SP9111)....81
Alarm Code 07 (SP9007)....97
Alarm Code 07 (SV0439, SP9011)....82
Alarm Code 09 (SP9009)....98
Alarm Code 10 (SP9010)....98
Alarm Code 10 (SV0606, SP9113)....82
Alarm Code 11 (SV0017)....87
Alarm Code 12 (SP9012)....99
Alarm Code 13 (SP12XX)....99
Alarm Code 14 (SP9014)....100
Alarm Code 14 (SV0607, SP9004)....82
Alarm Code 15 (SP9015)....100
Alarm Code 15 (SV0024, SP9204)....82
Alarm Code 16 (SP9016)....100
Alarm Code 17 (SP9017)....100
Alarm Code 18 (SP12XX)....100
Alarm Code 19, 20 (SP9019, SP9020)....101
Alarm Code 2 (SV0434)....85
Alarm Code 21 (SP9021)....101
Alarm Code 22 (SP9022)....101
Alarm Code 23 (SV0031, SP9211)....83
Alarm Code 24 (SP12XX)....101
Alarm Code 24 (SV0034, SP9212)....83
Alarm Code 25 (SV0040, SP9213)....83
Alarm Code 26 (SV0041, SP9214)....83
Alarm Code 27 (SP9027)....102
Alarm Code 27 (SV0042, SP9215)....84
Alarm Code 28 (SV0043, SP9216)....84
Alarm Code 29 (SP9029)....103
Alarm Code 3 (SV0013)....85
Alarm Code 31 (SP9031)....103
Alarm Code 32 (SP12XX)....104
Alarm Code 34 (SP9034)....104
Alarm Code 35 (SP9035)....105
Alarm Code 36 (SP9036)....106
Alarm Code 37 (SP9037)....106
Alarm Code 4 (SV0012)....86
Alarm Code 41 (SP9041)....107
Alarm Code 42 (SP9042)....107
Alarm Code 43 (SP9043)....108
Alarm Code 46 (SP9046)....108
Alarm Code 47 (SP9047)....108
Alarm Code 49 (SP9049)....109
Alarm Code 5 (SV0435)....86
Alarm Code 50 (SP9050)....109
Alarm Code 52, 53 (SP9052, SP9053)....109
Alarm Code 54 (SP9054)....109
Alarm Code 55 (SP9055)....109
Alarm Code 56 (SP9056)....110
Alarm Code 6 (SV0602)....86
Alarm Code 61 (SP9061)....110
Alarm Code 65 (SP9065)....110
Alarm Code 66 (SP9066)....111
Alarm Code 67 (SP9067)....111
Alarm Code 68 (SP9068)....111
Alarm Code 69 (SP9069)....111
Alarm Code 7 (SV0654)....86
Alarm Code 70 (SP9070)....111
Alarm Code 71 (SP9071)....112
Alarm Code 72 (SP9072)....112
Alarm Code 73 (SP9073)....112
Alarm Code 74 (SP9074)....114
Alarm Code 75 (SP9075)....114
Alarm Code 76 (SP9076)....114
Alarm Code 77 (SP9077)....114
Alarm Code 78 (SP9078)....114
Alarm Code 79 (SP9079)....114
Alarm Code 8 (SV0600)....87
Alarm Code 8., 9., A. (SV0449)....87
Alarm Code 8., 9., A. (SV0603)....88
Alarm Code 80 (SP9080)....114
Alarm Code 81 (SP9081)....115
Alarm Code 82 (SP9082)....116
Alarm Code 83 (SP9083)....118
Alarm Code 84 (SP9084)....119
Alarm Code 85 (SP9085)....119
Alarm Code 86 (SP9086)....119
Alarm Code 87 (SP9087)....119
Alarm Code 88 (SP9088)....119
Alarm Code 89 (SP9089)....120
Alarm Code 90 (SP9090)....120
Alarm Code 91 (SP9091)....121
Alarm Code 92 (SP9092)....121
Alarm Code A2 (SV0604, SP9110)....84
Alarm Code b, c, d (SV0438)....89
Alarm Code b., c., d. (SV0016)....91
Alarm Code b0 (SP9110)....122
Alarm Code b4 (SP9114)....122
Alarm Code b5 (SP9115)....122
Alarm Code C3 (SP9123)....122
Alarm Code C4 (SP9124)....123
Alarm Code C5 (SP9125)....123
Alarm Code C6 (SP9126)....123
Alarm Code C7 (SP9127)....123

Alarm Code C8 (SP9128) 123
Alarm Code C9 (SP9129) 123
Alarm Code d0 (SP9130) 123
Alarm Code d1 (SP9131) 124
Alarm Code d2 (SP9132) 124
Alarm Code d3 (SP9133) 124
Alarm Code d4 (SP9134) 124
Alarm Code d5 (SP9135) 124
Alarm Code d6 (SP9136) 125
Alarm Code d7 (SP9137) 125
Alarm Code d8 (SP9138) 125
Alarm Code d9 (SP9139) 125
Alarm Code E0 (SP9140) 125
Alarm Code E1 (SP9141) 125
Alarm Code E2 (SP9142) 125
Alarm Code E3 (SP9143) 126
Alarm Code E4 (SP9144) 126
Alarm Code E5 (SP9145) 126
Alarm Code E8 (SP9148) 126
Alarm Code E9 (SP9149) 126
Alarm Code F0 (SP9150) 126
Alarm Code F1 (SP9151) 126
Alarm Code F2 (SP9152) 126
Alarm Code F3 (SP9153) 127
Alarm Code F4 (SP9154) 127
Alarm Code F5 (SP9155) 127
Alarm Code F6 (SP9156) 127
Alarm Code F7 (SP9157) 127
Alarm Code F8 (SP9158) 127
Alarm Code G0 (SP9160) 127
Alarm Code G1 (SP9161) 127
Alarm Code G2 (SP9162) 128
Alarm Code G3 (SP9163) 128
Alarm Code G4 (SP9164) 128
Alarm Code G5 (SP9165) 128
Alarm Code G6 (SP9166) 128
Alarm Code G7 (SP9167) 128
Alarm Code G8 (SP9168) 128
Alarm Code G9 (SP9169) 129
Alarm Code H0 (SP9170) 129
Alarm Code J (SV0014) 89
Alarm Code L 91
Alarm Code LL 129
Alarm Code P (SV0604) 90
Alarm Code U 90
Alarm Code UU 129
Alarm Codes A, A1, and A2 121
Alarm Codes C0, C1, C2 (SP9120, SP9121, SP9122) 122
ALARM NUMBERS AND BRIEF DESCRIPTIONS 73,164,238
Alarms for built-in detectors (α*i* and β*i* Pulsecoders) and troubleshooting actions 286
Alarms for separate detectors and troubleshooting actions 287
Alarms Related to Pulsecoder and Separate Serial Detector 175
Amplifier group number 19,209
Amplitude and Offset Information Display of the Spindle Sensor 50
Appearance inspection of the linear motor (magnet plate) 285
Automatic spindle parameter initialization 214

<B>

Battery connection modes 191,266
Blinking Alarm Code 1, 1 (SV0444) 85
Blinking Alarm Code 11 (SV0018) 88
Blinking Alarm Code 2 (SV0015) 88
Blinking Alarm Code 7 (SV0659) 88
Blinking Alarm Code 8 (SV0039) 88
Blinking Alarm Code 9 (SV0037) 88
Blinking Alarm Code A (SV0036) 91
Blinking Alarm Code F, F (SV0601) 89

<C>

Check Procedure 156
Check terminal output signal 42
Checking Parameters 331
CHECKING PARAMETERS USING THE SPINDLE CHECK BOARD 331
Checking the Feedback Signal Waveform 43
Checking the Phase Sequence of the AC Fan Motor Power Supply 13
Checking the STATUS 2 Indicator 231
Checking the Status Display (Power Supply) 18
Checking the Status Display (Servo Amplifier) 23
Checking the Status Display (Spindle Amplifier) 28
Checking the Voltage and Capacity of the Power Supply 12,153,206
CONFIGURATIONS 4,150,202
CONFIRMATION OF THE OPERATION 17,156,216
Connecting a Protective Ground 13,154,208
CONNECTING THE POWER 12,153,206
Connection of the spindle check board 41
Connector and Status LED Locations 216
Converter: Control Power Supply Undervoltage 169
Converter: DC Link Overvoltage 168
Converter: DC Link Undervoltage 167
Converter: Excessive Deceleration Power 168
Cooling Fan 301
Cooling Fan Replacement Procedure 303

<D>

Data Numbers 328
Description and Initial Value of Each Address 324
Detailed troubleshooting methods 288
Details of monitor screens related to servo amplifiers 66
Details of monitor screens related to spindle amplifiers 69
Diagnosis Screen 173
Dismantling the Fan Motor from the Fan Unit 262
Dismantling the Fan Motor from the Fan Unit (β*i*SV40-B, β*i*SV80-B, β*i*SV10HV-B, β*i*SV20HV-B, β*i*SV40HV-B, β*i*SV20/20-B) 184

Dismantling the Fan Motor from the Fan Unit (βiSV40/40-B) 185
Dismantling the Fan Motor from the Fan Unit (βiSV4-B, βiSV20-B) 183
Dismantling the Fan Motor from the Internal Cooling Fan Unit 133
Dismantling the Fan Motor from the Radiator Cooling Fan Unit 134
Dismantling the Fan Unit of βiSV40/40-B 181
Dismantling the Fan Unit of βiSV4-B or βiSV20-B 179
Dismantling the Internal Cooling Fan Unit of βiSV40-B, βiSV80-B, βiSV10HV-B, βiSV20HV-B, βiSV40HV-B, or βiSV20/20-B 180
Dismantling the Radiator Cooling Fan Unit of βiSV80-B or βiSV40HV-B 182
Display of the servo amplifier operation status 294

<E>

Example of observing data 40,230,330

<F>

Feedback Disconnected Alarm 174
FOR Series 0i/0i Mate-D 166
FOR Series 30i/31i/32i/35i-B, Power Motion i-A, 0i-F 164
FOR Series 30i/31i/32i-A 165
FSSB Communication Error 171
Fuse Locations 145,198,271

<H>

How to check the data at an alarm or just before an alarm 65
How to Observe Data 323
HOW TO REPLACE THE FUSES 144
How to Replace the Fuses and Printed Circuit Boards 195,270
How to Switch the Trouble Diagnosis Guidance and Trouble Diagnosis Monitor to the "SAMPLING" State 72,259
HOW TO USE THE SPINDLE CHECK BOARD 323

<I>

αiBZ SENSOR 50
αiCZ SENSOR (serial output) 52
If the LED (green) does not light up 29
If the Magnetic Contactor Is Not Turned ON 21
If the Status LED Does Not Light up 23
If the status LED keeps blinking and displaying "--" 30
INITIAL PARAMETER SETTINGS 14,19,155,209
INITIALIZING PARAMETERS (SWITCHES AND DUMMY CONNECTORS) 155
Invalid Servo Parameter Setting Alarm 175
Inverter: Cooling Fan Stopped of the Radiator 169
Inverter: Internal Cooling Fan Stopped 169
Inverter: IPM Alarm 169
Inverter: IPM Alarm (OH) 170
Inverter: Motor Current Alarm 170
αiS 100 FAN, αiS 200 FAN (including HV) 307
αiS 1000HV 311
αiS 1000HV-B, αiS 1500HV-B 308
αiS 150-B to αiS 500-B (including HV) 305
αiS 2000HV, αiS 3000HV 311
αiS 300, αiS 500 (including HV) 308
βiSVSP-B Power Supply Section 209,219
βiSVSP-B Servo Section 211,231
βiSVSP-B Spindle Section 214,220

<L>

Leakage Current and Selecting the Ground Fault Interrupter 13
LEDs Do Not Light up. 79
LIST OF INTERNAL DATA FOR THE POWER SUPPLY 334
LIST OF ITEMS TO BE CHECKED 11,152,205
LIST OF MANUALS RELATED TO MOTORS AND AMPLIFIERS 275
List of spindle data that can be observed using the SERVO GUIDE 37,228

<M>

Main inspection items 278
Maintenance of a Detector 285
Maintenance of a Servo Amplifier 294
Maintenance of the FANUC-NSK spindle unit 284
Maintenance of the Pulsecoder of βiS-B/βiS servo motors (□40 and □60) 289
MAINTENANCE PARTS 312
Major Characteristics 323
MEASUREMENT SPECIFICATION 332
MEASURING INTERNAL DATA FOR THE POWER SUPPLY USING THE SERVO GUIDE 332
MEASURING SERVO MOTOR WAVEFORMS (TCMD, VCMD) 319
Method for Observing Motor Current 26,160,233
MOTOR/ DETECTOR/ AMPLIFIER PREVENTIVE MAINTENANCE 275

<N>

Notes on attaching connectors 194,269
Notes on motor cleaning 281
Notes on Replacing a Battery (Supplementary Explanation) 143,191,266
Notes on the cutting fluid (informational) 281

<O>

Observing Data Using the SERVO GUIDE 37,228
OBSERVING DATA USING THE SPINDLE CHECK BOARD 323
Ordering Numbers of Fan Units and Fan Motors for Maintenance 136
Other Alarms 129,177
OUTLINE OF βiSVSP-B 216

Overheat Alarm 175
Overload Alarm (Soft Thermal, OVC) 173
OVERVIEW ..... 3,37,57,140,149,163,187,201, ... 228,237,263,323,331,332,336

<P>

Parameter setting for specifying the PS control axis 20,210
Parameters related to spindle serial output 214
Periodic cleaning of a motor 280
Power Supply 6,17,79
Pre-charge Failure Alarm 21
PREFACE p-1
Preventive Maintenance of a Built-in Spindle Motor and Spindle Unit 283
Preventive Maintenance of a Linear Motor 284
Preventive Maintenance of a Motor (Common to All Models) 278
Preventive Maintenance of a Servo Amplifier 293
PREVENTIVE MAINTENANCE OF MOTORS AND DETECTORS 276
PREVENTIVE MAINTENANCE OF SERVO AMPLIFIERS 290
Principles in Outputting the Internal Data of the Serial Spindle 325
PS control axis 19,209
PS PRE-CHARGE FAILURE 336
Pulsecoder 299

<R>

REPLACEMENT OF A FAN MOTOR .. 130,179,260,295
Replacement of Fan Units of 150 or 300 mm Width Units 132
Replacement of Fan Units of 60 or 90 mm Width Units 130
Replacement of the Fan Unit 260
REPLACING AMPLIFIER COMPONENTS 130,179,260
Replacing Batteries 140,187,264
Replacing Batteries for β*i*S 0.2 to β*i*S 0.3 193,268
REPLACING BATTERY FOR ABSOLUTE PULSECODERS 140,187,263,295
REPLACING COOLING FANS 303
Replacing the Batteries in a Separate Battery Case 141,188,264
Replacing the Battery Built into the Servo Amplifier 142,189,265
Routine Inspection of a Spindle Motor with a Through Hole 282
Routine inspection of the FANUC-NSK spindle unit 283

<S>

SAFETY PRECAUTIONS s-1
Selecting the Ground Fault Interrupter That Matches the Leakage Current 154,208
SERIES AND EDITION OF APPLICABLE SOFTWARE 332
Servo Adjustment Screen 172
SERVO ALARM 73,164,165,166,238
Servo Amplifier 7,22,85,151,156,167
Servo and Spindle Multi-Axis Amplifier 10
SERVO CONTROL SOFTWARE 172
SERVO MOTOR MAINTENANCE 299
SERVO MOTOR MAINTENANCE PARTS 299
Servo parameter initialization procedure 211
SERVO SOFTWARE 92
SETTING OF CHANNELS 333
SPECIFICATION 6,151,204
Specifications of Fan Units and Fan Motors for Maintenance 263
Specifications of Fan Units for Maintenance 186
Specifying Data to Be Monitored 323
SPINDLE ALARM 76,241
Spindle Amplifier 9,27,95
Spindle Check Board 41
Spindle check board specifications 41
SPINDLE MOTOR MAINTENANCE PARTS 312
START-UP OF A MULTI-AXIS AMPLIFIER 14
Start-up of an individual servo axis 212
START-UP PROCEDURE 11,152,205,218
Status 1 Indicator 220
Status Error Indication 32
Status Error Indication Function 223
Storage method of the FANUC-NSK spindle unit 284

<T>

Test run of the FANUC-NSK spindle unit 284
The STATUS 1 indicator is blinking with "--." 221
The Status LED Is Off. 219
Things to Be Checked if the Status LED Is Off 21
TROUBLE DIAGNOSIS FUNCTION 58,59,245
Trouble Diagnosis Guidance 60,246
Trouble Diagnosis Monitor 65,252
TROUBLESHOOTING AND ACTION 79,167,244
Troubleshooting at Startup 29,221
TROUBLESHOOTING OF PS PRE-CHARGE FAILURE 337
TROUBLESHOOTING OF PS PRE-CHARGE FAILURES 336
Troubleshooting Procedure 58,244
TROUBLESHOOTING PROCEDURES 58,244
Troubleshooting Using the Trouble Diagnosis Guidance 337,340

<U>

Usable series and editions 37

<V>

V Ready-off Alarm Indicated on the CNC Screen 24,159,232

<W>

Warnings, Cautions, and Notes on Operation of Servo Amplifiers 290

Warnings, Cautions, and Notes on Preventive
Maintenance of Motors and Detectors.....276
When an overshoot or hunting occurs.....31,222
When cutting is not performed, the spindle
vibrates, making noise.....31,222
When cutting power weakens or
acceleration/deceleration slows down 31,222
When the motor does not turn.....30,221
When the specified speed cannot be obtained.....30,221
With αiS 50-B fan, with αiS 60-B fan, with αiF
40-B fan, with αiS 50 fan, with αiS 60 fan,
with αiF 40 fan (including HV).....303

REVISION RECORD

Edition	Date	Contents
01	Oct., 2018	

B-65515EN/01

B-65515EN/01.01