FANUC Power Motion *i*-MODEL A

CONNECTION MANUAL (HARDWARE)

B-64573EN/01

© MyFANUC 195109AB01DC415385669AA015E5BDE5

• No part of this manual may be reproduced in any form.
• All specifications and designs are subject to change without notice.

The products in this manual are controlled based on Japan's "Foreign Exchange and Foreign Trade Law". The export from Japan may be subject to an export license by the government of Japan.
Further, re-export to another country may be subject to the license of the government of the country from where the product is re-exported. Furthermore, the product may also be controlled by re-export regulations of the United States government.
Should you wish to export or re-export these products, please contact FANUC for advice.

The products in this manual are manufactured under strict quality control. However, when using any of the products in a facility in which a serious accident or loss is predicted due to a failure of the product, install a safety device.

In this manual we have tried as much as possible to describe all the various matters.
However, we cannot describe all the matters which must not be done, or which cannot be done, because there are so many possibilities.
Therefore, matters which are not especially described as possible in this manual should be regarded as "impossible".

This manual contains the program names or device names of other companies, some of which are registered trademarks of respective owners. However, these names are not followed by ® or ™ in the main body.

© MyFANUC 195109AB01DC415385669AA015E5BDE5

SAFETY PRECAUTIONS

Described below are the safety precautions regarding the control units and those peripheral units explained herein. The safety precautions must be observed in order to use these units safely.
Because exchanging, as well as performing daily maintenance operations on, the control units and those peripheral units explained herein may incur diverse dangers, you cannot be involved in such work unless you have been sufficiently trained for safety.
Some safety precautions may not apply to your control units or peripheral units explained herein because the units have no corresponding function. If this is the case, skip reading those precautions.
As for safety precautions regarding machine tools, refer to the respective machine manuals provided by the machine tool builders.
Before starting to operate machines for check purposes, be sure to read the manuals provided by the machine tool builders and FANUC and sufficiently understand their descriptions.

Contents

DEFINITION OF WARNING, CAUTION, AND NOTE s-1
WARNINGS AND CAUTIONS REGARDING MOUNTING, WIRING, AND EXCHANGING s-2
WARNINGS AND CAUTIONS REGARDING DESIGNING s-4
WARNINGS, CAUTIONS, AND NOTES REGARDING DAILY MAINTENANCE s-5

DEFINITION OF WARNING, CAUTION, AND NOTE

This manual includes safety precautions for protecting the user and preventing damage to the machine. Precautions are classified into Warning and Caution according to their bearing on safety. Also, supplementary information is described as a Note. Read the Warning, Caution, and Note thoroughly before attempting to use the machine.

⚠ WARNING
Applied when there is a danger of the user being injured or when there is a danger of both the user being injured and the equipment being damaged if the approved procedure is not observed.

⚠ CAUTION
Applied when there is a danger of the equipment being damaged, if the approved procedure is not observed.

NOTE
The Note is used to indicate supplementary information other than Warning and Caution.

- Read this manual carefully, and store it in a safe place.

© MyFANUC 195109AB01DC415385669AA015E5BDE5

WARNINGS AND CAUTIONS REGARDING MOUNTING, WIRING, AND EXCHANGING

⚠ WARNING

1 Before starting mounting, wiring, and exchanging, be sure to shut off externally supplied power. Otherwise, electrical shocks, breakdown, and blowout may occur.
If a control unit is turned off but other units are not, it is likely that power may be supplied to servo units, resulting in the units being damaged and workers getting an electrical shock when the units are exchanged.

2 Voltage lingers in servo and spindle amplifiers for a while even after power has been turned off, resulting in workers possibly getting an electrical shock when the workers touch them. Before starting to exchange these amplifiers, wait for 20 minutes after power has been turned off.

3 Be sure to ground your control units and peripheral units in accordance with your national grounding standards (protective grounding class C or stricter). Otherwise, electrical shocks, breakdown, and blowout may occur.

4 In order to prevent damage that may be caused by static electricity, wear a grounding wrist strap or take a similar protective measure before starting to touch a printed-circuit board or unit or attach a cable.
Static electricity from human bodies can damage electrical circuits.

5 In unit replacement, specify the same settings and parameters in the newly installed unit as those for the one removed. (For details, refer to the respective manuals for the units.)
Operating the newly installed unit with incorrect settings or parameters will cause the machine to behave unexpectedly, possibly leading to a damaged workpiece or machine or injury.

6 If you notice an apparent hardware fault, such as abnormal noise, abnormal odor, smoke, ignition, or abnormal heat, in the hardware while power is being supplied to it, shut it off at once. These faults can cause fire, breakdown, blowout, and malfunction.

7 The radiating fins of control units, servo amplifiers, spindle amplifiers, and other devices can remain very hot for a while after power has been turned off, making you get burned if you touch them. Before starting to work on them, wait and make sure they are cool.

8 When exchanging heavy stuff, you should do so together with two or more people.
If you try to exchange heavy stuff all by yourself, you may drop it and get hurt.

9 Wiring work in the control units and peripheral units must be done only after they have been installed. Otherwise, electrical shocks can occur.

10 Be careful not to damage cables. Otherwise, electrical shocks can occur.

11 When working, wear suitable clothes with safety taken into account. Otherwise, injury and electrical shocks can occur.

12 Do not work with your hands wet. Otherwise, electrical shocks and damage to electrical circuits can occur.

© MyFANUC 195109AB01DC415385669AA015E5BDE5

⚠ **CAUTION**

Failing to observe any caution stated below can lead to fire, breakdown, blowout, and malfunction.

1 Do not attach the units directly to any flammable object or install the units near any flammable object.
2 Do not allow any foreign matter (such as a screw, metal chip, or coolant) to get in the units.
3 Handle the units and printed-circuit boards gently because they are precision devices. Be careful not to drop them or give a high impact to them.
4 Lay signal wires away from power wires as stated in this manual.
5 When fastening each unit or wire, be sure to observe the screw tightening torque specified for them. If screws are tightened too weakly or too strongly, it is likely that the unit may drop, break, or malfunction, or the wire may be short-circuited. Do not forget to tighten all necessary screw.
6 Do not block any cooling fan air inlet or outlet. For units having no cooling fan, allow space for natural convection cooling above and below them.
7 Be careful not to make an incorrect wiring or connection. Be sure to attach wires and cables to their respective corresponding terminals and connectors.
8 Confirm equipment's electrical rating stated herein. Do not apply any unspecified voltage to the equipment.
9 Do not confuse voltage polarity. Carefully confirm the arrangement of connector pins.
10 When making a cable assembly, press-mount, crimp, or solder the wires, using the tool specified by the cable manufacturer.
11 Use printed-circuit boards and peripheral units that match your control unit.
12 When mounting the units, pay attention to their mass.
13 When detaching a cable from a unit, hold the connector rather than the cable. When attaching a cable, be sure to fit its connector to the connector pins securely. For connectors having a lock mechanism, be sure to lock them securely.
14 As for the shielding wires of the cables specified herein, securely ground them, using, for example, cable clamps.
15 Always use wires whose length, diameter, heat resistance, and flex resistance match their use.

© MyFANUC 195109AB01DC415385669AA015E5BDE5

WARNINGS AND CAUTIONS REGARDING DESIGNING

⚠ **WARNING**

1 When designing, be sure to observe all rules stated in this document and any related manuals. Otherwise, it is likely that failure and malfunction may occur.

2 Failures in the control units and I/O units as well as input power abnormality and communication failures can hamper the normal operation of these I/O units. Design each I/O unit in such a way that the machine can operate safely, for example, by providing an external safety circuit to the I/O unit so that no accident will occur even if the I/O unit fails to operate normally.
The DO function of each I/O unit has been designed in such a way that, if a system alarm is issued in the control unit that controls the I/O unit or the power of the control unit or the I/O unit is turned off, the DO function of all the I/O units is turned off. However, it is not guaranteed that the DO function is surely turned off. So, it is requested that, if a signal regarding safety is involved, a safety circuit external to each I/O unit must be configured. Using the dual check safety function makes it possible to detect a single fault in a portion related to safety. For details of the dual check safety function, refer to the Dual Check Safety Connection Manual (B-64483EN-2).

3 Coolants containing sulfur or chlorine at a high activation level, oil-free coolants called synthetic, and water-soluble coolants at a high alkali level, in particular, can largely affect the CNC and peripheral units. Please note that, even if consideration is taken to protect them from direct exposure to these coolants, the following trouble is likely to occur.

- Coolants containing sulfur or chlorine at a high activation level
  Some coolants containing sulfur or chlorine are at an extremely high activity level. If such a coolant adheres to the CNC or peripheral units, it reacts chemically with a material, such as resin, of equipment, possibly leading to corrosion or deterioration. If it gets in the CNC or peripheral units, it corrodes metals, such as copper and silver, used as component materials, possibly leading to a defective component.
- Synthetic-type coolants having a high permeability
  Some synthetic-type coolants whose lubricating component is, for example, PAG (polyalkylene glycol) have an extremely high permeability. If such a coolant is used even in equipment having a high closeness, it can readily flow into the CNC or peripheral units through, for example, gaskets. It is likely that, if the coolant gets in the CNC or a peripheral unit, it may deteriorate the insulation and damage the components.
- Water-soluble coolants at a high alkali level
  Some coolants whose pH is increased using alkanolamine are so strong alkali that its standard dilution will lead to pH10 or higher. If such a coolant spatters over the surface of the CNC or peripheral unit, it reacts chemically with a material, such as resin, possibly leading to corrosion or deterioration.

⚠ **CAUTION**

Install each control unit, display unit, MDI unit, and machine operator panel in such a place that neither cutting chip nor coolant will spatter to them. Otherwise, damage or malfunction may occur.

© MyFANUC 195109AB01DC415385669AA015E5BDE5

WARNINGS, CAUTIONS, AND NOTES REGARDING DAILY MAINTENANCE

⚠ WARNING

Battery replacement

Do not replace batteries unless you have been well informed of maintenance work and safety.

When opening the cabinet and replacing batteries, be careful not to touch any high-voltage circuit (marked with ⚠ and covered with an electric shock prevention cover).

When the electric shock prevention cover has been removed, you will get an electric shock if you touch any high-voltage circuit.

⚠ WARNING

Fuse replacement

Before replacing a blown fuse, it is necessary to remove the cause of the blown fuse.

So, do not replace fuses unless you have been well informed of maintenance work and safety.

When opening the cabinet and replacing fuses, be careful not to touch any high-voltage circuit (marked with ⚠ and covered with an electric shock prevention cover).

When the electric shock prevention cover has been removed, you will get an electric shock if you touch any high-voltage circuit.

⚠ CAUTION

Handle the batteries gently. Do not drop them or give a strong impact to them.

NOTE

Each control unit uses batteries, because it must hold data, such as programs, offset values, and parameters even when AC power for it is off.

Back up the data (programs, offset values, and parameters) regularly.

If the battery voltage becomes low, a low battery voltage alarm is displayed on the machine operator's panel or screen.

Once the battery voltage alarm has been displayed, replace the batteries within one week. Otherwise, the memory contents may be lost.

For the battery replacement procedure, see Section 4.4, "Batteries". Recollect or discard old batteries in the way your local autonomous community specifies.

© MyFANUC 195109AB01DC415385669AA015E5BDE5

© MyFANUC 195109AB01DC415385669AA015E5BDE5

PREFACE

This manual describes the information, that is, electrical and structural specifications, needed in connecting machine to the control and peripheral units stated below. The manual covers the range shown on the total connection diagrams mentioned in Chapter 2. The manual briefly describes the units that are used in common with the FANUC control units, such as FANUC I/O units, FANUC PANEL *i*, and servo motors. It also gives supplementary information for use of these units with the control units. For detailed specifications, refer to the manuals of these components.
For options not covered in this manual, also refer to the manuals of these components.

Applicable models

The models covered by this manual, and their abbreviations are :

Model name	Abbreviation	
FANUC Power Motion *i*–MODEL A	Power Motion *i*–A	Power Motion *i*

Organization of this manuals

This manual consists of chapters 1 to 13 and appendixes at the end of the book.

Chapter and title	Contents
Chapter 1 CONFIGURATION	Provides general information related to the connection of the Power Motion *i*, as well as an introduction to detailed information.
Chapter 2 TOTAL CONNECTION DAIGRAMS	Describes how to connect peripheral units to the Power Motion *i*.
Chapter 3 INSTALLATION	Describes the installation requirements for using the Power Motion *i*.
Chapter 4 POWER SUPPLAY CONNECTION	Describes how to make connections related to the power supply of the Power Motion *i*.
Chapter 5 CONNECTION TO CNC PERIOHERALS	Describes how to connect the peripheral devices to the Power Motion *i*.
Chapter 6 SERVO INTERFACES	Describes how to connect the Power Motion *i* to servo amplifiers. Also explains how to connect separate detector interface units.
Chapter 7 CONNECTION TO FANUC I/O Link *i* AND FANUC I/O Link	Describes how to connect machine interface I/O units using the FANUC I/O Link *i* and FANUC I/O Link.
Chapter 8 UNITS CONNECTED TO FANUC I/O Link *i* AND FANUC I/O Link	Describes major units that correspond to the FANUC I/O Link *i* and FANUC I/O Link.
Chapter 9 STOP AND EMERGENCY STOP	Describes how to handle the emergency stop signal. A lot of important information regarding safety is included. Be sure to read It.
Chapter 10 CONNECTION TO OTHER NETWORKS	Describes how to connect the Power Motion *i* to networks.
Chapter 11 CONNECTION WITH THE FANUC PANEL ***i*** AND COMMERCIAL PERSONAL COMPUTERS	Describes how to connect the Power Motion *i* to the FANUC PANEL ***i*** or a commercial personal computer, using the high-speed serial bus (HSSB) or Ethernet.
Chapter 12 PANEL *i*	Describes how to connect a PANEL *i* to the Power Motion *i*.

© MyFANUC 195109AB01DC415385669AA015E5BDE5

Chapter and title	Contents
APPENDIX	A) OUTLINE DRAWINGS OF UNITS AND CONNECTORS B) 20-PIN INTERFACE CONNECTORS AND CABLES C) CONNECTION CABLE (SUPPLIED FROM US) D) OPTICAL FIBER CABLE E) MEMORY CARD INTERFACE

Related manuals of Power Motion *i*-MODEL A

The following table lists the manuals related to Power Motion *i*-MODEL A. This manual is indicated by an asterisk(*).

Table 1 Related manuals

Manual name	Specification number	
DESCRIPTIONS	B-64572EN	
CONNECTION MANUAL (HARDWARE)	B-64573EN	*
CONNECTION MANUAL (FUNCTION)	B-64573EN-1	
OPERATOR'S MANUAL	B-64574EN	
MAINTENANCE MANUAL	B-64575EN	
PARAMETER MANUAL	B-64580EN	
Programming		
Macro Executor PROGRAMMING MANUAL	B-63943EN-2	
Macro Compiler PROGRAMMING MANUAL	B-66263EN	
C Language Executor PROGRAMMING MANUAL	B-63943EN-3	
PMC		
PMC PROGRAMMING MANUAL	B-64513EN	
Network		
PROFIBUS-DP Board CONNECTION MANUAL	B-63993EN	
Fast Ethernet / Fast Data Server OPERATOR'S MANUAL	B-64014EN	
DeviceNet Board CONNECTION MANUAL	B-64043EN	
FL-net Board CONNECTION MANUAL	B-64163EN	
CC-Link Board CONNECTION MANUAL	B-64463EN	
Dual Check Safety		
Dual Check Safety CONNECTION MANUAL	B-64483EN-2	

Related manuals of SERVO MOTOR αis/αi/βis/βi series

The following table lists the manuals related to SERVO MOTOR αis/αi/βis/βi series

Manual name	Specification number
FANUC AC SERVO MOTOR αi series DESCRIPTIONS	B-65262EN
FANUC AC SERVO MOTOR βi series DESCRIPTIONS	B-65302EN
FANUC SERVO AMPLIFIER αi series DESCRIPTIONS	B-65282EN
FANUC SERVO AMPLIFIER βi series DESCRIPTIONS	B-65322EN
FANUC SERVO MOTOR αis series FANUC SERVO MOTOR αi series FANUC AC SPINDLE MOTOR αi series FANUC SERVO AMPLIFIER αi series MAINTENANCE MANUAL	B-65285EN
FANUC SERVO MOTOR βis series FANUC AC SPINDLE MOTOR βi series FANUC SERVO AMPLIFIER βi series MAINTENANCE MANUAL	B-65325EN

© MyFANUC 195109AB01DC415385669AA015E5BDE5

Manual name	Specification number
FANUC AC SERVO MOTOR α*i* series FANUC AC SERVO MOTOR β*i* series FANUC LINEAR MOTOR L*i*S series FANUC SYNCHRONOUS BUILT-IN SERVO MOTOR D*i*S series PARAMETER MANUAL	B-65270EN

Related manuals of FANUC PANEL *i*

The following table lists the manuals related to FANUC PANEL *i*.

Manual name	Specification number
FANUC PANEL *i* CONNECTION AND MAINTENANCE MANUAL	B-64223EN

Related manuals of FANUC I/O Unit

The following table lists the manuals related to FANUC I/O Unit.

Manual name	Specification number
FANUC I/O Unit-MODEL A CONNECTION AND MAINTENANCE MANUAL	B-61813E
FANUC I/O Unit-MODEL B CONNECTION AND MAINTENANCE MANUAL	B-62163E
Handy Machine Operator's Panel CONNECTION MANUAL	B-63753EN

Training

- FANUC runs FANUC Training Center to train those who will be involved in the connection, maintenance, and operation of FANUC products. It is recommended to attend the class so you will be able to use the products effectively.
  Visit the following web site for detailed descriptions of its curriculum.
  http://www.fanuc.co.jp/

© MyFANUC 195109AB01DC415385669AA015E5BDE5

© MyFANUC 195109AB01DC415385669AA015E5BDE5

TABLE OF CONTENTS

SAFETY PRECAUTIONS s-1
DEFINITION OF WARNING, CAUTION, AND NOTE s-1
WARNINGS AND CAUTIONS REGARDING MOUNTING, WIRING, AND EXCHANGING s-2
WARNINGS AND CAUTIONS REGARDING DESIGNING s-4
WARNINGS, CAUTIONS, AND NOTES REGARDING DAILY MAINTENANCE s-5

PREFACE p-1

1 CONFIGURATION 1
1.1 CONTROL UNIT CONFIGURATION AND COMPONENT NAMES 1
1.1.1 Configurations of LCD-mounted Type Control Units 1
1.1.2 Configurations of Stand-alone Type Control Units 5
1.1.3 Configurations of Optional Boards 9
1.2 HARDWARE OVERVIEW 10
1.2.1 LCD-mounted Type Control Unit Overview 10
1.2.2 Stand-alone Type Control Unit Overview 11

2 TOTAL CONNECTION DIAGRAMS 12

3 INSTALLATION 16
3.1 ENVIRONMENTAL REQUIREMENTS OUTSIDE THE CABINET 16
3.1.1 Environmental Conditions outside the Cabinet 16
3.1.2 Installation Conditions of the Control Unit 16
3.2 CAUTIONS REGARDING THE INSTALLATION DESIGN OF MACHINE TOOL POWER MAGNETICS CABINETS 17
3.3 THERMAL DESIGN OF THE MACHINE TOOL MAGNETIC CABINET 19
3.3.1 Temperature Rise within the Machine Tool Magnetic Cabinet 19
3.3.2 Heat Output of Each Unit 19
3.3.3 Thermal Design of Operator's Panel 20
3.4 COUNTERMEASURES AGAINST NOISE AND GROUNDING 22
3.4.1 Grounding as Noise Suppression Measures 23
3.4.1.1 Grounding methods 23
3.4.1.2 Cabinet 24
3.4.2 Protective Ground (Grounding for Protection against Indirect Contact) 27
3.4.3 Connecting the Ground Terminal of the Control Unit 28
3.4.4 Separating Signal Lines 31
3.4.5 Noise Suppressor 32
3.4.6 Cable Clamp and Shield Processing 33
3.4.7 Lightning Surge Absorber Installation 36
3.5 INSTALLING THE CONTROL UNIT 37
3.5.1 Installing the LCD-mounted Type Control Unit 37
3.5.2 Installing the Stand-alone Type Control Unit 38
3.6 TIGHTENING TORQUE FOR FASTENING UNITS AND GROUND TERMINALS 39
3.7 DUSTPROOF MEASURES FOR CABINETS AND PENDANT BOXES 39
3.8 LCD PROTECTION COVER 42
3.9 ATTACHING SCREW CAPS 42

© MyFANUC 195109AB01DC415385669AA015E5BDE5

4 POWER SUPPLY CONNECTION 43
4.1 24 VDC POWER (INSULATION AC/DC CONVERTOR) 43
4.1.1 Connecting 24 VDC Power 43
4.1.2 24 VDC Power Supply Specification 45
4.1.3 Power Capacity of 24 VDC Power Supplies 47
4.2 TURNING ON AND OFF THE POWER TO THE CONTROL UNIT 49
4.2.1 Power-on Sequence 49
4.2.2 Power-off Sequence 50
4.3 CABLE FOR POWER SUPPLY TO CONTROL UNIT 52
4.4 BATTERIES 52
4.4.1 Battery for Memory Backup in the Control Unit (3 VDC) 53
4.4.1.1 Replacing the lithium battery 53
4.4.1.2 Replacing commercially available alkaline dry cells (size D) 55
4.4.2 Battery for Separate Absolute Pulsecoders (6VDC) 57
4.4.3 Battery for Absolute Pulse Coder Built into the Motor (6VDC) 58

5 CONNECTION TO CNC PERIPHERALS 59
5.1 CONNECTION BETWEEN THE LCD-MOUNTED TYPE CONTROL UNIT AND MDI UNIT 59
5.1.1 Connection Diagram 59
5.1.2 Connection with the MDI Unit 60
5.1.3 Key Layout of MDI Unit 61
5.2 CONNECTION BETWEEN THE STAND-ALONE TYPE CONTROL UNIT AND DISPLAY UNIT AND BETWEEN THE DISPLAY UNIT AND MDI UNIT 63
5.2.1 Overview 63
5.2.2 With the 10.4” Display Unit 63
5.2.3 With Two Display Units 65
5.2.3.1 Each connection 65
5.2.3.2 Installing the display unit 68
5.2.4 With the 15” Display Unit 70
5.3 CONNECTION WITH INPUT/OUTPUT DEVICES 71
5.3.1 Overview 71
5.3.2 Connecting I/O Devices 71
5.3.3 RS232-C Serial Port 72
5.3.4 RS232-C Interface Specification 74
5.4 CONNECTING THE HIGH-SPEED SKIP (HDI) 81
5.4.1 Connecting the High-speed Skip (HDI) 81
5.4.2 Input Signal Rules for the High-speed Skip (HDI) 83
5.5 LINKING THE ETHERNET INTERFACE 84
5.5.1 Connection to the Ethernet Interface 84
5.5.2 Specification of Twisted-Pair Cable 86
5.5.3 Network Installation 88
5.6 USB PORT 89

6 SERVO INTERFACES 90
6.1 OVERVIEW 90
6.2 Interface to the Amplifiers 91
6.2.1 Number of Units That Can Be Connected 92
6.3 SEPARATE DETECTOR INTERFACE 93
6.3.1 Overview 93
6.3.2 Connection Diagram 94

© MyFANUC 195109AB01DC415385669AA015E5BDE5

6.3.3 Separate Detector Interface Unit Specification 95
6.3.4 Connection of Power Supply 95
6.3.5 Separate Detector Interface (Digital Input) 97
6.3.5.1 FANUC serial interface 97
6.3.5.2 Parallel interface 98
6.3.5.3 Input Signal Requirements (Parallel interface) 99
6.3.6 Overview of the Analog Basic Unit 100
6.3.7 Connection Diagrams of an Analog Basic Unit 101
6.3.8 Separate Detector Interface (Analog Input) 104
6.3.8.1 Analog 1Vp-p interface 104
6.3.8.2 Input signal requirements (analog 1Vp-p interface) 105
6.3.8.3 Method for checking the encoder signals 106
6.3.9 Connection of Battery for Absolute Position Detector 107
6.3.10 Connection between the Basic Unit and Additional Unit 109
6.3.11 Connector Locations 109
6.3.12 Installation 111
6.3.13 Notes on Installing a Separate Detector Interface Unit 112

7 CONNECTION TO FANUC I/O Link *i* AND FANUC I/O Link 114

7.1 OVERVIEW 114
7.2 CONNECTION 115
7.2.1 Connection of I/O Link *i* or I/O Link by Electric Cable 117
7.2.2 Connection of FANUC I/O Link *i* or I/O Link by Optical Fiber Cable 118
7.2.3 Connection when Multiple Channels of the I/O Link *i* and I/O Link Are Used 120
7.3 ASSIGNMENT FOR I/O UNITS 129
7.3.1 Assignment of Signals 129
7.3.2 Fixed Signals 130
7.3.3 Status Alarm 131
7.4 MANUAL PULSE GENERATOR 132
7.4.1 Manual Pulse Generator Connection 132
7.4.2 Cable Length for Manual Pulse Generator 133
7.4.3 Manual Pulse Generator Signal Specifications 133
7.5 POWER SUPPLY 134

8 UNITS CONNECTED TO FANUC I/O Link *i* AND FANUC I/O Link 135

8.1 GENERAL UNITS 135
8.2 CONNECTION OF I/O MODULE FOR CONNECTOR PANEL 137
8.2.1 Configuration 137
8.2.2 Connection Diagram 138
8.2.3 Module Specifications 139
8.2.4 Connection of the Basic Module, and Extension Modules A and B 140
8.2.4.1 Connector pin arrangement 140
8.2.4.2 DI (input signal) connection 141
8.2.4.3 DO (output signal) connection 143
8.2.4.4 DI/DO signal specifications 144
8.2.5 Connection of Extension Module C (2A Output Module) 145
8.2.5.1 Connector pin arrangement 145
8.2.5.2 2A output signal connection 146
8.2.5.3 2A output signal specifications 147
8.2.6 Connection of Extension Module D (Analog Input Module) 147
8.2.6.1 Analog input connector pin allocation 147
8.2.6.2 Analog input signal connections 148
8.2.6.3 Analog input signal specifications 149
8.2.6.4 Channel selection and A/D conversion data 149
8.2.7 Manual Pulse Generator Connection 151

© MyFANUC 195109AB01DC415385669AA015E5BDE5

8.2.8 Connection of Basic and Extension Modules....152
8.2.9 Module Installation....153
8.2.10 Other Notes....158
8.2.11 Rotary Switch Setting....161
8.3 CONNECTION OF I/O MODULE FOR OPERATOR'S PANEL (FOR MATRIX INPUT)....163
8.3.1 Overall Connection Diagram....163
8.3.2 Power Connection....164
8.3.3 DI/DO Connector Pin Arrangement....165
8.3.4 DI (General-purpose Input Signal) Connection....166
8.3.5 DI (Matrix Input Signal) Connection....168
8.3.6 DO (Output Signal) Connection....169
8.3.7 Manual Pulse Generator Connection....172
8.3.8 External View....173
8.3.9 Specifications....174
8.3.10 Other Notes....175
8.4 CONNECTION OF I/O MODULE FOR OPERATOR'S PANEL AND I/O MODULE FOR POWER MAGNETICS CABINET....178
8.4.1 Overall Connection Diagram....178
8.4.2 Power Connection....179
8.4.3 DI/DO Connector Pin Arrangement....180
8.4.4 DI (General-purpose Input Signal) Connection....181
8.4.5 DO (Output Signal) Connection....185
8.4.6 Manual Pulse Generator Connection....186
8.4.7 External View....187
8.4.8 Specifications....188
8.4.9 Other Notes....189
8.5 CONNECTION OF I/O MODULE TYPE-2 FOR CONNECTOR PANEL....191
8.5.1 Configuration....191
8.5.2 Connector Layout Diagram....192
8.5.3 Connection Diagram....193
8.5.4 Module Specifications....194
8.5.5 DI/DO Connector Pin Assignment....195
8.5.6 DI (Input Signal) Connection....196
8.5.7 DO (Output Signal) Connection....203
8.5.8 DI/DO Signal Specifications....207
8.5.9 Power Supply Connection....207
8.5.10 Manual Pulse Generator Connection....208
8.5.11 Connection between Modules....208
8.5.12 Unit Dimensions....209
8.5.13 Mounting the Module....210
8.5.14 Connector Panel Printed Circuit Board....211
8.5.15 Other Notes....214
8.6 CONNECTION OF TERMINAL TYPE I/O MODULE....216
8.6.1 Overview....216
8.6.2 Module Specifications....217
8.6.2.1 Types of modules....217
8.6.2.2 Installation conditions....218
8.6.2.3 I/O signal specifications....218
8.6.2.4 Power supply rating....221
8.6.2.5 Heat dissipation....221
8.6.2.6 Weight....221
8.6.2.7 Applicable wire....222
8.6.3 External View and Dimensions....223

© MyFANUC 195109AB01DC415385669AA015E5BDE5

8.6.3.1 Dimensions (common to the modules) ... 223
8.6.3.2 Dimensions in a maximum configuration (one basic module + three extension modules) ... 223
8.6.3.3 Component names ... 224
8.6.4 Installation ... 227
8.6.5 Connection ... 229
8.6.5.1 Overall connection diagram ... 229
8.6.5.2 Power connection ... 230
8.6.5.3 Signal assignment on terminal blocks ... 231
8.6.5.4 DI/DO connection ... 234
8.6.5.5 Manual pulse generator connection ... 240
8.6.5.6 Inter-module connection ... 240
8.6.5.7 Cable connection to a terminal block ... 241
8.6.5.8 Detaching a terminal block ... 242
8.6.5.9 Connection of the ground terminal ... 243
8.6.6 Settings ... 244
8.6.6.1 Address map ... 244
8.6.6.2 Channel selection and A/D conversion data for extension module D ... 246
8.6.6.3 Channel selection and D/A conversion data for extension module E ... 248
8.6.6.4 DO alarm detection ... 249
8.6.6.5 Setting the rotary switch ... 252
8.6.7 Others ... 253
8.6.7.1 Method of common pin expansion ... 253
8.6.7.2 Parallel DO (output signal) connection ... 255
8.7 I/O Link CONNECTION UNIT ... 256
8.7.1 Overview ... 256
8.7.2 Specification ... 257
8.7.3 Installation ... 259
8.7.4 Connection ... 262
8.7.4.1 I/O Link connection ... 262
8.7.4.2 Power connection ... 263
8.8 CONNECTION TO STANDARD MACHINE OPERATOR'S PANEL ... 265
8.8.1 Overview ... 265
8.8.2 Total Connection Diagram ... 267
8.8.3 DI/DO Address Map ... 268
8.8.3.1 For connection to the I/O Link *i* ... *268*
8.8.3.2 For connection to the I/O Link ... 268
8.8.4 Each Connections ... 269
8.8.4.1 Pin assignment ... 269
8.8.4.2 Power supply connection ... 271
8.8.4.3 I/O Link connection ... 271
8.8.4.4 Emergency stop signal connection ... 271
8.8.4.5 Power ON/OFF control signal connection ... 272
8.8.4.6 General-purpose DI signal connection ... 273
8.8.4.7 General-purpose DO signal connection ... 275
8.8.5 Manual Pulse Generator Connection ... 276
8.8.5.1 When only the manual pulse generator ... 276
8.8.5.2 When a pendant type manual pulse generator ... 276
8.8.6 Connector (on the Cable Side) Specifications ... 277
8.8.7 DI/DO Addresses for the Keyboard ... 277
8.8.8 Code Output for the Rotary Switch ... 278
8.8.9 Outline ... 279
8.8.9.1 Outline of main panel ... 279
8.8.9.2 Outline of sub panel AA ... 280
8.8.9.3 Outline of sub panel D ... 281
8.8.9.4 Connector locations of main panel ... 282

© MyFANUC 195109AB01DC415385669AA015E5BDE5

8.8.10 Specifications of the Standard Machine Operator's Panel 283
8.8.10.1 Installation conditions 283
8.8.10.2 Order specification 283
8.8.10.3 Main panel specification 283
8.8.10.4 Sub panel AA, D specification 283
8.8.10.5 Power supply specification 283
8.8.10.6 Heat output 284
8.8.10.7 General-purpose DI signal definition 284
8.8.10.8 General-purpose DO signal definition 284
8.8.11 Key Tops on the Main Panel 284
8.8.11.1 Meaning of key symbols 284
8.8.11.2 Detachable key top on the main panel 286
8.8.12 DO (Output Signal) Error Detection 286
8.9 CONNECTION OF THE I/O Link-AS-i CONVERTER 288
8.9.1 Overview 288
8.9.1.1 Features 288
8.9.1.2 AS-i versions and ordering information 288
8.9.1.3 Specification of the I/O Link side 289
8.9.1.4 Support for AS-i profiles 289
8.9.2 Specifications 289
8.9.2.1 Specifications of the AS-i converter 289
8.9.2.2 Installation conditions 289
8.9.2.3 Dimensions and connector layout 290
8.9.2.4 Installation 290
8.9.3 Connection 293
8.9.3.1 Overall connection diagram 293
8.9.3.2 Power connection 293
8.9.3.3 AS-i connection 294
8.9.4 DI/DO Mapping on the I/O Link 296
8.9.4.1 For AS-i Ver. 2.0 (A03B-0817-C001) 296
8.9.4.2 For AS-i Ver. 2.1 (A03B-0817-C002) 297
8.9.5 Details of I/O Link DI/DO 299
8.9.5.1 Input/output data area 299
8.9.5.2 AS-i master status indication 300
8.9.5.3 Board status 301
8.9.5.4 Slave list 301
8.9.6 Command Execution by a Ladder Program 303
8.9.6.1 Types of commands executable by a ladder program 303
8.9.6.2 Command interface with a ladder program 303
8.9.6.3 Details of command flags and status 304
8.9.6.4 Error codes 304
8.9.6.5 Command handshake sequence 305
8.9.6.6 Details of commands 305
8.9.7 LED Status Indication and Setting Switch Operation 308
8.9.7.1 LED indication 308
8.9.7.2 7-segment LED indication 308
8.9.7.3 Setting/display switch 310
8.9.7.4 Error processing 311
8.9.8 How to Use the I/O Link-AS-i Converter 313
8.9.8.1 Installation 313
8.9.8.2 Normal operation 314
8.9.9 Others 315
8.9.9.1 CE marking 315
8.9.9.2 Fuse 315
8.10 CONNECTION OF OPERATOR'S PANEL CONNECTION UNIT (SOURCE DO) 316
8.10.1 Overall Connection Diagram 316

© MyFANUC 195109AB01DC415385669AA015E5BDE5

8.10.2 Power Connection 316
8.10.3 DI/DO Connector Pin Arrangement 317
8.10.4 DI (Input Signal) Connection 318
8.10.5 DO (Output Signal) Connection 325
8.10.6 External View 329
8.10.7 Specifications 329
8.10.8 Other Notes 331
8.11 CONNECTION OF SAFETY IO UNIT 335
8.11.1 Overview 335
8.11.2 Total Connection Diagram 335
8.11.3 Power Supply Connection 335
8.11.4 I/O Link *i* Connection 336
8.11.5 DI/DO Address 336
8.11.6 Pin Assignment of DI/DO 337
8.11.7 DI/DO Connection 338
8.11.8 Outline of Safety IO Unit 346
8.11.9 Connector Locations Safety IO Unit 347
8.11.10 Color Labels for Connectors of Safety IO Unit 348
8.11.11 Connector Specification of Safety IO Unit 349
8.11.12 Specifications of Safety IO Unit 349
8.11.13 DO (Output Signal) Error Detection 351
8.12 CONNECTION OF I/O MODULE FOR OPERATOR'S PANEL SUPPORTING SAFETY FUNCTION 352
8.12.1 Overview 352
8.12.2 Connection Diagram 352
8.12.3 Power Connection 353
8.12.4 DI/DO Address Map 354
8.12.5 DI/DO Connector Pin Arrangement 355
8.12.6 DI (General-purpose Input Signal) Connection 357
8.12.7 DO Signal Connection 360
8.12.8 Manual Pulse Generator Connection 361
8.12.9 External View 362
8.12.10 Specifications 363
8.12.11 DO (Output Signal) Error Detection 364
8.13 I/O UNIT FOR POWER MAGNETICS CABINET 365
8.13.1 Overall Connection Diagram 365
8.13.2 Power Connection 366
8.13.3 DI/DO Connector Pin Arrangement 367
8.13.4 DI (General-purpose Input Signal) Connection 368
8.13.5 DO (Output Signal) Connection 375
8.13.6 Manual Pulse Generator Connection 379
8.13.7 External View 379
8.13.8 GND Cable Connection 380
8.13.9 Specifications 381
8.13.10 Other Notes 382

9 STOP AND EMERGENCY STOP 385
9.1 STOP MODES 385
9.2 SHUTTING OFF THE MOTOR POWER 385
9.3 STOPPING THE SERVO MOTOR 386
9.4 EMERGENCY STOP SIGNAL 386
9.5 CAUTIONS ABOUT MULTI-PATH CONTROL 391

© MyFANUC 195109AB01DC415385669AA015E5BDE5

10 CONNECTION TO OTHER NETWORKS 392

11 CONNECTION WITH FANUC PANEL *i* AND COMMERCIAL PERSONAL COMPUTERS 393

11.1 OVERVIEW 393
11.2 CAUTIONS 393
11.3 CONNECTION USING THE HIGH-SPEED SERIAL BUS (HSSB) 393
11.3.1 Overview 393
11.3.2 Connection Diagram 394
11.3.3 Specifications of a Commercial PC 394
11.3.4 Installation Environment 395
11.3.5 Handling Precautions 395
11.3.6 Procedure for Installing Personal Computer Interface Boards 395
11.3.7 Cable Connection 396
11.4 CONNECTION USING ETHERNET 397
11.4.1 Overview 397
11.4.2 Connection Diagram 397

12 PANEL *i* 398

13 CONNECTION TO OTHER PERIPHERALS 399

13.1 Connection to 2nd LCD Unit (Ethernet) 399
13.1.1 Overview 399
13.1.2 Connection Diagram 399
13.1.3 Connector Name and Layout 401
13.1.3.1 Connection with the 24V power input 401
13.1.3.2 Connection with the MDI unit 402
13.1.3.3 Connection to the Ethernet 402
13.1.4 Installing the Display Unit 403
13.2 CONNECTION TO SHARED LCD UNIT (ETHERNET) 404
13.2.1 Overview 404
13.2.2 Connection Diagram 404
13.2.3 Connector Name and Layout 405
13.2.3.1 Connection with the 24V power input 405
13.2.3.2 Connection with the MDI unit 406
13.2.3.3 Connection to the Ethernet 406
13.2.4 Installing the Display Unit 407

APPENDIX

A OUTLINE DRAWINGS OF UNITS AND CONNECTORS 411

B 20-PIN INTERFACE CONNECTORS AND CABLES 448

B.1 BOARD-MOUNTED CONNECTORS 448
B.1.1 Vertical-type Connectors 448
B.1.2 Straight and Right-angled Connectors (for Spring and Screw-fixing Connector Housings) 448
B.2 CABLE CONNECTORS 449
B.2.1 Strand Wire Press-mount Connector 449
B.2.2 Soldering Type Connector 450
B.3 RECOMMENDED CONNECTORS, APPLICABLE HOUSINGS, AND CABLES 451
B.3.1 Recommended Connectors 452

© MyFANUC 195109AB01DC415385669AA015E5BDE5

B.3.2 Applicable Cables.....452

C CONNECTION CABLE (SUPPLIED FROM US).....459

D OPTICAL FIBER CABLE.....462

E MEMORY CARD INTERFACE.....472

ADDITIONAL INFORMATION

© MyFANUC 195109AB01DC415385669AA015E5BDE5

© MyFANUC 195109AB01DC415385669AA015E5BDE5

1 CONFIGURATION

1.1 CONTROL UNIT CONFIGURATION AND COMPONENT NAMES

The Power Motion *i* control units can roughly be categorized either as an LCD-mounted type or stand-alone type. The LCD-mounted type is one having both control and indicator sections in it. With the stand-alone type, the control and indicator sections are separated from each other, each being configured as an independent unit. Described below is the configuration of each type. This manual focuses on how to attach the connectors shown in the configuration diagrams to each device.

1.1.1 Configurations of LCD-mounted Type Control Units

Power Motion *i* LCD-mounted type control units

Screen size	Touch panel	Number of option slots	Number of horizontal soft keys	Number of vertical soft keys
8.4"	Without	Without	5+2	Without
		1		
		2		
10.4"	Without	Without	10+2	8+1
		1		
		2		
	With	Without		
		1		
		2		
15"	Without	Without		
		1		
		2		
	With	Without		
		1		
		2		

⚠ CAUTION
The touch panel is a device designed to be operated by touching directly its screen. Use a FANUC-supplied exclusive touch panel pen (A02B-0236-K111). Touching the screen with a sharp point, such as a pen, may damage or break the indicator surface. Touching the screen with your finger may adversely affect operability and soil the screen. Be sure to keep away from such improper use.

NOTE
The indicators having a touch panel has a protection sheet attached to its front surface. Explanations about how to replace the protection sheet, refer to the FANUC Power Motion *i*–MODEL A Maintenance Manual (B-64575EN).

© MyFANUC 195109AB01DC415385669AA015E5BDE5

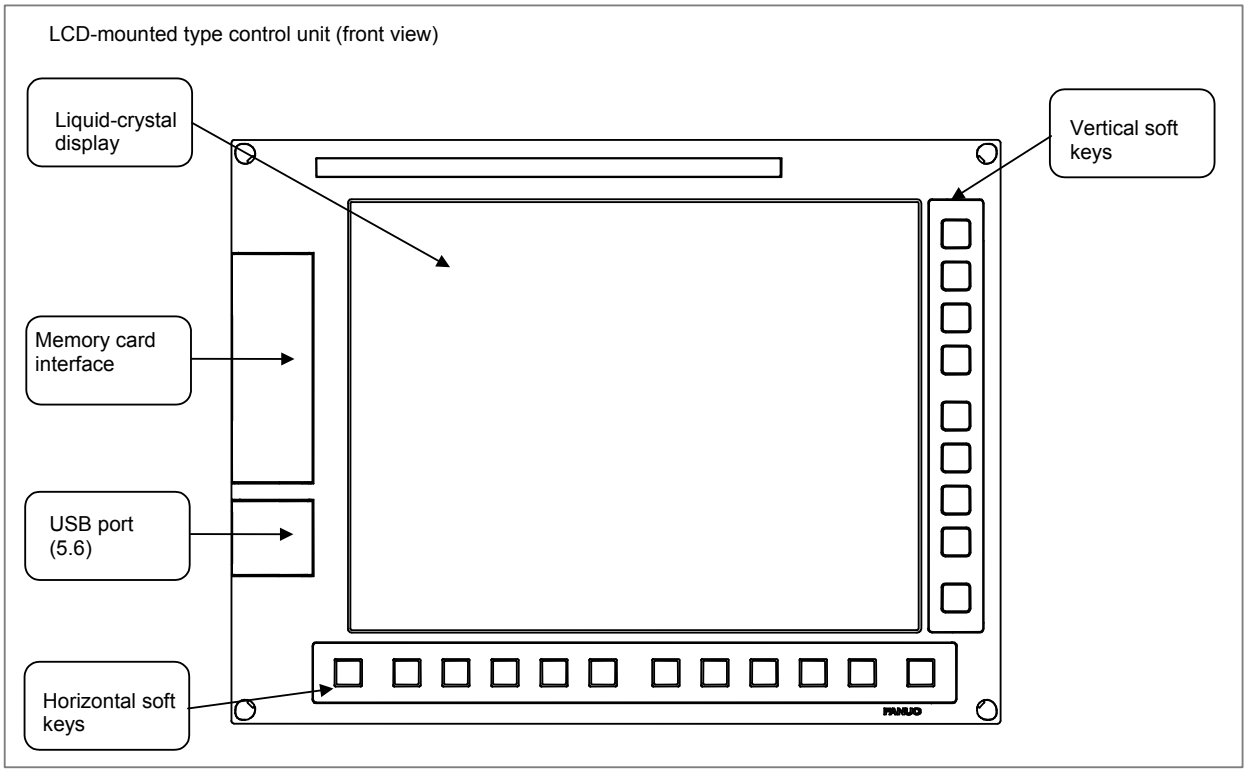

NOTE

1 This figure shows the 10.4” LCD-mounted control unit as viewed from the front. The basic configuration of the other control unit models is the same, as viewed from the front.
2 The 8.4” LCD-mounted control unit has no vertical soft key.
3 The LCD (liquid-crystal display) has been fabricated using an extreme precision technology. However, some of their pixels may fail to light or stay constantly lighting because of their characteristics. Please be forewarned that these phenomena are not faults.

© MyFANUC 195109AB01DC415385669AA015E5BDE5

LCD-mounted type control unit (8.4"LCD unit and 10.4"LCD unit A) (rear view)

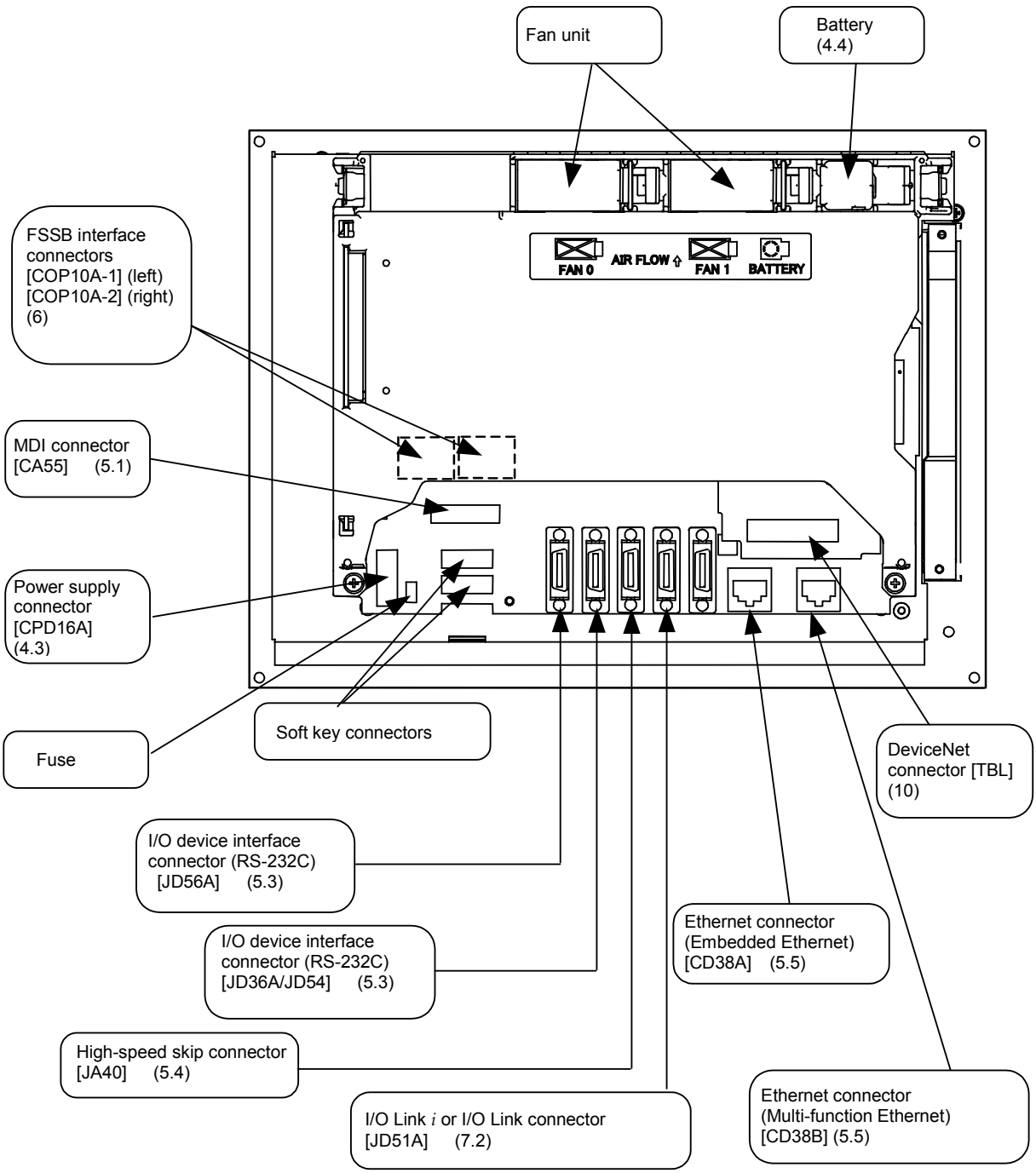

NOTE

1 This figure shows an LCD-mounted control unit having no option slot as viewed from the rear.
2 The numbers in parentheses () in the figures are keyed to the item numbers of the descriptions in this manual. The numbers in brackets [] in the figures are connector numbers.
3 Connectors [COP10A-2], [TBL], [CD38A], and [CD38B] may not be provided, depending on the specifications of the hardware.

© MyFANUC 195109AB01DC415385669AA015E5BDE5

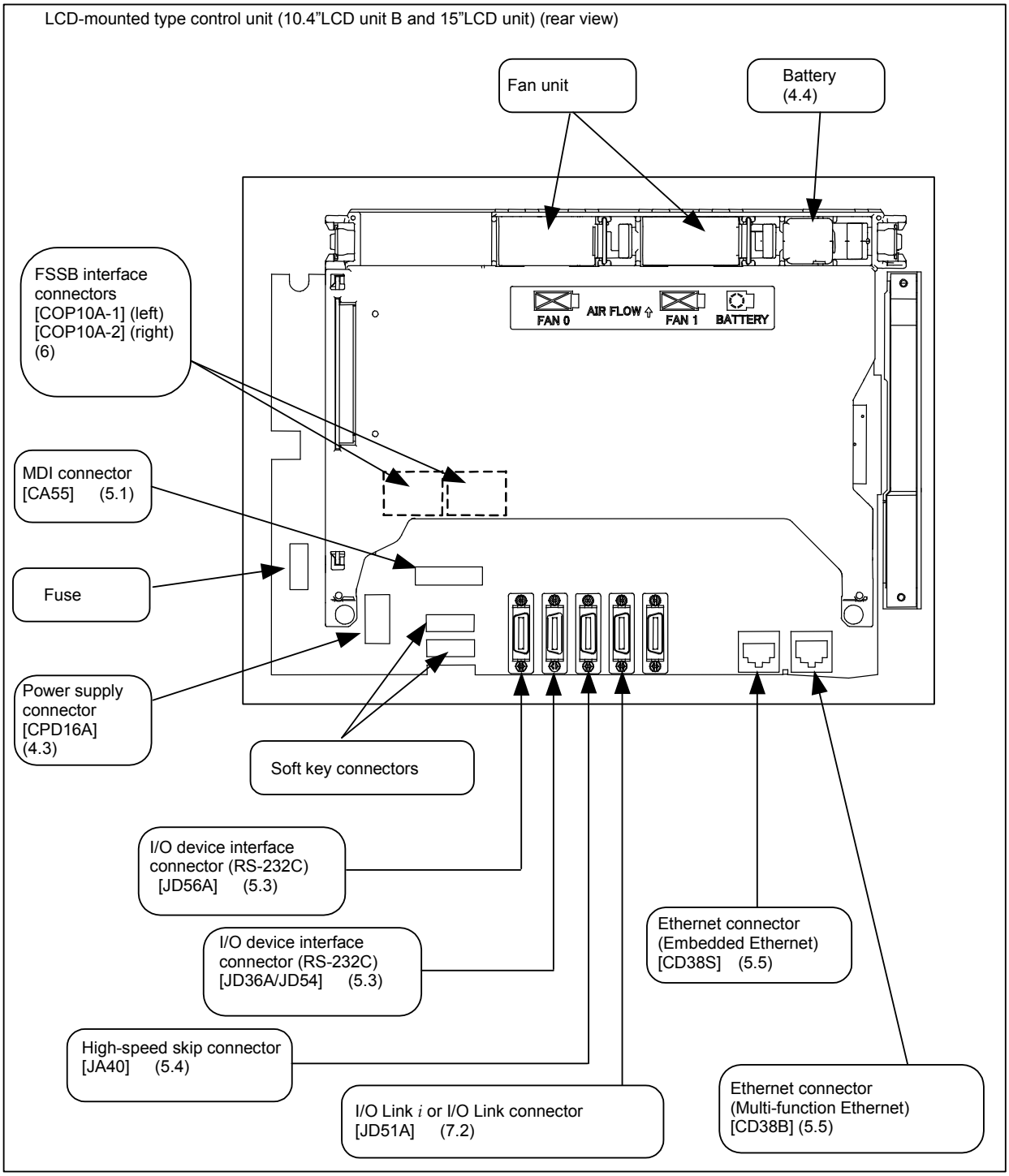

NOTE

1 This figure shows an LCD-mounted control unit having no option slot as viewed from the rear.
2 The numbers in parentheses () in the figures are keyed to the item numbers of the descriptions in this manual. The numbers in brackets [] in the figures are connector numbers.
3 Connectors [COP10A-2], [CD38S], and [CD38B] may not be provided, depending on the specifications of the hardware.

© MyFANUC 195109AB01DC415385669AA015E5BDE5

1.1.2 Configurations of Stand-alone Type Control Units

Power Motion *i* stand-alone type control units

Slot rack name	Number of option slots
2-slot rack	2

Power Motion *i* display units

Screen size	Touch panel	Number of horizontal soft keys	Number of vertical soft keys
10.4"	Without	10+2	8+1
	With		
15"	Without		
	With		

⚠ CAUTION

The touch panel is a device designed to be operated by touching directly its screen. Use a FANUC-supplied exclusive touch panel pen (A02B-0236-K111). Touching the screen with a sharp point, such as a pen, may damage or break the indicator surface. Touching the screen with your finger may adversely affect operability and soil the screen. Be sure to keep away from such improper use.

NOTE

The indicators having a touch panel has a protection sheet attached to its front surface. Explanations about how to replace the protection sheet, refer to the FANUC Power Motion *i*–MODEL A Maintenance Manual (B-64575EN).

© MyFANUC 195109AB01DC415385669AA015E5BDE5

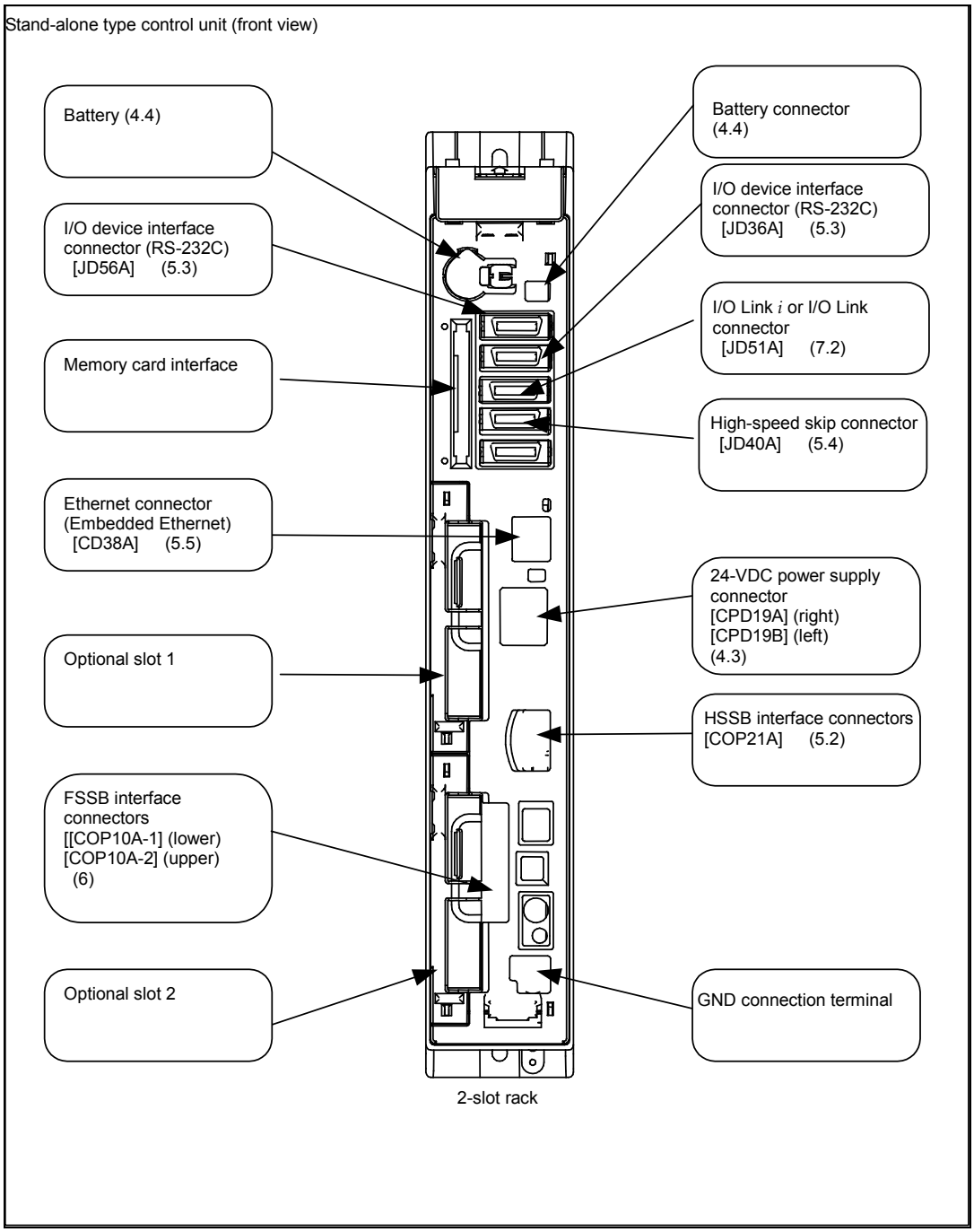

NOTE

The numbers in parentheses () in the figures are keyed to the item numbers of the descriptions in this manual. The numbers in brackets [] in the figures are connector numbers.

© MyFANUC 195109AB01DC415385669AA015E5BDE5

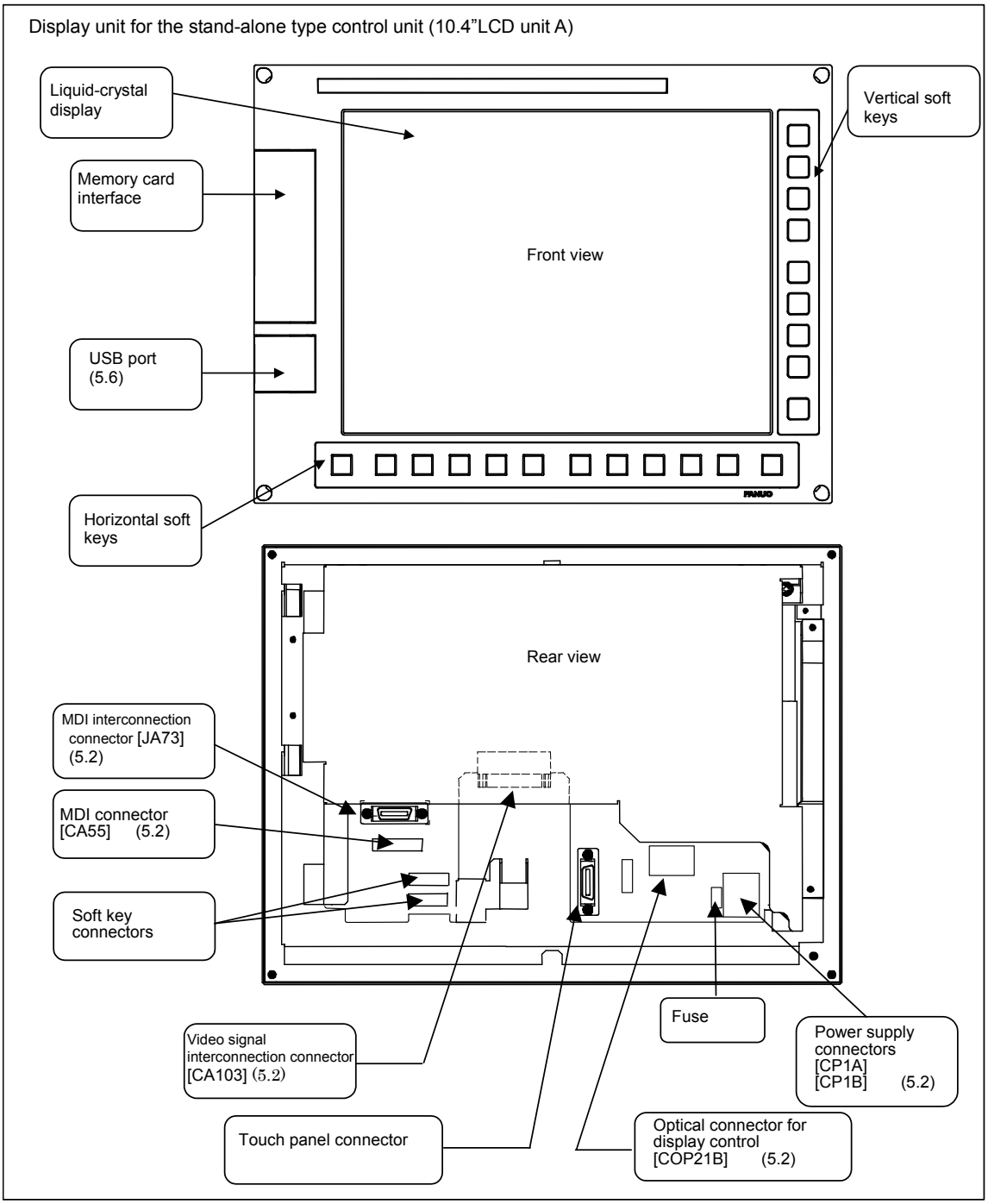

NOTE

1 The numbers in parentheses () in the figures are keyed to the item numbers of the descriptions in this manual. The numbers in brackets [] in the figures are connector numbers.

2 Connectors [JA73] and [CA103], the memory card interface, and USB ports may

3 The LCD (liquid-crystal display) has been fabricated using an extreme precision technology. However, some of their pixels may fail to light or stay constantly lighting because of their characteristics. Please be forewarned that these phenomena are not faults.

© MyFANUC 195109AB01DC415385669AA015E5BDE5

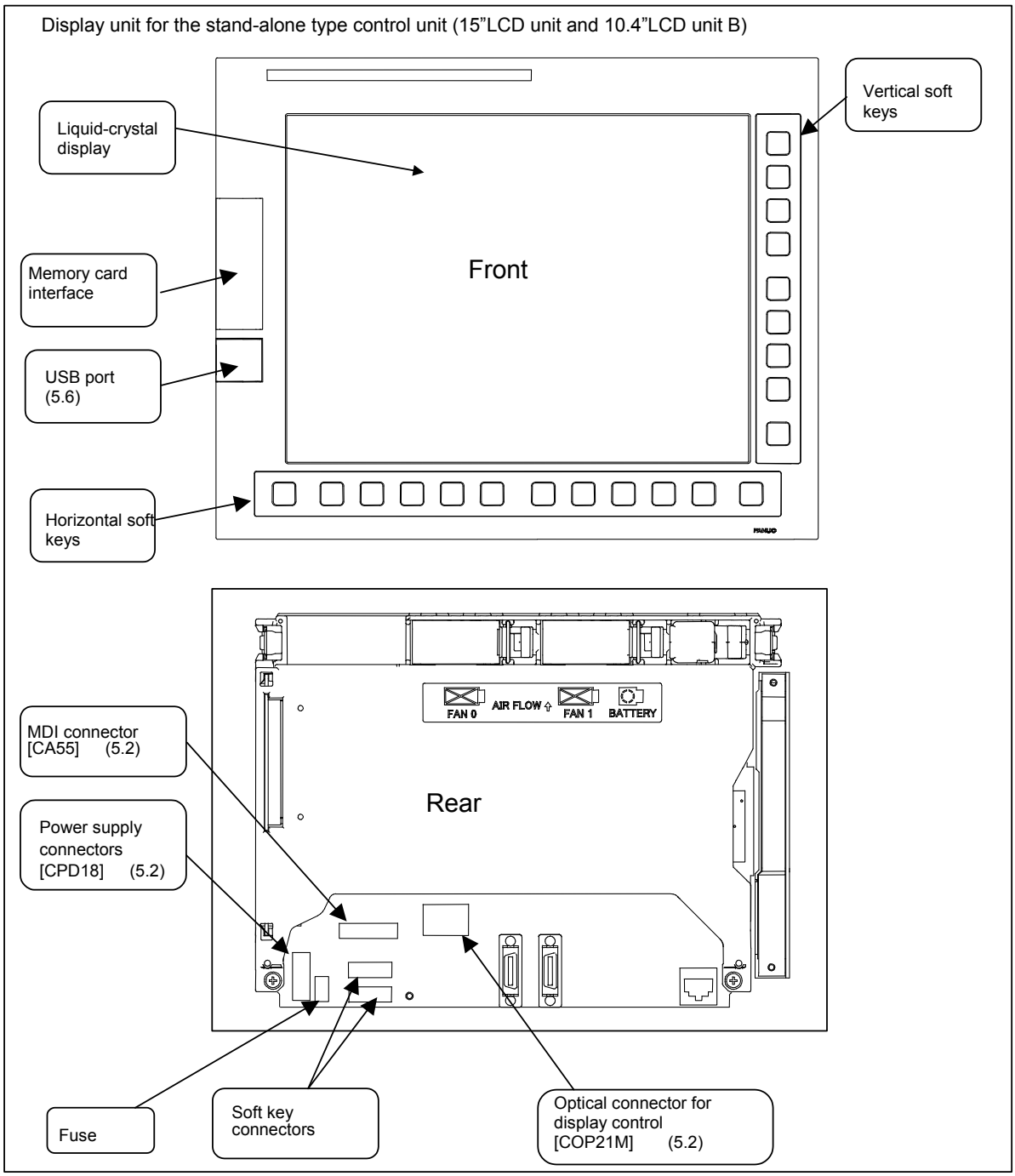

NOTE

1 The numbers in parentheses () in the figures are keyed to the item numbers of the descriptions in this manual. The numbers in brackets [] in the figures are connector numbers.

2 The LCD (liquid-crystal display) has been fabricated using an extreme precision technology. However, some of their pixels may fail to light or stay constantly lighting because of their characteristics. Please be forewarned that these phenomena are not faults.

© MyFANUC 195109AB01DC415385669AA015E5BDE5

1.1.3 Configurations of Optional Boards

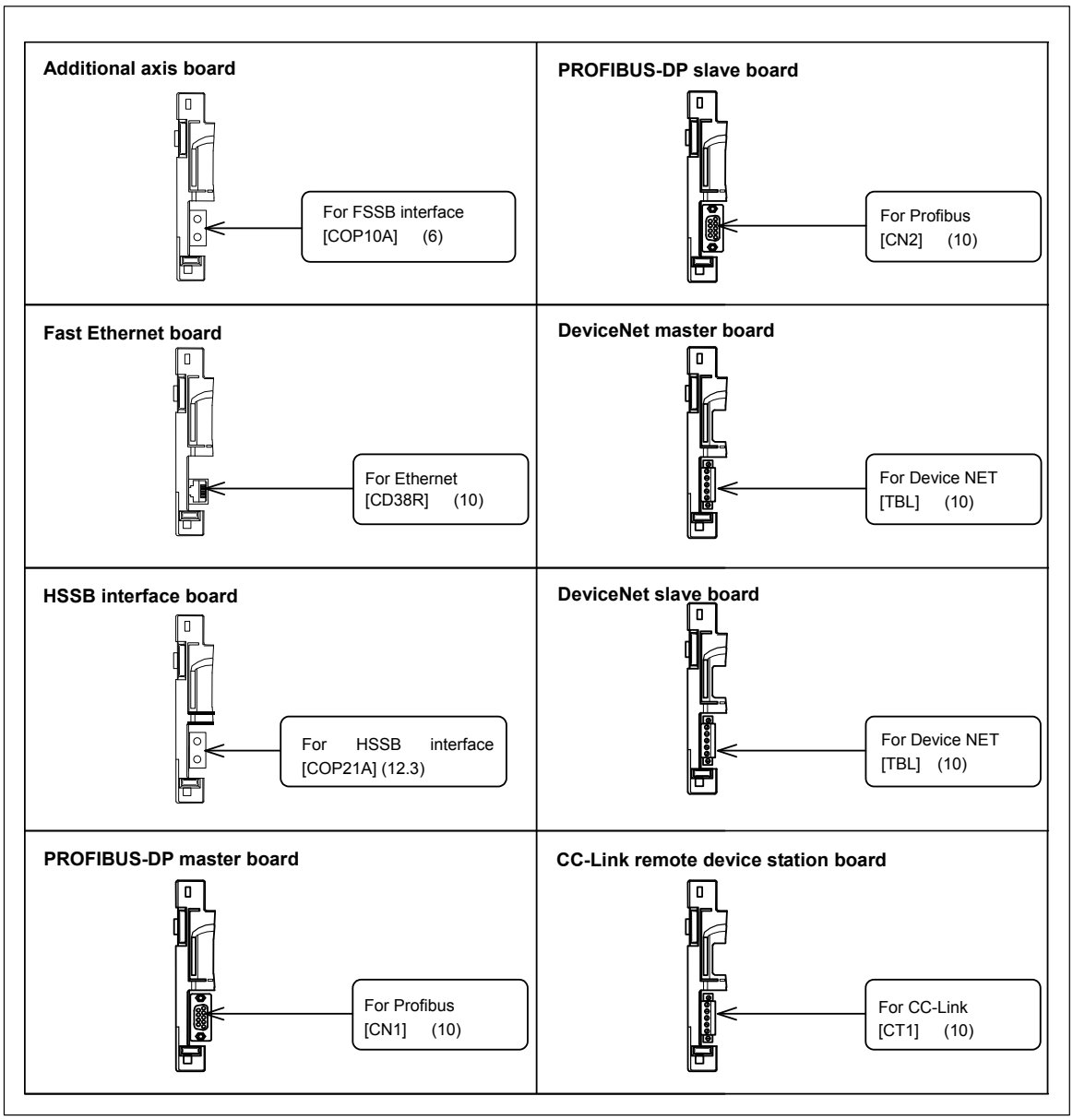

NOTE

The numbers in parentheses () in the figures are keyed to the item numbers of the descriptions in this manual. The numbers in brackets [] in the figures are connector numbers.
The Fast Ethernet board may be used also as FL-net functions, depending on the settings of parameters.

© MyFANUC 195109AB01DC415385669AA015E5BDE5

1.2 HARDWARE OVERVIEW

1.2.1 LCD-mounted Type Control Unit Overview

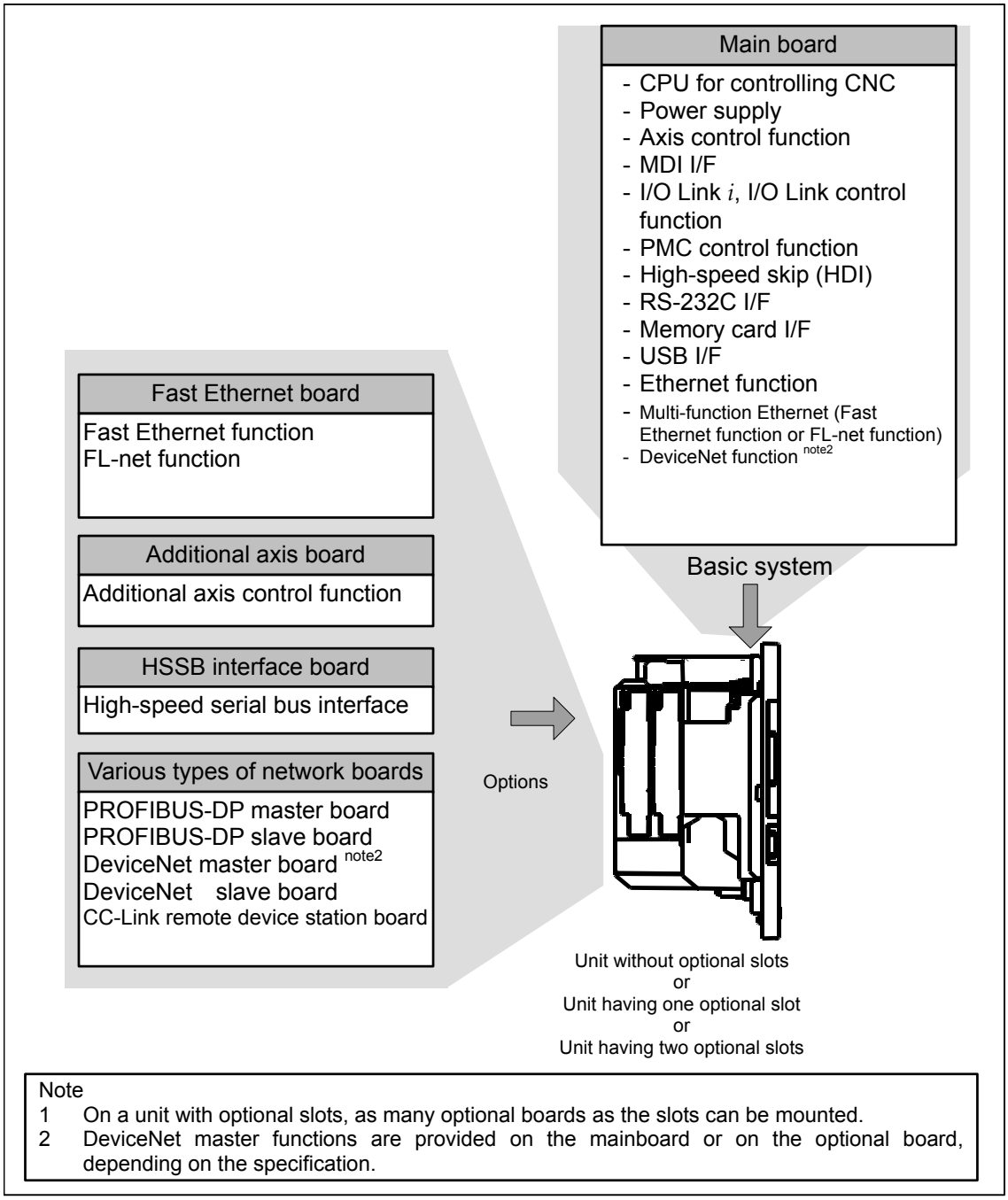

Note
1 On a unit with optional slots, as many optional boards as the slots can be mounted.
2 DeviceNet master functions are provided on the mainboard or on the optional board, depending on the specification.

© MyFANUC 195109AB01DC415385669AA015E5BDE5

1.2.2 Stand-alone Type Control Unit Overview

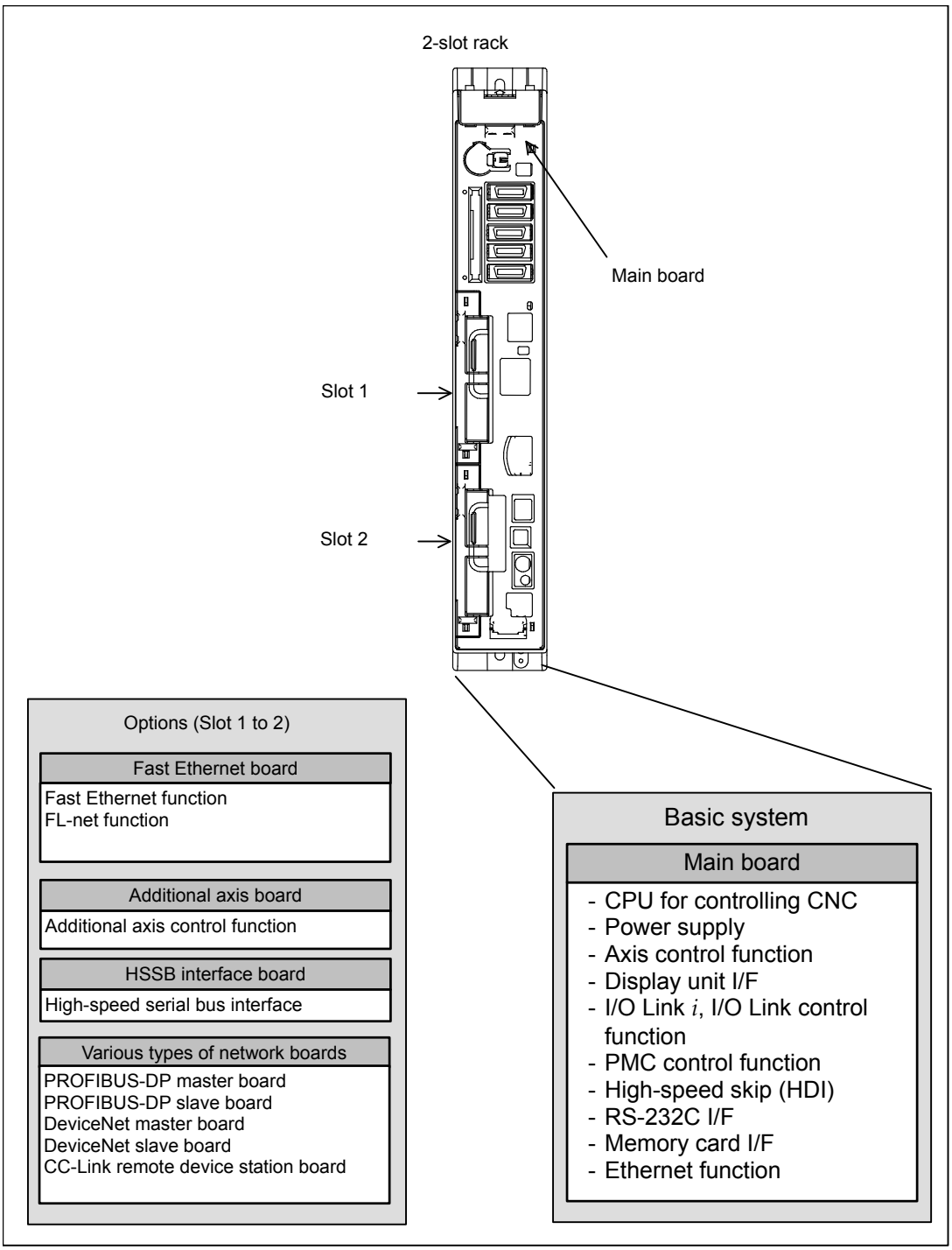

© MyFANUC 195109AB01DC415385669AA015E5BDE5

2 TOTAL CONNECTION DIAGRAMS

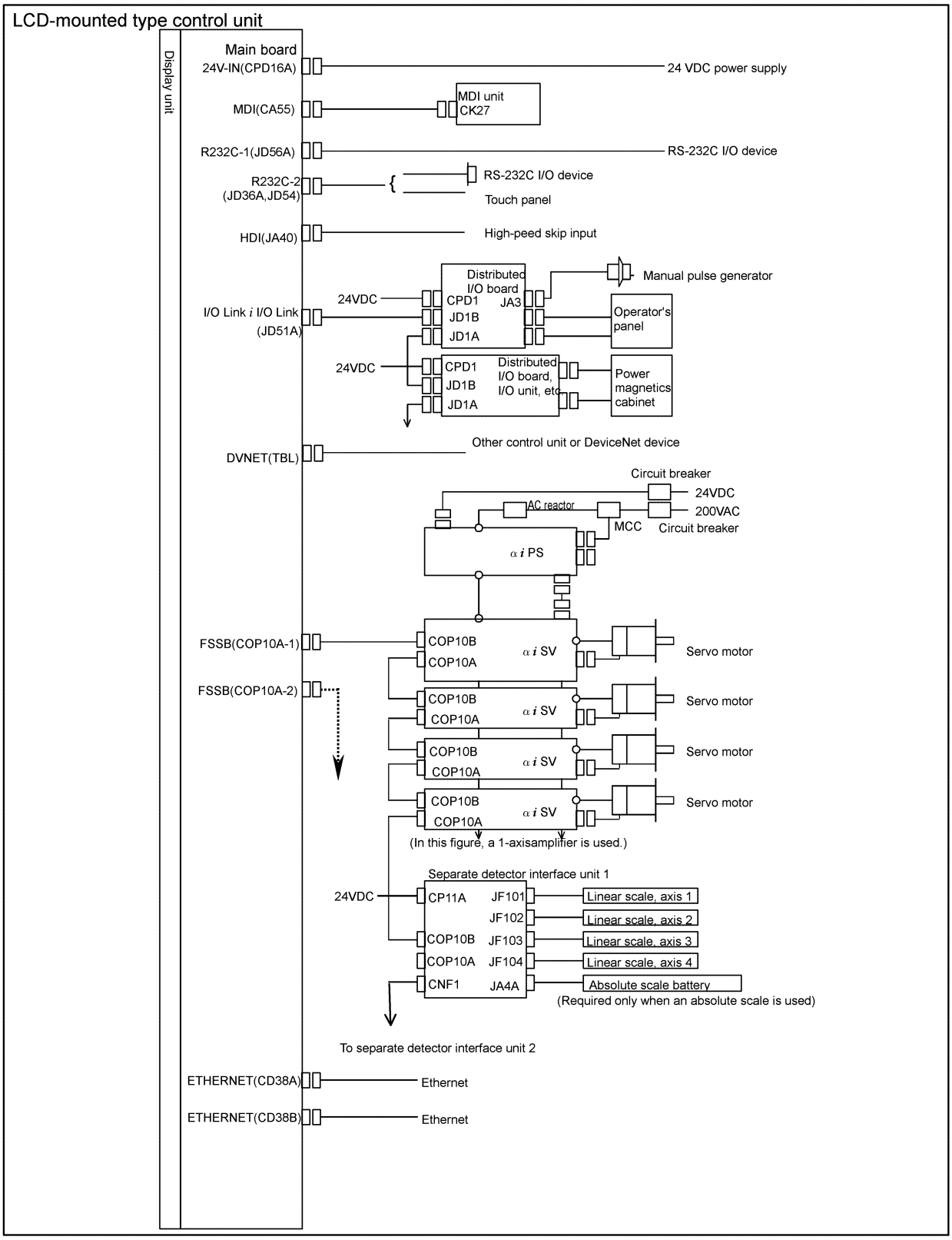

© MyFANUC 195109AB01DC415385669AA015E5BDE5

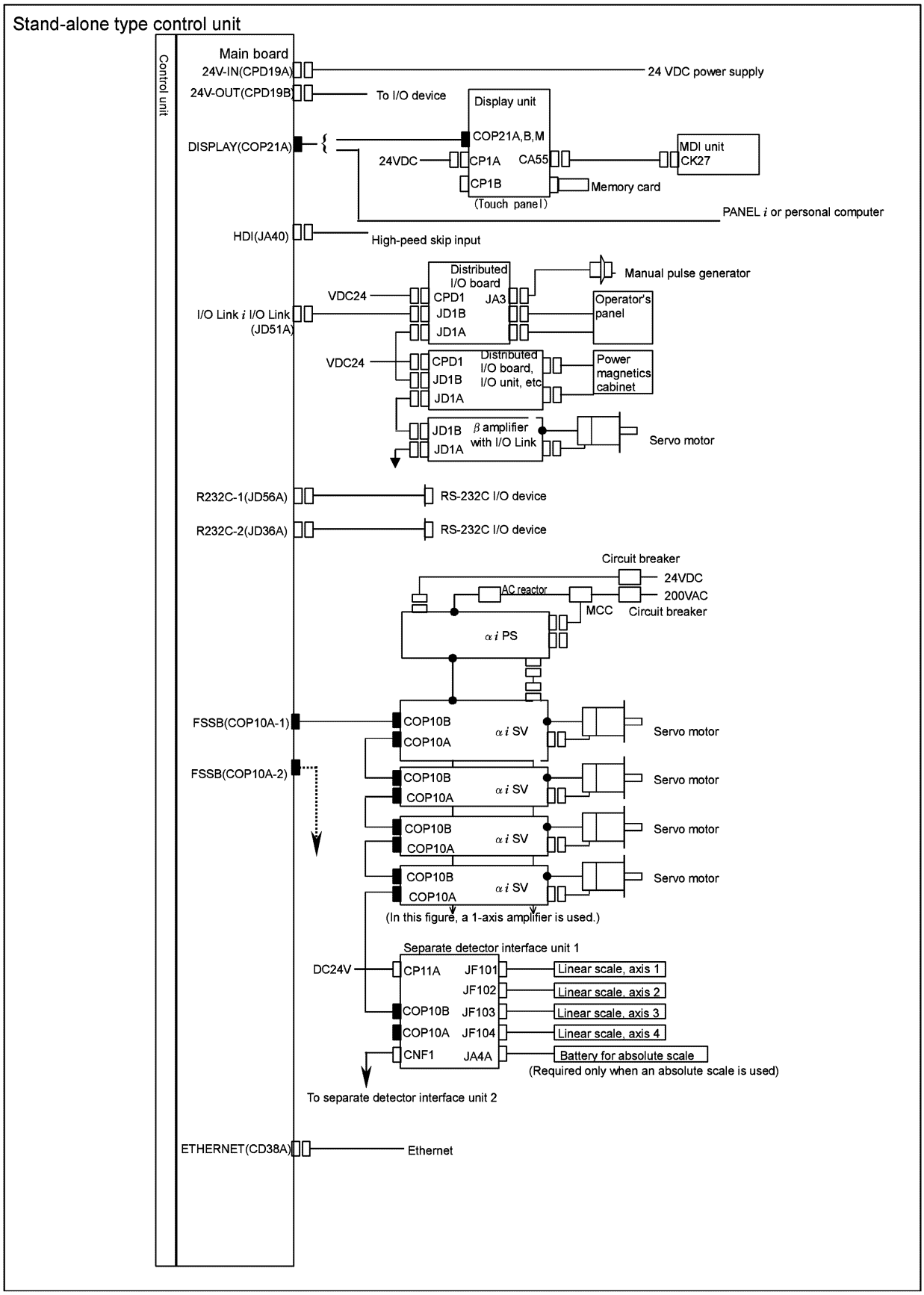

© MyFANUC 195109AB01DC415385669AA015E5BDE5

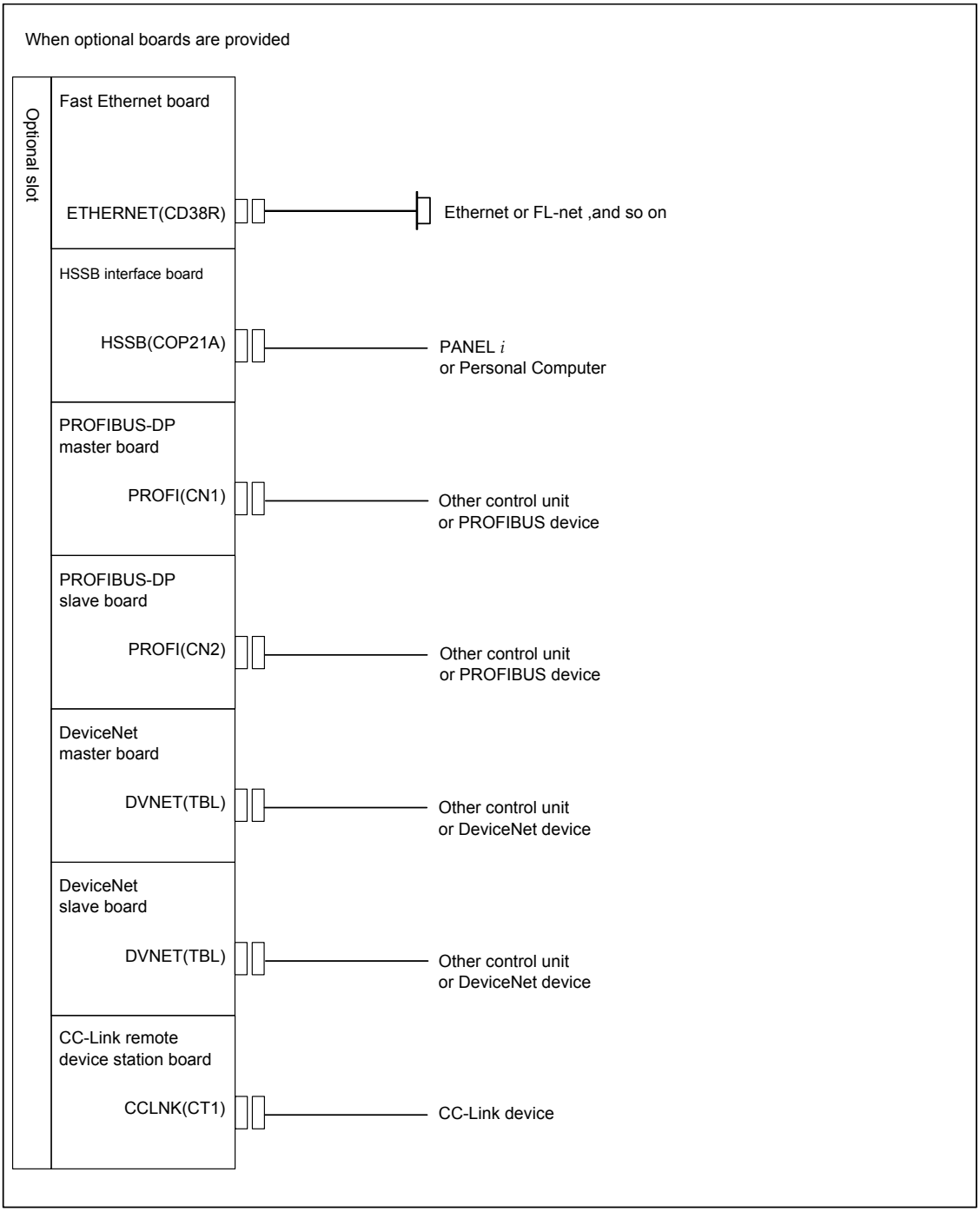

© MyFANUC 195109AB01DC415385669AA015E5BDE5

When one or more option boards are present

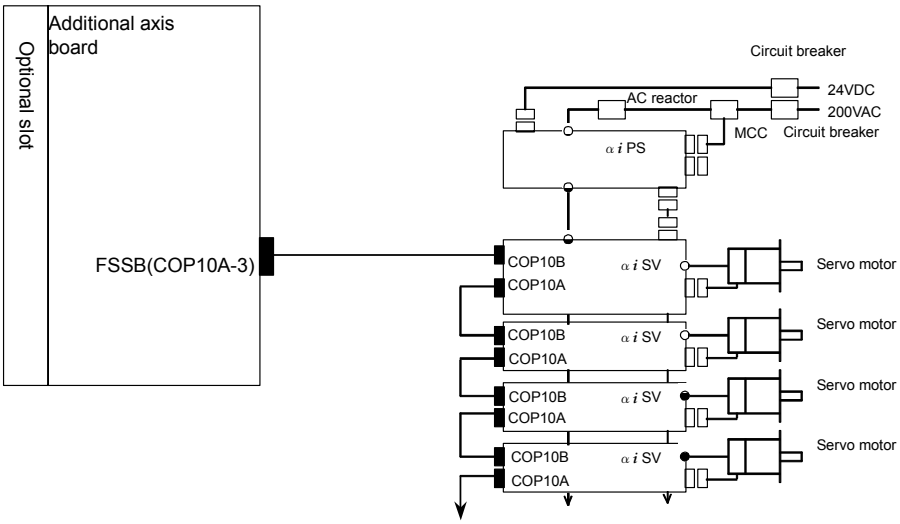

© MyFANUC 195109AB01DC415385669AA015E5BDE5

3 INSTALLATION

3.1 ENVIRONMENTAL REQUIREMENTS OUTSIDE THE CABINET

3.1.1 Environmental Conditions outside the Cabinet

The control unit and the peripheral units have been designed on the assumption that they are housed in closed cabinets. In this manual "cabinet" refers to the following:

- Cabinet manufactured by the machine tool builder for housing the control unit or peripheral units;
- Operation pendant, manufactured by the machine tool builder, for housing the display unit, MDI unit, or operator's panel.
- Equivalent to the above.

The following table lists the environmental conditions required in installing these cabinets. Section 3.3 of this connection manual explains the design conditions regarding installation of cabinets that will meet the environmental conditions.

Ambient temperature of the cabinet	Operating	0°C to 45°C
	Nonoperating (including storage and transportation)	-20°C to 60°C
	Temperature change	0.3°C/minute or less
Humidity	Normal	75%RH or less, no condensation
	Short period (less than 1 month)	95%RH or less, no condensation
Vibration	Operating	0.5G or less
	Nonoperating (including storage and transportation)	1.0G or less
Meters above sea level	Operating	Up to 1000 m (see Note 1 in the Subsec. 3.1.2.)
	Nonoperating (including storage and transportation)	Up to 12000 m
Environment		Normal machine shop environment (The environment must be considered if the cabinets are in a location where the density of dust, coolant, organic solvent, and/or corrosive gas is relatively high.)

3.1.2 Installation Conditions of the Control Unit

Condition		LCD-mounted type control unit and display unit	Stand-alone type control unit
Ambient temperature	Operating	0°C to 58°C	0°C to 55°C
	Nonoperating (including storage and transportation)	-20°C to 60°C	
	Temperature change	0.3°C/minute or less	
Humidity	Normal	75%RH or less, no condensation	
	Short period (less than 1 month)	95%RH or less, no condensation	

© MyFANUC 195109AB01DC415385669AA015E5BDE5

Condition		LCD-mounted type control unit and display unit	Stand-alone type control unit
Vibration	Operating	0.5G or less FANUC's evaluation test was conducted under the following conditions complying with IEC 60068-2-6. 10 to 58Hz: 0.075mm (amplitude) 58 to 500Hz: 1G Direction of vibration: Each of the X, Y, and Z directions Number of sweep cycles: 10	
	Nonoperating (including storage and transportation)	1.0G or less	
Meters above sea level	Operating	Up to 1000m (Note 1)	
	Nonoperating (including storage and transportation)	Up to 12000m	
Environment		Coolant, lubricant, or cutting chips shall not be sprinkled directly over the CNC or servo unit. No corrosive gas shall be allowed.	

NOTE

1 If the control unit is installed 1000 m or higher above sea level, the allowable upper ambient temperature of the control unit in the cabinet is changed as follows. Assume that the allowable upper ambient temperature of the control unit in the cabinet installed 1000 m or higher above sea level decreases by 1.0°C for every 100 m rise in altitude.
Example)
When a control unit whose required operating ambient temperature range is 0°C to 55°C is installed 1750 m above sea level:
55°C-(1750m-1000m)/100m × 1.0°C = 47.5°C
Therefore, the allowable ambient temperature range is from 0°C to 47.5°C.

2 When using a unit having additional installation conditions, be sure to meet also these conditions.

3.2 CAUTIONS REGARDING THE INSTALLATION DESIGN OF MACHINE TOOL POWER MAGNETICS CABINETS

When a cabinet is designed, it must satisfy the environmental conditions described in Section 3.1. In addition, the magnetic interference on the screen, noise resistance, and maintenance requirements must be considered. When mounting FANUC-supplied units, such as displays and operator's panels, use packing and fasten the mounting screws with the specified tightening torque. When designing magnetics cabinets, pay due consideration to each item stated in the following "CAUTION".

⚠ CAUTION

1 The cabinet must be fully closed. The cabinet must be designed to prevent the entry of airborne dust, coolant, and organic solvent.

2 The cabinet must be designed so that the permissible temperature of each unit is not exceeded. (See Section 3.3.)

© MyFANUC 195109AB01DC415385669AA015E5BDE5

⚠ **CAUTION**

3 A closed cabinet must be equipped with a fan to circulate the air within. (This is not necessary for a unit with fan.) The fan must be adjusted so that the air moves at 0.5 m/sec along the surface of each installed unit.
However, do not blow air from the fan directly to the unit, because doing so can readily make dust attach the portion where the air flow hits, leading to possible trouble. (This is not necessary for a unit with fan.)

4 For the air to move easily, a clearance of 100 mm is required between each unit and the wall of the cabinet.

5 Each FANUC-supplied unit, such as a display or operator's panel, has been designed on the assumption that they will be mounted using packing and with the specified screw tightening torque. Failing to mount them as specified can lead to unit damage and/or malfunction. Be sure to use packing and observe the specified screw tightening torque. (See Sections 3.6 and 3.7.)

6 Failing to use packing or to provide complete sealing, or using any packing not resistant to coolant in use will allow dust, coolant, and organic solvent to get in the cabinet, leading to possible equipment trouble. Be sure to use an appropriate packing and a secure sealing.
In addition, use an appropriate packing and a secure sealing for the cable outlets and doors of the machine builder-provided units, such as displays, operator's panels, and cabinet pendant boxes. (See Section 3.7.)

7 The LCD must not be installed in such a place that coolant would directly fall onto the unit. Be sure to attach a protection cover to the LCD if it will be used in an environment where it is anticipated that coolant may come into contact with it, for example, an environment with a relatively dense oil mist.

8 Noise must be minimized. As the machine and the control unit are reduced in size, the parts that generate noise may be placed near noise-sensitive parts in the magnetics cabinet.
The control unit is built to protect it from external noise. Cabinet design to minimize noise generation and to prevent it from being transmitted to the control unit is necessary. (See Section 3.4.)

9 When placing units in the cabinet, also consider ease of maintenance. The units should be placed so that they can be checked and replaced easily when maintenance is performed.

10 The hard disk drive and floppy disk drive must not be installed near the source of a strong magnetic field.

11 The installation conditions of the I/O unit and connector panel I/O module must be satisfied. In order to secure ventilation in the equipment, mount the I/O unit and connector panel I/O module in the specified orientation. Clearances of 100 mm or more both above and below the I/O unit are required for wiring and ventilation.
Equipment radiating too much heat must not be put below the I/O unit and connector panel I/O module.

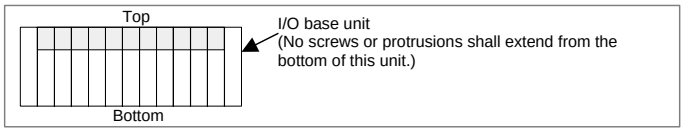

© MyFANUC 195109AB01DC415385669AA015E5BDE5

3.3 THERMAL DESIGN OF THE MACHINE TOOL MAGNETIC CABINET

The internal air temperature of the cabinet increases when the units and parts installed in the cabinet generate heat. Since the generated heat is radiated from the surface of the cabinet, the temperature of the air in the cabinet and the outside air balance at certain heat levels. If the amount of heat generated is constant, the larger the surface area of the cabinet, the less the internal temperature rises. The thermal design of the cabinet refers to calculating the heat generated in the cabinet, evaluating the surface area of the cabinet, and enlarging that surface area by installing heat exchangers in the cabinet, if necessary. Such a design method is described in the following subsections.

3.3.1 Temperature Rise within the Machine Tool Magnetic Cabinet

The cooling capacity of a cabinet made of sheet metal is generally 6 W/°C per 1m^2 surface area, that is, when the 6W heat source is contained in a cabinet having a surface area of 1 m^2, the temperature of the air in the cabinet rises by 1°C. In this case the surface area of the cabinet refers to the area useful in cooling, that is, the area obtained by subtracting the area of the cabinet touching the floor from the total surface area of the cabinet. There are two preconditions : The air in the cabinet must be circuited by the fun, and the temperature of the air in the cabinet must be almost constant. For example, the operator's panel cabinet may contain an LCD-mounted type control unit or the display of a stand-alone type control unit. To keep the temperature in the cabinet at 58°C or below when the ambient temperature is 45°C, the equation below must be satisfied.

Internal heat loss P [W] ≤

6[W/m^2·°C] × surface area S[m^2] × 13[°C] of rise in temperature

(A cooling capacity of 6 W/°C assumes the cabinet is so large that agitation with the fan motor does not make the temperature distribution uniform. For a small cabinet like the operator's panel, a cooling capacity of 8 W/°C, indicated in Subsection 3.3.3, may be used.)

For example, a cabinet having a surface area of 4m^2 has a cooling capacity of 24W/°C. To limit the internal temperature increase to 13°C under these conditions, the internal heat must not exceed 312W. If the actual internal heat is 360W, however, the temperature in the cabinet rises by 15°C. When this happens, the cooling capacity of the cabinet must be improved using the heat exchanger.

For the power magnetic cabinet containing a stand-alone type control unit, the internal temperature rise must be suppressed to 55°C or less, instead of 58°C.

3.3.2 Heat Output of Each Unit

Table 3.3.2 Heat output

Unit		Heat output	Remarks
LCD-mounted type control unit	With 8.4"LCD unit	17W	Note 1)
	With 10.4"LCD unit	18W	Note 1)
	With 15"LCD unit	36W	Note 1)
	Additional heat output from a control unit having communication features	+3W	
Stand-alone type control unit		15W	Note 1)
CPU card	Standard version	6W	
	High-speed version	11W	
Servo card	A11, A12, A13	4W	
	A24, A26	6W	
DeviceNet card		3.5W	

© MyFANUC 195109AB01DC415385669AA015E5BDE5

Unit		Heat output	Remarks
Optional board	Additional axis board	5W	
	Fast Ethernet board	3W	
	HSSB interface board	4W	
	PROFIBUS-DP master board	5W	
	PROFIBUS-DP slave board	2W	
	DeviceNet master board	3W	
	DeviceNet slave board	3.5W	
	CC-Link remote device station board	3W	
Display unit for stand-alone type control unit	10.4”LCD unit A	13W	
	10.4”LCD unit A (the first display unit when two are used)	14W	
	10.4”LCD unit A (the second display unit when two are used)	8W	
	10.4”LCD unit (2nd LCD Unit (Ethernet)) 10.4”LCD unit (Shared LCD Unit (Ethernet))	23W	
	15”LCD unit	37W	
MDI units		0W	

NOTE

1 The values listed above do not include any heat output of the CPU card, servo card, DeviceNet card, or option boards. To obtain the total heat output of the control unit, add the heat output from the CPU card, servo card, DeviceNet card, and any option boards.
2 See Chapter 6 for the heat output of the separate detector interface unit.
3 See Chapter 8 for the heat output of each I/O unit.
4 See Chapter 11 for the heat output of the control units having the personal computer function with Windows® CE.
5 Refer to the PANEL *i* Connection and Maintenance Manual (B-64223EN) for the heat output of the PANEL *i*.

3.3.3 Thermal Design of Operator's Panel

With a small cabinet like the operator's panel, the heat dissipating capacity of the cabinet is as shown below, assuming that there is sufficient mixing of the air inside the cabinet.
Coated metal surfaces: 8 $W/m^2{}^\circ C$
Plastic surfaces: 3.7 $W/m^2{}^\circ C$

An example of the thermal design for the cabinet shown in Fig. 3.3.3 is shown below.

© MyFANUC 195109AB01DC415385669AA015E5BDE5

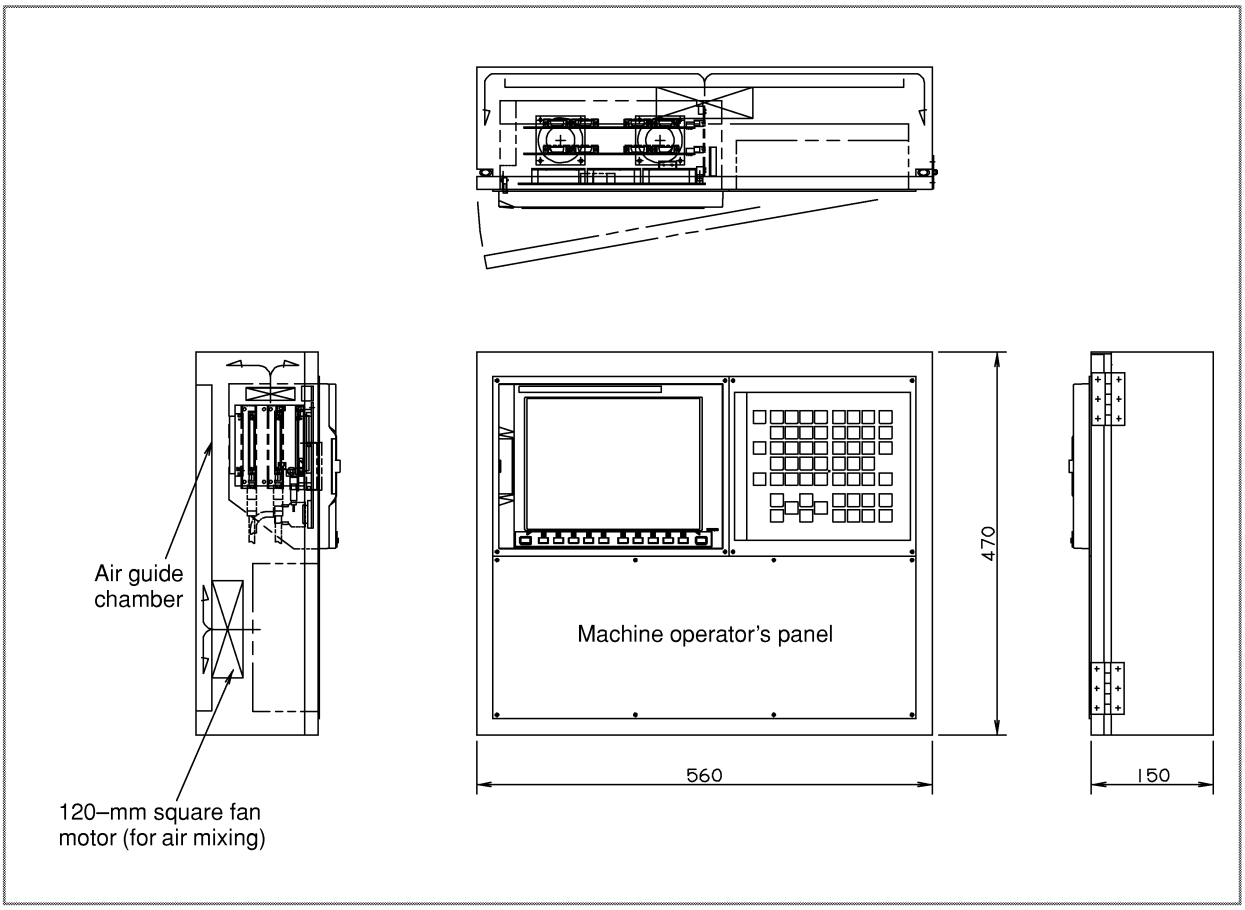

Fig. 3.3.3

Assume the following.
Thermal exchange rates
Coated metal surfaces : 8 W/m^2·°C
Plastic surfaces : 3.7 W/m^2·°C
Allowable temperature rise : 13°C higher than the exterior temperature
Also, assume the following.
Dimensions of pendant type cabinet shown in Fig. 3.3.3: 560(W) × 470(H) × 150(D) mm
Surface area of metallic sections : 0.5722 m^2
Surface area of plastic sections : 0.2632 m^2

In this case, the allowable total heat dissipation for the cabinet is:

$$8 \times 0.5722 \times 13 + 3.7 \times 0.2632 \times 13 = 72 \text{ W}.$$

In consequence, it can be concluded that the units shown in Table 3.3.3 on the next page can be installed in this cabinet.

Table 3.3.3

LCD-mounted type control unit (with 10.4"LCD unit A)	18W
Additional heat output from a control unit having communication features	+3W
CPU card (high-speed version)	11W
Servo card (A26)	6W
Optional board (Additional axis board)	5W
Standard machine operator's panel	15W(Note)
120-mm square fan motor for air mixing	8W
Total heat dissipation of the above	66W

© MyFANUC 195109AB01DC415385669AA015E5BDE5

NOTE
The 15 W quoted for the standard machine operator's panel represents an example heat output value when half of all the input signals are turned on. This value varies, depending on the mechanical configuration.

3.4 COUNTERMEASURES AGAINST NOISE AND GROUNDING

In general, noise can occur because of electrostatic coupling, electromagnetic induction, and ground loop and get in a control unit.
On the control unit side, due consideration is paid to a protective measure for external noise. However, it is hard to measure the magnitude and frequency of noise quantitatively and there are lots of uncertainties with noise. So, it is important to take measures for minimizing noise occurrence and keeping any noise from entering the control unit in order to enhance stability in CNC-based machine tool system operation.
Grounding the power magnetics cabinet and devices is very important to prevent an electric shock and suppress a noise influence. The CNC system uses the following three types of grounding:

(1) Signal grounding
This type of grounding is used to supply a reference potential (0 V) for the electrical signal system.

(2) Frame grounding
This type of grounding is used for safety reasons as well as to suppress external and internal noise. For example, grounding is provided for the device frames, panels, and shielding on the interface cables connecting the devices.

(3) System grounding (PE)
This type of grounding is used to connect frame grounds, which are provided for the individual devices or between the units, to the ground as a system at a single point.

When designing the power magnetics cabinet, guard against noise in the machine as described in the following section.

© MyFANUC 195109AB01DC415385669AA015E5BDE5

3.4.1 Grounding as Noise Suppression Measures

3.4.1.1 Grounding methods

Typically, noise that becomes a problem is high–frequency noise. To suppress high–frequency noise, it is important that the devices are grounded at low impedance(NOTE).
The grounding schemes for this purpose are described below.

> **NOTE**
> Impedance includes a resistance component that converts electric current to heat as well as a component called “reactance”, and indicates a characteristic of resistance to the flow of alternating current at a certain frequency.

(1) Multipoint grounding scheme

In this grounding scheme, when grounded at sufficiently low impedance, the cabinet metal plates are used as ground plates, to which grounding is provided in the vicinity of each device.
This scheme has a great effect of suppressing high–frequency noise because it enables grounding to the low–impedance metal plates of the cabinet in the shortest distance. However, the noise suppression effect depends on the cabinet structure because the cabinet metal plates are used as ground plates.
See Subsection 3.4.1.2 for the cabinet. Fig. 3.4.1.1 (a) is a schematic wiring diagram.

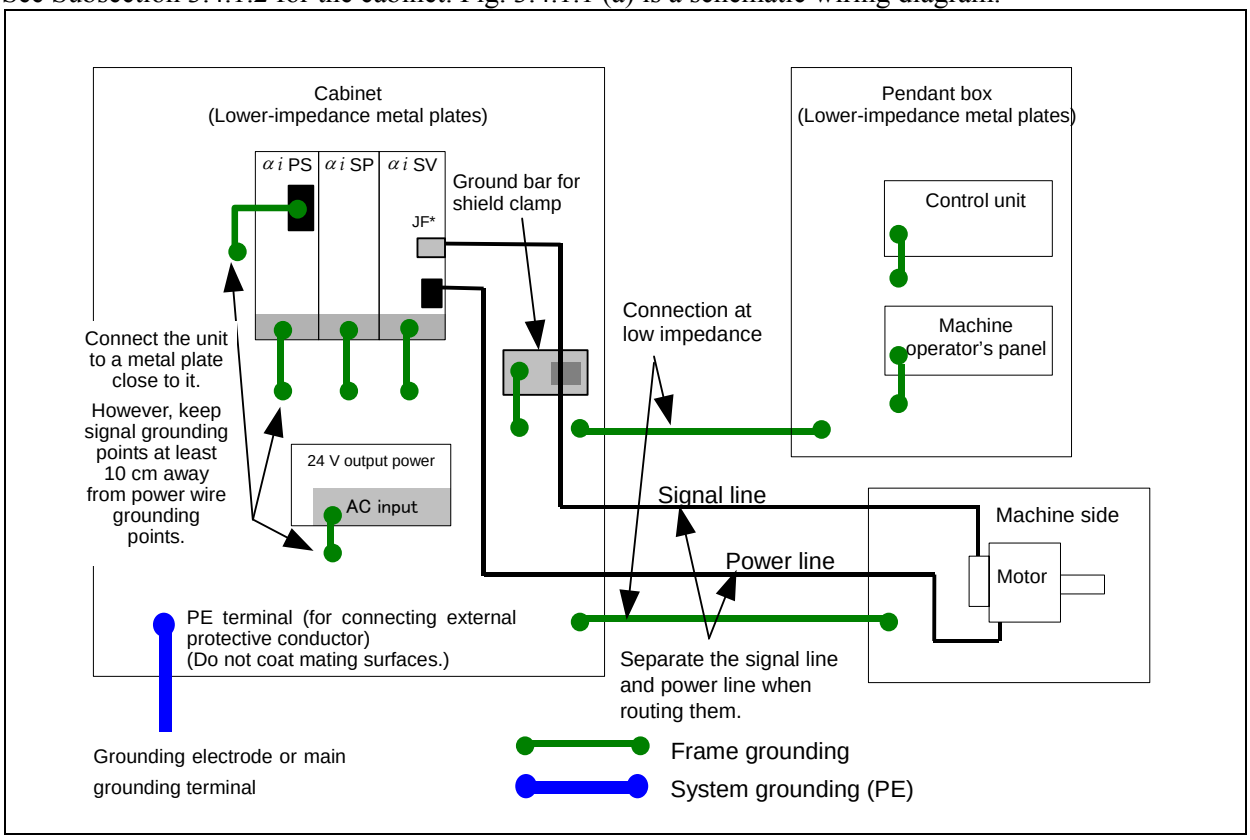

Fig. 3.4.1.1 (a) Schematic diagram for multipoint grounding scheme

When the multipoint grounding scheme is adopted, the units can be grounded at low impedance, and ground wires (wires from the unit’s ground terminal to a grounding plate) can be shortened, so that wiring may be simplified. So, FANUC recommends the multipoint grounding scheme.

© MyFANUC 195109AB01DC415385669AA015E5BDE5

> ⚠ **CAUTION**
> If it is impossible to configure cabinet metal plates with a low impedance, it is likely that noise may effect grounding circuits shared by power wires and signal wires.

(2) Single–point grounding scheme

In this grounding scheme, grounding separation is achieved between the signal system and power system, and grounding is provided at a single point to suppress the noise influence of the power system on the signal system.

This scheme tends to need longer connection wires for grounding the devices. To produce a sufficient effect of suppressing high–frequency noise, it is therefore necessary to use larger–diameter wires or use two or more wires for each connection. Fig. 3.4.1.1 (b) is a schematic wiring diagram.

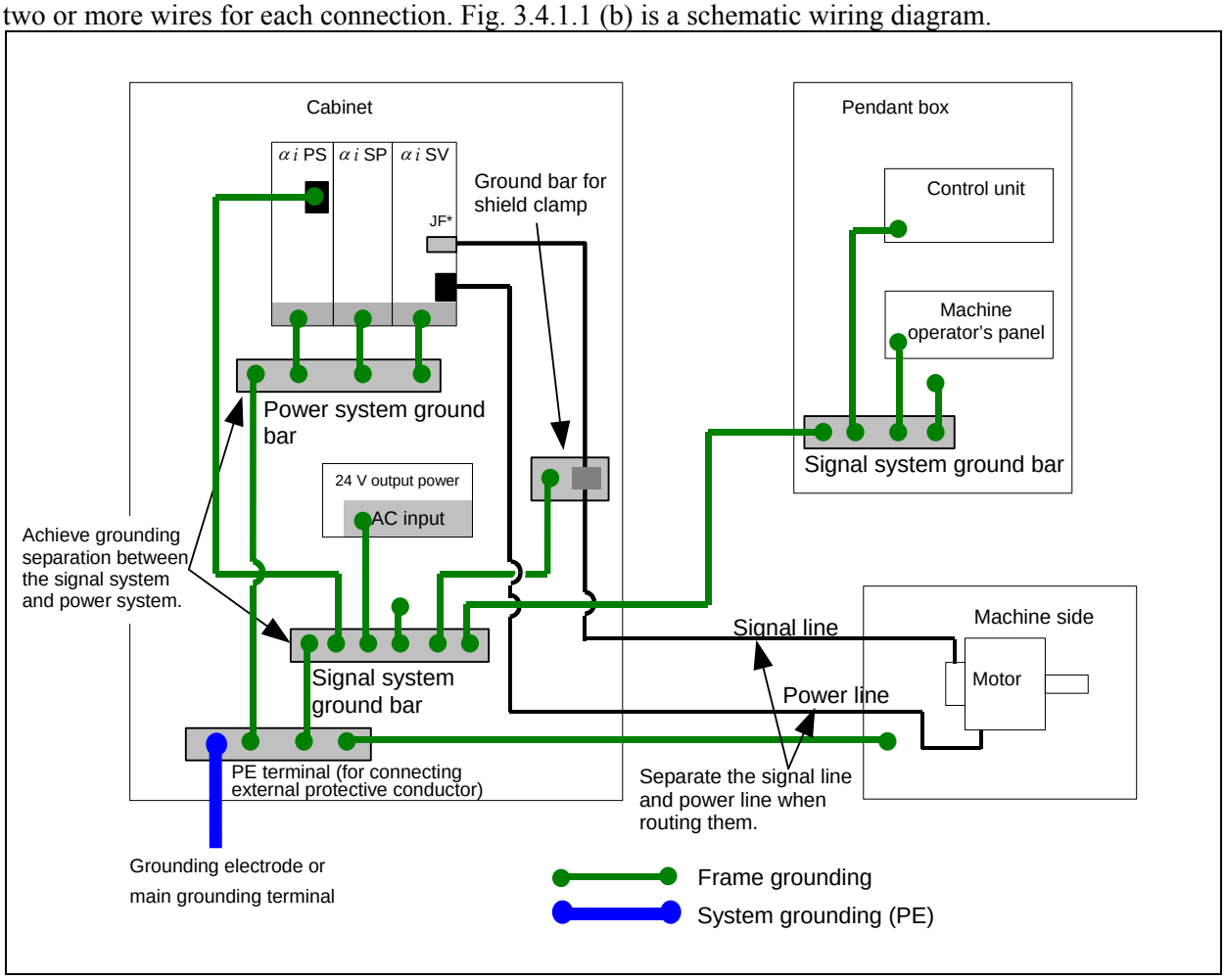

Fig. 3.4.1.1 (b) Schematic diagram for multipoint grounding scheme

3.4.1.2 Cabinet

A cabinet is an important element in improving noise immunity and suppressing radiated noise. One of the causes of problems related to noise immunity and radiated noise is faulty electrical continuity between the metal plates that make up the cabinet. Typically, noise that becomes a problem is high–frequency noise, against which measures must be taken in the cabinet design.

© MyFANUC 195109AB01DC415385669AA015E5BDE5

(1) Basic cabinet structure

A cabinet should basically be made of metal.
To improve noise immunity, there must be low–impedance electrical continuity between the metal plates that make up the cabinet, which are the side plates, top plate, and bottom plate, and a welding–type cabinet structure is recommended.
As for a cabinet welding method, bead welding is more suitable than spot welding for providing low–impedance electrical continuity between the metal plates.
For an assembly–type cabinet structure, provide electrical continuity by bringing the metal plates into direct contact with each other, without applying a coating to their joint surface areas.
In a structure that has the metal plates connected only with wires because of structural constraints, low–impedance connections are more difficult to make than in a structure in which welding is made or the metal plates are brought into direct contact with each other. It is necessary to maintain sufficient levels of items such as the cross–sectional area of a wire to use, continuity of connections, and contact areas.

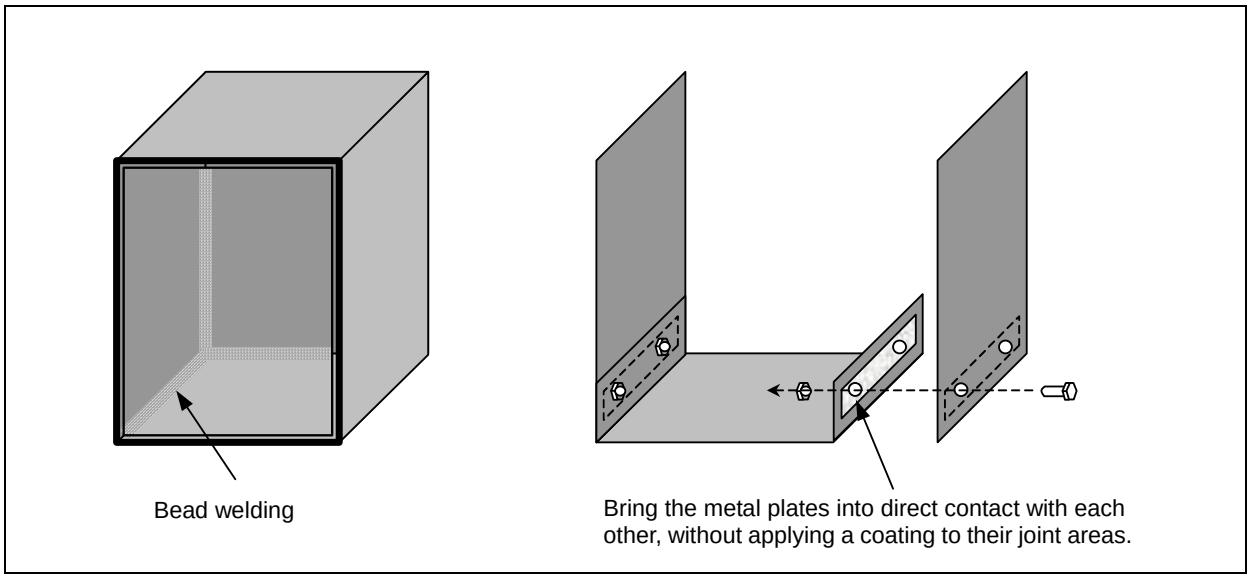

Fig. 3.4.1.2 (a) Cabinet structure

NOTE
Explained above is how to provide cabinets with low-impedance electrical continuity so as to increase noise immunity and to suppress noise radiation. See Subsection 3.4.2 for conditions required to configure protective grounding circuits.

(2) Mounting units on the cabinet

The shortest possible lengths of unit ground wires (wires from the unit's ground terminal to a grounding plate) should be used to make connections. A ground wire with a small conductor diameter causes impedance to high-frequency noise to become particularly higher, leading to an insufficient grounding effect. For the location of the ground terminal of each unit, refer to the manual relevant to the unit. The following shows the recommended method by which the metal plate with the unit mounted is installed on the cabinet. Care should be taken so that the cabinet and metal plate are connected to each other on their broad areas with no coating. It is not recommended that electrical continuity be provided only by screws, because impedance to high frequency cannot be sufficiently low.

© MyFANUC 195109AB01DC415385669AA015E5BDE5

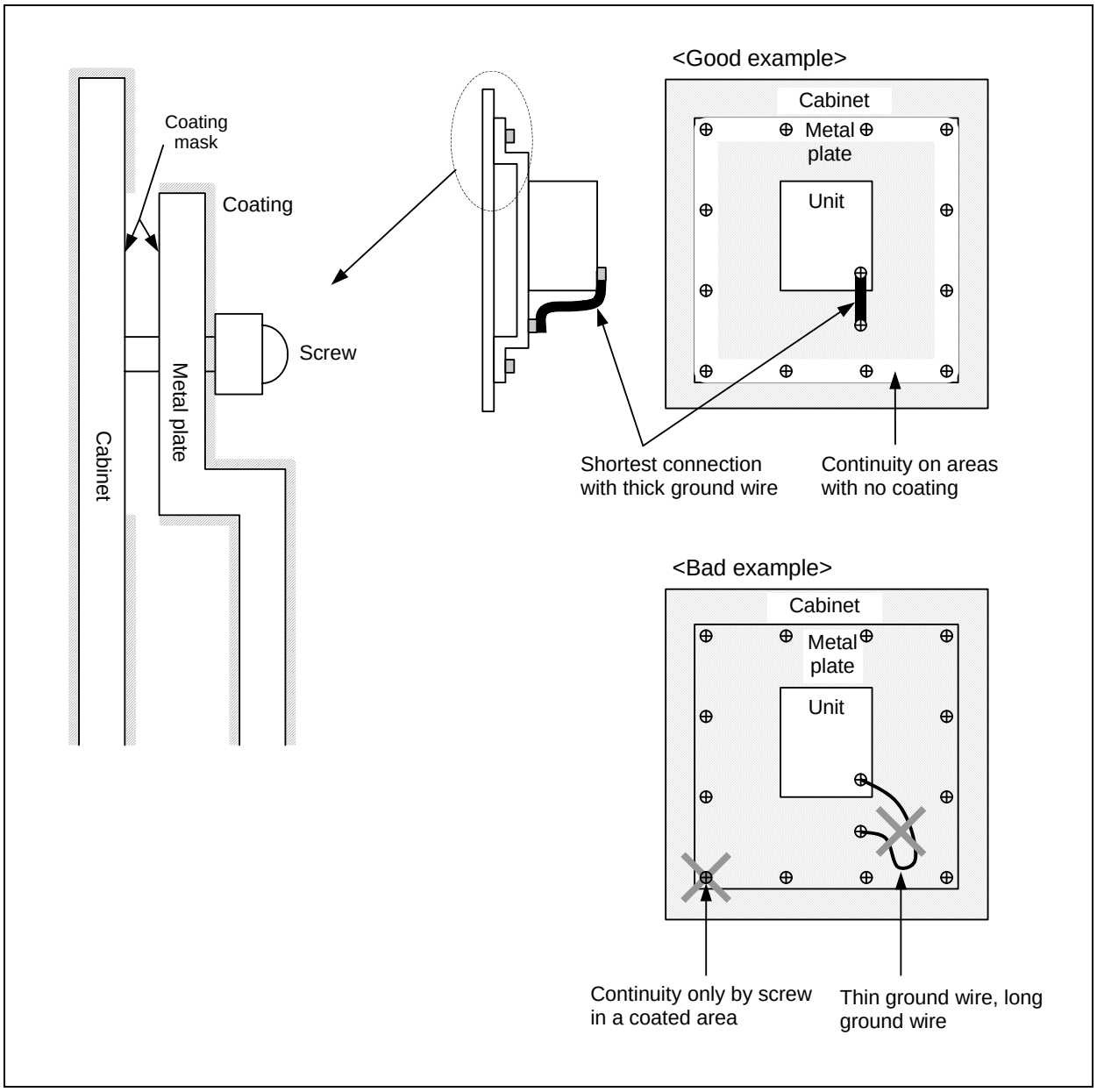

Fig. 3.4.1.2 (b) Installing a unit in a cabinet

© MyFANUC 195109AB01DC415385669AA015E5BDE5

3.4.2 Protective Ground (Grounding for Protection against Indirect Contact)

Protection against indirect contract is intended to prevent the risk that may occur in a conductive portion which is not charged with electricity (applied with voltage) during normal operation but may be charged with electricity if insulation is accidentally destroyed. It must be implemented by:

- measures to prevent the occurrence of a touch voltage, or
- automatic disconnection of the supply before the time of contact with a touch voltage can become hazardous

As for protective grounding in “automatic disconnection of the supply before the time of contact with a touch voltage can become hazardous”, follow any standards the machine tool is supposed to meet. Some standard examples follow:

Regarding protective grounding

IEC 60364-4-41:2005 and JIS C 60364-4-41:2010 (Electrical installations of buildings - Part 4-41: Protection for safety - Protection against electric shock) 411

Regarding the minimum cross-sectional area of protective conductors

IEC 60204-1:2005 and JIS B 9960-1:2008 (Safety of Machinery – Electrical Equipment of Machines – Part 1: General Requirements) 8.2.2

NFPA 79:2007 (Electrical Standard for Industrial Machinery) 8.2.2 Equipment Grounding (Protective) Conductors and Bonding Jumpers

NFPA 79:2007 (Electrical Standard for Industrial Machinery) 18.2 Continuity of the Equipment Grounding (Protective Bonding) Circuit

Regarding the cross-sectional area of a protective conductor shared by multiple circuits

IEC 60364-5-54:2002 and JIS C 60364-5-54:2006 (Electrical installations of buildings – Part 5-54: Selection and erection of electrical equipment – Earthing arrangements, protective conductors and protective bonding conductors) 543.1.4

Regarding use of enclosures (cabinets) or frames as protective conductors

IEC 60204-1:2005 and JIS B 9960-1:2008 (Safety of Machinery – Electrical Equipment of Machines – Part 1: General Requirements) 8.2.3

IEC 60364-5-54:2002 and JIS C 60364-5-54:2006 (Electrical installations of buildings – Part 5-54: Selection and erection of electrical equipment – Earthing arrangements, protective conductors and protective bonding conductors) 543.2.2, 543.2.3;

NFPA 79:2007 (Electrical Standard for Industrial Machinery) 12.2.1 Conductor Material

© MyFANUC 195109AB01DC415385669AA015E5BDE5

3.4.3 Connecting the Ground Terminal of the Control Unit

Continuity between the control unit's and a 0 V terminals

⚠ CAUTION

In each control unit, the 0 V and ground terminals are electrically connected to each other. So, do not connect any external unit's 0 V connected to the control unit's 0 V to any other line's grounding electrode that can have an electrical potential different from that of the grounding electrode connected to the control unit.

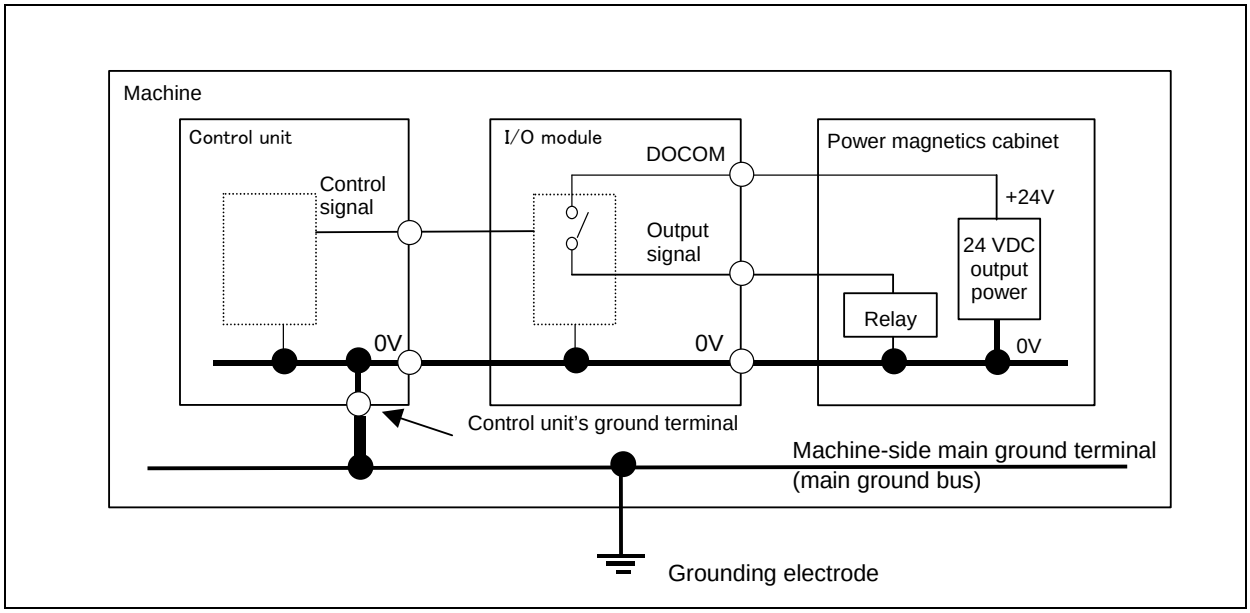

Fig. 3.4.3 (a) Continuity between the control unit's ground and 0 V terminals

© MyFANUC 195109AB01DC415385669AA015E5BDE5

Connecting the ground terminal of an LCD-mounted type control unit

Connect the 0 V line in the control unit to the cabinet's metal plate or signal system ground bar nearby via the protective ground terminal (see below).

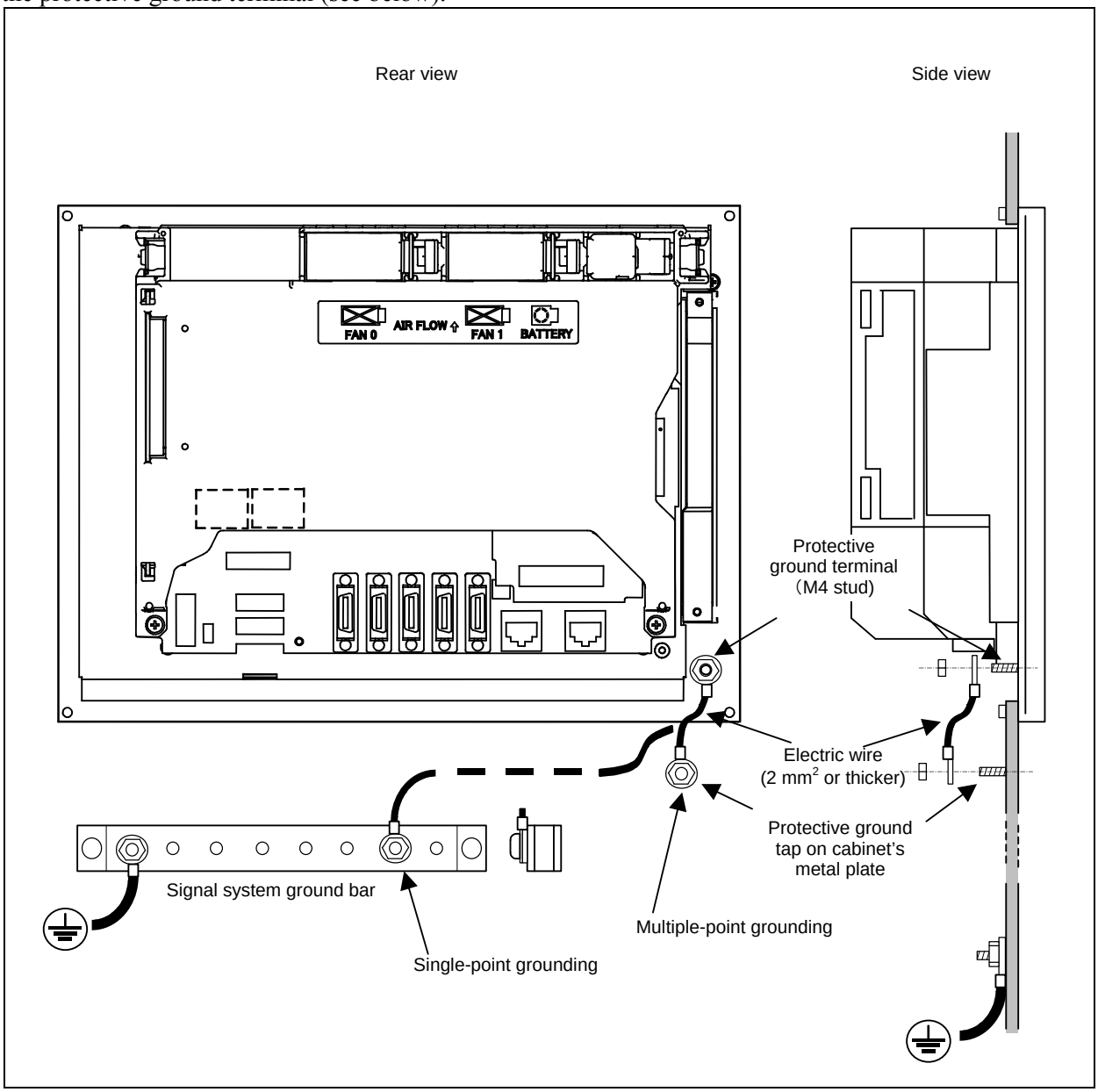

Fig. 3.4.3 (b) Ground terminal connection

© MyFANUC 195109AB01DC415385669AA015E5BDE5

Connecting the ground terminal of a stand-alone type control unit

Connect an electronics circuit's 0 V line in the control unit to the cabinet's metal plate or signal system ground bar close to it via the signal ground terminal.
Use the Faston terminal (FANUC specification: A02B-0166-K330).

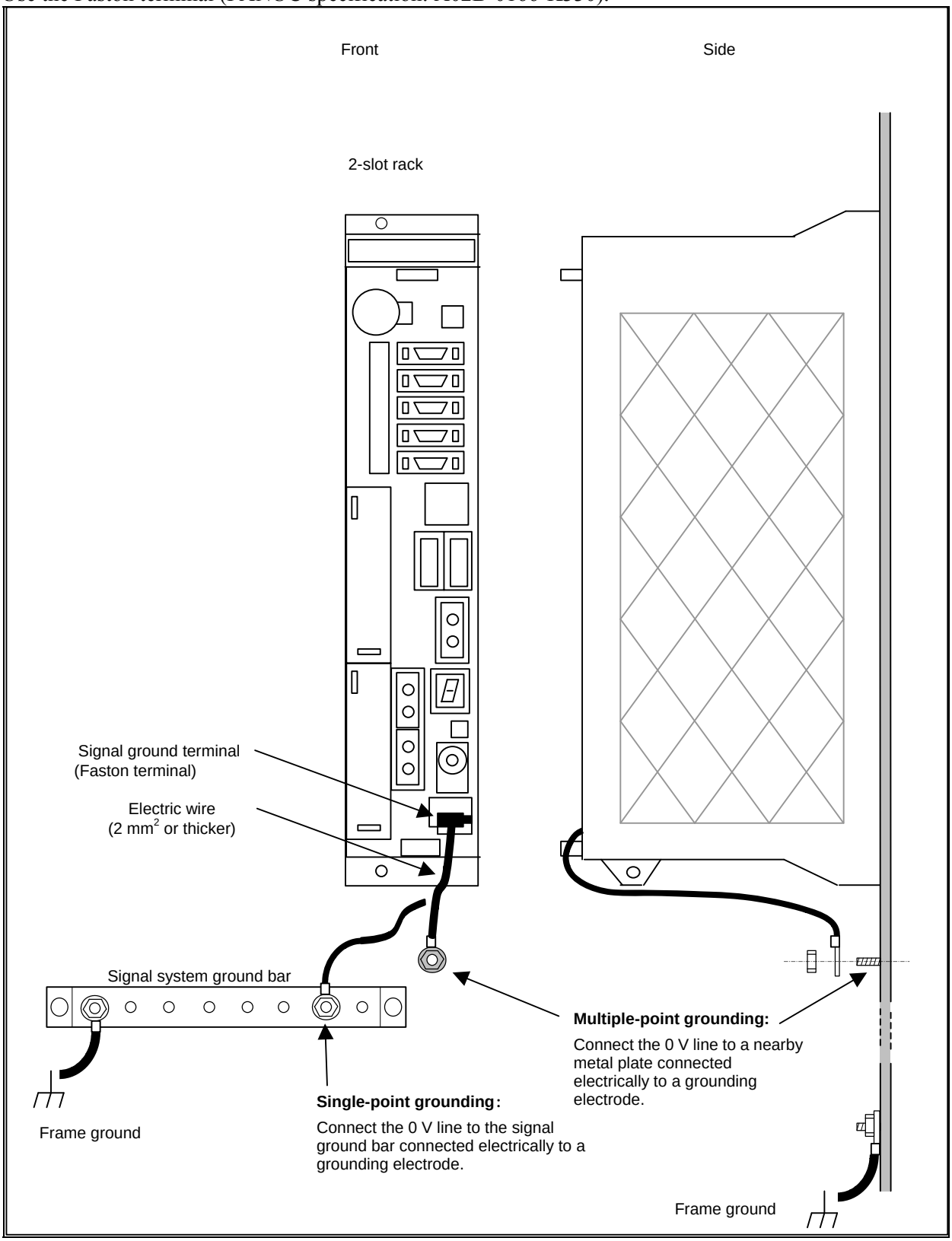

Fig. 3.4.3 (c) Ground terminal connection

© MyFANUC 195109AB01DC415385669AA015E5BDE5

3.4.4 Separating Signal Lines

The cables used for the CNC machine tool are classified as listed in the following table. Process the cables in each group as described in the action column.

Table 3.4.4 Cable grouping

Group	Signal line	Action
A	Primary AC power line	Bind the cables in group A separately (Note 1) from groups B and C, or cover group A with an electromagnetic shield (Note 2). See Subsection 3.4.5 and connect spark killers or diodes with the solenoid and relay.
	Secondary AC power line	
	AC/DC power lines (containing the power lines for the servo motors)	
	AC/DC solenoid	
	AC/DC relay	
B	DC solenoid (24 VDC)	Connect diodes with the DC solenoid and relay. Bind the cables in group B separately from group A, or cover group B with an electromagnetic shield. Separate group B as far from group C as possible. It is desirable to apply shield processing described in Subsection 3.4.6.
	DC relay (24 VDC)	
	DI/DO cable between the I/O unit and power magnetics cabinet	
	DI/DO cable between the I/O unit and machine	
	24 VDC input power cables connected to the control unit and its peripherals	
C	I/O Link *i* or I/O Link cable	Bind the cables in group C separately from group A, or cover group C with an electromagnetic shield. Separate group C as far from group B as possible. Be sure to perform shield processing as described in Subsection 3.4.6.
	Cable for the position coder	
	Cable for the manual pulse generator	
	Cable for the MDI (Note 3)	
	RS–232C interface cable	
	Cable for the battery	
	Cable for the Ethernet	
	Other cables for which shield processing is specified	

NOTE

1 Binding the cables in one group separately from another means that the groups are placed 10 cm or more apart from one another.

2 Covering a group with an electromagnetic shield means that shielding is provided between groups with grounded steel plates.

3 The shield is not required when the cable for the MDI is no more than 50 cm in length.

© MyFANUC 195109AB01DC415385669AA015E5BDE5

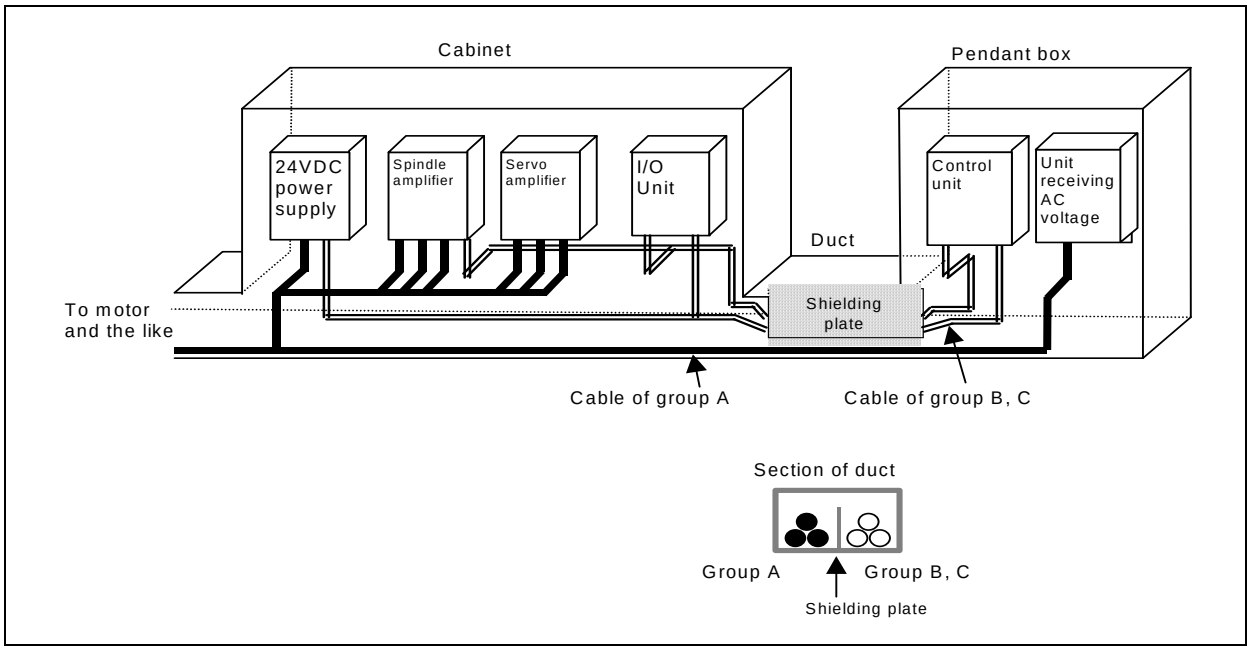

Fig. 3.4.4 Cable layout example

3.4.5 Noise Suppressor

Actuators, such as solenoids and relays, used in power magnetics cabinets need a noise suppressor.
Because an actuator, which converts electrical energy to mechanical action, is an inductive load, it resonates with the parasitic capacitance in a circuit containing it, when it works on and off, thus generating intermittent arcs accompanied by abrupt voltage rises and falls at its contacts, hence electromagnetic waves interfering with electronics circuits. As a remediation measure, treat the inductive load as described below.

1) While referencing the processing for cable groups A and B described in Subsection 3.4.4, “Separating Signal Lines”, apply a CR snubber circuit and a diode, respectively, to an inductive load in an AC circuit and that in a DC circuit.
2) When selecting a CR snubber or diode, observe the following cautions.

Cautions for selecting and using a CR snubber

- Use a CR snubber in an AC circuit.
  A varistor, voltage clamping element, can limit the peak of an oscillating voltage waveform but cannot relax an abrupt voltage transition . For this reason, we recommend using a CR snubber rather than the varistor.
- Determine the rating of the resistor and capacitor in the CR snubber according to the steady-state current I (A) and DC resistance RL (Ω) of the inductive load as follows:
  1) CR snubber resistance: $R \cong RL(\Omega)$
  2) CR snubber capacitance: $\frac{I^2}{10} \leq C \leq \frac{I^2}{20}$ (μF)
- Place the CR snubber close to the inductive load to minimize its wiring.

© MyFANUC 195109AB01DC415385669AA015E5BDE5

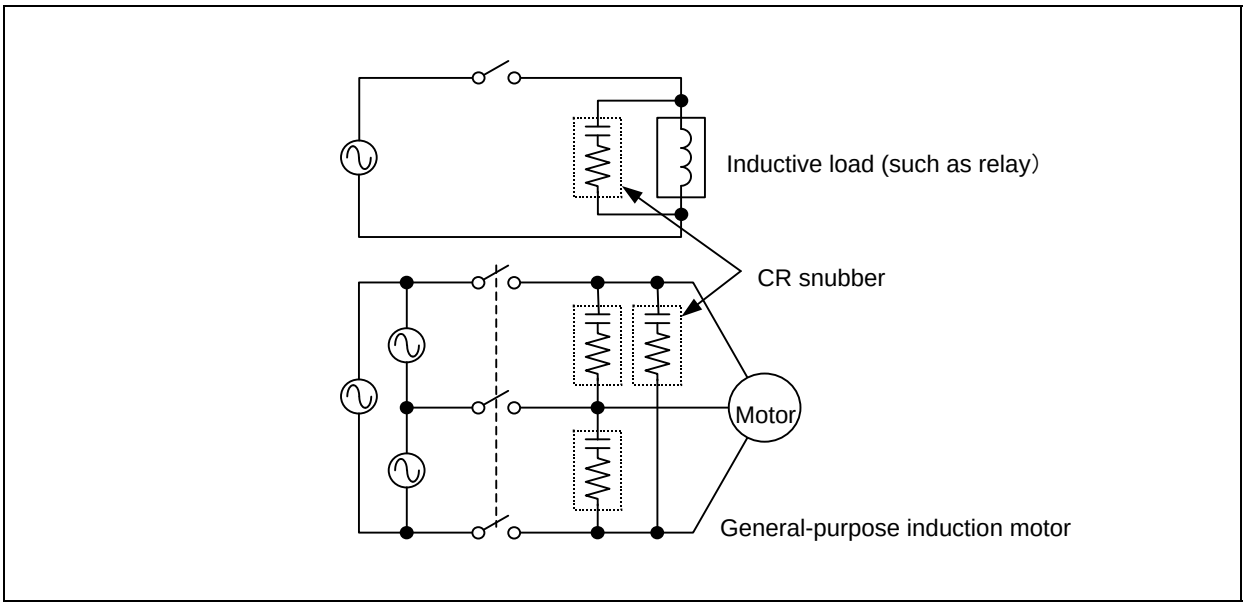

Fig. 3.4.5 (a) Example of applying a CR snubber

Cautions for selecting and using a diode

- A diode (freewheeling diode) can be used as a noise suppressor for a DC driver circuit.
- Determine the ratings of the diode according to the drive voltage and current for the inductive load (such as a solenoid coil, relay, or motor) as follows:
  1) Voltage rating: Approximately twice the voltage applied to the inductive load
  2) Current rating: Approximately twice the steady-state current flowing through the inductive load

- Place the diode close to the inductive load in order to minimize its wiring.

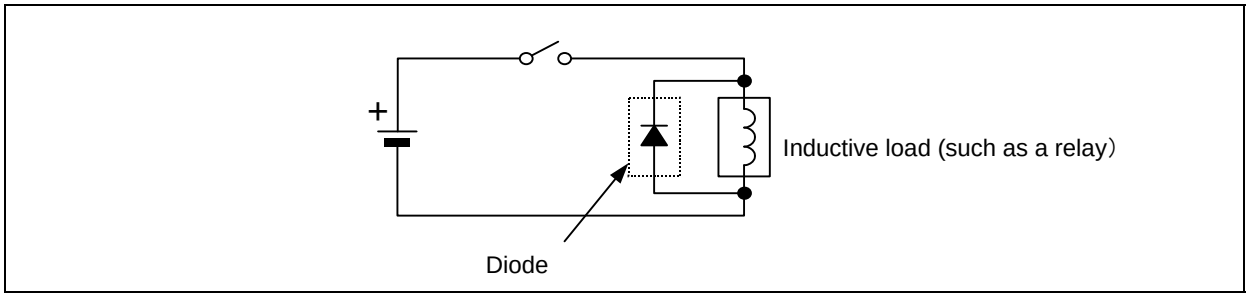

図3.4.5 (b) Example of applying a diode

3.4.6 Cable Clamp and Shield Processing

Some cables that are drawn into the control unit or servo amplifier need shielding (basically, every signal line needs shielding). Clamp all these cables in the way shown below. This type of clamping works for both cable supporting and shielding. Be sure to make clamping because it is quite important to make system operation stable. Clamping shield correctly can suppress effect from external noise.
Partially peel the sheath off a cable and expose the shield, and press the exposed portion against the ground bar with the clamp. Care should be taken so that the ground bar and shield have a surface contact in a larger area. (See the figure below.)
The machine builder is requested to prepare the ground bar for cable clamping and place it as shown below.
When the multipoint grounding scheme is used, care should be taken so that the ground bar for the shield clamp and cabinet are connected at low impedance by, for example, preventing the cabinet side contact surface from being coated.

© MyFANUC 195109AB01DC415385669AA015E5BDE5

When using an in-line connector or the like to split a cable, it is necessary to connect the shield of one portion of the cable and that of the other portion and to keep the total impedance of the two cable portions from becoming high. Even if the connector is placed at the inlet of the cabinet, it is also necessary to use the shield for the intra-cabinet portion of the cable all the way to the other end of the cable.

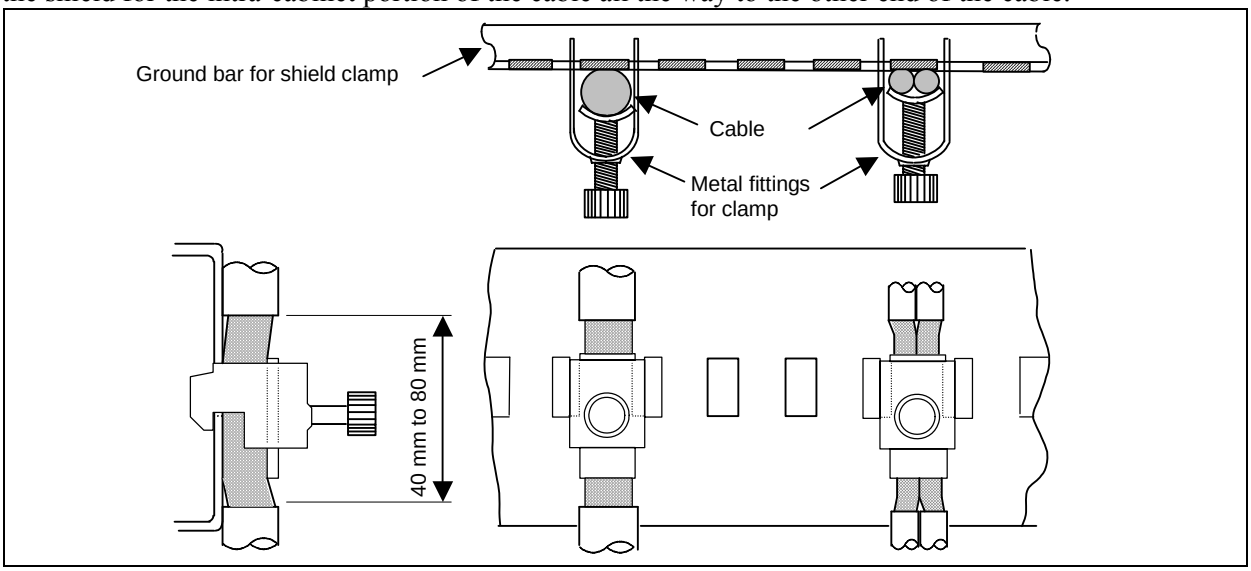

Fig. 3.4.6 (a) Cable clamp (1)

NOTE

1 Select a cable with a proper length.
2 If the cable is too long, the noise immunity may be reduced or noise may be caused on other cables. In addition, when the excess length is coiled, the inductance is increased and a high voltage is induced during turning on or off of signals. This may cause a failure or a malfunction due to noise.
3 Bundle and clamp the shields of cables that lead into the control unit or amplifier at a point, respectively, close to the unit or amplifier.

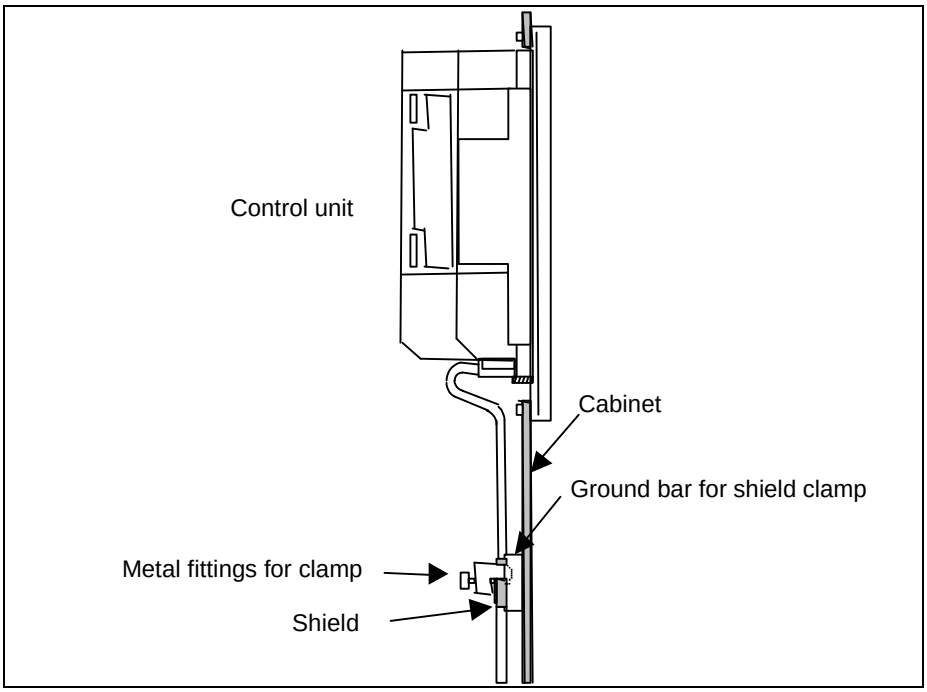

Fig. 3.4.6 (b) Cable clamp (2)

© MyFANUC 195109AB01DC415385669AA015E5BDE5

Prepare a ground bar for cable clamping shown below.

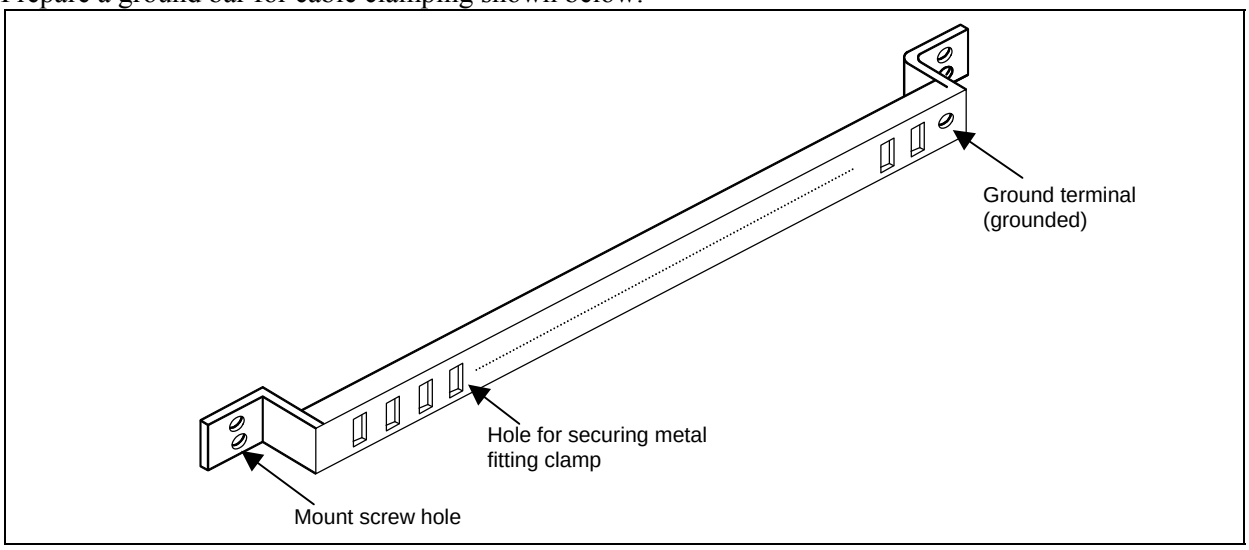

Fig. 3.4.6 (c) Ground bar for shield clamp (outline drawing)

The ground bar for cable clamping must be made of a steel plate at least 2 mm thick and plated with nickel.

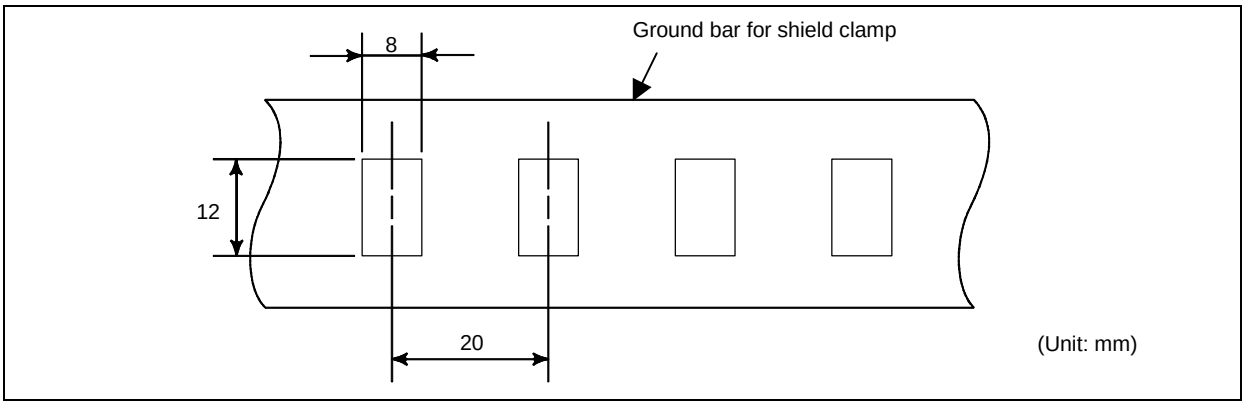

Fig. 3.4.6 (d) Ground bar for shield clamp (hole arrangement and dimension drawing)

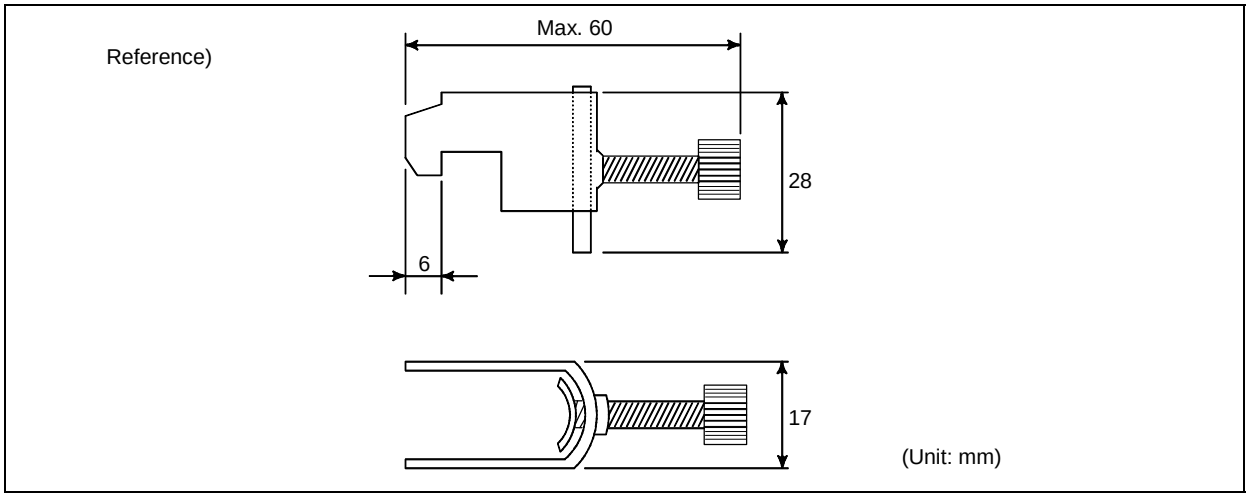

Fig. 3.4.6 (e) Clamping metal fixture (outline drawing)

Ordering specification for metal fittings for clamp

A02B-0303-K001 (8 pieces)

© MyFANUC 195109AB01DC415385669AA015E5BDE5

3.4.7 Lightning Surge Absorber Installation

It is recommended to install a surge absorber between input power lines and between input power lines and the ground in order to protect equipment from thunderbolt-caused voltage surges. However, installing a surge absorber does not always ensure protection from lightning surges.
For recommended lightning surge absorbers, refer to your respective servo amplifier descriptions.

Installation procedure

The surge-absorbing elements used for measures against surges due to lightening must be installed in the input power unit as shown in the figure below. The figure below shows an example in which an insulating transformer, shown by dotted lines, is not installed. If an insulating transformer is installed, surge-absorbing element 2 (between line and ground) is not required.

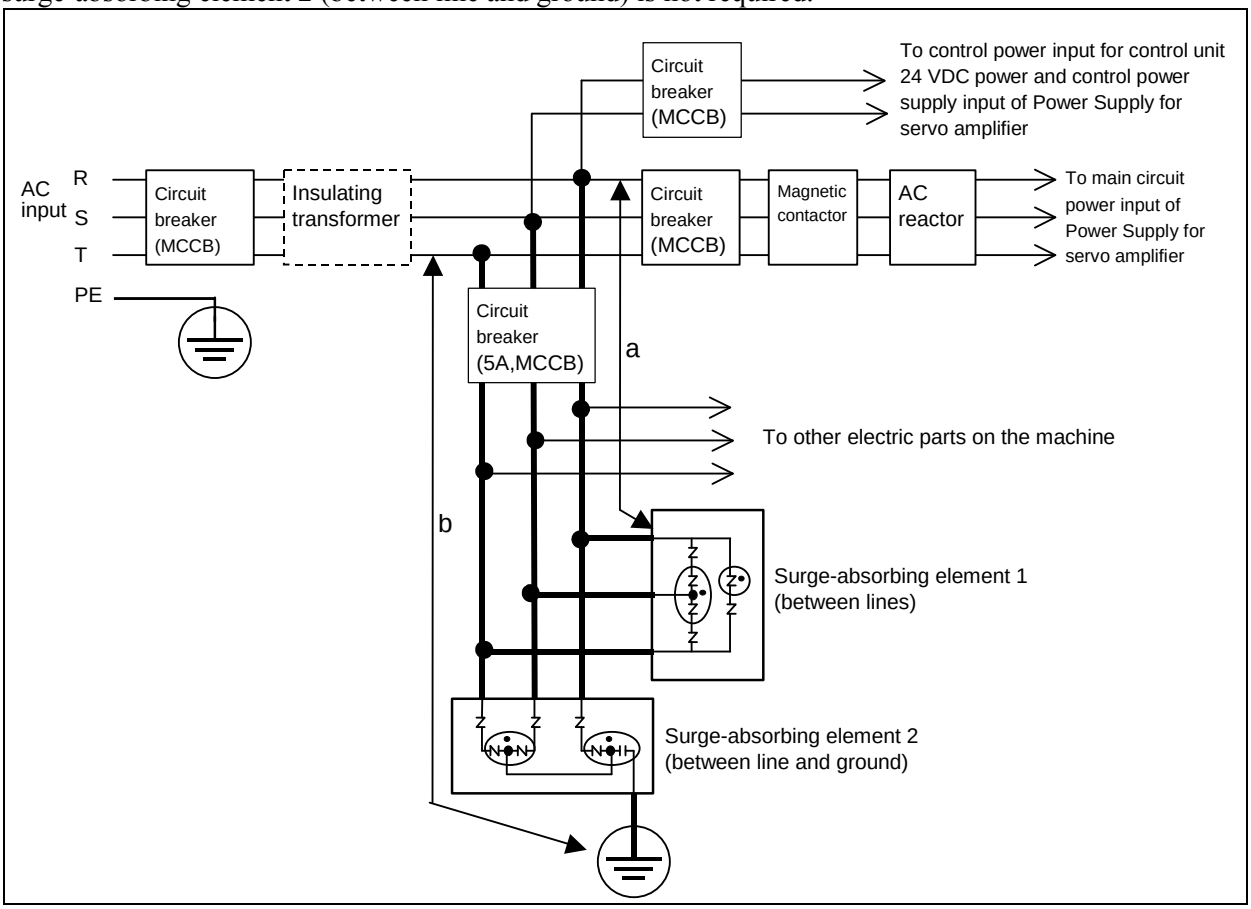

Fig. 3.4.7 Example of installing lightning surge absorbers on 200 VAC lines

⚠ CAUTION

1 For a better surge absorbing effect, the wiring shown by heavy line must be as short as possible.
Wire size : Cross-sectional area at least 2 mm^2 large
Wire length: The sum of the length (a) of the wire for the connection of surge-absorbing element 1 and that (b) of surge-absorbing element 2 must be 2 m or less.

2 If conducting dielectric strength tests by applying overvoltages (1000 VAC and 1500 VAC) to the power line, remove surge-absorbing element 2. Otherwise, the overvoltages would activate the element.

© MyFANUC 195109AB01DC415385669AA015E5BDE5

⚠ CAUTION

3 The circuit breaker (5A) is a short circuit protection of lines if the surge-absorbing elements result in short circuit breakdown due to the absorption of an excessive amount of energy.

NOTE

The circuit breaker (5A) can be used also for other electric parts on the machine because no current flows through surge-absorbing elements 1 and 2 in the normal state. The “other electric parts on the machine” can be the control power supply of Power Supply for servo unit.

3.5 INSTALLING THE CONTROL UNIT

⚠ CAUTION

The control unit has a built-in fan motor. Failing to secure a space sufficient to maintain a satisfactory air flow in the control unit can lead to abnormal heat generation and faults.

3.5.1 Installing the LCD-mounted Type Control Unit

Air enters the control unit through the bottom and is drawn through the fan motor which is located on the top of the control unit.

Space (A), shown in Fig. 3.5.1, must be provided to ensure unrestricted air flow. Also, space (B) should be provided whenever possible. When space (B) cannot be provided, ensure that nothing is placed in the immediate vicinity which could obstruct the air flow.

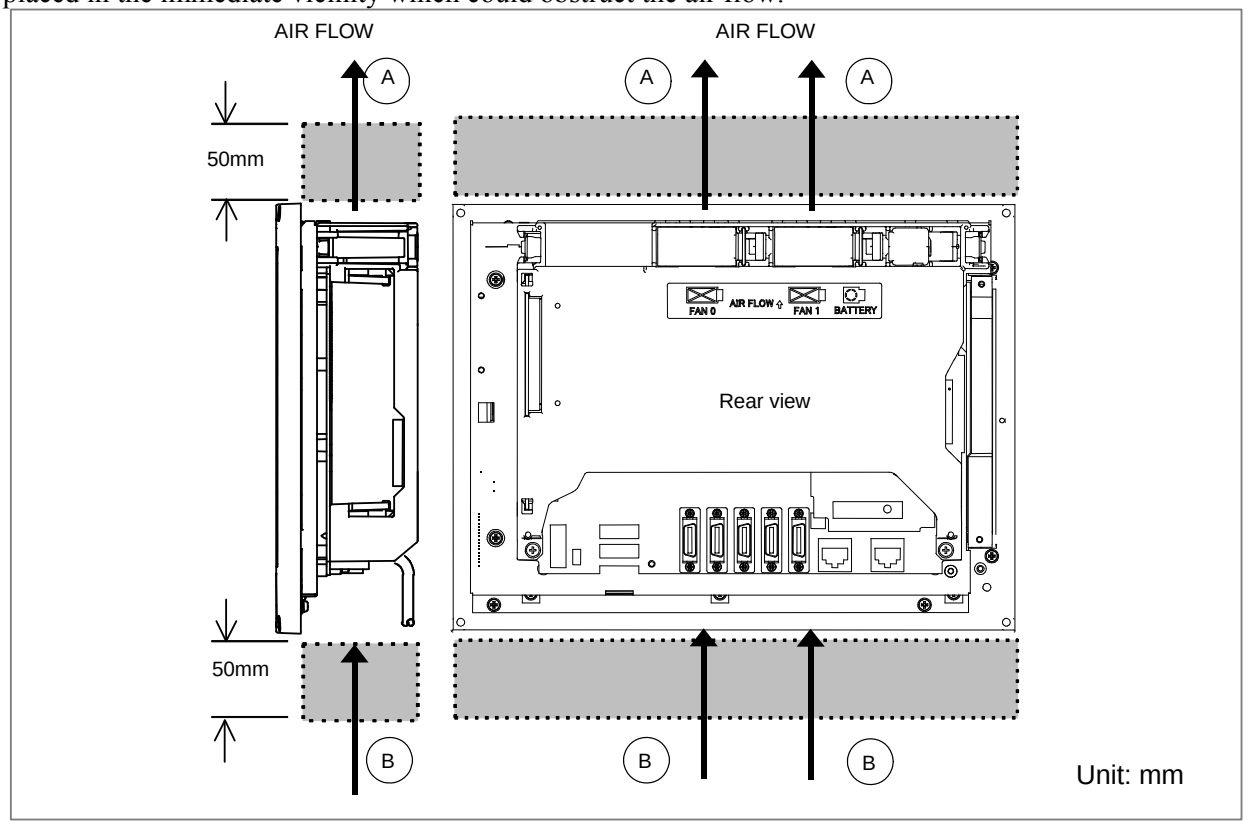

Fig. 3.5.1

© MyFANUC 195109AB01DC415385669AA015E5BDE5

3.5.2 Installing the Stand-alone Type Control Unit

Air is fed into the bottom of the unit and output from the fan motor mounted on the top of the unit.
The spaces shown in Fig. 3.6.2 (areas (A) and (B)) are always required to ensure smooth air flow.
Also, adequate service access space is required in front of and at the top of the unit so that printed circuit boards and the fan motor can be replaced easily if necessary.
There is a spare connector located at the far end (at middle height) on the right side of the control unit. This connector is used for control unit testing and other purposes. Therefore, space (area (C)) for handling the connector is required.

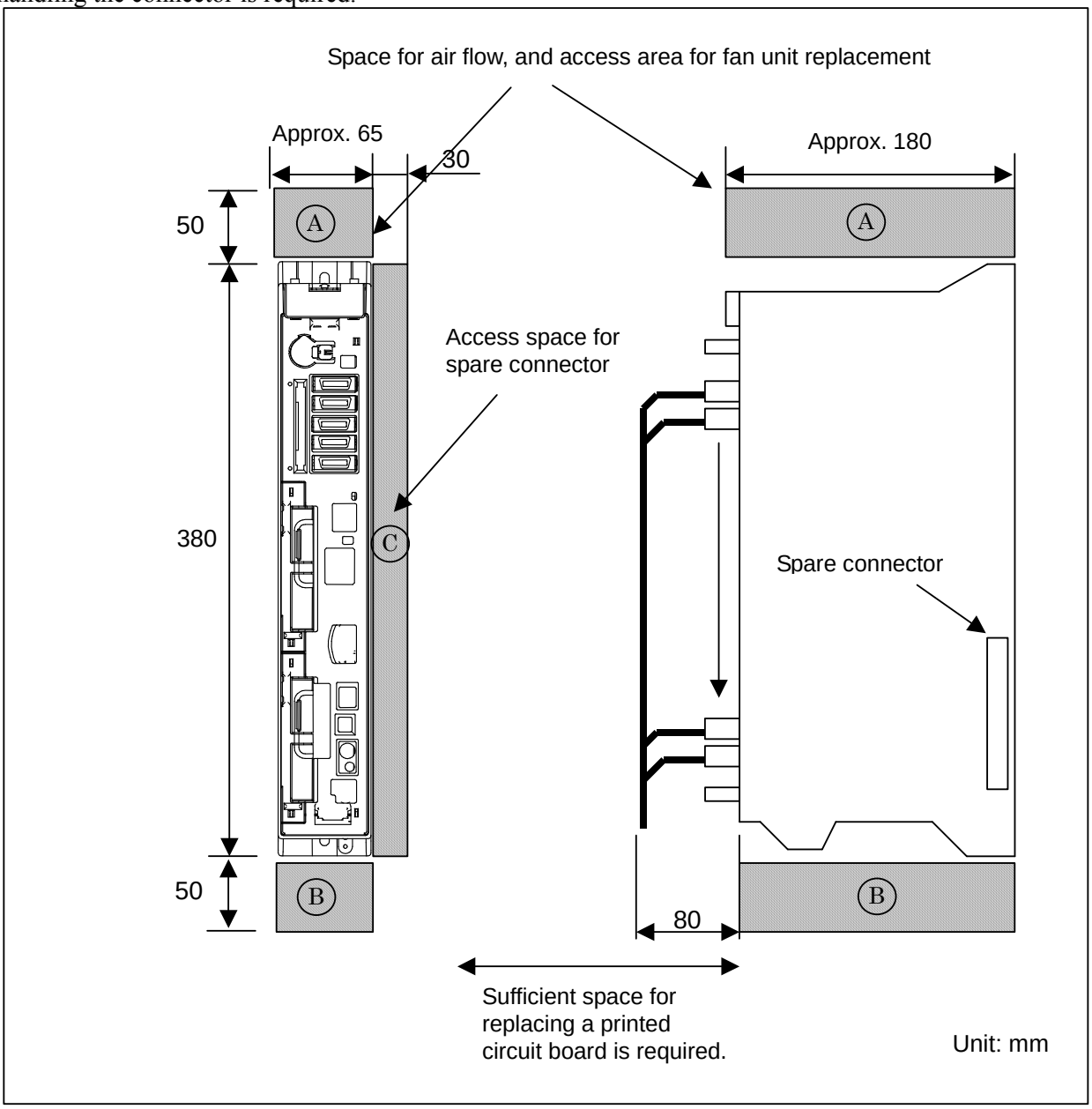

Fig. 3.5.2

© MyFANUC 195109AB01DC415385669AA015E5BDE5

3.6 TIGHTENING TORQUE FOR FASTENING UNITS AND GROUND TERMINALS

The following table lists the tightening torque for screws and nuts used to fasten the units (except those having molded mounting parts) explained herein and ground terminals in the units.

Screw and nut diameter	Tightening torque
M3	0.8 to 1.0 N·m
M4	1.6 to 2.0 N·m

The following table lists the tightening torque for screws and nuts used to fasten those units having molded mounting parts, such as stand-alone control units and separate detector interface units.

Screw and nut diameter	Tightening torque
M4	1.1 to 1.5 N·m
M5	2.4 to 2.8 N·m

⚠ **CAUTION**

Be sure to observe the rules listed above when tightening screws. If screws are tightened too weakly or too strongly, it is likely that the unit may drop, break, or malfunction.
For units having a touch panel in particular, be sure to observe the above rules. Failing to observe them can cause the touch panel to malfunction.

NOTE

For units having different installation conditions specified herein, observe them first.

3.7 DUSTPROOF MEASURES FOR CABINETS AND PENDANT BOXES

When designing and manufacturing cabinets or pendant boxes for housing displays and operator’s panels, they are requested to observe the following cautions to make their structures resistant to intrusion of dust, cutting chips, coolant, organic solvent, and oil mist because these cabinets and pendant boxes are susceptible to them.

1) The cabinet and pendant box must be of a hermetically sealed structure.
2) Apply packing to the panel mounting surface to which a display and operator's panel are to be mounted.
3) Make sure that the door packing of the cabinet and pendant box is sealed firmly.
4) For a cabinet or pendant box with a rear cover, apply packing to the mounting surface.
5) Make sure that the cable entrance is sealed with packing, connectors for conduits, etc.
6) Make sure that all other openings are blocked, if any.
7) Pay due consideration to keep the display and operator’s panel from direct exposure to cutting chips and coolant; do not let any coolant come into contact with them.
8) Coolant can readily form puddles on the cabinet and pendant box and may drop on the panel surface of the display and operator’s panel. Use such a structure that can prevent coolant from forming puddles on the display and operator’s panel or dropping on the panel surface.

© MyFANUC 195109AB01DC415385669AA015E5BDE5

⚠ WARNING

Coolants containing sulfur or chlorine at a high activation level, oil-free coolants called synthetic, and water-soluble coolants at a high alkali level, in particular, can largely affect the CNC and peripheral units. Please note that, even if consideration is taken to protect them from direct exposure to these coolants, the following trouble is likely to occur.

- Coolants containing sulfur or chlorine at a high activation level
  Some coolants containing sulfur or chlorine are at an extremely high activity level. If such a coolant adheres to the CNC or peripheral units, it reacts chemically with a material, such as resin, of equipment, possibly leading to corrosion or deterioration. If it gets in the CNC or a peripheral unit, it corrodes metals, such as copper and silver, used as component materials, possibly leading to a defective component.
- Synthetic-type coolants having a high permeability
  Some synthetic-type coolants whose lubricating component is, for example, PAG (polyalkylene glycol) have an extremely high permeability. If such a coolant is used even in equipment having a high closeness, it can readily flow into the equipment through, for example, gaskets, or packing. It is likely that, if the coolant gets in the CNC or a peripheral unit, it may deteriorate the insulation and damage the components.
- Water-soluble coolants at a high alkali level
  Some coolants whose pH is increased using alkanolamine are so strong alkali that its standard dilution will lead to pH10 or higher. If such a coolant spatters over the surface of the CNC or peripheral unit, it reacts chemically with a material, such as resin, possibly leading to corrosion or deterioration.

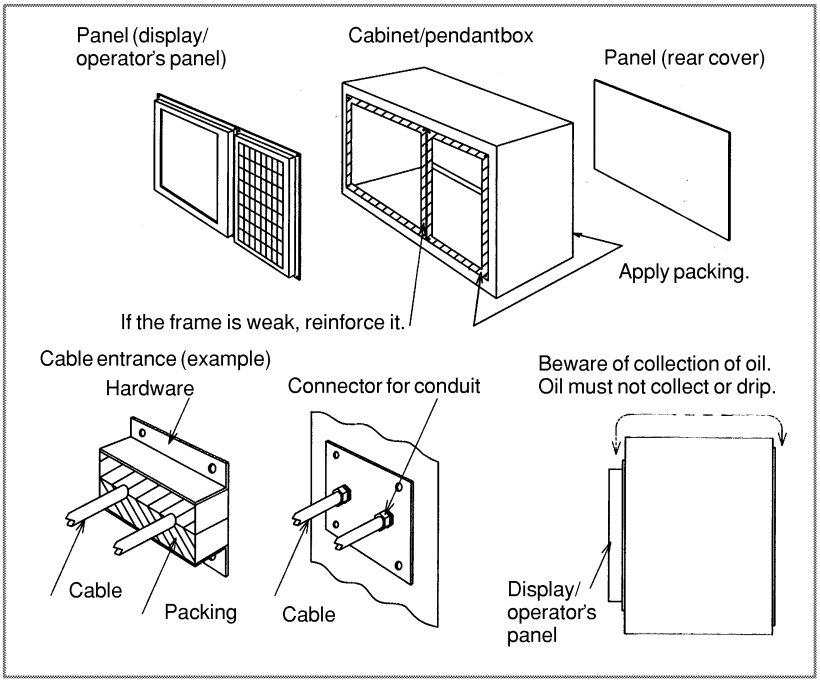

© MyFANUC 195109AB01DC415385669AA015E5BDE5

When making screw holes in packing, be careful not to cut to the edge of the packing. Any extra cut can let coolant get in the cabinet through the screw hole, causing trouble.

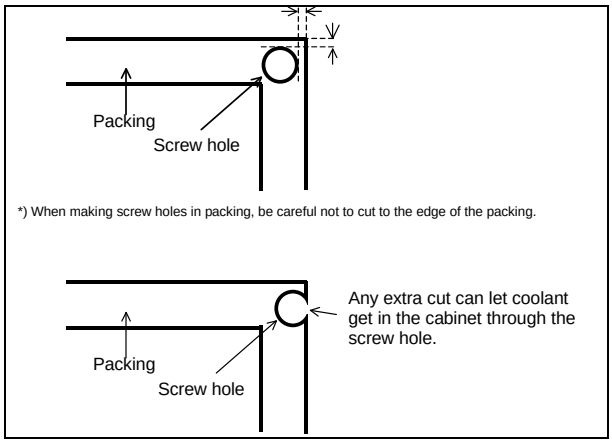

Packing for LCD units, MDI units, and standard machine operator's panels

Observe the following rough standards for the thickness and hardness of packing used with LCD units (included LCD-mounted control units or display units), MDI units, and standard machine operator's panels.

Thickness : 1.4mm(including double-stick tape)
Hardness : 8(Asker C)

The following models of packing can be purchased from FANUC. These models are electrically conductive. When they are used to mount a unit on a cabinet or pendant box, they leave no electrical gap between the unit and cabinet or pendant box, being effective in electromagnetic wave shielding and EMC measures.

Ordering information	Use
A02B-0323-K302	For 8.4" LCD unit, for standard MDI unit (ONG 8.4" LCD unit)
A02B-0323-K301	For 10.4" LCD unit, for standard MDI unit (ONG vertical type)
A02B-0323-K304	For 15" LCD unit
A02B-0323-K310	For standard MDI unit (ONG vertical type)
A02B-0323-K313	For small MDI unit (ONG 8.4" LCD unit)
A02B-0323-K314	For standard MDI unit (QWERTY)
A02B-0323-K315	For standard MDI unit (QWERTY type B)
A02B-0323-K320	For main panel of standard machine operator's panel

⚠ CAUTION

1 We have evaluated the above models of packing for many different coolants. However, we do not necessarily guarantee that they are resistant to all coolants. They are not resistant to, for example, coolants containing sulfur or chlorine at a high activation level and water-soluble coolants at a high alkali level.
2 When attaching these models of packing, observe the cautions provided together with them.

When using packing to install a LCD unit, MDI unit, or standard machine operator's panel in a cabinet or pendant box, be careful not to pinch the packing between the mounting surface of the cabinet or pendant box and the brim of the unit being installed.

© MyFANUC 195109AB01DC415385669AA015E5BDE5

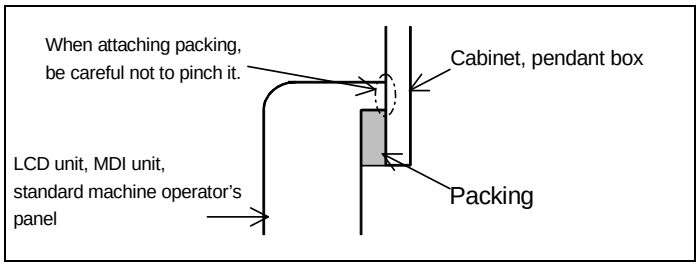

3.8 LCD PROTECTION COVER

FANUC offers LCD-mounted control units and display units having a protection cover for the LCD screen and soft keys on their front surface. The protection cover can be purchased also on an unbundling basis.

> ⚠ **CAUTION**
> Do not install the LCD-mounted control unit and the display unit in such a place that coolant would directly fall onto the unit. Be sure to attach a protection cover to the LCD-mounted control unit and the display unit if they will be used in an environment where it is anticipated that coolant may scatter over them, for example, an environment with a relatively dense oil mist.

3.9 ATTACHING SCREW CAPS

After mounting any of the LCD-mounted control unit, display unit, MDI unit, and machine operator's panel main panel, which are supposed to be mounted on the front of a cabinet or pendant box using M3 screws, attach screw caps to the screw mounting hole at every corner.

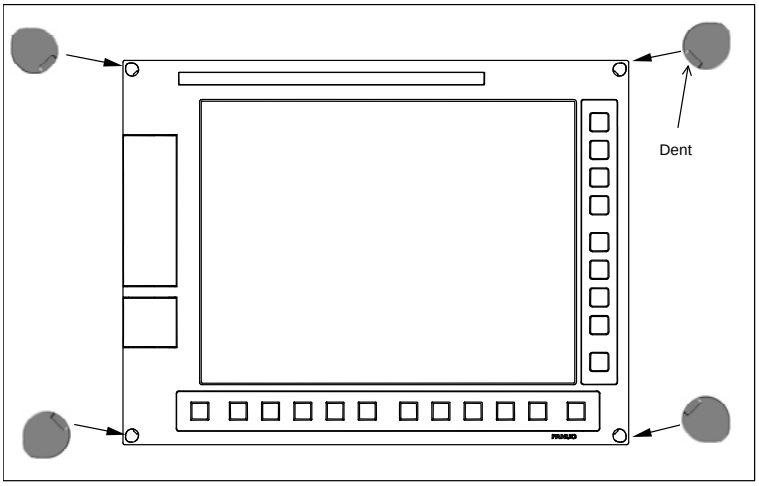

> ⚠ **CAUTION**
> When attaching screw caps, pay due attention to the dent in them and be careful not leave any gap. Otherwise, coolant may get in the equipment, causing trouble.

© MyFANUC 195109AB01DC415385669AA015E5BDE5

4 POWER SUPPLY CONNECTION

4.1 24 VDC POWER (INSULATION AC/DC CONVERTOR)

4.1.1 Connecting 24 VDC Power

Prepare a 24 VDC power supply (insulation AC/DC converter) and supply power to the 24 VDC input of the control unit and peripheral units, such as I/O units.
It is recommended to provide an ON/OFF circuit external to the 24 VDC power supply as shown in Fig. 4.1.1(a) so that it can turn on and off the AC input to the 24 VDC power supply.
It is also recommended to use a separate 24 VDC power supply for any unit whose load fluctuates largely or which may generate noise, in order to minimize effect of noise and voltage variation to the control unit or peripheral unit.

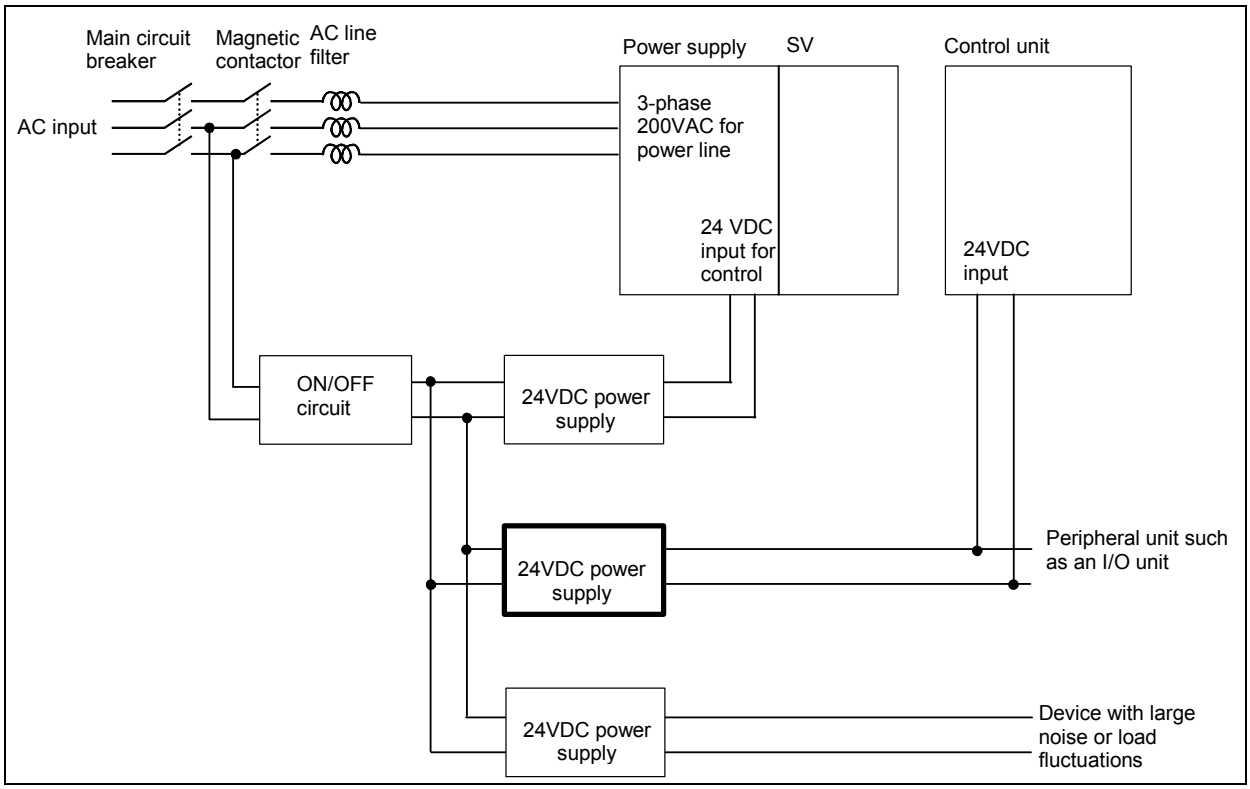

Fig. 4.1.1 (a) Example of recommended 24 VDC power supply connection

© MyFANUC 195109AB01DC415385669AA015E5BDE5

⚠ CAUTION

When the ON/OFF circuit is provided on the DC side of a 24 VDC power supply, on-time rush current imposes an extremely heavy burden on the relay contact in the ON/OFF circuit compared with the time when the ON/OFF circuit is provided on the AC side. So, it is necessary to select a relay that is highly resistant to rush current. In general, a relay having a high current rating and being large in size should be selected.

In the connection shown in Fig. 4.1.1(b), for example, use a separate 24 VDC power supply if voltage variation due to abrupt changes in the load or rush current may transiently exceed the rated input voltage range (24 VDC ±10%) for the control unit or peripheral unit.

As for a control unit having the personal computer function with Windows® XP, it is likely that input AC shut-down, such as power failure or dip, may corrupt the contents of the hard disk or CF card. So, read the PANEL*i* Connection and Maintenance Manual (B-64223EN) carefully and understand its contents sufficiently.

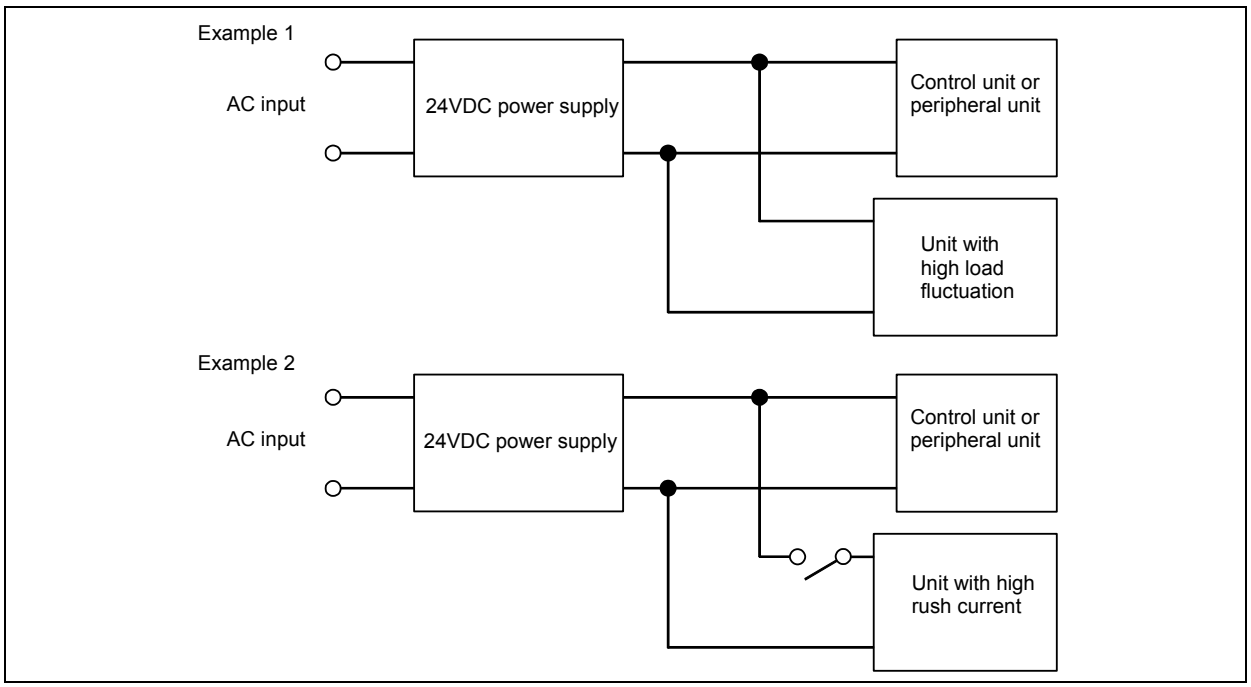

Fig. 4.1.1 (b) Example of connection with high transient voltage variation

© MyFANUC 195109AB01DC415385669AA015E5BDE5

NOTE

Try as much as possible to avoid the configuration shown in Fig. 4.1.1(b) even when load fluctuation and rush current are low.
In a configuration where two or more units are connected to the same 24 VDC power supply, the control unit will not be able to start, thus failing to issue an alarm, if the power supply fails to operate because of a fault in a unit other than the control unit. For this reason, it is likely that it may take time to locate the fault.
If the 24 VDC power supply for the control unit and peripheral units must be connected also to another unit because of a limited space in the power magnetics cabinet, insert a noise filter, example: ZGB2203-01U manufactured by TDK, before the 24 VDC input for the control unit and peripheral units in order to prevent noise from the 24 VDC power supply from entering the control unit and peripheral units after paying due consideration to the voltage variation resulting from load fluctuation or rush current. In case of using a noise filter, enough inspect workings of the control unit and peripheral units, because there may be influenced of another noise by the noise filter.

4.1.2 24 VDC Power Supply Specification

Specifications of recommended 24 VDC power supply:

Output voltage: +24V±10% (21.6V to 26.4V)
(In the 24 VDC input for the control unit and peripheral units, ripple voltage and noise are contained. See Fig. 4.1.2.)
Output current:
The continuous load current of the 24 VDC power supply is higher than or equal to the current used by the control unit and peripheral units that are connected to the power supply.
(At the maximum temperature inside the power magnetics cabinet in which the power supply is located. See Subsection 4.1.3.)
Load fluctuations (including rush current):
The output voltage must not go out of the above range due to load fluctuations by external DO and other factors.
Instantaneous input interruption retention time: 10 ms or more (for -100%), 20 ms or more (for -50%)
Safety standard
UL 60950-1, CSA-C22.2 No. 60950-1, EN60950-1 approved
Noise voltage at terminal/electrical field intensity of noise
EN55011/EN55022-B, FCC-B, VCCI-B compliant

NOTE

Safety standard and Noise voltage at terminal/electrical field intensity of noise are recommended for selecting the 24 VDC power supply on the market.
However, the required standards may be different from above standards by the machine, an importing country, revision of the standard, or etc, prepare the 24 VDC power supply that is conformed to required standards.

© MyFANUC 195109AB01DC415385669AA015E5BDE5

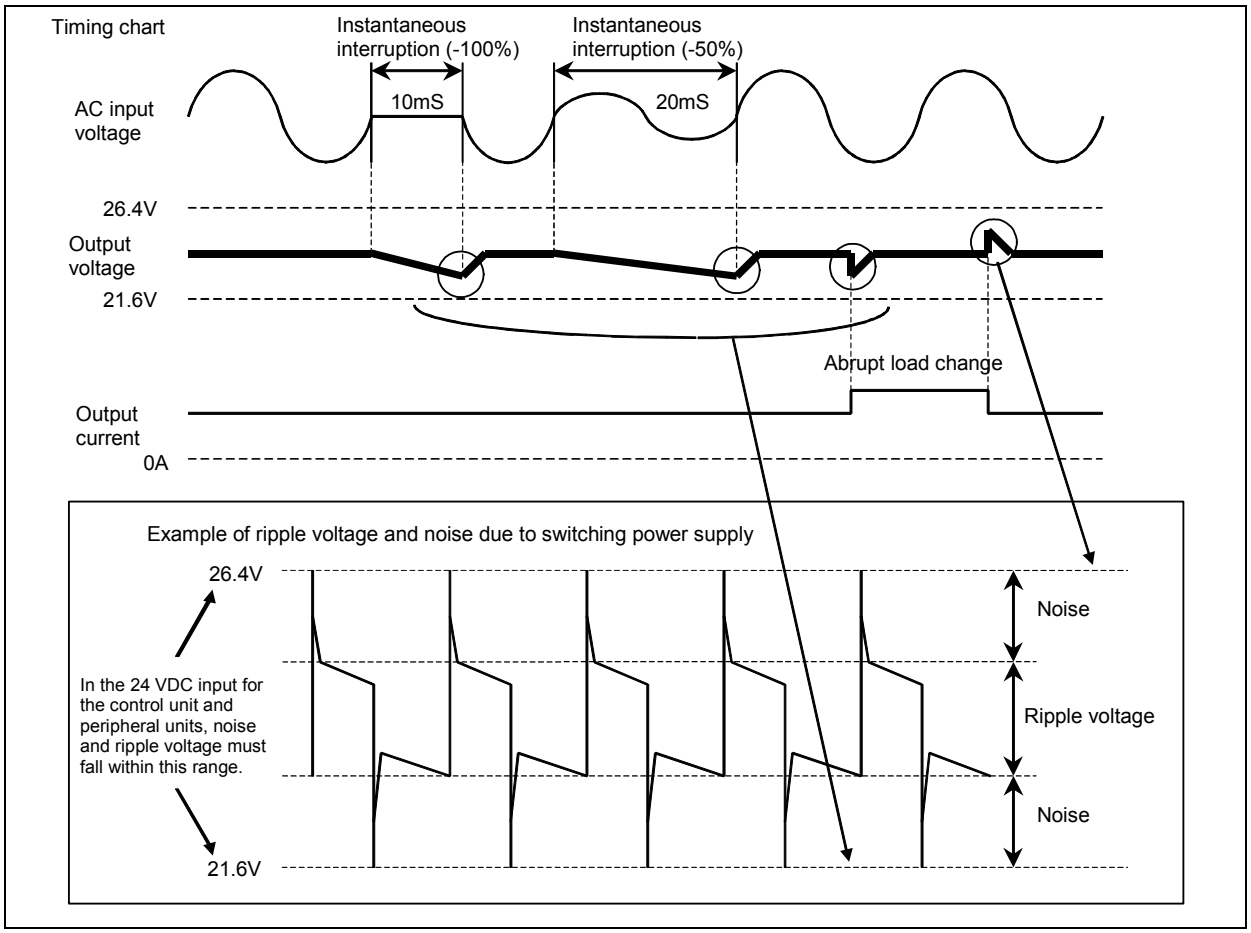

Fig. 4.1.2 (a) Timing chart

> ⚠ **CAUTION**
> Do not use any power supply circuit, consisting of a capacitor and rectifier circuit, like one shown in Fig. 4.1.2 (b), because it cannot maintain a voltage of 24 VDC (the voltage falls to 21.6 V or below in each 24 VDC input for the control unit and peripheral units) due to instantaneous interruption or voltage variation in the AC input. Instead, use a voltage regulator.

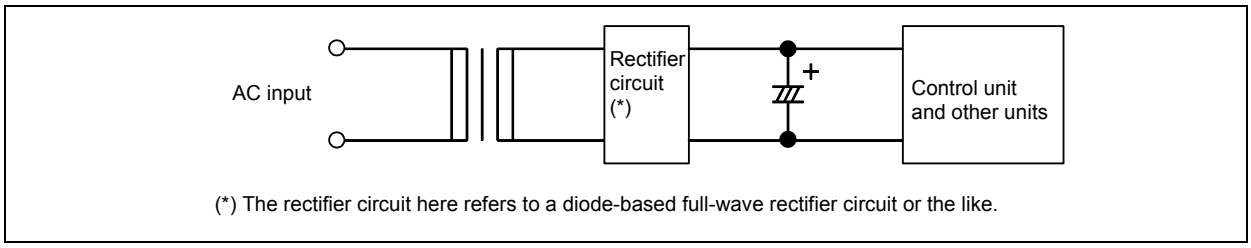

Fig. 4.1.2 (b) Example of a power supply circuit that cannot maintain 24 VDC

© MyFANUC 195109AB01DC415385669AA015E5BDE5

4.1.3 Power Capacity of 24 VDC Power Supplies

The 24 VDC power supply for the control unit and peripheral units must have the power capacity that can supply current required by them.
Calculate the power capacity required of each 24 VDC power supply according to what control unit and options are connected to the power supply while referencing Table 4.1.3.

Table 4.1.3 Power capacity

Unit		Power capacity	Remarks
LCD-mounted type control unit	With 8.4”LCD unit, 10.4”LCD unit A	1.6A	Note 1)
	With 15”LCD unit	2.4A	Note 1)
	Additional power capacity from a control unit having communication features	+0.1A	
Stand-alone type control unit		1.6A	Note 1)
DeviceNet card		0.1A	
Optional board	Additional axis board	0.3A	
	Fast Ethernet board	0.1A	
	HSSB interface board	0.2A	
	PROFIBUS-DP master board	0.2A	
	PROFIBUS-DP slave board	0.1A	
	DeviceNet master board	0.1A	
	DeviceNet slave board	0.1A	
	CC-Link remote device station board	0.1A	
Display unit for stand-alone type control unit	10.4”LCD unit A	0.7A	
	10.4”LCD unit A (the first display unit when two are used)	0.7A	
	10.4”LCD unit A (the second display unit when two are used)	0.4A	
	10.4”LCD unit (2nd LCD Unit (Ethernet))	1.1A	
	10.4”LCD unit (Shared LCD Unit (Ethernet))	1.1A	
	15”LCD unit	1.7A	
	Display unit for automotive	1.7A	
MDI units		0A	

NOTE

1 Each power capacity listed above does not include that of option boards or the DeviceNet card.
2 When connecting the RS-232C device which will draw power from the control unit, add the power capacity that the device requires to the listed power capacity.
3 Limit the total power consumption of memory cards and USB memories to within 2 W.
4 See Chapter 6 for the power capacity of the separate detector interface unit.
5 See Chapter 8 for the power capacity of I/O units.
6 Refer to the PANEL *i* Connection and Maintenance Manual (B-64223EN) for the power capacity of the PANEL *i*.
7 Selecting 24 VDC power supplies impose restrictions besides their power capacity. Be sure to read also Subsection 4.1.2.

© MyFANUC 195109AB01DC415385669AA015E5BDE5

⚠ **WARNING**

If the machine tool of interest has a vertical axis, it is necessary to select a 24 VDC power supply that can hold its output of 24 VDC for a prolonged time even after the AC input has been interrupted (including power failure and instantaneous power interruption) in order to keep a possible fall along the vertical axis within an acceptable range. The control unit deenergizes servo circuits if its 24 VDC input falls to 21.6 V or below. For this reason, failing to maintain the 24 VDC input to the control unit for a satisfactory period after the AC input has been interrupted may lead to a larger amount of fall along the vertical axis, depending on a peripheral circuit in use, because the servo for the vertical axis is deenergized before the peripheral circuit detects an AC input interruption and activates the brake. In general, selecting a 24 VDC power supply having a power capacity with a wide margin would prolong the hold time of the 24 VDC output after an AC input interruption.

© MyFANUC 195109AB01DC415385669AA015E5BDE5

4.2 TURNING ON AND OFF THE POWER TO THE CONTROL UNIT

4.2.1 Power-on Sequence

Turn on the power to all the units at the same time, or in the following sequence:

1 Power to the overall machine (AC input)
2 Servo amplifier control power supply (24VDC)
3 Power to the slave I/O units connected via the I/O Link or I/O Link *i*, the separate detector interface unit, and the display unit for stand-alone type control unit (24 VDC), power to the control unit (24 VDC), power to the separate detector (scale)

The expression "the same time" here means that the power to the units mentioned in Steps 1 and 2 above has been turned on at least within 500 ms after the 24 VDC power supply for the control unit mentioned in Step 3 above has been turned on. The power to each unit mentioned in Step 3 must have been turned on within a period between 200 ms before the 24 VDC power supply for the control unit is turned on and 500 ms after that time.

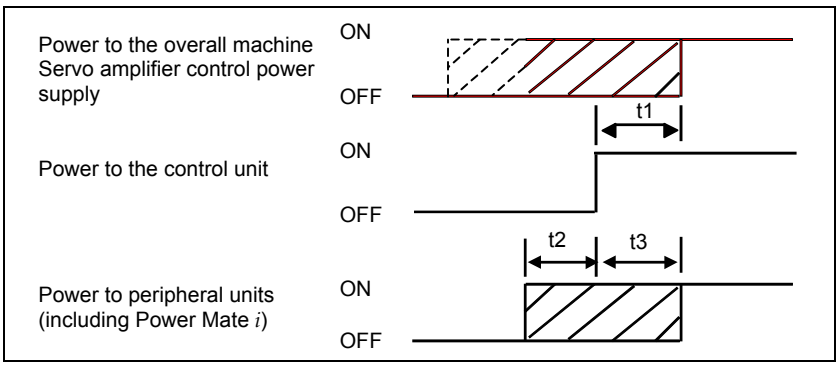

Fig. 4.2.1

t1:-500ms It is meant that the power to the overall machine and the servo amplifier control power are turned on at least within 500 ms after the control unit power has been turned on.

t2: 200ms It is meant that the power to peripheral units (including Power Mate *i*) is turned on not earlier than 200 ms before the control unit power is turned on.

t3:-500ms It is meant that the power to peripheral units (including Power Mate *i*) is turned on not earlier than 500 ms before the control unit power is turned on.

NOTE

Leave each of the memory backup battery (3 VDC) and separate absolute pulse coder battery (6 VDC) connected regardless of whether the control unit power is on or off. Removing these batteries with the control unit power turned off can corrupt parameters and programs in the control unit as well as position data in the pulse coder.
See Subsection 4.4.1 for explanations about how to replace the memory backup battery.
See Subsection 4.4.2 for explanations about how to replace the separate absolute pulse coder battery.

© MyFANUC 195109AB01DC415385669AA015E5BDE5

4.2.2 Power-off Sequence

Turn off the power to all the units at the same time, or in the following sequence:

4	Power to the slave I/O units connected via the I/O Link or I/O Link *i*, the separate detector interface unit, and the display unit for stand-alone type control unit (24 VDC), power to the control unit (24 VDC)
5	Servo amplifier control power supply (24 VDC), power to the separate detector (scale)
6	Power to the overall machine (AC input)

The expression "the same time" here means that there is no problem even if the power to the units mentioned in Steps 5 and 6 above is turned off not earlier than 500 ms before the power to the control unit mentioned in Step 4 above is turned off. If the power to the units mentioned in Steps 5 and 6 is turned off earlier, alarm information is left in the control unit. In addition, the power to each peripheral unit mentioned in Step 4 above must be turned off not earlier than 500 ms before the power to the control unit is turned off. Otherwise, alarm information is left in the control unit.

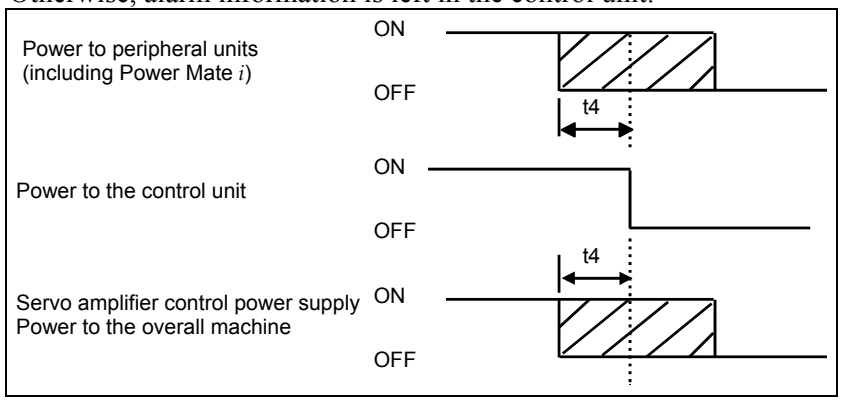

Fig. 4.2.2

t4:500ms It is meant that the power of interest is turned off not earlier than 500 ms before the power to the control unit is turned off.

> ⚠ **CAUTION**
> The power to the control unit cannot be turned on or off with peripheral units supplied with power.
> Before turning off the power to the control unit, be sure to turn off the power to the units (such as slave I/O units connected via the I/O Link *i* or I/O Link, the I/O Link *i*, I/O Link-equipped β*i* series servo amplifier, Power Mate *i*, separate detector I/F units, display units for stand-alone type control unit, servo amplifier control power, and separate detectors (scale)) connected to the control unit.

© MyFANUC 195109AB01DC415385669AA015E5BDE5

⚠ **WARNING**

It is impossible for the control side to control motors if the power supply is off or there is no AC input (including power failure). It is necessary for the machine side to perform any necessary processing.

If the control unit is used to control a vertical axis, for example, provide the motor with a brake mechanism to prevent a fall along the vertical axis. The brake should be controlled in such a way that the motor is clamped when the servo has not be started or when the motor is not supposed to rotate and unclamped only when it is supposed to rotate. It is common practice to clamp servo motors when the servo axes cannot be controlled because of the power supply being off or of a power failure. Even with this common practice, a fall may occur along a controlled axis before the relay works. So, it is necessary to examine whether the fall distance poses any problem.

Power-off: Before turning off the control unit power, be sure to apply the brake to clamp the motor.

Power failure: On detecting a power failure, apply the brake quickly.
Turning off the control unit power results in the servo being deenergized. So, select a 24 VDC power supply that can maintain its 24 VDC output for a prolonged time after an AC input interruption.

© MyFANUC 195109AB01DC415385669AA015E5BDE5

4.3 CABLE FOR POWER SUPPLY TO CONTROL UNIT

Supply the power to the control unit from a 24 VDC power supply.

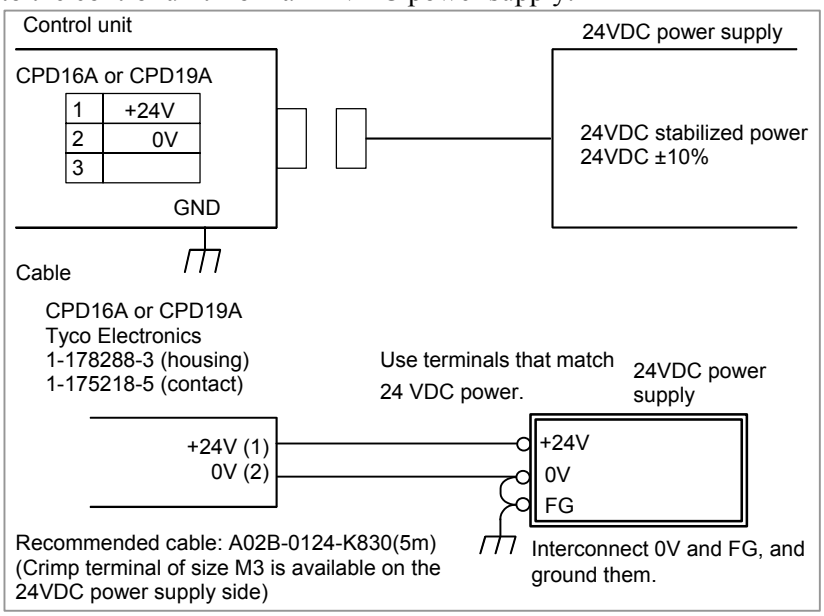

In the stand-alone type control unit, a voltage of 24 VDC once input to CPD19A can be branched out from CPD19B. The terminal arrangement of CPD19B is shown below. With this configuration, it is necessary for the 24 VDC power supply to supply as much current to CPD19A as the total of that required by the control unit and that required by external devices connected to CPD19B. The current-carrying capacity of CPD19B is 1.0 A.

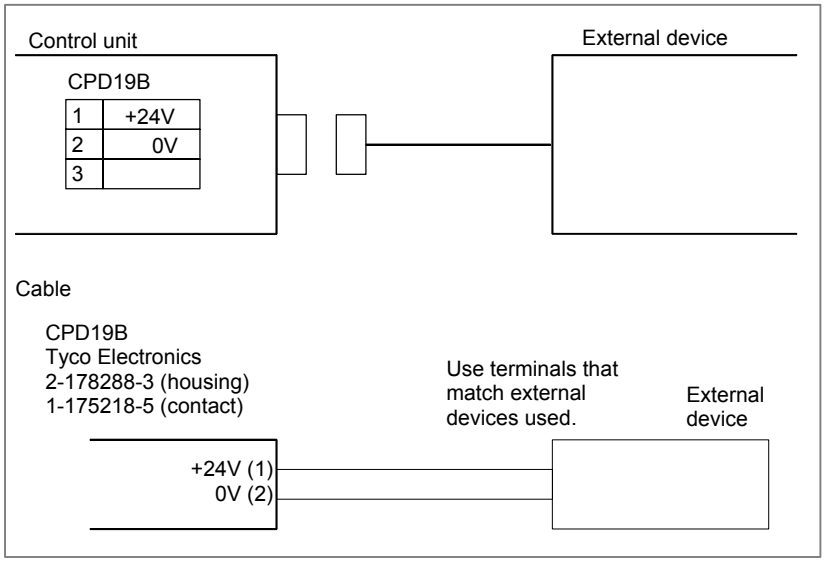

4.4 BATTERIES

A system using this control unit uses batteries in the places listed below. Refer to the FANUC PANEL *i* Connection and Maintenance Manual (B-64223EN) for explanations about the batteries used for the PANEL *i*. Used batteries must be discarded according to appropriate local ordinances or rules. When discarding batteries, insulate them by using tape and so forth to prevent the battery terminals from short-circuiting.

© MyFANUC 195109AB01DC415385669AA015E5BDE5

Use	Component connected to battery
Memory backup in the control unit	Control unit
Preservation of the current position indicated by the separate absolute pulse coder	Separate detector interface unit
Preservation of the current position indicated by the absolute pulse coder built into the motor	Servo amplifier

4.4.1 Battery for Memory Backup in the Control Unit (3 VDC)

Offset data, and system parameters are stored in SRAM in the control unit. The SRAM power is backed up with the memory backup batteries held in the control unit.
When the voltage of the battery becomes low, alarm message "BAT" blinks on the LCD screen and the battery alarm signal is output to the PMC. Upon the alarm, replace the battery as soon as possible. The rough standard for the replacement limit is one week. However, how long the battery lasts after the alarm varies, depending on the system configuration of interest.
If the voltage of the battery becomes any lower, memory can no longer be backed up. Turning on the power to the control unit in this state causes system alarm to occur because the contents of memory are lost. Clear the entire memory and reenter data after replacing the battery.
FANUC thus recommends that the battery be replaced periodically, once a year, regardless of whether a battery alarm is issued.
The following two kinds of batteries can be used.

- Lithium battery built into the CNC control unit.
- Alkaline dry cell (size D) inserted in an external battery case attached to the control unit.

NOTE
Before shipped from FANUC, the control unit is equipped with a lithium battery set as default. With this lithium battery, memory contents can be preserved for one year.

4.4.1.1 Replacing the lithium battery

For LCD-mounted type control unit

Prepare a new lithium battery (ordering code: A02B-0323-K102).

(1) Turn on the power to the machine (control unit). After about 30 seconds, turn off the power.
(2) Take out the lithium battery from the rear of the control unit (by holding the latch of the lithium battery and pulling it up while unlatching the claw held in the case).

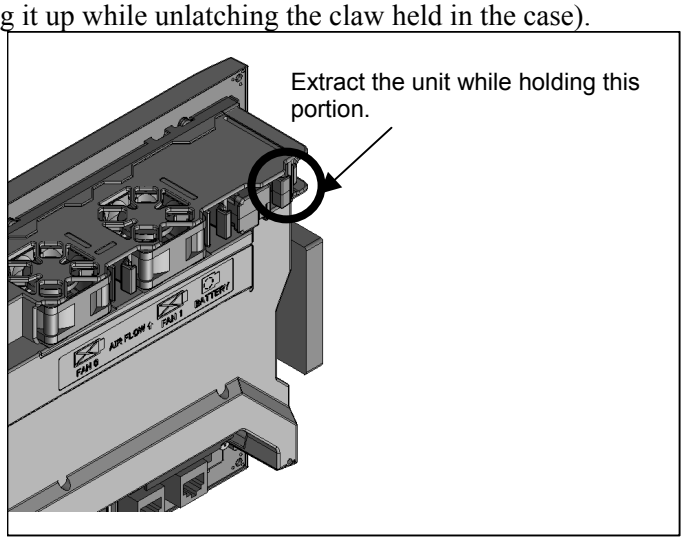

© MyFANUC 195109AB01DC415385669AA015E5BDE5

(3) Insert a new lithium battery, prepared in advance, into the battery case (by pushing it in until the claw of the lithium battery fits in the case). Make sure that the claw is latched securely.

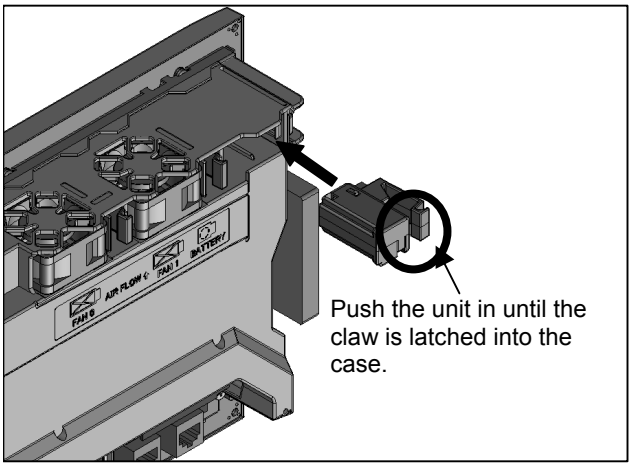

⚠ WARNING
It is likely that the lithium battery may explode unless it is replaced correctly.
Do not use any battery other than the specified one (A02B-0323-K102).

⚠ CAUTION
Steps (1) to (3) should be completed within 30 minutes.
Do not leave the control unit without a battery for any longer than the specified period. Otherwise, the contents of SRAM may be lost.
Before starting battery replacement, save the SRAM contents in a batch. They can be restored easily even if they are lost.
Refer to the Maintenance Manual (B-64575EN) for explanations about how to save and restore SRAM contents in a batch.

NOTE
Discard used batteries as “industrial waste” according to the rules and ordinances of the country where the machine is installed and of the local government that has jurisdiction over the location of the machine. When discarding them, insulate the battery terminals with tape or the like to protect them from short-circuiting.

For stand-alone type control unit

Prepare a new lithium battery (ordering code: A02B-0200-K102).

(1) Turn on the power to the machine (control unit). After about 30 seconds, turn off the power.

(2) Remove the lithium battery from top of the control unit.
First, pull the lithium battery cable to detach the connector. Then, take out the lithium battery from the battery case.
The battery case is on top of the main board face plate.

(3) After lithium battery replacement, attach the connector.

© MyFANUC 195109AB01DC415385669AA015E5BDE5

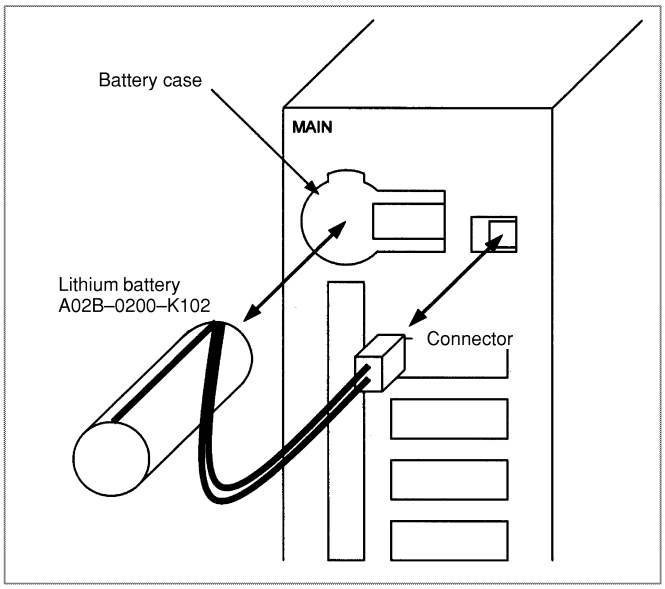

⚠ WARNING
It is likely that the lithium battery may explode unless it is replaced correctly.
Do not use any battery other than the specified one (A02B-0200-K102).

⚠ CAUTION
Steps (1) to (3) should be completed within 30 minutes.
Do not leave the control unit without a battery for any longer than the specified period. Otherwise, the contents of SRAM may be lost.
Before starting battery replacement, save the SRAM contents in a batch. They can be restored easily even if they are lost.
Refer to the Maintenance Manual (B-64575EN) for explanations about how to save and restore SRAM contents in a batch.

NOTE
Discard used batteries as “industrial waste” according to the rules and ordinances of the country where the machine is installed and of the local government that has jurisdiction over the location of the machine. When discarding them, insulate the battery terminals with tape or the like to protect them from short-circuiting.

4.4.1.2 Replacing commercially available alkaline dry cells (size D)

In place of the built-in lithium battery in the control unit, commercially available alkaline dry cells (size D) can be used by installing a battery case outside the control unit and inserting the dry cells in the case.

How to connect the battery case to the control unit

For the LCD-mounted type control unit, connect the battery cable (A02B-0323-K103) to the battery case (A02B-0236-C282). For the stand-alone type control unit, use the battery case (A02B-0236-C281), which comes with the battery cable attached.

© MyFANUC 195109AB01DC415385669AA015E5BDE5

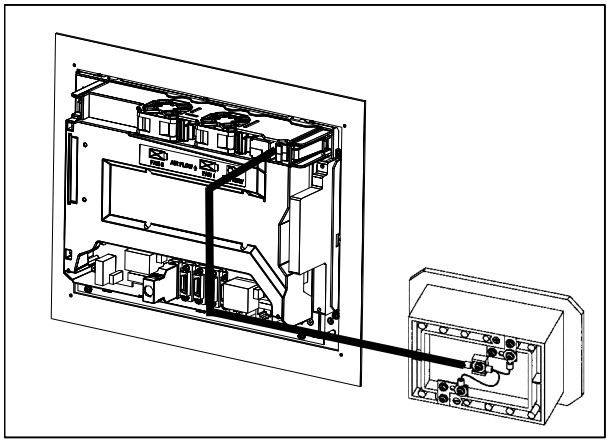

Example of connecting the battery case to the control unit (LCD-mounted type)

NOTE

1 The battery cable is engaged with its connector using a simple lock mechanism. Fasten the cable at a length of 500 mm or smaller measured from the connector with some slack so that the connector will not be disengaged due to the weight or tension of the cable.

2 Keep the battery cable away from any possible noise source, such as power wires.

Replacing the alkaline dry cells (size D)

(1) Prepare two new alkaline dry cells (size D).
(2) Turn on the power to the machine (control unit).
(3) Remove the battery case cover.
(4) Replace the batteries, paying careful attention to their orientation.
(5) Replace the battery case cover.

⚠ CAUTION

To replace the battery when the power is off, follow the same procedure as that for the replacement of a lithium battery, described above.

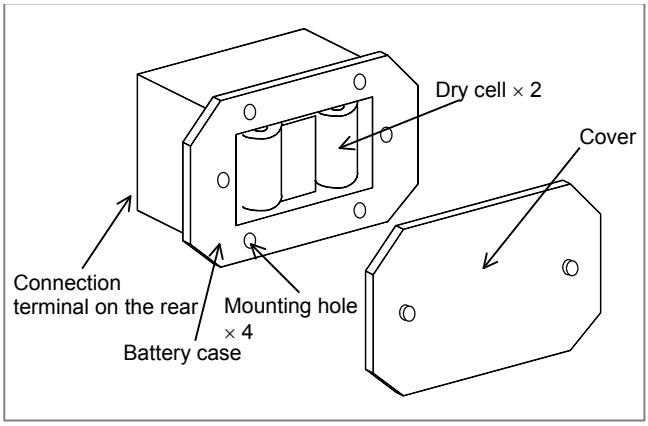

© MyFANUC 195109AB01DC415385669AA015E5BDE5

4.4.2 Battery for Separate Absolute Pulsecoders (6VDC)

- The absolute Pulsecoder uses a battery because it must hold data on absolute positions. When the voltage of the batteries for absolute Pulsecoders becomes low, alarm 307 or 306 occurs, with the following indication in the CNC state display at the bottom of the CNC screen.
  Alarm 308 (alarm 2 indicating the voltage of the battery becomes low) :
  The indication "APC" blinks in reversed display.
  Alarm 307 (alarm indicating the voltage of the battery becomes low) :
  The indication "APC" blinks in reversed display.
  Alarm 306 (battery zero alarm) :
  The indication "ALM" blinks in reversed display.
- When alarm 307 (alarm indicating the voltage of the battery becomes low) occurs, replace the battery as soon as possible. In general, the battery should be replaced within one or two weeks, however, this depends on the number of Pulsecoders used.
- When alarm 306 (battery zero alarm) occurs, Pulsecoders are reset to the initial state, in which absolute positions are not held. Alarm 300 (reference position return request alarm) also occurs, indicating that reference position return is required.
- In general, replace the batteries periodically within the service life listed below.
  - A06B-6050-K061 or D-size alkaline dry cells (LR20) : Two years (for each six-axis configuration)
  - A06B-6073-K001 : Two years (for each three-axis configuration)
  - A06B-6114-K504 : One year (for each three-axis configuration)

NOTE
The above values indicate the estimated service life of batteries used with FANUC absolute Pulsecoders. The actual battery service life depends on the machine configuration based on, for example, detector types. For details, contact the machine tool builder.

Replacing batteries

To prevent absolute position information in absolute Pulsecoders from being lost, turn on the machine power before replacing the battery. The replacement procedure is described below.

<1> Ensure that the power to the servo amplifier is turned on.
<2> Ensure that the machine is in the emergency stop state (the motor is inactive).
<3> Ensure that the DC link charge LED of the servo amplifier is off.
<4> Detach the old batteries and attach new ones.

© MyFANUC 195109AB01DC415385669AA015E5BDE5

⚠ **WARNING**

- The absolute Pulsecoder of each of the αi/αi S series servo motors and the βi S series servo motors (βi S0.4 to βi S22) has a built-in backup capacitor. Therefore, even when the power to the servo amplifier is off and the batteries are replaced, reference position return is not required if the replacement completes within less than 10 minutes. Turn the power on and replace the batteries if the replacement will take 10 minutes or more.
- To prevent electric shock, be careful not to touch metal parts in the power magnetics cabinet when replacing the batteries.
- Because the servo amplifier uses a large-capacitance electrolytic capacitor internally, the servo amplifier remains charged for a while even after the power is turned off. Before touching the servo amplifier for maintenance or other purposes, ensure your safety by measuring the residual voltage in the DC link with a tester and confirming that the charge indication LED (red) is off.
- Be sure to replace the batteries with specified ones. Pay attention to the battery polarity. If a wrong type of battery is used or a battery is installed with incorrect polarity, the battery may overheat, blow out, or catch fire, or the absolute position information in the absolute Pulsecoders may be lost.
- Ensure that the battery connector is inserted in the correct position.

How to insert batteries into the battery case

Use the following procedure to replace the batteries in the battery case.

<1> Loosen the screws on the battery case and detach the cover.
<2> Replace the batteries in the case (pay attention to the polarity).
<3> Attach the cover to the battery case.

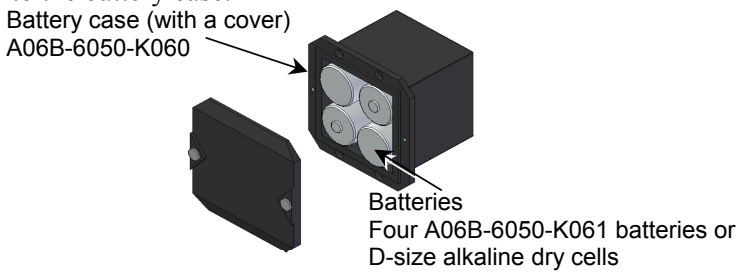

⚠ **CAUTION**

- Four D-size alkaline dry cells (LR20) that are commercially available can be used as batteries. A set of four A06B-6050-K061 batteries is optionally available from FANUC.
- Replace all the four batteries with new ones. If old and new batteries are mixed, the absolute position information in the absolute Pulsecoders may be lost.
- When connecting batteries, pay due attention to their polarity. If they are connected in reverse polarity, it is likely that they may get hot, explode, or catch fire. In addition, it is also likely that information on absolute positions may be lost from the absolute Pulsecoder.

4.4.3 Battery for Absolute Pulse Coder Built into the Motor (6VDC)

The battery for the absolute pulse coder built into the motor is installed in the servo amplifier. Explanations about how to connect and replace the battery, refer to the maintenance manual for the servo amplifier in use.

© MyFANUC 195109AB01DC415385669AA015E5BDE5

5 CONNECTION TO CNC PERIPHERALS

5.1 CONNECTION BETWEEN THE LCD-MOUNTED TYPE CONTROL UNIT AND MDI UNIT

5.1.1 Connection Diagram

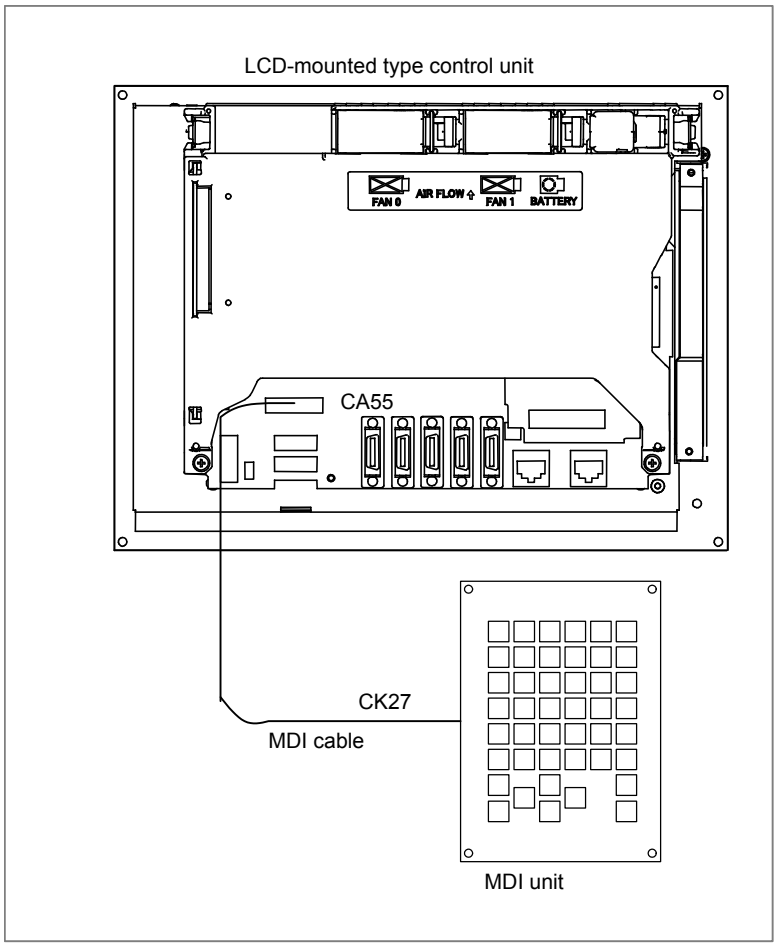

© MyFANUC 195109AB01DC415385669AA015E5BDE5

5.1.2 Connection with the MDI Unit

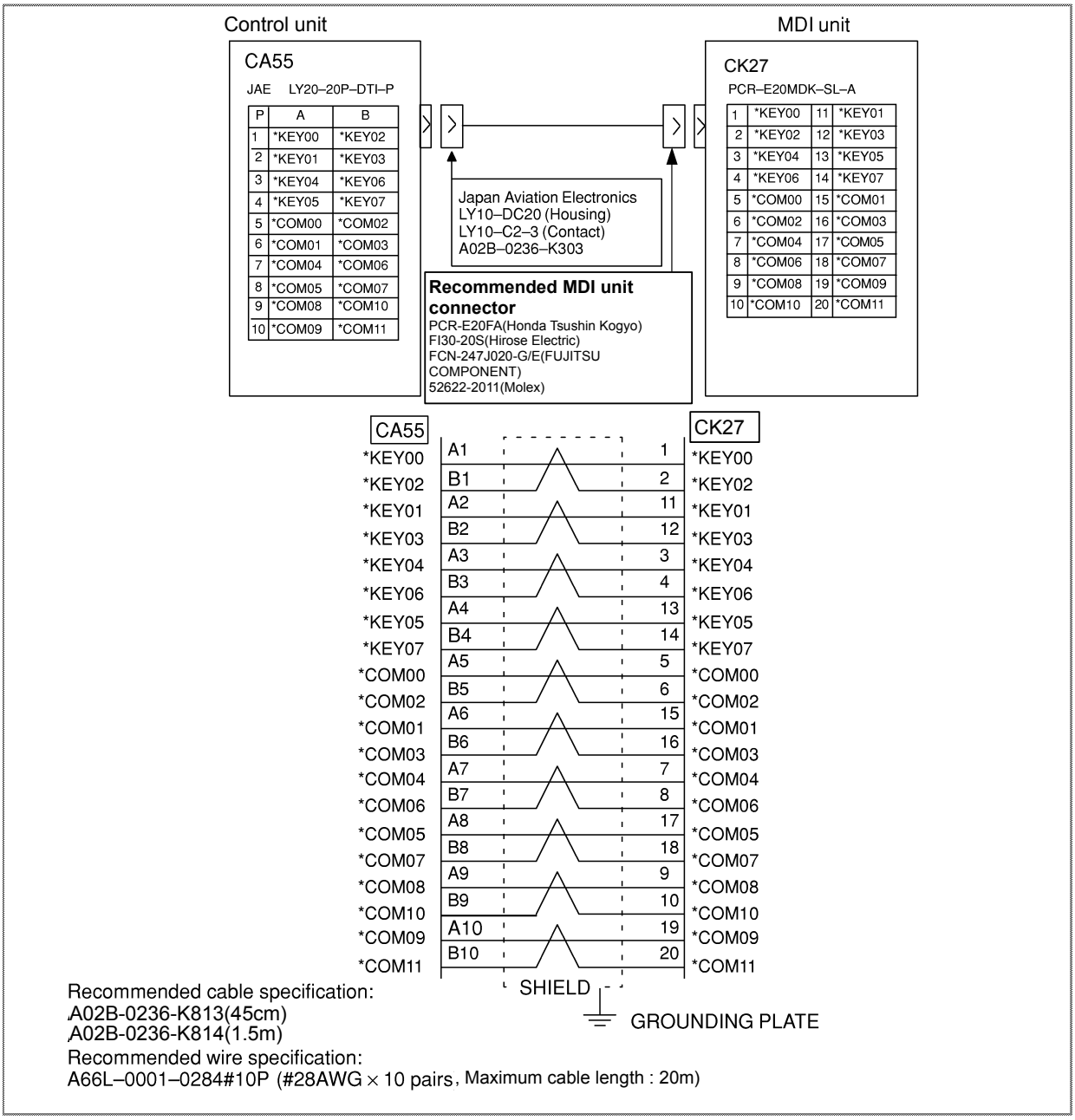

NOTE

For MDI cable connector mating on the CA55 side, a simple lock mechanism is employed. Ensure that a load greater than 1 kg is not applied to the connectors. Moreover, clamp the cable so that excessive force is not applied due to vibration. However, shielding and clamping are not required for a cable of up to 50 cm.

© MyFANUC 195109AB01DC415385669AA015E5BDE5

5.1.3 Key Layout of MDI Unit

- Standard MDI unit (ONG keys)

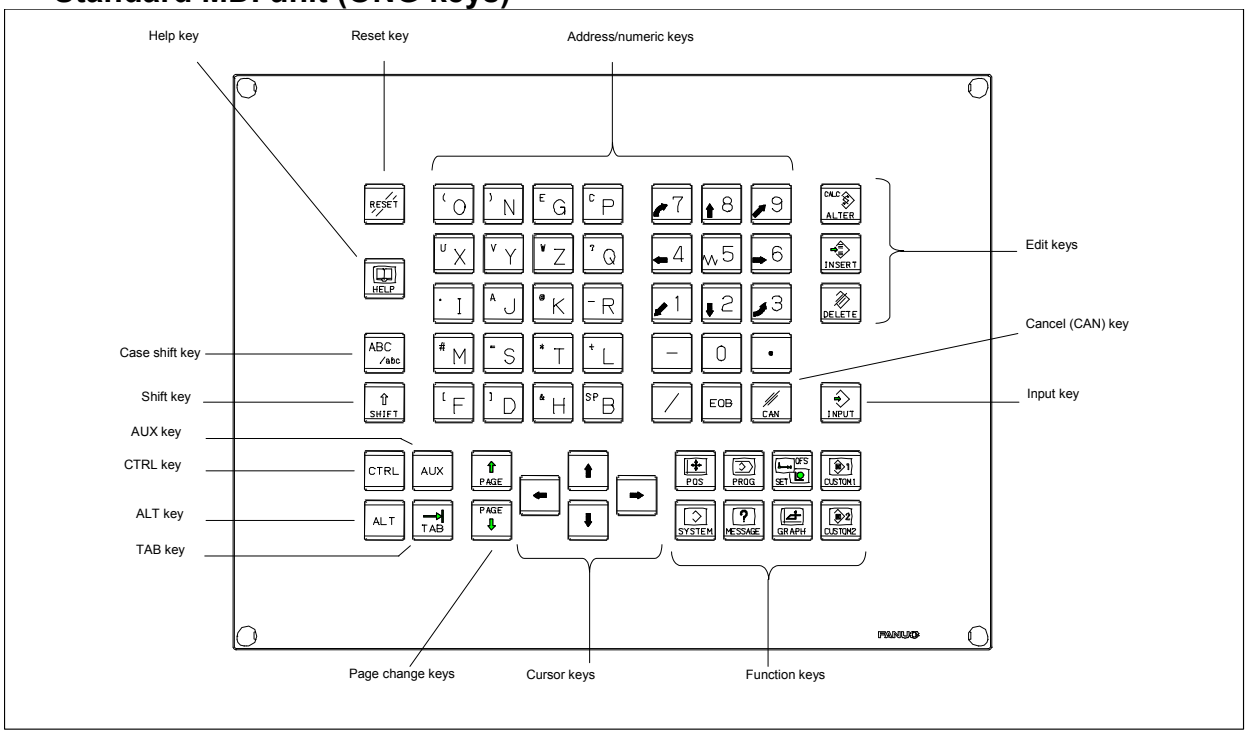

- Small MDI unit (ONG keys)

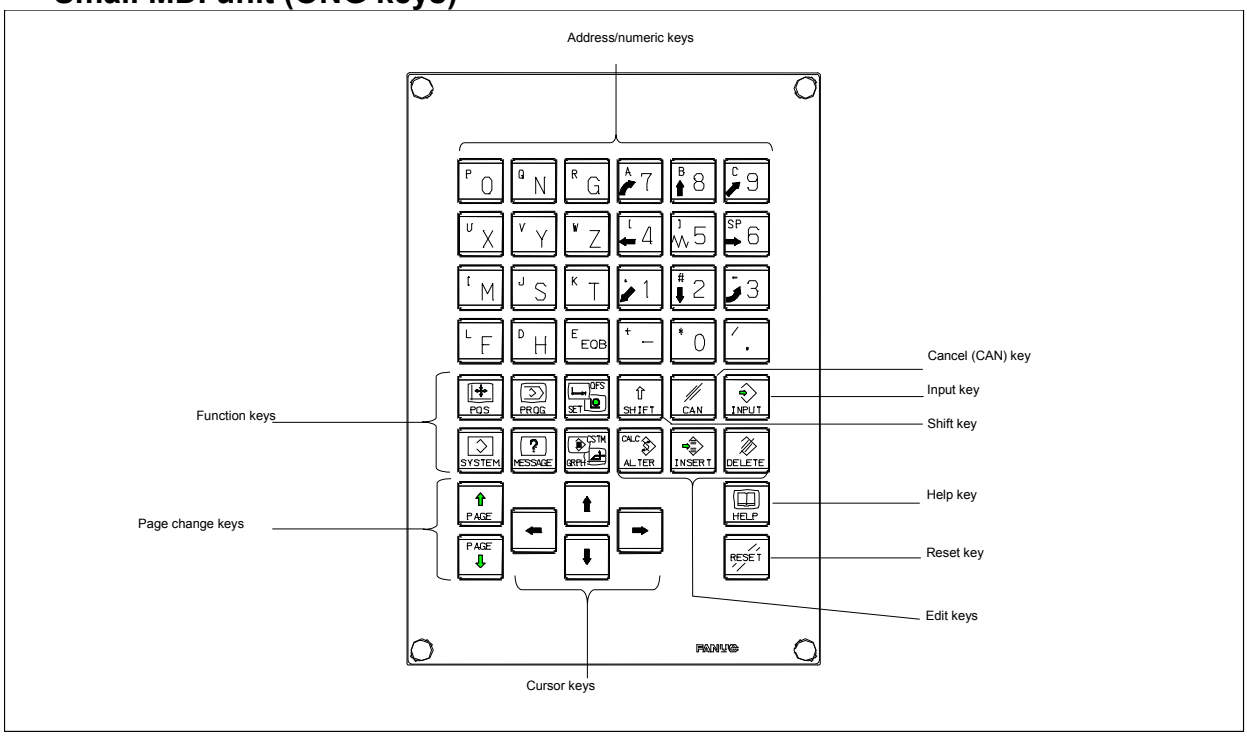

© MyFANUC 195109AB01DC415385669AA015E5BDE5

Common to lathe system / machining center system

- Standard MDI unit (QWERTY keys)

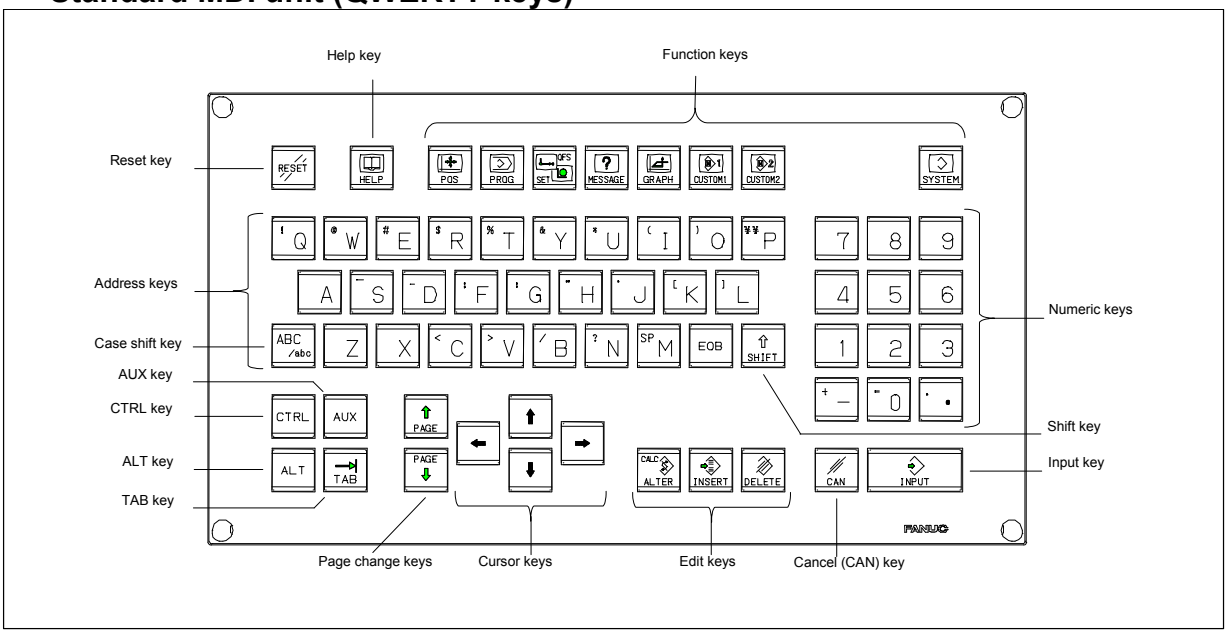

- Standard MDI unit (QWERTY type B keys)

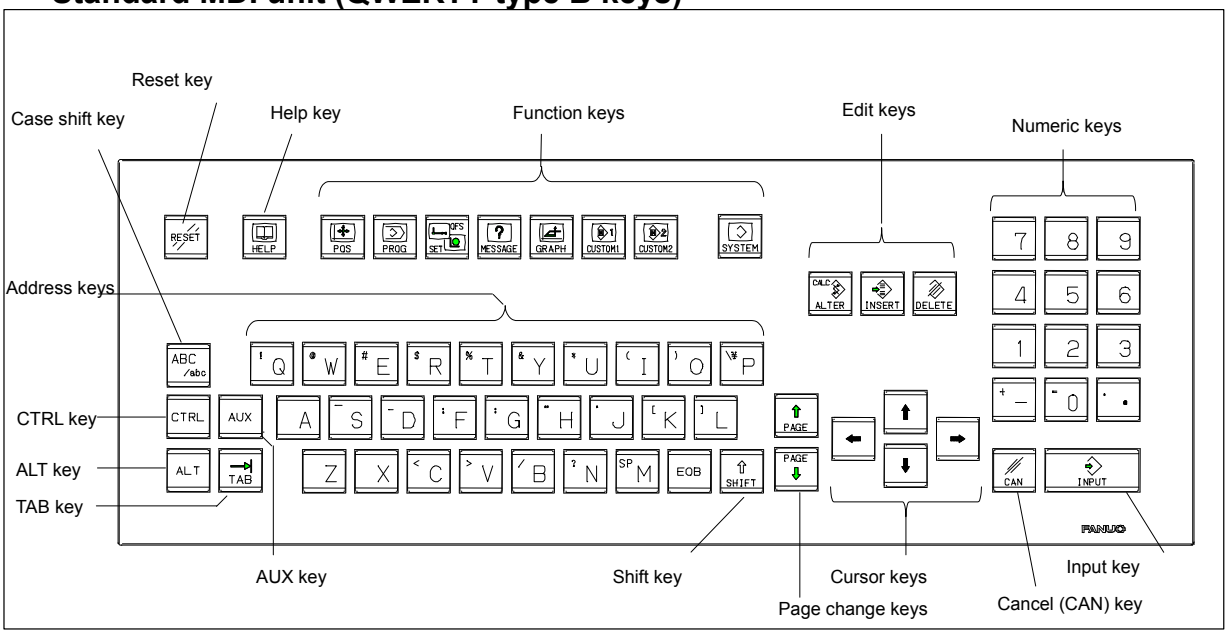

© MyFANUC 195109AB01DC415385669AA015E5BDE5

5.2 CONNECTION BETWEEN THE STAND-ALONE TYPE CONTROL UNIT AND DISPLAY UNIT AND BETWEEN THE DISPLAY UNIT AND MDI UNIT

5.2.1 Overview

This subsection describes connection between the stand-alone type control unit and display unit. It also describes connection between the display unit and MDI unit.

5.2.2 With the 10.4” Display Unit

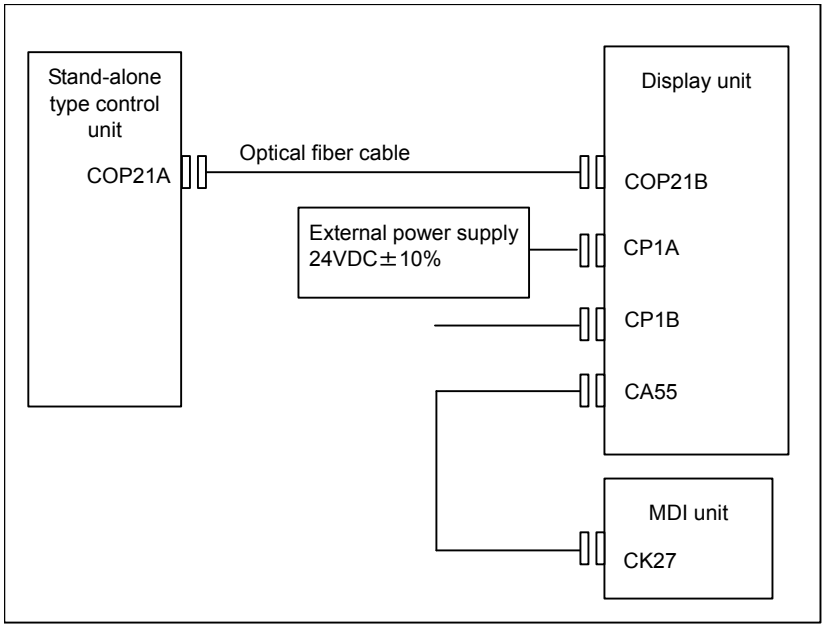

© MyFANUC 195109AB01DC415385669AA015E5BDE5

Connection to the control unit and power supply

An optical fiber cable is used to make the connection between the control unit and display unit.
For details of the optical fiber cable, see Appendix D.

Supply the power to the display unit from an external 24 VDC power supply.

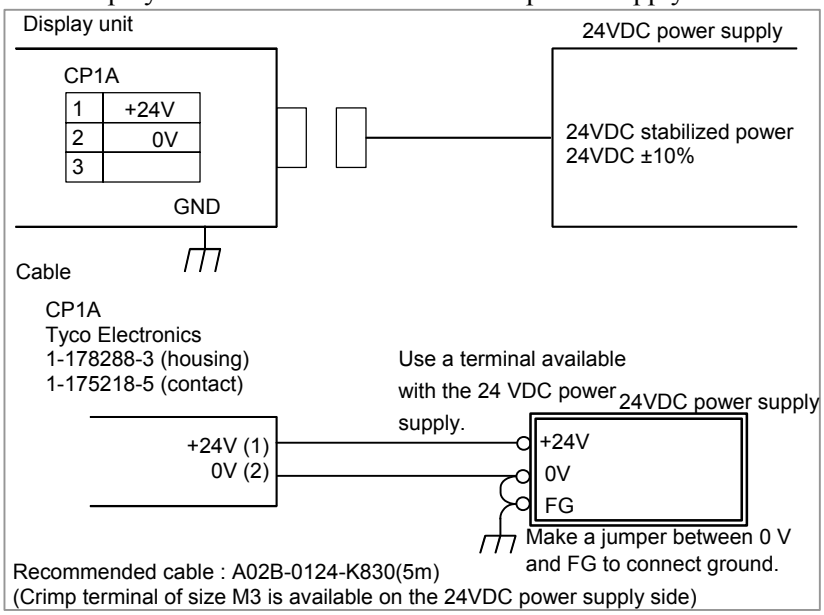

Part of the 24 VDC power input to CP1A can be taken out from CP1B by branching. CP1B connection is as shown below. In this case, the rating of the external 24 VDC power supplied to CP1A must be the sum of the power consumed within the display unit and that supplied to external equipment via CP1B. Up to 1.0 A can be supplied to the external equipment.

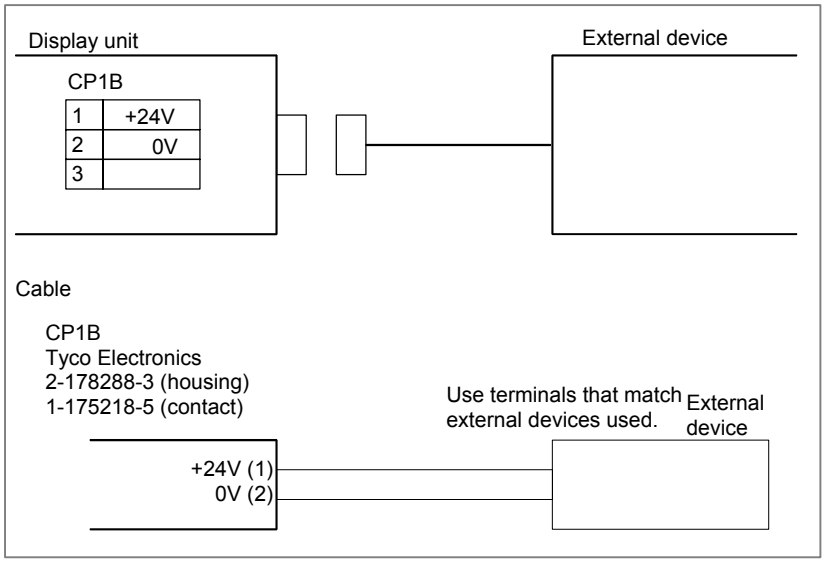

Connection to the MDI unit

For the connection between the connector (CA55) on the display unit and that (CK27) on the MDI unit, see Section 5.1, “Connection between the LCD-mounted Type Control Unit and MDI Unit”.
With the LCD-mounted type control unit, the connector (CA55) is located on the back of the control unit.
With the stand-alone type control unit, the connector is located on the back of the display unit.

© MyFANUC 195109AB01DC415385669AA015E5BDE5

5.2.3 With Two Display Units

5.2.3.1 Each connection

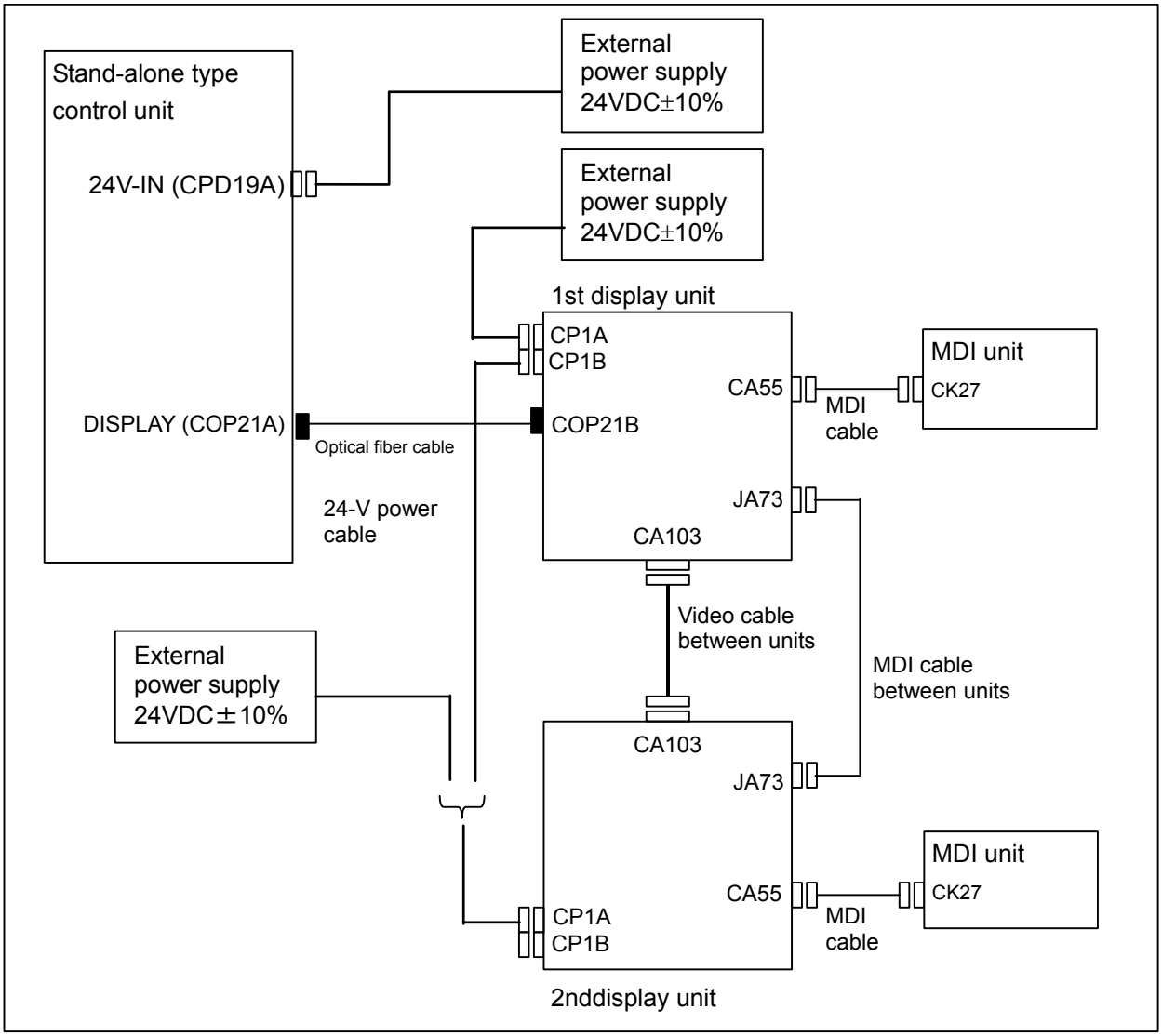

Connection to the control unit, between display units, and to the power supply

An optical fiber cable is used to make the connection between the control unit and 1st display unit. Video and MDI cables between units are used to make the connection between the 1st and 2nd display units. For details of the optical fiber cable, see Appendix D.

Connect cables between units as follows. The maximum length of a cable between the 1st and 2nd display units is 50 m.

© MyFANUC 195109AB01DC415385669AA015E5BDE5

Connection of the MDI cable between units

1st display unit

JA73
PCR-E20MDA

1	*KEY00	11	*KEY01
2	*KEY02	12	*KEY03
3	*KEY04	13	*KEY05
4	*KEY06	14	*KEY07
5	*COM00	15	*COM01
6	*COM02	16	*COM03
7	*COM04	17	*COM05
8	*COM06	18	*COM07
9	*COM08	19	*COM09
10	*COM10	20	*COM11

2nd display unit

JA73
PCR-E20MDA

1	*KEY00	11	*KEY01
2	*KEY02	12	*KEY03
3	*KEY04	13	*KEY05
4	*KEY06	14	*KEY07
5	*COM00	15	*COM01
6	*COM02	16	*COM03
7	*COM04	17	*COM05
8	*COM06	18	*COM07
9	*COM08	19	*COM09
10	*COM10	20	*COM11

Cable

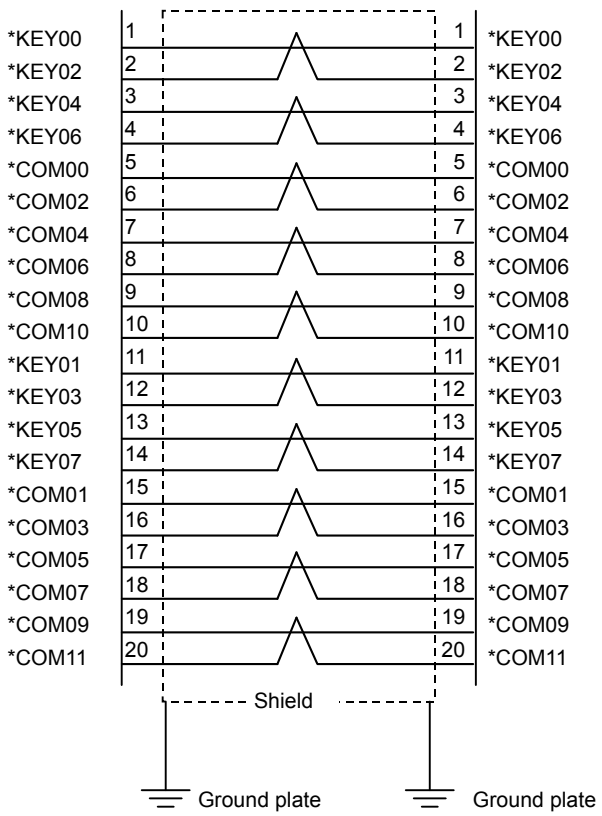

Ground the shield of the cable near each display unit.

Recommended cable:
A02B-0323-K865 (50m)
A02B-0303-K848 (30m)
A02B-0303-K845 (20m)
A02B-0303-K846 (10m)
A02B-0303-K847 (5m)

Recommended cable–side connectors (JA73):
PCR-E20FA (Honda Tsushin Kogyo Co., Ltd.)
FI30-20S (Hirose Electric Co., Ltd.)

Recommended wire specification:
A66L-0001-0284#10P(#28AWG × 10 pairs, maximum cable length: 50m)

© MyFANUC 195109AB01DC415385669AA015E5BDE5

Connection of the video cable between units

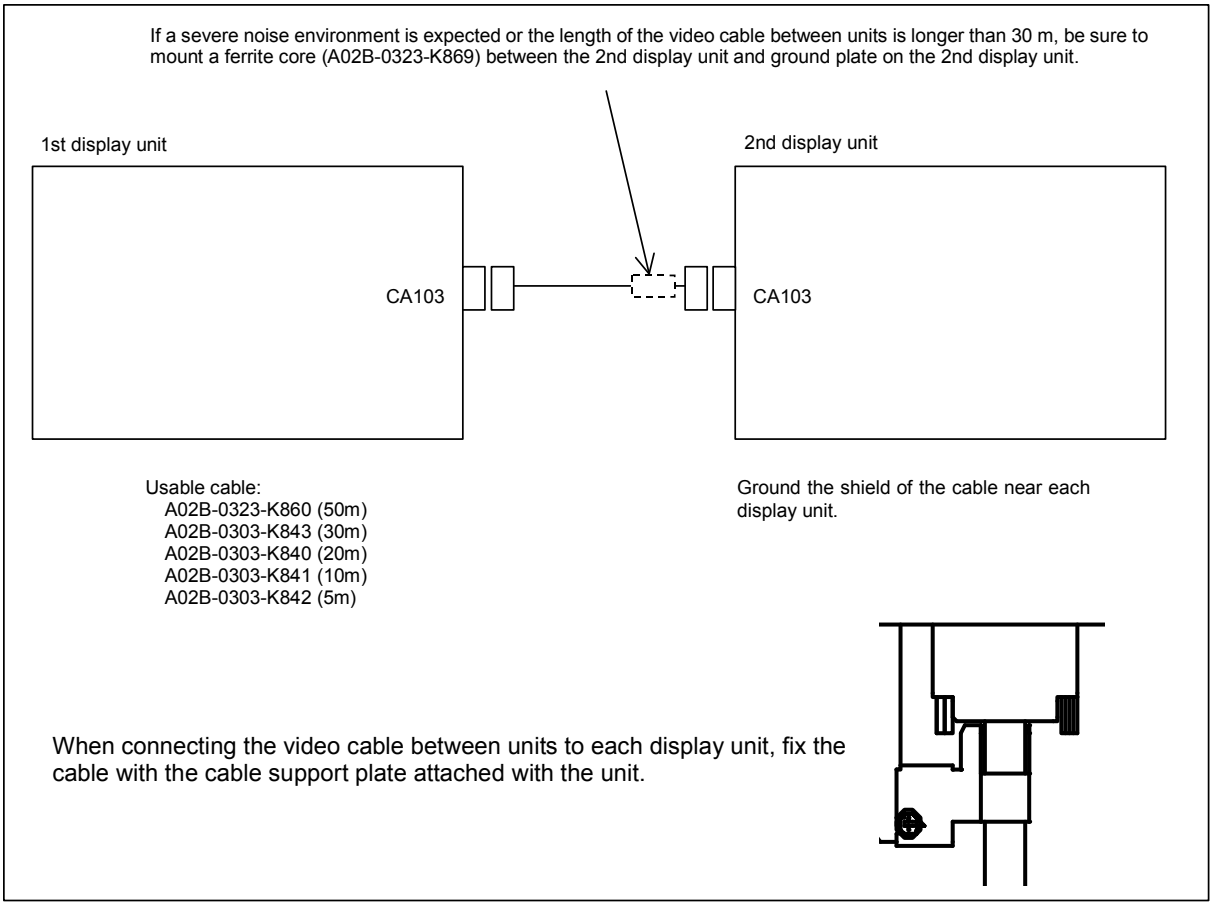

Supply the power to the display unit from an external 24 VDC power supply.

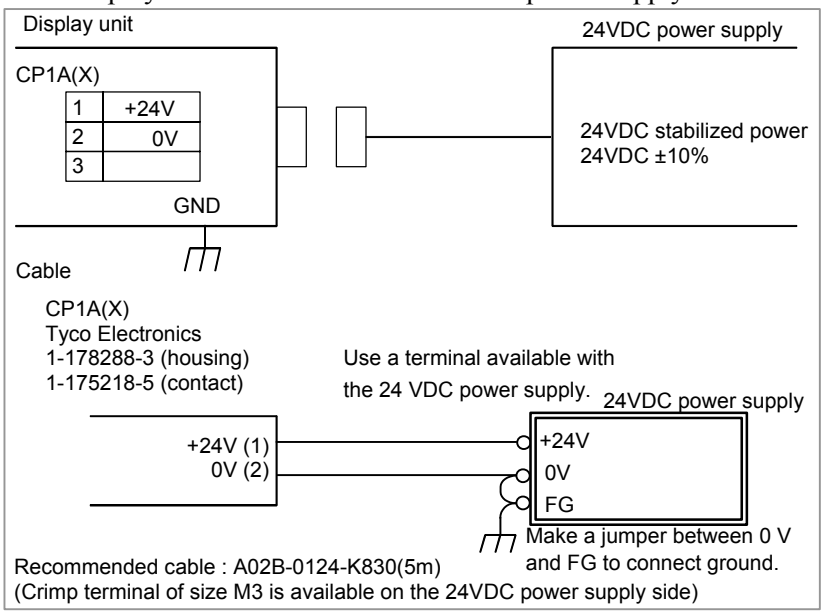

To share a power supply between the 1st and 2nd display units, see the figure below.

© MyFANUC 195109AB01DC415385669AA015E5BDE5

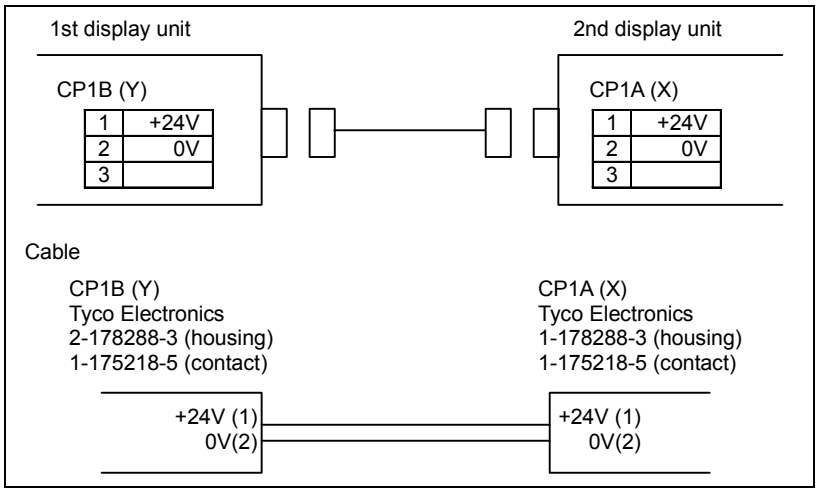

NOTE
For power-on and -off timing, see Section 4.2, “TURNING ON AND OFF THE POWER TO THE CONTROL UNIT”.
Make connection so that 24 VDC ±10% power is also supplied to the 2nd display unit in the same way as for the 1st display unit.

Connection to the MDI unit

For the connection between the connector (CA55) on the display unit and that (CK27) on the MDI unit, see Section 5.1, “Connection between the LCD-mounted Type Control Unit and MDI Unit”.
With the LCD-mounted type control unit, the connector (CA55) is located on the back of the control unit.
With the stand-alone type control unit, the connector is located on the back of the display unit.

NOTE
Be sure to use two MDI units of the same type when required.

5.2.3.2 Installing the display unit

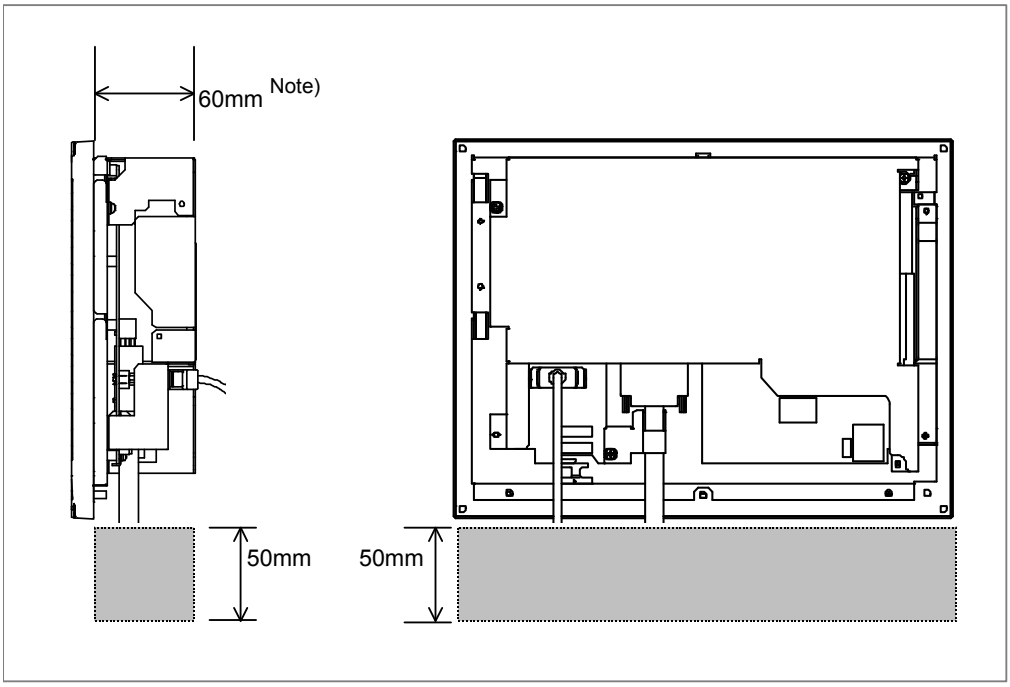

© MyFANUC 195109AB01DC415385669AA015E5BDE5

NOTE

100 mm (max) when the connector of the MDI cable between units is spring-fixed or 60 mm (max) when it is screw-fixed.

© MyFANUC 195109AB01DC415385669AA015E5BDE5

5.2.4 With the 15” Display Unit

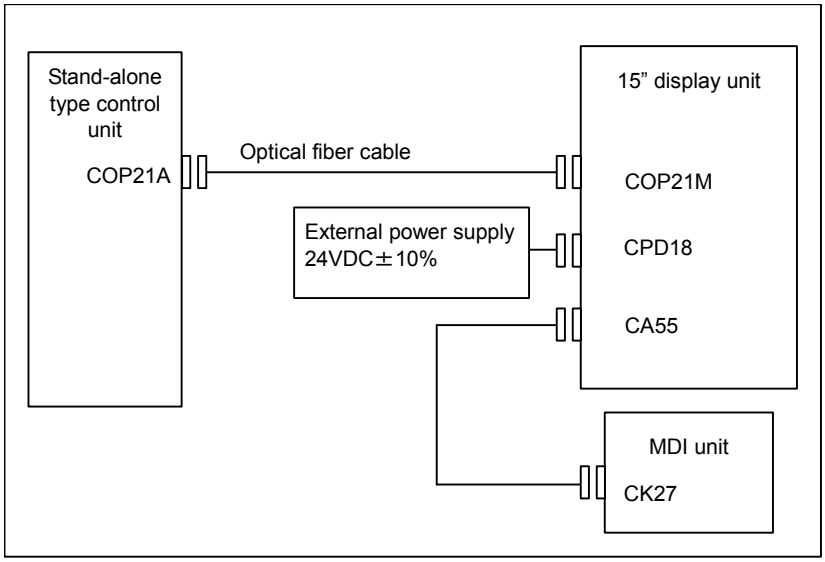

Connection to the control unit and power supply

An optical fiber cable is used to make the connection between the control unit and display unit.
For details of the optical fiber cable, see Appendix D.
Supply the power to the display unit from an external 24 VDC power supply.

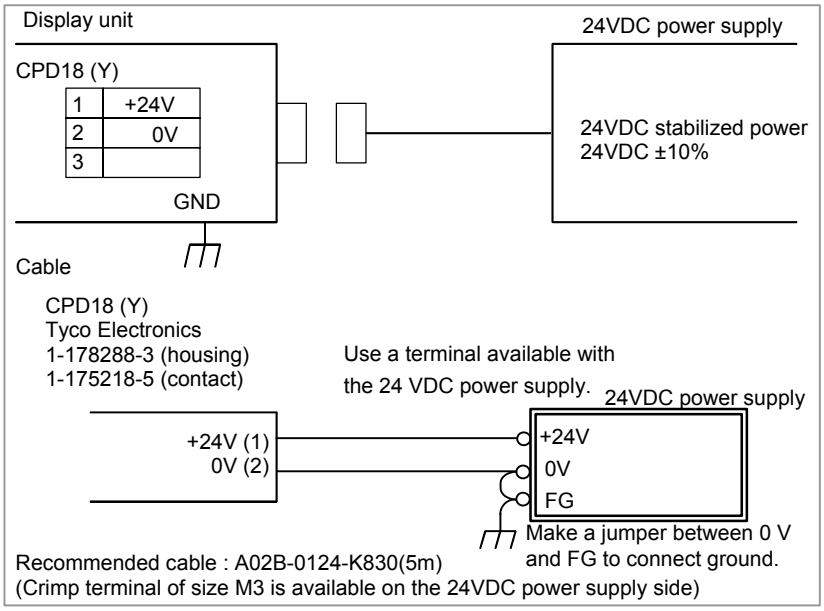

Connection to the MDI unit

For the connection between the connector (CA55) on the display unit and that (CK27) on the MDI unit, see Section 5.1, “Connection between the LCD-mounted Type Control Unit and MDI Unit”.
With the LCD-mounted type control unit, the connector (CA55) is located on the back of the control unit.
With the stand-alone type control unit, the connector is located on the back of the display unit.

Installing the display unit

Refer to the section 3.5.1.

© MyFANUC 195109AB01DC415385669AA015E5BDE5

5.3 CONNECTION WITH INPUT/OUTPUT DEVICES

5.3.1 Overview

An input/output device is used to enter information such as control unit programs and parameters from an external device to the control unit, or to output information from the control unit to an external device.
The input/output devices usable with this control unit include Handy File.
The interface of the input/output devices electrically conforms to RS232-C, so that a connection can be made with a device that has an RS232-C interface.
The tables below indicate the serial ports of this control unit.

Port name	Interface location	
1CH (JD56A)	Main control unit	
2CH (JD36A)	Main control unit	Note

The serial ports of the 15” LCD-mounted type control unit are as listed in the table below, however.

Port name	Interface location	
1CH (JD56A)	Main control unit	
2CH (JD54)	Main control unit	Note

NOTE
When a touch panel is used, this serial port is used for touch panel communication on the control unit side, so that this port cannot be used as a general-purpose port.

5.3.2 Connecting I/O Devices

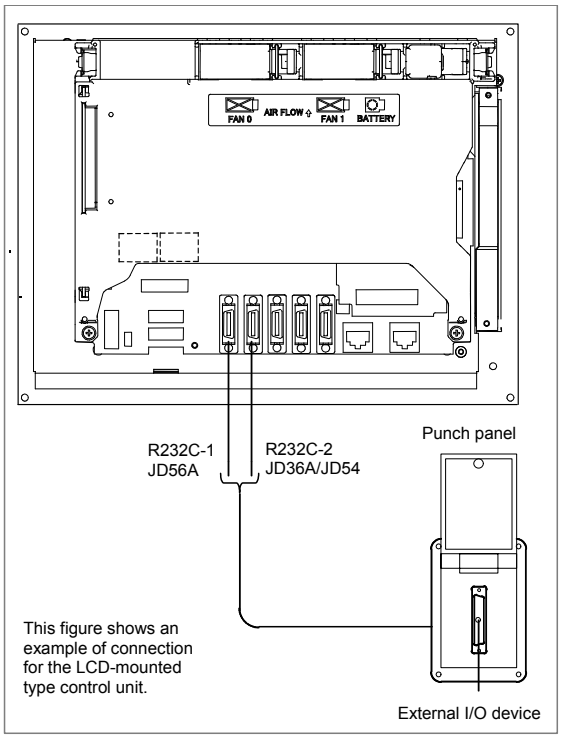

© MyFANUC 195109AB01DC415385669AA015E5BDE5

NOTE

This interface is the RS232-C interface on the control unit side.
For these devices, the RS232-C interface on the control unit is used for the following cases:

- Ladder monitoring, storing, or loading using FANUC LADDER III
- DNC operation via RS232-C, external I/O device control
- Input/output of parameters and programs by using the control unit screen display function

5.3.3 RS232-C Serial Port

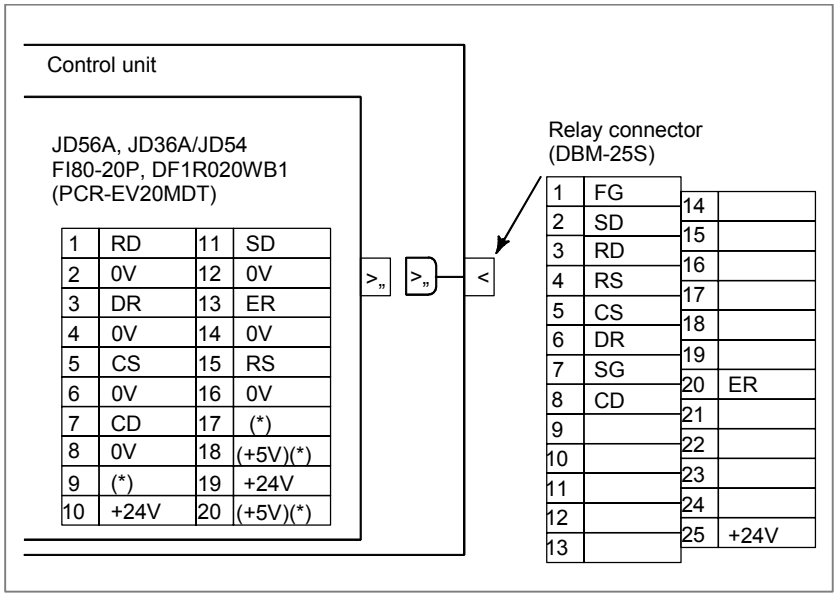

NOTE

1 Do not connect anything to those pins for which signal names are not indicated.
2 Pins 18 and 20 (+5V) are provided for touch channel connection.
3 The upper manufacturer and model on the control unit side are for the LCD-mounted type.
The lower manufacturer and model in parentheses are for the stand-alone type.
4 Do not connect anything to pins 6 and 8 of JD54 on the 15” LCD-mounted type control unit because these signals are reserved.

© MyFANUC 195109AB01DC415385669AA015E5BDE5

CABLE CONNECTION

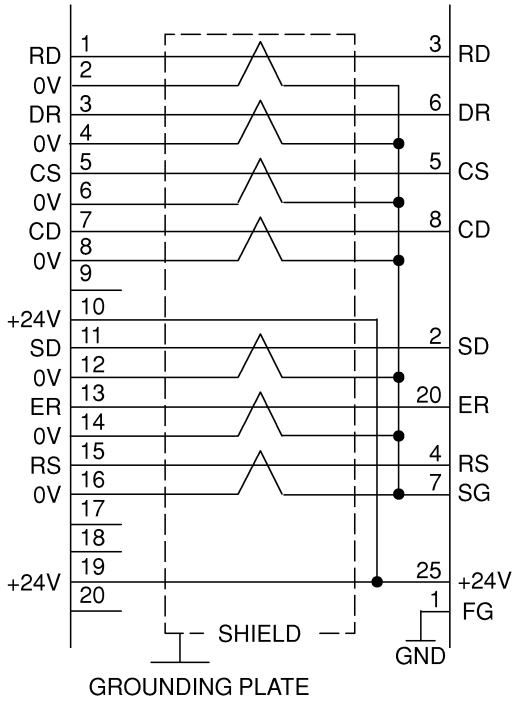

RECOMMENDED CABLE SPECIFICATION
A66L–0001–0284#10P (#28AWG × 10 pairs)
RECOMMENDED CABLE–SIDE CONNECTORS
(JD36A, JD56A)
PCR–E20FA (Honda Tsushin Kogyo Co., Ltd.)
FI30–20S (Hirose Electric Co., Ltd.)
FCN–247J020–G/E (FUJITSU COMPONENT)
52622–2011 (Molex Japan Co., Ltd.)

RECOMMENDED CABLE SPECIFICATION (PUNCH PANEL)
For LCD-mounted type
<Narrow width type>
A02B–0236–C191 (1 m)
A02B–0236–C192 (2 m)
A02B–0236–C193 (5 m)

RECOMMENDED CABLE SPECIFICATION (PUNCH PANEL)
For stand-alone type
<Narrow width type>
A02B–0120–C191 (1 m)
A02B–0120–C192 (2 m)
A02B–0120–C193 (5 m)

NOTE
1 Do not connect anything to those pins for which signal names are not indicated.
2 Recommended cable-side connector FI30-20S (manufactured by Hirose Electric) cannot be used for the stand-alone type.

© MyFANUC 195109AB01DC415385669AA015E5BDE5

5.3.4 RS232-C Interface Specification

RS232-C Interface signals

Generally signals as follows are used in RS232-C interface.

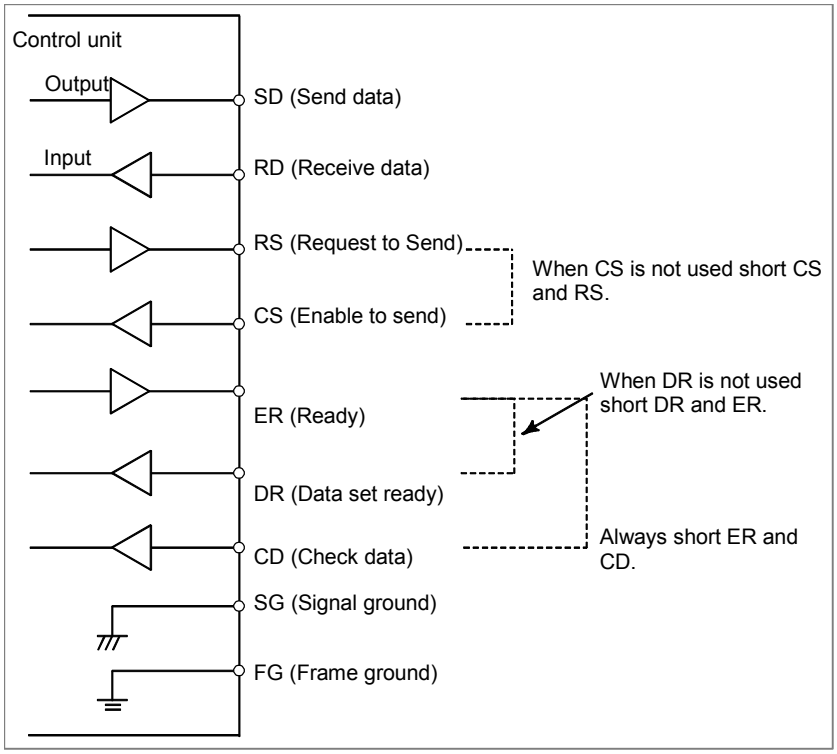

Fig. 5.3.4 RS232-C interface

Signal description of RS232-C interface

Signal	I/O	Description	
SD	Output	Sending data	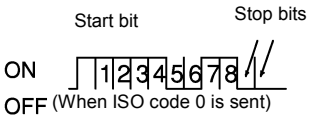
RD	Input	Receiving data	
RS	Output	Sending request	This signal is set to on when control unit starts sending data and is turned off when transmission ends.
CS	Input	Sending permitted	When both this signal and the DR signal are set, the control unit can send data. If I/O device processing is delayed by a punching operation, etc., control unit data sending can be stopped by turning off this signal after sending two characters, including the data being sent currently. If this signal will not be used, make sure to strap this signal circuit to the RS signal circuit.
DR	Input	Data set ready	When I/O device is ready to operate, this signal is set. This signal should usually be connected to the signal indicating I/O device power supply being on. (ER signal (Note) of I/O device). See Note below. The control unit transfers data when this signal is set. If the signals turned off during data transfer, alarm 086 is issued. If the DR signal will not be used, make sure to strap this signal circuit to the ER signal circuit.
ER	Output	Control unit ready to operation	This signal is set when the control unit is ready to operate. External device should regard the SD signal as being significant when the ER signal is set.
CD	Input	Signal Condition	Since this signal is not used in connections with I/O device, the signal circuit must be strapped, inside the connecting cable, to the ER signal circuit.
SG		Signal grounding	
FG		Frame grounding	

© MyFANUC 195109AB01DC415385669AA015E5BDE5

NOTE

Signal on/off state is defined as follows;

	-3V or lower	+3V or higher
Function	OFF	ON
Signal Condition	Marking	Spacing

Transmission Method of RS232-C interface

- Start-stop

Generally, two transmission methods are available at the serial interface. This control unit uses the start-stop method.

NOTE

Start-stop method:

With this method, start and stop signals are output before and after each data bit.

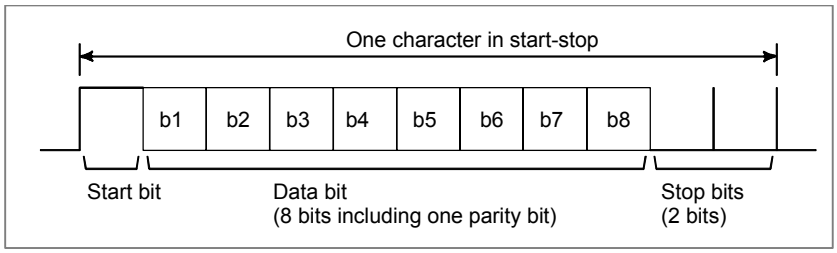

- Codes

Transmission codes are as follows:

(1) EIA code and Control codes DC1 to DC4.

(2) ISO code and Control codes DC1 to DC4 (Optional ISO code input is necessary.)

The connected I/O device must be able to recognize the following control codes, sent from control unit.

Control code		8	7	6	5	4		3	2	1
DC1	Tape reader start				○		○			○
DC2	Tape punch designation				○		○		○	
DC3	Tape reader stop	○			○		○		○	○
DC4	Tape punch release				○		○	○		

NOTE

The listed control codes are used for both EIA and ISO.

In this interface, control codes DC1 to DC4 are used.

(a) Control unit can control I/O device by issuing codes DC1 to DC4.

(b) If processing is delayed at the I/O device (when the control unit outputs data)

(i) External device can temporarily stop control unit data output by using the control unit's CS signal. Data output stops within two characters including a currently transmitting character when CS OFF signal is input to control unit. When CS signal is turned on again, data transmission start.

(ii) If control code DC3 is input to control unit, control unit stops data output within ten characters. When control code DC1 is input to control unit, control unit starts sending data again.

© MyFANUC 195109AB01DC415385669AA015E5BDE5

(c) When the external device is equipped with an ISO/EIA converter, the external device must satisfy the specification shown in Table 5.3.4.

Table 5.3.4

ISO code										EIA code										Remarks
Character	8	7	6	5	4		3	2	1	Character	8	7	6	5	4		3	2	1	
0			○	○		●				0			○			●				Number 0
1	○		○	○		●			○	1						●			○	Number 1
2	○		○	○		●		○		2						●		○		Number 2
3			○	○		●		○	○	3				○		●		○	○	Number 3
4	○		○	○		●	○			4						●	○			Number 4
5			○	○		●	○		○	5				○		●	○		○	Number 5
6			○	○		●	○	○		6				○		●	○	○		Number 6
7	○		○	○		●	○	○	○	7						●	○	○	○	Number 7
8	○		○	○	○	●				8					○	●				Number 8
9			○	○	○	●			○	9				○	○	●			○	Number 9
A		○				●			○	a		○	○			●			○	Address A
B		○				●		○		b		○	○			●		○		? Address B
C	○	○				●		○	○	c		○	○	○		●		○	○	Address C
D		○				●	○			d		○	○			●	○			? Address D
E	○	○				●	○		○	e		○	○	○		●	○		○	? Address E
F	○	○				●	○	○		f		○	○	○		●	○	○		Address F
G		○				●	○	○	○	g		○	○	○		●	○	○	○	Address G
H		○			○	●				h		○	○		○	●				Address H
I	○	○			○	●			○	i		○	○	○	○	●			○	Address I
J	○	○			○	●		○		j		○		○		●		○	○	? Address J
K		○			○	●		○	○	k		○		○		●		○		Address K
L	○	○			○	●	○			l		○				●		○	○	? Address L
M		○			○	●	○		○	m		○		○		●	○			Address M
N		○			○	●	○	○		n		○				●	○		○	Address N
O	○	○			○	●	○	○	○	o		○				●	○	○		Address O
P		○		○		●				p		○		○		●	○	○	○	Address P
Q	○	○		○		●			○	q		○		○	○	●				Address Q
R	○	○		○		●		○		r		○			○	●			○	Address R
S		○		○		●		○	○	s			○	○		●		○		Address S
T	○	○		○		●	○			t			○			●		○	○	Address T
U		○		○		●	○		○	u			○	○		●	○			Address U
V		○		○		●	○	○		v			○			●	○		○	? Address V
W	○	○		○		●	○	○	○	w			○			●	○	○		Address W
X	○	○		○	○	●				x			○	○		●	○	○	○	Address X
Y		○		○	○	●			○	y			○	○	○	●				? Address Y
Z		○		○	○	●		○		z			○		○	●			○	Address Z
DEL	○	○	○	○	○	●	○	○	○	Del		○	○	○	○	●	○	○	○	*
NUL						●				Blank						●				*
BS	○				○	●				BS			○		○	●		○		*
HT					○	●			○	Tab			○	○	○	●	○	○		*
LF or NL					○	●		○		CR or EOB	○					●				
CR	○				○	●	○		○											*
SP	○		○			●				SP				○		●				*
%	○		○			●	○		○	ER					○	●		○	○	
(			○		○	●				(2-4-5)				○	○	●		○		
)	○		○		○	●			○	(2-4-7)		○			○	●		○		
+			○		○	●		○	○	+		○	○	○		●				*
-			○		○	●	○		○	-		○				●				
:			○	○	○	●		○												
/	○		○		○	●	○	○	○	/			○	○		●			○	
.			○		○	●	○	○		.		○	○		○	●		○	○	
#	○		○			●		○	○											
$			○			●	○													
&	○		○			●	○	○		&					○	●	○	○		*
▽			○			●	○	○	○											*
*	○		○		○	●		○												*
,	○		○		○	●	○			,			○	○	○	●		○	○	*
;	○		○	○	○	●		○	○											*
<			○	○	○	●	○													*
=	○		○	○	○	●	○		○											*
>	○		○	○	○	●	○	○												*
?			○	○	○	●	○	○	○											*
@	○	○				●														*
”			○					○												*

© MyFANUC 195109AB01DC415385669AA015E5BDE5

NOTE

1 When the external device is equipped with an ISO/EIA converter, the following items must be noted in Table 5.3.4.

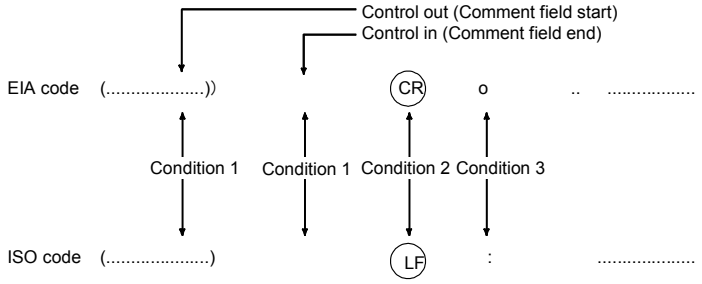

Condition1 Left parenthesis "("of the ISO code punches holes at bits 2, 4 and 5 when used in the EIA code.
Right parenthesis ")"of the ISO code punches holes at bits 2, 4 and 7 when used in the EIA code.

Condition2 EIA code CR is LF in ISO code.

Condition3 EIA code O is : in ISO code.

2 Control codes DC1 to DC4 are transmission codes output from the control unit. So they need not to be punched on the control unit tape.

(3) Transmission rate (Baud rate)
The transmission rate (Baud rate) is the number of bits transferred per second.
The following baud rates are available depending on the system parameter.
50, 100, 110, 150, 200, 300, 600, 1200, 2400, 4800, 9600

[Example] Baud rate : 110
When using one start bit and two stop bits (totaling 11 bits per character):
Transmission characters/second= 110/11 =10 characters/second (Max.)

(4) Cable length
The cable length depends on the external device type. Consult with the device manufacturers for actual connecting cable lengths.
Cable length is as follows by the specification of control unit.
RS232-C Baud rate 4800 or less: Up to 100 m
Baud rate 9600 or less: Up to 50 m

Time chart when the control unit receives data (Read into memory)

(1) Control unit outputs DC1.
(2) The I/O device starts sending data upon receiving DC1.
(3) Control unit sends DC3 when control unit processing is delayed.
(4) The I/O device stops sending data to control unit after receiving DC3.
The device may send up to 10 characters after receiving DC3. If it sends more than 10 characters, alarm 087 will occur.
(5) Control unit reissues DC1 upon completing delayed processing.
(6) The I/O device restarts data output upon receiving the DC1 code (the data must be the next data to the preceding.)
(7) Control unit sends DC3 upon completing data read.
(8) The I/O device stops sending data.

© MyFANUC 195109AB01DC415385669AA015E5BDE5

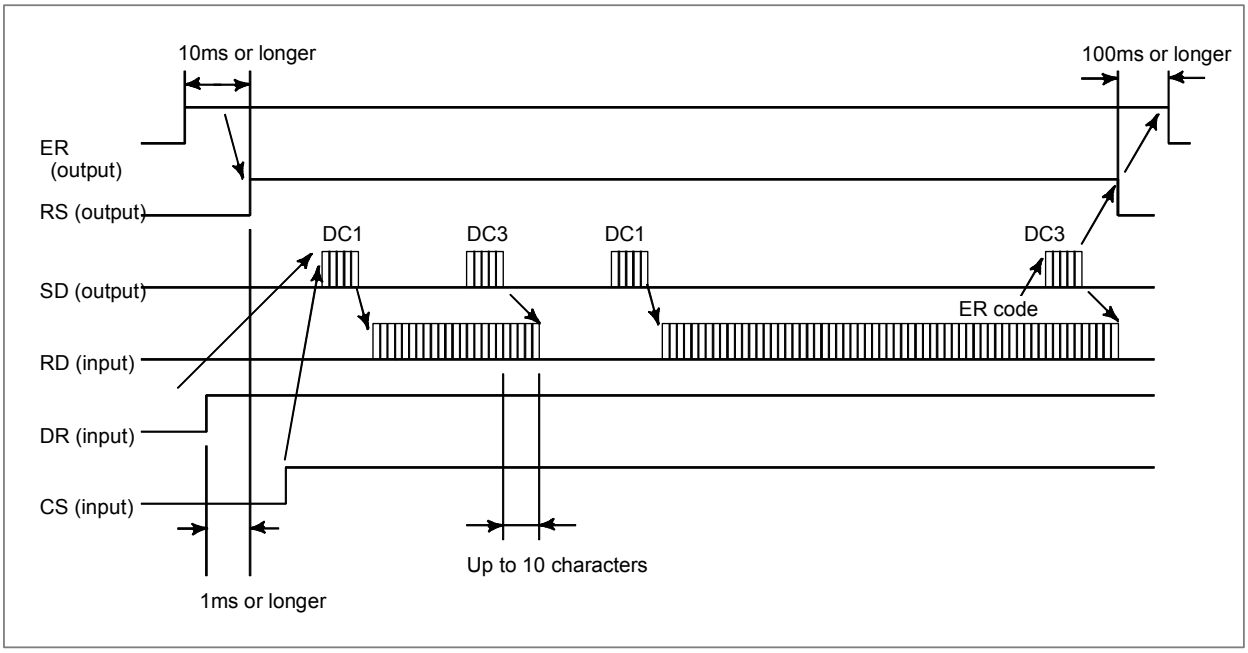

Time chart when the control unit send data (Punch out)

(1) Control unit output DC2.
(2) Control unit outputs punch data in succession.
(3) When data processing is delayed at the I/O device.
  (a) Data output stops within two characters including a currently transmitting character when CS signal is turned off.
  When CS signal is turned on again, data transmission starts. (See Fig. 5.3.4 (b))
  (b) If control code DC3 is input to control unit, control unit stops data output within ten characters. When control code DC1 is input to control unit, control unit starts sending data again. (See Fig. 5.3.4 (c))
(4) The control unit starts sending the next data if the CS signal is turned on after the I/O device completes data processing.
(5) The control unit issues DC4 upon completing data output.

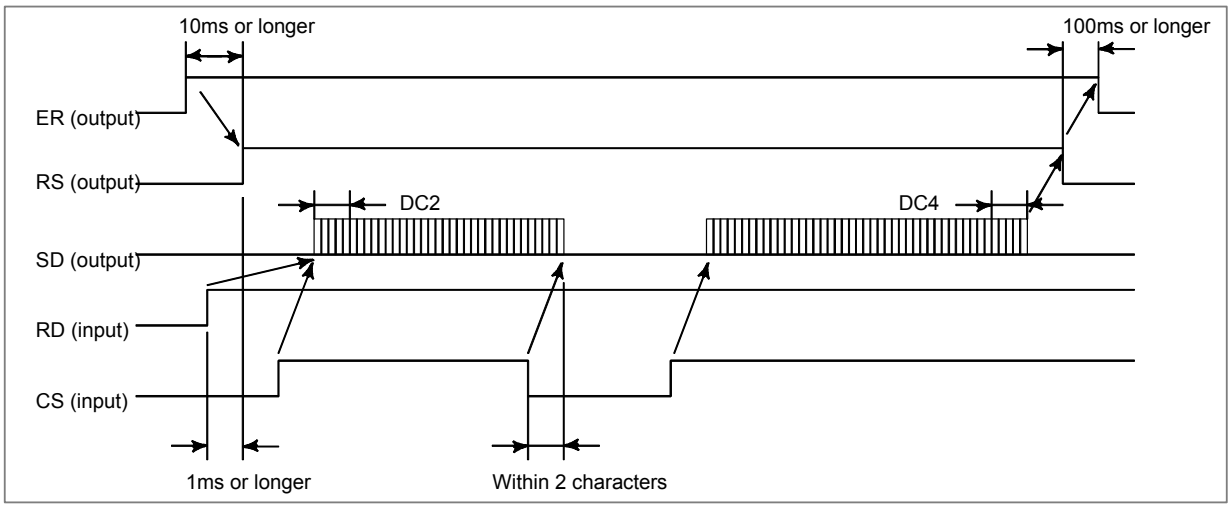

Fig. 5.3.4 (b)

© MyFANUC 195109AB01DC415385669AA015E5BDE5

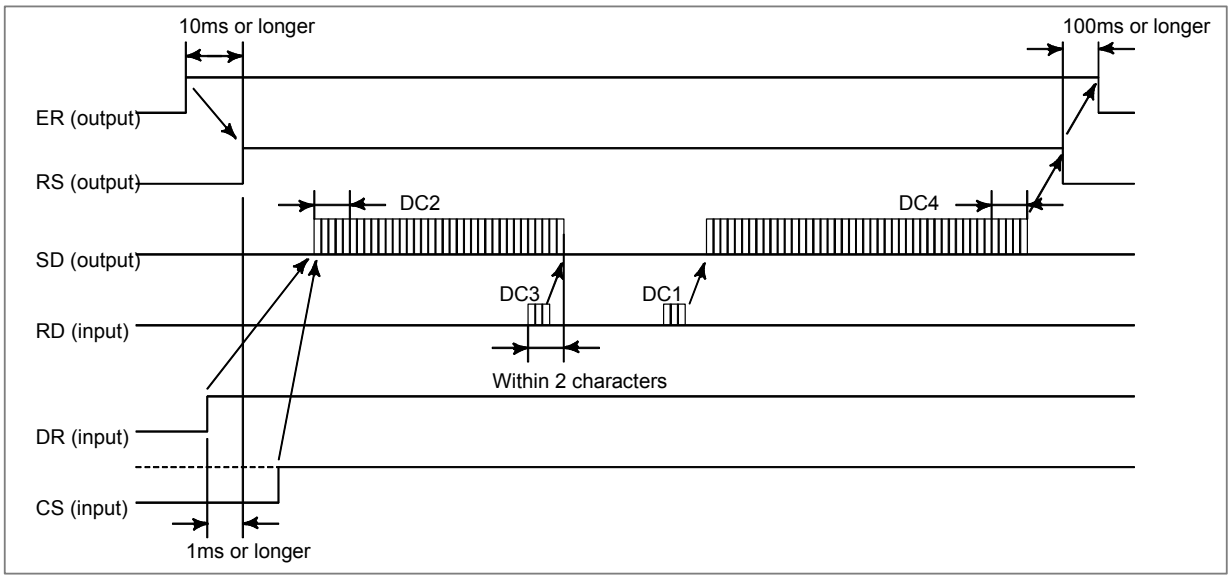

Fig. 5.3.4 (c)

Connection between RS232-C interface and external device

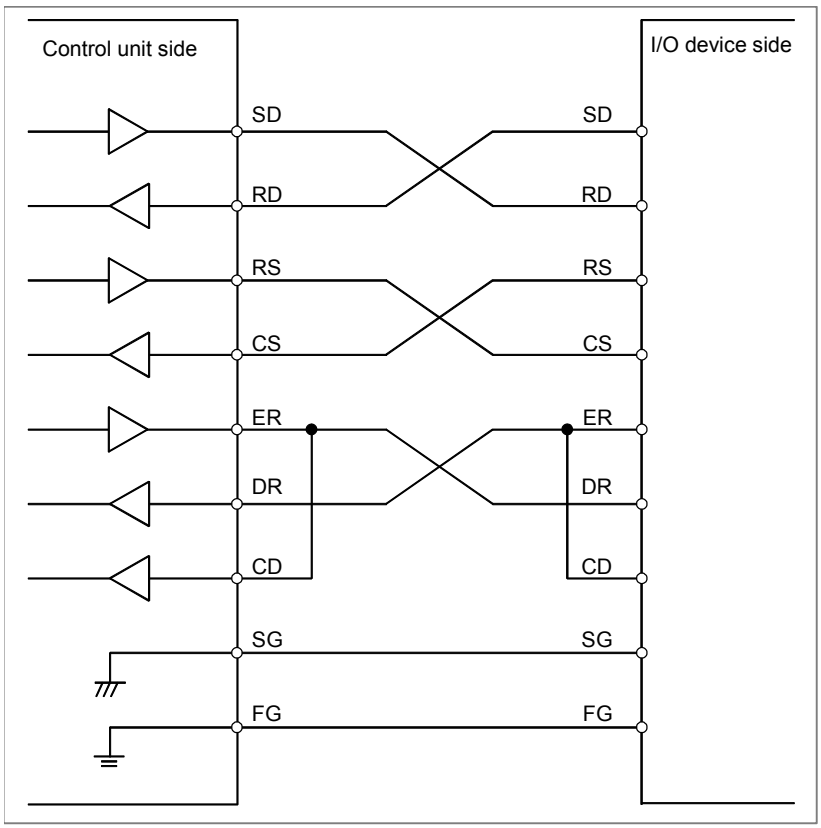

© MyFANUC 195109AB01DC415385669AA015E5BDE5

- Use the connection shown in the figure below when the ER and DR signals are not used for handshaking.

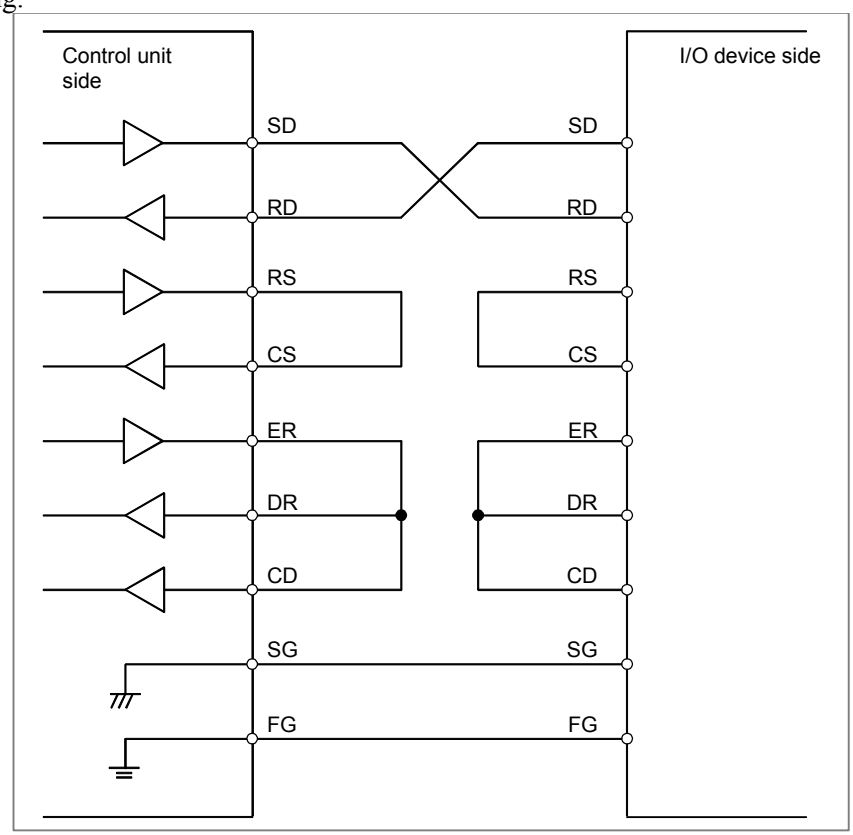

The cable for connecting the I/O device to the control unit should be connected as shown in the below diagram.

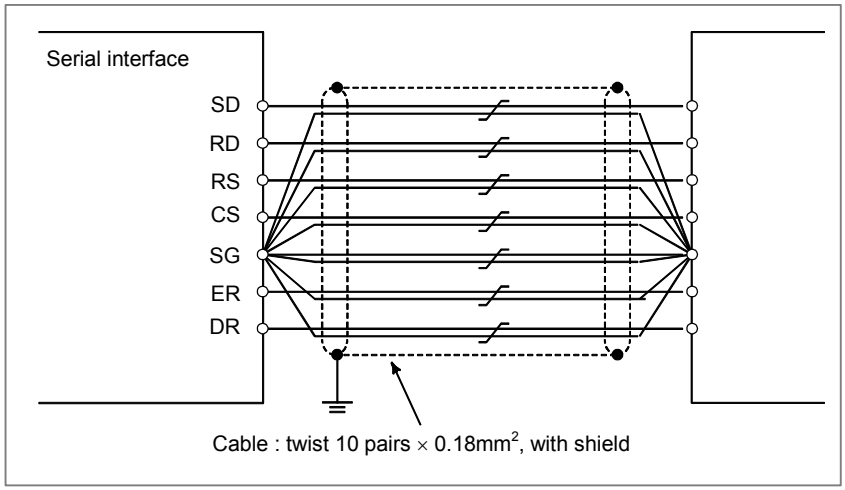

© MyFANUC 195109AB01DC415385669AA015E5BDE5

5.4 CONNECTING THE HIGH-SPEED SKIP (HDI)

5.4.1 Connecting the High-speed Skip (HDI)

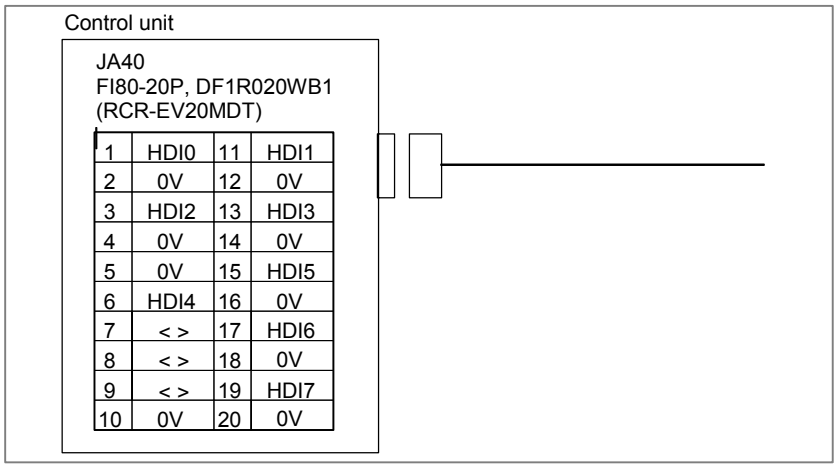

1	HDI0	11	HDI1
2	0V	12	0V
3	HDI2	13	HDI3
4	0V	14	0V
5	0V	15	HDI5
6	HDI4	16	0V
7	< >	17	HDI6
8	< >	18	0V
9	< >	19	HDI7
10	0V	20	0V

NOTE

1 The upper manufacturer and model of JA40 are for the LCD-mounted type.
The lower manufacturer and model in parentheses are for the stand-alone type.

2 No connections must be made to the pins with angle brackets (<>) because they are reserved for expansions.

© MyFANUC 195109AB01DC415385669AA015E5BDE5

Cable connections

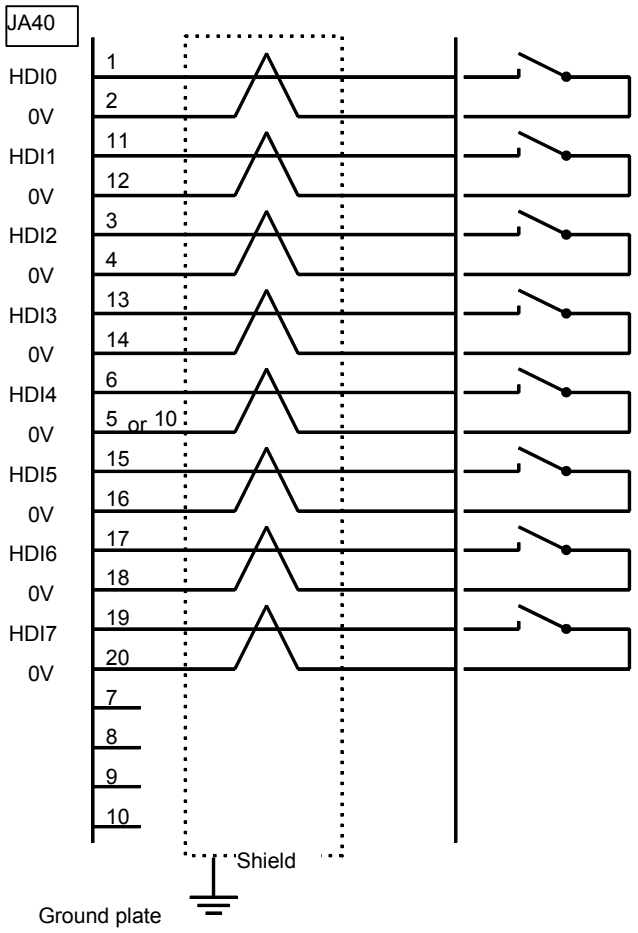

Recommended cable–side connectors
PCR-E20FA (Honda Tsushin Kogyo)
FI30-20S (Hirose Electric)
FCN-247J020-G/E (FUJITSU COMPONENT)
52622-2011 (Molex Japan)

NOTE
The recommended cable connector FI30-20S (manufactured by Hirose Electric) cannot be used for the stand-alone type.

© MyFANUC 195109AB01DC415385669AA015E5BDE5

5.4.2 Input Signal Rules for the High-speed Skip (HDI)

Circuit configuration

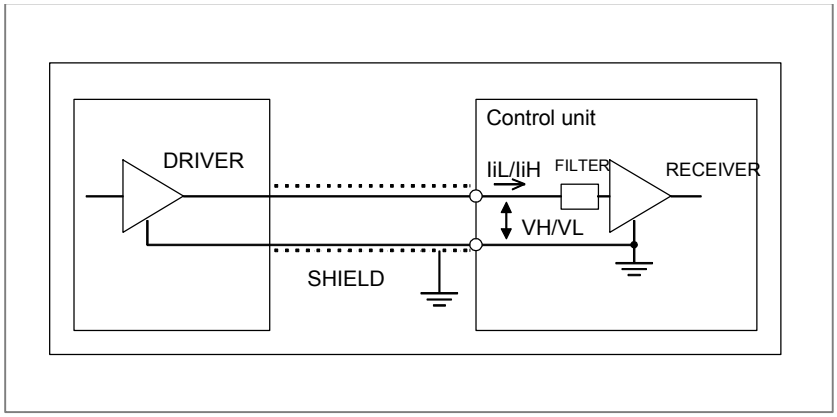

Absolute maximum rating
Input voltage range Vin: -3.6V to +13.6V

Input characteristics

Unit	Symbol	Specification	Unit	Remarks
High level input voltage	VH	3.6 to 11.6	V	
Low level input voltage	VL	0 to 1.0	V	
High level input current	IiH	2 (max)	mA	Vin=5V
		11 (max)	mA	Vin=10V
Low level input current	IiL	-8.0 (max)	mA	Vin=0V
Input signal pulse duration		20 (min)	μs	
Input signal delay or variations		0.02 (max)	ms	

NOTE

1 The plus (+) sign of IiH/IiL represents the direction of flow into the receiver. The minus (-) sign of IiH/IiL represents the direction of flow out of the receiver.
2 The high-speed skip signal is assumed to be 1 when the input voltage is at the low level and 0 when it is at the high level.
3 The input level for the control unit receiver is high when the circuit is open. So, the input level for the external driver must be low.

© MyFANUC 195109AB01DC415385669AA015E5BDE5

5.5 LINKING THE ETHERNET INTERFACE

⚠ CAUTION

Before attaching or removing cables, power off the control unit main unit, and confirm that the power is off.
Ask the respective manufacturers for explanations about how to build a network and about conditions for using units (such as a media converter, hub, transceiver, and cable) other than the control unit. When installing network cables, exercise sufficient caution so that the network will not be affected by any noise source. Electrically separate the network wiring sufficiently from noise sources like motors and their power lines. Also, ground each unit as required. If the grounding impedance is high, it may cause trouble in communication. Once the equipment is installed, conduct communication tests to verify normal operation before starting actual use of the equipment.
FANUC is not liable to any damage related to trouble arising from any unit other than the control unit.

5.5.1 Connection to the Ethernet Interface

With the 30*i*-B series, an Ethernet connector (for Multi-function Ethernet) is provided on the LCD-mounted type control unit, in addition to the Ethernet connector (for Embedded Ethernet). A hub (line concentrator) is used to connect the control unit to a system. A typical example of connection is shown below. For the connection of the control unit with the FANUC PANEL ***i*** and a commercially available personal computer using Ethernet, see also Chapter 11.

NOTE

To use Multi-funtcion Ethernet (the FL-net or Fast Ethernet) interface, also refer to the FANUC FL-net Board Connection Manual (B-64163EN) or FANUC Fast Ethernet/Fast Data Server Operator's Manual (B-64014EN), respectively.

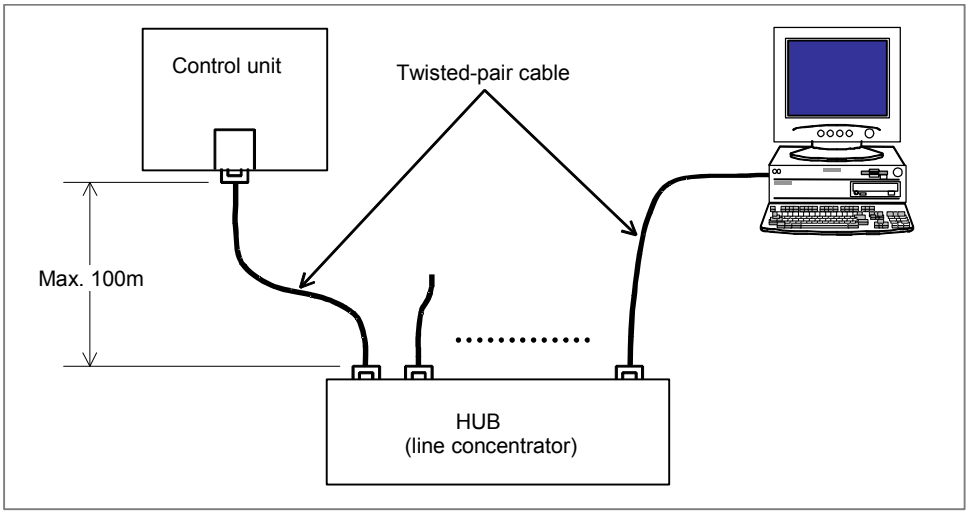

© MyFANUC 195109AB01DC415385669AA015E5BDE5

NOTE

1 To connect the control unit to the 10BASE-T Ethernet interface, use a hub which satisfies the following conditions:
- Supports 100BASE-TX.
- Has an auto-negotiation function.
- Supports store-and-forward switching.

2 The cable can be up to 100 m long (for the FANUC- recommended cable for movable sections, up to 50 m). Do not make the cable longer than necessary.

3 An Ethernet cable needs clamping to make system operation stable. For details of clamping, see Subsection 3.4.6, “Cable Clamp and Shield Processing”. The clamp for grounding the shield of the cable can also fix the cable.

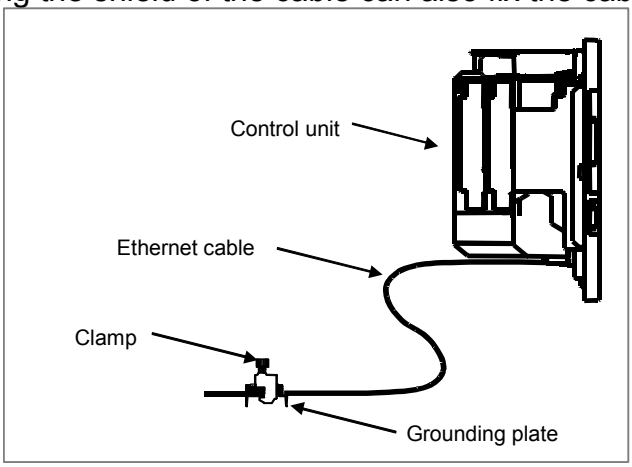

4 Some of the units (hub, transceiver, etc.) required to build a network are not dust-proof. They should be enclosed in a dust-proof cabinet. Using them in an atmosphere with dust or oil mist may lead to a communication error or failure.

Pin arrangement of the Ethernet connector (CD38A, CD38B)

CD38A, CD38B

Pin No.	Signal name	Description
1	TX+	Transmit +
2	TX-	Transmit -
3	RX+	Receive +
4		Not used
5		Not used
6	RX-	Receive -
7		Not used
8		Not used

© MyFANUC 195109AB01DC415385669AA015E5BDE5

5.5.2 Specification of Twisted-Pair Cable

Cable connection

The connectors of a cable for connecting between the Ethernet interface (CD38A, CD38B) and the hub have the pin arrangement shown below.

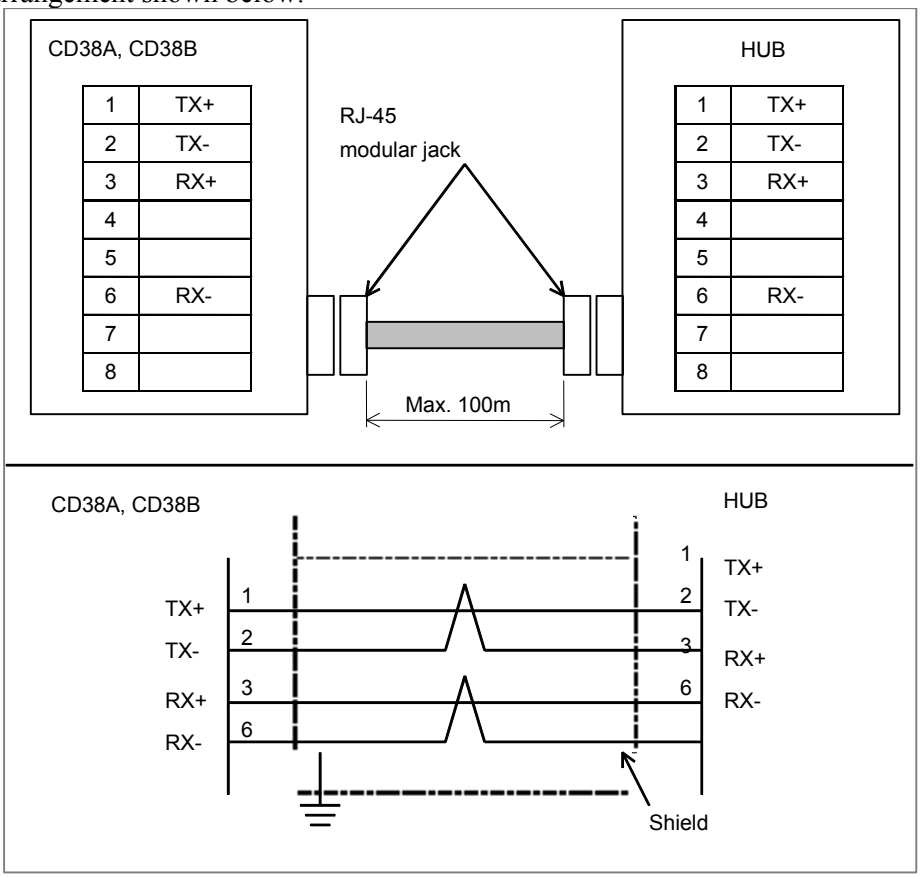

NOTE
The cable can be up to 100 m long (for the FANUC- recommended cable for movable sections, up to 50 m). Do not make the cable longer than necessary.

Cable Wires

Many cables without a shield (UTP cables) are commercially available as twisted pair cables conforming to 10BASE-T or 100BASE-TX. To improve noise immunity in factory automation environments, however, be sure to use twisted pair cables (STP cables) with a common shield in category 5.

Recommended cable wire (for fixed parts)

Manufacturer	Specification	Remark
Nissei Electric Co., Ltd.	F-4PWMWMF	Single-wire cable

NOTE
No cable recommended for use in fixed sections shall be used in movable sections.
For movable sections, be sure to use the recommended cables for movable sections listed below.

© MyFANUC 195109AB01DC415385669AA015E5BDE5

Recommended cable wire (for movable sections)

Manufacturer	Specification	Remark
Oki Electric Cable Co., Ltd.	AWG26 4P TPMC-C5-F (SB)	Dedicated to FANUC products, with no connector
SHINKO ELECTRIC INDUSTRIES CO., LTD.	FNC-118	

Specification

- Ordering specifications : A66L-0001-0453
- Electrical characteristic : Complying with EIA/TIA 568A categories 3 and 5
- Structure : Common-shield braided cable with drain wire
  The conductors of the cable are AWG26 annealed-copper strand wire, with a sheath 0.8 mm thick and an outer diameter of 6.7 ± 0.3 mm
- Fire resistance : UL1581 VW-1
- Oil resistance : As per FANUC's internal standard (Equivalent to conventional oil-resistant electrical cable)
- Flex resistance : Million or more bending cycles with a bending radius of 50 mm (U-shaped bend test)
- UL style No. : AWM20276 (80℃/30V/VW-1)

NOTE
When using this cable, keep the length between the control unit and hub within 50 m because of its attenuation performance. Be sure to use the TM21CP-88P(03) connector manufactured by Hirose Electric Co., Ltd.

About cable assemblies
Oki Electric Cable Co., Ltd. can offer a cable assembly that uses the TM21CP-88P(03) connector made by Hirose Electric Co., Ltd. To get this cable assembly, negotiate directly with the manufacturer on its specifications (cable length, shipping test, package, etc.).

Connector specification

An 8-pin modular connector called the RJ-45 is used with a twisted-pair cable for Ethernet interfaces. Use the connector listed below or equivalent.

	Manufacturer's model number	Manufacturer	Remark
Connector used with cable AWG26 4P TPMC-C5-F(SB)	TM21CP-88P(03)	Hirose Electric Co., Ltd.	(Note)

NOTE
About TM21CP-88P(03)
Ordering specifications: A63L-0001-0823#P
Complying with EIA/TIA 568A categories 3 and 5
Ask Hirose Electric Co., Ltd. for explanations about how to attach the connector to a cable. (Hirose Electric Co., Ltd. offers the TM21CP-88P(03) Wiring Procedure Specification (Engineering Specification No. ATAD-E2367) to explain the related technical information.)

© MyFANUC 195109AB01DC415385669AA015E5BDE5

5.5.3 Network Installation

Even when the machine satisfies its grounding requirements, noise from the machine may get on communication lines depending on the way the machine is installed and its environment, resulting in a communication error. Separating and isolating the Ethernet backbone cable and PC from the machine can prevent noise from getting on the communication lines.
An example of connection is shown below.

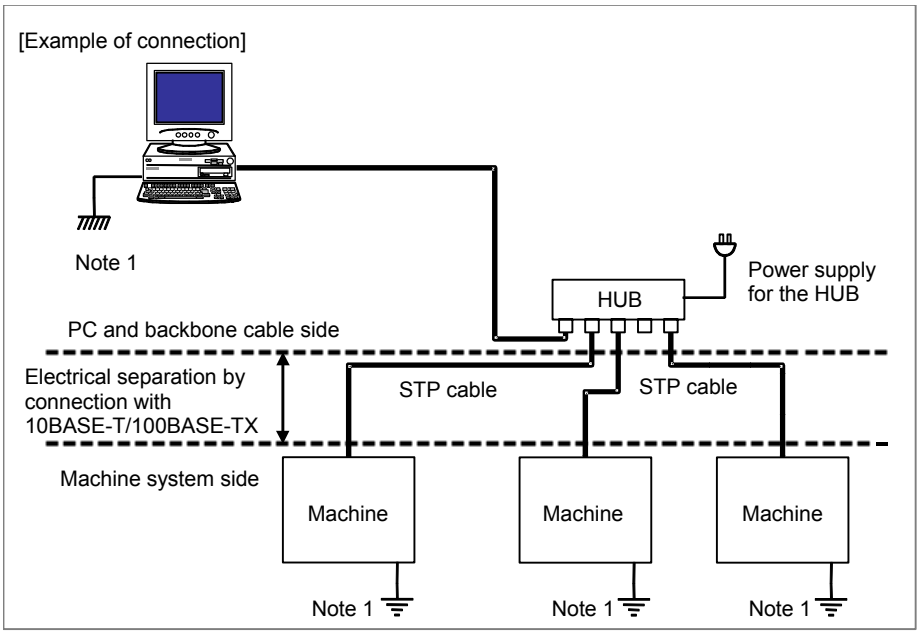

NOTE

1 Ground the PC and backbone cable separately from the machine system.
If this is impossible because there is only one grounding point, use separate grounding wires for the PC/backbone cable and the machine system up to the grounding point.
The grounding resistance must not be higher than 100 Ω (class 3 grounding).
The grounding wire must not be thinner than the AC power line conductor, and its cross-sectional area must not smaller than 5.5 mm^2.

2 In some cases, the aforementioned isolation/separation method based on 10BASE-T/ 100BASE-TX cannot assure normal communication because of influence by noise. In such worst environments, use optical fiber media to completely isolate the machine from the PC.

© MyFANUC 195109AB01DC415385669AA015E5BDE5

5.6 USB PORT

The LCD-mounted type control unit and display unit for stand-alone type control unit have an USB port for an USB memory. Via the USB port, data can be input to the control unit and output from it.

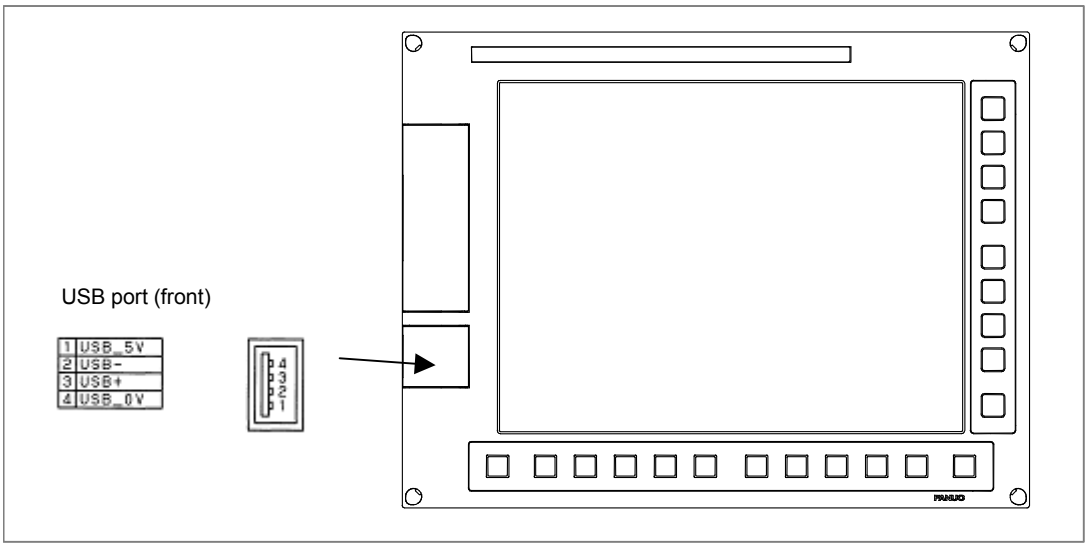

NOTE

1 For the connection of the USB port on the control unit with the personal computer function with Windows® CE, see Chapter 11.
2 For the connection of the USB ports on the display unit for automobile manufacturers, see Subsection 5.2.5.
3 This USB port is dedicated to an USB memory. Do not connect other USB devices to the port.
4 It is not guaranteed that every commercially available USB memory can operate normally. For example, an USB memory with a security function does not operate. Some commercially available USB memories may not be designed for the use in an FA environment.

⚠ CAUTION

1 While the control unit is accessing the USB memory, do not turn the power to the control unit off or remove the USB memory.
2 Close the cover of the USB port when no USB memory is inserted.
3 The maximum USB power supply (USB_5V) current is 500 mA in total.

© MyFANUC 195109AB01DC415385669AA015E5BDE5

6 SERVO INTERFACES

6.1 OVERVIEW

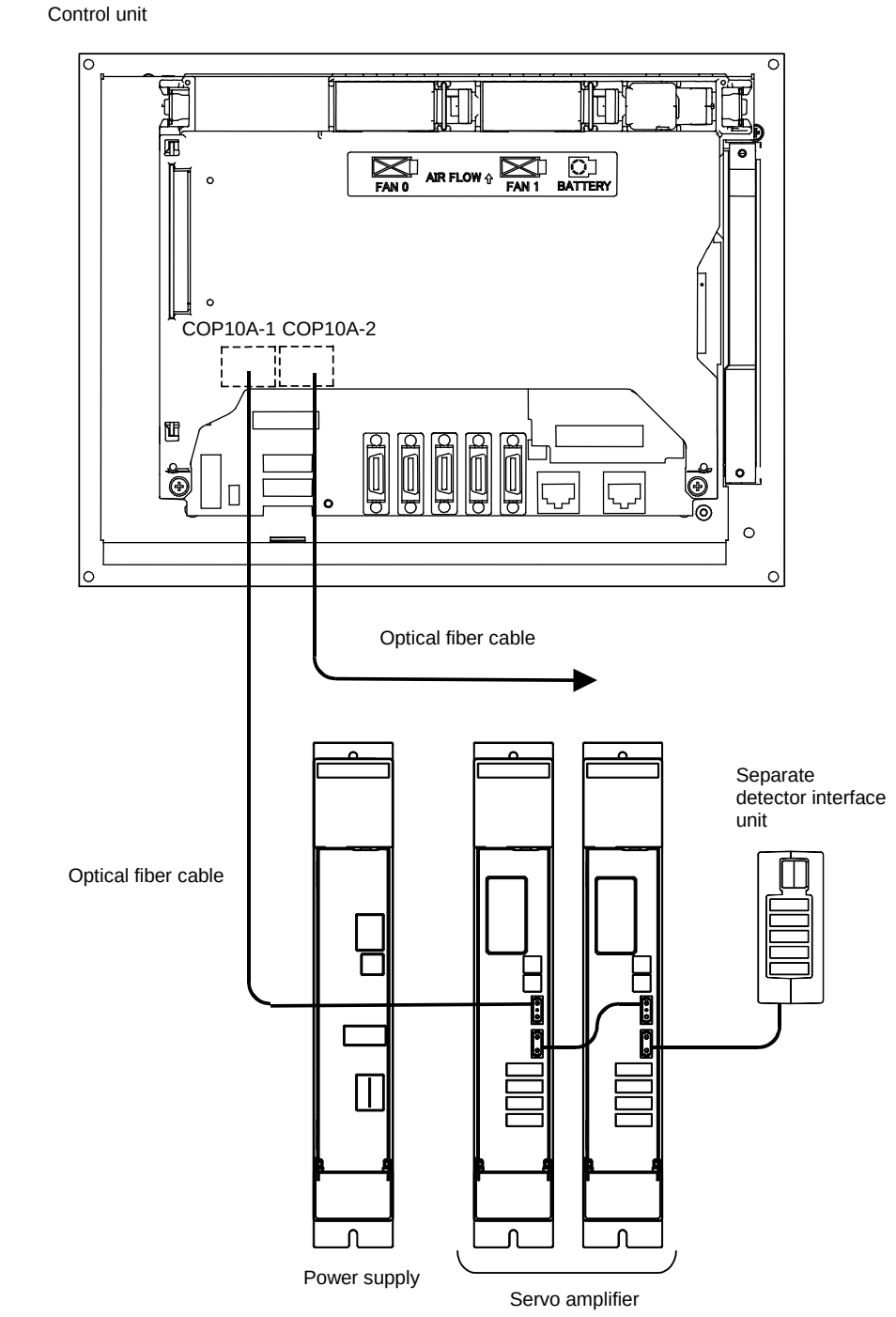

This figure is an example of connecting to control unit a LCD-mounted type.

© MyFANUC 195109AB01DC415385669AA015E5BDE5

This chapter describes how to connect the control unit to the servo amplifiers and separate detector interface units.
The control unit is connected to servo amplifiers and separate detector interface units via serial buses using optical fiber cables (called FSSBs below). Up to three FSSB lines can be connected to the control unit. For the 1st and 2nd FSSB lines, optical connectors are located on the servo card of the main board (some types of servo cards do not have an optical connector for the 2nd FSSB line). For the 3rd FSSB line, an optical connector is located on the additional axis board (an additional axis board may not be mounted on the control unit because it is optional).
Slave units to be connected to the control unit must support the Power Motion *i*. Slave units include servo amplifiers and separate detector interface units.

6.2 Interface to the Amplifiers

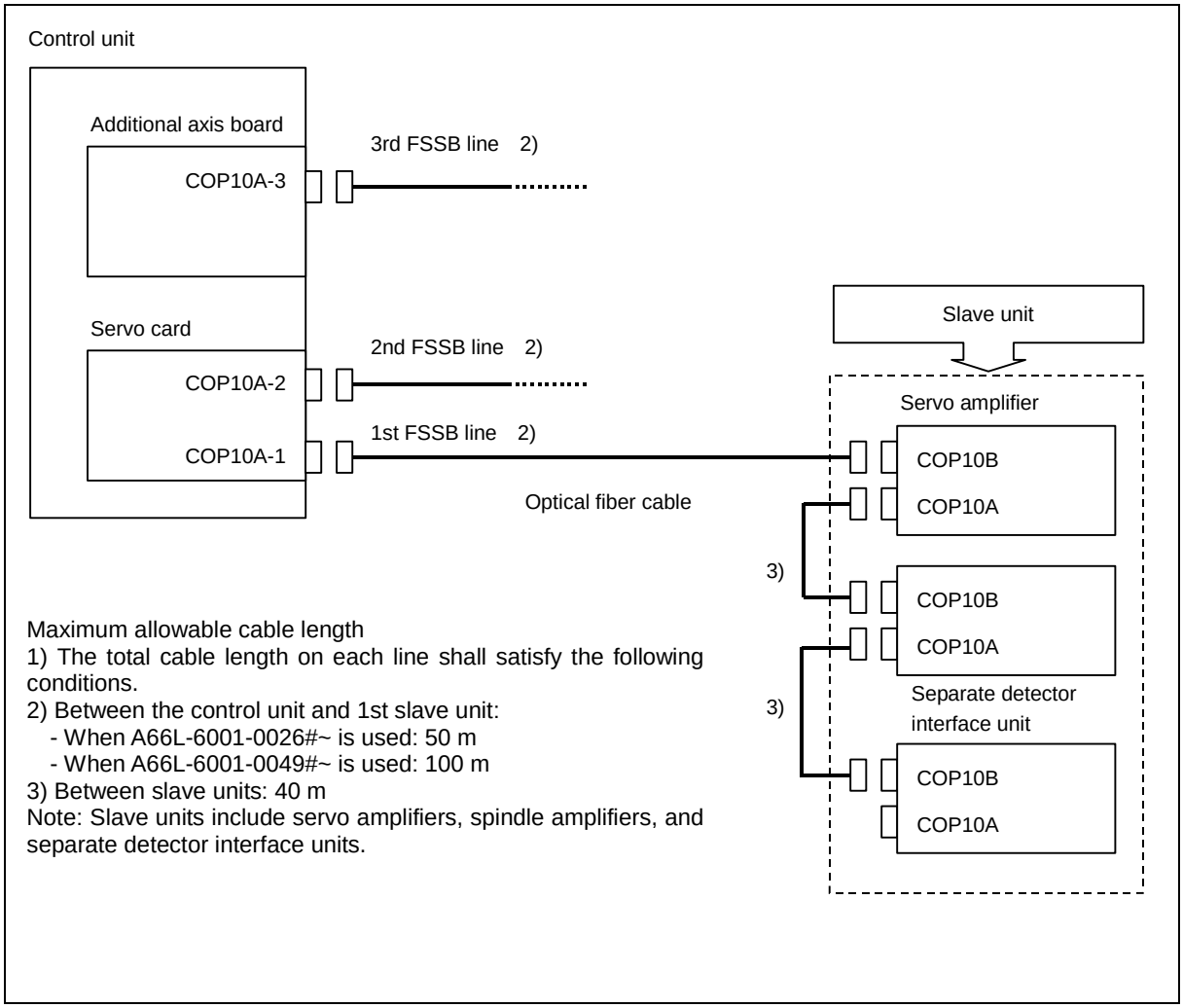

<Total cable length on each line>

Control mode	Maximum total cable length
HRV2	500m
HRV3	200m

<Optical fiber cable types>

Usage	Cable drawing number	Cable length
For internal connection	A02B-0236-K851 to -K856 (A66L-6001-0023#~)	Length of 10 m or less

© MyFANUC 195109AB01DC415385669AA015E5BDE5

Usage	Cable drawing number	Cable length
For external connection	A66L-6001-0026#~	Length of 50 m or less (40 m or less between slave units)
	A66L-6001-0049#~	Length of 100 m or less (40 m or less between slave units)

6.2.1 Number of Units That Can Be Connected

The following table lists the maximum number of controlled axes and control modes for the Power Motion *i* .

<Maximum number of servo axes for control unit models>

	Control mode and maximum number of servo axes		Remarks
	HRV2	HRV3	
Power Motion *i*	32 axes	32 axes	

The maximum total number of servo axes and connector name for each line differ depending on the FSSB line and control mode. See the table below.

<Maximum number of axes for each line (total number of servo axes)>

	Control mode and maximum number of axes (servo axes)		Connector name	Remarks
	HRV2	HRV3		
1st FSSB line	28 axes	13 axes	COP10A-1	On the servo card
2nd FSSB line	12 axes	13 axes	COP10A-2	On the servo card
3rd FSSB line	—	13 axes	COP10A-3	On the additional axis board

NOTE

1 The number of axes that can be controlled varies also depending on the software series.
2 When the number of axes that was set for the first FSSB line is zero, no axes can be set for the second FSSB line.
3 Unused optical connectors must be covered with the caps.

© MyFANUC 195109AB01DC415385669AA015E5BDE5

6.3 SEPARATE DETECTOR INTERFACE

6.3.1 Overview

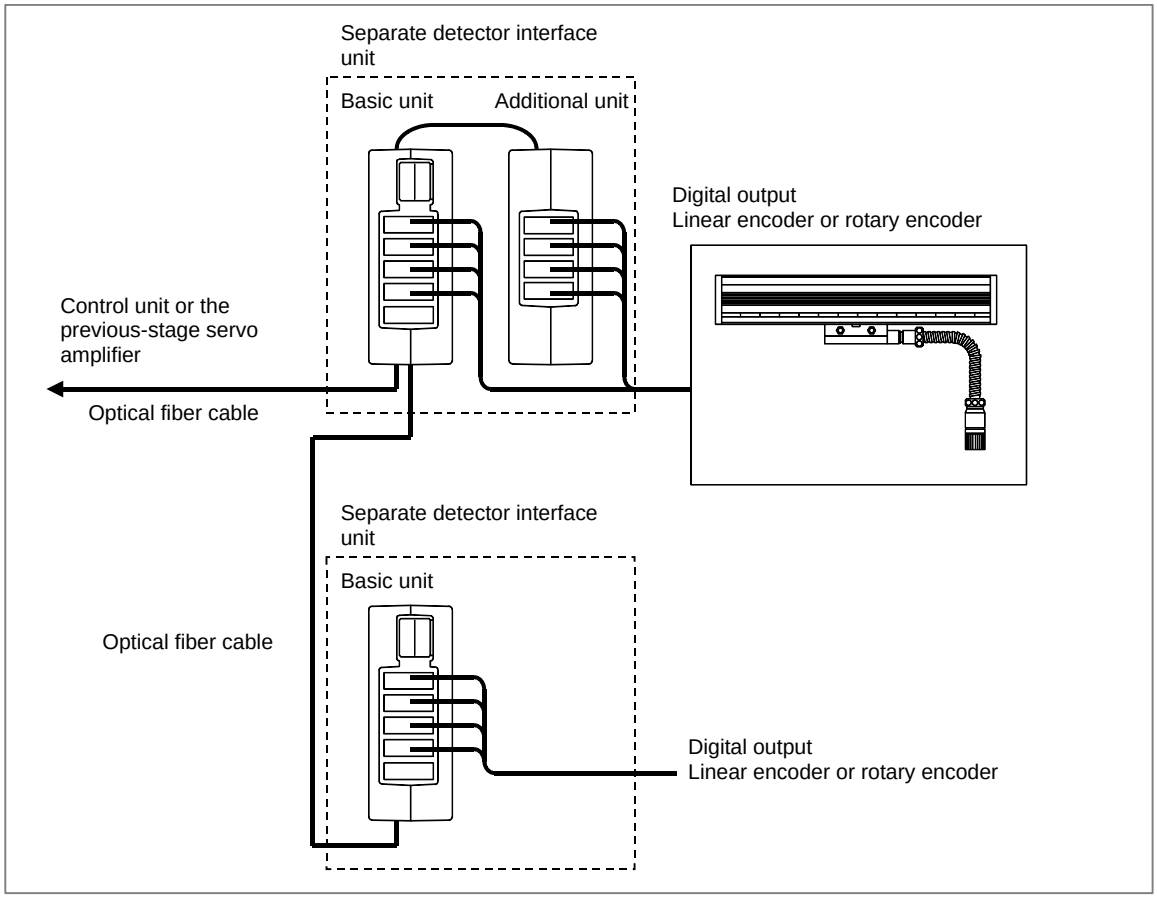

When a separate detector such as a separate rotary encoder or linear encoder is used, a separate detector interface unit is required. The separate detector interface unit is connected through an optical fiber cable as an unit on an FSSB line.

A separate detector interface unit consists of a separate detector I/F unit for basic four axes (called a basic unit below) and a separate detector I/F unit for additional four axes (called an additional unit below) (the additional unit may not be provided). The basic and additional units are connected through a flat cable.

Up to four separate detectors can be connected for each of the basic and additional units. A separate detector refers to a detector that outputs A and B rectangular waveforms (parallel) or a FANUC serial interface output detector (serial).

The maximum number of separate detector interface units that can be connected to an FSSB line is 4 for HRV2 and 2 for HRV3 regardless of the control unit model, software series, and servo card type.
Therefore, for HRV2, up to 32 separate detectors can be connected for each line.

In addition to the digital input type of parallel/serial basic unit as described above, the analog input type of analog basic unit is also available.
When a basic unit is solely described in this chapter, it refers to a basic unit of the digital input type.

© MyFANUC 195109AB01DC415385669AA015E5BDE5

NOTE

1 The feedback from the separate detector interface unit connected to the first or second FSSB line is available for the full-closed loop control of the axis connected to the first or second FSSB line. But it is not available for the control of the axis connected to the third FSSB line.
2 The feedback from the separate detector interface unit connected to the third FSSB line is available for the full-closed loop control of the axis connected to the third FSSB line. But it is not available for the control of the axis connected to the first or second FSSB line.
3 In the mode other than HRV2, the separate detector interface unit must not be connected to the FSSB line which no servo axis is connected to.
4 All units of a separate detector interface unit must support the Power Motion *i*.
5 Unused optical connectors must be covered with the caps.

6.3.2 Connection Diagram

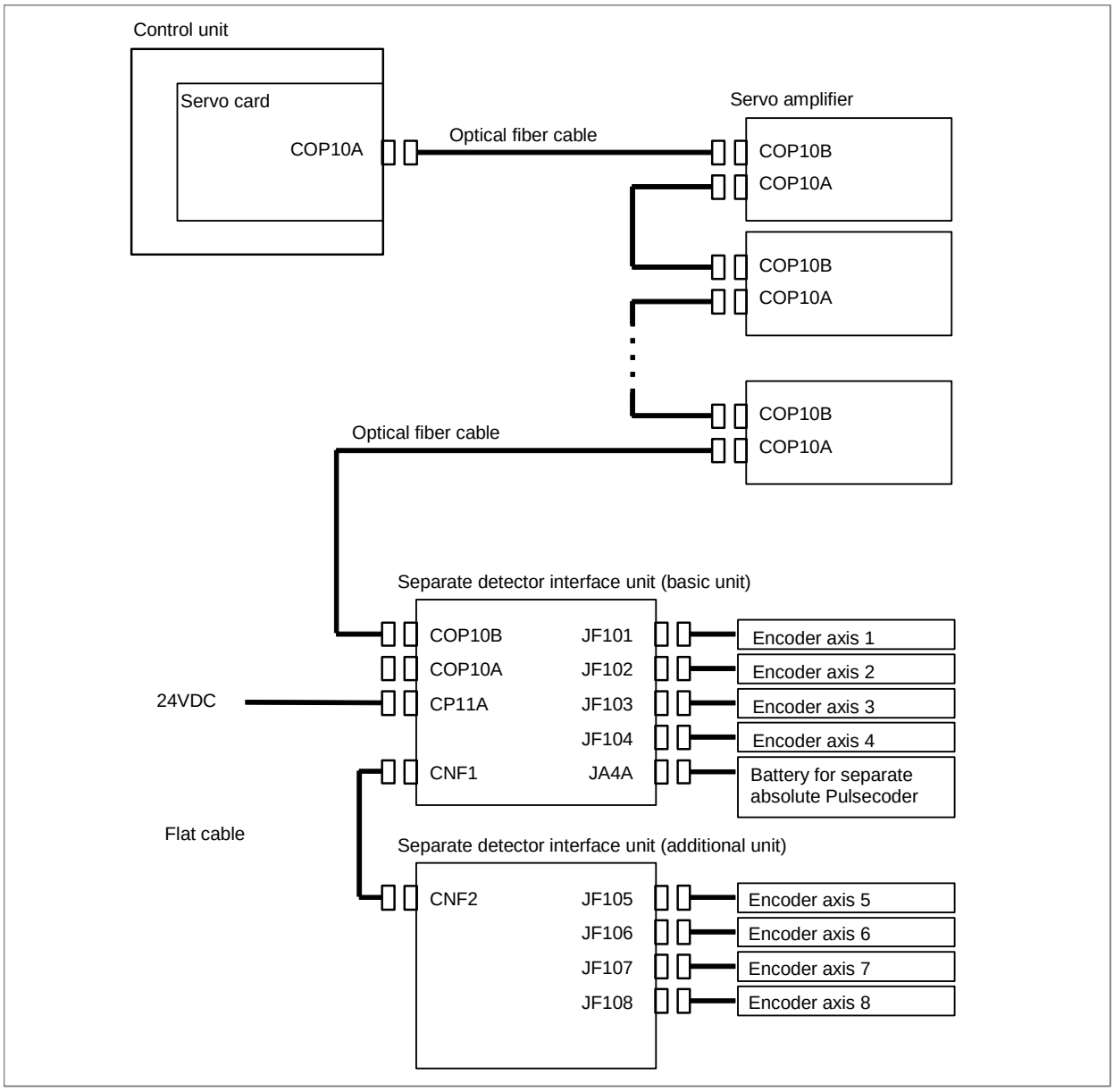

© MyFANUC 195109AB01DC415385669AA015E5BDE5

6.3.3 Separate Detector Interface Unit Specification

Item	Specification
Power supply capacity	Voltage 24 VDC ±10% Current: 0.9 A (basic unit only), 1.5 A (basic unit + additional unit) Includes the power to be supplied to the detectors.
Consumption power	9W (for basic four axes) 14W (for basic four axes + additional four axes)
Ordering information	Basic unit : A02B-0323-C205 (Separate detector I/F unit for basic four axes) Additional unit : A02B-0323-C204 (Separate detector I/F unit for additional four axes) Analog basic unit : A06B-6061-C202 (Analog input separate detector I/F unit for basic four axes)
Method of installation	An interface unit can be installed by using screws or a DIN rail.

6.3.4 Connection of Power Supply

Power to the separate detector interface unit should be supplied from an external 24 V DC power supply. An additional unit is powered by a basic unit.

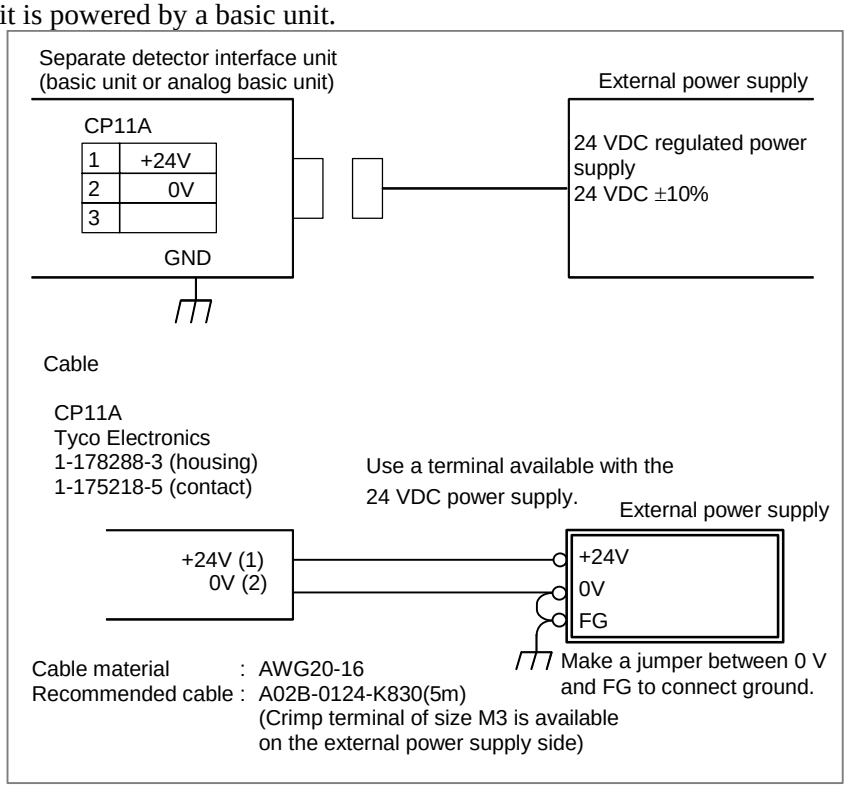

The 24 VDC input to CP11A can be output at CP11B for use in branching. A cable with the same specifications as for CP11A can be connected to connector CP11B. In this case, the power supplied to CP11A should be equal to the sum of the rating of the separate detector interface unit and that of the units after CP11B. A current of up to 1.5 A can be supplied via CP11A.

Be sure to ground the 0-V line of the power supply to the separate detector interface unit. In addition, keep any noise source (such as an AC power cable and contactor) away from the power line of the separate detector interface unit as far as possible to prevent noise from being picked up through the power line.

For all units of the separate detector interface unit, secure the ground line to the ground terminal (GND) for signals, which is located at the bottom of each unit, with an M3 screw as shown in the figure below. Connect the ground line to the ground plate of the cabinet.

© MyFANUC 195109AB01DC415385669AA015E5BDE5

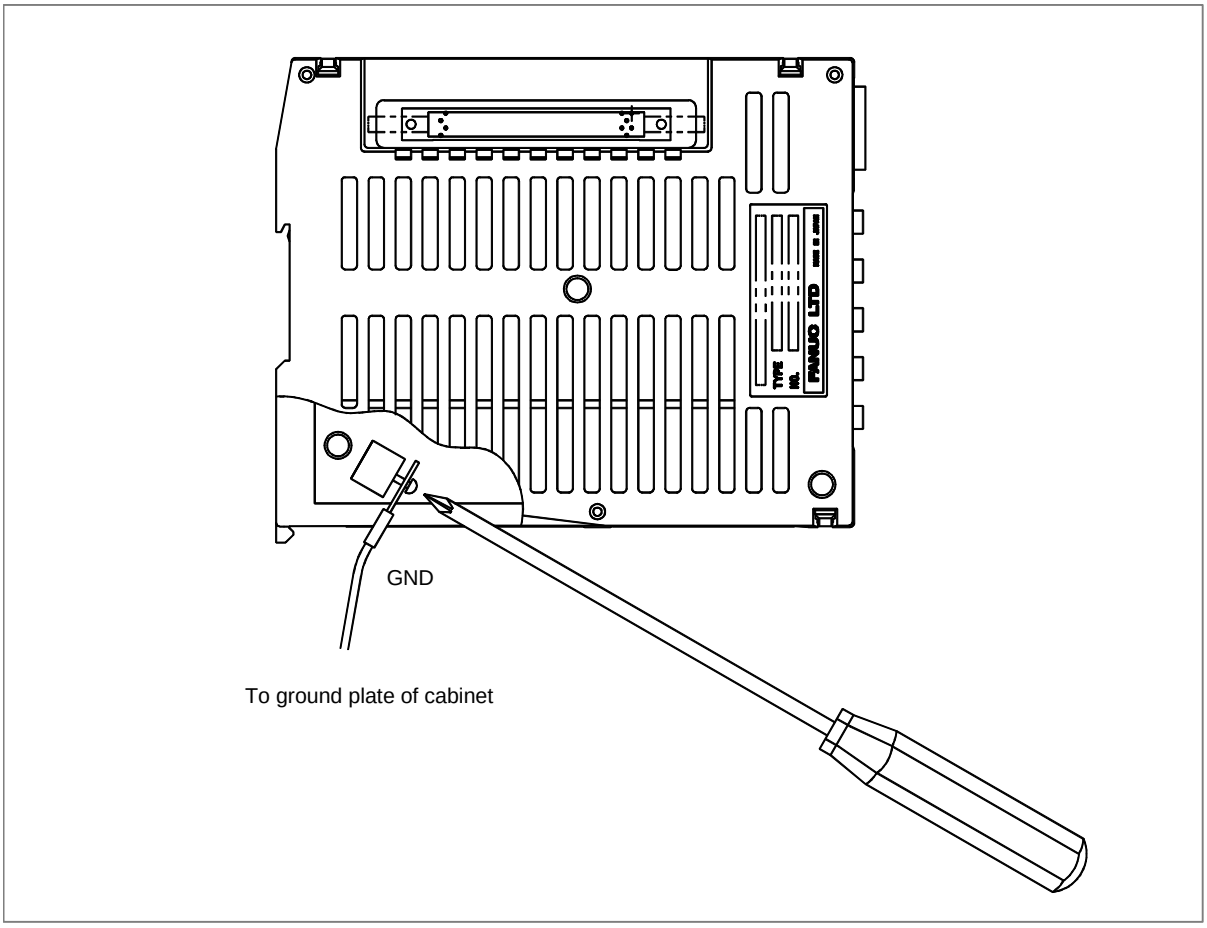

NOTE

The torque with which a screw is tightened is 0.5 N·m or less.

© MyFANUC 195109AB01DC415385669AA015E5BDE5

6.3.5 Separate Detector Interface (Digital Input)

6.3.5.1 FANUC serial interface

Separate detector interface unit
(Basic unit or additional unit)

JF101 to JF108
(PCR-EV20MDT)

1	SD	11	
2	＊SD	12	0V
3		13	
4		14	0V
5	REQ	15	
6	＊REQ	16	0V
7	(+6V)	17	
8		18	+5V
9	+5V	19	
10		20	+5V

Separate detector

The +6V signal is provided for absolute position detectors that require battery backup.

Cable connection

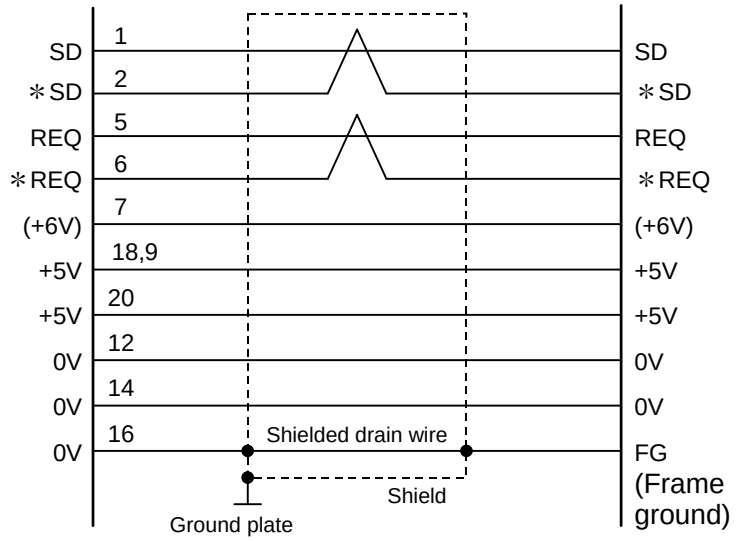

Recommended cable:
A66L-0001-0286(#20AWG×6+#24AWG×3-pair)

Recommended connectors:
PCR-E20FA (Honda Tsushin Kogyo)
FI30-20S (Hirose Electric)
FCN-247J020-G/E (FUJITSU COMPONENT)
52622-2011 (Molex)
FI40B-2015S (Hirose Electric)

NOTE

1 The +5V signals above can be used to feed power to the detectors. The supply current per detector is 0.35 A maximum.
The lower limit of the 5V signals is 4.95 V for the basic unit or 4.9 V for the additional unit. Determine the specifications and length of the cable to be used so that the specification of the detector is not exceeded.

© MyFANUC 195109AB01DC415385669AA015E5BDE5

NOTE
2 Ask the manufacturer of each detector whether it supports the FANUC serial interface.

6.3.5.2 Parallel interface

Separate detector interface unit
(Basic unit or additional unit)

JF101 to JF108
(PCR-EV20MDT)

1	PCA	11	
2	∗PCA	12	0V
3	PCB	13	
4	∗PCB	14	0V
5	PCZ	15	
6	∗PCZ	16	0V
7	(+6V)	17	
8	(REQ)	18	+5V
9	+5V	19	
10		20	+5V

Separate detector

The +6V and REQ signals are provided for absolute position detectors that require battery backup.

Cable connection

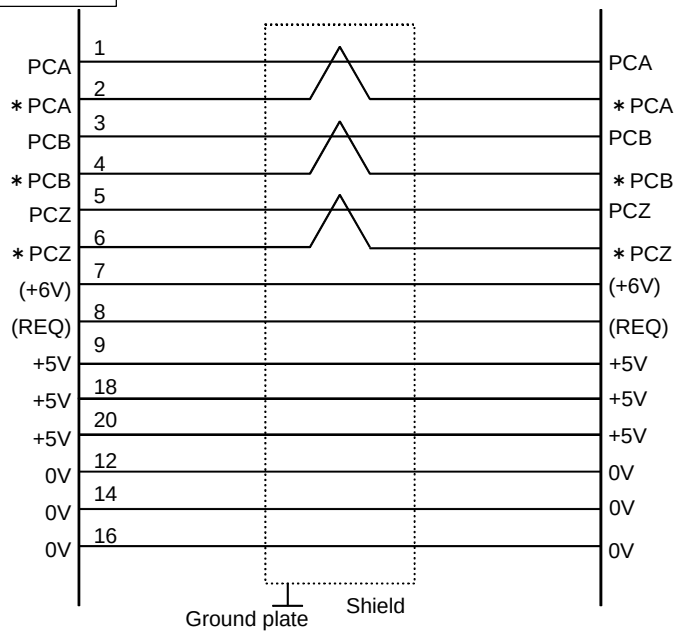

Recommended cable:
A66L-0001-0286 (#20AWG×6 + #24AWG×3-pair)
Recommended connectors:
PCR-E20FA (Honda Tsushin Kogyo)
FI30-20S (Hirose Electric)
FCN-247J020-G/E (FUJITSU COMPONENT)
52622-2011 (Molex)
FI40B-2015S (Hirose Electric)

© MyFANUC 195109AB01DC415385669AA015E5BDE5

NOTE

The +5V signals above can be used to feed power to the detectors. The supply current per detector is 0.35 A maximum.
The lower limit of the 5V signals is 4.95 V for the basic unit or 4.9 V for the additional unit. Determine the specifications and length of the cable to be used so that the specification of the detector is not exceeded.

6.3.5.3 Input Signal Requirements (Parallel interface)

The feedback signals from the separate detectors connected via the parallel interface are defined as follows:

(1) A and B phase signal input
This is a method to input position information by the mutual 90 degree phase slip of A and B phase signals.
Detection of the position is performed with the state in which the B phase is leading taken as a shift in the plus direction, and the state in which the A phase is leading as a shift in the minus direction.

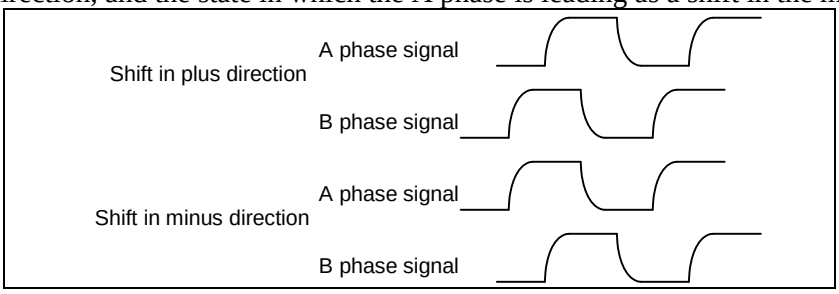

(2) Phase difference and minimum repeat frequency

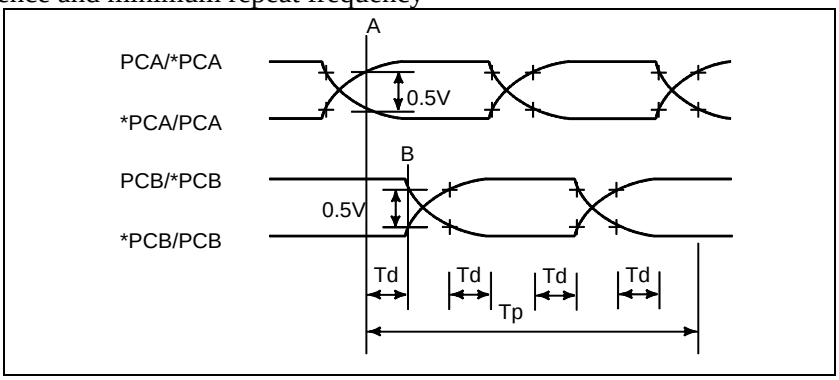

(3) Z phase signal input

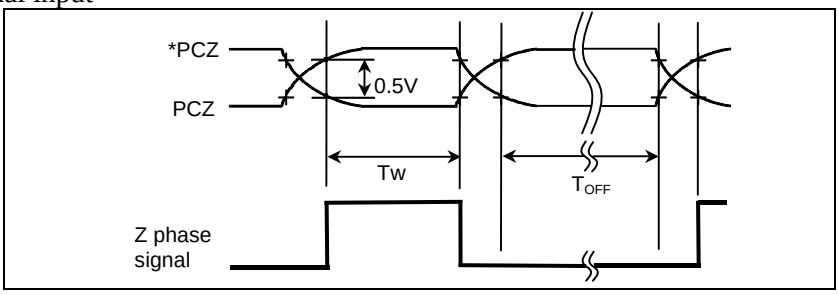

© MyFANUC 195109AB01DC415385669AA015E5BDE5

Time requirements

Requirements for the signals at the input pins of input connectors JF101 to JF108. The signals for these connectors are differential input signals with A and B phases. An important factor is time Td from point A, when the potential difference between PCA and *PCA exceeds 0.5V, to point B, when the potential difference between PCB and *PCB becomes lower than 0.5V. The minimum value of Td is 0.15 μs. The period and pulse width of the signals must be long enough to satisfy the above requirements.
The Z phase signals are also differential signals. There are the following requirements for the time from when the potential difference between PCZ and *PCZ exceeds 0.5 V to when it becomes lower than 0.5 V:

Tw ≥ 1/4 frequency of the A or B phase signals
TOFF > 1.5 msec

Input voltage requirements

The voltage of the A and B phase signals must meet the following requirements:
High level: 2.4 V or more
Low level: 0.8 V or less

Receiver circuit

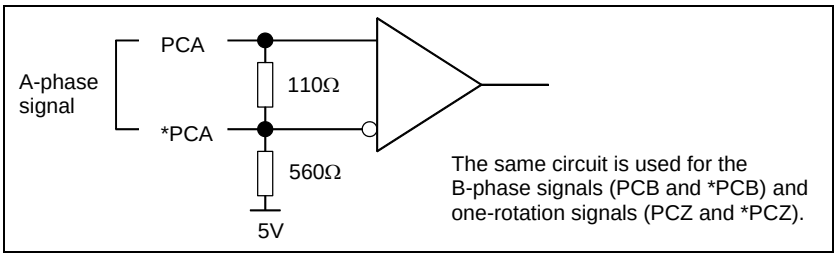

Rotation directions of a servo motor and separate Pulsecoder

If a separate Pulsecoder rotates in a direction opposite to the direction of servo motor rotation when the servo motor is rotating, the connection of the feedback cable from the separate Pulsecoder must be changed as follows:
(1) Exchange signal PCA with signal PCB.
(2) Exchange signal *PCA with signal *PCB.
The rotation direction can also be changed using a parameter.
For details, refer to the servo parameter manual.

6.3.6 Overview of the Analog Basic Unit

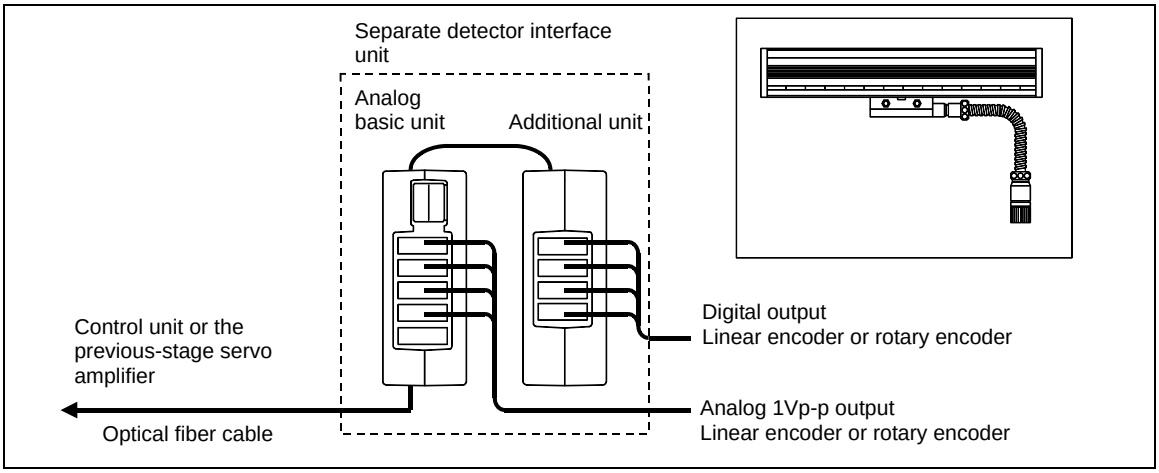

© MyFANUC 195109AB01DC415385669AA015E5BDE5

To use a separate detector with an analog output of 1 Vp-p requires an analog basic unit, which is a basic unit of the analog input type. The analog basic unit is connected as a unit on the FSSB line via an optical fiber cable.

Up to four separate detectors with an analog output of 1 Vp-p can be connected to an analog basic unit. Four separate detectors with digital output can be connected to the additional unit regardless of whether an analog or digital basic unit is used.

NOTE

1 The feedback from the separate detector interface unit connected to the first or second FSSB line is available for the full-closed loop control of the axis connected to the first or second FSSB line. But it is not available for the control of the axis connected to the third FSSB line.
2 The feedback from the separate detector interface unit connected to the third FSSB line is available for the full-closed loop control of the axis connected to the third FSSB line. But it is not available for the control of the axis connected to the first or second FSSB line.
3 In the mode other than HRV2, the separate detector interface unit must not be connected to the FSSB line which no servo axis is connected to.
4 All units of a separate detector interface unit must support the Power Motion *i*.
5 Unused optical connectors must be covered with the caps.
6 No 1-Vp-p output detector can be connected to additional units.

6.3.7 Connection Diagrams of an Analog Basic Unit

(1) When encoders with an analog output of 1 Vp-p are connected to the 1st to 4th axes

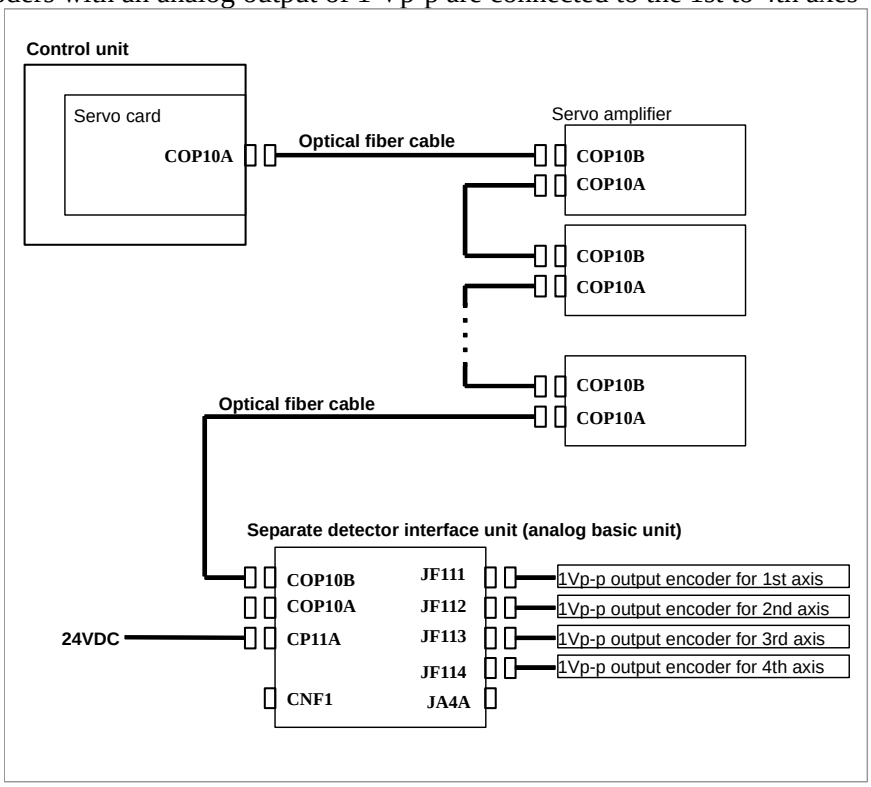

© MyFANUC 195109AB01DC415385669AA015E5BDE5

(2) When encoders with an analog output of 1 Vp-p are connected to the 5th to 8th axes

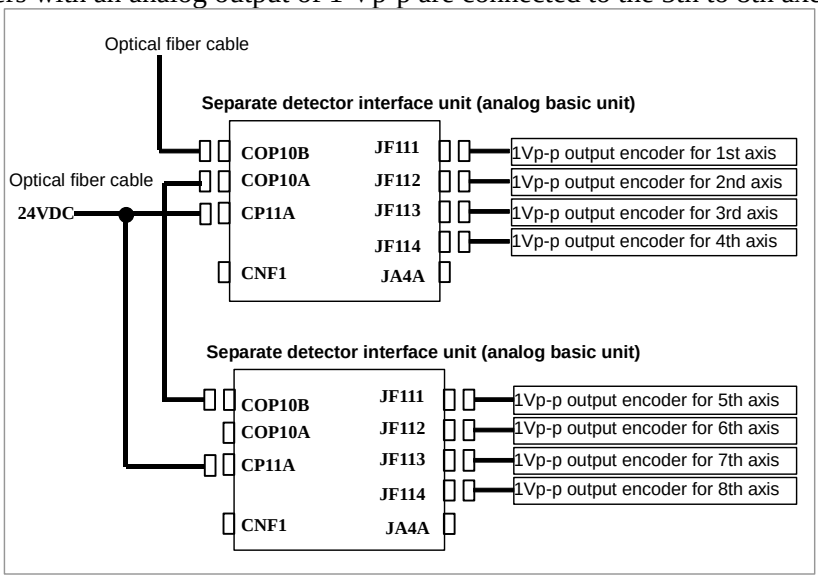

(3) When encoders with an analog output of 1 Vp-p and digital output encoders are connected to the 1st to 4th axes

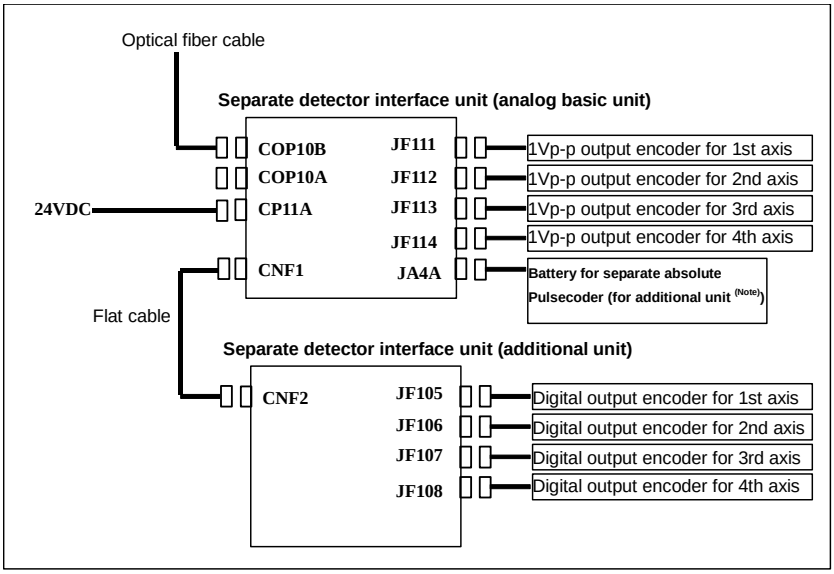

© MyFANUC 195109AB01DC415385669AA015E5BDE5

(4) When encoders with an analog output of 1 Vp-p are connected to the 1st to 4th axes and digital output encoders are connected to the 5th to 8th axes

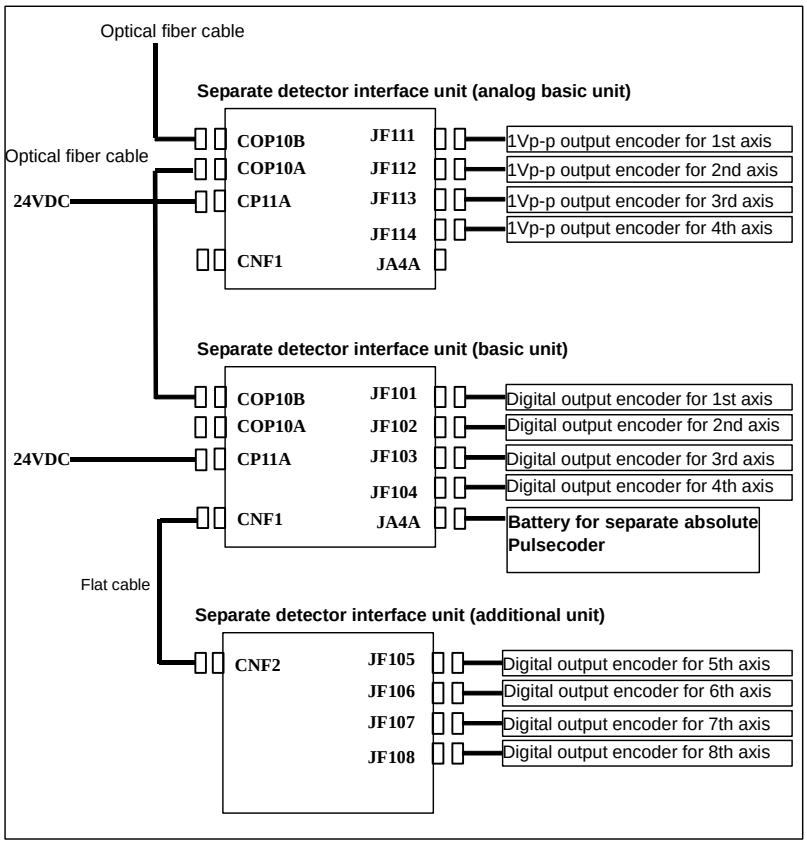

NOTE

When a separate absolute position detector that requires battery backup is connected to an additional unit, a battery case for the separate absolute pulse coder must be connected to JA4A on the analog basic unit. The battery voltage is supplied to the additional unit via the flat cable.

© MyFANUC 195109AB01DC415385669AA015E5BDE5

6.3.8 Separate Detector Interface (Analog Input)

6.3.8.1 Analog 1Vp-p interface

Separate detector interface unit
(Analog basic unit)

JF111 to JF114
(PCR-EV20MDT)

1	A	11	NC(ADIF)
2	XA	12	0V
3	B	13	NC(BDIF)
4	XB	14	0V
5	Z	15	NC(T0)
6	XZ	16	0V
7		17	
8		18	+5V
9	+5V	19	NC(PZ)
10		20	+5V

Analog 1Vp-p output encode

Leave NC (No Connection) open.

Cable connection

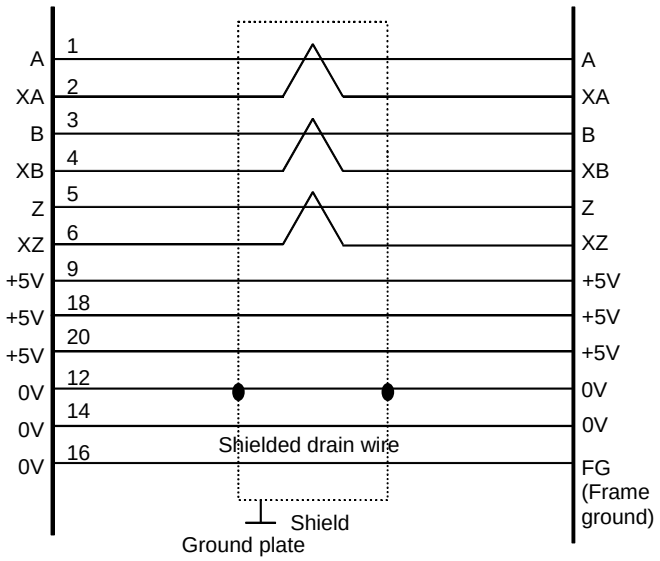

Recommended cable:
A66L-0001-0286 (#20AWG × 6 + #24AWG × 3-pair)
Recommended connectors:
PCR-E20FA (Honda Tsushin Kogyo)
FI30-20S (Hirose Electric)
FCN-247J020-G/E (FUJITSU COMPONENT)
52622-2011 (Molex)
FI40B-2015S (Hirose Electric)

NOTE

The +5V signals above can be used to feed power to the detectors. The supply current per detector is 0.35 A maximum.
The lower limit of the 5V signals is 4.95 V for the basic unit or 4.9 V for the additional unit. Determine the specifications and length of the cable to be used so that the specification of the detector is not exceeded.

© MyFANUC 195109AB01DC415385669AA015E5BDE5

6.3.8.2 Input signal requirements (analog 1Vp-p interface)

A/B (Type I)

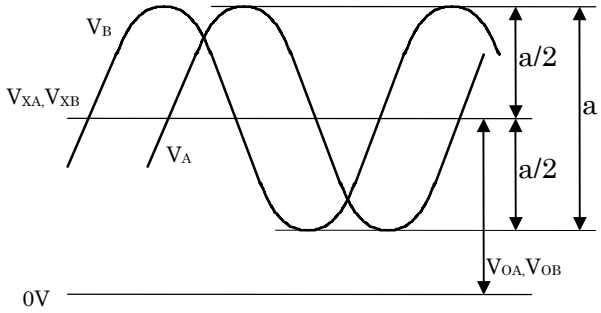

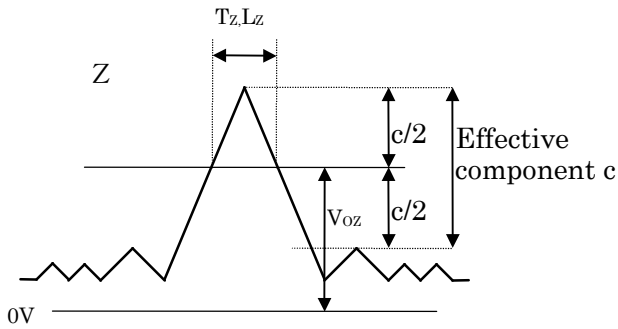

A/B (Type II)

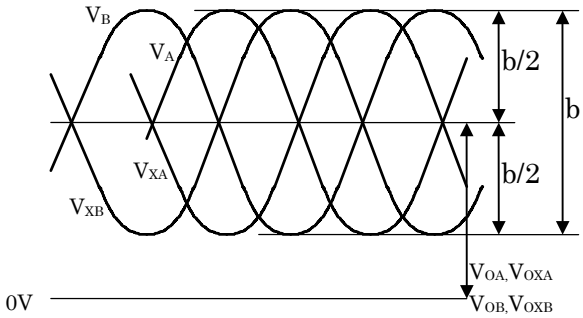

Item	Symbol	Min. spec.	Standard spec.	Max. spec.	Unit
Amplitude (phase A/B)	Type I a of phase A and phase B Type II Sum of b of phase A and b of phase XA Sum of b of phase B and b of phase XB	0.6	1.0	1.5	V_{P-P}
Amplitude (phase Z)	Sum of c of Z and c of XZ (analog signal)	0.2	0.4	-	V
Center value (DC level)	Type I V_{OA},V_{XA} ,V_{OB},V_{XB} Type II V_{OA},V_{OXA} ,V_{OB},V_{OXB} V_{OZ},V_{OXZ}	2.0	2.5	3.0	V
Offset voltage (phase A/B)	Type I V_{OA}-V_{XA} , V_{OB}-V_{XB} Type II V_{OA}-V_{OXA} , V_{OB}-V_{OXB}	-0.1	0	+0.1	V
Offset voltage (phase Z)	V_{OZ}-V_{OXZ}	-0.05	0	+0.05	V
Pulse width of phase Z	T_Z	600	-	-	nSec
Length of phase Z	L_Z	1/4	-	-	Pitch of A (or B)
Input impedance		100	120	140	Ω
Input frequency		-	-	200	kHz

* The detection precision depends on the precision of signals from the encoder.

© MyFANUC 195109AB01DC415385669AA015E5BDE5

6.3.8.3 Method for checking the encoder signals

The check pin board can be used to observe ADIF (differential amplified signal from A and XA input signals), BDIF (differential amplified signal from B and XB input signals), T0 (reference voltage), and PZ (compared digital signal from Z and XZ input signals).

(1) Ordering specifications A06B-6071-K290
Details
A20B-1005-0340 Printed circuit board with check pins
A660-2042-T031#L200R0 200-mm cable

(2) Connection
Connect the check pin board to the cable of which axis you want to observe the signals.

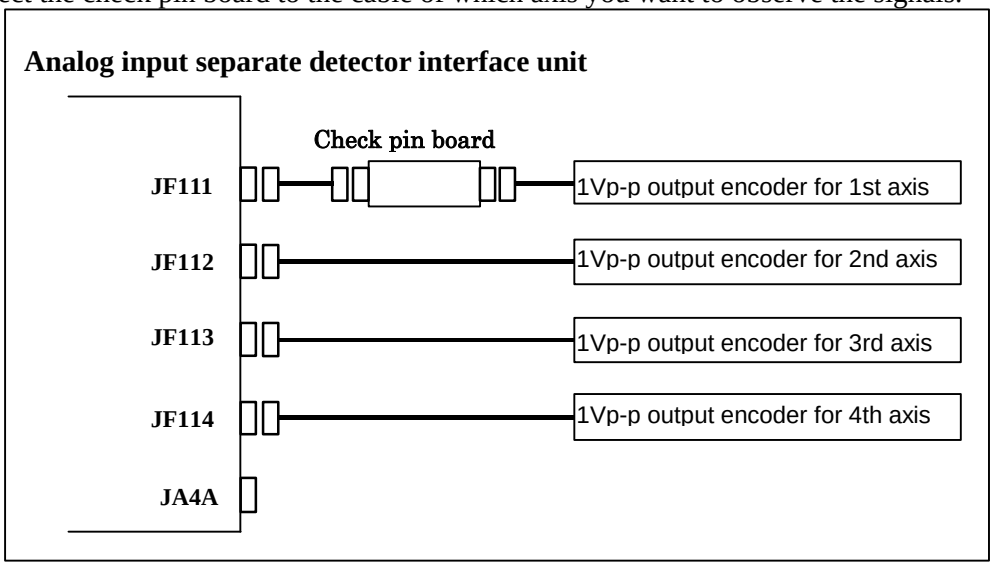

(3) Signal output

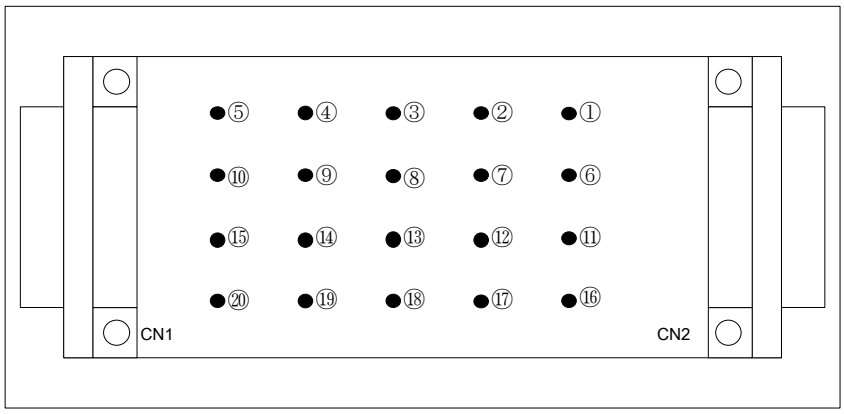

Pin number	Signal name	Remarks
⑪	ADIF	Differential amplified signal from A and XA input signals ADIF = 2 × (XA – A)
⑬	BDIF	Differential amplified signal from B and XB input signals BDIF = 2 × (XB – B)
⑮	T0	Reference voltage 2.5VDC (=1/2Vcc)
⑲	PZ	Compared digital signal from Z and XZ input signals
⑨, ⑱, ⑳	+5V	Power
⑫, ⑭, ⑯	0V	Signal ground

© MyFANUC 195109AB01DC415385669AA015E5BDE5

6.3.9 Connection of Battery for Absolute Position Detector

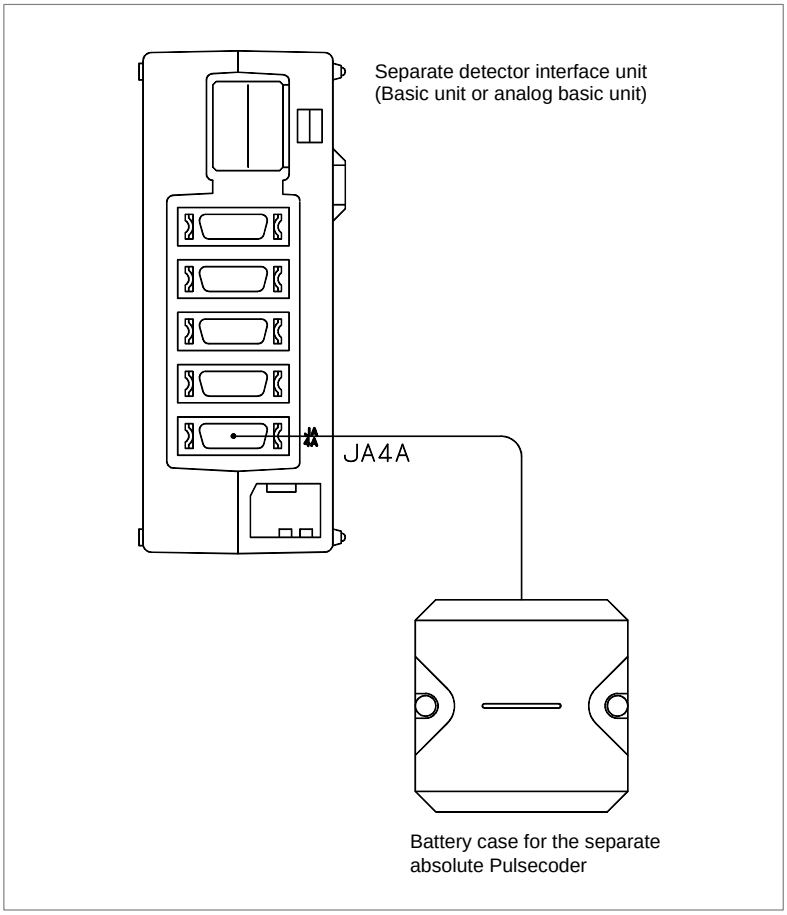

When a separate absolute position detector that requires battery backup is connected, a battery case for the separate absolute pulse coder must be connected to JA4A on the basic unit (or analog basic unit).
The battery voltage is supplied to the additional unit via the flat cable.

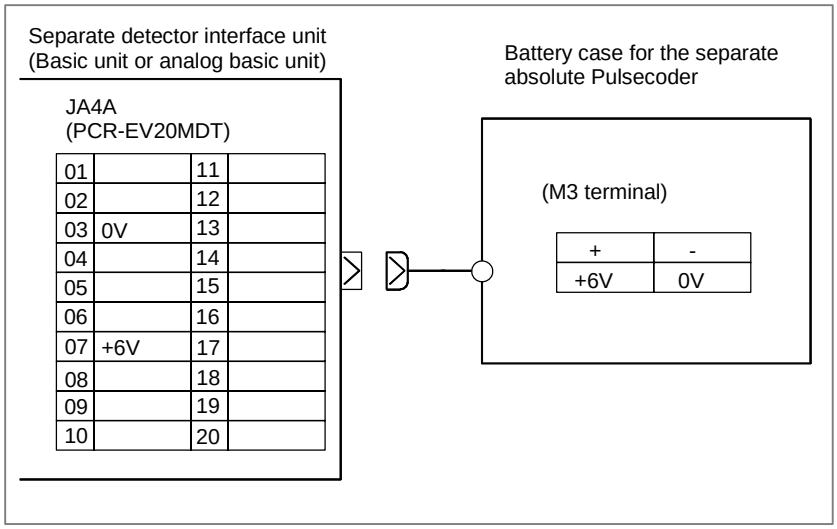

© MyFANUC 195109AB01DC415385669AA015E5BDE5

Cable connection

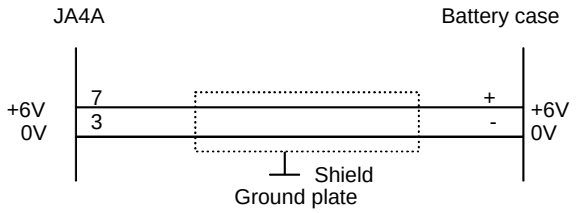

Recommended cable material:
≧0.2mm^2(7/0.18)
Recommended connectors:
PCR-E20FA (Honda Tsushin Kogyo)
FI30-20S (Hirose Electric)
FCN-247J020-G/E (FUJITSU COMPONENT)
52622-2011 (Molex)

⚠ **CAUTION**

If the cable is connected to JA4A when the separate absolute pulse coder battery case contains the battery, the battery voltage is applied to the battery power supply pin (+6V) for each of the feedback connectors (JF105 to JF108). In this case, if the battery line and 0 V are short-circuited, the battery may heat up or the protection circuit within the separate detector interface unit may fail. First, make sure the battery case contains no battery or the cable is not connected to JA4A. Then, complete all cabling work and confirm cables are correctly connected. Finally, place the battery or connect the cable to JA4A.

© MyFANUC 195109AB01DC415385669AA015E5BDE5

6.3.10 Connection between the Basic Unit and Additional Unit

A flat cable is used to connect the basic unit (or analog basic unit) and additional unit as shown below. The flat cable is 100 mm long.

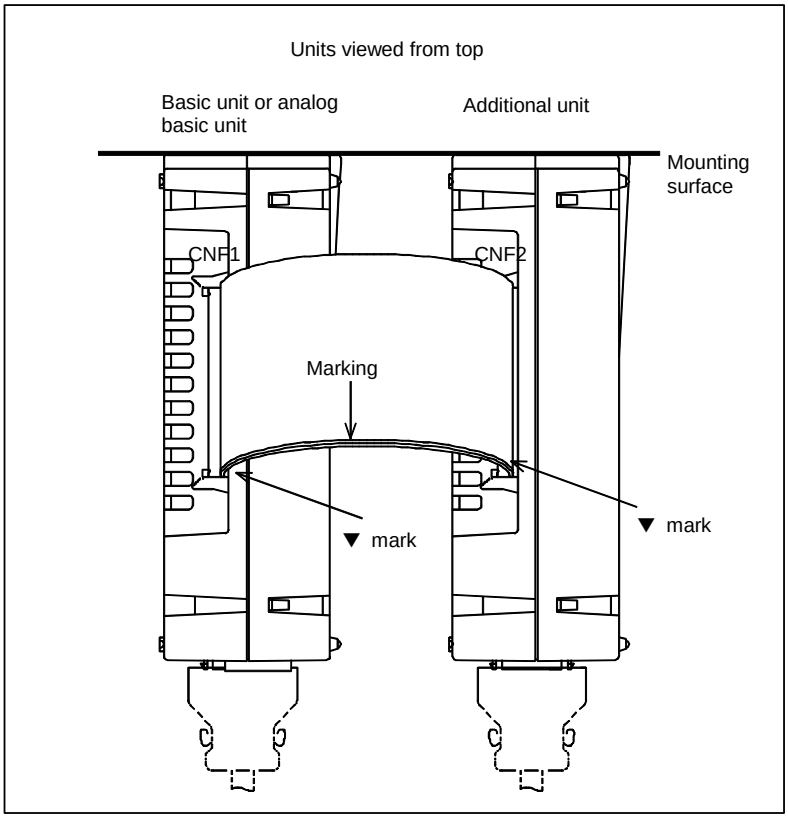

Place an order on a flat cable together with separate detector interface units.

6.3.11 Connector Locations

Connector locations on the basic unit

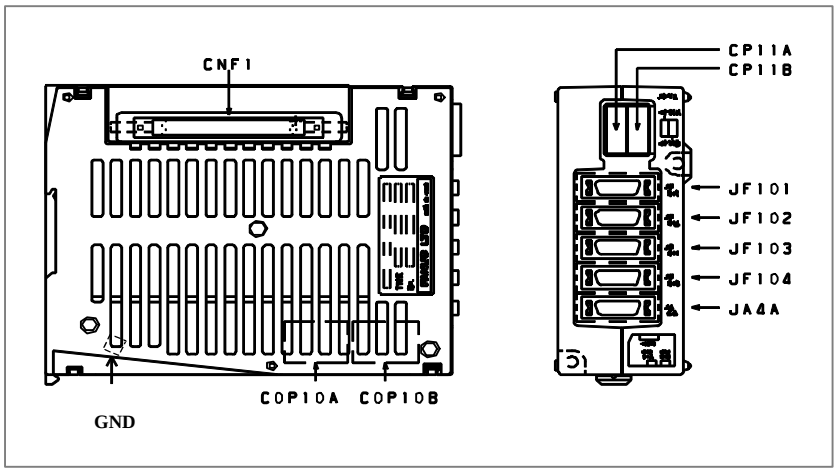

© MyFANUC 195109AB01DC415385669AA015E5BDE5

Connector locations on the additional unit

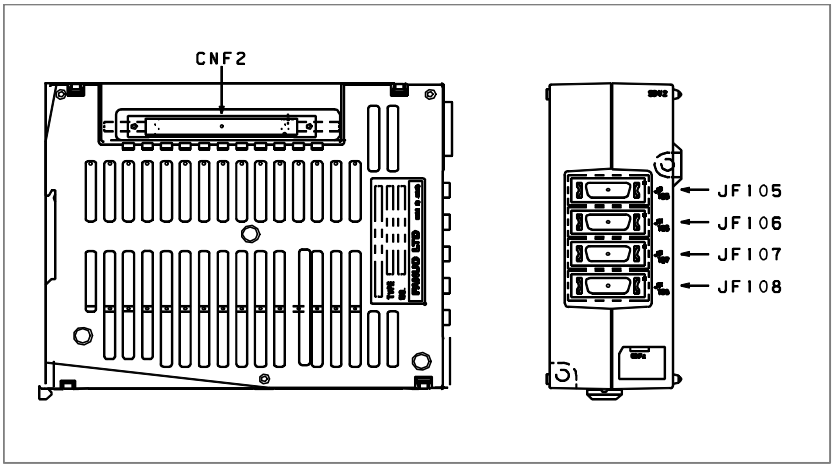

Connector locations on the analog basic unit

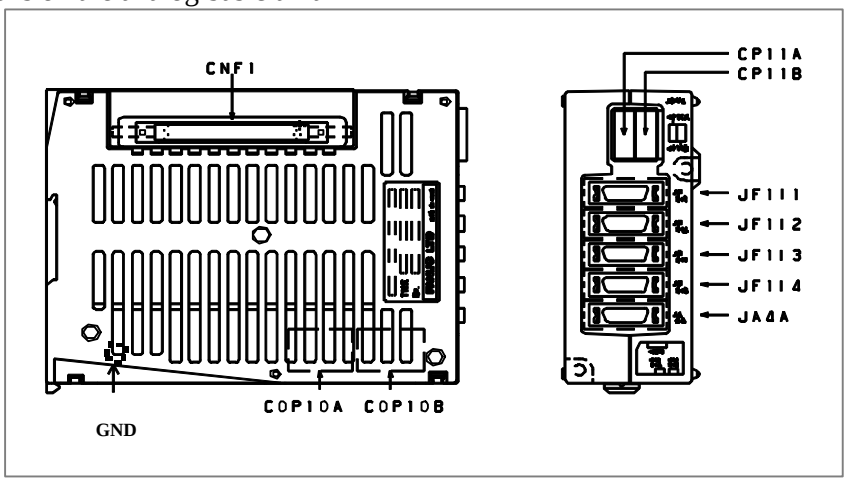

For the outside dimensions, see Appendix A, “OUTLINE DRAWINGS OF UNITS AND CONNECTORS”.

© MyFANUC 195109AB01DC415385669AA015E5BDE5

6.3.12 Installation

1) Notes on installation
   (1) Use an interface unit in a completely enclosed cabinet.
   (2) Install an interface unit on a vertical surface, and provide a space of 100 mm above and below the unit. Below an interface unit, do not place equipment that generates a large amount of heat.
   (3) When using a basic unit (or analog basic unit) and additional unit, place the units as shown below so that the flat cable connecting the units does not block the vent holes on the basic unit (or analog basic unit). A flat cable not longer than 100 mm must be used.

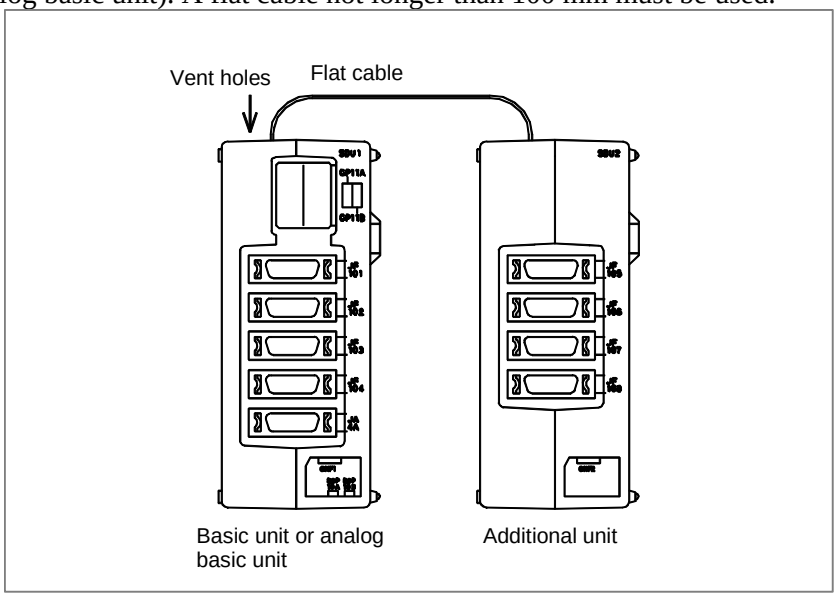

2) Installation using screws

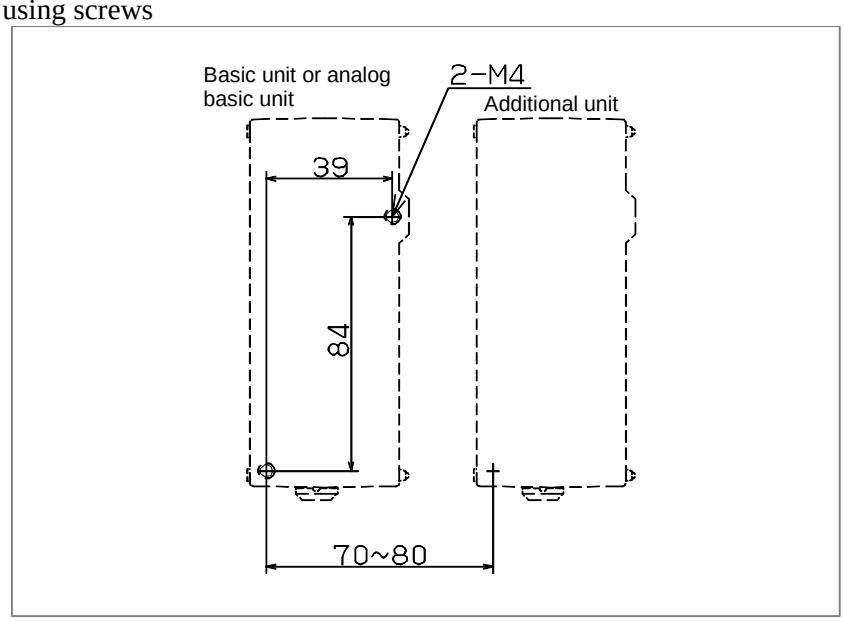

When using both a basic unit (or analog basic unit) and additional unit, install the units as shown above, with the mounting holes horizontally separated by 70 to 80 mm.

© MyFANUC 195109AB01DC415385669AA015E5BDE5

6.3.13 Notes on Installing a Separate Detector Interface Unit

NOTE

Since a screwdriver must be inserted obliquely to install or remove this unit and heat is radiated from the sides of the unit, sufficient access clearances are required on both sides of the unit.
As a guideline, if the front of an adjacent unit appears flush with the unit or slightly set back, allow a clearance of about 20 mm between the unit and the adjacent unit. If the front of an adjacent unit protrudes beyond the front of the unit, allow a clearance of about 70 mm between the unit and the adjacent unit.
Also, when installing the unit near a side of the cabinet, allow a clearance of about 70 mm between the unit and the side of the cabinet.

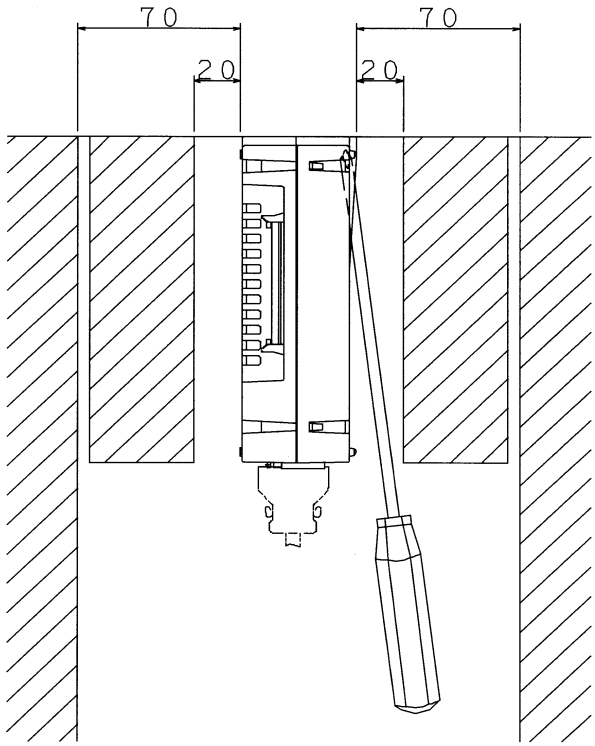

Access clearance near a separate detector interface unit

© MyFANUC 195109AB01DC415385669AA015E5BDE5

Installing the unit on the DIN rail

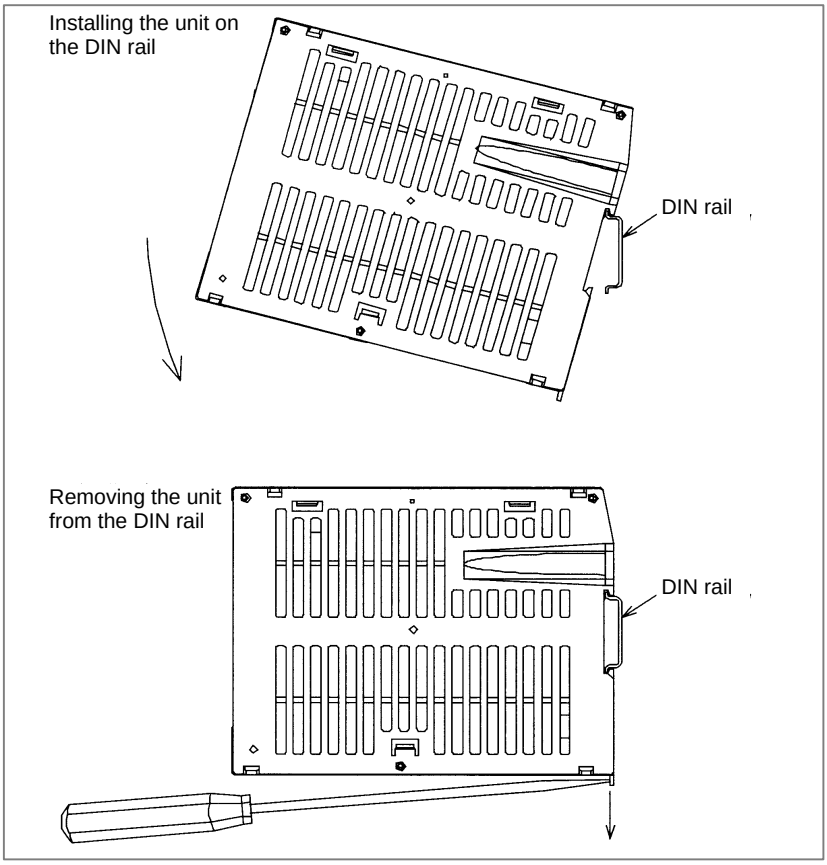

Installing the unit:

1. Hook the unit on the top of the DIN rail.
2. Push the unit in until it clicks.

Removing the unit:

1. Push down the lock by using a screwdriver.
2. Remove the unit by pulling the lower end of the unit towards you.

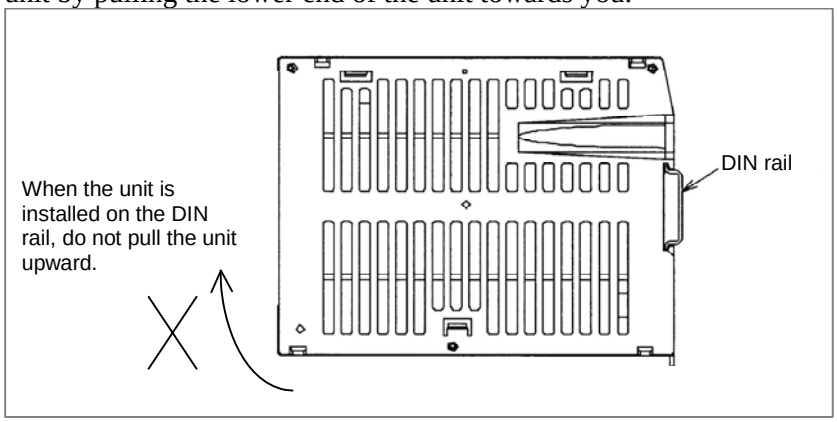

⚠ CAUTION

Be careful not to damage the lock by applying excessive force to the installed unit. When installing and removing the unit, hold the upper and lower ends of the unit so that stress is not applied to the side (surface with the slits) of the unit. When the unit is installed on the DIN rail, do not pull the unit upward, or the case may be damaged.

© MyFANUC 195109AB01DC415385669AA015E5BDE5

7 CONNECTION TO FANUC I/O Link *i* AND FANUC I/O Link

⚠ **WARNING**

An I/O unit may not operate normally due to a control unit, I/O unit, or input power failure, or communication error. To prevent accidents even in this case, design the machine to operate safely by making a safety circuit outside the I/O unit.

All DO signals of an I/O unit are designed to be turned off if a system alarm occurs in the control unit which controls the I/O unit, or if the power to the control unit or I/O unit is turned off. However, it cannot be guaranteed that DO signals of the I/O unit will certainly be turned off. Therefore, manage the signals related to safety by making a safety circuit outside of the I/O unit. The dual check safety function can be used to detect a single failure in the safety-related section. For details of the dual check safety function, refer to the Dual Check Safety Connection Manual (B-64483EN-2).

7.1 OVERVIEW

The I/O Link *i* and I/O Link are a serial interface which connects the control unit, I/O Unit-MODEL A, Power Mate, and other units and transfers I/O signals (bit data) at high speed between units. In I/O Link *i* and I/O Link control, there are the master station and its slave stations. The master is the control unit, and the slaves are other I/O units.

The status of input signals from the slaves is sent to the master at specified intervals. Output signals from the master are also sent to the slaves at specified intervals.

With the I/O Link *i*, the communication transfer rate is increased, compared to the I/O Link. More signals and slaves (groups) can be connected.

Specification comparison of the I/O Link *i* and I/O Link

Item	I/O Link	I/O Link *i*
Transfer cycle	2 ms	2 ms (normal mode) 0.5 ms (high-speed mode)
Maximum number of I/O signals (per channel)	1024/1024	2048/2048 (normal mode) 512/512 (high-speed mode)
Maximum number of I/O signals (per group)	256/256	512/512
Maximum number of groups (per channel)	16 groups	24 groups (normal mode) 5 groups (high-speed mode)
Number of channels required for dual check safety	2 channels	1 channel

* The normal and high-speed modes can be used simultaneously. For the setting of the high-speed mode, refer to the PMC Programming Manual (B-64513EN).

* The transfer cycle means the cycle of DI/DO transfer between the master and slaves. For the actual delay time, the slave driver and receiver delay times and ladder scan period must be considered.

* When dual check safety (safety I/O mode) is used, the maximum number of I/O signals that can be used is limited to 28 bytes per group. For details, refer to the PMC Programming Manual (B-64513EN).

* The high-speed mode is applied to I/O module for connector panel, I/O module for power magnetics cabinet and Terminal type I/O module.

© MyFANUC 195109AB01DC415385669AA015E5BDE5

The Power Motion *i* has a total of three channels of I/O Link *i* and I/O Link interfaces. When only the I/O Link *i* is used, up to two channels can be used. When only the I/O Link is used, up to three channels can be used.

Number of channels available for the I/O Link *i* and I/O Link

Item	I/O Link	I/O Link *i*
Number of available channels	Up to 3	Up to 2

* The I/O Link *i* and I/O Link can be used simultaneously by selecting the I/O Link *i* and I/O Link for each channel. For details, see Section 7.2, "Connection", below.

7.2 CONNECTION

With the Power Motion *i*, interface connector for the I/O Link *i* and I/O Link JD51A (for three channels) is located on the main board. For channels 1 and 2 of these three channels, the I/O Link *i* or I/O Link can be selected. Channel 3 is available only for the I/O Link. Each of channels 1 and 2 is used for the I/O Link *i* or I/O Link according to the parameter setting. According to the initial setting, channels 1 and 2 are used for the I/O Link. For the parameter setting, refer to the PMC Programming Manual (B-64513EN).
In I/O control, there are the master station and its slave stations. The master is the control unit, and the slaves are other I/O units. The slaves are divided into groups. Up to 24 slave groups can be connected to one channel with the I/O Link *i*. Up to 16 slave groups can be connected with the I/O Link.
The I/O Link *i* and I/O Link are connected in different ways depending on the types of units actually used and the number of I/O signals. Therefore, the assignment and addresses of the I/O signals have been made programmable with the PMC program. The maximum number of I/O signals available for each channel is 2048/2048 for the I/O Link *i* and 1024/1024 for the I/O Link.
Up to 4096/4096 signals in total can be used for the entire system. Within this range of the total number of signals, the I/O Link *i* or I/O Link can be selected for each channel.

[Sample available combination]

Channel 1	Channel 2	Channel 3	Total number of signals (DI / DO)
I/O Link *i*	I/O Link *i*	—	4096 / 4096
I/O Link *i*	I/O Link	—	3072 / 3072
I/O Link *i*	I/O Link	I/O Link	4096 / 4096
I/O Link	I/O Link	I/O Link	3072 / 3072

NOTE
1 The total number of I/O signals that can be used differs depending on the model.
2 All units connected to the channel used for the I/O Link *i* must support the I/O Link *i*.
Do not connect any unit dedicated to the I/O Link *i* to the channel used for the I/O Link.

An I/O unit has I/O Link *i* and I/O Link interface connectors JD1A and JD1B. All units with the I/O Link *i* or I/O Link function have these connectors. A cable must always be connected from JD1A to JD1B. Although connector JD1A on the last unit is not used and left open, it is not necessary to connect JD1A with a terminator.
The pin assignments of connectors JD1A and JD1B are common to all units with the I/O Link *i* or I/O Link function. They are described in Subsection 7.2.1. Fig. 7.2 shows a connection diagram of the I/O Link *i* or I/O Link.

© MyFANUC 195109AB01DC415385669AA015E5BDE5

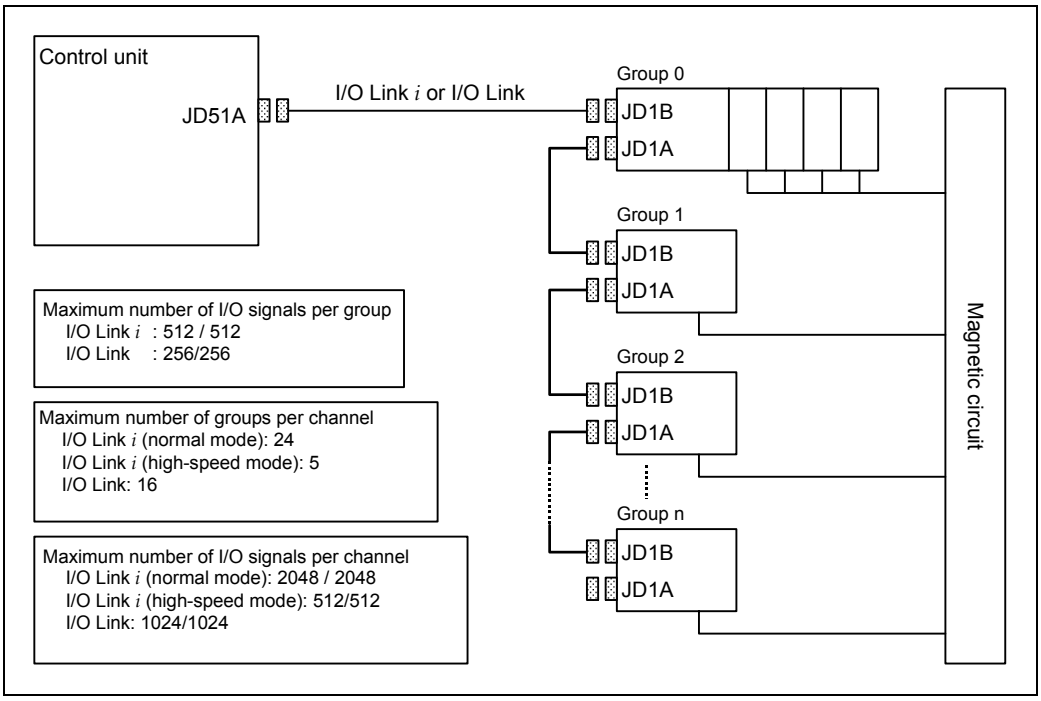

Fig. 7.2 I/O Link *i* or I/O Link connection diagram

The I/O Link *i* and I/O Link are connected by an electric cable (Subsection 7.2.1) or by an optical fiber cable (Subsection 7.2.2). When an electric cable is used, the maximum cable length between units is 10 m. When the cable is laid within the same cabinet(NOTE), however, the maximum length is 15 m. The maximum cable length between units can be extended to 200 m with optical fiber cables using an optical adapter.
If any of the following conditions is satisfied, use an optical fiber cable for connecting units:

- The cable laid within the same cabinet is longer than 15 m.
- The cable is run between different cabinets and is longer than 10 m or the cabinets cannot be connected with each other via a ground wire of 5.5 mm^2 or more.
- The cable may be influenced by strong noise.
  For example, there is a strong electromagnetic noise source such as a welding machine beside the cable or a noise generating cable such as a power cable or power magnetic cable runs for a long distance in parallel with the cable.

NOTE
Different cabinets connected at low impedance by a closed metal duct can be assumed to be one cabinet.

© MyFANUC 195109AB01DC415385669AA015E5BDE5

7.2.1 Connection of I/O Link *i* or I/O Link by Electric Cable

When an electric cable is used, the maximum cable length between units is 10 m.
When the cable is laid within the same cabinet, however, the maximum length is 15 m.

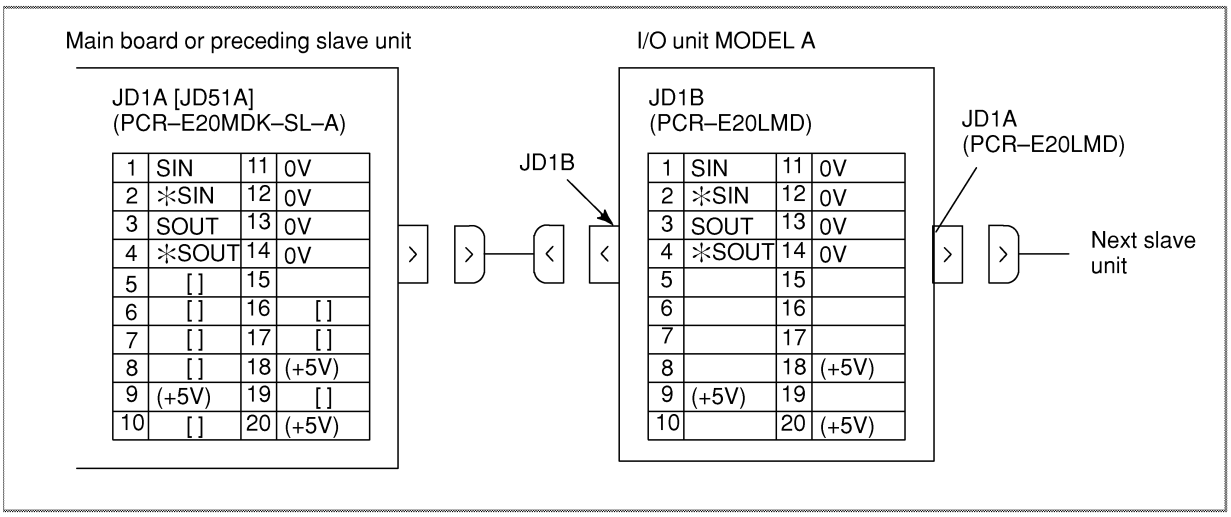

NOTE

1. The +5 V terminals in parentheses are for supplying the power to an optical adapter to be used for connection by an optical fiber cable. Do not connect the +5 V terminals when using no optical adapter.
2. Do not connect the pins in brackets. They are used for connecting channels 2 and 3 with JD51A.
3. Do not connect any pin for which no signal is assigned.
4. Take sufficient measures against noise. See Section 3.4, “Countermeasures against Noise and Grounding”.

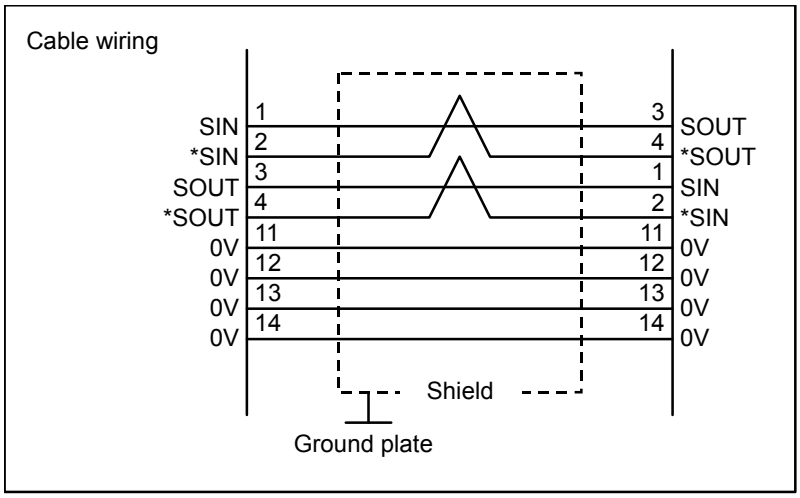

Recommended wire material	A66L-0001-0284#10P (#28AWG × 10 pairs)
Recommended cable connectors	PCR-E20FA (Honda Tsushin Kogyo Co., Ltd.) FCN-247J020-G/E (FUJITSU COMPONENT) 52622-2011 (Molex Japan Co., Ltd.)

© MyFANUC 195109AB01DC415385669AA015E5BDE5

7.2.2 Connection of FANUC I/O Link *i* or I/O Link by Optical Fiber Cable

The I/O Link *i* and I/O Link can be extended to a maximum length of 200 m with optical fiber cables using an optical adapter. The length of the electric cable connected to the optical adapter must not exceed 2 m (when the recommended wire material is used).

Connection

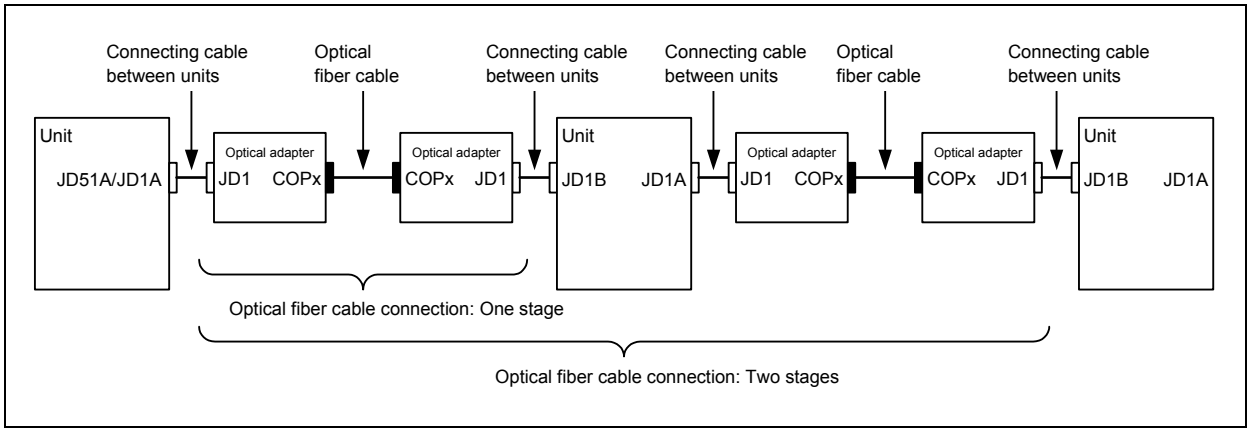

Connecting cable between units

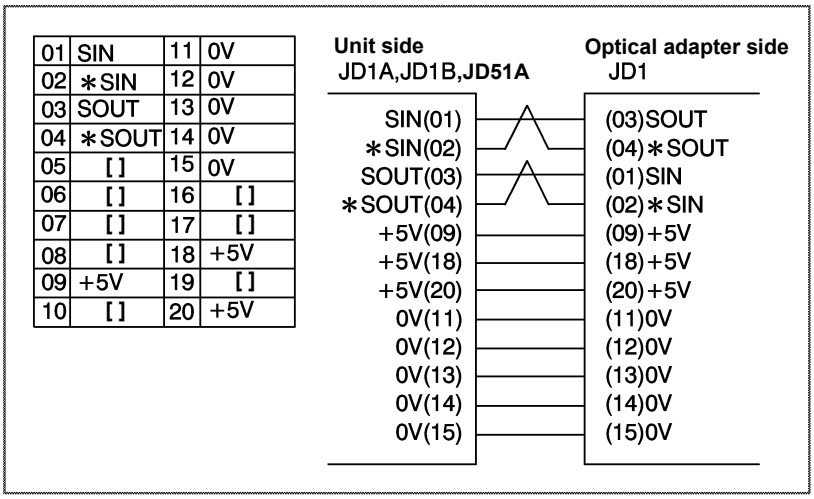

01	SIN	11	0V
02	∗SIN	12	0V
03	SOUT	13	0V
04	∗SOUT	14	0V
05	[ ]	15	0V
06	[ ]	16	[ ]
07	[ ]	17	[ ]
08	[ ]	18	+5V
09	+5V	19	[ ]
10	[ ]	20	+5V

Recommended wire material	A66L-0001-0284#10P (#28AWG × 10 pairs)
Recommended cable connectors	PCR-E20FA (Honda Tsushin Kogyo Co., Ltd.)
	FCN-247J020-G/E (FUJITSU COMPONENT)
	52622-2011 (Molex Japan Co., Ltd.)

NOTE

1. The length of the cable for connecting units must not exceed 2 m (when the recommended wire material is used).
2. Do not connect the pins in brackets. They are used for connecting channels 2 and 3 with JD51A.
3. Do not connect any pin for which no signal is assigned.

© MyFANUC 195109AB01DC415385669AA015E5BDE5

Specifications of optical adapters and optical fiber cables

The following table lists the specifications of the optical adapter for the I/O Link *i*.

Specifications	Transfer mode	Maximum transmission distance	Maximum number of connectable stages	Relay with an optical fiber relay adapter	Weight
A13B-0154-B101	Normal mode	200m	5	None	About 100 g
		100m	16	Up to one point	
	High-speed mode	100m	10	Up to one point	

NOTE
Optical adapter A13B-0154-B101 is for the I/O Link *i*. They cannot be used for the I/O Link.

The following table lists the specifications of the optical adapter for the I/O Link.

Specifications	Type	Maximum transmission distance	Maximum number of connectable stages	Relay with an optical fiber relay adapter	Weight
A13B-0154-B001	Normal type	200m	5	None	About 100g
		100m	5	Up to one point	
A13B-0154-B004	High-speed type	100m	16	None	About 100g

NOTE
1 Optical adapters A13B-0154-B001 and A13B-0154-B004 are for the I/O Link. They cannot be used for the I/O Link *i*.
2 Both high-speed- and normal-type adapters cannot be used on the same I/O Link line.
3 When a high-speed type optical adapter is used, the optical fiber relay adapter cannot be used.

The specifications of the optical fiber cable are A66L-2001-0026#~. For details, see Appendix D.
The specification of the optical fiber relay adapter is A63L-0020-0002. For its external dimensions, see Appendix D.

External dimension of optical adapter

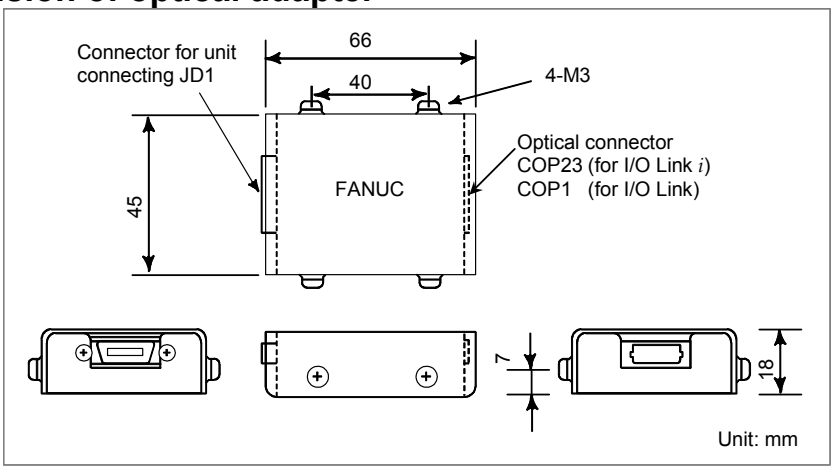

© MyFANUC 195109AB01DC415385669AA015E5BDE5

Optical adapter installation conditions

(a) The optical adapter enclosure is not fully sealed; install it with the control unit in the fully enclosed cabinet.
(b) Ground the case using the case fixing screw of the optical adapter.
(c) The optical adapter is light, and it may not be necessary to mount it with screws. However, keep it from coming in contact with other circuits to prevent possible short-circuits. When mounting the optical adapter in a cabinet, attach it with an L-type fitting using the case fixing screws (M3) of the optical link adapter.

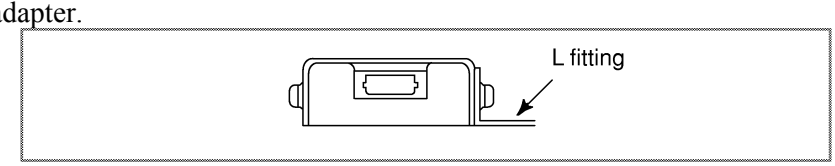

7.2.3 Connection when Multiple Channels of the I/O Link *i* and I/O Link Are Used

With the Power Motion *i*, up to two channels of the I/O Link *i* interface or up to three channels of the I/O Link interface can be used. This feature allows the number of I/O points to be increased to 4096 (4096 input points and 4096 output points).
Signals for three channels are assigned to the connector (JD51A) on the main board. When using only channel 1, see Subsection 7.2.1.
When using the channel 2 and channel 3, use the I/O Link branching adapter for two channels or the I/O Link branching adapter for three channels to branch the I/O Link *i* or I/O Link.

NOTE
A maximum of eight groups can be connected to the FANUC I/O Unit-Model B with three channels.

Using the channel 2

When using channel 2, use the 2ch I/O Link signal divider for three channels to branch the I/O Link *i* or I/O Link.

Connection

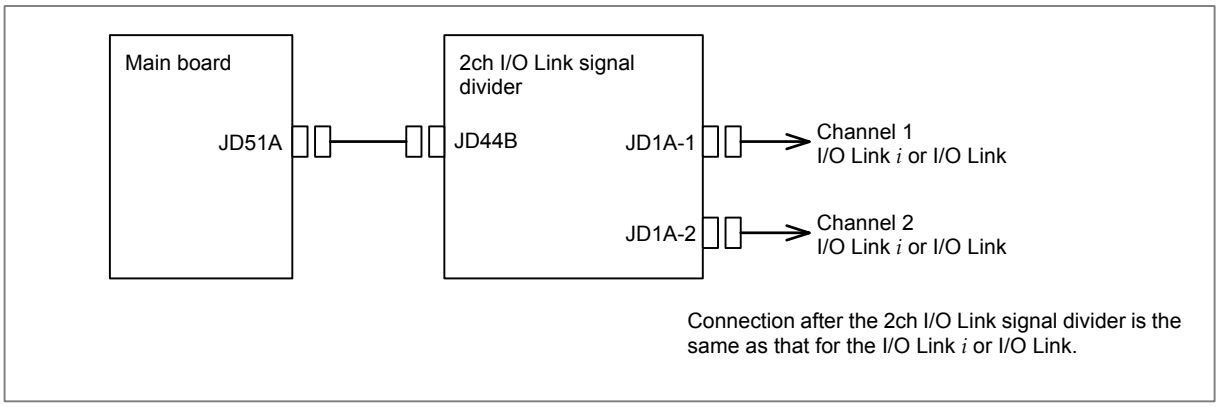

Specification of the 2ch I/O Link signal divider: A20B-1007-0680 (Weight: 60g)

© MyFANUC 195109AB01DC415385669AA015E5BDE5

Connection between the main board and 2ch I/O Link signal divider

Main board
JD51A
(such as PCR-E20MDK-SL-A)

1	SIN1	11	0V
2	*SIN1	12	0V
3	SOUT1	13	0V
4	*SOUT1	14	0V
5	SIN2	15	0V
6	*SIN2	16	[*SIN3]
7	SOUT2	17	[SIN3]
8	*SOUT2	18	(+5V)
9	(+5V)	19	[SOUT3]
10	[*SOUT3]	20	(+5V)

2ch I/O Link signal divider
JD44B
(PCR−E20MDT)

1	SIN1	11	0V
2	*SIN1	12	0V
3	SOUT1	13	0V
4	*SOUT1	14	0V
5	SIN2	15	0V
6	*SIN2	16	
7	SOUT2	17	
8	*SOUT2	18	(+5V)
9	(+5V)	19	
10		20	(+5V)

NOTE

1 The +5 V terminals in parentheses are for supplying the power to an optical adapter to be used for connection by an optical fiber cable. Do not connect the +5 V terminals when using no optical adapter.
2 Do not connect the pins in brackets. These signals are used for connecting channel 3.
3 Do not connect any pin for which no signal is assigned.

Cable connection

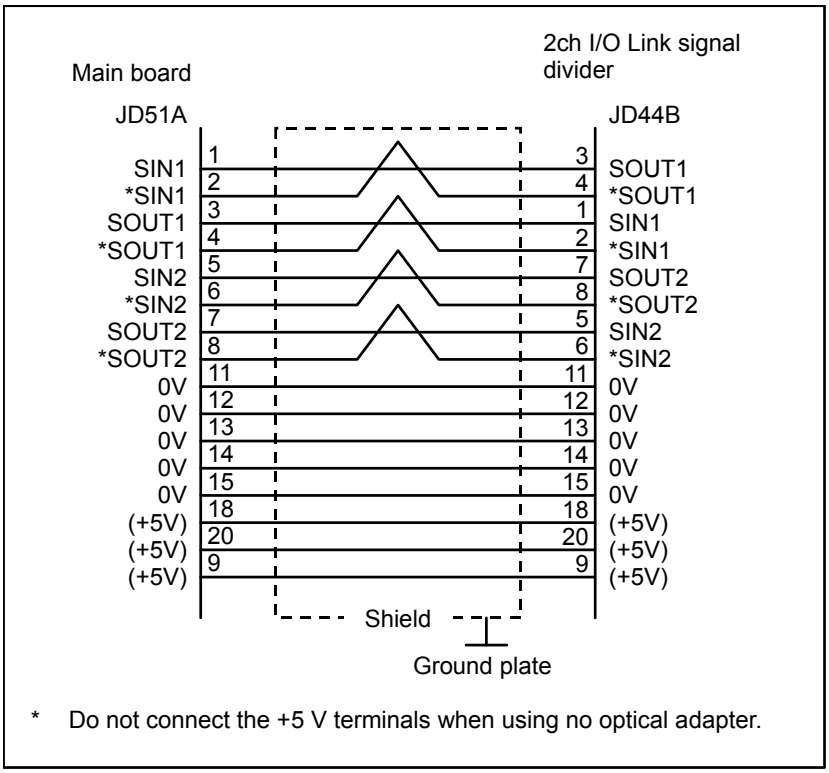

* Do not connect the +5 V terminals when using no optical adapter.

Recommended wire material: A66L-0001-0284#10P (#28AWG × 10 pairs)
Recommended cable connectors: PCR-E20FA (Honda Tsushin Kogyo Co., Ltd.)
FCN-247J020-G/E (FUJITSU COMPONENT)
52622-2011 (Molex Japan Co., Ltd.)

© MyFANUC 195109AB01DC415385669AA015E5BDE5

Connection between the 2ch I/O Link signal divider and I/O units

The 2ch I/O Link signal divider can be connected to I/O units in the same way as for the I/O Link *i* and I/O Link. See Subsection 7.2.1.

Cable length

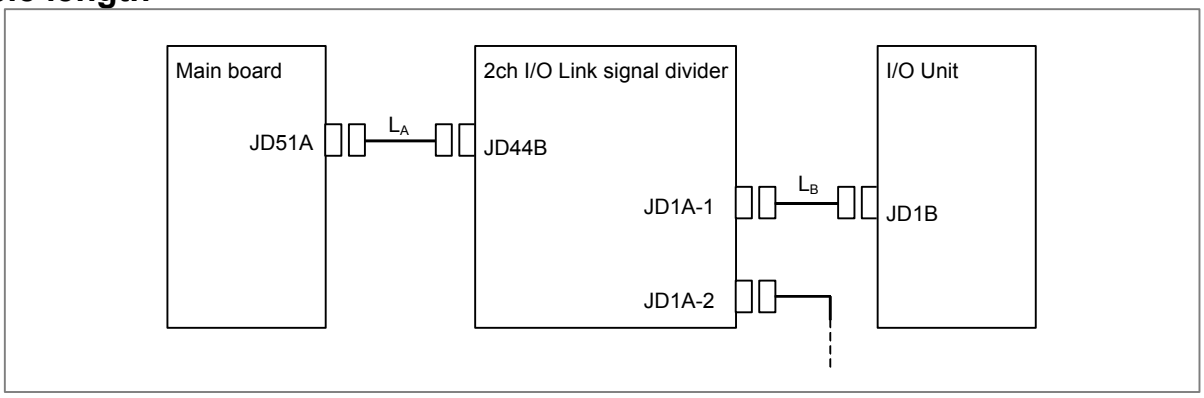

NOTE

The total of L_A and L_B must not exceed 10 m, where L_A is the length of the cable between connector JD51A on the main board and connector JD44B on the 2ch I/O Link signal divider, and L_B is the length of the cable between connector JD1A-1 or JD1A-2 on the 2ch I/O Link signal divider and connector JD1B on the I/O unit. When all cables are laid within the same cabinet, however, a total cable length of up to 15 m is allowed.

© MyFANUC 195109AB01DC415385669AA015E5BDE5

Installation of the 2ch I/O Link signal divider

Install the 2ch I/O Link signal divider in a hermetically sealed cabinet like the control unit.

External dimensions of the 2ch I/O Link signal divider

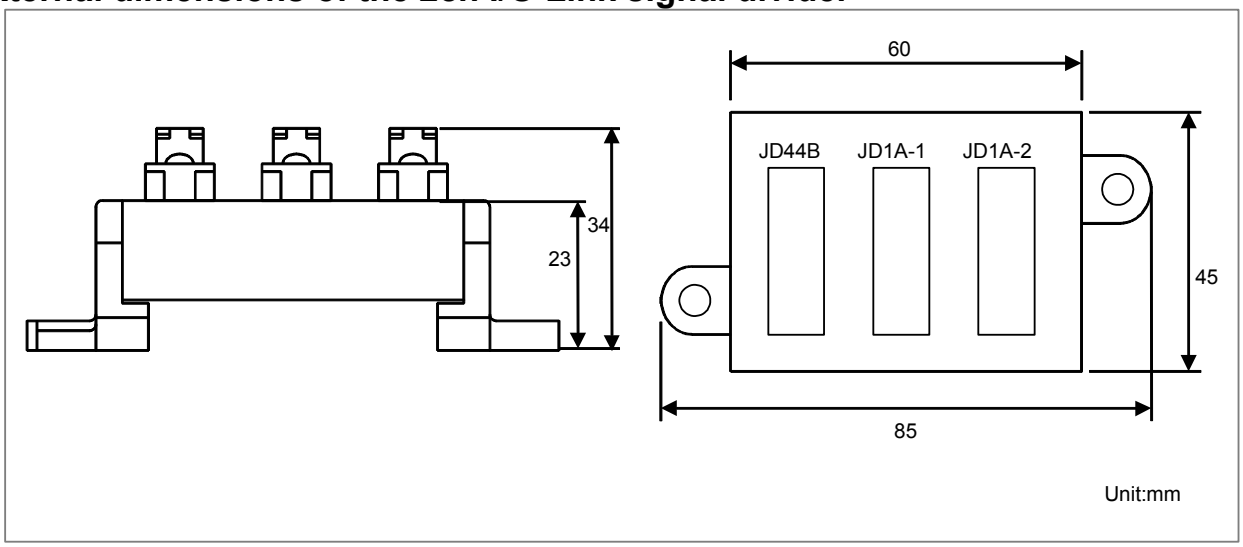

Allow a clearance of about 10 cm above the adapter for connection and routing of cables.

Installation of the 2ch I/O Link signal divider

1) Installation on the DIN rail
The following figure shows the external dimensions of a recommended DIN rail.

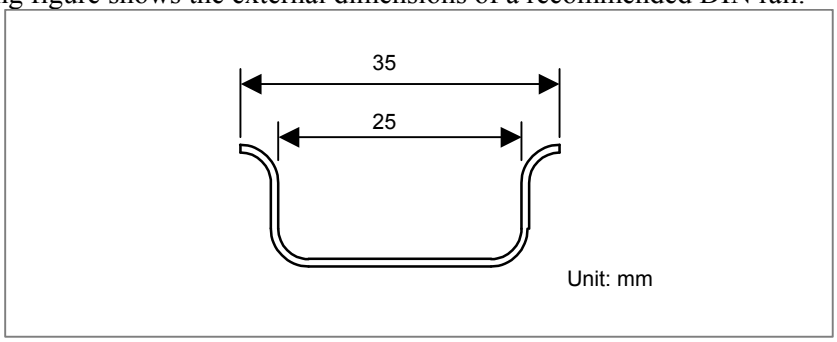

External dimensions of a recommended DIN rail

2) Screwing
The following figure shows drilling on the plate.

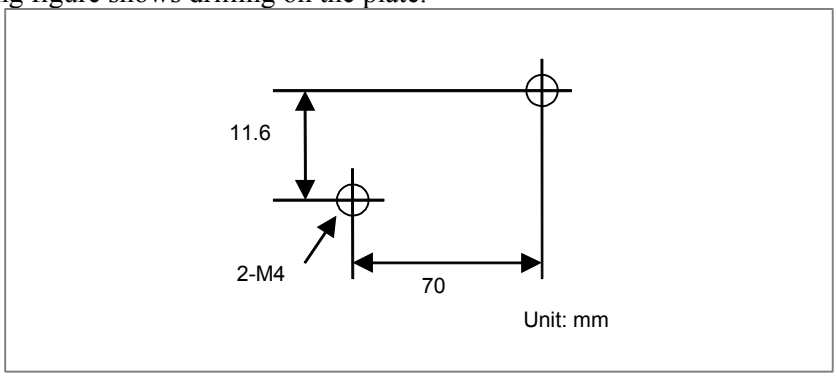

Drilling on the plate

© MyFANUC 195109AB01DC415385669AA015E5BDE5

Using the channel 3

When using channel 3, use the 3ch I/O Link signal divider for three channels to branch the I/O Link *i* or I/O Link.

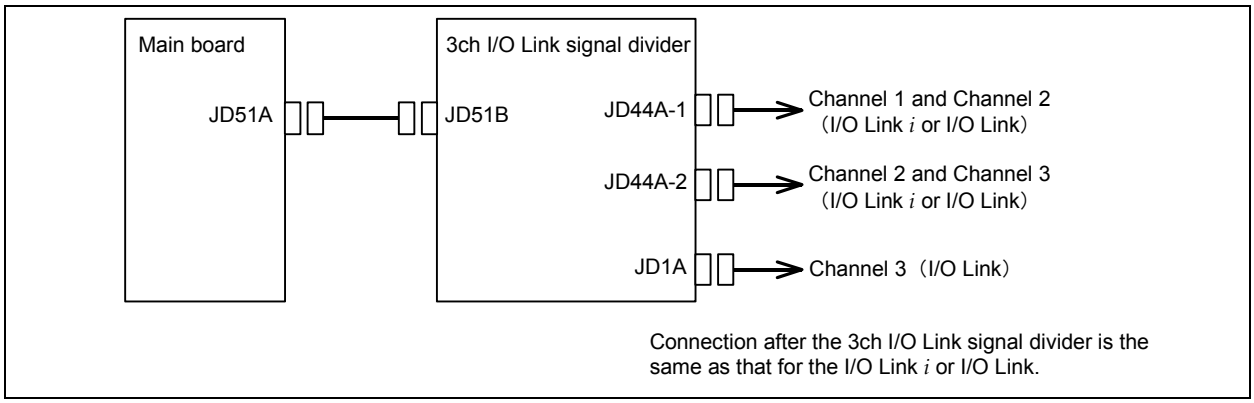

Specification of the 3ch I/O Link signal divider: A20B-1008-0360 (Weight: 80g)

Connection between the main board and 3ch I/O Link signal divider

Main board
JD51A
(such as PCR-E20MDK-SL-A)

1	SIN1	11	0V
2	*SIN1	12	0V
3	SOUT1	13	0V
4	*SOUT1	14	0V
5	SIN2	15	0V
6	*SIN2	16	*SIN3
7	SOUT2	17	SIN3
8	*SOUT2	18	(+5V)
9	(+5V)	19	SOUT3
10	*SOUT3	20	(+5V)

3ch I/O Link signal divider
JD51B
(PCR−E20MDT)

1	SIN1	11	0V
2	*SIN1	12	0V
3	SOUT1	13	0V
4	*SOUT1	14	0V
5	SIN2	15	0V
6	*SIN2	16	*SIN3
7	SOUT2	17	SIN3
8	*SOUT2	18	(+5V)
9	(+5V)	19	SOUT3
10	*SOUT3	20	(+5V)

NOTE

The +5 V terminals in parentheses are for supplying the power to an optical adapter to be used for connection by an optical fiber cable.
Do not connect the +5 V terminals when using no optical adapter.

© MyFANUC 195109AB01DC415385669AA015E5BDE5

Cable connection

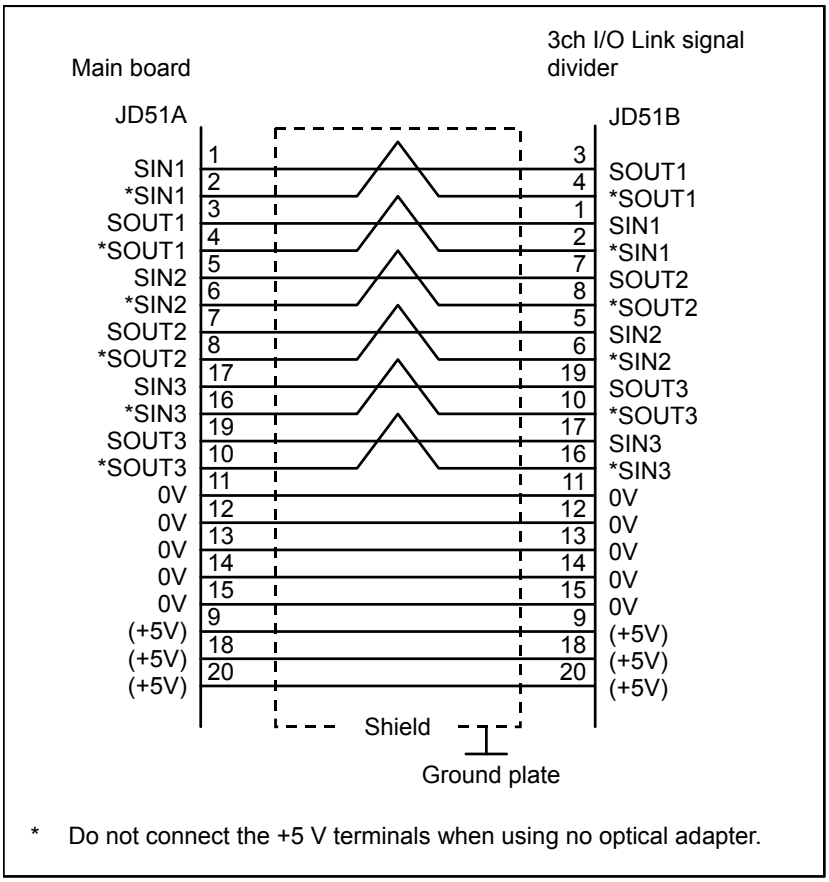

Recommended wire material: A66L-0001-0284#10P (#28AWG × 10 pairs)
Recommended cable connectors: PCR-E20FA (Honda Tsushin Kogyo Co., Ltd.)
FCN-247J020-G/E (FUJITSU COMPONENT)
52622-2011 (Molex Japan Co., Ltd.)

Signal configuration of the 3ch I/O Link signal divider

3ch I/O Link signal divider

JD44A−1 (PCR−E20MDT)

1	SIN1	11	0V
2	*SIN1	12	0V
3	SOUT1	13	0V
4	*SOUT1	14	0V
5	SIN2	15	0V
6	*SIN2	16	0V
7	SOUT2	17	
8	*SOUT2	18	(+5V)
9	(+5V)	19	
10		20	(+5V)

JD44A−2 (PCR−E20MDT)

1	SIN2	11	0V
2	*SIN2	12	0V
3	SOUT2	13	0V
4	*SOUT2	14	0V
5	SIN3	15	0V
6	*SIN3	16	0V
7	SOUT3	17	
8	*SOUT3	18	(+5V)
9	(+5V)	19	
10		20	(+5V)

JD1A (PCR−E20MDT)

1	SIN3	11	0V
2	*SIN3	12	0V
3	SOUT3	13	0V
4	*SOUT3	14	0V
5		15	0V
6		16	0V
7		17	
8		18	(+5V)
9	(+5V)	19	
10		20	(+5V)

Connection between the 3ch I/O Link signal divider and each channel

The 3ch I/O Link signal divider can be connected to I/O units in the same way as for the I/O Link *i* and I/O Link. However, note the following points:

Connector JD44A-1 outputs channel 1 and 2 signals (I/O Link *i* or I/O Link) and connector JD44A-2 outputs channel 2 signals (I/O Link *i* or I/O Link) and channel 3 signals (I/O Link).

Connector JD1A is dedicated to I/O Link channel 3.

1) When the I/O Link *i* or I/O Link is branched to three channels, normal I/O cables are used for JD44A-1, JD44A-2, and JD1A. Channel 1 corresponds to JD44A-1, channel 2 corresponds to JD44A-2, and channel 3 corresponds to JD1A.

© MyFANUC 195109AB01DC415385669AA015E5BDE5

2) When channels 1 and 2 are extended together, the 2ch I/O Link signal divider must be connected to JD44A-1 to branch channel 1 and channel 2 at the end of the adapter. JD1A is used as channel 3. JD44A-2 is not used.
3) When channels 2 and 3 are extended together, the2ch I/O Link signal divider must be connected to JD44A-2 to branch to channel 2 and channel 3 at the end of the adapter. JD44A-1 is used as channel 1. JD1A is not used.

1) When three channels are branched

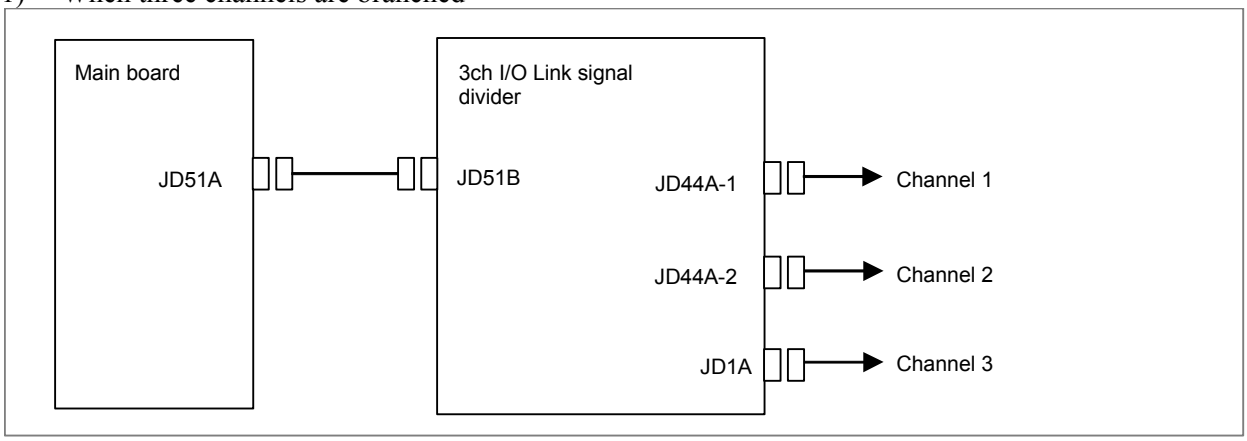

2) When channels 1 and 2 are extended together

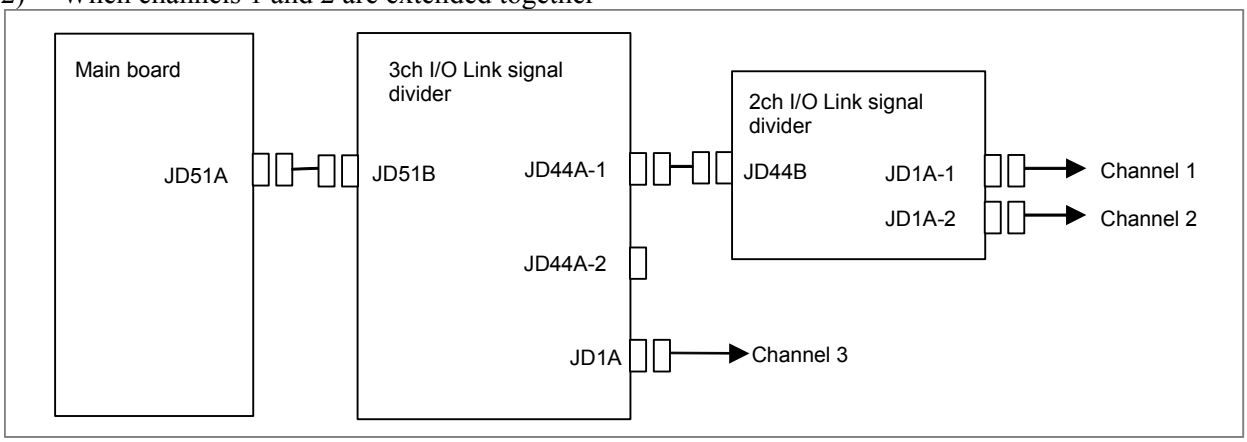

3) When channels 2 and 3 are extended together

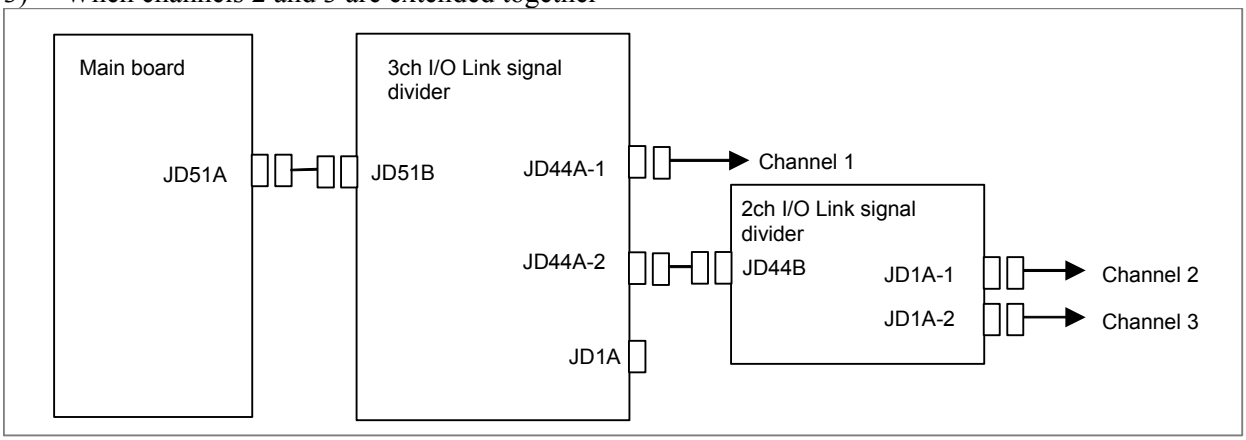

© MyFANUC 195109AB01DC415385669AA015E5BDE5

Connection between the 3ch I/O Link signal divider and 2ch I/O Link signal divider

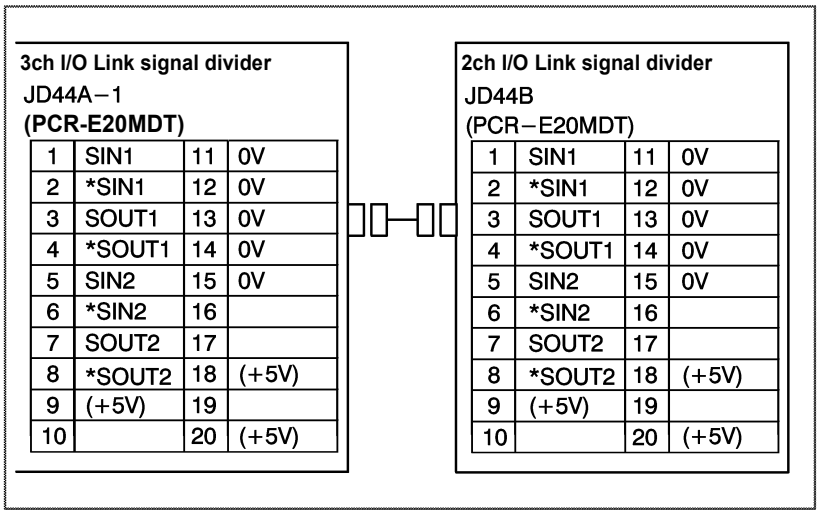

1	SIN1	11	0V
2	*SIN1	12	0V
3	SOUT1	13	0V
4	*SOUT1	14	0V
5	SIN2	15	0V
6	*SIN2	16	
7	SOUT2	17	
8	*SOUT2	18	(+5V)
9	(+5V)	19	
10		20	(+5V)

1	SIN1	11	0V
2	*SIN1	12	0V
3	SOUT1	13	0V
4	*SOUT1	14	0V
5	SIN2	15	0V
6	*SIN2	16	
7	SOUT2	17	
8	*SOUT2	18	(+5V)
9	(+5V)	19	
10		20	(+5V)

NOTE

1 The +5 V terminals in parentheses are for supplying the power to an optical adapter to be used for connection by an optical fiber cable. Do not connect the +5 V terminals when using no optical adapter.

2 Do not connect any pin for which no signal is assigned.

Cable connection

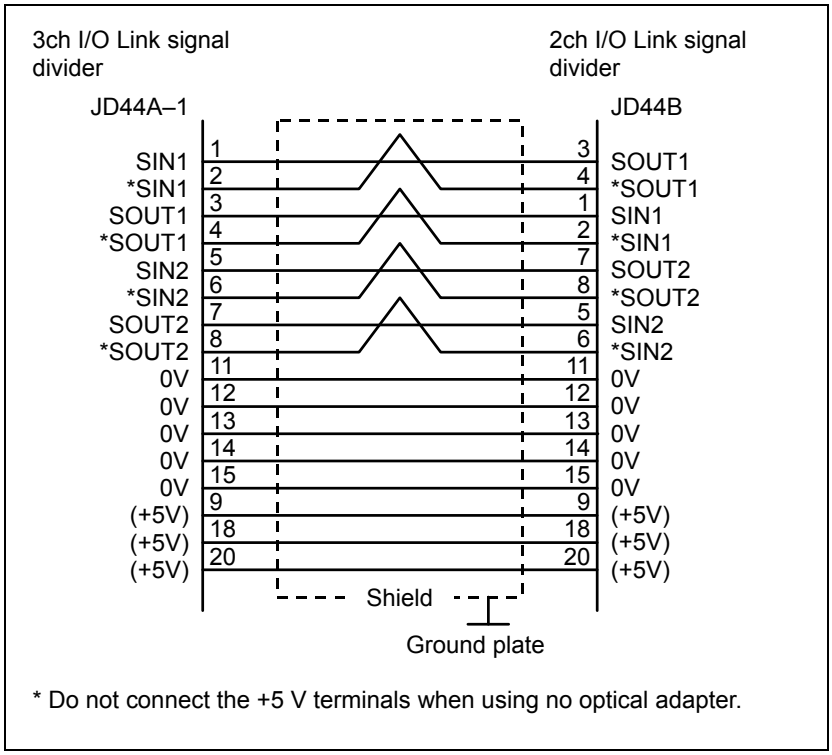

* Do not connect the +5 V terminals when using no optical adapter.

Recommended wire material: A66L-0001-0284#10P (#28AWG × 10 pairs)
Recommended cable connectors: PCR-E20FA (Honda Tsushin Kogyo Co., Ltd.)
FCN-247J020-G/E (FUJITSU COMPONENT)
52622-2011 (Molex Japan Co., Ltd.)

© MyFANUC 195109AB01DC415385669AA015E5BDE5

Cable length

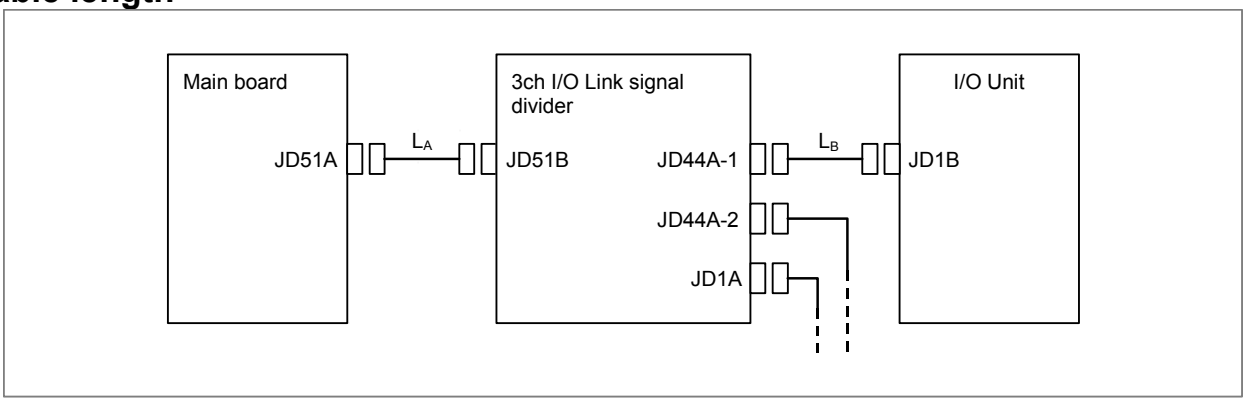

NOTE

The total of L_A and L_B must not exceed 10 m; where L_A is the length of the cable between connector JD51A on the main board and connector JD51B on the 3ch I/O Link signal divider, and L_B is the length of the cable between connector JD44A-1, JD44A-2, or JD1A on the 3ch I/O Link signal divider and connector JD1B on the I/O Unit. When all cables are accommodated in the same cabinet, however, a total cable length of up to 15 m is allowed.

Installation of the 3ch I/O Link signal divider

Install the 3ch I/O Link signal divider in a hermetically sealed cabinet like the control unit.

External dimensions of the 3ch I/O Link signal divider

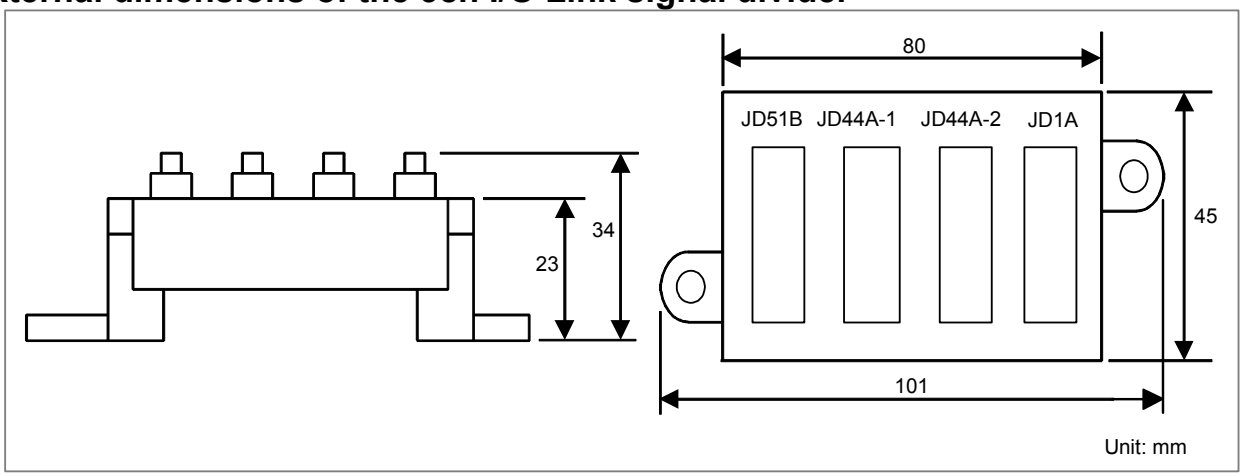

Allow a clearance of about 10 cm above the adapter for connection and routing of cables.

Installation of the 3ch I/O Link signal divider

1) Installation on the DIN rail

The following figure shows the external dimensions of a recommended DIN rail.

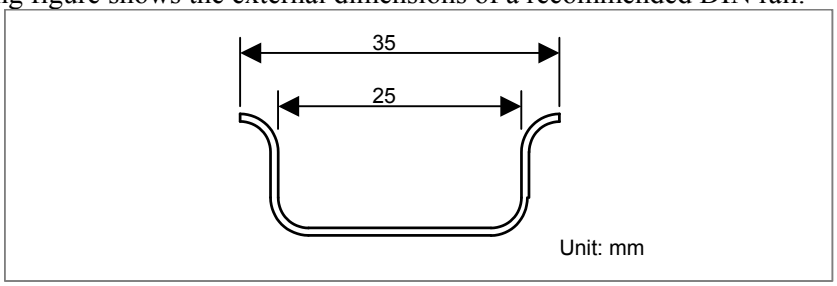

External dimensions of a recommended DIN rail

© MyFANUC 195109AB01DC415385669AA015E5BDE5

2) Screwing
The following figure shows drilling on the plate.

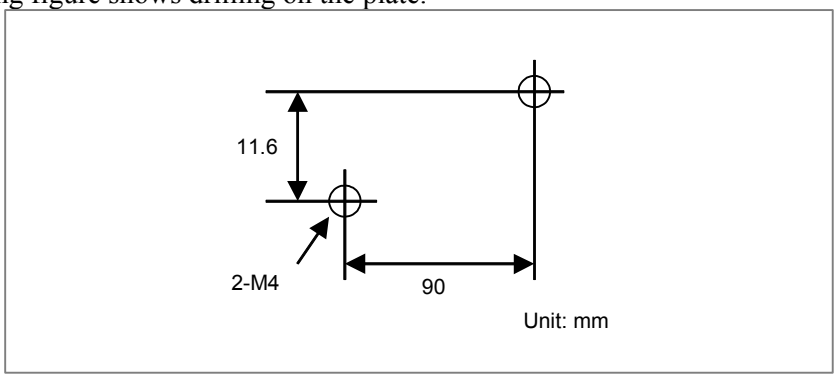

Drilling on the plate

7.3 ASSIGNMENT FOR I/O UNITS

7.3.1 Assignment of Signals

The unit of slaves connected to the I/O Link *i* and I/O Link is called a group. One group of connected I/O units may consist of multiple modules. This unit is called a slot.
On the I/O Link *i* and I/O Link, to allow the control unit as the master to control other I/O units as slaves, the I/O signals of each I/O unit must be assigned to X addresses (input) and Y addresses (output) of the control unit. Assign signals in units of slots for both the I/O Link *i* and I/O Link.
In assignment for the I/O Link *i*, each of basic and extension modules connected to I/O modules for connector panel is treated as a slot. A manual pulse generator interface is also treated as one slot. In assignment for the I/O Link, the I/O modules for control panel are treated as one slot regardless of how many extension modules are connected. A manual pulse generator interface is not also treated as one slot.

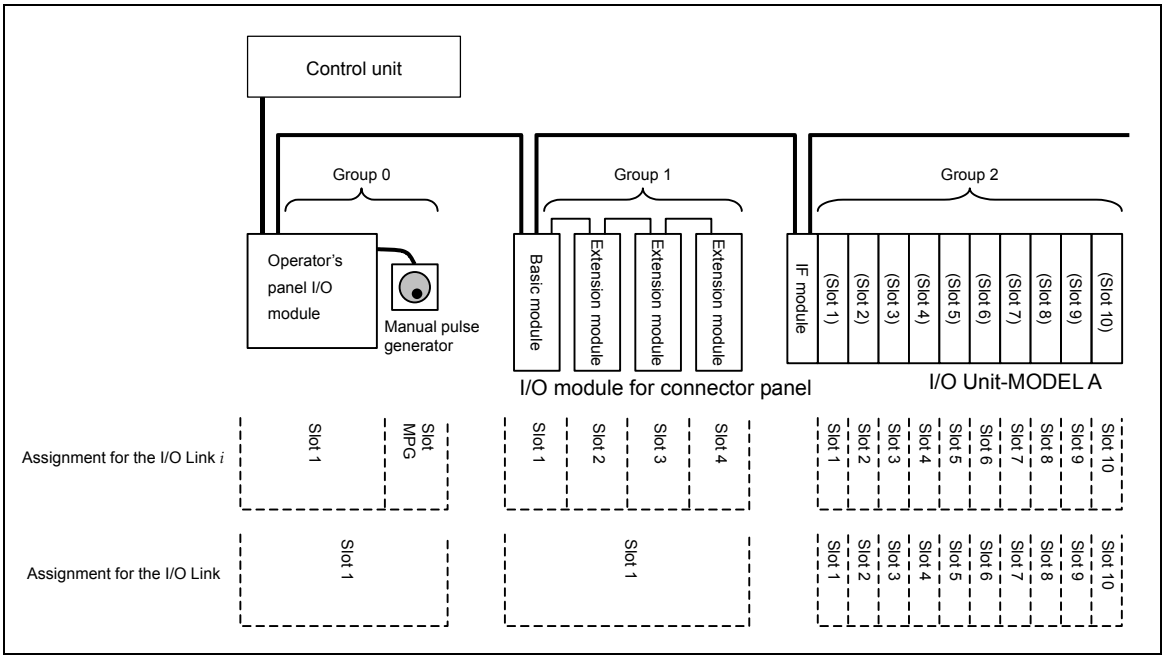

© MyFANUC 195109AB01DC415385669AA015E5BDE5

7.3.2 Fixed Signals

Some DI signals are monitored directly by the control unit. Fixed addresses are assigned to these directly monitored signals. Select I/O units and assign addresses with attention to the polarity of each signal. Whether addresses are assigned to signals are determined according to the machine control type, number of controlled axes, and parameter setting. For details, refer to the FANUC Power Motion *i*–MODEL A Connection Manual (Function) (B-64573EN-1).

> ⚠ **CAUTION**
> The emergency stop signal (*ESP) must be a DI signal at an address for which the common voltage is fixed to 24 V so that it functions to the safety side if a failure such as cable disconnection occurs.

Examples of fixed addresses the control unit directly monitors

	7	6	5	4	3	2	1	0
X004	SKIP	SKIP6	SKIP5	SKIP4	SKIP3	SKIP2	SKIP8	SKIP7
X005								
X006								
X007								
X008				*ESP				
X009	*DEC8	*DEC7	*DEC6	*DEC5	*DEC4	*DEC3	*DEC2	*DEC1

The following figure shows an example of assigning fixed signals to I/O modules for connector panel connected to the I/O Link.

When DI addresses are assigned in units of 16 bytes, starting at X0004

X004	Basic module	← SKIPn and other fixed signals
X005		
X006		
X007	Extension module 1	
X008		← *ESP fixed signals
X009		← *DECn fixed signals
X010	Extension module 2	
X011		
X012		
X013	Extension module 3	
X014		
X015		
X016 (for 1st MPG)	Extension module 1	
X017 (for 2nd MPG)		
X018 (for 3rd MPG)		
X019 (DO alarm detection)	Basic module	

Use the minimum configuration consisting of the basic module and extension module 1. Use extension modules 2 and 3 as required. This allows fixed signals such as SKIPn and *DECn to always be used and the *ESP fixed signal to be assigned to an address for which the common voltage is fixed to 24 V.
Also, the manual pulse generator interface of extension module 1 can always be used.

© MyFANUC 195109AB01DC415385669AA015E5BDE5

When DI addresses are assigned in units of 16 bytes, starting at X0007

X007	Basic module
X008	
X009	
X010	Extension module 1
X011	
X012	
X013	Extension module 2
X014	
X015	
X016	Extension module 3
X017	
X018	
X019 (for 1st MPG)	Extension module 1
X020 (for 2nd MPG)	
X021 (for 3rd MPG)	
X022 (DO alarm detection)	Basic module

*ESP fixed signals
*DECn fixed signals

Use the minimum configuration consisting of the basic module only. Use extension modules 1, 2, and 3 as required. In the minimum configuration, SKIP and other fixed signals and the manual pulse generator interface of extension module 1 cannot be used. In this case, however, the *DECn fixed signal can always be used and the *ESP fixed signal can be assigned to an address for which the common voltage is fixed to 24 V in the minimum configuration.

7.3.3 Status Alarm

Some I/O units have a function which detects unit errors including DO alarms (DO ground faults) and DO common voltage errors. If these units detect an error described above, how detected information is transferred to the master differs between the I/O Link and I/O Link *i*.
With the I/O Link, detected information is transferred to the master as DI signals. For this reason, to allow the master to reference the detected information, as many signals as required for the detected information must be assigned to X addresses. As many signals as required for the detected information are assumed as the number of DI signals used by the group and channel.
With the I/O Link *i*, detected information is called a status alarm, and the CNC is notified of the status alarm separate from DI signals. For this reason, it is not necessary to assign the information to X addresses. If an error occurs, the information is output to the system relay (R or Z) area. The information only for one group per channel is output to the system relay area. Only the information for the first group in which a status alarm is detected is output.
For details of status alarms actually detected by units, see the section for each unit in Chapter 8.
The following figure shows an example of a system relay area to which to output a status alarm. For details of the system relay area, refer to the PMC Programming Manual (B-64513EN).

[Reference] System relay area related to a status alarm

Channel 1	Channel 2	7	6	5	4	3	2	1	0
R9268(Z268)	R9276(Z276)	Status	Type						
R9269(Z269)	R9277(Z277)				Group number				
R9270(Z270)	R9278(Z278)				Slot number				
R9271(Z271)	R9279(Z279)	Alarm information number							
R9272(Z272)	R9280(Z280)	Y address number							
R9273(Z273)	R9281(Z281)								
R9274(Z274)	R9282(Z282)					PMC path			
R9275(Z275)	R9283(Z283)	Alarm data							

[Reference] Simple description of signals

Name	Description
Status	Indicates that a status alarm occurs when this signal is set to 1.
Type	Indicates the type of status alarm. 0: DO alarm (such as a ground fault), 1: Other than a DO alarm (such as a DO common voltage error)
Group number	Outputs a group number (0 to 23).
Slot number	Outputs a numeric value 0 to 31, which indicates slot number 1 to 32.

© MyFANUC 195109AB01DC415385669AA015E5BDE5

Name	Description
Alarm information number	Outputs the position of the alarm information corresponding to the alarm which occurs (byte position in the slot).
Y address number	Outputs the Y address number of the relevant DO signal. Valid when the PMC path value is other than 0.
PMC path	Outputs the PMC path at the Y address assigned to the relevant DO signal. Outputs 0 if no address is assigned to the DO signal.
Alarm data	Outputs information on the alarm which occurs. Outputs 1 to the bit corresponding to the alarm which occurs.

7.4 MANUAL PULSE GENERATOR

When multiple I/O units having a manual pulse generator interface are connected, the manual pulse generator interface of the I/O unit nearest the control unit on the I/O Link *i* or I/O Link is enabled in the initial status.
The manual pulse generator interface of a desired I/O unit can be enabled by setting the relevant parameter.
For the parameter setting, refer to the FANUC Power Motion *i*–MODEL A Parameter Manual (B-64580EN).

7.4.1 Manual Pulse Generator Connection

The following figure shows an example in which three manual pulse generators are connected.

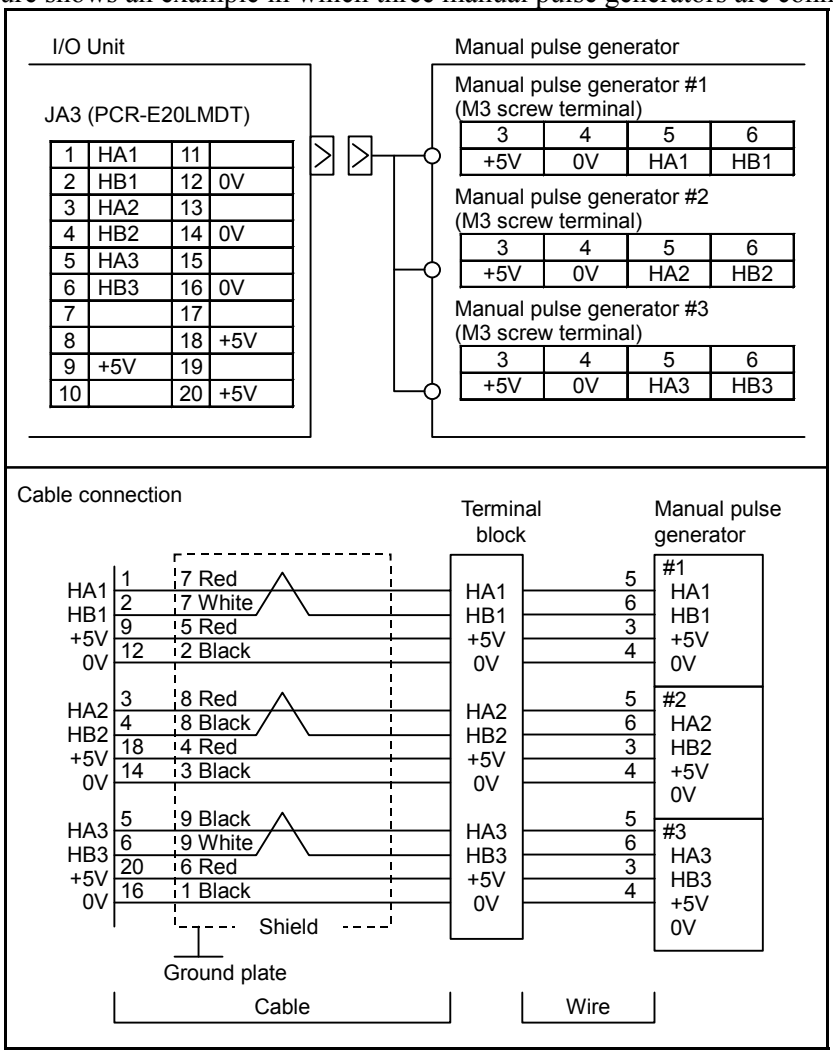

© MyFANUC 195109AB01DC415385669AA015E5BDE5

Recommended wire material	:	A66L-0001-0286 (#20AWG×6+#24AWG×3 pairs)
Recommended connector	:	A02B-0120-K303 (including the following connector and case) (Connector: FI40-2015S (Hirose Electric Co., Ltd.)) (Case: FI40-20-CV5 (Hirose Electric Co., Ltd.))
Recommended cables	:	A02B-0120-K841 (7m) (for connecting three manual pulse generators) A02B-0120-K848 (7m) (for connecting two manual pulse generators) A02B-0120-K847 (7m) (for connecting one manual pulse generator) (These cables do not include the wire shown in the above figure.)

NOTE
The number of connectable manual pulse generators depends on the type and option configuration.

7.4.2 Cable Length for Manual Pulse Generator

The manual pulse generator operates on 5 VDC. The supply voltage drop due to the cable resistance must be held below 0.2 V (when those of the 0-volt and 5-volt wires are combined), as expressed in the following expression:

$$0.2 \geq \frac{0.1 \times R \times 2L}{m}$$

where
0.1 = manual pulse generator supply current (0.1 A)
R = resistance per unit cable length (Ω/m)
m = number of 0-volt and 5-volt wires
L = cable length (m).

Therefore, the cable length can be determined using the following expression.

$$L \leq \frac{m}{R}$$

As an example, obtain the cable length when recommended cable wire A66L-0001-0286 is used.
This cable wire has three paired signal wires and six power connection wires. Since the electric resistance of a power connection wire is 0.0394 Ω/m, if three wires are used for 0 V and 5 V, the cable length is:

$$L \leqq \frac{3}{0.0394} = 76.75[m]$$

According to the FANUC specifications, however, the maximum transmission distance of a pulse signal from a manual pulse generator must not exceed 50 m.
Therefore, when one manual pulse generator is connected, the maximum cable length is 50 m.
The maximum cable length is:

When two manual pulse generators are connected	38.37 m
When three manual pulse generators are connected	25.58 m

7.4.3 Manual Pulse Generator Signal Specifications

If the customer will use a manual pulse generator which is not manufactured by FANUC, the following conditions must be satisfied.
The relationship between signals HAn and HBn, and pulses issued to the control unit is as shown in the figure below. A cycle of a pulse T_1 must be at least 200 μsec and $T_1/4$ must be at least 50 μsec.

© MyFANUC 195109AB01DC415385669AA015E5BDE5

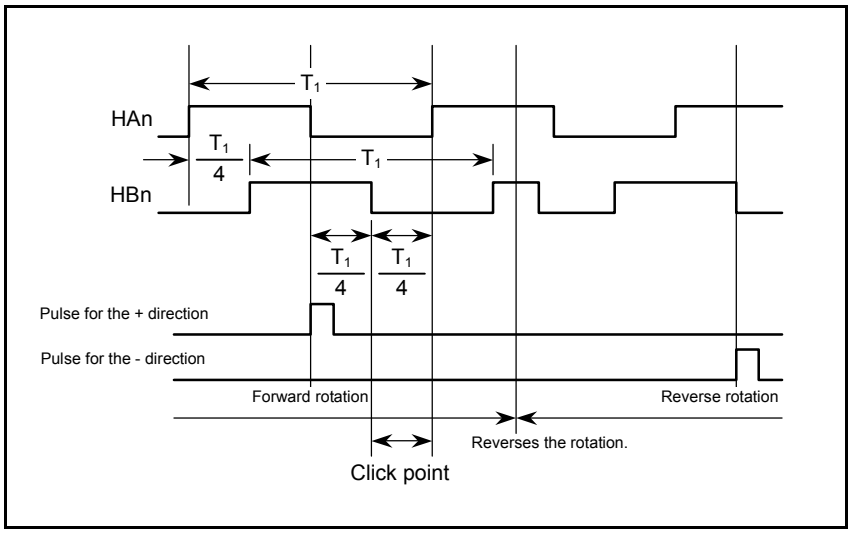

The following figure shows the receiver circuit for signals in the manual pulse generator.

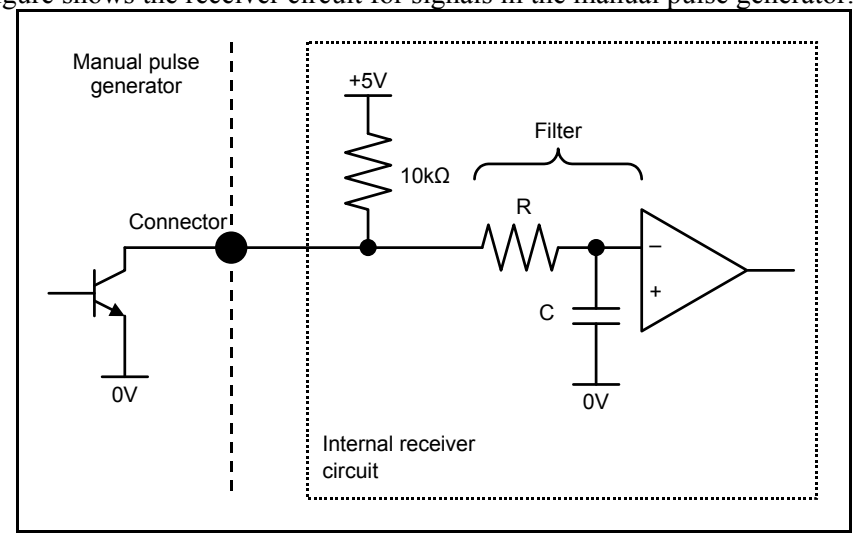

The points (thresholds) at which the input signal to the receiver changes are:
3.7 V or higher when the input signal state changes from the low level to the high level
1.5 V or lower when the input signal state changes from the high level to the low level

7.5 POWER SUPPLY

Supply the +24 V power to the slave I/O units connected to the I/O Link *i* or I/O Link when or before the power to the control unit is turned on at the power-on of the system. At the power-off of the system, turn the +24 V off when or after the power to the control unit is turned off. For detailed timing specifications at power-on and -off, see Section 4.2, “Turning On and Off the Power to the Control Unit”.
Do not turn the +24 V power to any slave I/O unit off during operation, or a communication alarm with the control unit is issued.

© MyFANUC 195109AB01DC415385669AA015E5BDE5

8 UNITS CONNECTED TO FANUC I/O Link *i* AND FANUC I/O Link

8.1 GENERAL UNITS

Basically, the Power Motion *i* can be connected to any unit that has a FANUC I/O Link slave interface. The following table lists general units that can be connected to the Power Motion *i*. For detailed description of each unit, see the section or manual indicated in Detailed description in the table below. Some units are available for the I/O Link *i* and others are available for the I/O Link. Check whether a unit is available for the I/O Link *i* or I/O Link because the assignment method and others may differ. In this manual, a unit is available for both the I/O Link *i* and I/O Link unless otherwise specified.

General units that can be connected to Power Motion *i*

Unit	Available for the I/O Link *i*	Description	Detailed description
I/O module for connector panel	○	Distribution type I/O module that can flexibly support a combination of input/output signals required by a power magnetics circuit. Has a manual pulse generator interface.	Section 8.2
I/O module for operator's panel (for Matrix Input)	○	Unit having an interface with a machine operator's panel; it has an interface with a manual pulse generator.	Section 8.3
I/O module for operator's panel	○	Unit having an interface with a machine operator's panel that handles the input/output signals required by the power magnetics circuit; it has an interface with a manual pulse generator.	Section 8.4
I/O module for power magnetics cabinet	○	Unit that has an interface with the power magnetics cabinet. This unit can also handle input/output signals required for the power magnetics circuit.	Section 8.4
I/O module type-2 for connector panel	○	Distribution type I/O module that can flexibly support a combination of input/output signals required by a power magnetics circuit. Has a manual pulse generator interface.	Section 8.5
Terminal type I/O module	○	I/O module that is equivalent to a connector panel I/O module. Input/output signals are connected on a spring-type terminal block (ferrule terminal block).	Section 8.6
FANUC I/O Unit-MODEL A	○	I/O unit with a module configuration that can flexibly handle a combination of input/output signals required for the power magnetics circuit	Connection and Maintenance Manual B-61813E
FANUC I/O Unit-MODEL B		I/O unit of distribution type that can flexibly handle a combination of input/output signals required for the power magnetics circuit	Connection and Maintenance Manual B-62163E
Fanuc I/O Link connection unit	○	Unit that makes a connection with a FANUC I/O Link master to transfer DI/DO signals	Section 8.7
Servo amplifier β*i* SV series (I/O Link interface)		Unit that makes a connection with a control unit through the FANUC I/O Link for servo motor control	Descriptions B-65322EN
Standard machine operator's panel	○	The appearance of this machine operator's panel is consistent with that of the Power Motion *i*. The panel can easily be customized.	Section 8.8

© MyFANUC 195109AB01DC415385669AA015E5BDE5

Unit	Available for the I/O Link *i*	Description	Detailed description
Handy machine operator's panel		Compact handy operation panel, used for operation on the machine side, that consists of the manual pulse generator, emergency stop switch, enable switch, display unit, and input key.	Connection Manual B-63753EN
I/O Link-AS-i converter		Converter unit for connecting AS-i (Actuator Sensor Interface), which is an I/O level open network.	Section 8.9
Operator's panel connection unit (source DO)	O	Unit having an interface with a machine operator's panel.	Section 8.10
Safrty IO unit	O	I/O unit to connect duplicated safety signals.	Section 8.11
I/O module for operator's panel supporting safety function	O	I/O module for a machine operator's panel that has a terminal to input duplicated safety signals.	Section 8.12

NOTE

1 To use a unit listed in the table above that supports the I/O Link *i*, be sure to specify a unit of the ordering specifications described in the relevant section.

2 The I/O Link *i* and I/O Link can be used simultaneously for each channel. For details, see Section 7.2.

© MyFANUC 195109AB01DC415385669AA015E5BDE5

8.2 CONNECTION OF I/O MODULE FOR CONNECTOR PANEL

8.2.1 Configuration

As shown in the figure below, an I/O module for connector panel consists of the basic module and extension modules (up to three modules).

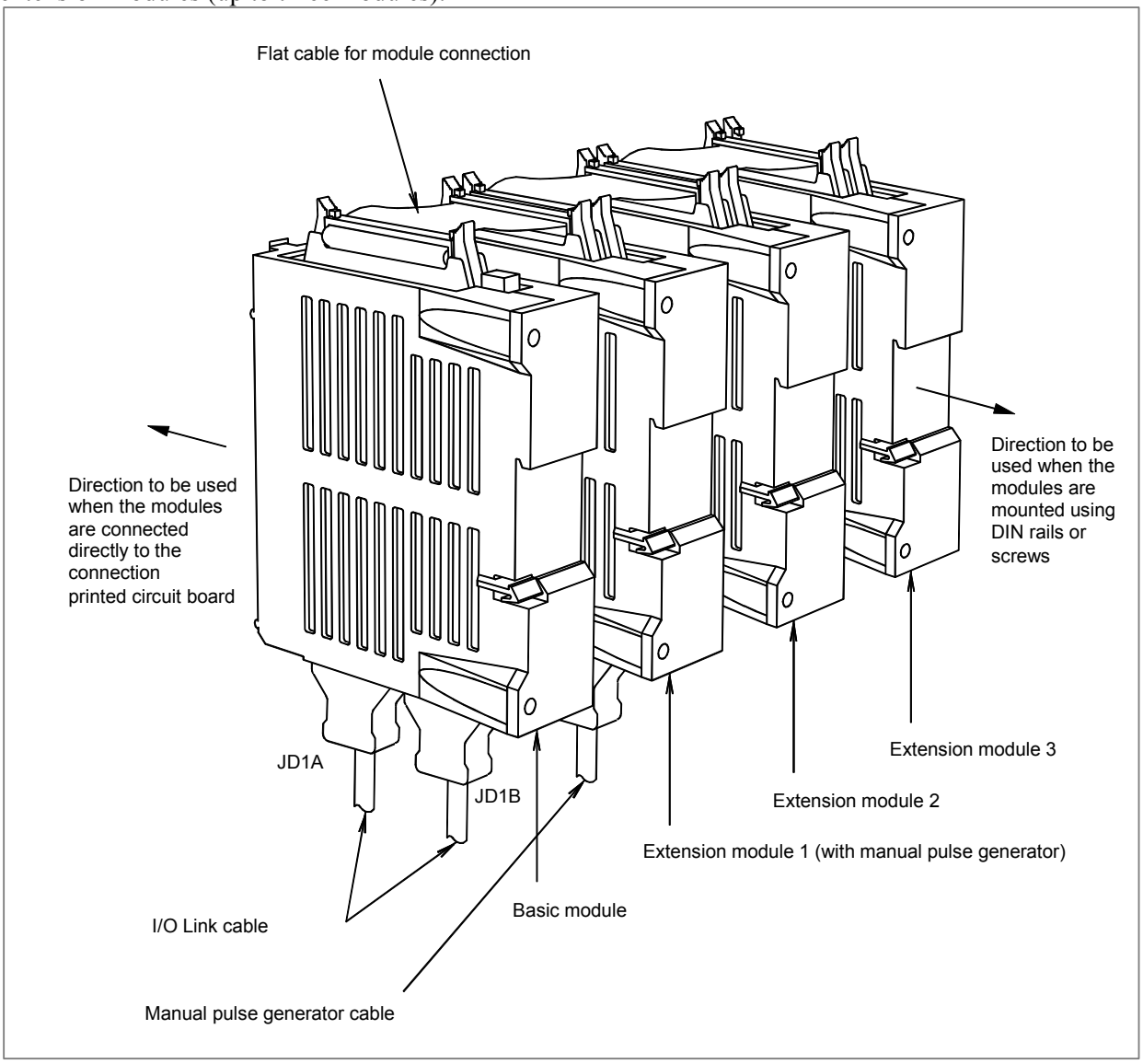

NOTE

Be sure to install I/O modules for connector panel so that the basic module and extension modules are placed as shown in the figure above.

When the modules are directly connected to the connection printed circuit board designed by the machine tool builder:

Install the extension modules to the right of the basic module on the installation plane.

When the modules are installed using DIN rails or screws:

Install the extension modules to the left of the basic module on the installation plane.

© MyFANUC 195109AB01DC415385669AA015E5BDE5

8.2.2 Connection Diagram

The following figure shows an example of connecting extension module A, extension module C, and extension module D as extension modules.

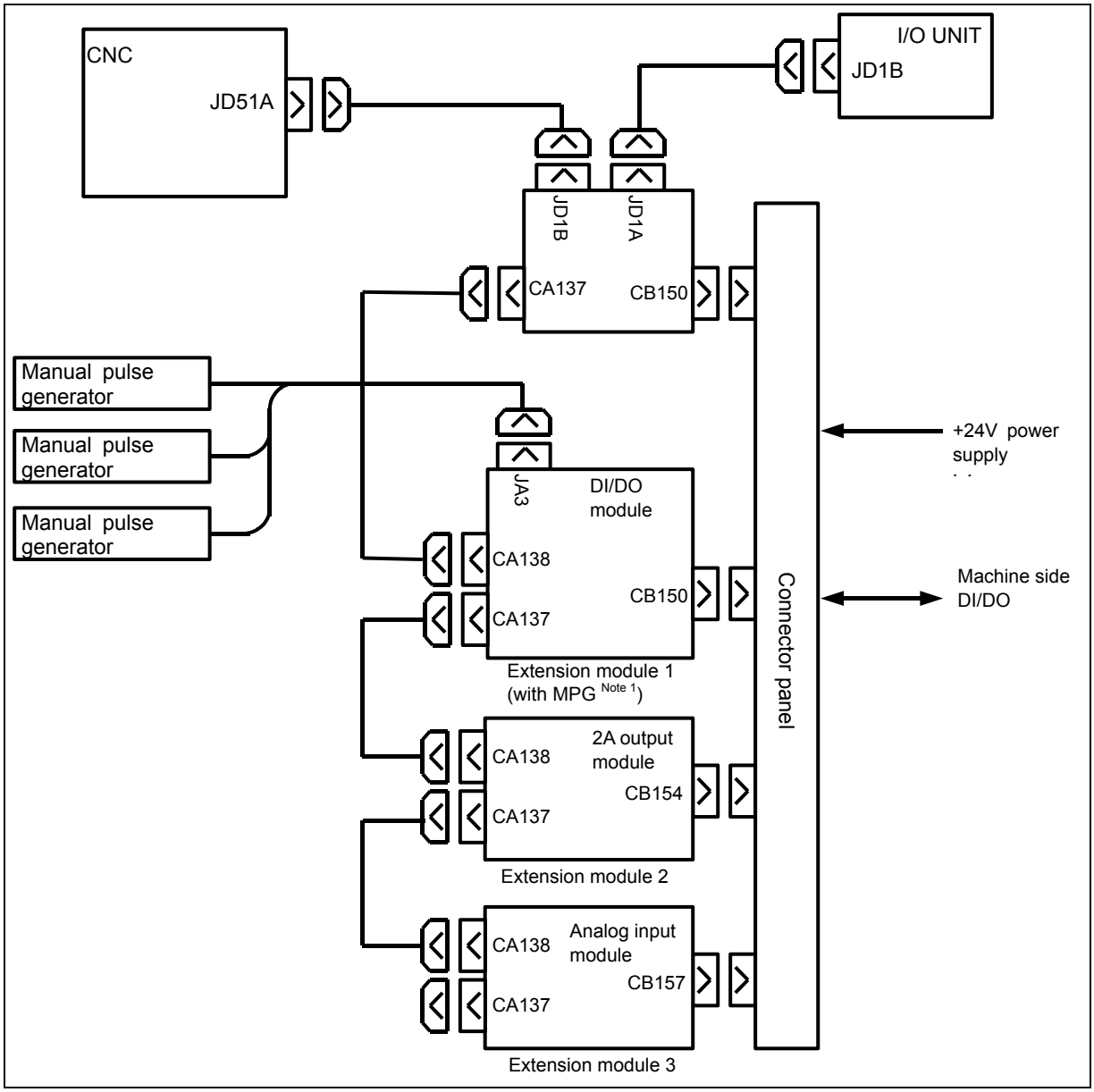

NOTE

Extension modules A, B, C, and D can be installed in any position of extension modules 1, 2, and 3. If a manual pulse generator interface is required, however, be sure to install extension module A in extension module 1. Other modules cannot be installed in extension module 1.

© MyFANUC 195109AB01DC415385669AA015E5BDE5

8.2.3 Module Specifications

Types of modules

Name	Ordering specifications	Specifications	Weight	Reference item
I/O module for connector panel (basic module)	A03B-0824-C001	DI/DO : 24/16	220g	Subsec. 8.2.4
I/O module for connector panel (extension module A)	A03B-0824-C002	DI/DO : 24/16 With MPG interface	210g	Subsec. 8.2.4
I/O module for connector panel (extension module B)	A03B-0824-C003	DI/DO : 24/16 Without MPG interface	200g	Subsec. 8.2.4
I/O module for connector panel (extension module C)	A03B-0824-C004	DO : 16 2A output module	230g	Subsec. 8.2.5
I/O module for connector panel (extension module D)	A03B-0824-C005	Analog input module	210g	Subsec. 8.2.6
Fuse (spare parts)	A03B-0815-K002	1A (For basic module)		
Flat cable between modules	A03B-0815-K100	20 mm long Suitable for a module interval of 32 mm		

NOTE
Be sure to use modules with the ordering specifications listed above in combination. Do not use other modules.

For the specifications (such as signal input requirements) specific to each module, see the relevant pages of each item.

Installation conditions

(1) Use each I/O module in a completely sealed cabinet.
(2) Use the units under the following ambient temperature conditions:
Operation: 0°C to 55°C
Storage and transportation: -20°C to 80°C
(3) For other installation conditions, conform to the CNC installation conditions.
(4) For ventilation within each I/O module, each module must be installed in shown below. Moreover, for ventilation and wiring, allow a clearance of 100 mm or more above and below each module. Never place a device that generates a large amount of heat below an I/O module.
(5) Install the basic module and extension modules so that the connection flat cables lie on the top of them. Also ensure that the flat cable does not block the vent holes on the basic unit. (See Subsection 8.2.8.)

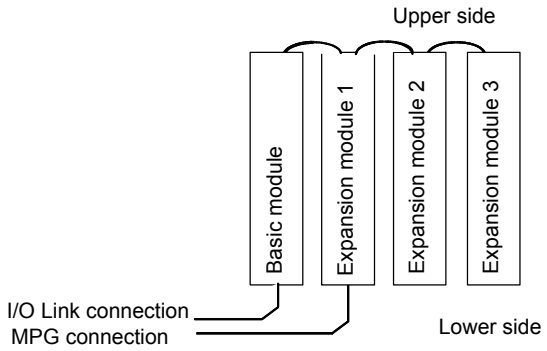

(6) Install the basic module and extension modules so that they are placed as shown in the figure in Subsection 8.2.1.

© MyFANUC 195109AB01DC415385669AA015E5BDE5

- When the modules are directly connected to the connection printed circuit board designed by the machine tool builder:
  Install the extension modules to the right of the basic module on the installation plane.
- When the modules are installed using DIN rails or screws:
  Install the extension modules to the left of the basic module on the installation plane.

Power supply rating

Module	Power supply voltage	Power supply rating	Remarks
Basic module	24 VDC ±10% is fed through the I/O connector (CB150) of the basic module; ±10% includes momentary variations and ripples.	0.2A+7.3mA×DI	Number of DI points with DI=ON
Expansion modules A and B		0.1A+7.3mA×DI	Number of DI points with DI=ON
Expansion module C (2A output module)		0.1A	
Expansion module D (analog input module)		0.1A	

As a guideline for the heat dissipation, assume [above power supply capacity × 24 (W)].

NOTE
1 The above power supply rating does not include that to be input to DOCOM for DO output.
2 To connect an optical adapter for the I/O Link i to both connectors JD1A and JD1B on the basic module, the above power supply rating + 70 mA is required for the power supply of the basic module.

8.2.4 Connection of the Basic Module, and Extension Modules A and B

8.2.4.1 Connector pin arrangement

The following figure shows the connector pin arrangement of the basic module and extension modules A and B.

CB150(HONDA MRH-50RMAST)

33	DOCOM			01	DOCOM
34	Yn+0.0	19	0V	02	Yn+1.0
35	Yn+0.1	20	0V	03	Yn+1.1
36	Yn+0.2	21	0V	04	Yn+1.2
37	Yn+0.3	22	0V	05	Yn+1.3
38	Yn+0.4	23	0V	06	Yn+1.4
39	Yn+0.5	24	DICOM0	07	Yn+1.5
40	Yn+0.6	25	Xm+1.0	08	Yn+1.6
41	Yn+0.7	26	Xm+1.1	09	Yn+1.7
42	Xm+0.0	27	Xm+1.2	10	Xm+2.0
43	Xm+0.1	28	Xm+1.3	11	Xm+2.1
44	Xm+0.2	29	Xm+1.4	12	Xm+2.2
45	Xm+0.3	30	Xm+1.5	13	Xm+2.3
46	Xm+0.4	31	Xm+1.6	14	Xm+2.4
47	Xm+0.5	32	Xm+1.7	15	Xm+2.5
48	Xm+0.6			16	Xm+2.6
49	Xm+0.7			17	Xm+2.7
50	+24V			18	+24V

50 male pins with fittings for fixing the connector covers

© MyFANUC 195109AB01DC415385669AA015E5BDE5

> ⚠ **CAUTION**
> Pins 18 and 50 (+24V) of connector CB150 are used to apply +24 V externally to a module. Be sure to connect these pins because the +24 V is used internally. Also be sure to connect pins 19 to 23 (0V).

8.2.4.2 DI (input signal) connection

This subsection describes the DI (input signal) connections of the basic module and expansion modules A and B.
The following figures show DI connection per module. A maximum of 96 signals are available in a configuration of one basic module (24 signals) and three extension modules (24 signals each).

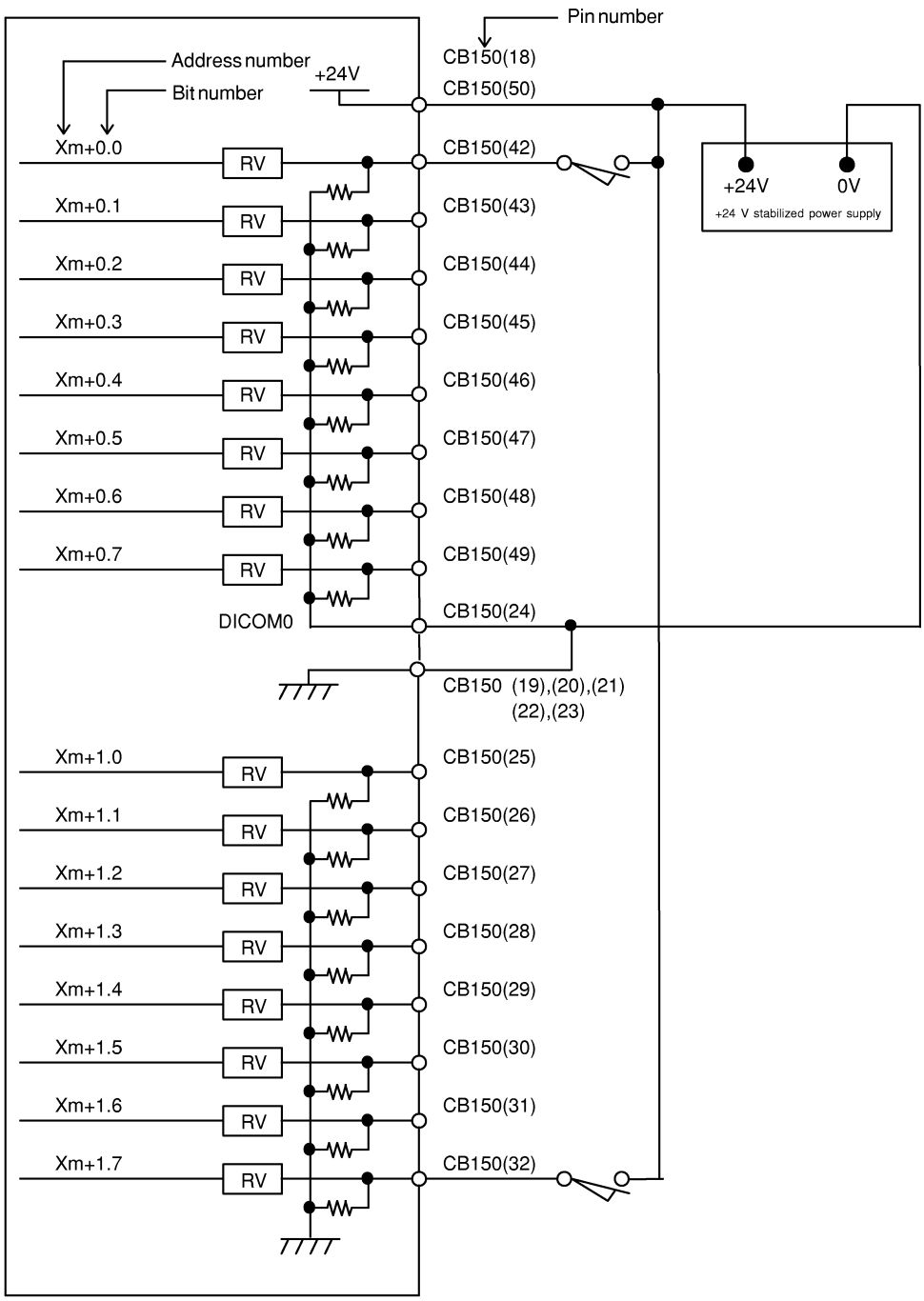

© MyFANUC 195109AB01DC415385669AA015E5BDE5

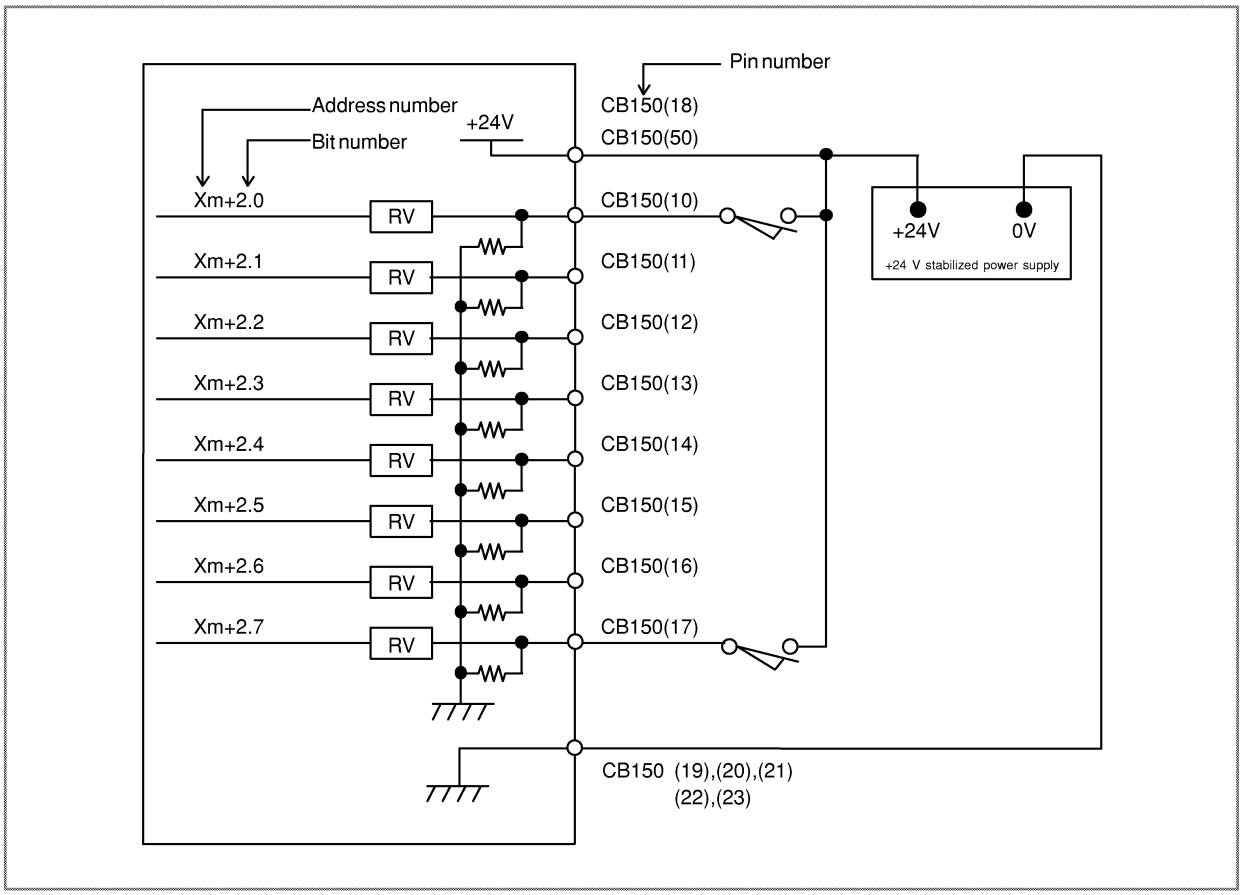

NOTE

As listed in the table below, Xm+0.0 through Xm+0.7 are DI pins for which a common voltage can be selected. That is, by connecting the DICOM0 CB150(24) pin to the +24 V power supply, a DI signal can be input with its logical state reversed. If, however, a cable is connected to ground, it has the same effect as inputting an ON state DI signal. To prevent such accidents, the connection of the DICOM0 CB150(24) pin to the 0 V power supply is recommended wherever possible.

For the unconnected pins at the addresses for which the common voltage is fixed (from Xm+1.0 to Xm+1.7 and from Xm+2.0 to Xm+2.7), the input is “0”. For the unconnected pins at the addresses for which a common voltage can be selected (from Xm+0.0 to Xm+0.7), the input is “0” when the DICOM0 CB150(24) pin is connected to the 0 V power supply or “1” when it is connected to the +24 V power supply. Connect DICOM0 when used. When addresses from Xm+0.0 to Xm+0.7 are not used, connect DICOM0 to the 0 V power supply.

Common voltage for the basic module, and extension modules A and B

Address	Common voltage
Xm	Can externally be selected with DICOM0.
Xm+1	Cannot be selected.
Xm+2	Cannot be selected.

© MyFANUC 195109AB01DC415385669AA015E5BDE5

8.2.4.3 DO (output signal) connection

This subsection describes the DO (output signal) connections of the basic module and expansion modules A and B.
The following figures show DI connection per module. A maximum of 64 signals are available in a configuration of one basic module (16 signals) and three extension modules (16 signals each).

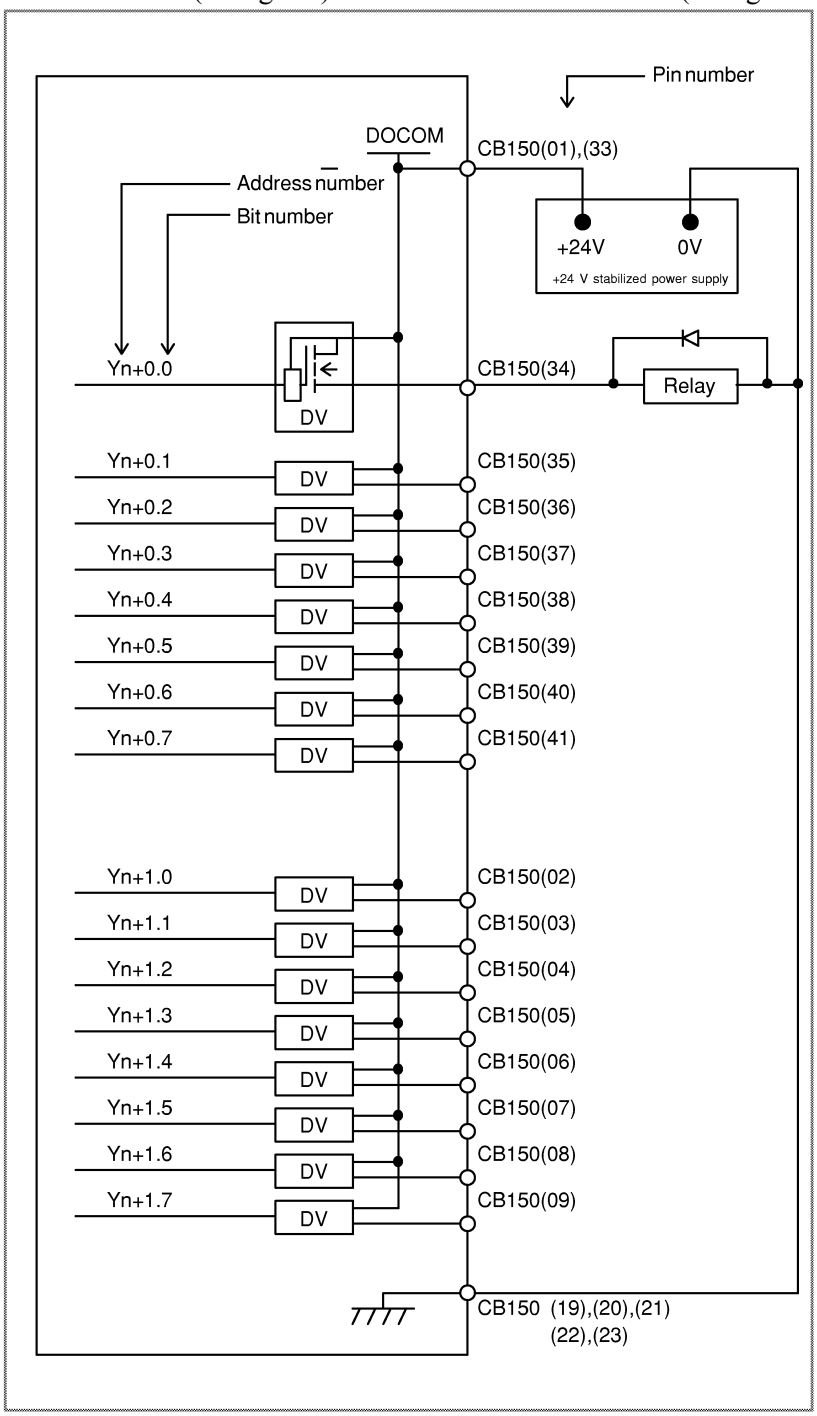

© MyFANUC 195109AB01DC415385669AA015E5BDE5

8.2.4.4 DI/DO signal specifications

This section describes the specifications of the DI/DO signals used with the basic module and expansion modules A and B.

DI (input signal specifications)

Number of points	24 points (per module)
Rated input	24 VDC, 7.3 mA
Contact rating	30 VDC, 16 mA or more
Leakage current between contacts when opened	1 mA or less (26.4 V)
Voltage decrease between contacts when closed	2 V or less (including a cable voltage decrease)
Delay time	The receiver delay time is 2 ms (maximum). In addition, [I/O Link transfer time between CNC and I/O module] and [ladder scan period (depending on CNC)] must be considered.

DO (output signal specifications)

Number of points	16 points (per module)
Maximum load current when ON	200 mA or less including momentary variations
Saturation voltage when ON	1 V (maximum) when the load current is 200 mA
Withstand voltage	24 V +20% or less including momentary variations
Leakage current when OFF	20 μA or less
Delay time	The driver delay time is 50 μs (maximum). In addition, [I/O Link transfer time between CNC and I/O module] and [ladder scan period (depending on CNC)] needs to be considered.

ON/OFF of the power supply for DO signals (output signals)

By turning off (opening) the power supply (DOCOM) for the DO signals (output signals), all the DO signals of each module can be turned off at the same time. At this time, the DO state is as shown below.

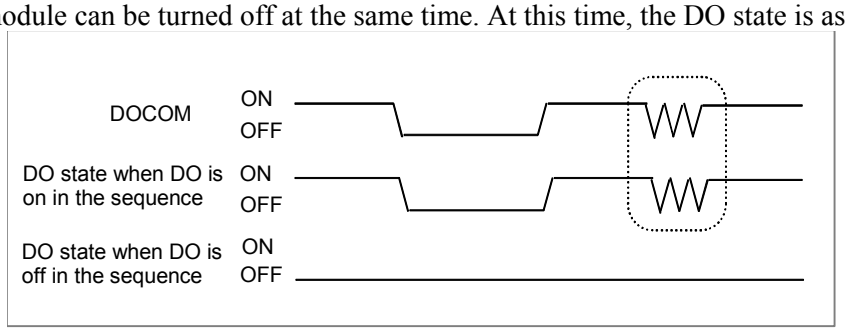

NOTE

When DO is on in the sequence, the ON/OFF state of DOCOM is directly reflected in the DO state as indicated above by the dashed box.

Parallel DO (output signal) connection

A DO load current of twice the level can be obtained by connecting DO points in parallel and exercising ON/OFF control at the same time in the sequence. Namely, the maximum load current per DO point is 200 mA. By connecting two DO points in parallel and turning on the two DO points at the same time, 400 mA can be obtained. In this case, however, the leakage current is doubled up to 40 mA when the DO points are turned off.

© MyFANUC 195109AB01DC415385669AA015E5BDE5

> ⚠ **CAUTION**
> Be sure to connect the bit at the same address for parallel connection.
> Do not connect three or more signals in parallel.

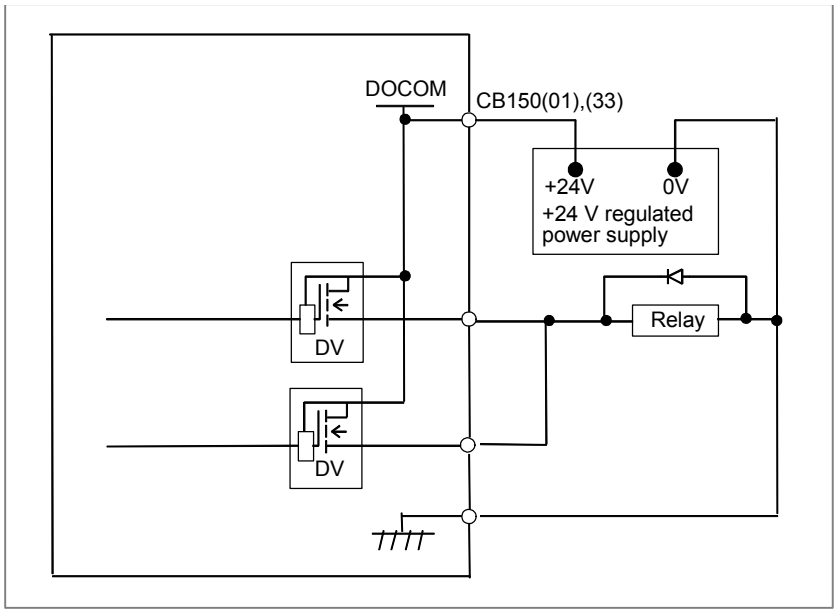

8.2.5 Connection of Extension Module C (2A Output Module)

8.2.5.1 Connector pin arrangement

The following figure shows the connector pin arrangement of the extension module C (2A output module).

CB154(HONDA MRH-50RMAST)

33	DOCOMA			01	DOCOMA
34	Yn+0.0	19	GNDA	02	Yn+1.0
35	Yn+0.1	20	GNDA	03	Yn+1.1
36	Yn+0.2	21	GNDA	04	Yn+1.2
37	Yn+0.3	22	GNDA	05	Yn+1.3
38	Yn+0.4	23	GNDA	06	Yn+1.4
39	Yn+0.5	24		07	Yn+1.5
40	Yn+0.6	25		08	Yn+1.6
41	Yn+0.7	26		09	Yn+1.7
42		27		10	
43		28		11	
44		29		12	
45		30		13	
46		31		14	
47		32		15	
48				16	
49	DOCOMA			17	DOCOMA
50	DOCOMA			18	DOCOMA

50 pins, male,
with a metal fitting for securing the connector cover

© MyFANUC 195109AB01DC415385669AA015E5BDE5

8.2.5.2 2A output signal connection

This subsection describes the connection of extension module C (2A output module).

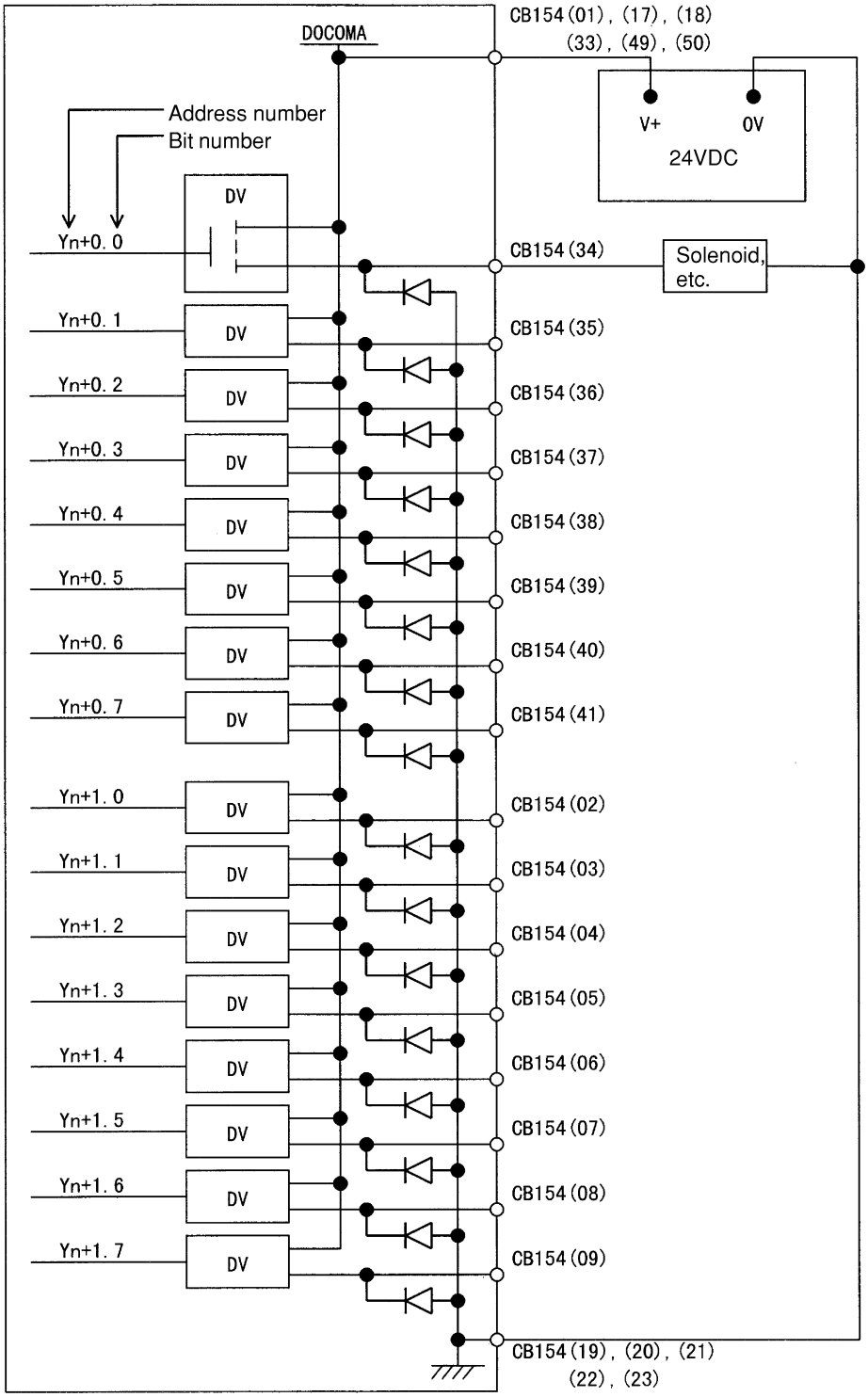

© MyFANUC 195109AB01DC415385669AA015E5BDE5

8.2.5.3 2A output signal specifications

This subsection describes the specifications of the signals used with extension module C (2A output module).

DO (output signal specifications)

Number of points	16 points (per module)
Maximum load current when ON	2 A or less per point. 12 A maximum for the entire module (DO: 16 points) (including momentary variations).
Withstand voltage	24 V +20% or less (including momentary variations)
Leakage current when OFF	100 μA or less
Delay time	The driver delay time is 120ns(MAX). In addition, [I/O Link transfer time between CNC and I/O module] and [ladder scan period (depending on CNC)] needs to be considered.

ON/OFF of the power supply for DO signals (output signals)

For ON/OFF of the power supply (DOCOMA) for the DO signals (output signals), see Subsection 8.2.4.4.

Parallel DO (output signal) connection

The 2A output module does not allow parallel DO connections.

8.2.6 Connection of Extension Module D (Analog Input Module)

8.2.6.1 Analog input connector pin allocation

This subsection describes the pin allocation of extension module D (analog input module).

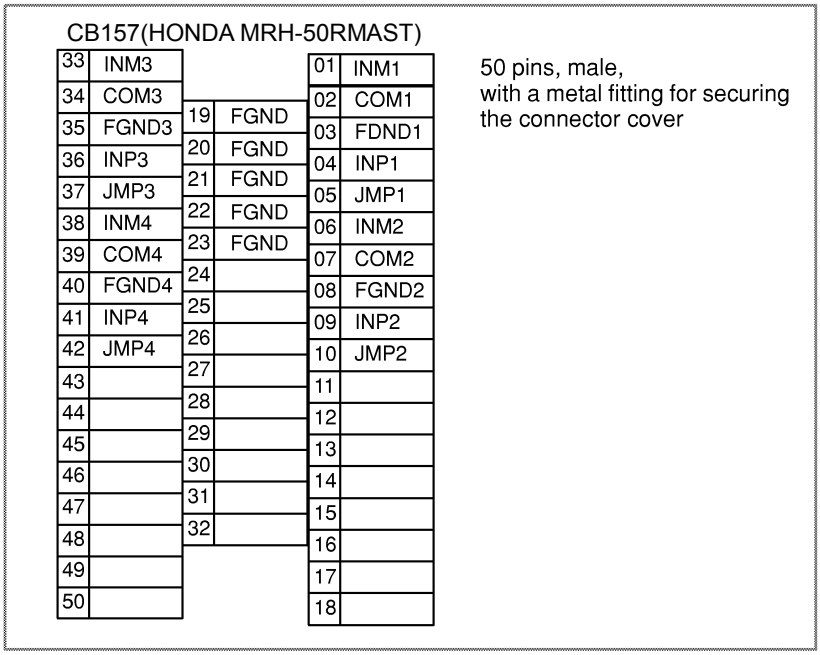

© MyFANUC 195109AB01DC415385669AA015E5BDE5

8.2.6.2 Analog input signal connections

This subsection provides a connection diagram of extension module D (analog input module).

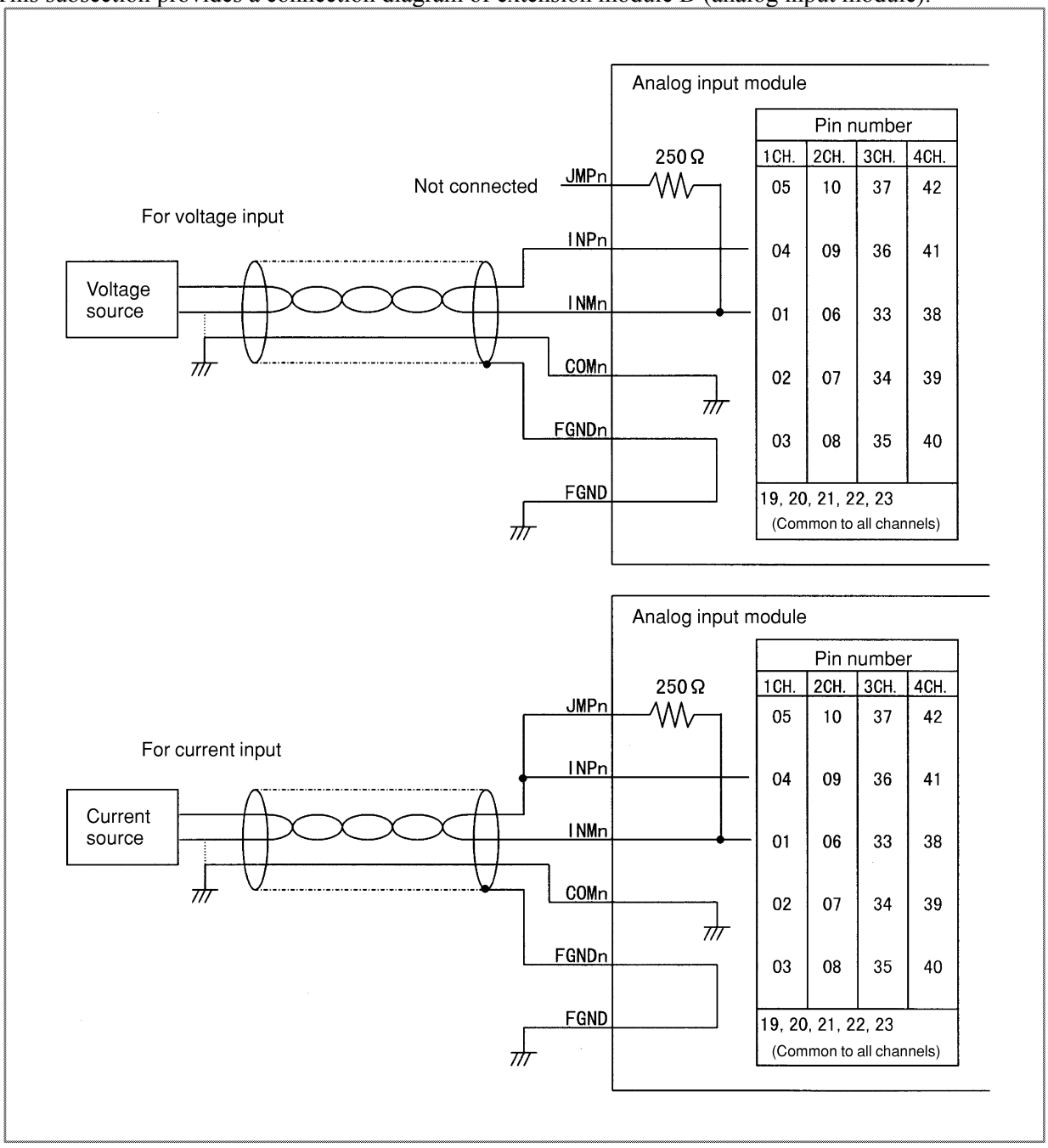

NOTE

1 In the diagram above, n represents each channel (n = 1, 2, 3, 4).
2 Current input or voltage input can be selected on a channel-by-channel basis. For current input, be sure to connect JMPn to INPn.
3 For the connection, use a shielded twisted pair.
4 In the diagram above, the shield of each channel is connected to FGNDn, and FGND is used for shield processing of all channels. However, the shield of a channel may be directly connected to frame ground with a cable clamp, instead of using FGNDn.

© MyFANUC 195109AB01DC415385669AA015E5BDE5

NOTE
5 If the voltage (current) source has a GND pin, as shown in the figure above, connect COMn to this pin. Otherwise, connect INMn and COMn together in the analog input module.

8.2.6.3 Analog input signal specifications

This subsection describes the specifications of the input signals used with extension module D (analog input module).

Item	Specifications	Remarks
Number of input channels (Note)	Four channels	
Analog input	DC -10 to +10 V (Input resistance: 4.7 MΩ) DC -20 to +20 mA (Input resistance: 250 Ω)	Voltage input or current input can be selected on channel-by-channel basis.
Digital output (Note)	12 bits (binary)	Represented as two's complement
Input/output correspondence	Analog input / Digital output +10V / +2000 +5V or +20mA / +1000 0V or 0mA / 0 -5V or -20mA / -1000 -10V / -2000	
Resolution	5 mV or 20 μA	
Overall precision	Voltage input: ±0.5% Current input: ±1%	With respect to full scale
Maximum input voltage/current	±15V/±30mA	
Minimum conversion time	[I/O Link transfer time between CNC and I/O module] and [ladder scan period (depending on CNC)] needs to be considered.	
Number of occupied input/output points (Note)	DI = 3 bytes, DO = 2 bytes	

NOTE
Extension module D (analog input module) has four input channels. The digital output section consists of a group of 12 bits within the three-byte occupied input points. This means that the channel to be used can be dynamically selected by the ladder. The channel switching DO point for channel selection is included in the two-byte occupied output points.

8.2.6.4 Channel selection and A/D conversion data

NOTE
For allocation, see Subsection 8.2.10.

(Channel selection)

With extension module D (analog input module), which of the four analog input channels is to be the target of A/D conversion must be determined with a PMC program. The DO points used for this selection are CHA and CHB (two-byte occupied output points). These are mapped as indicated below.

© MyFANUC 195109AB01DC415385669AA015E5BDE5

Address in the module	7	6	5	4	3	2	1	0
Yn	X	X	X	X	X	X	X	X
Yn+1	X	X	X	X	X	X	CHB	CHA

Yn is the first address to which the analog input module is allocated.

By writing the values indicated below to CHA and CHB, the corresponding channel is selected, and the A/D converted data of the channel and the data of the selected channel can be read as DI data. The character X indicated above represents an unused bit, so that either 1 or 0 may be written in place of X.

CHB	CHA	Channel selected
0	0	Channel 1
0	1	Channel 2
1	0	Channel 3
1	1	Channel 4

(Address)

A/D conversion data of the channel selected by the above setting is output to two bytes of the three bytes of DI (input signals) of the slot to which this module is allocated. The A/D conversion data output addresses are as shown below, depending on where extension module D (analog input module) is installed.

For connection to the I/O Link *i*

> ⚠ **CAUTION**
> For connection to the I/O Link *i*, be sure to allocate the start address of the slot as shown below, according to where the analog input module is installed:
> When connected to extension module 1 (slot 2):
> Xm_2 must always be allocated at an odd-numbered address.
> When connected to extension module 2 (slot 3):
> Xm_3 must always be allocated at an even-numbered address.
> When connected to extension module 3 (slot 4):
> Xm_4 must always be allocated at an odd-numbered address.

- When extension module D (analog input module) is installed in extension module 1 (slot 2)

Address	7	6	5	4	3	2	1	0
Xm_2(odd-numbered address)	Undefined							
Xm_2+1(even-numbered address)	D07	D06	D05	D04	D03	D02	D01	D00
Xm_2+2(odd-numbered address)	0	0	CHB	CHA	D11	D10	D09	D08

Xm_2 is the start address of slot 2.

- When extension module D (analog input module) is installed in extension module 2 (slot 3)

Address	7	6	5	4	3	2	1	0
Xm_3(even-numbered address)	D07	D06	D05	D04	D03	D02	D01	D00
Xm_3+1(odd-numbered address)	0	0	CHB	CHA	D11	D10	D09	D08
Xm_3+2(even-numbered address)	Undefined							

Xm_3 is the start address of slot 3.

- When extension module D (analog input module) is installed in extension module 3 (slot 4)

Address	7	6	5	4	3	2	1	0
Xm_4(odd-numbered address)	Undefined							
Xm_4+1(even-numbered address)	D07	D06	D05	D04	D03	D02	D01	D00
Xm_4+2(odd-numbered address)	0	0	CHB	CHA	D11	D10	D09	D08

Xm_4 is the start address of slot 4.

© MyFANUC 195109AB01DC415385669AA015E5BDE5

For connection to the I/O Link

> ⚠ **CAUTION**
> For connection to the I/O Link, when an analog input module is used as an extension module in the configuration, be sure to allocate the start address of X (DI) of the basic module at an even-numbered address.

- When extension module D (analog input module) is installed in extension module 1

Address	7	6	5	4	3	2	1	0
Xm+3(odd-numbered address)	Undefined							
Xm+4(even-numbered address)	D07	D06	D05	D04	D03	D02	D01	D00
Xm+5(odd-numbered address)	0	0	CHB	CHA	D11	D10	D09	D08

(Xm is the start address of the basic module connected to this module.)

- When extension module D (analog input module) is installed in extension module 2

Address	7	6	5	4	3	2	1	0
Xm+6(even-numbered address)	D07	D06	D05	D04	D03	D02	D01	D00
Xm+7(odd-numbered address)	0	0	CHB	CHA	D11	D10	D09	D08
Xm+8(even-numbered address)	Undefined							

(Xm is the start address of the basic module connected to this module.)

- When extension module D (analog input module) is installed in extension module 3

Address	7	6	5	4	3	2	1	0
Xm+9(odd-numbered address)	Undefined							
Xm+10(even-numbered address)	D07	D06	D05	D04	D03	D02	D01	D00
Xm+11(odd-numbered address)	0	0	CHB	CHA	D11	D10	D09	D08

(Xm is the start address of the basic module connected to this module.)

(A/D conversion data)

A/D conversion data for the selected channel is output to the above address as 12-bit data in the following format.

Address in the module	7	6	5	4	3	2	1	0
Xm	D07	D06	D05	D04	D03	D02	D01	D00
Xm+1	0	0	CHB	CHA	D11	D10	D09	D08

D00 to D11 represent 12-bit digital output data. D00 corresponds to weighting of 2^0 and D10 corresponds to that of 2^{10}.
D11 is a sign bit expressed as a two's complement. CHA and CHB represent an analog input channel.
This means that when the two bytes above are read with a PMC program, the A-D converted data of the input channel represented by CHA and CHB can be read from D11 to D00.

> **NOTE**
> When two-byte digital output addresses are to be referenced with a PMC program, a read must always be performed word-by-word (16 bits).

8.2.7 Manual Pulse Generator Connection

For an I/O module for connector panel, three manual pulse generators can be connected to extension module A. For the connection, see Subsection 7.4.1.

> **NOTE**
> To use extension module A having a manual pulse generator interface, connect the module next to the basic module.

© MyFANUC 195109AB01DC415385669AA015E5BDE5

8.2.8 Connection of Basic and Extension Modules

Modules can be connected in the same way, regardless of whether you are connecting the basic module to an extension module or connecting two extension modules. Connect the modules by using 34-pin flat cable connectors as shown in the figure below. Ensure that all 34 pins at one end of the cable are connected to the corresponding pins at the other end; e.g., connect the A1 pin to the pin having the same designation (A1) at the other end.

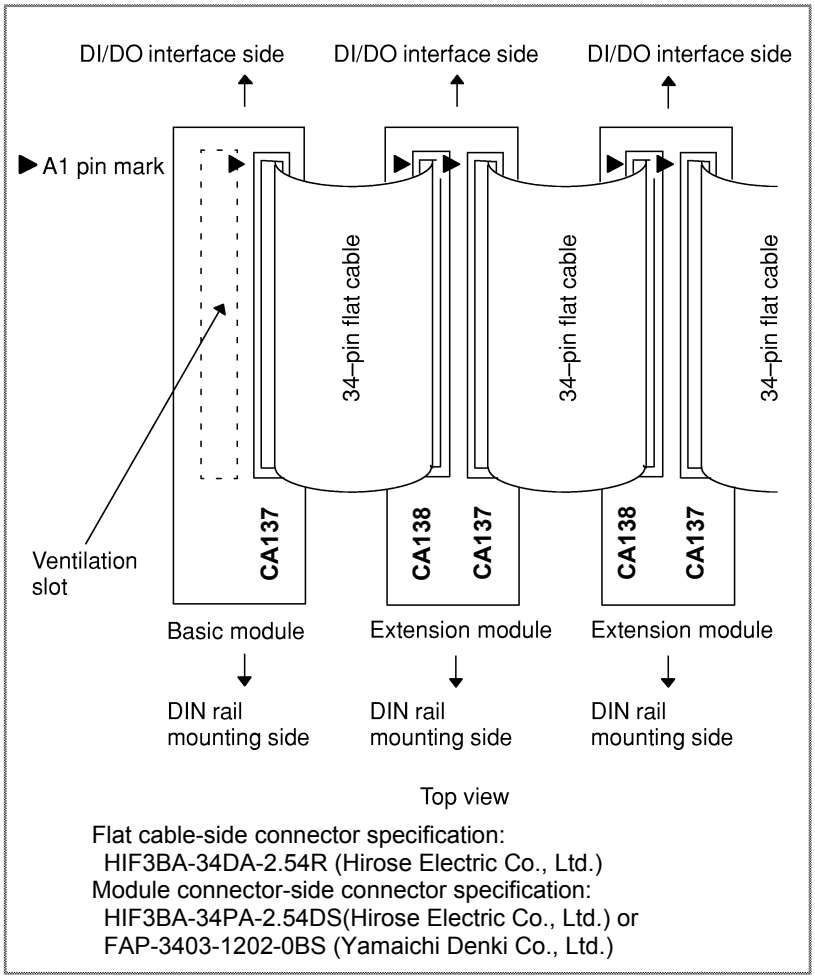

Flat cable-side connector specification:
HIF3BA-34DA-2.54R (Hirose Electric Co., Ltd.)
Module connector-side connector specification:
HIF3BA-34PA-2.54DS(Hirose Electric Co., Ltd.) or
FAP-3403-1202-0BS (Yamaichi Denki Co., Ltd.)

© MyFANUC 195109AB01DC415385669AA015E5BDE5

NOTE

Install the basic module and extension modules so that they are placed as shown in the figure above.

- When the modules are directly connected to the connection printed circuit board designed by the machine tool builder:
  Install the extension modules to the right of the basic module on the installation plane.
- When the modules are installed using DIN rails or screws:
  Install the extension modules to the left of the basic module on the installation plane.

Modules need to be spaced at least 32 mm apart, in which case a flat cable of about 20 mm in length is required. To install modules further away from each other, the cable length will be 20 mm plus the extra distance. Note that the maximum length of a flat cable is 300 mm.

To ensure adequate ventilation, install the modules in such a way that the flat cables lie on top of them.
The basic module has a vent at the top (as indicated by the dotted lines in the above figure). Install the modules so that the flat cable does not block the vent.

Be sure to connect the flat cable from CA137 on a module to CA138 on the next module.

8.2.9 Module Installation

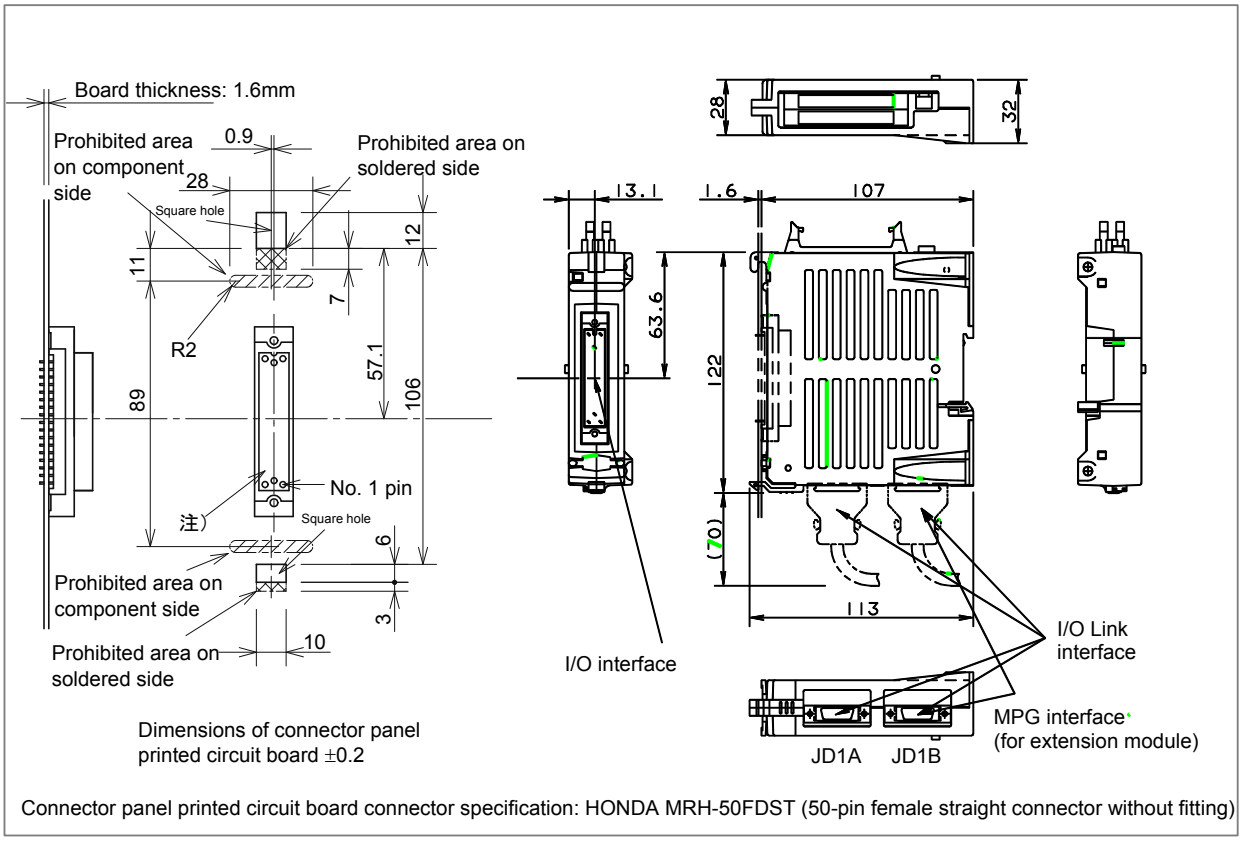

When connecting a connector panel printed circuit board directly (external module view and mounting diagram)

© MyFANUC 195109AB01DC415385669AA015E5BDE5

NOTE

1 A connector with a fitting (HONDA MRH-50RMAST) is used for the module-side I/O interface. Always use a connector having no fitting for the connector panel printed circuit board.

2 Area where pattern printing is prohibited
: Prohibited area on soldered side
: Prohibited area on component side

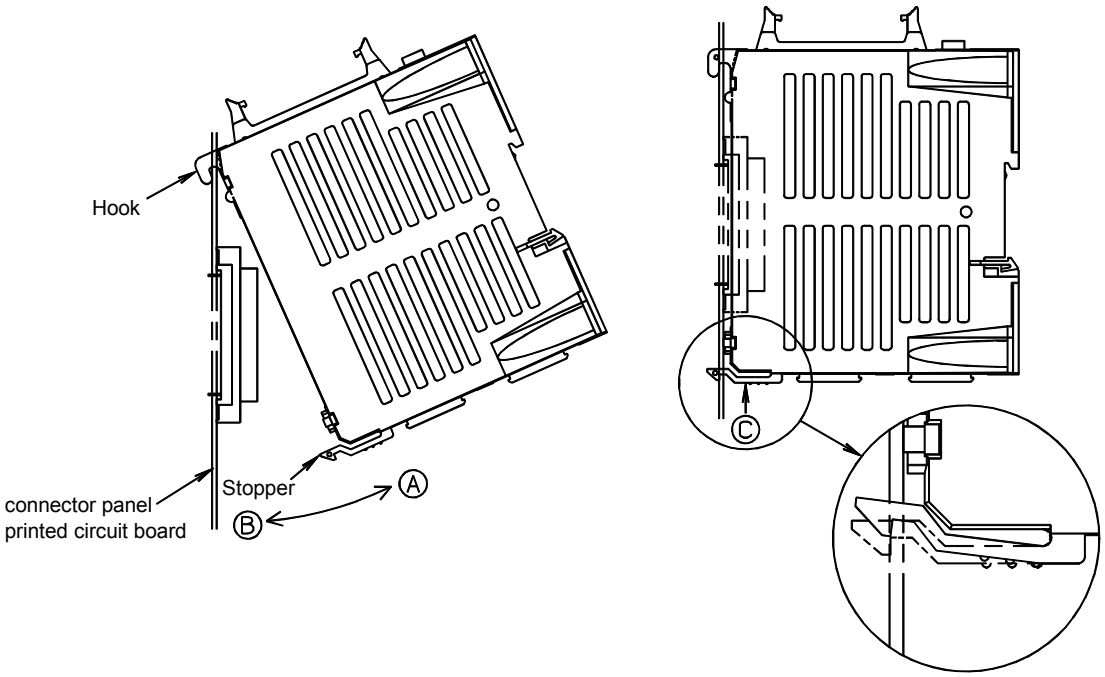

Mounting the module
1. Insert the hook of the module into the square hole located at the upper part of the connector panel printed circuit board.
2. Using the hook as a fulcrum, push the module in the direction of (B), and attach the module's connector to the connector on the printed circuit board.
3. Push the stopper into the lower hole of the printed circuit board until it clicks into place.

Dismounting the module
1. Press the stopper (C) upward.
2. Using the hook as a fulcrum, pull the lower part of the module in the direction of (A).

When connecting a connector panel printed circuit board directly (mounting and dismounting a module)

NOTE

When mounting and dismounting a module, hold the module by its top and bottom surfaces. Avoid applying force to the sides where there are slits.

© MyFANUC 195109AB01DC415385669AA015E5BDE5

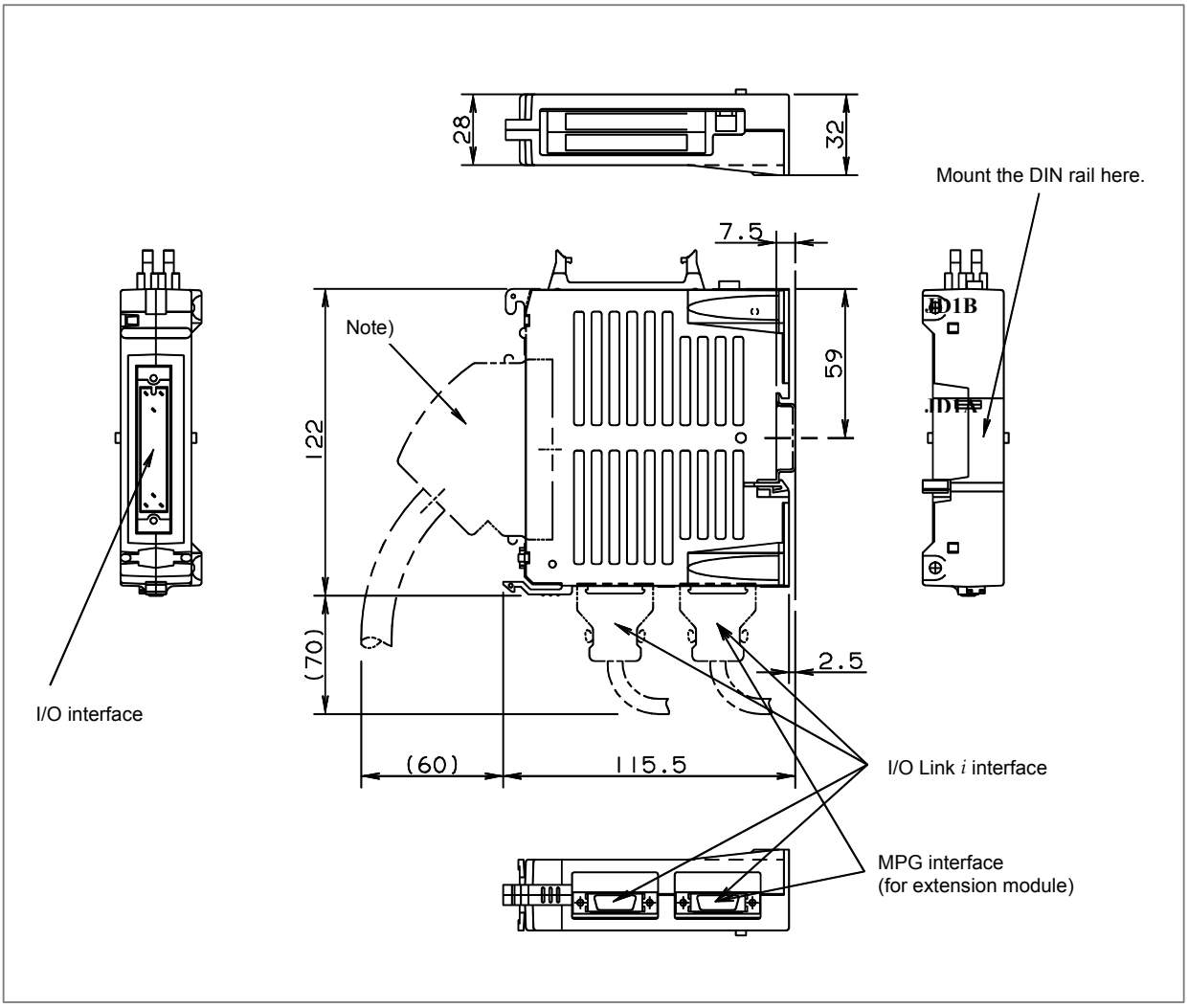

When mounting a DIN rail (external module view and mounting diagram)

NOTE

Recommended connector:

A02B-0098-K891 (including the following connector and case)
(Connector: HONDA MR-50F solder type)
(Case: HONDA MR-50NSB angled type)

Recommended wire material:

A66L-0001-0042(7/0.18, 50 pins)

© MyFANUC 195109AB01DC415385669AA015E5BDE5

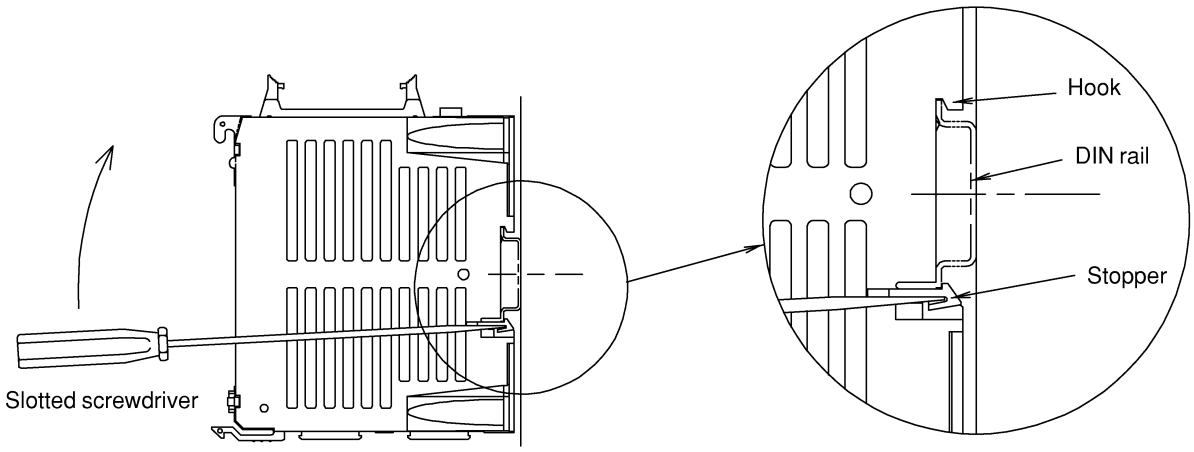

Mounting the module
1. Hook the module at the upper end of the DIN rail.
2. Push the stopper into the slit located at the lower end of the rail until it clicks into place.

Dismounting the module
1. Insert the tip of the slotted screwdriver and push out the stopper in the direction indicated by the arrow.

When mounting a DIN rail (mounting and dismounting a module)

NOTE

When dismounting the module, take care not to damage the stopper by applying excessive force with the screwdriver.
When mounting and dismounting a module, hold the module by its top and bottom surfaces. Avoid applying force to the sides where there are slits.

© MyFANUC 195109AB01DC415385669AA015E5BDE5

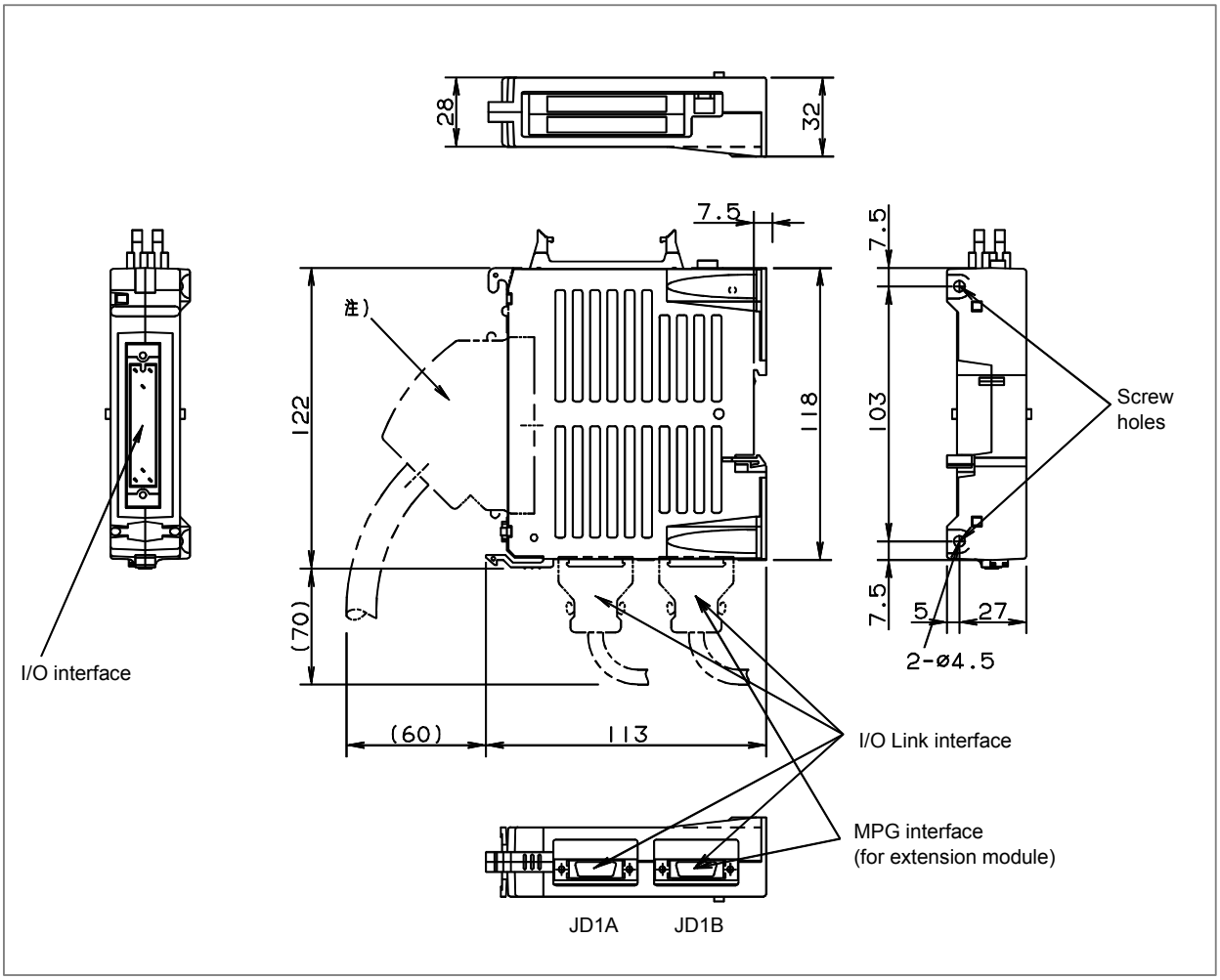

When mounting a module using screws (external module view and mounting diagram)

NOTE

Recommended connector:

A02B-0098-K891 (including the following connector and case)
(Connector: HONDA MR-50F solder type)
(Case: HONDA MR-50NSB angled type)

Recommended wire material:

A66L-0001-0042(7/0.18, 50 pins)

© MyFANUC 195109AB01DC415385669AA015E5BDE5

8.2.10 Other Notes

Address allocation

For connection to the I/O Link *i*

For the I/O module for connector panel, I/O addresses are mapped as follows.

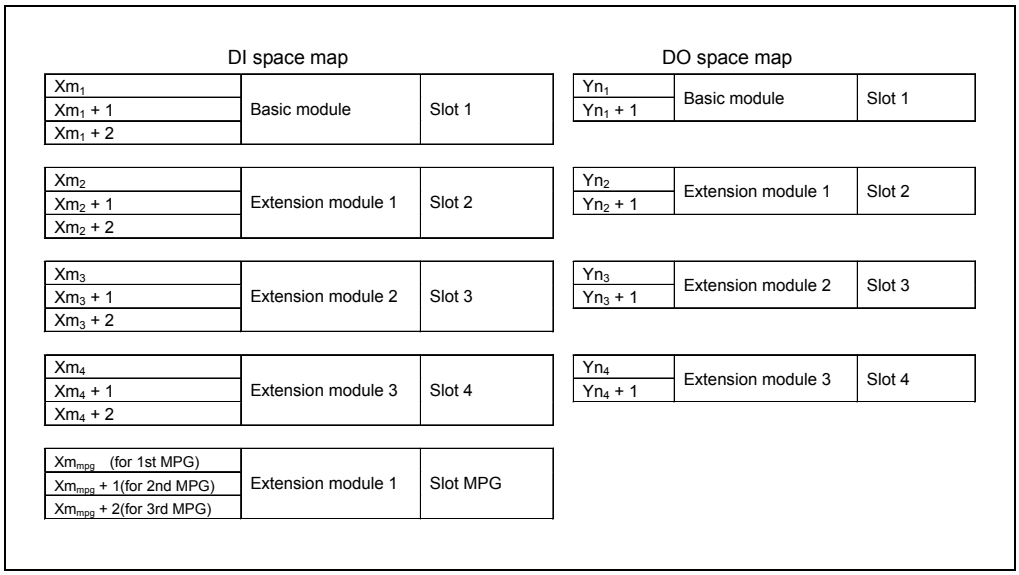

Xm_1, Xm_2, Xm_3, Xm_4, Xm_{mpg}, Yn_1, Yn_2, Yn_3, and Yn_4 indicate the start address at allocation.

Each module is treated as a slot and addresses are allocated for each module. When only the basic module is used, allocate 3-byte DI addresses and 2-byte DO addresses to slot 1. When extension modules are added, allocate 3-byte DI addresses and 2-byte DO addresses to slots 2, 3, and 4.
An I/O module for connector panel has an interface for three manual pulse generators. To use manual pulse generators, allocate addresses to slot MPG. With this setting, addresses can be allocated to the three manual pulse generators at a time (addresses cannot be allocated individually to manual pulse generators). Do not use the DI space with the ladder because the CNC processes the manual pulse generator signals directly.

NOTE
1 Be sure to allocate addresses to the basic module. (DI: 3 bytes, DO: 2 bytes)
2 Extension module C (2A output module) has no DI signals. For connection to the I/O Link i, it is not necessary to allocate addresses to the DI section of extension module C.

© MyFANUC 195109AB01DC415385669AA015E5BDE5

For connection to the I/O Link

For the I/O module for connector panel, I/O addresses are mapped as follows.

DI space map

Xm	Basic module
Xm+1	
Xm+2	
Xm+3	Extension module 1
Xm+4	
Xm+5	
Xm+6	Extension module 2
Xm+7	
Xm+8	
Xm+9	Extension module 3
Xm+10	
Xm+11	
Xm+12 (for 1st MPG)	Extension module 1
Xm+13 (for 2nd MPG)	
Xm+14 (for 3rd MPG)	
Xm+15 (DO alarm detection)	Basic module

DO space map

Yn	Basic module
Yn+1	
Yn+2	Extension module 1
Yn+3	
Yn+4	Extension module 2
Yn+5	
Yn+6	Extension module 3
Yn+7	

For connection to the I/O Link, allocate addresses to the basic module and extension modules at a time. Addresses Xm+12 to Xm+14 are allocated to manual pulse generator and address Xm+15 is allocated to the DO alarm regardless of whether an extension module is used. For this reason, allocate DI addresses in units of 16 bytes.
Do not use the DI space with the ladder because the CNC processes the manual pulse generator signals directly.

NOTE

Extension module C (2A output module) involves no DI signals. For connection to the I/O Link, the DI addresses allocated to the 2A output module cannot be used. When a 2A output module is installed in extension module 2, for example, addresses Xm+6 to Xm+8 cannot be used. (The addresses for other modules are not shifted. In this case, the DI addresses for extension module 3 remain Xm+9 to Xm+11.)

DO (output signal) error detection

The DO driver of the Basic and Extension module A/B is capable of detecting an overcurrent and measuring its own temperature. If an accident, such as the connecting of the cable to ground, causes an abnormal increase in the load current or in the driver temperature, a protection circuit, which is provided for each DO driver, is activated and keeps the DO signal in the OFF state until the cause of the problem is eliminated. Even if this occurs, the CNC and I/O module continue operating without entering the alarm status, but the PMC is notified of the location of the error detected by the DO driver. This information can be checked on the PMC status screen or alarm processing can be performed in advance using a ladder to help error check and recovery.
Information reported to the PMC differs depending on whether the I/O Link i or I/O Link is connected.

For connection to the I/O Link *i*

For connection to the I/O Link i, a DO error such as a ground fault is detected for each signal. This DO error is transferred to the PMC system relay area as a status alarm. The following table lists system relay area information and corresponding DO data related to a status alarm. When an alarm data bit is set to “1”, the DO driver corresponding to the bit detects an error. Also see Subsection 7.3.3, “Status Alarm”.

Information output to the system relay area and corresponding location where an error occurred

© MyFANUC 195109AB01DC415385669AA015E5BDE5

Slot number	Alarm information number	Address of the DO driver which detects an error	Location
1	0	Yn_1	Basic module
1	1	Yn_1+1	Basic module
2	0	Yn_2	Extension module 1
2	1	Yn_2+1	Extension module 1
3	0	Yn_3	Extension module 2
3	1	Yn_3+1	Extension module 2
4	0	Yn_4	Extension module 3
4	1	Yn_4+1	Extension module 3

Description of alarm data

#7	#6	#5	#4	#3	#2	#1	#0
Bit 7 error	Bit 6 error	Bit 5 error	Bit 4 error	Bit 3 error	Bit 2 error	Bit 1 error	Bit 0 error

For connection to the I/O Link

For connection to the I/O Link, a DO error such as a ground fault is detected for each byte. Data at DI address Xm+15 identifies the DO error. The following table lists each bit at DI address Xm+15 and corresponding DO area. When a bit at DI address Xm+15 is set to “1”, the corresponding DO driver detects an error.

Alarm detection address and bit	DO address	Location
Xm+15.0	Yn+0	Basic module
Xm+15.1	Yn+1	Basic module
Xm+15.2	Yn+2	Extension module 1
Xm+15.3	Yn+3	Extension module 1
Xm+15.4	Yn+4	Extension module 2
Xm+15.5	Yn+5	Extension module 2
Xm+15.6	Yn+6	Extension module 3
Xm+15.7	Yn+7	Extension module 3

NOTE

This function is not supported by the extension module C (2A output module) or extension module D (analog input module).

© MyFANUC 195109AB01DC415385669AA015E5BDE5

8.2.11 Rotary Switch Setting

NOTE
In the description in this subsection, slots are applicable only for the I/O Link *i*.

By changing the setting (rotary switch) for the expansion modules, connections can be made by omitting some expansion modules (slots) as shown below.

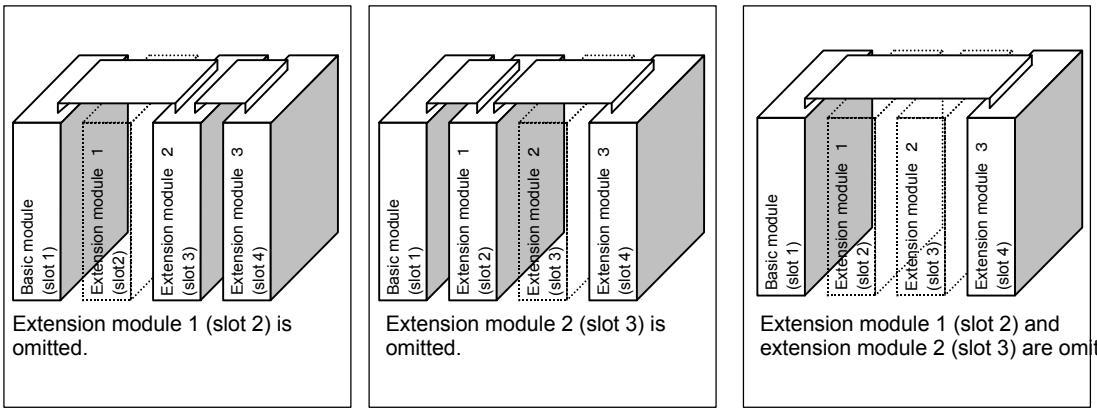

Method of setting (control and method of setting the control)
As shown below, the control (rotary switch) is located on an expansion module. To change the setting, turn the switch with a flat-bladed screwdriver with a tip width of about 2.5 mm.

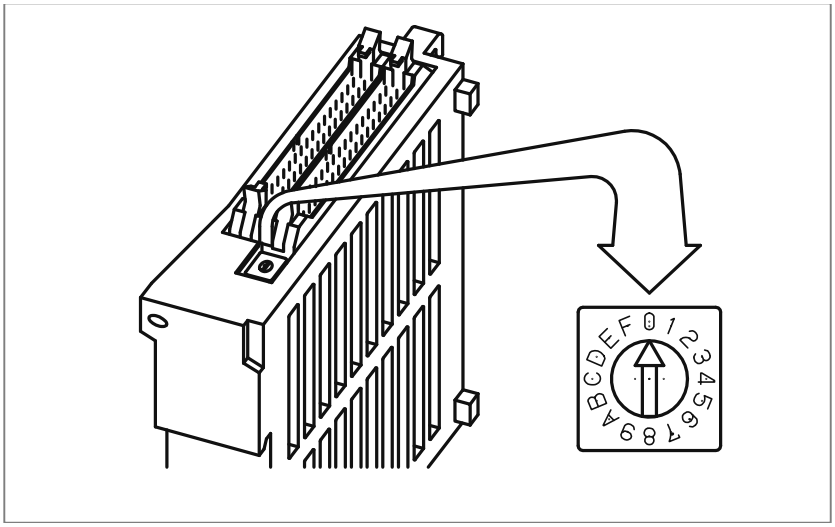

The setting position of the control (rotary switch) has the following meaning.

Setting position	Meaning of setting
0	This is the standard setting. The rotary switch is factory-set to this position. This setting is used when no expansion module is omitted.
1	Set the rotary switch on an expansion module to this position when the preceding expansion module is omitted.
2	Set the rotary switch on an expansion module to this position when the preceding two expansion modules are omitted.
3 to F	This setting is prohibited.

© MyFANUC 195109AB01DC415385669AA015E5BDE5

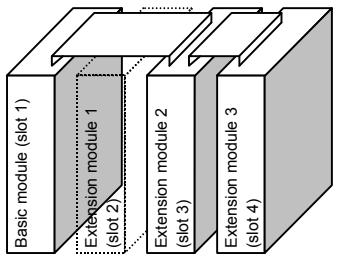

- (When extension module 1 (slot 2) is omitted)
  On extension module 2, set the rotary switch to setting position 1. On extension module 3, keep the rotary switch set to setting position 0.

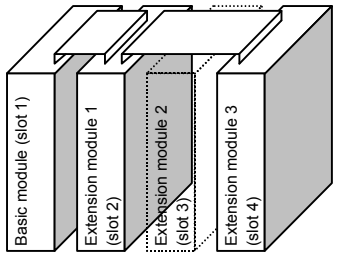

- (When extension module 2 (slot 3) is omitted)
  On extension module 3, set the rotary switch to setting position 1. On extension module 1, keep the rotary switch set to setting position 0.

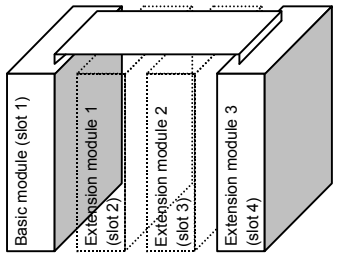

- (When extension module 1 (slot 2) and extension module 2 (slot 3) is omitted)
  On extension module 3, set the rotary switch to setting position 2.

NOTE

Extension module A is fitted with an additional rotary switch as other types of modules are modified. However, extension module A is always mounted at the location of extension module 1, so that its factory setting need not be changed.

© MyFANUC 195109AB01DC415385669AA015E5BDE5

8.3 CONNECTION OF I/O MODULE FOR OPERATOR'S PANEL (FOR MATRIX INPUT)

8.3.1 Overall Connection Diagram

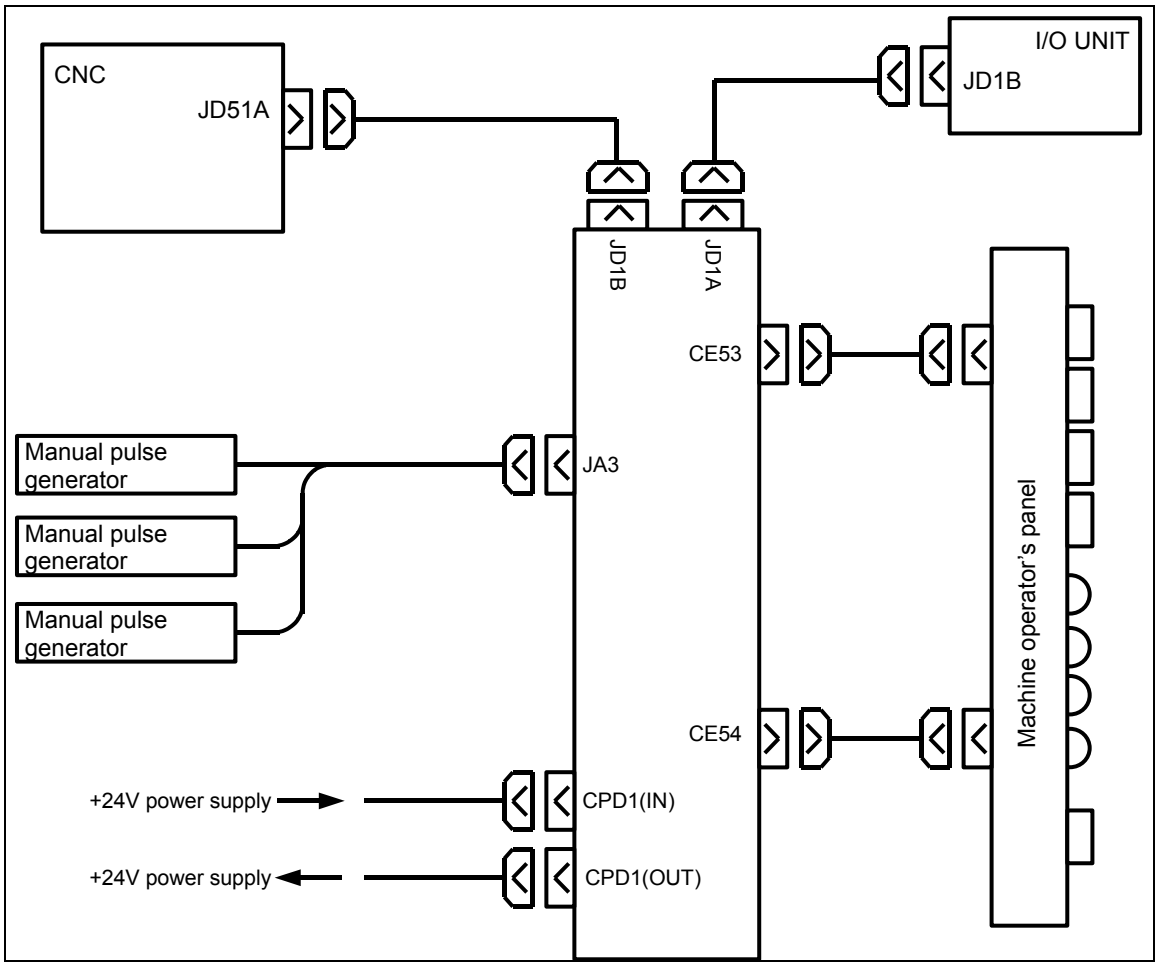

NOTE
The following screw type connectors, newly incorporated into the main board of control unit, cannot be used to connect the I/O Link *i* or manual pulse generator.

Connectors that cannot be used on the cable side

	Specification	Manufacturer
Connector case	FI-20-CV7	Hirose Electric Co., Ltd.
Connector case and connector	FI30-20S-CV7	Hirose Electric Co., Ltd.

© MyFANUC 195109AB01DC415385669AA015E5BDE5

8.3.2 Power Connection

Provide the CPD1 (IN) connector, shown below, with the power necessary for printed circuit board operation and that for DI operation. To facilitate power division, the power is output to CPD1 (OUT) exactly as it is input from CPD1 (IN). When power division is required, use CPD1 (OUT). Up to 1.0 A can be supplied by branching.

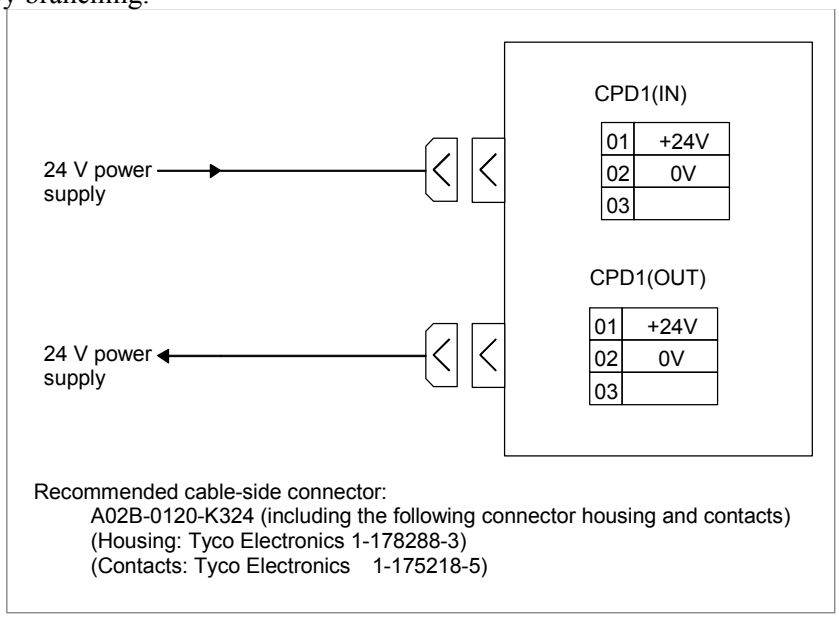

NOTE

The specification of the power supply connector CPD1 (IN) is the same as that for CPD1 (OUT). There are no indications on the printed circuit board to distinguish between the IN and OUT connectors.

© MyFANUC 195109AB01DC415385669AA015E5BDE5

8.3.3 DI/DO Connector Pin Arrangement

CE53

	A	B
01	0V	0V
02	N.C.	+24V
03	Xm+0.0	Xm+0.1
04	Xm+0.2	Xm+0.3
05	Xm+0.4	Xm+0.5
06	Xm+0.6	Xm+0.7
07	Yn+0.0	Yn+0.1
08	Yn+0.2	Yn+0.3
09	Yn+0.4	Yn+0.5
10	Yn+0.6	Yn+0.7
11	Yn+1.0	Yn+1.1
12	Yn+1.2	Yn+1.3
13	Yn+1.4	Yn+1.5
14	Yn+1.6	Yn+1.7
15	Yn+2.0	Yn+2.1
16	Yn+2.2	Yn+2.3
17	Yn+2.4	Yn+2.5
18	Yn+2.6	Yn+2.7
19	KYD0	KYD1
20	KYD2	KYD3
21	KYD4	KYD5
22	KYD6	KYD7
23	KCM1	KCM2
24	KCM3	KCM4
25	DOCOM	DOCOM

CE54

	A	B
01	0V	0V
02	COM1	+24V
03	Xm+1.0	Xm+1.1
04	Xm+1.2	Xm+1.3
05	Xm+1.4	Xm+1.5
06	Xm+1.6	Xm+1.7
07	Yn+3.0	Yn+3.1
08	Yn+3.2	Yn+3.3
09	Yn+3.4	Yn+3.5
10	Yn+3.6	Yn+3.7
11	Yn+4.0	Yn+4.1
12	Yn+4.2	Yn+4.3
13	Yn+4.4	Yn+4.5
14	Yn+4.6	Yn+4.7
15	Yn+5.0	Yn+5.1
16	Yn+5.2	Yn+5.3
17	Yn+5.4	Yn+5.5
18	Yn+5.6	Yn+5.7
19	Yn+6.0	Yn+6.1
20	Yn+6.2	Yn+6.3
21	Yn+6.4	Yn+6.5
22	Yn+6.6	Yn+6.7
23	KCM5	KCM6
24	KCM7	DOCOM
25	DOCOM	DOCOM

Flat cable–side connector specification:
A02B–0120–K342
(HIF3BB–50D–2.54R (Hirose Electric Co., Ltd.))
50 contacts
Cable material specification:
A02B–0120–K886
(61–meter, 50–pin cable
(Hitachi Cable, Ltd. or Oki Electric Cable Co., Ltd.))

⚠ **CAUTION**
An output DC voltage of +24 V at CD53 (B02) and CE54 (B02) is for DI signals. Do not supply 24 VDC to these pins from the outside.

© MyFANUC 195109AB01DC415385669AA015E5BDE5

8.3.4 DI (General-purpose Input Signal) Connection

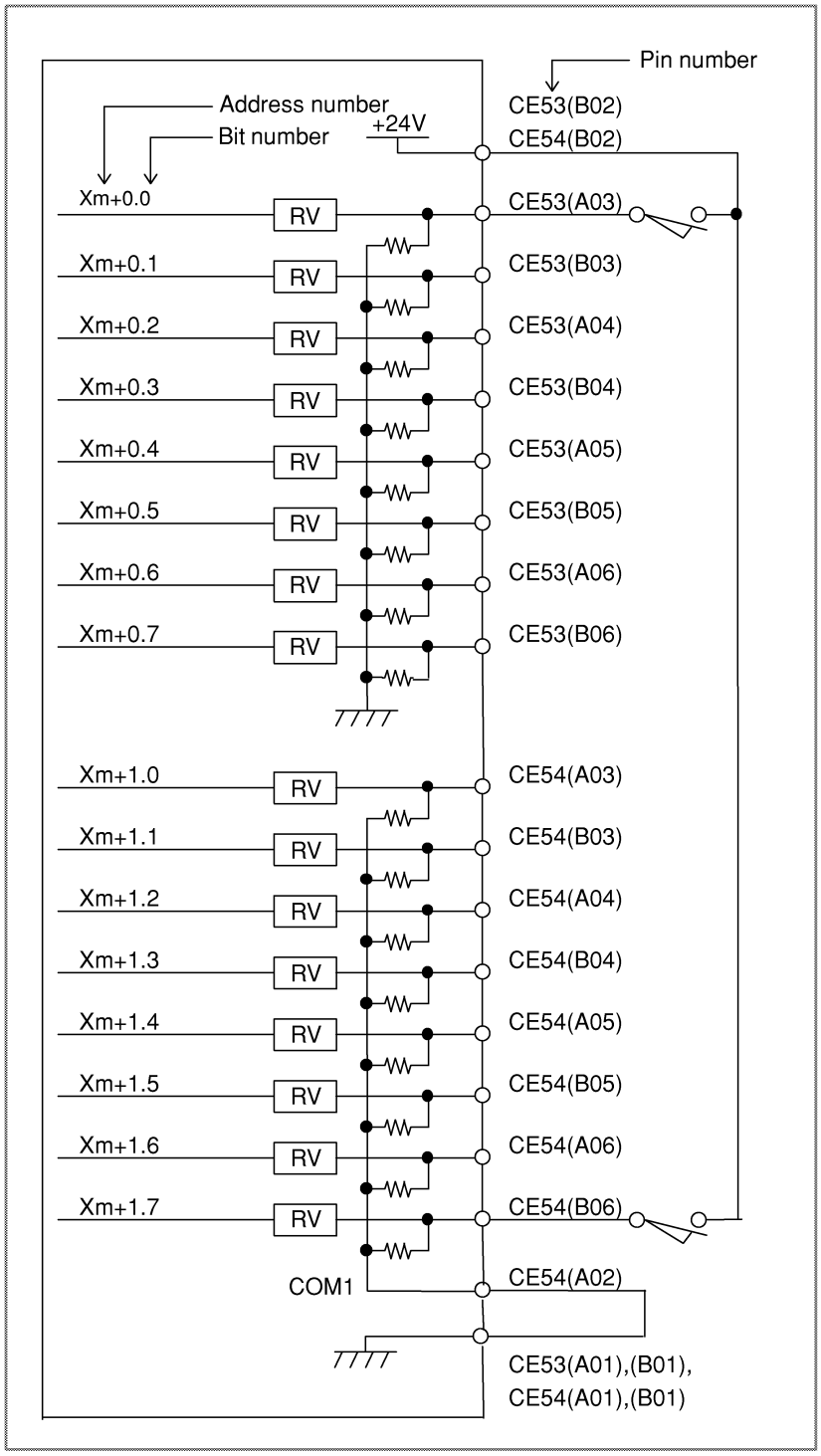

© MyFANUC 195109AB01DC415385669AA015E5BDE5

NOTE

Xm+1.0 through Xm+1.7 are DI pins for which a common voltage can be selected. That is, by connecting the COM1 CE54(A02) pin to the +24 V power supply, a DI signal can be input with its logical state reversed. If, however, a cable is connected to ground, it has the same effect as inputting an ON state DI signal. To prevent this from occurring, the connection of the COM1 CE54(A02) pin to the 0 V power supply is recommended whereever possible.

For the unconnected pins at the addresses for which the common voltage is fixed (from Xm+0.0 to Xm+0.7), the input is “0”. For the unconnected pins at the addresses for which a common voltage can be selected (from Xm+1.0 to Xm+1.7), the input is “0” when the COM1 CE54(A02) pin is connected to the 0 V power supply or “1” when it is connected to the +24 V power supply. Connect COM1 when used. When addresses from Xm+1.0 to Xm+1.7 are not used, connect COM1 to the 0 V power supply.

Common voltage for general-purpose DI

Address	Common voltage
Xm	Cannot be selected.
Xm+1	Can externally be selected with COM1.

⚠ **CAUTION**

An output DC voltage of +24 V at CD53 (B02) and CE54 (B02) is for DI signals. Do not supply 24 VDC to these pins from the outside.

© MyFANUC 195109AB01DC415385669AA015E5BDE5

8.3.5 DI (Matrix Input Signal) Connection

- A maximum of 56 points are provided.

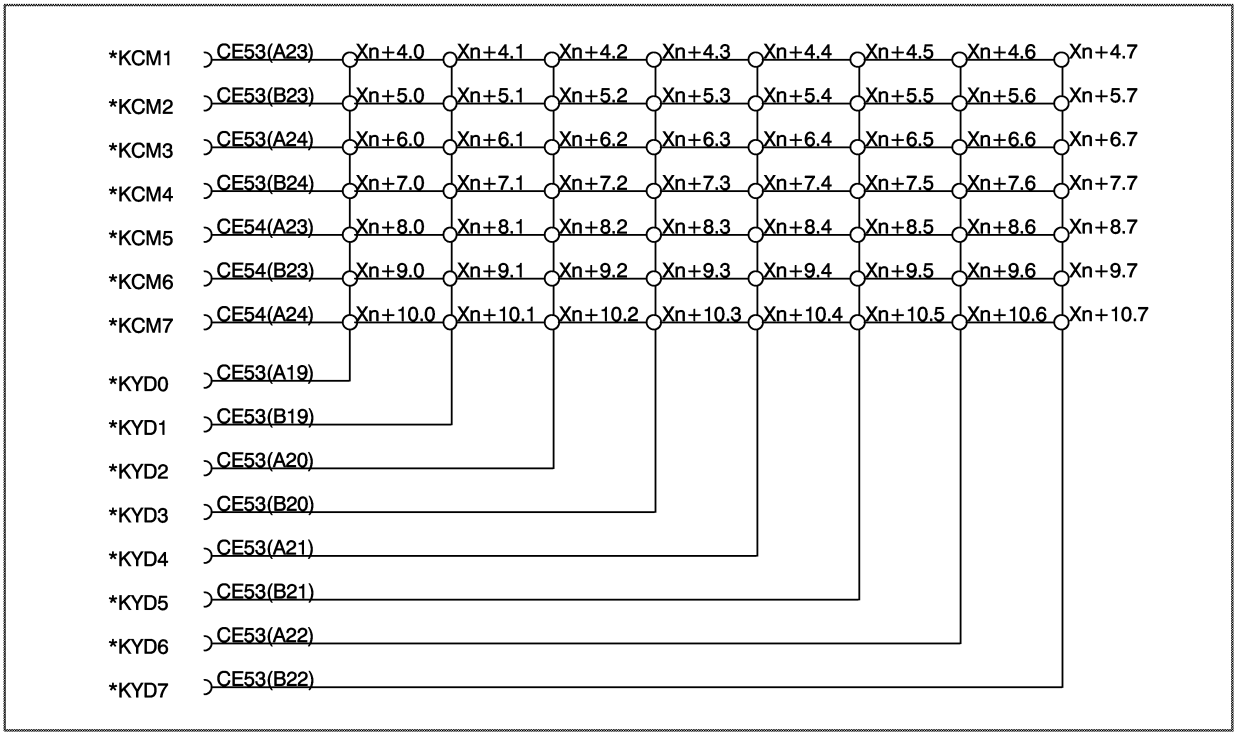

NOTE

Detour prevention diodes must be incorporated for matrix signal input, as shown in the following figure. Otherwise, only two signals can be input at the same time. Inputting three or more signals simultaneously without using detour prevention diodes may result in data input errors.

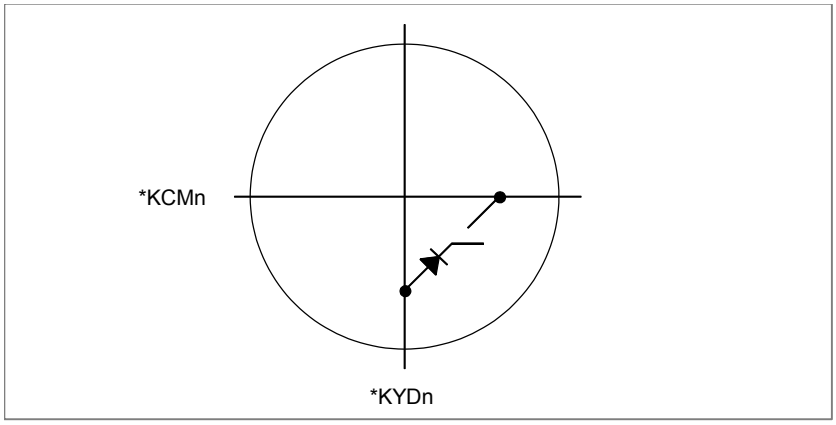

© MyFANUC 195109AB01DC415385669AA015E5BDE5

8.3.6 DO (Output Signal) Connection

- A maximum of 56 points are provided.

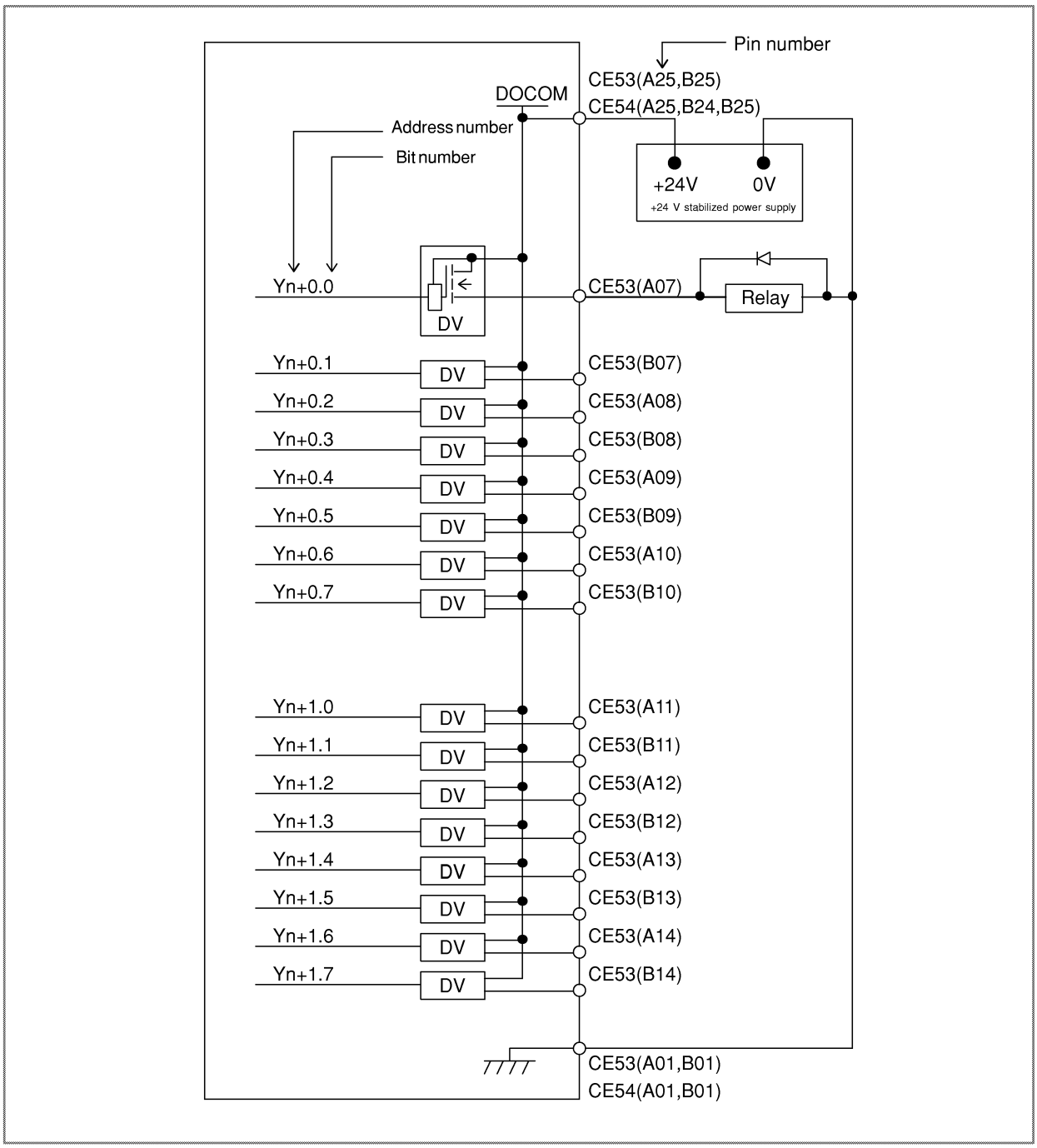

© MyFANUC 195109AB01DC415385669AA015E5BDE5

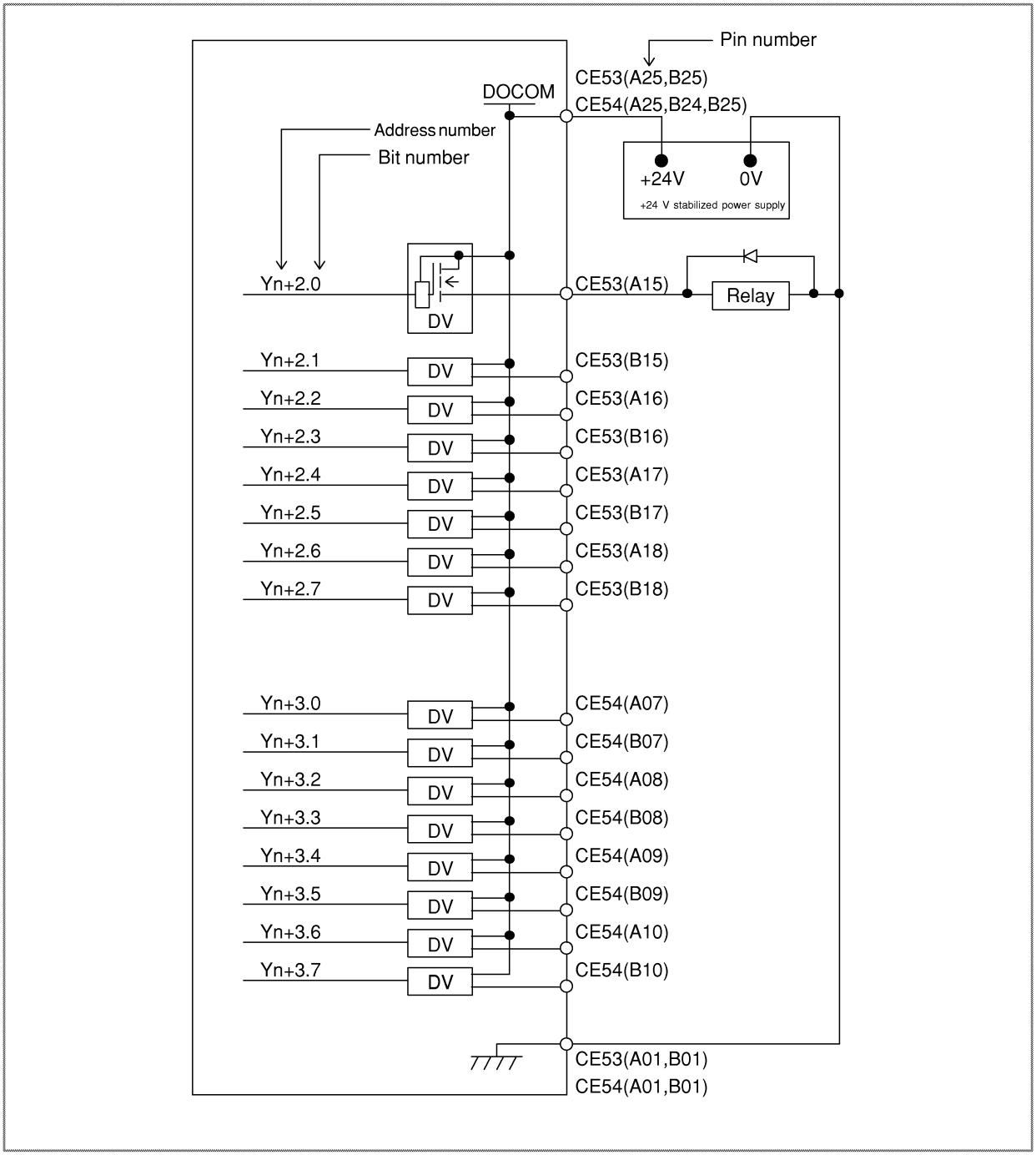

© MyFANUC 195109AB01DC415385669AA015E5BDE5

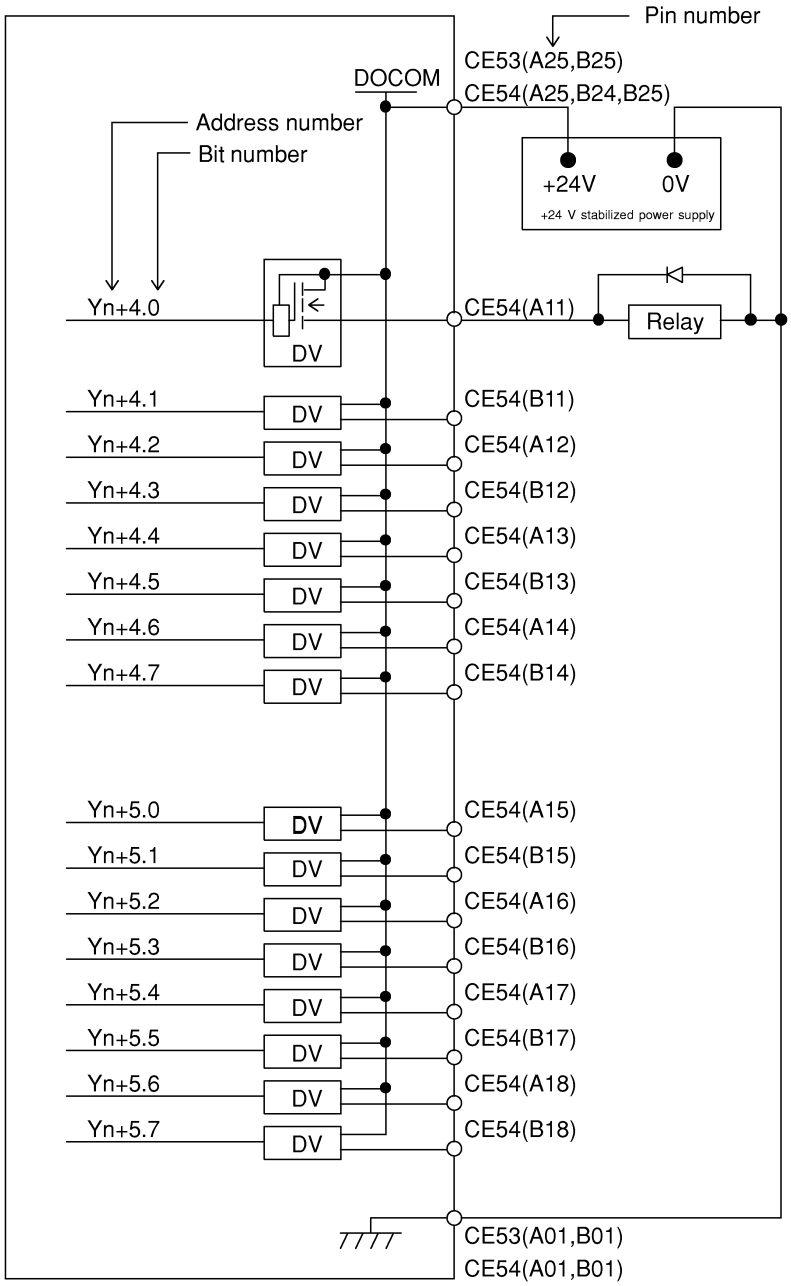

© MyFANUC 195109AB01DC415385669AA015E5BDE5

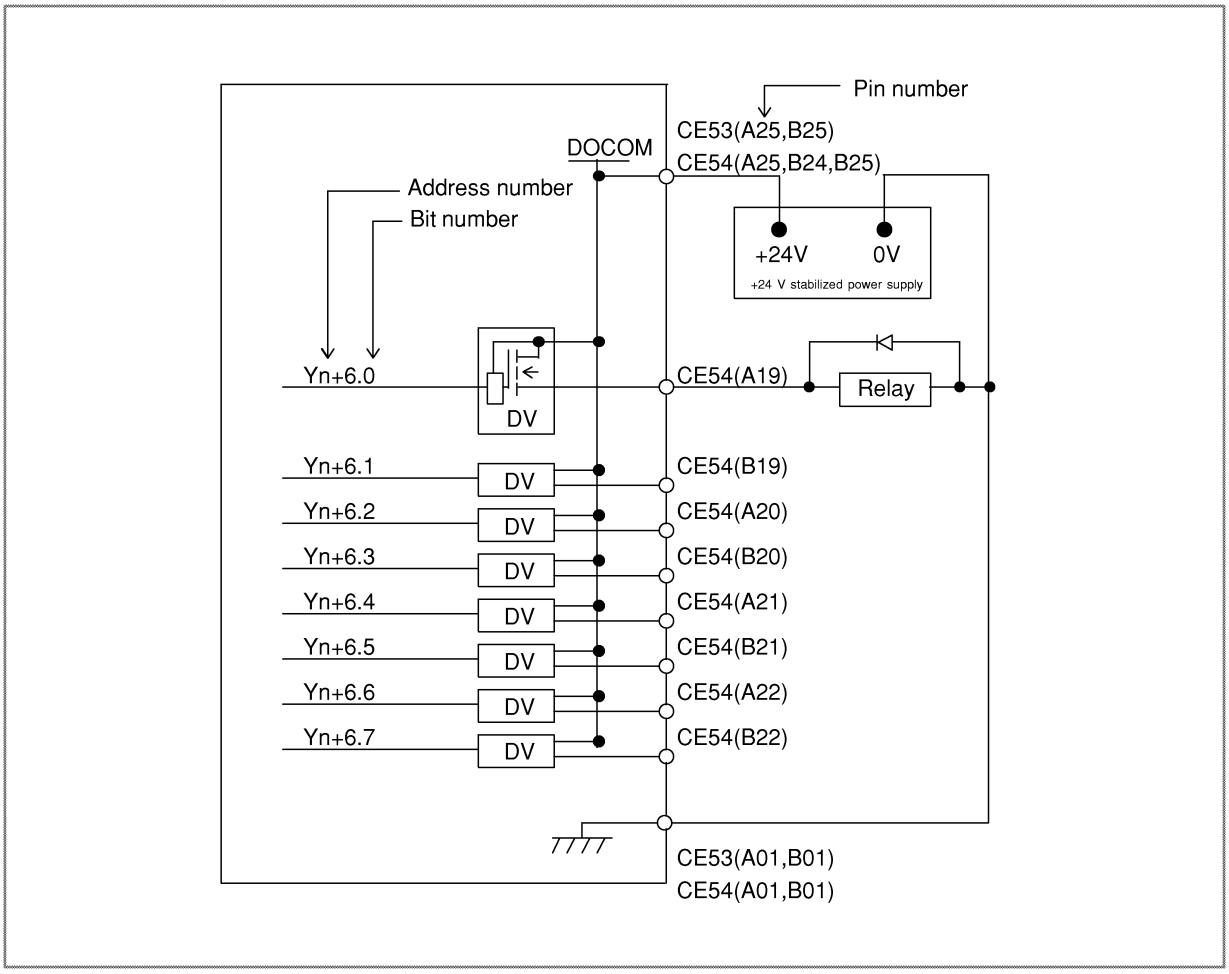

8.3.7 Manual Pulse Generator Connection

For an I/O module for operator's panel, three manual pulse generators can be connected.
For the connection, see Subsection 7.4.1.

© MyFANUC 195109AB01DC415385669AA015E5BDE5

8.3.8 External View

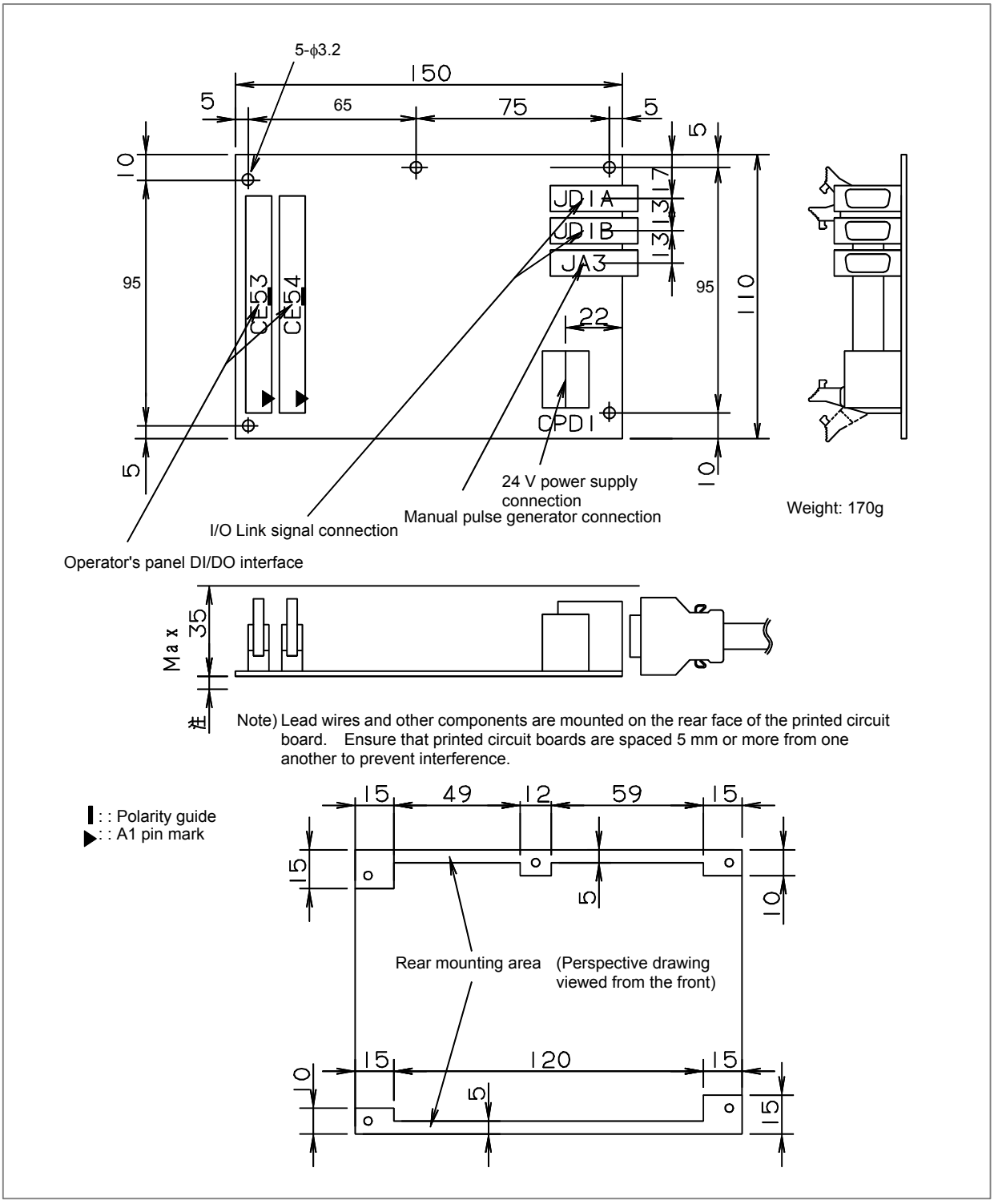

© MyFANUC 195109AB01DC415385669AA015E5BDE5

8.3.9 Specifications

Installation specifications

Install the I/O module in a fully enclosed cabinet.
For other installation conditions, conform to the CNC installation conditions.

Ordering specifications

Item	Ordering specifications	Remarks
I/O module for operator's panel	A03B-0824-K200	
Fuse (spare parts)	A03B-0815-K001	1A

Module specifications

Item	Specification	Remarks
General-purpose DI	16 points	24-V input
Matrix DI	56 points (8 × 7)	5-V input
DO points	56 points (8 × 7)	24 V source type output
MPG interface	Max. 3 units	

Power supply rating

Module	Supply voltage	Current rating	Remarks
I/O module for operator's panel	24 VDC ±10% supplied from the power supply connector CPD1. The allowance of ±10% should include instantaneous voltage and ripple voltage.	0.35A	The total power consumption of DI points is included. (This is true when all general-purpose DI points are turned on.) The power consumption of DO points is not included.

NOTE
To connect an optical adapter for the I/O Link *i* to both connectors JD1A and JD1B, the above power supply rating + 70 mA is required.

DI (input signal specifications)

(General-purpose input signal)

Rated input	24 VDC, 7.3 mA
Contact rating	30 VDC, 16 mA or more
Leakage current between contacts when opened	1 mA or less (26.4 V)
Voltage decrease between contacts when closed	2 V or less (including a cable voltage decrease)
Delay time	The receiver delay time is 2 ms (maximum). In addition, [I/O Link transfer time between CNC and I/O module] and [ladder scan period (depending on CNC)] must be considered.

(Matrix input signal)

Contact rating	6 VDC, 2 mA or more
Leakage current between contacts when opened	0.2mA or less (6V)
Voltage decrease between contacts when closed	0.9 V or less (with a current of 1 mA)
Delay time	The maximum matrix period of 16 ms (maximum). In addition, [I/O Link transfer time between CNC and I/O module] and [ladder scan period (depending on CNC)] must be considered.

© MyFANUC 195109AB01DC415385669AA015E5BDE5

NOTE
When detour prevention diodes are used, the voltage drop across closed contacts indicated above must be maintained, including the diode voltage drop.

DO (output signal specifications)

Maximum load current when ON	200 mA or less including momentary current per signal. 3.5 A or less for DO signals in all
Saturation voltage when ON	1 V (maximum) when the load current is 200 mA
Withstand voltage	24 V +20% or less including momentary variations
Leakage current when OFF	20μA or less
Delay time	The driver delay time is 50 μs (maximum). In addition, [I/O Link transfer time between CNC and I/O module] and [ladder scan period (depending on CNC)] must be considered.

NOTE
Be sure to connect all DO power supply pins DOCOM.

8.3.10 Other Notes

Address allocation

For connection to the I/O Link *i*

For the I/O module for operator's panel, I/O addresses are mapped as follows.

DI space map

Xm_1	General-purpose input signal	Slot 1
$Xm_1 + 1$		
$Xm_1 + 2$	Reserved	
$Xm_1 + 3$		
$Xm_1 + 4$	Matrix input signal	
$Xm_1 + 5$		
$Xm_1 + 6$		
$Xm_1 + 7$		
$Xm_1 + 8$		
$Xm_1 + 9$		
$Xm_1 + 10$		
$Xm_1 + 11$	Reserved	

Xm_{mpg} (for 1st MPG)	Basic module	Slot MPG
$Xm_{mpg} + 1$ (for 2nd MPG)		
$Xm_{mpg} + 2$ (for 3rd MPG)		

DO space map

Yn_1	Output signal	Slot 1
$Yn_1 + 1$		
$Yn_1 + 2$		
$Yn_1 + 3$		
$Yn_1 + 4$		
$Yn_1 + 5$		
$Yn_1 + 6$		
$Yn_1 + 7$	Reserved	

Xm_1, Xm_{mpg}, and Yn_1 indicate the start address at allocation.
Basically, for an I/O module for operator's panel, allocate 12-byte DI addresses to slot 1 and 8-byte DO addresses to slot 1.
An I/O module for operator's panel has an interface for three manual pulse generators. To use manual pulse generators, allocate addresses to slot MPG. With this setting, addresses can be allocated to the three manual pulse generators at a time (addresses cannot be allocated individually to manual pulse generators). Do not use the addresses with the ladder because the CNC processes the manual pulse generator signals directly.

© MyFANUC 195109AB01DC415385669AA015E5BDE5

For connection to the I/O Link

DI space map

Xm	General-purpose input signal
Xm+1	
Xm+2	Reserved
Xm+3	
Xm+4	Matrix input signal
Xm+5	
Xm+6	
Xm+7	
Xm+8	
Xm+9	
Xm+10	
Xm+11	Reserved
Xm+12 (for 1st MPG)	Manual pulse generator
Xm+13 (for 2nd MPG)	
Xm+14 (for 3rd MPG)	
Xm+15 (DO alarm detection)	(DO alarm detection)

DO space map

Yn	Output signal
Yn+1	
Yn+2	
Yn+3	
Yn+4	
Yn+5	
Yn+6	
Yn+7	Reserved

For connection to the I/O Link, addresses are allocated to general-purpose input signals, matrix input signals, manual pulse generators, and DO alarm detection at a time. For this reason, allocate DI addresses in units of 16 bytes.
Do not use the DI space with the ladder because the CNC processes the manual pulse generator signals directly.

ON/OFF of the power supply (DO common) for DO signals (output signals)

For ON/OFF of the power supply pin (DOCOM) for the DO signals (output signals), see Subsection 8.2.4.4.

Parallel DO (output signal) connection

For parallel connections of DO signals (output signals), see Subsection 8.2.4.4.

DO (output signal) alarm detection

The DO driver of an I/O module for operator's panel is capable of detecting an overcurrent and measuring its own temperature. If an accident, such as connecting the cable to ground, causes an abnormal increase in the load current or in the driver temperature, a protection circuit, which is provided for each DO driver, is activated which keeps the DO signal for the relevant 1 byte in the OFF state until the cause of the problem is eliminated. Even if this occurs, the CNC and I/O module continue operating without entering the alarm status, but the PMC is notified of the location of the error detected by the DO driver. This information can be checked on the PMC status screen or alarm processing can be performed in advance using a ladder to help error check and recovery.
Information reported to the PMC differs depending on whether the I/O Link i or I/O Link is connected.

For connection to the I/O Link *i*

For connection to the I/O Link i, a DO error such as a ground fault is detected for each byte. This DO error is transferred to the PMC system relay area as a status alarm. The following table lists system relay area information and corresponding DO data related to a status alarm. When alarm data bit 0 is set to "1", the DO driver indicated by the slot number and byte offset detects an error as listed in the table below. Also see Subsection 7.3.3, "Status Alarm".

Information output to the system relay area and corresponding location where an error occurred

Information output to the system relay area			Description
Slot number	Alarm information number	Alarm data bit 0 data	
1	0	1	Yn_1 error

© MyFANUC 195109AB01DC415385669AA015E5BDE5

Information output to the system relay area			Description
Slot number	Alarm information number	Alarm data bit 0 data	
1	1	1	Yn_1+1 error
1	2	1	Yn_1+2 error
1	3	1	Yn_1+3 error
1	4	1	Yn_1+4 error
1	5	1	Yn_1+5 error
1	6	1	Yn_1+6 error

For connection to the I/O Link

For connection to the I/O Link, a DO error such as a ground fault is detected for each byte. Data at DI address Xm+15 identifies the DO error. The following table lists each bit at DI address Xm+15 and corresponding DO area. When a bit at DI address Xm+15 is set to “1”, the corresponding DO driver detects an error.

Alarm detection address and bit	DO address	Remarks
Xm+15.0	Yn+0	
Xm+15.1	Yn+1	
Xm+15.2	Yn+2	
Xm+15.3	Yn+3	
Xm+15.4	Yn+4	
Xm+15.5	Yn+5	
Xm+15.6	Yn+6	
Xm+15.7	–	Reserved

© MyFANUC 195109AB01DC415385669AA015E5BDE5

8.4 CONNECTION OF I/O MODULE FOR OPERATOR'S PANEL AND I/O MODULE FOR POWER MAGNETICS CABINET

The difference between the I/O module for operator's panel and the I/O module for power magnetics cabinet lies in whether an interface to a manual pulse generator is provided. The power magnetics cabinet does not provide an interface to a manual pulse generator.

8.4.1 Overall Connection Diagram

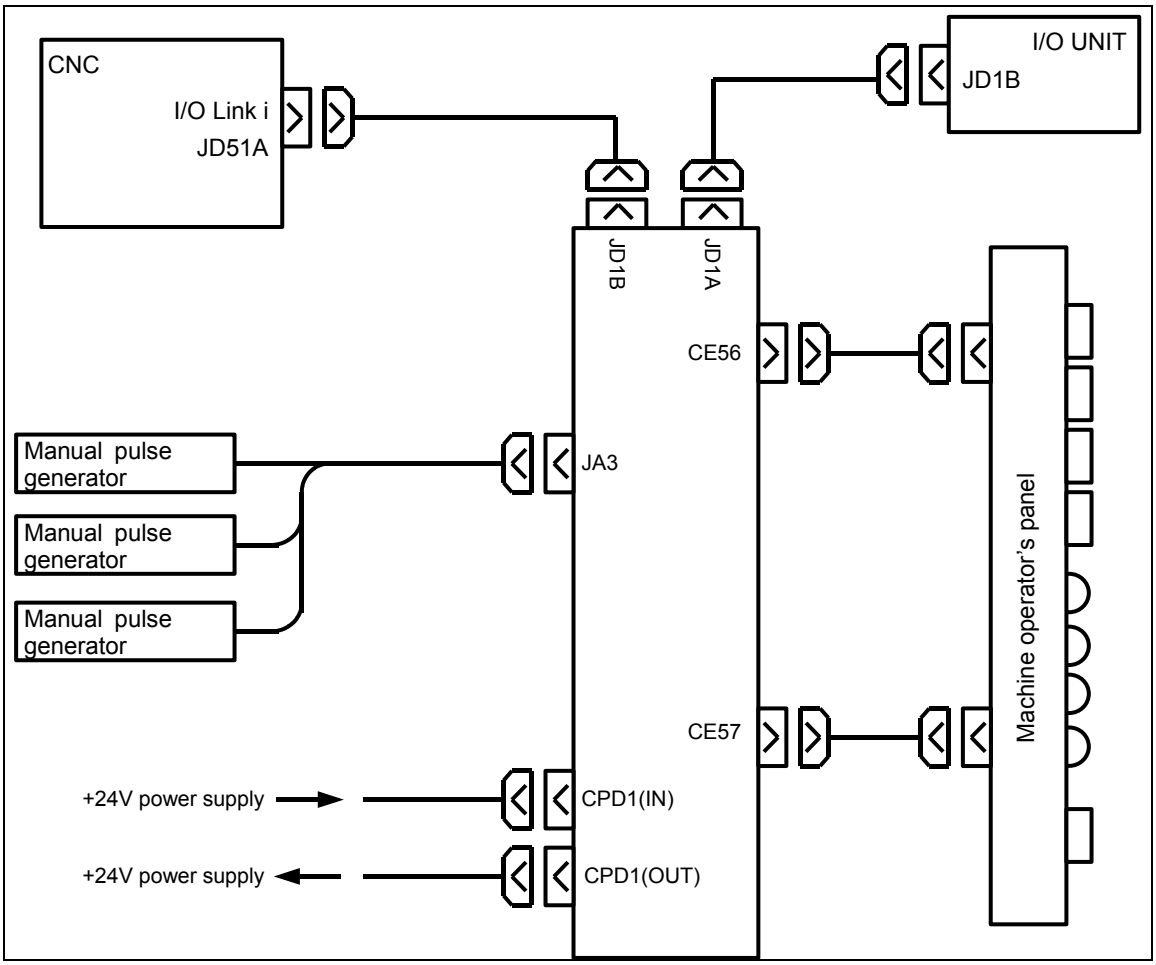

NOTE
The following screw type connectors, newly incorporated into the main board of control unit, cannot be used to connect the I/O Link *i* or manual pulse generator.

Connectors that cannot be used on the cable side

	Specification	Manufacturer
Connector case	FI-20-CV7	Hirose Electric Co., Ltd.
Connector case and connector	FI30-20S-CV7	Hirose Electric Co., Ltd.

© MyFANUC 195109AB01DC415385669AA015E5BDE5

8.4.2 Power Connection

Provide the CPD1 (IN) connector, shown below, with the power necessary for the printed circuit board operation and that for DI operation. To facilitate power division, the power is output to CPD1 (OUT) exactly as it is input from CPD1 (IN). When power division is required, use CPD1 (OUT).
Up to 1.0 A can be supplied by branching.

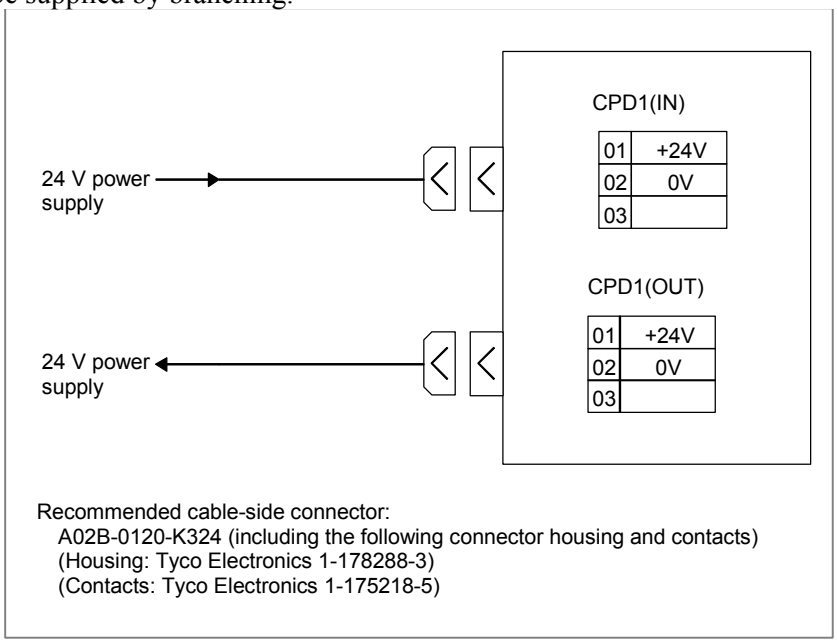

NOTE

The specification of the power supply connector CPD1 (IN) is the same as that for CPD1 (OUT). There are no indications on the printed circuit board to distinguish between the IN and OUT connectors.

© MyFANUC 195109AB01DC415385669AA015E5BDE5

8.4.3 DI/DO Connector Pin Arrangement

CE56

	A	B
01	0V	+24V
02	Xm+0.0	Xm+0.1
03	Xm+0.2	Xm+0.3
04	Xm+0.4	Xm+0.5
05	Xm+0.6	Xm+0.7
06	Xm+1.0	Xm+1.1
07	Xm+1.2	Xm+1.3
08	Xm+1.4	Xm+1.5
09	Xm+1.6	Xm+1.7
10	Xm+2.0	Xm+2.1
11	Xm+2.2	Xm+2.3
12	Xm+2.4	Xm+2.5
13	Xm+2.6	Xm+2.7
14	DICOM0	
15		
16	Yn+0.0	Yn+0.1
17	Yn+0.2	Yn+0.3
18	Yn+0.4	Yn+0.5
19	Yn+0.6	Yn+0.7
20	Yn+1.0	Yn+1.1
21	Yn+1.2	Yn+1.3
22	Yn+1.4	Yn+1.5
23	Yn+1.6	Yn+1.7
24	DOCOM	DOCOM
25	DOCOM	DOCOM

CE57

	A	B
01	0V	+24V
02	Xm+3.0	Xm+3.1
03	Xm+3.2	Xm+3.3
04	Xm+3.4	Xm+3.5
05	Xm+3.6	Xm+3.7
06	Xm+4.0	Xm+4.1
07	Xm+4.2	Xm+4.3
08	Xm+4.4	Xm+4.5
09	Xm+4.6	Xm+4.7
10	Xm+5.0	Xm+5.1
11	Xm+5.2	Xm+5.3
12	Xm+5.4	Xm+5.5
13	Xm+5.6	Xm+5.7
14		DICOM5
15		
16	Yn+2.0	Yn+2.1
17	Yn+2.2	Yn+2.3
18	Yn+2.4	Yn+2.5
19	Yn+2.6	Yn+2.7
20	Yn+3.0	Yn+3.1
21	Yn+3.2	Yn+3.3
22	Yn+3.4	Yn+3.5
23	Yn+3.6	Yn+3.7
24	DOCOM	DOCOM
25	DOCOM	DOCOM

Flat cable–side connector specification:
A02B–0120–K342
(HIF3BB–50D–2.54R (Hirose Electric Co., Ltd.))
50 contacts
Cable material specification:
A02B–0120–K886
(61–meter, 50–pin cable
(Hitachi Cable, Ltd. or Oki Electric Cable Co., Ltd.))

⚠ CAUTION
An output DC voltage of +24 V at CE56 (B01) and CE57 (B01) is for DI signals. Do not supply 24 VDC to these pins from the outside.

© MyFANUC 195109AB01DC415385669AA015E5BDE5

8.4.4 DI (General-purpose Input Signal) Connection

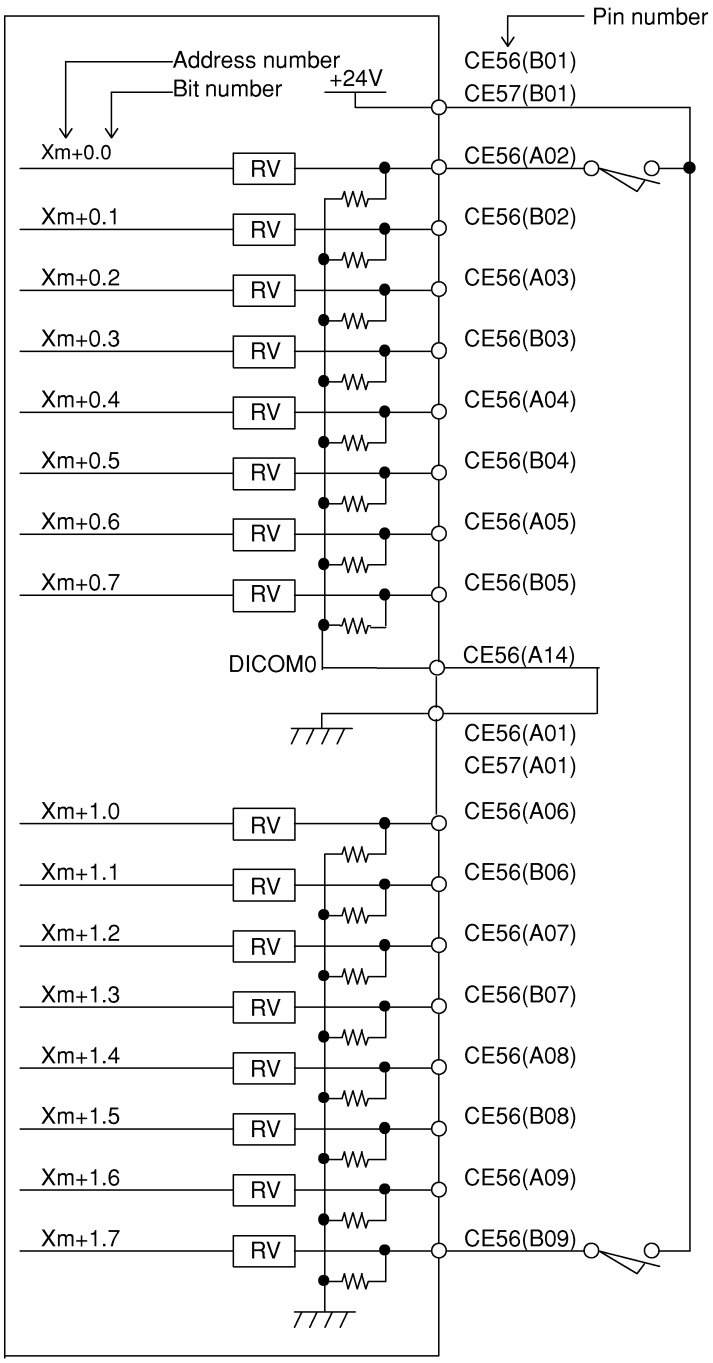

© MyFANUC 195109AB01DC415385669AA015E5BDE5

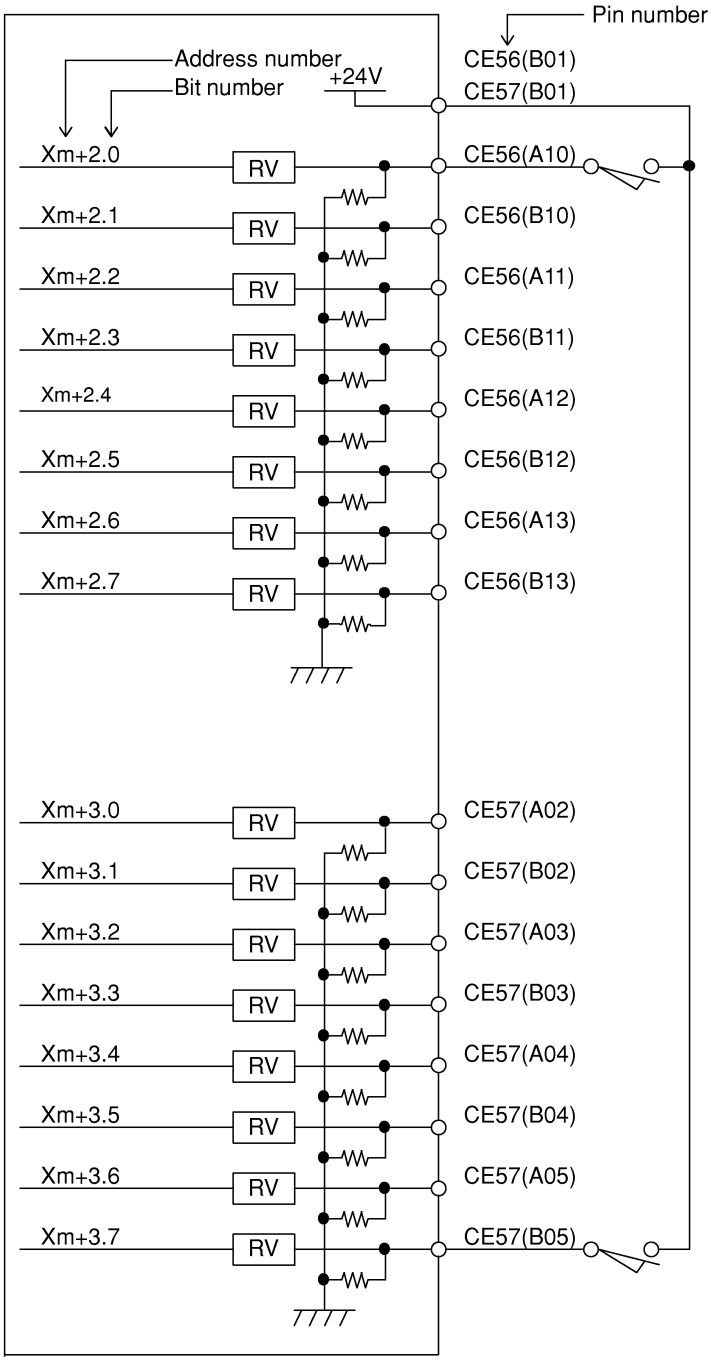

© MyFANUC 195109AB01DC415385669AA015E5BDE5

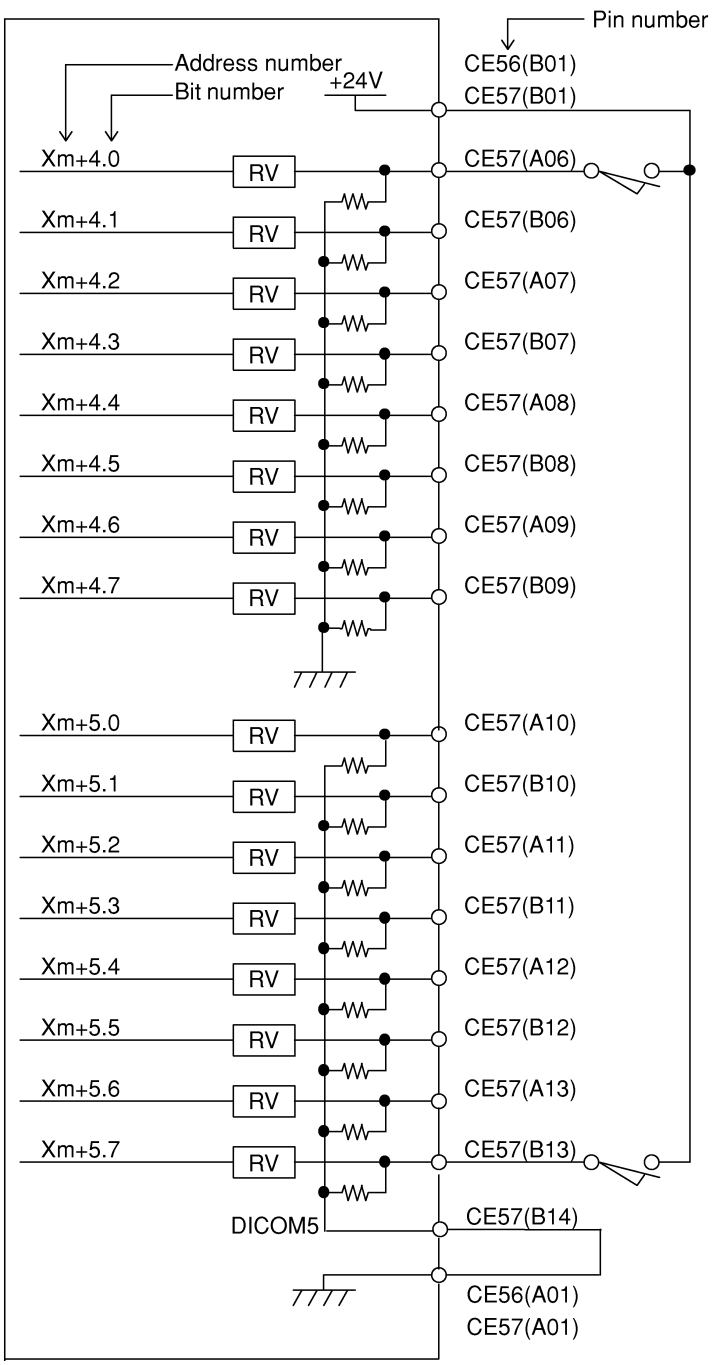

© MyFANUC 195109AB01DC415385669AA015E5BDE5

NOTE

Xm+0.0 through Xm+0.7 and Xm+5.0 through Xm+5.7 are DI pins for which a common voltage can be selected. That is, by connecting the DICOM0 CE56(A14) or DICOM5 CE57(B14) pin to the +24 V power supply, a DI signal can be input with its logical state reversed. If, however, a cable is connected to ground, it has the same effect as inputting an ON state DI signal. To prevent this from occurring, the connection of the DICOM0 CE56(A14) and DICOM5 CE57(B14) pins to the 0 V power supply is recommended whereever possible.
For the unconnected pins at the addresses for which the common voltage is fixed, the input is “0”. For the unconnected pins at the addresses for which a common voltage can be selected, the input is “0” when the DICOMx common select pin is connected to the 0 V power supply or “1” when it is connected to the +24 V power supply. Connect DICOM0 and DICOM5 when used. When addresses from Xm+0.0 to Xm+0.7 and Xm+5.0 to Xm+5.7 are not used, connect DICOM0 and DICOM5 to the 0 V power supply.

Common voltage for general-purpose DI

Address	Common voltage
Xm	Can be selected with DICOM0.
Xm+1	Cannot be selected.
Xm+2	Cannot be selected.
Xm+3	Cannot be selected.
Xm+4	Cannot be selected.
Xm+5	Can be selected with DICOM5.

⚠ **CAUTION**

An output DC voltage of +24 V at CE56 (B01) and CE57 (B01) is for DI signals. Do not supply 24 VDC to these pins from the outside.

© MyFANUC 195109AB01DC415385669AA015E5BDE5

8.4.5 DO (Output Signal) Connection

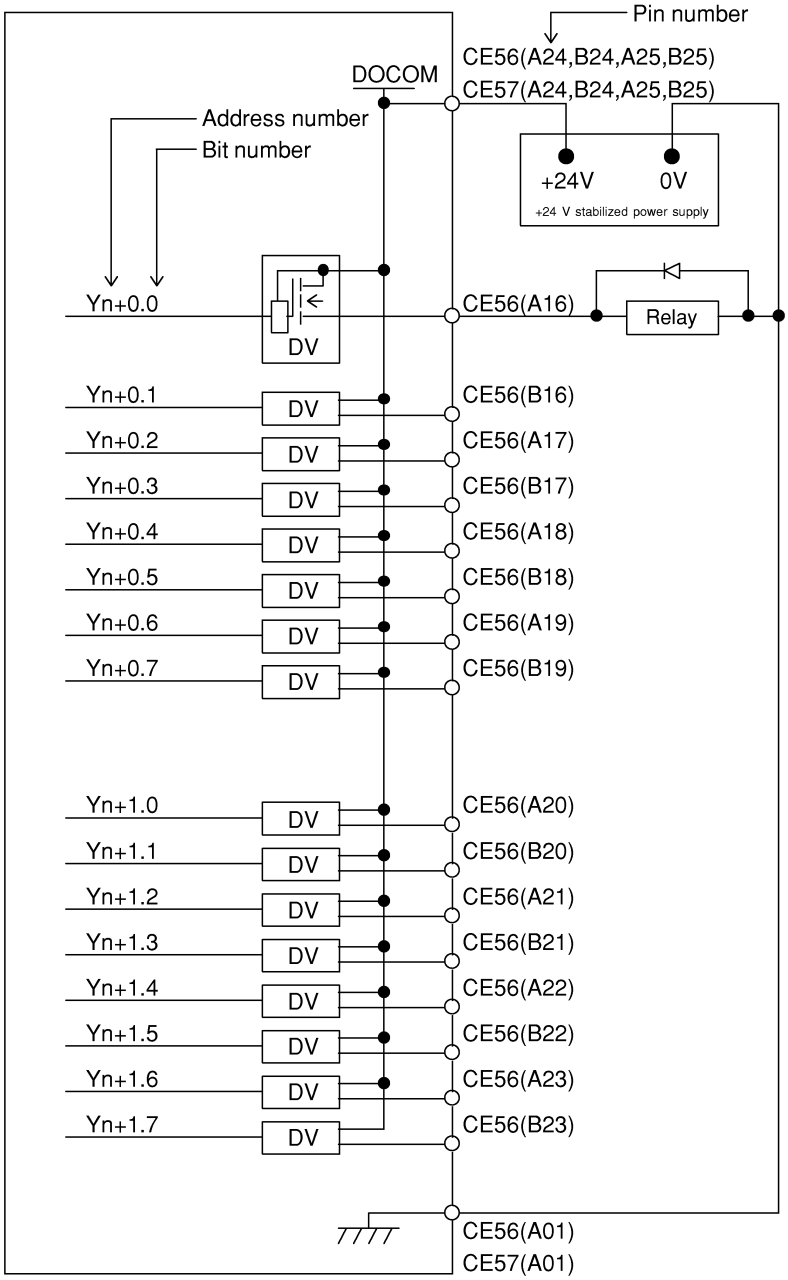

© MyFANUC 195109AB01DC415385669AA015E5BDE5

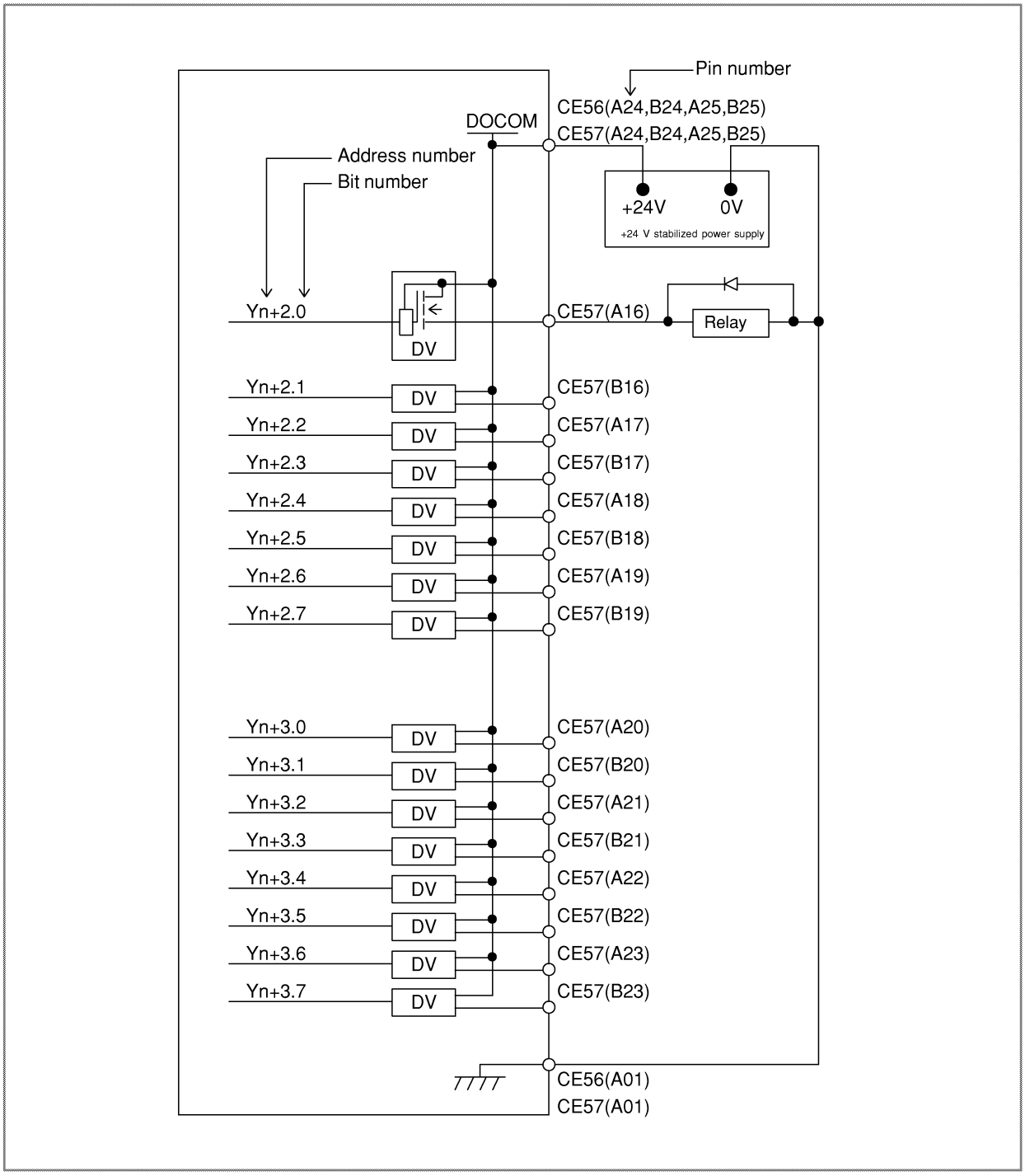

8.4.6 Manual Pulse Generator Connection

For an I/O module for operator's panel, three manual pulse generators can be connected.
For the connection, see Subsection 7.4.1.

© MyFANUC 195109AB01DC415385669AA015E5BDE5

8.4.7 External View

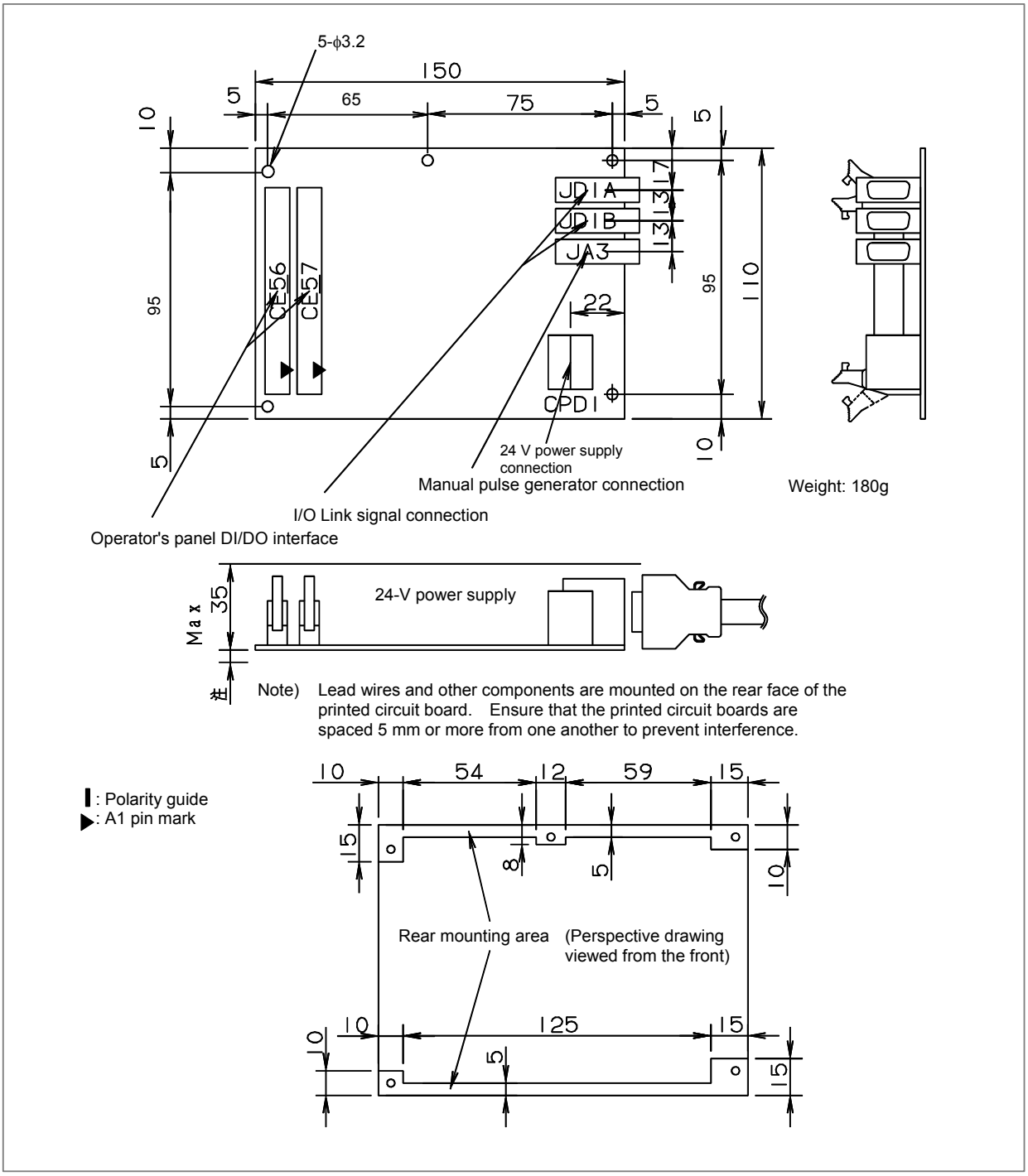

© MyFANUC 195109AB01DC415385669AA015E5BDE5

8.4.8 Specifications

Installation specifications

Install the I/O module in a fully enclosed cabinet.
For other installation conditions, conform to the CNC installation conditions.

Ordering specifications

Item	Ordering specifications	Remarks
I/O module for operator's panel B1 (with MPG interface)	A03B-0824-K202	DI : 48 points DO : 32 points With MPG interface
I/O module for power magnetics cabinet B2 (without MPG interface)	A03B-0824-K203	DI : 48 points DO : 32 points Without MPG interface
Fuse (spare parts)	A03B-0815-K001	1A

Module specifications

Item	Specification	Remarks
DI points	48 points	24-V input
DO points	32 points	24 V source type output
MPG interface	Max. 3 units	For A03B-0824-K202

Power supply rating

Module	Supply voltage	Power supply rating	Remarks
I/O module for operator's panel and I/O module for power magnetics cabinet	24 VDC ±10% supplied from the power supply connector CPD1. The allowance of ±10% should include instantaneous voltage and ripple voltage.	0.3A+7.3mA×DI	DI = number of DI points in the ON state

NOTE
To connect an optical adapter for the I/O Link i to both connectors JD1A and JD1B, the above power supply rating + 70 mA is required.

DI (input signal specifications) (General-purpose input signal)

Rated input	24 VDC, 7.3 mA
Contact rating	30 VDC, 16 mA or more
Leakage current between contacts when opened	1 mA or less (26.4 V)
Voltage decrease between contacts when closed	2 V or less (including a cable voltage decrease)
Delay time	The receiver delay time is 2 ms (maximum). In addition, [I/O Link transfer time between CNC and I/O module] and [ladder scan period (depending on CNC)] must be considered.

DO (output signal specifications)

Maximum load current when ON	200 mA or less including momentary current per signal. 5.6 A or less for DO signals in all
Saturation voltage when ON	1 V (maximum) when the load current is 200 mA
Withstand voltage	24 V +20% or less including momentary variations
Leakage current when OFF	20μA or less

© MyFANUC 195109AB01DC415385669AA015E5BDE5

Delay time	The driver delay time is 50 μs (maximum). In addition, [I/O Link transfer time between CNC and I/O module] and [ladder scan period (depending on CNC)] must be considered.

NOTE
Be sure to connect all DO power supply pins DOCOM.

8.4.9 Other Notes

Address allocation

- For connection to the I/O Link *i*

For this I/O module, I/O addresses are mapped as follows.

DI space map

Xm_1	Input signal	Slot 1
$Xm_1 + 1$		
$Xm_1 + 2$		
$Xm_1 + 3$		
$Xm_1 + 4$		
$Xm_1 + 5$		
Xm_{mpg} (for 1st MPG)	Manual pulse generator	Slot MPG
$Xm_{mpg} + 1$ (for 2nd MPG)		
$Xm_{mpg} + 2$ (for 3rd MPG)		

DO space map

Yn_1	Output signal	Slot 1
$Yn_1 + 1$		
$Yn_1 + 2$		
$Yn_1 + 3$		

Xm_1, Xm_{mpg}, and Yn_1 indicate the start address at allocation.

Basically, for this I/O module, allocate 6-byte DI addresses to slot 1 and 4-byte DO addresses to slot 1.
An I/O module for operator's panel has an interface for three manual pulse generators. To use manual pulse generators, allocate addresses to slot MPG. With this setting, addresses can be allocated to the three manual pulse generators at a time (addresses cannot be allocated individually to manual pulse generators).
Do not use this area with the ladder because the CNC processes the manual pulse generator signals directly.

- For connection to the I/O Link

DI space map

Xm	Input signal
Xm+1	
Xm+2	
Xm+3	
Xm+4	
Xm+5	
Xm+6	Not used
Xm+7	
Xm+8	
Xm+9	
Xm+10	
Xm+11	
Xm+12 (for 1st MPG)	Manual pulse generator
Xm+13 (for 2nd MPG)	
Xm+14 (for 3rd MPG)	
Xm+15(DO alarm detection)	DO alarm detection

DO space map

Yn	Output signal
Yn+1	
Yn+2	
Yn+3	

For connection to the I/O Link, addresses are allocated to input signals, manual pulse generators, and DO alarm detection at a time. For this reason, allocate DI addresses in units of 16 bytes.
Do not use the DI space with the ladder because the CNC processes the manual pulse generator signals directly.

© MyFANUC 195109AB01DC415385669AA015E5BDE5

ON/OFF of the power supply (DO common) for DO signals (output signals)

For ON/OFF of the power supply pin (DOCOM) for the DO signals (output signals), see Subsection 8.2.4.4.

Parallel DO (output signal) connection

For parallel connections of DO signals (output signals), see Subsection 8.2.4.4.

DO (output signal) alarm detection

The DO driver of the I/O module is capable of detecting an overcurrent and measuring its own temperature. If an accident, such as the connecting of the cable to ground, causes an abnormal increase in the load current or in the driver temperature, a protection circuit, which is provided for each DO driver, is activated and keeps the DO signal for the relevant 1 byte in the OFF state until the cause of the problem is eliminated. Even if this occurs, the CNC and I/O module continues operating without entering the alarm status, but the DO driver which detected the error can be checked. If a DO error occurs, this information can be checked on the CNC DGN screen or alarm processing can be performed in advance using a ladder to help error check and recovery.
The check area for an error detected by a DO driver differs depending on whether the I/O Link i or I/O Link is connected.

- For connection to the I/O Link *i*

For connection to the I/O Link i, a DO error such as a ground fault is detected for each point. This DO error is transferred to the PMC system relay area as a status alarm. The following table lists system relay area information and corresponding DO data related to a status alarm. When an alarm data bit is set to “1”, the DO driver corresponding to the bit detects an error. Also see Subsection 7.3.3, “Status Alarm”.

Information output to the system relay area and corresponding location where an error occurred

Slot number	Alarm information number	Address of the DO driver which detects an error
1	0	Yn_1
1	1	Yn_1+1
1	2	Yn_1+2
1	3	Yn_1+3

Description of alarm data

#7	#6	#5	#4	#3	#2	#1	#0
Bit 7 error	Bit 6 error	Bit 5 error	Bit 4 error	Bit 3 error	Bit 2 error	Bit 1 error	Bit 0 error

- For connection to the I/O Link

For connection to the I/O Link, a DO error such as a ground fault is detected for each byte. Data at DI address Xm+15 identifies the DO error. The following table lists each bit at DI address Xm+15 and corresponding DO area. When a bit at DI address Xm+15 is set to “1”, the corresponding DO driver detects an error.

Alarm detection address and bit	DO address	Remarks
Xm+15.0	Yn+0	
Xm+15.1	Yn+1	
Xm+15.2	Yn+2	
Xm+15.3	Yn+3	
Xm+15.4	–	Reserved
Xm+15.5	–	Reserved
Xm+15.6	–	Reserved
Xm+15.7	–	Reserved

© MyFANUC 195109AB01DC415385669AA015E5BDE5

8.5 CONNECTION OF I/O MODULE TYPE-2 FOR CONNECTOR PANEL

8.5.1 Configuration

I/O module for connector panel type-2 consists of the basic module and up to one extension module as shown in the figure below.

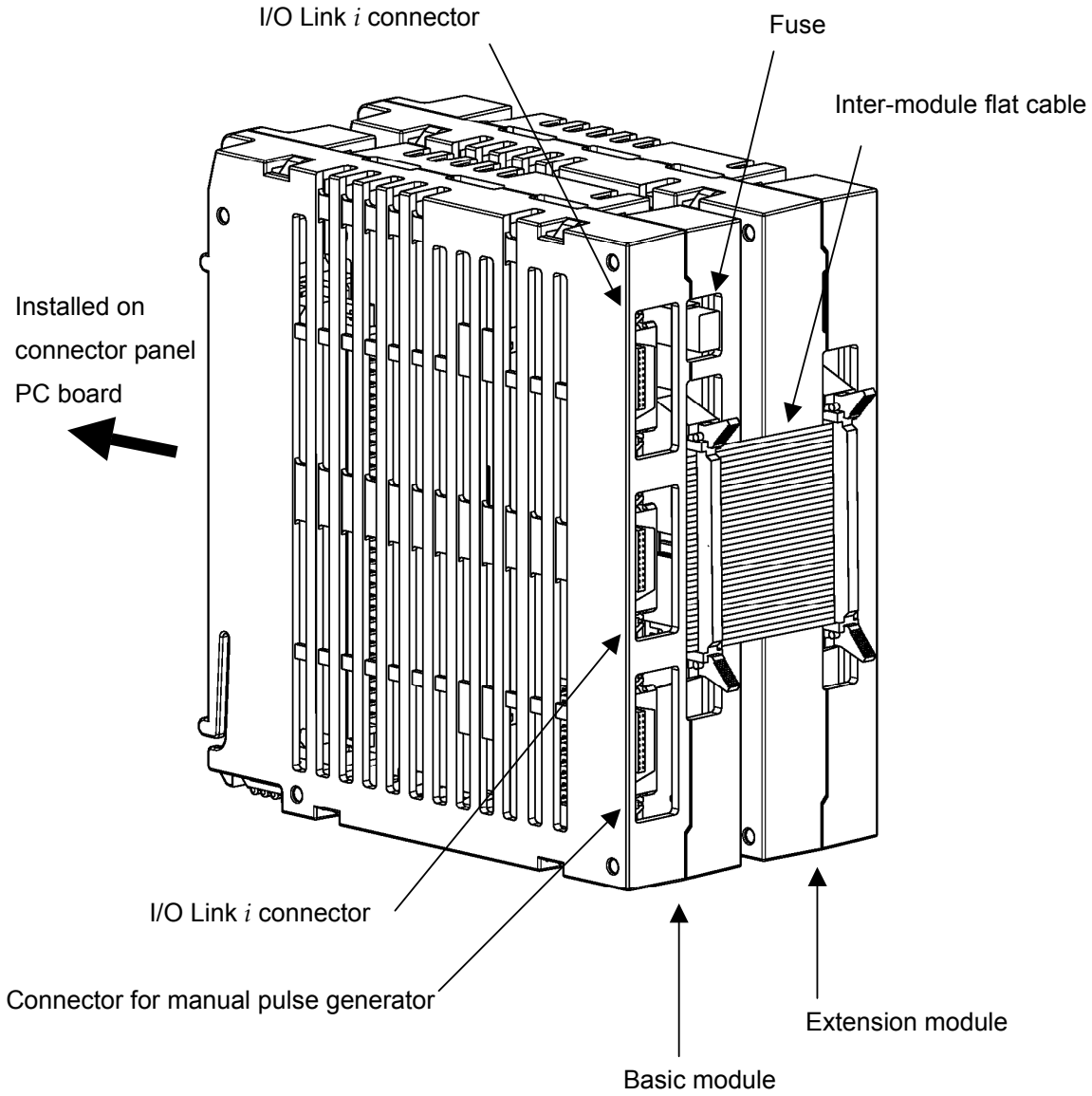

NOTE

As shown in the figure above, be sure to install the basic module to the left of the extension module, viewed from the side of the flat cable for connecting modules.
This unit cannot be installed on the DIN rail.
In a maximum configuration, one basic module plus one expansion module can be installed per group as shown above (DI/DO=96/64).

© MyFANUC 195109AB01DC415385669AA015E5BDE5

8.5.2 Connector Layout Diagram

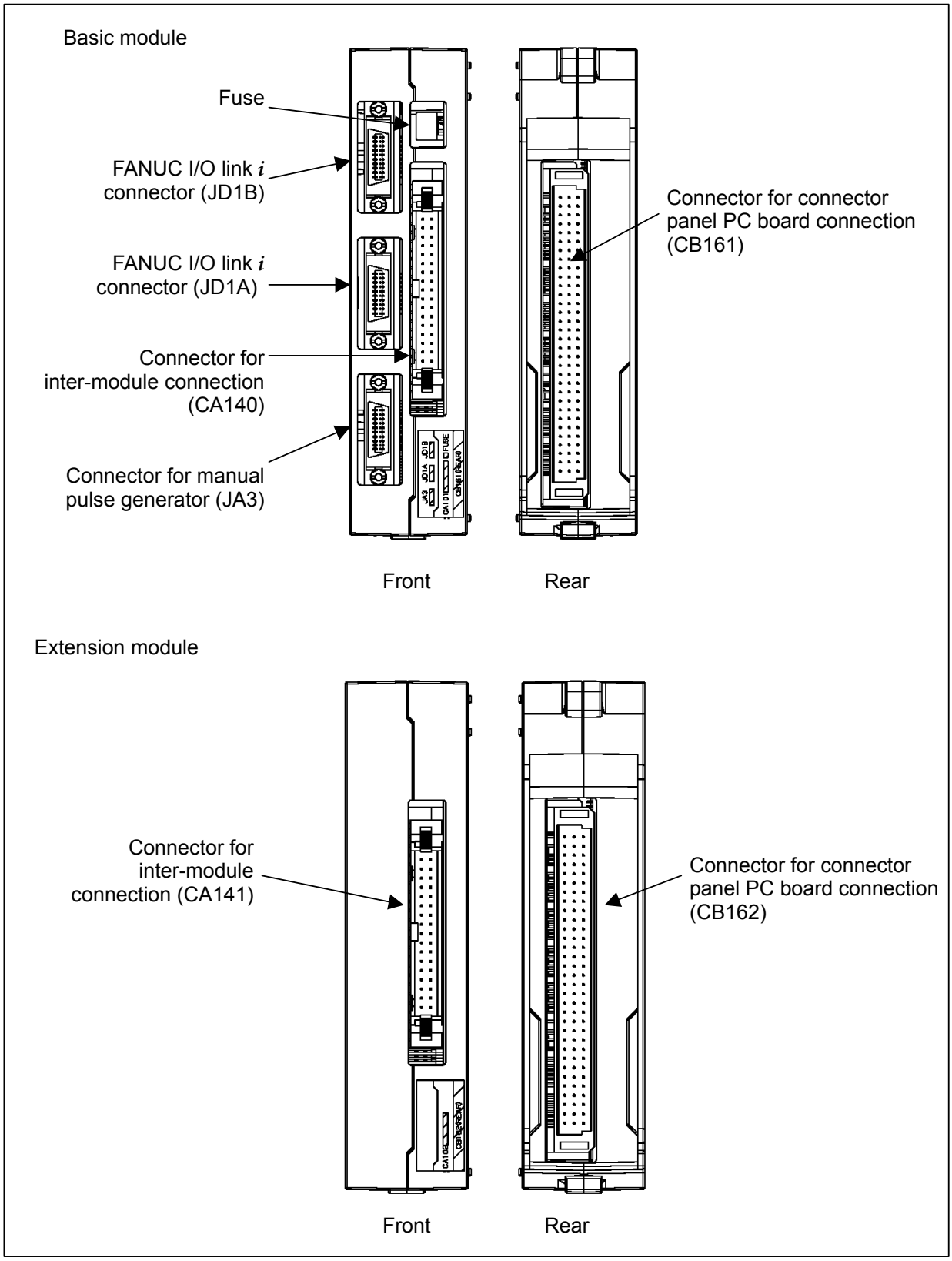

© MyFANUC 195109AB01DC415385669AA015E5BDE5

8.5.3 Connection Diagram

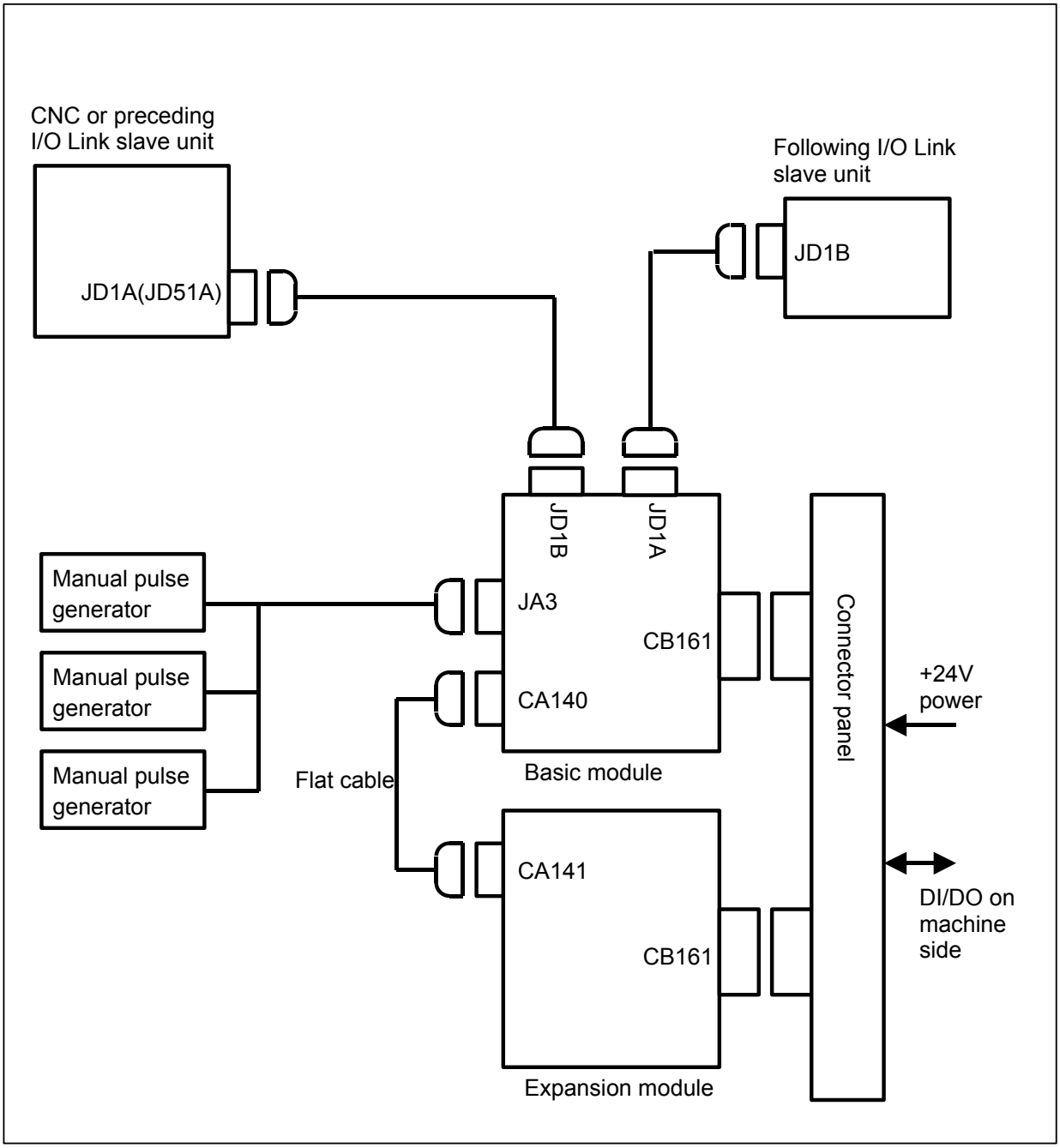

NOTE

The maximum configuration of a group consists of one basic module plus one expansion module as shown above. At this time, the number of input points is 96, and the number of output points is 64. To add points, connect an additional slave onto the I/O Link.

© MyFANUC 195109AB01DC415385669AA015E5BDE5

8.5.4 Module Specifications

Types of modules

Item	Ordering specifications	Specification
I/O module type-2 for connector panel (basic module B1)	A03B-0824-C040	DI/DO=48/32 With MPG interface
I/O module type-2 for connector panel (basic module B2)	A03B-0824-C041	DI/DO=48/32 Without MPG interface
I/O module type-2 for connector panel (extension module E1)	A03B-0824-C042	DI/DO=48/32
Fuse (spare parts)	A03B-0815-K002	1 A (for basic module)
Inter-module flat cable	A03B-0815-K102	Cable length: 35 mm Module interval: 5 mm

NOTE
Be sure to use modules with the ordering specifications listed above in combination. Do not use other modules.

Installation conditions

(1) Use this I/O module in a completely sealed cabinet.
(2) Use the units under the following ambient temperature conditions:
Operation: 0°C to 55°C
Storage and transportation: -20°C to 80°C
(3) For other installation conditions, conform to the CNC installation conditions.
(4) For ventilation within each I/O module, allow a clearance of 40 mm or more between modules. Moreover, allow a clearance of 50 mm or more above and below each module. Never place a device that generates a large amount of heat below an I/O module.
(5) When mounting I/O modules, ensure that the basic module is mounted on the left side when viewed from the flat cable.

Power supply rating

Module	Supply voltage	Power supply rating	Remarks
Basic module	24 VDC ±10% is fed through CB161 and CB162; ±10% includes momentary variations and ripples.	0.3A+7.3mA × DI	DI = number of DI points in the ON state
Extension module		0.2A+7.3mA × DI	DI = number of DI points in the ON state

As a guideline for heat dissipation, assume [power supply rating × 24 (W)].

NOTE
1 The above power supply rating does not include that to be input to DOCOM for DO output.
2 To connect an optical adapter for the I/O Link i to both connectors JD1A and JD1B on the basic module, the above power supply rating + 70 mA is required for the power supply of the basic module.

© MyFANUC 195109AB01DC415385669AA015E5BDE5

8.5.5 DI/DO Connector Pin Assignment

This subsection describes the DI/DO connector pin assignment of the basic module and extension modules.

Basic module
CB161(HONDA MRF-96MLST)

	A	B	C
32	+24V	+24V	+24V
31	0V	0V	0V
30	0V	0V	0V
29		DICOM0	Xm+0.0
28	Xm+0.1	Xm+0.2	Xm+0.3
27	Xm+0.4	Xm+0.5	Xm+0.6
26	Xm+0.7	Xm+1.0	Xm+1.1
25	Xm+1.2	Xm+1.3	Xm+1.4
24	Xm+1.5	Xm+1.6	Xm+1.7
23	Xm+2.0	Xm+2.1	Xm+2.2
22	Xm+2.3	Xm+2.4	Xm+2.5
21	Xm+2.6	Xm+2.7	Xm+3.0
20	Xm+3.1	Xm+3.2	Xm+3.3
19	Xm+3.4	Xm+3.5	Xm+3.6
18	Xm+3.7	Xm+4.0	Xm+4.1
17	Xm+4.2	Xm+4.3	Xm+4.4
16	Xm+4.5	Xm+4.6	Xm+4.7
15	Xm+5.0	Xm+5.1	Xm+5.2
14	Xm+5.3	Xm+5.4	Xm+5.5
13	Xm+5.6	Xm+5.7	DICOM3
12	Yn+3.5	Yn+3.6	Yn+3.7
11	Yn+3.2	Yn+3.3	Yn+3.4
10	Yn+2.7	Yn+3.0	Yn+3.1
9	Yn+2.4	Yn+2.5	Yn+2.6
8	Yn+2.1	Yn+2.2	Yn+2.3
7	DOCOM23	DOCOM23	Yn+2.0
6	Yn+1.5	Yn+1.6	Yn+1.7
5	Yn+1.2	Yn+1.3	Yn+1.4
4	Yn+0.7	Yn+1.0	Yn+1.1
3	Yn+0.4	Yn+0.5	Yn+0.6
2	Yn+0.1	Yn+0.2	Yn+0.3
1	DOCOM01	DOCOM01	Yn+0.0

Extension module
CB162(HONDA MRF-96MLST)

	A	B	C
32	+24V	+24V	+24V
31	0V	0V	0V
30	0V	0V	0V
29		DICOM6	Xm+6.0
28	Xm+6.1	Xm+6.2	Xm+6.3
27	Xm+6.4	Xm+6.5	Xm+6.6
26	Xm+6.7	Xm+7.0	Xm+7.1
25	Xm+7.2	Xm+7.3	Xm+7.4
24	Xm+7.5	Xm+7.6	Xm+7.7
23	Xm+8.0	Xm+8.1	Xm+8.2
22	Xm+8.3	Xm+8.4	Xm+8.5
21	Xm+8.6	Xm+8.7	Xm+9.0
20	Xm+9.1	Xm+9.2	Xm+9.3
19	Xm+9.4	Xm+9.5	Xm+9.6
18	Xm+9.7	Xm+10.0	Xm+10.1
17	Xm+10.2	Xm+10.3	Xm+10.4
16	Xm+10.5	Xm+10.6	Xm+10.7
15	Xm+11.0	Xm+11.1	Xm+11.2
14	Xm+11.3	Xm+11.4	Xm+11.5
13	Xm+11.6	Xm+11.7	DICOM9
12	Yn+7.5	Yn+7.6	Yn+7.7
11	Yn+7.2	Yn+7.3	Yn+7.4
10	Yn+6.7	Yn+7.0	Yn+7.1
9	Yn+6.4	Yn+6.5	Yn+6.6
8	Yn+6.1	Yn+6.2	Yn+6.3
7	DOCOM67	DOCOM67	Yn+6.0
6	Yn+5.5	Yn+5.6	Yn+5.7
5	Yn+5.2	Yn+5.3	Yn+5.4
4	Yn+4.7	Yn+5.0	Yn+5.1
3	Yn+4.4	Yn+4.5	Yn+4.6
2	Yn+4.1	Yn+4.2	Yn+4.3
1	DOCOM45	DOCOM45	Yn+4.0

NOTE

1 Each of Xm and Yn represents the start address of the module on the I/O Link.
2 The A32, B32, and C32 pins of each connector are used to feed 24 V to the module externally. Be sure to connect these pins. Be sure to connect the A30, A31, B30, B31, C30, and C31 pins to the 0 V power supply.

© MyFANUC 195109AB01DC415385669AA015E5BDE5

8.5.6 DI (Input Signal) Connection

This subsection describes the DI (input signal) connections of the basic module and extension moduless.

○ 96 points maximum (Up to 48 points (basic module) + 48 points (extension modules) can be connected.)

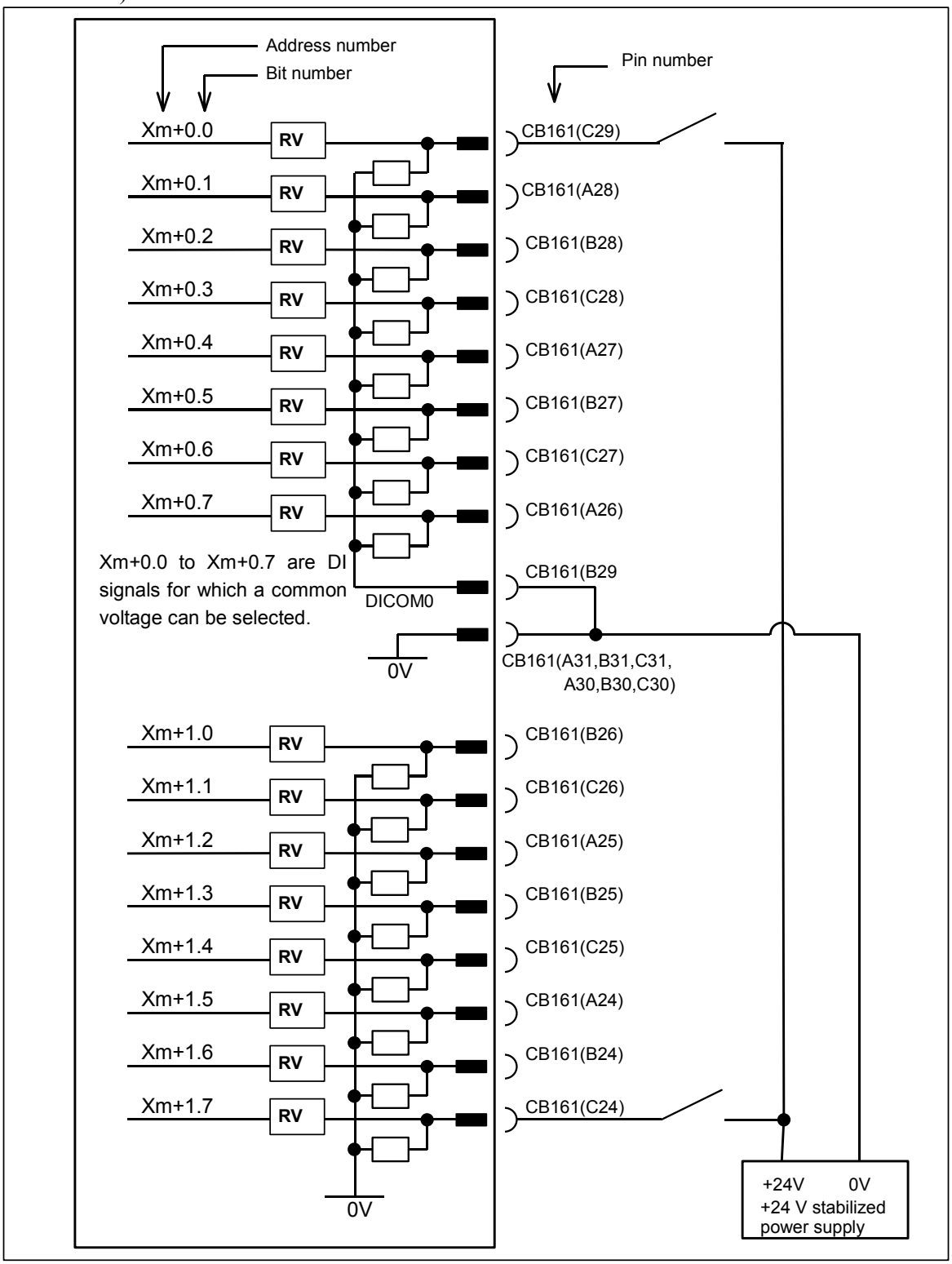

© MyFANUC 195109AB01DC415385669AA015E5BDE5

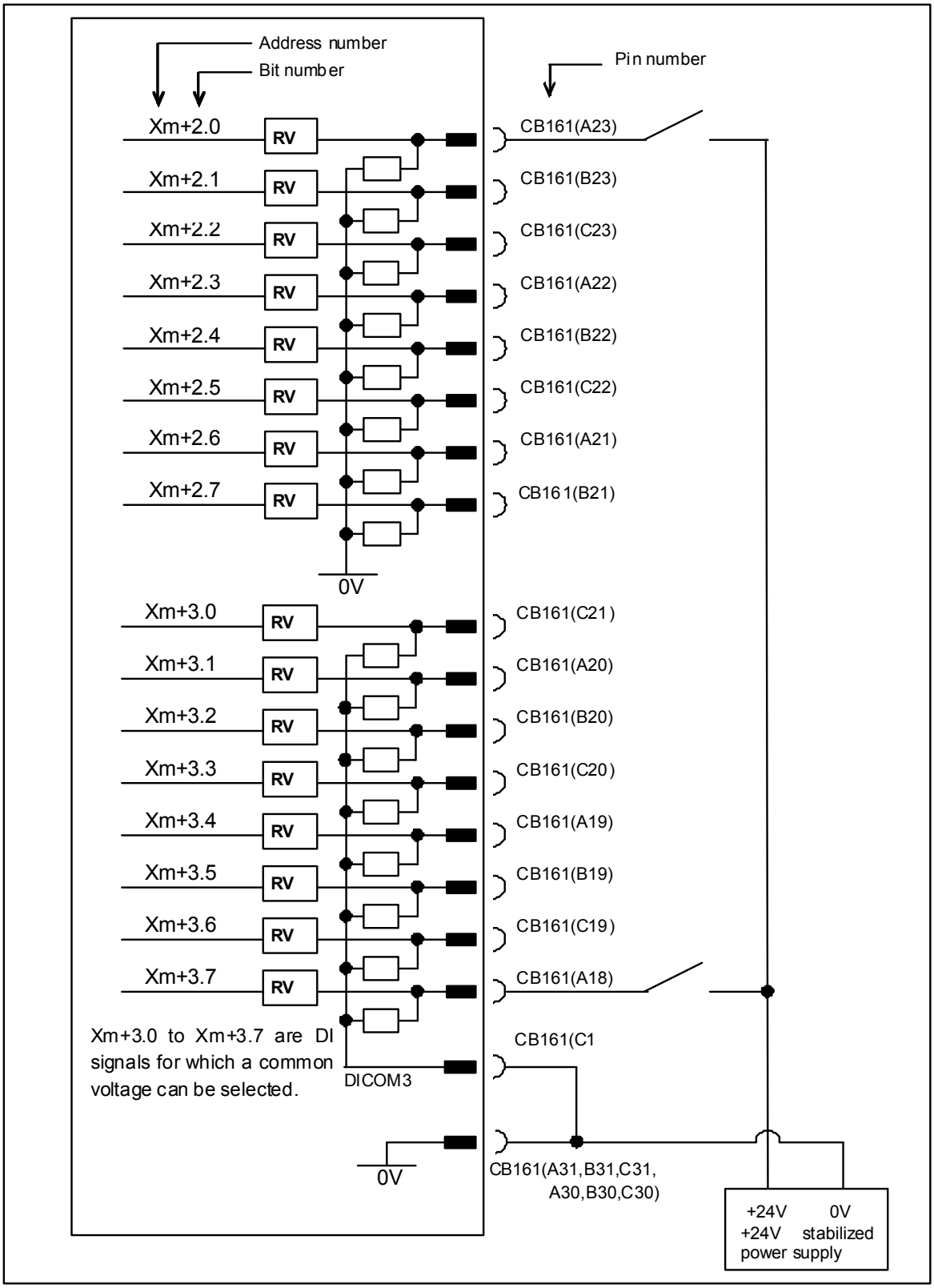

© MyFANUC 195109AB01DC415385669AA015E5BDE5

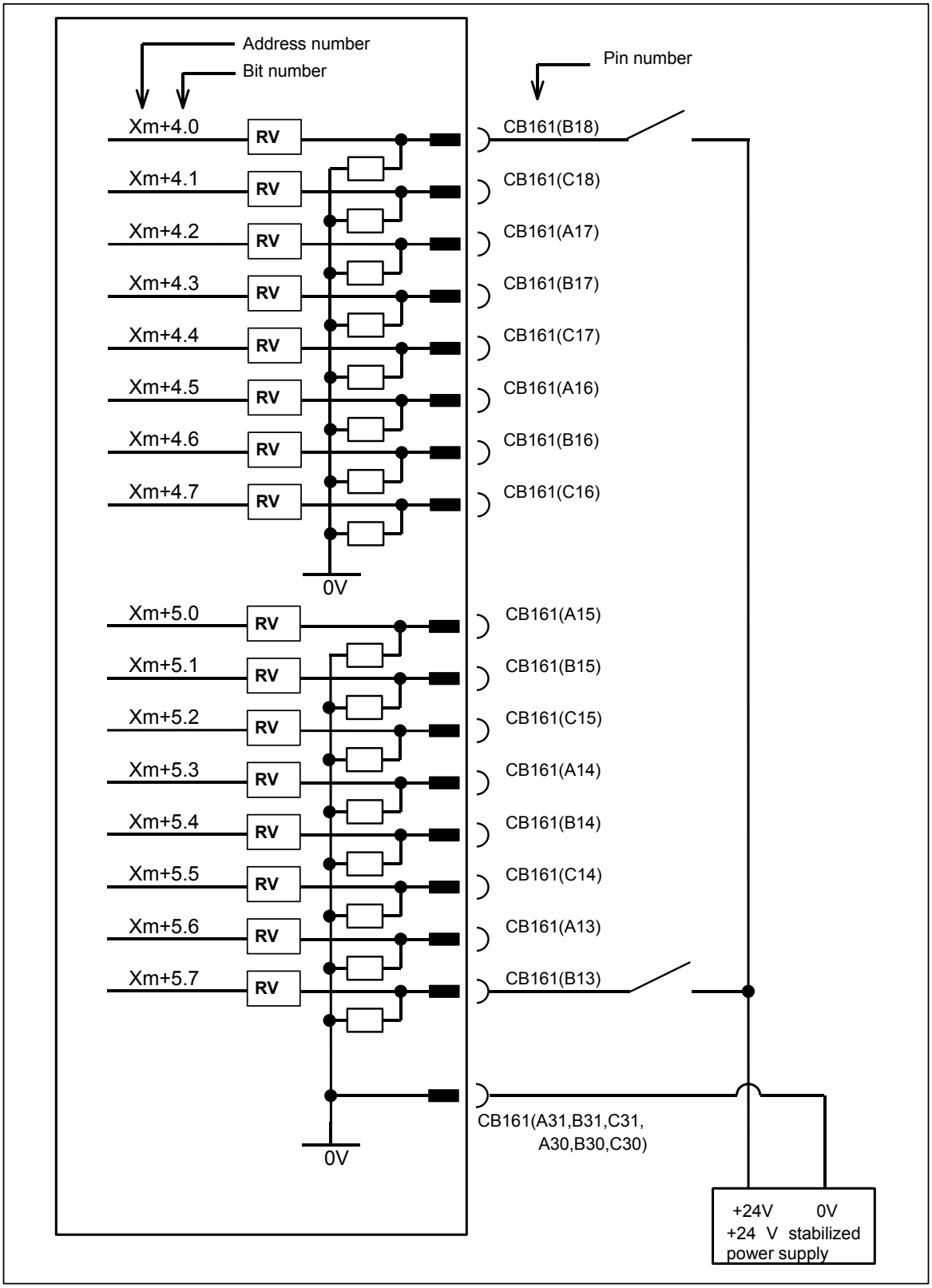

© MyFANUC 195109AB01DC415385669AA015E5BDE5

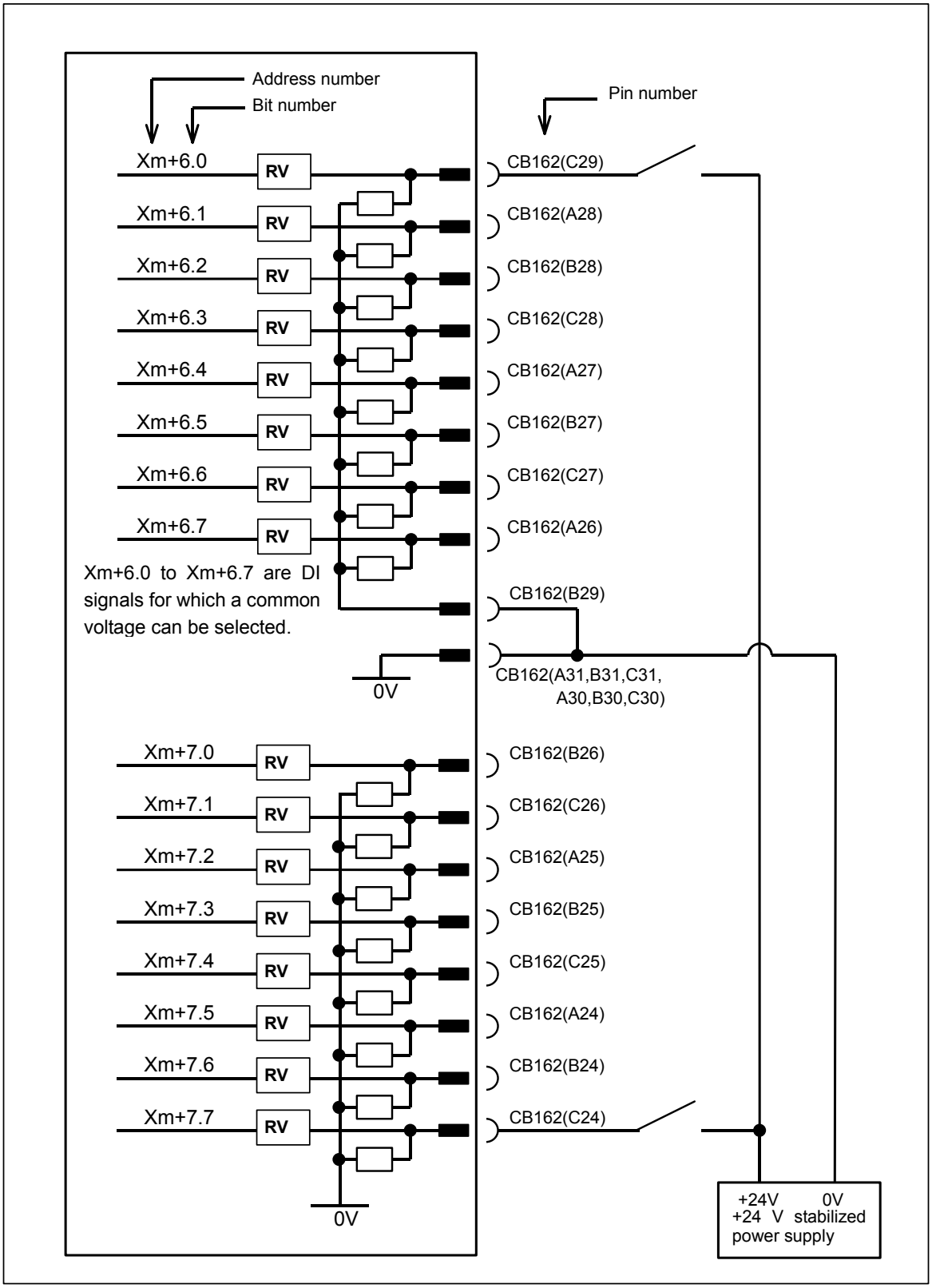

© MyFANUC 195109AB01DC415385669AA015E5BDE5

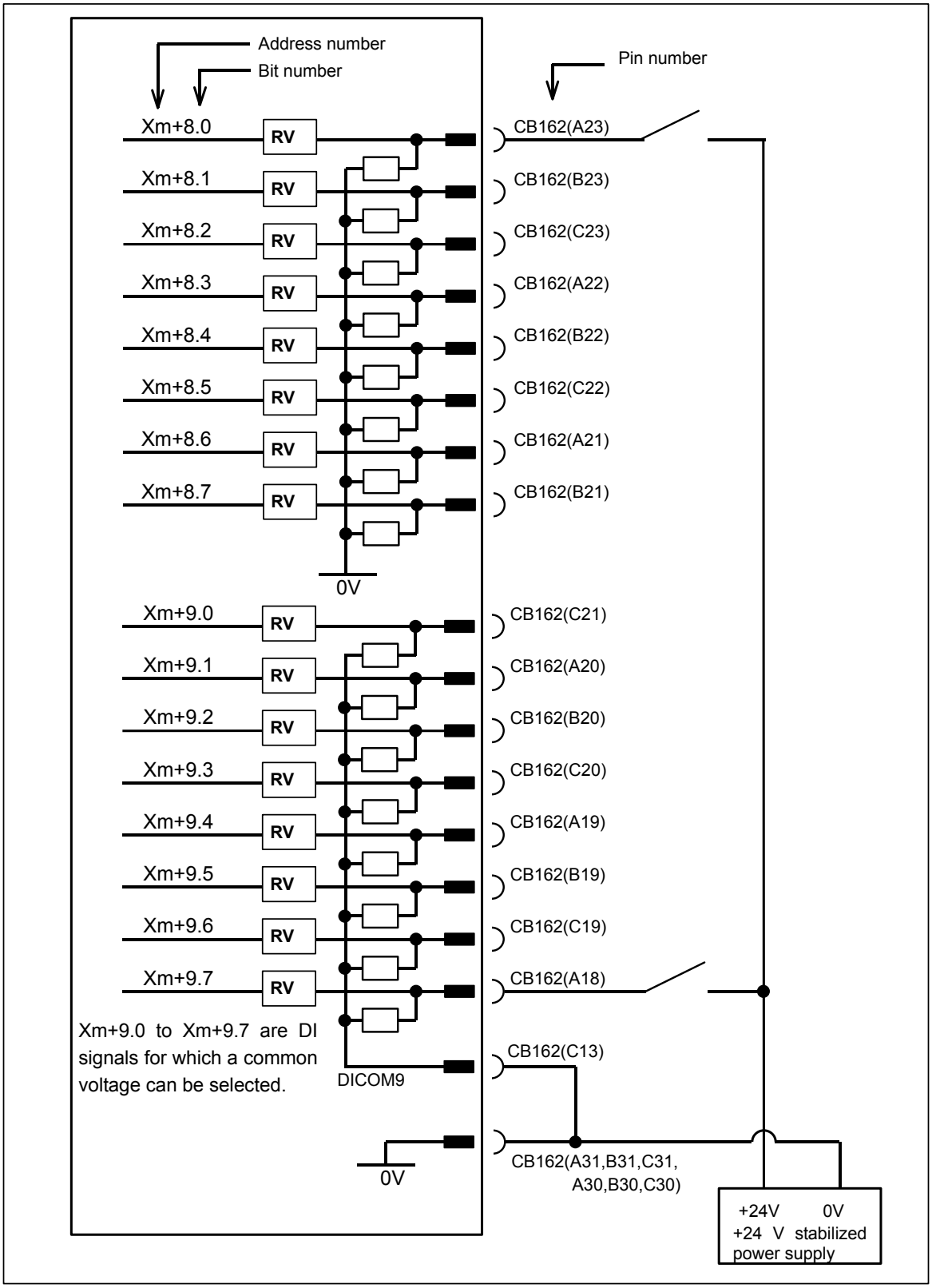

© MyFANUC 195109AB01DC415385669AA015E5BDE5

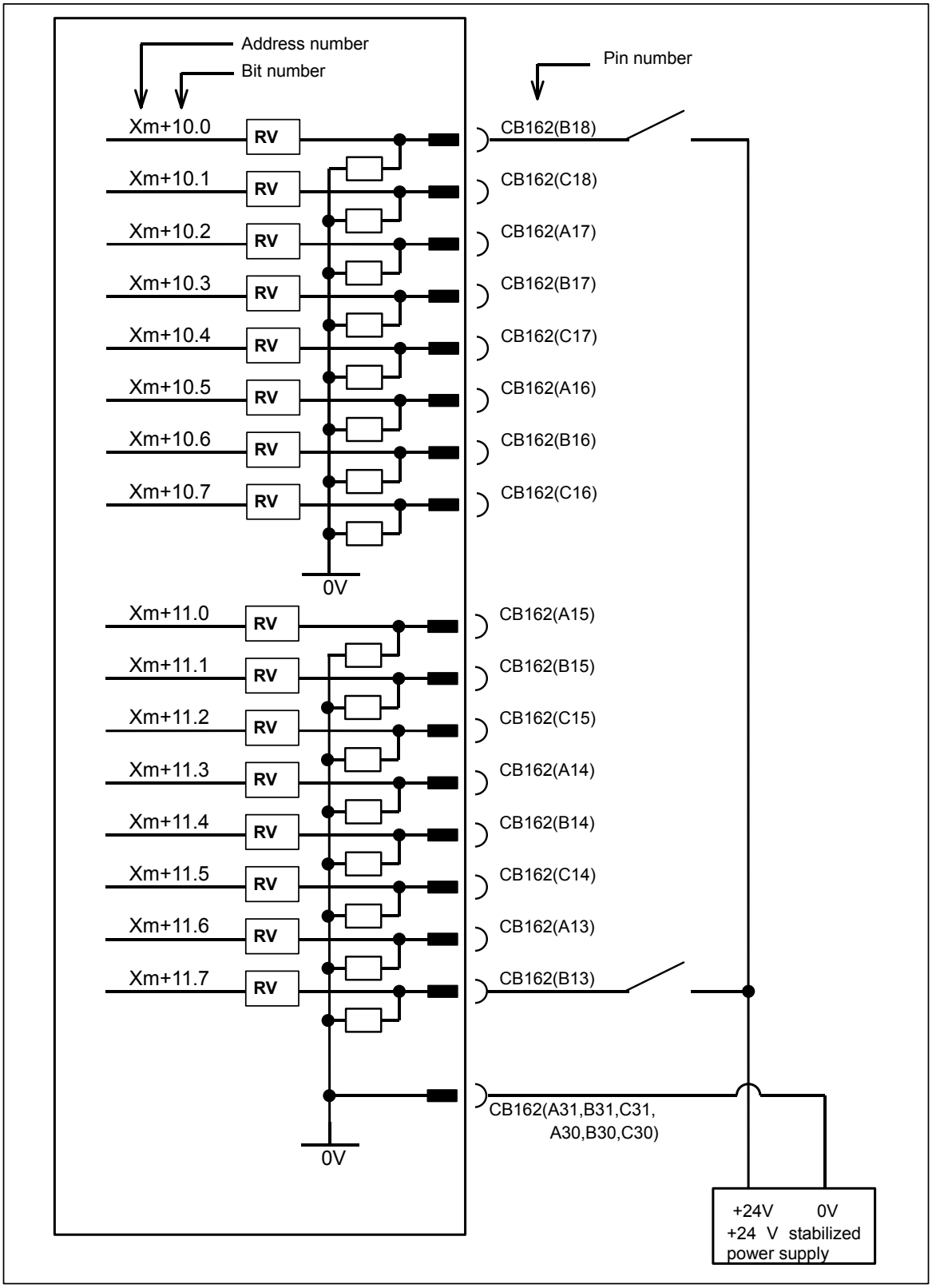

© MyFANUC 195109AB01DC415385669AA015E5BDE5

NOTE

A common voltage can be selected for DI signals at Xm+0.0 to Xm+0.7, Xm+3.0 to Xm+3.7, Xm+6.0 to Xm+6.7, and Xm+9.0 to Xm+9.7. That is, by connecting the DICOM0, DICOM3, DICOM6, and DICOM9 pins to the +24 V power supply, a DI signal can be input with its logical state reversed. If, however, a cable is connected to ground, it has the same effect as inputting an ON state DI signal. To prevent such accidents, the connection of these pins to the 0 V power supply is recommended wherever possible.

For the unconnected pins at the addresses for which the common voltage is fixed, the input is “0”. For the unconnected pins at the addresses for which a common voltage can be selected, the input is “0” when the DICOMx common select pin is connected to the 0 V power supply or “1” when it is connected to the +24 V power supply. Connect DICOM0, DICOM3, DICOM6, and DICOM9 when used. When the corresponding address input is not used, connect the DICOM pins to the 0 V power supply.

Common voltage for general-purpose DI

Address	Common voltage
Xm	Can be selected with DICOM0.
Xm+1	Cannot be selected.
Xm+2	Cannot be selected.
Xm+3	Can be selected with DICOM3.
Xm+4	Cannot be selected.
Xm+5	Cannot be selected.
Xm+6	Can be selected with DICOM6.
Xm+7	Cannot be selected.
Xm+8	Cannot be selected.
Xm+9	Can be selected with DICOM9.
Xm+10	Cannot be selected.
Xm+11	Cannot be selected.

© MyFANUC 195109AB01DC415385669AA015E5BDE5

8.5.7 DO (Output Signal) Connection

This subsection describes the DO (output signal) connections of the basic module and extension modules.

○ 64 points maximum (Up to 32 points (basic module) + 32 points (extension modules) can be connected.)

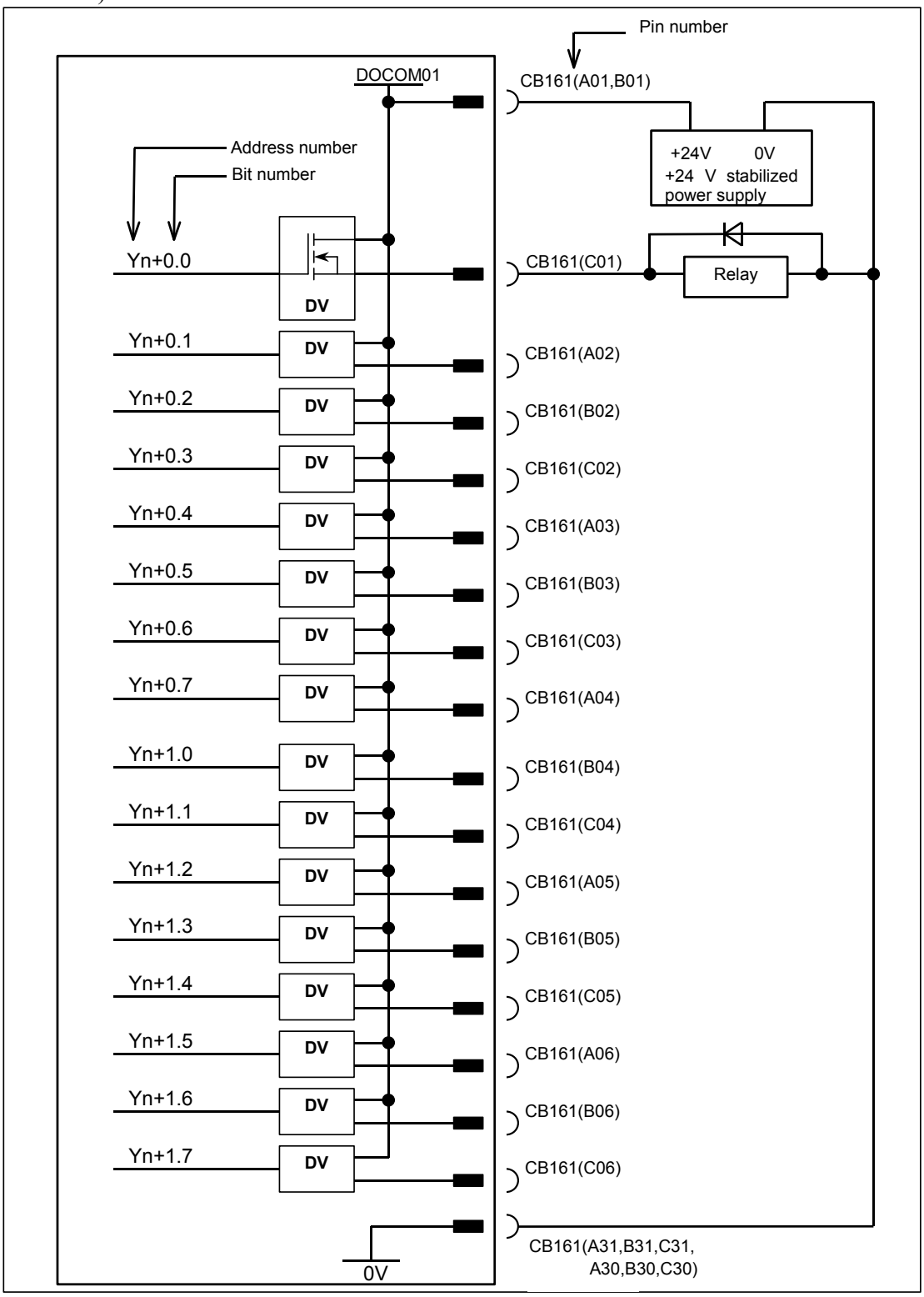

© MyFANUC 195109AB01DC415385669AA015E5BDE5

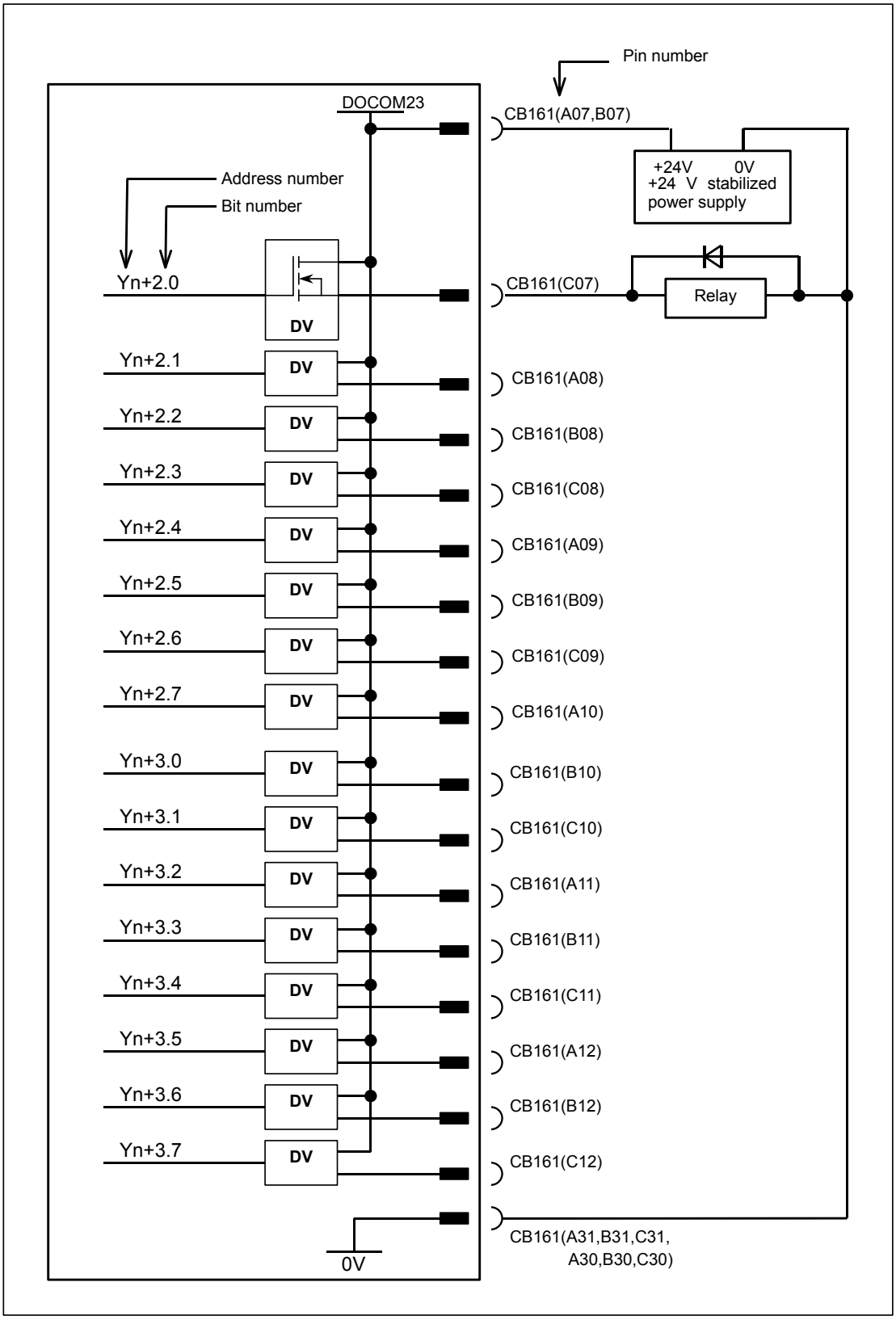

© MyFANUC 195109AB01DC415385669AA015E5BDE5

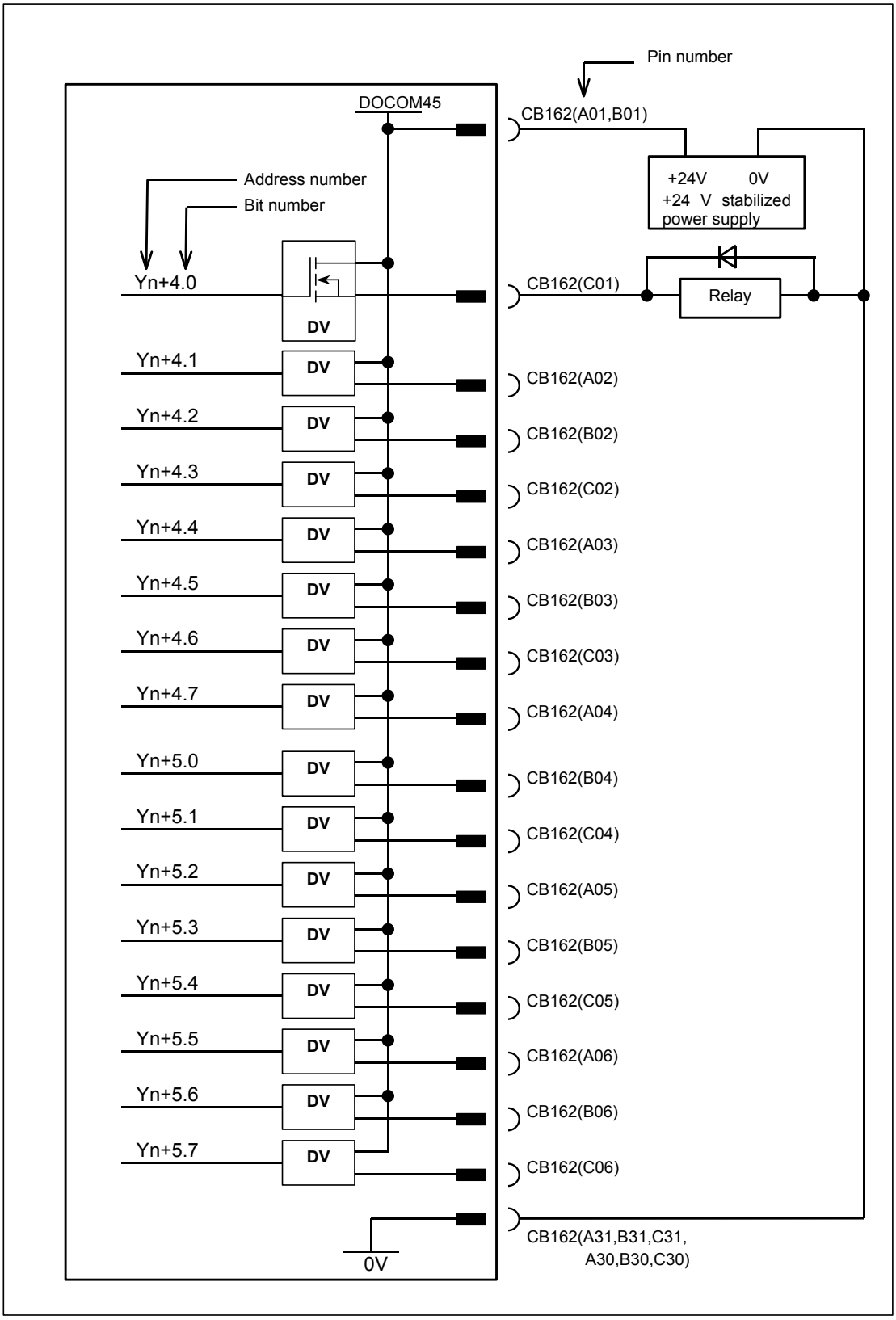

© MyFANUC 195109AB01DC415385669AA015E5BDE5

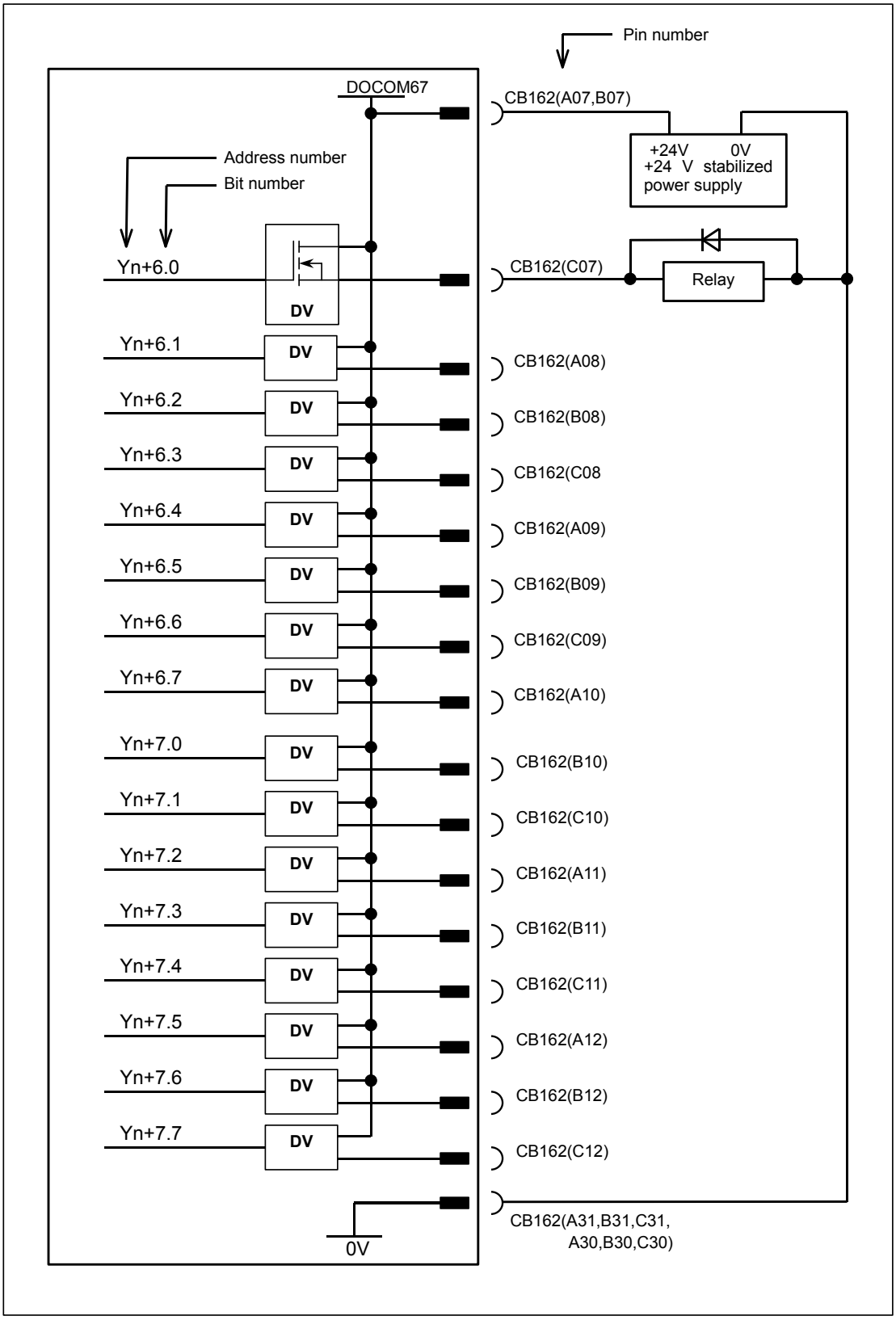

© MyFANUC 195109AB01DC415385669AA015E5BDE5

8.5.8 DI/DO Signal Specifications

This subsection describes the specifications of the DI/DO signals used with the basic module and extension modules.

DI (input signal specifications)

Number of points	48 points (per module)
Rated input	24 VDC, 7.3 mA
Contact rating	30 VDC, 16 mA or more
Leakage current between contacts when opened	1 mA or less (26.4 V)
Voltage decrease between contacts when closed	2 V or less (including a cable voltage decrease)
Delay time	The receiver delay time is 2 ms (maximum). In addition, [I/O Link transfer time between CNC and I/O module] and [ladder scan period (depending on CNC)] must be considered.

DO (output signal specifications)

Number of points	32 points (per module)
Maximum load current when ON	200 mA or less including momentary variations
Saturation voltage when ON	1 V (maximum) when the load current is 200 mA
Withstand voltage	24 V +20% or less including momentary variations
Leakage current when OFF	20 μA or less
Delay time	The driver delay time is 50 μs (maximum). In addition, [I/O Link transfer time between CNC and I/O module] and [ladder scan period (depending on CNC)] must be considered.

ON/OFF of the power supply (DO common) for DO signals (output signals)

For ON/OFF of the power supply pin (DOCOM) for the DO signals (output signals), see Subsection 8.2.4.4.

Parallel DO (output signal) connection

For parallel connections of DO signals (output signals), see Subsection 8.2.4.4.

8.5.9 Power Supply Connection

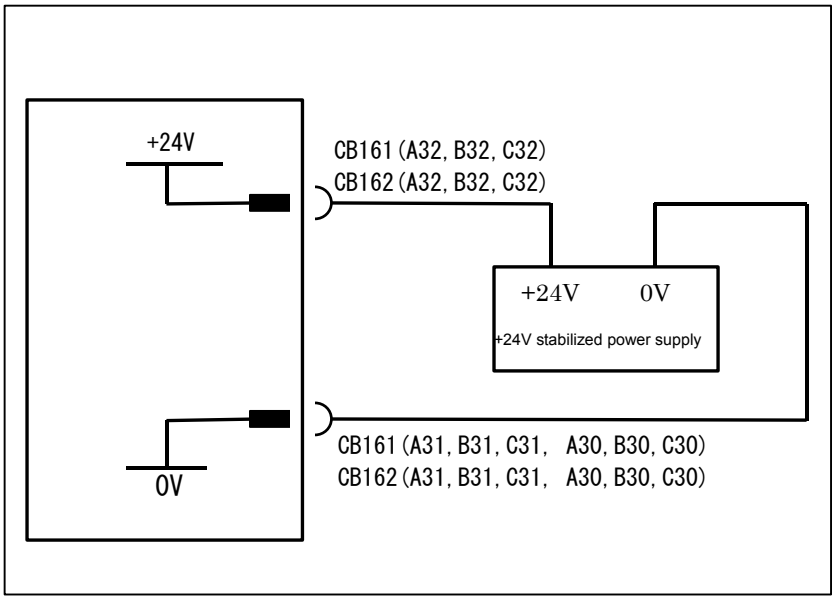

© MyFANUC 195109AB01DC415385669AA015E5BDE5

8.5.10 Manual Pulse Generator Connection

For I/O module for connector panel type-2, three manual pulse generators can be connected to the basic module.
For the connection, see Subsection 7.4.1.

8.5.11 Connection between Modules

Connect the basic module with an extension modules by using a 34-pin flat cable. At this time, install an extension modules on the right side of the basic module to prevent the I/O Link *i* connector from being covered by the flat cable.

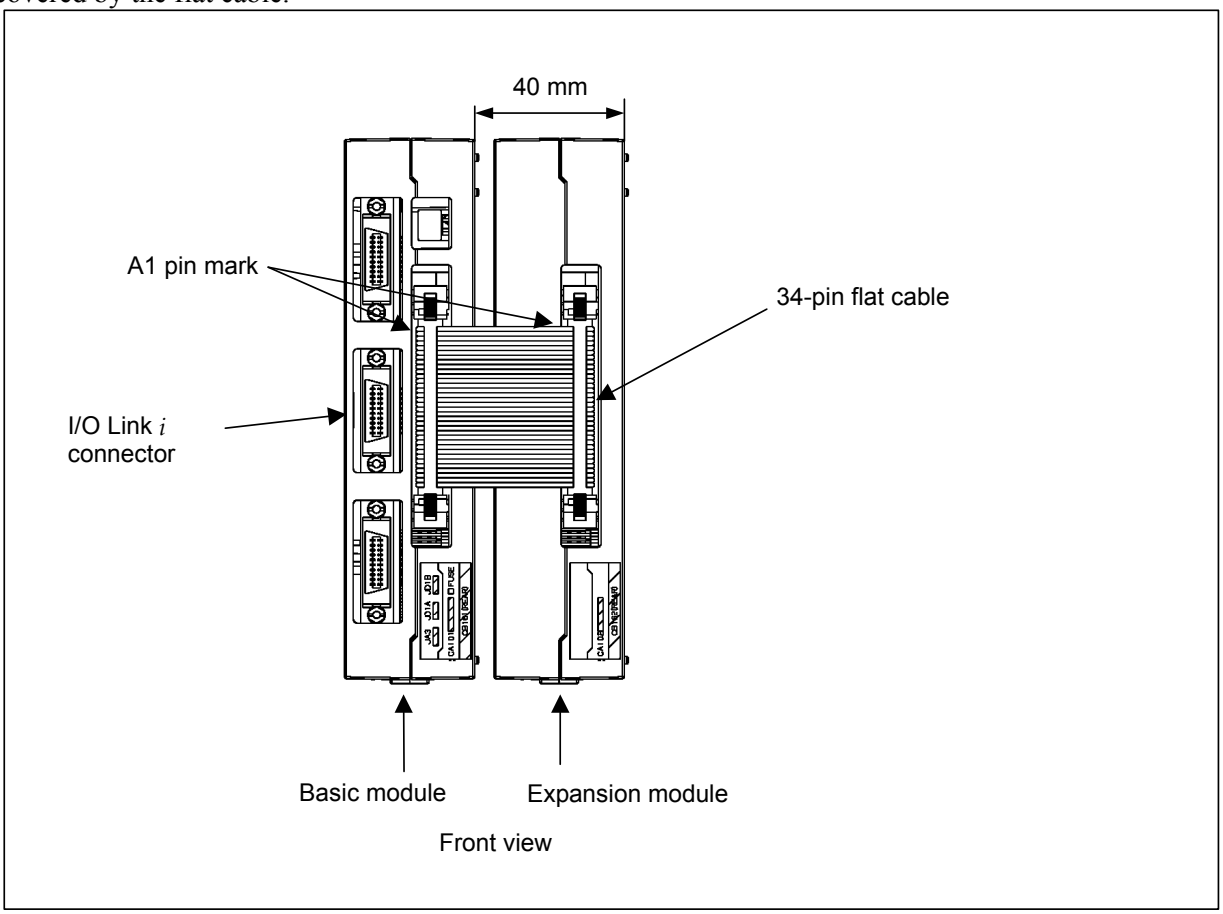

Flat cable-side connector : Hirose Electric:HIF3BA-34DA-2.54R
Module-side connector : Hirose Electric:3BA-34PA-2.54DS or
Yamaichi Denki:FAP-3403-1202-0BS

NOTE

When installing a flat cable, ensure that all pins are connected on a one-to-one basis.
The modules must be spaced at least 40 mm apart.
In this case, the length of the flat cable is about 35 mm. When the modules are separated furthermore, the length of the flat cable is:
35 mm + (module spacing - 40 mm)
Note, however, that the maximum allowable flat cable length is 300 mm.

© MyFANUC 195109AB01DC415385669AA015E5BDE5

8.5.12 Unit Dimensions

The basic module and extension modules have the same dimensions.

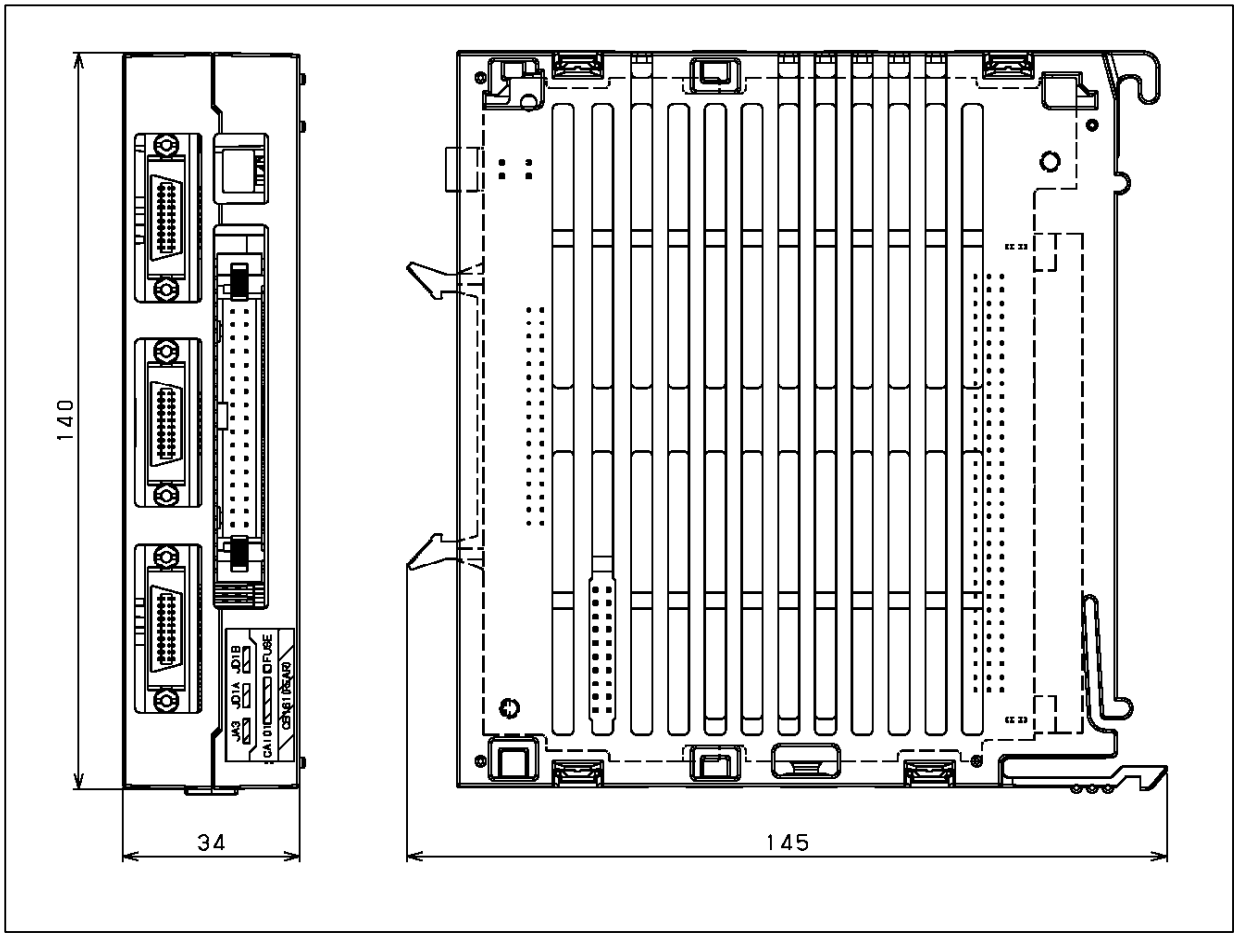

Weight: Basic module 280 g
Extension modules 210 g

© MyFANUC 195109AB01DC415385669AA015E5BDE5

8.5.13 Mounting the Module

Mounting the module

1. Insert the hook of the module into the square hole located at the upper part of the connector panel printed circuit board.
2. Using the hook as a fulcrum, push the module in the direction of A and mate the module's connector with the connector on the printed circuit board.
3. Push the stopper into the square hole located at the lower part of the connector panel printed circuit board until it clicks into place.

Dismounting the module

1. Press point B of the stopper.
2. Using the hook as a fulcrum, pull the lower part of the module in the direction of C.

NOTE
When mounting and dismounting a module, hold the module by its top and bottom surfaces. Avoid applying force to the sides (where slits are provided).

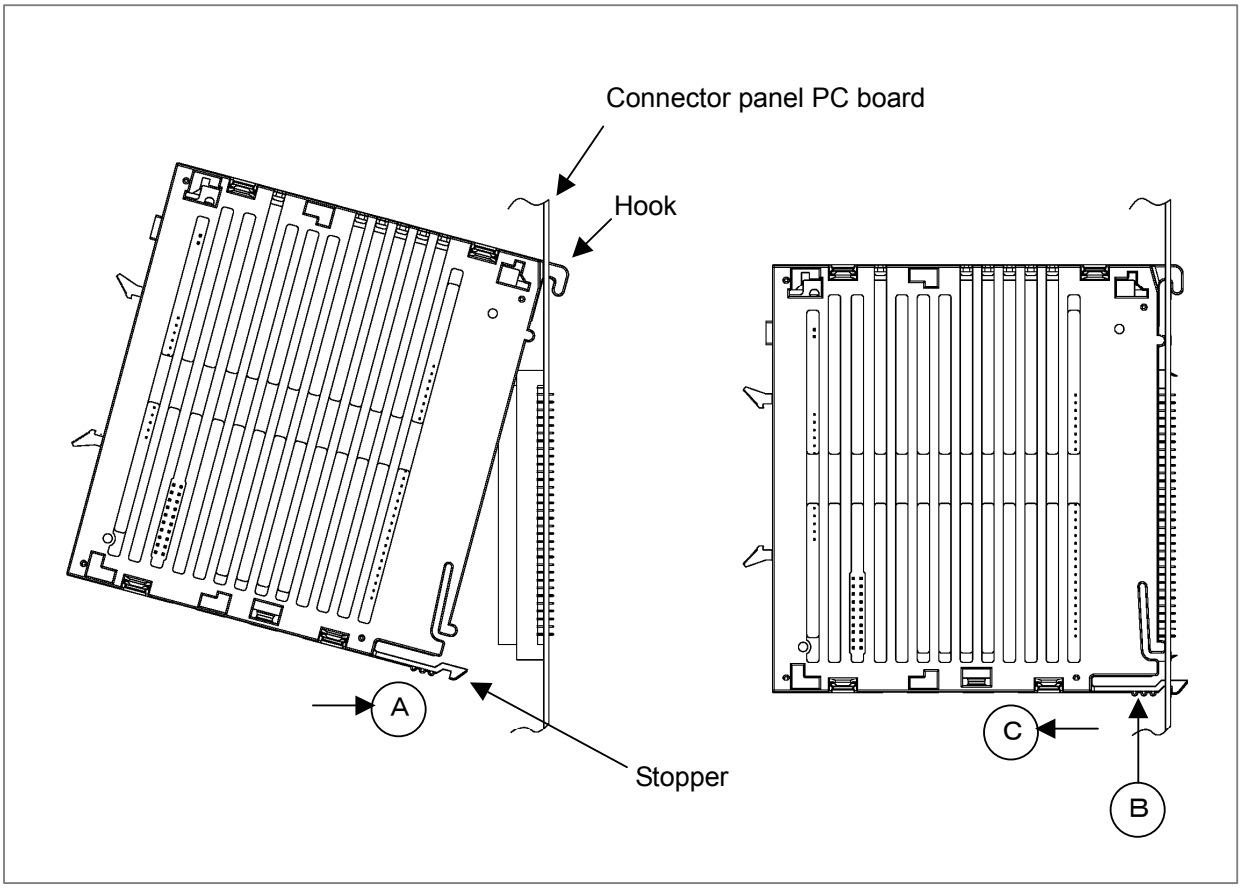

© MyFANUC 195109AB01DC415385669AA015E5BDE5

8.5.14 Connector Panel Printed Circuit Board

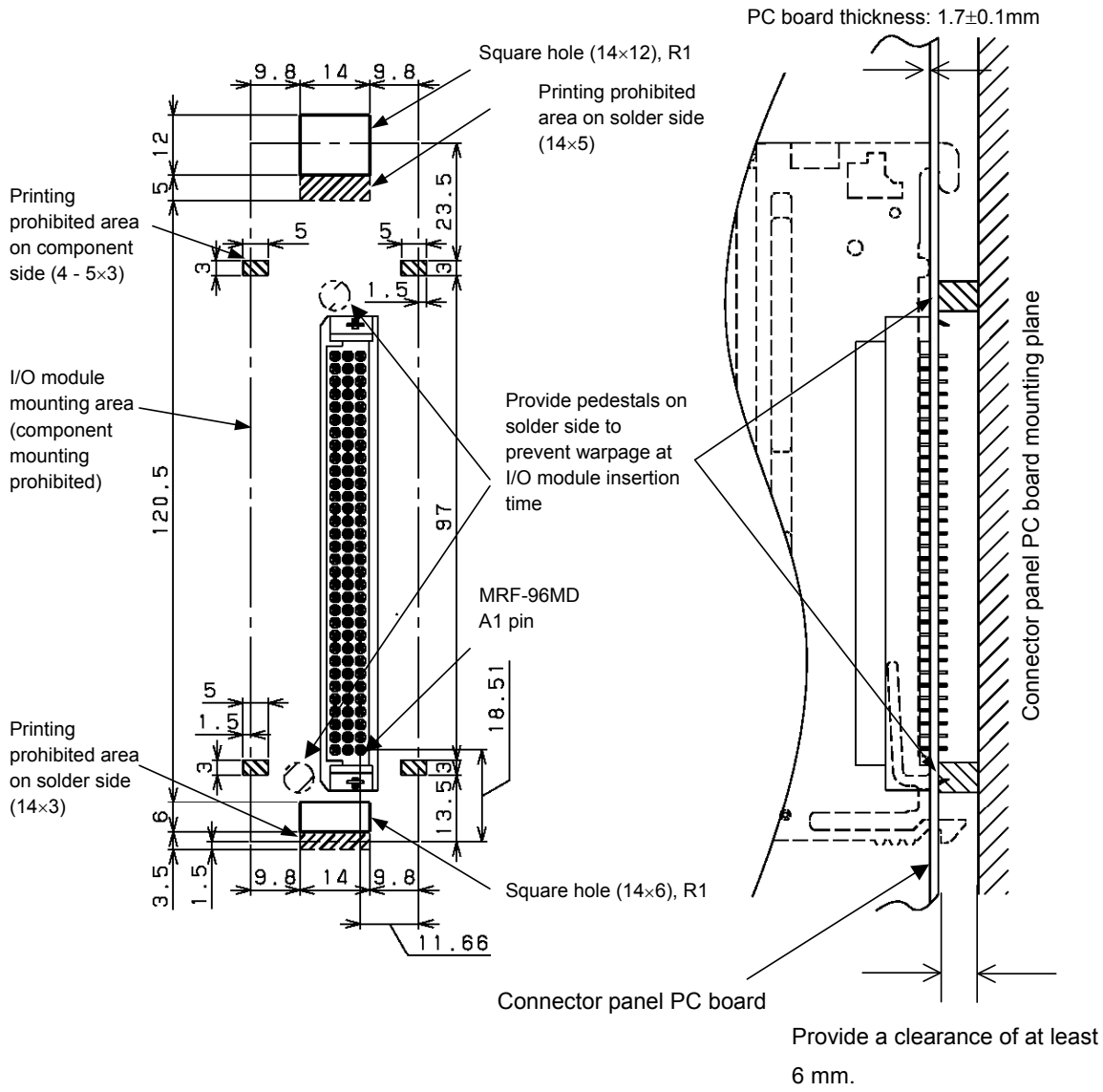

Connector specifications of the connection printed circuit board: HONDA MRF-96FDST(straight, 96 pins, female)

© MyFANUC 195109AB01DC415385669AA015E5BDE5

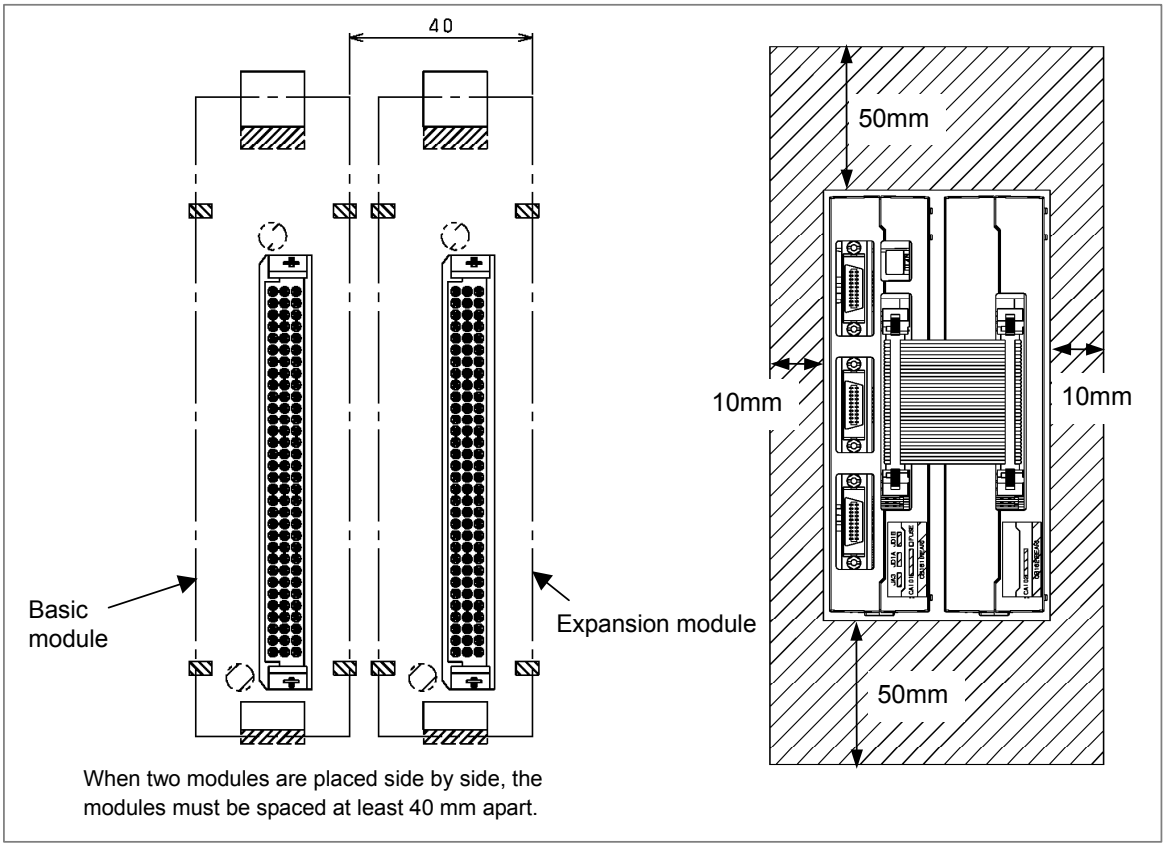

NOTE

1 To ensure adequate ventilation within an I/O module, allow a clearance of 50 mm or more above and below the module and a clearance of 10 mm or more on the left and right sides. Never place a device that generates a large amount of heat below an I/O module.

2 To the front panel of an I/O module, the cables for the I/O Link *i* and manual pulse generator are connected.
For cabling, allow a clearance of about 70 mm at the front of an I/O module.

3 Space the basic module and extension modules at least 40 mm apart from each other.

4 An I/O module is secured to the connector panel by inserting the hook into a hole on the connector panel as with the current distribution I/O module. Allow a clearance for hooking on the rear side of the connector panel.

5 For securing an I/O module, four printing prohibited areas are provided on the surface of the connector panel, and a printing prohibited area is also provided beside the upper and lower square holes on the rear side.

6 When mounting the basic module and extension modules side by side, ensure that the basic module is mounted on the left side when viewed from the I/O Link *i* connector.

7 When inserting an I/O module into the connector panel, provide pedestals at positions nearest to the connector of the connector panel to support the top and bottom areas of the connector from the rear side to protect the connector panel from being warped.

8 Ensure that the thickness of the connector panel printed circuit board is 1.7 mm ±0.1 mm.

© MyFANUC 195109AB01DC415385669AA015E5BDE5

Dimensions of the connector (HONDA MRF-96FDST) for the connector panel printed circuit board
(Part order specification drawing number: A03B-0815-K030)

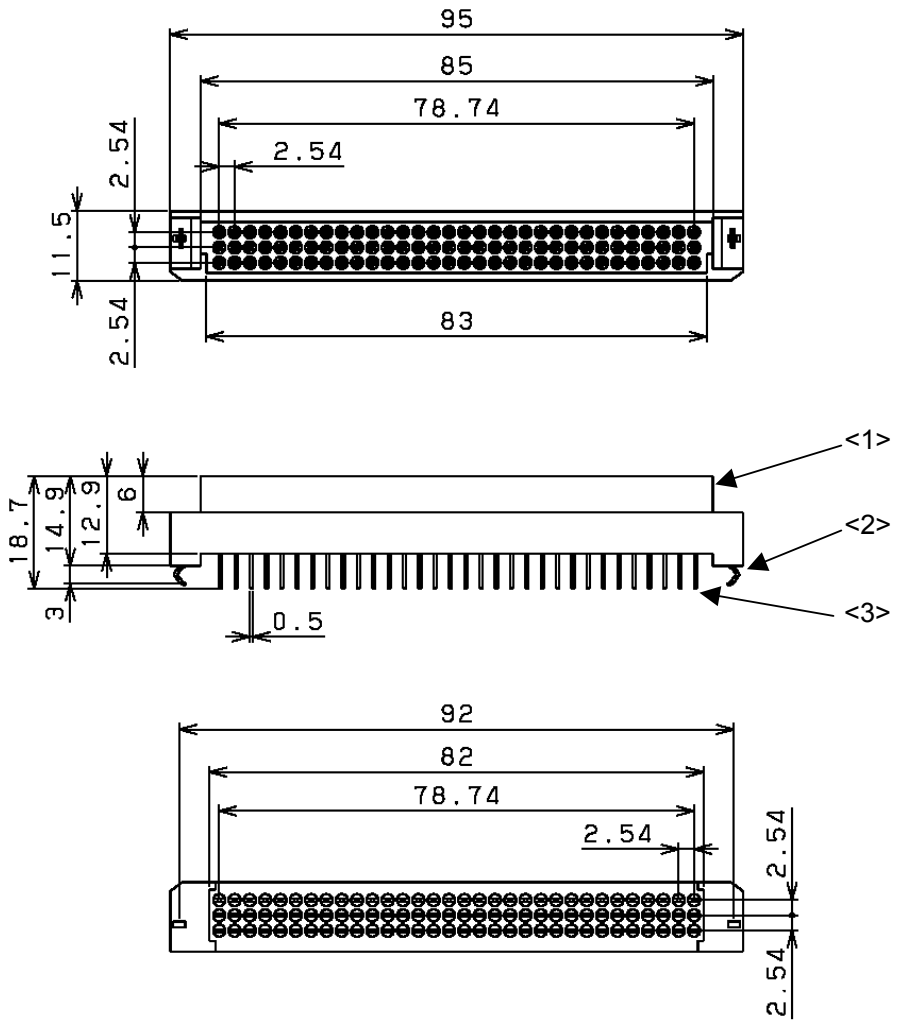

Unit: mm

<1> Insulator
<2> Locking hardware
<3> Contact

© MyFANUC 195109AB01DC415385669AA015E5BDE5

8.5.15 Other Notes

Address allocation

- For connection to the I/O Link *i*

For this I/O module, I/O addresses are mapped as follow:

DI space map

Xm_1	Basic module	Slot 1
$Xm_1 + 1$		
$Xm_1 + 2$		
$Xm_1 + 3$		
$Xm_1 + 4$		
$Xm_1 + 5$		
Xm_2	Extension module	Slot 2
$Xm_2 + 1$		
$Xm_2 + 2$		
$Xm_2 + 3$		
$Xm_2 + 4$		
$Xm_2 + 5$		
Xm_{mpg} (for 1st MPG)	Basic module	Slot MPG
$Xm_{mpg} + 1$ (for 2nd MPG)		
$Xm_{mpg} + 2$ (for 3rd MPG)		

DO space map

Yn_1	Basic module	Slot 1
$Yn_1 + 1$		
$Yn_1 + 2$		
$Yn_1 + 3$		
Yn_2	Extension module	Slot 2
$Yn_2 + 1$		
$Yn_2 + 2$		
$Yn_2 + 3$		

Xm_1, Xm_2, Xm_{mpg}, Yn_1, and Yn_2 indicate the start address at allocation.

For the I/O Link *i*, each module of I/O module for connector panel type-2 is treated as a slot and addresses are allocated for each module. When only the basic module is used, allocate 6-byte DI addresses and 4-byte DO addresses to slot 1. When an extension module is used, allocate 6-byte DI addresses and 4-byte DO addresses to slot 2.
I/O module for connector panel type-2 has an interface for three manual pulse generators. To use manual pulse generators, allocate addresses to slot MPG. With this setting, addresses can be allocated to the three manual pulse generators at a time (addresses cannot be allocated individually to manual pulse generators).
Do not use these addresses with the ladder because the CNC processes the manual pulse generator signals directly.

- For connection to the I/O Link

For this I/O module, I/O addresses are mapped as follow:

DI space map

Xm	Basic module
Xm + 1	
Xm + 2	
Xm + 3	
Xm + 4	
Xm + 5	
Xm + 6	Extension module
Xm + 7	
Xm + 8	
Xm + 9	
Xm + 10	
Xm + 11	
Xm + 12 (for 1st MPG)	Basic module
Xm + 13 (for 2nd MPG)	
Xm + 14 (for 3rd MPG)	
Xm + 15 (DO alarm detection)	

DO space map

Yn	Basic module
Yn + 1	
Yn + 2	
Yn + 3	
Yn + 4	Extension module
Yn + 5	
Yn + 6	
Yn + 7	

For connection to the I/O Link, allocate addresses to the basic module and extension modules at a time. Addresses Xm+12 to Xm+14 are allocated to manual pulse generator and address Xm+15 is allocated to the DO alarm regardless of whether an extension module is used. For this reason, allocate DI addresses in units of 16 bytes.
Do not use the DI space with the ladder because the CNC processes the manual pulse generator signals directly.

© MyFANUC 195109AB01DC415385669AA015E5BDE5

DO (output signal) alarm detection

The DO driver of this I/O module is capable of detecting an overcurrent and measuring its own temperature. If an accident, such as connecting the cable to ground, causes an abnormal increase in the load current or in the driver temperature, a protection circuit, which is provided for each DO driver, is activated which keeps the DO signal for the relevant 1 byte in the OFF state until the cause of the problem is eliminated. Even if this occurs, the CNC and I/O module continues operating without entering the alarm status, but the DO driver which detected the error can be checked. If a DO error occurs, this information can be checked on the CNC DGN screen or alarm processing can be performed in advance using a ladder to help error check and recovery.
The check area for an error detected by a DO driver differs depending on whether the I/O Link i or I/O Link is connected.

- For connection to the I/O Link *i*

For connection to the I/O Link i, a DO error such as a ground fault is detected for each point. This DO error is transferred to the PMC system relay area as a status alarm. The following table lists system relay area information and corresponding DO data related to a status alarm. When an alarm data bit is set to “1”, the DO driver corresponding to the bit detects an error. Also see Subsection 7.3.3, “Status Alarm”.

Information output to the system relay area and corresponding location where an error occurred

Slot number	Alarm information number	Address of the DO driver which detects an error	Location
1	0	Yn_1	Basic module
1	1	Yn_1+1	Basic module
1	2	Yn_1+2	Basic module
1	3	Yn_1+3	Basic module
2	0	Yn_2	Extension module
2	1	Yn_2+1	Extension module
2	2	Yn_2+2	Extension module
2	3	Yn_2+3	Extension module

Description of alarm data

#7	#6	#5	#4	#3	#2	#1	#0
Bit 7 error	Bit 6 error	Bit 5 error	Bit 4 error	Bit 3 error	Bit 2 error	Bit 1 error	Bit 0 error

For connection to the I/O Link

For connection to the I/O Link, a DO error such as a ground fault is detected for each byte. Data at DI address Xm+15 identifies the DO error. The following table lists each bit at DI address Xm+15 and corresponding DO area. When a bit at DI address Xm+15 is set to “1”, the corresponding DO driver detects an error.

Alarm detection address and bit	DO address	Location
Xm+15.0	Yn+0	Basic module
Xm+15.1	Yn+1	
Xm+15.2	Yn+2	
Xm+15.3	Yn+3	
Xm+15.4	Yn+4	Extension module
Xm+15.5	Yn+5	
Xm+15.6	Yn+6	
Xm+15.7	Yn+7	

© MyFANUC 195109AB01DC415385669AA015E5BDE5

8.6 CONNECTION OF TERMINAL TYPE I/O MODULE

8.6.1 Overview

The terminal type I/O module has the following features:

- Input/output signals are connected on a spring-type terminal block (ferrule terminal block).
- A terminal block can be attached to or detached from the main body of the module.
- An LED for state indication is provided for each I/O signal.
- The terminal type I/O module can be installed on the DIN rail.
- By using extension modules, the maximum number of digital input points can be extended to 96 and the maximum number of digital output points can be extended to 64.
- An extension module with a manual pulse generator (MPG) interface is available.

NOTE
Extension modules D and E have no LED for state indication.

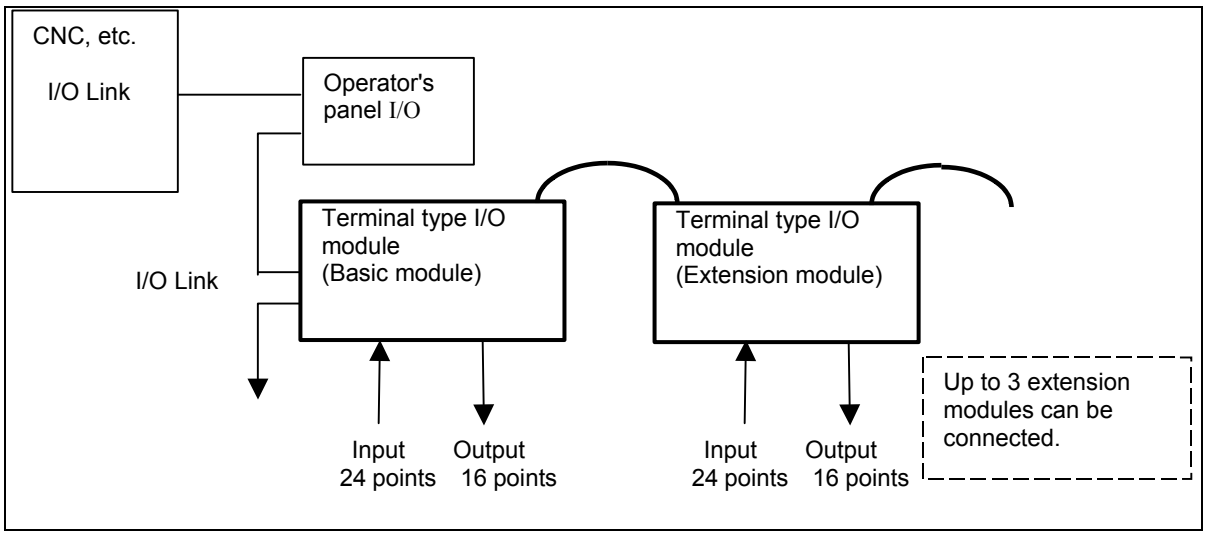

© MyFANUC 195109AB01DC415385669AA015E5BDE5

8.6.2 Module Specifications

8.6.2.1 Types of modules

Item	Ordering specifications	Specification
Basic module	A03B-0823-C011	DI/DO: 24/16
Extension module A	A03B-0823-C012	DI/DO : 24/16 With MPG interface
Extension module B	A03B-0823-C013	DI/DO : 24/16 Without MPG interface
Extension module C	A03B-0823-C014	DO : 16 2-A output module
Extension module D	A03B-0823-C015	Analog input module
Extension module E	A03B-0823-C016	Analog output module
Fuse (spare parts)	A03B-0823-K001	2A (for basic module)
Spare terminal block set (for basic module and extension module A/B)	A03B-0823-K020	Cable-side terminal block set (including each of T1 through T4)
Spare terminal block set (for extension module C)	A03B-0823-K011	Cable-side terminal block set (including each of T1 and T2)
Spare terminal block set (for extension module D)	A03B-0823-K012	Cable-side terminal block set (including each of T1 and T2)
Spare terminal block set (for extension module E)	A03B-0823-K013	Cable-side terminal block set (including each of T1 and T2)
Inter-module cable A	A03B-0823-K100	Cable length: 100 mm Used for extension module connection

NOTE
A cable-side terminal block is shipped with the main unit. Spare terminal blocks are used for replacement.

Module specifications (common items)

Item	Specification	Remarks
Interface between basic module and extension modules	Bus connection using a flat cable	Up to three extension modules connectable per basic module. Up to two extension modules D connectable, however.

For the specifications (such as signal input requirements) specific to each module, see the relevant pages of each item.

NOTE
Be sure to use modules with the ordering specifications listed above in combination. Do not use other modules.

© MyFANUC 195109AB01DC415385669AA015E5BDE5

8.6.2.2 Installation conditions

(1) Use this I/O module in a completely sealed cabinet.
(2) Use the units under the following ambient temperature conditions:
Operation: 0°C to 55°C
Storage and transportation: -20°C to 80°C
(3) For other installation conditions, conform to the CNC installation conditions.
(4) Be sure to install this module on a vertical surface and provide a clearance of 100 mm or more both above and below the module. Do not place equipment that generates a large amount of heat below the I/O module.

8.6.2.3 I/O signal specifications

Basic module、Extension modules A and B

Digital input	
Number of points	24 points
Common	8 points/common (6 common terminals)
Rated input voltage	24 VDC (+10%, −10%)
Rated input current	7 mA (average)
Polarity	Xm+0.0 to Xm+0.7: Sink or source type selectable Xm+1.0 to Xm+1.7, Xm+2.0 to Xm+2.7: Sink type
ON voltage/current	20 VDC or more, 6 mA or more
OFF voltage/current	8 VDC or less, 1.5 mA or less
Response time	The receiver delay time is 2 ms (maximum). In addition, [I/O Link transfer time between CNC and I/O module] and [ladder scan period (depending on CNC)] needs to be considered.

Digital output	
Number of points	16 points
Common	8 points/common (8 common terminals)
Rated output voltage	12 VDC to 24 VDC (+20%, −15%)
Rated output current	0.2A/pt
Polarity	Source type
Maximum voltage decrease when ON	0.63 V (load current × 1.25Ω)
Maximum leakage current when OFF	40 μA
Output protection function	Protection against overheat and overcurrent
Response time	The driver delay time is 50 μs (maximum). In addition, [I/O Link transfer time between CNC and I/O module] and [ladder scan period (depending on CNC)] needs to be considered.

⚠ **CAUTION**

1 The protection function is intended to protect the components internal to the modules rather than external units.
2 No protection function of modules can protect their internal components in all cases. Once any protection function has worked, remove the cause promptly. If an absolute maximum rating is exceeded, for example, it is likely that protection functions may not work or an IC may break down before the related protection function works, depending on the way or situation in which the modules are used.
3 If an output protection function is defective, it is likely that, if the load current exceeds its rating continuously for a long time, smoke or ignition may occur.

© MyFANUC 195109AB01DC415385669AA015E5BDE5

Extension module C

Digital output	
Number of points	16 points
Common	4 points/common
Rated output voltage	12 VDC to 24 VDC (+20%, –15%)
Rated output current	2 A/pt (4 A/common)
Polarity	Source type
Maximum voltage decrease when ON	0.18 V (load current × 0.09Ω)
Maximum leakage current when OFF	0.1mA
Insulation method	Photocoupler insulation
Output protection function	Protection against overheat, overcurrent, short-circuiting, and disconnection detection
Response time	The driver delay time is 50 μs (maximum). In addition, [I/O Link transfer time between CNC and I/O module] and [ladder scan period (depending on CNC)] needs to be considered.

⚠ CAUTION

1 The protection function is intended to protect the components internal to the modules rather than external units.

2 No protection function of modules can protect their internal components in all cases. Once any protection function has worked, remove the cause promptly. If an absolute maximum rating is exceeded, for example, it is likely that protection functions may not work or an IC may break down before the related protection function works, depending on the way or situation in which the modules are used.

3 If an output protection function is defective, it is likely that, if the load current exceeds its rating continuously for a long time, smoke or ignition may occur.

Extension module D

Analog input		
Number of input channels	4 channels	
Analog input range	-10 VDC to +10 VDC (Input resistance: 4.7 MΩ) -20 VDC to +20 mA (Input resistance: 250Ω)	Voltage input or current input can be selected on a channel–by–channel basis by wiring.
Digital conversion range	12 bits (binary), two's complement representation	
Input/output correspondence		
Resolution	5 mV or 20 μA	
Overall precision	Voltage input: ±0.5% (with respect to full scale) Current input: ±1.0% (with respect to full scale)	
Maximum input voltage/current	±15 V/±30 mA	
A-D conversion time	2 ms or less	
Minimum update period of digital output	Ladder scan period of CNC connected	
Number of occupied input/output points	DI = 3 bytes, DO = 2 bytes(NOTE)	

Analog input	Digital output
+10 V	+2000
+5V or +20mA	+1000
0V or 0mA	0
-5V or -20mA	-1000
-10V	-2000

© MyFANUC 195109AB01DC415385669AA015E5BDE5

NOTE

This module has four analog input channels but has only one 12-bit digital output channel within the occupied input points (3 bytes). Namely, a channel for conversion is selected dynamically using a ladder program. Channel switching DO points for selecting a channel are present in the occupied output points (2 bytes). (See Subsection 8.6.6.2, “Channel selection and A/D conversion data for extension module D”.)

Extension module E

Analog output	
Number of input channels (Note 1)	4 channels
Analog output range (Note 2)	-10 VDC to +10 VDC (external load resistance 10kΩ or more) 0 VDC to +20 mA (external load resistance 400Ω or less)
Digital conversion range	12 bits (binary), two's complement representation
Input/output correspondence	

Digital input	Analog output	
	Voltage output	Current output
+2000	+10V	-
+1000	+5V	+20mA
0	0V	0mA
-1000	-5V	-
-2000	-10V	-

Resolution	5 mV or 20 μA
Overall precision	Voltage input: ±0.5% (with respect to full scale) Current input: ±1.0% (with respect to full scale)
D-A conversion time (Note 3)	1ms or less
Minimum update period of digital input	Ladder scan period of CNC connected
Number of occupied input/output points (Note 4)	For connection to the I/O Link: DI = 3 bytes, DO = 2 bytes For connection to the I/O Link *i*: DO = 2 bytes

NOTE

1 One of the four channels must be selected for output using a ladder program. (See Subsection 8.6.6.3, “Channel selection and D/A conversion data for extension module E”.)

2 There is a choice between use for voltage output or use for current output during connection to the terminal section.

3 The conversion time refers to that only within the module. The actual response time includes the scan time determined depending on the system.

4 For connection to the I/O Link, 3 bytes of DI are automatically occupied at assignment, but not used. (See Subsection 8.6.6.3, “Channel selection and D/A conversion data for extension module E”.)
For connection to the I/O Link *i*, assignment of 3 bytes of DI are unnecessary.

© MyFANUC 195109AB01DC415385669AA015E5BDE5

8.6.2.4 Power supply rating

Module name	Supply voltage	Current rating
Basic module	24 VDC ±10%	0.2 A + 7.3 mA × DI (DI: Number of DI points in the ON state)
Extension modules A, B	Supplied from the basic module	0.1 A + 7.3 mA × DI (DI: Number of DI points in the ON state)
Extension module C	Supplied from the basic module	0.1A
Extension module D	Supplied from the basic module	0.1A
Extension module E	Supplied from the basic module	0.16A

NOTE

1 The above power supply rating does not include that to be input to DOCOM0 and DOCOM1 for DO output.

2 To connect an optical adapter for the I/O Link *i* to both connectors JD1A and JD1B on the basic module, the above power supply rating + 70 mA is required for the power supply of the basic module.

8.6.2.5 Heat dissipation

The heat dissipation of a module is the sum of "Basic heat dissipation" in the table below plus the total obtained by multiplying each of "Heat dissipation per input point" and "Heat dissipation per output point" in the table below by the number of points that are turned on at the same time.

Module name	Basic heat dissipation (W)	Heat dissipation per input point (W)	Heat dissipation per output point (W) IL: Output load current
Basic module	4.8	0.23	$0.04+0.9\times IL^2$
Extension modules A, B	2.4	0.23	$0.04+0.9\times IL^2$
Extension module C	2.4	-	$0.04+0.1\times IL^2$
Extension module D	2.4	-	-
Extension module E	3.8	-	-

[Calculation example]

When 16 input points, eight 0.1-A output points, and four 0.2-A output points are used for the basic module, and eight 2-A output points are used for extension module C

$$P=4.8+0.23\times 16+(0.04+0.9\times 0.1^2)\times 8+(0.04+0.9\times 0.2^2)\times 4+1.0+(0.04+0.09\times 2^2)\times 8$$
$$=13.4W$$

8.6.2.6 Weight

Module name	Weight (g)
Basic module	420
Extension module A	400
Extension module B	380
Extension module C	440
Extension module D	400
Extension module E	400

© MyFANUC 195109AB01DC415385669AA015E5BDE5

8.6.2.7 Applicable wire

Electric wires and ferrule terminals used for connection with a terminal block of this module should have the following dimensions:

Electric wire size

Ferrule terminal

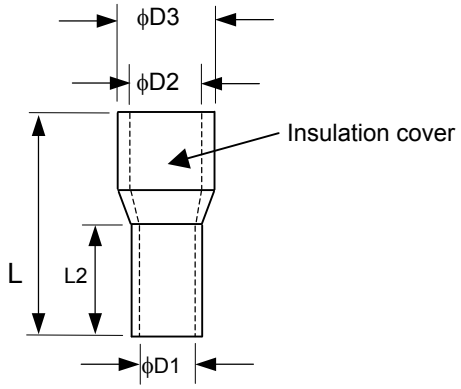

The dimensions indicated below are based on the products of Weidmuller Color., Ltd.

Cross sectional area of electric wire (mm^2)	JIS VSF KIV (mm^2)	JIS IV (mm^2)	UL1007 (AWG)	UL1015 (AWG)	Electric wire sheath stripped length (mm)	Overall length L1 (mm)	Length of metallic part L2 (mm)	Inner diameter of conductor D1 (mm)	Inner diameter of sheath D2 (mm)	Outer diameter of sheath D3 (mm)
0.5	-	-	20	-	10	14	8	1	2.6	3.1
					12	16	10			
0.75	0.5	-	18	20	10	14	8	1.2	2.8	3.3
					12	16	10			
1.0	0.75	0.9	-	18	10	14	8	1.4	3	3.5
					12	16	10			

NOTE
Use a ferrule terminal from the viewpoint of long-term reliability.

© MyFANUC 195109AB01DC415385669AA015E5BDE5

8.6.3 External View and Dimensions

8.6.3.1 Dimensions (common to the modules)

Unit: mm

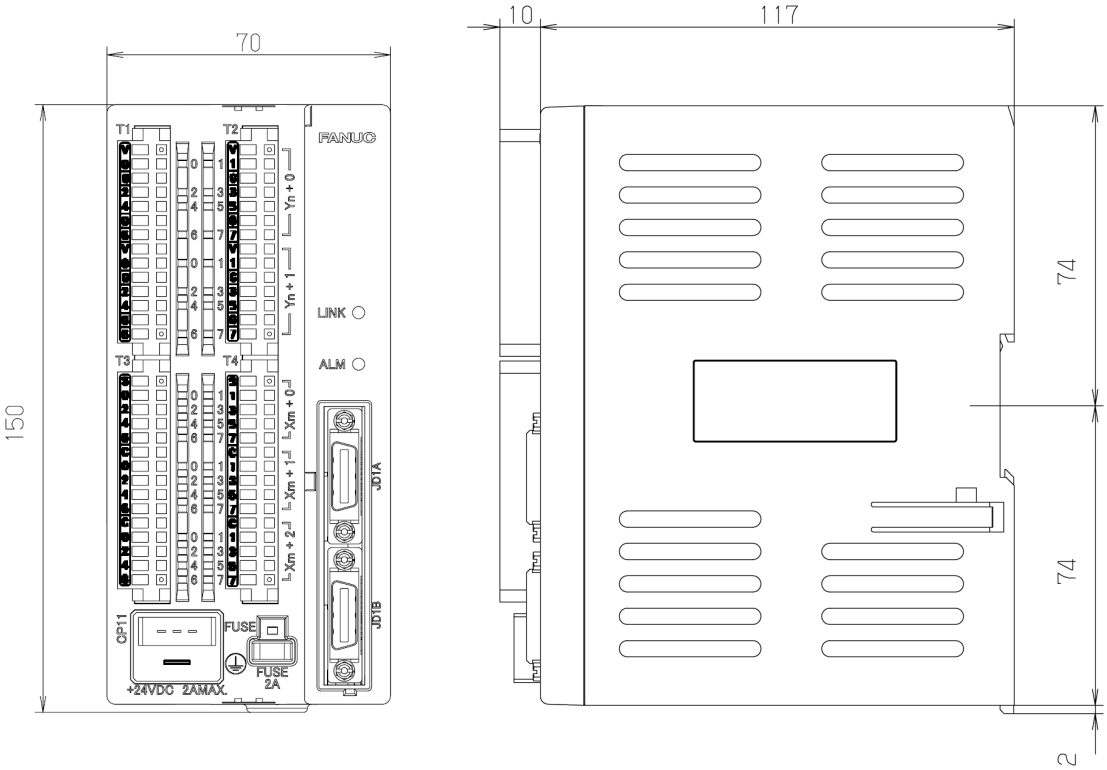

8.6.3.2 Dimensions in a maximum configuration (one basic module + three extension modules)

Unit: mm

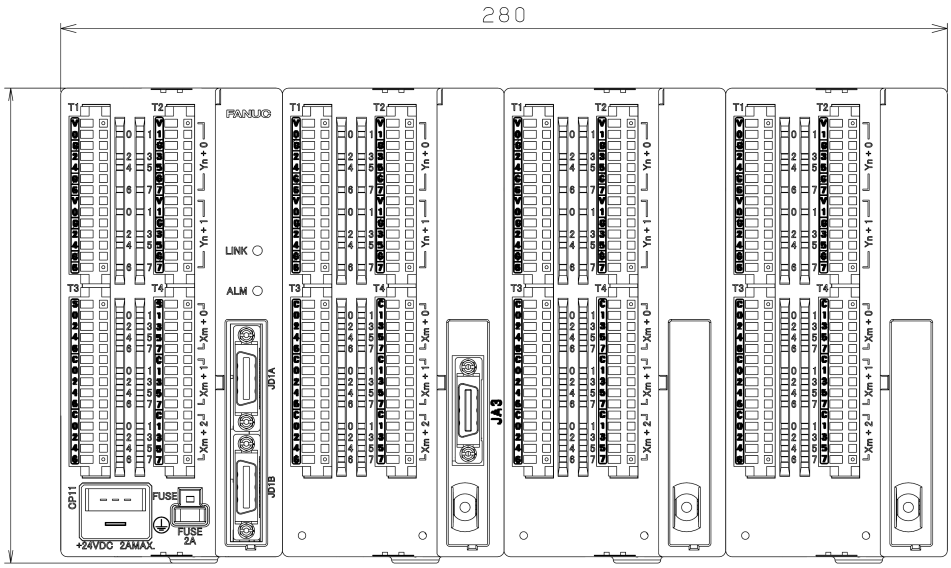

© MyFANUC 195109AB01DC415385669AA015E5BDE5

8.6.3.3 Component names

Basic module A03B－0823－C011

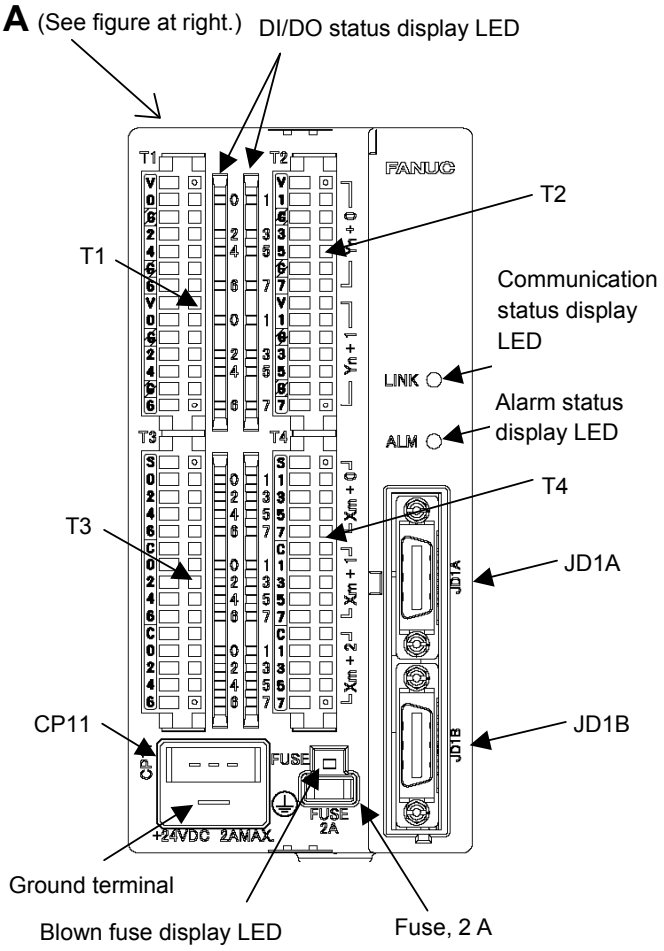

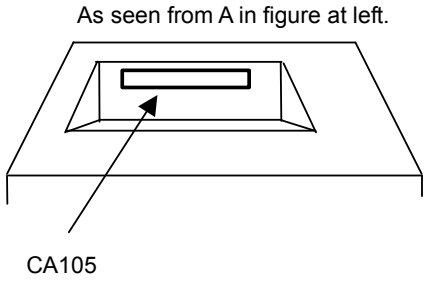

Connector / terminal board number	Use
CP11	24-VDC power supply input
JD1A	Second I/O link stage
JD1B	First I/O link stage
CA105	Extension module connection
T1	DO terminal board with aqua label
T2	DO terminal board with lime green label
T3	DI terminal board with yellow label
T4	DI terminal board with pink label

© MyFANUC 195109AB01DC415385669AA015E5BDE5

Extension module A A03B－0823－C012

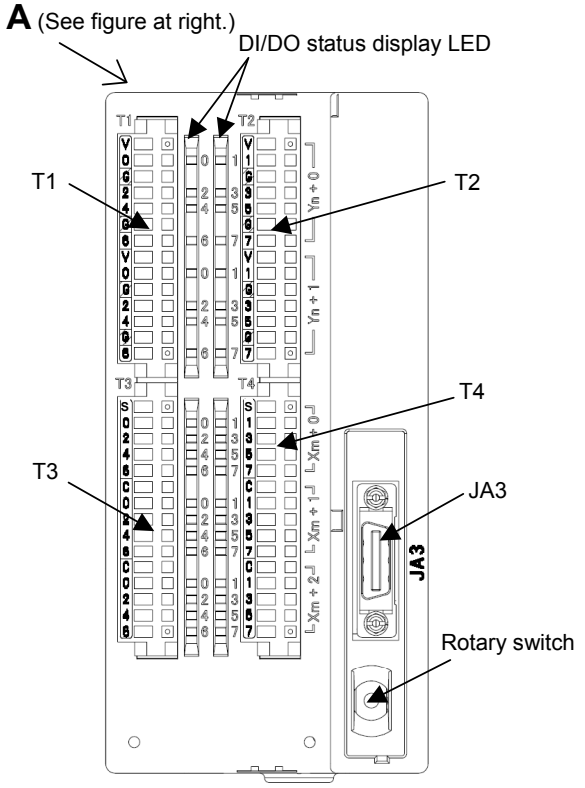

As seen from A in figure at left.

(Common to A03B-0823-C012 and A03B-0823-C013)

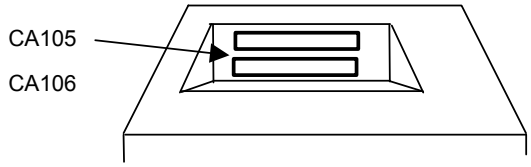

Connector / terminal board number	Use
JA3	MPG interface
CA105	Extension module connection (to next-stage extension module)
CA106	Extension module connection (to previous-stage basic module)
T1	DO terminal board with aqua label
T2	DO terminal board with lime green label
T3	DI terminal board with yellow label
T4	DI terminal board with pink label

Extension module B A03B－0823－C013

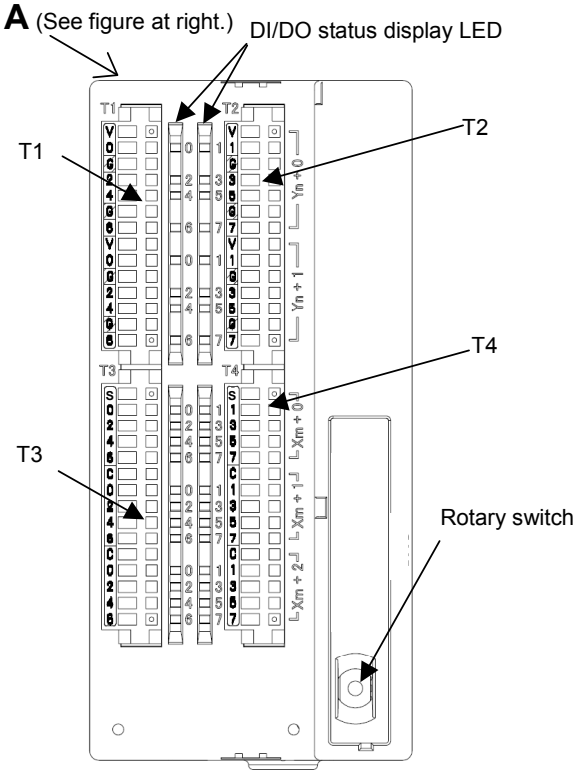

Connector / terminal board number	Use
CA105	Extension module connection (to next-stage extension module)
CA106	Extension module connection (to previous-stage basic module)
T1	DO terminal board with aqua label
T2	DO terminal board with lime green label
T3	DI terminal board with yellow label
T4	DI terminal board with pink label

NOTE

Be sure to connect extension module A next to the basic module.

© MyFANUC 195109AB01DC415385669AA015E5BDE5

Extension module C A03B－0823－C014

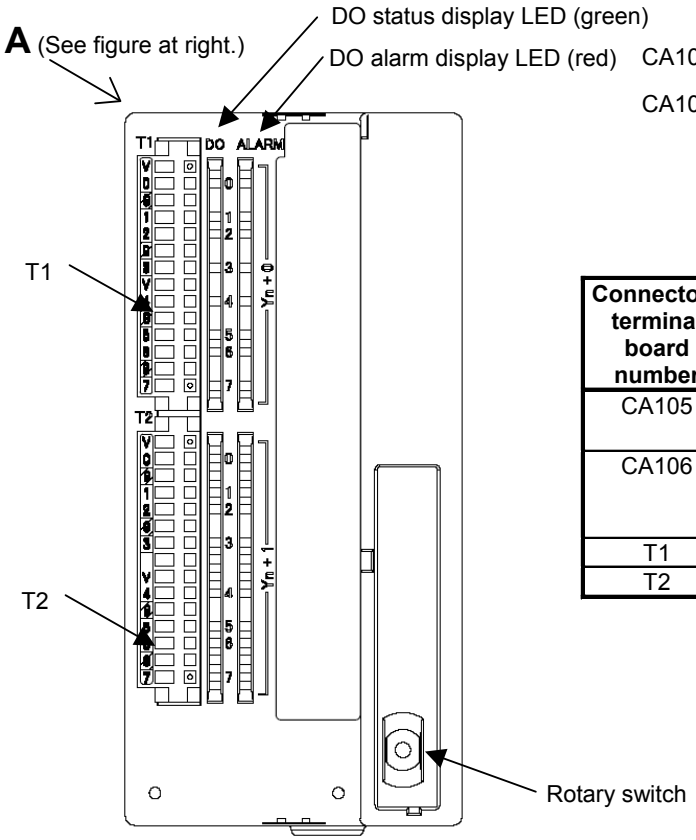

As seen from A in figure at left. (Common to A03B-0823-C014 and A03B-0823-C015)

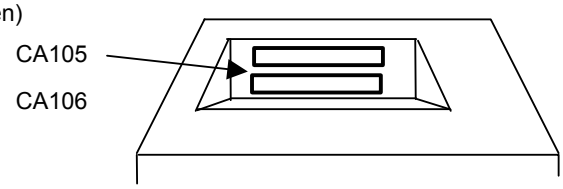

Connector / terminal board number	Use
CA105	Extension module connection (to next-stage expansion module)
CA106	Extension module connection (to previous-stage basic or extension module)
T1	DO terminal board with aqua label
T2	DO terminal board with lime green label

Extension module D A03B－0823－C015

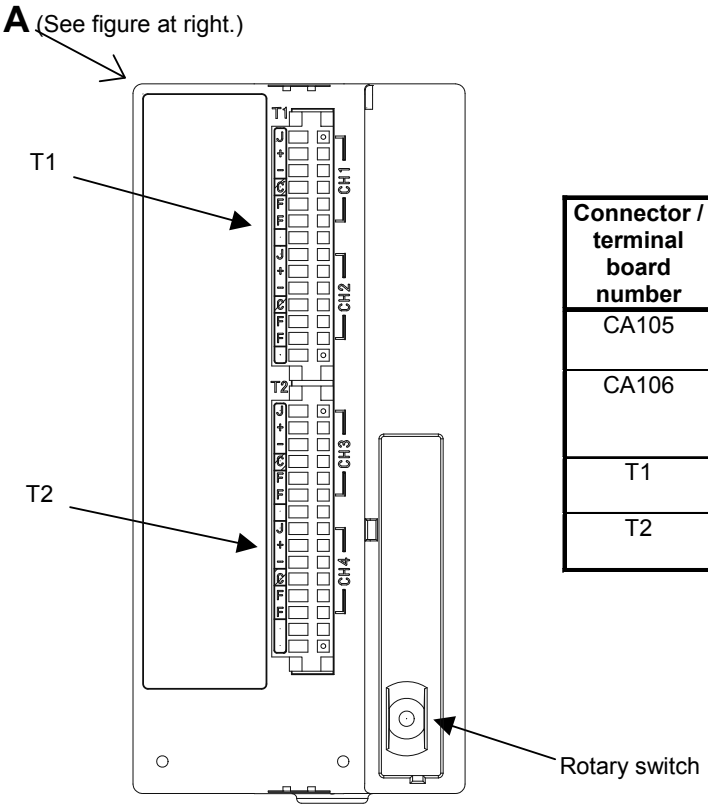

Connector / terminal board number	Use
CA105	Extension module connection (to next-stage expansion module)
CA106	Extension module connection (to previous-stage basic or extension module)
T1	Analog input CH1 and CH2 terminal board with yellow label
T2	Analog input CH3 and CH4 terminal board with pink label

© MyFANUC 195109AB01DC415385669AA015E5BDE5

Extension module E A03B－0823－C016

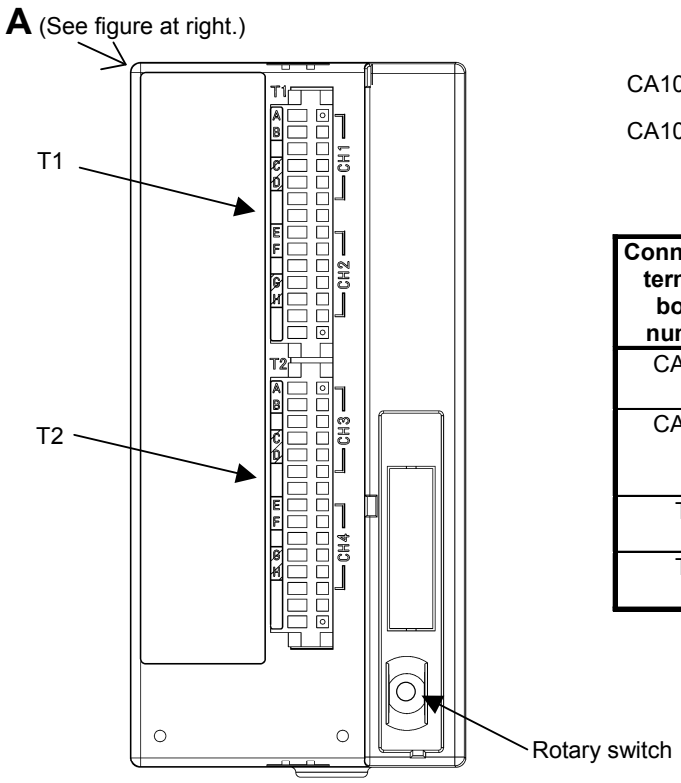

As seen from A in figure at left.

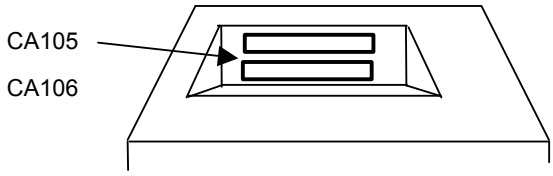

Connector / terminal board number	Use
CA105	Extension module connection (to next-stage expansion module)
CA106	Extension module connection (to previous-stage basic or extension module)
T1	Analog output CH1 and CH2 terminal board with lime green label
T2	Analog output CH3 and CH4 terminal board with sky blue label

8.6.4 Installation

Mounting holes for screwing

Front view of the module Unit: mm

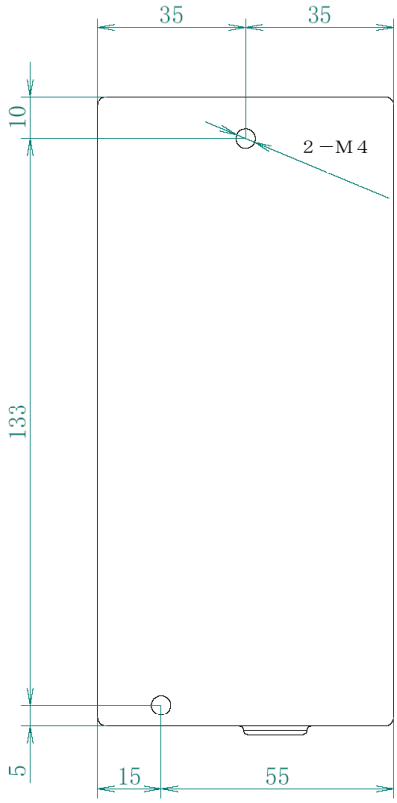

© MyFANUC 195109AB01DC415385669AA015E5BDE5

Using a DIN rail for mounting

1) Method of mounting

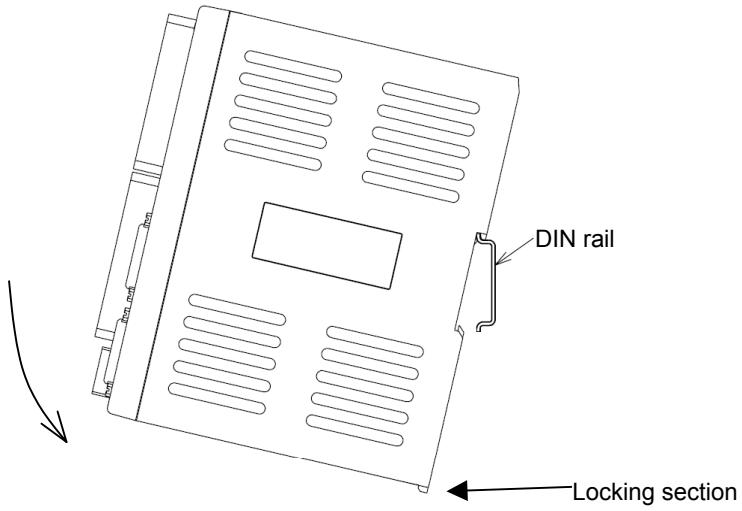

1) Place the hook of the module onto the top of the DIN rail.
2) Push the module until it clicks into place.

NOTE
Ensure that the locking section is not left lowered.

2) Method of dismounting

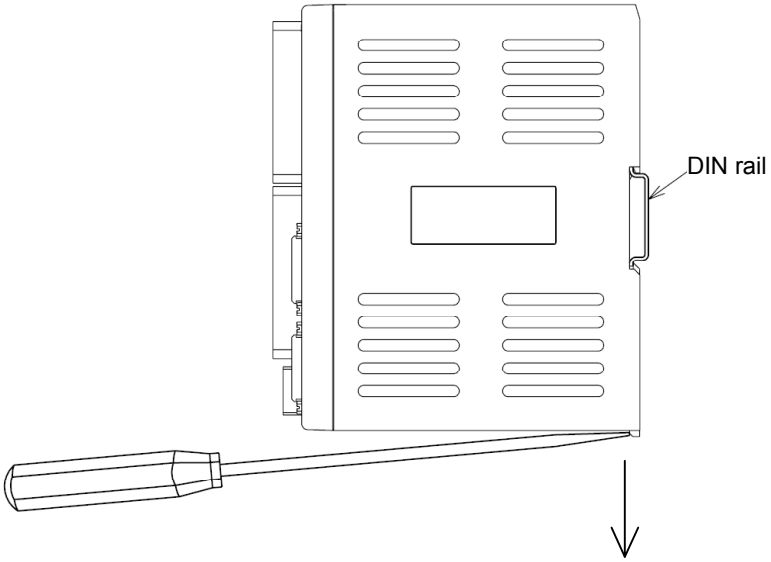

1) Lower the locking section with a flat-blade screwdriver.
2) Pull the lower part of the module toward you.

NOTE
When dismounting the module, be careful not to damage the locking section by applying an excessive force.

© MyFANUC 195109AB01DC415385669AA015E5BDE5

8.6.5 Connection

8.6.5.1 Overall connection diagram

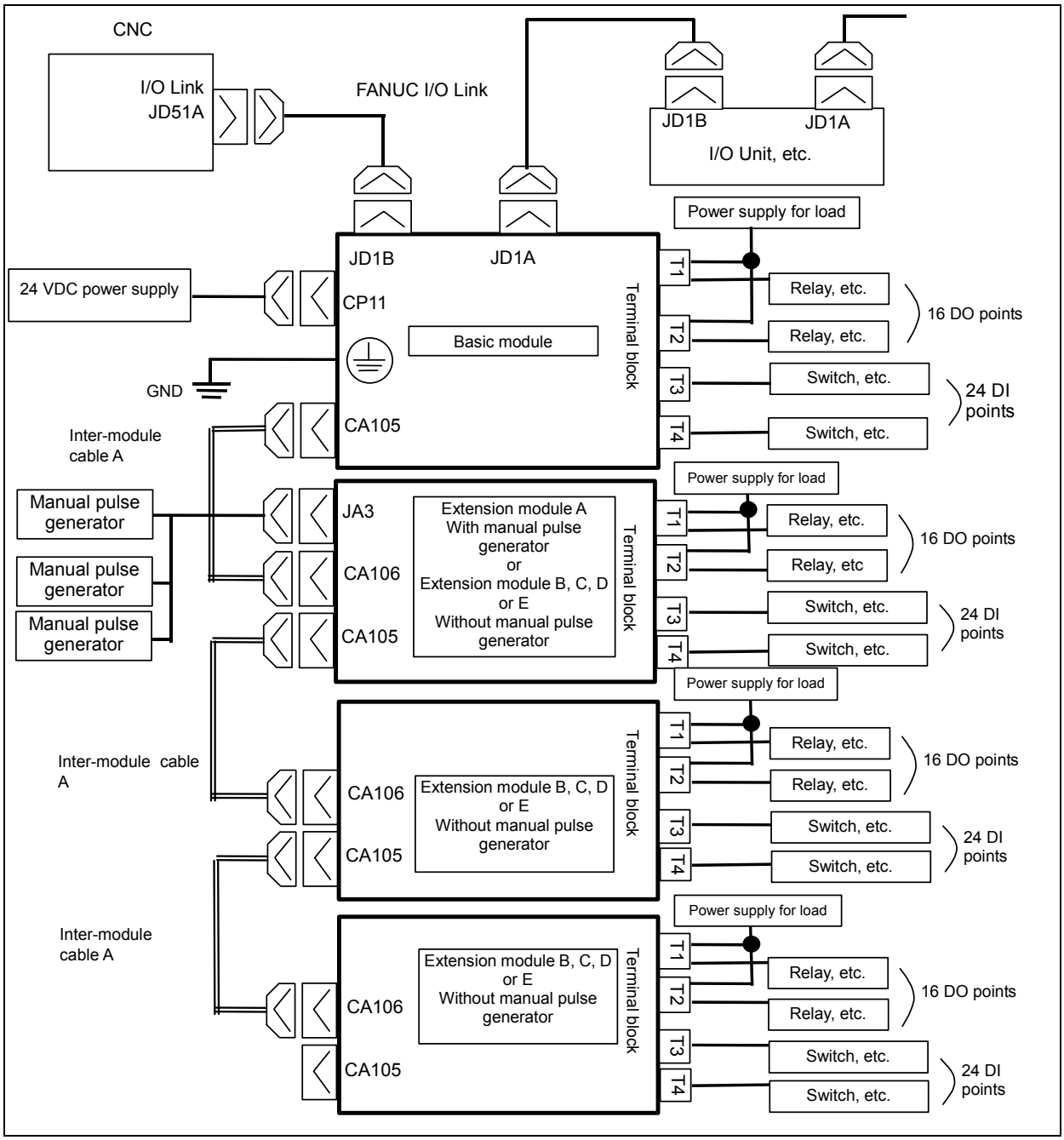

NOTE

1 Extension module C does not have DI points. Only the terminal blocks for DO, T1 and T2, are available.

2 With extension module D, only the terminal blocks for analog input, T1 and T2, are available.

3 With extension module E, only the terminal blocks for analog output, T1 and T2, are available.

© MyFANUC 195109AB01DC415385669AA015E5BDE5

8.6.5.2 Power connection

Supply power to the basic module from the CNC or an external 24 VDC regulated power supply.

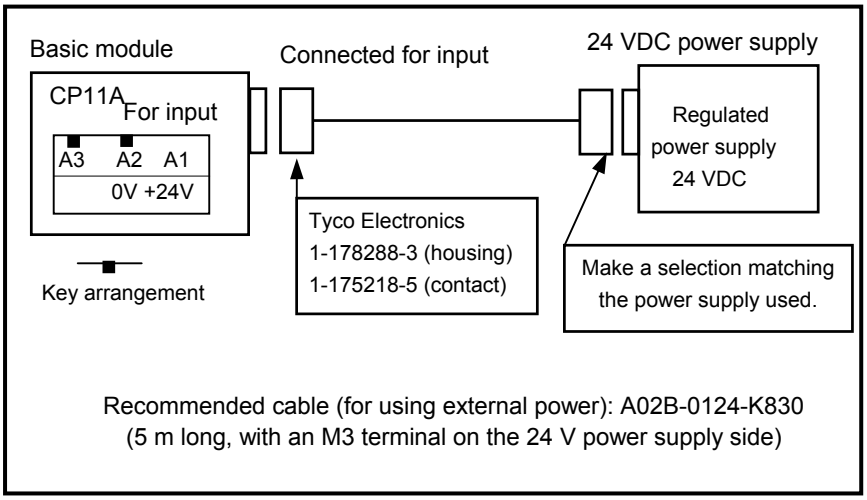

NOTE

1 Ensure that +24 V is supplied either when or before the power to the CNC is turned on, and that +24 V is removed either when or after the power to the CNC is turned off.

2 When turning off the power to the CNC control unit, be sure to turn off the power to the terminal type I/O module and other slave I/O units connected via the I/O Link as well.

© MyFANUC 195109AB01DC415385669AA015E5BDE5

8.6.5.3 Signal assignment on terminal blocks

Basic module, Extension modules A and B

- **Assignment of signals for output**

T1 (Label color: Light blue)

		Label indication
1	DOCOM0	V
2	Yn+0.0	0
3	0V	G
4	Yn+0.2	2
5	Yn+0.4	4
6	0V	G
7	Yn+0.6	6
8	DOCOM1	V
9	Yn+1.0	0
10	0V	G
11	Yn+1.2	2
12	Yn+1.4	4
13	0V	G
14	Yn+1.6	6

T2 (Label color: Yellow green)

		Label indication
1	DOCOM0	V
2	Yn+0.1	1
3	0V	G
4	Yn+0.3	3
5	Yn+0.5	5
6	0V	G
7	Yn+0.7	7
8	DOCOM1	V
9	Yn+1.1	1
10	0V	G
11	Yn+1.3	3
12	Yn+1.5	5
13	0V	G
14	Yn+1.7	7

- **Assignment of signals for input**

T3 (Label color: Yellow)

		Label indication
1	DICOM0	S
2	Xm+0.0	0
3	Xm+0.2	2
4	Xm+0.4	4
5	Xm+0.6	6
6	DICOM1	C
7	Xm+1.0	0
8	Xm+1.2	2
9	Xm+1.4	4
10	Xm+1.6	6
11	DICOM1	C
12	Xm+2.0	0
13	Xm+2.2	2
14	Xm+2.4	4
15	Xm+2.6	6

T4 (Label color: Pink)

		Label indication
1	DICOM0	S
2	Xm+0.1	1
3	Xm+0.3	3
4	Xm+0.5	5
5	Xm+0.7	7
6	DICOM1	C
7	Xm+1.1	1
8	Xm+1.3	3
9	Xm+1.5	5
10	Xm+1.7	7
11	DICOM1	C
12	Xm+2.1	1
13	Xm+2.3	3
14	Xm+2.5	5
15	Xm+2.7	7

- **Terminal block specification**

Terminal block name	Terminal block specification on cable side	Remarks
T1 T2	Weidmuller BLZF3.5/14F	Each of terminal blocks T1 and T2 has a different color assigned by the label attached to the main unit.
T3 T4	Weidmuller BLZF3.5/15F	Each of terminal blocks T3 and T4 has a different color assigned by the label attached to the main unit.

NOTE
The terminal blocks on the cable side are shipped with the terminal type I/O module.

© MyFANUC 195109AB01DC415385669AA015E5BDE5

Extension module C

- Assignment of signals for output

T1 (Label color: Light blue)

		Label indication
1	DOCOM0	V
2	Yn+0.0	0
3	0V-0	G
4	Yn+0.1	1
5	Yn+0.2	2
6	0V-0	G
7	Yn+0.3	3
8	DOCOM1	V
9	Yn+0.4	4
10	0V-1	G
11	Yn+0.5	5
12	Yn+0.6	6
13	0V-1	G
14	Yn+0.7	7

T2 (Label color: Yellow green)

		Label indication
1	DOCOM2	V
2	Yn+1.0	0
3	0V-2	G
4	Yn+1.1	1
5	Yn+1.2	2
6	0V-2	G
7	Yn+1.3	3
8		
9	DOCOM3	V
10	Yn+1.4	4
11	0V-3	G
12	Yn+1.5	5
13	Yn+1.6	6
14	0V-3	G
15	Yn+1.7	7

- Terminal block specification

Terminal block name	Terminal block specification on cable side
T1	Weidmuller BLZF3.5/14F
T2	Weidmuller BLZF3.5/15F

Extension module D

- Assignment of signals for analog input

T1 (Label color: Yellow)

		Label indication
1	JMP0	J
2	INP0	+
3	INM0	-
4	COM0	C
5	FG0I	F
6	FG0O	F
7		
8	JMP1	J
9	INP1	+
10	INM1	-
11	COM1	C
12	FG1I	F
13	FG1O	F
14		

T2 (Label color: Pink)

		Label indication
1	JMP2	J
2	INP2	+
3	INM2	-
4	COM2	C
5	FG2I	F
6	FG2O	F
7		
8	JMP3	J
9	INP3	+
10	INM3	-
11	COM3	C
12	FG3I	F
13	FG3O	F
14		
15		

- Terminal block specification

Terminal block name	Terminal block specification on cable side
T1	Weidmuller BLZF3.5/14F
T2	Weidmuller BLZF3.5/15F

NOTE

The terminal blocks on the cable side are shipped with the terminal type I/O module.

© MyFANUC 195109AB01DC415385669AA015E5BDE5

Extension module E

- Assignment of signals for analog output

T1 (Label color: Yellow green)

		Label indication
1	VP1	A
2	VN1	B
3		
4	IP1	C
5	IN1	D
6		
7		
8	VP2	E
9	VN2	F
10		
11	IP2	G
12	IN2	H
13		
14		

T2 (Label color: Light blue)

		Label indication
1	VP3	A
2	VN3	B
3		
4	IP3	C
5	IN3	D
6		
7		
8	VP4	E
9	VN4	F
10		
11	IP4	G
12	IN4	H
13		
14		
15		

- Terminal block specification

Terminal block name	Terminal block specification on cable side
T1	Weidmuller BLZF3.5/14F
T2	Weidmuller BLZF3.5/15F

NOTE

The terminal blocks on the cable side are shipped with the terminal type I/O module.

© MyFANUC 195109AB01DC415385669AA015E5BDE5

8.6.5.4 DI/DO connection

Basic module, Extension modules A and B

DI connection

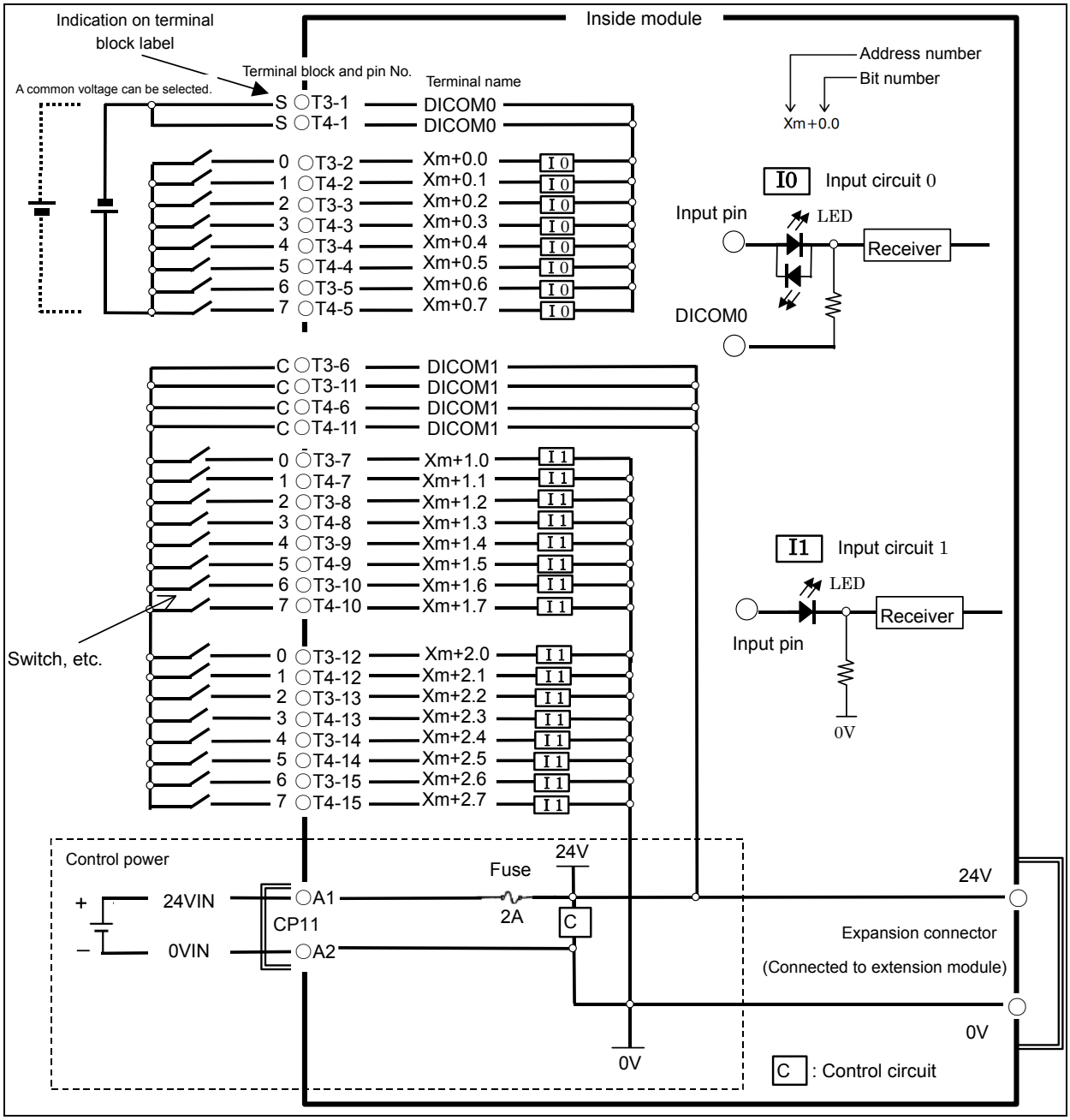

NOTE

The circuitry enclosed in the dashed rectangle shown above is mounted on the basic module only. In the case of an extension module, 24 V for DICOM1 is supplied via the extension cable from the basic module or the extension module at the preceding stage.

© MyFANUC 195109AB01DC415385669AA015E5BDE5

NOTE

As listed in the table below, Xm+0.0 through Xm+0.7 are DI terminals for which a common voltage can be selected. That is, by connecting DICOM0 (T3-1 and T4-1 pins) to +24 V, a DI signal can be input with its logical state reversed. If, however, a cable is connected to ground, it has the same effect as inputting an ON state DI signal. From the safety viewpoint, the connection of DICOM0 (T3-1 and T4-1 pins) to 0 V is recommended wherever possible.

For the unconnected pins at the addresses for which the common voltage is fixed (from Xm+1.0 to Xm+1.7 and from Xm+2.0 to Xm+2.7), the input is “0”. For the unconnected terminals at the addresses for which a common voltage can be selected (from Xm+0.0 to Xm+0.7), the input is “0” when DICOM0 (T3-1 and T4-1 pins) is connected to 0 V or “1” when it is connected to +24. Connect DICOM0 when used. When addresses from Xm+0.0 to Xm+0.7 are not used, connect DICOM0 to the 0 V power supply.

Common voltage for the basic module, and extension modules A and B

Address	Common voltage
Xm	Can externally be selected with DICOM0.
Xm+1	Cannot be selected.
Xm+2	Cannot be selected.

© MyFANUC 195109AB01DC415385669AA015E5BDE5

DO connection

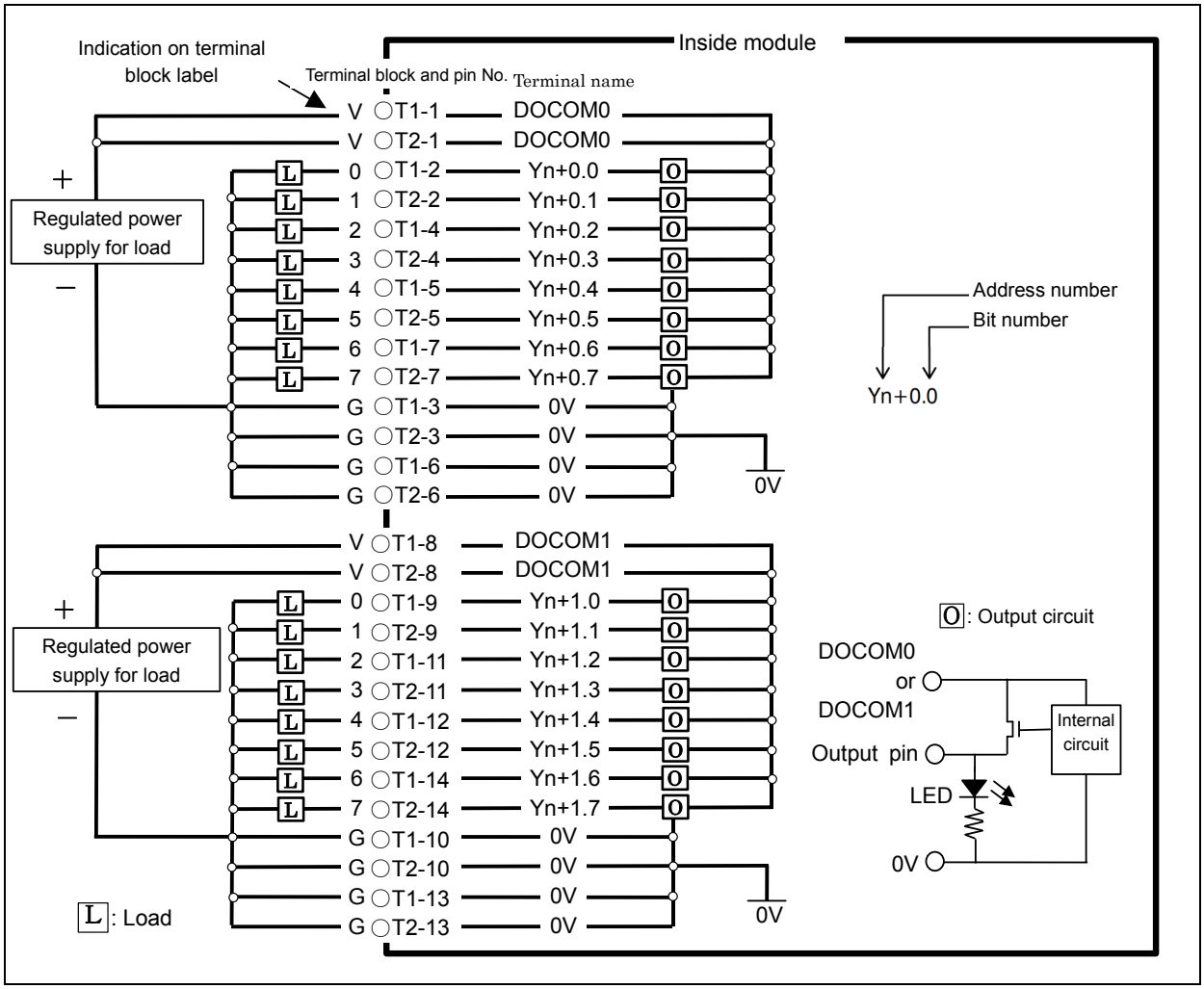

⚠ CAUTION

Be sure to connect the 0 V signal from the regulated power supply for load to the 0 V terminal (with label indication "G") of the module. Otherwise, a load error can occur.

© MyFANUC 195109AB01DC415385669AA015E5BDE5

Extension module C

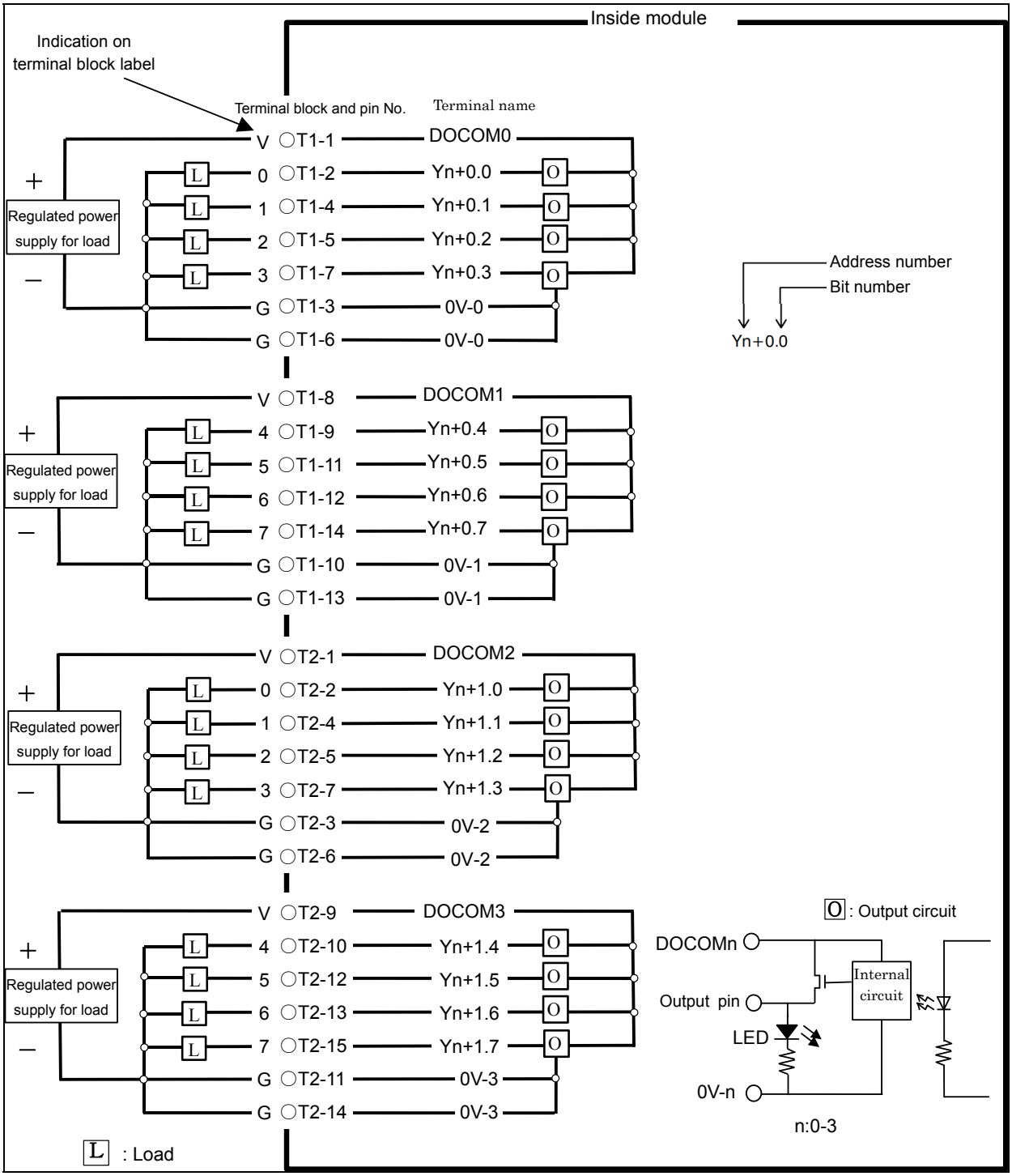

⚠ CAUTION

Be sure to connect the 0 V signal from the regulated power supply for load to the 0 V terminal (with label indication "G") of the module. Otherwise, a load error can occur.

© MyFANUC 195109AB01DC415385669AA015E5BDE5

Extension module D

In the example of connection below, CH1 is used for voltage input, CH3 is used for current input, and CH2 and CH4 are not used.

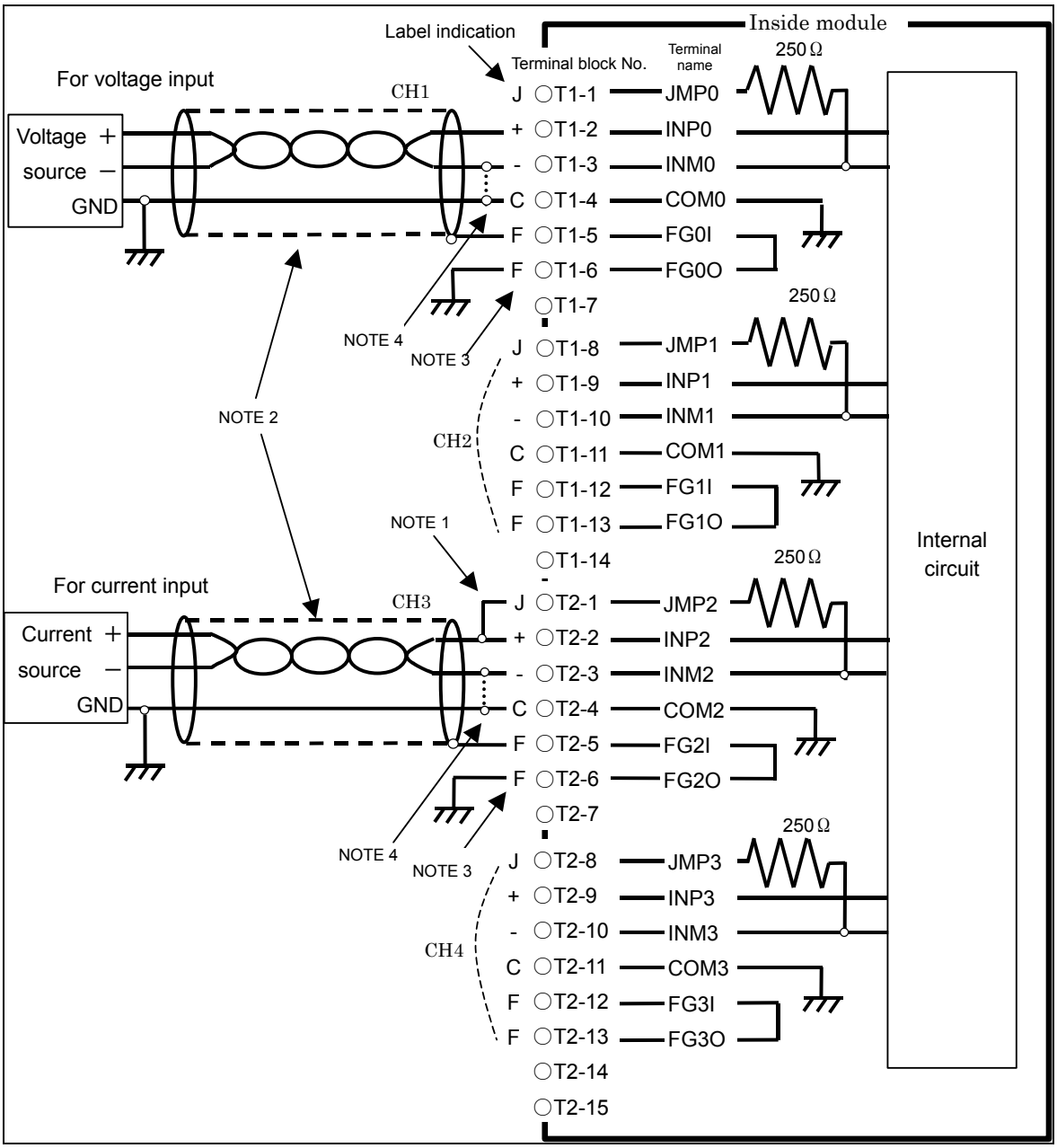

NOTE

1. When JMPn and INPn (n=0, 1, 2, 3) are connected with each other, the channel becomes a current input channel.
2. For the connection cable, use a shielded twisted pair.
3. In the figure above, the shield is connected to FGnI for grounding to FGnO. However, the shield may be directly connected to frame ground by using a cable clamp without using FGnI and FGnO.
4. When a voltage source (current source) has a GND terminal as shown above, connect COMn to the terminal. When no GND terminal is provided, connect INMn and COMn with each other on the analog input module as indicated by the dotted line. COMn of each channel is connected to the common analog ground inside the module.

© MyFANUC 195109AB01DC415385669AA015E5BDE5

Extension module E

In the example of connection below, CH1 is used for voltage input, CH3 is used for current input, and CH2 and CH4 are not used.

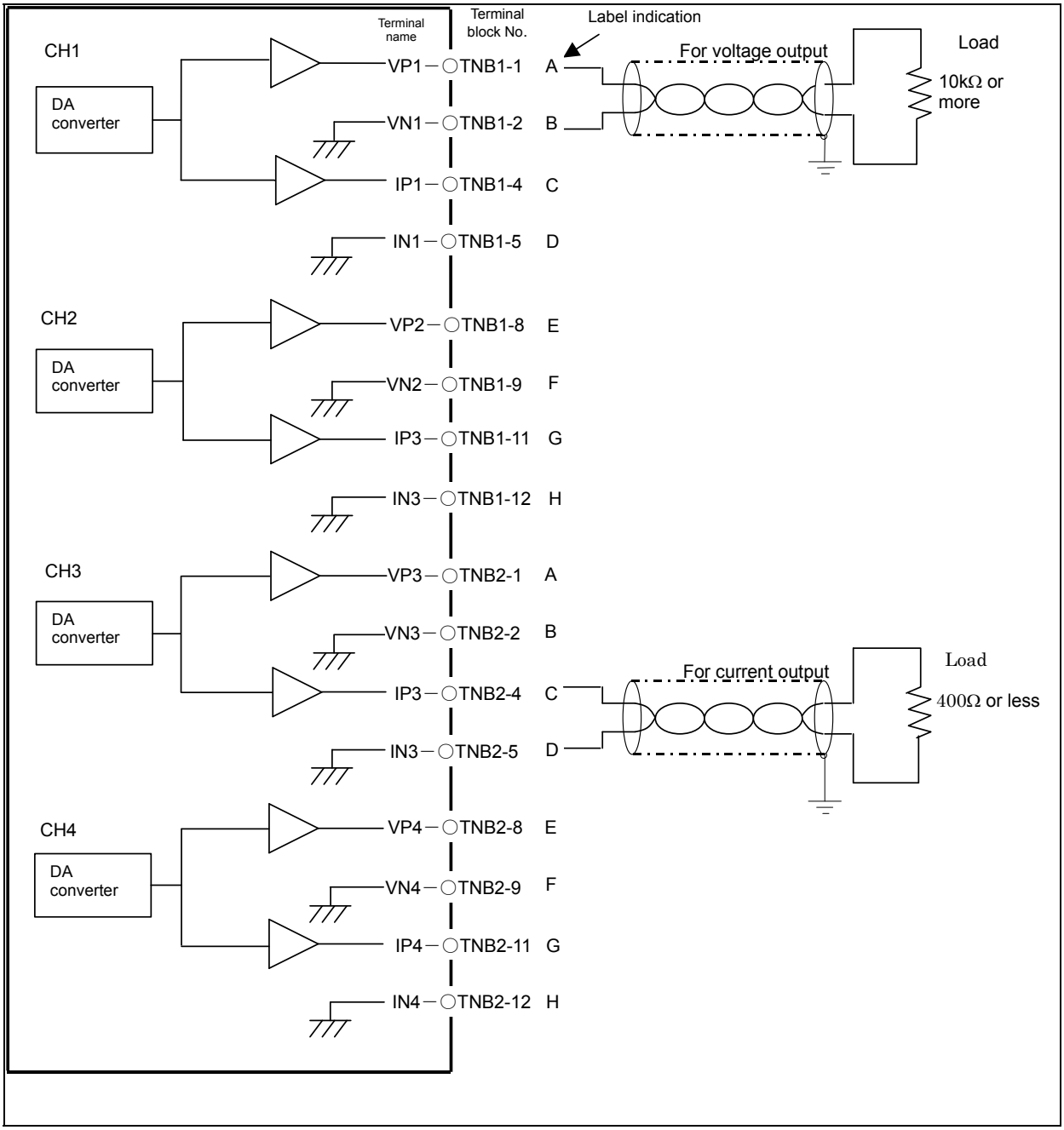

⚠ CAUTION

1 For connection, use a shielded two-core twisted pair.
2 Ground the shield of the cable on the load side.
3 When another unit requiring a power supply is connected to this module, turn the power to the basic module on first. If the power to the unit connected to this module is turned on first, invalid output or malfunction may cause an accident.

© MyFANUC 195109AB01DC415385669AA015E5BDE5

8.6.5.5 Manual pulse generator connection

Up to three manual pulse generators can be connected to extension module A.
For details, see Subsection 7.4.1.

8.6.5.6 Inter-module connection

The same inter-module connection method is applied to between the basic module and an extension module and between extension modules. For inter-module connection, connect a 52-pin flat cable connector to the expansion connectors CA105 and CA106 provided on each module as shown below. At this time, connect all 52 pins, paying attention to the connector orientation.

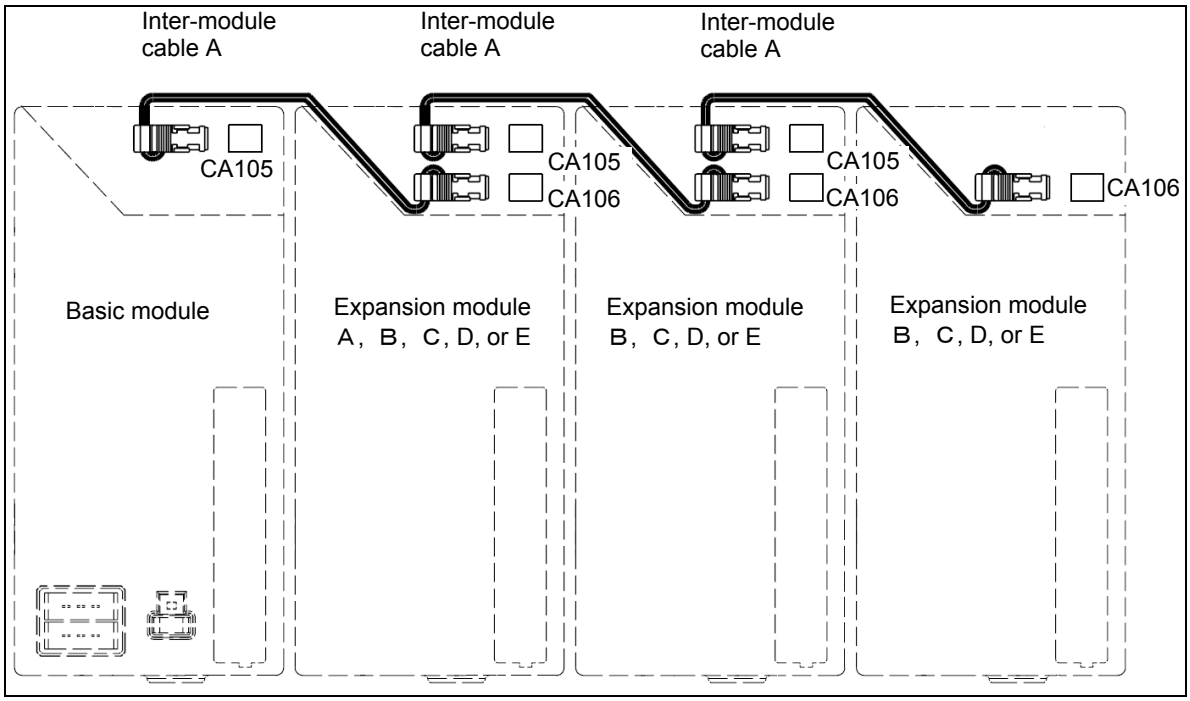

<Cross sectional view>

Method of detaching a connected cable

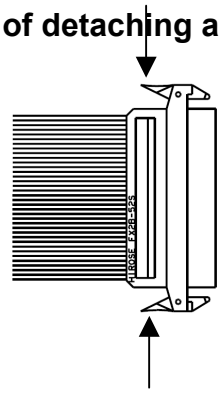

When detaching a connected cable from a module, release the lock by pushing the latch of the connector on the cable side in the arrow directions shown at the left.

© MyFANUC 195109AB01DC415385669AA015E5BDE5

8.6.5.7 Cable connection to a terminal block

(1) Insert a flat-blade screwdriver with a tip width of about 2.5 mm into a clamp of a terminal block to open the fixing bracket.

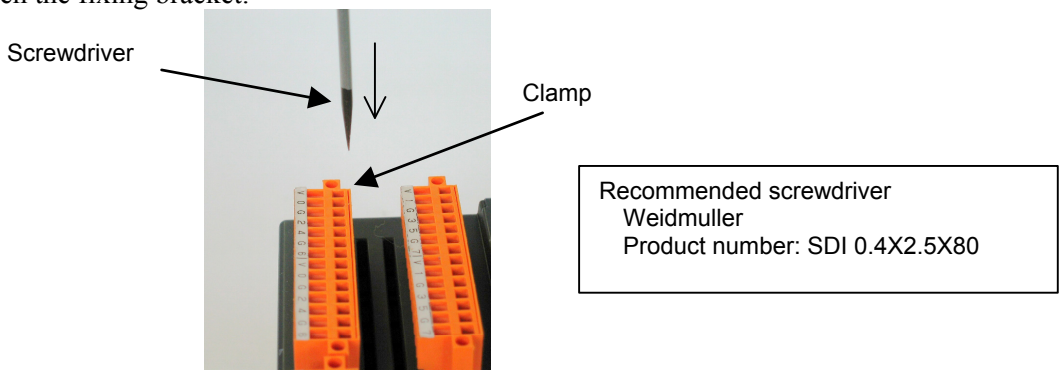

(2) Insert a cable with a ferrule terminal.

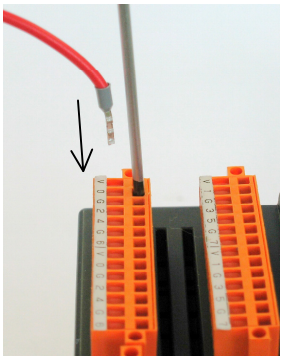

(3) Extract the screwdriver from the clamp to complete cabling.

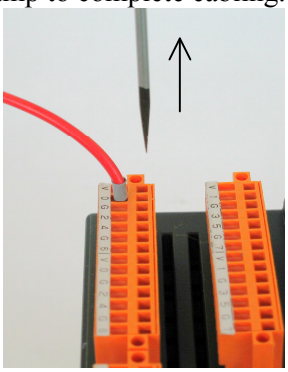

NOTE
Do not pry the screwdriver in a clamp. Otherwise, the terminal block can be damaged.

© MyFANUC 195109AB01DC415385669AA015E5BDE5

8.6.5.8 Detaching a terminal block

A terminal block can be detached from the main module by loosening the mounting screws at the both ends of the terminal block.

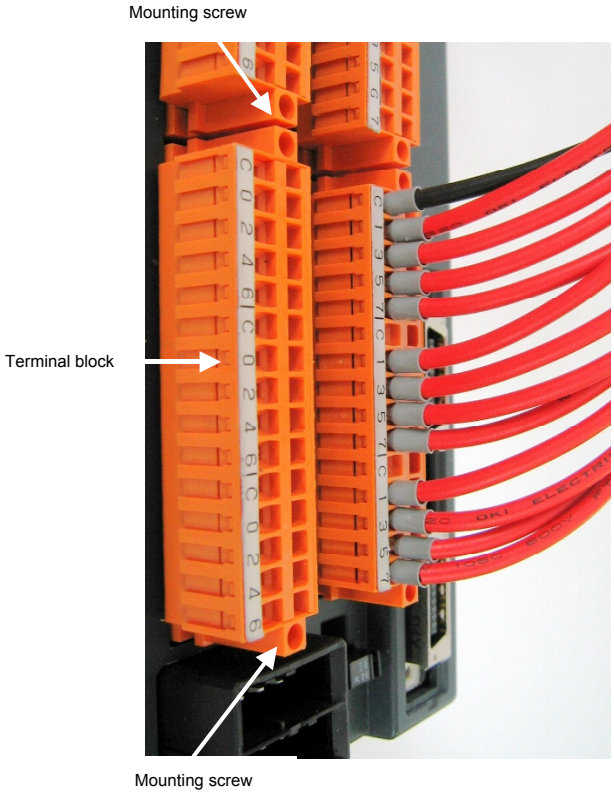

Tightening torque for the mounting screw: 0.4 Nm maximum

© MyFANUC 195109AB01DC415385669AA015E5BDE5

8.6.5.9 Connection of the ground terminal

Ground the ground terminal of a basic module.

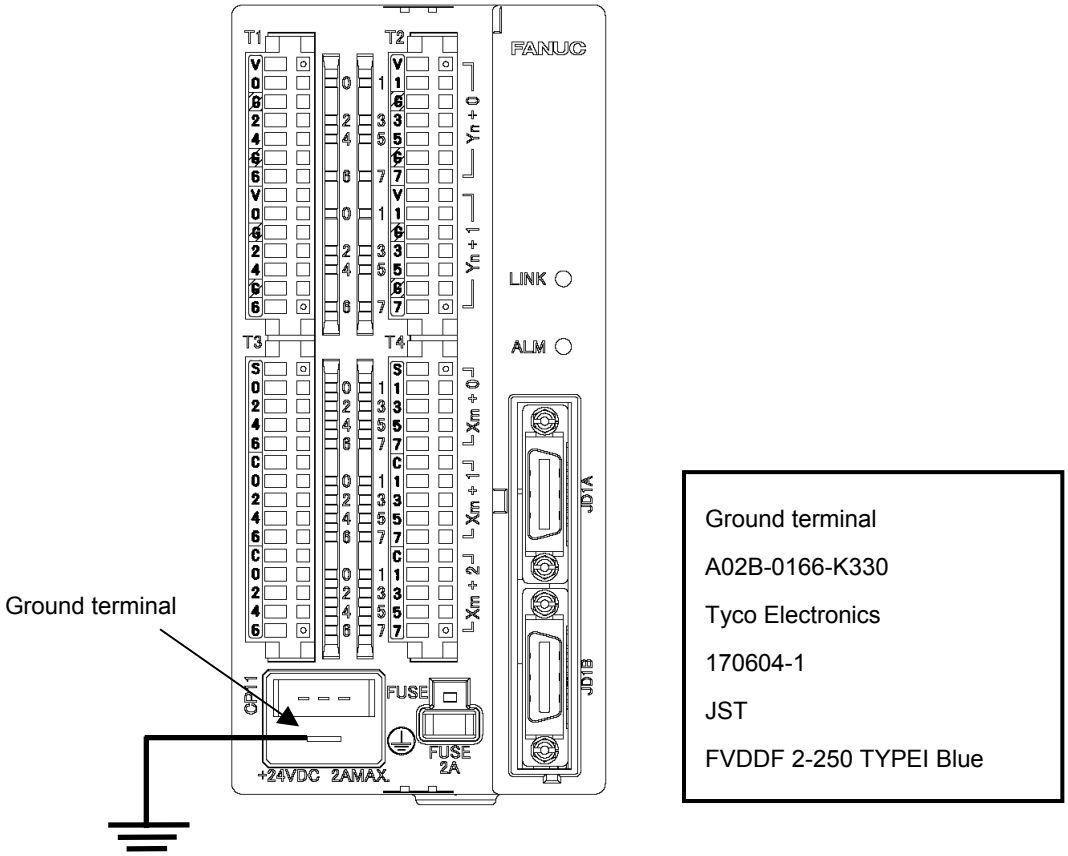

© MyFANUC 195109AB01DC415385669AA015E5BDE5

8.6.6 Settings

8.6.6.1 Address map

Address allocation

For connection to the I/O Link *i*

For terminal type I/O module, I/O addresses are mapped as follows.

DI space map

Xm_1	Basic module	Slot 1
$Xm_1 + 1$		
$Xm_1 + 2$		
Xm_2	Extension module 1	Slot 2
$Xm_2 + 1$		
$Xm_2 + 2$		
Xm_3	Extension module 2	Slot 3
$Xm_3 + 1$		
$Xm_3 + 2$		
Xm_4	Extension module 3	Slot 4
$Xm_4 + 1$		
$Xm_4 + 2$		
Xm_{mpg} (For 1st MPG)	Extension module 1	Slot MPG
$Xm_{mpg} + 1$(For 2nd MPG)		
$Xm_{mpg} + 2$(For 3rd MPG)		

DO space map

Yn_1	Basic module	Slot 1
$Yn_1 + 1$		
Yn_2	Extension module 1	Slot 2
$Yn_2 + 1$		
Yn_3	Extension module 2	Slot 3
$Yn_3 + 1$		
Yn_4	Extension module 3	Slot 4
$Yn_4 + 1$		

Xm_1, Xm_2, Xm_3, Xm_4, Xm_{mpg}, Yn_1, Yn_2, Yn_3, and Yn_4 indicate the start address at allocation.

For connection to the I/O Link ***i***, each module is treated as a slot and addresses are allocated for each module. When only the basic module is used, allocate 3-byte DI addresses and 2-byte DO addresses to slot 1. When extension modules are added, allocate 3-byte DI addresses and 2-byte DO addresses to slots 2, 3, and 4.

NOTE

1 Extension module A has an interface for three manual pulse generators. To use manual pulse generators, allocate addresses to slot MPG. With this setting, addresses can be allocated to the three manual pulse generators at a time (addresses cannot be allocated individually to manual pulse generators). Do not use the DI space with the ladder because the CNC processes the manual pulse generator signals directly.

2 Extension modules C (2A output module) has no DI signals. However when a DO error occurs, the DO alarm is transferred in the area at the DI address in spite of connection to the I/O Link or I/O Link *i*. (With the I/O Link *i*, the DO alarm is not transferred to the system relay (R or Z) area.) For this reason, it is necessary to allocate addresses to the DI section of extension modules C.

3 Extension modules E (analog output module) have no DI signals. For connection to the I/O Link *i*, it is not necessary to allocate addresses to the DI section of extension modules E.

© MyFANUC 195109AB01DC415385669AA015E5BDE5

For connection to the I/O Link

For terminal type I/O module, I/O addresses are mapped as follows.

DI space map

Xm	Basic module
Xm+1	
Xm+2	
Xm+3	Extension module 1
Xm+4	
Xm+5	
Xm+6	Extension module 2
Xm+7	
Xm+8	
Xm+9	Extension module 3
Xm+10	
Xm+11	
Xm+12(for 1st MPG)	Extension module 1
Xm+13(for 2nd MPG)	
Xm+14(for 3rd MPG)	
Xm+15(DO alarm detection)	Basic module

DO space map

Yn	Basic module
Yn+1	
Yn+2	Extension module 1
Yn+3	
Yn+4	Extension module 2
Yn+5	
Yn+6	Extension module 3
Yn+7	

For connection to the I/O Link, allocate addresses to the basic module and extension modules at a time. Addresses Xm+12 to Xm+14 are allocated to manual pulse generator and address Xm+15 is allocated to the DO alarm regardless of whether an extension module is used.
Do not use the DI space with the ladder because the CNC processes the manual pulse generator signals directly.

NOTE

DO alarms of extension module C (2A output module) are allocated not to Xm+15, but to the DI addresses for extension module 1, 2, or 3. For details, see “Extension module C” in Subsection 8.6.6.4.

© MyFANUC 195109AB01DC415385669AA015E5BDE5

8.6.6.2 Channel selection and A/D conversion data for extension module D

<Channel selection>

With extension module D, which of the four analog input channels is to be the target of A/D conversion must be determined with a PMC program. The DO points used for this selection are CHA and CHB (two-byte occupied output points). These are mapped as indicated below.

Address in the module	7	6	5	4	3	2	1	0
Yn	×	×	×	×	×	×	×	×
Yn+1	×	×	×	×	×	×	CHB	CHA

Yn is the first address to which the analog input module is allocated.

By setting the values listed below to CHA and CHB, the corresponding channel is selected, and the A/D conversion data of the channel and the data of the selected channel are written in the DI area. The character X above represents an unused bit, so either 1 or 0 may be written in place of X.

CHB	CHA	Channel selected
0	0	Channel 1
0	1	Channel 2
1	0	Channel 3
1	1	Channel 4

<Address>

A/D conversion data of the channel selected by the above setting is output to two bytes of the three bytes of DI (input signals) of the slot to which this module is allocated. The A/D conversion data output addresses are as shown below, depending on where extension module D (analog input module) is installed.

For connection to the I/O Link *i*

NOTE

For connection to the I/O Link *i*, be sure to allocate the start address of the slot as shown below, according to where the extension module D is installed:

When connected to extension module 1 (slot 2):

Xm_2 must always be allocated at an odd-numbered address.

When connected to extension module 2 (slot 3):

Xm_3 must always be allocated at an even-numbered address.

When connected to extension module 3 (slot 4):

Xm_4 must always be allocated at an odd-numbered address.

- When extension module D (analog input module) is installed in extension module 1 (slot 2)

Address	7	6	5	4	3	2	1	0
Xm_2(odd-numbered address)	Undefined							
Xm_2+1(even-numbered address)	D07	D06	D05	D04	D03	D02	D01	D00
Xm_2+2(odd-numbered address)	0	0	CHB	CHA	D11	D10	D09	D08

Xm_2 is the start address of slot 2.

- When extension module D (analog input module) is installed in extension module 2 (slot 3)

Address	7	6	5	4	3	2	1	0
Xm_3(even-numbered address)	D07	D06	D05	D04	D03	D02	D01	D00
Xm_3+1(odd-numbered address)	0	0	CHB	CHA	D11	D10	D09	D08
Xm_3+2(even-numbered address)	Undefined							

Xm_3 is the start address of slot 3.

© MyFANUC 195109AB01DC415385669AA015E5BDE5

- When extension module D (analog input module) is installed in extension module 3 (slot 4)

Address	7	6	5	4	3	2	1	0
Xm_4(odd-numbered address)	Undefined							
Xm_4+1(even-numbered address)	D07	D06	D05	D04	D03	D02	D01	D00
Xm_4+2(odd-numbered address)	0	0	CHB	CHA	D11	D10	D09	D08

Xm_4 is the start address of slot 4.

For connection to the I/O Link

NOTE
For connection to the I/O Link, when an extension module D is used, be sure to allocate the start address of X (DI) of the basic module at an even-numbered address.

- When extension module D (analog input module) is installed in extension module 1

Address	7	6	5	4	3	2	1	0
Xm+3(odd-numbered address)	Undefined							
Xm+4(even-numbered address)	D07	D06	D05	D04	D03	D02	D01	D00
Xm+5(odd-numbered address)	0	0	CHB	CHA	D11	D10	D09	D08

(Xm is the start address of the basic module connected to this module.)

- When extension module D (analog input module) is installed in extension module 2

Address	7	6	5	4	3	2	1	0
Xm+6(even-numbered address)	D07	D06	D05	D04	D03	D02	D01	D00
Xm+7(odd-numbered address)	0	0	CHB	CHA	D11	D10	D09	D08
Xm+8(even-numbered address)	Undefined							

(Xm is the start address of the basic module connected to this module.)

- When extension module D (analog input module) is installed in extension module 3

Address	7	6	5	4	3	2	1	0
Xm+9(odd-numbered address)	Undefined							
Xm+10(even-numbered address)	D07	D06	D05	D04	D03	D02	D01	D00
Xm+11(odd-numbered address)	0	0	CHB	CHA	D11	D10	D09	D08

(Xm is the start address of the basic module connected to this module.)

< A/D conversion data>

A/D conversion data for the selected channel is output to the above address as 12-bit data in the following format.

Address in the module D	7	6	5	4	3	2	1	0
Xm	D07	D06	D05	D04	D03	D02	D01	D00
Xm+1	0	0	CHB	CHA	D11	D10	D09	D08

Xm is the first address to which extension module D is allocated.

D00 to D11 represent 12-bit digital output data (complement representation). D00 corresponds to weighting of 2^0 and D11 corresponds to that of -2^{11}. That is, D11 is a sign bit represented as a two's complement.
CHA and CHB represent the channel of which data is converted. This means that when the two bytes above are read with a ladder program, the A-D converted data of the input channel represented by CHA and CHB can be read from D11 to D00.

NOTE
When two-byte digital output addresses are to be referenced with a ladder program, a read must always be performed word-by-word (16 bits).

© MyFANUC 195109AB01DC415385669AA015E5BDE5

8.6.6.3 Channel selection and D/A conversion data for extension module E

<Channel selection>

Extension module E has four analog output channels. Which of the four analog output channels is to be output must be determined with a ladder program. CHA and CHB, which are used to select a channel, are allocated in the DO address area for the module as shown below.

Address in the module	7	6	5	4	3	2	1	0
Yn（even-numbered address）	D07	D06	D05	D04	D03	D02	D01	D00
Yn+1（odd-numbered address）	CHB	CHA	0	0	D11	D10	D09	D08

Yn is the start address of the extension module E connected to this module.

By setting the values listed below to CHA and CHB, the corresponding channel is selected.

CHB	CHA	**Channel selected**
0	0	Channel 1
0	1	Channel 2
1	0	Channel 3
1	1	Channel 4

< D/A conversion data>

By writing 12-bit digital data in D00 to D11 in the above address map, desired voltage and current are output.
D11 is a sign bit represented as a two's complement.

Address in the module	7	6	5	4	3	2	1	0
Yn（even-numbered address）	D07	D06	D05	D04	D03	D02	D01	D00
Yn+1（odd-numbered address）	CHB	CHA	0	0	D11	D10	D09	D08

Yn is the start address of the extension module E connected to this module.

NOTE
1 For connection to the I/O Link, when an extension module E is used, be sure to allocate the start address of Y (DO) of the basic module at an even-numbered address.
2 For connection to the I/O Link *i*, when an extension module E is used, be sure to allocate the start address of the slot which assigned the extension module E at an even-numbered address.

NOTE
1 Be sure to write the target data for D-A conversion with a PMC program word-by-word (16 bits).
2 The output value of each channel is held until another data is written in that channel.
3 Multiple channels cannot be selected within the same ladder scan period. After selecting a channel, wait at least the ladder scan period before selecting another channel.

© MyFANUC 195109AB01DC415385669AA015E5BDE5

8.6.6.4 DO alarm detection

The DO driver of the basic module and extension modules A, B, and C is capable of detecting an overcurrent and measuring its own temperature. If an accident, such as connecting the cable to ground, causes an abnormal increase in the load current or in the driver temperature, a protection circuit, which is provided for each DO driver, is activated and keeps the DO signal in the OFF state until the cause of the problem is eliminated. Even if this occurs, the CNC and I/O module continue operating without entering the alarm status, but the PMC is notified of the location of the error detected by the DO driver. This information can be checked on the PMC status screen or alarm processing can be performed in advance using a ladder to help error check and recovery.
Eliminate a cause after checking the location of the detected error.

Basic module, Extension module A and B

For connection to the I/O Link *i*

For connection to the I/O Link *i*, a DO error such as a ground fault is detected for each signal. This DO error is transferred to the PMC system relay area as a status alarm. The following table lists system relay area information and corresponding DO data related to a status alarm. When an alarm data bit is set to “1”, the DO driver corresponding to the bit detects an error. Also see Subsection 7.3.3, “Status Alarm”.

Information output to the system relay area and corresponding location where an error occurred

Slot number	Alarm information number	Address of the DO driver which detects an error	Location
1	0	Yn_1	Basic module
1	1	Yn_1+1	Basic module
2	0	Yn_2	Extension module 1
2	1	Yn_2+1	Extension module 1
3	0	Yn_3	Extension module 2
3	1	Yn_3+1	Extension module 2
4	0	Yn_4	Extension module 3
4	1	Yn_4+1	Extension module 3

Description of alarm data

#7	#6	#5	#4	#3	#2	#1	#0
Bit 7 error	Bit 6 error	Bit 5 error	Bit 4 error	Bit 3 error	Bit 2 error	Bit 1 error	Bit 0 error

For connection to the I/O Link

For connection to the I/O Link, a DO error such as a ground fault is detected for each byte. Data at DI address Xm+15 identifies the DO error. The following table lists each bit at DI address Xm+15 and corresponding DO area. When a bit at DI address Xm+15 is set to “1”, the corresponding DO driver detects an error.

Alarm detection address and bit	DO address	Location
Xm+15.0	Yn+0	Basic module
Xm+15.1	Yn+1	Basic module
Xm+15.2	Yn+2	Extension module 1
Xm+15.3	Yn+3	Extension module 1
Xm+15.4	Yn+4	Extension module 2
Xm+15.5	Yn+5	Extension module 2
Xm+15.6	Yn+6	Extension module 3
Xm+15.7	Yn+7	Extension module 3

© MyFANUC 195109AB01DC415385669AA015E5BDE5

Extension module C

For connection to the I/O Link *i*

With extension module C, a DO error such as a ground fault is detected for each signal. The DO error is input not in the PMC system relay area, but in the area at the DI address listed in the table below.

- DO alarm bit addresses when extension module C is allocated as extension modules 1 to 3 (0: No DO alarm issued, 1: DO alarm issued).

Address	Bit								Module
	7	6	5	4	3	2	1	0	
Xm_1	Bit 7 of Yn_1	Bit 6 of Yn_1	Bit 5 of Yn_1	Bit 4 of Yn_1	Bit 3 of Yn_1	Bit 2 of Yn_1	Bit 1 of Yn_1	Bit 0 of Yn_1	DO alarm on extension module 1
Xm_1+1	Bit 7 of Yn_1+1	Bit 6 of Yn_1+1	Bit 5 of Yn_1+1	Bit 4 of Yn_1+1	Bit 3 of Yn_1+1	Bit 2 of Yn_1+1	Bit 1 of Yn_1+1	Bit 0 of Yn_1+1	
Xm_2	Bit 7 of Yn_2	Bit 6 of Yn_2	Bit 5 of Yn_2	Bit 4 of Yn_2	Bit 3 of Yn_2	Bit 2 of Yn_2	Bit 1 of Yn_2	Bit 0 of Yn_2	DO alarm on extension module 2
Xm_2+1	Bit 7 of Yn_2+1	Bit 6 of Yn_2+1	Bit 5 of Yn_2+1	Bit 4 of Yn_2+1	Bit 3 of Yn_2+1	Bit 2 of Yn_2+1	Bit 1 of Yn_2+1	Bit 0 of Yn_2+1	
Xm_3	Bit 7 of Yn_3	Bit 6 of Yn_3	Bit 5 of Yn_3	Bit 4 of Yn_3	Bit 3 of Yn_3	Bit 2 of Yn_3	Bit 1 of Yn_3	Bit 0 of Yn_3	DO alarm on extension module 3
Xm_3+1	Bit 7 of Yn_3+1	Bit 6 of Yn_3+1	Bit 5 of Yn_3+1	Bit 4 of Yn_3+1	Bit 3 of Yn_3+1	Bit 2 of Yn_3+1	Bit 1 of Yn_3+1	Bit 0 of Yn_3+1	

How to view the table above

DO alarm data assigned to bit 5 of address Yn_1+1 is written to bit 5 of Xm_1+1.

For connection to the I/O Link

With extension module C, a DO error such as a ground fault is detected for each signal. The DO error is input not in the area at Xm+15, but in the area at the DI address listed in the table below.

- DO alarm bit addresses when extension module C is allocated as extension modules 1 to 3 (0: No DO alarm issued, 1: DO alarm issued). *=Don't care

Address	Bit								Module
	7	6	5	4	3	2	1	0	
Xm+3	Bit 7 of Yn+2	Bit 6 of Yn+2	Bit 5 of Yn+2	Bit 4 of Yn+2	Bit 3 of Yn+2	Bit 2 of Yn+2	Bit 1 of Yn+2	Bit 0 of Yn+2	DO alarm on extension module 1
Xm+4	Bit 7 of Yn+3	Bit 6 of Yn+3	Bit 5 of Yn+3	Bit 4 of Yn+3	Bit 3 of Yn+3	Bit 2 of Yn+3	Bit 1 of Yn+3	Bit 0 of Yn+3	
Xm+5	*	*	*	*	*	*	*	*	
Xm+6	Bit 7 of Yn+4	Bit 6 of Yn+4	Bit 5 of Yn+4	Bit 4 of Yn+4	Bit 3 of Yn+4	Bit 2 of Yn+4	Bit 1 of Yn+4	Bit 0 of Yn+4	DO alarm on extension module 2
Xm+7	Bit 7 of Yn+5	Bit 6 of Yn+5	Bit 5 of Yn+5	Bit 4 of Yn+5	Bit 3 of Yn+5	Bit 2 of Yn+5	Bit 1 of Yn+5	Bit 0 of Yn+5	
Xm+8	*	*	*	*	*	*	*	*	
Xm+9	Bit 7 of Yn+6	Bit 6 of Yn+6	Bit 5 of Yn+6	Bit 4 of Yn+6	Bit 3 of Yn+6	Bit 2 of Yn+6	Bit 1 of Yn+6	Bit 0 of Yn+6	DO alarm on extension module 3
Xm+10	Bit 7 of Yn+7	Bit 6 of Yn+7	Bit 5 of Yn+7	Bit 4 of Yn+7	Bit 3 of Yn+7	Bit 2 of Yn+7	Bit 1 of Yn+7	Bit 0 of Yn+7	
Xm+11	*	*	*	*	*	*	*	*	

How to view the table above

DO alarm data assigned to bit 5 of address Yn+3 is written to bit 5 of Xm+4.

NOTE

1 Xm+5, Xm+8, and Xm+11 cannot be used with extension module C.

2 Even when extension module A or B is allocated as extension module 1 or 2, address space is not shifted.

© MyFANUC 195109AB01DC415385669AA015E5BDE5

States when the protection function is activated in extension module C

The following table lists the DO output and alarm data states when a DO error occurs in extension module C and the protection function is activated.

State	PMC output	Module DO output	DO state indication LED (green)	DO alarm LED (red)	Alarm data
Normal operation	0	OFF	Turned off	Turned off	0
	1	ON	Turned on	Turned off	0
Overheat protection function operation	0	OFF	Turned off	Turned off	0
	1	OFF	Turned off	Turned on	1
Over voltage protection function operation	0	OFF	Turned off	Turned off	0
	1	OFF	Turned off	Turned off	0
Disconnection detection	0	OFF	Turned off	Turned off	0
	1	ON	Turned on	Turned on	1

NOTE

1 If the overheat protection function or over voltage protection function among the protection functions above is activated, the DO bit is kept OFF until the cause is eliminated. When the cause is eliminated, the DO bit is set to ON without restarting the system.

2 Disconnection detection is performed by monitoring, with an output element in the module, the current flowing through a load when DO output is ON. When the detected current value is about 200 mA or less, disconnection detection is assumed. So, when a device (such as an LED) with a small load current is connected, the DO alarm state results, assuming disconnection detection. Unlike the other protection functions, however, this function does not turn off DO output. If a connection is reactivated after the state of disconnection is once set, disconnection detection is canceled without restarting the system.

3 When the ratings current value of the load is larger than the disconnection detection current value, and the rise time of the current that flows to the connected load (such as an solenoid) is late, the disconnection detection function might work. For that case, the disconnection detecting function when DO output is ON can be evaded by programming it to refer to DO alarm allocated to DI after the fixed time has passed since DO was turned on.

© MyFANUC 195109AB01DC415385669AA015E5BDE5

8.6.6.5 Setting the rotary switch

NOTE
In the description in this subsection, slots are applicable only for the I/O Link *i*.

By changing the setting (rotary switch) for the extension modules, connections can be made by omitting some extension modules (slots). Use the same setting method as for I/O modules for connector panel. For details, see Subsection 8.2.11.

Location of the rotary switch

As shown below, the control (rotary switch) is located on an extension module. To change the setting, turn the switch with a flat-bladed screwdriver with a tip width of about 2.5 mm.

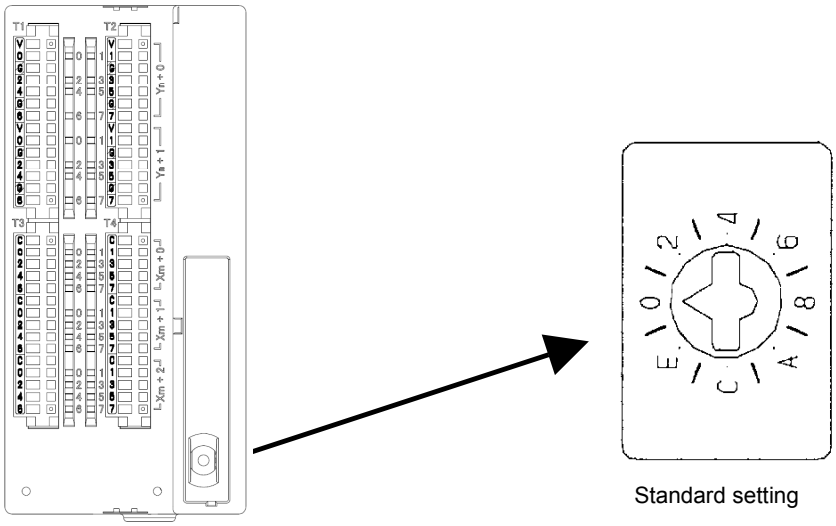

Standard setting

© MyFANUC 195109AB01DC415385669AA015E5BDE5

8.6.7 Others

8.6.7.1 Method of common pin expansion

Additional common pins can be provided by mounting (screwing) a commercially available terminal block on the top cover of an extension module.

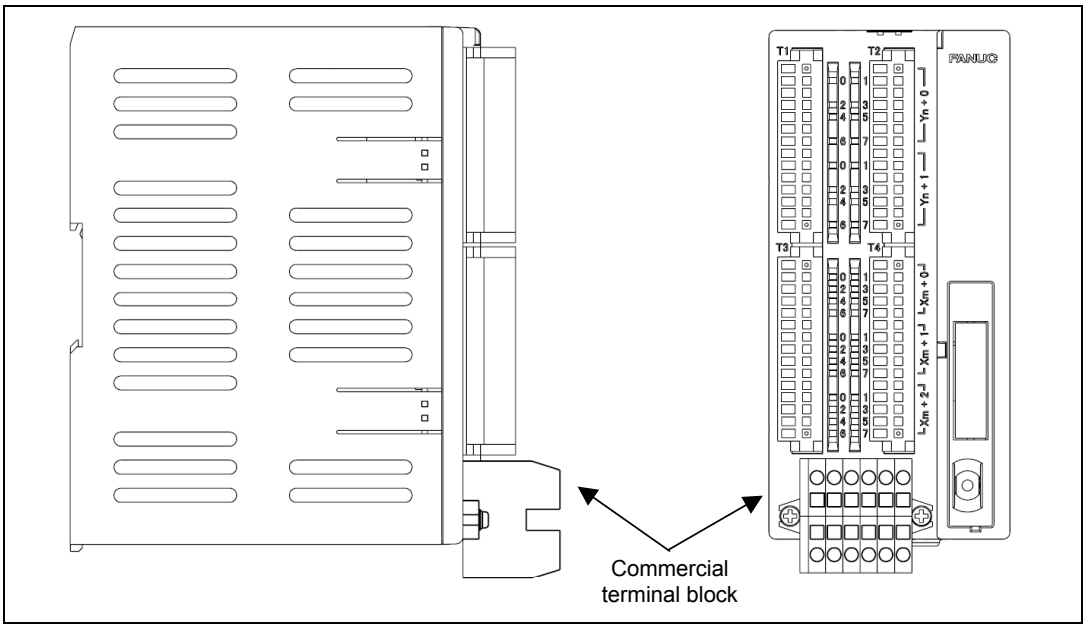

Examples of commercial terminal blocks

Manufacturer	Model	Maximum number of poles
WAGO	869 series	12
Weidmuller	ZDUB2.5 series	10
OSADA	TWM10B series	14

For details of the terminal blocks, contact the respective manufacturers.

© MyFANUC 195109AB01DC415385669AA015E5BDE5

Mounting dimensions of a commercial terminal block

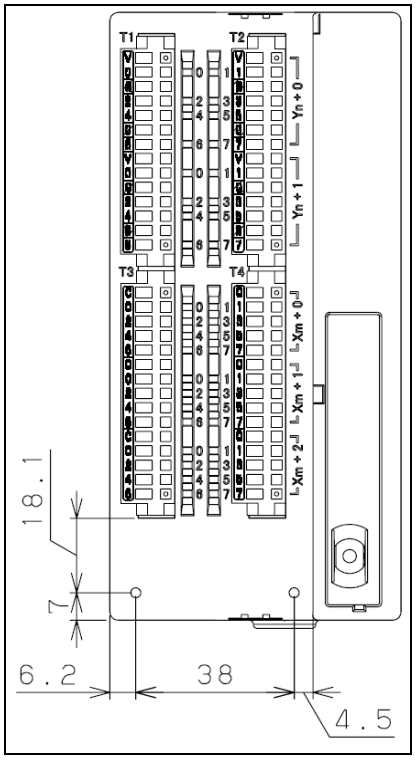

Unit: mm

NOTE
To fasten a terminal block, use M3 tap screws not longer than 10 mm.

© MyFANUC 195109AB01DC415385669AA015E5BDE5

8.6.7.2 Parallel DO (output signal) connection

Basic module, Extension modules A and B

With the basic module and extension modules A and B, a DO load current two times larger can be obtained by connecting DO points in parallel and exercising ON/OFF control at the same time in the sequence as shown below. Namely, the maximum load current per DO point is 200 mA, but 400 mA can be obtained by connecting two DO points in parallel and turning on the two DO points at the same time. In this case, however, the leakage current is also doubled up to 40 μA when the DO points are turned off.

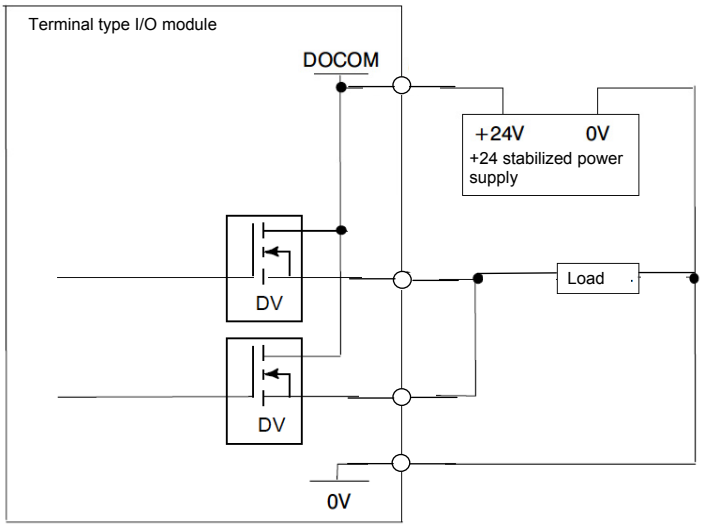

NOTE

1 Be sure to connect the bit at the same address for parallel connection. Three or more signals cannot be connected in parallel.
2 Extension module C does not allow parallel DO connection.

© MyFANUC 195109AB01DC415385669AA015E5BDE5

8.7 I/O Link CONNECTION UNIT

The I/O Link connection unit connects I/O Link master devices such as CNCs via an I/O Link to enable the transfer of DI/DO data between I/O Link master devices on different systems.

8.7.1 Overview

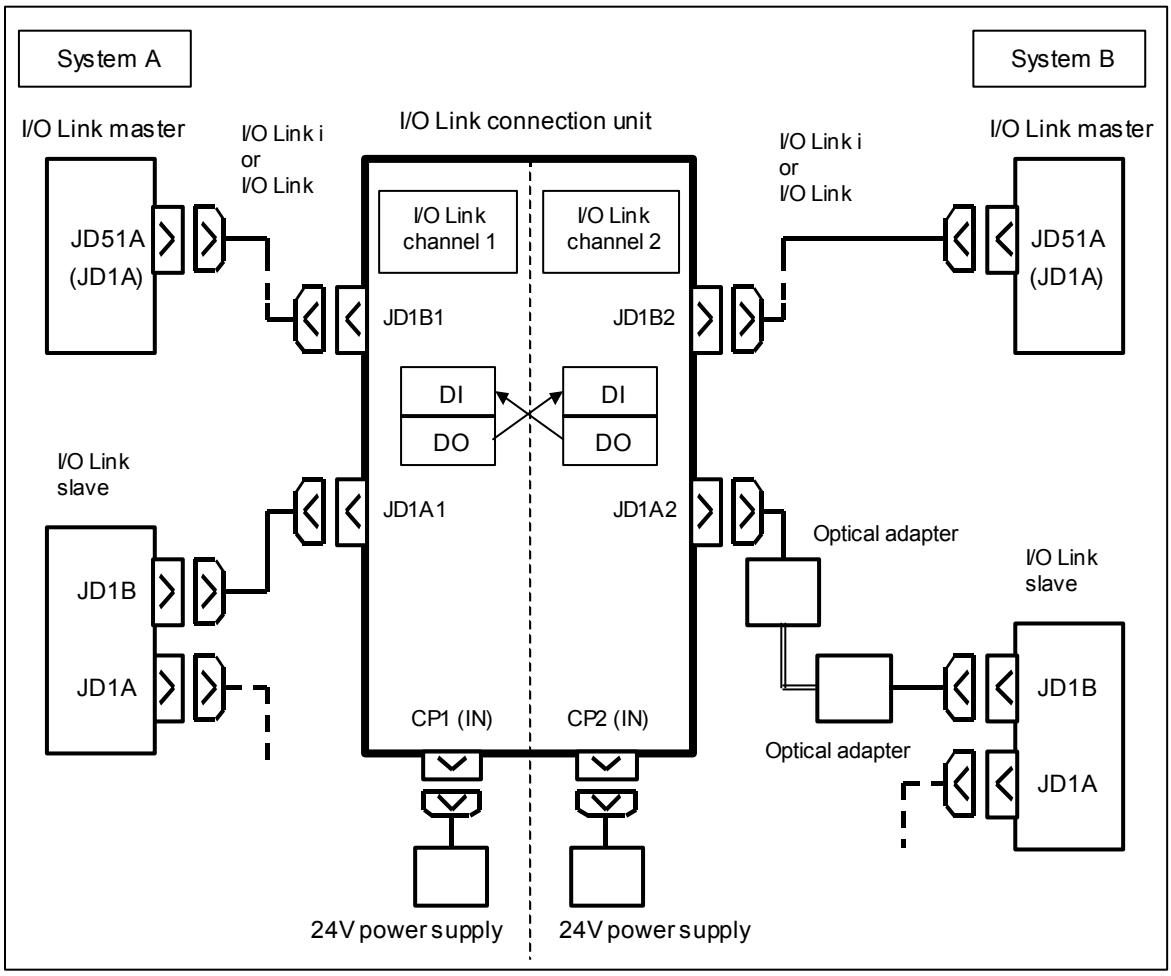

Specification of operation

1) The I/O Link connection unit has two channels of I/O Link slave interfaces.
2) The two I/O Link slave channels can independently operate, and the power to each channel can also turned on and off independently.
3) When both systems operate normally, DO data of one system is transferred as DI data to the other system.
4) When either system stops (NOTE 1), DI data of the other system that is operating is automatically set to all zeros.
5) When both systems normally operate, then either system stops (NOTE 1), it takes up to 200 ms until DI data of the other system that is operating is automatically set to all zeros. During this period, DO data immediately before that system stops is transferred as DI data.
6) When either system that has stopped starts operation, DI data is transferred after the I/O Link communication is established.
7) Any of the following combinations is available for the two I/O Link slave interfaces for operation:
   - I/O Link *i* for both systems
   - I/O Link for both systems

© MyFANUC 195109AB01DC415385669AA015E5BDE5

- I/O Link *i* for either system and I/O Link for the other

8) If an alarm is issued due to a failure in the I/O Link connection unit itself, the I/O Link enters an alarm state in both I/O Link channels.

NOTE

1 The stopped state here means the status in which the power to the system is off for adjustment or maintenance or that in which the I/O Link stops due to an error in the I/O Link master device or another slave device.

2 The specification of operation does not guarantee that the system always operates according to the specification. Therefore, for the signals related to safety, configure a safety circuit outside the I/O Link connection unit.

8.7.2 Specification

Ordering information

Item	Specification
I/O Link connection unit	A02B-0333-C250
Fuse, 1A (one as a spare part)	A03B-0815-K001

Installation conditions

(1) When installing the I/O Link connection unit, satisfy the CNC installation conditions.

(2) Install this unit on a vertical surface, and provide a space of at least 100 mm above and below the unit. Do not place any device that generates a large amount of heat below this unit.

Power supply rating

Item	Specification	Remarks
Voltage	24VDC±10%	±10% includes momentary variations and ripples.
Current	0.3A/channel	When two or less optical adapters are connected
	0.4A/channel	When three or more optical adapters are connected
Heat output	7.5W	When two or less optical adapters are connected
	10W	When three or more optical adapters are connected

I/O Link specification

Item	Specification
Number of DI/DO data items	For each I/O Link slave channel DI: Up to 256, DO: Up to 256 (The number of data items actually used varies depending on the amount of data assigned in the I/O Link master device.)

NOTE

Note the following points when assigning DI/DO data items to each channel:

- The number of DI data items assigned to channel 1 is the same as that of DO data items assigned channel 2.
- The number of DO data items assigned to channel 1 is the same as that of DI data items assigned to channel 2.

© MyFANUC 195109AB01DC415385669AA015E5BDE5

External dimensions/weight

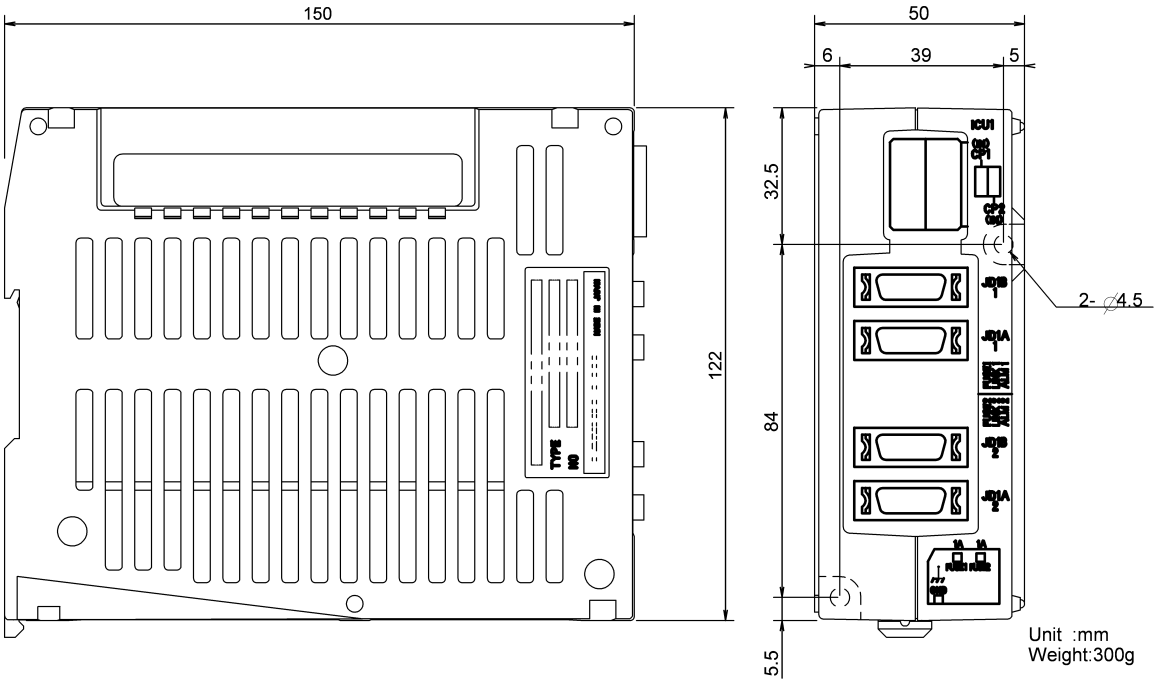

Connector layout

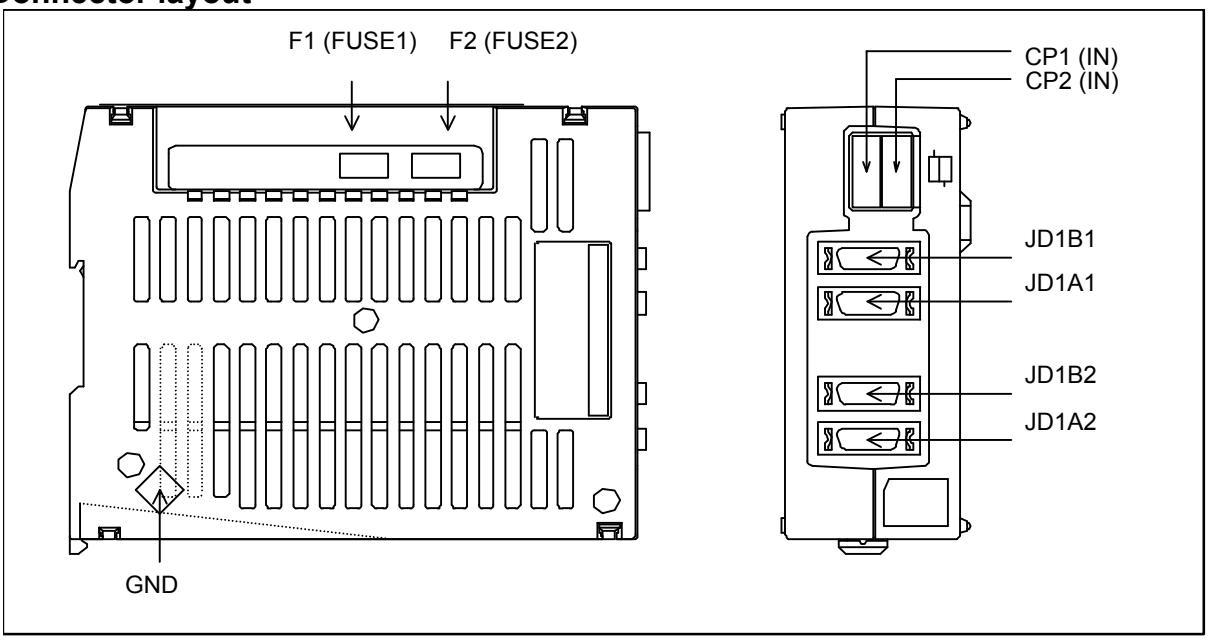

Connector number and fuse number	Purpose
CP1 (IN)	24VDC power input (channel 1)
CP2 (IN)	24VDC power input (channel 2)
JD1B1, JD1A1	I/O Link interface (channel 1)
JD1B2, JD1A2	I/O Link interface (channel 2)
GND	Ground terminal for signals
F1 (FUSE1)	Fuse for channel 1
F2 (FUSE2)	Fuse for channel 2

© MyFANUC 195109AB01DC415385669AA015E5BDE5

8.7.3 Installation

Mounting hole for screwing

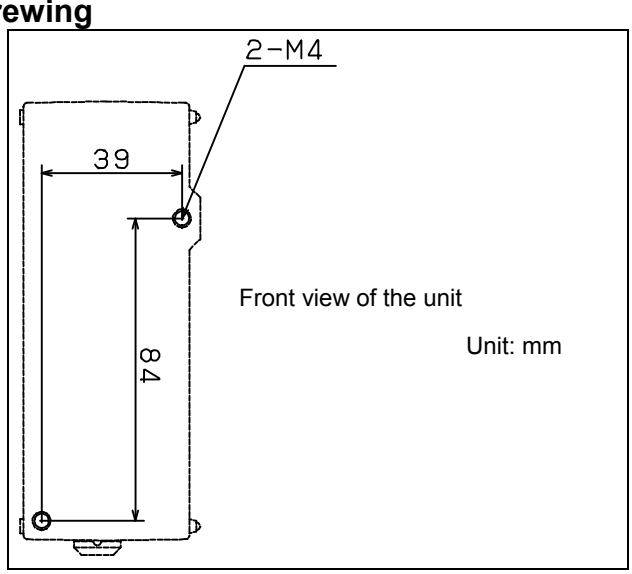

NOTE

1 A screwdriver is inserted on a slant to mount and dismount the unit, so that a sufficient maintenance space is required on both sides of the unit. When the front face of an adjacent unit is flush with the front face of the unit or is recessed, provide a clearance of about 20 mm from the adjacent unit. When the front face of an adjacent unit is more projected toward you than the front face of the unit, provide a clearance of about 70 mm from the adjacent unit.

2 When the unit is to be installed near a side plane of the cabinet, provide a clearance of about 70 mm between the unit and the side plane of the cabinet.

© MyFANUC 195109AB01DC415385669AA015E5BDE5

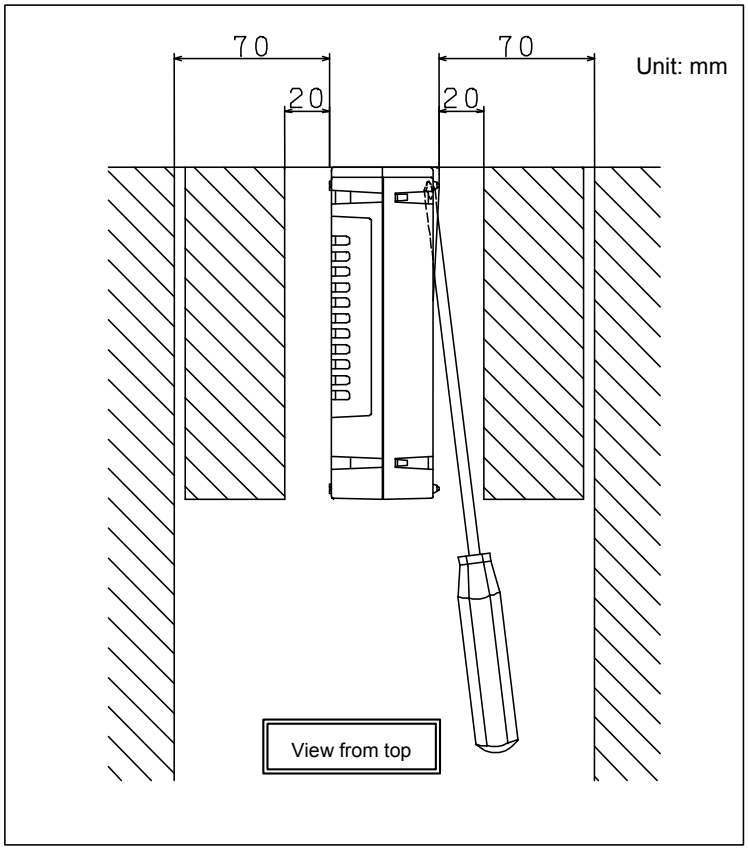

© MyFANUC 195109AB01DC415385669AA015E5BDE5

Using a DIN rail for mounting

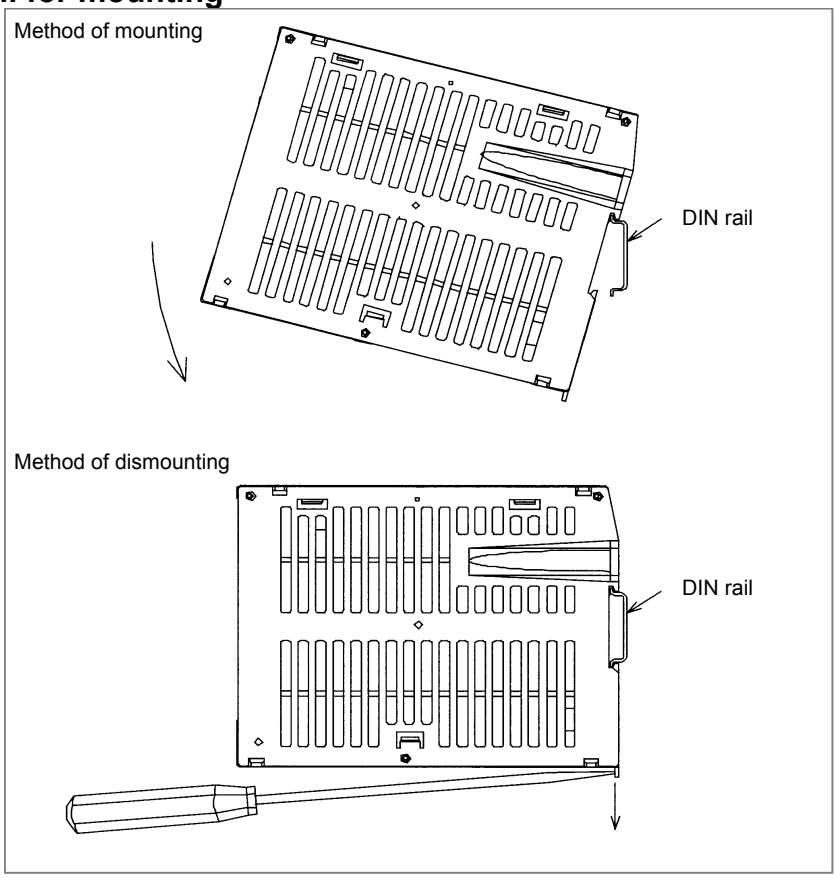

Method of mounting
1. Place the hook of the unit onto the top of the DIN rail.
2. Push the unit until it clicks into place.

Method of dismounting
1. Lower the locking section with a flat-blade screwdriver.
2. Pull the lower part of the unit toward you.

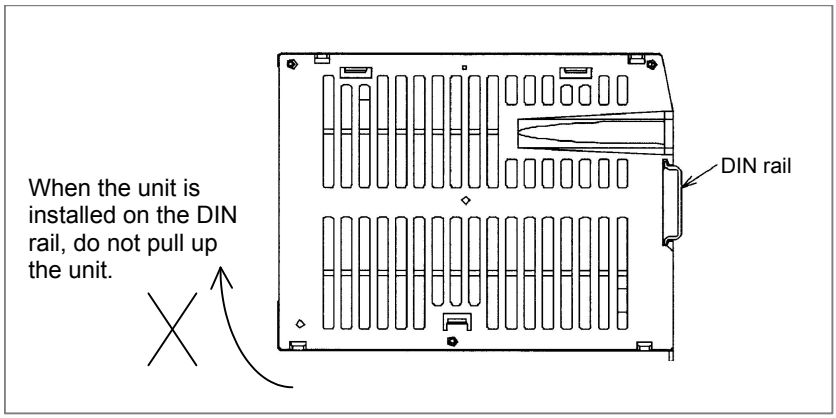

© MyFANUC 195109AB01DC415385669AA015E5BDE5

> ⚠ **CAUTION**
> When the unit is installed, be careful not to damage the lock by applying excessive force.
> When installing and removing the unit, hold the upper and lower ends of the unit so that stress is not applied to the side (that surface with the slits) of the unit.
> When the unit is installed on the DIN rail, do not pull up the unit. Pulling up the unit may damage the case.

8.7.4 Connection

8.7.4.1 I/O Link connection

Sample connection

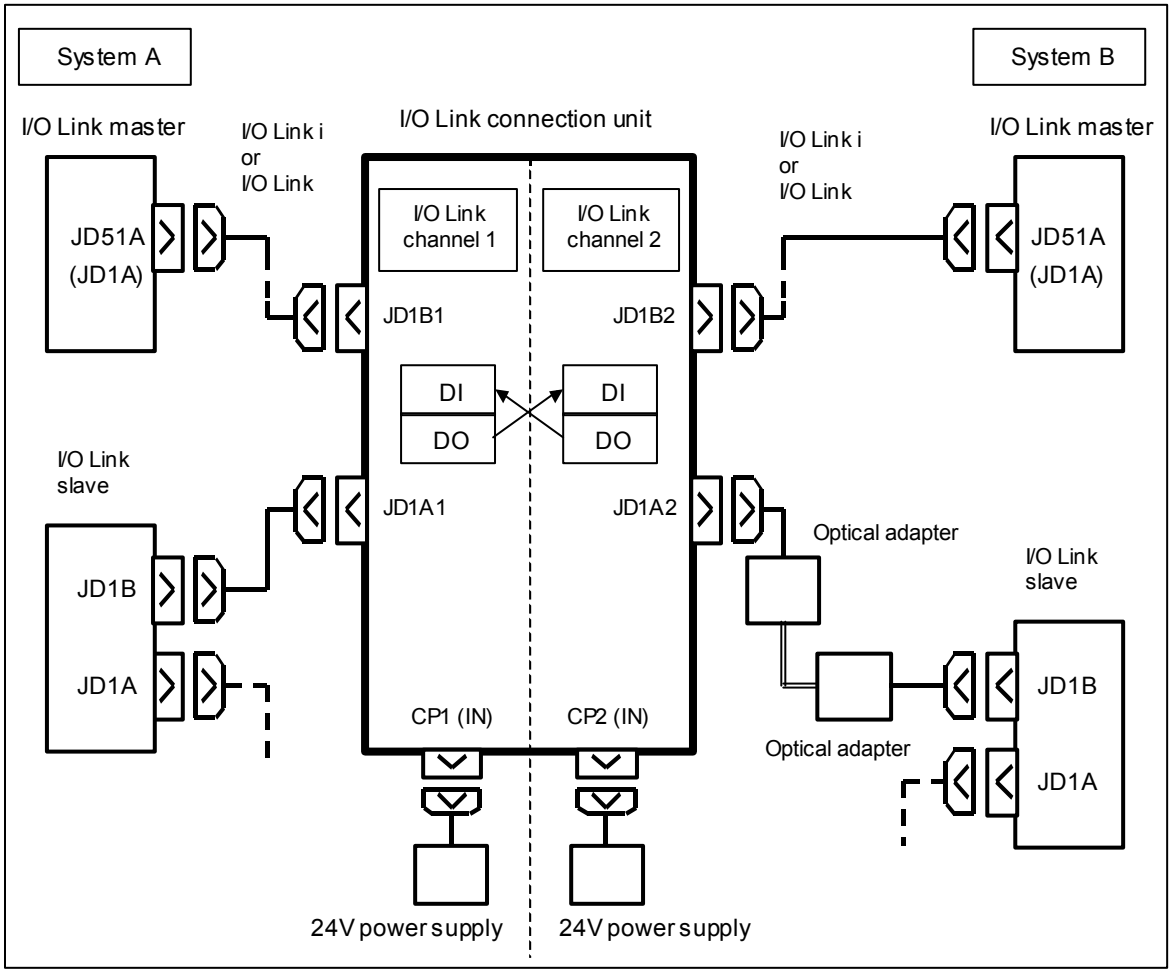

For details of I/O Link connection, see Section 7.2.

> **NOTE**
> 1 A conventional I/O Link connection unit has an optical interface. This model has electric interfaces only. When an optical interface is required, use an optical adapter for connection.
> 2 To an electric interface on this unit, 5 V power is supplied for an optical adapter, though it is not supplied for an optical adapter to an electric interface on a conventional I/O Link connection unit.

© MyFANUC 195109AB01DC415385669AA015E5BDE5

NOTE

3 When optical adapters are connected, the power supply rating of the 24 V power supply differs depending on the number of optical adapters connected to the I/O Link connection unit. For the power supply rating, see Subsection 8.7.2.

8.7.4.2 Power connection

Supply the power required for operation of this unit to the connectors shown in the figure below, CP1(IN) and CP2(IN).
Supplying the power to CP1(IN) operates the I/O Link of channel 1.
Supplying the power to CP2(IN) operates the I/O Link of channel 2.

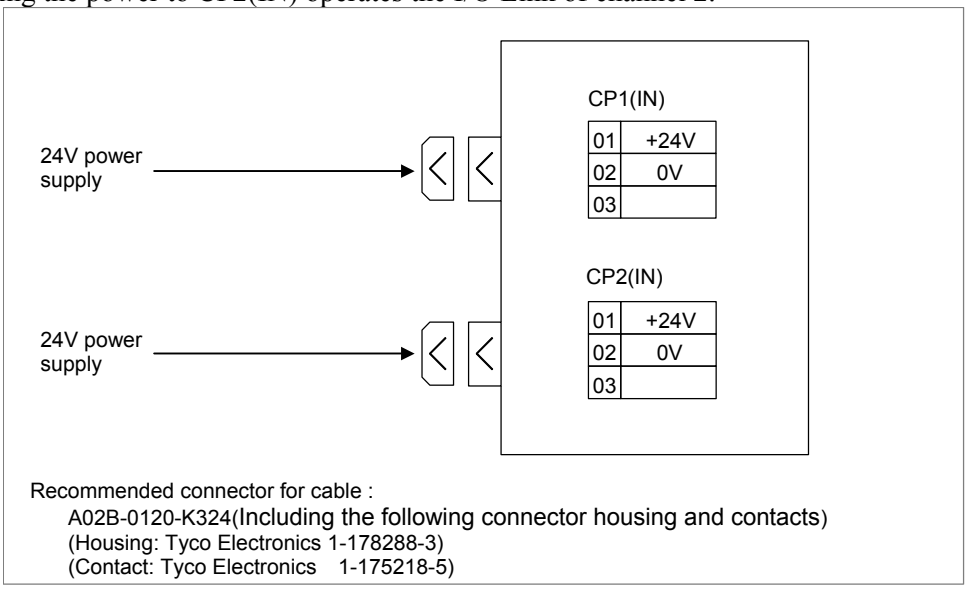

© MyFANUC 195109AB01DC415385669AA015E5BDE5

Ground terminal for signals

Secure the ground line to the ground terminal (GND) for signals, which is located at the bottom of each unit, with an M3 screw as shown in the figure below. Connect the ground line to the ground plate of the cabinet.

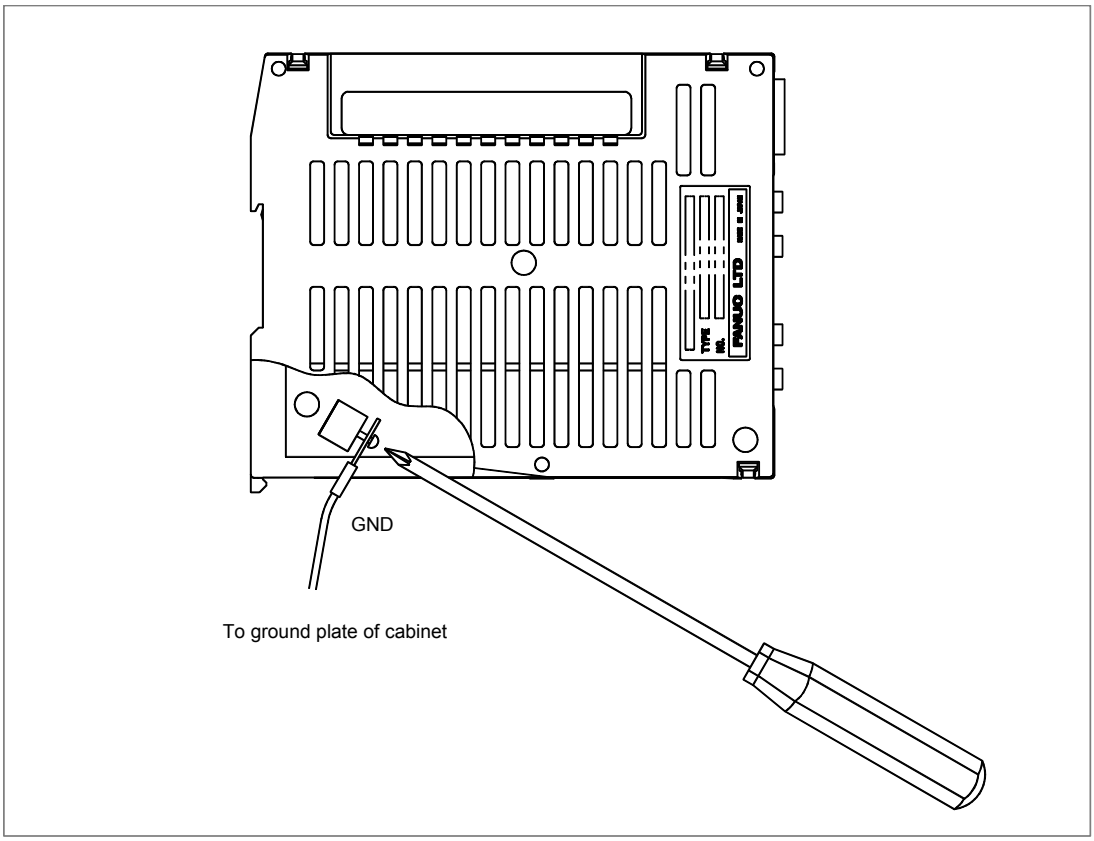

NOTE

The torque with which a screw is tightened is 0.5 N·m or less.

© MyFANUC 195109AB01DC415385669AA015E5BDE5

8.8 CONNECTION TO STANDARD MACHINE OPERATOR'S PANEL

8.8.1 Overview

The standard machine operator's panel for the Power Motion *i* consists of the following operator's panels.

- Main panel
  The main panel is a machine operator's panel connected with the Power Motion *i* by the I/O Link *i* or I/O Link with independent key switches all of which key tops are detachable.

- Sub panel AA, D
  Sub panels AA and D are operator's panels with power ON/OFF, emergency stop, program protect, and two override rotary switches to enable the signal from each switch to be transferred to the power magnetics cabinet via the main panel. ON-switch has a LED.

© MyFANUC 195109AB01DC415385669AA015E5BDE5

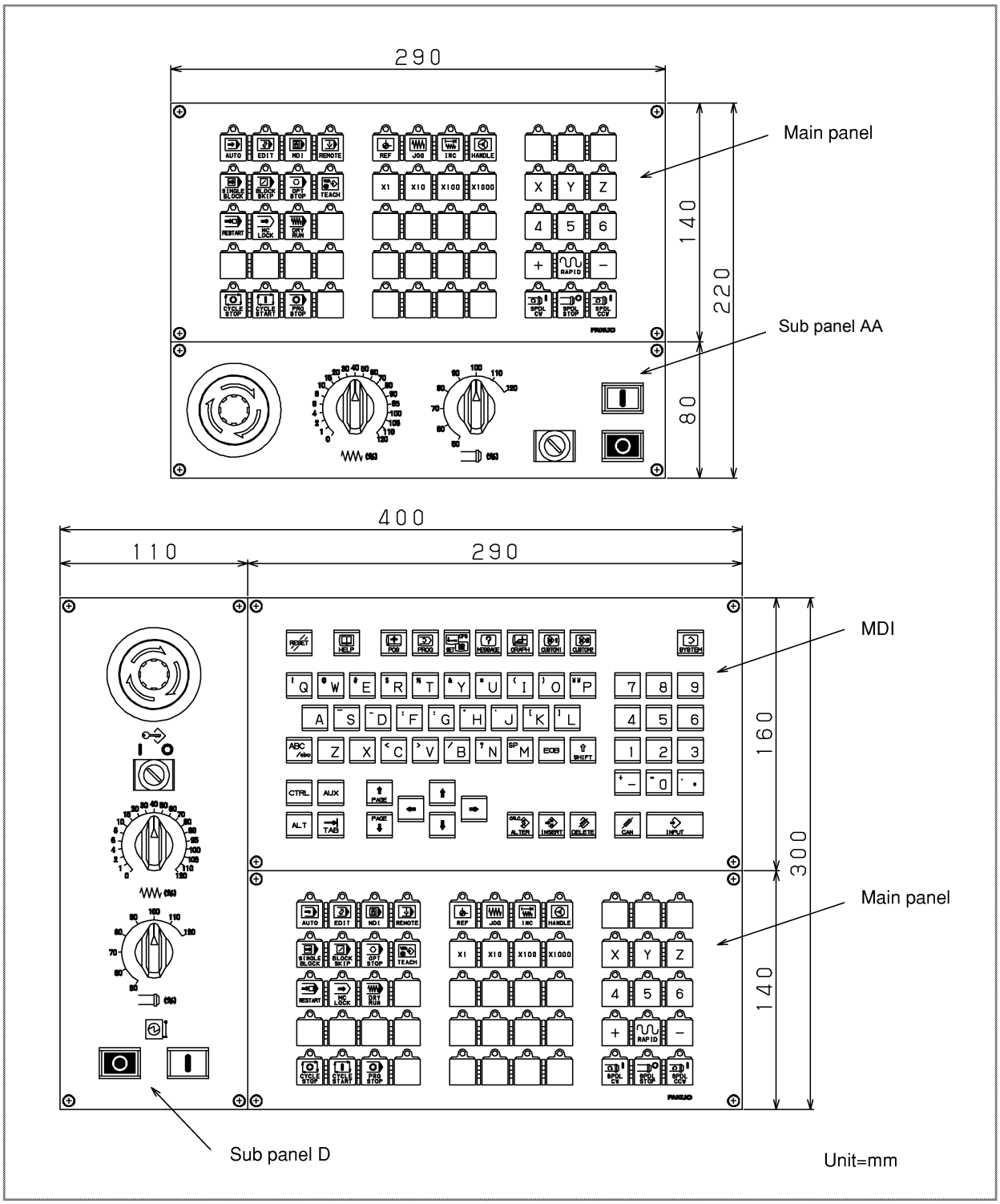

© MyFANUC 195109AB01DC415385669AA015E5BDE5

8.8.2 Total Connection Diagram

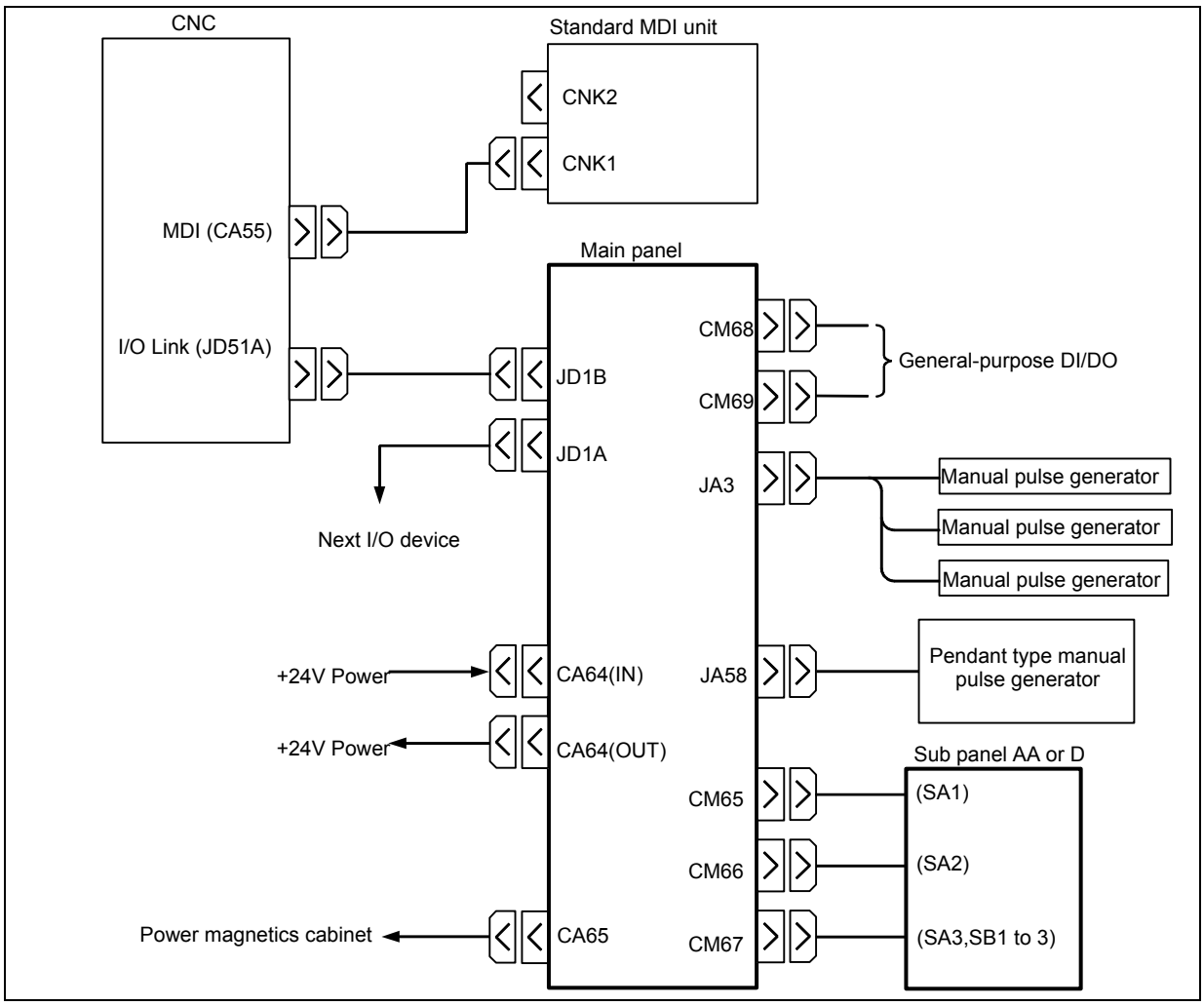

NOTE
Manual pulse generators cannot be connected to JA3 and JA58 simultaneously.

© MyFANUC 195109AB01DC415385669AA015E5BDE5

8.8.3 DI/DO Address Map

8.8.3.1 For connection to the I/O Link *i*

Address map for connection to the I/O Link *i*

DI space map

Xm_1	General purpose input signal	Slot 1
$Xm_1 + 1$		
$Xm_1 + 2$		
$Xm_1 + 3$		
$Xm_1 + 4$	Matrix input signal (key switch)	
$Xm_1 + 5$		
$Xm_1 + 6$		
$Xm_1 + 7$		
$Xm_1 + 8$		
$Xm_1 + 9$		
$Xm_1 + 10$		
$Xm_1 + 11$		

Xm_2 (for 1st MPG)	Manual pulse generator	Slot MPG
$Xm_2 + 1$ (for 2nd MPG)		
$Xm_2 + 2$ (for 3rd MPG)		

DO space map

Yn_1	Matrix output signal (key LED) Including general-purpose output signal	Slot 1
$Yn_1 + 1$		
$Yn_1 + 2$		
$Yn_1 + 3$		
$Yn_1 + 4$		
$Yn_1 + 5$		
$Yn_1 + 6$		
$Yn_1 + 7$		

Xm_1, Xm_2, and Yn_1 indicate the start address at allocation.

For the main panel, allocate 12-byte DI addresses to slot 1 and 8-byte DO addresses to slot 1. The main panel has an interface for three manual pulse generators. To use manual pulse generators, allocate addresses to slot MPG. With this setting, addresses can be allocated to the three manual pulse generators at a time (addresses cannot be allocated individually to manual pulse generators). Do not use the addresses with the ladder because the CNC processes the manual pulse generator signals directly.

8.8.3.2 For connection to the I/O Link

Address map for connection to the I/O Link

DI space map

Xm	General purpose input signal
Xm+1	
Xm+2	
Xm+3	
Xm+4	Matrix input signal (key switch)
Xm+5	
Xm+6	
Xm+7	
Xm+8	
Xm+9	
Xm+10	
Xm+11	
Xm+12 (for 1st MPG)	Manual pulse generator
Xm+13 (for 2nd MPG)	
Xm+14 (for 3rd MPG)	
Xm+15	DO error detection

DO space map

Yn	Matrix output signal (key LED) Including general-purpose output signal
Yn+1	
Yn+2	
Yn+3	
Yn+4	
Yn+5	
Yn+6	
Yn+7	

For the main panel, allocate 16-byte DI addresses as one group and 8-byte DO addresses as one group. Do not use addresses Xm+12 to Xm+14 in the above table with the ladder because the CNC processes the manual pulse generator signals directly.

© MyFANUC 195109AB01DC415385669AA015E5BDE5

8.8.4 Each Connections

8.8.4.1 Pin assignment

CA64 (Power source)

3		2	0V	1	+24V
6		5	0V	4	+24V

Recommended connector for cable:
Housing: Tyco Electronics 1-17288-3(3 pins type)
Contact: Tyco Electronics 1-175218-5

CM67 (ON/OFF, Program protect, ESP)

A01	EON	B01	EOFF
A02	COM1	B02	COM2
A03	Xm+1.4	B03	KEYCOM
A04	*ESP	B04	ESPCM1
A05	TR1	B05	TR2

Recommended connector for cable:
Housing: Tyco Electronics 178289-5
Contact: Tyco Electronics 1-175218-5

CM65 (General–purpose DI)

A01		B01	
A02		B02	Xm+0.5
A03	Xm+0.1	B03	Xm+0.3
A04	+24V	B04	Xm+0.4
A05	Xm+0.2	B05	Xm+0.0

Recommended connector for cable:
Hirose electric : HIF3BA–10D–2.54R

CM68 (General–purpose DI/DO)

A01	+24V	B01	Xm+1.5
A02	Xm+1.6	B02	Xm+1.7
A03	Xm+2.0	B03	Xm+2.1
A04	Xm+2.2	B04	Xm+2.3
A05	Xm+2.4	B05	Xm+2.5
A06	TR3	B06	TR4
A07	TR5	B07	TR6
A08	Yn+5.3	B08	Yn+5.7
A09	Yn+6.3	B09	Yn+6.7
A10	DOCOM	B10	0V

Recommended connector for cable:
Housing: Tyco Electronics 178289-8
Contact: Tyco Electronics 1-175218-5

CA65 (Power magnetic cabinet)

A01	EON	B01	EOFF
A02	COM1	B02	COM2
A03	*ESP	B03	ESPCM1
A04	TR1	B04	TR2
A05	TR3	B05	TR4
A06	TR5	B06	TR6
A07	TR7	B07	TR8
A08		B08	
A09		B09	
A10		B10	

Recommended connector for cable:
Hirose electric : HIF3BA–20D–2.54R

CM66 (General–purpose DI)

A01		B01	
A02		B02	Xm+1.3
A03	Xm+0.7	B03	Xm+1.1
A04	+24V	B04	Xm+1.2
A05	Xm+1.0	B05	Xm+0.6

Recommended connector for cable:
Hirose electric : HIF3BA–10D–2.54R

CM69 (General–purpose DI/DO)

A01	+24V	B01	Xm+2.6
A02	Xm+2.7	B02	Xm+3.0
A03	Xm+3.1	B03	Xm+3.2
A04	Xm+3.3	B04	Xm+3.4
A05	Xm+3.5	B05	Xm+3.6
A06	Xm+3.7	B06	DICOM
A07	TR7	B07	TR8
A08	Yn+7.3	B08	Yn+7.4
A09	Yn+7.5	B09	Yn+7.6
A10	DOCOM	B10	0V

Recommended connector for cable:
Housing: Tyco Electronics 178289-8
Contact: Tyco Electronics 1-175218-5

NOTE

1 DI/DO pins and MPG signal pins (1 axis) in shaded by ▭ are in pairs. Main panel has connector ‘JA58’ to connect the pendant-type MPG. In this connector, there are DIs (9 points) used to selection of axes and multiplier, DO (1 point) for LED, and signals for MPG (1 axis). These signals are in CM68 for general-purpose DI/DO and JA3 for MPG too. Only one in each pair is usable.

2 Pins shaded by ■ are used for the relay. There are two uses in these signals as follows.
(1) When a sub panel is connected to the main panel, signals in CM67 from the sub panel are out to CA65.
(2) Open pins (TR1-TR8) in CM68, CM69 for general-purpose DI/DO and CM67 for connection to the sub panel are connected directly to CA65.
These signals can be relayed to the power magnetic cabinet by using a flat cable.

© MyFANUC 195109AB01DC415385669AA015E5BDE5

J A 3 (for manual pulse generator)

1	HA1	11	
2	HB1	12	0V
3	HA2	13	
4	HB2	14	0V
5	HA3	15	
6	HB3	16	0V
7		17	
8		18	+5V
9	+5V	19	
10		20	+5V

J A 5 8 (for pendant type manual pulse generator)

1	HA1	11	Xm+1.5
2	HB1	12	0V
3	Xm+2.2	13	Xm+1.6
4	Xm+2.3	14	0V
5	Xm+2.4	15	Xm+1.7
6	Xm+2.5	16	0V
7	Yn+5.3	17	Xm+2.0
8	Xm+2.1	18	+5V
9	+5V	19	+24V
10	+24V	20	+5V

Recommended connector for cable of JA3 and JA58
When the depth of the operator's panel is 60mm min.
Hirose electric :FI30-20S (Connector), FI-20-CV7 (Case)
When the depth of the operator's panel is 80mm min.
Recommended connector for cable of JA3:
Hirose electric :FI40B-2015S (Connector), FI-20-CV (Case)
Recommended connector for cable of JA58:
Honda : PCR-E20FA (Connector), PCR-V20LA (Case)
Hirose electric : FI30-20S (Connector), FI-20-CV2 (Case)
FUJITSU COMPONENT: FCN-247J020-G/E (Connector), FCN-240C020-Y/S (Case)
Molex : 52622-2011 (Connector), 52624-2015 (Case)

NOTE

DI/DO signals and MPG signals (1 axis) in shaded by ▭ are in pairs. In JA58 for the pendant-type MPG, there are DIs (9 points) used to selection of axes and multiplier, DO (1 point) for LED, and MPG signals (for 1 axis). These signals are in CM68 for general-purpose DI/DO and JA3 for MPG too. Only one in each pair is usable.

© MyFANUC 195109AB01DC415385669AA015E5BDE5

8.8.4.2 Power supply connection

The power required for the operation of this operator's panel and for a general DI must be supplied to connector CA64 (IN) in the following figure. Since the power input from CA64 (IN) is output to CA64 (OUT) for easy branching, use the power from CA64 (OUT) when the power must be branched. Up to 1.0 A can be supplied by branching.

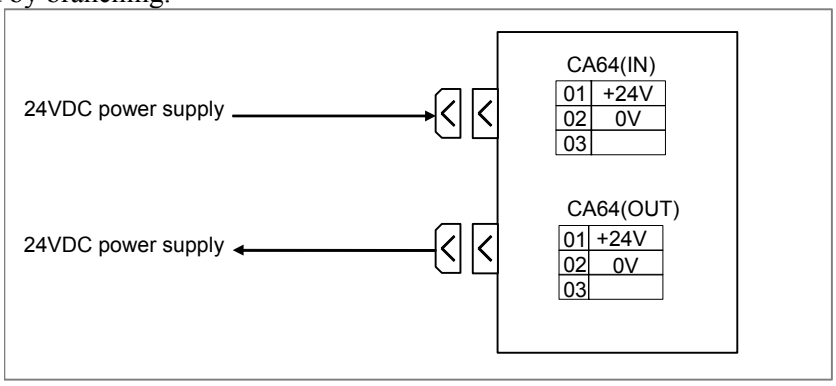

NOTE

1 Both connectors CA64(IN) and CA64(OUT) are same specification. And there is not indication of (IN) and (OUT) on the PCB.

2 Power supply for the operator's panel must not turn off at operation. If +24V is turned off at operation, CNC happen to get system alarm (Communication alarm between CNC and operator's panel). +24V for operator's panel must be supplied before or same time CNC power on.

8.8.4.3 I/O Link connection

For I/O Link connection, see Section 7.2.

8.8.4.4 Emergency stop signal connection

The signal from the emergency stop switch on the sub panel can be connected to the power magnetics cabinet via the main panel. (This signal is not sent to the CNC via the I/O Link).
In the sub panel AA and D, wirings had been connected to the connector form the emergency stop switch. (1 contact) Then, connect this connector to CM67 in the main panel.

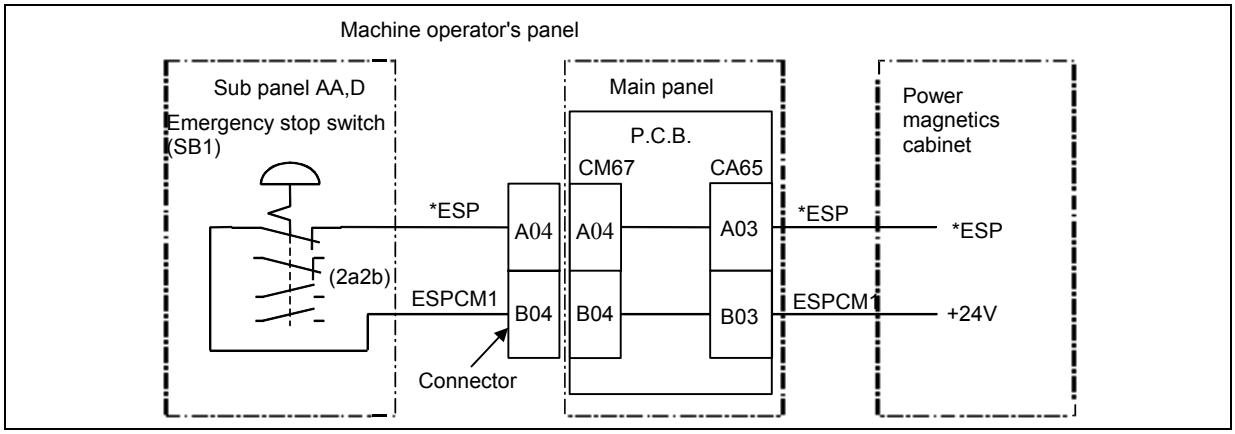

© MyFANUC 195109AB01DC415385669AA015E5BDE5

8.8.4.5 Power ON/OFF control signal connection

The signal from the ON/OFF switch on the sub panel can be connected to the power magnetics cabinet via the main panel. (This signal is not sent to the CNC via the I/O Link).
In the sub panel AA and D, wirings had been connected to the connector form the ON/OFF switch. (1 contact) Then, connect this connector to CM67 in the main panel.

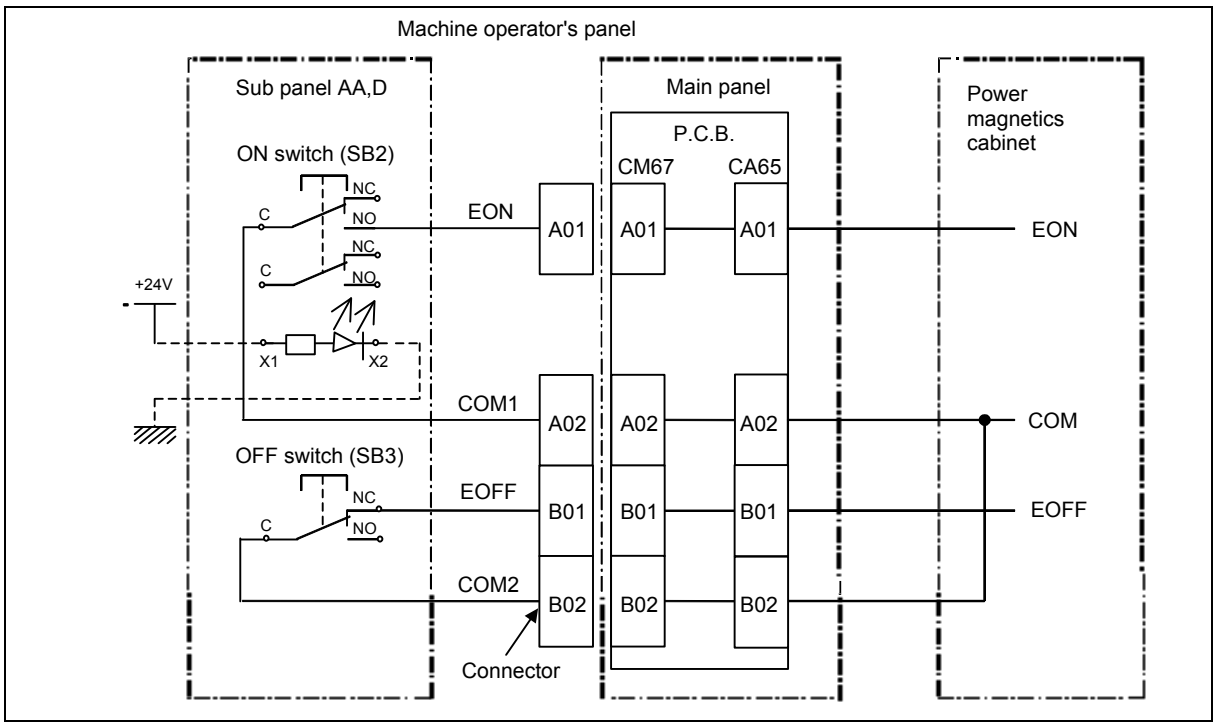

NOTE

1 ON switch of Sub panel AA and D has 2 c-contacts and LED.
To make luminous of LED, the power supply of 24V±10% DC must be supplied to X1 and X2 pin of ON switch.
(Circuit of LED part of ON switch built in the limitation current resistance.
Rated current of circuit of LED part is 10mA.)

2 OFF switch has 1 c-contact and no LED.

© MyFANUC 195109AB01DC415385669AA015E5BDE5

8.8.4.6 General-purpose DI signal connection

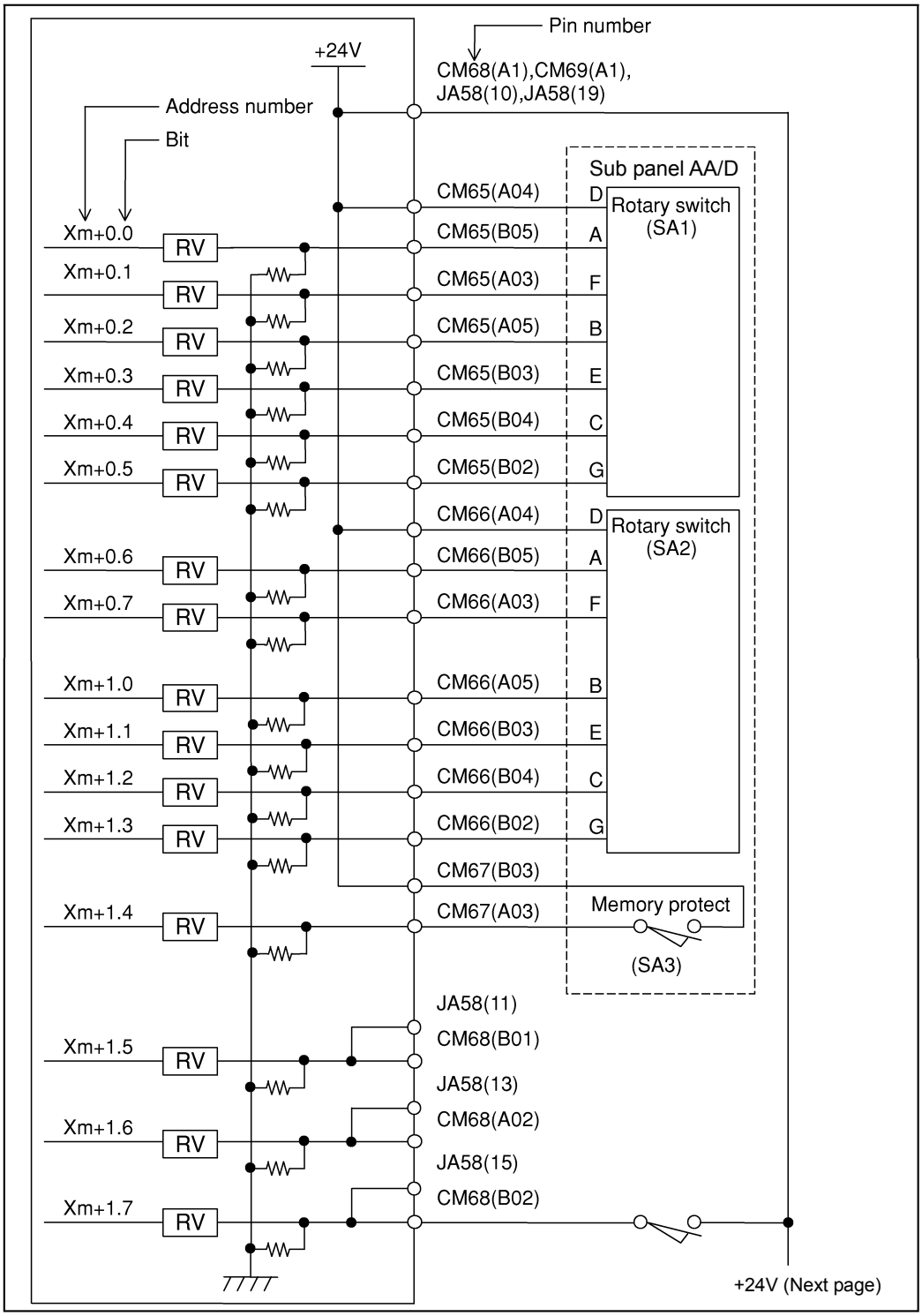

NOTE

1 Connection of Xm+0.0 to Xm+0.7, Xm+1.0 to Xm+1.4 shows when the Sub panel AA/D is used.

© MyFANUC 195109AB01DC415385669AA015E5BDE5

NOTE

2 In the sub panel AA and D is used, wirings had been connected to the connector form the memory protect switch. Then, connect this connector to CM67 in the main panel. And cables from rotary switches had been connected. Then, connect these cables to CM65, CM66 in the main panel.

3 JA58 DI signals can be used as a signal for axis selection or multiplier setting when a pendant type manual pulse generator is connected. Do not connect any DI signal used for axis selection or multiplier setting to CM68.

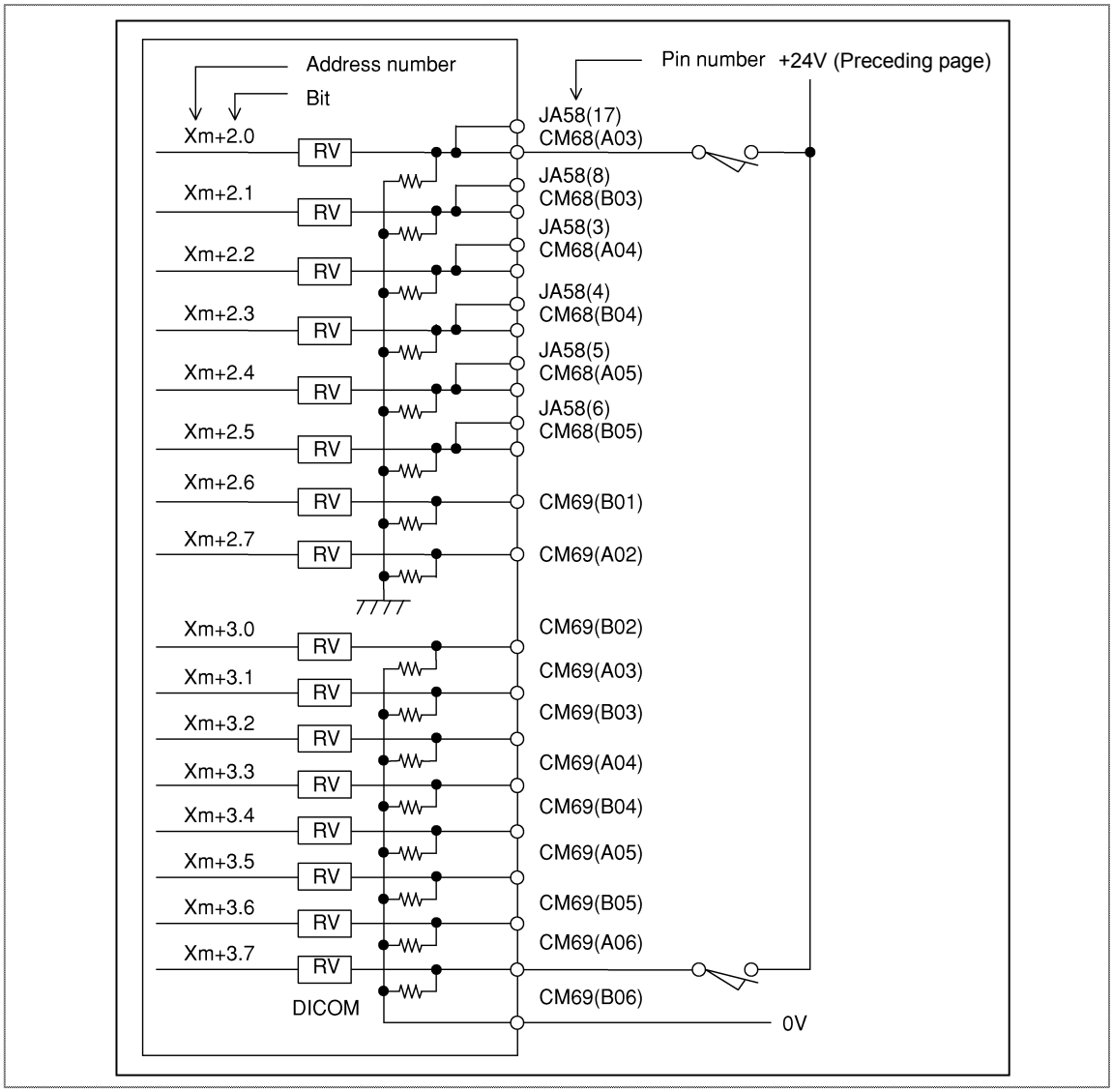

⚠ CAUTION

An output DC voltage of +24 V at CM68 (A1), CM69 (A1), CM65 (A04), CM66 (A04), JA58 (10), and JA58 (19) is for DI signals. Do not supply 24 VDC to these pins from the outside.

NOTE

1 JA58 DI signals can be used as a signal for axis selection or multiplier setting when a pendant type manual pulse generator is connected. Do not connect any DI signal used for axis selection or multiplier setting to CM68.

© MyFANUC 195109AB01DC415385669AA015E5BDE5

NOTE

2 Xm+3.0 to 3.7 have a common line that is possible to select the source/sink type. If DICOM (CM69-B06pin) is connected to +24V, the DI signal logic is negative. But in this connection, if the DI signal wires happen to drop the ground level, the status of the DI signal is same as the DI signal is "ON". From the safety viewpoint, DICOM should be connected 0V.

3 From the safety viewpoint, Emergency Stop signal must be assigned on the address Xm+0.0 to 0.7 or Xm+1.0 to 1.7 or Xm+2.0 to 2.7. As refer to the Subsection 8.8.3, assign the Emergency stop DI.

4 For the unconnected pins at addresses fro which the common voltage is fixed (from Xm+0.0 to Xm+0.7, from Xm+1.0 to Xm+1.7, and from Xm+2.0 to Xm+2.7), the input is “0”. For the unconnected pins at the addresses for which a common voltage can be selected (from Xm+3.0 to Xm+3.7), the input is “0” when the DICOM (CM69 (B06) pin) is connected to 0 V or “1” when it is connected to +24 V. Connect DICOM (CM69 (B06) pin) when used. When addresses from Xm+3.0 to Xm+3.7 are not used, connect DICOM to 0 V.

8.8.4.7 General-purpose DO signal connection

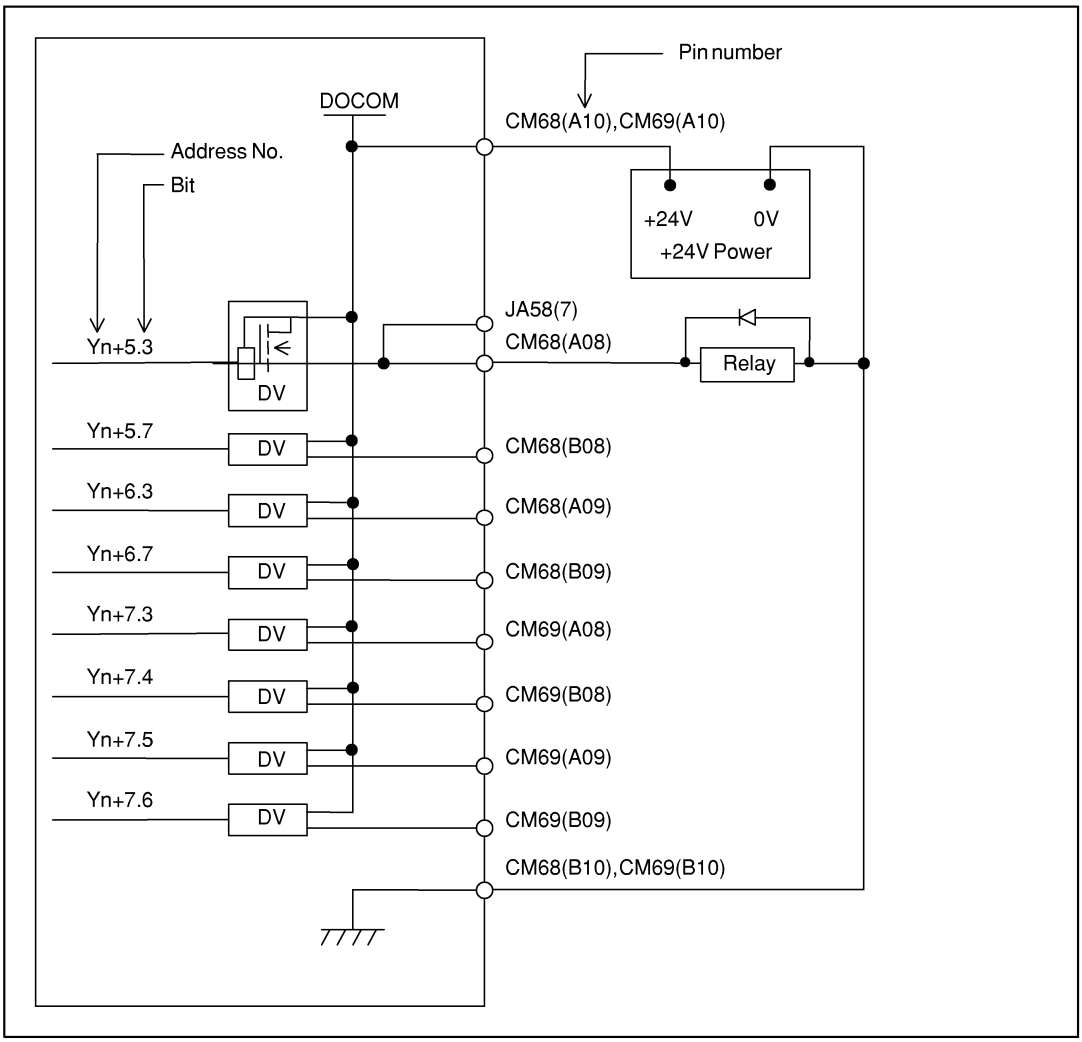

© MyFANUC 195109AB01DC415385669AA015E5BDE5

NOTE
Yn+5.3 can be used when a pendant type manual pulse generator is connected to JA58. In this case, however, do not connect Yn+5.3 to CM68.

8.8.5 Manual Pulse Generator Connection

8.8.5.1 When only the manual pulse generator

For the connection when only three manual pulse generators are connected, see Subsection 7.4.1.

8.8.5.2 When a pendant type manual pulse generator

To use a pendant type manual pulse generator, connect it to JA58.

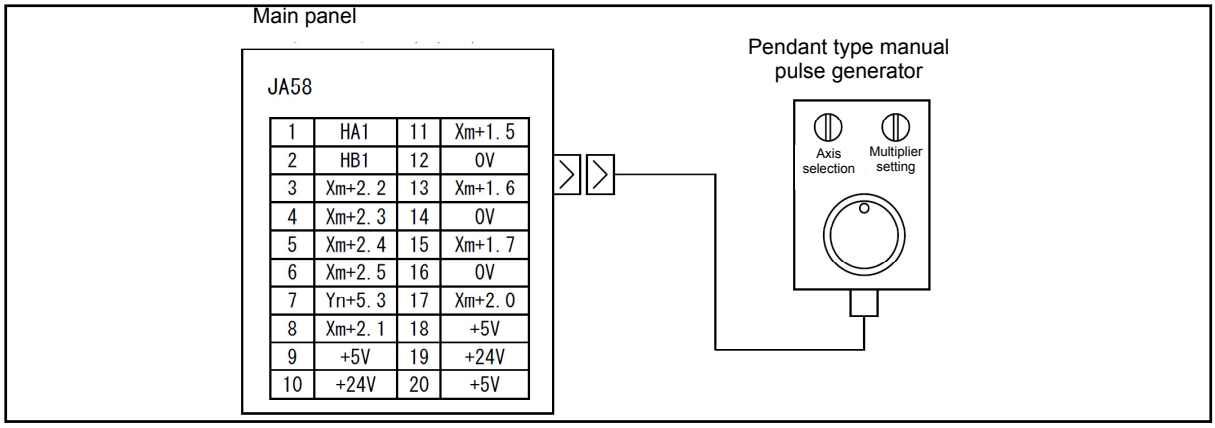

1	HA1	11	Xm+1.5
2	HB1	12	0V
3	Xm+2.2	13	Xm+1.6
4	Xm+2.3	14	0V
5	Xm+2.4	15	Xm+1.7
6	Xm+2.5	16	0V
7	Yn+5.3	17	Xm+2.0
8	Xm+2.1	18	+5V
9	+5V	19	+24V
10	+24V	20	+5V

NOTE
1 When Xm+1.5 to Xm+2.5 of connector JA58 are allocated as the DIs used for the axis selection and multiplier setting, Xm+1.5 to Xm+2.5 of connector CM68 cannot be used.
2 One DO is available for the manual pulse generator side at the user's direction. When this is used, Yn+5.3 of CM68 cannot be used, as in the case for DIs above.

© MyFANUC 195109AB01DC415385669AA015E5BDE5

8.8.6 Connector (on the Cable Side) Specifications

Connector	Manufacture specification		Order specification
JD1A, JD1B, JA3, JA58 (Operators panel depth=60mm min.)	Stand wire press-mount type	Hirose FI30-20S (Connector) FI-20-CV7 (Case)	A02B-0236-K302
JD1A, JD1B, JA58 (Operators panel depth=80mm min.)	Soldering type	Honda PCR-E20FS (Connector) PCR-V20LA (Case)	A02B-0120-K301
		Hirose FI40B-20S (Connector) FI-20-CV2 (Case)	
	Stand wire press-mount type	Honda PCR-E20FA (Connector) PCR-V20LA (Case)	A02B-0120-K302
		Hirose FI30-20S (Connector) FI-20-CV2 (Case)	
JA3 (Operators panel depth=80mm min.)	Soldering type	Hirose FI40B-2015S (Connector) FI-20-CV (Case)	A02B-0120-K303
CA64 (IN), CA64 (OUT)	Tyco Electronics 1-178288-3 (Housing) 1-175218-5 (Contact)		A02B-0120-K324
CM67	Tyco Electronics 178289-5 (Housing) 1-175218-5 (Contact)		A02B-0236-K312
CM68, CM69	Tyco Electronics 178289-8 (Housing) 1-175218-5 (Contact)		A02B-0236-K313
CM65, CM66	Hirose HIF3BA-10D-2.54R		A02B-0236-K314
CA65	Hirose HIF3BA-20D-2.54R		A02B-0120-K343
CA55	JAV LY10-DC10 (Housing) LY10-C2-3 (Contact)		A02B-0236-K303

8.8.7 DI/DO Addresses for the Keyboard

I/O address of Keyswitches (matrix input) and LED (matrix output) on the keyboard of Main panel are as follows.

BIT / Key/LED	7	6	5	4	3	2	1	0
Xm+4/Yn+0	B4	B3	B2	B1	A4	A3	A2	A1
Xm+5/Yn+1	D4	D3	D2	D1	C4	C3	C2	C1
Xm+6/Yn+2	A8	A7	A6	A5	E4	E3	E2	E1
Xm+7/Yn+3	C8	C7	C6	C5	B8	B7	B6	B5
Xm+8/Yn+4	E8	E7	E6	E5	D8	D7	D6	D5
Xm+9/Yn+5		B11	B10	B9		A11	A10	A9
Xm+10/Yn+6		D11	D10	D9		C11	C10	C9
Xm+11/Yn+7						E11	E10	E9

© MyFANUC 195109AB01DC415385669AA015E5BDE5

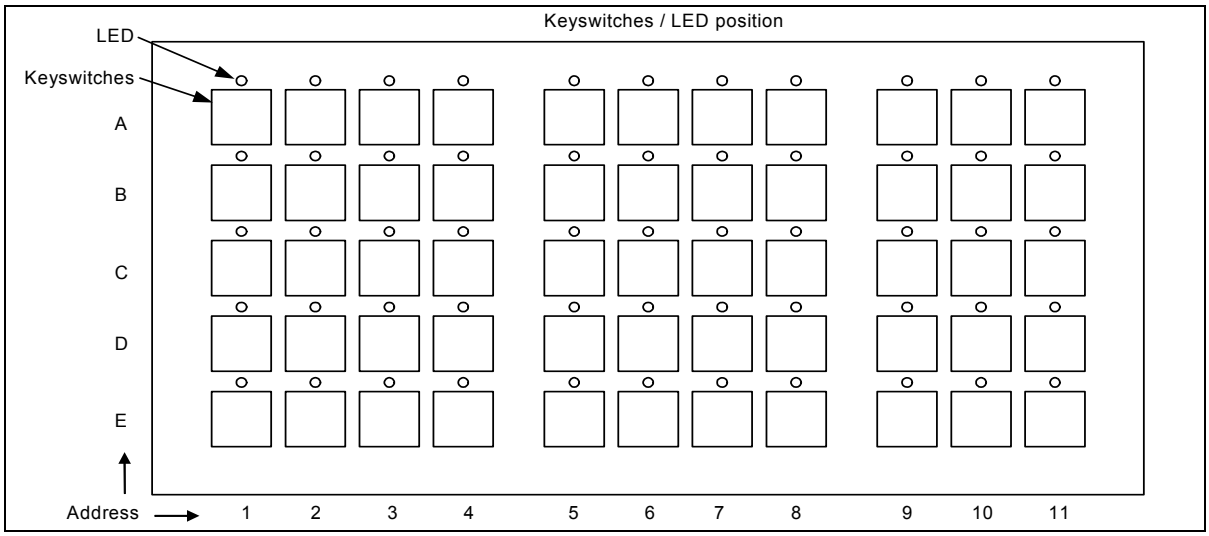

8.8.8 Code Output for the Rotary Switch

When sub panel AA or D is used, a real Gray code is output from the rotary switches as listed in the tables below.

Feedrate override rotary switch (SA1)

%	0	1	2	4	6	8	10	15	20	30	40	50	60	70	80	90	95	100	105	110	120
Xm+0.0		●	●			●	●			●	●			●	●			●	●		
Xm+0.1			●	●	●	●					●	●	●	●					●	●	●
Xm+0.2					●	●	●	●	●	●	●	●									●
Xm+0.3									●	●	●	●	●	●	●	●	●	●	●	●	●
Xm+0.4																	●	●	●	●	●
Xm+0.5		●		●		●		●		●		●		●		●		●		●	

Spindle override rotary switch (SA2)

%	50	60	70	80	90	100	110	120
Xm+0.6		●	●			●	●	
Xm+0.7			●	●	●	●		
Xm+1.0					●	●	●	●
Xm+1.1								
Xm+1.2		●		●		●		●
Xm+1.3								

NOTE
Xm+0.5 and Xm+1.2 are parity bits.

© MyFANUC 195109AB01DC415385669AA015E5BDE5

8.8.9 Outline

8.8.9.1 Outline of main panel

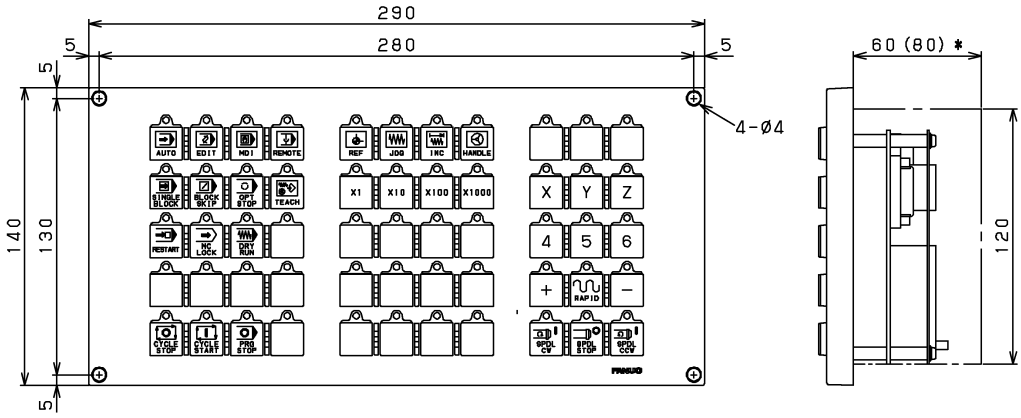

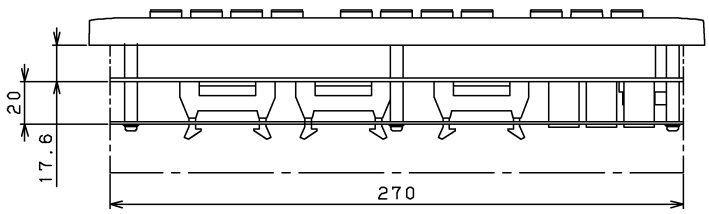

Note)

1 When a low screw–fixing housing "HIROSE FI–20–CV7" is used, the depth is 60mm.
When a usual housing is used, the depth is 80mm.

2 Secure the unit with the screws from outside of the cabinet and then attach the caps (see Outline drawing of screw caps in Appendix A).

Mass: 1.3kg

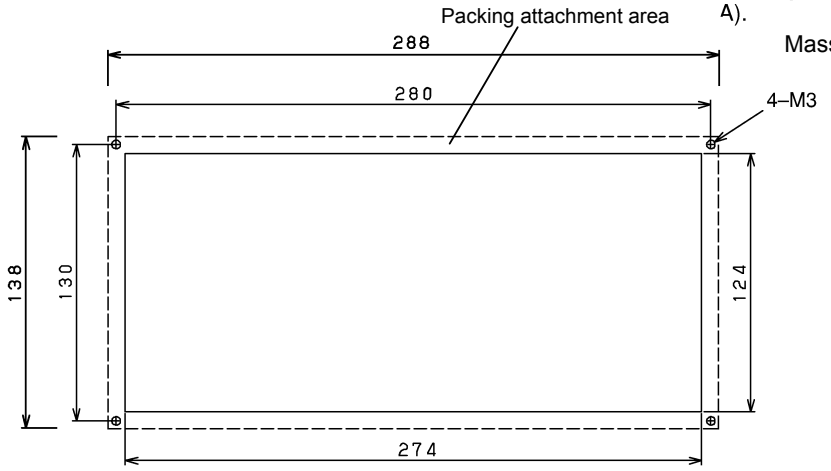

Panel cut drawing

Unit: mm

NOTE
Install the main panel in a vertical direction.

© MyFANUC 195109AB01DC415385669AA015E5BDE5

8.8.9.2 Outline of sub panel AA

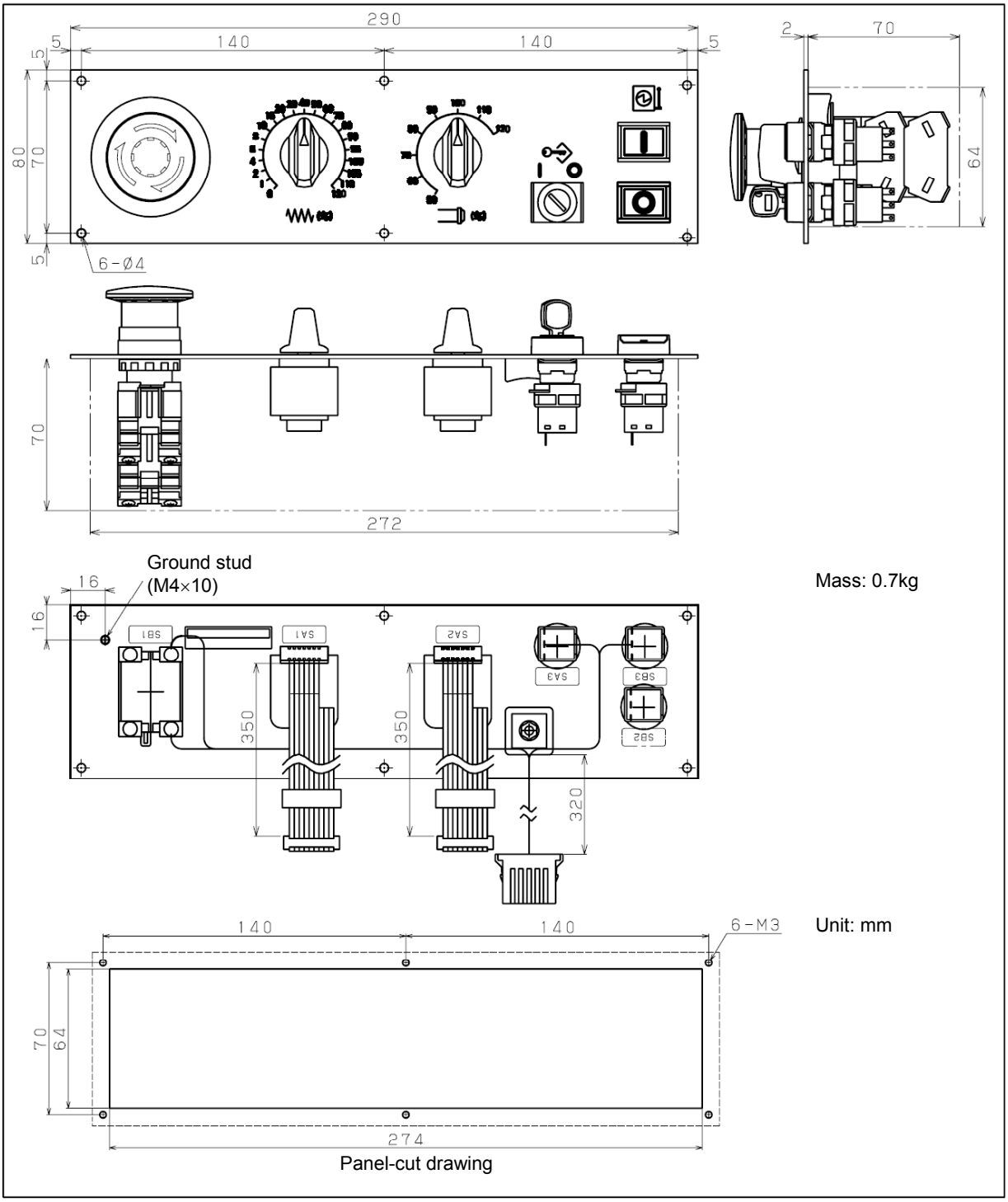

© MyFANUC 195109AB01DC415385669AA015E5BDE5

8.8.9.3 Outline of sub panel D

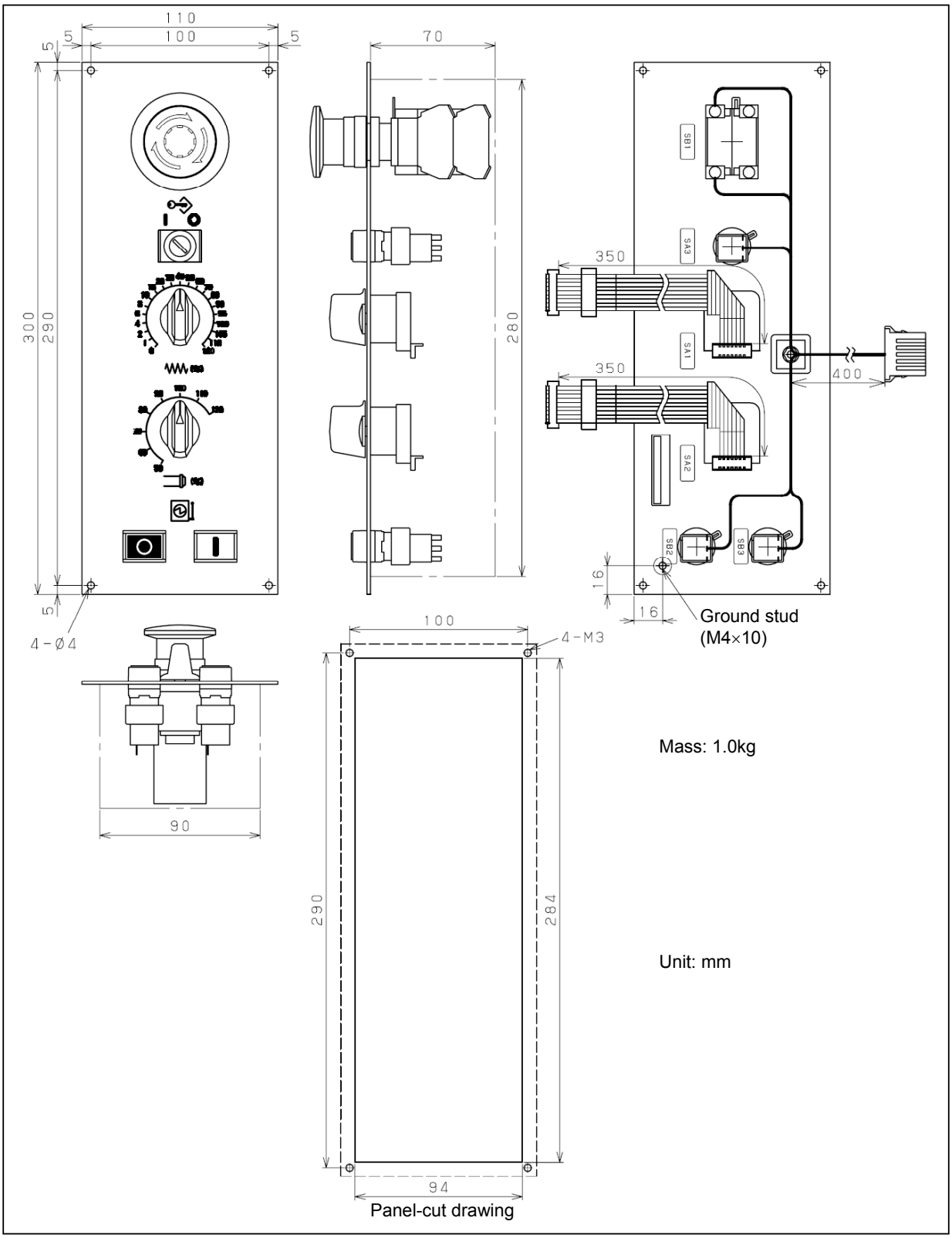

© MyFANUC 195109AB01DC415385669AA015E5BDE5

8.8.9.4 Connector locations of main panel

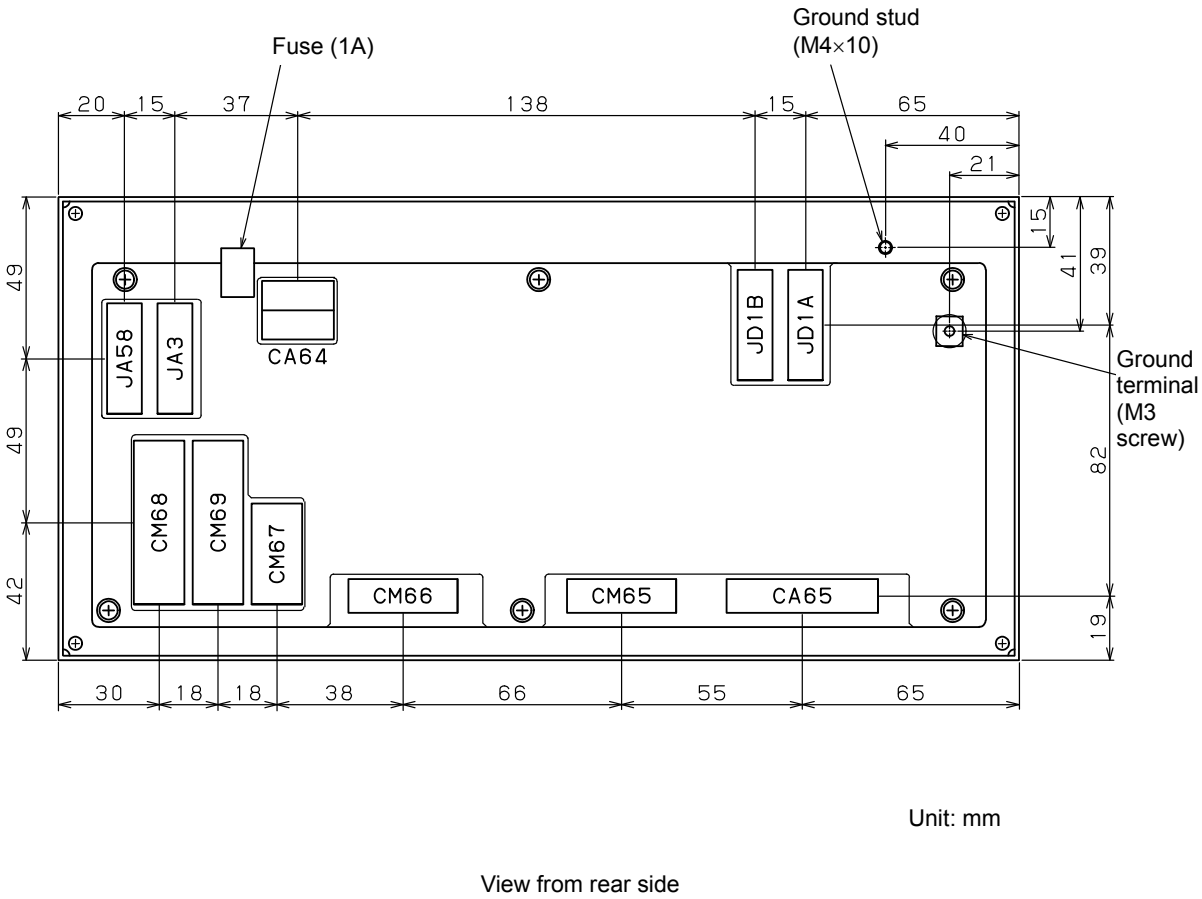

© MyFANUC 195109AB01DC415385669AA015E5BDE5

8.8.10 Specifications of the Standard Machine Operator's Panel

8.8.10.1 Installation conditions

Install this standard machine operator's panel in a fully enclosed cabinet of flat side.
For other installation conditions, conform to the CNC installation conditions.

8.8.10.2 Order specification

Name	Order specification	Remarks
Standard machine operators panel Main panel	A02B-0323-C231	Symbol and alphabet keys
Standard machine operators panel Sub panel AA	A02B-0236-C237	
Standard machine operators panel Sub panel D	A02B-0236-C244	
Set of transparent key tops	A02B-0236-K170	55 key tops
Set of blank key tops	A02B-0236-K171	55 key tops
Set of symbol English key tops	A02B-0236-K174	34 labeled key tops + 21 blank key tops
Set of blank key tops (color: red)	A02B-0236-K175	100 red blank key tops
Set of blank key tops (color: green)	A02B-0236-K176	100 green blank key tops
Set of blank key tops (color: blue)	A02B-0236-K177	100 blue blank key tops
Set of blank key tops (color: yellow)	A02B-0236-K178	100 yellow blank key tops
Fuse (spare parts)	A02B-0815-K001	1A

8.8.10.3 Main panel specification

Item	Specification	Remarks
General-purpose DI points	32 points	24VDC type input
General-purpose DO points	8 points	24VDC type output
Keyswitches	55 keys	Matrix DI
LED	Green	Attached to all keyswitches, Matrix DO
Manual pulse generator interface	Max. 3 units	

8.8.10.4 Sub panel AA, D specification

Item	Specification of Sub panel		Remarks
	AA	D	
Override rotary switch	2	2	5 bit real gray code output (with a parity bit)
Emergency stop switch	1	1	Number of Contact : 4 (contact a × 2, contact b × 2) M3.5 Screw
Program protect key	1	1	The key cannot be removed in the program protect off state.
ON switch	1	1	Contact c × 2, illumination type (24 VDC, resistance contained)
OFF switch	1	1	Contact c × 1

8.8.10.5 Power supply specification

Item	Specification	Remarks
24VDC±10% (from Power connector CA64, including momentary values)	0.3A+7.3mA × DI	

NOTE
The above power supply rating does not include that to be input to DOCOM for DO output.

© MyFANUC 195109AB01DC415385669AA015E5BDE5

8.8.10.6 Heat output

Heat output	Remarks
15W	When 50% of general-purpose input signals and key LEDs on the main panel are on

8.8.10.7 General-purpose DI signal definition

Number of points	32 points
Rated input voltage	24VDC (+10%, -10%)
Rated input current	7.3mA (average)
Polarity	Xm+0.0 to Xm+0.7, Xm+1.0 to Xm+1.7, Xm+2.0 to Xm+2.7: Sink type Xm+3.0 to Xm+3.7: Sink or source type selectable
ON voltage/current	18VDC or more, 6mA or more
OFF volltage/current	6VDC or less, 1.5mA or less
Permission self-diagnostics pulse width	Pulse width: 150μs or less Cycle: 4ms or more
Response time	The receiver delay time is 2ms (maximum). In addition, [I/O Link rtansfer time between CNC and I/O module] and [ladder scan period (depending on CNC)] needs to be considered.

8.8.10.8 General-purpose DO signal definition

Number of points	8 points
Rated output voltage	12VDC to 24VDC (+20%, -15%)
Rated output current	200mA/pt (An instant is contained)
Polarity	Source type
Maximum voltage decrease when ON	28mV
Maximum leakage current when OFF	5μA
Output protection function	Protection against overheat, over current, and short circuit
Response time	The driver delay time is 50μs (maximum). In addition, [I/O Link transfer time between CNC and I/O module] and [ladder scan period (depending on CNC)] needs to be considered.

⚠ CAUTION

1 The protection function is intended to protect the components internal rather than external units.
2 No protection function can protect their internal components in all cases. Once any protection function has worked, remove the cause promptly. If an absolute maximum rating is exceeded, for example, it is likely that protection functions may not work or an IC may break down before the related protection function works, depending on the way or situation in which the modules are used.
3 If an output protection function is defective, it is likely that, if the load current exceeds its rating continuously for a long time, smoke or ignition may occur.

8.8.11 Key Tops on the Main Panel

8.8.11.1 Meaning of key symbols

Symbol	English	Meaning of key
	AUTO	AUTO mode selection signal; Sets automatic operation mode.
	EDIT	EDIT mode selection signal; Sets program edit operation mode.

© MyFANUC 195109AB01DC415385669AA015E5BDE5

Symbol	English	Meaning of key
	MDI	MDI mode selection; Sets MDI mode.
	REMOTE	DNC operation mode; Sets DNC operation mode.
	REF RETURN	Reference position return mode selection; Sets reference position return mode.
	JOG	JOG feed mode selection; Sets jog feed mode.
	INC JOG	Step feed mode selection; Sets step feed mode.
	HANDLE	Manual handle feed mode selection; Sets manual handle feed mode.
	TEACH	Teach-in jog (reach-in handle) mode selection signal; Sets teach-in jog (teach-in handle) mode.
	SINGLE BLOCK	Single block signal; Executes program one by one. This key is used to check a program.
	BLOCK DELETE	Block delete; Skips the execution of the blocks d ending with the end of block (;) when this button is pressed during automatic operation.
	PRG STOP	Program stop(output only); Turns on the LED on the button when automatic operation is stopped by M00 specified in the program.
	OPT STOP	Optional stop; Stops automatic operation after execution of the block of a program where M01 is specified in the program.
	RESTART	Program restart; A program may be restart at a block by specifying the sequence number of the block, after automatic operation is stopped because of a broken tool or for holidays.
	DRY RUN	Dry run; Sets the axis feedrate to the jog feedrate instead of a programmed feedrate when automatic operation is performed by setting this button to on. This function is used to check only the movement of the tool when no workpiece is mounted.
	MC LOCK	Machine lock; Updates only position display on the screen without making any axis movement, when automatic operation is performed by setting this button to on. This function is used to check a program.
	CYCLE START	Cycle start; Start automatic operation.
	CYCLE STOP	Cycle stop; Stops automatic operation.
X1 X10 X100 X1000		Manual handle feed magnification: Magnification for manual handle feed. Magnified by 1, 10, 100, 1000.
X Y Z 4 5 6		Manual feed axis selection; Axes are selected, when these buttons are set to on in the jog feed mode or step feed mode.
+ −		Manual feed operation; Performs movement along selected axes when these buttons are set on in the jog feed mode or step feed mode.
	RAPID	Traverse; Performs jog feed at rapid traverse rate when this button is set to on.
	SPDL CW	Positive spindle rotation direction; Rotates the spindle motor in the positive direction.
	SPDL CCW	Negative spindle rotation direction; Rotates the spindle motor in the negative direction.
	SPDL STOP	Spindle stop; Stops the spindle motor rotation.

© MyFANUC 195109AB01DC415385669AA015E5BDE5

8.8.11.2 Detachable key top on the main panel

All key tops on the main panel are detachable, which allows you to make your original key layout easily. A transparent key top (available as an option) can be used to insert a film sheet with marking into the key.

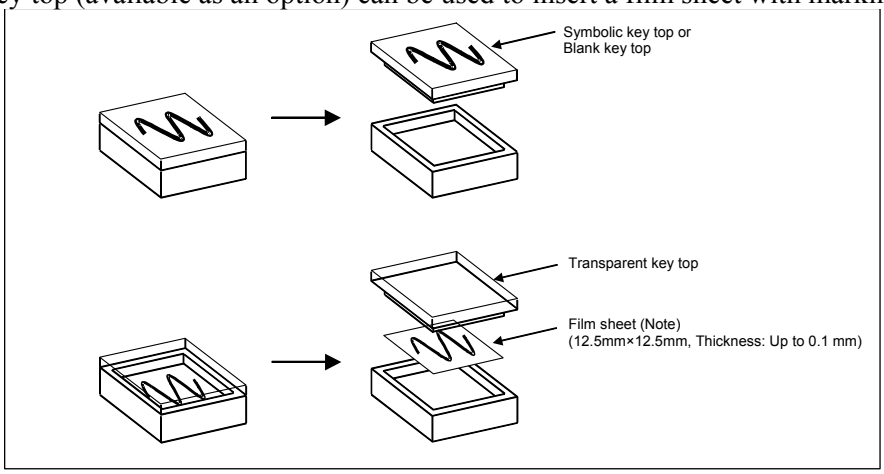

NOTE
Use the oil-proof sheet in the environment which oil is used for.

8.8.12 DO (Output Signal) Error Detection

The DO driver of the main panel has the output protection function for each output signal. If an accident, such as connecting the cable to ground, causes an abnormal increase in the load current or in the driver temperature, a protection circuit, which is provided for each DO driver, is activated and keeps the DO signal in the OFF state. Even if this occurs, the CNC and I/O module continue operating without entering the alarm status, but the PMC is notified of the location of the error detected by the DO driver. This information can be checked on the PMC status screen or alarm processing can be performed in advance using a ladder to help error check and recovery.

In the case of I/O Link *i* connection
When the above protection function is activated by the DO driver, the relevant error is output as a status alarm and transferred to the PMC system relay area. The following table lists system relay area information and corresponding DO data related to a status alarm. When an alarm data bit is set to “1”, the DO driver corresponding to the bit detects an error. For details of the status alarm, see Subsection 7.3.3, “Status Alarm”.

Information output to the system relay area and corresponding location where an error occurred

Information output to the system relay area		Address of the DO driver which detects an error
Slot number	Alarm information number	
1	5	Yn+5
1	6	Yn+6
1	7	Yn+7

Yn indicate the start address at allocation.

In the case of I/O Link connection
When the above protection function is activated by the DO driver, the relevant error is output to DI address (Xm+15). The DI address (Xm+15) and DO data have the following relations. When bit of DI address (Xm+15) is set to “1”, the DO driver corresponding to the bit detects an error.

The bit of DI address	Address of the DO driver which detects an error
Xm+15.0	Yn+5.3

© MyFANUC 195109AB01DC415385669AA015E5BDE5

The bit of DI address	Address of the DO driver which detects an error
Xm+15.1	Yn+5.7
Xm+15.2	Yn+6.3
Xm+15.3	Yn+6.7
Xm+15.4	Yn+7.3
Xm+15.5	Yn+7.4
Xm+15.6	Yn+7.5
Xm+15.7	Yn+7.6

Xm, Yn indicate the start address at allocation.

NOTE

1 Bit of DI address (Xm+15) indicates whether the outputs of the respective DO output bits are protected. “1” corresponds to the protected state.

2 Bit of DI address (Xm+15) returns to “0” when the respective alarm conditions are removed.

© MyFANUC 195109AB01DC415385669AA015E5BDE5

8.9 CONNECTION OF THE I/O Link-AS-i CONVERTER

8.9.1 Overview

The FANUC I/O Link-AS-i converter unit (hereinafter referred to as the AS-i converter) is a stand-alone unit that converts I/O Link data to the Actuator Sensor Interface (hereinafter referred to as the AS-i), which is an I/O-level open network.

> ⚠ **CAUTION**
> The AS-i converter is a unit dedicated to I/O Link connection. It cannot be used for I/O Link *i* connection.

8.9.1.1 Features

The AS-i converter converts the AS-i to the I/O Link so that the DI/DO signals of an AS-i slave module can be used by the PMC of a CNC that has the I/O Link.

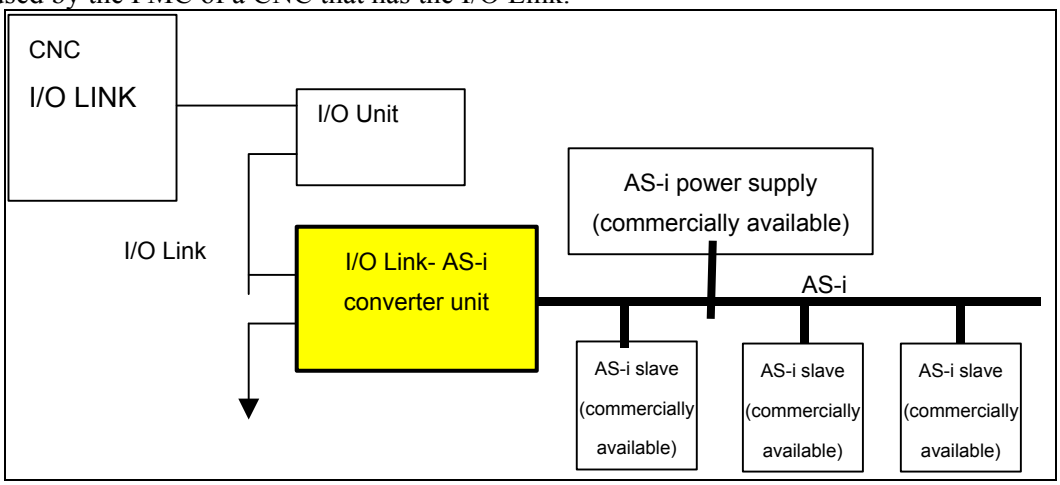

8.9.1.2 AS-i versions and ordering information

Two major versions of the AS-i are available: Ver. 2.0 and Ver. 2.1.

AS-i version	Ver. 2.0	Ver. 2.1
Maximum number of I/O points	124 input points/124 output points	248 input points/186 output points
Maximum number of slaves	31 (standard slave)	62 (A/B slave) Caution) When standard slaves such as analog slaves are used, the maximum number of slaves is 31.
Maximum cable length	100 m	100 m
Cycle time	5 ms/31 units	10 ms/62 units
Analog input/output	The user needs to make a data control sequence.	Input/output can be performed easily with a command.
Ordering information of the AS-i converter	A03B-0817-C001	A03B-0817-C002

© MyFANUC 195109AB01DC415385669AA015E5BDE5

8.9.1.3 Specification of the I/O Link side

	For Ver. 2.0 A03B-0817-C001	For Ver. 2.1 A03B-0817-C002
Number of occupied points	256 input points/256 output points	512 input points/512 output points Note) Two successive groups are occupied.

NOTE
Note that when the AS-i converter is used, a large number of I/O points are occupied on the I/O Link side as described in Subsection 8.9.4.

8.9.1.4 Support for AS-i profiles

	For Ver. 2.0 A03B-0817-C001	For Ver. 2.1 A03B-0817-C002
Master profile	Equivalent to M1	Equivalent to M1e
Analog profile	7.1 / 7.2 Note) The user needs to make a data control sequence.	7.3 / 7.4

8.9.2 Specifications

8.9.2.1 Specifications of the AS-i converter

Power supply

	For Ver. 2.0 A03B-0817-C001	For Ver. 2.1 A03B-0817-C002
Power supply capacity Input power supply: 24 VDC (±10%)	100mA	120mA
Heat dissipation	2.4W	2.9W

Weight

For Ver. 2.0 A03B-0817-C001	For Ver. 2.1 A03B-0817-C002
350g	370g

8.9.2.2 Installation conditions

(1) Use this I/O module in a completely sealed cabinet.
(2) Use the units under the following ambient temperature conditions:
Operation: 0°C to 55°C
Storage and transportation: -20°C to 80°C
(3) For other installation conditions, conform to the CNC installation conditions.
(4) Be sure to install this unit on a vertical surface and provide a clearance of 100 mm or more both above and below the unit. Do not place equipment that generates a large amount of heat below this unit.

© MyFANUC 195109AB01DC415385669AA015E5BDE5

8.9.2.3 Dimensions and connector layout

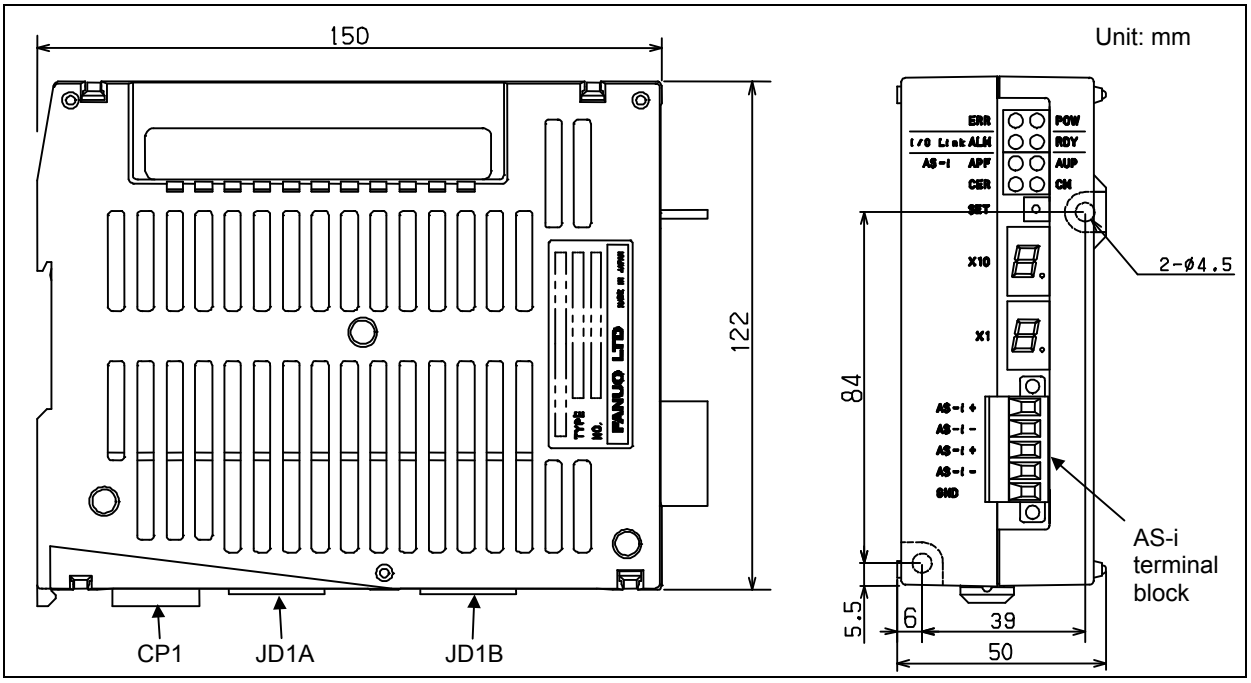

8.9.2.4 Installation

Mounting hole for screwing

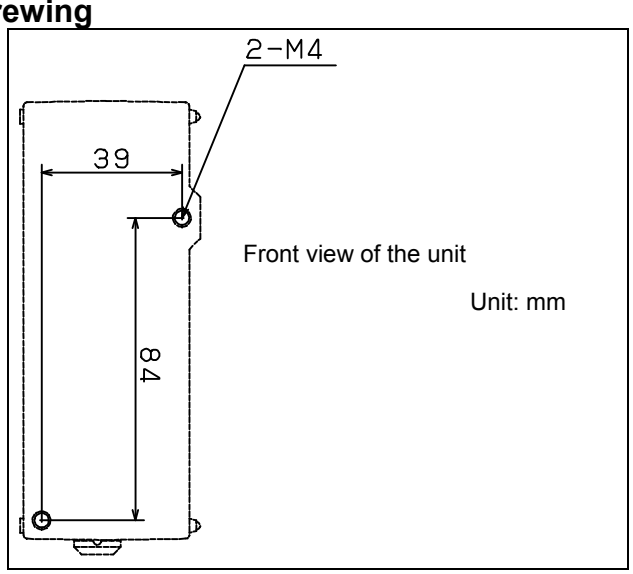

NOTE

1 A screwdriver is inserted on a slant to mount and dismount the unit, so that a sufficient maintenance space is required on both sides of the unit. When the front face of an adjacent unit is flush with the front face of the unit or is recessed, provide a clearance of about 20 mm from the adjacent unit. When the front face of an adjacent unit is more projected toward you than the front face of the unit, provide a clearance of about 70 mm from the adjacent unit.

2 When the unit is to be installed near a side plane of the cabinet, provide a clearance of about 70 mm between the unit and the side plane of the cabinet.

© MyFANUC 195109AB01DC415385669AA015E5BDE5

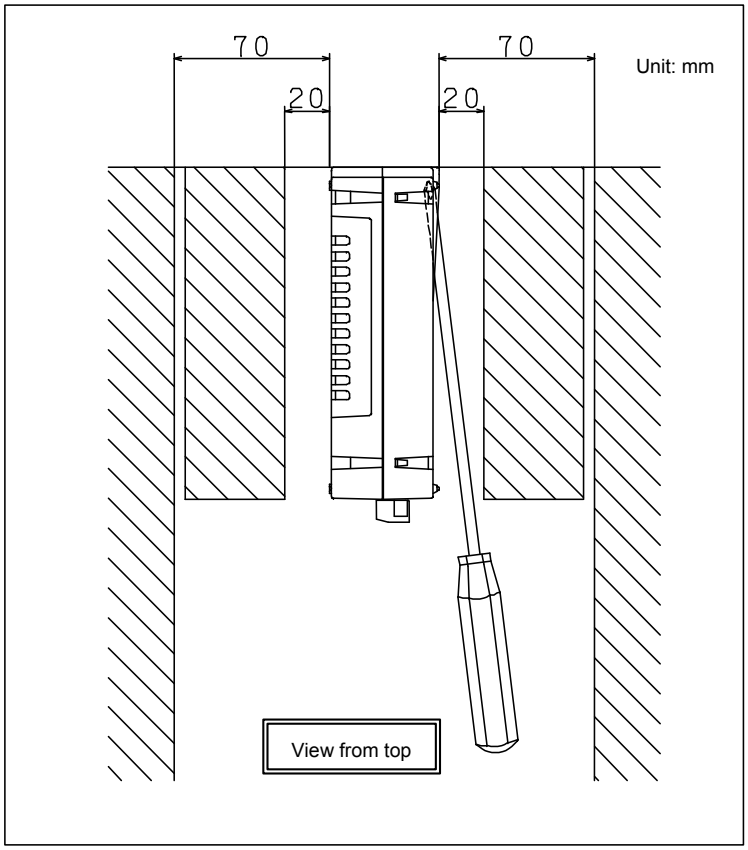

© MyFANUC 195109AB01DC415385669AA015E5BDE5

Using a DIN rail for mounting

Method of mounting

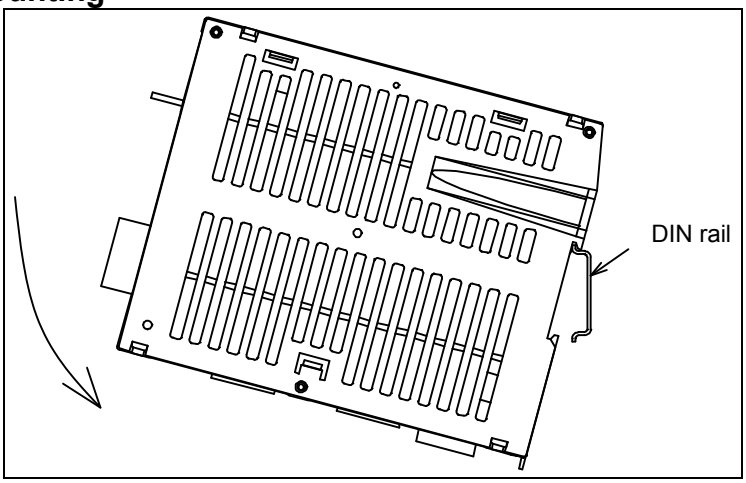

1. Place the hook of the unit onto the top of the DIN rail.
2. Push the unit until it clicks into place.

Method of dismounting

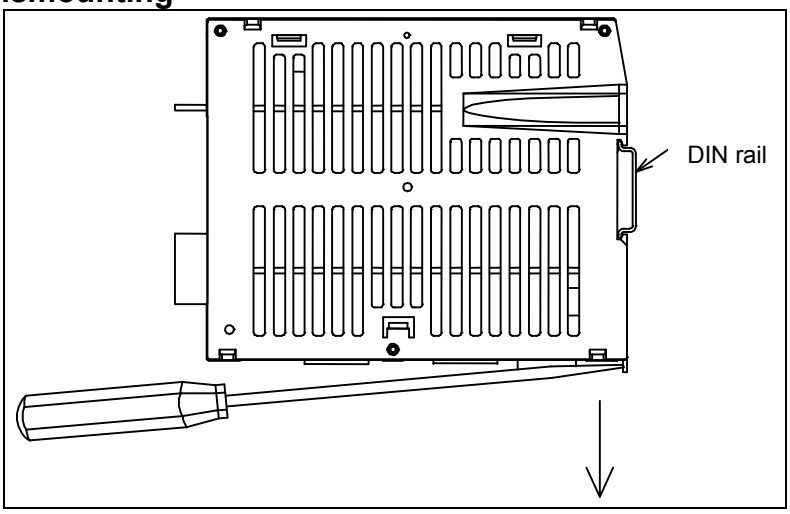

1. Lower the locking section with a flat-blade screwdriver.
2. Pull the lower part of the unit toward you.

NOTE

When dismounting the unit, be careful not to damage the locking section by applying an excessive force. When mounting and dismounting the unit, hold the unit by its top and bottom surfaces. Avoid applying force to the sides (where slits are provided).

© MyFANUC 195109AB01DC415385669AA015E5BDE5

8.9.3 Connection

8.9.3.1 Overall connection diagram

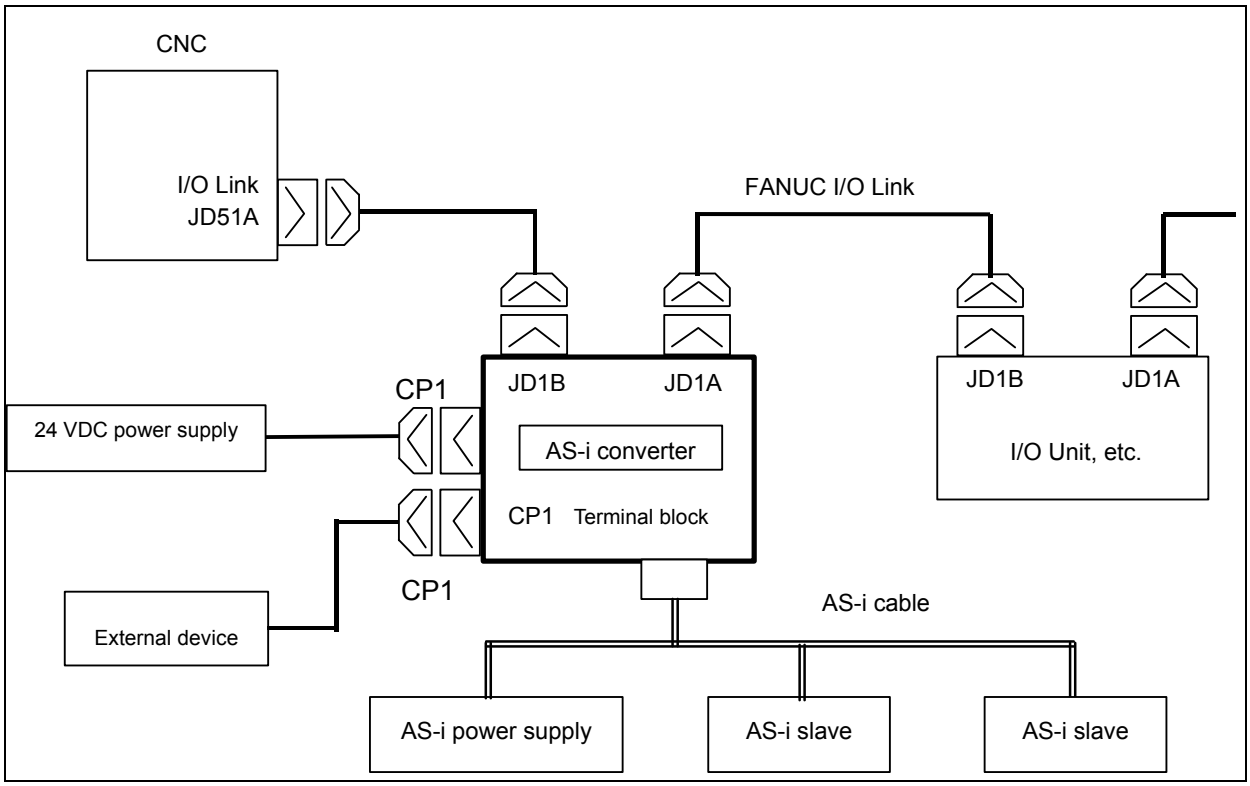

8.9.3.2 Power connection

Supply power to the AS-i converter from the CNC or an external 24 VDC regulated power supply.

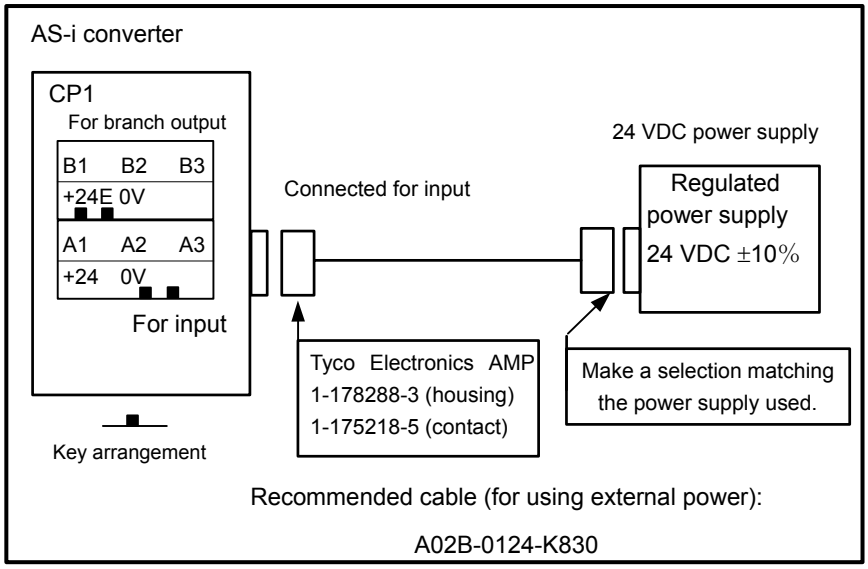

The 24 VDC input to CP1 (A1, A2) can be output from CP1 (B1, B2) for branching. CP1 (B1, B2) is connected as shown below. In this case, the external 24 VDC power supply needs to provide CP1 (A1, A2) with a current which is equal to the sum of the current consumed by the control unit and the current used via CP1 (B1, B2).

© MyFANUC 195109AB01DC415385669AA015E5BDE5

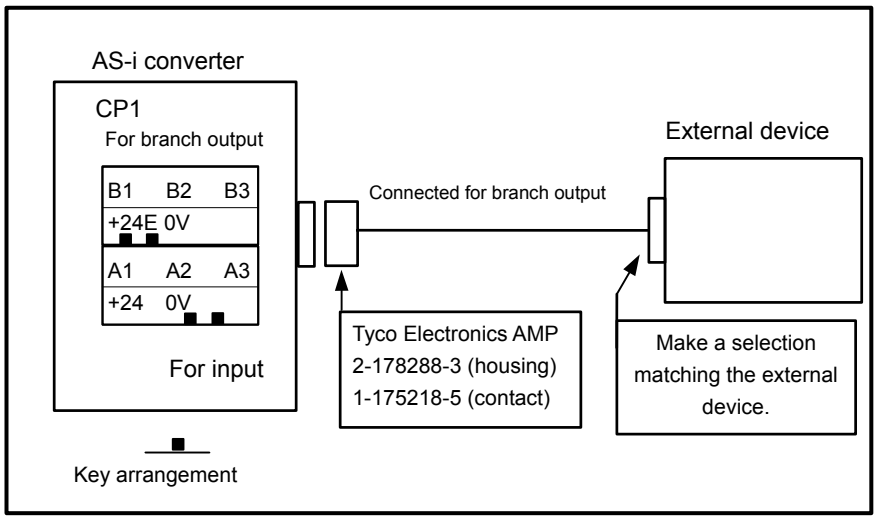

The DC output current supplied from CP1 (B1, B2) is 1 A maximum.

NOTE

1 Ensure that +24 V is supplied either when or before the power to the CNC is turned on, and that +24 V is removed either when or after the power to the CNC is turned off.

2 When turning off the power to the CNC control unit, be sure to turn off the power to the AS-i converter and other slave I/O units connected via the I/O Link as well.

3 Turn on the power to the AS-i power supply (power supply connected to the AS-i communication cable) either when or before the power to the CNC control unit is turned on. If the power to the AS-i power supply is turned on after the power to the CNC control unit is turned on, the system may not be started.

8.9.3.3 AS-i connection

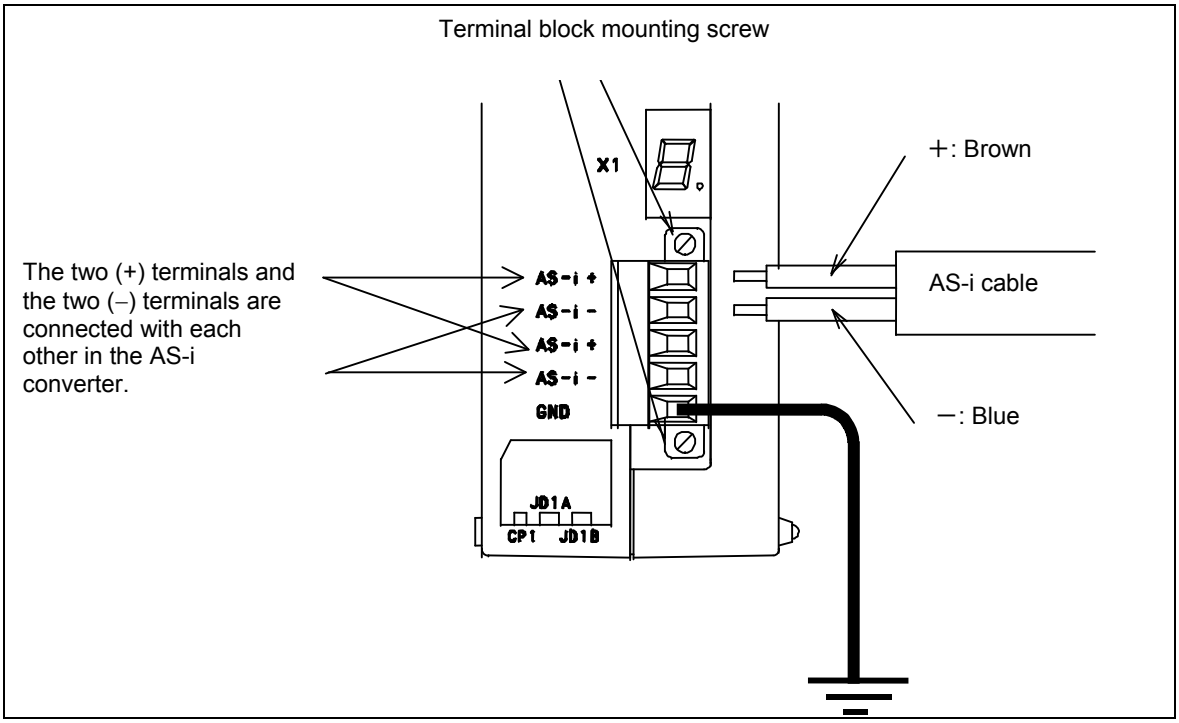

© MyFANUC 195109AB01DC415385669AA015E5BDE5

1) Peel off the coating of the AS-i cable then screw the cable onto the terminal block of the AS-i converter.
2) This terminal block is detachable, and work can be done on the terminal block after being detached from the AS-i converter. When attaching the terminal block, firmly tighten the screws for mounting the terminal block.
3) To facilitate AS-i cable branching, two AS-i + terminals and two AS-i – terminals are provided. A + terminal and a – terminal are connected with each other in the AS-i converter. Use those terminals that can be handled more easily.
4) Do not connect two cables to each terminal.
5) Connect the GND terminal to ground.

NOTE

To protect against induction noise, separate high-voltage lines and the power line from the AS-i communication cable as much as possible. (It is recommended to separate high-voltage lines and the power line from the AS-i communication cable by 300 mm or more.) Moreover, attach a surge absorber to a device that tends to generate noise.

© MyFANUC 195109AB01DC415385669AA015E5BDE5

8.9.4 DI/DO Mapping on the I/O Link

8.9.4.1 For AS-i Ver. 2.0 (A03B-0817-C001)

On the I/O Link, 32 bytes are assigned for input and 32 bytes are assigned for output.
Assignment name: OC03I for input, OC03O for output

<Input>

X	bit 7-4	bit 3-0
+0	DI #1	Reserved
+1	DI #3	DI #2
+2	DI #5	DI #4
+3	DI #7	DI #6
+4	DI #9	DI #8
+5	DI #11	DI #10
+6	DI #13	DI #12
+7	DI #15	DI #14
+8	DI #17	DI #16
+9	DI #19	DI #18
+10	DI #21	DI #20
+11	DI #23	DI #22
+12	DI #25	DI #24
+13	DI #27	DI #26
+14	DI #29	DI #28
+15	DI #31	DI #30
+16	AS-i master status (1)	
+17	AS-i master status (2)	
+18	Board status (1)	
+19	Board status (2)	
+20	Slave list (1) #1 to #7	
+21	Slave list (2) #8 to #15	
+22	Slave list (3) #16 to #23	
+23	Slave list (4) #24 to #31	
+24	Command status	
+25	Command error code	
+26	Command response data (1)	
+27	Command response data (2)	
+28	Command response data (3)	
+29	Command response data (4)	
+30	Reserved	
+31	Reserved	

<Output>

Y	bit 7-4	bit 3-0
+0	DO #1	Reserved
+1	DO #3	DO #2
+2	DO #5	DO #4
+3	DO #7	DO #6
+4	DO #9	DO #8
+5	DO #11	DO #10
+6	DO #13	DO #12
+7	DO #15	DO #14
+8	DO #17	DO #16
+9	DO #19	DO #18
+10	DO #21	DO #20
+11	DO #23	DO #22
+12	DO #25	DO #24
+13	DO #27	DO #26
+14	DO #29	DO #28
+15	DO #31	DO #30
+16	Command flag	
+17	Command code	
+18	Command parameter (1)	
+19	Command parameter (2)	
+20	Command parameter (3)	
+21	Command parameter (4)	
+22	Reserved	
+23	Reserved	
+24	Reserved	
+25	Reserved	
+26	Reserved	
+27	Reserved	
+28	Reserved	
+29	Reserved	
+30	Reserved	
+31	Reserved	

NOTE
A number after # represents an AS-i slave number.

© MyFANUC 195109AB01DC415385669AA015E5BDE5

8.9.4.2 For AS-i Ver. 2.1 (A03B-0817-C002)

On the I/O Link, 64 bytes are assigned for input and 64 bytes are assigned for output.
Assignment name: OC03I for input, OC03O for output. Two successive groups are assigned.

<Input>

Group α

X	bit 7-4	bit 3-0
+0	DI #1A	Reserved
+1	DI #3A	DI #2A
+2	DI #5A	DI #4A
+3	DI #7A	DI #6A
+4	DI #9A	DI #8A
+5	DI #11A	DI #10A
+6	DI #13A	DI #12A
+7	DI #15A	DI #14A
+8	DI #17A	DI #16A
+9	DI #19A	DI #18A
+10	DI #21A	DI #20A
+11	DI #23A	DI #22A
+12	DI #25A	DI #24A
+13	DI #27A	DI #26A
+14	DI #29A	DI #28A
+15	DI #31A	DI #30A
+16	AS-i master status (1)	
+17	AS-i master status (2)	
+18	Board status (1)	
+19	Board status (2)	
+20	Slave list (1) #1A to #7A	
+21	Slave list (2) #8A to #15A	
+22	Slave list (3) #16A to #23A	
+23	Slave list (4) #24A to #31A	
+24	Command status	
+25	Command error code	
+26	Command response data (1)	
+27	Command response data (2)	
+28	Command response data (3)	
+29	Command response data (4)	
+30	Reserved	
+31	Reserved	

Group α+1

X'	bit 7-4	bit 3-0
+0	DI #1B	Reserved
+1	DI #3B	DI #2B
+2	DI #5B	DI #4B
+3	DI #7B	DI #6B
+4	DI #9B	DI #8B
+5	DI #11B	DI #10B
+6	DI #13B	DI #12B
+7	DI #15B	DI #14B
+8	DI #17B	DI #16B
+9	DI #19B	DI #18B
+10	DI #21B	DI #20B
+11	DI #23B	DI #22B
+12	DI #25B	DII#24B
+13	DI #27B	DI #26B
+14	DI #29B	DI #28B
+15	DI #31B	DI #30B
+16	Reserved	
+17	Reserved	
+18	Reserved	
+19	Reserved	
+20	Slave list (5) #1B to #7B	
+21	Slave list (6) #8B to #15B	
+22	Slave list (7) #16B to #23B	
+23	Slave list (8) #24B to #31B	
+24	Reserved	
+25	Reserved	
+26	Command response data (5)	
+27	Command response data (6)	
+28	Command response data (7)	
+29	Command response data (8)	
+30	Reserved	
+31	Reserved	

NOTE
A number and letter after # represent an AS-i slave number.

© MyFANUC 195109AB01DC415385669AA015E5BDE5

<Output>

Group α

Y	bit 7-4	bit 3-0
+0	DO #1A	Reserved
+1	DO #3A	DO #2A
+2	DO #5A	DO #4A
+3	DO #7A	DO #6A
+4	DO #9A	DO #8A
+5	DO #11A	DO #10A
+6	DO #13A	DO #12A
+7	DO #15A	DO #14A
+8	DO #17A	DO #16A
+9	DO #19A	DO #18A
+10	DO #21A	DO #20A
+11	DO #23A	DO #22A
+12	DO #25A	DO #24A
+13	DO #27A	DO #26A
+14	DO #29A	DO #28A
+15	DO #31A	DO #30A
+16	Command flag	
+17	Command code	
+18	Command parameter (1)	
+19	Command parameter (2)	
+20	Command parameter (3)	
+21	Command parameter (4)	
+22	Command parameter (5)	
+23	Reserved	
+24	Reserved	
+25	Reserved	
+26	Reserved	
+27	Reserved	
+28	Reserved	
+29	Reserved	
+30	Reserved	
+31	Reserved	

Group α+1

Y'	bit 7-4	bit 3-0
+0	DO #1B	Reserved
+1	DO #3B	DO #2B
+2	DO #5B	DO #4B
+3	DO #7B	DO #6B
+4	DO #9B	DO #8B
+5	DO #11B	DO #10B
+6	DO #13B	DO #12B
+7	DO #15B	DO #14B
+8	DO #17B	DO #16B
+9	DO #19B	DO #18B
+10	DO #21B	DO #20B
+11	DO #23B	DO #22B
+12	DO #25B	DO #24B
+13	DO #27B	DO #26B
+14	DO #29B	DO #28B
+15	DO #31B	DO #30B
+16	Reserved	
+17	Reserved	
+18	Command parameter (6)	
+19	Command parameter (7)	
+20	Command parameter (8)	
+21	Command parameter (9)	
+22	Reserved	
+23	Reserved	
+24	Reserved	
+25	Reserved	
+26	Reserved	
+27	Reserved	
+28	Reserved	
+29	Reserved	
+30	Reserved	
+31	Reserved	

NOTE

1 A number and letter after # represent an AS-i slave number.

2 To group α, the standard slave or an A slave of the A/B slaves is assigned.
To group α+1, a B slave of the A/B slaves is assigned.

© MyFANUC 195109AB01DC415385669AA015E5BDE5

8.9.5 Details of I/O Link DI/DO

8.9.5.1 Input/output data area

For AS-i Ver. 2.0 (A03B-0817-C001)

Input signals are assigned to X+0 to X+15, and output signals are assigned to Y+0 to Y+15. Each bit set to 1 represents the ON state, and each bit set to 0 represents the OFF state.

<Input>

Address	bit 7	bit 6	bit 5	bit 4	bit 3	bit 2	bit 1	bit 0
X+0	DI of slave address #1				Reserved			
	IN4	IN3	IN2	IN1	Reserved	Reserved	Reserved	Reserved
X+1	DI of slave address #3				DI of slave address #2			
	IN4	IN3	IN2	IN1	IN4	IN3	IN2	IN1
: :	: :	: :	: :	: :	: :	: :	: :	: :
X+15	DI of slave address #31				DI of slave address #30			
	IN4	IN3	IN2	IN1	IN4	IN3	IN2	IN1

<Output>

Address	bit 7	bit 6	bit 5	bit 4	bit 3	bit 2	bit 1	bit 0
Y+0	DO of slave address #1				Reserved			
	OUT4	OUT3	OUT2	OUT1	Reserved	Reserved	Reserved	Reserved
Y+1	DO of slave address #3				DO of slave address #2			
	OUT4	OUT3	OUT2	OUT1	OUT4	OUT3	OUT2	OUT1
: :	: :	: :	: :	: :	: :	: :	: :	: :
Y+15	DO of slave address #31				DO of slave address #30			
	OUT4	OUT3	OUT2	OUT1	OUT4	OUT3	OUT2	OUT1

For AS-i Ver. 2.1 (A03B-0817-C002)

Input signals are assigned to X+0 to X+15 (group α) and X'+0 to X'+15 (group α+1), and output signals are assigned to Y+0 to Y+15 (group α) and Y'+0 to Y'+15 (group α+1). Each bit set to 1 represents the ON state, and each bit set to 0 represents the OFF state.

<Input>

	Address	bit 7	bit 6	bit 5	bit 4	bit 3	bit 2	bit 1	bit 0
Group α	X+0	DI of slave address #1A				Reserved			
		IN4	IN3	IN2	IN1	Reserved	Reserved	Reserved	Reserved
	X+1	DI of slave address #3A				DI of slave address #2A			
		IN4	IN3	IN2	IN1	IN4	IN3	IN2	IN1
	: :	: :	: :	: :	: :	: :	: :	: :	: :
	X+15	DI of slave address #31A				DI of slave address #30A			
		IN4	IN3	IN2	IN1	IN4	IN3	IN2	IN1
Group α+1	X'+0	DI of slave address #1B				Reserved			
		IN4	IN3	IN2	IN1	Reserved	Reserved	Reserved	Reserved
	X'+1	DI of slave address #3B				DI of slave address #2B			
		IN4	IN3	IN2	IN1	IN4	IN3	IN2	IN1
	: :	: :	: :	: :	: :	: :	: :	: :	: :
	X'+15	DI of slave address #31B				DI of slave address #30B			
		IN4	IN3	IN2	IN1	IN4	IN3	IN2	IN1

© MyFANUC 195109AB01DC415385669AA015E5BDE5

<Output>

	Address	bit 7	bit 6	bit 5	bit 4	bit 3	bit 2	bit 1	bit 0
Group α	Y+0	DO of slave address #1A				Reserved			
		OUT4(NOTE)	OUT3	OUT2	OUT1	Reserved	Reserved	Reserved	Reserved
	Y+1	DO of slave address #3A				DO of slave address #2A			
		OUT4(NOTE)	OUT3	OUT2	OUT1	OUT4(NOTE)	OUT3	OUT2	OUT1
	:	:	:	:	:	:	:	:	:
	:	:	:	:	:	:	:	:	:
	X+15	DO of slave address #31A				DO of slave address #30A			
		OUT4(NOTE)	OUT3	OUT2	OUT1	OUT4(NOTE)	OUT3	OUT2	OUT1
Group α+1	Y'+0	DO of slave address #1B				Reserved			
		Reserved	OUT3	OUT2	OUT1	Reserved	Reserved	Reserved	Reserved
	Y'+1	DO of slave address #3B				DO of slave address #2B			
		Reserved	OUT3	OUT2	OUT1	Reserved	OUT3	OUT2	OUT1
	:	:	:	:	:	:	:	:	:
	:	:	:	:	:	:	:	:	:
	Y'+15	DO of slave address #31B				DO of slave address #30B			
		Reserved	OUT3	OUT2	OUT1	Reserved	OUT3	OUT2	OUT1

NOTE

A number and letter after # represent an AS-i slave number.
When the standard slave is used, DI/DO signals are assigned to group α (X+0 to X+15 and Y+0 to Y+15).
When the A/B slave is used, OUT4 is reserved and cannot be used.

8.9.5.2 AS-i master status indication

Address	Bit	Item	Bit status	Condition for ON
X+16	0	Offline phase status	0: Not offline 1: Offline	When a command for setting the offline status such as a command for configuration registration is executed or the AS-i power supply is turned off
	1	AS-i power supply monitor	0: Normal 1: Decreased voltage or OFF	When the AS-i power supply voltage has decreased or the AS-i power supply is turned off
	2	Operation status	0: Initialization in progress or start-up operation in progress 1: Normal operation mode	The normal operation mode is set when AS-i communication is enabled.
	3	Operation mode	0: Protection mode 1: Configuration mode	When the configuration mode is set
	4	Status of automatic addressing	0: Disabled 1: Enabled	Status where automatic addressing is enabled (when the protection mode is set, automatic addressing is enabled, and one slave is detached)
	5	Reserved		
	6	Connection of slave with address 0	0: Not connected 1: Connected	When a slave with address 0 is connected
	7	Matching of current configuration with registered configuration	0: Mismatch 1: Match	When the registered configuration matches detected slaves

© MyFANUC 195109AB01DC415385669AA015E5BDE5

Address	Bit	Item	Bit status	Condition for ON
X+17	0	Offline operation status	0: Not offline 1: Offline	
	1	Reserved		
	2	EEPROM status in AS-i master	0: Abnormal 1: Normal	When the EEPROM in the AS-i master is normal
	3	Automatic addressing enable status	0: Disabled 1: Enabled	When automatic addressing is enabled
	4 to 7	Reserved		

8.9.5.3 Board status

Address	Bit	Item	Bit status	
X+18	0	AS-i data ready	0: DI/DO data is invalid.	1: DI/DO data is valid.
	1	Error status	0: Normal	1: Alarm
	2	AS-i master error	0: Normal	1: AS-i master error
	3	ROM error	0: Normal	1: ROM error
	4	RAM error	0: Normal	1: RAM error
	5	Watchdog alarm	0: Normal	1: CPU watchdog alarm
	6	Reserved		
	7	Reserved		
X+19	0 to 3	Software version		
	4 to 7	Hardware version		

NOTE

To use the AS-i safely, be sure to monitor the AS-i status.
When using DI/DO data on the AS-i side, be sure to monitor the AS-i power supply monitor information in Subsection 8.9.5.2, the AS-i data ready bit in Subsection 8.9.5.3, and other error information items. If any of these information items indicates an error or illegal status, the DI/DO data on the AS-i converter side is also invalid. So, correct the system to maintain the safe status.

8.9.5.4 Slave list

From addresses X+20 to X+23 (plus X'+20 to X'+23 for Ver. 2.1), data is output in one of four different modes, depending on the list output mode setting (bits 6 and 7 of Y+16 (Subsection 8.9.6.3)).

For AS-i Ver. 2.0 (A03B-0817-C001)

Address	bit 7	bit 6	bit 5	bit 4	bit 3	bit 2	bit 1	bit 0
X+20	#7	#6	#5	#4	#3	#2	#1	Reserved
X+21	#15	#14	#13	#12	#11	#10	#9	#8
X+22	#23	#22	#21	#20	#19	#18	#17	#16
X+23	#31	#30	#29	#28	#27	#26	#25	#24

© MyFANUC 195109AB01DC415385669AA015E5BDE5

For AS-i Ver. 2.1 (A03B-0817-C002)

Group	Address	bit 7	bit 6	bit 5	bit 4	bit 3	bit 2	bit 1	bit 0
α	X+20	#7A	#6A	#5A	#4A	#3A	#2A	#1A	Reserved
	X+21	#15A	#14A	#13A	#12A	#11A	#10A	#9A	#8A
	X+22	#23A	#22A	#21A	#20A	#19A	#18A	#17A	#16A
	X+23	#31A	#30A	#29A	#28A	#27A	#26A	#25A	#24A
α+1	X'+20	#7B	#6B	#5B	#4B	#3B	#2B	#1B	Reserved
	X'+21	#15B	#14B	#13B	#12B	#11B	#10B	#9B	#8B
	X'+22	#23B	#22B	#21B	#20B	#19B	#18B	#17B	#16B
	X'+23	#31B	#30B	#29B	#28B	#27B	#26B	#25B	#24B

Mode 0: Discrepancy between LPS (list of configured slaves) and LES (list of detected slaves)
0: There is no discrepancy between LPS and LES.
1: There is a discrepancy between LPS and LES.

Mode 1: Contents of LES (list of detected slaves)
0: Slaves not connected
1: Slaves currently connected

Mode 2: Contents of LAS (list of active slaves)
0: Slaves not active
1: Slaves currently active

Mode 3: Contents of LPS (list of configured slaves)
0: Slaves not configured
1: Slaves configured

Check LES (mode 1) to know which slave is connected.
Check LPS (mode 2) to know which slave is configured.
Set mode 0 in normal operation. If a configuration mismatch error occurs during operation in the protection mode, a mismatching slave can be identified by the discrepancy between LPS and LES (mode 0).

NOTE
If the list output mode is switched, up to about 3 seconds may be required until an output change actually takes place after the mode switching. When reading with a ladder, be sure to check the list output mode in status information beforehand.

© MyFANUC 195109AB01DC415385669AA015E5BDE5

8.9.6 Command Execution by a Ladder Program

A ladder program can read or write the parameter of an AS-i slave unit, can change addresses, and can read the I/O configuration and ID code.

8.9.6.1 Types of commands executable by a ladder program

	Command code (HEX)	Description	Parameter byte length	Response data byte length
	0AH	Writes the parameter of a particular slave to the EEPROM.	2	0
	0BH	Reads the parameter of a particular slave from the EEPROM.	1	1
	0CH	Writes a parameter to a particular slave.	2	1
	0DH	Reads the parameter of a particular slave.	1	1
	12H	Reads the I/O configuration and ID code of a particular slave.	1	2
	17H	Changes the address of a particular slave.	2	0
For Ver. 2.1 only	29H	Reads the analog input data of a particular slave.	1	8
For Ver. 2.1 only	2AH	Writes analog output data to a particular slave.	9	0

8.9.6.2 Command interface with a ladder program

DO (PMC → AS-i converter)

	Address	Name	Description
	Y+16	Command flag	Command execution request flag, list output setting mode
	Y+17	Command code	Command code
	Y+18	Command parameter 1	When the command has a parameter
	Y+19	Command parameter 2	Same as above
	Y+20	Command parameter 3	Same as above
	Y+21	Command parameter 4	Same as above
For Ver. 2.1 only	Y+22	Command parameter 5	Same as above
For Ver. 2.1 only	Y'+18	Command parameter 6	Same as above
For Ver. 2.1 only	Y'+19	Command parameter 7	Same as above
For Ver. 2.1 only	Y'+20	Command parameter 8	Same as above
For Ver. 2.1 only	Y'+21	Command parameter 9	Same as above

DI (AS-i converter → PMC)

	Address	Name	Description
	X+24	Command status	End flag, list output status
	X+25	Command error status	Error code of the executed command
	X+26	Command response data 1	When the command has response data
	X+27	Command response data 2	Same as above
	X+28	Command response data 3	Same as above
	X+29	Command response data 4	Same as above
For Ver. 2.1 only	X'+26	Command response data 5	Same as above
For Ver. 2.1 only	X'+27	Command response data 6	Same as above
For Ver. 2.1 only	X'+28	Command response data 7	Same as above
For Ver. 2.1 only	X'+29	Command response data 8	Same as above

© MyFANUC 195109AB01DC415385669AA015E5BDE5

8.9.6.3 Details of command flags and status

<table>
<tr><th>Address</th><th>Bit</th><th>Description</th></tr>
<tr><td rowspan="3">Y+16</td><td>0</td><td>Request flag 1: Requested</td></tr>
<tr><td>1 to 5</td><td>Reserved</td></tr>
<tr><td>6
7</td><td>List output request mode
<table>
<tr><th>Bit 7</th><th>Bit 6</th><th>Description</th></tr>
<tr><td>0</td><td>0</td><td>Discrepancy between LPS and LES</td></tr>
<tr><td>0</td><td>1</td><td>LES (list of detected slaves)</td></tr>
<tr><td>1</td><td>0</td><td>LAS (list of active slaves)</td></tr>
<tr><td>1</td><td>1</td><td>LPS (list of configured slaves)</td></tr>
</table></td></tr>
</table>

<table>
<tr><td rowspan="3">X+24</td><td>0</td><td>End flag 1: End of command</td></tr>
<tr><td>1</td><td>Error flag 1: Command error (For details, see Subsection 8.9.6.4, "Error codes".)</td></tr>
<tr><td>2 to 5</td><td>Reserved</td></tr>
<tr><td>6
7</td><td>List output mode
<table>
<tr><th>Bit 7</th><th>Bit 6</th><th>Description</th></tr>
<tr><td>0</td><td>0</td><td>Discrepancy between LPS and LES</td></tr>
<tr><td>0</td><td>1</td><td>LES (list of detected slaves)</td></tr>
<tr><td>1</td><td>0</td><td>LAS (list of active slaves)</td></tr>
<tr><td>1</td><td>1</td><td>LPS (list of configured slaves)</td></tr>
</table></td></tr>
</table>

8.9.6.4 Error codes

Error code (HEX)	Description
00H	Normal command termination
02H	Slave address error
03H	The specified slave is not active (not listed in LAS).
04H	A slave with address 0 exists.
05H	AS-i communication error
06H	EEPROM error
07H	Command or parameter error
08H	In executable command
09H	Command error (command code error)

© MyFANUC 195109AB01DC415385669AA015E5BDE5

8.9.6.5 Command handshake sequence

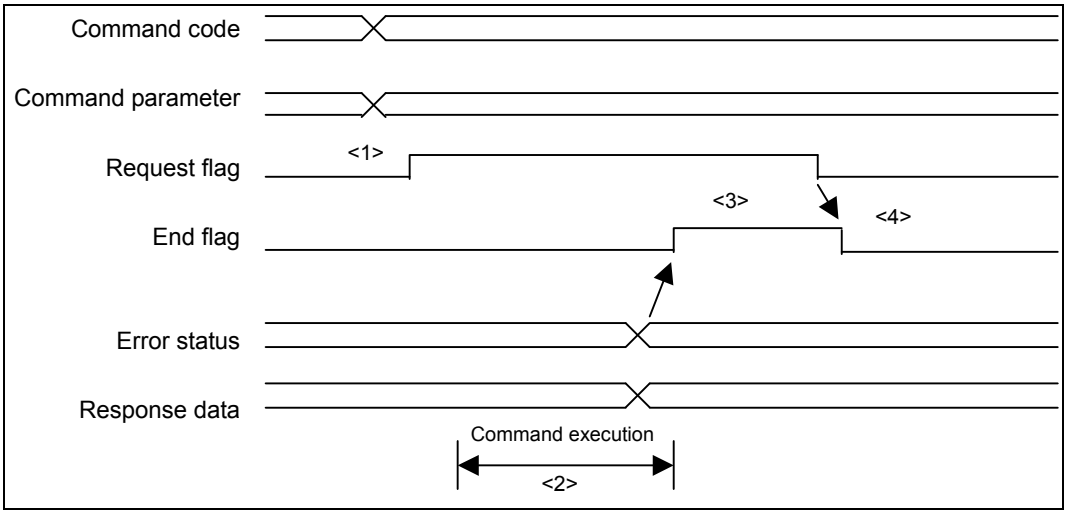

<1> PMC side: Command code is written after checking that both of the request flag and end flag are OFF. If the command has parameter data, the parameter data is written simultaneously. Next, the request flag is set to ON. Within the same scan period, command code may be written and the request flag may be set to ON.

<2> Converter side: When the request flag is set, command code is read then the command is executed. Upon completion of command execution, error status and response data are transferred then the end flag is set to ON.

<3> PMC side: The end flag set to ON is awaited. When the end flag is set to ON, error status is read. In the case of normal termination with response data, the response data is read. Upon completion of processing, the end flag is set to OFF.

<4> Converter side: When the request flag is set to OFF, the end flag is set to OFF.

NOTE
The operations of <2> and <4> are performed by the AS-i converter.

8.9.6.6 Details of commands

(1) Writing the parameter of a particular slave to the EEPROM of the AS-i master

	Address	bit 7	bit 6	bit 5	bit 4	bit 3	bit 2	bit 1	bit 0
Execution data	Y+17	0AH							
	Y+18	Slave address (01H to 1FH, 21H to 3FH)(NOTE)							
	Y+19	0				Parameter value			
	Y+20 to Y+21	Not set							
Response data	X+25	Error code							

A parameter value written to the EEPROM of the AS-i master is not transferred to slaves at the time of command execution but is transferred to each slave when the power is turned on next time.

© MyFANUC 195109AB01DC415385669AA015E5BDE5

(2) Reading the parameter of a particular slave from the EEPROM of the AS-i master

	Address	bit 7	bit 6	bit 5	bit 4	bit 3	bit 2	bit 1	bit 0
Execution data	Y+17	0BH							
	Y+18	Slave address (01H to 1FH, 21H to 3FH)(NOTE)							
	Y+19 to Y+21	Not set							
Response data	X+25	Error code							
	X+26	0				Parameter value			

(3) Writing a parameter to a particular slave

	Address	bit 7	bit 6	bit 5	bit 4	bit 3	bit 2	bit 1	bit 0
Execution data	Y+17	0CH							
	Y+18	Slave address (01H to 1FH, 21H to 3FH)(NOTE)							
	Y+19	0				Parameter value			
	Y+20 to Y+21	Not set							
Response data	X+25	Error code							
	X+26	0				Parameter echo			

A parameter value is transferred to a slave at the time of command execution. However, the parameter value is not stored in the EEPROM of the AS-i master, so that the parameter value is lost when the power is turned off.

(4) Reading the parameter of a particular slave

	Address	bit 7	bit 6	bit 5	bit 4	bit 3	bit 2	bit 1	bit 0
Execution data	Y+17	0DH							
	Y+18	Slave address (01H to 1FH, 21H to 3FH)(NOTE)							
	Y+19 to Y+21	Not set							
Response data	X+25	Error code							
	X+26	0				Parameter value			

(5) Reading the I/O configuration and ID code of a particular slave

	Address	bit 7	bit 6	bit 5	bit 4	bit 3	bit 2	bit 1	bit 0
Execution data	Y+17	12H							
	Y+18	Slave address (01H to 1FH, 21H to 3FH)(NOTE)							
	Y+19 to Y+21	Not set							
Response data	X+25	Error code							
	X+26	0				ID code			
	X+27	0				I/O configuration			

(6) Changing the address of a particular slave

	Address	bit 7	bit 6	bit 5	bit 4	bit 3	bit 2	bit 1	bit 0
Execution data	Y+17	17H							
	Y+18	Slave address before change (01H to 1FH, 21H to 3FH)(NOTE)							
	Y+19	Slave address after change (01H to 1FH, 21H to 3FH)(NOTE)							
	Y+20 to Y+21	Not set							
Response data	X+25	Error code							

This command cannot be executed when a slave with address 0 is connected.

© MyFANUC 195109AB01DC415385669AA015E5BDE5

(7) Reading the analog input data of a particular slave

	Address	bit 7	bit 6	bit 5	bit 4	bit 3	bit 2	bit 1	bit 0
Execution data	Y+17	29H							
	Y+18	Slave address (01H to 1FH)(NOTE)							
	Y+19 to Y+21	Not set							
	Y'+18 to Y'+21	Not set							
Response data	X+25	Error code							
	X+26	Channel 1 input data (higher byte)							
	X+27	Channel 1 input data (lower byte)							
	X+28	Channel 2 input data (higher byte)							
	X+29	Channel 2 input data (lower byte)							
	X'+26	Channel 3 input data (higher byte)							
	X'+27	Channel 3 input data (lower byte)							
	X'+28	Channel 4 input data (higher byte)							
	X'+29	Channel 4 input data (lower byte)							

This command can be executed only with an AS-i converter of Ver. 2.1.

(8) Writing analog output data to a particular slave

	Address	bit 7	bit 6	bit 5	bit 4	bit 3	bit 2	bit 1	bit 0
Execution data	Y+17	2AH							
	Y+18	Slave address (01H to 1FH)(NOTE)							
	Y+19	Channel 1 output data (higher byte)							
	Y+20	Channel 1 output data (lower byte)							
	Y+21	Channel 2 output data (higher byte)							
	Y+22	Channel 2 output data (lower byte)							
	Y'+18	Channel 3 output data (higher byte)							
	Y'+19	Channel 3 output data (lower byte)							
	Y'+20	Channel 4 output data (higher byte)							
	Y'+21	Channel 4 output data (lower byte)							
Response data	X+25	Error code							

This command can be executed only with an AS-i converter of Ver. 2.1.

NOTE

Input an AS-i slave address number as follows:

Slave type	Address input method
Standard slave or A slave	Input an address number directly in hexadecimal (01H to 1FH).
B slave	Input an address number added to 32 (20hex) in hexadecimal. Example) When the address is 10B 10 + 32 → 42 (Input 2Ahex.)

An analog slave is a standard slave to which address distinction between A and B is not applicable. So, input an address number directly in hexadecimal (01H to 1FH).

© MyFANUC 195109AB01DC415385669AA015E5BDE5

8.9.7 LED Status Indication and Setting Switch Operation

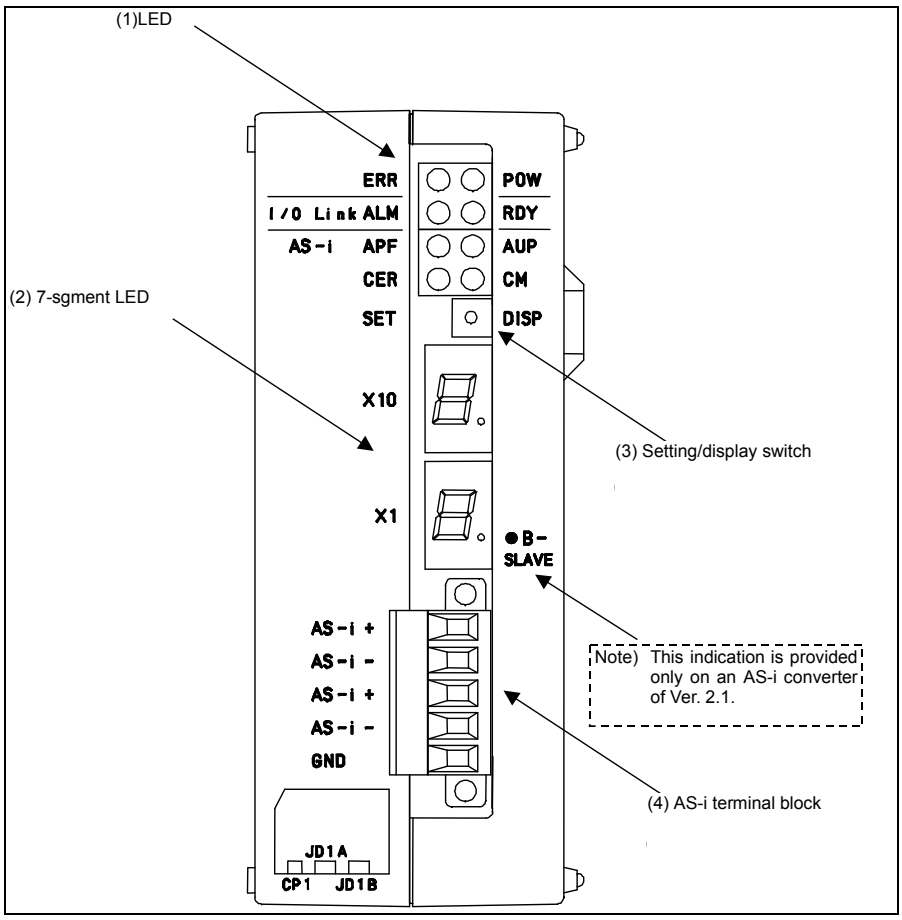

8.9.7.1 LED indication

	Name	Color	Description
Overall	POW	Green	Indicates that the power to the AS-i converter is on.
	ERR	Red	Turned on when there is an error. (For error details, check the other LEDs, 7-segment LEDs, and status on the I/O Link.)
I/O Link	RDY	Green	Turned on when the I/O Link is ready for communication.
	ALM	Red	Indicates that an alarm is issued on the I/O Link. (For error details, check the 7-segment LEDs.)
AS-i	AUP	Green	Turned on when the operation mode is the protection mode and automatic addressing is enabled.
	CM	Green	Turned on when the operation mode is the configuration mode and turned off when the operation mode is the protection mode.
	APF	Red	Turned on when the voltage of the AS-i power supply is low.
	CER	Red	Turned on when there is a discrepancy between the configured slaves and the currently connected slaves (when there is a discrepancy in LPS, ID code, or I/O configuration).

8.9.7.2 7-segment LED indication

LED indication	Description
No indication	Normal operation
E0	AS-i master error
E1	AS-i master EEPROM error
E2	ROM error

© MyFANUC 195109AB01DC415385669AA015E5BDE5

LED indication	Description
E3	RAM error
E5	Command execution error, SET switch execution error
E6	I/O Link slave watchdog alarm
E7	I/O Link RAM error
E8	Watchdog alarm 1
E9 or "." (dot) of X10	Watchdog alarm 2
00 to 31	Slave address indication (See the table below and the next page.)
"." (dot) of X1	Turned on when a B slave address is indicated.
88	Initialization in progress, mode switching in progress, AS-i power supply voltage decrease

Operation mode	In normal operation	When the setting switch (DISP) is pressed
Configuration mode	No display	Displays all connected slaves at intervals of about one second (display of LES).
Protection mode	The smallest slave address among those of the configuration-mismatching slaves is displayed.	Displays all configuration-mismatching slaves at intervals of about one second (displays a list of discrepancies between LPS and LES). * No data is displayed when there is no configuration-mismatching slave.

Order of slave number display with Ver. 2.1

Slave numbers are displayed in the order from standard slaves or A slaves (with "." of X1 turned off) to B slaves (with "." of X1 turned on).

(Example)

When the following slaves are connected, the slave numbers are displayed in the order shown below:

Address #10	Standard slave
Address #20A	A/B slave
Address #20B	A/B slave
Address #30	Standard slave

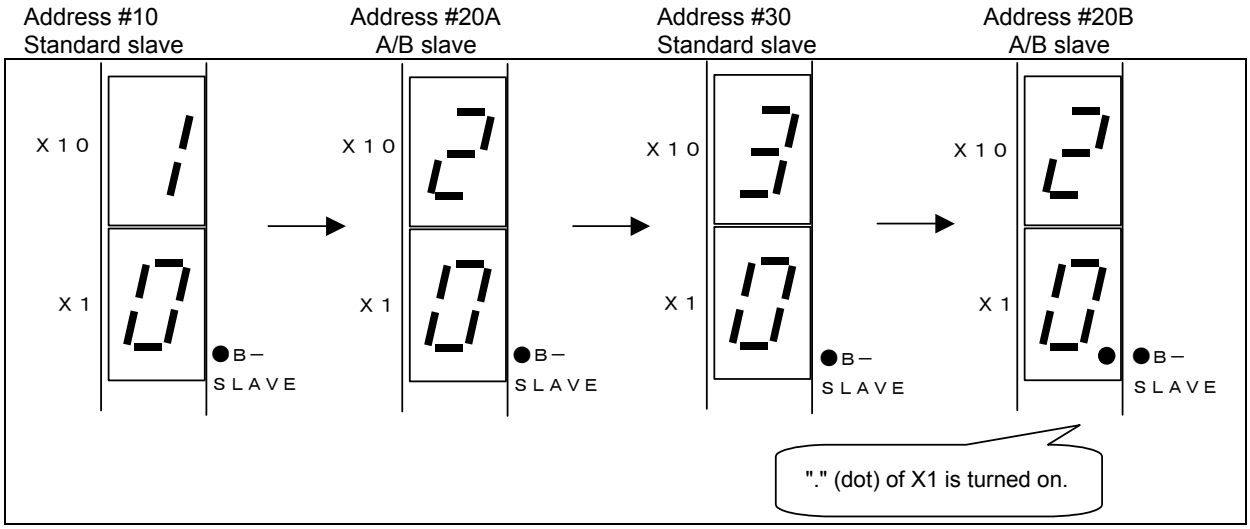

© MyFANUC 195109AB01DC415385669AA015E5BDE5

8.9.7.3 Setting/display switch

Switch	Operation mode	
	Configuration mode	**Protection mode**
DISP	The addresses of slaves are displayed. No additional input is accepted until the addresses of all slaves are displayed.	
	The addresses of all slaves are displayed at intervals of about 1 second. (LES is displayed).	The addresses of all configuration-mismatching slaves are displayed at intervals of about 1 second. (A list of discrepancies between LPS and LES is displayed.) No data is displayed when there is no configuration-mismatching slave.
SET	The operation mode is switched. Holding down this switch continually does not switch the mode successively. Be sure to turn off this switch for 1 second or more before switching to the next mode.	
	Pressing this switch for 5 seconds or more registers the current slave configuration (LPS, ID code, I/O configuration, and parameters), enables automatic addressing, and switches the mode to the protection mode. Pressing this switch for less than 5 seconds changes the mode to the protection mode. In this case, however, the configuration is not registered and automatic addressing is not enabled.	Pressing this switch for 5 seconds or more changes the mode to the configuration mode. Pressing this switch for less than 5 seconds does not change the mode.

NOTE

If a slave with address 0 is connected, the configuration cannot be registered and the mode is not switched to the protection mode. Alarm E5 is indicated.

© MyFANUC 195109AB01DC415385669AA015E5BDE5

8.9.7.4 Error processing

Check the error state with the LED indication and the status signals on the I/O Link.

Alarm or warning	LED indication		Status signals on I/O Link			Cause and corrective action
	LED	7-segment LED	ERR X+18 bit 1	AS-i data ready X+18 bit 0	Others	
Normal operation	-	Turned off	0	1	-	-
Configuration mismatch	CER turned on	(NOTE)	0	1	X+16 bit 7=0	There are discrepancies between the registered configuration and the current slave configuration. Pressing DISP in the protection mode displays the addresses of configuration-mismatching slaves. The cause may be a slave unit failure, AS-i cable disconnection, or AS-i communication error due to noise.
Initialization in progress, or mode switching in progress	-	88	0	0	X+16 bit 0=1 or X+17 bit 0=1	
AS-i power supply voltage decrease	APF turned on	88	1	0	X+16 bit 1=1	Check if the AS-i power supply is normal and check also if the cable from the AS-i power supply is normal. This error is automatically recovered when the AS-i power supply becomes normal.
AS-i master EEPROM error	ERR turned on	E1	1	0	X+17 bit 2=0	Restart the power supply. The registered configuration may have been destroyed. So, register the configuration again (according to NOTE below). If this error still occurs, replace the AS-i converter.
AS-i master error	ERR turned on	E0	1	0	X+18 bit 2=1	Restart the power supply. If this error still occurs, replace the AS-i converter.
ROM error	ERR turned on	E2	1	0	X+18 bit 3=1	Replace the AS-i converter.
RAM error	ERR turned on	E3	1	0	X+18 bit 4=1	Replace the AS-i converter.
Watchdog 1	ERR turned on	E8	1	0	X+18 bit 5=1	Replace the AS-i converter.
Watchdog 2	ERR turned on	E9 or "." of X10	1	0	-	An I/O Link system alarm is issued on the NC side. Replace the AS-i converter.
I/O Link slave watchdog	ERR turned on	E6	-	-	-	An I/O Link system alarm is issued on the NC side. The power to another device connected to the I/O Link may be turned off, or the I/O Link cable may be disconnected. An I/O Link communication error may have occurred due to noise.
I/O Link RAM error	ERR turned on	E7	-	-	-	An I/O Link system alarm is issued on the NC side. Replace the AS-i converter.

© MyFANUC 195109AB01DC415385669AA015E5BDE5

NOTE

1 In the protection mode, the smallest one of the addresses of the configuration-mismatching slaves is displayed. No data is displayed in the configuration mode.
2 Use a ladder program to detect and display an AS-i converter error.
3 When an AS-i converter error occurs, both of the DO signals and DI signals are turned off.
4 When AS-i communication fails, a watchdog alarm is issued on the slave unit side. When a slave watchdog alarm is issued, the behavior of DO signals is determined by the type of slave unit and parameter setting. For details, refer to the specifications of the slave unit.
5 Corrective action for an AS-i master EEPROM error
When the 7-segment LEDs indicate E1, the registered configuration may have been destroyed. So, register the configuration again according to the procedure below.

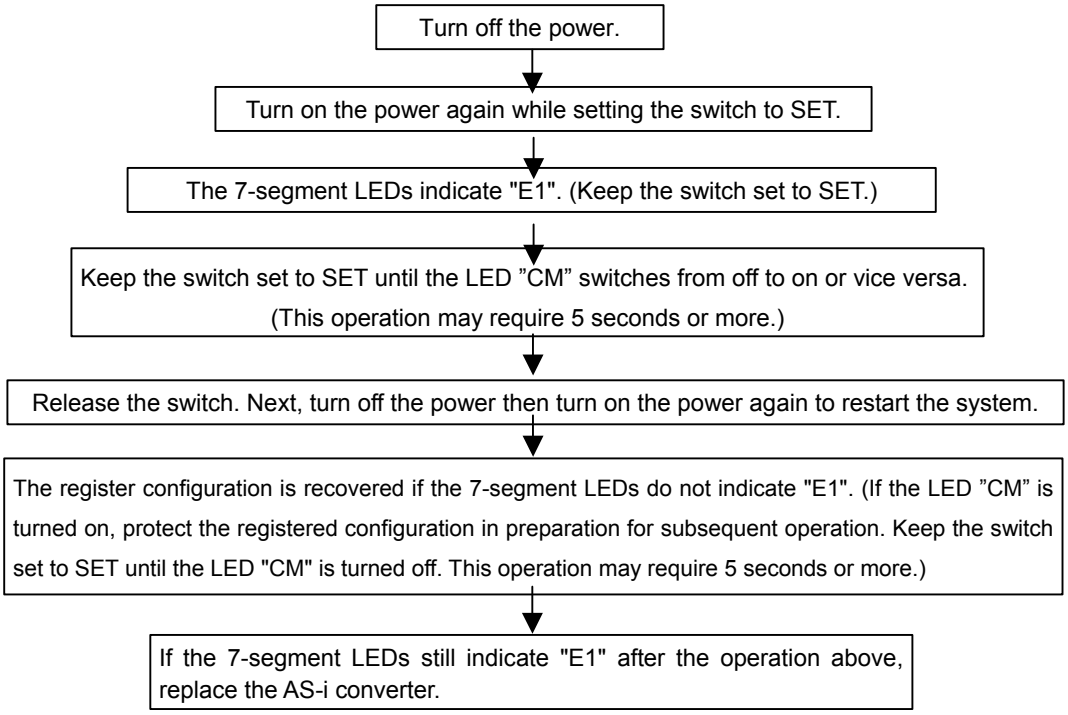

* Note that if "E1" is indicated, the CNC may not be started.

AS-i converters with this function were shipped in June, 2005 or later.
The corrective action mentioned above cannot be applied to those AS-i converters that were shipped earlier. In this case, replace the AS-i converter if an EEPROM error occurs.

© MyFANUC 195109AB01DC415385669AA015E5BDE5

8.9.8 How to Use the I/O Link-AS-i Converter

8.9.8.1 Installation

The operation below can be performed even when the I/O Link is not connected (for example, when the power to the CNC is not turned on with only the power to the AS-i converter and AS-i power supply turned on or when the I/O Link cable is not connected).

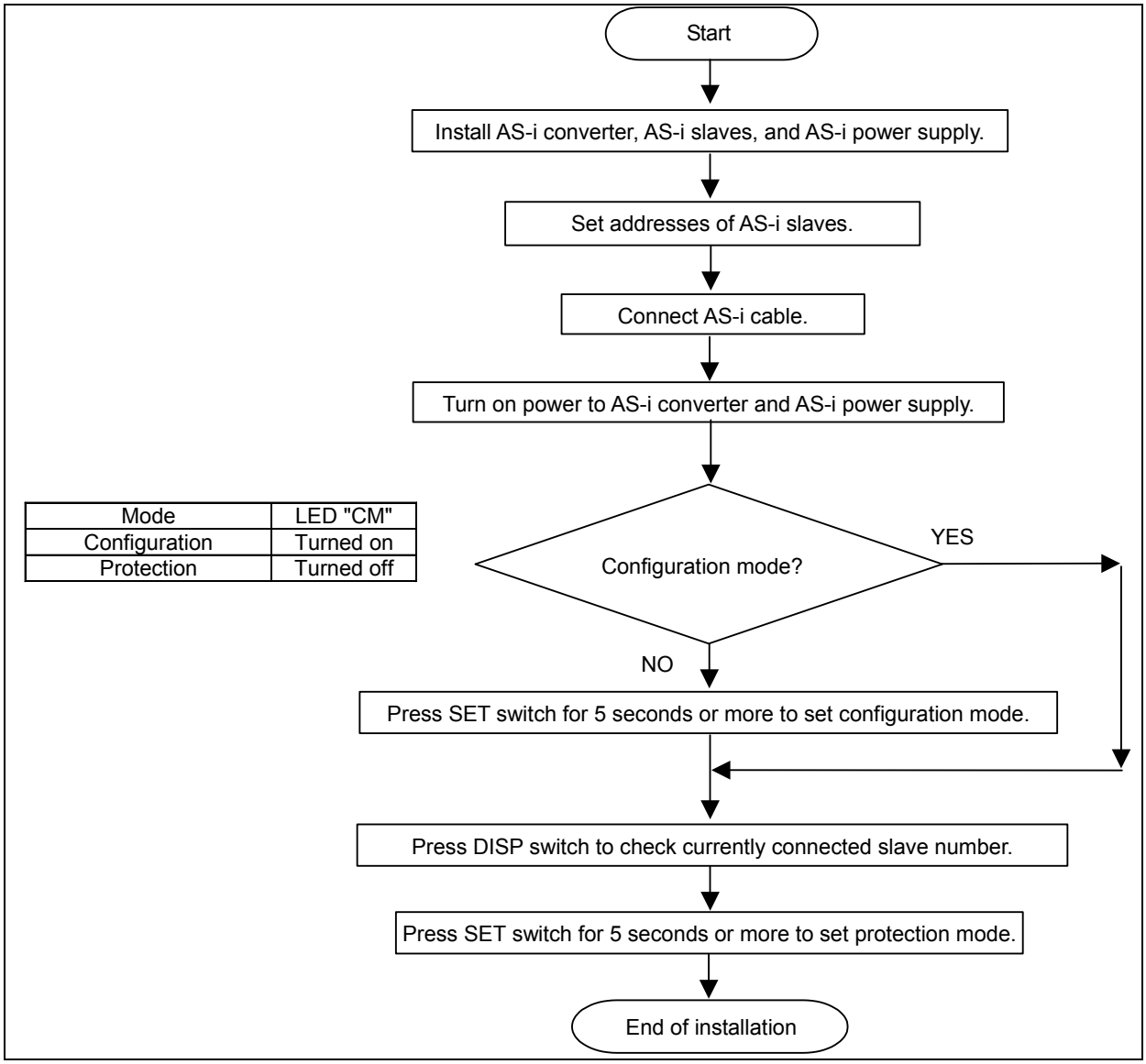

Mode	LED "CM"
Configuration	Turned on
Protection	Turned off

NOTE

1 When the operation mode is switched to the protection mode, the slave configuration is registered and automatic addressing is enabled.

2 The operation mode remains unchanged, regardless of whether the power to the AS-i converter is turned on or off. To switch the operation mode, use the SET switch.

© MyFANUC 195109AB01DC415385669AA015E5BDE5

8.9.8.2 Normal operation

(1) Operation mode

The protection mode is used in normal operation.
In this mode, a configuration mismatch error occurs and CER is turned on if communication with an AS-i slave unit is disabled for a cause such as a disconnected cable, AS-i communication error, and slave unit failure.

(2) Alarm monitor

Monitor the alarm signal (alarm issued by bit 1 of X+18 set to 1) on the I/O Link with a CNC ladder program and ensure that a PMC alarm is issued to notify maintenance staff if an error occurs.
Check the cause of an alarm with the LED indications and the status signals (X+16 to X+18) on the I/O Link then take a proper corrective action.

(3) Configuration mismatch

A configuration mismatch means that the current slave configuration differs from the slave configuration registered when the operation mode is switched from the configuration mode to the protection mode.
Pressing the DISP switch in the protection mode when CER is turned on displays all configuration-mismatching slave numbers sequentially.
Monitor for this configuration-mismatching error (bit 7 of X+16) with a CNC ladder program and ensure that a PMC alarm is issued to notify maintenance staff if this error occurs. To take a proper corrective action, maintenance staff can identify the slave number in question by pressing the DISP switch as mentioned earlier.
With a ladder program, configuration-mismatching slave numbers can be displayed on the display unit of the CNC.

(4) Causes of configuration mismatch and corrective action

A configuration mismatch can occur for a cause such as a disconnected cable, communication error, and AS-i slave unit failure.

a) Disconnected cable

The cause may be identified as a disconnected cable if all slaves after a particular slave are configuration-mismatching slaves.

b) Communication error

A temporary communication error may be recovered by restarting the operation. In this case, however, check whether a large noise source is located nearby and whether all connections are made normally.

c) Slave unit failure

If normal operation cannot be resumed after a restart, the cause may be a slave unit hardware failure.
When only one slave unit is to be replaced, an address number can be automatically set with the automatic addressing function.
When multiple slave units are to be replaced, addresses for the slave units can be set on a one-by-one basis with the automatic addressing function or addresses for all slaves can be set beforehand using the addressing device.

d) No address setting

An AS-i slave with address "0" is connected.

(5) AS-i data ready flag (X+18: Bit 0)

Before reading DI signals with a ladder, check that the AS-i data ready flag is set to 1. If the flag is set to 0, do not use DI signals.

© MyFANUC 195109AB01DC415385669AA015E5BDE5

8.9.9 Others

8.9.9.1 CE marking

The AS-i converter has CE marking certification.
Note, however, that because of its conformance to the AS-i EN standard (EN50295), the AS-i converter has not undergone surge test.

8.9.9.2 Fuse

The AS-i converter has a built-in fuse. If the fuse blows, replace the fuse after correcting the cause.

Blown fuse indication	Rating	Ordering information
POW is off.	1 A	A03B-0815-K001

A fuse is installed on the printed circuit board inside the unit.

© MyFANUC 195109AB01DC415385669AA015E5BDE5

8.10 CONNECTION OF OPERATOR'S PANEL CONNECTION UNIT (SOURCE DO)

Two operator's panel connection units are available according to the number of I/Os.

Specification	Input	Output
A16B-2204-0260	96	64
A16B-2204-0261	64	32

8.10.1 Overall Connection Diagram

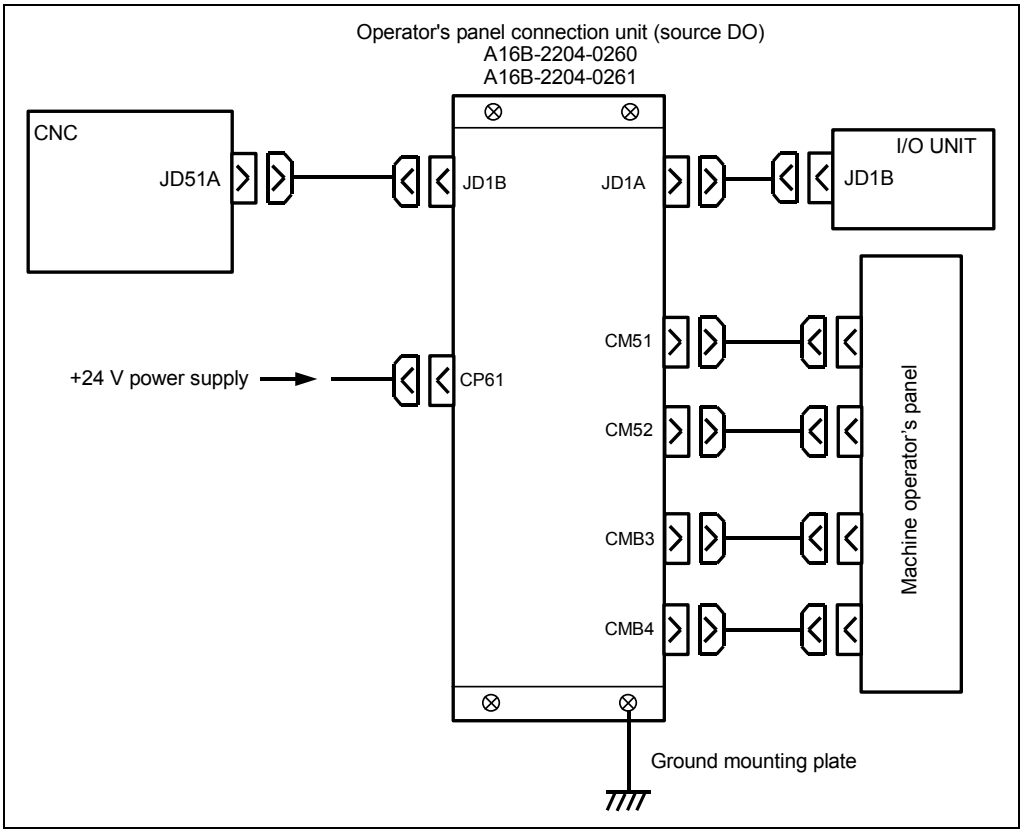

8.10.2 Power Connection

Provide the CP61 connector, shown below, with the power necessary for the printed circuit board operation and that for DI operation.

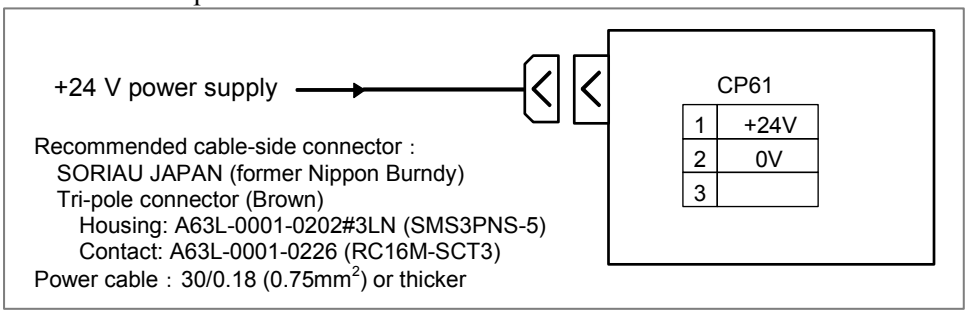

© MyFANUC 195109AB01DC415385669AA015E5BDE5

8.10.3 DI/DO Connector Pin Arrangement

CM51

33	DICOM1			01	Xm+0.0
34	Xm+0.2	19	Xm+0.1	02	Xm+0.3
35	Xm+0.5	20	Xm+0.4	03	Xm+0.6
36	Xm+1.0	21	Xm+0.7	04	Xm+1.1
37	Xm+1.3	22	Xm+1.2	05	Xm+1.4
38	Xm+1.6	23	Xm+1.5	06	Xm+1.7
39	Xm+2.1	24	Xm+2.0	07	Xm+2.2
40	Xm+2.4	25	Xm+2.3	08	Xm+2.5
41	Xm+2.6	26	Xm+3.0	09	Xm+2.7
42	Xm+3.1	27	Xm+3.3	10	Xm+3.2
43	Xm+3.4	28	Xm+3.6	11	Xm+3.5
44	Xm+3.7	29	Xm+4.1	12	Xm+4.0
45	Xm+4.2	30	Xm+4.4	13	Xm+4.3
46	Xm+4.5	31	Xm+4.7	14	Xm+4.6
47	Xm+5.0	32	Xm+5.2	15	Xm+5.1
48	Xm+5.3			16	Xm+5.4
49	Xm+5.5			17	Xm+5.6
50	Xm+5.7			18	24V

CM52

33	0V			01	Xm+6.0
34	Xm+6.2	19	Xm+6.1	02	Xm+6.3
35	Xm+6.5	20	Xm+6.4	03	Xm+6.6
36	Xm+7.0	21	Xm+6.7	04	Xm+7.1
37	Xm+7.3	22	Xm+7.2	05	Xm+7.4
38	Xm+7.6	23	Xm+7.5	06	Xm+7.7
39	Xm+8.1	24	Xm+8.0	07	Xm+8.2
40	Xm+8.4	25	Xm+8.3	08	Xm+8.5
41	Xm+8.6	26	Xm+9.0	09	Xm+8.7
42	Xm+9.1	27	Xm+9.3	10	Xm+9.2
43	Xm+9.4	28	Xm+9.6	11	Xm+9.5
44	Xm+9.7	29	Xm+10.1	12	Xm+10.0
45	Xm+10.2	30	Xm+10.4	13	Xm+10.3
46	Xm+10.5	31	Xm+10.7	14	Xm+10.6
47	Xm+11.0	32	Xm+11.2	15	Xm+11.1
48	Xm+11.3			16	Xm+11.4
49	Xm+11.5			17	Xm+11.6
50	Xm+11.7			18	24V

CMB3

33	0V			01	Yn+0.0
34	Yn+0.2	19	Yn+0.1	02	Yn+0.3
35	Yn+0.5	20	Yn+0.4	03	Yn+0.6
36	Yn+1.0	21	Yn+0.7	04	Yn+1.1
37	Yn+1.3	22	Yn+1.2	05	Yn+1.4
38	Yn+1.6	23	Yn+1.5	06	Yn+1.7
39	Yn+2.1	24	Yn+2.0	07	Yn+2.2
40	Yn+2.4	25	Yn+2.3	08	Yn+2.5
41	Yn+2.6	26	Yn+3.0	09	Yn+2.7
42	Yn+3.1	27	Yn+3.3	10	Yn+3.2
43	Yn+3.4	28	Yn+3.6	11	Yn+3.5
44	Yn+3.7	29	Yn+4.1	12	Yn+4.0
45	Yn+4.2	30	Yn+4.4	13	Yn+4.3
46	Yn+4.5	31	Yn+4.7	14	Yn+4.6
47	Yn+5.0	32	Yn+5.2	15	Yn+5.1
48	Yn+5.3			16	Yn+5.4
49	Yn+5.5			17	DOCOM
50	DOCOM			18	DICOM2

CMB4

14	Yn+6.0			01	Yn+6.1
15	Yn+6.3	8	Yn+6.2	02	Yn+6.4
16	Yn+6.6	9	Yn+6.5	03	Yn+6.7
17	Yn+7.1	10	Yn+7.0	04	Yn+7.2
18	Yn+7.4	11	Yn+7.3	05	Yn+7.5
19	Yn+7.7	12	Yn+7.6	06	Yn+5.6
20	DOCOM	13	Yn+5.7	07	0V

(Note)
1. Xm+8 through Xm+11 and Yn+4 through Yn+7 can be used only for the A16B-2204-0260.
2. Connector CMB4 is not mounted when A16B-2204-0261 is selected.

NOTE

CM51, CM52, CMB3: Recommended cable-side connector: A63L-0001-0134#01
(Connector: HONDA MR-50F, Case: HONDA MR-50L)
Recommended wire material: A66L-0001-0042
(7/0.18, 50 pins)

CMB4: Recommended cable-side connector: A63L-0001-0134#02
(Connector: HONDA MR-20F, Case: HONDA MR-20L)
Recommended wire material: A66L-0001-0041
(7/0.18, 20 pins)

⚠ CAUTION

An output DC voltage of +24 V at CM51 (18) and CM52 (18) is for DI signals. Do not supply 24 V DC to these pins from the outside.

© MyFANUC 195109AB01DC415385669AA015E5BDE5

8.10.4 DI (Input Signal) Connection

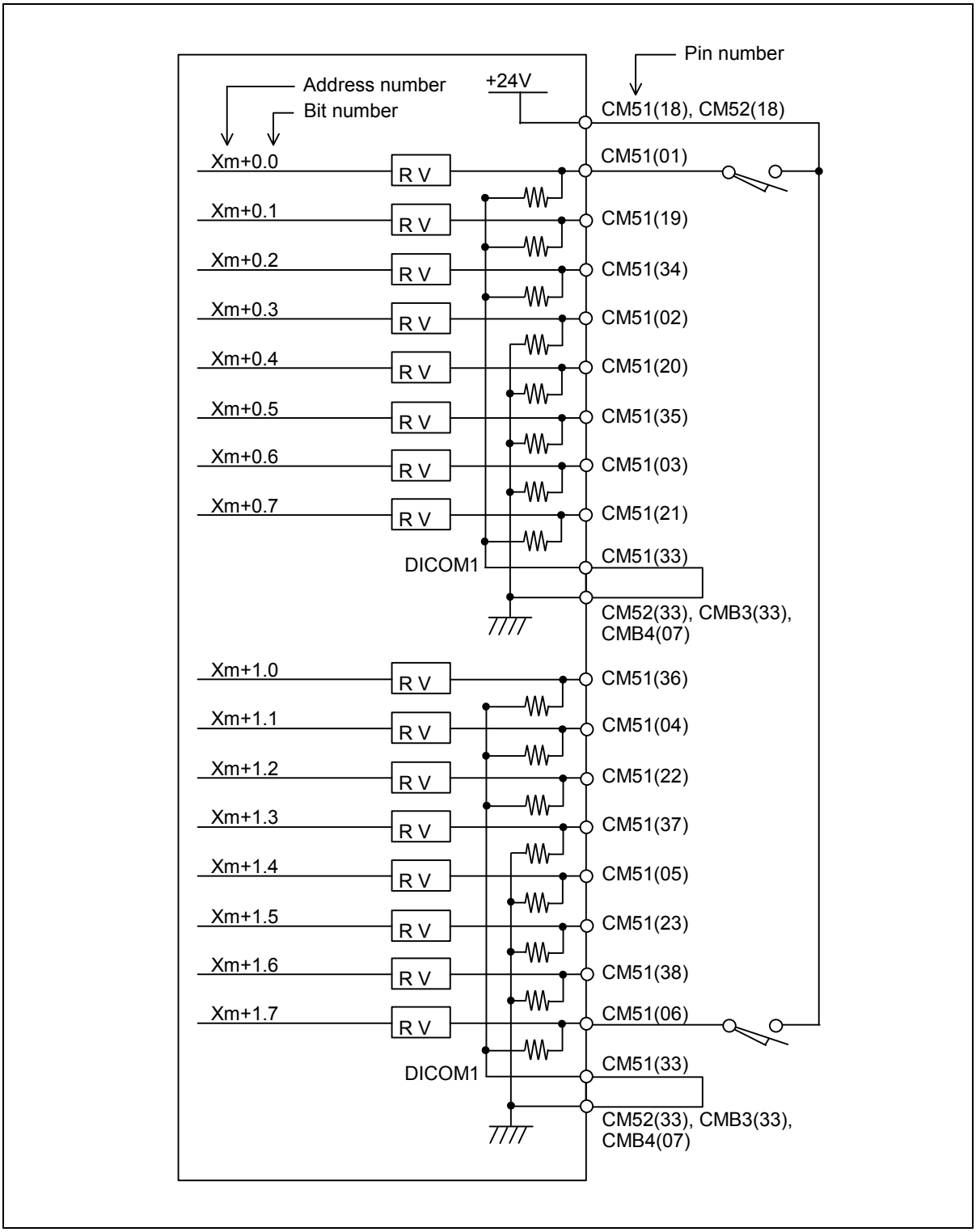

© MyFANUC 195109AB01DC415385669AA015E5BDE5

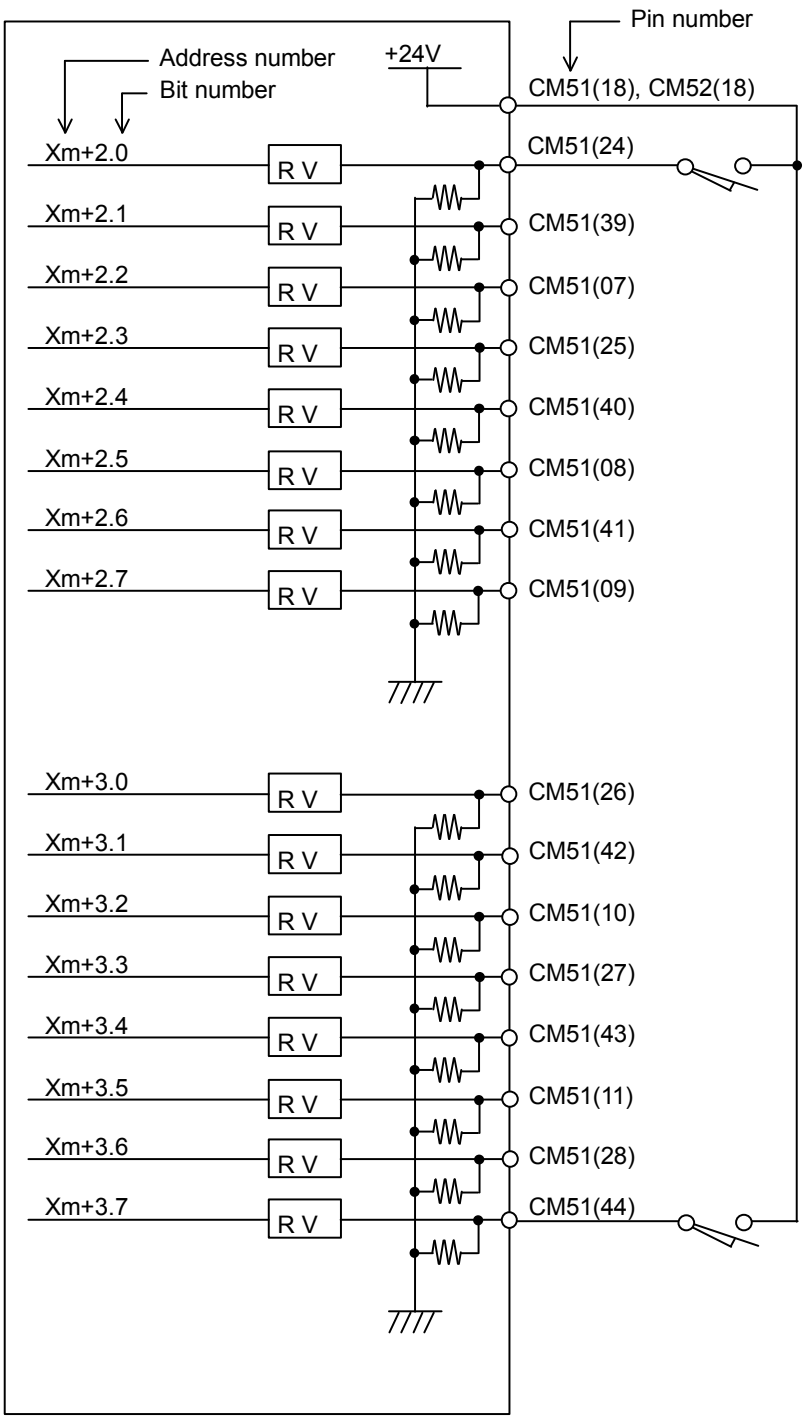

© MyFANUC 195109AB01DC415385669AA015E5BDE5

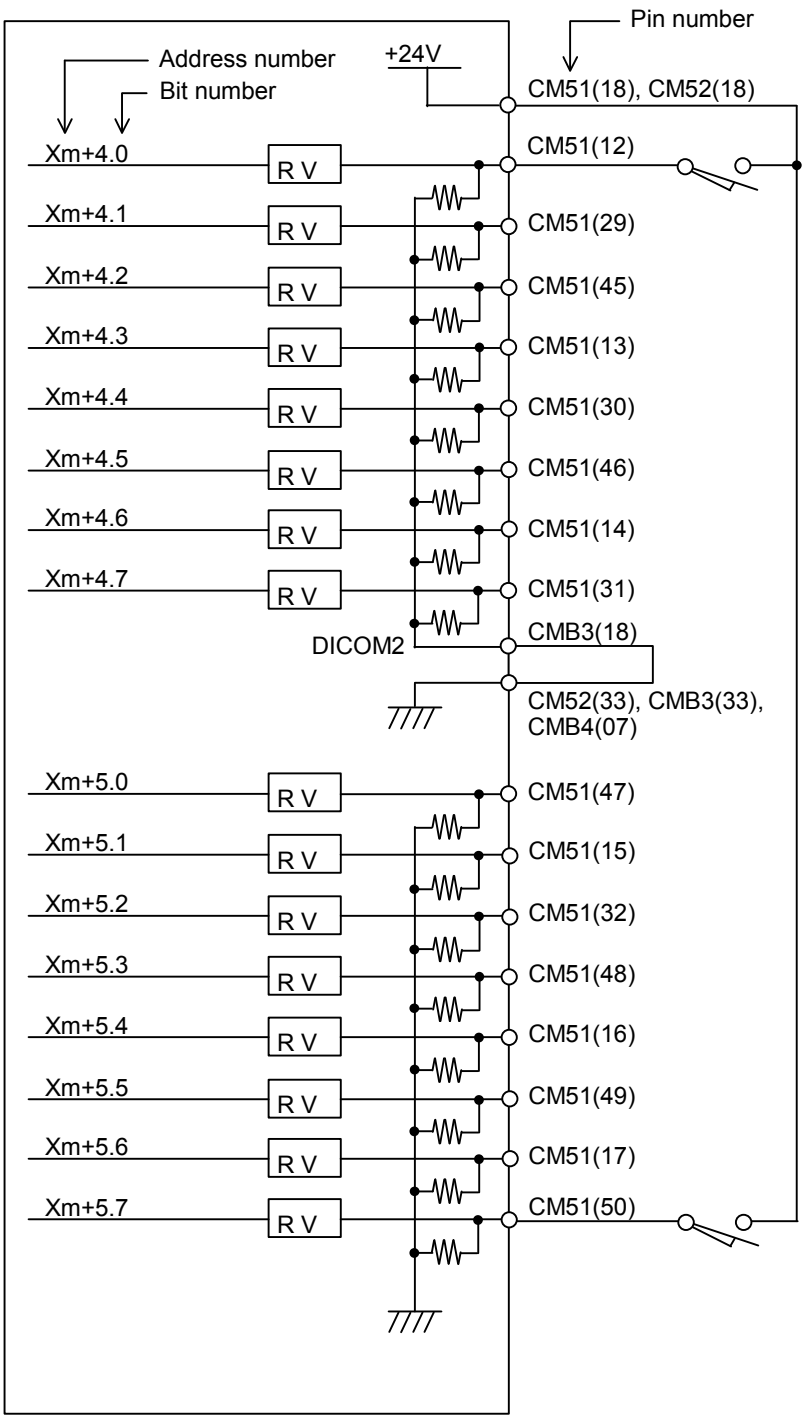

© MyFANUC 195109AB01DC415385669AA015E5BDE5

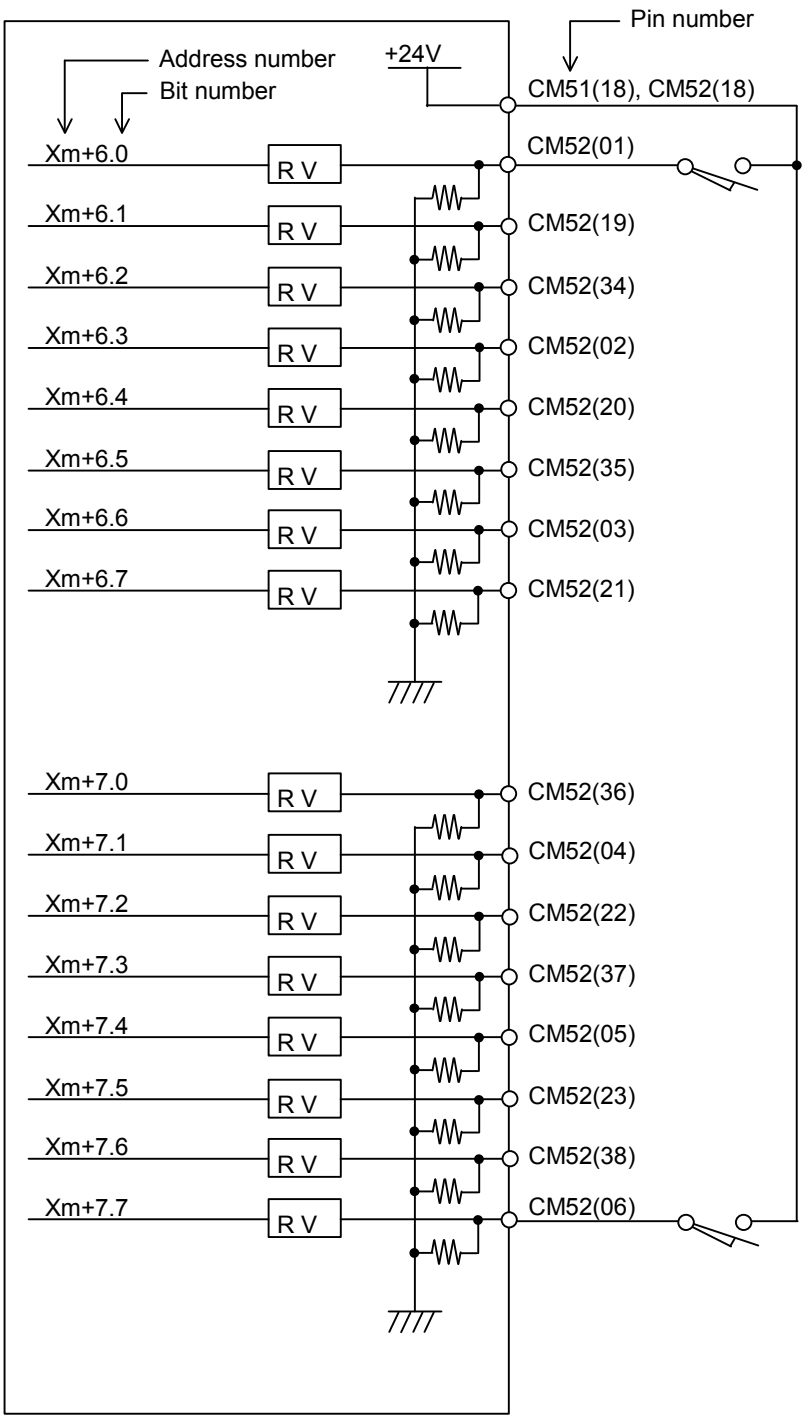

© MyFANUC 195109AB01DC415385669AA015E5BDE5

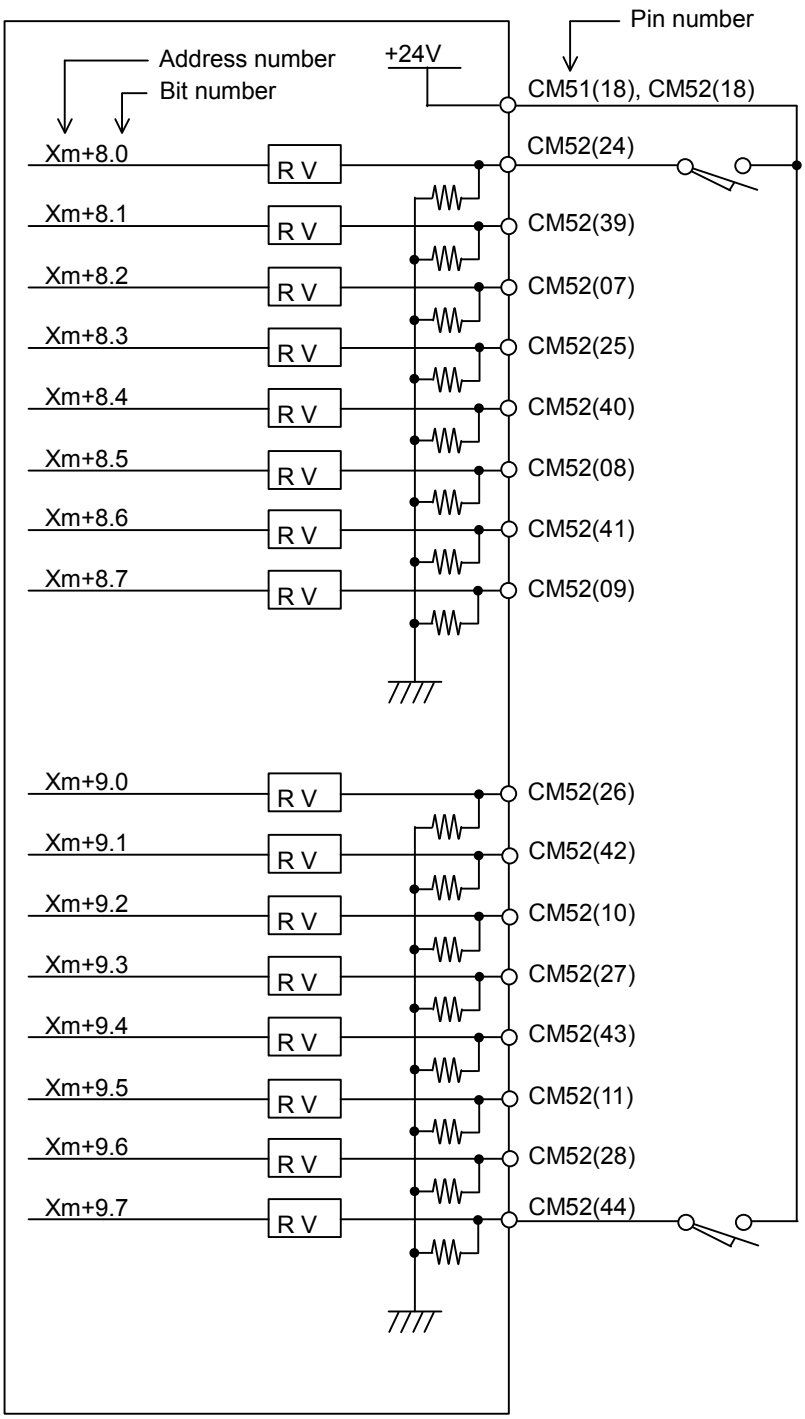

© MyFANUC 195109AB01DC415385669AA015E5BDE5

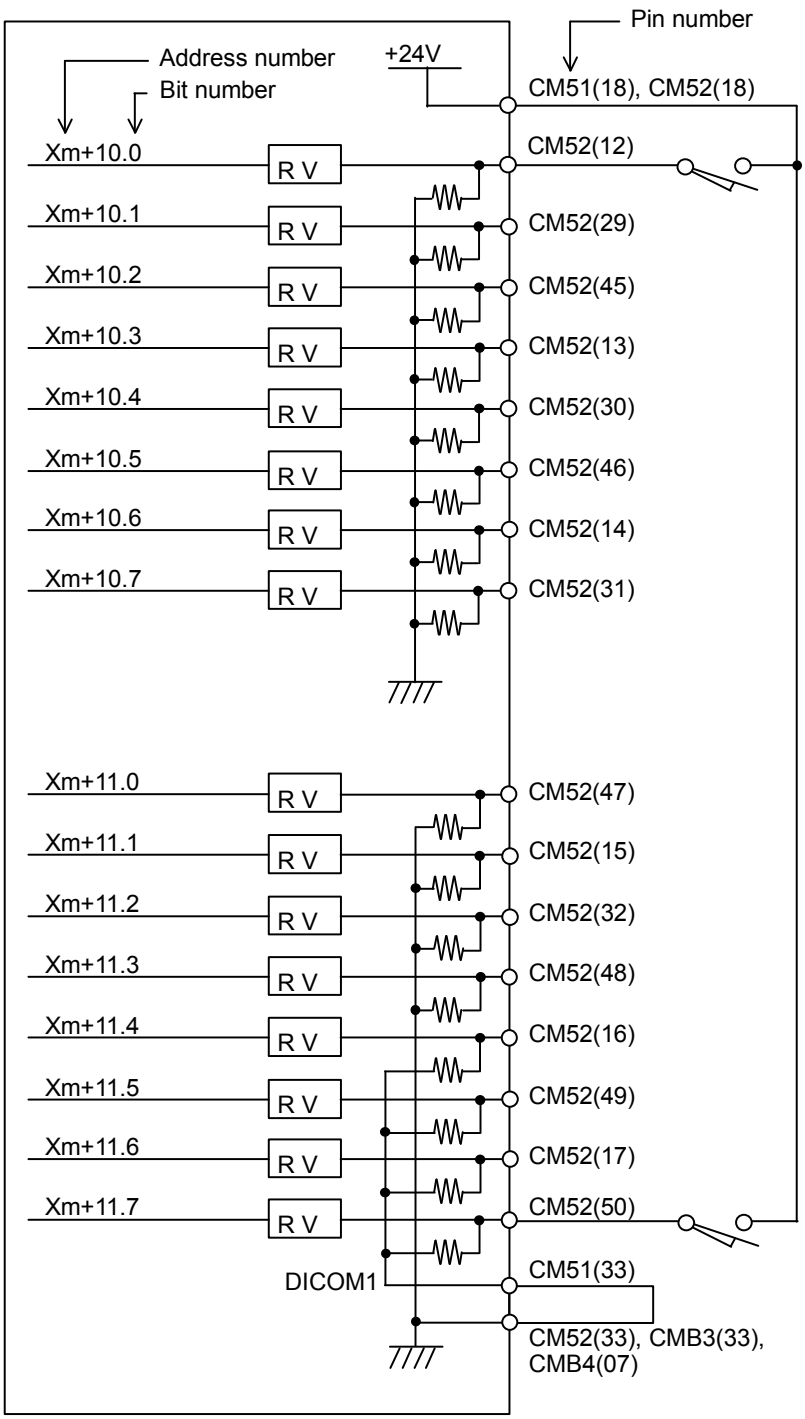

© MyFANUC 195109AB01DC415385669AA015E5BDE5

NOTE

Xm+0.0 through Xm+0.2, Xm+0.7, Xm+1.0 through Xm+1.2, Xm+1.7, Xm+11.4 through Xm+11.7, and Xm+4.0 through Xm+4.7 are DI pins for which a common voltage can be selected. That is, by connecting the DICOM1 CM51(33) or DICOM2 CMB3(18) pin to the +24 V power supply, a DI signal can be input with its logical state reversed. If, however, a cable is connected to ground, it has the same effect as inputting an ON state DI signal. To prevent this from occurring, the connection of the DICOM1 CM51(33) and DICOM2 CMB3(18) pins to the 0 V power supply is recommended whereever possible.

For the unconnected pins at the addresses for which the common voltage is fixed, the input is “0”. For the unconnected pins at the addresses for which a common voltage can be selected, the input is “0” when the DICOMx common select pin is connected to the 0 V power supply or “1” when it is connected to the +24 V power supply. Connect DICOM1 and DICOM2 when used. When addresses Xm+0.0 through Xm+0.2, Xm+0.7, Xm+1.0 through Xm+1.2, Xm+1.7, Xm+11.4 through Xm+11.7, and Xm+4.0 through Xm+4.7 are not used, connect DICOM1 and DICOM2 to the 0 V power supply.

Common voltage for DI

Address	Common voltage
Xm	Bit 0, 1, 2, and 7 can be selected with DICOM1. The others cannot be selected.
Xm+1	Bit 0, 1, 2, and 7 can be selected with DICOM1. The others cannot be selected.
Xm+2	Cannot be selected.
Xm+3	Cannot be selected.
Xm+4	Can be selected with DICOM2
Xm+5	Cannot be selected.
Xm+6	Cannot be selected.
Xm+7	Cannot be selected.
Xm+8	Cannot be selected.
Xm+9	Cannot be selected.
Xm+10	Cannot be selected.
Xm+11	Bit 4, 5, 6, and 7 can be selected with DICOM1. The others cannot be selected.

⚠ **CAUTION**

An output DC voltage of +24 V at CM51 (18) and CM52 (18) is for DI signals. Do not supply 24 V DC to these pins from the outside.

© MyFANUC 195109AB01DC415385669AA015E5BDE5

8.10.5 DO (Output Signal) Connection

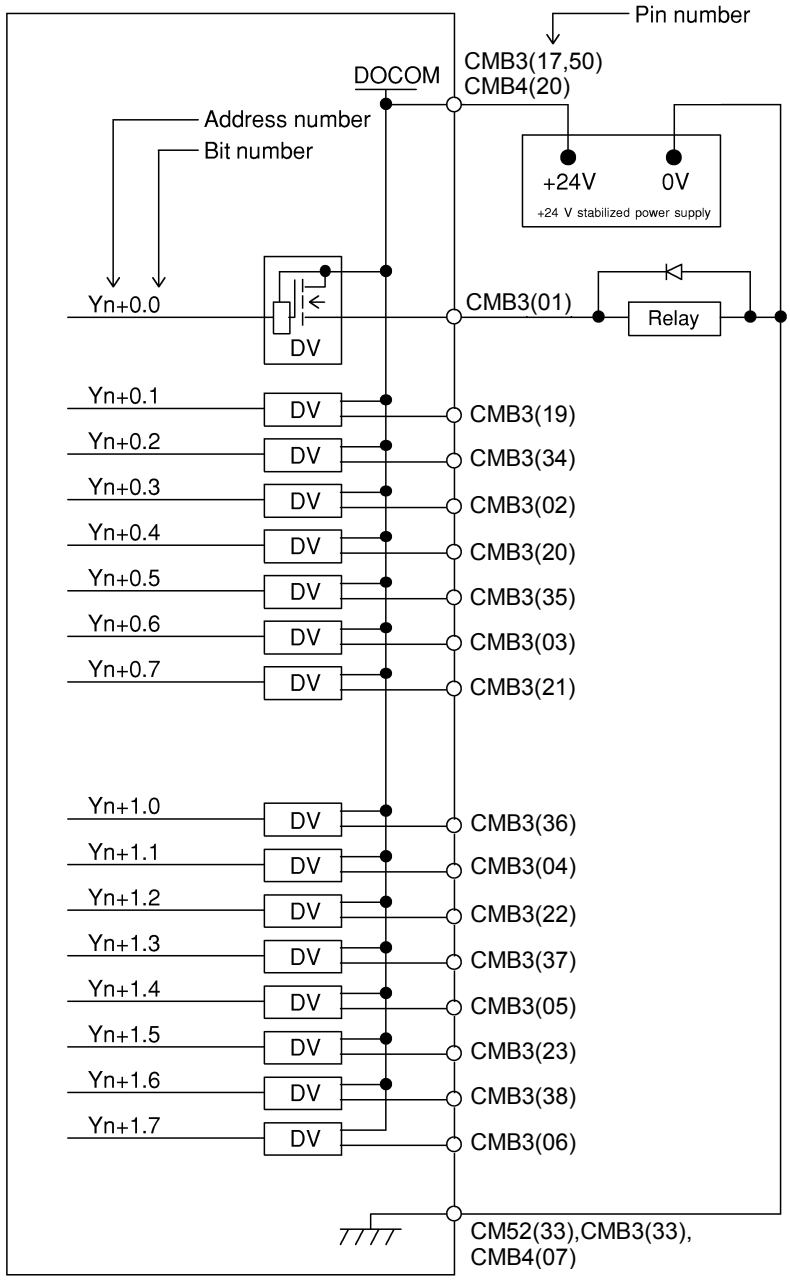

© MyFANUC 195109AB01DC415385669AA015E5BDE5

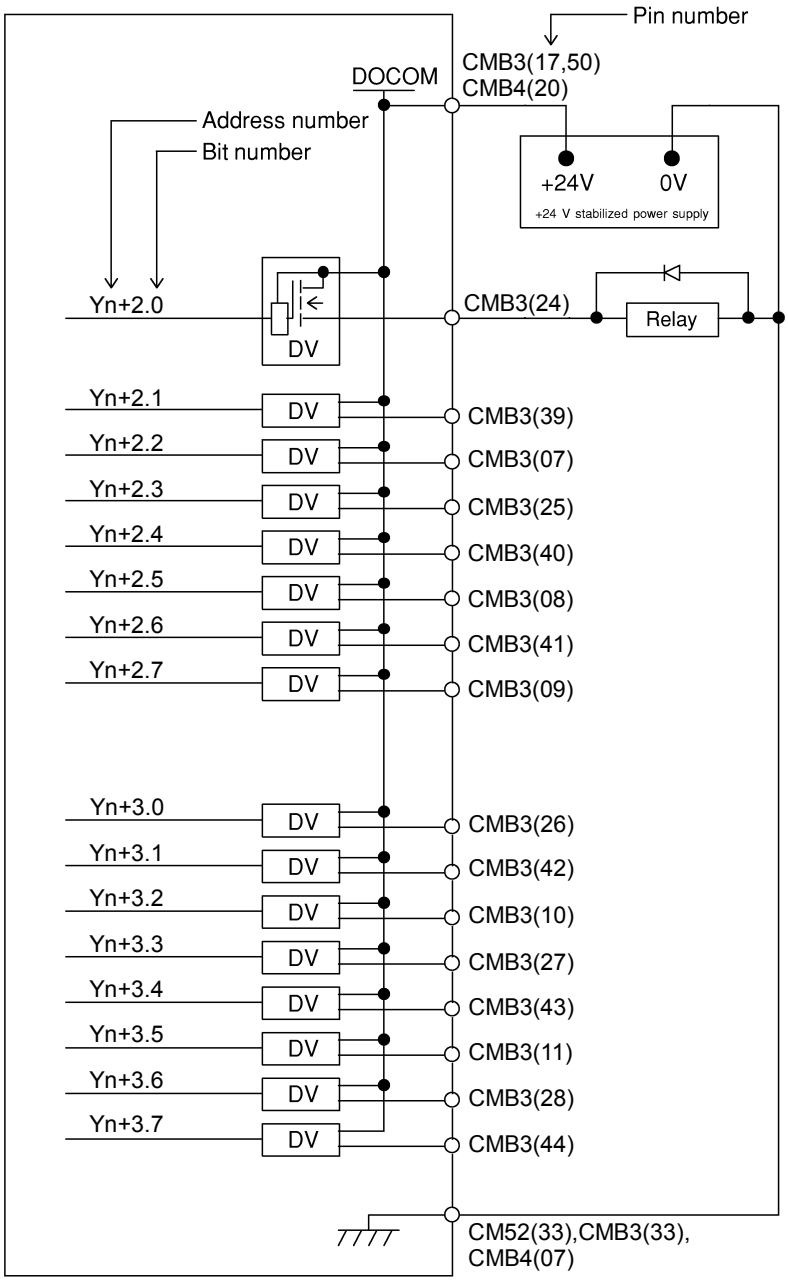

© MyFANUC 195109AB01DC415385669AA015E5BDE5

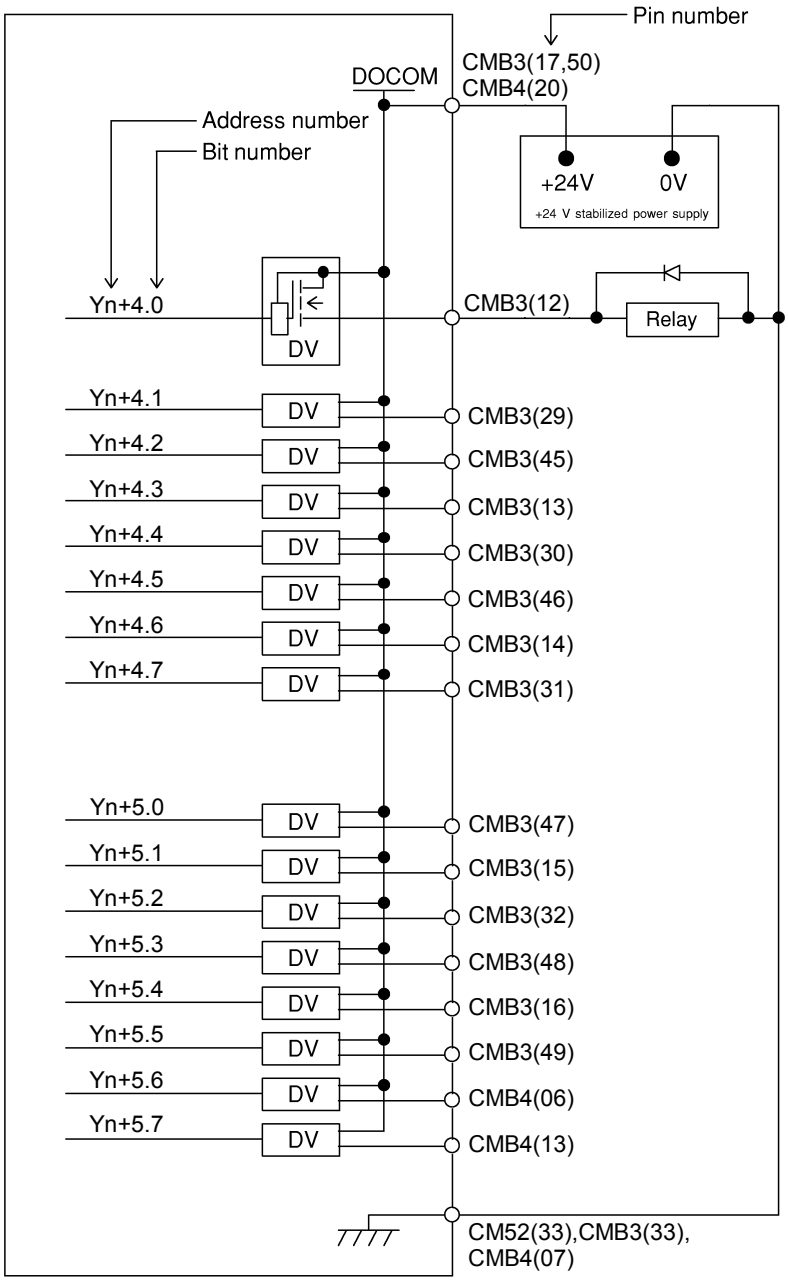

© MyFANUC 195109AB01DC415385669AA015E5BDE5

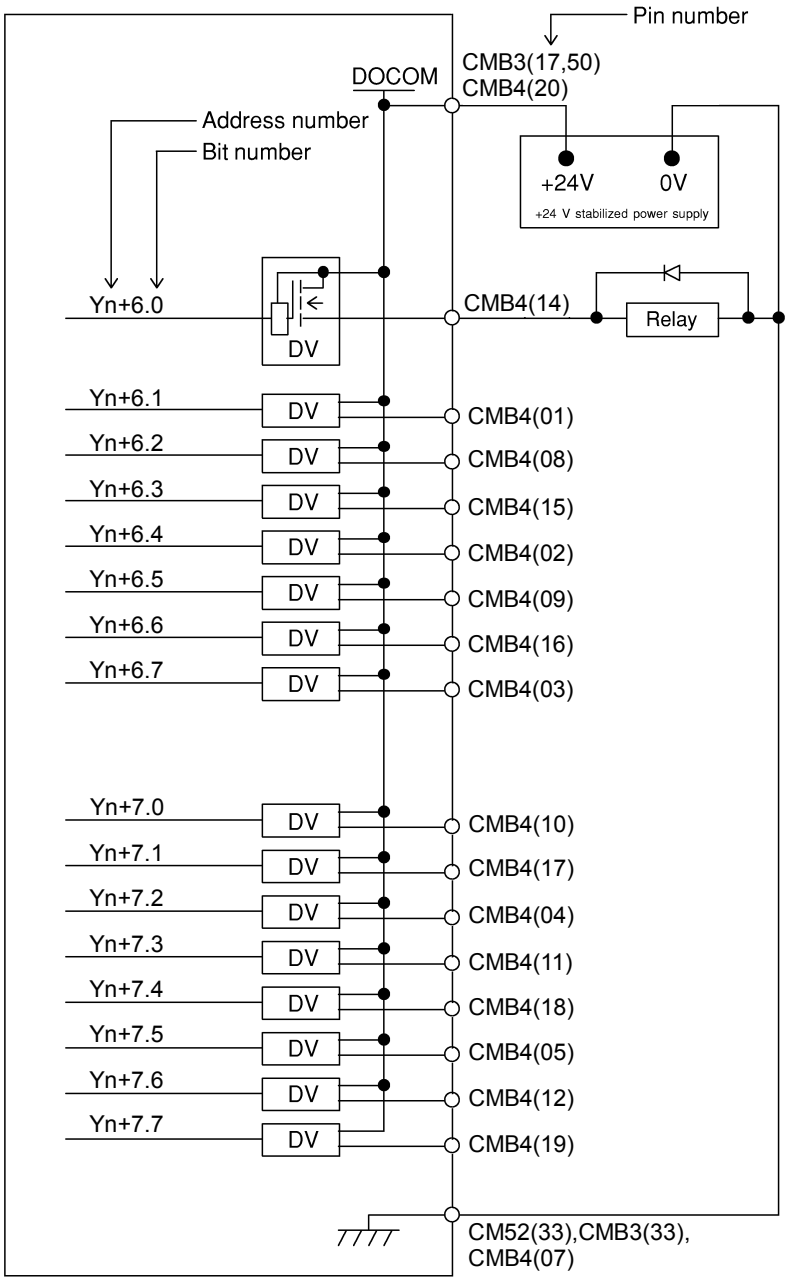

© MyFANUC 195109AB01DC415385669AA015E5BDE5

8.10.6 External View

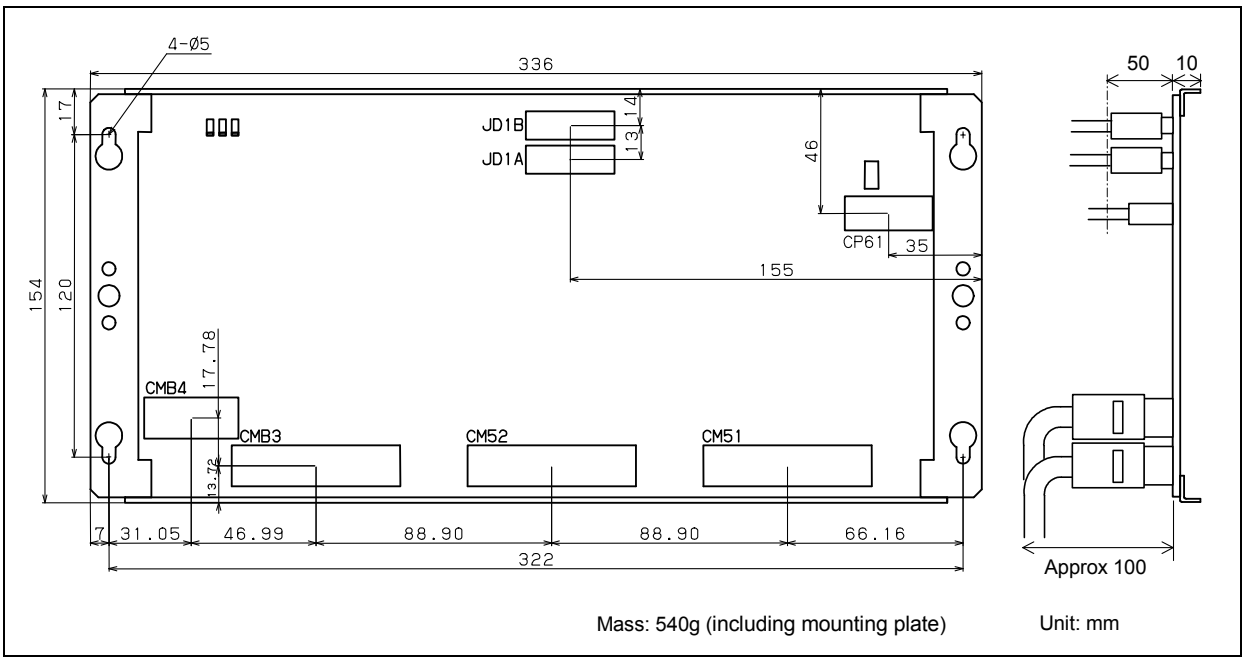

8.10.7 Specifications

Installation specifications

Install this unit in a fully enclosed cabinet.
For other installation conditions, conform to the CNC installation conditions.

Specifications of operator's panel connection unit (source DO)

Item	Ordering specifications	Specification
Operator's panel connection unit (source DO)	A16B-2204-0260	DI : 96 points DO : 64 points
Operator's panel connection unit (source DO)	A16B-2204-0261	DI : 64 points DO : 32 points
Fuse (spare parts)	A02B-0163-K111	3.2A

Power supply rating

Supply voltage	Power supply rating	Remarks
24 VDC ±10% supplied from the power supply connector CP61. The allowance of ±10% should include instantaneous voltage and ripple voltage.	0.5A+7.3mA×DI	DI = number of DI points in the ON state

NOTE

1 The above power supply rating does not include that to be input to DOCOM for DO output.
2 To connect an optical adapter for the I/O Link *i* to both connectors JD1A and JD1B, the above power supply rating + 70 mA is required.

© MyFANUC 195109AB01DC415385669AA015E5BDE5

DI (input signal specifications)

Contact rating	30 VDC, 16 mA or more
Leakage current between contacts when opened	1 mA or less (26.4 V)
Voltage decrease between contacts when closed	2 V or less (including a cable voltage decrease)
Delay time	The receiver delay time is 22 ms (maximum). In addition, [I/O Link transfer time between CNC and this unit] and [ladder scan period (depending on CNC)] must be considered.

DO (output signal specifications)

Maximum load current when ON	200 mA or less including momentary current per signal. 6.0 A or less for DO signals in all (For A16B-2204-0260) 4.0 A or less for DO signals in all (For A16B-2204-0261)
Saturation voltage when ON	1 V (maximum) when the load current is 200 mA
Withstand voltage	24 V +20% or less including momentary variations
Leakage current when OFF	20μA or less
Delay time	The driver delay time is 50 μs (maximum). In addition, [I/O Link transfer time between CNC and this unit] and [ladder scan period (depending on CNC)] must be considered.

NOTE

Be sure to connect all DO power supply pins DOCOM. The maximum current that is allowed to pass to each DOCOM terminal pin is 2.0 A, and care must be paid to prevent the sum of the load current from exceeding the current that is allowed to pass via the DOCOM terminal.

© MyFANUC 195109AB01DC415385669AA015E5BDE5

8.10.8 Other Notes

Address allocation

- For connection to the I/O Link *i*

For this unit, I/O addresses are mapped as follows.

For A16B-2204-0260

DI space map

Xm_1	Input signal	Slot 1
$Xm_1 + 1$		
$Xm_1 + 2$		
$Xm_1 + 3$		
$Xm_1 + 4$		
$Xm_1 + 5$		
$Xm_1 + 6$		
$Xm_1 + 7$		
$Xm_1 + 8$		
$Xm_1 + 9$		
$Xm_1 + 10$		
$Xm_1 + 11$		

DO space map

Yn_1	Output signal	Slot 1
$Yn_1 + 1$		
$Yn_1 + 2$		
$Yn_1 + 3$		
$Yn_1 + 4$		
$Yn_1 + 5$		
$Yn_1 + 6$		
$Yn_1 + 7$		

For A16B-2204-0261

DI space map

Xm_1	Input signal	Slot 1
$Xm_1 + 1$		
$Xm_1 + 2$		
$Xm_1 + 3$		
$Xm_1 + 4$		
$Xm_1 + 5$		
$Xm_1 + 6$		
$Xm_1 + 7$		

DO space map

Yn_1	Output signal	Slot 1
$Yn_1 + 1$		
$Yn_1 + 2$		
$Yn_1 + 3$		

Xm_1 and Yn_1 indicate the start address at allocation.

Basically, for this unit, allocate 12-byte DI addresses to slot 1 and 8-byte DO addresses to slot 1 for A16B-2204-0260, or 8-byte DI addresses to slot 1 and 4-byte DO addresses to slot 1 for A16B-2204-0261.

© MyFANUC 195109AB01DC415385669AA015E5BDE5

- For connection to the I/O Link

For A16B-2204-0260

DI space map

Xm	Input signal
Xm+1	
Xm+2	
Xm+3	
Xm+4	
Xm+5	
Xm+6	
Xm+7	
Xm+8	
Xm+9	
Xm+10	
Xm+11	
Xm+12	Not used
Xm+13	
Xm+14	
Xm+15 (DO alarm detection)	DO alarm detection

DO space map

Yn	Output signal
Yn+1	
Yn+2	
Yn+3	
Yn+4	
Yn+5	
Yn+6	
Yn+7	

For A16B-2204-0261

DI space map

Xm	Input signal
Xm+1	
Xm+2	
Xm+3	
Xm+4	
Xm+5	
Xm+6	
Xm+7	
Xm+8	Not used
Xm+9	
Xm+10	
Xm+11	
Xm+12	
Xm+13	
Xm+14	
Xm+15 (DO alarm detection)	DO alarm detection

DO space map

Yn	Output signal
Yn+1	
Yn+2	
Yn+3	

For connection to the I/O Link, addresses are allocated to input signals and DO alarm detection at a time. For this reason, allocate DI addresses in units of 16 bytes.

ON/OFF of the power supply (DO common) for DO signals (output signals)

For ON/OFF of the power supply pin (DOCOM) for the DO signals (output signals), see Subsection 8.2.4.4.

Parallel DO (output signal) connection

For parallel connections of DO signals (output signals), see Subsection 8.2.4.4.

DO (output signal) alarm detection

The DO driver of this unit capable of detecting an overcurrent and measuring its own temperature. If an accident, such as the connecting of the cable to ground, causes an abnormal increase in the load current or in the driver temperature, a protection circuit, which is provided for each DO driver (1 byte), is activated and keeps the DO signal for the relevant 1 byte in the OFF state until the cause of the problem is eliminated. Even if this occurs, the CNC and I/O continues operating without entering the alarm status,

© MyFANUC 195109AB01DC415385669AA015E5BDE5

but the DO driver which detected the error can be checked. If a DO error occurs, this information can be checked on the CNC DGN screen or alarm processing can be performed in advance using a ladder to help error check and recovery.
The check area for an error detected by a DO driver differs depending on whether the I/O Link *i* or I/O Link is connected.

- For connection to the I/O Link *i*

For connection to the I/O Link *i*, a DO error such as a ground fault is detected for each point. This DO error is transferred to the PMC system relay area as a status alarm. The following table lists system relay area information and corresponding DO data related to a status alarm. When an alarm data bit is set to "1", the DO driver corresponding to the bit detects an error. Also see Subsection 7.3.3, "Status Alarm".

Information output to the system relay area and corresponding location where an error occurred

For A16B-2204-0260

Slot number	Alarm information number	Address of the DO driver which detects an error
1	0	Yn_1
1	1	Yn_1+1
1	2	Yn_1+2
1	3	Yn_1+3
1	4	Yn_1+4
1	5	Yn_1+5
1	6	Yn_1+6
1	7	Yn_1+7

For A16B-2204-0261

Slot number	Alarm information number	Address of the DO driver which detects an error
1	0	Yn_1
1	1	Yn_1+1
1	2	Yn_1+2
1	3	Yn_1+3

Description of alarm data

#7	#6	#5	#4	#3	#2	#1	#0
Bit 7 error	Bit 6 error	Bit 5 error	Bit 4 error	Bit 3 error	Bit 2 error	Bit 1 error	Bit 0 error

- For connection to the I/O Link

For connection to the I/O Link, a DO error such as a ground fault is detected for each byte. Data at DI address Xm+15 identifies the DO error. The following table lists each bit at DI address Xm+15 and corresponding DO area. When a bit at DI address Xm+15 is set to "1", the corresponding DO driver detects an error.

For A16B-2204-0260

Alarm detection address and bit	DO address	Remarks
Xm+15.0	Yn+0	
Xm+15.1	Yn+1	
Xm+15.2	Yn+2	
Xm+15.3	Yn+3	
Xm+15.4	Yn+4	
Xm+15.5	Yn+5	
Xm+15.6	Yn+6	
Xm+15.7	Yn+7	

For A16B-2204-0261

Alarm detection address and bit	DO address	Remarks
Xm+15.0	Yn+0	

© MyFANUC 195109AB01DC415385669AA015E5BDE5

Alarm detection address and bit	DO address	Remarks
Xm+15.1	Yn+1	
Xm+15.2	Yn+2	
Xm+15.3	Yn+3	
Xm+15.4	–	Reserved
Xm+15.5	–	Reserved
Xm+15.6	–	Reserved
Xm+15.7	–	Reserved

© MyFANUC 195109AB01DC415385669AA015E5BDE5

8.11 CONNECTION OF SAFETY IO UNIT

8.11.1 Overview

Safety IO unit is a unit which can be used only with I/O Link *i*, and has the interface to connect duplicated input and output signals from the safety circuit when the Dual Check Safety (DCS) function is used.

> ⚠ **CAUTION**
> Safety IO unit is a unit dedicated to I/O Link *i*. It cannot be used for I/O Link connection.

8.11.2 Total Connection Diagram

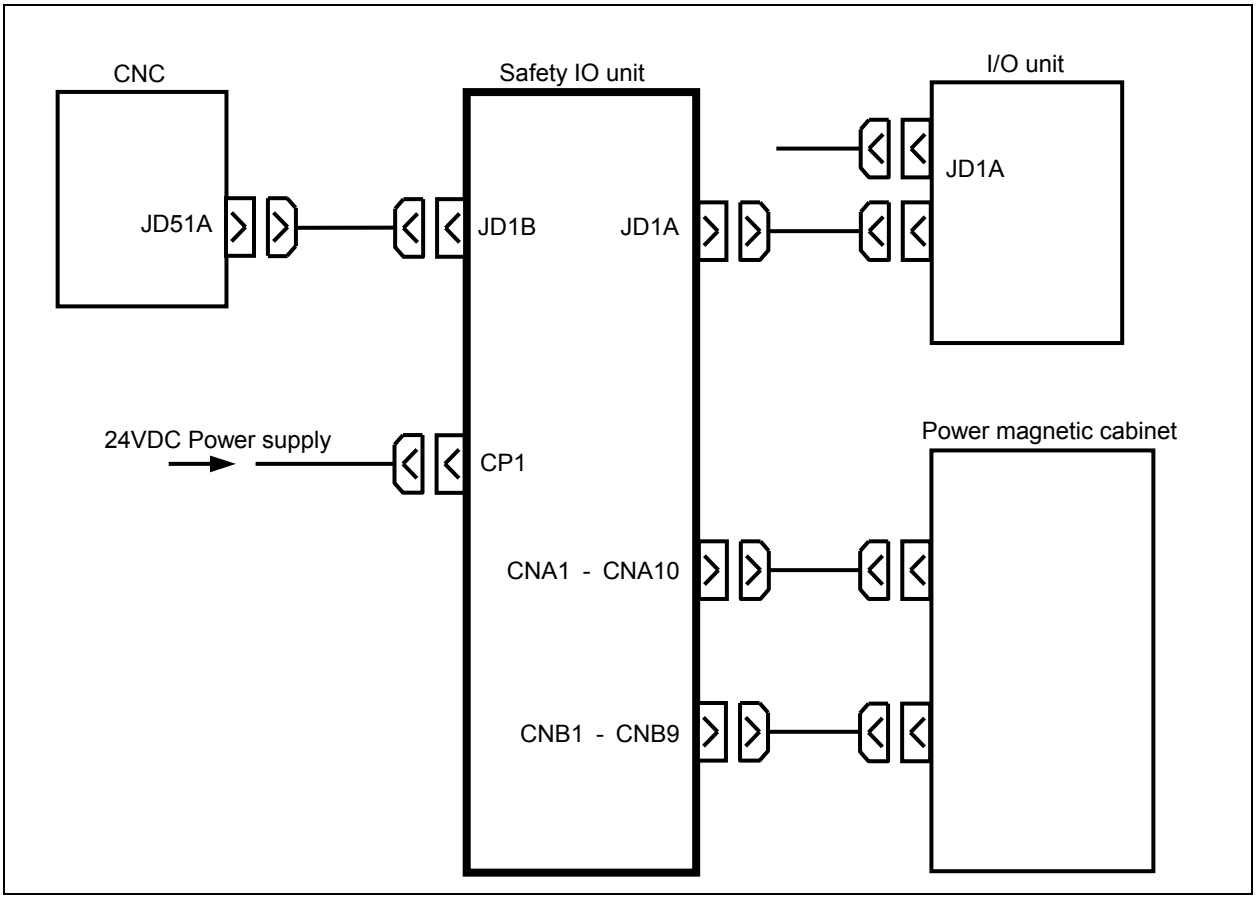

8.11.3 Power Supply Connection

The power required for the operation of this safety IO unit and for DI/DO must be supplied to connector CP1 in the following figure.

© MyFANUC 195109AB01DC415385669AA015E5BDE5

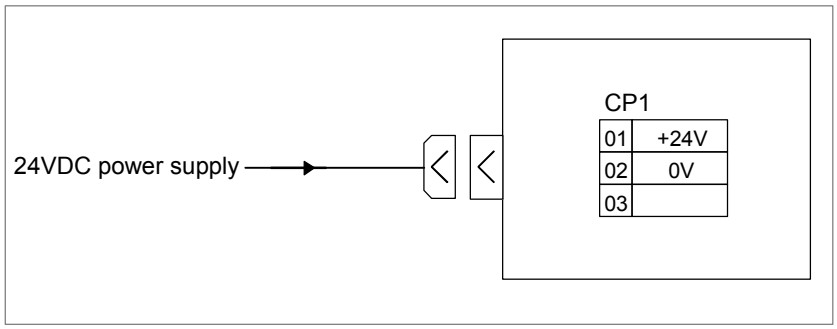

8.11.4 I/O Link *i* Connection

For I/O Link *i* connection, see Section 7.2.

8.11.5 DI/DO Address

Safety IO unit must be used in "safety I/O mode", and allocated to two continuous groups of I/O Link *i*. In I/O Link *i*, allocate 6-byte DI address and 2-byte DO address to slot 1 of 1st group as PMC DI/DO, and allocate 4-byte DI address and 2-byte DO address to slot 1 of 2nd group as DCSPMC DI/DO.
DI/DO addresses are as follows.

・1st group (PMC DI/DO) address

Address	bit 7	bit 6	bit 5	bit 4	bit 3	bit 2	bit 1	bit 0	
X1m+0		MONI				MONI			DI: 6-byte
X1m+1		MONI				MONI			
X1m+2									
X1m+3									
X1m+4	MONI	MONI	MONI	MONI	MONI	MONI	MONI		
X1m+5	MONI	MONI	MONI	MONI	MONI	MONI	MONI	MONI	
Y1n+0									DO: 2-byte
Y1n+1									

・2nd group (DCSPMC DI/DO) address

Address	bit 7	bit 6	bit 5	bit 4	bit 3	bit 2	bit 1	bit 0	
X2m+0									DI: 4-byte
X2m+1									
X2m+2									
X2m+3									
Y2n+0									DO: 2-byte
Y2n+1									

NOTE
1 DI shaded by ■ cannot use.
2 DI written "MONI" is signal to monitor DO status. So it cannot be used as an input signal from machine side.

© MyFANUC 195109AB01DC415385669AA015E5BDE5

8.11.6 Pin Assignment of DI/DO

CNA1

	B	A
01	X1m+0.0	0V
02	X1m+0.1	X2m+0.0
03	Y1n+0.0 (X1m+0.2)	
04	+24V	+24V

CNA2

	B	A
01		0V
02	X1m+2.0	X2m+2.0
03		+24V

CNA3

	B	A
01	X1m+2.6	0V
02	X2m+2.6	+24V
03	+24V	+24V

CNA4

	B	A
01	X1m+0.4	0V
02	X1m+0.5	X2m+0.4
03	Y1n+1.0 (X1m+0.6)	
04	+24V	+24V

CNA5

	B	A
01		0V
02	X1m+2.1	X2m+2.1
03		+24V

CNA6

	B	A
01	X1m+2.7	0V
02	X2m+2.7	+24V
03	+24V	+24V

CNA7

	B	A
01	X1m+1.0	0V
02	X1m+1.1	X2m+1.0
03	Y1n+0.1 (X1m+1.2)	
04	+24V	+24V

CNA8

	B	A
01	X1m+2.2	0V
02	X1m+2.3	X2m+2.2
03	X1m+2.4	X2m+2.3
04	Y2n+1.2 (X1m+4.1)	X2m+2.4
05	+24V	+24V
06	+24V	+24V

CNA9

	B	A
01	X1m+2.5	0V
02	Y1n+0.5 (X1m+4.2)	X2m+2.5
03	+24V	+24V

CNA10

	B	A
01	X1m+1.4	0V
02	X1m+1.5	X2m+1.4
03	Y1n+1.1 (X1m+1.6)	
04	+24V	+24V

CNB1

	B	A
01	Y1n+1.4 (X1m+5.0)	0V
02	X1m+3.4	X2m+3.4
03	Y2n+1.4 (X1m+5.1)	+24V

CNB2

	B	A
01	X1m+3.5	0V
02	Y1n+1.5 (X1m+5.2)	Y2n+1.5 (X1m+5.3)
03	X2m+3.5	+24V

CNB3

	B	A
01	X1m+3.6	0V
02	Y1n+1.6 (X1m+5.4)	Y2n+1.6 (X1m+5.5)
03	X2m+3.6	+24V

CNB4

	B	A
01	X1m+3.0	0V
02	X2m+3.0	+24V
03	+24V	+24V

CNB5

	B	A
01	X1m+3.1	0V
02	X2m+3.1	+24V
03	+24V	+24V

CNB6

	B	A
01	X1m+3.2	0V
02	X2m+3.2	+24V
03	+24V	+24V

CNB7

	B	A
01	X1m+1.7	0V
02	Y1n+0.2 (X1m+4.3)	Y2n+0.2 (X1m+5.6)
03	X2m+1.7	+24V

CNB8

	B	A
01	X1m+3.3	0V
02	Y1n+1.3 (X1m+4.5)	Y2n+1.3 (X1m+5.7)
03	X2m+3.3	+24V

CNB9

	B	A
01	0V	0V
02	Y2n+0.3 (X1m+4.7)	Y1n+0.3 (X1m+4.4)
03	Y1n+1.2 (X1m+4.6)	0V

· X1m, Y1n: PMC DI/DO
· X2m, Y2n: DCSPMC DI/DO
· Signals in ( ) are DI to monitor DO status. When DO is ON, DI in ( ) is "1". When DO is OFF, DI in ( ) is "0".

© MyFANUC 195109AB01DC415385669AA015E5BDE5

8.11.7 DI/DO Connection

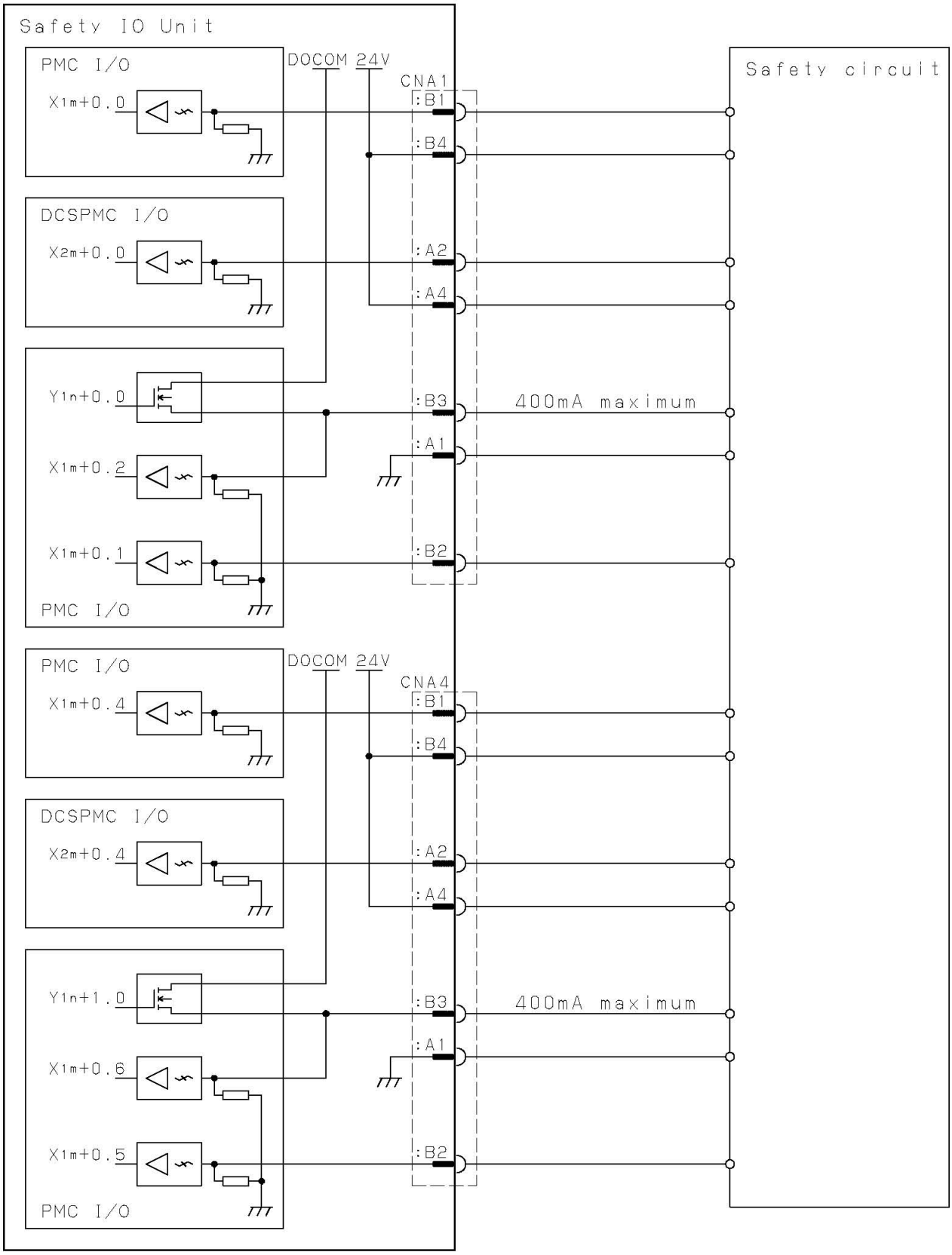

Duplicated input and output signals are connected to Safety IO Unit as PMC I/O and DCSPMC I/O.

© MyFANUC 195109AB01DC415385669AA015E5BDE5

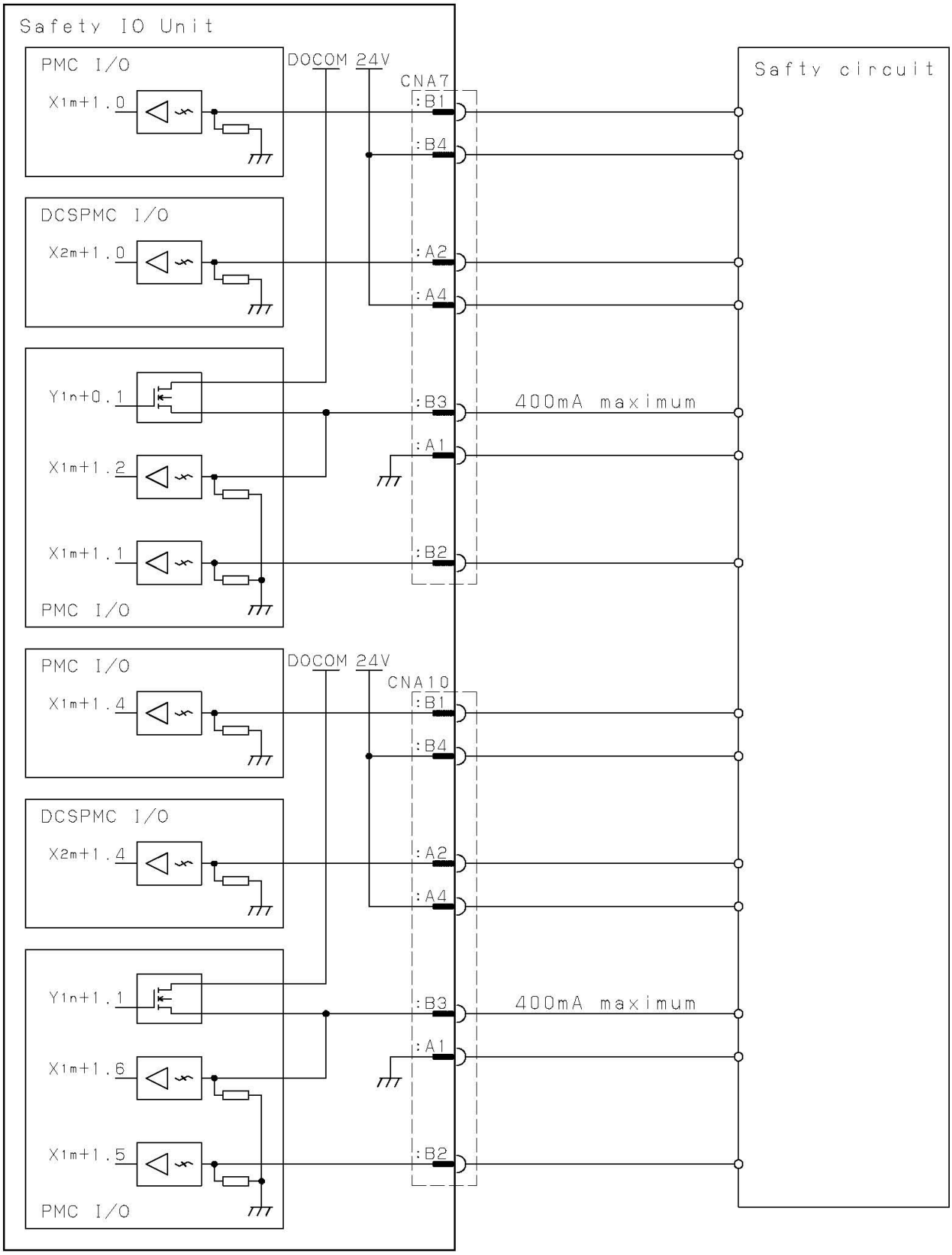

Duplicated input and output signals are connected to Safety IO Unit as PMC I/O and DCSPMC I/O.

© MyFANUC 195109AB01DC415385669AA015E5BDE5

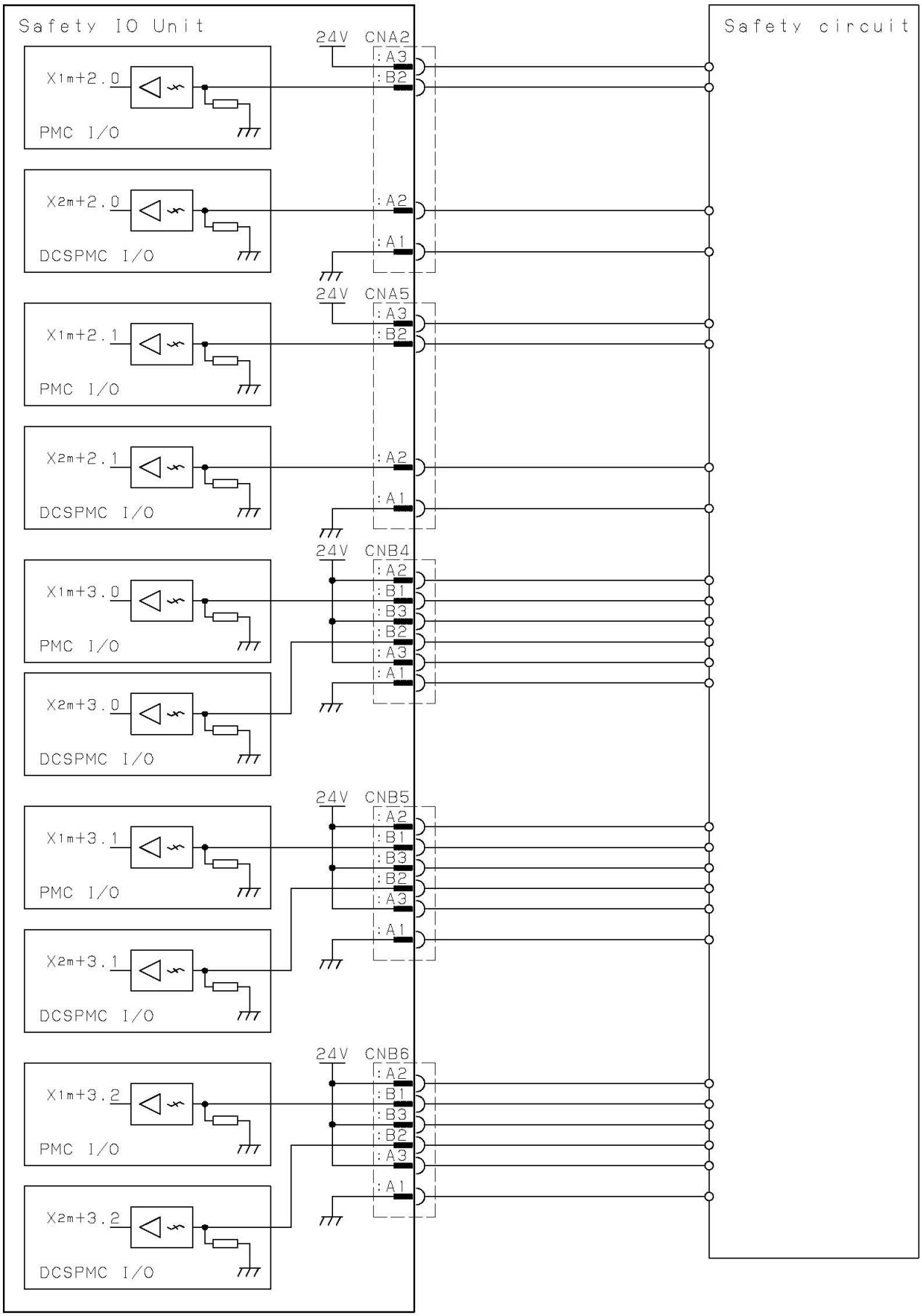

Duplicated input and output signals are connected to Safety IO Unit as PMC I/O and DCSPMC I/O.

© MyFANUC 195109AB01DC415385669AA015E5BDE5

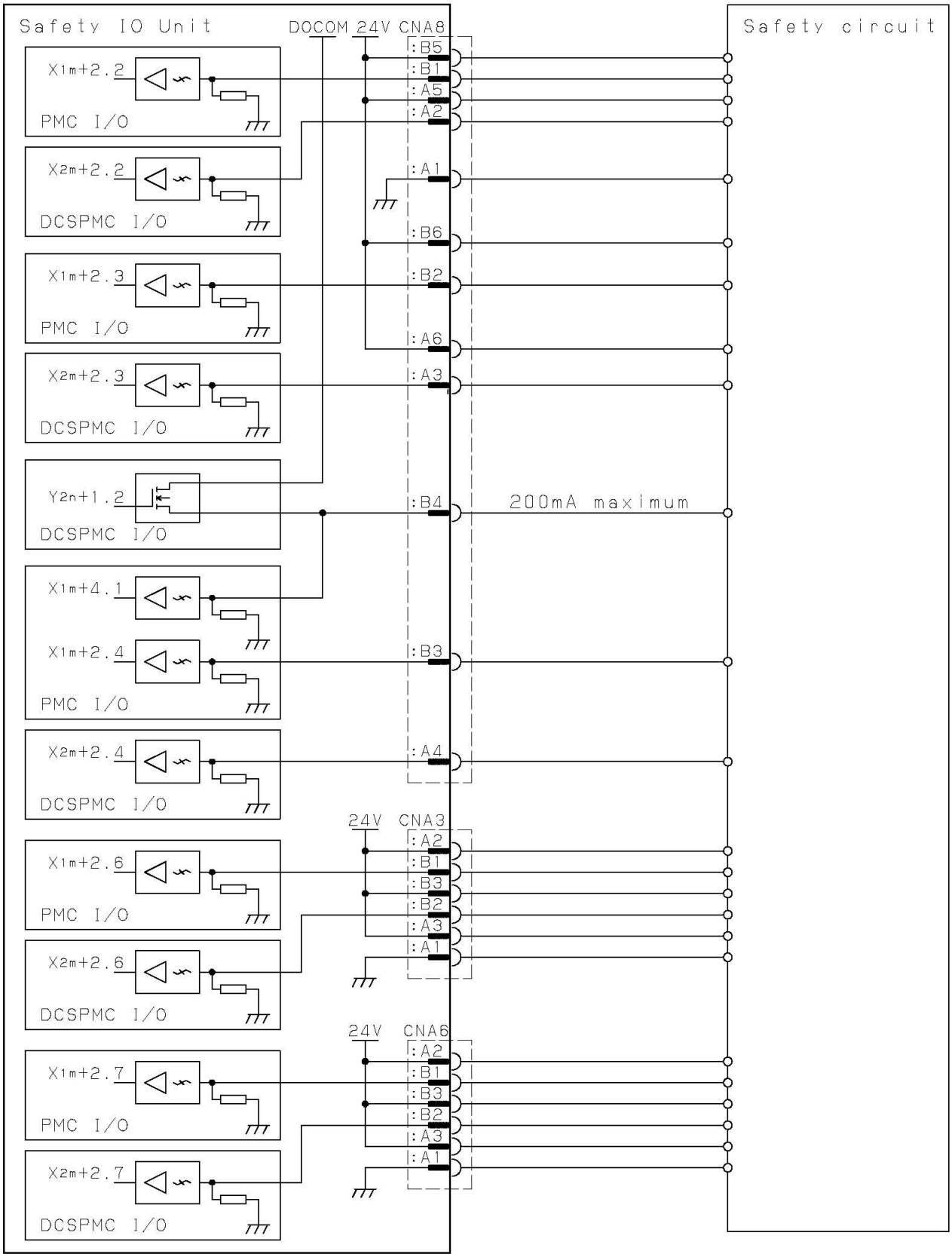

Duplicated input and output signals are connected to Safety IO Unit as PMC I/O and DCSPMC I/O.

© MyFANUC 195109AB01DC415385669AA015E5BDE5

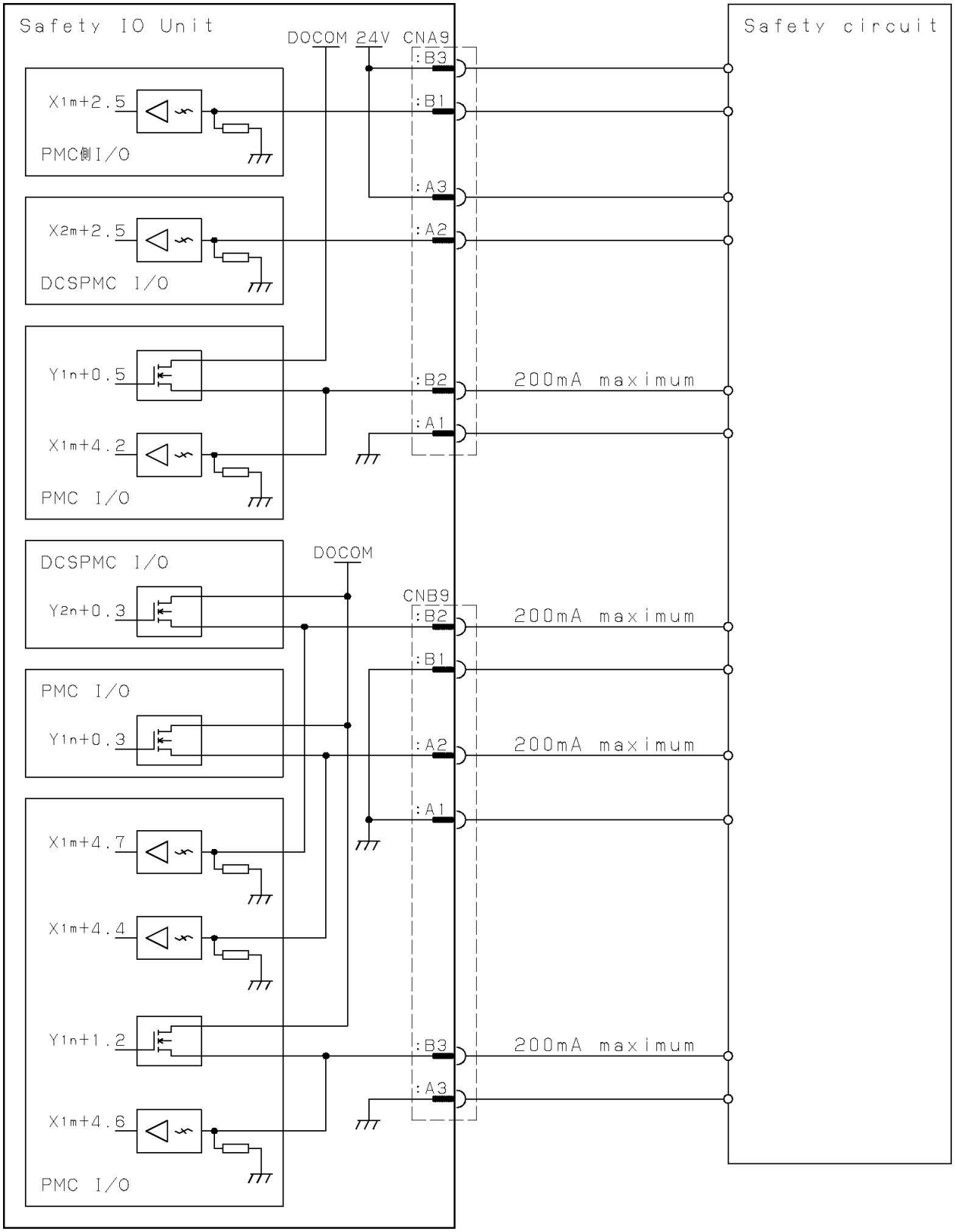

Duplicated input and output signals are connected to Safety IO Unit as PMC I/O and DCSPMC I/O.

© MyFANUC 195109AB01DC415385669AA015E5BDE5

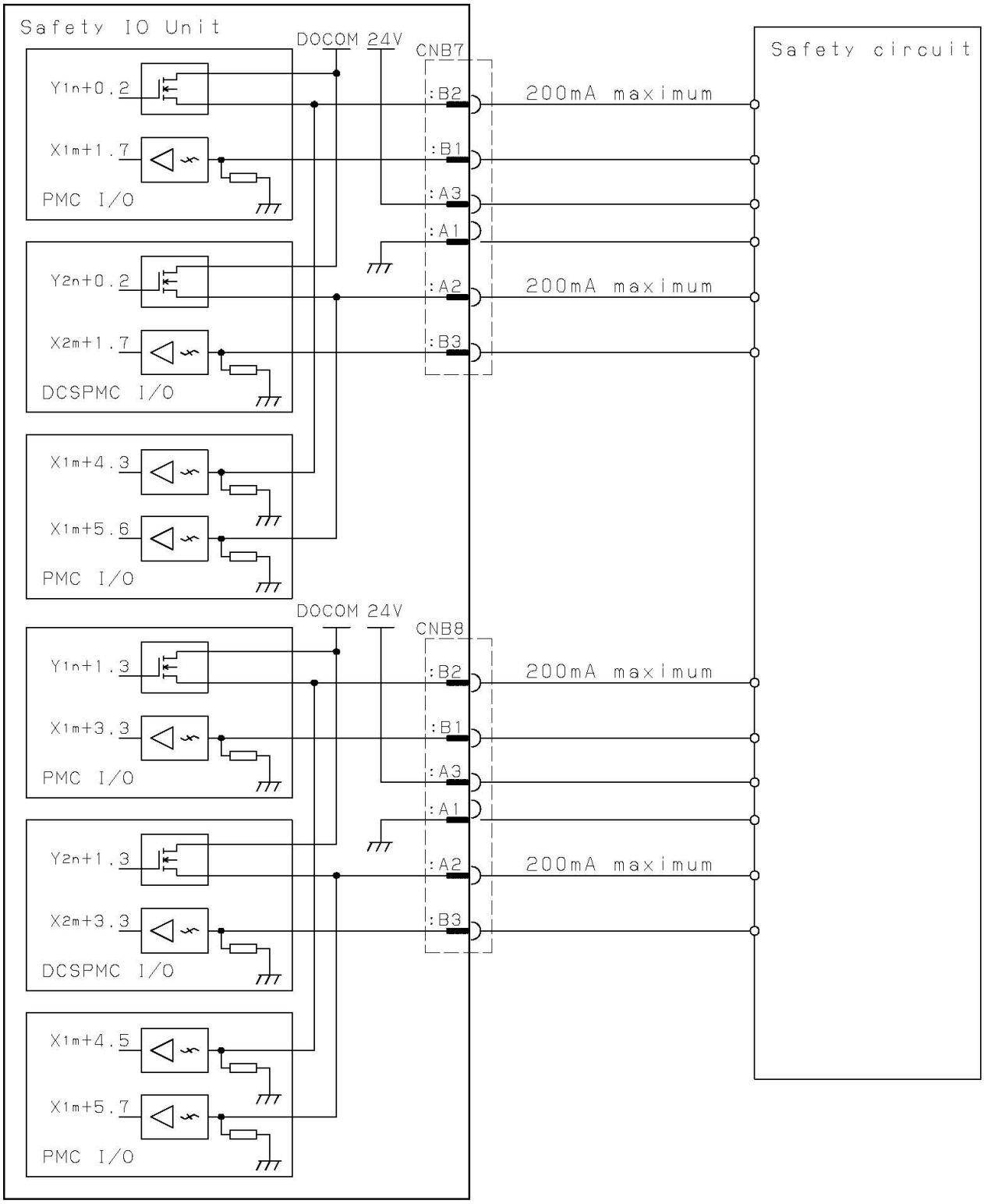

Duplicated input and output signals are connected to Safety IO Unit as PMC I/O and DCSPMC I/O.

© MyFANUC 195109AB01DC415385669AA015E5BDE5

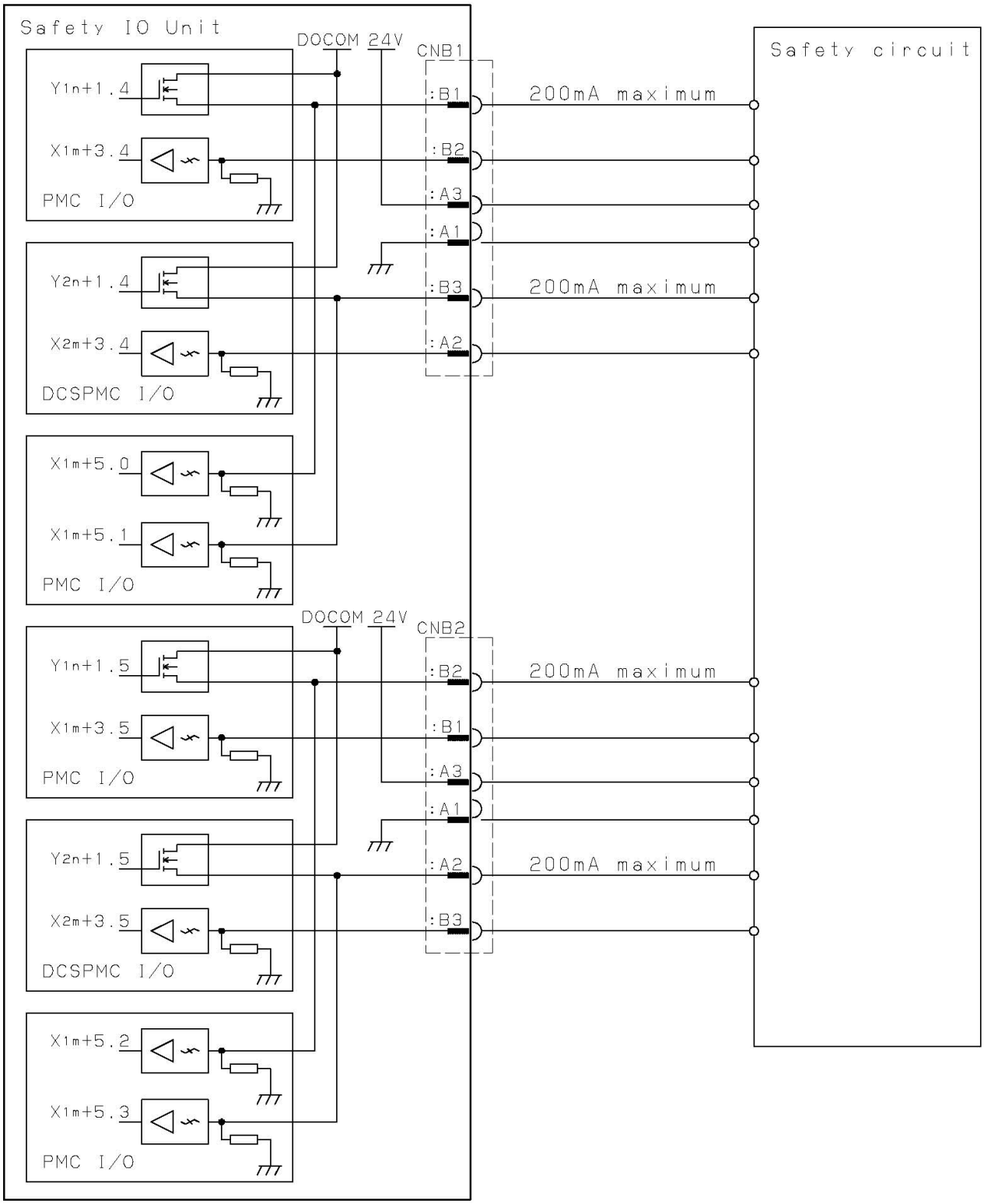

Duplicated input and output signals are connected to Safety IO Unit as PMC I/O and DCSPMC I/O.

© MyFANUC 195109AB01DC415385669AA015E5BDE5

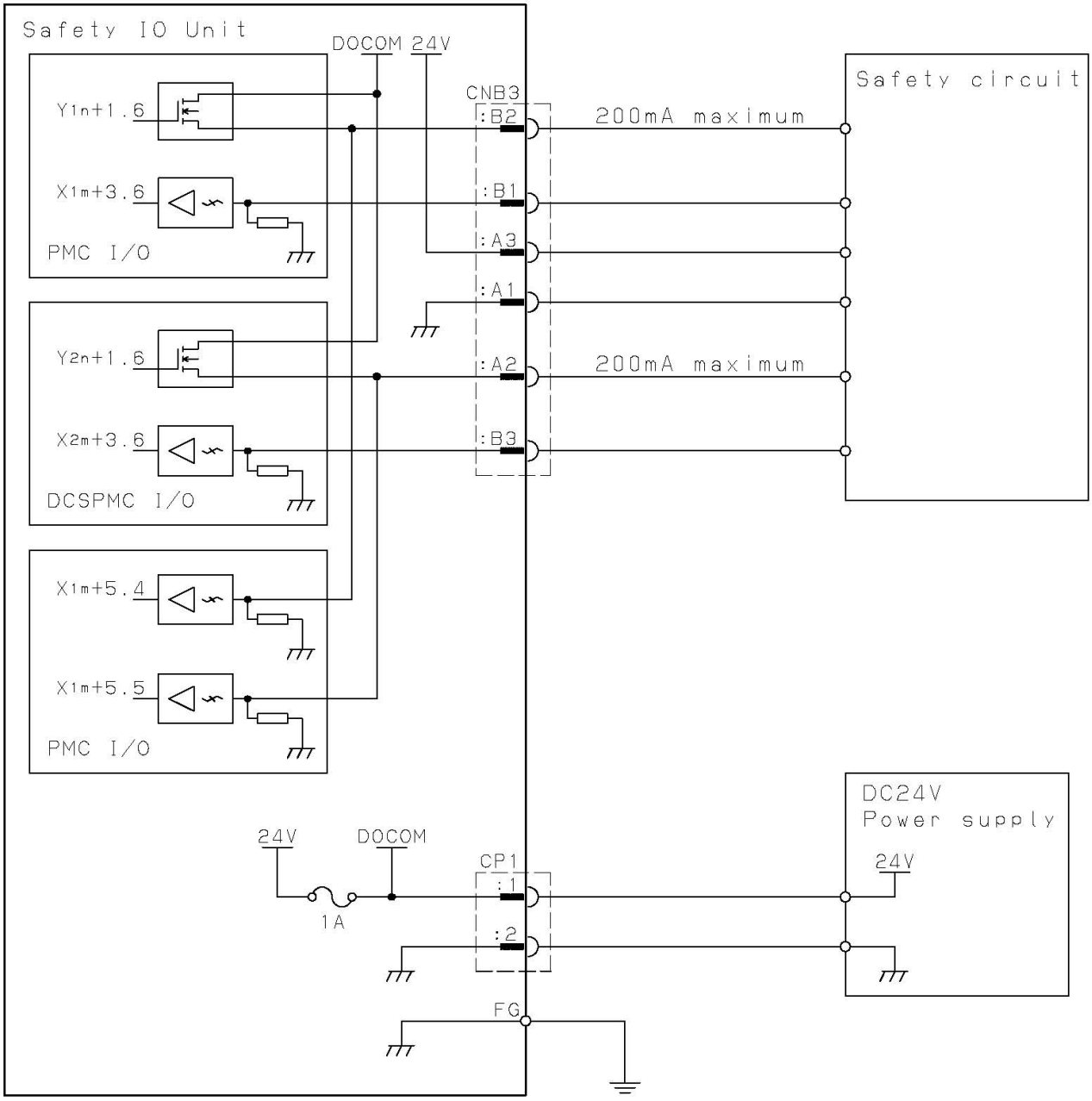

Duplicated input and output signals are connected to Safety IO Unit as PMC I/O and DCSPMC I/O.

© MyFANUC 195109AB01DC415385669AA015E5BDE5

8.11.8 Outline of Safety IO Unit

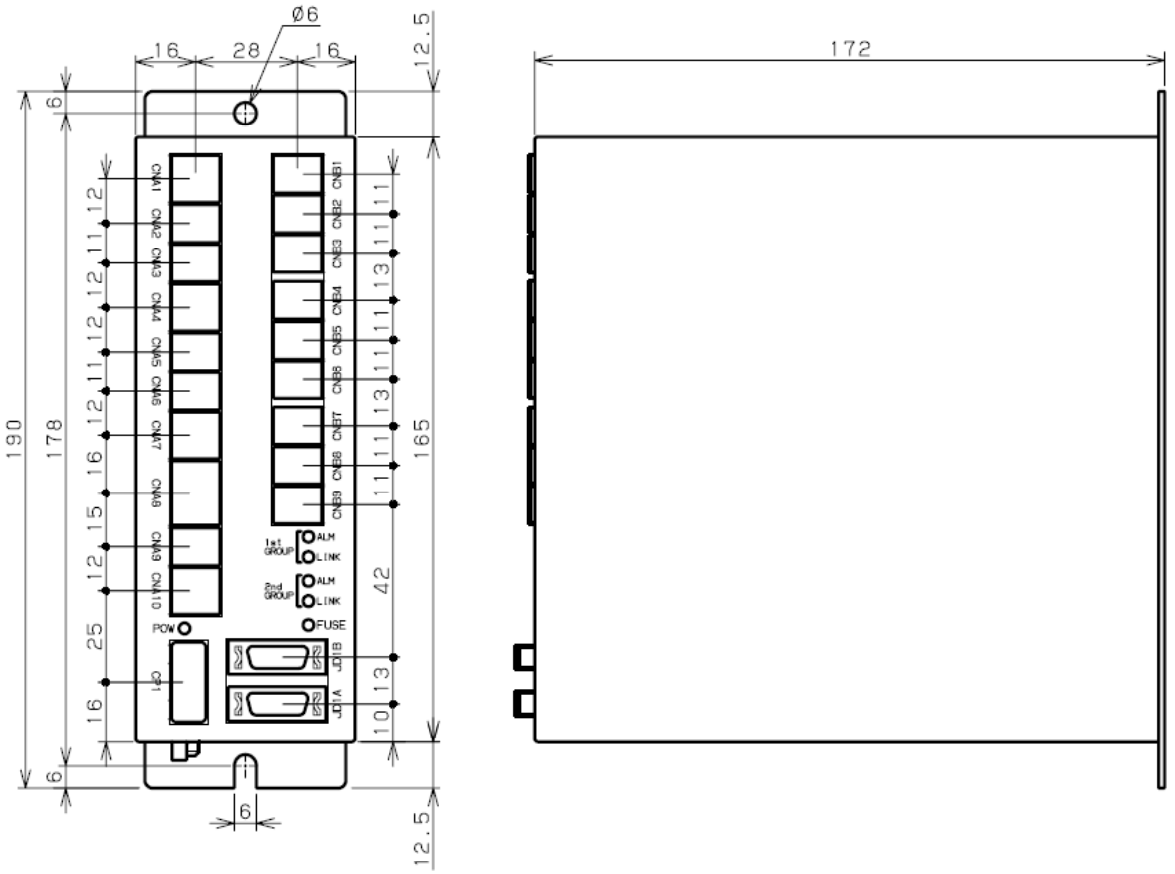

Weight: 1.4Kg

Unit: mm

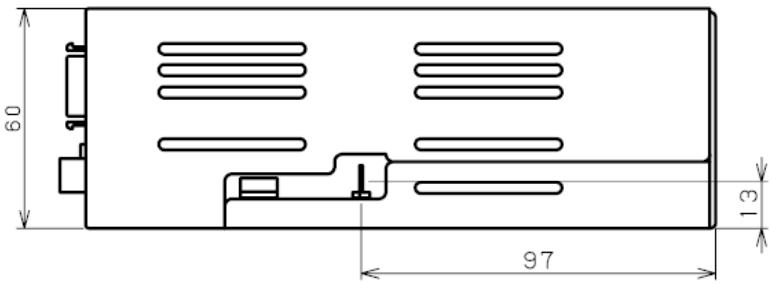

© MyFANUC 195109AB01DC415385669AA015E5BDE5

8.11.9 Connector Locations Safety IO Unit

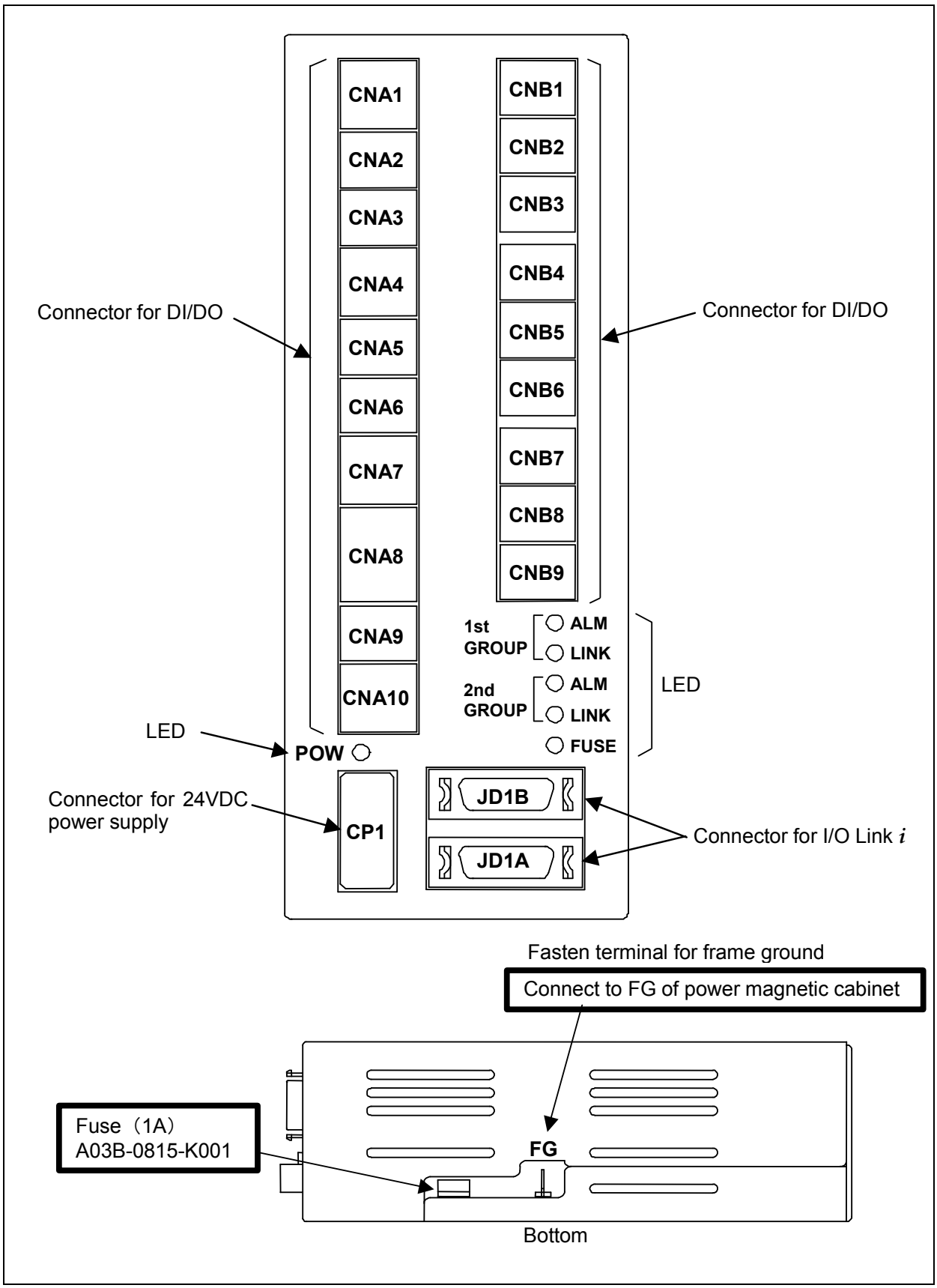

© MyFANUC 195109AB01DC415385669AA015E5BDE5

8.11.10 Color Labels for Connectors of Safety IO Unit

There is color labels placed beside the Tyco Electronics connectors of the safety IO unit.
Attached color labels for the connectors on the cable side are to be affixed to the connectors on the cable side.

Color labels for the connectors on the cable side (attached to the safety IO unit)

CNA1 White

CNA2 Light green

CNA3 Blue

CNA4 Orange

CNA5 White

CNA6 Green

CNA7 Blue

CNA8 Light blue

CNA9 Pink

CNA10 Green

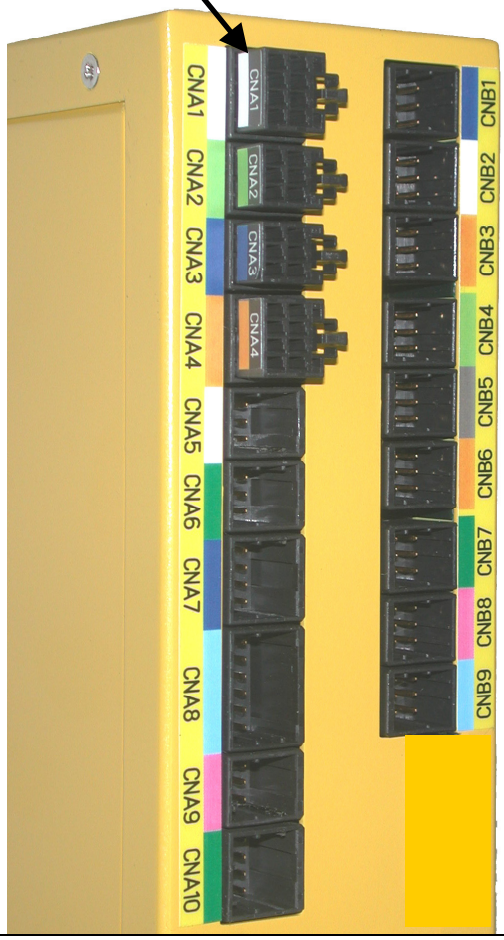

CNB1 Blue

CNB2 White

CNB3 Orange

CNB4 Light green

CNB5 Gray

CNB6 Orange

CNB7 Green

CNB8 Pink

CNB9 Light blue

© MyFANUC 195109AB01DC415385669AA015E5BDE5

8.11.11 Connector Specification of Safety IO Unit

Connector name	Name	Specification of cable-side connector	Order number
CP1	3-pin female connector Housing D-3100 (X key)	Tyco Electronics 1-178288-3	A02B-0120-K324 (Housing and three contacts of 1-175218-5)
	Contact (AWG20-16)	Tyco Electronics 1-175218-5	
	Contact (AWG24-20)	Tyco Electronics 1-175217-5	
CNA2, CNA5, CNA9, CNB1, CNB3, CNB5, CNB7, CNB9	6-pin female connector Housing D-2100 (X key)	Tyco Electronics 1-1318119-3	A03B-0821-K100 (For one unit)
CNA3, CNA6, CNB2, CNB4, CNB6, CNB8	6-pin female connector Housing D-2100 (Y key)	Tyco Electronics 2-1318119-3	
CNA1, CNA4, CNA7, CNA10	8-pin female connector Housing D-2100 (Y key)	Tyco Electronics 2-1318119-4	
CNA8	12-pin female connector Housing D-2100 (X key)	Tyco Electronics 1-1318118-6	
CNA1 - CNA10 CNB1 - CNB9	Contact (AWG28-24)	Tyco Electronics 1318108-1	A03B-0821-K101 (1000 contacts of 1318107-1)
	Contact (AWG22-18)	Tyco Electronics 1318107-1	
JD1A, JD1B	Soldering type connector (20 pins, female)	Connector: Honda Tsushin Kogyo PCR-E20FS Case: Honda Tsushin Kogyo PCR-V20LA or Connector: Hirose Denki FI40B-20S Case: Hirose Denki FI-20-CV2	A02B-0120-K301
	Press-mount connector (20 pins, female)	Connector: Honda Tsushin Kogyo PCR-E20FA Case: Honda Tsushin Kogyo PCR-V20LA or Connector: Hirose Denki FI30-20S Case: Hirose Denki FI-20CV2	A02B-0120-K302
FG	Fasten terminal	Tyco Electronics 170604-1 or JST FVDDF 2-250 TYPE I Blue	A02B-0166-K330

8.11.12 Specifications of Safety IO Unit

Installation conditions

(1) Use this unit in a completely sealed cabinet.
(2) Use the unit under the following ambient temperature conditions:
Operation: 0°C to 55°C
Storage transportation: -20°C to 80°C
(3) For other installation conditions, conform to the CNC installation conditions.
(4) Be sure to install the unit on a vertical face. Moreover for ventilation, allow a clearance of 100mm or more above and below. And never place a device that generates a large amount of heat below the safety IO unit.

Order specification

Name	Order specification	Remarks
Safety IO Unit	A03B-0821-C002	
Fuse (Spare parts)	A03B-0815-K001	1A

© MyFANUC 195109AB01DC415385669AA015E5BDE5

Power supply capacity

Power supply voltage	Power supply capacity	Remarks
24V±10% (±10% includes momentary variations and ripples.)	5.2A maximum	0.5A + 7.3mA x DI + Load current of DO

Heat output

Heat output	Remarks
19W	Value when 50% on input signal are on.

Input signal specification

Number of points	63 points (include DI to monitor DO status)
Rated input voltage	24VDC (±10%)
Rated input current	7.3mA (average)
Polarity	Sink type
ON voltage/current	18VDC or more, 6mA or more
OFF voltage/current	6VDC or less, 1.5mA or less
Allowable self-diagnosis pulse width	Pulse width: 150μs or less, Cycle: 4ms or more
Delay time	Receiver delay time: 2ms (maximum) In addition, [I/O Link transfer time between CNC and Safety IO unit] and [ladder scan period (depending on CNC)] must be considered.

Output signal specification

Number of points	19 points
Rated output voltage	24VDC (±10%)
Rated output current	200mA (15 points), 400mA (4 points), including momentary variations
Polarity	Source type
Maximum voltage decrease ON	28mV (output current is 200mA)、56mV (output current is 400mA)
Maximum leakage current when OFF	5μA
Output protection function	Protection against overheat, over current, short-circuiting
Delay time	The driver delay time is 50μs (maximum) In addition, [I/O Link transfer time between CNC and Safety IO unit] and [ladder scan period (depending on CNC)] must be considered.

⚠ **CAUTION**

1 The protection function is intended to protect the components internal rather than external units.
2 No protection function can protect their internal components in all cases. Once any protection function has worked, remove the cause promptly. If an absolute maximum rating is exceeded, for example, it is likely that protection functions may not work or an IC may break down before the related protection function works, depending on the way or situation in which the modules are used.
3 If an output protection function is defective, it is likely that, if the load current exceeds its rating continuously for a long time, smoke or ignition may occur.

© MyFANUC 195109AB01DC415385669AA015E5BDE5

8.11.13 DO (Output Signal) Error Detection

The DO driver of the safety IO unit has the output protection function for each output signal. If an accident, such as connecting the cable to ground, causes an abnormal increase in the load current or in the driver temperature, a protection circuit, which is provided for each DO driver, is activated and keeps the DO signal in the OFF state. Even if this occurs, the CNC and safety IO unit continue operating without entering the alarm status, but the PMC is notified of the location of the error detected by the DO driver. This information can be checked on the PMC status screen or alarm processing can be performed in advance using a ladder to help error check and recovery.

When the above protection function is activated by the DO driver, the relevant error is output as a status alarm and transferred to the PMC system relay area. The following table lists system relay area information and corresponding DO data related to a status alarm. When an alarm data bit is set to ”1”, the DO driver corresponding to the bit detects an error. For details of the status alarm, see Subsection 7.3.3, “Status Alarm”.

Information output to the system relay area and corresponding location where an error occurred

Information output to the system relay area			Address of the DO driver which detects an error	PMC DO or DCSPMC DO
Group number	Slot number	Alarm information number		
1st group (PMC)	1	0	Y_1n	PMC DO
	1	1	Y_1n+1	PMC DO
2nd group (DCSPMC)	1	0	Y_2n	DCSPMC DO
	1	1	Y_2n+1	DCSPMC DO

Meaning of an alarm data

#7	#6	#5	#4	#3	#2	#1	#0
Error of bit 7	Error of bit 6	Error of bit 5	Error of bit 4	Error of bit 3	Error of bit 2	Error of bit 1	Error of bit 0

© MyFANUC 195109AB01DC415385669AA015E5BDE5

8.12 CONNECTION OF I/O MODULE FOR OPERATOR'S PANEL SUPPORTING SAFETY FUNCTION

8.12.1 Overview

"I/O module for operator's panel supporting safety function" is a unit dedicated to I/O Link *i*, which has an interface for duplicated input signals of safety circuits in using dual check safety (DCS) function.
There are two types of I/O modules for operator's panel supporting safety function.

Name	Ordering specification	Remarks
I/O module for operator's panel supporting safety function (type B)	A20B-2200-0470	General-pupose DI: 21 points DO: 16 points Safety input signal: 3 points One manual pulse generator can be connected.
I/O module for operator's panel supporting safety function (type A)	A20B-2200-0471	General-pupose DI: 24 points DO: 16 points Safety input signal: 4 points Three manual pulse generators can be connected.

⚠ CAUTION
I/O module for operator's panel supporting safety function is a unit dedicated to I/O Link *i*. Do not connect it to chanels used for I/O Link.

8.12.2 Connection Diagram

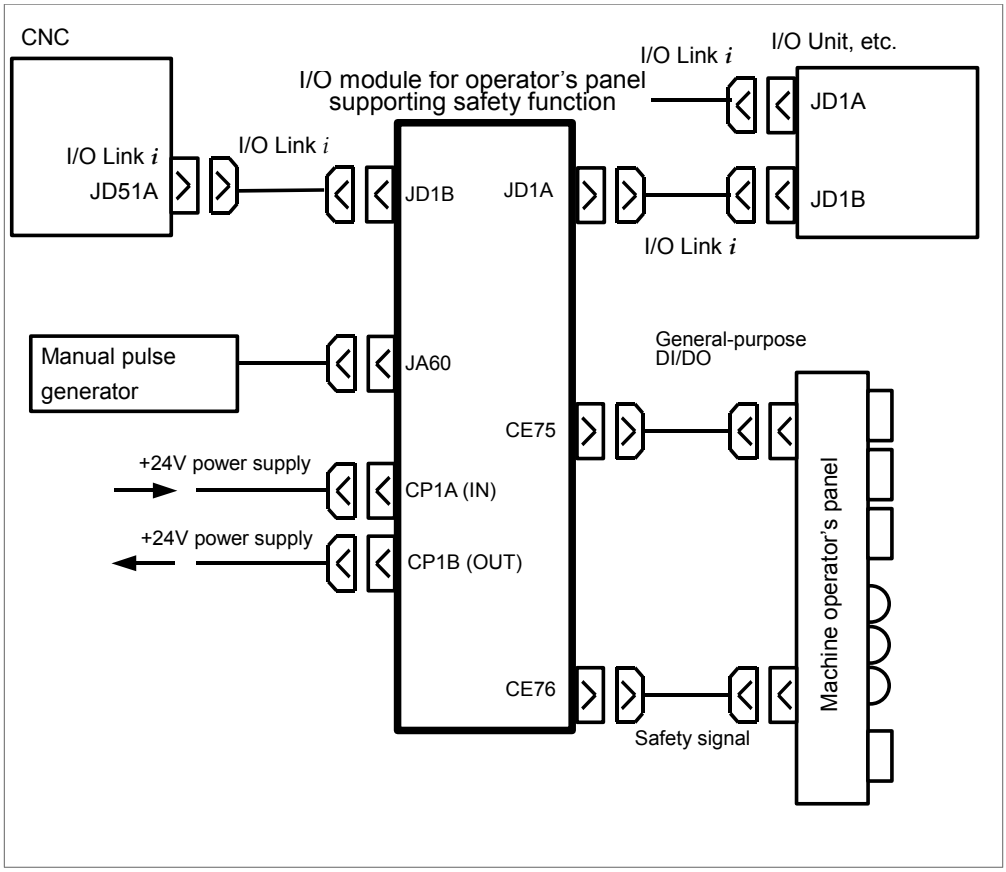

© MyFANUC 195109AB01DC415385669AA015E5BDE5

8.12.3 Power Connection

Provide the CP1B (IN) connector, shown below, with the power necessary for printed circuit board operation and that for DI/DO operation. To facilitate power division, the power is output to CP1A(OUT) exactly as it is input from CP1B (IN). When power division is required, use CP1A (OUT). Up to 2.5 A can be supplied by branching.

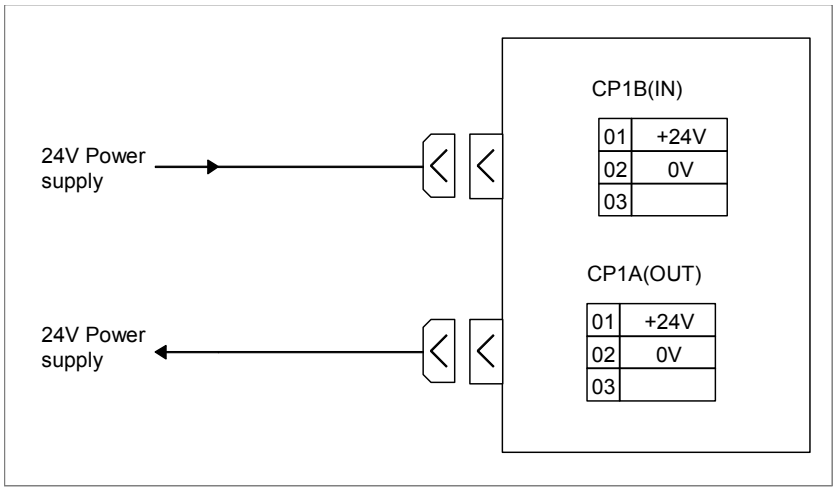

Connector name	Cable-side connector	Cable-side connector specification
CP1A, CP1B	Housing	Tyco Electronics AMP1-178288-3
	Contacts	Tyco Electronics AMP1-175218-5

NOTE

1 This unit doesn't have a pin (DOCOM) which supplys power to a driver which outputs DO.
Power is also supplied for DO through this connector. Use a power supply, considering DO power supply rating.

2 Both connectors CP1B (IN) and CP1A (OUT) are same specification.
And there is not indication of (IN) and (OUT) on the PCB.

© MyFANUC 195109AB01DC415385669AA015E5BDE5

8.12.4 DI/DO Address Map

I/O module for operator's panel supporting safety function is assigned to X addresses (input) and Y addresses (output) in two successive groups. Assign for I/O Link *i* as described below.

For Type B
Allocate 4-byte DI addresses and 2-byte DO addresses to PMC-side (group 1) slot1, and 2-byte DI addresses to DCS-side (group 2) slot1.
For Type A
Allocate 4-byte DI addresses and 2-byte DO address to PMC-side (group 1) slot1, and 1-byte DI address to DCS-side (group 2) slot1.

DI/DO address maps are as follows for Type A and Type B.

For A20B-2200-0470 (TypeB)

・PMC-side (group 1) address map

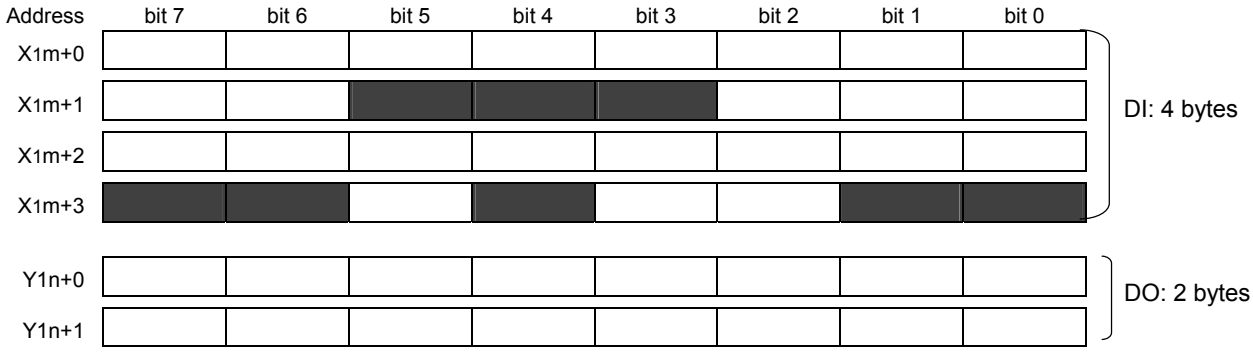

・DCS-side (group 2) address map

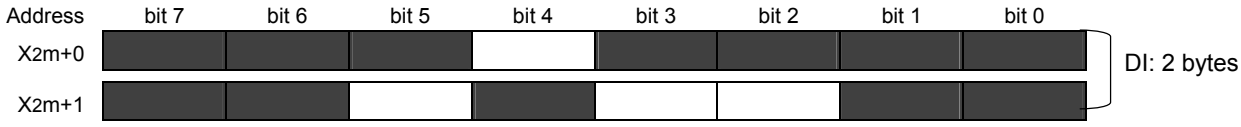

For A20B-2200-0471 (Type A)

・PMC-side (group 1) address map

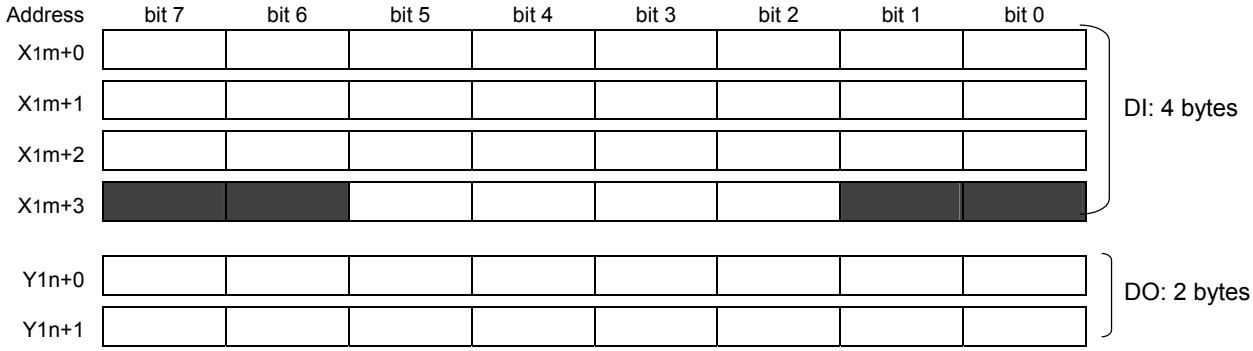

・DCS-side (group 2) address map

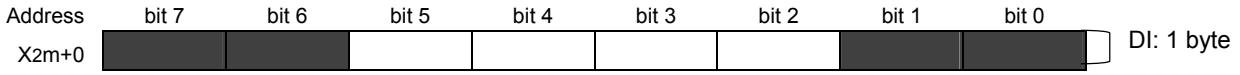

NOTE
Signals in shaded area ( ) can not be used.

© MyFANUC 195109AB01DC415385669AA015E5BDE5

8.12.5 DI/DO Connector Pin Arrangement

CE75

Pin Arrangement for A20B-2200-0470 (Type B)

	A	B
01	0V	+24V
02	X1m+0.0	X1m+0.1
03	X1m+0.2	X1m+0.3
04	X1m+0.4	X1m+0.5
05	X1m+0.6	X1m+0.7
06	X1m+1.0	X1m+1.1
07	X1m+1.2	
08		
09	X1m+1.6	X1m+1.7
10	X1m+2.0	X1m+2.1
11	X1m+2.2	X1m+2.3
12	X1m+2.4	X1m+2.5
13	X1m+2.6	X1m+2.7
14	0V	0V
15	0V	0V
16	Y1n+0.0	Y1n+0.1
17	Y1n+0.2	Y1n+0.3
18	Y1n+0.4	Y1n+0.5
19	Y1n+0.6	Y1n+0.7
20	Y1n+1.0	Y1n+1.1
21	Y1n+1.2	Y1n+1.3
22	Y1n+1.4	Y1n+1.5
23	Y1n+1.6	Y1n+1.7
24	+24V	+24V
25	+24V	+24V

Pin Arrangement for A20B-2200-0471 (Type A)

	A	B
01	0V	+24V
02	X1m+0.0	X1m+0.1
03	X1m+0.2	X1m+0.3
04	X1m+0.4	X1m+0.5
05	X1m+0.6	X1m+0.7
06	X1m+1.0	X1m+1.1
07	X1m+1.2	X1m+1.3
08	X1m+1.4	X1m+1.5
09	X1m+1.6	X1m+1.7
10	X1m+2.0	X1m+2.1
11	X1m+2.2	X1m+2.3
12	X1m+2.4	X1m+2.5
13	X1m+2.6	X1m+2.7
14	0V	0V
15	0V	0V
16	Y1n+0.0	Y1n+0.1
17	Y1n+0.2	Y1n+0.3
18	Y1n+0.4	Y1n+0.5
19	Y1n+0.6	Y1n+0.7
20	Y1n+1.0	Y1n+1.1
21	Y1n+1.2	Y1n+1.3
22	Y1n+1.4	Y1n+1.5
23	Y1n+1.6	Y1n+1.7
24	+24V	+24V
25	+24V	+24V

© MyFANUC 195109AB01DC415385669AA015E5BDE5

Connector name	Cable-side connector	Cable-side connector specification
CE75	Two-piece connector, series HIF3B, complying with MIL standards.	Hirose Electric: HIF3BB-50D-2.54R

CE76

Pin Arrangement for A20B-2200-0470 (Type B)

	A	B
01	0V	X_1m+3.2
02	X_2m+1.2	X_1m+3.3
03	X_2m+1.3	X_1m+3.5
04	X_2m+1.5	X_2m+0.4
05	+24V	+24V
06	+24V	+24V

Pin Arrangement for A20B-2200-0471 (TypeA)

	A	B
01	0V	X_1m+3.2
02	X_2m+0.2	X_1m+3.3
03	X_2m+0.3	X_1m+3.4
04	X_2m+0.4	X_1m+3.5
05	X_2m+0.5	+24V
06	+24V	+24V

Connector name	Cable-side connector	Cable-side connector specification
CE76	12 pin femle connector housing D-2100 X key	Tyco Electronics AMP1-1318118-6
	Contact	Tyco Electronics AMP1318107-1

⚠ **CAUTION**

In case of Type B, address X_1m+1.6 to address X_1m+2.7 are assigned to pins of JA60 as well as CE75. If address X_1m+1.6 to address X_1m+2.7 are used in one type of a connector, do not connect to these addresses in the other type of connector.

NOTE

Blank pins cannot be used. Do not connect to these pins.

© MyFANUC 195109AB01DC415385669AA015E5BDE5

8.12.6 DI (General-purpose Input Signal) Connection

DI connection for CE75

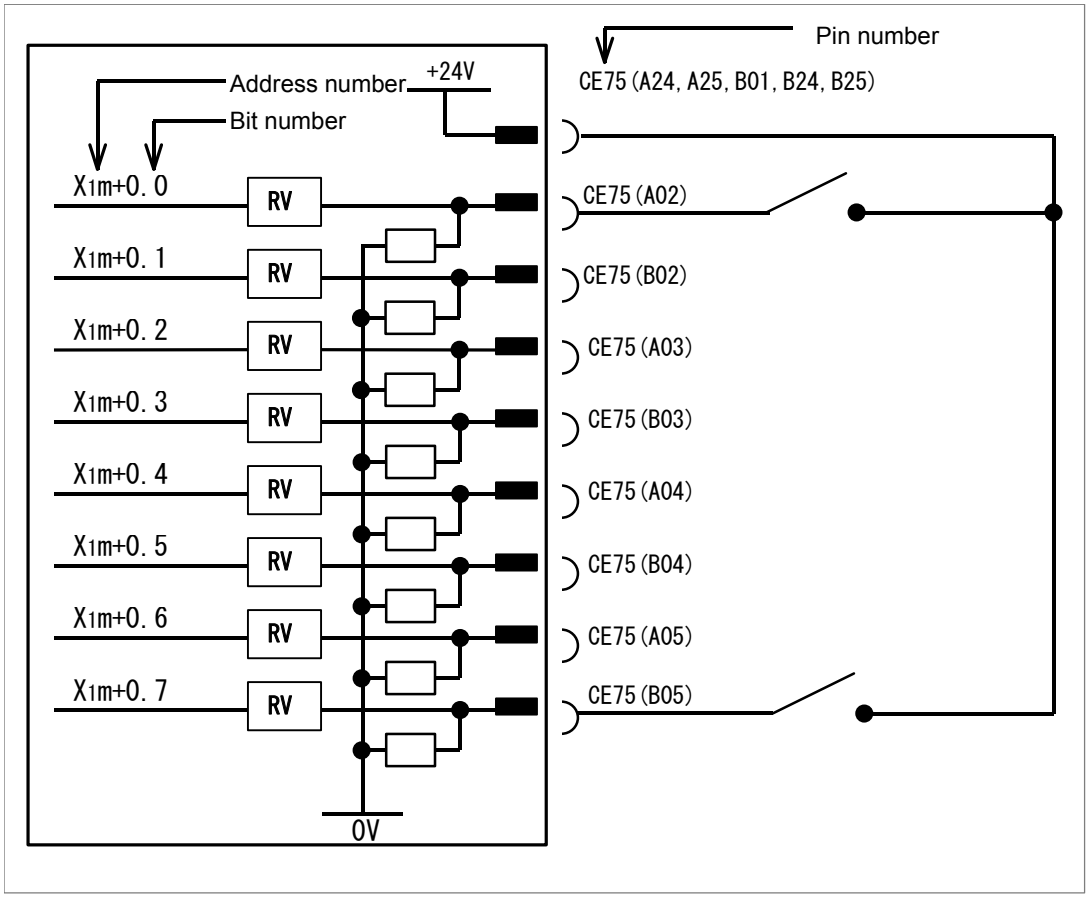

© MyFANUC 195109AB01DC415385669AA015E5BDE5

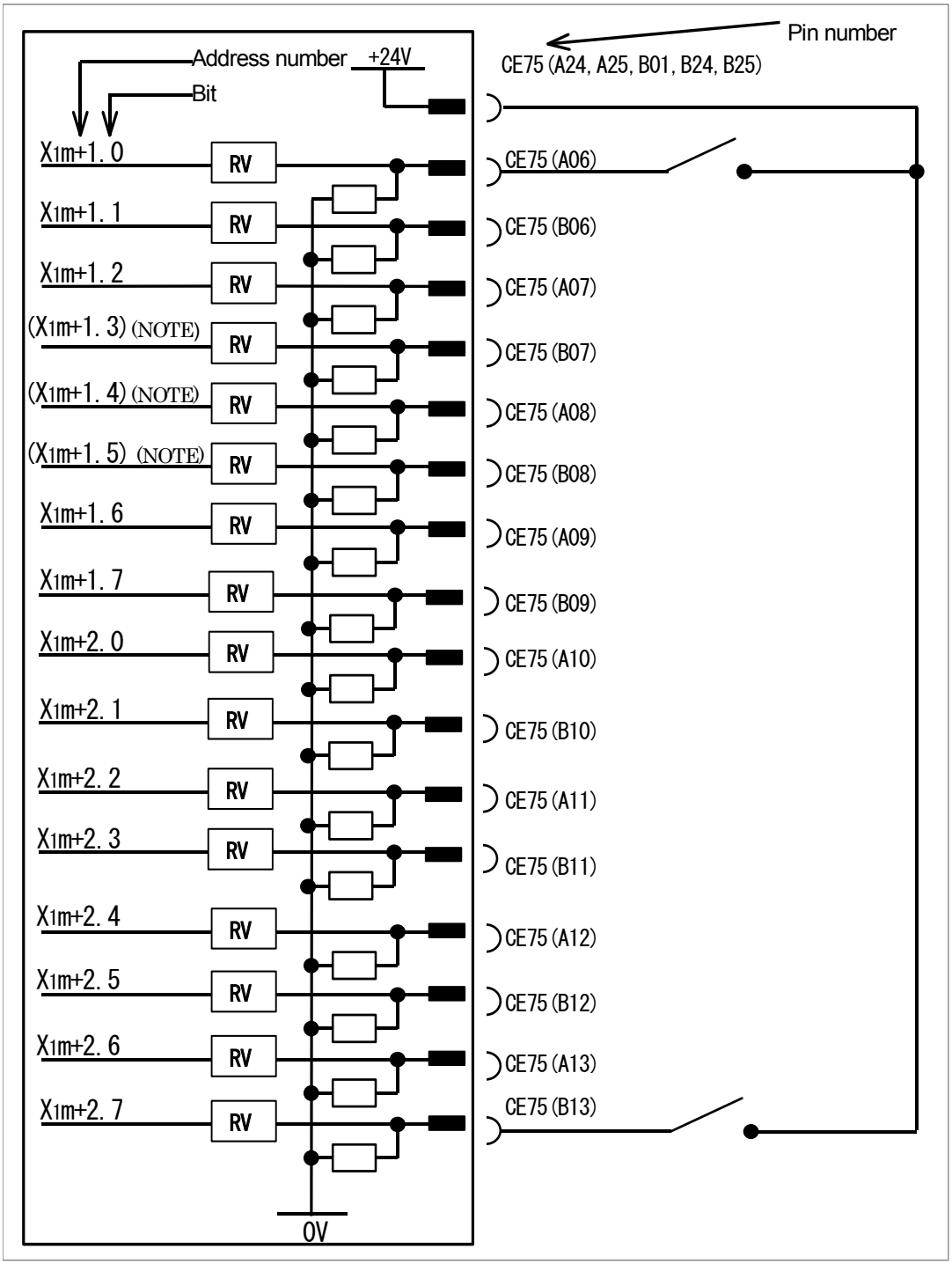

⚠ CAUTION

+24V (A24, A25, B01, B24, B25) are output signals which are used as a common voltage for input signals.
Do not use these except for a common voltage for input signals. Do not supply 24V to these pins from the outside.

NOTE

X_1m+1.3, X_1m+1.4, and X_1m+1.5 can not be used for type B. These addresses can be used only for Type A.

© MyFANUC 195109AB01DC415385669AA015E5BDE5

DI connection for CE76

DI connection for A20B-2200-0470（Type B）

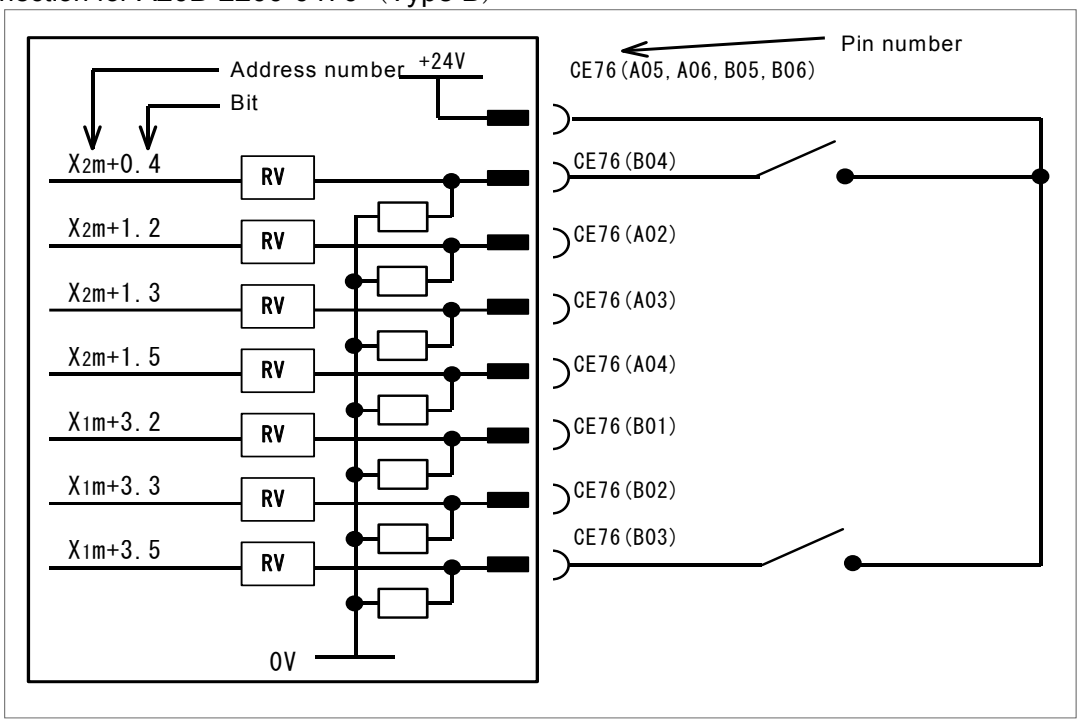

DI connection for A20B-2200-0471 (Type A)

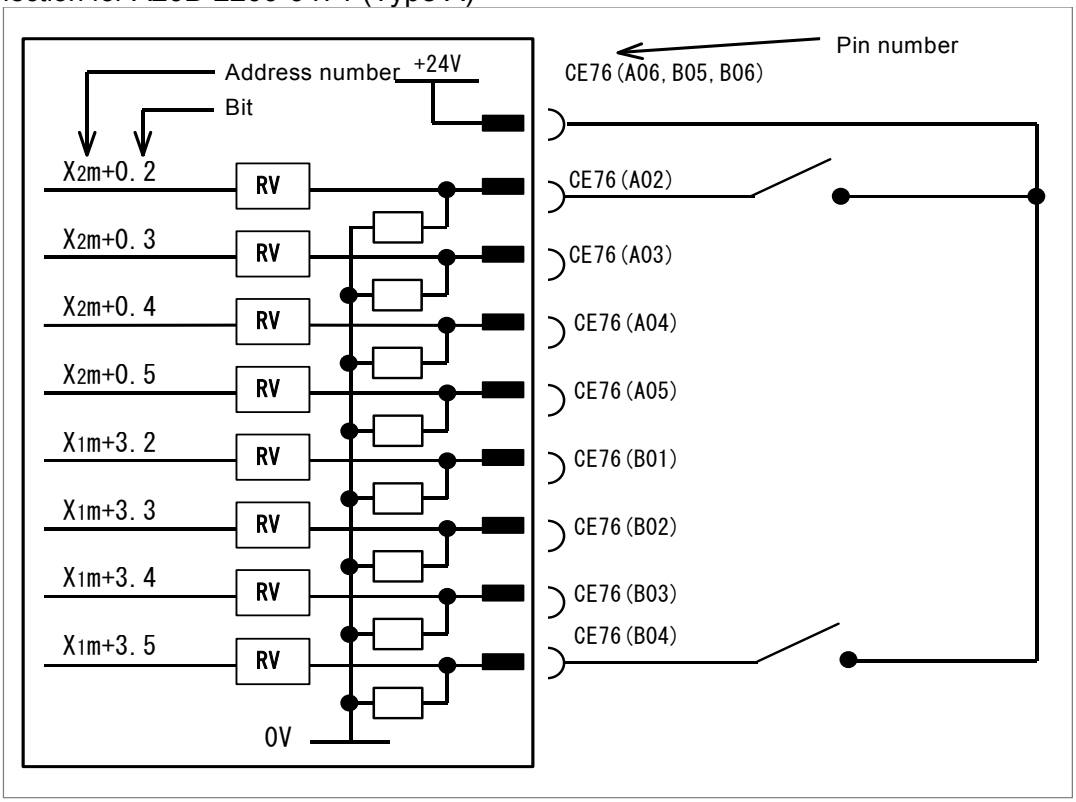

> ⚠ **CAUTION**
> +24V (A05 (in Type B), A06, B05 and B06) are output signals which are used as a common voltage for input signals. Do not use these except for a common voltage for input signals. Do not supply 24V to these pins from the outside.

© MyFANUC 195109AB01DC415385669AA015E5BDE5

8.12.7 DO Signal Connection

DO connection for CE75

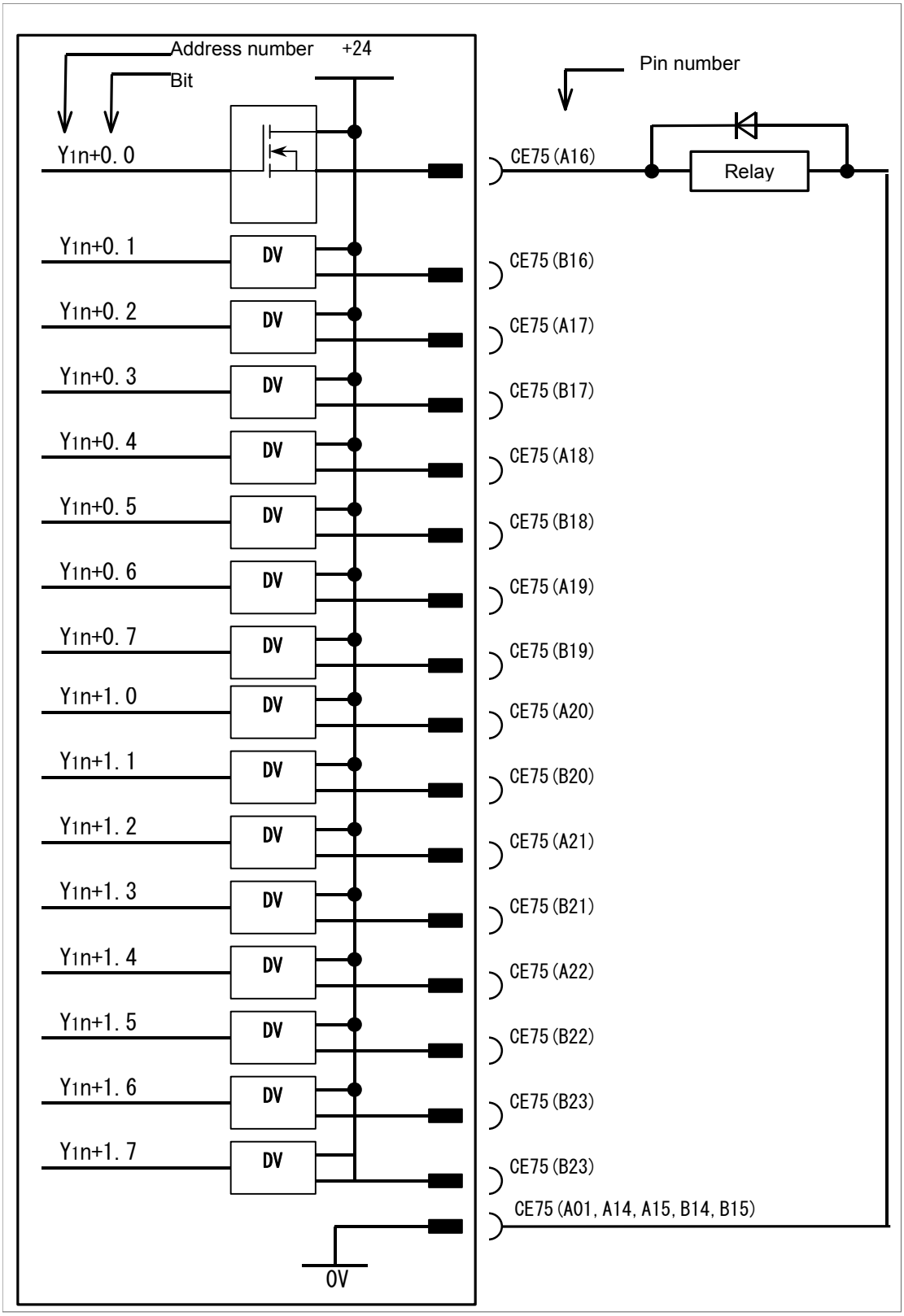

© MyFANUC 195109AB01DC415385669AA015E5BDE5

8.12.8 Manual Pulse Generator Connection

Connection of JA60 to manual pulse generators

- Connection for type B

One manual pulse generator can be connected. Ten input signals can be used on the connector.

For A20B-2200-0470(Type B)

1	HA1	11	X1m+2.0
2	HB1	12	X1m+2.1
3	+5V	13	X1m+2.2
4	0V	14	X1m+2.3
5	+5V	15	X1m+2.4
6	0V	16	X1m+2.5
7	+5V	17	X1m+2.6
8	0V	18	X1m+2.7
9	X1m+1.6	19	X1m+1.7
10	0V	20	+24V

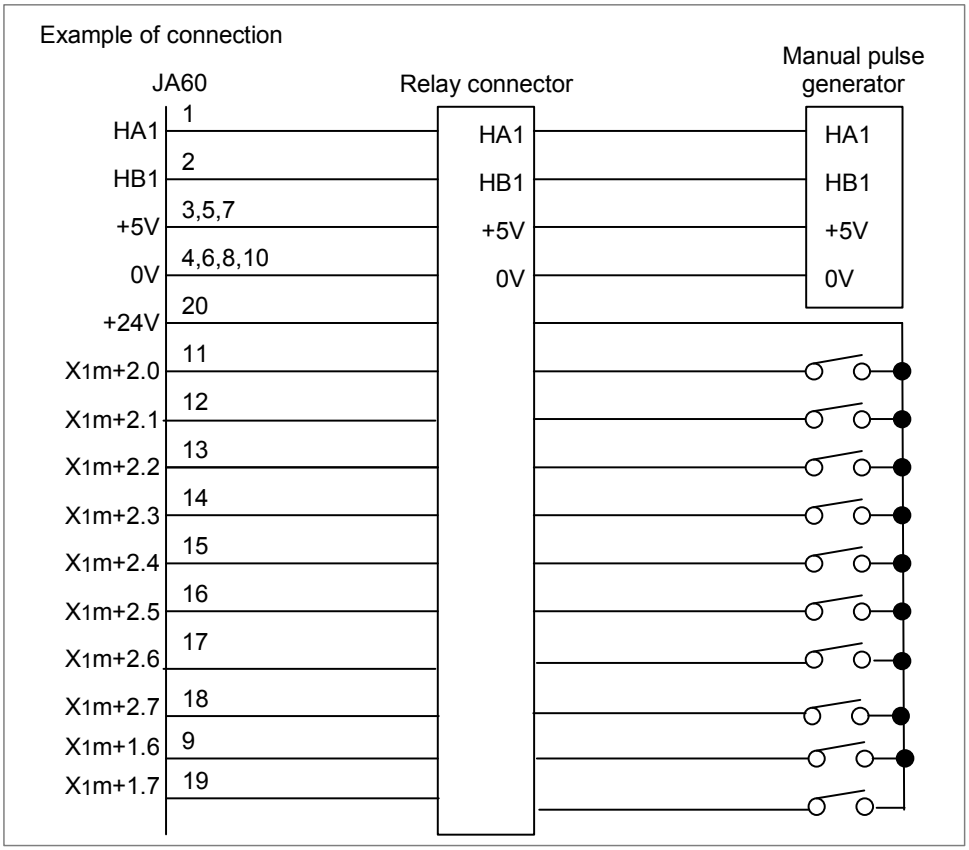

© MyFANUC 195109AB01DC415385669AA015E5BDE5

- Connection for type A

Three manual pulse generators can be connected.
Please refer to section 7.4.1 about the connection.

For A20B-2200-0471(Type A)

1	HA1	11	
2	HB1	12	0V
3	HA2	13	
4	HB2	14	0V
5	HA3	15	
6	HB3	16	0V
7		17	
8		18	5V
9	5V	19	
10		20	5V

Connector name	Cable-side connector	Cable-side connector specification
JA60	20 pin half-pitch connector Solder type connector (20pin, female)	Connector: Hirose Electric FI40B-20S Case: Hirose Electric FI-20-CV5

⚠ CAUTION
In case of I/O module for operator's panel supporting safety function type B, address X1m+1.6 to address X1m+2.7 are also assigned to pins of CE75. If address X1m+1.6 to address X1m+2.7 are used in one type of a connector, do not connect to these addresses in the other type of connector.

8.12.9 External View

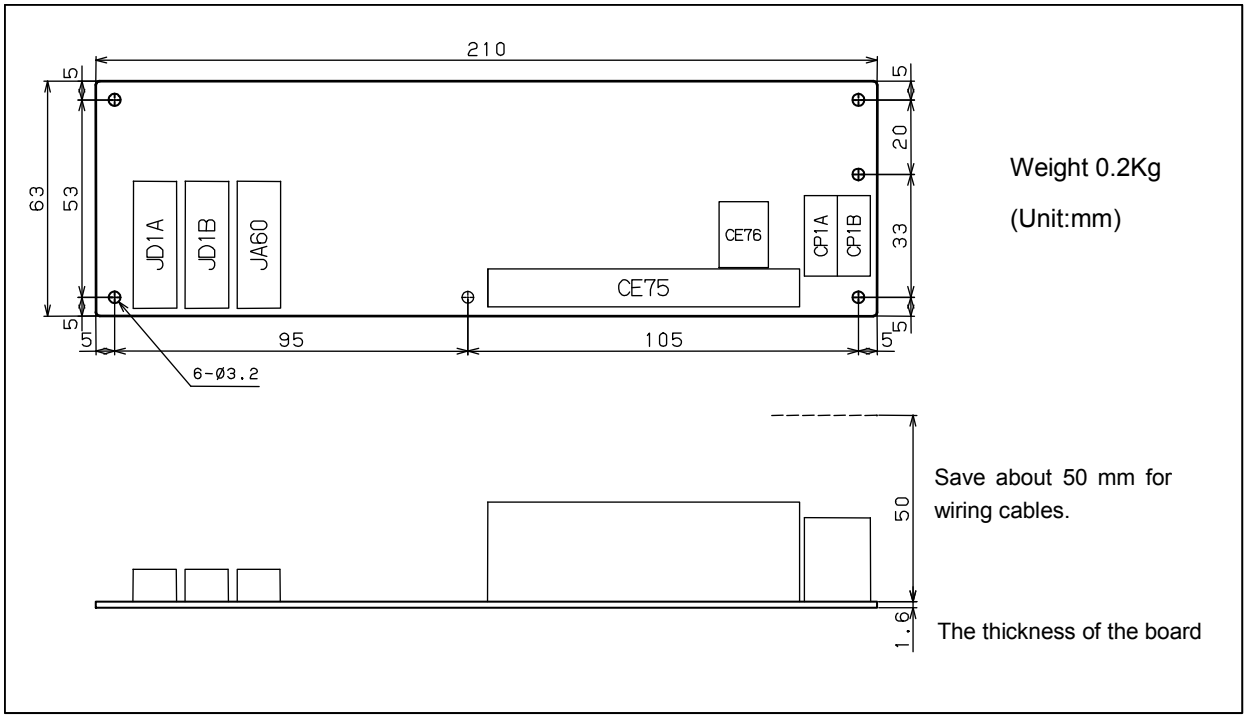

© MyFANUC 195109AB01DC415385669AA015E5BDE5

8.12.10 Specifications

Installation specifications

Install the I/O module in a fully enclosed cabinet.
For other installation conditions, conform to the CNC installation conditions.

Ordering specifications

Name	Ordering specification	Remarks
I/O module for operator's panel supporting safety function (type B)	A20B-2200-0470	General-pupose DI: 21 points DO: 16 points Safety input signal: 3 points One manual pulse generator can be connected
I/O module for operator's panel supporting safety function (type A)	A20B-2200-0471	General-pupose DI: 24 points DO: 16 points Safety input signal: 4 points Three manual pulse generators can be conected
Fuse（spare parts）	A03B-0815-K001	1A

Power supply rating

Power supply voltage	Power supply rating	Remarks
24VDC±10% is fed through the I/O connector (CPD1) ±10% includes momentary variation and ripples.	0.40A	The total power consumption of DI points is included. The power consumption of DO points is not included. Use a power supply, considering DO power supply rating.

NOTE
To connect an optical adapter for the I/O Link *i* to JD1A, the above power supply rating +35mA is required. An optical adapter for the I/O Link *i* can not be connected to JD1B.

Heat dissipation

Unit name	Heat dissipation	Remarks
I/O module for operator's panel supporting safety function type A and B	4.3W	DI: 8 points when ON

NOTE
The details of the method of calculating heat dissipation are as follows.

2.9 (W) + 0.18 (W) × N
(N: Number of DI points turned on)

The above heat dissipation is only what this unit produces. This does not include the power dissipation of peripherals, optical adapters for the I/O Link *i*, manual pulse generators and so on.

DI (input signal specifications)

Contact rating	30VDC, 16mA or more
Leakage current between contacts when opened	1mA or less (26.4 V)
Voltage decrease between contacts when closed	2V or less (including a cable voltage decrease)

© MyFANUC 195109AB01DC415385669AA015E5BDE5

Contact rating	30VDC, 16mA or more
Delay time	The receiver delay time is 2ms (maximum) In addition, [I/O Link transfer time between CNC and I/O module (2ms or less)] and [ladder scan period (depending on CNC)] must be considered.

DO (output signal specifications)

Maximum load current when ON	200mA or less including momentary current per signal.
Saturation voltage when ON	1V (maximum) when the load current is 200mA.
Withstand voltage	24 V +20% or less including momemtary variations.
Leakage current when OFF	20μA or less
Delay time	The driver delay time is 50μs (maxmum). In addition, [I/O Link transfer time between CNC and I/O module (2ms or less)] and [ladder scan period (depending on CNC)] must be considered.

8.12.11 DO (Output Signal) Error Detection

The DO driver of this unit has ouput protection functions for each output signal. If an accident, such as an earth fault, causes an abnormal increase in the load current or in the driver temperature, a protection circuit, which is provided for each DO driver, is activated and keeps the relevant DO signal in the OFF state. Even if this occurs, the CNC and I/O module continue operating without entering the alarm status, but the PMC is notified of the location of the error detected by the DO driver. This information can be checked on the PMC status screen or alarm processing can be performed in advance using a ladder to help error check and recovery.

When the above protection function is activated by the DO driver, the relevant error is output as a status alarm and transferred to the PMC relay area. The following table lists relay area information and corresponding DO data related to a status alarm. When an alarm data bit is set to ‘1’, the DO driver corresponding to the bit detects an error. For detail of the status alarm, see Subsection 7.3.3, “Status Alarm”.

Information output to the relay area and corresponding location where an error occured

Information ouput to relay area			Address of the DO driver which detects an error
Group number	Slot number	Byte address in the slot	
Group 1	1	0	$Y_{1}n+0$
	1	1	$Y_{1}n+1$

Description of alarm data

#7	#6	#5	#4	#3	#2	#1	#0
Bit 7 error	Bit 6 error	Bit 5 error	Bit 4 error	Bit 3 error	Bit 2 error	Bit 1 error	Bit 0 error

© MyFANUC 195109AB01DC415385669AA015E5BDE5

8.13 I/O UNIT FOR POWER MAGNETICS CABINET

8.13.1 Overall Connection Diagram

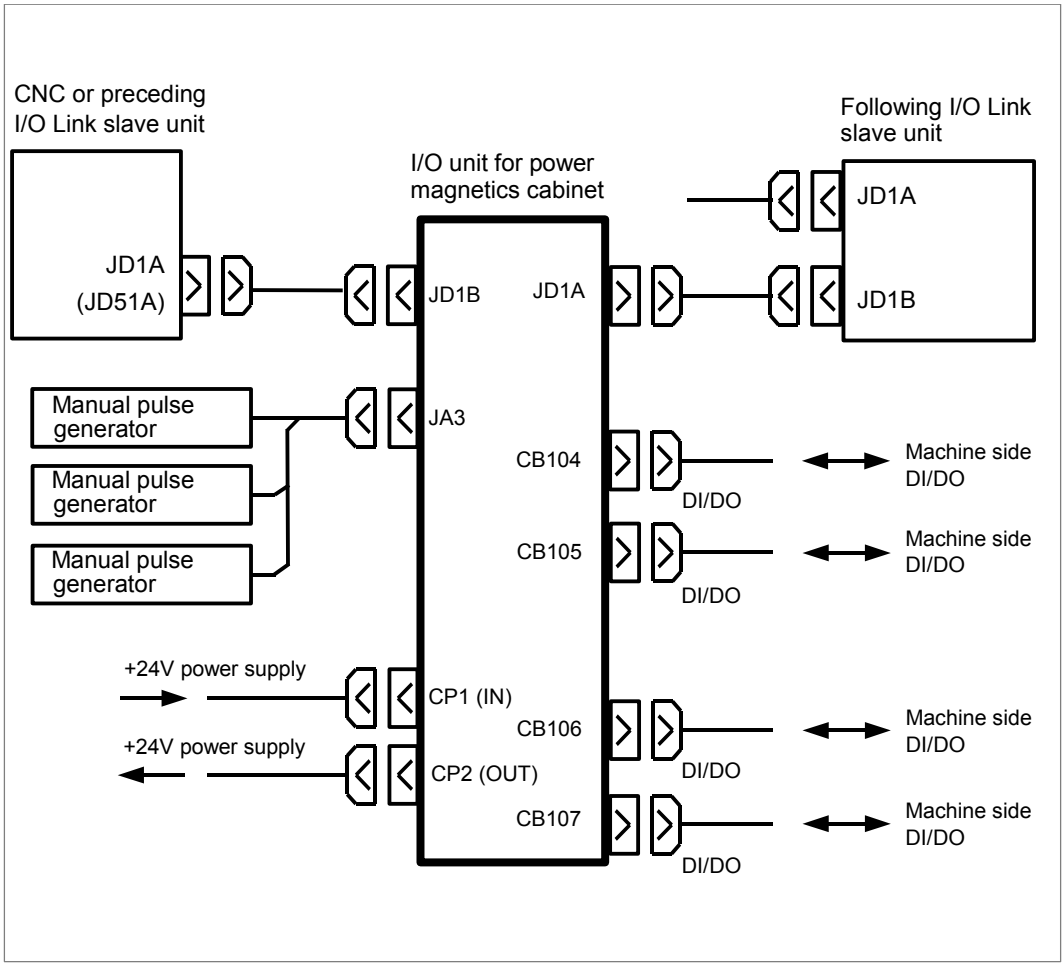

NOTE

The following screw type connectors cannot be used to connect the I/O Link *i* or manual pulse generator.

Connectors that cannot be used on the cable side

	Specification	Manufacturer
Connector case	FI-20-CV7	Hirose Electric Co., Ltd.
Connector case and connector	FI30-20S-CV7	Hirose Electric Co., Ltd.

© MyFANUC 195109AB01DC415385669AA015E5BDE5

8.13.2 Power Connection

Supply power to the I/O unit for power magnetics cabinet from external power.

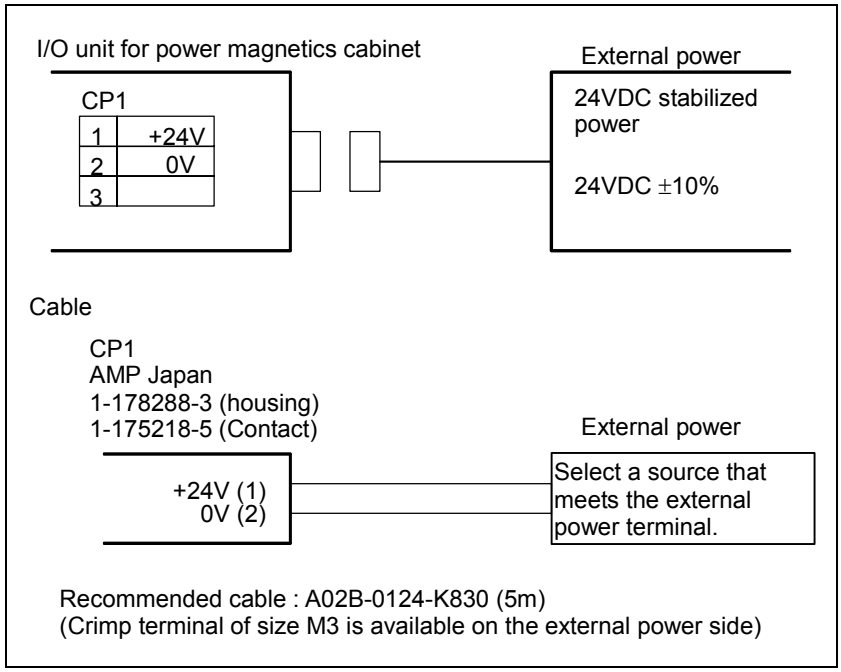

Part of the 24 VDC power input to CP1 can be taken out from CP2 by branching. CP2 should be connected as shown below. In this case, the rating of the external 24 VDC power supplied to CP1 must be the sum of the power consumed within the control unit and that supplied to external equipment via CP2. The maximum capacity of power that can be obtained from a branch is 1.0 A.

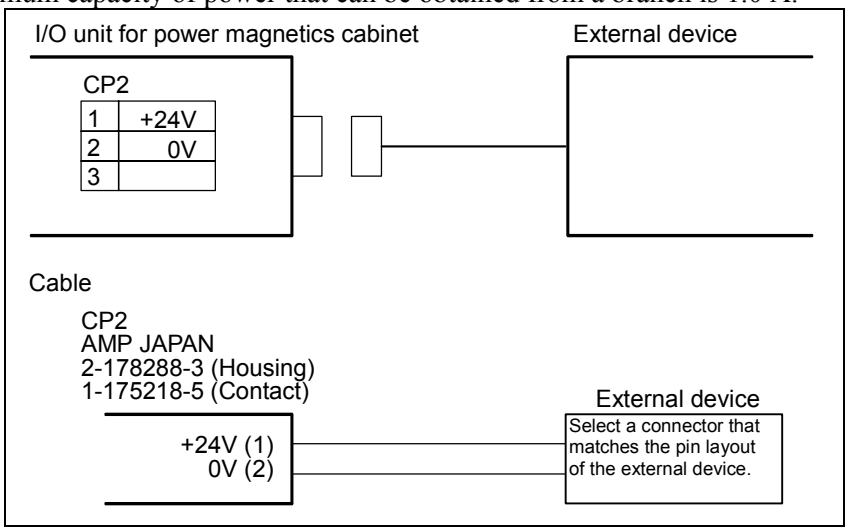

NOTE

Do not interrupt +24V supplied to this connector during operation. Otherwise, an alarm about communication with the CNC is issued. A voltage of +24V must not be supplied after power-on of the CNC and +24V must not be interrupted before power-off of the CNC. When powering off the CNC control unit, be sure to power off the I/O unit for power magnetics cabinet.

© MyFANUC 195109AB01DC415385669AA015E5BDE5

8.13.3 DI/DO Connector Pin Arrangement

CB104

HIROSE 50PIN

	A	B
01	0V	+24V
02	Xm+0.0	Xm+0.1
03	Xm+0.2	Xm+0.3
04	Xm+0.4	Xm+0.5
05	Xm+0.6	Xm+0.7
06	Xm+1.0	Xm+1.1
07	Xm+1.2	Xm+1.3
08	Xm+1.4	Xm+1.5
09	Xm+1.6	Xm+1.7
10	Xm+2.0	Xm+2.1
11	Xm+2.2	Xm+2.3
12	Xm+2.4	Xm+2.5
13	Xm+2.6	Xm+2.7
14		
15		
16	Yn+0.0	Yn+0.1
17	Yn+0.2	Yn+0.3
18	Yn+0.4	Yn+0.5
19	Yn+0.6	Yn+0.7
20	Yn+1.0	Yn+1.1
21	Yn+1.2	Yn+1.3
22	Yn+1.4	Yn+1.5
23	Yn+1.6	Yn+1.7
24	DOCOM	DOCOM
25	DOCOM	DOCOM

CB105

HIROSE 50PIN

	A	B
01	0V	+24V
02	Xm+3.0	Xm+3.1
03	Xm+3.2	Xm+3.3
04	Xm+3.4	Xm+3.5
05	Xm+3.6	Xm+3.7
06	Xm+8.0	Xm+8.1
07	Xm+8.2	Xm+8.3
08	Xm+8.4	Xm+8.5
09	Xm+8.6	Xm+8.7
10	Xm+9.0	Xm+9.1
11	Xm+9.2	Xm+9.3
12	Xm+9.4	Xm+9.5
13	Xm+9.6	Xm+9.7
14		
15		
16	Yn+2.0	Yn+2.1
17	Yn+2.2	Yn+2.3
18	Yn+2.4	Yn+2.5
19	Yn+2.6	Yn+2.7
20	Yn+3.0	Yn+3.1
21	Yn+3.2	Yn+3.3
22	Yn+3.4	Yn+3.5
23	Yn+3.6	Yn+3.7
24	DOCOM	DOCOM
25	DOCOM	DOCOM

CB106

HIROSE 50PIN

	A	B
01	0V	+24V
02	Xm+4.0	Xm+4.1
03	Xm+4.2	Xm+4.3
04	Xm+4.4	Xm+4.5
05	Xm+4.6	Xm+4.7
06	Xm+5.0	Xm+5.1
07	Xm+5.2	Xm+5.3
08	Xm+5.4	Xm+5.5
09	Xm+5.6	Xm+5.7
10	Xm+6.0	Xm+6.1
11	Xm+6.2	Xm+6.3
12	Xm+6.4	Xm+6.5
13	Xm+6.6	Xm+6.7
14	COM4	
15		
16	Yn+4.0	Yn+4.1
17	Yn+4.2	Yn+4.3
18	Yn+4.4	Yn+4.5
19	Yn+4.6	Yn+4.7
20	Yn+5.0	Yn+5.1
21	Yn+5.2	Yn+5.3
22	Yn+5.4	Yn+5.5
23	Yn+5.6	Yn+5.7
24	DOCOM	DOCOM
25	DOCOM	DOCOM

CB107

HIROSE 50PIN

	A	B
01	0V	+24V
02	Xm+7.0	Xm+7.1
03	Xm+7.2	Xm+7.3
04	Xm+7.4	Xm+7.5
05	Xm+7.6	Xm+7.7
06	Xm+10.0	Xm+10.1
07	Xm+10.2	Xm+10.3
08	Xm+10.4	Xm+10.5
09	Xm+10.6	Xm+10.7
10	Xm+11.0	Xm+11.1
11	Xm+11.2	Xm+11.3
12	Xm+11.4	Xm+11.5
13	Xm+11.6	Xm+11.7
14		
15		
16	Yn+6.0	Yn+6.1
17	Yn+6.2	Yn+6.3
18	Yn+6.4	Yn+6.5
19	Yn+6.6	Yn+6.7
20	Yn+7.0	Yn+7.1
21	Yn+7.2	Yn+7.3
22	Yn+7.4	Yn+7.5
23	Yn+7.6	Yn+7.7
24	DOCOM	DOCOM
25	DOCOM	DOCOM

⚠ **CAUTION**

An output DC voltage of +24V at CB104 (B01) , CB105(B01), CB106(B01) and CE107 (B01) is for DI signals. Do not supply 24 VDC to these pins from the outside.

© MyFANUC 195109AB01DC415385669AA015E5BDE5

8.13.4 DI (General-purpose Input Signal) Connection

○96 points maximum

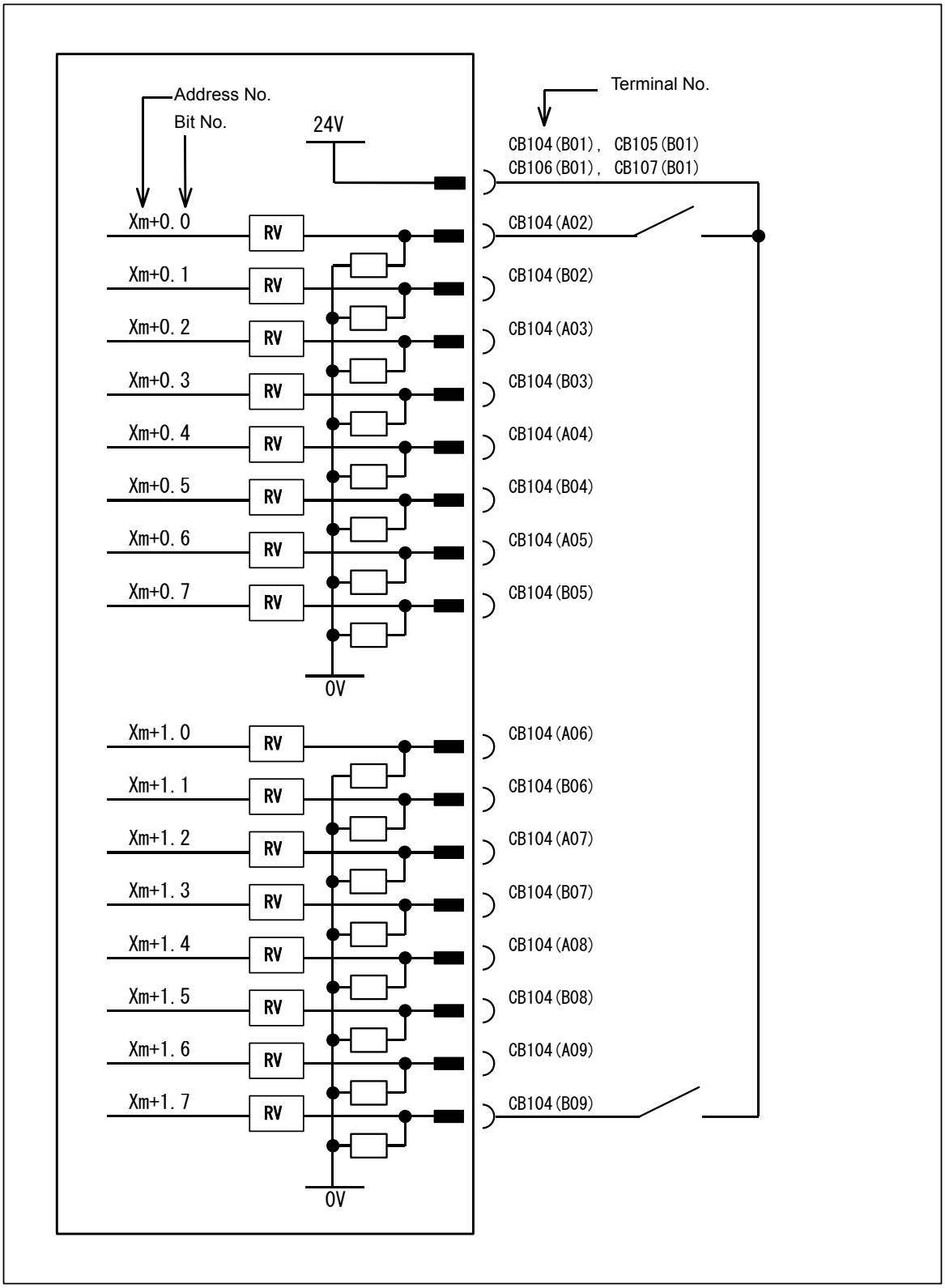

© MyFANUC 195109AB01DC415385669AA015E5BDE5

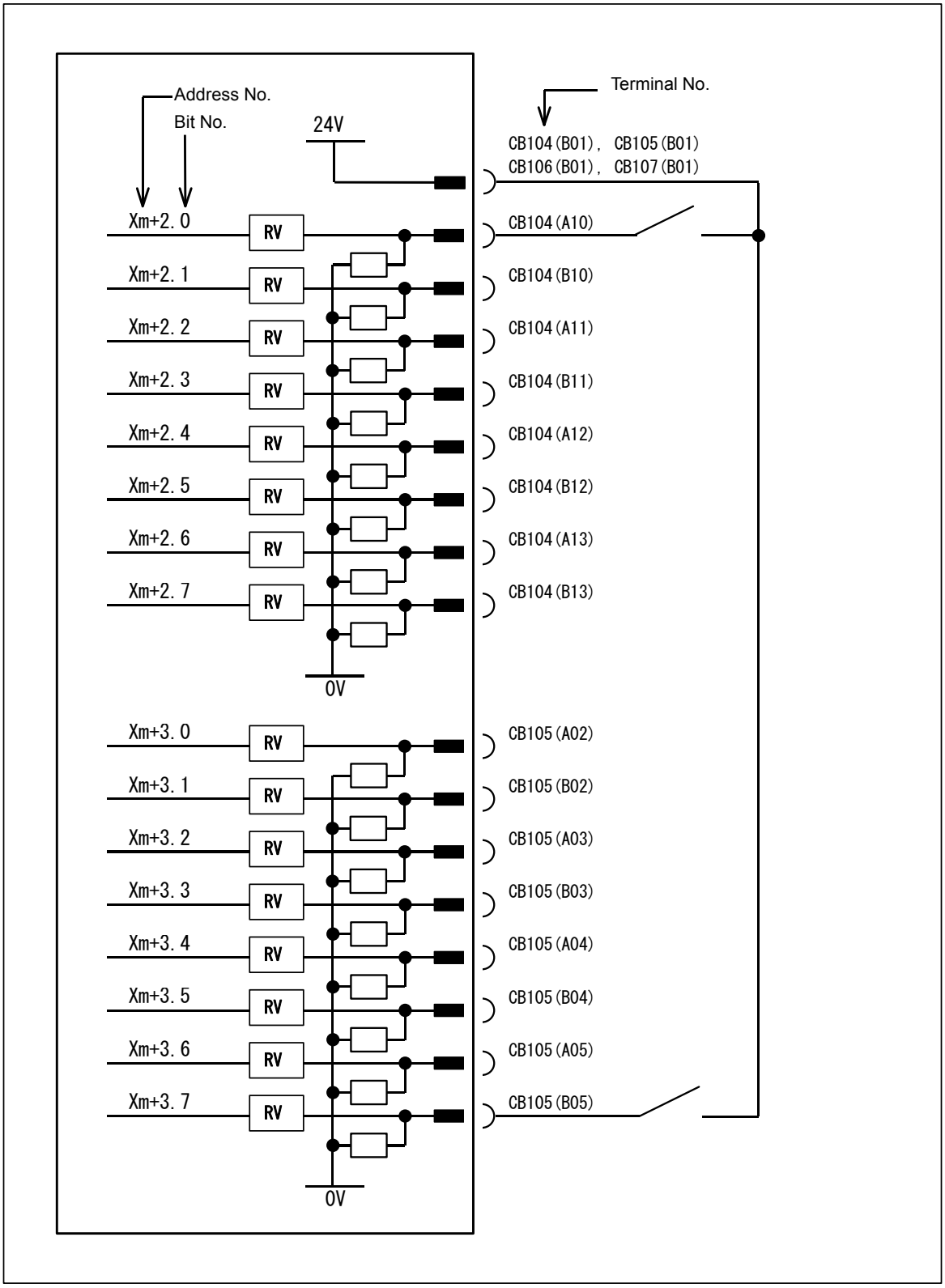

© MyFANUC 195109AB01DC415385669AA015E5BDE5

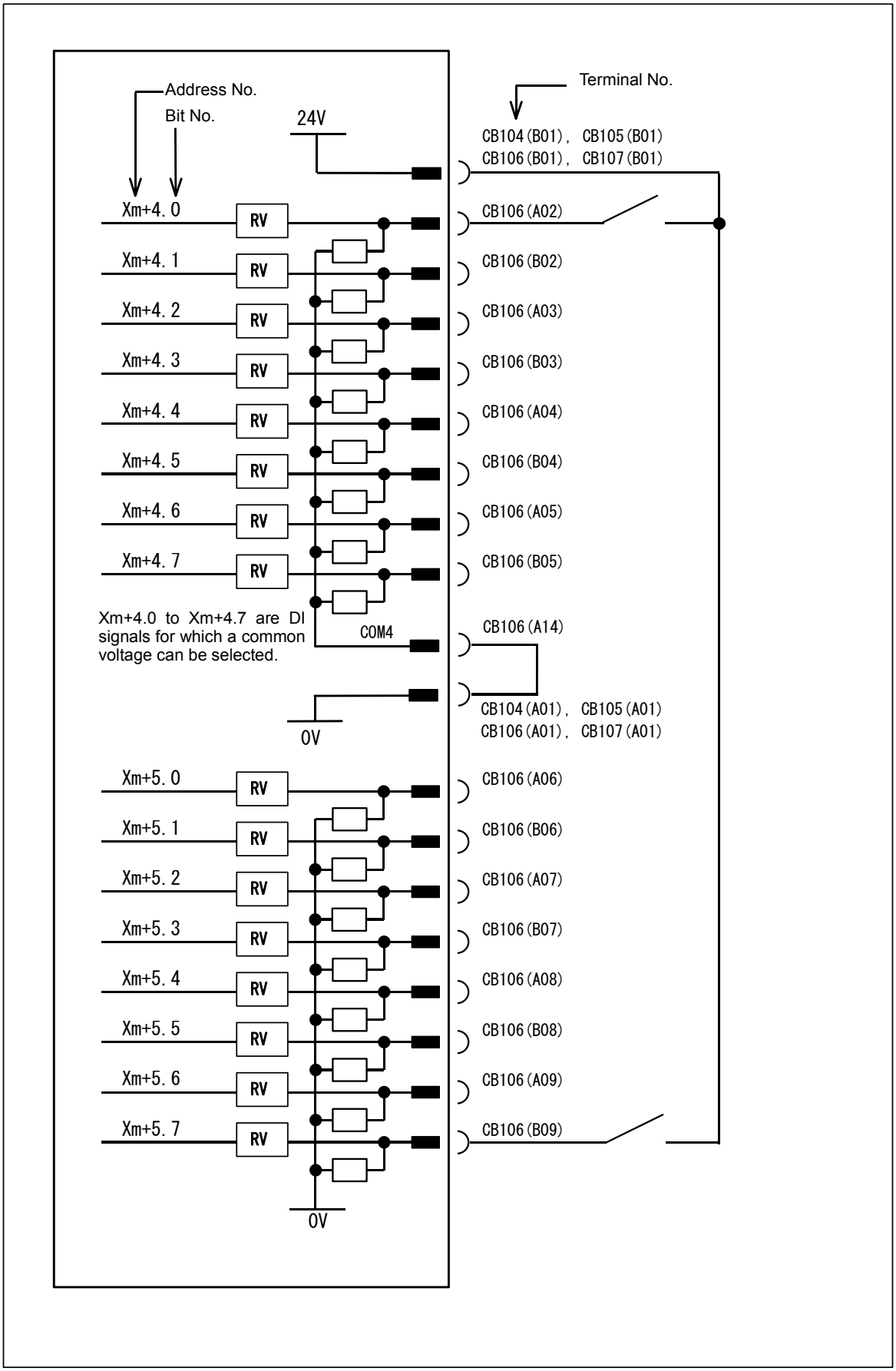

© MyFANUC 195109AB01DC415385669AA015E5BDE5

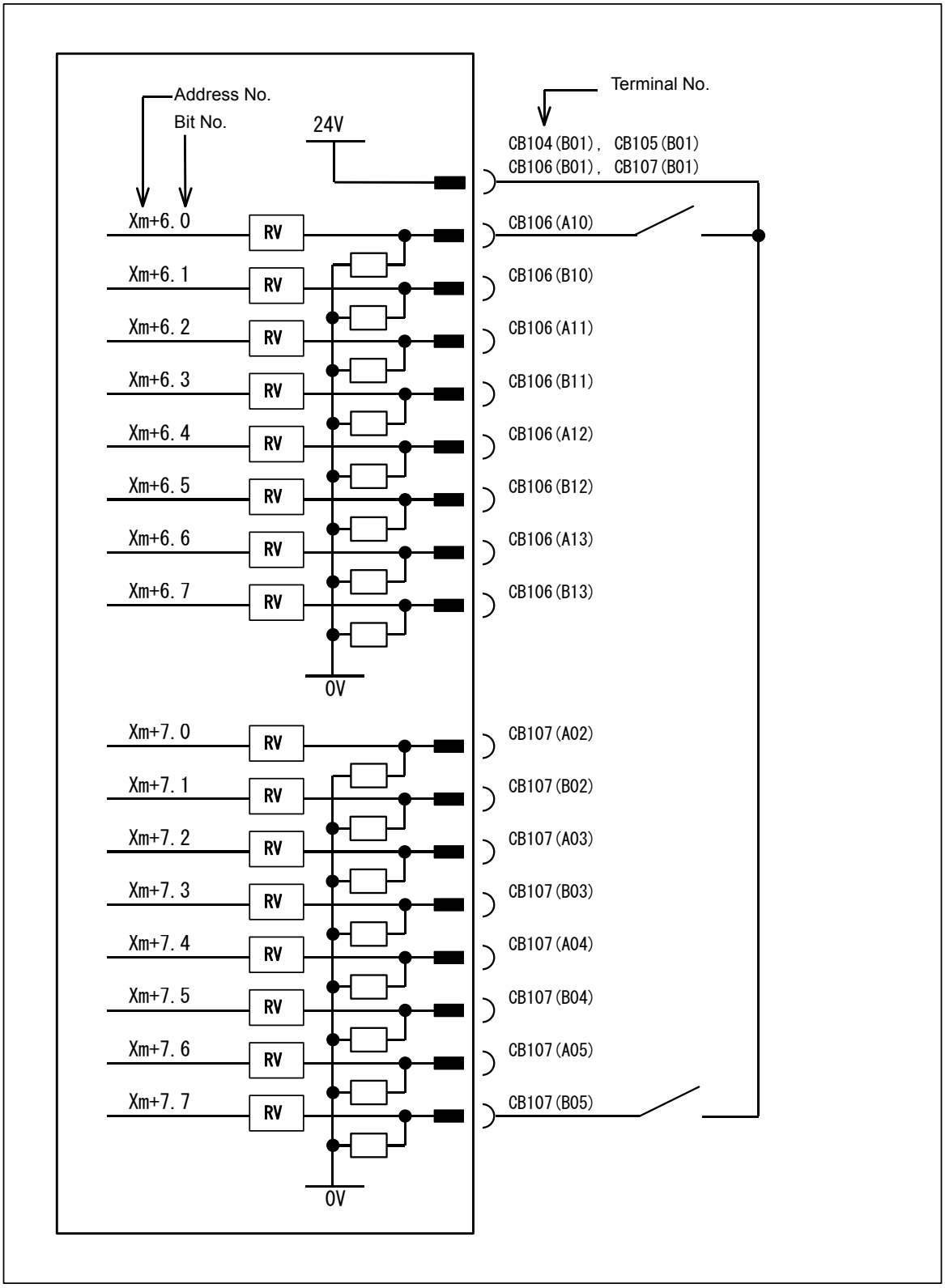

© MyFANUC 195109AB01DC415385669AA015E5BDE5

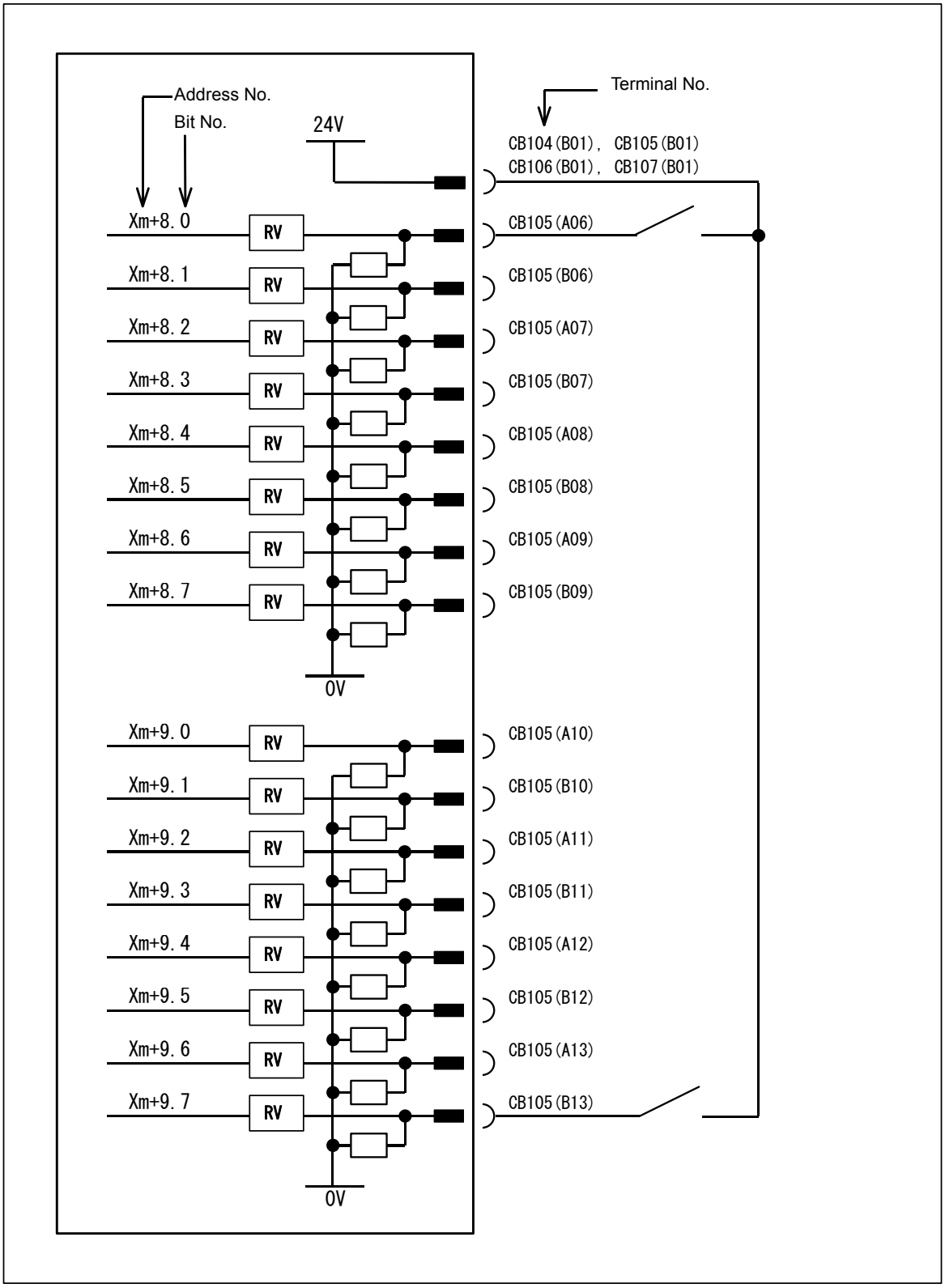

© MyFANUC 195109AB01DC415385669AA015E5BDE5

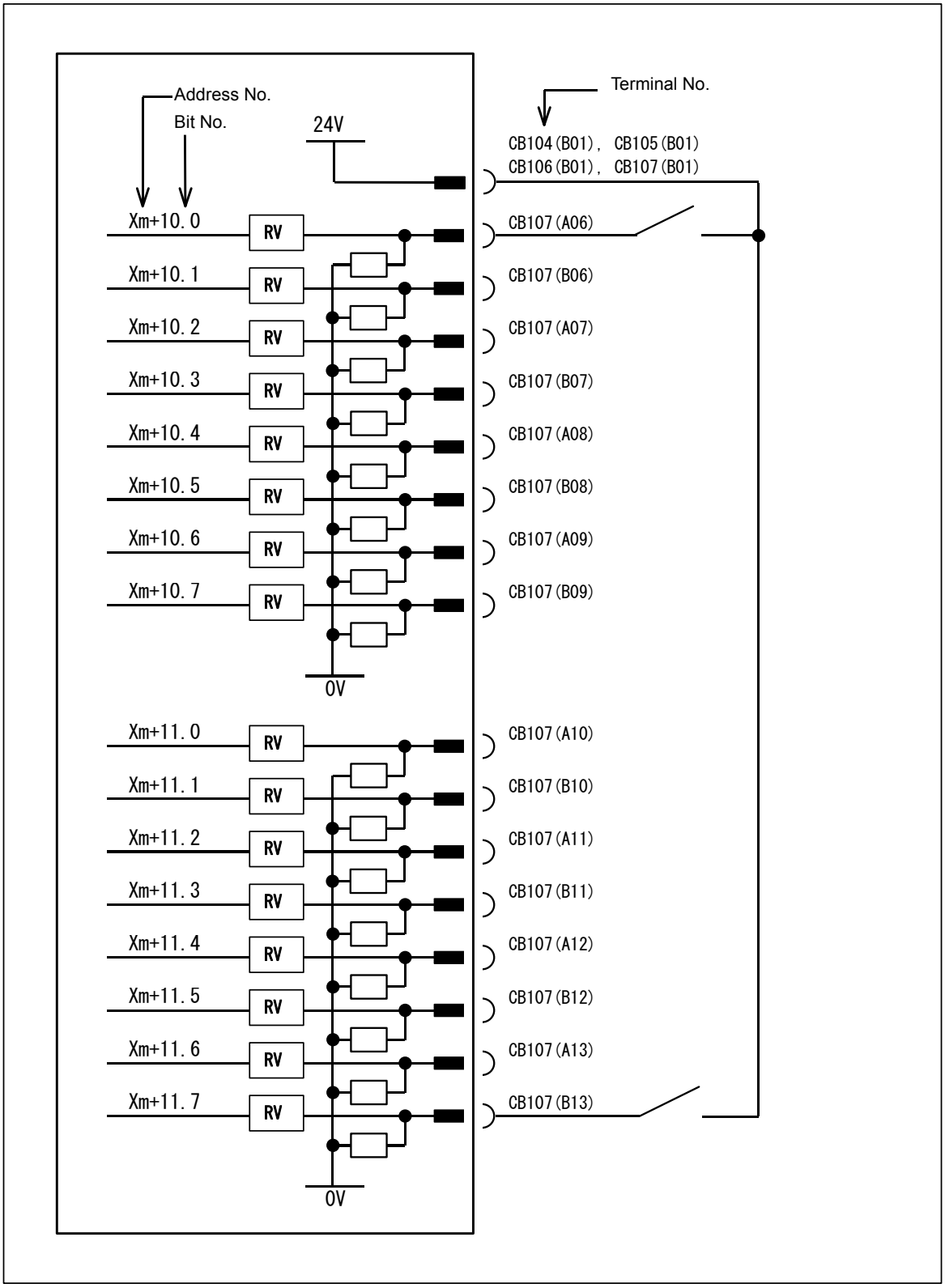

© MyFANUC 195109AB01DC415385669AA015E5BDE5

NOTE

Xm+4.0 through Xm+4.7 are DI pins for which a common voltage can be selected. That is, by connecting the COM4 (CB106-A14) pin to the +24V power supply, these DI signals can be input with them logical state reversed. If, however, some cable wires of them are connected to ground, they have the same effect as inputting an ON state DI signal. To prevent this from occurring, the connection of the COM4 (CB106-A14) pin to the 0V power supply is recommended wherever possible in terms of safety.

For the unconnected pins at the addresses for which the common voltage is fixed, the input is “0”. For the unconnected pins at the addresses for which a common voltage can be selected (from Xm+4.0 to Xm+4.7), the input is “0” when the COM4 (CB106-A14) pin is connected to the 0 V power supply or “1” when it is connected to the +24V power supply. Connect COM4 when used. When addresses from Xm+4.0 to Xm+4.7 are not used, connect COM4 to the 0V power supply.

Common voltage for general-purpose DI

Address	Common voltage
Xm	Internally fixed to 0V.
Xm+1	Internally fixed to 0V.
Xm+2	Internally fixed to 0V.
Xm+3	Internally fixed to 0V.
Xm+4	Externally can be selected with COM4.
Xm+5	Internally fixed to 0V.
Xm+6	Internally fixed to 0V.
Xm+7	Internally fixed to 0V.
Xm+8	Internally fixed to 0V.
Xm+9	Internally fixed to 0V.
Xm+10	Internally fixed to 0V.
Xm+11	Internally fixed to 0V.

⚠ **CAUTION**

An output DC voltage of +24V at CB104 (B01), CB105(B01), CB106(B01) and CE107 (B01) is for DI signals. Do not supply 24 VDC to these pins from the outside.

© MyFANUC 195109AB01DC415385669AA015E5BDE5

8.13.5 DO (Output Signal) Connection

○ 64 points maximum

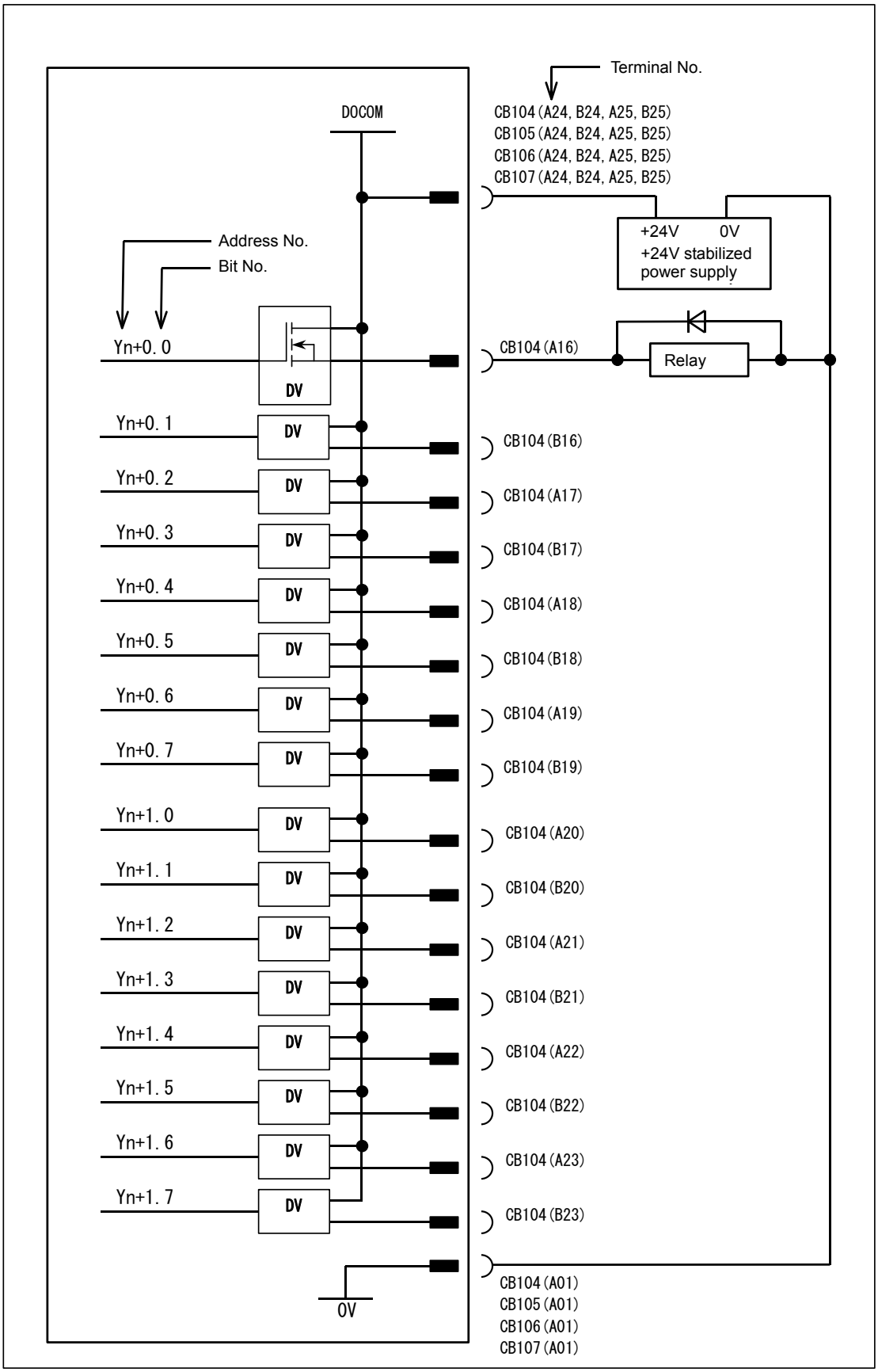

© MyFANUC 195109AB01DC415385669AA015E5BDE5

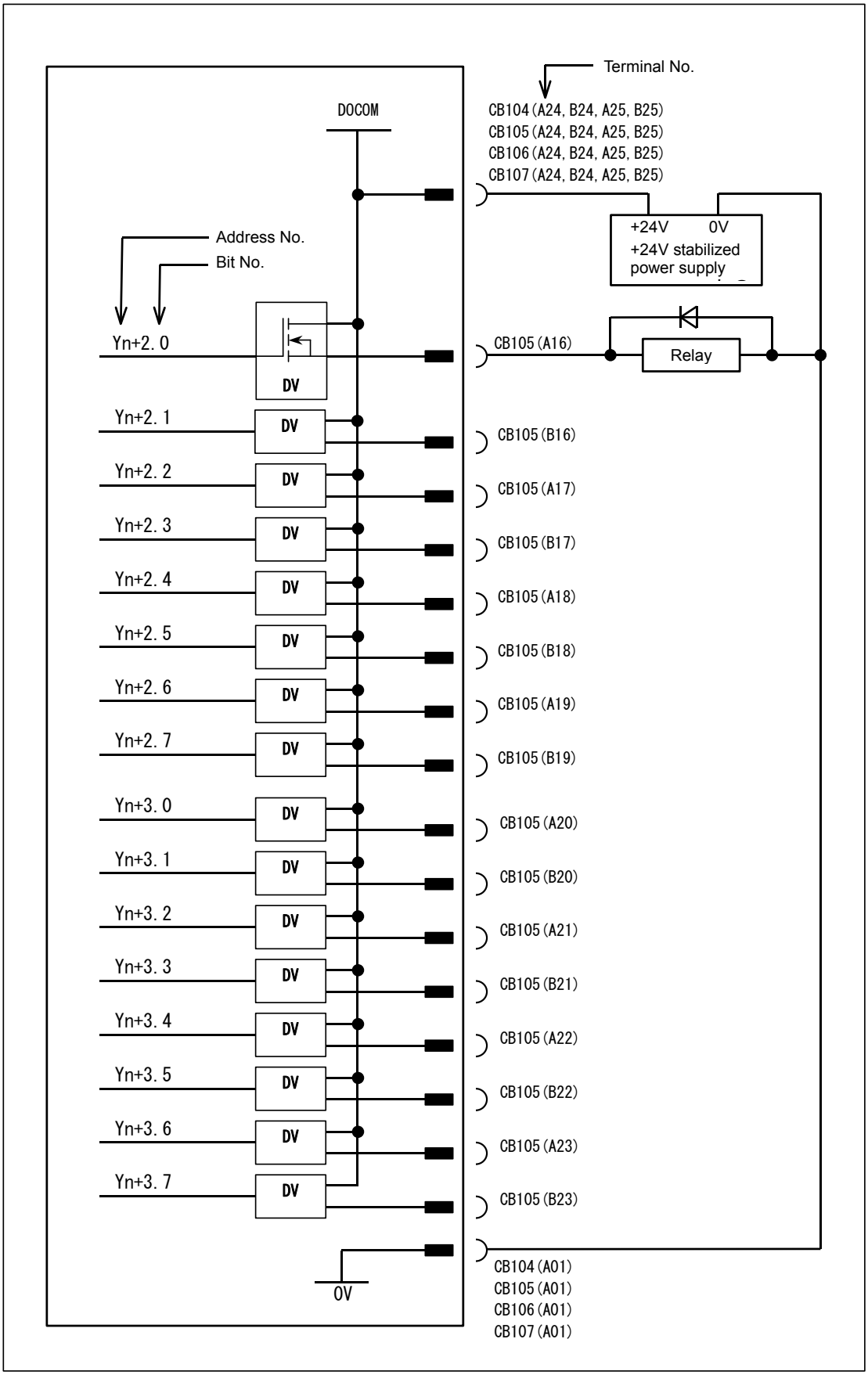

© MyFANUC 195109AB01DC415385669AA015E5BDE5

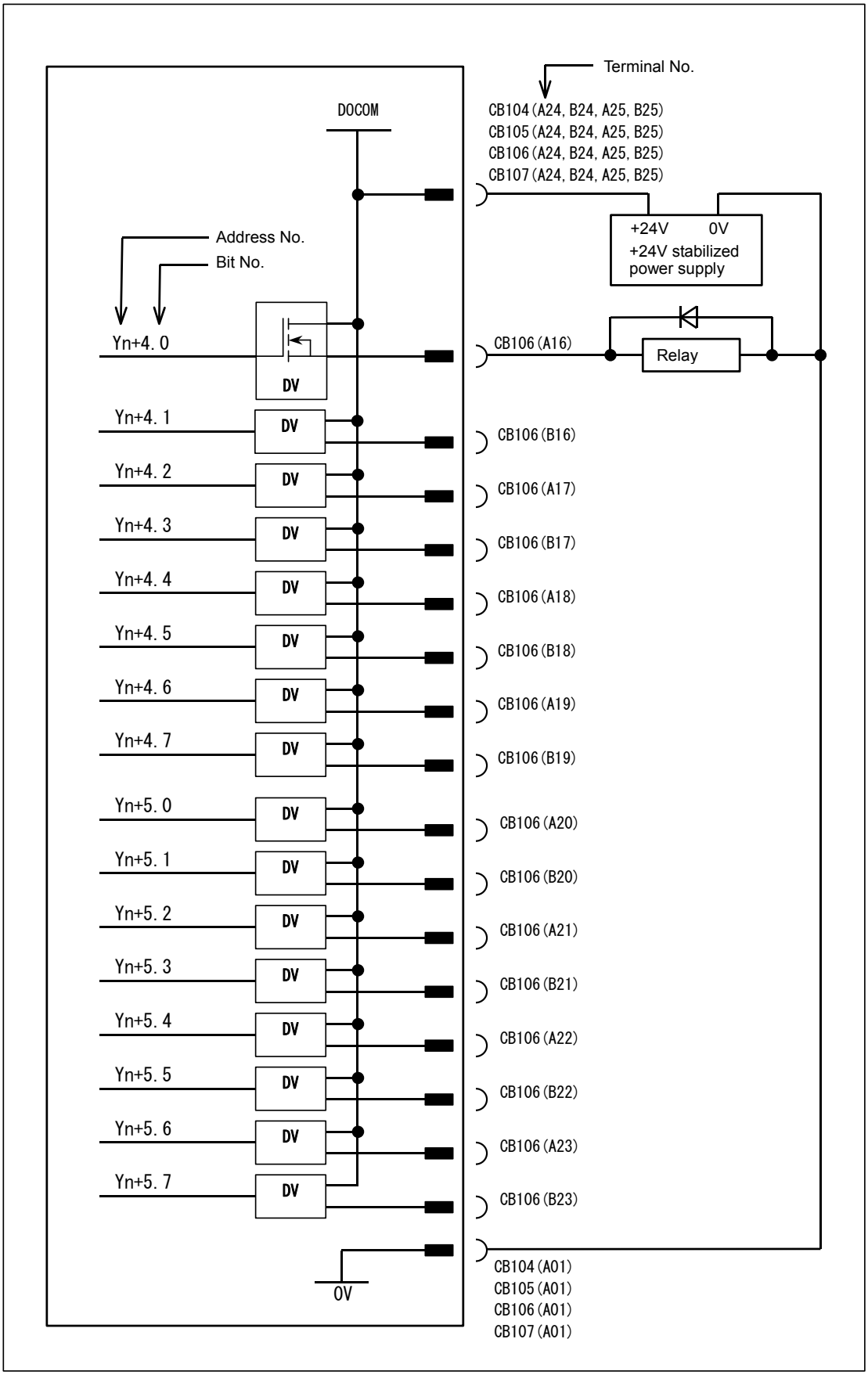

© MyFANUC 195109AB01DC415385669AA015E5BDE5

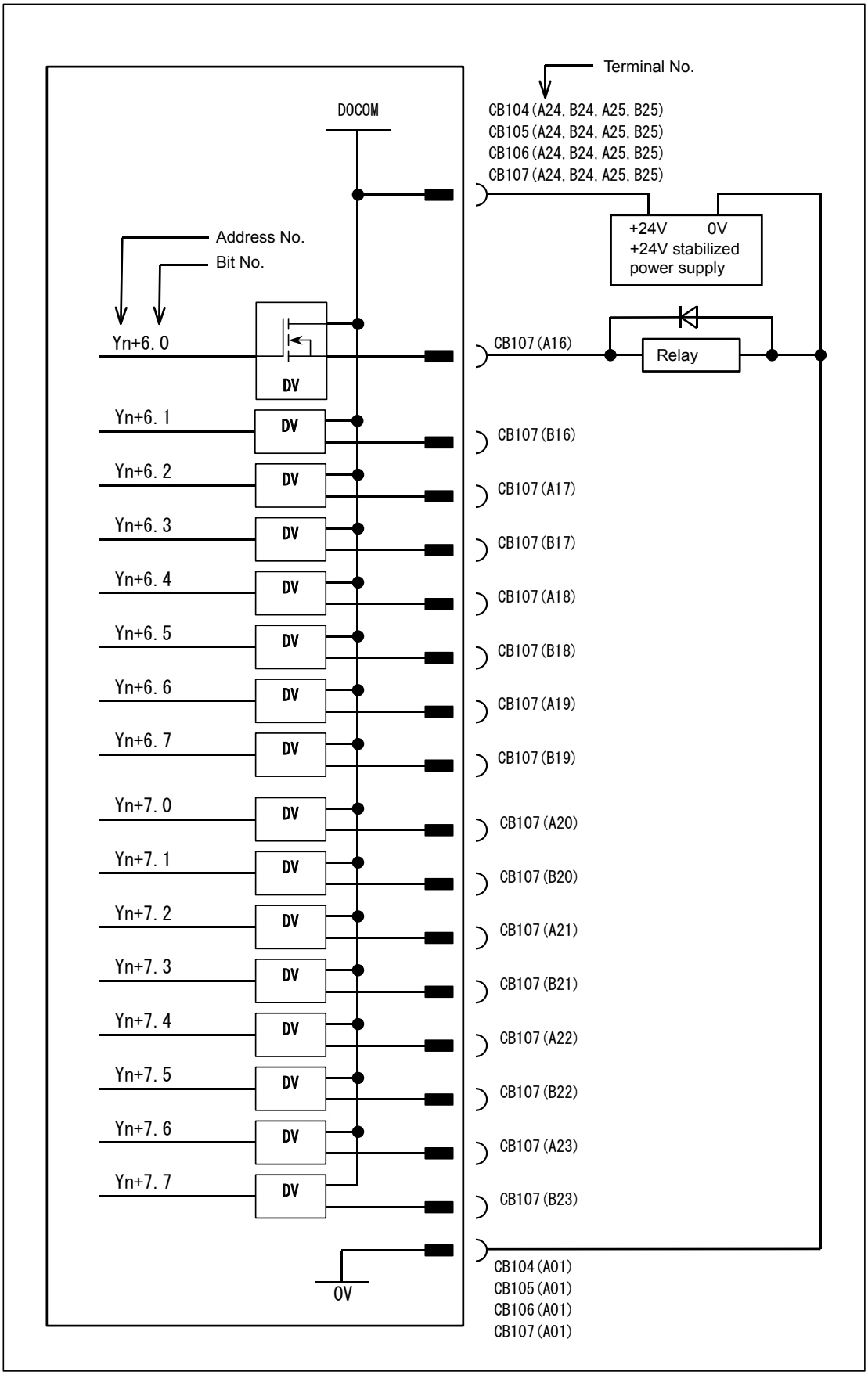

© MyFANUC 195109AB01DC415385669AA015E5BDE5

8.13.6 Manual Pulse Generator Connection

For an I/O unit for power magnetics cabinet, three manual pulse generators can be connected.
For the connection, see Subsection 7.4.1.

8.13.7 External View

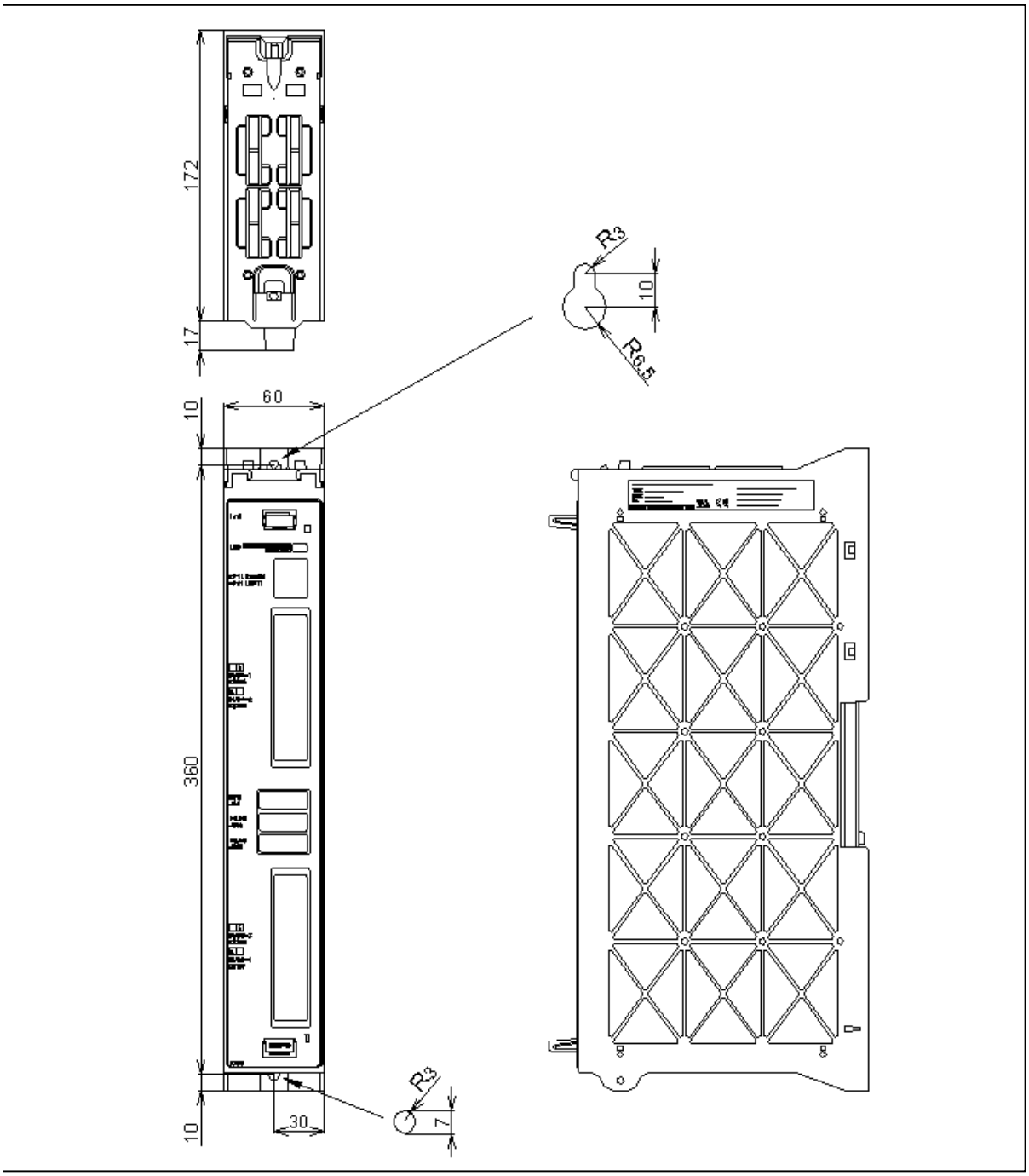

© MyFANUC 195109AB01DC415385669AA015E5BDE5

8.13.8 GND Cable Connection

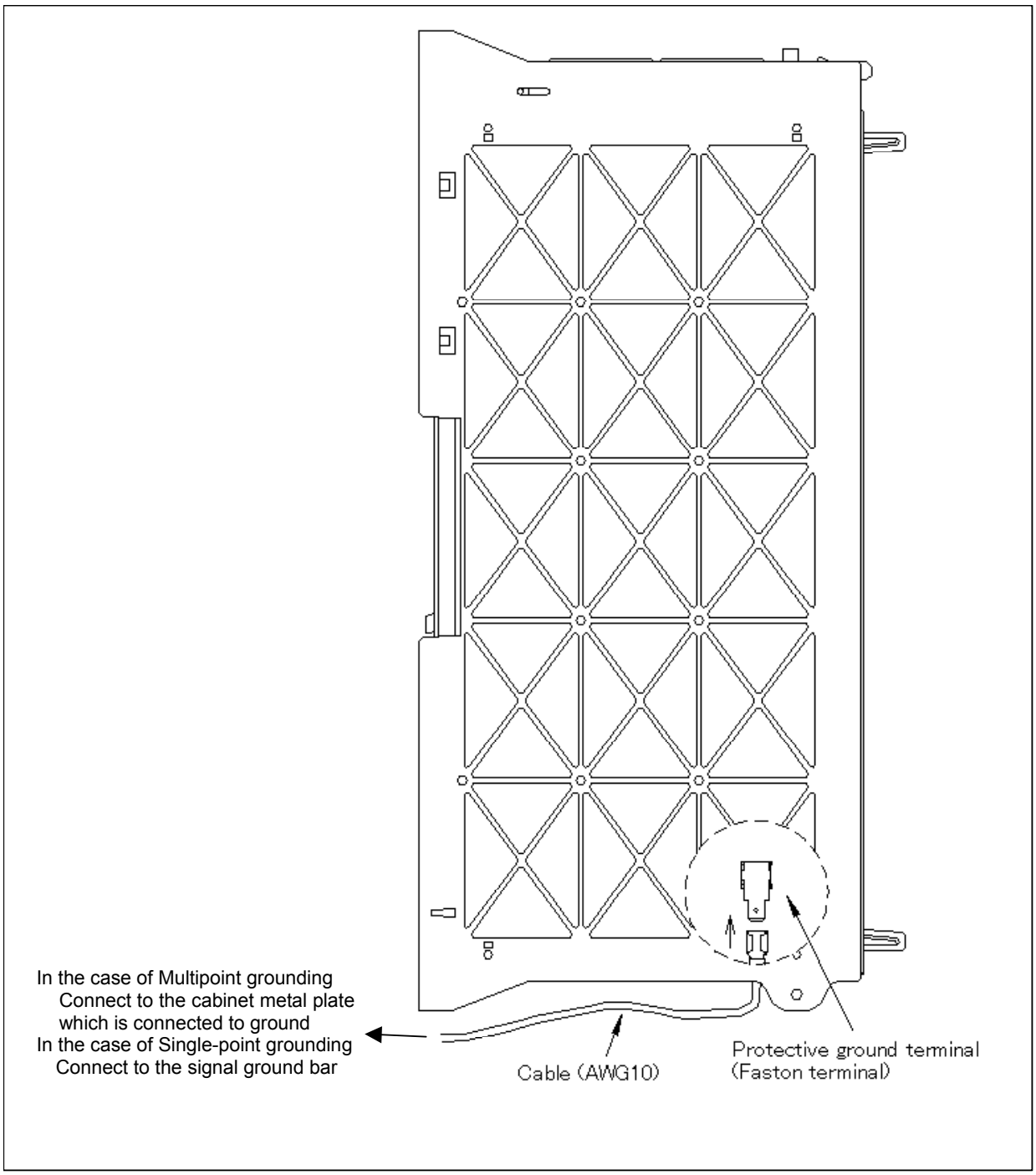

Connect the 0V line of this unit to the cabinet's metal plate which is connected to ground or signal ground bar nearby via the protective ground terminal. Ground cable can be connected to the terminal from the bottlom of the unit case. Refer to Item 3.4.1.1 about Multipoint grounding or Single-point grounding.
Use a faston terminal for series 250 as cable terminal.

© MyFANUC 195109AB01DC415385669AA015E5BDE5

8.13.9 Specifications

Installation specifications

Install the I/O module in a fully enclosed cabinet.
Use the units under the following ambient temperature conditions:

Operation: 0°C to 55°C
Storage and transportation: -20°C to 80°C

For other installation conditions, conform to the CNC installation conditions.

Ordering specifications

Item	Ordering specifications	Remarks
I/O unit for power magnetics cabinet	A02B-0319-C001	
Fuse (spare parts)	A03B-0815-K001	1A

Module specifications

Item	Specification	Remarks
DI points	96 points	24 V input
DO points	64 points	24 V source type output
MPG interface	Up to 3 units	

Power supply rating

Module	Supply voltage	Current rating	Remarks
I/O unit for power magnetics cabinet	24 VDC ±10% supplied from the power supply connector CP1. The allowance of ±10% should include instantaneous voltage and ripple voltage.	0.3A + 7.3mA × DI	DI = number of DI points in the ON state.

NOTE

To connect an optical adapter for the I/O Link *i* to both connectors JD1A and JD1B, the above power supply rating + 70mA is required.
If you use the power supply which is output from CP2, add the amount to the above current rating .

DI (input signal specifications)
(General-purpose input signal)

Rated input	24 VDC, 7.3 mA
Contact rating	30 VDC, 16 mA or more
Leakage current between contacts when opened	1 mA or less (26.4 V)
Voltage decrease between contacts when closed	2 V or less (including a cable voltage decrease)
Delay time	The receiver delay time is 2 ms (maximum). In addition, [I/O Link transfer time between CNC and I/O unit] and [ladder scan period (depending on CNC)] must be considered.

© MyFANUC 195109AB01DC415385669AA015E5BDE5

DO (output signal specifications)

Maximum load current when ON	200 mA or less including momentary current per signal. 11.2 A or less for DO signals in all
Saturation voltage when ON	1 V (maximum) when the load current is 200 mA
Withstand voltage	24 V +20% or less including momentary variations
Leakage current when OFF	20μA or less
Delay time	The driver delay time is 50 μs (maximum). In addition, [I/O Link transfer time between CNC and I/O module] and [ladder scan period (depending on CNC)] must be considered.

NOTE
Be sure to connect all DO power supply pins DOCOM.

8.13.10 Other Notes

Address allocation

For connection to the I/O Link *i*

For the I/O unit for power magnetics cabinet, I/O addresses are mapped as follows.

DI space map

Xm_1	General-purpose input signal	Slot 1
$Xm_1 + 1$		
$Xm_1 + 2$		
$Xm_1 + 3$		
$Xm_1 + 4$		
$Xm_1 + 5$		
$Xm_1 + 6$		
$Xm_1 + 7$		
$Xm_1 + 8$		
$Xm_1 + 9$		
$Xm_1 + 10$		
$Xm_1 + 11$		
Xm_{mpg} (for 1st MPG)	Manual pulse generator	Slot MPG
$Xm_{mpg} + 1$ (for 2nd MPG)		
$Xm_{mpg} + 2$ (for 3rd MPG)		

DO space map

Yn_1	Output signal	Slot 1
$Yn_1 + 1$		
$Yn_1 + 2$		
$Yn_1 + 3$		
$Yn_1 + 4$		
$Yn_1 + 5$		
$Yn_1 + 6$		
$Yn_1 + 7$		

Xm_1, Xm_{mpg}, and Yn_1 indicate the start address at allocation.
Basically, for an I/O unit for power magnetics cabinet, allocate 12-byte DI addresses to slot 1 and 8-byte DO addresses to slot 1.
An I/O unit for power magnetics cabinet has an interface for three manual pulse generators. To use manual pulse generators, allocate addresses to slot MPG. With this setting, addresses can be allocated to the three manual pulse generators at a time (addresses cannot be allocated individually to manual pulse generators). Do not use the addresses with the ladder because the CNC processes the manual pulse generator signals directly.

© MyFANUC 195109AB01DC415385669AA015E5BDE5

For connection to the I/O Link

DI space map

Xm	General-purpose Input signal
Xm + 1	
Xm + 2	
Xm + 3	
Xm + 4	
Xm + 5	
Xm + 6	
Xm + 7	
Xm + 8	
Xm + 9	
Xm + 10	
Xm + 11	
Xm + 12(for 1st MPG)	Manual pulse generator
Xm + 13(for 2nd MPG)	
Xm + 14(for 3rd MPG)	
Xm + 15(DO alarm detection)	DO alarm detection

DO space map

Yn	Output signal
Yn + 1	
Yn + 2	
Yn + 3	
Yn + 4	
Yn + 5	
Yn + 6	
Yn + 7	

Module name : CM080

For connection to the I/O Link, addresses are allocated to general-purpose input signals, manual pulse generators, and DO alarm detection at a time. For this reason, allocate DI addresses in units of 16 bytes.
Do not use the DI space of manual pulse generator with the ladder because the CNC processes the manual pulse generator signals directly.

ON/OFF of the power supply (DO common) for DO signals (output signals)

For ON/OFF of the power supply pin (DOCOM) for the DO signals (output signals), see Subsection 8.2.4.4.

Parallel DO (output signal) connection

For parallel connections of DO signals (output signals), see Subsection 8.2.4.4.

DO (output signal) alarm detection

The DO driver of the I/O unit for power magnetics cabinet is capable of detecting an overcurrent and measuring its own temperature. If an accident, such as the connecting of the cable to ground, causes an abnormal increase in the load current or in the driver temperature, a protection circuit, which is provided for each DO driver, is activated and keeps the DO signal in the OFF state until the cause of the problem is eliminated. Even if this occurs, the CNC and I/O module continue operating without entering the alarm status, but the PMC is notified of the location of the error detected by the DO driver. This information can be checked on the PMC status screen or alarm processing can be performed in advance using a ladder to help error check and recovery.
Information reported to the PMC differs depending on whether the I/O Link i or I/O Link is connected.

For connection to the I/O Link *i*

For connection to the I/O Link i, a DO error such as a ground fault is detected for each point. This DO error is transferred to the PMC system relay area as a status alarm. The following table lists system relay area information and corresponding DO data related to a status alarm. When an alarm data bit is set to “1”, the DO driver corresponding to the bit detects an error. Also see Subsection 7.3.3, “Status Alarm”.

Information output to the system relay area and corresponding location where an error occurred

Slot number	Alarm information number	Address of the DO driver which detects an error
1	0	Yn_1
1	1	Yn_1+1
1	2	Yn_1+2
1	3	Yn_1+3
1	4	Yn_1+4
1	5	Yn_1+5

© MyFANUC 195109AB01DC415385669AA015E5BDE5

Slot number	Alarm information number	Address of the DO driver which detects an error
1	6	Yn_1+6
1	7	Yn_1+7

Description of alarm data

#7	#6	#5	#4	#3	#2	#1	#0
Bit 7 error	Bit 6 error	Bit 5 error	Bit 4 error	Bit 3 error	Bit 2 error	Bit 1 error	Bit 0 error

For connection to the I/O Link

For connection to the I/O Link, a DO error such as a ground fault is detected for each byte. Data at DI address Xm+15 identifies the DO error. The following table lists each bit at DI address Xm+15 and corresponding DO area. When a bit at DI address Xm+15 is set to “1”, the corresponding DO driver detects an error.

Alarm detection address and bit	DO address
Xm+15.0	Yn+0
Xm+15.1	Yn+1
Xm+15.2	Yn+2
Xm+15.3	Yn+3
Xm+15.4	Yn+4
Xm+15.5	Yn+5
Xm+15.6	Yn+6
Xm+15.7	Yn+7

DO Signals and Drivers

The driver of DO signals is source type (a type that supplies energy, non-insulating).
There is a possibility that the I/O unit will not operate normally due to a failure of CNC or I/O Link slave module, or abnormally power supply voltage. To prevent accidents even in this case, design the machine to operate safely by making a safety circuit outside the I/O unit.
The circuit of this I/O unit is designed so that all DO signals are turned off if a system alarm is occurred in the CNC which controls the I/O unit, or if a power of the CNC or the I/O unit is turned off. However, it cannot be guaranteed that DO signals of the I/O unit will certainly be turned off. Therefore, manage signals related to safety by making a safety circuit outside this I/O unit.

© MyFANUC 195109AB01DC415385669AA015E5BDE5

9 STOP AND EMERGENCY STOP

9.1 STOP MODES

If the control unit enters the alarm state, the servo motors stop (Note).

NOTE
A servo motor attached to a vertical axis may not stop.

There are the following stop modes:
1. Stop by shutting off the motor power
2. Controlled stop without shutting off the motor power
3. Stop by shutting off the motor power after a controlled stop

A controlled stop is the quickest. However, a stop may be made by immediately shutting off the motor power for safety reasons.

⚠ WARNING
Pressing the RESET key stops the running program. As a result, the servo axis stops. The RESET key may not function due to an MDI failure or the like, so, for safety, use the emergency stop button instead of the RESET key to stop the motor safely. When a failure of the control unit, machine contact, or connection is also assumed, further safety actions must be taken.

9.2 SHUTTING OFF THE MOTOR POWER

The motor power may be shut off through an IGBT (transistor) or an electromechanical scheme that controls mechanical contacts. When an amplifier is used, the motor power is shut off by an IGBT (transistor) based on the control unit alarm state (or Ladder program). To shut off the motor power through an electromechanical scheme, a line contactor must be installed on the power input line in the Power Supply, thereby providing a direct contactor shut-off route. (See Fig. 9.4 (a) in Section 9.4, "EMERGENCY STOP SIGNAL.")
The Power Supply provides MCC control signals (MCCOFF3 and MCCOFF4) for controlling the contactor. However, these signals are enabled only when the motor power to all servo amplifiers connected to the Common Power Supply is shut off through the IGBT.
Example 1)
When the *ESP signal is input to the Power Supply
The motor power to the servo amplifier is shut off by the IGBT, after which MCC control signals are output.

Example 2)
When a servo alarm occurs
The motor power to the servo amplifier is shut off by the IGBT.
A failure in the amplifier may disable MCC control signals. To ensure motor power shut-off, therefore, a circuit must be designed in a redundancy configuration having a route that is independent of the shut-off function of the amplifier.

© MyFANUC 195109AB01DC415385669AA015E5BDE5

9.3 STOPPING THE SERVO MOTOR

Shutting off the motor power brings the servo motor to a dynamic brake stop. A dynamic brake stop is braking performed by separating the synchronous rotator from the driving power, and consuming generated electric energies with the coil as well as the built-in resistor of the servo amplifier. With this function, shutting off the motor power does not allow the servo motor to coast like the spindle motor.
Servo motor stop mode depends on the type of a control unit alarm.
Example)

1. PS alarm caused by an NC program error or the like
   The motor power is not shut off.
2. Control unit fan stop
   A single-block stop is made. The motor power is not shut off.
3. Emergency stop state
   A dynamic stop is made as a rule. By setting relevant parameters, however, it is also possible to decelerate the servo motor to a stop, and then to shut off the servo motor power.
4. System alarm
   A dynamic brake stop is made.

If the servo motor cannot be controlled, a dynamic brake stop is unconditionally made.

9.4 EMERGENCY STOP SIGNAL

> ⚠ **WARNING**
> The safety machine should be designed based on the evaluation results of machine risk assessment. Use the emergency stop signal properly in order to design the safety machine.

To configure an emergency stop circuit in compliance with the safety standards of IEC60204-1 in which requirements for electrical components of machine are specified, observe the following cautions. IEC60204-1 specifies that an emergency stop circuit shall function as a category 0 or 1 stop.

Category 0 stop:
Stopping by immediate removal of power to the machine actuators(Uncontrolled stop)

Category 1 stop:
A controlled stop with power to the machine actuators available to achieve the stop and then removal of power when the stop is achieved
(Controlled stop)

Fig. 9.4 (a) or Fig. 9.4 (b) shows an example showing how to make connections for the emergency stop signal with this CNC controller and servo amplifier(α*i* series or β*i* series) to comply with the EU Machine Instructions. Fig. 9.4 (c) shows a flow diagram of the emergency stop circuit signals.

The emergency stop signal is input to the Safety relay module. The output signal from the relay is input to the CNC controller and Power Supply(PS). The Power Supply outputs control signal for a motor power magnetic contactor, which can be used to switch the power applied to the Power Supply on and off. An emergency stop signal is usually generated by closing the B contact of a pushbutton switch.

When the emergency stop signal (*ESP) contact is closed, the CNC controller enters the emergency stop released state, such that the servo motors can be controlled and operated.

© MyFANUC 195109AB01DC415385669AA015E5BDE5

When the emergency stop signal (*ESP) contact opens, the CNC controller enters the emergency stop state, and the servo motors stop. In case of Fig. 9.4 (a) or 9.4 (b), the servo motor is forced to be a dynamic stop as a rule (Category 0 stop). By setting relevant parameter, however, it is also possible to decelerate the servo motor to a stop, and then to shut off the servo motor power (Category 1 stop).

Regarding how the Servo motor stops when the emergency stop button is pushed, refer to the Item 9.3. Regarding specifications of parameters related in these matters, refer to the FANUC AC SERVO parameters manual(B-65270JA).

The example of the emergency stop signal circuit showed in Fig. 9.4 (a) or Fig. 9.4 (b) complies with the requirements of the safety standard ISO13849-1, Performance Level(PL) c or d. However, when calculating PL value concretely, the calculation should be based on the safety standard ISO13849-1 with the reliability data provided by each parts supplier. In case for the reliability data of CNC, please contact FANUC sales office.

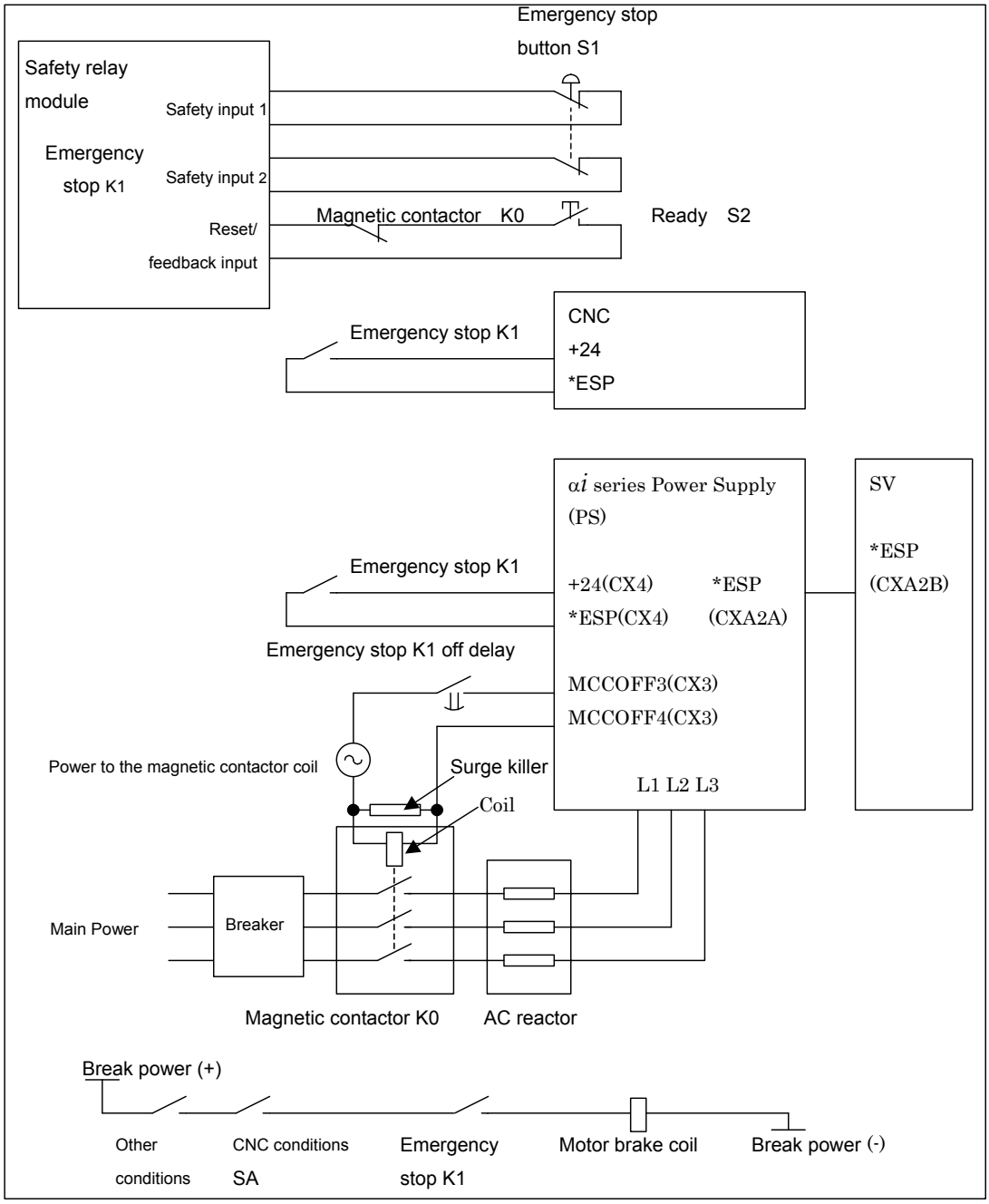

Fig. 9.4 (a) Example of connections with an αi series servo amplifier

© MyFANUC 195109AB01DC415385669AA015E5BDE5

NOTE

1 When Emergency stop button S1 is pushed, Emergency stop K1 opens and Magnetic contactor K0 shuts off the power for Power Supply.

2 Set the off delay timer for shutting the power to the magnetic contactor coil in the above example as follows:
- Set a value which allows the feed axis stop time also when the feed axis quick stop function and vertical axis fall prevention function are used.

3 Connect the auxiliary contact of Magnetic contactor K0 to feedback input of Safety relay in order to detect the failure of Magnetic contactor K0.

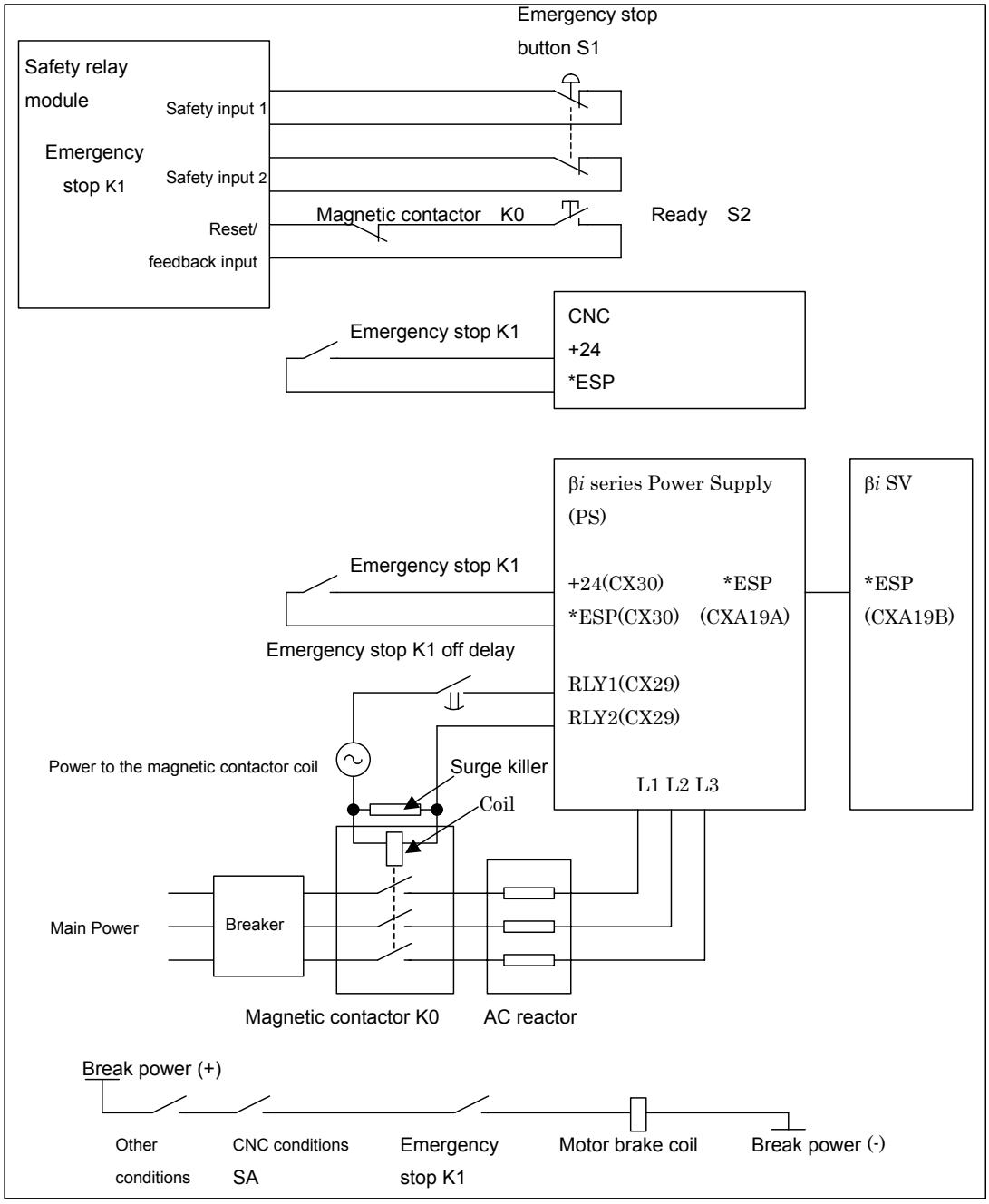

Fig. 9.4 (b) Example of connections with an βi series servo amplifier

© MyFANUC 195109AB01DC415385669AA015E5BDE5

NOTE

1 When Emergency stop button S1 is pushed, Emergency stop K1 opens and Magnetic contactor K0 shuts off the power for Power Supply.

2 Set the off delay timer for shutting the power to the magnetic contactor coil in the above example as follows:
- Set a value which allows the feed axis stop time also when the feed axis quick stop function and vertical axis fall prevention function are used.

3 Connect the auxiliary contact of Magnetic contactor K0 to feedback input of Safety relay in order to detect the failure of Magnetic contactor K0.

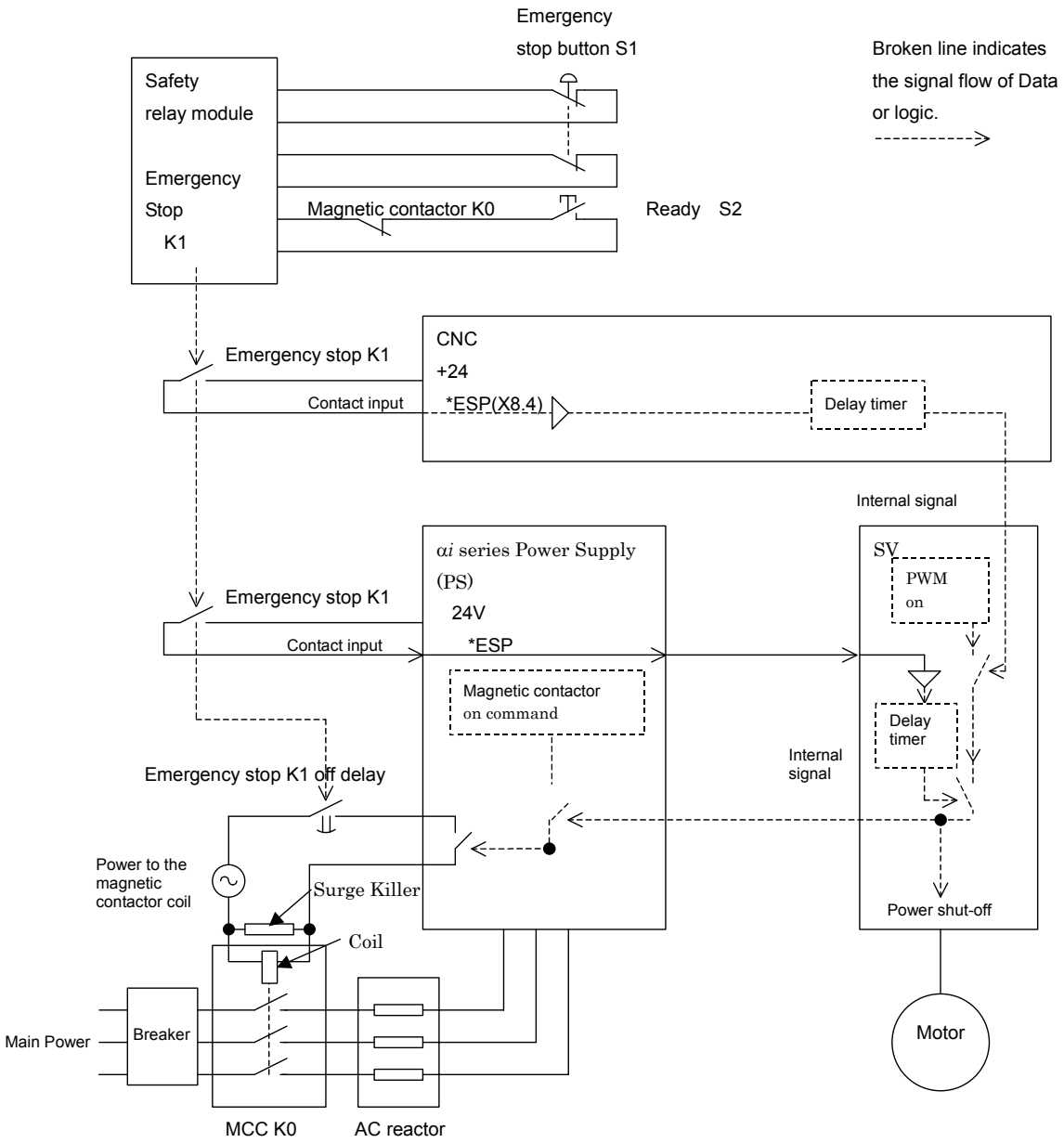

Fig. 9.4 (c) Flow diagram of emergency stop circuit signals

© MyFANUC 195109AB01DC415385669AA015E5BDE5

⚠ **CAUTION**

1 This CNC controller can detect overtravel by using a software limit function. If the software limit function does not operate effectively due to a failure, resulting in a possible serious accident or loss, install a safety circuit, for example, a stroke end limit switch arranged in series with the emergency stop button.

2 To use a spindle motor and amplifier produced by a manufacturer other than FANUC, refer to the corresponding documentation as well as this manual. Design the emergency stop sequence such that, if the emergency stop signal contact opens while the spindle motor is rotating, the spindle motor is decelerated until it stops.

© MyFANUC 195109AB01DC415385669AA015E5BDE5

9.5 CAUTIONS ABOUT MULTI-PATH CONTROL

For multi-path control, multiple paths (up to 4 paths) belong to a machine group, and multiple machine groups (up to two groups) constitute a system.

Example) Multi-path control configuration

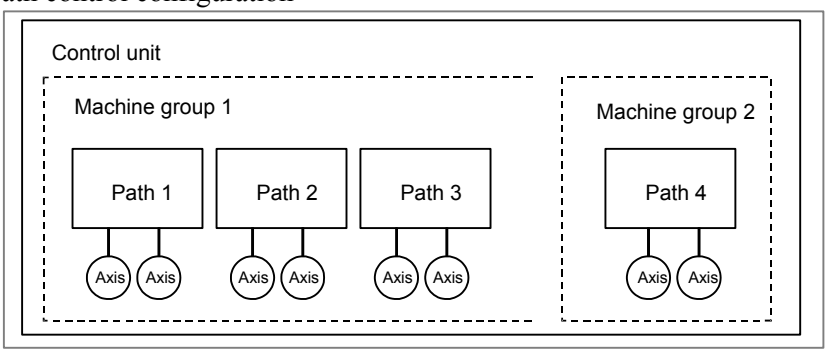

Fig. 9.5 (a)

To prevent an emergency stop in one machine group from affecting another within a multi-path control system, a separate emergency stop circuit (see Fig. 9.5 (b)) must be provided for each machine group.

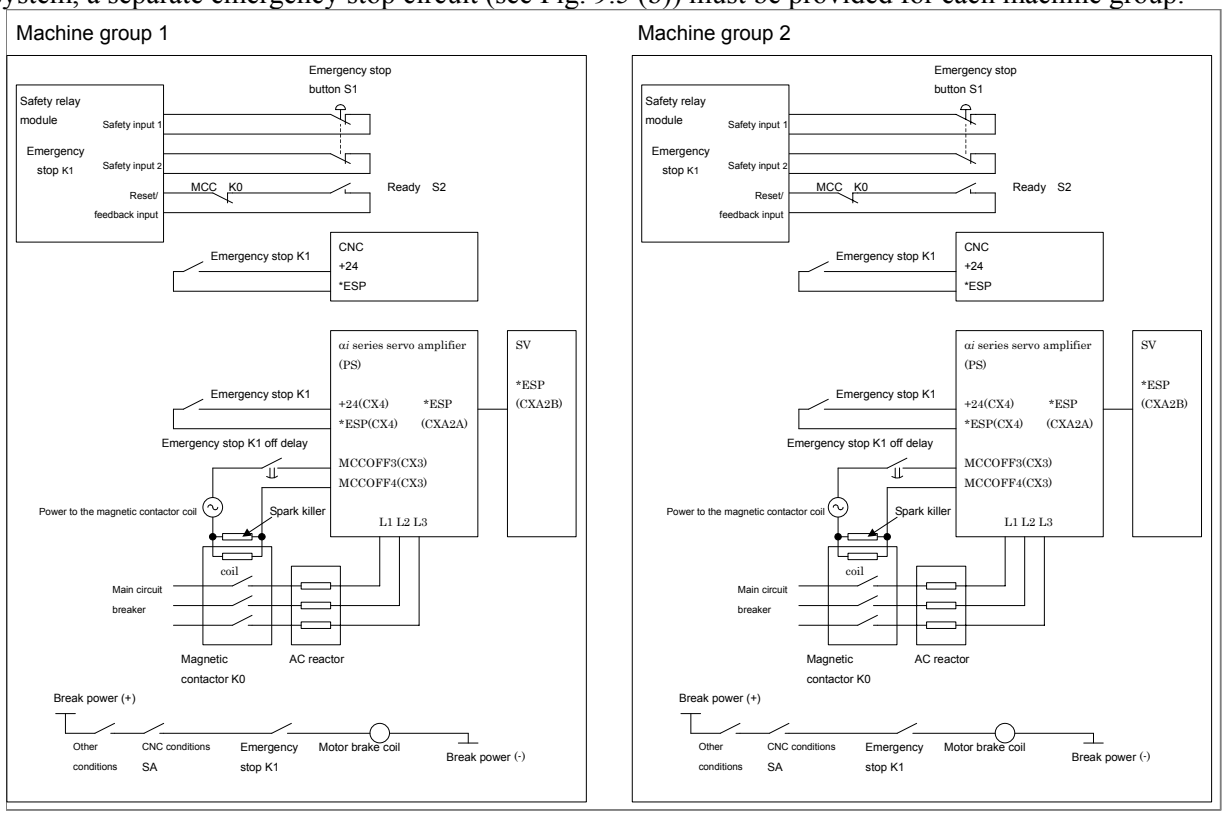

Fig. 9.5 (b)

© MyFANUC 195109AB01DC415385669AA015E5BDE5

10 CONNECTION TO OTHER NETWORKS

The 30*i* series can be connected to the following networks. For an explanation of how to make the connection, refer to the manuals listed below:

Manual title	Manual code
FANUC Fast Ethernet / Fast Data Server OPERATOR'S MANUAL	B-64014EN
FANUC PROFIBUS-DP Board CONNECTION MANUAL	B-63993EN
FANUC DeviceNet Board CONNECTION MANUAL	B-64043EN
FANUC FL-net Board CONNECTION MANUAL	B-64163EN
FANUC CC-Link Board CONNECTION MANUAL	B-64463EN

NOTE

For connection when a Multi-function Ethernet connector (for Multi-function Ethernet) provided on the LCD-mounted type control unit is used, refer to the FANUC FL-net Board Connection Manual (B-64163EN) or FANUC Fast Ethernet/Fast Data Server Operator's Manual (B-64014EN) in addition to Section 5.5 in this manual.

© MyFANUC 195109AB01DC415385669AA015E5BDE5

11 CONNECTION WITH FANUC PANEL *i* AND COMMERCIAL PERSONAL COMPUTERS

11.1 OVERVIEW

This chapter describes how to connect the control unit to the FANUC PANEL *i* or a commercial personal computer, using the high-speed serial bus (HSSB) or Ethernet.

11.2 CAUTIONS

The FANUC PANEL *i* or a Windows-compatible personal computer commercially available is to be connected. The user (machine tool builder or end user) is required to procure and maintain a commercial personal computer if the user is to use it. FANUC owns the copyright for the driver used to connect a personal computer. The software mentioned above and the contents of the related manuals may not be used or reproduced in part or whole without the prior written permission of FANUC.

NOTE
1 IBM is a registered trademark of IBM Corp. of the US.
2 Windows is registered trademarks of Microsoft Corp. of the US.
3 The company and product names mentioned in this manual are trademarks or registered trademarks of the respective companies.

11.3 CONNECTION USING THE HIGH-SPEED SERIAL BUS (HSSB)

11.3.1 Overview

The high-speed serial bus (HSSB) enables the high-speed transfer of large amounts of data between a commercial personal computer and the control unit, by connecting them via a high-speed optical fiber. For an LCD-mounted type control unit, an HSSB interface board is inserted in an optional slot. For a stand-alone type control unit, the HSSB interface is provided as standard. It also allows an HSSB interface board to be inserted in an optional slot. On the personal computer, an appropriate interface board is installed. You can use the FANUC PANEL ***i*** instead of a commercial PC. The FANUC PANEL ***i*** comes standard with the HSSB interface.

© MyFANUC 195109AB01DC415385669AA015E5BDE5

11.3.2 Connection Diagram

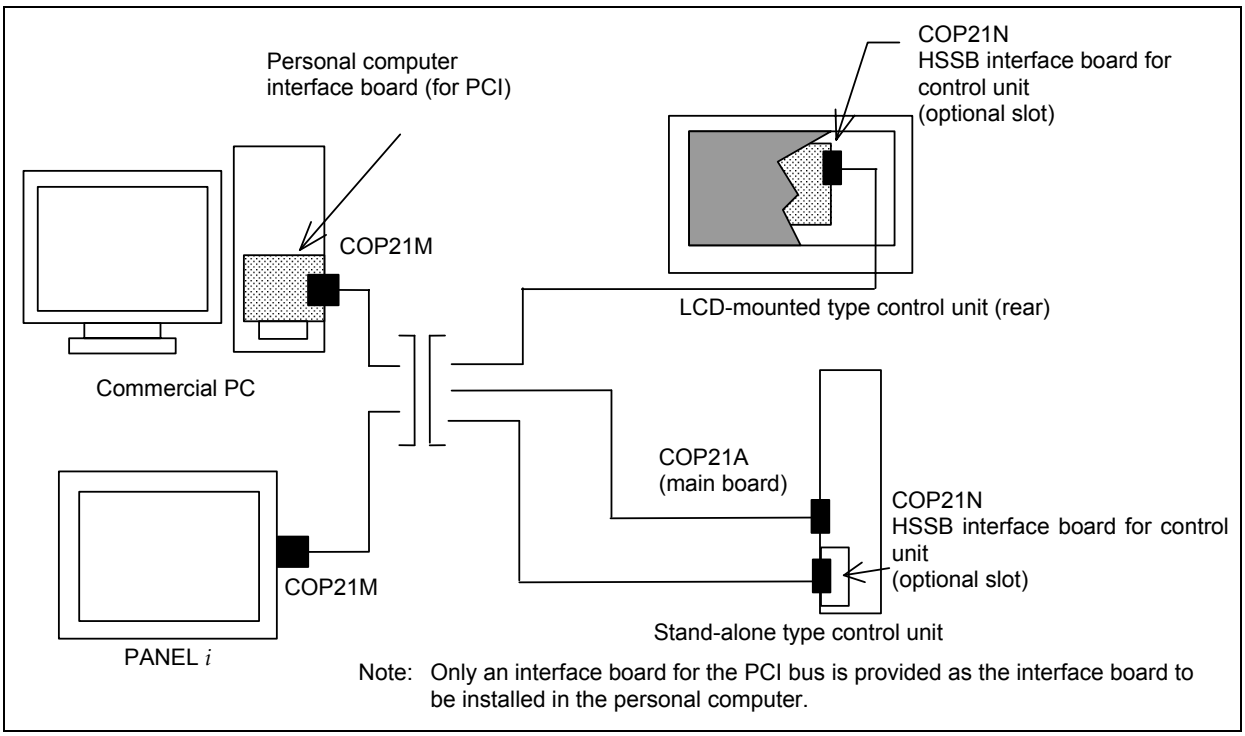

11.3.3 Specifications of a Commercial PC

NOTE

1 The machine tool builder or end user is required to procure and maintain the personal computer.
2 FANUC is not liable for any problems resulting from the operation of users' personal computers, regardless of whether the operations are normal or abnormal.
3 Perform a connection test between the PC and control unit before using the PC sufficiently.

(1) The PC must have a PCI slot (5 V) to install an interface board.
(2) An HSSB driver must be installed on the PC. The HSSB driver is stored on the FOCAS1/2 library disk (ordering information: A02B-0207-K737).
(3) Following shows the required power of the interface board for PCI type.

Drawing No.	Specification	Power supply requirements
A20B-8101-0162	2ch specification	+5V 1.5A
A20B-8101-0163	1ch specification	+5V 1A

© MyFANUC 195109AB01DC415385669AA015E5BDE5

11.3.4 Installation Environment

(1) HSSB Interface Board For Personal Computer

Ambient temperature	Operating	0 to 55°C
	Non-operating	-20 to 60°C
Humidity	Usual	10 to 75% (non-condensing)
	Short-term (within one month)	10 to 95% (non-condensing)

If the environmental requirement of the using personal computer is different from the above, please keep the environmental requirement to be satisfied by the both equipments.

(2) HSSB Interface Board For control unit
Strictly keep environmental requirement about each control unit in which the interface boards are installed.

11.3.5 Handling Precautions

(1) Personal computer interface board
(a) Electrostatic interference
The personal computer interface board is shipped in an anti-static bag. To store or transport the interface board, always place it in the anti-static bag. Before removing the interface board from the anti-static bag, ground your body.
(b) Protection of card edge terminals
When handling the personal computer interface board, do NOT touch its card edge terminals (the gold-plated contacts which engage with a mating connector). If you accidentally touch any card edge terminal, wipe it gently with clean or ethyl alcohol-dipped tissue paper or absorbent cotton. Do not use any organic solvent other than ethyl alcohol.
(2) Optical connector and fiber cable
See Appendix D.

11.3.6 Procedure for Installing Personal Computer Interface Boards

⚠ WARNING
Before starting to mount or remove a personal computer interface board, switch off the personal computer and its peripheral devices, and disconnect their power supply cables. Otherwise, there is a serious danger of electric shock.

(1) Remove the covering plate of extension slot on the personal computer.
(2) Insert the interface board for the personal computer to the PCI connector tightly.
(3) Screw the plate of interface board to the computer.
(4) Confirm connection (in only case of HSSB multi-connection)
Confirm following items for installing drivers of HSSB interface board in case of HSSB multi-connection.
- PCI slot number which HSSB board is mounted (slot number is marked to PCB normally).
- Correspondence between HSSB channel and CNC
(5) Restore the covering plate.

NOTE
Do not touch the leads running to the card edge of the interface board (that match with connectors).

© MyFANUC 195109AB01DC415385669AA015E5BDE5

11.3.7 Cable Connection

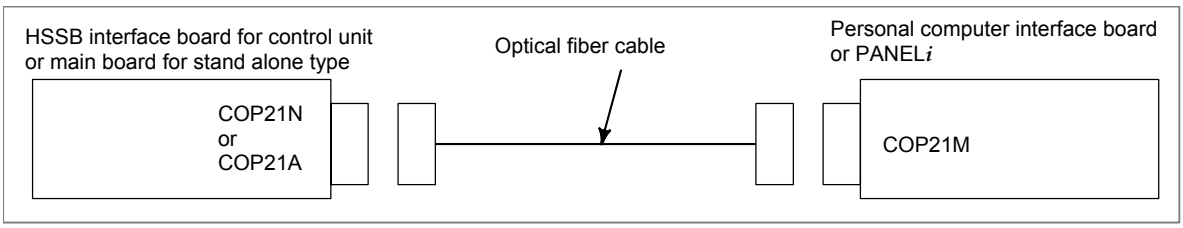

(1) Optical fiber cable for HSSB
Cable for inside wire
A66L-6001-0023#L~ (maximum cable length: 10m)
Cable for outside wire
A66L-6001-0026#L~ (maximum cable length: 50m)
Low-loss cable for outside wire (for relay only)
A66L-6001-0029#L~ (maximum total length of two cables: 35 m)
High-speed low-loss cable for outside wire
A66L-6001-0049#L~ (maximum cable length: 100m, maximum total length of two cables for relay: 55m)

(2) Low-loss optical junction adapter
A63L-0020-0004

NOTE
1 For explanations about how to specify the length of the underscored portion and the related cautions, see Appendix D.
2 The machine tool builder cannot cut or connect any optical fiber cable. Be sure to use the cables above.

© MyFANUC 195109AB01DC415385669AA015E5BDE5

11.4 CONNECTION USING ETHERNET

11.4.1 Overview

You can connect the control unit with a commercial PC to use the PC as the display unit of the control unit and transfer data between the control unit and PC, using Ethernet. You can also use the Ethernet display function to perform maintenance and IPL operation for the control unit from the PC at power-on. You can use the FANUC PANEL *i* instead of a commercial PC.

11.4.2 Connection Diagram

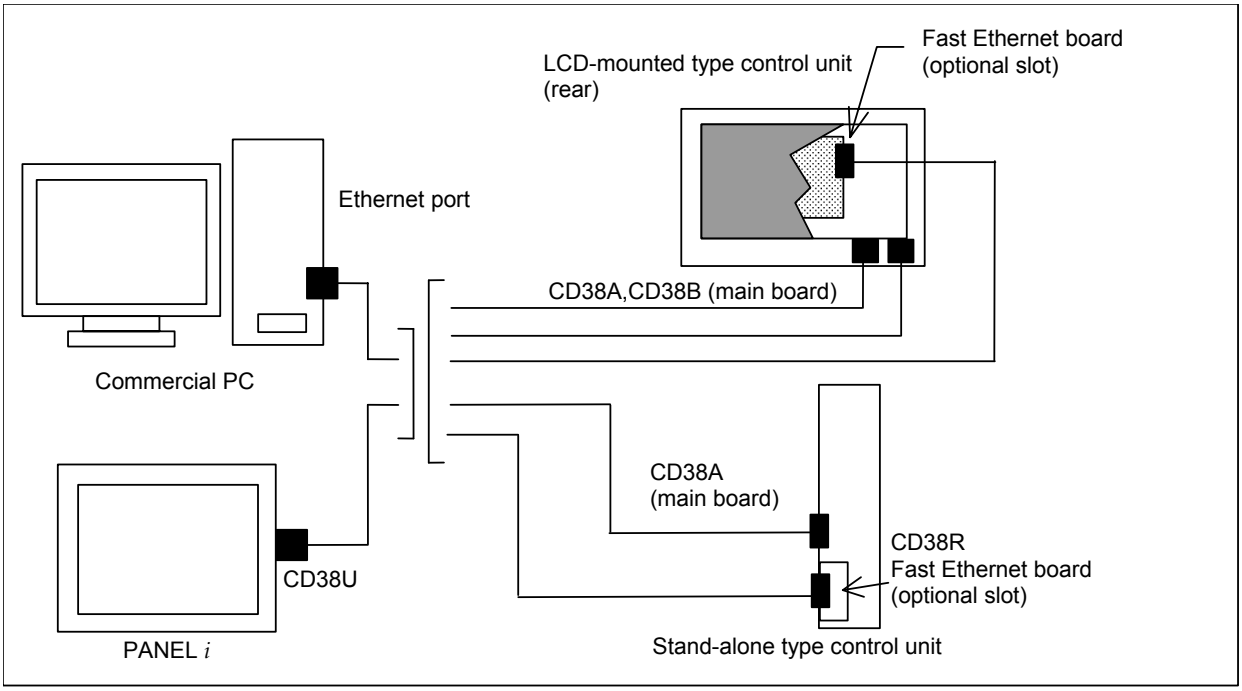

NOTE

1 For connection to the Ethernet interface, see Section 5.5.

2 For connection using the Fast Ethernet board, refer to the FANUC Fast Ethernet/Fast Data Server Operator's Manual (B-64014EN). When a PC is connected using Fast Ethernet, the Ethernet display function cannot be used to perform maintenance and IPL operation for the control unit from the PC at power-on.

3 For the Ethernet display function, refer to Appendixes B and C in the FANUC PANEL *i* Connection and Maintenance Manual (B-64223EN). The Ethernet display function is available when a PC is connected using Embedded Ethernet on a stand-alone type control unit. The function cannot be used on any LCD-mounted type control unit or with Fast Ethernet.

© MyFANUC 195109AB01DC415385669AA015E5BDE5

12 PANEL *i*

The PANEL *i* is on an IBM PC compatible panel computer. Connecting the PANEL *i* to the control unit via an optical fiber (high-speed serial bus) or Ethernet can provide a system with PC functions.

For details of the PANEL *i* (including installation environment conditions and connection), refer to the FANUC PANEL *i* Connection and Maintenance Manual (B-64223EN). For connection with the control unit, see Chapter 11.

© MyFANUC 195109AB01DC415385669AA015E5BDE5

13 CONNECTION TO OTHER PERIPHERALS

13.1 Connection to 2nd LCD Unit (Ethernet)

13.1.1 Overview

The connection with control unit and 2nd LCD Unit (Ethernet).

13.1.2 Connection Diagram

Case of LCD mounted type control unit

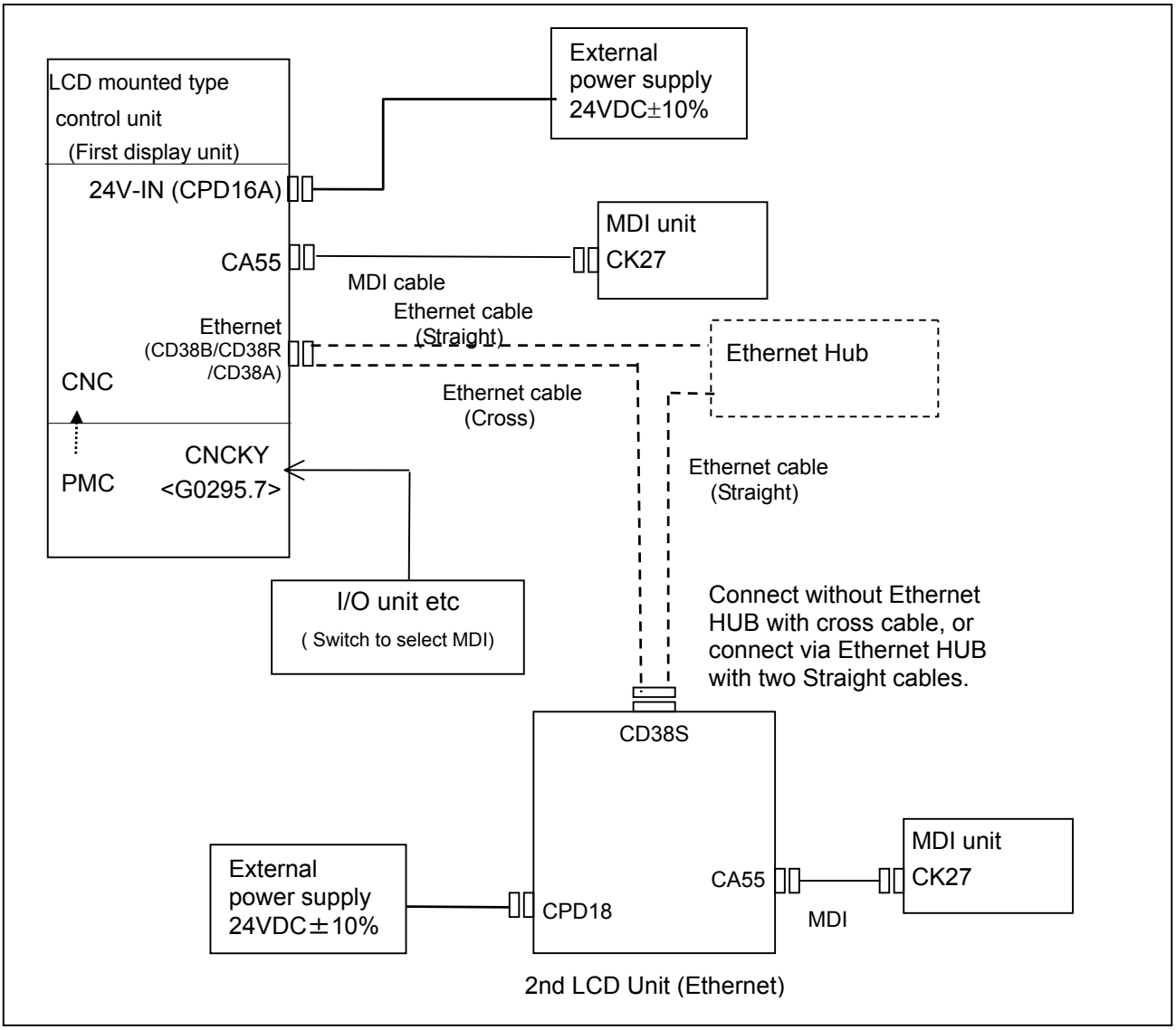

© MyFANUC 195109AB01DC415385669AA015E5BDE5

Case of stand alone type control unit

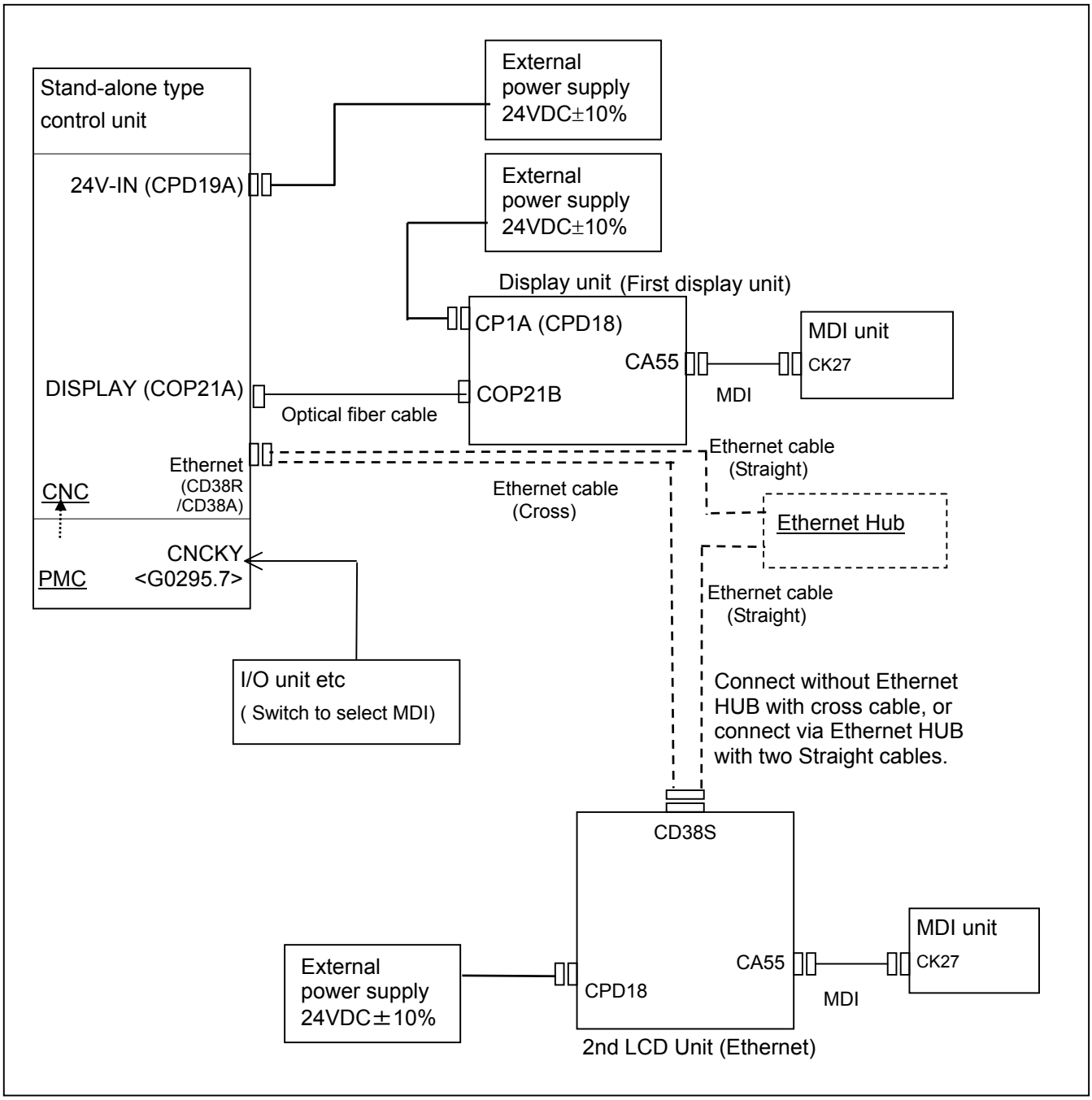

© MyFANUC 195109AB01DC415385669AA015E5BDE5

13.1.3 Connector Name and Layout

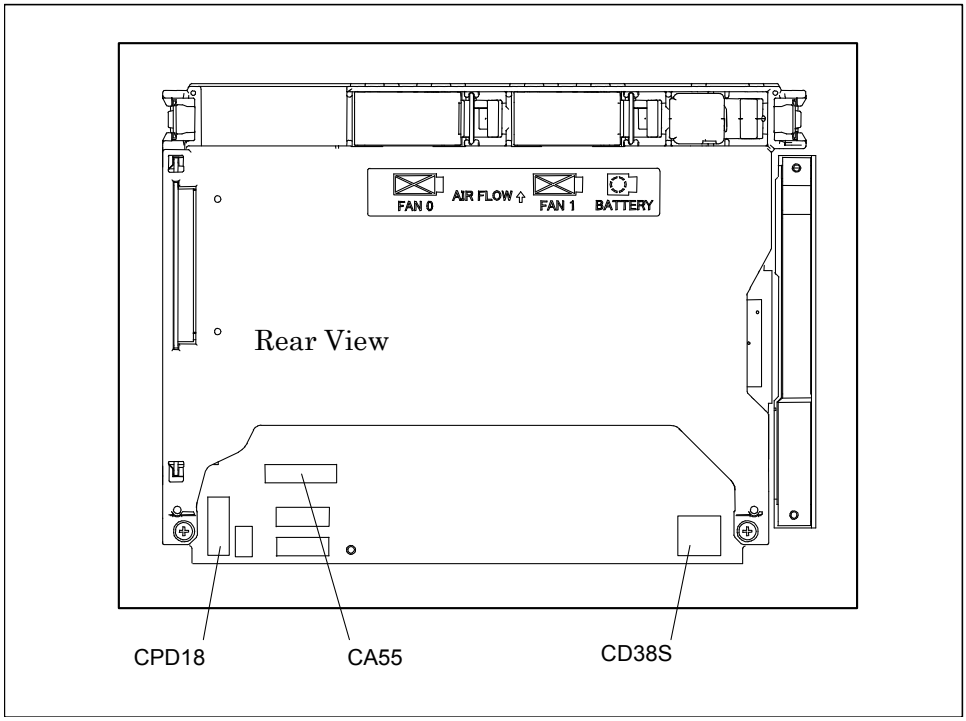

No.	Connector Name	Function	Note
1	CPD18	DC24V IN	14.1.3.1
2	CA55	MDI	14.1.3.2
3	CD38S	Ethernet	14.1.3.3

Other connectors are reserved.

13.1.3.1 Connection with the 24V power input

Supply the power to the display unit from an external 24 VDC power supply.

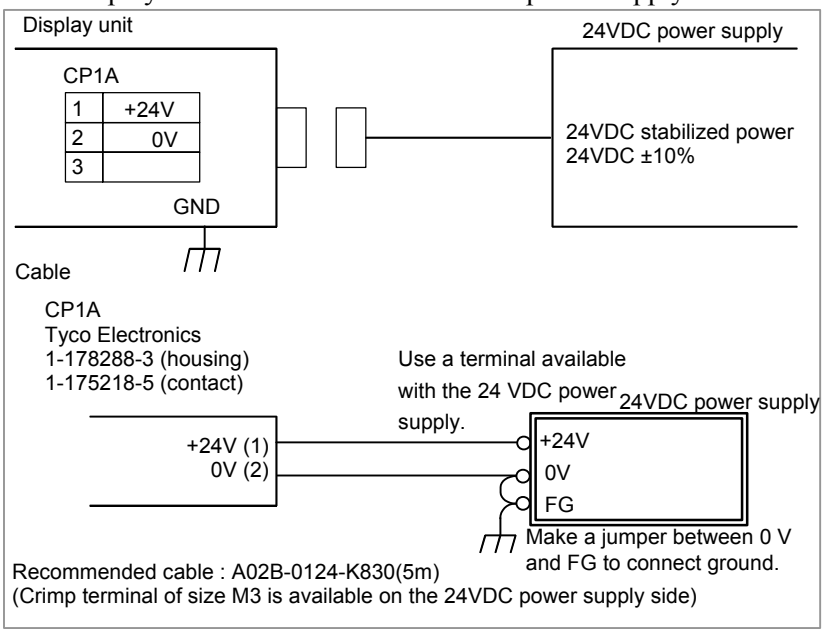

© MyFANUC 195109AB01DC415385669AA015E5BDE5

13.1.3.2 Connection with the MDI unit

For the connection between the connector (CA55) on the display unit and that (CK27) on the MDI unit, see Section 5.1, “Connection between the LCD-mounted Type Control Unit and MDI Unit”.

13.1.3.3 Connection to the Ethernet

(a) Connection without Ethernet HUB (Cross cable)
The connectors of a cable for connecting between the Ethernet interface (CD38S) and CNC without Ethernet HUB have the pin arrangement shown below.

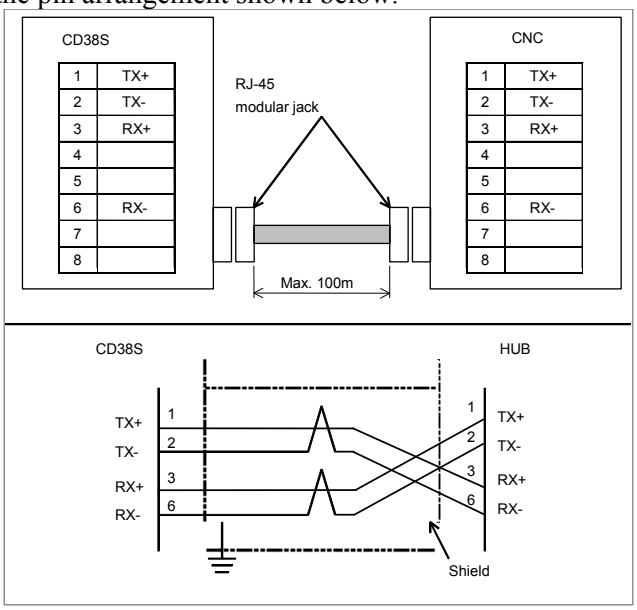

(b) Connection via Ethernet HUB (Straight cable)
The connectors of a cable for connecting between the Ethernet interface (CD38S) and the Ethernet HUB have the pin arrangement shown below.

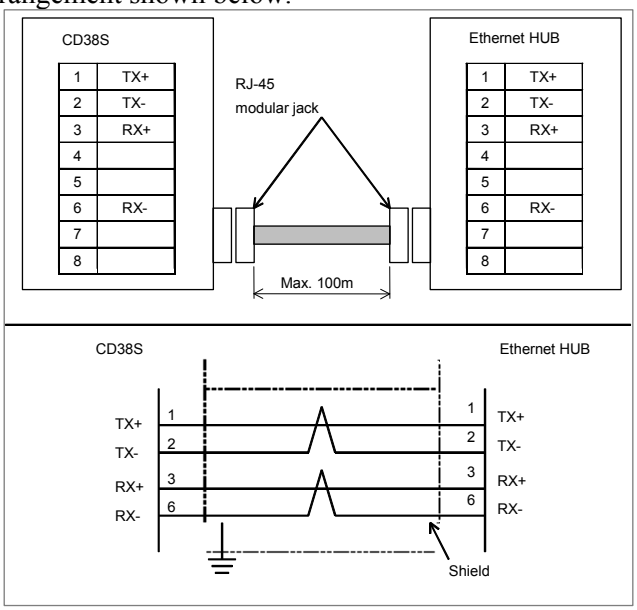

© MyFANUC 195109AB01DC415385669AA015E5BDE5

NOTE
At both case, the cable can be up to 100 m long (for the FANUC- recommended cable for movable sections, up to 50 m). Do not make the cable longer than necessary.

Refer to “5.5 LINKING THE ETHERNET INTERFACE”.

13.1.4 Installing the Display Unit

Refer to “3.5.1 Installing the LCD-mounted Type Control Unit”.

© MyFANUC 195109AB01DC415385669AA015E5BDE5

13.2 CONNECTION TO SHARED LCD UNIT (ETHERNET)

13.2.1 Overview

It explains the connection with control unit and Shared LCD Unit (Ethernet).
The shared LCD Unit(Ethernet) can be connected to up to eight stand-alone type CNC.

13.2.2 Connection Diagram

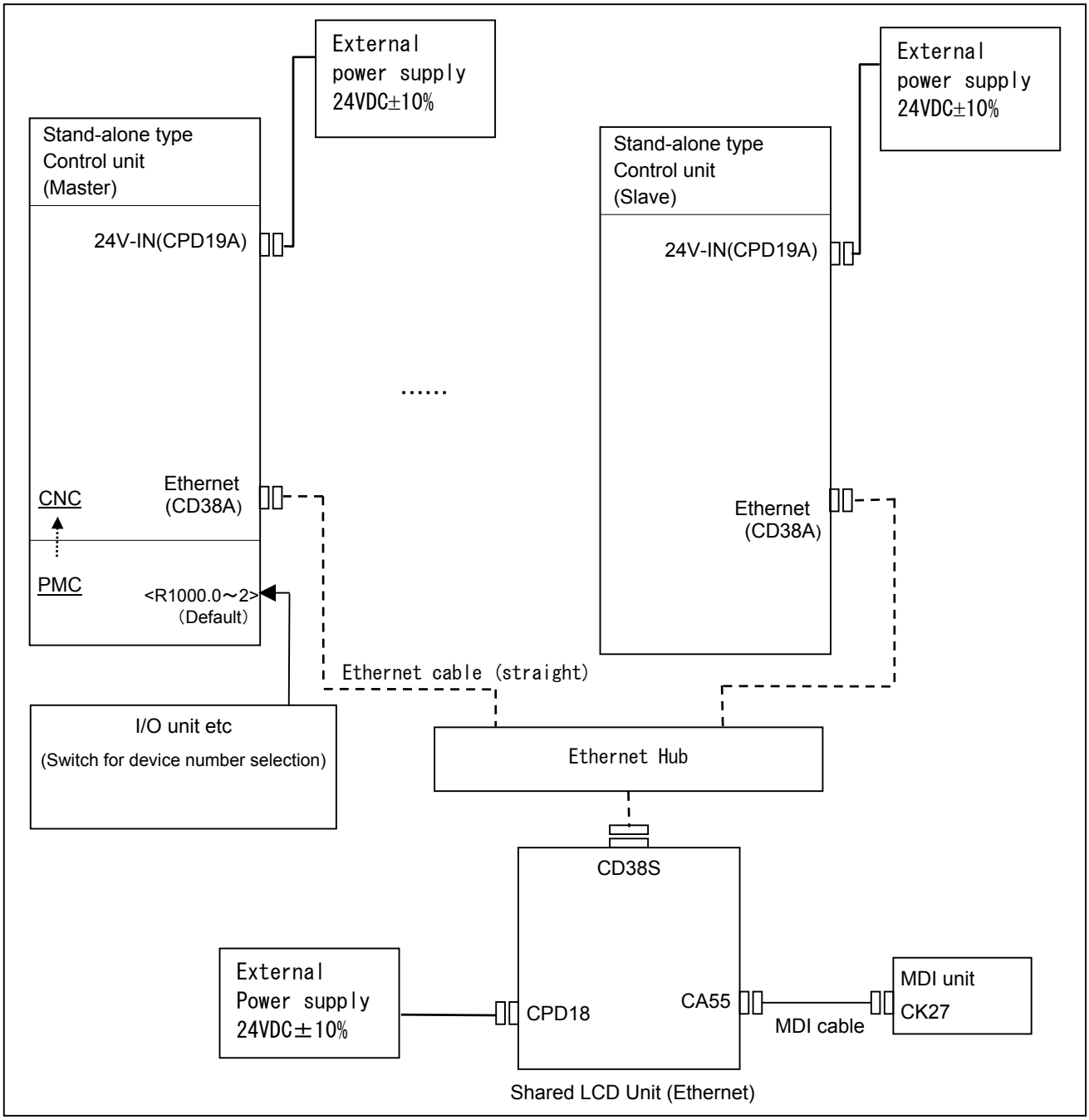

© MyFANUC 195109AB01DC415385669AA015E5BDE5

13.2.3 Connector Name and Layout

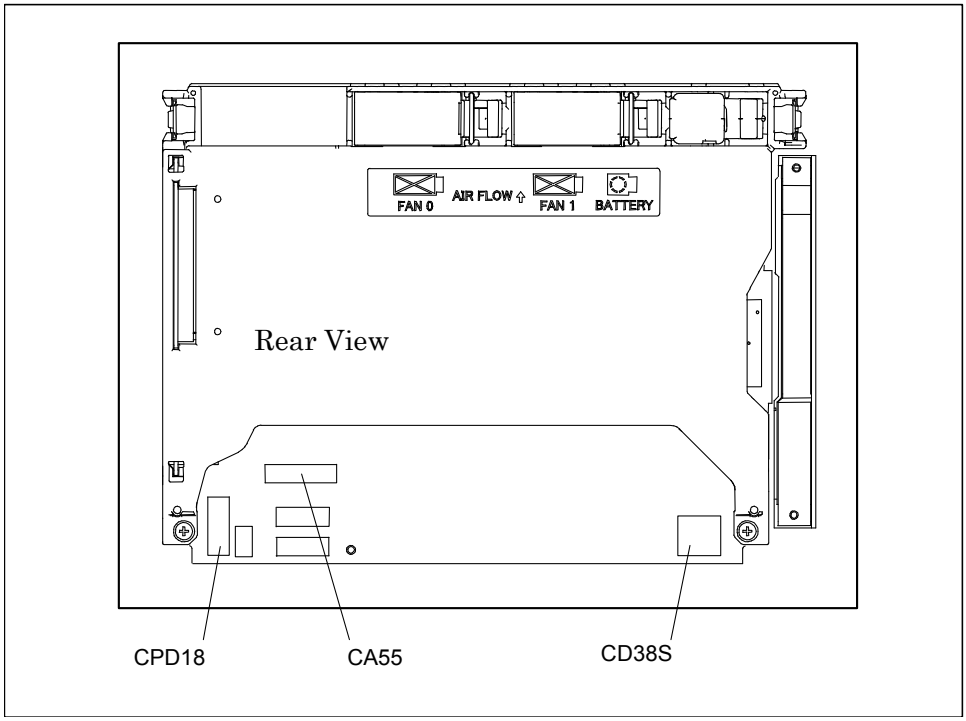

No.	Connector Name	Function	Note
1	CPD18	DC24V IN	14.2.3.1
2	CA55	MDI	14.2.3.2
3	CD38S	Ethernet	14.2.3.3

Other connectors are reserved.

13.2.3.1 Connection with the 24V power input

Supply the power to the display unit from an external 24 VDC power supply.

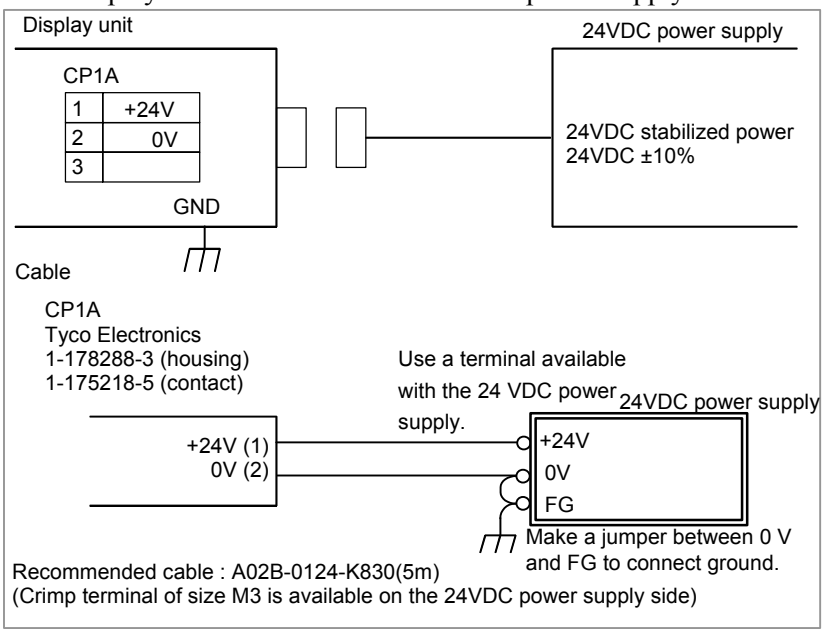

© MyFANUC 195109AB01DC415385669AA015E5BDE5

13.2.3.2 Connection with the MDI unit

For the connection between the connector (CA55) on the display unit and that (CK27) on the MDI unit, see Section 5.1, “Connection between the LCD-mounted Type Control Unit and MDI Unit”.

13.2.3.3 Connection to the Ethernet

(a) Connection without Ethernet HUB (Cross cable)
The connectors of a cable for connecting between the Ethernet interface (CD38S) and CNC without Ethernet HUB have the pin arrangement shown below.

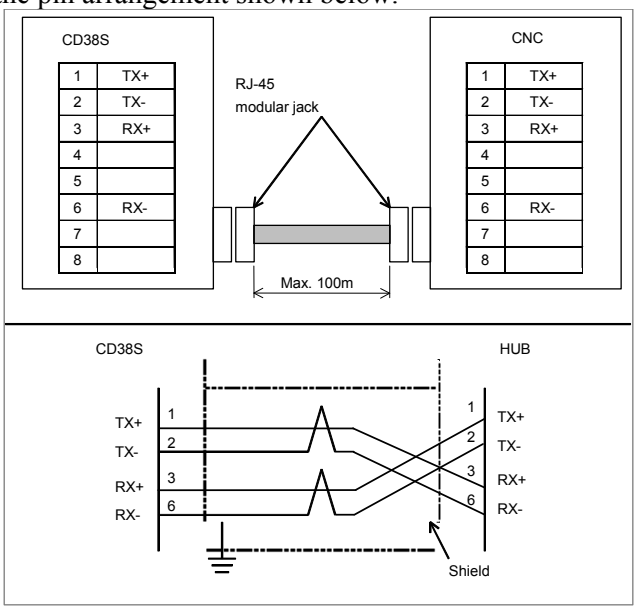

(b) Connection via Ethernet HUB (Straight cable)
The connectors of a cable for connecting between the Ethernet interface (CD38S) and the Ethernet HUB have the pin arrangement shown below.

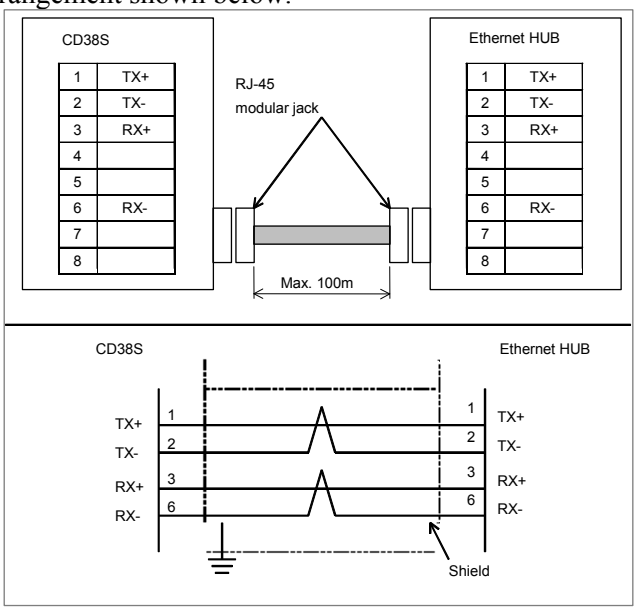

© MyFANUC 195109AB01DC415385669AA015E5BDE5

NOTE
At both case, the cable can be up to 100 m long (for the FANUC- recommended cable for movable sections, up to 50 m). Do not make the cable longer than necessary.

Refer to “5.5 LINKING THE ETHERNET INTERFACE”.

13.2.4 Installing the Display Unit

Refer to “3.5.1 Installing the LCD-mounted Type Control Unit”.

© MyFANUC 195109AB01DC415385669AA015E5BDE5

© MyFANUC 195109AB01DC415385669AA015E5BDE5

APPENDIX

© MyFANUC 195109AB01DC415385669AA015E5BDE5

© MyFANUC 195109AB01DC415385669AA015E5BDE5

A OUTLINE DRAWINGS OF UNITS AND CONNECTORS

Outline drawings for LCD-mounted type control unit

Name		See
Control unit	8.4” LCD	Fig. U1
	10.4” LCD	Fig. U2
	15” LCD	Fig. U3

Outline drawings for stand-alone type control unit

Name		See
Control unit	2 slots	Fig. U4
Display unit	10.4” LCD	Fig. U5
	15” LCD	Fig. U6

Other outline drawings

Name	See
Small MDI unit (ONG, for 8.4” LCD)	Fig. U7
Standard MDI unit (ONG, for 8.4” LCD)	Fig. U8
Standard MDI unit (ONG, horizontal placement)	Fig. U9
Standard MDI unit (ONG, vertical placement)	Fig. U10
Standard MDI unit (QWERTY)	Fig. U11
MDI unit (QWERTY TYPE B)	Fig. U12
Manual pulse generator	Fig. U13
Pendant type manual pulse generator	Fig. U14
Separate detector interface unit or analog input separate detector interface unit	Fig. U15
Absolute pulse coder battery case for a separate detector	Fig. U16
Battery case for external installation	Fig. U17
Punch panel (for LCD-mounted type control unit)	Fig. U18
Punch panel (for stand-alone type control unit)	Fig. U19
HSSB interface board on the personal computer side	Fig. U20

© MyFANUC 195109AB01DC415385669AA015E5BDE5

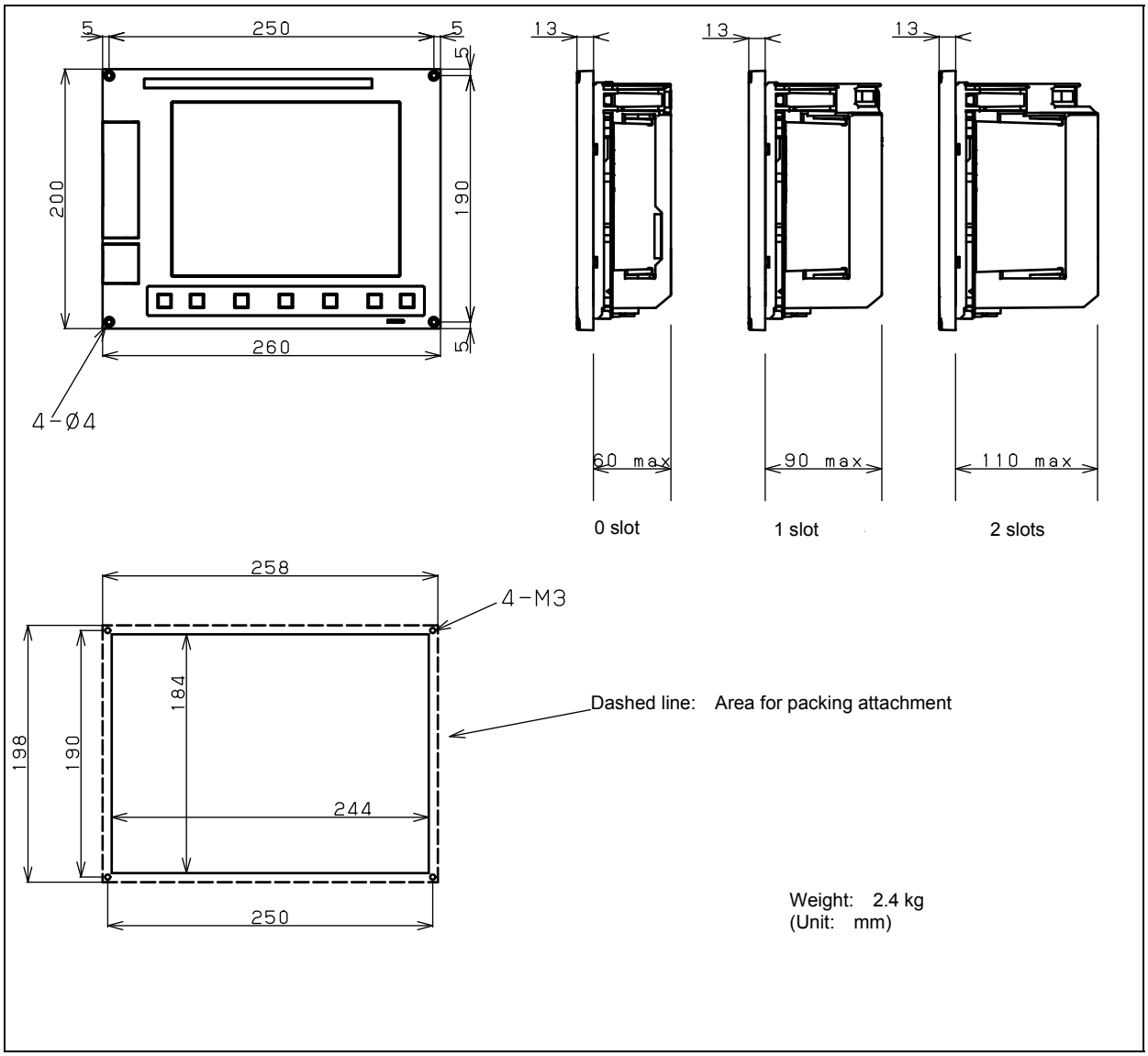

Fig. U1 LCD-mounted type control unit - 8.4” LCD

© MyFANUC 195109AB01DC415385669AA015E5BDE5

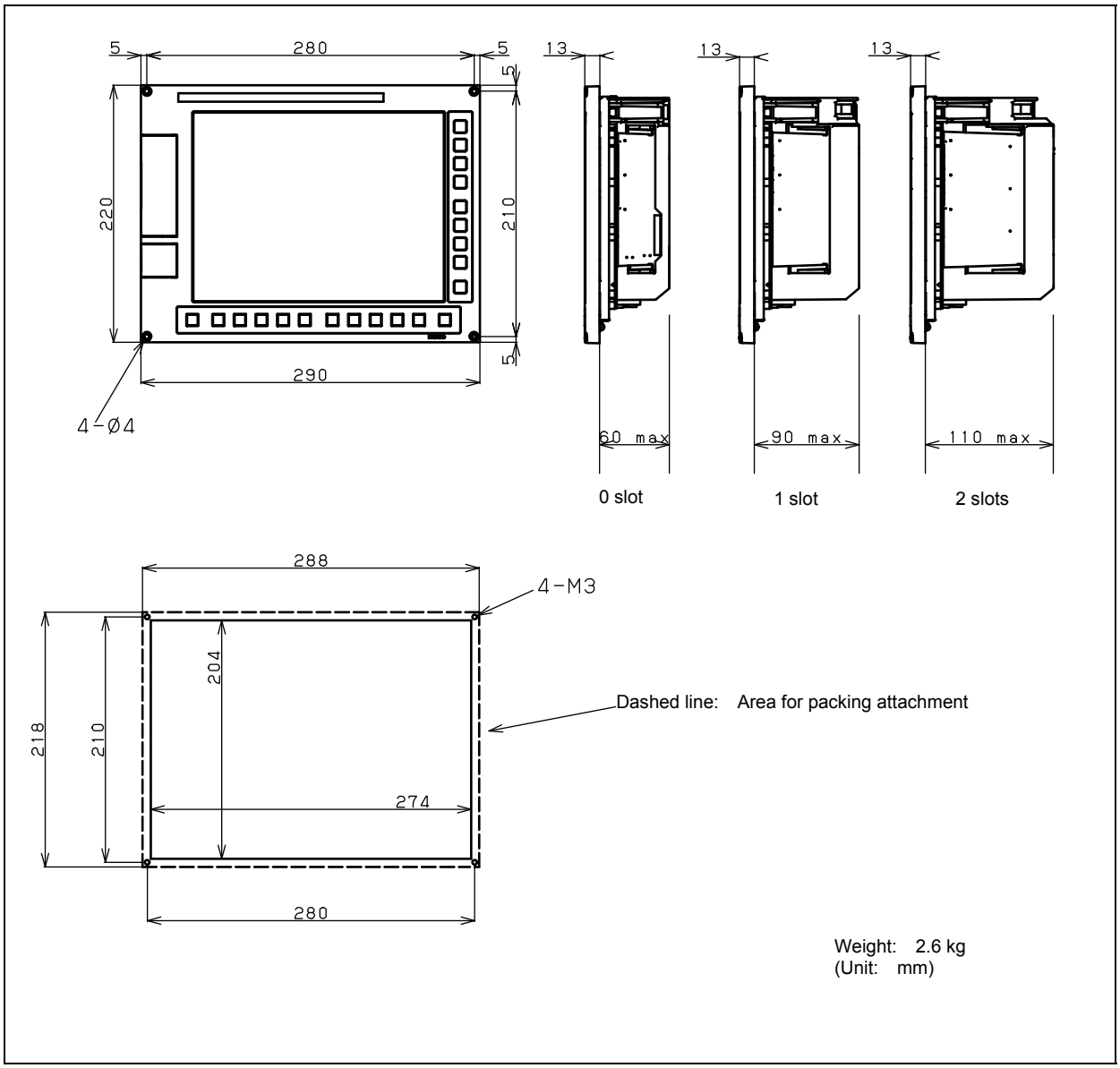

Fig. U2 LCD-mounted type control unit - 10.4” LCD

© MyFANUC 195109AB01DC415385669AA015E5BDE5

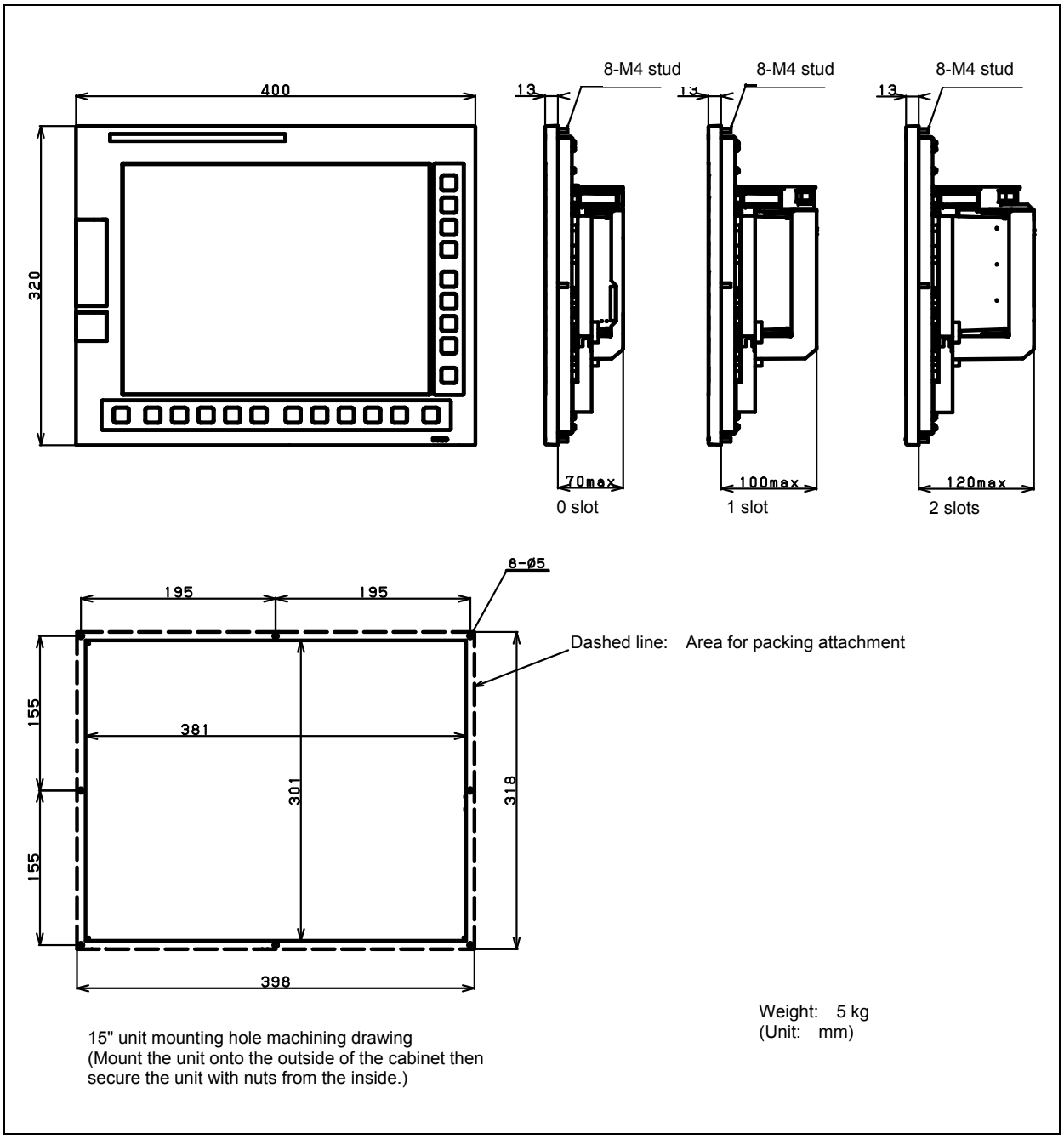

Fig. U3 LCD-mounted type control unit - 15” LCD

© MyFANUC 195109AB01DC415385669AA015E5BDE5

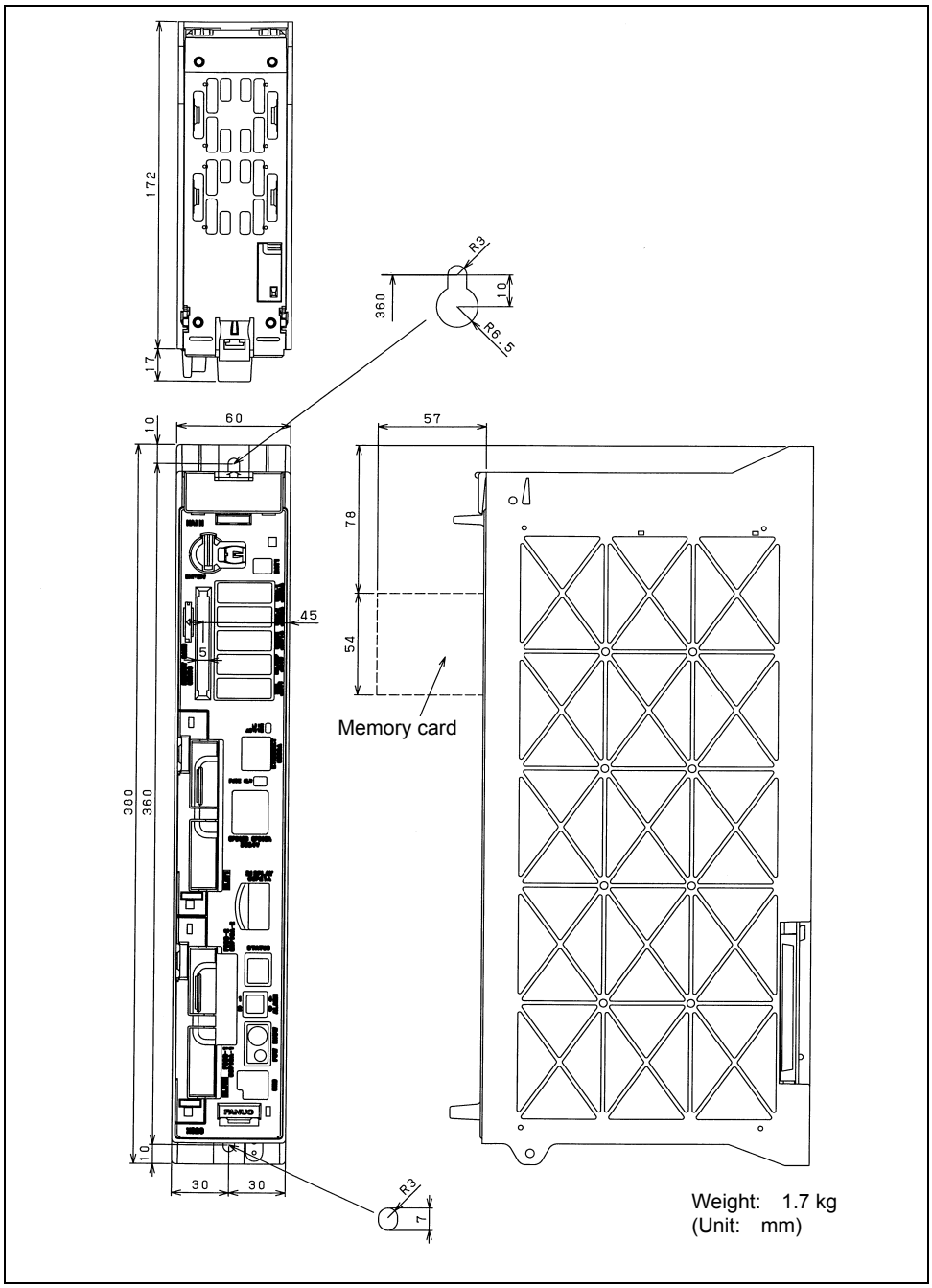

Fig. U4 Stand-alone type control unit - 2 slots

© MyFANUC 195109AB01DC415385669AA015E5BDE5

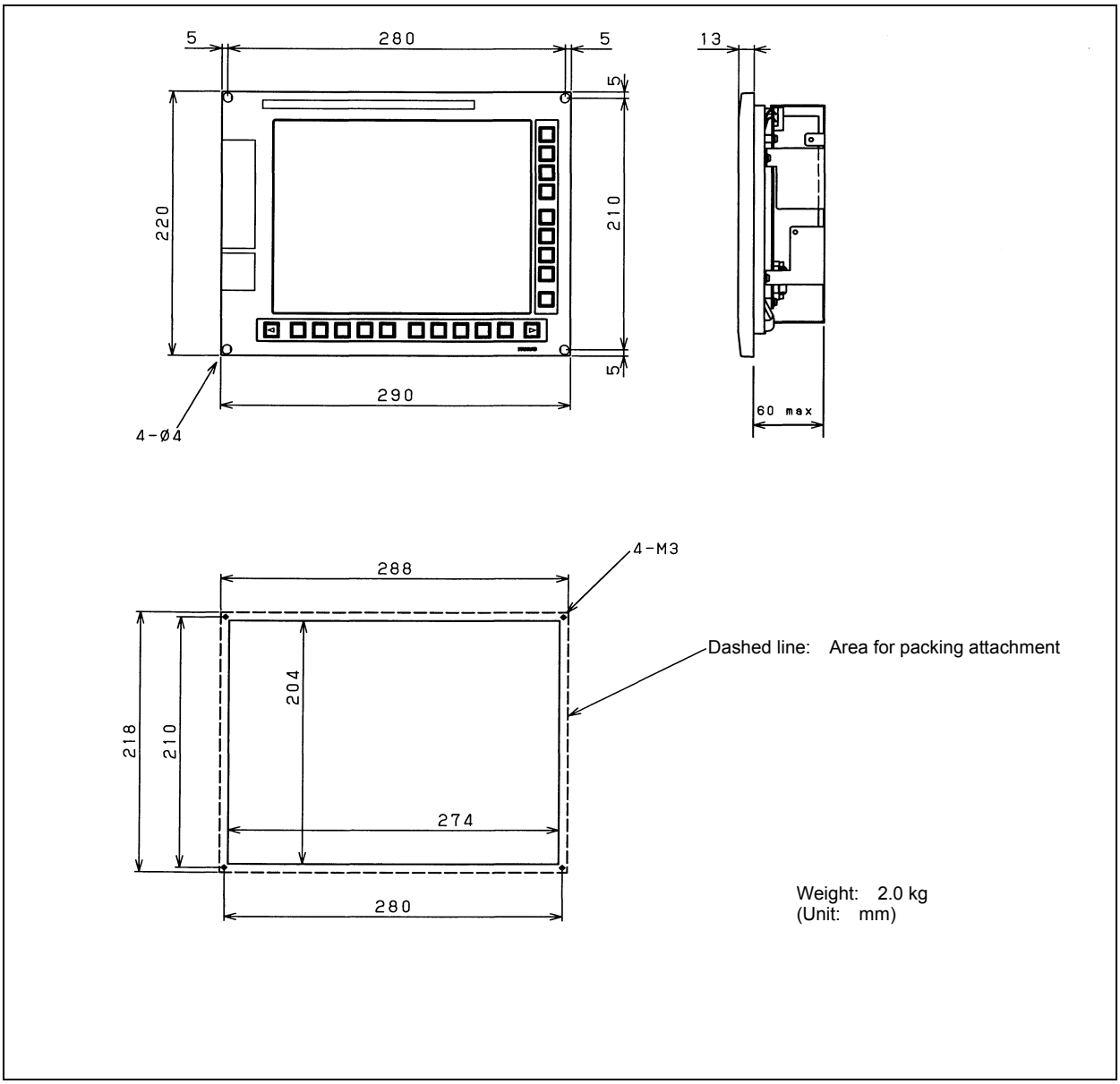

Fig. U5 Display unit - 10.4” LCD

© MyFANUC 195109AB01DC415385669AA015E5BDE5

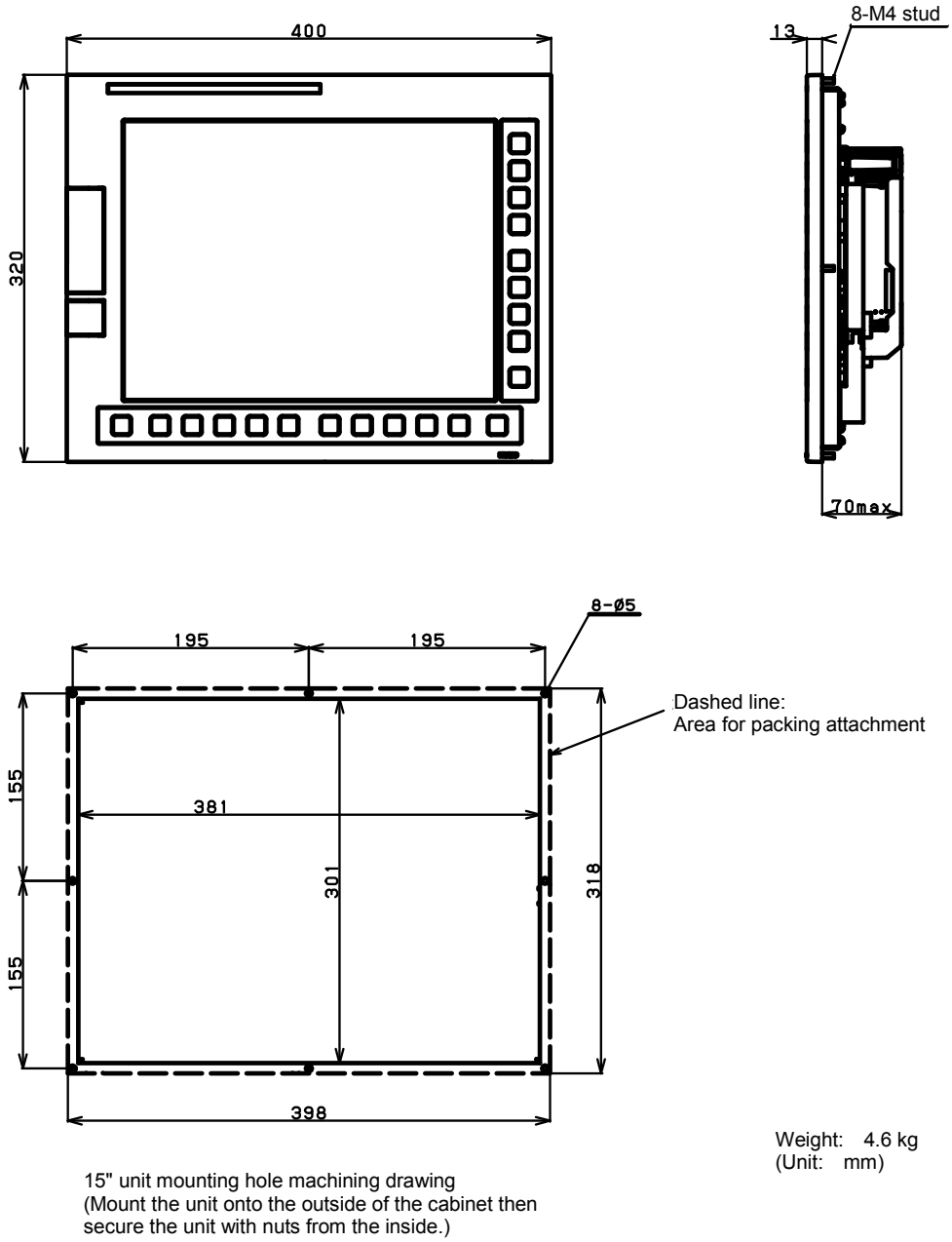

Fig. U6 Display unit - 15" LCD

© MyFANUC 195109AB01DC415385669AA015E5BDE5

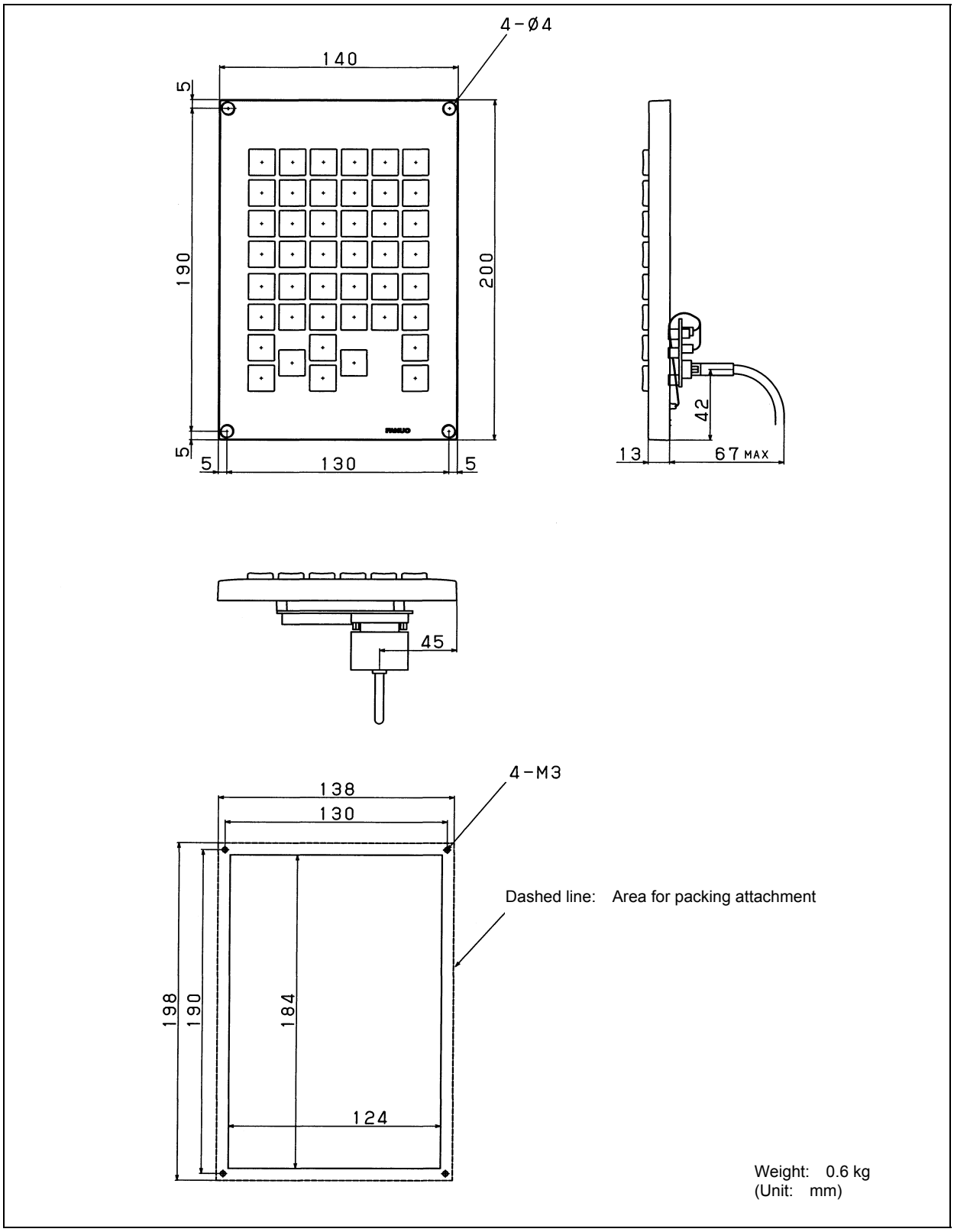

Fig. U7 Small MDI unit (ONG, for 8.4" LCD)

© MyFANUC 195109AB01DC415385669AA015E5BDE5

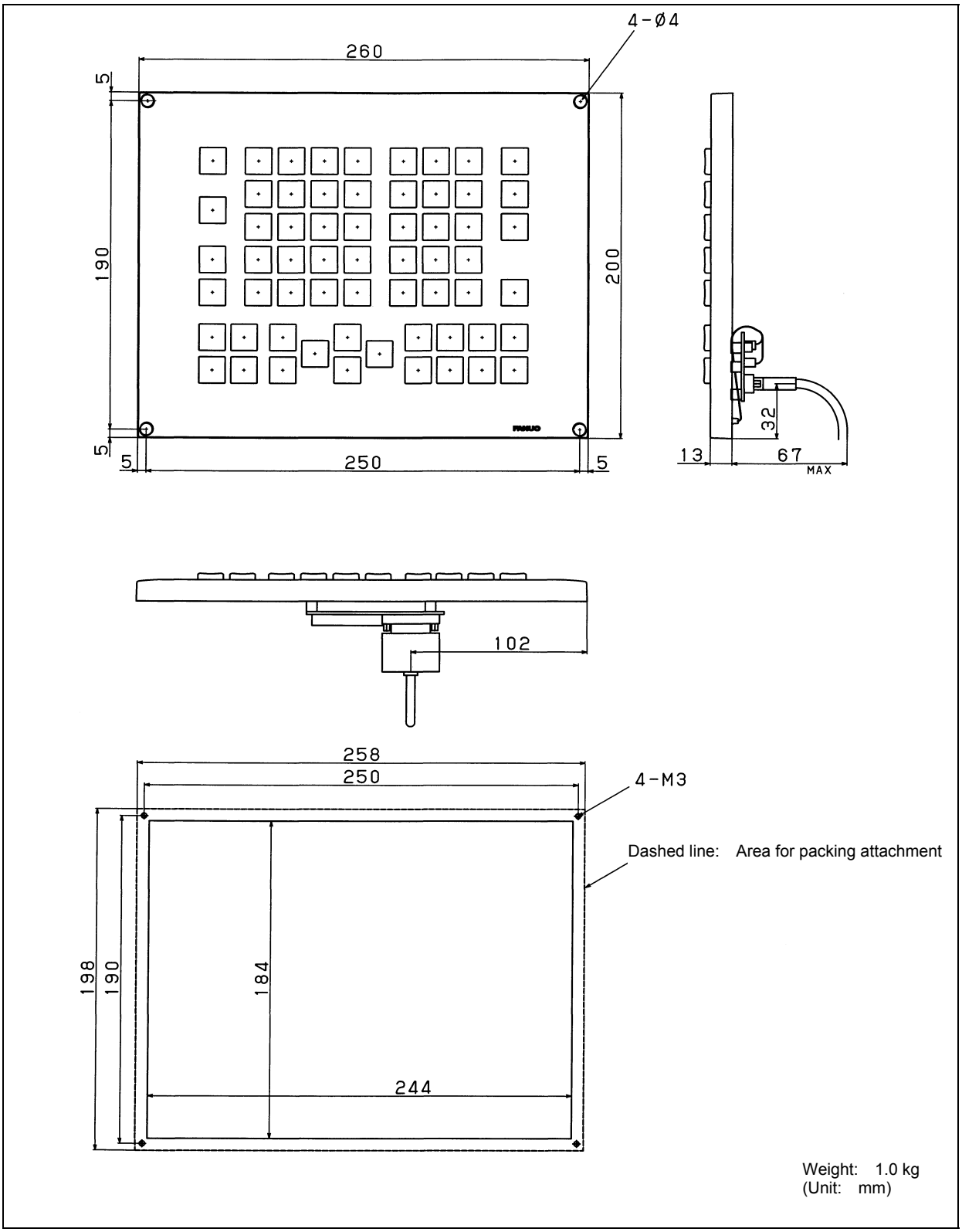

Fig. U8 Standard MDI unit (ONG, for 8.4" LCD)

© MyFANUC 195109AB01DC415385669AA015E5BDE5

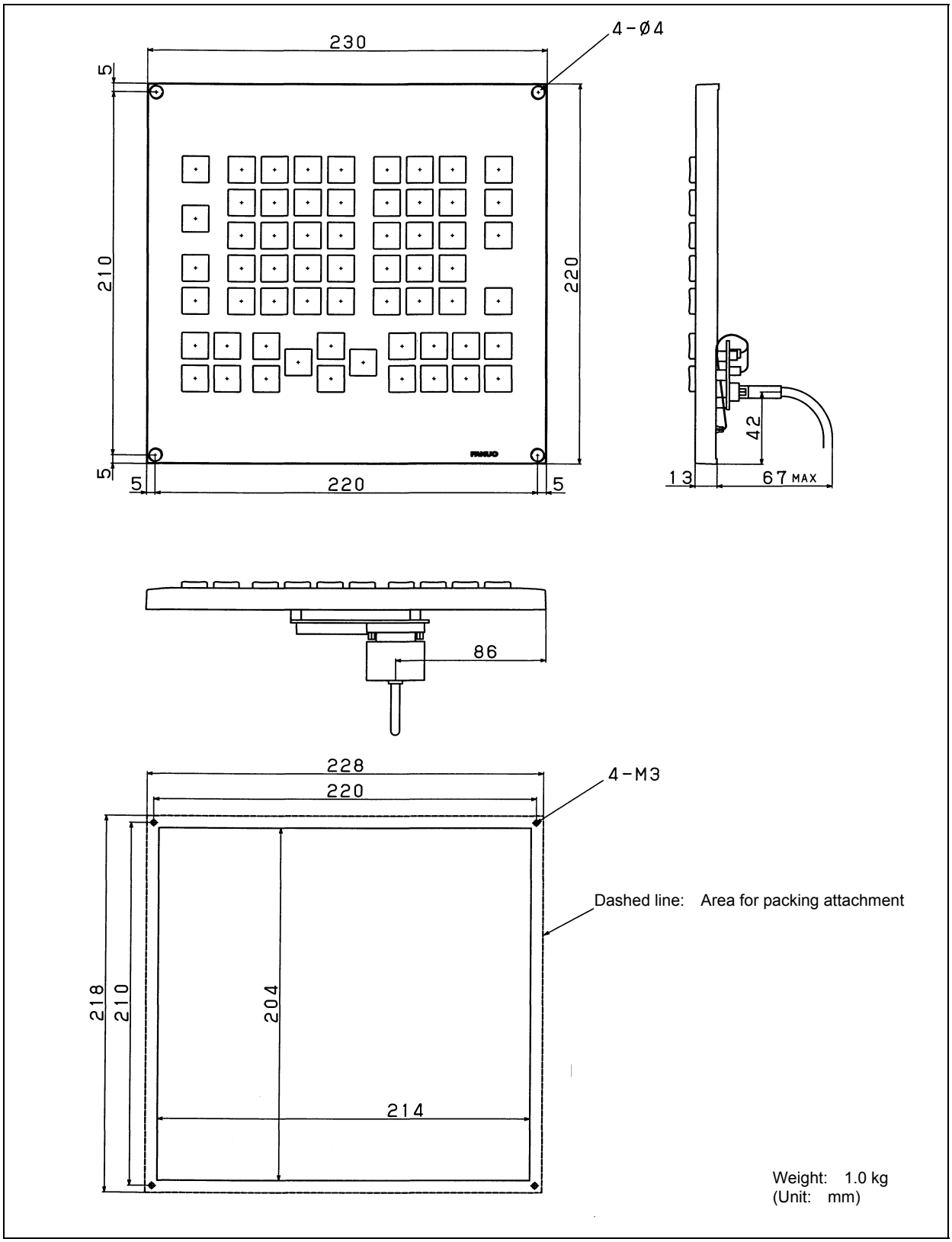

Fig. U9 Standard MDI unit (ONG, horizontal placement)

© MyFANUC 195109AB01DC415385669AA015E5BDE5

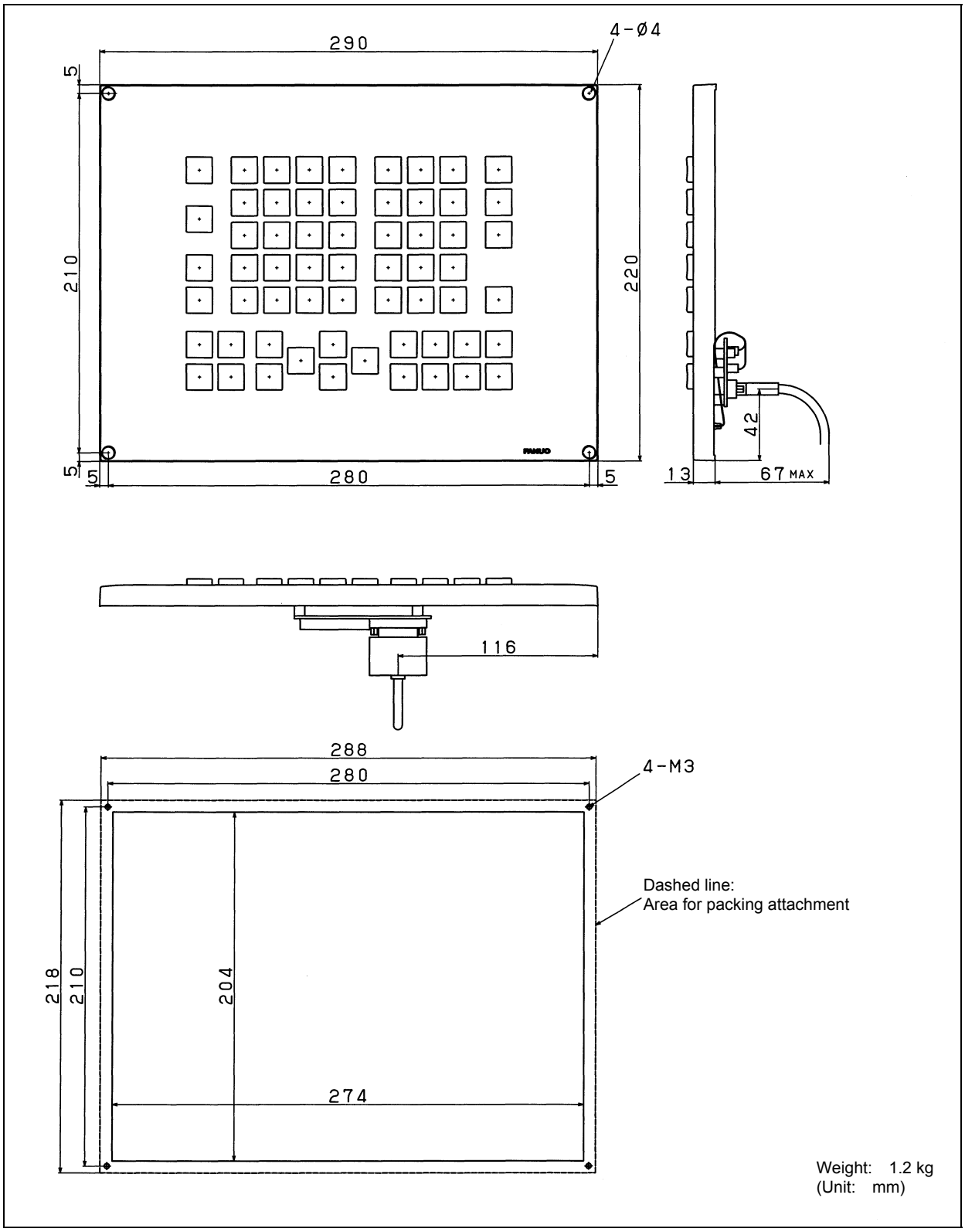

Fig. U10 Standard MDI unit (ONG, vertical placement)

© MyFANUC 195109AB01DC415385669AA015E5BDE5

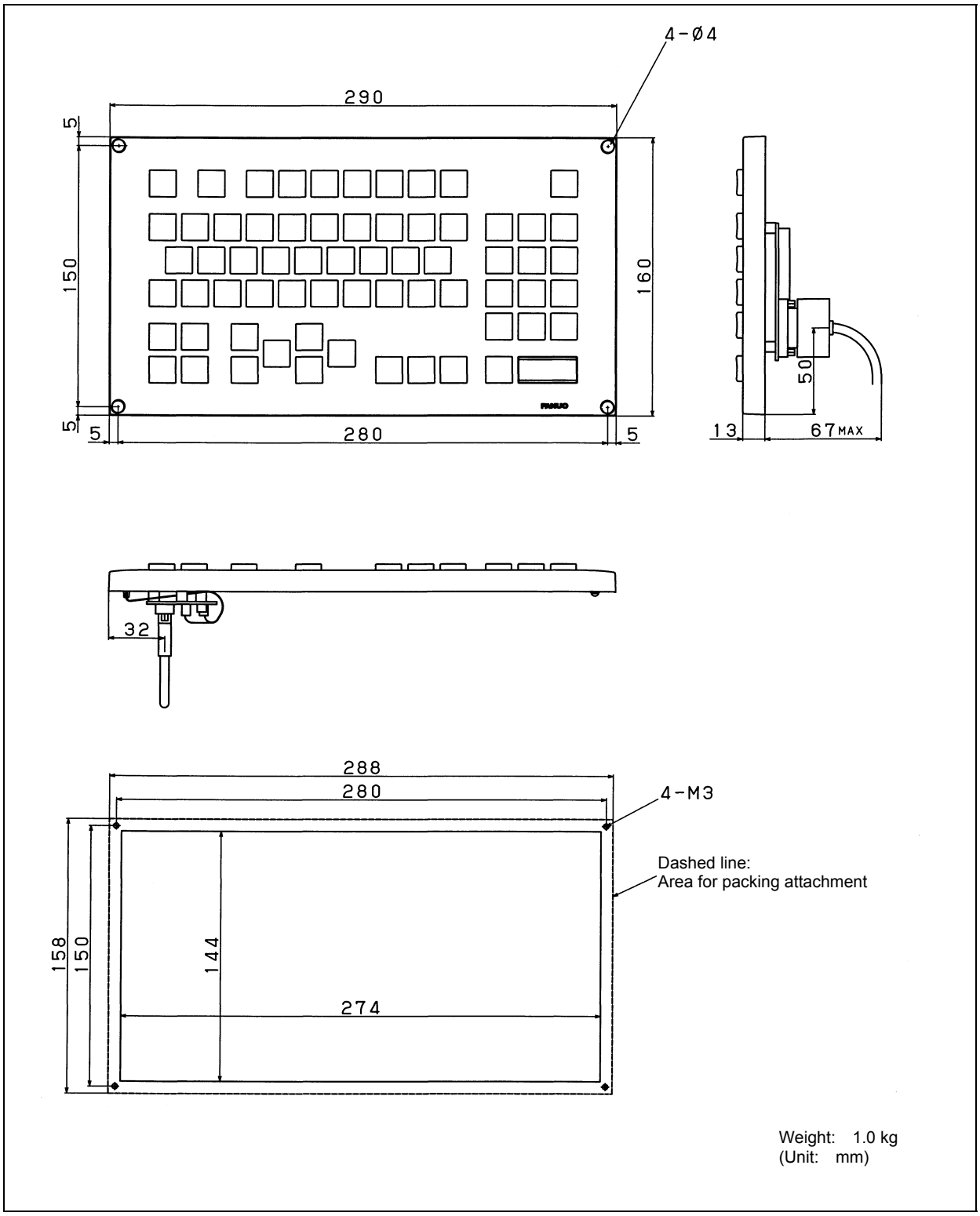

Fig. U11 Standard MDI unit (QWERTY)

© MyFANUC 195109AB01DC415385669AA015E5BDE5

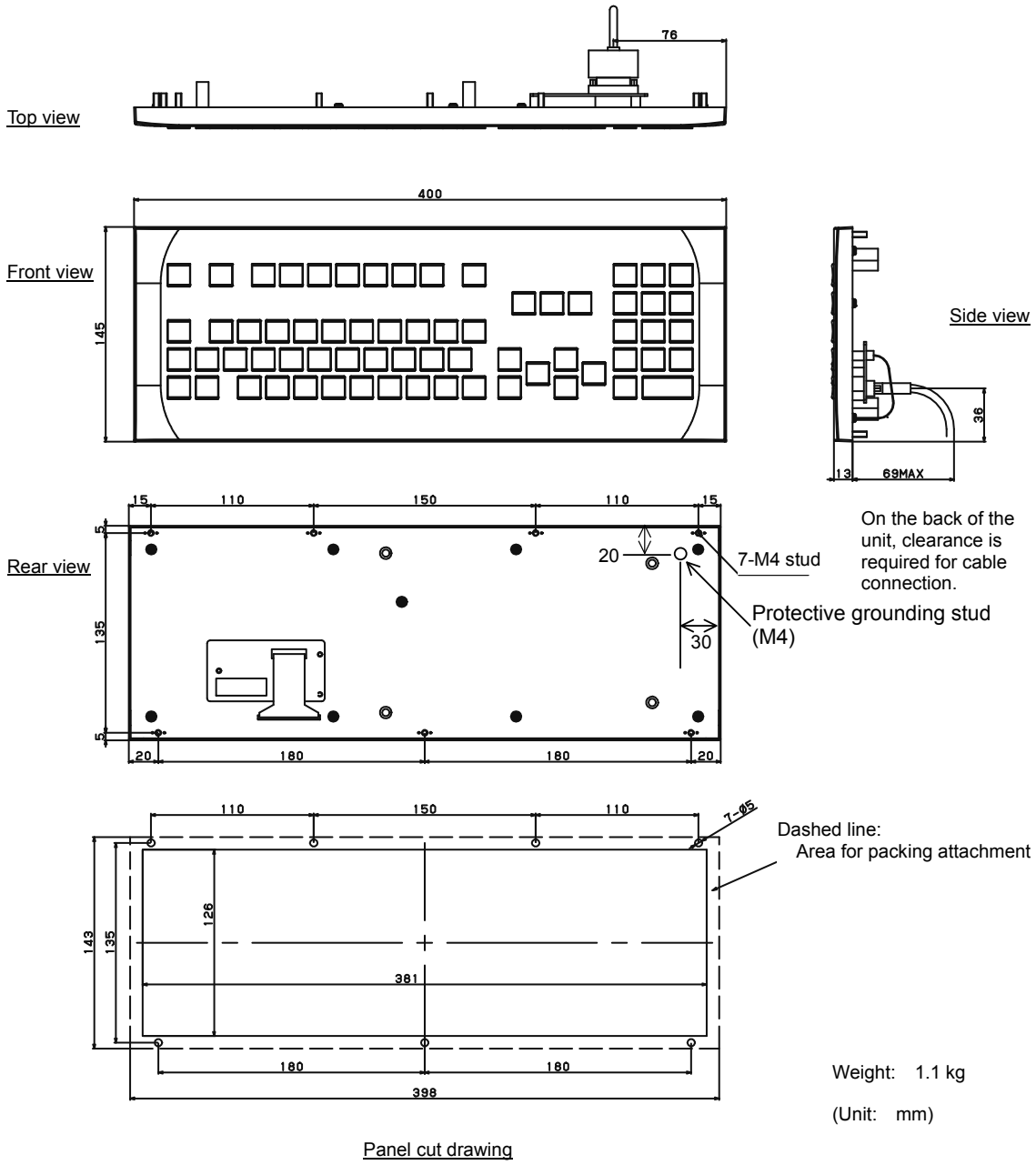

(Mount the unit onto the outside of the cabinet then secure the unit with nuts from the inside.)

Fig. U12 MDI unit (QWERTY TYPE B)

© MyFANUC 195109AB01DC415385669AA015E5BDE5

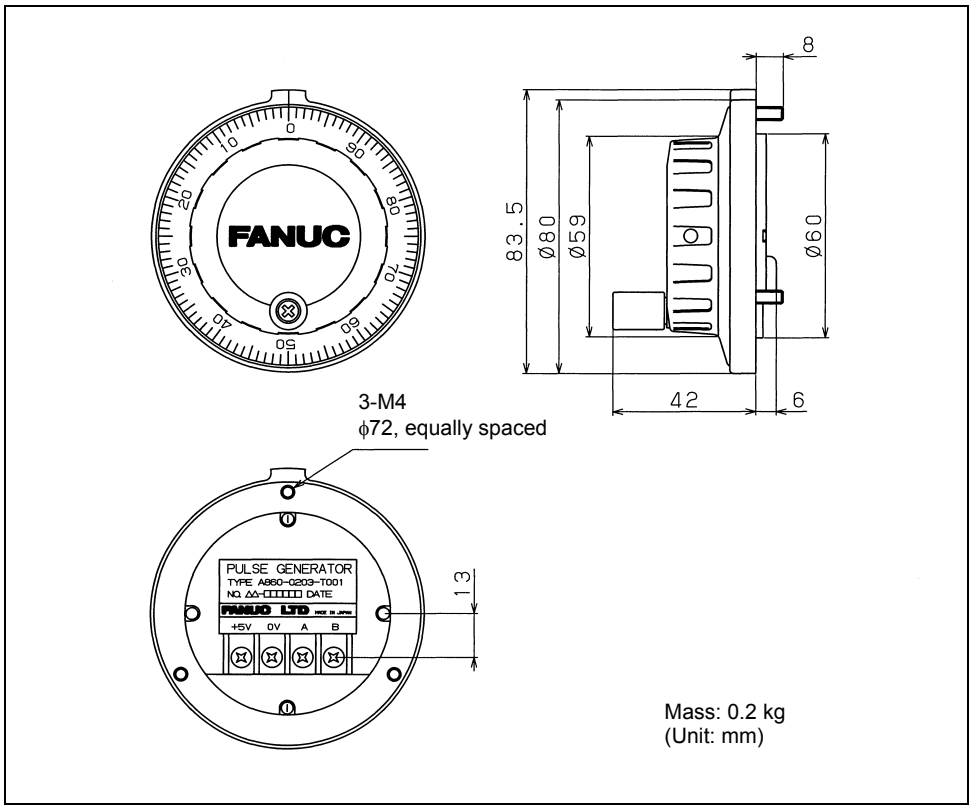

Fig. U13 Manual pulse generator

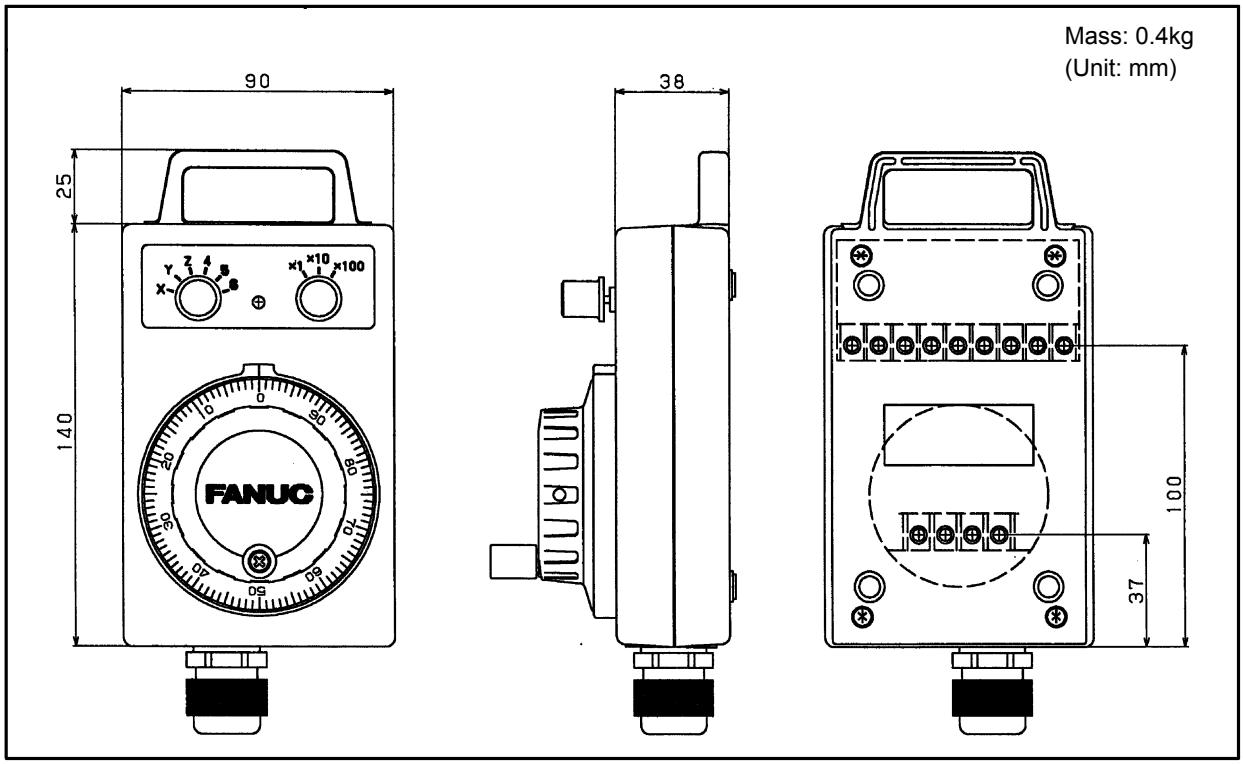

Fig. U14 Pendant type manual pulse generator

© MyFANUC 195109AB01DC415385669AA015E5BDE5

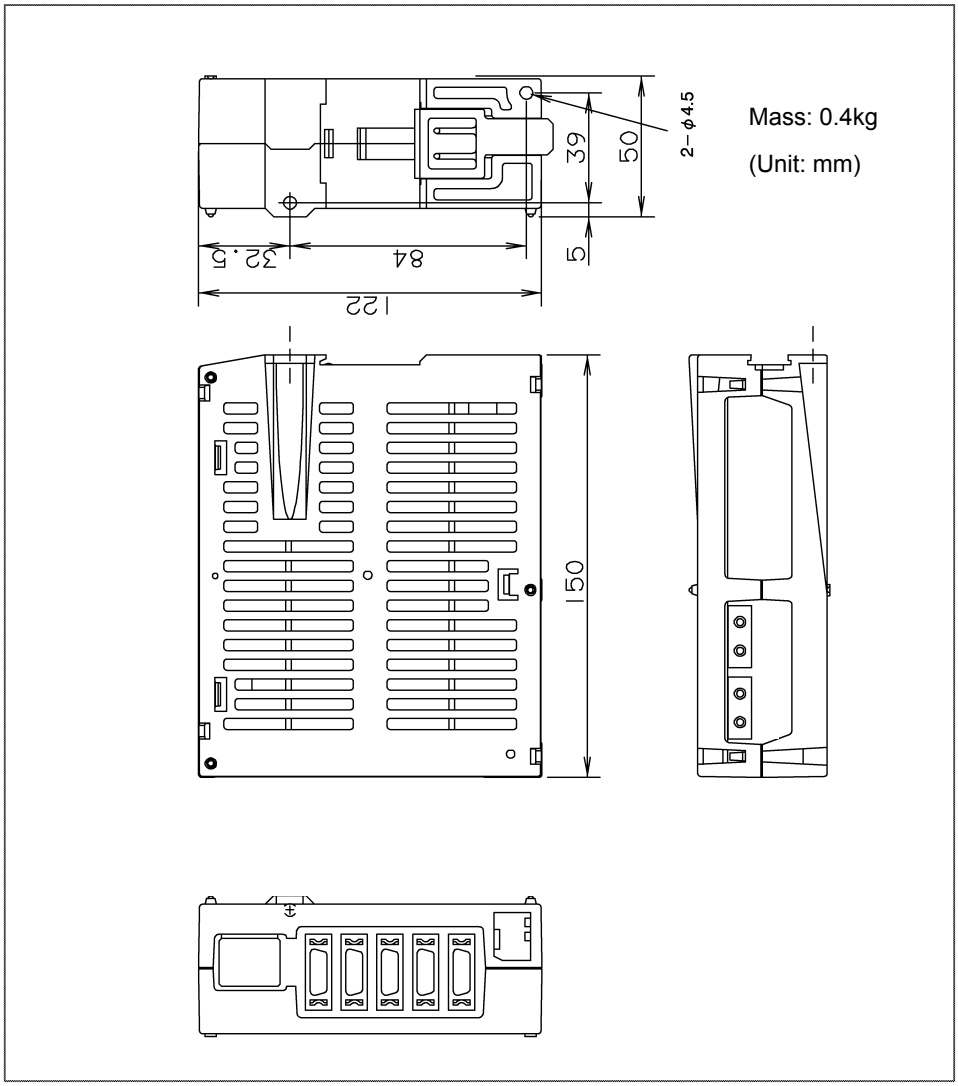

Fig. U15 Separate detector interface unit or analog input separate detector interface unit

© MyFANUC 195109AB01DC415385669AA015E5BDE5

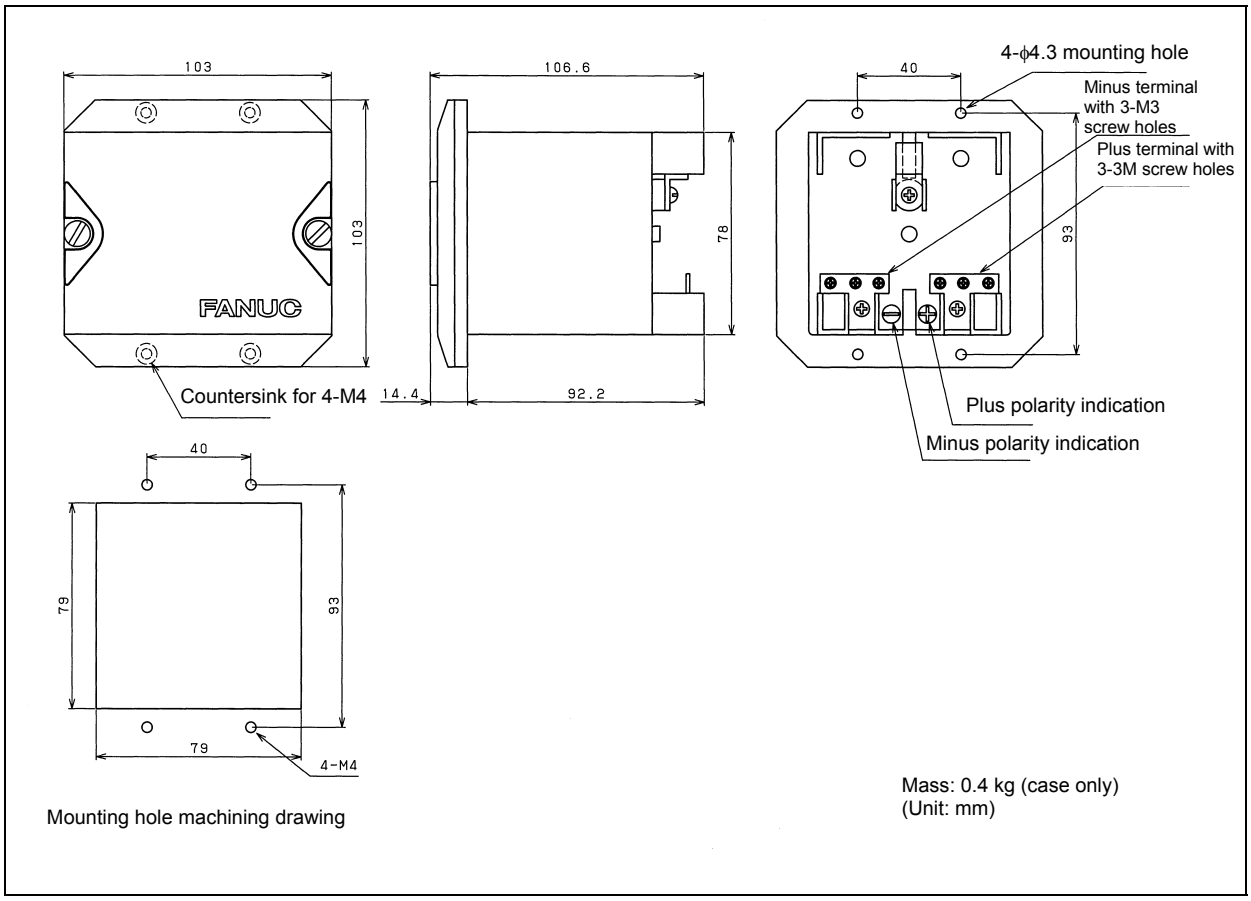

Fig. U16 Absolute pulse coder battery case for a separate detector

© MyFANUC 195109AB01DC415385669AA015E5BDE5

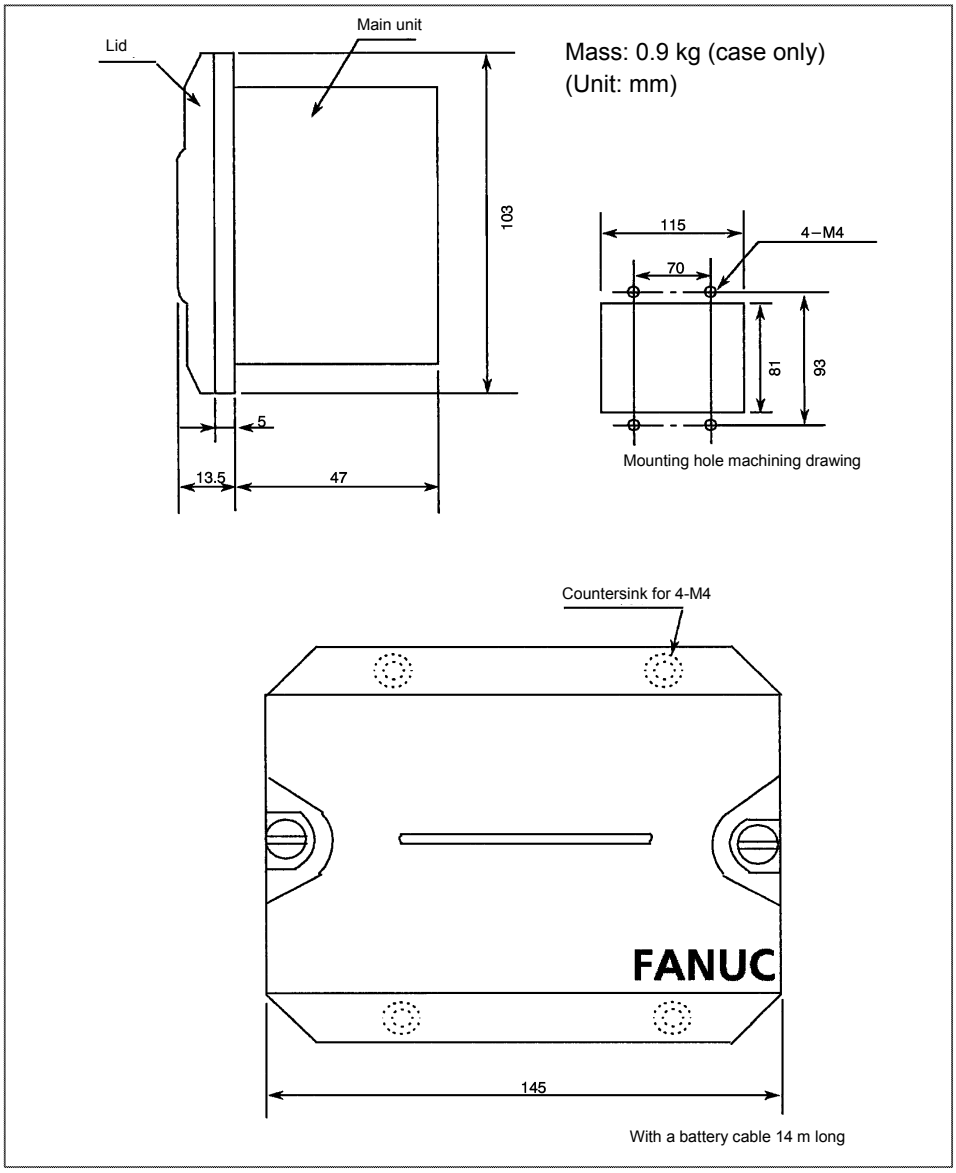

Fig. U17 Battery case for external installation

© MyFANUC 195109AB01DC415385669AA015E5BDE5

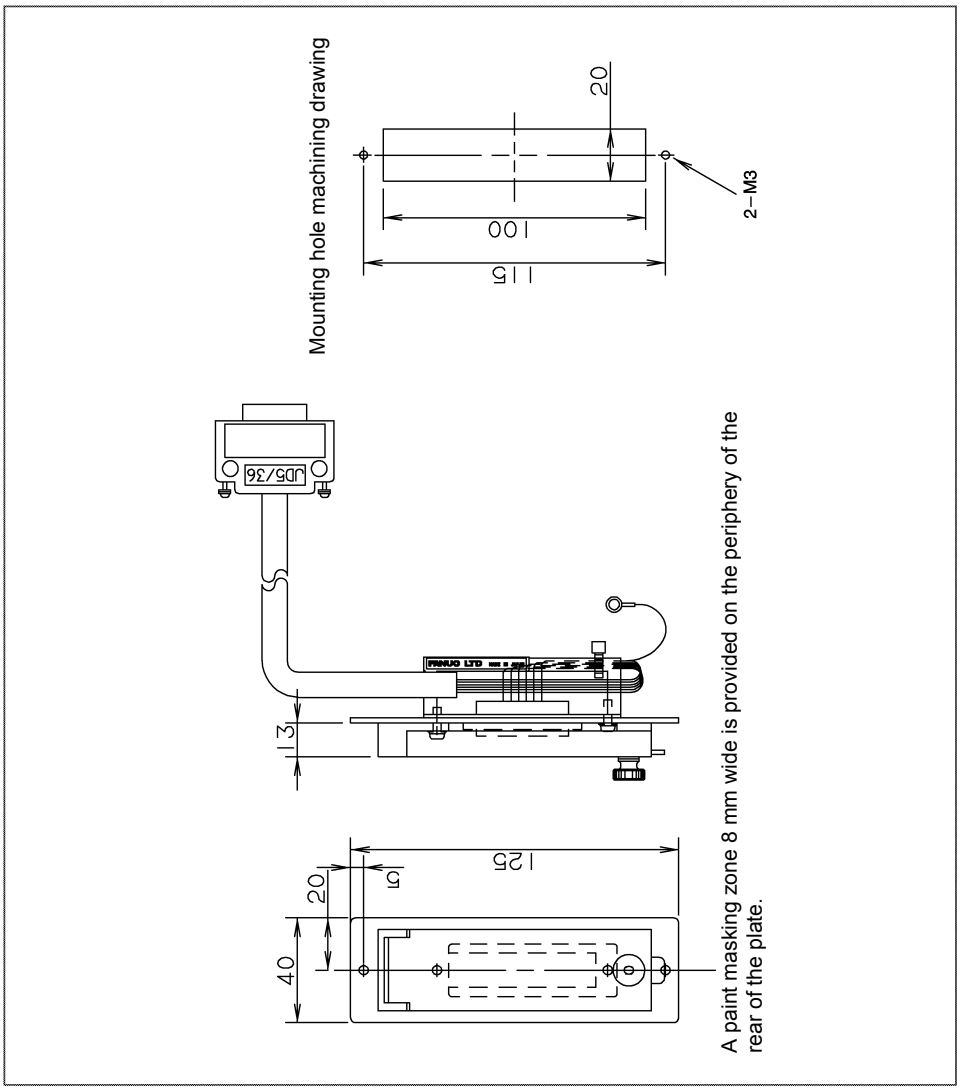

Fig. U18 Punch panel (for LCD-mounted type control unit)

© MyFANUC 195109AB01DC415385669AA015E5BDE5

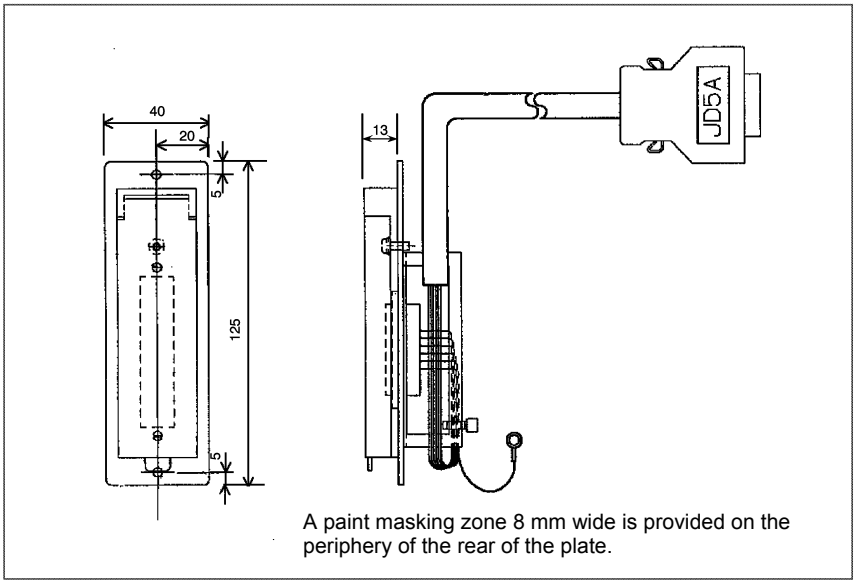

Fig. U19 Punch panel (for stand-alone type control unit)

The panel cut dimensions of this punch panel are indicated below.

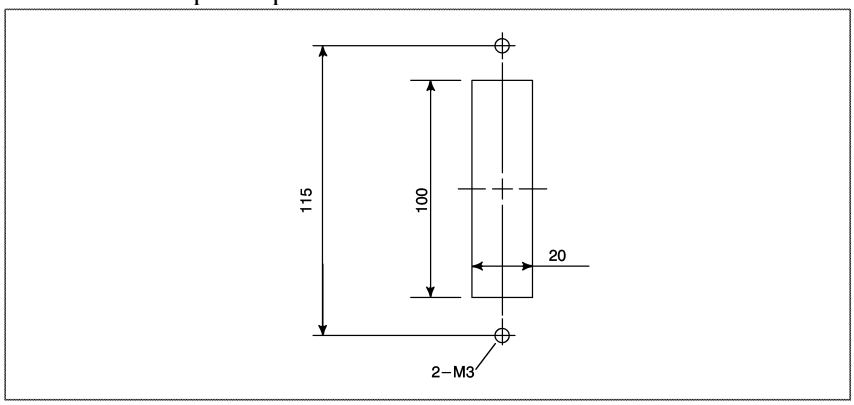

© MyFANUC 195109AB01DC415385669AA015E5BDE5

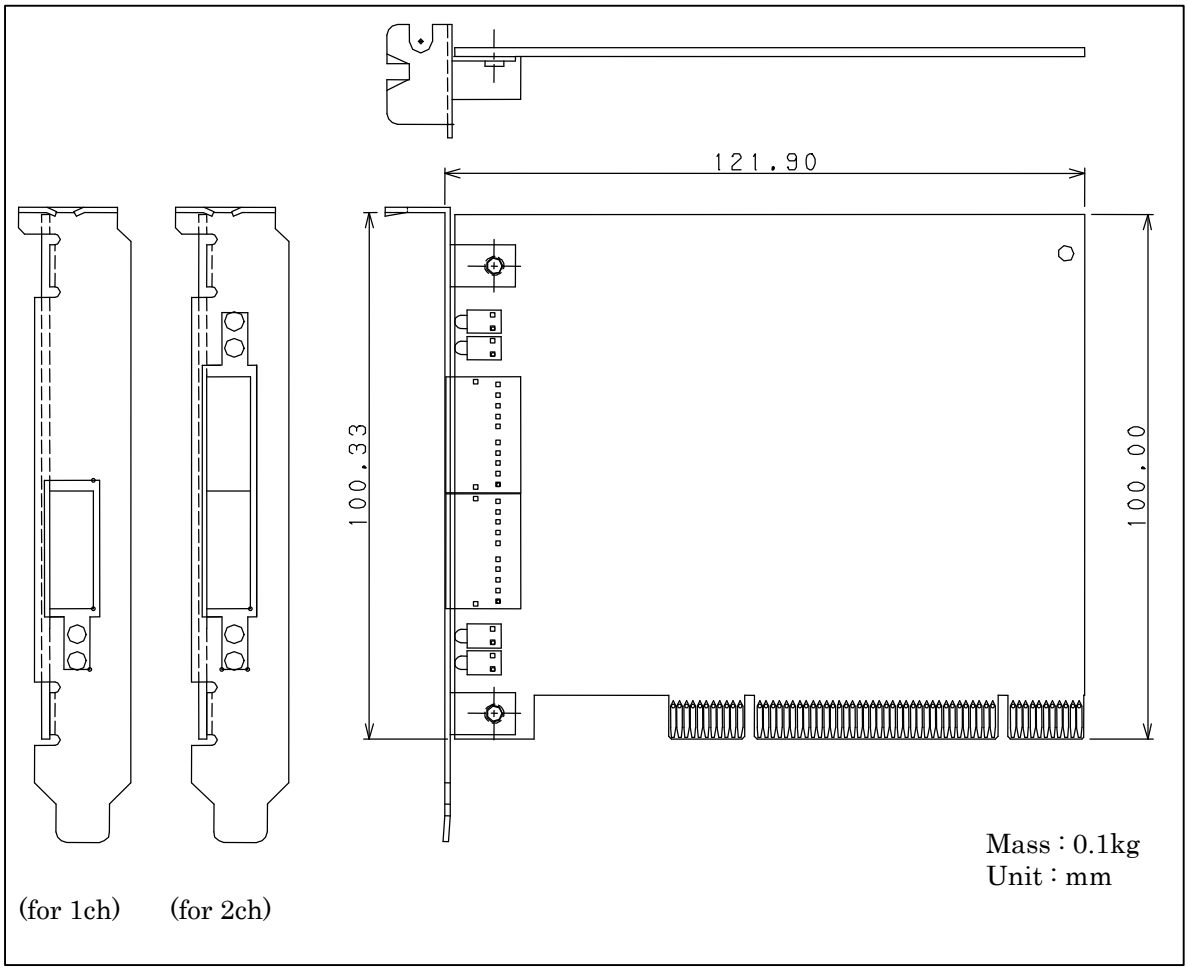

Fig. U20 HSSB interface board on the personal computer side

© MyFANUC 195109AB01DC415385669AA015E5BDE5

Connectors

Fig. title	Specification No.	Fig. No.
PCR connector (soldering type)	PCR-E20FS	Fig. C1 (a)
FI40 connector	FI40-2015S	Fig. C1 (b)
Connector case (PCR type manufactured by HONDA TSUSHIN KOGYO)	PCR-V20LA/PCR-V20LB	Fig. C2 (a)
Connector case (FI type manufactured by HIROSE ELECTRIC)	FI-20-CV	Fig. C2 (b)
Connector case (manufactured by FUJITSU COMPONENT)	FCN-240C20-Y/S	Fig. C2 (c)
Connector case (PCR type manufactured by HIROSE ELECTRIC)	FI-20-CV7	Fig. C2 (d)
Connector (1) for servo side manufactured by Tyco Electronics	AMP1-178128-3	Fig. C3 (a)
Connector (2) for servo side manufactured by Tyco Electronics	AMP2-178128-3	Fig. C3 (b)
Connector (3) for +24 V power supply manufactured by Tyco Electronics	AMP1-178288-3	Fig. C3 (c)
Connector (4) for +24 V power supply manufactured by Tyco Electronics	AMP2-178288-3	Fig. C3 (d)
Contact for connector manufactured by Tyco Electronics	AMP1-175218-2/5 AMP1-175196-2/5	Fig. C3 (e)
Connector (case) manufactured by HONDA TSUSHIN KOGYO		Fig. C4 (a)
Connector (angled case) manufactured by HONDA TSUSHIN KOGYO		Fig. C4 (b)
Connector (male) manufactured by HONDA TSUSHIN KOGYO		Fig. C4 (c)
Connector (female) manufactured by HONDA TSUSHIN KOGYO		Fig. C4 (d)
Connector (terminal layout) manufactured by HONDA TSUSHIN KOGYO		Fig. C4 (e)
Connector (3 pins/brown) manufactured by Burndy Japan	SMS3PN-5	Fig. C5
Connector for flat cable manufactured by HIROSE ELECTRIC	HIF3BB-50D-2.54R HIF3BB-34D-2.54R	Fig. C6
Connector (for MDI) manufactured by Japan Aviation Electronics	LY10-DC20	Fig. C7 (a)
Contact (for MDI) manufactured by Japan Aviation Electronics	LY10-C2-3	Fig. C7 (b)
Punch panel connector for reader/punch interface		Fig. C8 (a)
Locking plate for reader/punch interface connector		Fig. C8 (b)
Connector (for distribution I/O connection printed circuit board) manufactured by HONDA TSUSHIN KOGYO	MRH-50FD	Fig. C9
Connector (for loader I/O board) manufactured by Tyco Electronics	AMP178214-1	Fig. C10
Faston terminal	A02B-0166-K330	Fig. C11

© MyFANUC 195109AB01DC415385669AA015E5BDE5

TYPE : HONDA PCR–E20FS (SOLDERING TYPE)
USAGE : GENERAL
MATING
HOUSING : HONDA PCR–V20LA (PLASTIC)

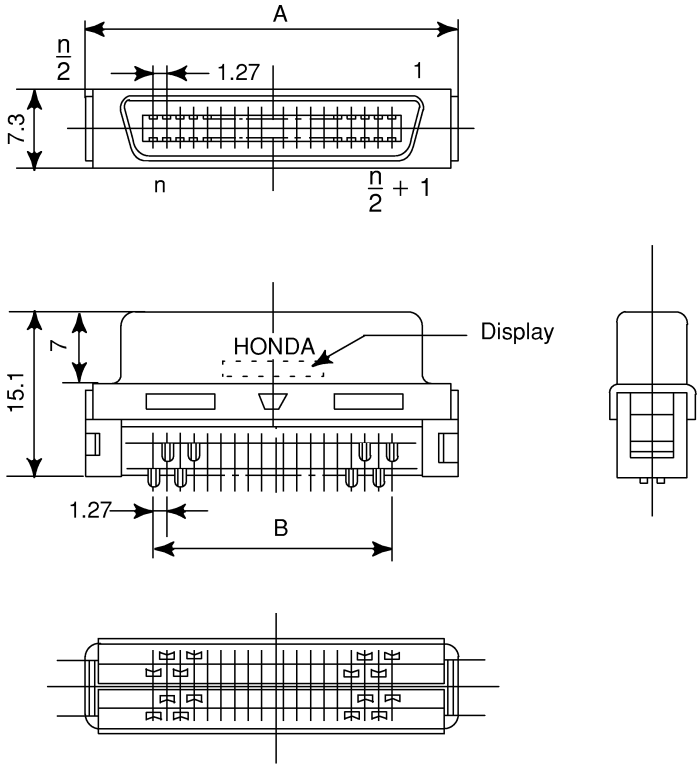

	A	B
PCR–E20FS	21.65	11.43

Fig. C1 (a) PCR connector (soldering type)

© MyFANUC 195109AB01DC415385669AA015E5BDE5

TYPE : HIROSE FI40–2015S
USAGE : PULSE CODER INTERFACE
LINEAR SCALE INTERFACE
MPG INTERFACE
MATING/HOUSING : HIROSE FI–20–CV

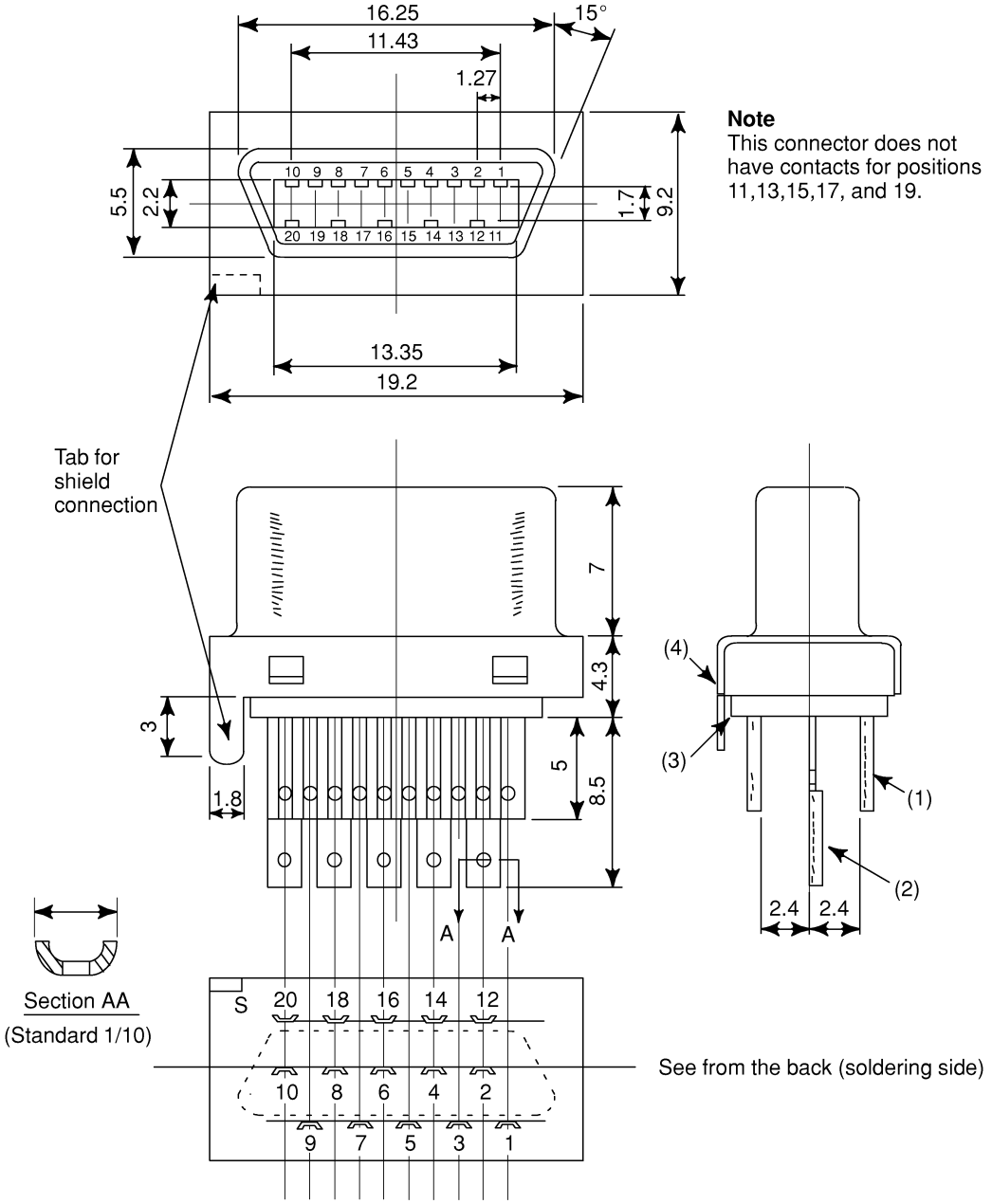

Note
This connector does not have contacts for positions 11,13,15,17, and 19.

Fig. C1 (b) FI40 connector

© MyFANUC 195109AB01DC415385669AA015E5BDE5

TYPE : HONDA PCR–V20LA (for 6 dia. cable)
USAGE : GENERAL

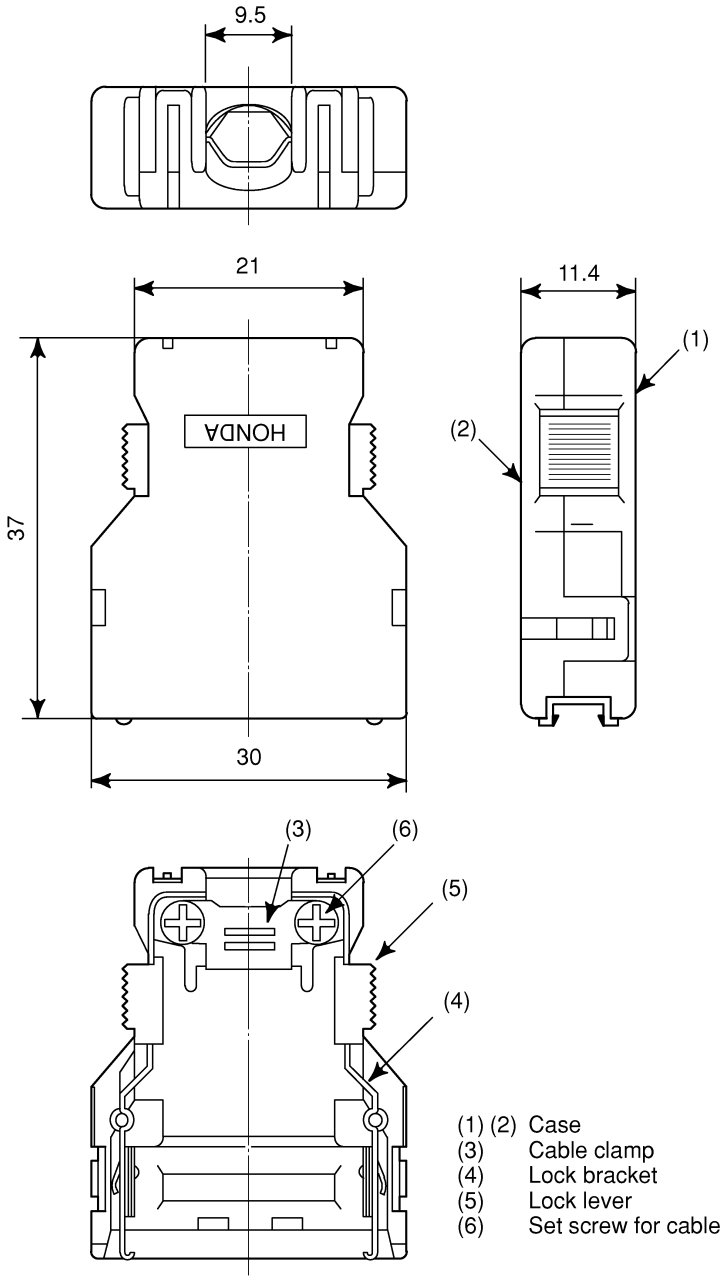

(1) (2) Case
(3) Cable clamp
(4) Lock bracket
(5) Lock lever
(6) Set screw for cable clamp

Fig. C2 (a) Connector case (PCR type manufactured by HONDA TSUSHIN KOGYO)

© MyFANUC 195109AB01DC415385669AA015E5BDE5

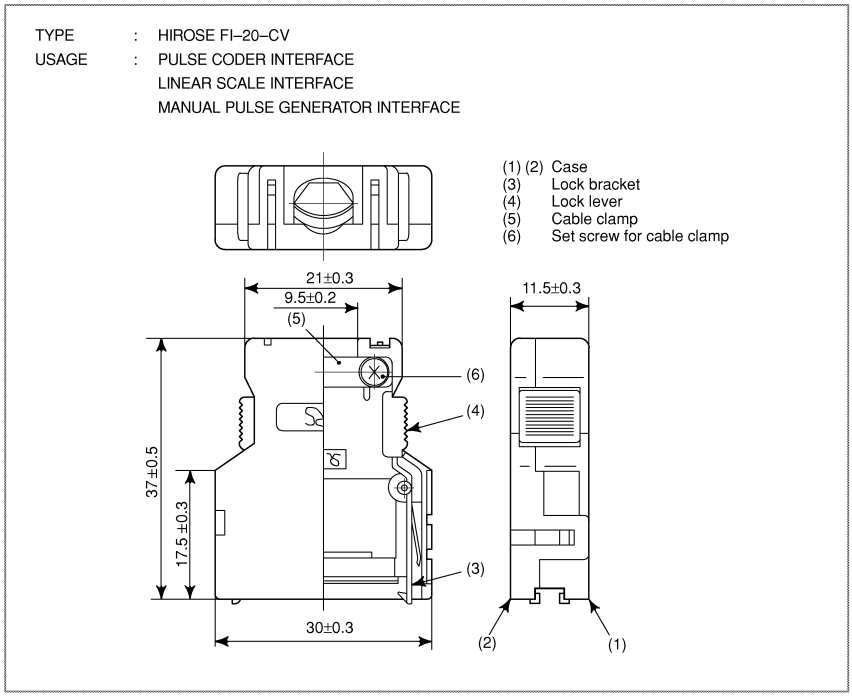

Fig. C2 (b) Connector case (FI type manufactured by HIROSE ELECTRIC)

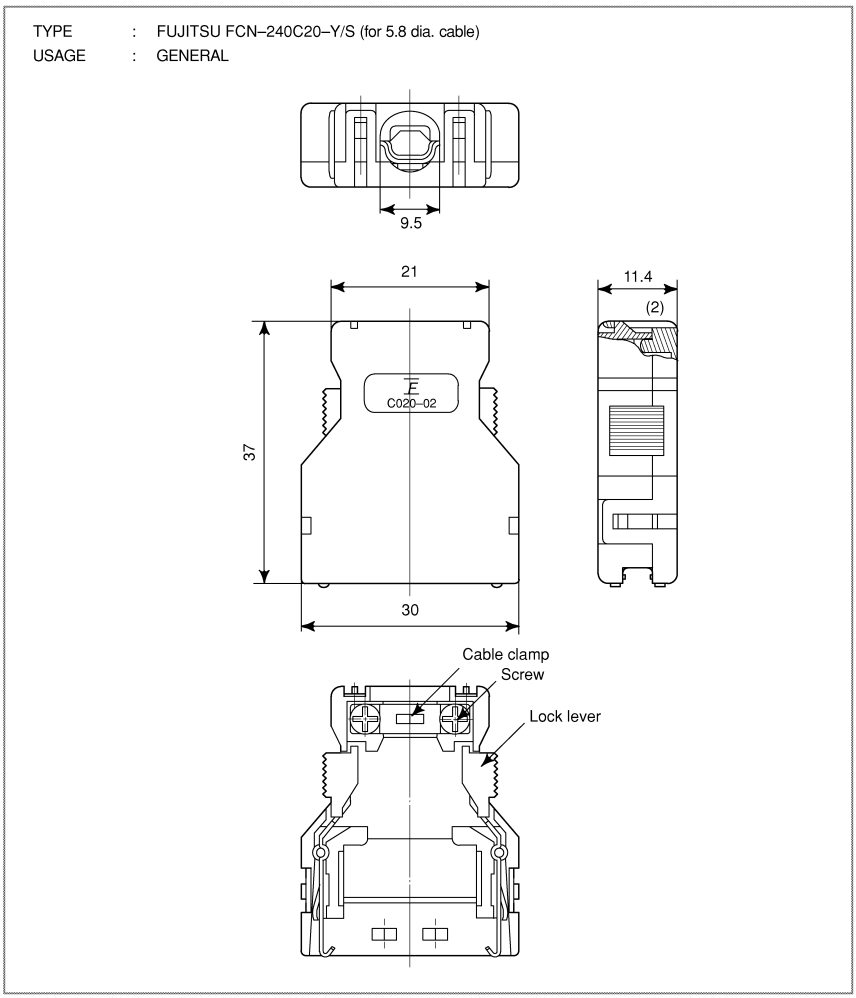

Fig. C2 (c) Connector case (manufactured by FUJITSU COMPONENT)

© MyFANUC 195109AB01DC415385669AA015E5BDE5

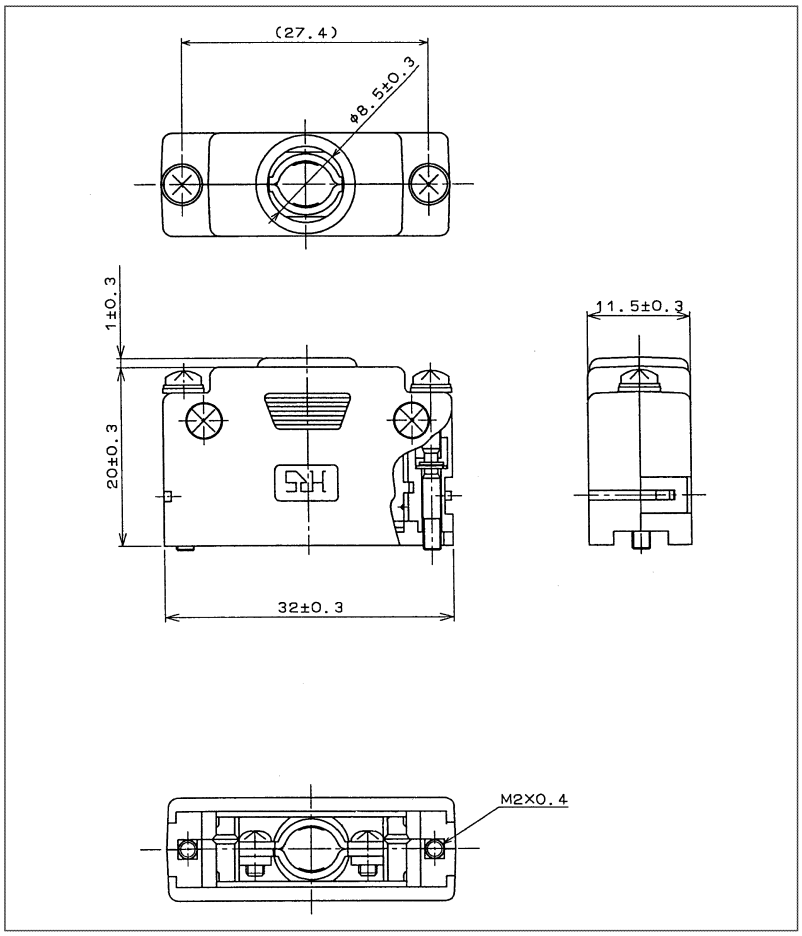

Fig. C2 (d) Connector case (PCR type manufactured by HIROSE ELECTRIC)

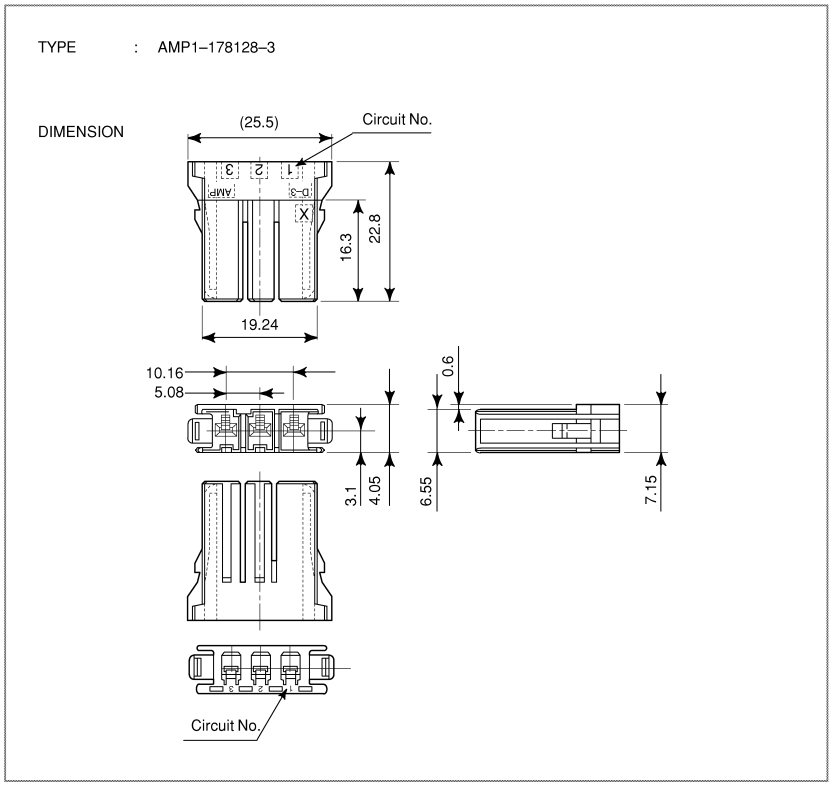

Fig. C3 (a) Connector (1) for servo side manufactured by Tyco Electronics

© MyFANUC 195109AB01DC415385669AA015E5BDE5

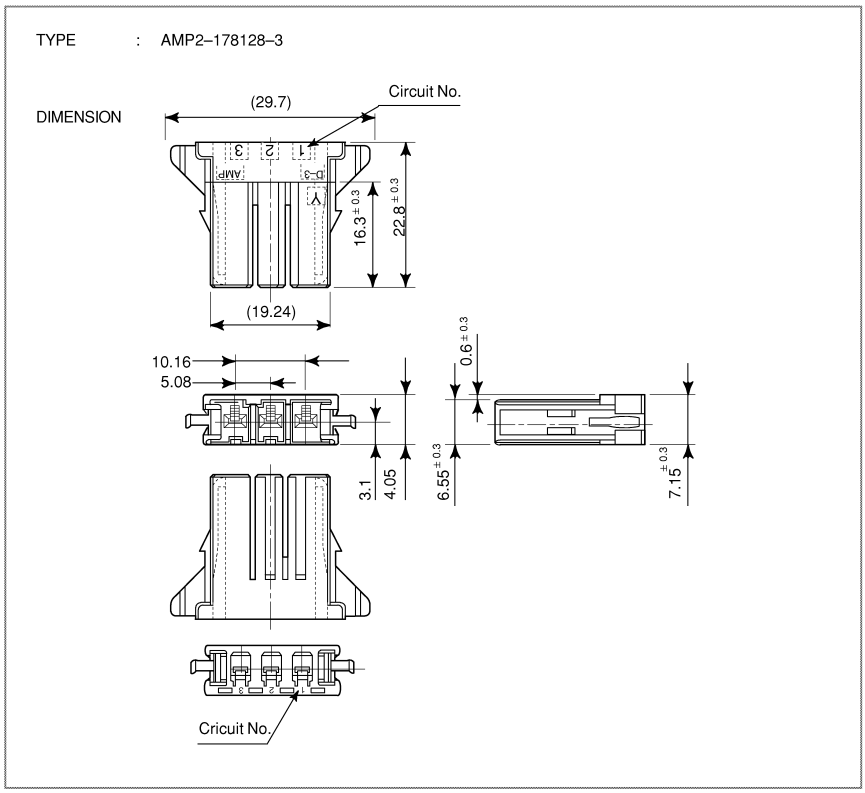

Fig. C3 (b) Connector (2) for servo side manufactured by Tyco Electronics

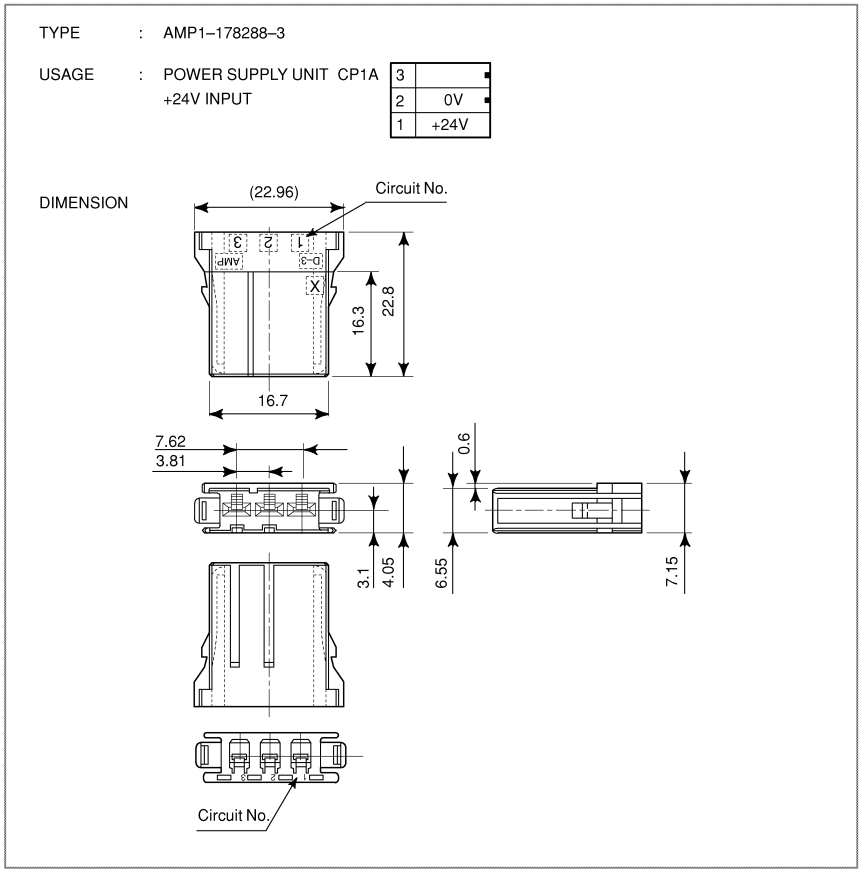

Fig. C3 (c) Connector (3) for +24 V power supply manufactured by Tyco Electronics

© MyFANUC 195109AB01DC415385669AA015E5BDE5

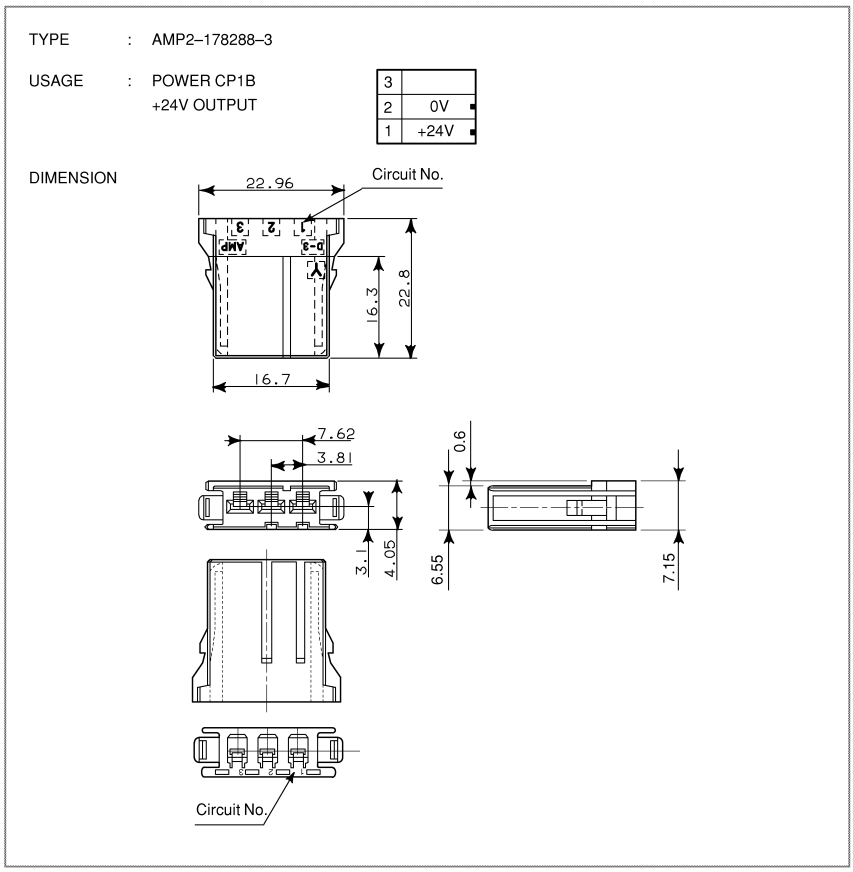

Fig. C3 (d) Connector (4) for +24 V power supply manufactured by Tyco Electronics

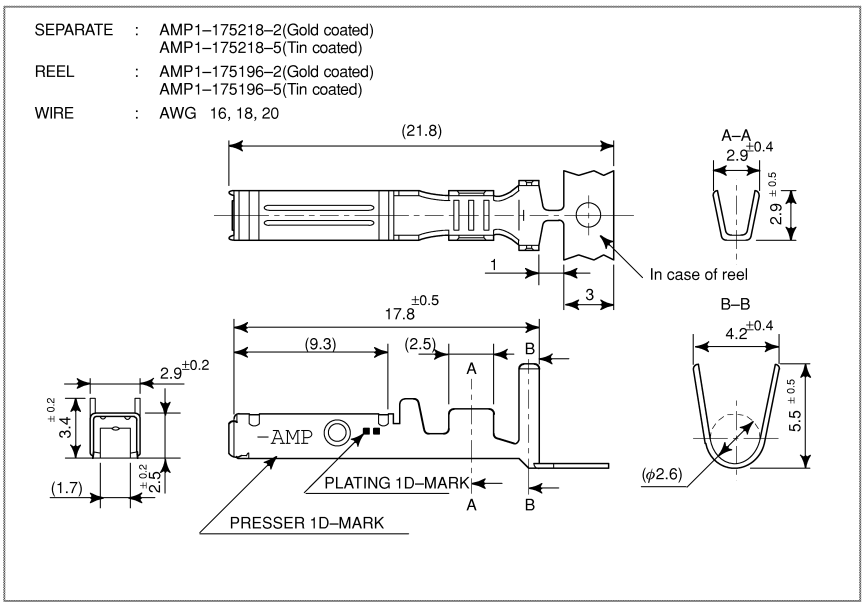

Fig. C3 (e) Contact for connector manufactured by Tyco Electronics

© MyFANUC 195109AB01DC415385669AA015E5BDE5

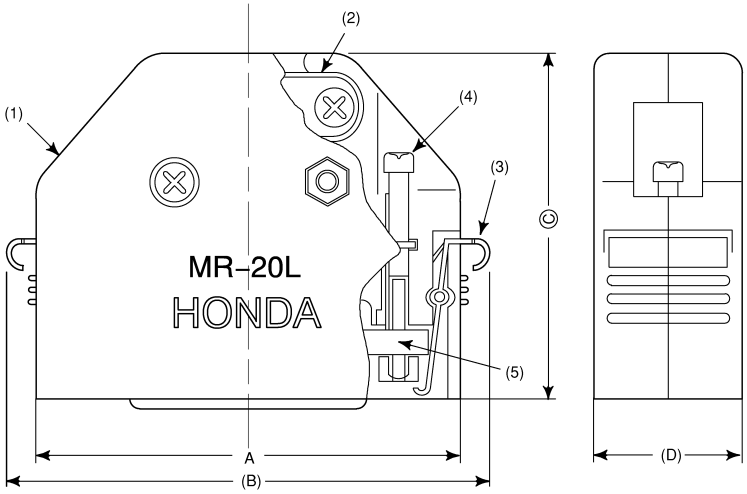

Specification \ Symbol	A	(B)	C	(D)
MR–20LMH (Plug)	39.3	44.9	39.8	17
MR–20LFH (Jack)				
MR–50LMH (Plug)	67.9	73.5	44.8	18
MR–50LFH (Jack)				

Number of terminals
20
50

Symbol	Name
1	Connector cover
2	Cable clamp
3	Stopper
4	Screw for cable clamp
5	Plug (MR–20, 50MH)
	Jack (MR–20, 50FH)

Outer diameter of the cable
MR–20L dia.10mm max
MR–50L dia.16mm max

Fig. C4 (a) Connector (case) manufactured by HONDA TSUSHIN KOGYO

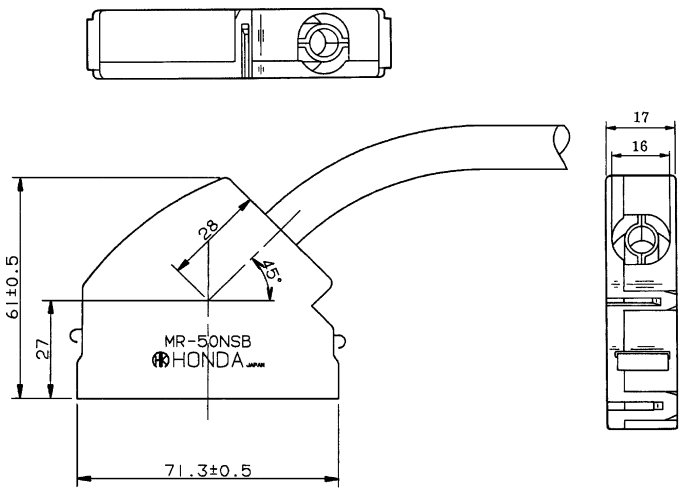

External dimensions of 50–pin connector

Fig. C4 (b) Connector (angled case) manufactured by HONDA TSUSHIN KOGYO

© MyFANUC 195109AB01DC415385669AA015E5BDE5

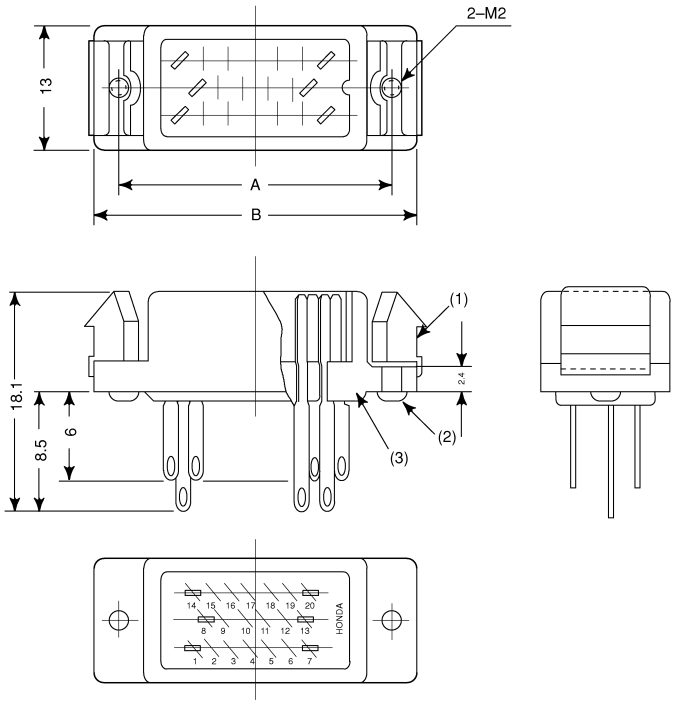

	A	B	Number of terminals
MR–20RMH	32.8	27.8	20
MR–50RHF	61.4	56.4	50

Symbol	Name
1	Cable clamp
2	Screw 2.6dia.×8
3	Connector (MR–20,–50MH)

Fig. C4 (c) Connector (male) manufactured by HONDA TSUSHIN KOGYO

© MyFANUC 195109AB01DC415385669AA015E5BDE5

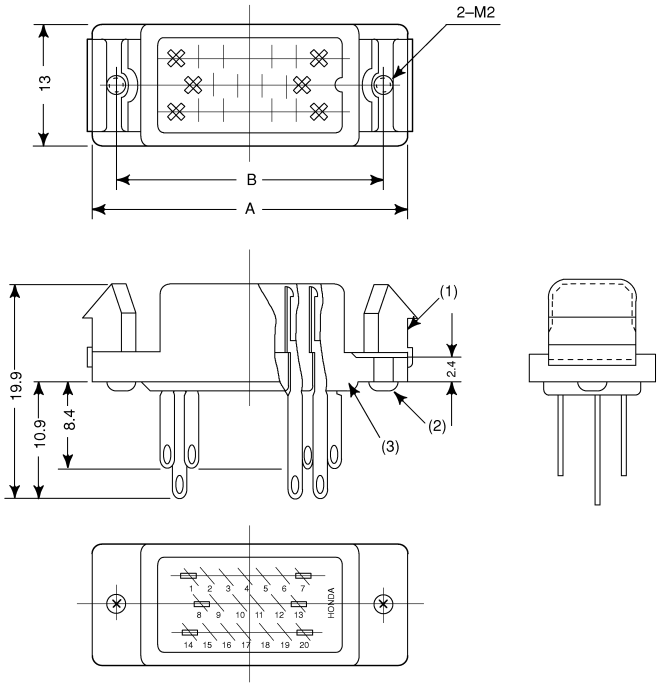

	A	B	Number of terminals
MR–20RMH	32.8	27.8	20
MR–50RMH	61.4	56.4	50

Symbol	Name
1	Cable clamp
2	Screw 2.6dia.×8
3	Connector (MR–20,– 50FH)

Fig. C4 (d) Connector (female) manufactured by HONDA TSUSHIN KOGYO

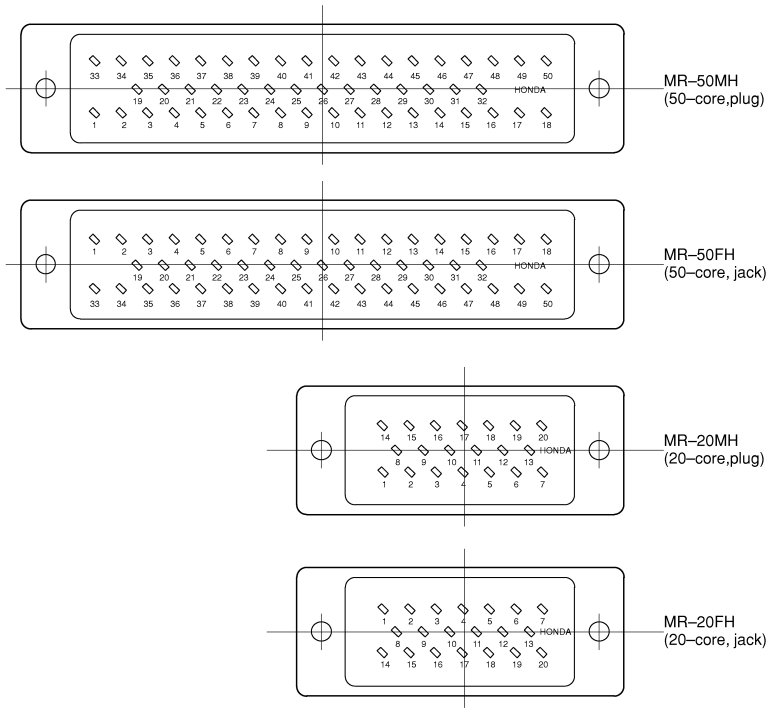

Fig. C4 (e) Connector (terminal layout) manufactured by HONDA TSUSHIN KOGYO

© MyFANUC 195109AB01DC415385669AA015E5BDE5

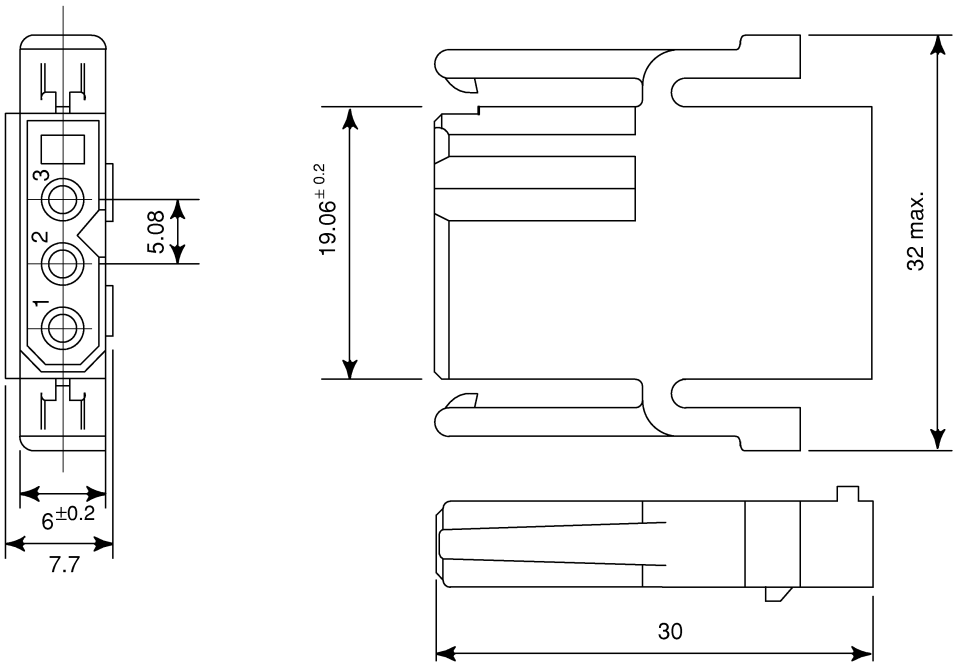

Manufacturer : Burndy Japan Corp.

Name		Specification (Connector maker number)	Remarks
Connector housing for cable		SMS3PNS–5	Brown
Contact	(Crimp type)	RC16M–23T3	For details on tools required for crimp terminals,contact the manufacturer.
	(Solder type)	RC16M–SCT3	

Cables : Cross sectional area : 0.75mm^2(30/0.18)
Insulation diameter : 2.8mm max
Peeling length : 7.2mm

Fig. C5 Connector (3 pins/brown) manufactured by Burndy Japan

© MyFANUC 195109AB01DC415385669AA015E5BDE5

CONNECTOR FOR FLAT CABLE (HIROSE ELEC. CO.)

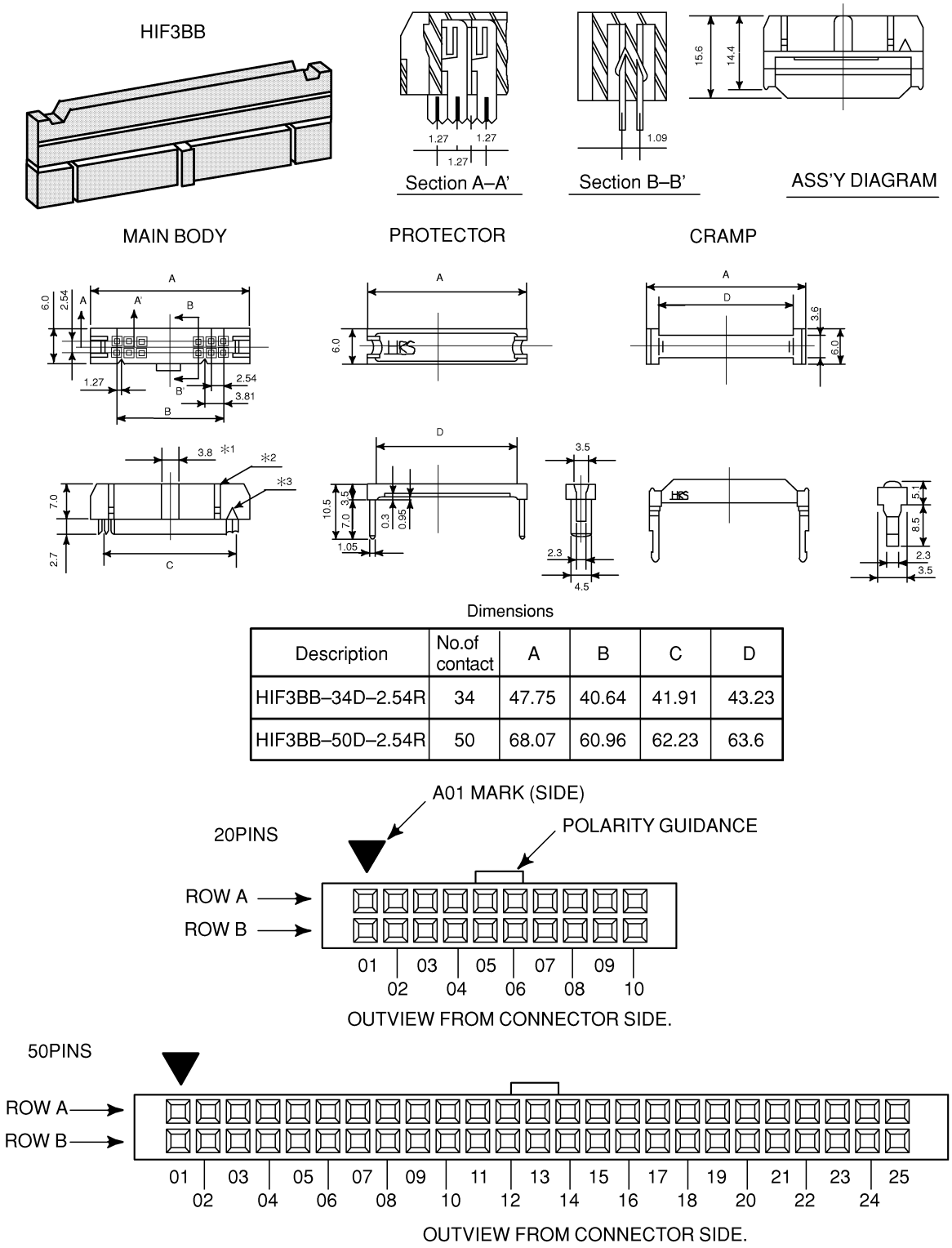

Description	No.of contact	A	B	C	D
HIF3BB–34D–2.54R	34	47.75	40.64	41.91	43.23
HIF3BB–50D–2.54R	50	68.07	60.96	62.23	63.6

Fig. C6 Connector for flat cable manufactured by HIROSE ELECTRIC

© MyFANUC 195109AB01DC415385669AA015E5BDE5

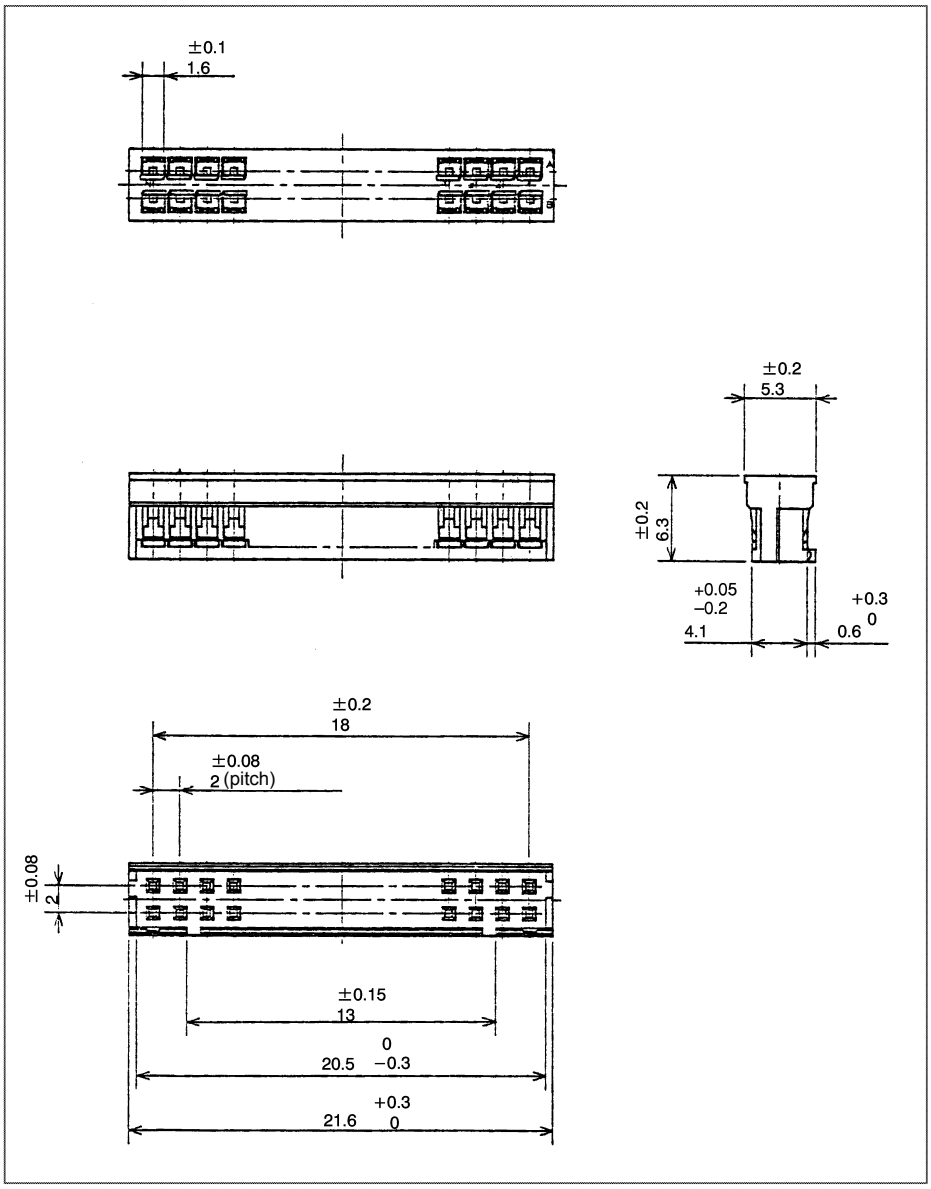

Fig. C7 (a) Connector (for MDI) manufactured by Japan Aviation Electronics

© MyFANUC 195109AB01DC415385669AA015E5BDE5

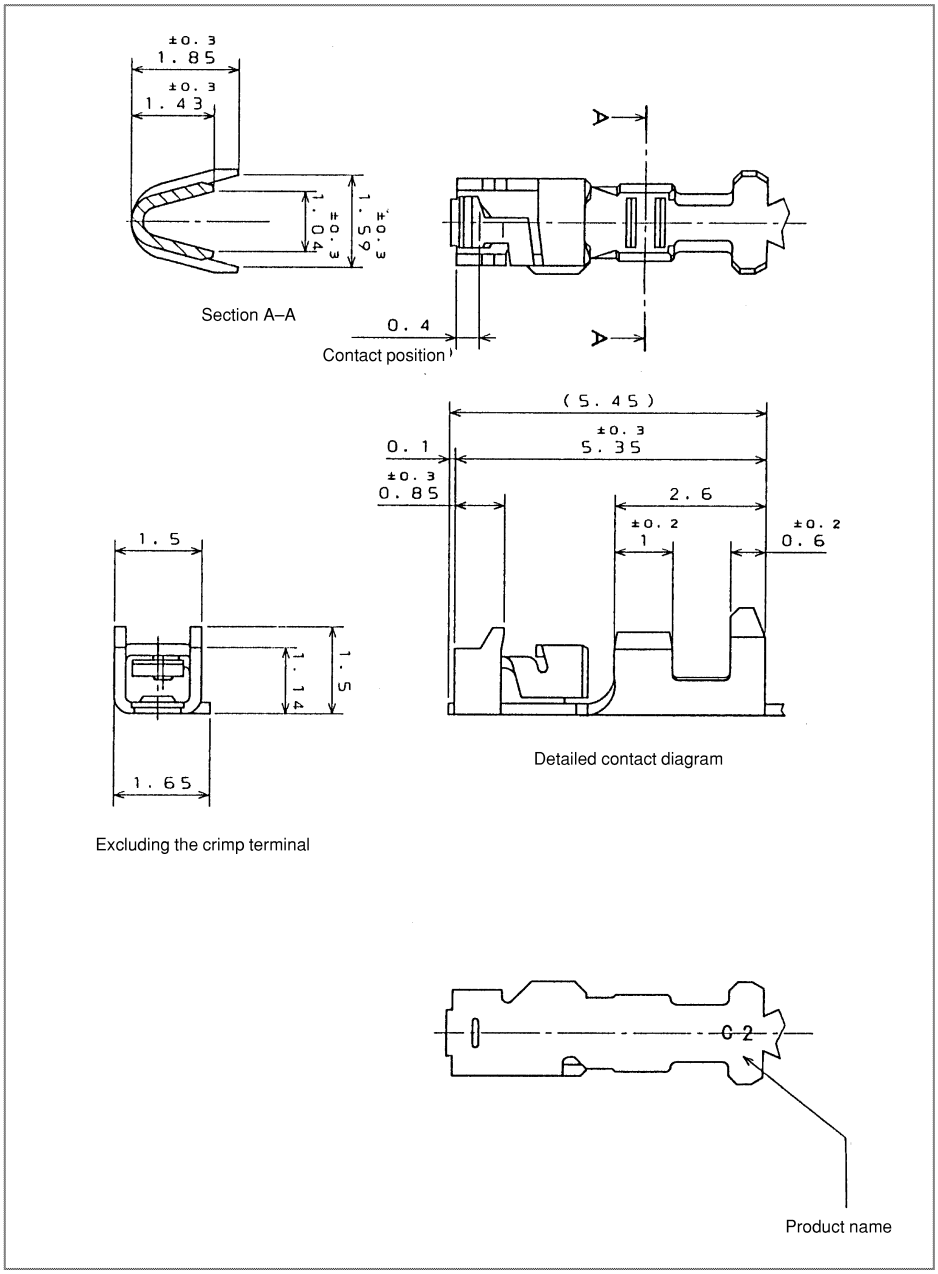

Fig. C7 (b) Contact (for MDI) manufactured by Japan Aviation Electronics

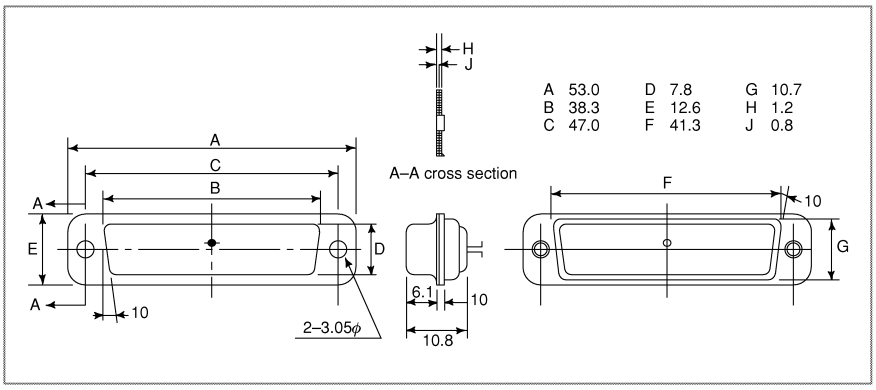

Fig. C8 (a) Punch panel connector for reader/punch interface

© MyFANUC 195109AB01DC415385669AA015E5BDE5

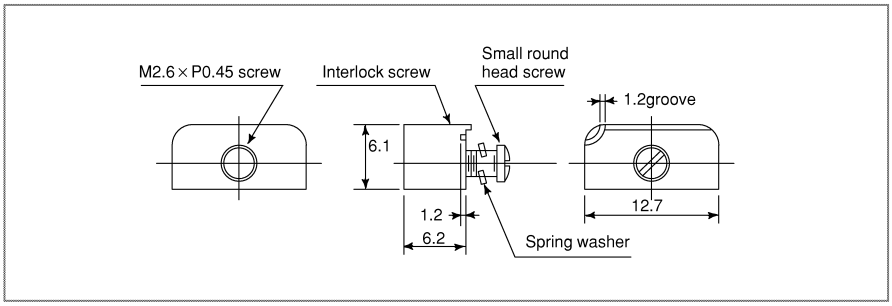

Fig. C8 (b) Locking plate for reader/punch interface connector

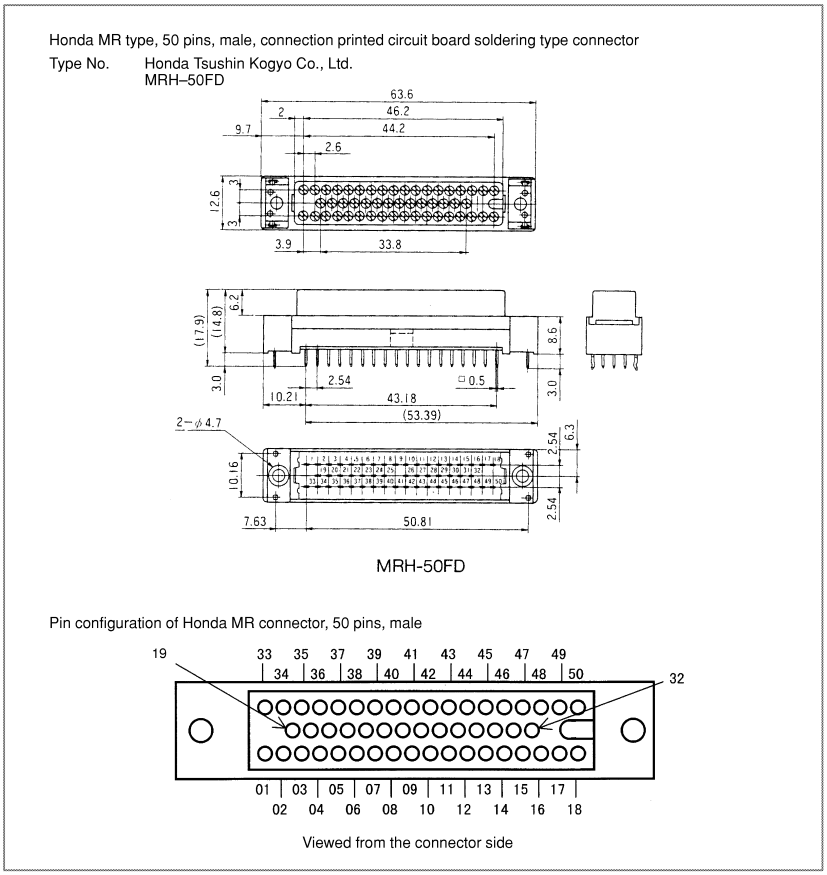

Fig. C9 Connector (for distribution I/O connection printed circuit board) manufactured by HONDA TSUSHIN KOGYO

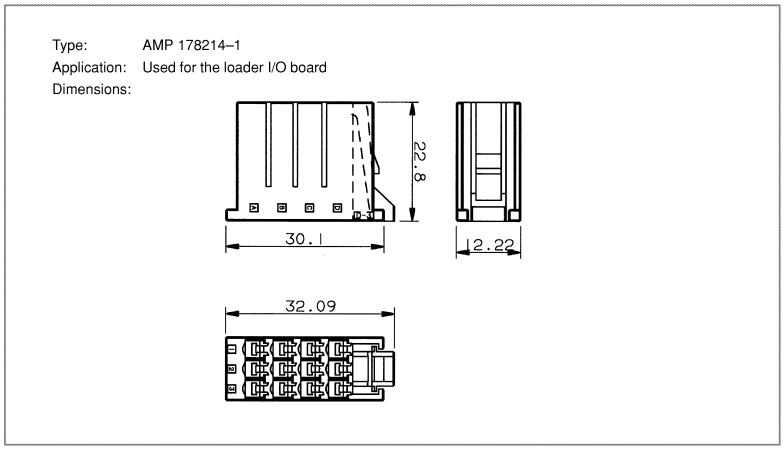

Fig. C10 Connector (for loader I/O board) manufactured by Tyco Electronics

© MyFANUC 195109AB01DC415385669AA015E5BDE5

Type: Faston terminal
Use: Frame grounding
Applicable housing: 17604-1 manufactured by Tyco Electronics or
FVDDF2-250B TYPE Ⅰ manufactured by J.S.T. Mfg.

Dimensions:

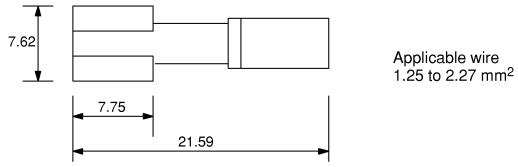

Fig. C11 Faston terminal

© MyFANUC 195109AB01DC415385669AA015E5BDE5

B 20-PIN INTERFACE CONNECTORS AND CABLES

B.1 BOARD-MOUNTED CONNECTORS

B.1.1 Vertical-type Connectors

Models: PCR-EV20MDT (Honda Tsushin)
52618-2011 (Molex Japan)

These board-mounted connectors have been specially developed to achieve the high packing density required for FANUC products. As explained in the following subsection, Honda PCR series connectors can be used as cable connectors because the mating mechanism of the newly developed connectors is compatible with that of the Honda PCR series connectors. To support this specification extensively, many connector manufacturers are now developing custom-tailored cable connectors. (Note that these cables cannot be used with screw-fixing cable connector housings.)

B.1.2 Straight and Right-angled Connectors (for Spring and Screw-fixing Connector Housings)

Models: FI80-20P (straight connector) (Hirose Electric)
DF1R020WB1 (straight connector) (Japan Aviation Electronics)
PCR-E20LMDETZ-SL (right-angled connector) (Honda Tsushin)

These connectors are used for the main and option boards. As cable connectors, they are compatible with screw-fixing connector housings as well as the spring locking connector housings.

© MyFANUC 195109AB01DC415385669AA015E5BDE5

B.2 CABLE CONNECTORS

Cable connectors consist of a connector main body and housing. The models listed below are available. Those connectors not marked with an asterisk are currently being mass-produced as manufacturer's standard models. Those marked with an asterisk are produced according to custom specifications by FANUC.

Table B.1 Cable connectors

Use	Type	Manufacture	Connector model	Housing model	Applicable cable outside diameter
General use MDI,IO Link *i*, I/O Link, etc.	Strand wire press-mount type	Honda Tsushin	PCR-E20FA	PCR-V20LA*	ϕ6mm(ϕ5.7 to 6.5)
		Hirose Electric	FI30-20S*	FI-20-CV2*	ϕ6.2mm(ϕ5.5 to 6.5)
		FUJITSU COMPONET	FCN-247J020-G/E	FCN-240C020-Y/S	ϕ5.8mm(ϕ5.5 to 6.5)
		Molex Japan	52622-2011*	52624-2015*	ϕ6.2mm(ϕ5.9 to 6.5)
	Strand wire press-mount type (when a low screw-fixing housing is used)	Hirose Electric	FI30-20S*	FI-20-CV7* (Low screw-fixing housing)	ϕ6.2mm(ϕ5.5 to 6.5)
	Soldering type	Honda Tsushin	PCR-E20FS	PCR-V20LA*	ϕ6mm(ϕ5.7 to 6.5)
		Hirose Electric	FI40B-20S*	FI-20-CV2*	ϕ6.2mm(ϕ5.5 to 6.5)
			FI-40B-20S* (FI40A-20S*)	FI-20-CV5*	ϕ9.2mm(ϕ8.9 to 9.5)
			FI40B-20S*	FI-20-CV6*	ϕ10.25mm(ϕ9.5 to 11.0)
For Pulsecoder, coaxial cable, linear scale, manual pulse generator, etc.	Soldering type	Hirose Electric	FI40B-2015S* (FI40-2015S*)	FI-20-CV*	ϕ8.5mm(ϕ8.0 to 9.0)
			FI40B-20S* (FI40-20S*)	FI-20-CV5*	ϕ9.2mm(ϕ8.9 to 9.5)
			FI40B-20S*	FI-20-CV6*	ϕ10.25mm(ϕ9.5 to 11.0)
		Honda Tsushin	PCR-E20FS	PCR-V20LA*	ϕ6mm(ϕ5.7 to 6.5)

B.2.1 Strand Wire Press-mount Connector

With this connector, #28AWG wires are press-connected to each pin at the same time. The cost of producing a cable/connector assembly with this connector model is much lower than with connectors designed for crimping or soldering.

Connector model (manufacturer)	Supplementary description
FI-20-CV7 (Hirose Electric)	Low connector housing, more compact than conventional models. The housing can be fastened to a board-mounted connector by means of a screw lock. It is intended mainly for connecting the board-mounted connectors used on the main and option boards of the LCD-mounted type (see Section B.1.2). Note that this connector housing cannot be used for conventional board-mounted connectors.

© MyFANUC 195109AB01DC415385669AA015E5BDE5

B.2.2 Soldering Type Connector

Details of soldering type connectors and their housings are summarized below.

Table B.4 Details of soldering type connectors and housings

Connector model (manufacturer)	Supplementary description
PCR-E20FS (Honda Tsushin)	Soldering type connector for general signals. This is suitable for producing cable assemblies in small quantities, as well as on-site.
FI40-20S (Hirose Electric)	Equivalent to Honda Tsushin PCR-E20FS
FI40B-20S (Hirose Electric) (formerly, FI40A-20S)	Has the same number of pins as the FI40-20S, but features a wider soldering pitch, facilitating soldering and enabling the use of thicker wires. Its reinforced pins allow wires as thick as #17AWG to be soldered to the FI40B-20S (wires no thicker than #20AWG can be used with the FI40A-20S). Note, however, that a thick wire, such as #17AWG, should be used with a more robust housing like the FI-20-CV6.
FI40B-2015S (Hirose Electric) (formerly, FI40-2015S)	Features a wider soldering pitch, attained by using the space provided by thinning out some pins. Also features tougher pins, compared with its predecessor, the FI40-2015S. These pins can be soldered to wires as thick as #17AWG, provided that the cable diameter does not exceed 8.5 mm.

Housing model (manufacturer)	Supplementary description
FI-20-CV5 (Hirose Electric)	Should be used with the FI40B-20S. This is a plastic housing designed for use with a cable that is 9.2 mm in diameter.
FI-20-CV6 (Hirose Electric)	Should be used with the FI40B-20S. This housing, however, can be used with a thicker cable (such as 10.25 mm) than is possible with the FI-20-CV5. Its components are die cast.

In addition to the combinations shown in Table B.1, Hirose soldering-type connectors can be combined with the housings listed below. Ensure that the diameter of the cable used with each housing satisfies the requirements of that housing.

Connector model		Housing model (applicable cable diameter)
FI40B-2015S (formerly FI40-2015S)	⇔	FI-20-CV (8.5 mm in diameter) only
FI40-20S FI40B-20S (formerly FI40A-20S)	⇔	FI-20-CV2 (ϕ6.2mm) FI-20-CV5 (ϕ9.2mm) FI-20-CV6 (ϕ10.25mm)

Those listed on the left can be used.

© MyFANUC 195109AB01DC415385669AA015E5BDE5

B.3 RECOMMENDED CONNECTORS, APPLICABLE HOUSINGS, AND CABLES

Table B.5 Recommended connectors, applicable housings, and cables

Connector name referenced in the Connection Manual	FANUC-approved connector (manufacturer)	FANUC-approved housing (manufacturer)	Compatible cable (cable diameter) FANUC development Ordering specification	Remarks
PCR-E20FA Strand wire press-mount type	PCR-E20FA (Honda Tsushin)	PCR-V20LA (Honda Tsushin)	A66L-0001-0284#10P (6.2 mm in diameter)	Plastic housing
	FI30-20S (Hirose Electric)	FI-20-CV2 (Hirose Electric)		Metal housing
	FCN-247J020-G/E (FUJITSU COMPONET)	FCN-240C020-Y/S (FUJITSU COMPONET)		Plastic housing
	52622-2011 (Molex Japan)	52624-2015 (Molex Japan)		Plastic housing
PCR-E20FA Strand wire press-mount type	FI30-20S (Hirose Electric)	FI-20-CV7 (Hirose Electric)		Plastic housing
PCR-E20FS Soldering type	PCR-E20FS (Honda Tsushin)	PCR-V20LA (Honda Tsushin)		Plastic housing
	FI40-20S (Hirose Electric)	FI-20-CV2 (Hirose Electric)		Plastic housing
FI40B-2015S (formerly I40-2015S) 15-pin soldering type	FI40B-2015S (formerly FI40-2015S) (Hirose Electric)	FI-20-CV (Hirose Electric)	A66L-0001-0286 (Note) A66L-0001-0402 (Note) (8.5 mm in diameter)	Plastic housing
FI40B-20S (formerly FI40A-20S) Soldering type	FI40B-20S (formerly FI40A-20S) (Hirose Electric)	FI-20-CV5 (Hirose Electric)	A66L-0001-0367 A66L-0001-0368 (9.2 mm in diameter)	Plastic housing
	FI40B-20S (Hirose Electric)	FI-20-CV6 (Hirose Electric)	A66L-0001-0403 (Note) (9.8 mm in diameter)	Metal housing

NOTE

As pulse coder cables, the following cables are available: Cable that can be up to 20 m long (A66L-0001-0286), cable that can be up to 30 m long (A66L-0001-0402), and cable that can be up to 50 m (A66L-0001-0403). Cables A66L-0001-0402 and A66L-0001-0403 have not only the same level of oil resistance as conventional cables, but also bending resistance (cable, 100 mm in diameter, capable of withstanding at least 10 million bending cycles), and are UL- and CSA-certified.

© MyFANUC 195109AB01DC415385669AA015E5BDE5

B.3.1 Recommended Connectors

Press-mount type connector assembly tools and jigs

Connector model referenced in the Connection Manual	FANUC-approved connector (manufacturer)	Wire forming tool	Press-mounting tool	Remark
PCR-E20FA	PCR-E20FA (Honda Tsushin)	PCS-K2A	FHPT-918A	
		JGPS-015-1/1-20 JGPS-014	MFC-K1 PCS-K1	(Note 1)
		FHAT-918A		
	FI30-20S (Hirose Electric)	FI30-20CAT	FI30-20/ID	
		FI30-20CAT1	HHP-502 FI30-20GP	
	FCN-247J020-G/S (FUJITSU COMPONET)	FCN-237T-T043/H	FCN-237T-T109/H FCN-247T-T066/H	
		FCN-237T-T044/H		
		FCN-237T-T062/H		
	52622-2011 (Molex Japan)	57829-5000	57830-5000	
		57823-5000	57824-5000	

NOTE
1 Those tools indicated by shading are available from FANUC (specification number A02B-0120-K391).
2 The tools available from each manufacturer are specifically designed for use with the connectors manufactured by that manufacturer.

B.3.2 Applicable Cables

Materials for cable assemblies

Machine tool builders are required to manufacture or procure the materials for the cable assemblies to be used with their products. FANUC recommends the following materials as being suitable for interface connectors. Individual machine tool builders are encouraged to contact each cable manufacturer for themselves, as required.

Material	Use	Constitution	FANUC specification number	Manufacturer	Remark
10-pair cable	General use	0.08mm^2 10-pair	A66L-0001-0284 #10P	Hitachi Cable Oki Electric Cable SHINKO ELECTRIC INDUSTRIES	
12-conductor composite cable	Pulsecoder, linear scale, manual pulse generator	0.5mm^2 6-conductor 0.18mm^2 3-pair	A66L-0001-0286	Hitachi Cable Oki Electric Cable SHINKO ELECTRIC INDUSTRIES	20 m or less
		0.75mm^2 6-conductor 0.18mm^2 3-pair	A66L-0001-0402	Oki Electric Cable	30 m or less Usable on movable parts
		1.25mm^2 6-conductor 0.18mm^2 3-pair	A66L-0001-0403	Oki Electric Cable	50 m or less Usable on movable parts

© MyFANUC 195109AB01DC415385669AA015E5BDE5

10-pair cable

(a) Specifications

Item		Unit	Specifications
Product No.		-	A66L-0001-0284#10P
Manufacturer		-	Hitachi Cable,Ltd. Oki Electric Cable, Co.,Ltd. SHINKO ELECTRIC INDUSTRIES CO., LTD.
Rating		-	60°C 30V : UL2789 80°C 30V : UL80276
Material	Conductor	-	Stranded wire of tinned annealed copper (ASTM B-286)
	Insulator	-	Cross-linked vinyl
	Shield braid	-	Tinned annealed copper wire
	Sheath	-	Heat-resistant oil-proof vinyl
Number of pairs		Pairs	10
Conductor	Size	AWG	28
	Structure	Conductors/mm	7/0.127
	Outside diameter	mm	0.38
Insulator	Thickness	mm	0.1 Thinnest portion : 0.8 (3.1mm)
	Outside diameter (approx.)	mm	0.58
	Core style (rating)	mm	UL15157(80°C , 30V)
Twisted pair	Outside diameter (approx.)	mm	1.16
	Pitch	mm	20 or less
Lay		-	Collect the required number of twisted pairs into a cable, then wrap binding tape around the cable. To make the cable round, apply a cable separator as required.
Lay diameter (approx.)		mm	3.5
Drain wire		Conductors/mm	Hitachi Cable : Not available Oki Electric Cable : Available,10/0.12 SHINKO ELECTRIC INDUSTRIES CO., LTD. : Not available
Shield braid	Element wire diameter	mm	0.12
	Braid density	%	85 or more
Sheath	Color	-	Black
	Thickness	mm	1.0
	Outside diameter (approx.)	mm	6.2
Standard length		m	200
Packing method		-	Bundle
Electrical performance	Electric resistance (at 20°C)	Ω/km	233 or less
	Insulation resistance (at 20°C)	MΩ-km	10 or less
	Dielectric strength (AC)	V/min.	300
Flame resistance		-	Shall pass flame resistance test VW-1SC of UL standards.

© MyFANUC 195109AB01DC415385669AA015E5BDE5

(b) Structure drawing

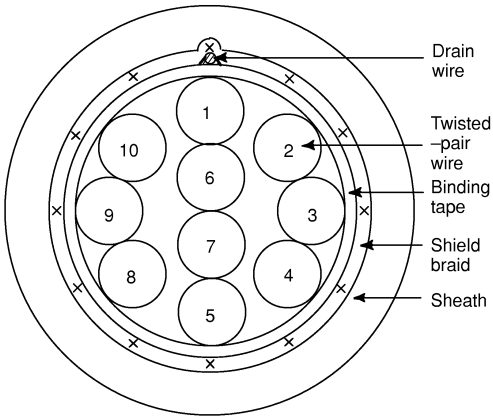

Wire identification table

Pair No.	Insulator color	Dot mark (1 pitch)	Dot mark color	
			First wire	Second wire
1	Orange	–	Red	Black
2	Gray	–	Red	Black
3	white	–	Red	Black
4	Yellow	–	Red	Black
5	Pink	–	Red	Black
6	Orange	– –	Red	Black
7	Gray	– –	Red	Black
8	White	– –	Red	Black
9	Yellow	– –	Red	Black
10	Pink	– –	Red	Black

The numbers assigned to the wires correspond to the numbers in the table at right.

Composite 12-core cable

(a) Specifications

Item		Unit	Specifications	
Product No.		-	A66L-0001-0286	
Manufacturer		-	Oki Cable, Ltd. Hitachi Electric Cable Co., Ltd. SHINKO ELECTRIC INDUSTRIES CO., LTD.	
Rating		-	80°C, 30V	
Material	Conductor, braid-shielded wire, drain wire	-	Strand wire of tinned annealed copper (JIS C3152)	
	Insulator	-	Heat-resistant flame-retardant vinyl	
	Sheath	-	Oil-proof, heat-resistant, flame-retardant vinyl	
Number of wires (wire ons.)		Cores	6 (1 to 6)	6 (three pairs) (7 to 9)
Conductor	Size	mm^2	0.5	0.18
	Structure	Conductors/mm	20/0.18	7/0.18
	Outside diameter	mm	0.94	0.54
Insulator	Standard thickness (The minimum thickness is at least 80% of the standard thickness.)	mm	0.25	0.2
	Outside diameter	mm	1.50	0.94
Twisted pair	Outside diameter	mm		1.88
	Direction of lay	-		Left
	Pitch	mm		20 or less
Lay		-	Twist the wires at an appropriate pitch so the outermost layer is right-twisted, and wrap tape around the outermost layer. Apply a cable separator as required.	
Lay diameter (approx.)		mm	5.7	

© MyFANUC 195109AB01DC415385669AA015E5BDE5

Item		Unit	Specifications	
Drain wire	Size	mm^2	0.3	
	Structure	Wires/mm	12/0.18	
	Outside diameter	mm	0.72	
Shield braid	Element wire diameter	mm	0.12	
	Thickness	mm	0.3	
	Braid density	%	70	
	Outside diameter	mm	6.3	
Sheath	Color	-	Black	
	Standard thickness (The minimum thickness is at least 85% of the standard thickness.)	mm	1.1	
	Outside diameter	mm	8.5Max. 9.0 (Note)	
Standard length		m	100	
Packing method		-	Bundle	
Electrical performance	Electric resistance (at 20°C) (wire nos.)	Ω/km	39.4 (1 to 6)	113 (7 to 9)
	Insulation resistance (at 20°C)	MΩ-km	15	
	Dielectric strength (AC)	V/min.	500	
Flame resistance		-	Shall pass flame resistance test VW-1SC of UL standards.	

NOTE
The maximum outside diameter applies to portions other than the drain wire.

(b) Cable structure
The cable structure is shown below.

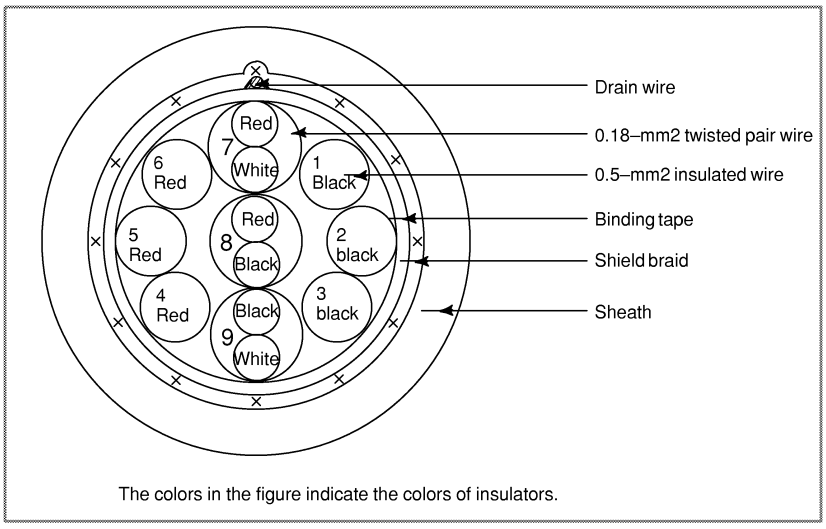

(c) Specifications

Item	Specification			
FANUC specification number	A66L-0001-0402		A66L-0001-0403	
Manufacturer	Oki Electric Cable Co., Ltd.			
	A-conductor	B-conductor	A-conductor	B-conductor

© MyFANUC 195109AB01DC415385669AA015E5BDE5

Item		Specification			
Conductor	Constitution Number of conductors/ mm	16/0.12 (0.18mm^2)	3/22/0.12 (0.75mm^2)	16/0.12 (0.18mm^2)	7/16/0.12 (1.25mm^2)
	Typical outside diameter (mm)	0.55	1.20	0.55	1.70
Insulation (polyester)	Color	White, red, black	Red, black	White, red, black	Red, black
	Typical thickness (mm)	0.16	0.23	0.16	0.25
	Typical outside diameter (mm)	0.87	1.66	0.87	2.20
Pair twisting	Constitution	White-red, white-black, and black-red		White-red, white-black, and black-red	
	Direction of twisting	Left Typical pitch: 20 mm		Left Typical pitch: 20 mm	
Assembling by twisting	Number of strands or conductors	3	6	3	6
	Direction of twisting	Left		Left	
	Taping	Twisting is wrapped with washi, or Japanese paper, tape.		Twisting is wrapped with washi, or Japanese paper, tape.	
	Typical outside diameter (mm)	5.7		6.9	
Braided shielding	Typical strand diameter (mm)	0.14			
	Typical density (mm)	80			
	Drain	A 12/0.18 mm wire is roughly wrapped under braided shielding.			
	Typical outside diameter (mm)	6.4		7.6	
Sheath (polyurethane)	Color	Black (matted)			
	Typical thickness (mm)	1.05		1.1	
	Vertical taping	Vertically taped with washi under sheathing.			
	Outside diameter (mm)	8.5±0.3		9.8±0.3	
Finished assembly	Typical length (m)	100			
	Short size	Basically not approved.			
Finished assembly performance	Rating	80°C 30V			
	Standard	Shall comply with UL STYLE 20236 and CSA LL43109 AWM I/II A 80°C 30V FT-1.			
	Flame resistance	Shall comply with VW-1 and FT-1.			
Electrical performance	Conductor resistance Ω/km (20°C)	103 or lower	25.5 or lower	103 or lower	15.0 or lower
	Insulation resistance MΩ/km (20°C)	1 or higher			
	Dielectric strength V-min	A.C 500			
Insulation performance	Tensile strength N/mm^2	9.8 or higher			
	Elongation %	100 or higher			
	Tensile strength after aging %	At least 70% of that before aging			
	Elongation after aging %	At least 65% of that before aging			
	Aging condition	For 168 hours at 113°C			

© MyFANUC 195109AB01DC415385669AA015E5BDE5

Item		Specification
Sheathing performance	Tensile strength N/mm^2	9.8 or higher
	Elongation %	100 or higher
	Tensile strength after aging %	At least 70% of that before aging
	Elongation after aging %	At least 65% of that before aging
	Aging condition	For 168 hours at 113°C
Cable cross section	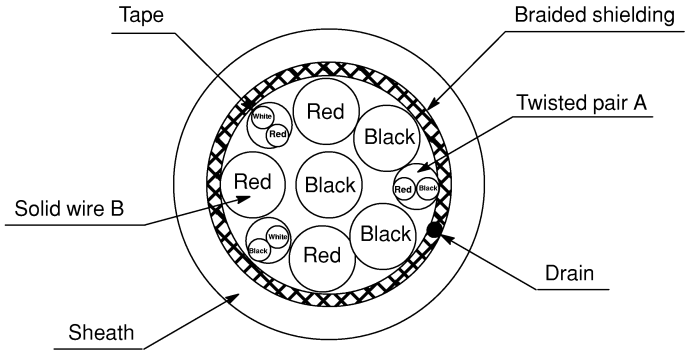	

5-core coaxial cable

(a) Specifications

Item		Unit	Description
Specification		-	A66L-0001-0371
Manufacture		-	HITACHI CABLE CO., LTD.
Number of Conductors		Core	5
Inside Conductor	Size	mm^2	0.14
	Components	Conductors(PCS)/mm	7/0.16
	Material	-	Tin-coated Soft Copper Wire
	Diameter (approx.)	mm	0.48
Insulator	Material (Color)	-	Polyethylene (White), heat-resistant 80°C
	Thickness	mm	0.71
	Diameter (approx.)	mm	1.90
Outside Conductor	Material	-	Tin-coated Soft Copper Wire (Rolled)
	Diameter of Component-Wire	mm	0.08
	Density	%	95 or more
	Thickness	mm	0.2
Jacket	Material	-	Vinyl, heat-resistant 80°C
	Color	-	Black. White. Red. Green. Blue
	Thickness	mm	0.15
	Diameter (approx.)	mm	2.6
Twisted Assembly Diameter (approx.)		mm	7.1
Thickness of Paper Tape		mm	0.05
Shield braid	Wire dia. Material	mm	0.12 (Tin-coaded soft copper wire)
	Density	%	80 or more (typ 82%)
	Thickness	mm	0.3
	Diameter	mm	7.8
Sheath	Material, Color	-	Oil Tight Vinyl (A), Black, heat-resistant 80°C
	Thickness	mm	0.7 (Min. thickness: 0.56)
Finish Diameter		mm	9.2±0.3
Conductor Resistance (20°C)		Ω/km	143 or less

© MyFANUC 195109AB01DC415385669AA015E5BDE5

Item	Unit	Description
Dielectric strength (between internal conductor and external conductor)	-	1000 VAC must be withstood for one minute.
Insulation resistance (between internal conductor and external conductor, 20°C)	MΩ-km	1000 or more
Impedance (10MHz)	Ω	75±5
Standard Capacitance (1MHz)	nF/km	56
Standard Attention	dB/km	53
Weight	kg/km	105
Standard Length	m	200
Package form	-	Bundle

An example of circuit testing 20-pin interface cable

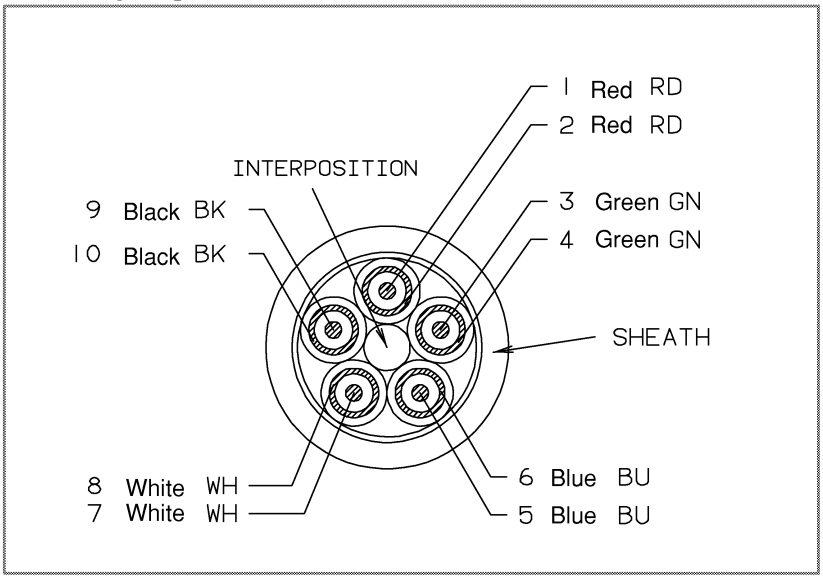

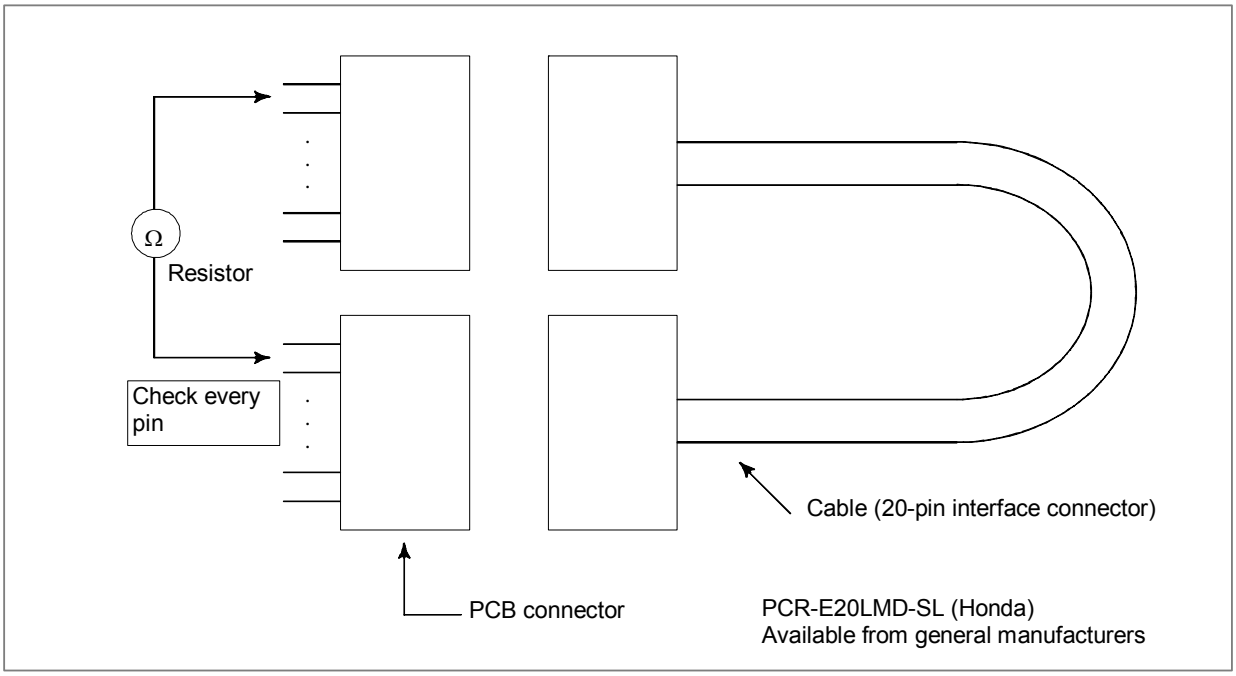

© MyFANUC 195109AB01DC415385669AA015E5BDE5

C CONNECTION CABLE (SUPPLIED FROM US)

Maximum allowable cable length between units

Cable type	Use and condition	Maximum cable length (m)
MDI cable	Control unit-to-MDI unit	20m
I/O Link *i* or I/O Link cable	Electrical cable	10m (Note 2)
	Electrical-to-optical conversion adapter	2m
	Optical fiber cable	200m
Position coder cable	Control unit-position coder	50m
Manual pulse generator cable	Connector panel I/O operator's panel I/O module-to-manual pulse generator	50m
FSSB cable	See Appendix D.	
HSSB cable	See Appendix D.	
RS232-C communication cable	4800 baud or less	100m
	9600 baud	50m
RS-422 communication cable	9600 baud or less	800m
	19.2K baud	50m

NOTE

1 The maximum cable lengths listed above apply only when the respective recommended cables stated in the text are used. If a non-recommended cable is used, the maximum cable length may not be guaranteed. Cables other than those listed above are used between units in the 30*i* series. See the respective descriptions in this manual for details of these cables.

2 This cable can be extended to up to 15 m if it is used within the cabinet.

Purpose	Description	Specification	Length
Power supply cable for I/O unit Control unit (CP1B) ↕ I/O Unit (CP31)	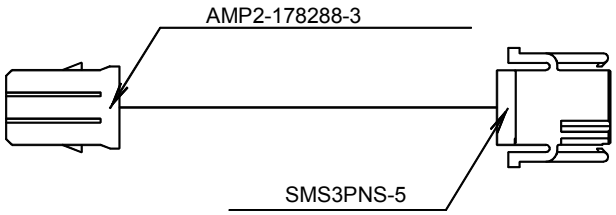	A02B-0236-K843	5m
MDI cable LCD-mounted type control unit or display unit for stand-alone type (CA55) ↕ MDI unit (CK1)	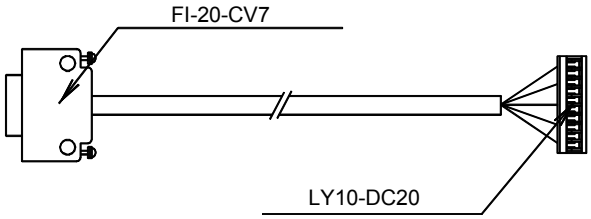	A02B-0236-K813	45cm
		A02B-0236-K814	1.5m

© MyFANUC 195109AB01DC415385669AA015E5BDE5

Purpose	Description	Specification	Length
Manual pulse generator cable (for one unit) Control unit (JA3) ↕ Manual pulse generator terminal board	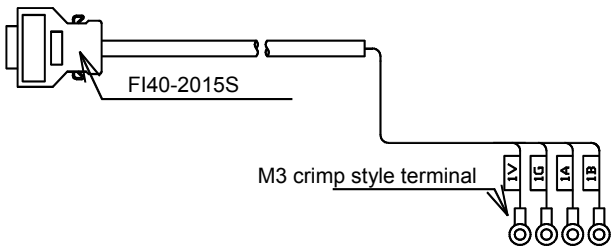	A02B-0120-K847	7m
Manual pulse generator cable (for two units) Control unit (JA3) ↕ Manual pulse generator terminal board	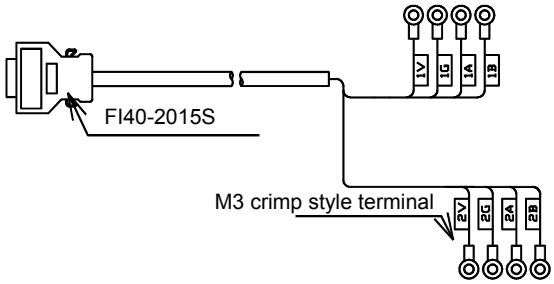	A02B-0120-K848	7m
Manual pulse generator cable (for three units) Control unit (JA3) ↕ Manual pulse generator terminal board	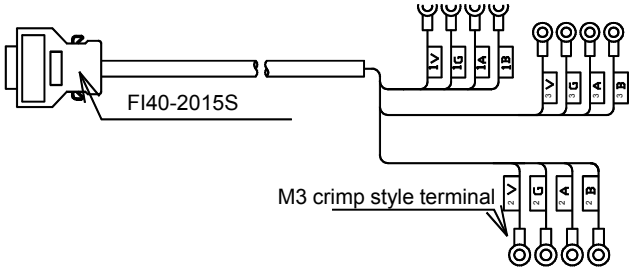	A02B-0120-K841	7m
I/O Link *i* or I/O Link cable Control unit (JD51A) ↕ I/O unit (JD1B) I/O unit (JD1A) ↕ I/O unit (JD1B)	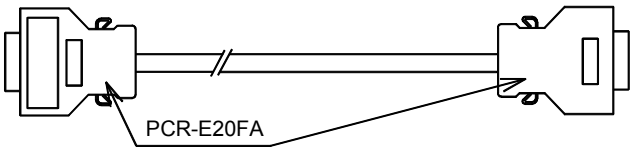	A02B-0120-K842	5m
I/O Link *i* or I/O Link cable Control unit (JD51A) ↕ I/O Link signal divider (2 channels) (JD44B)	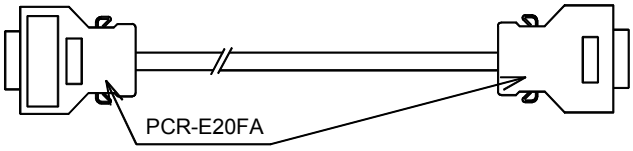	A02B-0236-K848	1m

© MyFANUC 195109AB01DC415385669AA015E5BDE5

Purpose	Description	Specification	Length
I/O Link *i* or I/O Link cable Control unit (JD1A) ↕ I/O Link signal divider (3 channels) (JD1B)	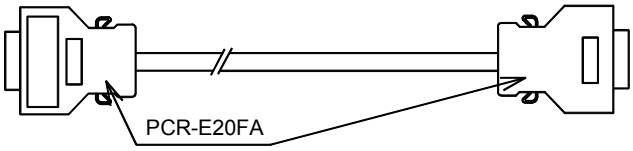	A02B-0303-K849	1m
I/O Link *i* or I/O Link cable between units (For optical I/O Link connection)	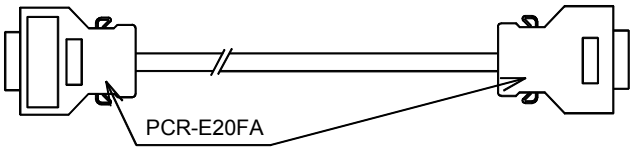	A03B-0807-K803	1m
Control unit power supply cable Stabilized power supply (24 VDC) ↕ Control unit (CP1A)	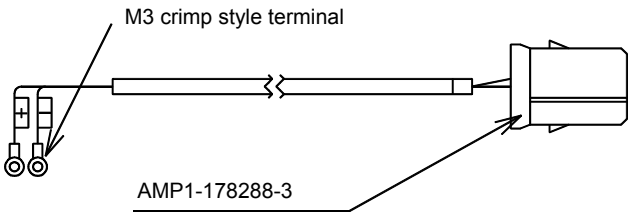	A02B-0124-K830	5m
Ethernet extension connector	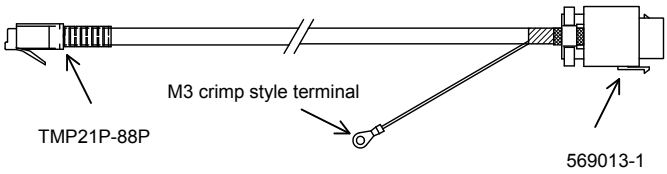	A02B-0323-K850	7m
Battery cable for an external LCD-mounted type control unit Control unit (CA131) ↕ Battery for an external control unit (terminal block)	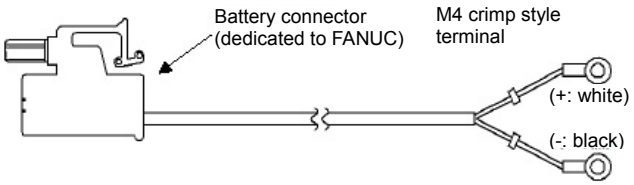	A02B-0323-K103	14m

© MyFANUC 195109AB01DC415385669AA015E5BDE5

D OPTICAL FIBER CABLE

The 30*i* series uses optical fiber cables for the following interfaces. This table lists the usable combinations.

Interface	Junction	Recommended optical fiber cable	Maximum allowable transmission distance	Applicable junction adapter
I/O Link *i* or I/O Link interface *1	None	A66L-6001-0026#L~	200m	
	Exist	A66L-6001-0026#L~	100m *2	A63L-0020-0002
High-speed serial bus (HSSB) interface Between stand-alone control unit and display unit	None	A66L-6001-0023#L~	10m	
	None	A66L-6001-0026#L~	50m	
	None	A66L-6001-0049#L~	100m	
	Exist	A66L-6001-0029#L~	35m *2	A63L-0020-0004
	Exist	A66L-6001-0049#L~	55m *2	A63L-0020-0004
Serial servo bus (FSSB) interface	None	A66L-6001-0023#L~	10m	
	None	A66L-6001-0026#L~	50m *3	
	None	A66L-6001-0049#L~	100m *3	

⚠ CAUTION

1 When an optical fiber cable is used for connection.

2 Optical fiber cables can be relayed at up to one point. The total length of the two cables must not exceed the maximum transmission distance. The two cables must be optical fiber cables of the same type.

3 There are the following restrictions on the cable length for the FSSB:

- Between the control unit and 1st slave unit:
  - When A66L-6001-0026#L~ is used: 50 m
  - When A66L-6001-0049#L~ is used: 100 m
- Between slave units: 40 m
- Total cable length per FSSB line in each control mode:
  HRV2 ..... 500m
  HRV3 ..... 200m
  HRV4 ..... 150m

© MyFANUC 195109AB01DC415385669AA015E5BDE5

Notes on the specifications of optical fiber cable

(1) Supported optical cables

<1> Internal cord type cable ..... A66L-6001-0023#L□R□□□
Length ..... 0.15 to 10m
Code diameter ..... ϕ2.2mm × 2 cords
Tensile strength
Optical fiber cord ..... 7kg per cord
Between optical fiber cord and connector 2kg
Minimum bending radius of optical fiber cord .. 25mm
Operating temperature ..... -20 to 70 °C

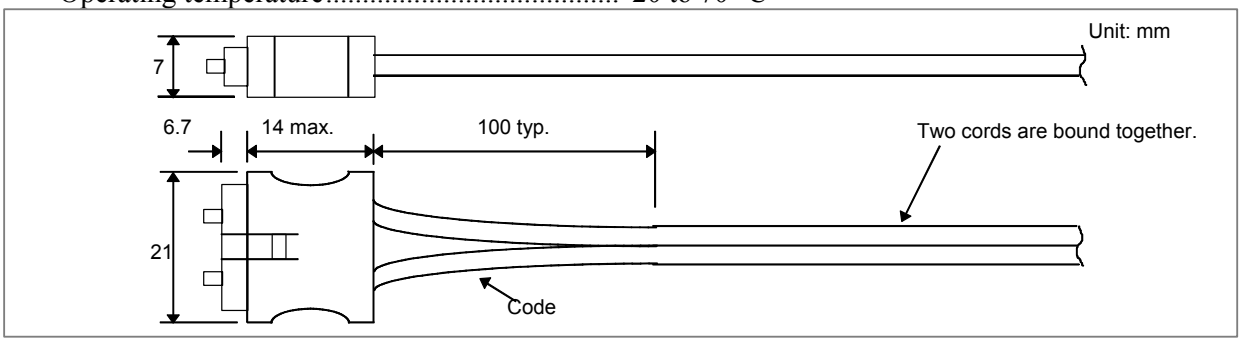

Fig. D (a) External dimensions of internal cord type cable

<2> External type cable ..... A66L-6001-0026#LxRxxx
..... A66L-6001-0029#LxRxxx
..... A66L-6001-0049#LxRxxx
Length ..... 1 to 200m
Optical fiber cord diameter ..... ϕ2.2mm × 2 cords
Diameter of cable with reinforced cover ..... ϕ7.6mm(A66L-6001-0026, -0029)
..... ϕ8.2mm(A66L-6001-0049)
Tensile strength
Cable with reinforced cover 75kg
Optical fiber cord ..... 7kg/1 cord
Between optical fiber cord and connector 2kg
Minimum bending radius of optical fiber cord 25mm
Minimum bending radius of cable with reinforced cover ... 50mm
Bending resistance (cable with reinforced cover) 10 million bending cycles at room temperature (when the bending radius is 100 mm)
Flame resistance ..... Equivalent to UL VW-1
Operating temperature ..... -20 to 70 °C

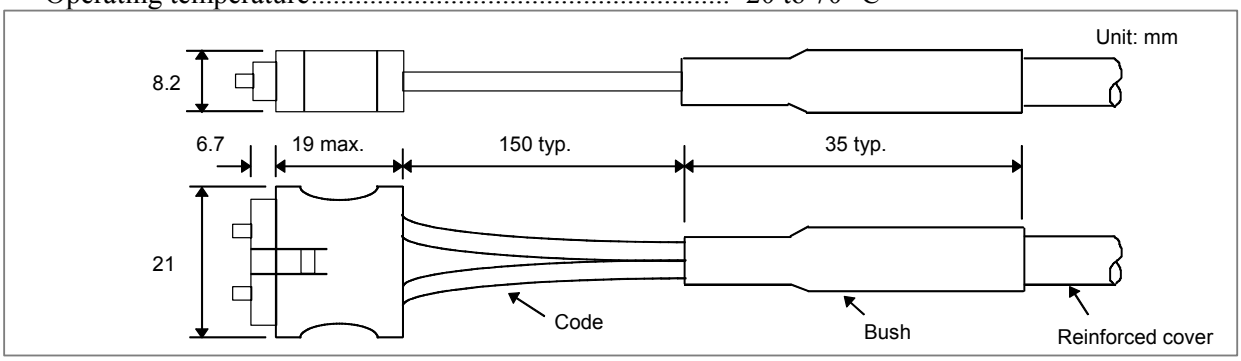

Fig. D (b) External dimensions of external cable

© MyFANUC 195109AB01DC415385669AA015E5BDE5

Table D (a) Standard cable length

Internal cord type cable			External cable	
A66L-6001-0023#			A66L-6001-0026#	
Specification	**Length**	**Remarks**	**Specification**	**Length**
L150R0	0.15m	For 60mm width of amplifier	L1R003	1.0 m
L200R0	0.2 m	For 90mm width of amplifier	L2R003	2.0 m
L250R0	0.25 m	For 150mm width of amplifier	L3R003	3.0 m
L300R0	0.3 m		L5R003	5.0 m
L400R0	0.4 m	For 300mm width of amplifier	L7R003	7.0 m
L500R0	0.5 m		L10R03	10.0m
L1R003	1.0 m		L15R03	15.0m
L2R003	2.0 m		L20R03	20.0m
L3R003	3.0 m		L30R03	30.0m
L5R003	5.0 m		L50R03	50.0m
L7R003	7.0 m		L100R03	100m
L10R03	10.0 m		L200R03	200m

(2) Cable selection

- Always use an external cable when the cable is to be laid outside the power magnetics cabinet or main unit cabinet, where it may be pulled, rubbed, or stepped on.
- Use an external cable when part of the cabling is to be subject to movement.
  For example, when connecting a movable operation pendant box to the power magnetics cabinet using an optical fiber cable, use an external cable because the cable is likely to be bent, pulled, or twisted repeatedly even if frequent system operation is not expected.
  The force likely to be applied when the cable is installed or moved for maintenance purposes does not need to be taken into consideration.
- Use an external cable in locations where sparks or flame are a danger. Although the internal cord type cable (A66L-6001-0023#~) is covered by nonflammable resin, the cover, if exposed to frame for a long time, may melt, allowing the fiber cable inside to burn.
- Use an external cable when the cable is expected to be pulled with considerable force during installation (the force applied to the cable must be within the specified tensile strength limit at all times). For example, even though installing a cable in a cable duct can be regarded as internal cabling, a cable of the appropriate type must be selected according to the tensile force to be applied to the cable during installation.
- Both the internal cord type and external cables have the same oil and heat resistance properties.

© MyFANUC 195109AB01DC415385669AA015E5BDE5

(3) Procuring the cable

All optical fiber cables mentioned above are special cable products with optical connectors, which are designed, produced, and tested to ensure the required system performance and reliability. The users cannot process and produce these cables on their own. The users cannot also cut or connect them after purchase on their own. Purchase cables of the necessary length.
Cables are available from either FANUC or any of the FANUC-approved manufacturers listed in Table D (b). (Purchase A66L-6001-0029#~ and A66L-6001-0049#~ from FANUC, however.)

Table D (b) FANUC-approved cable manufacturers and cable model numbers (retail)

<1> Internal cord type cable : A66L-6001-0023#L□R□□□

Manufacturer	Model number	Remark
Tyco Electronics	*-353373-*	
Japan Aviation Electronics Industry, Ltd.	PF-2HB209-**M-F-1	** indicates the cable length (m).
Hirose Electric Co., Ltd.	H07-P22-F2VCFA-**	** indicates the cable length (m).

<2> External Cable : A66L-6001-0026#L□R□□□

Manufacturer	Model number	Remark
Tyco Electronics	*-353199-*	
Japan Aviation Electronics Industry, Ltd.	CF-2HB208-**M-F-1	** indicates the cable length (m).
Hirose Electric Co., Ltd.	H07-P22-F2NCFA-**	** indicates the cable length (m).
Oki Electric Cable Co., Ltd.	OPC201HPXF-**MB	** indicates the cable length (m).

(4) Handling precautions

<1> Protection during storage

When the electrical/optical conversion module mounted on the printed circuit board and the optical fiber cable are not in use, their mating surfaces must be protected with the lid and caps with which they are supplied. If left uncovered, the mating surfaces are likely to become dirty, possibly resulting in a poor cable connection.

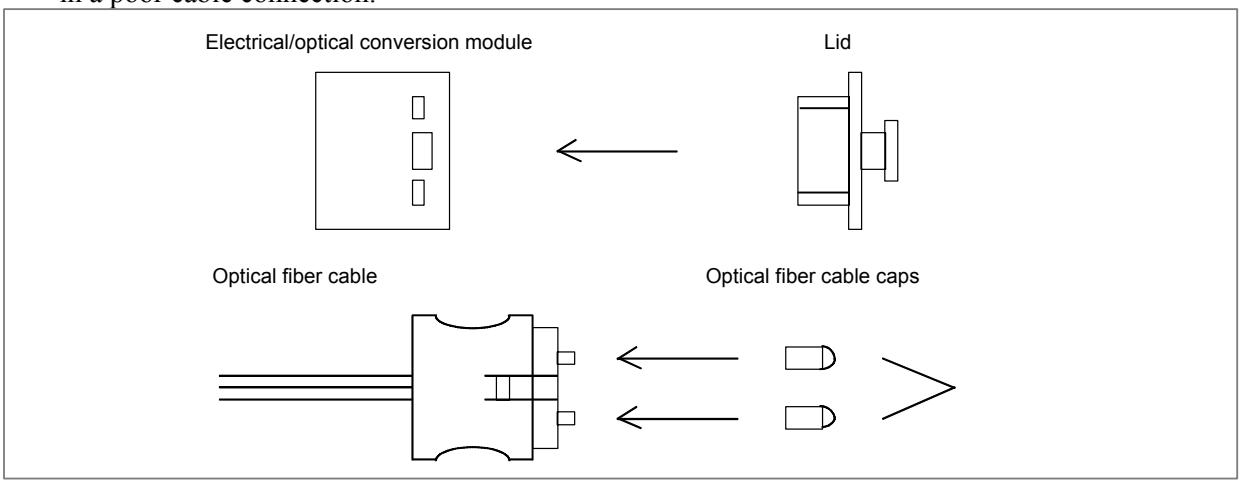

Fig. D (c) Protection of electrical/optical conversion module and optical fiber cable (when not in use)

<2> Optical fiber cable

- Make sure that the bending radius and tensile strength of the cable are always within their ranges described in the specifications (see the first item), regardless of whether the cable is stored or routed and whether operation is in progress or not.
- Although the reinforcing cover of the external cable has sufficient mechanical strength, be careful not to drop heavy objects on the cable.

© MyFANUC 195109AB01DC415385669AA015E5BDE5

- Grasp the optical connector firmly when connecting or disconnecting the cable. Do not pull on the optical fiber cord itself. (The maximum tensile strength between the fiber cord and connector is 2 kg. Applying greater force to the cord is likely to cause the connector to come off, making the cable unusable.)
- Once connected, the optical connector is automatically locked by the lock levers on its top. To remove the connector, release the lock levers and pull the connector.
- Although optical connectors cannot be connected in other than the correct orientation, always take note of the connector's orientation before making the connection.
- Before installing an external cable, fix either a wire with a hook or a tension member to the reinforcing cover of the optical connector and pull the wire or tension member, as shown in Fig. D (d). This is done to prevent a tensile force from being applied between the fiber cord and connector. If no tensile force is applied between the fiber cord and connector when installing the cable, you can hold the reinforcing cover of the connector directly and pull it. In the case of an internal cord, which does not have a reinforcing cover, apply the same protective measures, as instructed in Fig. D (d), for that portion of the cable where the two cords are bound together, in order to prevent a tensile force from being applied between the fiber cord and connector. In the same way as for an external cable, if no tensile force is applied between the fiber cord and connector during installation, you can hold the shielded part of the cable directly and pull it. Because the combined tensile strength of the two cords is only 14 kg, however, avoid applying too great a force to the cable during installation, regardless of whether you have taken the protective measures.

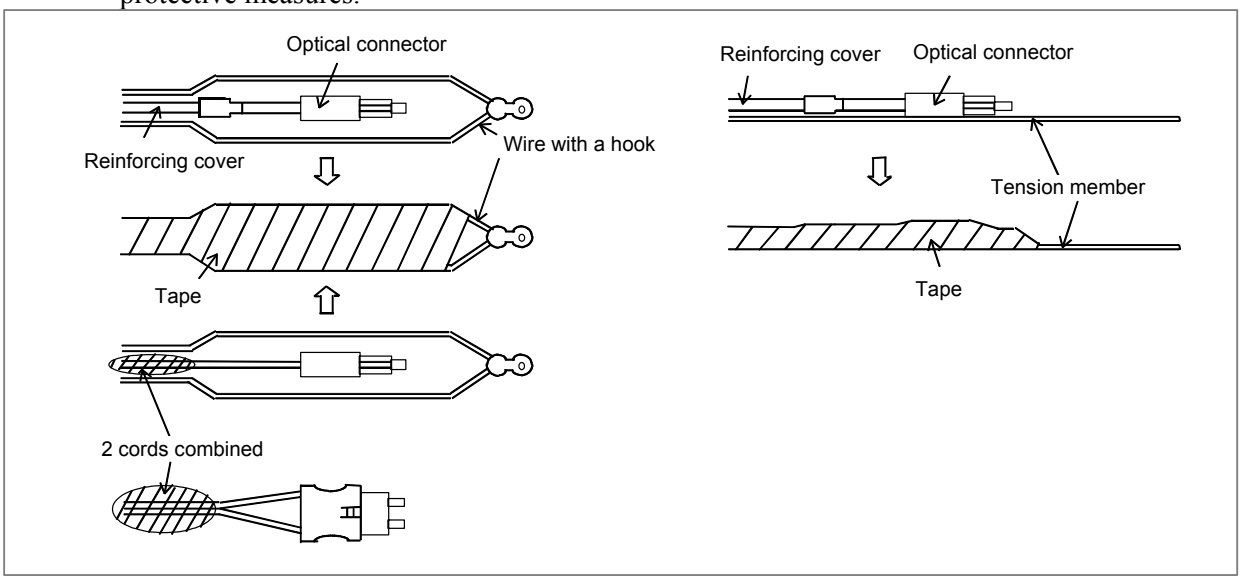

Fig. D (d) Prior to installing a cable

- Take care to keep both parts of the optical connector (cable side and PCB side) clean. If they become dirty, wipe them with tissue paper or absorbent cotton to remove dirt. The tissue paper or absorbent cotton may be moistened with ethyl alcohol. Do not use any organic solvent other than ethyl alcohol.
- Fix the reinforcing cover of the external cable or the cord binding portion of the internal cord type cable by using a cable clamp, as shown in Fig. D (e), to prevent the weight of the optical fiber cable from being applied directly to the connecting part of the optical connector.

(Recommended cable clamp)	Recommended cable clamps are listed below. Use a clamp that grasps the optical fiber cable lightly; the clamp should not apply excessive pressure to the cable.
For an external cable	CKN-13SP (with sponge) (Kitagawa Industry Co., Ltd.)
For an internal cord type cable	MN-1 (Kitagawa Industry Co., Ltd.)

© MyFANUC 195109AB01DC415385669AA015E5BDE5

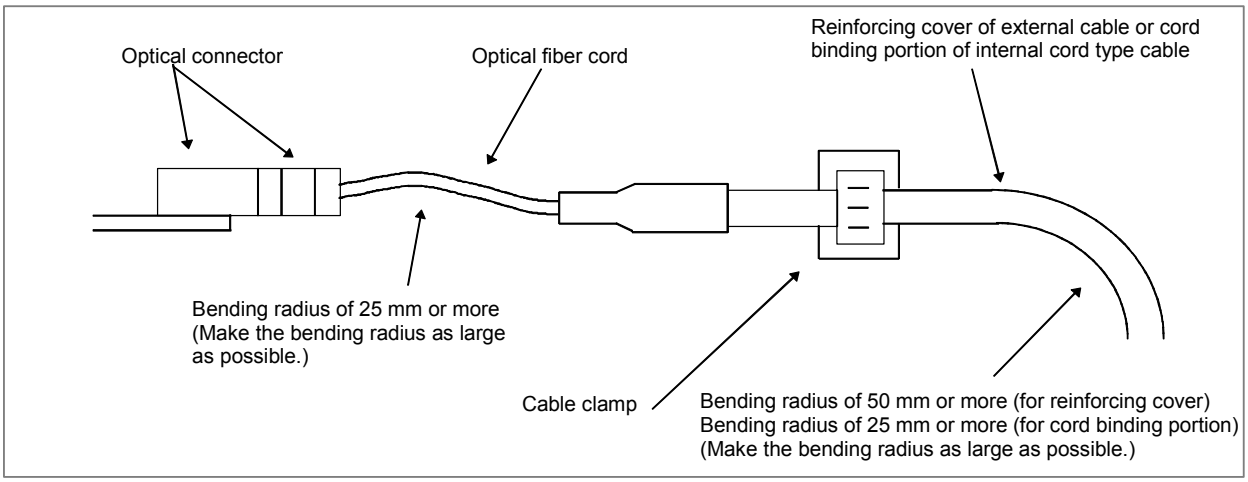

Fig. D (e) Fixing the optical fiber cable with a clamp

- Any superfluous portion of the cable may be wound into loops. Should this prove necessary, make sure the diameter of each loop is at least 150 mm (for an external cable) or at least 100 mm (for an internal cord type cable). Winding the cable into smaller loops may produce sharp curves that exceed the specified bending radius limit without the user being aware. Such bending can result in a greater transmission loss, ultimately leading to an optical communication failure.
- When using a nylon band (cable tie) as a cable clamp, follow the instructions given below. Also, take care not to apply a bending force to one particular part of the cable when fixing it with a clamp. Failing to clamp the cable correctly may cut or damage it.

  (External cable)

  Do not clamp the uncovered portion of the cable with a nylon band. When clamping the cable by the reinforcing cover, the clamping force is not an important factor to consider. However, ensure that the clamping force is as small as possible to ensure that the reinforcing cover is not deformed by the clamping. If possible, the clamping force should be 5 kg or less.

  (Internal cord type cable)

  Lightly clamp the optical able with a nylon band so that the cable shield is not deformed. If possible, the clamping force should be 1 or 2 kg (make sure that no force is applied to the cable). Due care is required when clamping the internal cord type cable because its cable shield is weaker than the reinforcing cover of the external cable.

© MyFANUC 195109AB01DC415385669AA015E5BDE5

(5) Optical fiber cable relay of I/O Link *i* or I/O Link

When used for the I/O Link *i* or I/O Link application, optical fiber cables can be connected by using an optical fiber adapter, as follows.

(a) External view of an optical fiber adapter

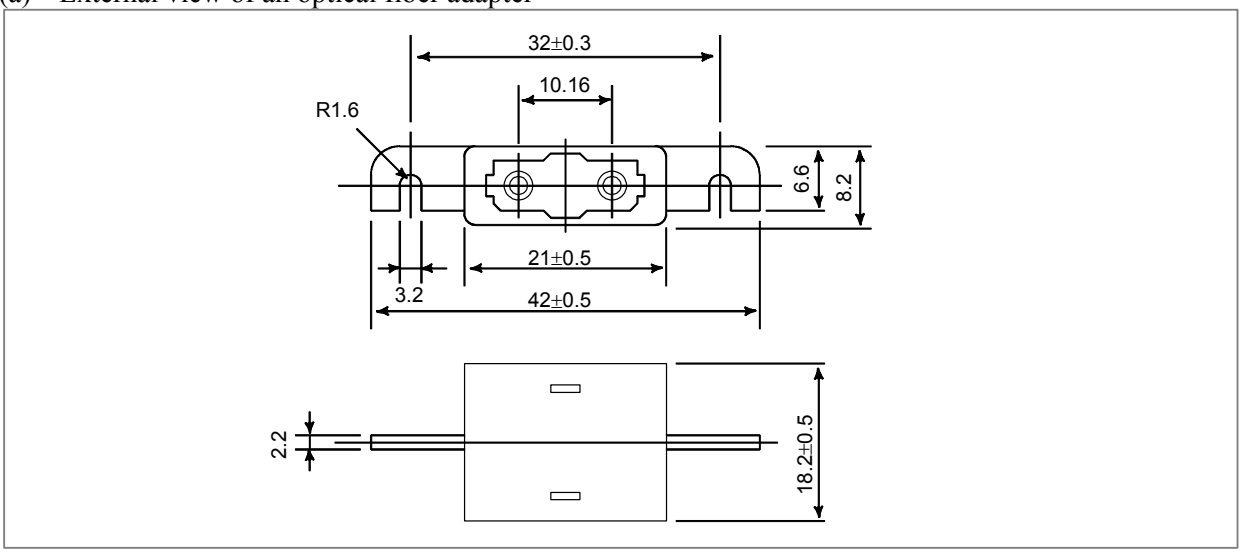

(b) Example of the use of an optical fiber adapter

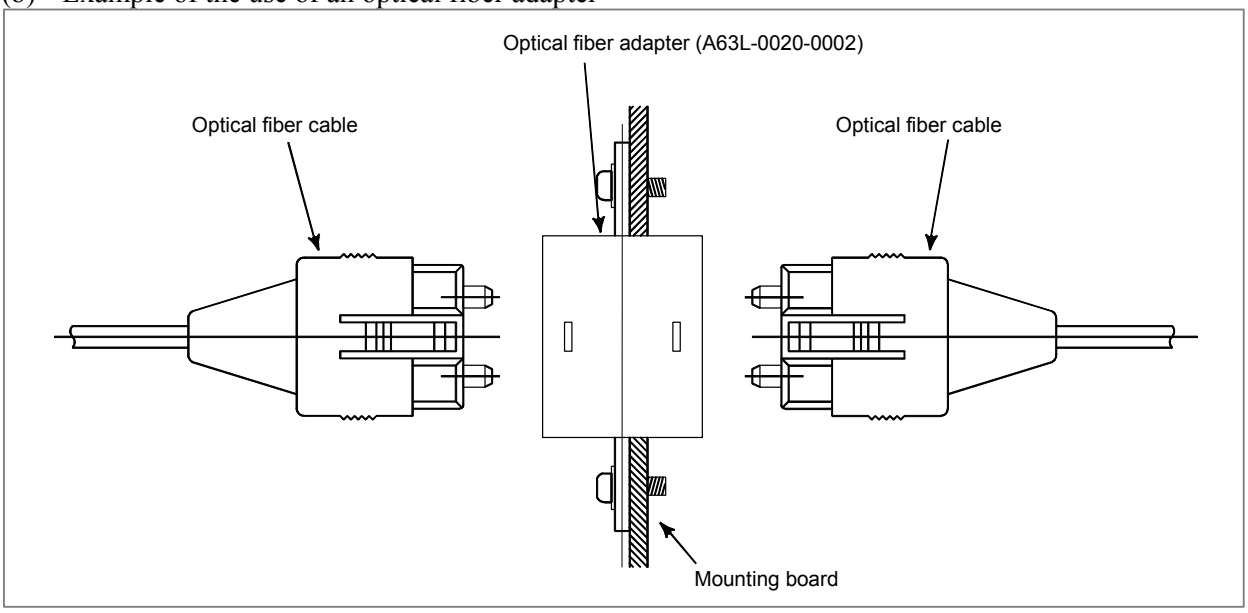

NOTE
Only one relay point is permitted.

© MyFANUC 195109AB01DC415385669AA015E5BDE5

(6) Optical fiber cable relay of FANUC high-speed serial bus

With the high-speed serial bus, special low-loss optical fiber cables can be connected by using a special low-loss optical relay adapter as an optical fiber relay adapter.

(a) External view of the low-loss optical relay adapter

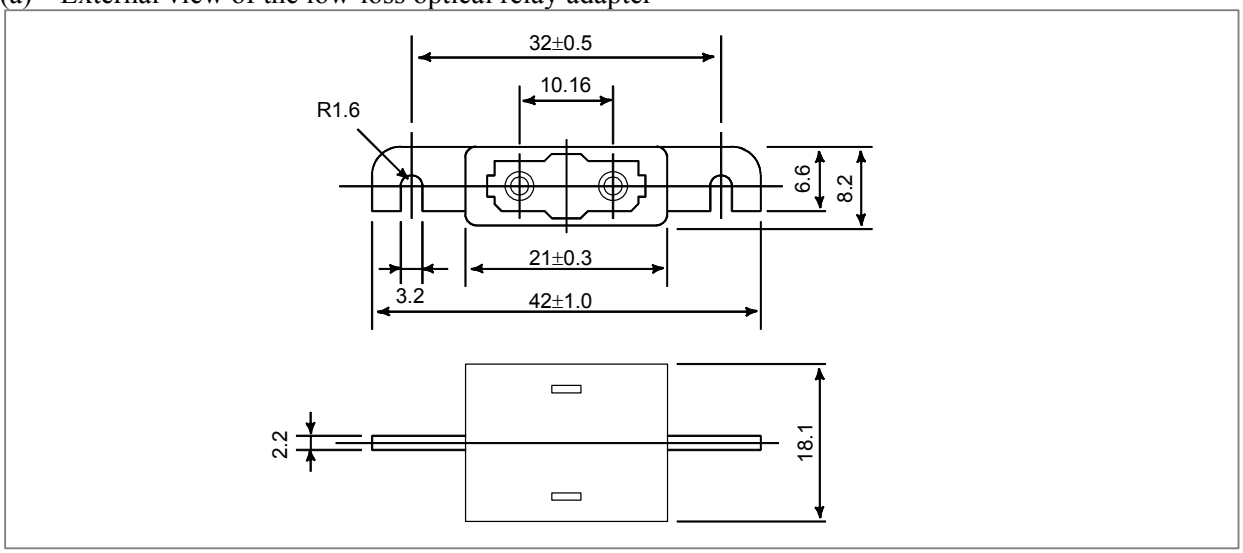

(b) Example of use of the optical fiber relay adapter

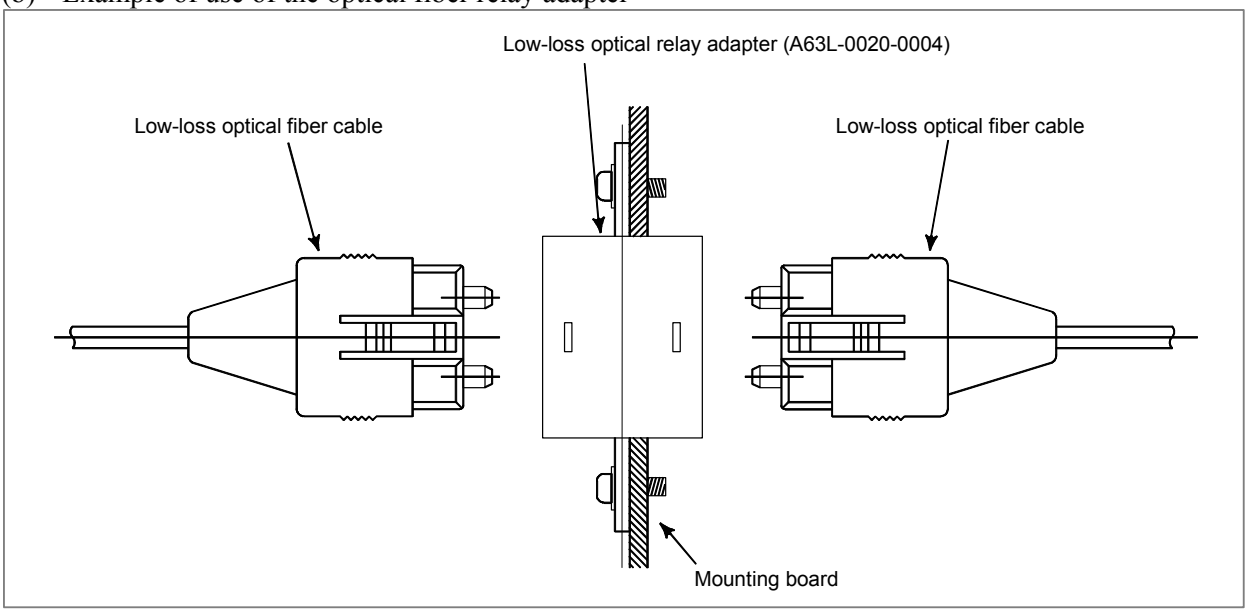

NOTE
Only one relay point is permitted.

© MyFANUC 195109AB01DC415385669AA015E5BDE5

(7) Precautions for connection with low-loss optical junction adapter

- Features and attention in use of low-loss optical junction adapter (A63L-0020-0004)
  When optical connectors for a conventional optical junction adapter (A63L-0020-0002) are jointed, the facing ferrules(Note 1) are located about 60 um from each other. This is because the optical fiber of conventional PCF (plastic clad silica fiber) cables (A66L-6001-0008, -0009, -0026) may protrude from the tip of the ferrules (by up to about several um), resulting in the fiber protrusion being damaged when the ferrules are butted against each other.
  In the low-loss optical junction adapter, the ferrules are butted against each other, thus greatly reducing the reduction in repeater loss. Therefore, the two optical cables used with the low-loss optical junction adapters must be dedicated to the adapters.
  If a conventional PCF (plastic clad silica fiber) cable (A66L-6001-0008, -0009, -0026) is used as even one of the two optical fiber cables for joining the low-loss optical junction adapter, both cables may be damaged, resulting in deteriorated characteristics.

NOTE
Ferrule: Movable metal at the tip of an optical connector; the fiber is bonded to the ferrule.

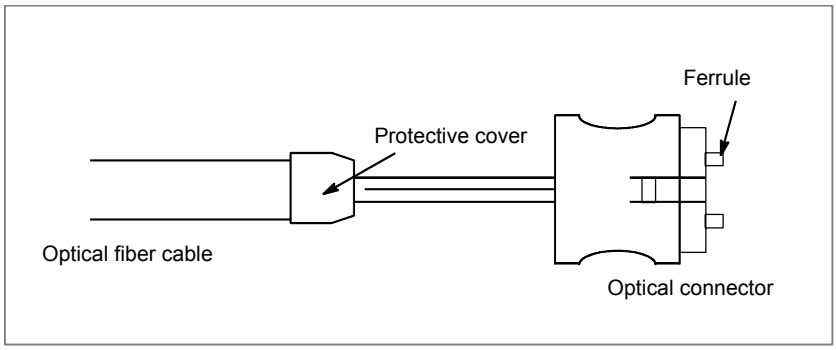

- Features of low-loss optical fiber cable (A66L-6001-0029#~)
  A low-loss optical fiber cable is selected from conventional PCF optical fiber cables (A66L-6601-0026). The selected cable offers low loss, and its connector section is given special treatment; the fiber ends are provided with a depression so that the ferrules can be butted against each other.
- Features of high-speed low-loss optical fiber cable (A66L-6001-0049#~)
  To achieve high-speed and long-distance communication, a high-speed low-loss optical cable is different from conventional PCF optical cables (A66L-6001-0026 and A66L-6001-0029) in optical properties. Therefore, the mode of propagation of light is also different. Connecting different types of optical fibers can result in a greater transmission loss, ultimately leading to an optical communication failure.
- The two optical cables used with a low-loss optical relay adapter must be the same type (two high-speed low-loss optical cables or two low-loss optical cables).
- Appearance of the low-loss relay adapter, low-loss optical fiber cable, and high-speed low-loss optical fiber cable (how to distinguish them from conventional types)
  While the body of the conventional optical relay adapter is black, that of the low-loss optical relay adapter is blue. While the protection cover (see the figure above) of the conventional PCF optical fiber cable is black, that of the low-loss optical fiber cable is blue, and that of the high-speed low-loss optical fiber cable is yellow.

(8) Installing the optical fiber junction adapter

The optical fiber junction adapter should be installed within a cabinet, as a rule. If it is impossible to avoid installing it within a cabinet, protect the adapter and the optical fiber cable portions (such as connectors and cords) not covered with reinforcement coating from the outside air by, for example, covering them with packing.

© MyFANUC 195109AB01DC415385669AA015E5BDE5

(9) Environmental resistance of the optical fiber junction adapter

- The optical fiber junction adapter is not waterproof. Even when optical fiber cables are attached to both ends of the adapter, there are very small gaps in the linked portions, so water resistance can not be expected.
- When optical fiber cables are attached to both ends of the junction adapter installed in a normal environment (such as within a cabinet), it is unlikely that dust will penetrate between the adapter and optical fiber to the degree that it may hamper normal optical linkage. If one or both ends of the adapter are left open, dust and dirt may accumulate even when the adapter is in a normal environment (such as within a cabinet). The dust and dirt on the adapter ends is likely to hamper normal optical linkage when the optical fiber cables are attached. In such a case, clean the junction adapter and the optical connector using the optical fiber junction adapter cleaning method described below.
- Do not allow cutting fluid to splash over the adapter or those optical fiber cable portions (such as connectors and cords) that are not covered with reinforcement coating. If the inside of the adapter and fiber end surfaces are contaminated with cutting fluid, a malfunction may occur.

(10) Cleaning

If the optical fiber junction adapter, optical-to-electrical conversion module, or optical fiber cable is soiled, clean them according to the following procedures.

- Cleaning the optical fiber junction adapter and optical-to-electrical conversion module
  First, clean the entire housing by wiping it with a cloth moistened with, or by washing it in, ethyl alcohol. Similarly, wash the two sleeves in the adapter or wipe them with a cotton swab or the like.
- Cleaning optical fiber cables
  For the optical fiber cables, it is important to clean the connectors at their ends. Any soiling on the optical fiber end surfaces will hamper optical transmission, resulting in a malfunction. Wipe the optical fiber end surfaces (that is, the ferrule end surfaces) thoroughly with a soft, clean cloth (like gauze) moistened with ethyl alcohol, in the same way as described above. The use of cotton swabs may prove convenient. The fiber end surfaces of low-loss optical fiber cables are lower than the ferrules. To remove any soiling from the fiber end surfaces completely, push the cotton swab or gauze into the depressions all the way through while rotating the ferrule. If the ferrules and optical connectors are contaminated with oily substances, and they may extend over a cleaned fiber end surface when it is attached to the optical-to-electrical conversion module, it is a good idea to wash them before wiping the optical fiber end surfaces, using the procedure stated above.

© MyFANUC 195109AB01DC415385669AA015E5BDE5

E MEMORY CARD INTERFACE

Overview

The memory card interface on the left side of the LCD-mounted control unit or the display unit allows input/output of data in the control unit and DNC operation. This appendix describes the memory card interface on the left side of the LCD-mounted control unit or the display unit.

Compact Flash Card

With the 30*i* series, use a compact flash card (called a CF card below) purchased from FANUC.

NOTE
1 If a CF card other than that purchased from FANUC is used, the operation is not guaranteed.
2 The flash ATA card uses a quick format.
3 If your flash ATA card has not been formatted, do so using a personal computer. In this case, format the card in the FAT16 format. Other formats are not supported.

Using the compact flash adapter

1. Attachment
   - Attach the CF card to the compact flash card adapter (A02B-0303-K150, called the CF adapter later).
   - Make sure lock lever A is in the upper position and then insert the CF adapter above into the memory card interface.
   - Push lock lever A downward.
   - Close the cover of the memory card interface.

NOTE
1 To perform continuous operation with the CF adapter attached, be sure to push lock lever A downward and then close the cover of the memory card interface.
2 The lock function is enabled only when the CF adapter (A02B-0303-K150) is used.
3 The CF adapter must be inserted with label surface facing toward the screen.

2. Removal
   - Open the cover of the memory card interface.
   - Push lock lever A upward.
   - Push eject button B once to project the button.
   - Push eject button B again to eject the CF adapter.
   - Remove the CF card with your fingers.
   - Close the cover of the memory card interface.

NOTE
When lock lever A is in the lower position (in the locked state), eject button B cannot be pushed.

© MyFANUC 195109AB01DC415385669AA015E5BDE5

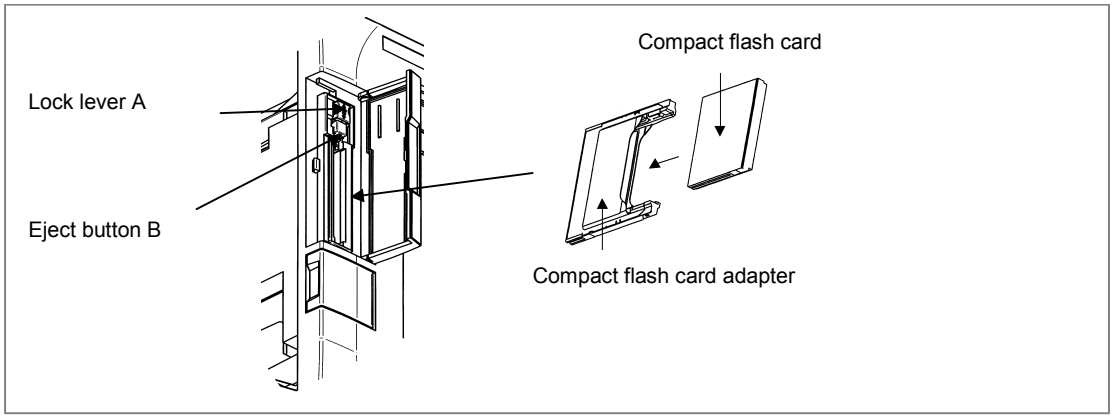

© MyFANUC 195109AB01DC415385669AA015E5BDE5

© MyFANUC 195109AB01DC415385669AA015E5BDE5

ADDITIONAL INFORMATION

© MyFANUC 195109AB01DC415385669AA015E5BDE5

© MyFANUC 195109AB01DC415385669AA015E5BDE5

An addition to
FANUC Power Motion *i*-MODEL A
CONNECTION MANUAL (HARDWARE)

1. Type of applied technical documents

Name	FANUC Power Motion *i*-MODEL A CONNECTION MANUAL (HARDWARE)
Spec.No./Version	B-64573EN/01

2. Summary of change

Group	Name / Outline	New, Add, Correct, Delete	Applicable Date
Basic Function			
Optional Function			
Unit			
Maintenance parts			
Notice	Information with a title of “NOTE REGARDING KOREAN KC MARK” is added to the end of “SAFETY PRECAUTIONS”.	Add	Immediately
Correction			
Another			

© MyFANUC 195109AB01DC415385669AA015E5BDE5

SAFETY PRECAUTIONS

Described below are the safety precautions regarding the control units and those peripheral units explained herein. The safety precautions must be observed in order to use these units safely.
Because exchanging, as well as performing daily maintenance operations on, the control units and those peripheral units explained herein may incur diverse dangers, you cannot be involved in such work unless you have been sufficiently trained for safety.
Some safety precautions may not apply to your control units or peripheral units explained herein because the units have no corresponding function. If this is the case, skip reading those precautions.
As for safety precautions regarding machine tools, refer to the respective machine manuals provided by the machine tool builders.
Before starting to operate machines for check purposes, be sure to read the manuals provided by the machine tool builders and FANUC and sufficiently understand their descriptions.

Contents

DEFINITION OF WARNING, CAUTION, AND NOTE s-1
WARNINGS AND CAUTIONS REGARDING MOUNTING, WIRING, AND EXCHANGING s-2
WARNINGS AND CAUTIONS REGARDING DESIGNING s-4
WARNINGS, CAUTIONS, AND NOTES REGARDING DAILY MAINTENANCE s-5
NOTE REGARDING KOREAN KC MARK s-5

DEFINITION OF WARNING, CAUTION, AND NOTE

This manual includes safety precautions for protecting the user and preventing damage to the machine. Precautions are classified into Warning and Caution according to their bearing on safety. Also, supplementary information is described as a Note. Read the Warning, Caution, and Note thoroughly before attempting to use the machine.

⚠ WARNING
Applied when there is a danger of the user being injured or when there is a danger of both the user being injured and the equipment being damaged if the approved procedure is not observed.

⚠ CAUTION
Applied when there is a danger of the equipment being damaged, if the approved procedure is not observed.

NOTE
The Note is used to indicate supplementary information other than Warning and Caution.

- Read this manual carefully, and store it in a safe place.

© MyFANUC 195109AB01DC415385669AA015E5BDE5

WARNINGS AND CAUTIONS REGARDING MOUNTING, WIRING, AND EXCHANGING

⚠ **WARNING**

1 Before starting mounting, wiring, and exchanging, be sure to shut off externally supplied power. Otherwise, electrical shocks, breakdown, and blowout may occur.
If a control unit is turned off but other units are not, it is likely that power may be supplied to servo units, resulting in the units being damaged and workers getting an electrical shock when the units are exchanged.

2 Voltage lingers in servo and spindle amplifiers for a while even after power has been turned off, resulting in workers possibly getting an electrical shock when the workers touch them. Before starting to exchange these amplifiers, wait for 20 minutes after power has been turned off.

3 Be sure to ground your control units and peripheral units in accordance with your national grounding standards (protective grounding class C or stricter). Otherwise, electrical shocks, breakdown, and blowout may occur.

4 In order to prevent damage that may be caused by static electricity, wear a grounding wrist strap or take a similar protective measure before starting to touch a printed-circuit board or unit or attach a cable.
Static electricity from human bodies can damage electrical circuits.

5 In unit replacement, specify the same settings and parameters in the newly installed unit as those for the one removed. (For details, refer to the respective manuals for the units.)
Operating the newly installed unit with incorrect settings or parameters will cause the machine to behave unexpectedly, possibly leading to a damaged workpiece or machine or injury.

6 If you notice an apparent hardware fault, such as abnormal noise, abnormal odor, smoke, ignition, or abnormal heat, in the hardware while power is being supplied to it, shut it off at once. These faults can cause fire, breakdown, blowout, and malfunction.

7 The radiating fins of control units, servo amplifiers, spindle amplifiers, and other devices can remain very hot for a while after power has been turned off, making you get burned if you touch them. Before starting to work on them, wait and make sure they are cool.

8 When exchanging heavy stuff, you should do so together with two or more people.
If you try to exchange heavy stuff all by yourself, you may drop it and get hurt.

9 Wiring work in the control units and peripheral units must be done only after they have been installed. Otherwise, electrical shocks can occur.

10 Be careful not to damage cables. Otherwise, electrical shocks can occur.

11 When working, wear suitable clothes with safety taken into account. Otherwise, injury and electrical shocks can occur.

12 Do not work with your hands wet. Otherwise, electrical shocks and damage to electrical circuits can occur.

© MyFANUC 195109AB01DC415385669AA015E5BDE5

⚠ **CAUTION**

Failing to observe any caution stated below can lead to fire, breakdown, blowout, and malfunction.

1 Do not attach the units directly to any flammable object or install the units near any flammable object.
2 Do not allow any foreign matter (such as a screw, metal chip, or coolant) to get in the units.
3 Handle the units and printed-circuit boards gently because they are precision devices. Be careful not to drop them or give a high impact to them.
4 Lay signal wires away from power wires as stated in this manual.
5 When fastening each unit or wire, be sure to observe the screw tightening torque specified for them. If screws are tightened too weakly or too strongly, it is likely that the unit may drop, break, or malfunction, or the wire may be short-circuited. Do not forget to tighten all necessary screw.
6 Do not block any cooling fan air inlet or outlet. For units having no cooling fan, allow space for natural convection cooling above and below them.
7 Be careful not to make an incorrect wiring or connection. Be sure to attach wires and cables to their respective corresponding terminals and connectors.
8 Confirm equipment's electrical rating stated herein. Do not apply any unspecified voltage to the equipment.
9 Do not confuse voltage polarity. Carefully confirm the arrangement of connector pins.
10 When making a cable assembly, press-mount, crimp, or solder the wires, using the tool specified by the cable manufacturer.
11 Use printed-circuit boards and peripheral units that match your control unit.
12 When mounting the units, pay attention to their mass.
13 When detaching a cable from a unit, hold the connector rather than the cable. When attaching a cable, be sure to fit its connector to the connector pins securely. For connectors having a lock mechanism, be sure to lock them securely.
14 As for the shielding wires of the cables specified herein, securely ground them, using, for example, cable clamps.
15 Always use wires whose length, diameter, heat resistance, and flex resistance match their use.

© MyFANUC 195109AB01DC415385669AA015E5BDE5

WARNINGS AND CAUTIONS REGARDING DESIGNING

⚠ **WARNING**

1 When designing, be sure to observe all rules stated in this document and any related manuals. Otherwise, it is likely that failure and malfunction may occur.

2 Failures in the control units and I/O units as well as input power abnormality and communication failures can hamper the normal operation of these I/O units. Design each I/O unit in such a way that the machine can operate safely, for example, by providing an external safety circuit to the I/O unit so that no accident will occur even if the I/O unit fails to operate normally.
The DO function of each I/O unit has been designed in such a way that, if a system alarm is issued in the control unit that controls the I/O unit or the power of the control unit or the I/O unit is turned off, the DO function of all the I/O units is turned off. However, it is not guaranteed that the DO function is surely turned off. So, it is requested that, if a signal regarding safety is involved, a safety circuit external to each I/O unit must be configured. Using the dual check safety function makes it possible to detect a single fault in a portion related to safety. For details of the dual check safety function, refer to the Dual Check Safety Connection Manual (B-64483EN-2).

3 Coolants containing sulfur or chlorine at a high activation level, oil-free coolants called synthetic, and water-soluble coolants at a high alkali level, in particular, can largely affect the CNC and peripheral units. Please note that, even if consideration is taken to protect them from direct exposure to these coolants, the following trouble is likely to occur.

- Coolants containing sulfur or chlorine at a high activation level
  Some coolants containing sulfur or chlorine are at an extremely high activity level. If such a coolant adheres to the CNC or peripheral units, it reacts chemically with a material, such as resin, of equipment, possibly leading to corrosion or deterioration. If it gets in the CNC or peripheral units, it corrodes metals, such as copper and silver, used as component materials, possibly leading to a defective component.
- Synthetic-type coolants having a high permeability
  Some synthetic-type coolants whose lubricating component is, for example, PAG (polyalkylene glycol) have an extremely high permeability. If such a coolant is used even in equipment having a high closeness, it can readily flow into the CNC or peripheral units through, for example, gaskets. It is likely that, if the coolant gets in the CNC or a peripheral unit, it may deteriorate the insulation and damage the components.
- Water-soluble coolants at a high alkali level
  Some coolants whose pH is increased using alkanolamine are so strong alkali that its standard dilution will lead to pH10 or higher. If such a coolant spatters over the surface of the CNC or peripheral unit, it reacts chemically with a material, such as resin, possibly leading to corrosion or deterioration.

⚠ **CAUTION**

Install each control unit, display unit, MDI unit, and machine operator panel in such a place that neither cutting chip nor coolant will spatter to them. Otherwise, damage or malfunction may occur.

© MyFANUC 195109AB01DC415385669AA015E5BDE5

WARNINGS, CAUTIONS, AND NOTES REGARDING DAILY MAINTENANCE

⚠ WARNING

Battery replacement

Do not replace batteries unless you have been well informed of maintenance work and safety.

When opening the cabinet and replacing batteries, be careful not to touch any high-voltage circuit (marked with ⚠ and covered with an electric shock prevention cover).

When the electric shock prevention cover has been removed, you will get an electric shock if you touch any high-voltage circuit.

⚠ WARNING

Fuse replacement

Before replacing a blown fuse, it is necessary to remove the cause of the blown fuse.

So, do not replace fuses unless you have been well informed of maintenance work and safety.

When opening the cabinet and replacing fuses, be careful not to touch any high-voltage circuit (marked with ⚠ and covered with an electric shock prevention cover).

When the electric shock prevention cover has been removed, you will get an electric shock if you touch any high-voltage circuit.

⚠ CAUTION

Handle the batteries gently. Do not drop them or give a strong impact to them.

NOTE

Each control unit uses batteries, because it must hold data, such as programs, offset values, and parameters even when AC power for it is off.

Back up the data (programs, offset values, and parameters) regularly.

If the battery voltage becomes low, a low battery voltage alarm is displayed on the machine operator's panel or screen.

Once the battery voltage alarm has been displayed, replace the batteries within one week. Otherwise, the memory contents may be lost.

For the battery replacement procedure, see Section 4.4, "Batteries". Recollect or discard old batteries in the way your local autonomous community specifies.

NOTE REGARDING KOREAN KC MARK

NOTE

This equipment is industrial (Class A) electromagnetic wave suitability equipment and seller or user should take notice of it, and this equipment is to be used in the places except for home.

이 기기는 업무용(A 급) 전자파적합기기로서 판 매자 또는 사용자는 이 점을 주의하시기 바라며, 가정외의 지역에서 사용하는 것을 목적으로 합니다.

© MyFANUC 195109AB01DC415385669AA015E5BDE5

Explanation addition in FANUC Power Motion *i*-MODEL A
CONNECTION MANUAL (HARDWARE)

1. Type of applied technical documents

Name	FANUC Power Motion *i*-MODEL A CONNECTION MANUAL (HARDWARE)
Spec. No. / Version	B-64573EN/01

2. Summary of change

Group	Name / Outline	New, Add., Correct, Del.	Applicable Date
Basic Function			
Optional Function			
Unit			
Maintenance Parts			
Notice	Note for INSTALLATION CONDITION FOR UL/CSA RECOGNITION is added as Section 3.10.		
Correction			
Another			

© MyFANUC 195109AB01DC415385669AA015E5BDE5

"Note for INSTALLATION CONDITION FOR UL/CSA RECOGNITION" is added as Section 3.10

.

3.10 INSTALLATION CONDITION FOR UL/CSA RECOGNITION

1. Outline

   For UL/CSA recognition of the product, FANUC Power Motion *i*-MODEL A shall be installed after due considerations on UL/CSA requirements.

2. Notes on the installation conditions for UL/CSA recognition

   - Set up the LCD-mounted type control unit, display unit and MDI unit on a flat surface of a Type 1 Enclosure [*1].

     (*1. Type 1 Enclosure is defined in standard UL 50 as follows.

     TYPE 1 - Enclosures constructed for indoor use to provide a degree of protection to personnel against incidental contact with the enclosed equipment and to provide a degree of protection against falling dirt.)

   - Use CNC, Display and MDI unit in Pollution degree 2 [*2] environment or cleaner environment, except for part exposed on the outside of enclosure.

     (*2. Pollution degree is a classification according to the amount of pollution and condensation present in the environment.

     "Pollution Degree 2" is defined in the standard UL 508 as follows.

     Normally, only nonconductive pollution occurs; however, temporary conductivity caused by condensation may be expected.)

   - Maximum surrounding air temperature rating: +60°C [*3]

     (*3. This temperature rating is a condition of UL/CSA evaluation for recognition. However, for long-term reliability, the cabinet should be actually designed in accordance with the maximum operating surrounding air temperature that described in the subsection 3.1.2.)

   - Power supply unit for this unit must have an isolating device and the DC 24 Volt output must be isolated from AC mains supply.

     (This isolation can be achieved with the use of the isolating DC power supply unit that complies with UL/CSA standard.)

     Cable from an external 24VDC power supply to this control unit should have a wire size 14AWG or 16AWG .

© MyFANUC 195109AB01DC415385669AA015E5BDE5

FANUC Power Motion *i* -MODEL A

The addition of CONNECTION MANUAL (HARDWARE)

1.Type of applied technical documents

Name	FANUC Power Motion *i* -MODEL A CONNECTION MANUAL (HARDWARE)
Spec.No./Ed.	B-64573EN/01

2.Summary of Change

Group	Name/Outline	New, Add, Correct, Delete	Applicable Date
Basic			
Optional Function	Addition of Inter-unit synchronous board	Add	Immediately
Unit			
Maintenance Parts			
Notice			
Correction			
Another			

Ed.	Date	Design	Description
Date	20170410	Desig. Y.Sato	Check Apprv.

Title	FANUC Power Motion i-MODEL A The addition of CONNECTION MANUAL (HARDWARE)
Draw No.	B-64573EN/01-04

FANUC CORPORATION

© MyFANUC 195109AB01DC415385669AA015E5BDE5

13 CONNECTION TO INTER-UNIT SYNCHRONIZATION

13.1. OVERVIEW

An axis on a slave unit can be synchronized with an axis on the master unit by connecting the master unit to a slave unit via a communication line for synchronization. Up to 256 synchronized axes can be controlled because up to 8 units can be connected.

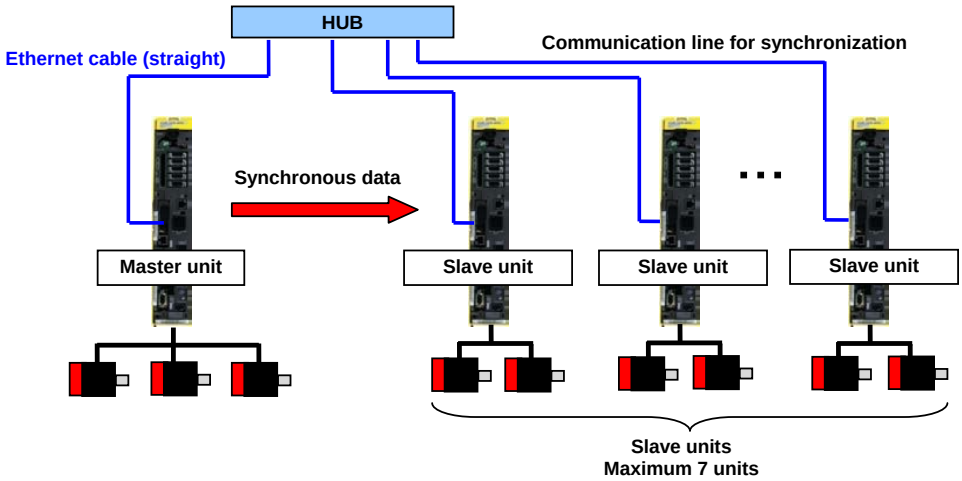

13.2. Inter-unit synchronous board Specification

In case of using the Inter-unit synchronization, Inter-unit synchronous board of one per Power Motion i is necessary.

Ordering information of Inter-unit synchronous board	A02B-0334-J149
Drawing number of printed circuit board	A20B-8101-0771

The table below indicates the amount of heat output, by the Inter-unit synchronous board.

Name	Power supply capacity	Heat output
Inter-unit synchronous board	0.1A	3W

13.3. Connection

The communication of inter-unit synchronization uses the Ethernet communication. As for connecting, it is the same as Ethernet. For details, refer to the chapter V.CONNECTION on Fast Ethernet/Fast Data Server OPERATOR'S MANUAL (B-64014EN).

© MyFANUC 195109AB01DC415385669AA015E5BDE5

The Inter-unit synchronous board and HUB are connected with the Ethernet cable.

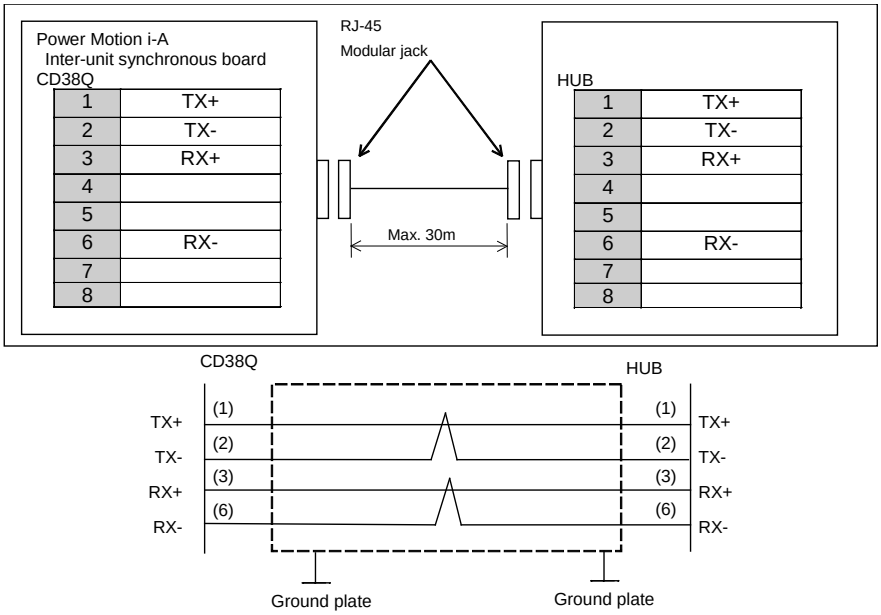

Recommended HUB

Manufacturer	Specification	Remarks
Phoenix Contact	FL HUB 8TX-ZF	8 ports Communication setting: 100Mbps

Inquiries

Manufacturer	Contact address
Phoenix Contact Headquarters	Yuusen Sin-yokohama 1-Chome Building, Sin-yokohama 1-7-9, Kohoku Ward, Yokohama, 222-0033 TEL：045-471-0030 FAX：045-471-0031 URL：http://www.phoenixcontact.com

NOTE

1 The other Ethernet equipment cannot be connected with the communication line for synchronization. Otherwise, it causes the stop communication and the malfunction of a inter-unit synchronization function.
2 To improve noise immunity in factory automation environments, be sure to use twisted pair cables with a common shield in category 5 (STP cables).
3 The cable can be up to 30 m long. Do not make the cable longer than necessary.
4 Before using the HUB, refer to the operation manual supplied by the manufacturer.

© MyFANUC 195109AB01DC415385669AA015E5BDE5

© MyFANUC 195109AB01DC415385669AA015E5BDE5

Addition of description to FANUC Power Motion *i* -MODEL A CONNECTION MANUAL (HARDWARE)

1. Type of applied technical documents

Name	FANUC Power Motion *i* -MODEL A CONNECTION MANUAL (HARDWARE)
Spec.No./Ed.	B-64573EN/01

2. Summary of Change

Group	Name/Outline	New, Add, Correct, Delete	Applicable Date
Basic			
Optional Function			
Unit	Addition of stand-alone type control unit (4-slot rack)	Add	Immediately
Maintenance Parts			
Notice			
Correction			
Another			

Ed.	Date	Design	Description
Date	20170830	Desig. Anekawa	Check / Apprv.

Title	Addition of description to FANUC Power Motion *i* -MODEL A CONNECTION MANUAL (HARDWARE)
Draw No.	B-64573EN/01-05
FANUC CORPORATION	1/6

© MyFANUC 195109AB01DC415385669AA015E5BDE5

The descriptions of stand-alone type control unit (4-slot rack) are added to 1.1.2 Configurations of Stand-alone Type Control Units.

1.1.2 Configurations of Stand-alone Type Control Units

Power Motion i stand-alone type control units

Slot rack name	Number of option slots
2-slot rack	2
4-slot rack	4

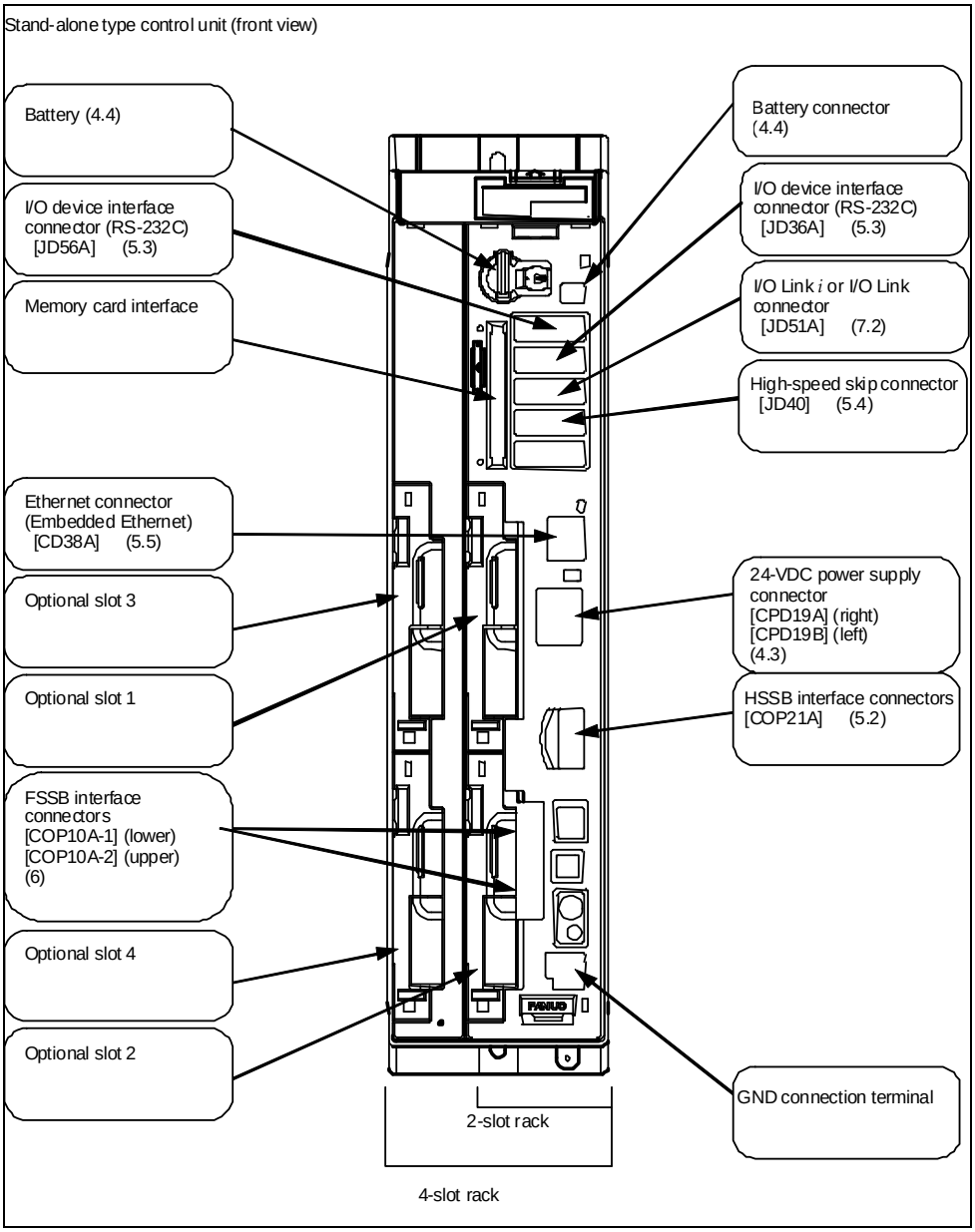

© MyFANUC 195109AB01DC415385669AA015E5BDE5

The descriptions of stand-alone type control unit (4-slot rack) are added to 1.2.2 Stand-alone Type Control Unit Overview.

1.2.2 Stand-alone Type Control Unit Overview

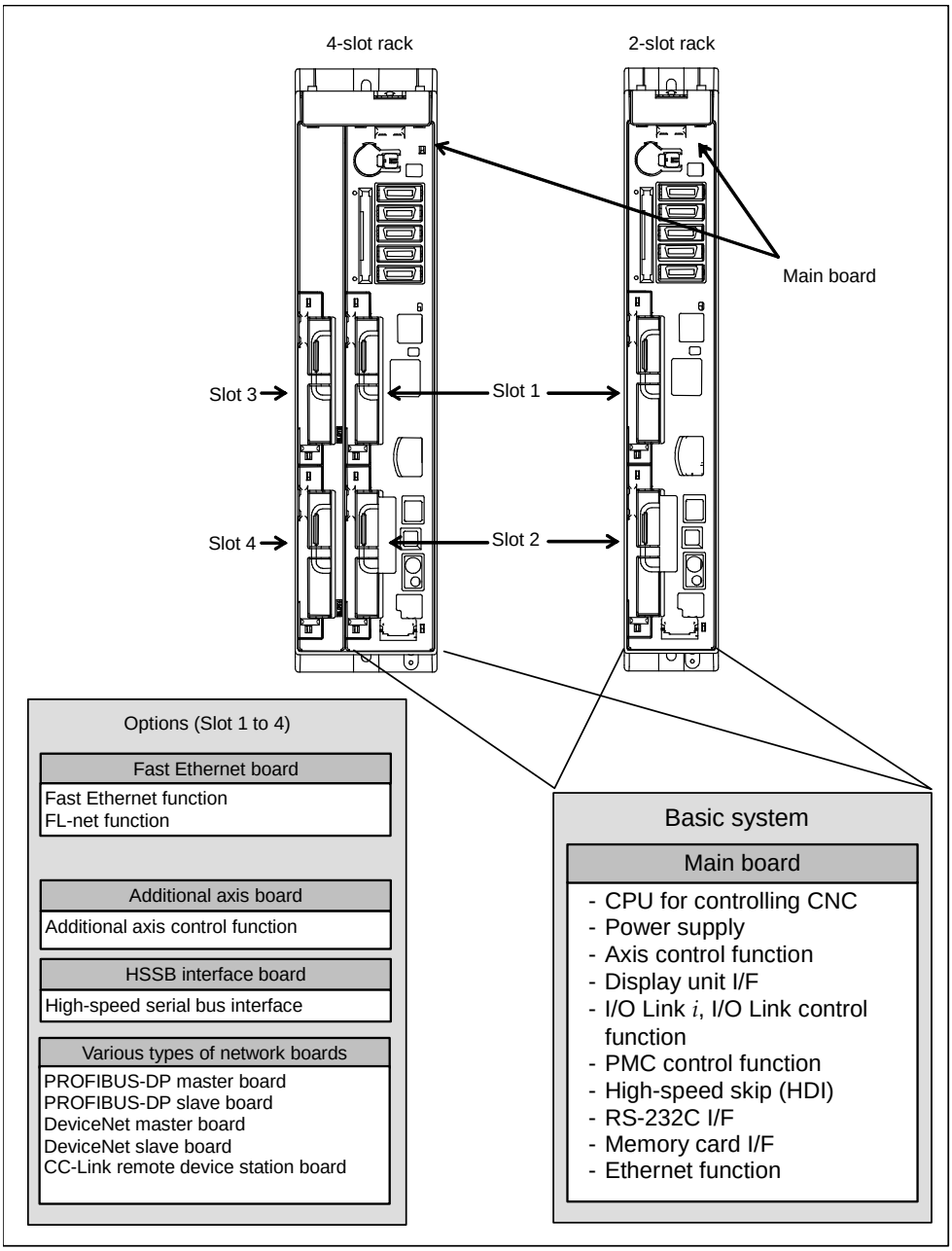

© MyFANUC 195109AB01DC415385669AA015E5BDE5

The descriptions of stand-alone type control unit (4-slot rack) are added to 3.4.3 Connecting the Ground Terminal of the Control Unit.

3.4.3 Connecting the Ground Terminal of the Control Unit

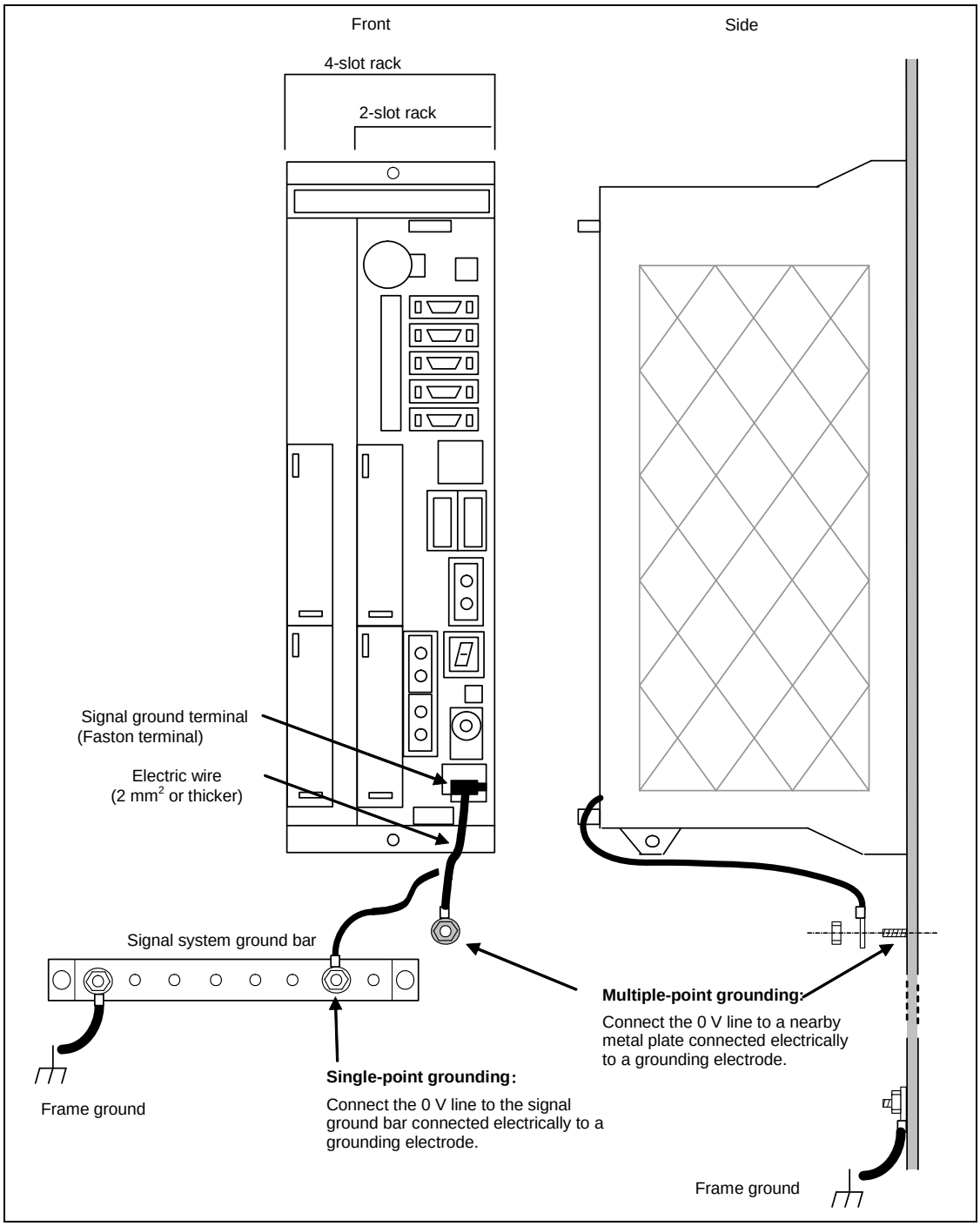

Fig. 3.4.3 (c) Ground terminal connection

				Title. Addition of description to FANUC Power Motion *i* -MODEL A CONNECTION MANUAL (HARDWARE)	
				Draw.No.. B-64573EN/01-05	CUST.
Edit	Date	Design	Description	FANUC CORPORATION	Sheet. 4/6

© MyFANUC 195109AB01DC415385669AA015E5BDE5

The figure of stand-alone type control unit (4-slot rack) is added to 3.5.2 Installing the Stand-alone Type Control Unit.

3.5.2 Installing the Stand-alone Type Control Unit

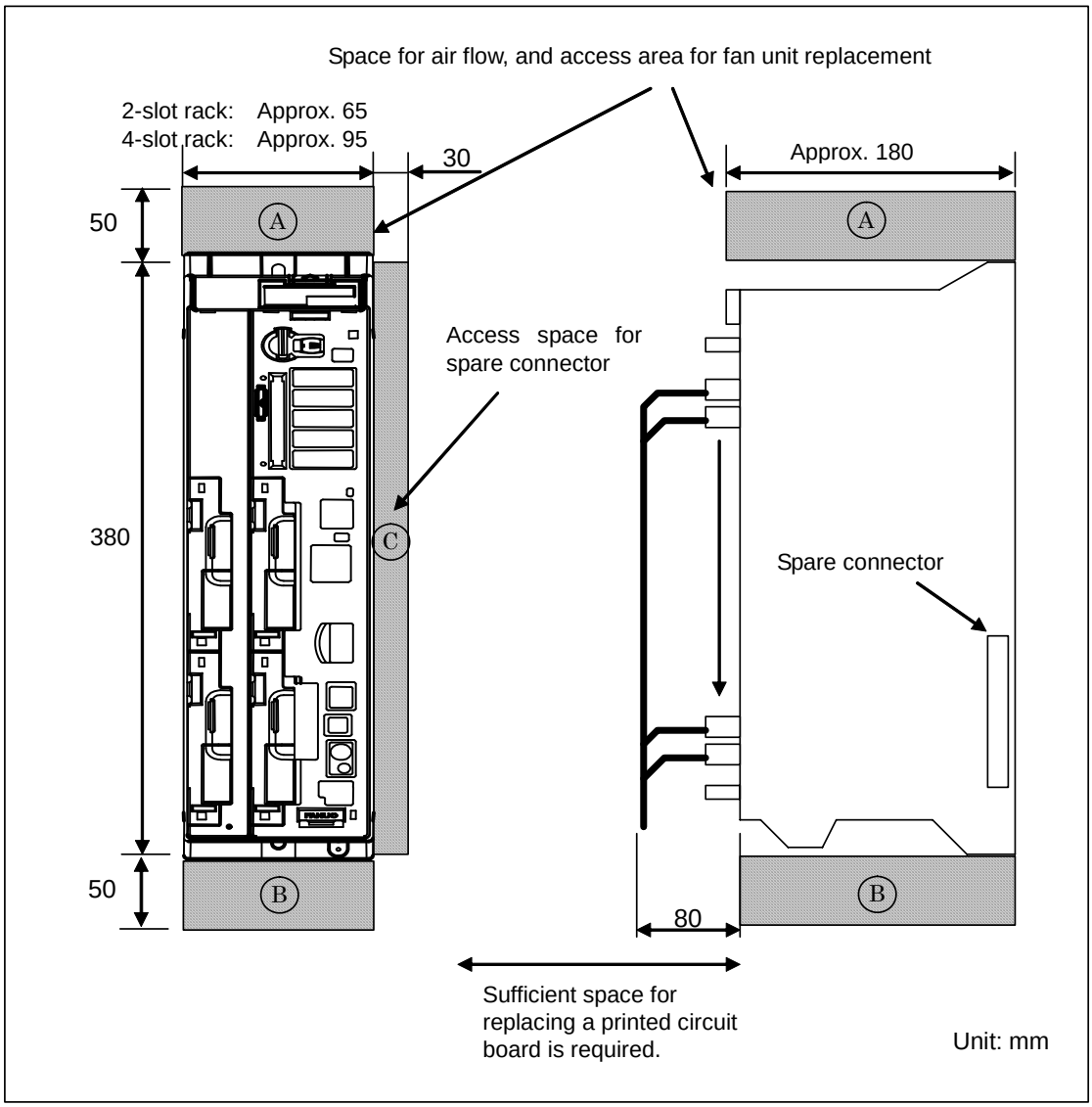

Fig. 3.5.2

				Title. Addition of description to FANUC Power Motion *i* -MODEL A CONNECTION MANUAL (HARDWARE)	
				Draw.No.. B-64573EN/01-05	CUST.
Edit	Date	Design	Description	FANUC CORPORATION	Sheet. 5/6

© MyFANUC 195109AB01DC415385669AA015E5BDE5

The descriptions of stand-alone type control unit (4-slot rack) are added to APPENDIX A OUTLINE DRAWINGS OF UNITS AND CONNECTORS.

A OUTLINE DRAWINGS OF UNITS AND CONNECTORS

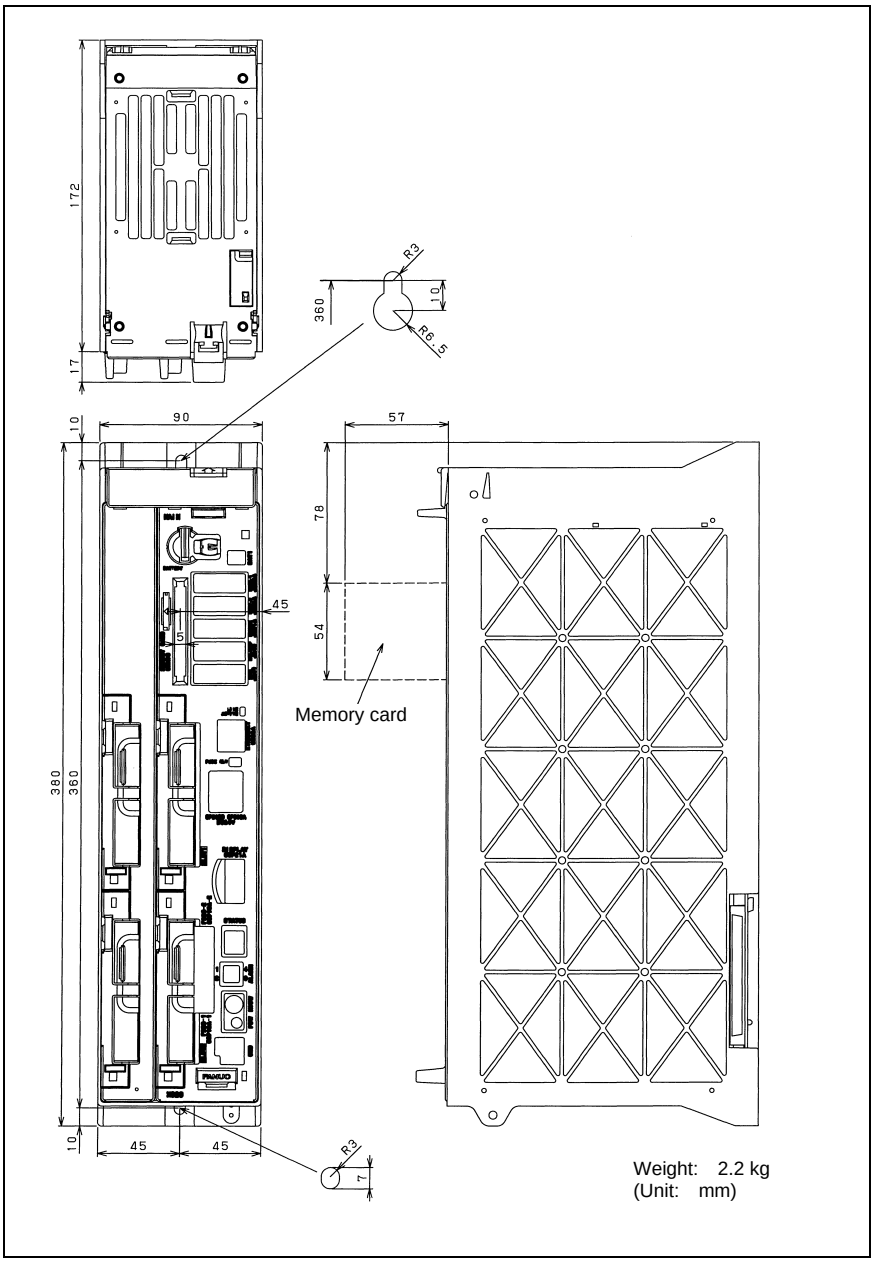

Fig. U21 Stand-alone type control unit - 4 slots

				Title. Addition of description to FANUC Power Motion *i* -MODEL A CONNECTION MANUAL (HARDWARE)	
				Draw.No.. B-64573EN/01-05	CUST.
Edit	Date	Design	Description	FANUC CORPORATION	Sheet. 6/6

© MyFANUC 195109AB01DC415385669AA015E5BDE5

INDEX

<Number>

20-PIN INTERFACE CONNECTORS AND CABLES448
24 VDC POWER (INSULATION AC/DC CONVERTOR) 43
24 VDC Power Supply Specification 45
2A output signal connection....146
2A output signal specifications 147
7-segment LED indication 308

<A>

Address map....244
Analog 1Vp-p interface....104
Analog input connector pin allocation 147
Analog input signal connections 148
Analog input signal specifications 149
Applicable Cables 452
Applicable wire 222
AS-i connection....294
AS-i master status indication....300
AS-i versions and ordering information 288
ASSIGNMENT FOR I/O UNITS 129
Assignment of Signals....129
ATTACHING SCREW CAPS 42

<B>

BATTERIES 52
Battery for Absolute Pulse Coder Built into the Motor (6VDC)....58
Battery for Memory Backup in the Control Unit (3 VDC) 53
Battery for Separate Absolute Pulsecoders (6VDC) 57
Board status....301
BOARD-MOUNTED CONNECTORS 448

<C>

Cabinet 24
Cable Clamp and Shield Processing....33
Cable Connection 396
Cable connection to a terminal block 241
CABLE CONNECTORS 449
CABLE FOR POWER SUPPLY TO CONTROL UNIT 52
Cable Length for Manual Pulse Generator....133
CAUTIONS 393
CAUTIONS ABOUT MULTI-PATH CONTROL 391
CAUTIONS REGARDING THE INSTALLATION DESIGN OF MACHINE TOOL POWER MAGNETICS CABINETS 17
CE marking 315
Channel selection and A/D conversion data....149
Channel selection and A/D conversion data for extension module D....246
Channel selection and D/A conversion data for extension module E 248
Code Output for the Rotary Switch....278
Color Labels for Connectors of Safety IO Unit 348
Command Execution by a Ladder Program 303
Command handshake sequence....305
Command interface with a ladder program....303
Component names....224
CONFIGURATION 1,137,191
Configurations of LCD-mounted Type Control Units 1
Configurations of Optional Boards 9
Configurations of Stand-alone Type Control Units....5
Connecting 24 VDC Power....43
Connecting I/O Devices 71
Connecting the Ground Terminal of the Control Unit ...28
CONNECTING THE HIGH-SPEED SKIP (HDI)....81
CONNECTION....115,229,262,293
Connection between Modules 208
Connection between the Basic Unit and Additional Unit 109
CONNECTION BETWEEN THE LCD-MOUNTED TYPE CONTROL UNIT AND MDI UNIT 59
CONNECTION BETWEEN THE STAND-ALONE TYPE CONTROL UNIT AND DISPLAY UNIT AND BETWEEN THE DISPLAY UNIT AND MDI UNIT 63
CONNECTION CABLE (SUPPLIED FROM US) 459
Connection Diagram 59,94,138,193,352,394,397,399,404
Connection Diagrams of an Analog Basic Unit 101
Connection of Basic and Extension Modules....152
Connection of Battery for Absolute Position Detector.107
Connection of Extension Module C (2A Output Module)....145
Connection of Extension Module D (Analog Input Module)....147
Connection of FANUC I/O Link *i* or I/O Link by Optical Fiber Cable 118
Connection of I/O Link *i* or I/O Link by Electric Cable117
CONNECTION OF I/O MODULE FOR CONNECTOR PANEL....137
CONNECTION OF I/O MODULE FOR OPERATOR’S PANEL SUPPORTING SAFETY FUNCTION....352
CONNECTION OF I/O MODULE FOR OPERATOR'S PANEL (FOR MATRIX INPUT) 163
CONNECTION OF I/O MODULE FOR OPERATOR'S PANEL AND I/O MODULE FOR POWER MAGNETICS CABINET 178
CONNECTION OF I/O MODULE TYPE-2 FOR CONNECTOR PANEL....191
CONNECTION OF OPERATOR'S PANEL CONNECTION UNIT (SOURCE DO)....316
Connection of Power Supply 95
CONNECTION OF SAFETY IO UNIT 335
CONNECTION OF TERMINAL TYPE I/O MODULE216
Connection of the Basic Module, and Extension Modules A and B....140

© MyFANUC 195109AB01DC415385669AA015E5BDE5

Connection of the ground terminal....243
CONNECTION OF THE I/O Link-AS-i CONVERTER 288
Connection to 2nd LCD Unit (Ethernet)....399
CONNECTION TO CNC PERIPHERALS 59
CONNECTION TO FANUC I/O Link *i* AND FANUC I/O Link 114
CONNECTION TO OTHER NETWORKS 392
CONNECTION TO OTHER PERIPHERALS 399
CONNECTION TO SHARED LCD UNIT (ETHERNET)....404
CONNECTION TO STANDARD MACHINE OPERATOR'S PANEL 265
Connection to the Ethernet....402,406
Connection to the Ethernet Interface....84
CONNECTION USING ETHERNET 397
CONNECTION USING THE HIGH-SPEED SERIAL BUS (HSSB)....393
Connection when Multiple Channels of the I/O Link *i* and I/O Link Are Used 120
CONNECTION WITH FANUC PANEL *i* AND COMMERCIAL PERSONAL COMPUTERS....393
CONNECTION WITH INPUT/OUTPUT DEVICES....71
Connection with the 24V power input....401,405
Connection with the MDI Unit....60,402,406
Connector (on the Cable Side) Specifications....277
Connector Layout Diagram....192
Connector Locations 109
Connector locations of main panel....282
Connector Locations Safety IO Unit....347
Connector Name and Layout....401,405
Connector Panel Printed Circuit Board....211
Connector pin arrangement....140,145
Connector Specification of Safety IO Unit 349
CONTROL UNIT CONFIGURATION AND COMPONENT NAMES 1
COUNTERMEASURES AGAINST NOISE AND GROUNDING....22

<D>

DEFINITION OF WARNING, CAUTION, AND NOTE s-1
Detachable key top on the main panel....286
Detaching a terminal block 242
Details of command flags and status....304
Details of commands....305
Details of I/O Link DI/DO 299
DI (General-purpose Input Signal) Connection 166,181,357,368
DI (input signal) connection....141,196,318
DI (Matrix Input Signal) Connection 168
DI/DO Address....336
DI/DO Address Map 268,354
DI/DO Addresses for the Keyboard 277
DI/DO connection 234,338
DI/DO Connector Pin Arrangement. 165,180,317,355,367
DI/DO Connector Pin Assignment....195
DI/DO Mapping on the I/O Link....296
DI/DO signal specifications 144,207
Dimensions (common to the modules)....223
Dimensions and connector layout 290
Dimensions in a maximum configuration (one basic module + three extension modules)....223
DO (output signal) connection .. 143,169,185,203,325,375
DO (Output Signal) Error Detection 286,351,364
DO alarm detection 249
DO Signal Connection 360
DUSTPROOF MEASURES FOR CABINETS AND PENDANT BOXES 39

<E>

Each connection 65
Each Connections....269
EMERGENCY STOP SIGNAL....386
Emergency stop signal connection....271
Environmental Conditions outside the Cabinet....16
ENVIRONMENTAL REQUIREMENTS OUTSIDE THE CABINET....16
Error codes....304
Error processing 311
External View 173,187,329,362,379
External View and Dimensions....223

<F>

FANUC serial interface 97
Features....288
Fixed Signals....130
For AS-i Ver. 2.0 (A03B-0817-C001) 296
For AS-i Ver. 2.1 (A03B-0817-C002) 297
For connection to the I/O Link....268
For connection to the I/O Link *i*....*268*
Fuse....315

<G>

GENERAL UNITS 135
General-purpose DI signal connection....273
General-purpose DI signal definition....284
General-purpose DO signal connection 275
General-purpose DO signal definition 284
GND Cable Connection 380
Grounding as Noise Suppression Measures 23
Grounding methods....23

<H>

Handling Precautions 395
HARDWARE OVERVIEW 10
Heat dissipation....221
Heat output....284
Heat Output of Each Unit....19
How to Use the I/O Link-AS-i Converter 313

<I>

I/O Link connection 262,271
I/O Link CONNECTION UNIT 256
I/O Link *i* Connection 336
I/O signal specifications....218
I/O UNIT FOR POWER MAGNETICS CABINET 365

© MyFANUC 195109AB01DC415385669AA015E5BDE5

Input signal requirements (analog 1Vp-p interface).....105
Input Signal Requirements (Parallel interface) 99
Input Signal Rules for the High-speed Skip (HDI) 83
Input/output data area.....299
INSTALLATION..... 16,111,227,259,290,313
Installation conditions 218,283,289
Installation Conditions of the Control Unit 16
Installation Environment.....395
INSTALLING THE CONTROL UNIT 37
Installing the display unit 68,403,407
Installing the LCD-mounted Type Control Unit 37
Installing the Stand-alone Type Control Unit 38
Interface to the Amplifiers 91
Inter-module connection 240

<K>

Key Layout of MDI Unit.....61
Key Tops on the Main Panel 284

<L>

LCD PROTECTION COVER.....42
LCD-mounted Type Control Unit Overview.....10
LED indication.....308
LED Status Indication and Setting Switch Operation ..308
Lightning Surge Absorber Installation 36
LINKING THE ETHERNET INTERFACE 84

<M>

Main panel specification 283
MANUAL PULSE GENERATOR 132
Manual Pulse Generator Connection
..... 132,151,172,186,208,240,276,361,379
Manual Pulse Generator Signal Specifications 133
Meaning of key symbols 284
MEMORY CARD INTERFACE 472
Method for checking the encoder signals.....106
Method of common pin expansion 253
Module Installation 153
Module Specifications..... 139,194,217
Mounting the Module.....210

<N>

Network Installation.....88
Noise Suppressor.....32
Normal operation 314
Notes on Installing a Separate Detector Interface Unit 112
Number of Units That Can Be Connected.....92

<O>

OPTICAL FIBER CABLE.....462
Order specification 283
Other Notes 158,175,189,214,331,382
Others 253,315
Outline.....279
OUTLINE DRAWINGS OF UNITS AND
CONNECTORS 411
Outline of main panel.....279
Outline of Safety IO Unit.....346
Outline of sub panel AA.....280
Outline of sub panel D 281
Overall Connection Diagram 163,178,229,293,316,365
Overview of the Analog Basic Unit 100

<P>

PANEL *i* *398*
Parallel DO (output signal) connection 255
Parallel interface 98
Pin assignment 269
Pin Assignment of DI/DO 337
Power Capacity of 24 VDC Power Supplies.....47
Power Connection 164,179,230,263,293,316,353,366
Power ON/OFF control signal connection 272
POWER SUPPLY 134
POWER SUPPLY CONNECTION 43,207,271,335
Power supply rating 221
Power supply specification 283
Power-off Sequence 50
Power-on Sequence.....49
PREFACE p-1
Procedure for Installing Personal Computer Interface
Boards 395
Protective Ground (Grounding for Protection against
Indirect Contact).....27

<R>

Recommended Connectors.....452
RECOMMENDED CONNECTORS, APPLICABLE
HOUSINGS, AND CABLES 451
Replacing commercially available alkaline dry cells
(size D) 55
Replacing the lithium battery 53
Rotary Switch Setting 161
RS232-C Interface Specification.....74
RS232-C Serial Port.....72

<S>

SAFETY PRECAUTIONS s-1
SEPARATE DETECTOR INTERFACE 93
Separate Detector Interface (Analog Input) 104
Separate Detector Interface (Digital Input).....97
Separate Detector Interface Unit Specification 95
Separating Signal Lines 31
SERVO INTERFACES 90
Setting the rotary switch 252
Setting/display switch 310
Settings.....244
SHUTTING OFF THE MOTOR POWER.....385
Signal assignment on terminal blocks 231
Slave list.....301
Soldering Type Connector 450
Specification 257
Specification of the I/O Link side 289
Specification of Twisted-Pair Cable 86
Specifications..... 174,188,289,329,363,381
Specifications of a Commercial PC 394
Specifications of Safety IO Unit 349
Specifications of the AS-i converter 289

© MyFANUC 195109AB01DC415385669AA015E5BDE5

Specifications of the Standard Machine Operator's Panel 283
Stand-alone Type Control Unit Overview 11
Status Alarm 131
STOP AND EMERGENCY STOP 385
STOP MODES 385
STOPPING THE SERVO MOTOR 386
Straight and Right-angled Connectors (for Spring and Screw-fixing Connector Housings) 448
Strand Wire Press-mount Connector 449
Sub panel AA, D specification 283
Support for AS-i profiles 289

<T>

Temperature Rise within the Machine Tool Magnetic Cabinet 19
Thermal Design of Operator's Panel 20
THERMAL DESIGN OF THE MACHINE TOOL MAGNETIC CABINET 19
TIGHTENING TORQUE FOR FASTENING UNITS AND GROUND TERMINALS 39
Total Connection Diagram 267,335
TOTAL CONNECTION DIAGRAMS 12
TURNING ON AND OFF THE POWER TO THE CONTROL UNIT 49
Types of commands executable by a ladder program ..303
Types of modules 217

<U>

Unit Dimensions 209
UNITS CONNECTED TO FANUC I/O Link *i* AND FANUC I/O Link 135
USB PORT 89

<V>

Vertical-type Connectors 448

<W>

WARNINGS AND CAUTIONS REGARDING DESIGNING s-4
WARNINGS AND CAUTIONS REGARDING MOUNTING, WIRING, AND EXCHANGING s-2
WARNINGS, CAUTIONS, AND NOTES REGARDING DAILY MAINTENANCE s-5
Weight 221
When a pendant type manual pulse generator 276
When only the manual pulse generator 276
With the 10.4" Display Unit 63
With the 15" Display Unit 70
With Two Display Units 65

© MyFANUC 195109AB01DC415385669AA015E5BDE5

REVISION RECORD

Edition	Date	Contents
01	Nov., 2011	

© MyFANUC 195109AB01DC415385669AA015E5BDE5

B-64573EN/01

B-64573EN/01.04

© MyFANUC 195109AB01DC415385669AA015E5BDE5