# FANUC Series 0*i*-MODEL D
# FANUC Series 0*i* Mate-MODEL D

## CONNECTION MANUAL (HARDWARE)

B-64303EN/03

- No part of this manual may be reproduced in any form.
- All specifications and designs are subject to change without notice.


The products in this manual are controlled based on Japan's "Foreign Exchange and Foreign Trade Law". The export from Japan may be subject to an export license by the government of Japan.
Further, re-export to another country may be subject to the license of the government of the country from where the product is re-exported. Furthermore, the product may also be controlled by re-export regulations of the United States government.
Should you wish to export or re-export these products, please contact FANUC for advice.

The products in this manual are manufactured under strict quality control. However, when using any of the products in a facility in which a serious accident or loss is predicted due to a failure of the product, install a safety device.

In this manual we have tried as much as possible to describe all the various matters.
However, we cannot describe all the matters which must not be done, or which cannot be done, because there are so many possibilities.
Therefore, matters which are not especially described as possible in this manual should be regarded as "impossible".

# DEFINITION OF WARNING, CAUTION, AND NOTE

This manual includes safety precautions for protecting the user and preventing damage to the machine. Precautions are classified into Warning and Caution according to their bearing on safety. Also, supplementary information is described as a Note. Read the Warning, Caution, and Note thoroughly before attempting to use the machine.

⚠ **WARNING**
Applied when there is a danger of the user being injured or when there is a danger of both the user being injured and the equipment being damaged if the approved procedure is not observed.

⚠ **CAUTION**
Applied when there is a danger of the equipment being damaged, if the approved procedure is not observed.

**NOTE**
The Note is used to indicate supplementary information other than Warning and Caution.

- Read this manual carefully, and store it in a safe place.

# PREFACE

This manual describes the electrical and structural specifications required for connecting the CNC control unit to a machine tool. The manual outlines the components commonly used for FANUC CNC control units, as shown in the configuration diagram in Chapter 2, and supplies additional information on using these components.

The manual outlines the I/O unit, servo, spindle, and other components common to FANUC CNC control units, and supplies additional information on using these components in this CNC control unit. For detailed specifications, refer to the manuals of these components.

For options not covered in this manual, also refer to the manuals of these components.

## Applicable models

The models covered by this manual, and their abbreviations are :

| Model name | Abbreviation | |
|---|---|---|
| FANUC Series 0*i*-TD | 0*i* –TD | Series 0*i* |
| FANUC Series 0*i*-MD | 0*i* –MD | |
| FANUC Series 0*i* Mate-TD | 0*i* Mate-TD | Series 0*i* Mate |
| FANUC Series 0*i* Mate-MD | 0*i* Mate-MD | |

## Organization of this manuals

This manual consists of chapters 1 to 12 and appendixes at the end of the book.

| Chapter and title | Contents |
|---|---|
| Chapter 1<br>CONFIGURATION | Provides general information related to the connection of the CNC, as well as an introduction to detailed information. |
| Chapter 2<br>TOTAL CONNECTION DAIGRAMS | Describes how to connect peripheral units to the CNC. |
| Chapter 3<br>INSTALLATION | Describes the installation requirements for using the CNC.<br>1) Required power supply capacity<br>2) Heat output<br>3) Locations of connectors on the control unit<br>4) Action against noise |
| Chapter 4<br>POWER SUPPLAY CONNECTION | Describes how to make connections related to the power supply of the CNC. |
| Chapter 5<br>CONNECTION TO CNC PERIOHERALS | Describes how to connect the following peripheral devices to the CNC:<br>1) Display unit / MDI unit<br>2) I/O device (RS-232-C)<br>3) High-speed skip (HDI)<br>4) Embedded Ethernet<br>5) Connection to the touch panel |
| Chapter 6<br>SPINDLE CONNECTION | Describes how to connect spindle-related units to the CNC. |
| Chapter 7<br>SERVO INTERFACE | Describes how to connect servo-related units to the CNC. |
| Chapter 8<br>CONNECTION TO FANUC I/O Link | Describes how to connect machine interface I/O with the FANUC I/O Link. |
| Chapter 9<br>CONNECTION OF I/O Link SLAVE DEVICES | Describes how to connect various I/O Link slave devices.<br>It also describes I/O units for the 0*i*. |
| Chapter 10<br>STOP AND EMERGENCY STOP | Describes how to handle the emergency stop signal.<br>Be sure to read this chapter. |

| Chapter and title | Contents |
|---|---|
| Chapter 11<br>CONNECTION TO OTHER NETWORKS | Describes connection to the following networks.<br>For details on the connection, refer to the following manuals provided separately.<br><br>Manual name (Specification number)<br>• FANUC Fast Ethernet / Fast Data Server For FANUC Series 0*i*-MODEL D OPERATOR'S MANUAL (B-64414EN)<br>• FANUC Series 0*i*-MODEL D PROFIBUS-DP Board CONNECTION MANUAL (B-64403EN)<br>• FANUC Series 0*i*-MODEL D DeviceNet Board CONNECTION MANUAL (B-64443EN)<br>• FANUC Series 0*i*-MODEL D FL-net Board CONNECTION MANUAL (B-64453EN) |
| Chapter 12<br>CONNECTION OF THE STAND-ALONE TYPE | Provides descriptions specific to connection of the stand-alone type Series 0*i*-D. |
| APPENDIX | A) OUTLINE DRAWINGS OF UNITS<br>B) 20-PIN INTERFACE CONNECTORS AND CABLES<br>C) CONNECTION CABLE (SUPPLIED FROM US)<br>D) OPTICAL FIBER CABLE<br>E) LIQUID CRYSTAL DISPLAY (LCD)<br>F) MEMORY CARD INTERFACE |

## Related manuals of Series 0*i* -D, Series 0*i* Mate -D

The following table lists the manuals related to Series 0*i* -D, Series 0*i* Mate -D. This manual is indicated by an asterisk(*).

**Table 1 Related manuals of Series 0*i*-D, Series 0*i* Mate-D**

| Manual name | Specification number | |
|---|---|---|
| DESCRIPTIONS | B-64302EN | |
| CONNECTION MANUAL (HARDWARE) | B-64303EN | * |
| CONNECTION MANUAL (FUNCTION) | B-64303EN-1 | |
| USER'S MANUAL (Common to Lathe System/Machining Center System) | B-64304EN | |
| USER'S MANUAL (For Lathe System) | B-64304EN-1 | |
| USER'S MANUAL (For Machining Center System) | B-64304EN-2 | |
| MAINTENANCE MANUAL | B-64305EN | |
| PARAMETER MANUAL | B-64310EN | |
| START-UP MANUAL | B-64304EN-3 | |
| Programming | | |
| Macro Executor PROGRAMMING MANUAL | B-64303EN-2 | |
| Macro Compiler PROGRAMMING MANUAL | B-64303EN-5 | |
| C Language Executor PROGRAMMING MANUAL | B-64303EN-3 | |
| PMC | | |
| PMC PROGRAMMING MANUAL | B-64393EN | |
| Network | | |
| PROFIBUS-DP Board CONNECTION MANUAL | B-64403EN | |
| Fast Ethernet / Fast Data Server OPERATOR'S MANUAL | B-64414EN | |
| DeviceNet Board CONNECTION MANUAL | B-64443EN | |
| FL-net Board CONNECTION MANUAL | B-64453EN | |
| Dual Check Safety | | |
| Dual Check Safety CONNECTION MANUAL | B-64303EN-4 | |
| Operation guidance function | | |
| MANUAL GUIDE *i* (Common to Lathe System/Machining Center System) OPERATOR'S MANUAL | B-63874EN | |
| MANUAL GUIDE *i* (For Machining Center System) OPERATOR'S MANUAL | B-63874EN-2 | |

| Manual name | Specification number | |
|---|---|---|
| MANUAL GUIDE *i* Set-up Guidance OPERATOR'S MANUAL | B-63874EN-1 | |
| MANUAL GUIDE 0*i* OPERATOR'S MANUAL | B-64434EN | |
| TURN MATE *i* OPERATOR'S MANUAL | B-64254EN | |
| CNC Screen Display function | | |
| CNC Screen Display Function OPERATOR'S MANUAL | B-63164EN | |

## Related manuals of SERVO MOTOR αis/βis/αi/βi series

The following table lists the manuals related to SERVO MOTOR αis/βis/αi/βi series

**Table 2 Related manuals of SERVO MOTOR αis/βis/αi/βi series**

| Manual name | Specification number |
|---|---|
| FANUC AC SERVO MOTOR αi series DESCRIPTIONS | B-65262EN |
| FANUC AC SPINDLE MOTOR αi series DESCRIPTIONS | B-65272EN |
| FANUC AC SERVO MOTOR βi series DESCRIPTIONS | B-65302EN |
| FANUC AC SPINDLE MOTOR βi series DESCRIPTIONS | B-65312EN |
| FANUC SERVO AMPLIFIER αi series DESCRIPTIONS | B-65282EN |
| FANUC SERVO AMPLIFIER βi series DESCRIPTIONS | B-65322EN |
| FANUC AC SERVO MOTOR αis series<br>FANUC AC SERVO MOTOR αi series<br>FANUC AC SPINDLE MOTOR αi series<br>FANUC SERVO AMPLIFIER αi series MAINTENANCE MANUAL | B-65285EN |
| FANUC SERVO MOTOR βis series<br>FANUC AC SPINDLE MOTOR βi series<br>FANUC SERVO AMPLIFIER βi series MAINTENANCE MANUAL | B-65325EN |
| FANUC AC SERVO MOTOR αi series<br>FANUC AC SERVO MOTOR βi series<br>FANUC LINEAR MOTOR LiS series<br>FANUC SYNCHRONOUS BUILT-IN SERVO MOTOR DiS series<br>PARAMETER MANUAL | B-65270EN |
| FANUC AC SPINDLE MOTOR αi series<br>FANUC AC SPINDLE MOTOR βi series<br>BUILT-IN SPINDLE MOTOR Bi series<br>PARAMETER MANUAL | B-65280EN |

This manual mainly assumes that the FANUC SERVO MOTOR αi series of servo motor is used. For servo motor and spindle information, refer to the manuals for the servo motor and spindle that are actually connected.

## Related manuals of FANUC PANEL *i*

The following table lists the manuals related to FANUC PANEL *i*.

**Table 3 Related manuals of FANUC PANEL *i***

| Manual name | Specification number |
|---|---|
| FANUC PANEL *i* CONNECTION AND MAINTENANCE MANUAL | B-64223EN |

# TABLE OF CONTENTS


DEFINITION OF WARNING, CAUTION, AND NOTE ..... s-1

PREFACE ..... p-1

1 CONFIGURATION ..... 1
- 1.1 CONTROL UNIT CONFIGURATION AND COMPONENT NAMES ..... 1
  - 1.1.1 Configurations of Control Units ..... 1
- 1.2 HARDWARE OVERVIEW ..... 5
  - 1.2.1 Control Unit Overview ..... 5

2 TOTAL CONNECTION DIAGRAMS ..... 6

3 INSTALLATION ..... 9
- 3.1 ENVIRONMENTAL REQUIREMENTS ..... 9
  - 3.1.1 Environmental Conditions External to Cabinets ..... 9
  - 3.1.2 Environmental Conditions of the Control Unit ..... 9
- 3.2 POWER SUPPLY CAPACITY ..... 10
  - 3.2.1 Power Supply Capacities of CNC-related Units ..... 10
- 3.3 DESIGN AND INSTALLATION CONDITIONS OF THE MACHINE TOOL MAGNETIC CABINET ..... 11
- 3.4 THERMAL DESIGN OF THE MACHINE TOOL MAGNETIC CABINET ..... 12
  - 3.4.1 Temperature Rise within the Machine Tool Magnetic Cabinet ..... 12
  - 3.4.2 Heat Output of Each Unit ..... 12
  - 3.4.3 Thermal Design of Operator's Panel ..... 13
- 3.5 COUNTERMEASURES AGAINST NOISE ..... 15
  - 3.5.1 Grounding ..... 15
    - 3.5.1.1 About grounding types ..... 15
    - 3.5.1.2 Grounding methods ..... 15
    - 3.5.1.3 Cable clamp and shield processing ..... 19
    - 3.5.1.4 Cabinet ..... 21
  - 3.5.2 Connecting the Ground Terminal of the Control Unit ..... 23
  - 3.5.3 Separating Signal Lines ..... 26
  - 3.5.4 Noise Suppressor ..... 27
  - 3.5.5 Measures Against Surges due to Lightning ..... 28
- 3.6 CONTROL UNIT ..... 29
  - 3.6.1 Installation of the Control Unit ..... 29
- 3.7 SEVERE DUST/LIQUID PROTECTION OF CABINETS AND PENDANT BOXES ..... 30

4 POWER SUPPLY CONNECTION ..... 32
- 4.1 GENERAL ..... 32
- 4.2 TURNING ON AND OFF THE POWER TO THE CONTROL UNIT ..... 32
  - 4.2.1 Power Supply for the Control Unit ..... 32
  - 4.2.2 External 24 VDC Power Specification and Circuit Configuration ..... 32
  - 4.2.3 Power-on Sequence ..... 36
  - 4.2.4 Power-off Sequence ..... 36
- 4.3 CABLE FOR POWER SUPPLY TO CONTROL UNIT ..... 37
- 4.4 BATTERIES ..... 37
  - 4.4.1 Battery for Memory Backup in the CNC Control Unit (3 VDC) ..... 37

4.4.2 Battery for Separate Absolute Pulsecoders (6VDC) ....42
4.4.3 Battery for Absolute Pulsecoder Built into the Motor (6VDC)....42

**5 CONNECTION TO CNC PERIPHERALS ....43**
5.1 CONNECTION WITH DISPLAY UNIT/MDI UNIT ....43
5.1.1 Overview ....43
5.1.2 Connection to the MDI Unit....44
5.1.3 Connection with the Standard MDI Unit....45
5.1.4 Key Layout of MDI....46
5.2 CONNECTION WITH INPUT/OUTPUT DEVICES ....49
5.2.1 Overview ....49
5.2.2 Connecting I/O Devices ....50
5.2.3 RS-232-C Serial Port....51
5.2.4 RS-232-C Interface Specification....53
5.3 CONNECTING THE HIGH-SPEED SKIP (HDI)....60
5.3.1 Connecting the High-speed Skip (HDI) ....60
5.3.2 Input Signal Rules for the High-speed Skip (HDI) ....61
5.4 LINKING THE EMBEDDED ETHERNET INTERFACE....62
5.4.1 Connection to the Ethernet Interface....62
5.4.2 Specification of Twisted-Pair Cable....64
5.4.3 Anti-Noise Measure ....66
5.4.4 Network Installation....66
5.5 CONNECTION TO THE TOUCH PANEL ....68
5.5.1 Connection of the LCD Unit with a Touch Panel ....68
5.5.2 External Touch Panel Interface ....69

**6 SPINDLE CONNECTION ....71**
6.1 SERIAL SPINDLE....73
6.1.1 Connection of One to Two Serial Spindles ....73
6.1.2 Connecting Three Serial Spindles ....75
6.2 ANALOG SPINDLE ....80
6.3 POSITION CODER....81

**7 SERVO INTERFACE....82**
7.1 CONNECTION TO THE SERVO AMPLIFIERS....82
7.1.1 Overview ....83
7.1.2 Interface to the Servo Amplifiers ....83
7.2 SEPARATE DETECTOR INTERFACE....84
7.2.1 Separate Detector Interface Unit Specification ....85
7.2.2 Connection of Power Supply....86
7.2.3 Separate Detector Interface (Serial Interface) ....88
7.2.4 Separate Detector Interface (Parallel interface)....90
7.2.5 Input Signal Requirements (Parallel interface) ....91
7.2.6 Connection of Battery for Absolute Position Detector....93
7.2.7 Connection Between the Basic Unit and Additional Unit....95
7.2.8 Connector Locations....95
7.2.9 Installation....96
7.2.10 Notes on Installing a Separate Detector Interface Unit ....97
7.3 ANALOG INPUT SEPARATE DETECTOR INTERFACE ....100
7.3.1 Overview ....101
7.3.2 Analog Input Separate Detector Interface Unit Specification ....103
7.3.3 Connection of Power Supply....104
7.3.4 Analog Input Separate Detector Interface (Analog 1Vp-p Interface) ....106

7.3.5 Input Signal Specifications....107
7.3.6 Connection of Battery for Absolute Position Detector....108
7.3.7 Connection Between the Analog Input Separate Detector Interface Unit and Additional Unit....109
7.3.8 Connector Locations....109
7.3.9 Installation....110
7.3.10 Notes on Installing an Analog Input Separate Detector Interface Unit....111

**8 CONNECTION TO FANUC I/O Link....113**

8.1 OVERVIEW....113
8.2 CONNECTION....113
8.2.1 Connection of FANUC I/O Link by Electric Cable....116
8.2.2 Connection of FANUC I/O Link by Optical Fiber Cable....117
8.2.3 Connection when Multiple Channels of FANUC I/O Links are Used....120
8.2.4 Power Supply Precautions....123

**9 CONNECTION OF I/O Link SLAVE DEVICES....124**

9.1 UNITS CONNECTABLE WITH THE FANUC I/O LINK....124
9.2 CONNECTION OF CONNECTOR PANEL I/O MODULE....125
9.2.1 Configuration....125
9.2.2 Connection Diagram....126
9.2.3 Module Specifications....127
9.2.4 DI/DO Connector Pin Assignment....129
9.2.5 DI (Input Signal) Connection....130
9.2.6 DO (Output Signal) Connection....132
9.2.7 DI/DO Signal Specifications....133
9.2.8 2A Output Connector Pin Allocation....134
9.2.9 2A DO (Output Signal) Connection....135
9.2.10 2A Output DO Signal Specifications....136
9.2.11 Analog Input Connector Pin Allocation....137
9.2.12 Analog Input Signal Connections....138
9.2.13 Analog Input Signal Specifications....139
9.2.14 Analog Input Specifications....139
9.2.15 Manual Pulse Generator Connection....141
9.2.16 Cable Length for Manual Pulse Generator....142
9.2.17 Connection of Basic and Expansion Modules....142
9.2.18 Module Installation....144
9.2.19 Other Notes....148
9.2.20 Distribution I/O Setting....151
9.3 CONNECTION OF OPERATOR'S PANEL I/O MODULE (FOR MATRIX INPUT)....153
9.3.1 Overall Connection Diagram....153
9.3.2 Power Connection....154
9.3.3 DI/DO Connector Pin Arrangement....155
9.3.4 DI (General-purpose Input Signal) Connection....156
9.3.5 DI (Matrix Input Signal) Connection....157
9.3.6 DO (Output Signal) Connection....159
9.3.7 Manual Pulse Generator Connection....163
9.3.8 External View....163
9.3.9 Specifications....164
9.3.10 Other Notes....165
9.4 CONNECTION OF OPERATOR'S PANEL I/O MODULE AND POWER MAGNETICS CABINET I/O MODULE....169
9.4.1 Overall Connection Diagram....169

9.4.2 Power Connection ....170
9.4.3 DI/DO Connector Pin Arrangement ....171
9.4.4 DI (General-purpose Input Signal) Connection ....172
9.4.5 DO (Output Signal) Connection ....176
9.4.6 Manual Pulse Generator Connection ....177
9.4.7 External View ....178
9.4.8 Specifications ....179
9.4.9 Other Notes ....180
9.5 I/O MODULE TYPE-2 FOR CONNECTOR PANEL .... 183
9.5.1 Configuration ....183
9.5.2 Connector Layout Diagram ....184
9.5.3 Connection Diagram ....185
9.5.4 Module Specifications ....186
9.5.5 DI/DO Connector Pin Assignment ....187
9.5.6 DI (Input Signal) Connection ....188
9.5.7 DO (Output Signal) Connection ....194
9.5.8 DI/DO Signal Specifications ....198
9.5.9 Power Supply Connection ....199
9.5.10 Manual Pulse Generator Connection ....199
9.5.11 Cable Length for Manual Pulse Generator ....199
9.5.12 Connection between Modules ....200
9.5.13 Unit Dimensions ....201
9.5.14 Mounting the Module ....201
9.5.15 Connector Panel Printed Circuit Board ....203
9.5.16 Other Notes ....205
9.6 CONNECTION OF I/O UNITS FOR 0*i* .... *207*
9.6.1 Overview ....207
9.6.2 Cautions ....209
9.6.3 Cable for Power Supply to Control Unit ....210
9.6.4 Connector Pin Arrangement ....211
9.6.5 Connecting DI/DO ....212
9.6.6 I/O Signal Requirements and External Power Supply for DO ....221
9.6.7 Connecting the Manual Pulse Generator ....226
9.7 FANUC I/O LINK CONNECTION UNIT .... 230
9.7.1 Overview ....230
9.7.2 Specification ....231
9.7.3 Connection ....234
9.7.3.1 I/O Link interface ....234
9.8 CONNECTING THE FANUC SERVO UNIT β SERIES WITH I/O LINK .... 236
9.8.1 Overview ....236
9.8.2 Connection ....237
9.8.3 Maximum Number of Units that can be Connected ....237
9.8.4 Address Assignment by Ladder ....237
9.9 CONNECTION TO STANDARD MACHINE OPERATOR'S PANEL .... 238
9.9.1 Overview ....238
9.9.2 Total Connection Diagram ....239
9.9.3 Each Connections ....240
9.9.3.1 Pin assignment ....240
9.9.3.2 Power supply connection ....241
9.9.3.3 I/O Link connection ....242
9.9.3.4 Emergency stop signal connection ....243
9.9.3.5 Power ON/OFF control signal connection ....243
9.9.3.6 General-purpose DI signal connection ....244
9.9.3.7 General-purpose DO signal connection ....246

9.9.3.8 Manual pulse generator connection ..... 246
9.9.3.9 Connector (on the cable side) specifications ..... 249
9.9.4 I/O Address ..... 250
9.9.4.1 Keyboard of main panel ..... 250
9.9.4.2 Override signals ..... 250
9.9.5 I/O Mapping ..... 251
9.9.5.1 Connector locations of main panel ..... 252
9.9.6 Specifications ..... 254
9.9.6.1 Environmental requirement ..... 254
9.9.6.2 Order specification ..... 254
9.9.6.3 Main panel specification ..... 254
9.9.6.4 Sub panel A/B1 specification ..... 254
9.9.6.5 Power supply specification ..... 255
9.9.6.6 General-purpose DI signal definition ..... 255
9.9.6.7 General-purpose DO signal definition ..... 255
9.9.7 Key Symbol Indication on Machine Operator’s Panel ..... 255
9.9.7.1 Meaning of key symbols ..... 255
9.9.7.2 Detachable key top ..... 257
9.10 CONNECTION TO THE SMALL MACHINE OPERATOR'S PANEL OR SMALL MACHINE OPERATOR'S PANEL B ..... 258
9.10.1 Overview ..... 258
9.10.2 Overall Connection Diagram ..... 258
9.10.3 Connection of Each Section ..... 260
9.10.3.1 Power connection ..... 260
9.10.3.2 Emergency stop switch ..... 260
9.10.3.3 I/O Link connection ..... 261
9.10.3.4 Manual pulse generator connection ..... 261
9.10.4 DI Signal Connection (Rotary Switch Connection) ..... 263
9.10.5 General-purpose DI/DO Connection (Only for the Small Machine Operator's Panel B) ..... 264
9.10.5.1 Connector pin allocation ..... 264
9.10.5.2 General-purpose DI (input signal) connection ..... 265
9.10.5.3 General-purpose DO (output signal) connection ..... 267
9.10.6 I/O Address ..... 268
9.10.6.1 Keyboard of the operator's panel ..... 268
9.10.6.2 Override signals ..... 269
9.10.7 I/O Address Allocation ..... 270
9.10.7.1 For small machine operator's panel ..... 270
9.10.7.2 For small machine operator's panel B ..... 271
9.10.8 External Dimensions ..... 274
9.10.8.1 Outline drawing and panel-cut drawing of the small machine operator's panel ..... 274
9.10.8.2 Layout of the key sheet (Same for both the small machine operator's panel and small machine operator's panel B) ..... 276
9.10.9 Connector Layout of the Small Machine Operator's Panel ..... 278
9.10.10 Specifications ..... 279
9.10.10.1 Environmental requirement ..... 279
9.10.10.2 Order specification ..... 279
9.10.10.3 Operator's panel specification ..... 280
9.10.10.4 Power supply specification ..... 280
9.10.11 Key Symbol Indication on Machine Operator's Panel ..... 280
9.10.11.1 Meaning of key symbols ..... 280
9.10.11.2 Customization of the key sheet ..... 281
9.10.12 Maintenance Parts ..... 282
9.11 CONNECTION OF TERMINAL TYPE I/O MODULE ..... 282
9.11.1 Overview ..... 282

9.11.2 Module Specifications ....283
9.11.2.1 Types of modules ....283
9.11.2.2 Installation conditions ....284
9.11.2.3 I/O signal specifications ....284
9.11.2.4 Power supply capacity ....286
9.11.2.5 Heat dissipation ....286
9.11.2.6 Weight ....286
9.11.2.7 Applicable wire ....287
9.11.3 External View and Dimensions ....288
9.11.3.1 Dimensions (common to the modules) ....288
9.11.3.2 Dimensions in a maximum configuration (one basic module + three expansion modules) ....288
9.11.3.3 Component names ....289
9.11.4 Installation ....294
9.11.5 Connection ....296
9.11.5.1 Overall connection diagram ....296
9.11.5.2 Power connection ....297
9.11.5.3 Signal assignment on terminal blocks ....298
9.11.5.4 DI/DO connection ....301
9.11.5.5 Manual pulse generator connection ....305
9.11.5.6 Inter-module connection ....305
9.11.5.7 Cable connection to a terminal block ....306
9.11.5.8 Detaching a terminal block ....307
9.11.6 Settings ....308
9.11.6.1 Address map ....308
9.11.6.2 DO alarm detection ....310
9.11.6.3 Setting the rotary switch ....312
9.11.7 Others ....314
9.11.7.1 Method of common pin expansion ....314
9.11.7.2 DO signal reaction to a system alarm ....315
9.11.7.3 Parallel DO (output signal) connection ....316
9.12 CONNECTION OF THE I/O LINK-AS-i CONVERTER ....317
9.12.1 Overview ....317
9.12.1.1 Features ....317
9.12.1.2 AS-i versions and ordering information ....317
9.12.1.3 Applicable CNC ....318
9.12.1.4 Specification of the I/O Link side ....318
9.12.1.5 Support for AS-i profiles ....318
9.12.2 Specifications ....318
9.12.2.1 Specifications of the AS-i converter ....318
9.12.2.2 Installation conditions ....319
9.12.2.3 Dimensions and connector layout ....319
9.12.2.4 Installation ....320
9.12.3 Connection ....323
9.12.3.1 Overall connection diagram ....323
9.12.3.2 Power connection ....323
9.12.3.3 I/O Link connection ....325
9.12.3.4 AS-i connection ....325
9.12.4 DI/DO Mapping on the I/O Link ....326
9.12.4.1 For AS-i Ver. 2.0 (A03B-0817-C001) ....326
9.12.4.2 For AS-i Ver. 2.1 (A03B-0817-C002) ....327
9.12.5 Details of I/O Link DI/DO ....329
9.12.5.1 Input/output data area ....329
9.12.5.2 AS-i master status indication ....330
9.12.5.3 Board status ....331
9.12.5.4 Slave list ....331
9.12.6 Command Execution by a Ladder Program ....333

9.12.6.1 Types of commands executable by a ladder program ..... 333
9.12.6.2 Command interface with a ladder program ..... 333
9.12.6.3 Details of command flags and status ..... 334
9.12.6.4 Error codes ..... 334
9.12.6.5 Command handshake sequence ..... 334
9.12.6.6 Details of commands ..... 335
9.12.7 LED Status Indication and Setting Switch Operation ..... 338
9.12.7.1 LED indication ..... 338
9.12.7.2 7-segment LED indication ..... 339
9.12.7.3 Setting/display switch ..... 340
9.12.7.4 Error processing ..... 341
9.12.8 How to Use the I/O Link-AS-i Converter ..... 343
9.12.8.1 Installation ..... 343
9.12.8.2 Normal operation ..... 344
9.12.9 Others ..... 345
9.12.9.1 CE marking ..... 345
9.12.9.2 Fuse ..... 345

**10 STOP AND EMERGENCY STOP ..... 346**
10.1 STOP MODES ..... 346
10.2 SHUTTING OFF THE MOTOR POWER ..... 346
10.3 STOPPING THE SPINDLE MOTOR ..... 347
10.4 STOPPING THE SERVO MOTOR ..... 347
10.5 EMERGENCY STOP SIGNAL ..... 348

**11 CONNECTION TO OTHER NETWORKS ..... 351**

**12 CONNECTION OF THE STAND-ALONE TYPE ..... 352**
12.1 OVERVIEW ..... 352
12.2 CONTROL UNIT CONFIGURATION AND COMPONENT NAMES ..... 353
12.3 CONTROL UNIT OVERVIEW ..... 354
12.4 TOTAL CONNECTION DIAGRAMS ..... 355
12.5 INSTALLATION ..... 356
12.5.1 Environmental Conditions of the Control Unit ..... 356
12.5.2 Power Supply Capacity ..... 356
12.5.3 Heat Output of Each Unit ..... 356
12.5.4 Connecting the Ground Terminal of the Control Unit ..... 357
12.5.5 Installing the Control Unit ..... 357
12.6 POWER SUPPLY CONNECTION ..... 358
12.6.1 TURNING ON AND OFF THE POWER TO THE CONTROL UNIT ..... 358
12.6.1.1 Power-on Sequence ..... 358
12.6.1.2 Power-off Sequence ..... 359
12.6.2 Cable for Power Supply to Control Unit ..... 359
12.6.3 Batteries ..... 360
12.7 HIGH-SPEED SERIAL BUS (HSSB) ..... 361
12.7.1 Overview ..... 361
12.7.2 Cautions ..... 361
12.7.3 Connection Diagram ..... 361
12.7.4 Personal Computer Specification ..... 362
12.7.5 Installation Environment ..... 362
12.7.6 Procedure for Installing Personal Computer Interface Boards ..... 362
12.7.7 Handling Precautions ..... 363
12.7.8 Recommended Cables ..... 363
12.8 PERIPHERAL EQUIPMENT AND CONNECTION ..... 363

12.8.1 Connection with the MDI Unit ....363
12.9 EXTERNAL DIMENSIONS OF EACH UNIT ....364
12.9.1 External Dimensions of Stand-alone type Control Unit ....364
12.9.2 Punch Panel (for Stand-alone Type Control Unit) ....365

**APPENDIX**

**A EXTERNAL DIMENSIONS OF EACH UNIT ....369**

**B 20-PIN INTERFACE CONNECTORS AND CABLES ....411**
B.1 BOARD-MOUNTED CONNECTORS ....411
B.1.1 Vertical-type Connectors ....411
B.1.2 Straight and Right-angled Connectors (for Spring and Screw-fixing Connector Housings) ....411
B.2 CABLE CONNECTORS ....411
B.2.1 Strand Wire Press-mount Connector ....412
B.2.2 Soldering Type Connector ....412
B.3 RECOMMENDED CONNECTORS, APPLICABLE HOUSINGS, AND CABLES ....413
B.3.1 Recommended Connectors ....414
B.3.2 Applicable Cables ....415

**C CONNECTION CABLE (SUPPLIED FROM US) ....422**

**D OPTICAL FIBER CABLE ....425**

**E LIQUID CRYSTAL DISPLAY (LCD) ....434**

**F MEMORY CARD INTERFACE ....435**

**G ANALOG SERVO ADAPTER ....437**
G.1 OVERVIEW ....437
G.2 SPECIFICATIONS ....437
G.3 ORDER SPECIFICATIONS ....437
G.4 CONNECTION DIAGRAM ....438
G.5 CONNECTION OF TYPE F ANALOG SERVO INTERFACE ....439
G.5.1 System Structure ....439
G.5.1.1 In case of using the built-in pulse coder ....439
G.5.1.2 In case of using the separate detector ....439
G.5.2 Detail of Connection ....440
G.5.2.1 Cable J155 ....440
G.5.2.2 Cable J156A (A quad B interface) ....441
G.5.2.3 Cable J156B (FANUC serial interface) ....442
G.5.2.4 Cable J37 ....443
G.5.2.5 Detail of signals ....443
G.6 CONNECTION OF TYPE M ANALOG SERVO INTERFACE ....446
G.6.1 System Structure ....446
G.6.1.1 In case of using the built-in pulse coder ....446
G.6.1.2 In case of using the separate detector ....447
G.6.2 Detail of Connection ....447
G.6.2.1 Cables J156A/B ....447
G.6.2.2 Cable J37 ....447
G.6.2.3 Cable J157 ....447
G.6.2.4 Cable J158 ....449

G.6.2.5 Detail of signals ..... 449
G.7 POWER AND HEAT GENERATED ..... 451
G.7.1 Power Supply Rating ..... 452
G.7.2 Heat Generated ..... 452
G.8 SELECT SWITCH SW1 ..... 453
G.9 EXTERNAL DIMENSION ..... 453
G.10 NOTICE ..... 453
G.11 PARAMETER SETTING ..... 454

# 1 CONFIGURATION

**NOTE**
See Chapter 12, “CONNECTION OF THE STAND-ALONE TYPE”, for stand-alone type CNC.

## 1.1 CONTROL UNIT CONFIGURATION AND COMPONENT NAMES

The configuration and component names of control units are shown in the figures given below. This manual explains how to attach the connectors shown in these figures to devices. The numbers in parentheses () in the figures are keyed to the item numbers of the descriptions in this manual. The numbers in brackets [] in the figures are connector numbers.

### 1.1.1 Configurations of Control Units

Control units (A circle indicates that the corresponding unit is available.)

| Display unit | Touch panel | MDI | Expansion slot | Soft key | 0*i* | 0*i* Mate |
|---|---|---|---|---|---|---|
| 8.4-inch color LCD | Absent | LCD-mounted type (Horizontal) | Absent | 5+2 | Available | Available |
| | | | 2 | 5+2 | Available | N/A |
| | | LCD-mounted type (Vertical) | Absent | 5+2 | Available | Available |
| | | | 2 | 5+2 | Available | N/A |
| | Present | LCD-mounted type (Horizontal) | Absent | 5+2 | Available | Available |
| | | | 2 | 5+2 | Available | N/A |
| | | LCD-mounted type (Vertical) | Absent | 5+2 | Available | Available |
| | | | 2 | 5+2 | Available | N/A |
| 10.4-inch color LCD | Absent | Stand-alone type (Vertical / Horizontal) | Absent | 10+2 | Available | N/A |
| | | | 2 | 10+2 | Available | N/A |
| | Present | | Absent | Absent | Available | N/A |
| | | | 2 | Absent | Available | N/A |

For the 8.4-inch color LCD, the touch panel is attached to only lathe system CNCs.

Control unit

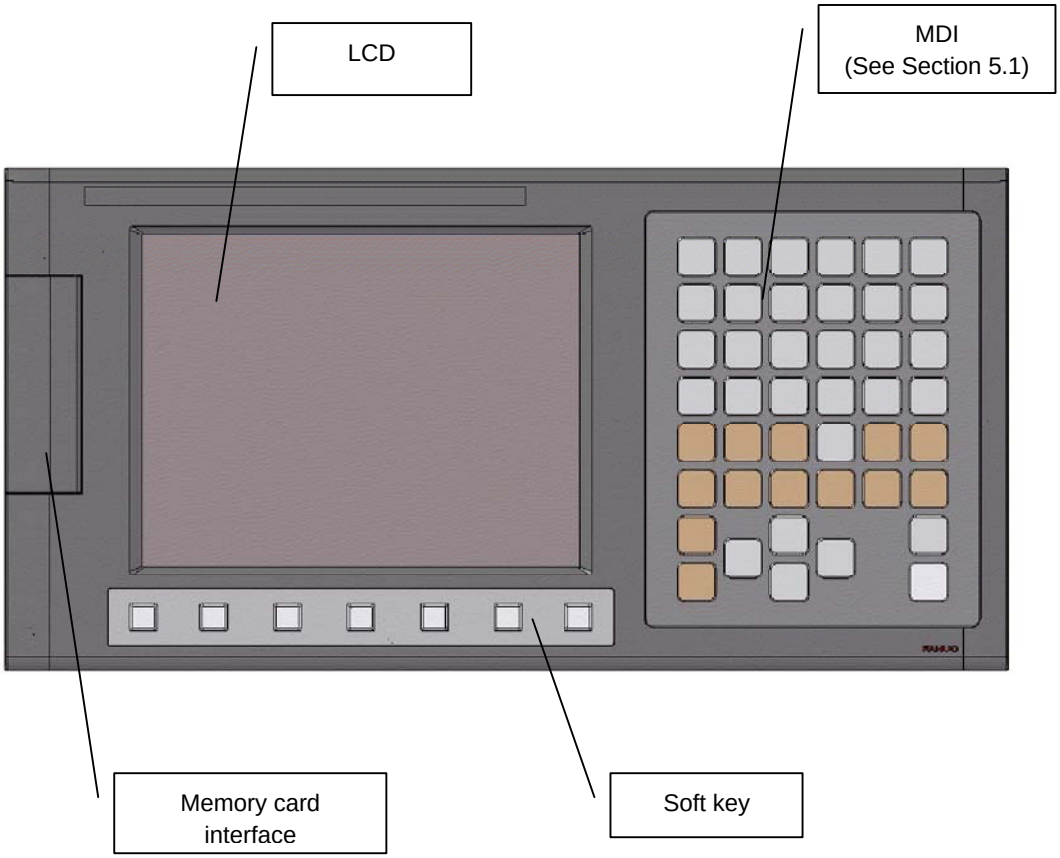


**NOTE**

This figure is a front view of the 8.4-inch color LCD/MDI (horizontal) type control unit.

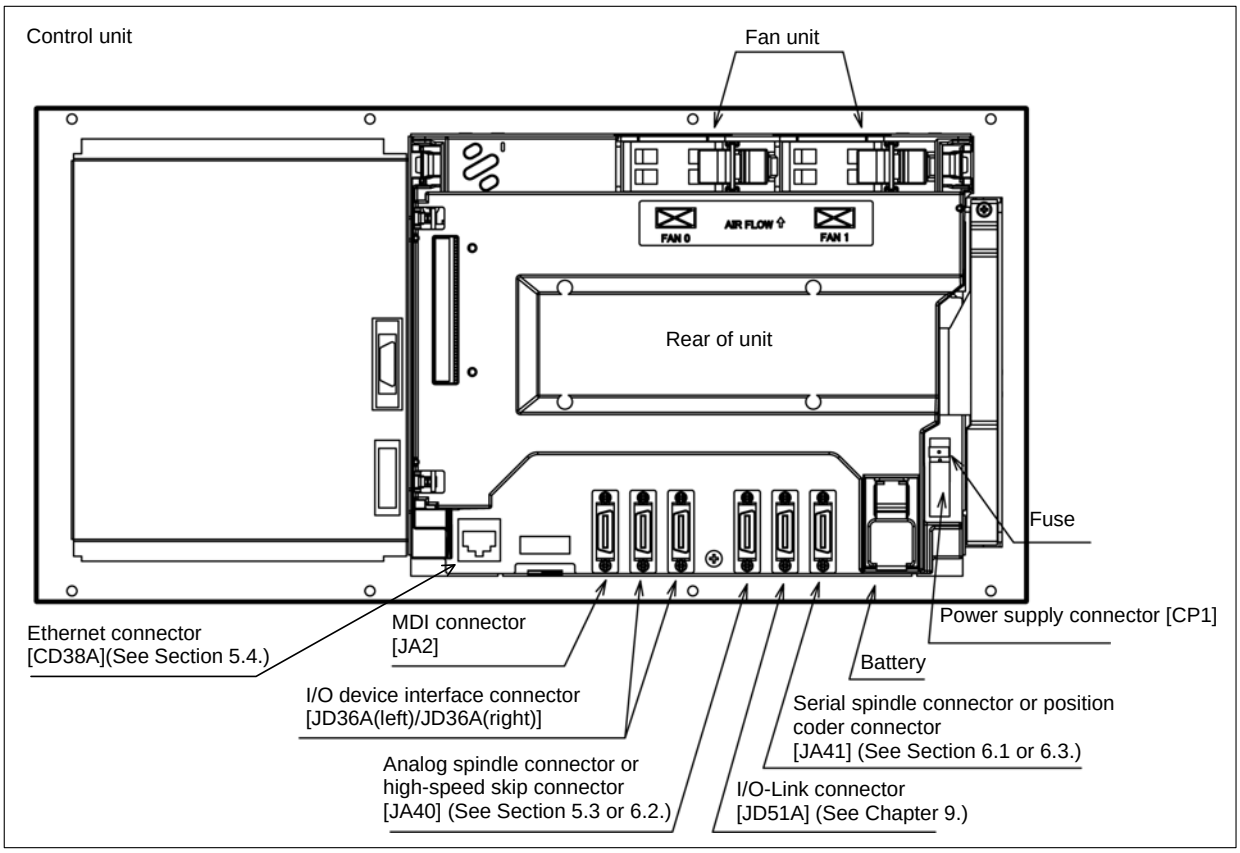


**NOTE**

This figure is a rear view of the control unit without option slots.
The numbers in parentheses () in the figures are keyed to the item numbers of the descriptions in this manual. The numbers in brackets [] in the figures are connector numbers.

I/O unit for 0*i*

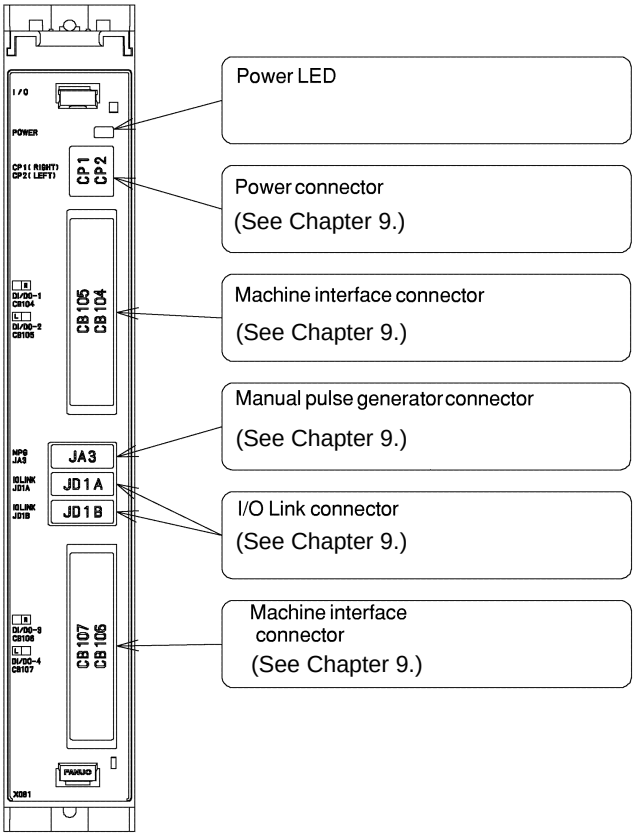

# 1.2 HARDWARE OVERVIEW

## 1.2.1 Control Unit Overview

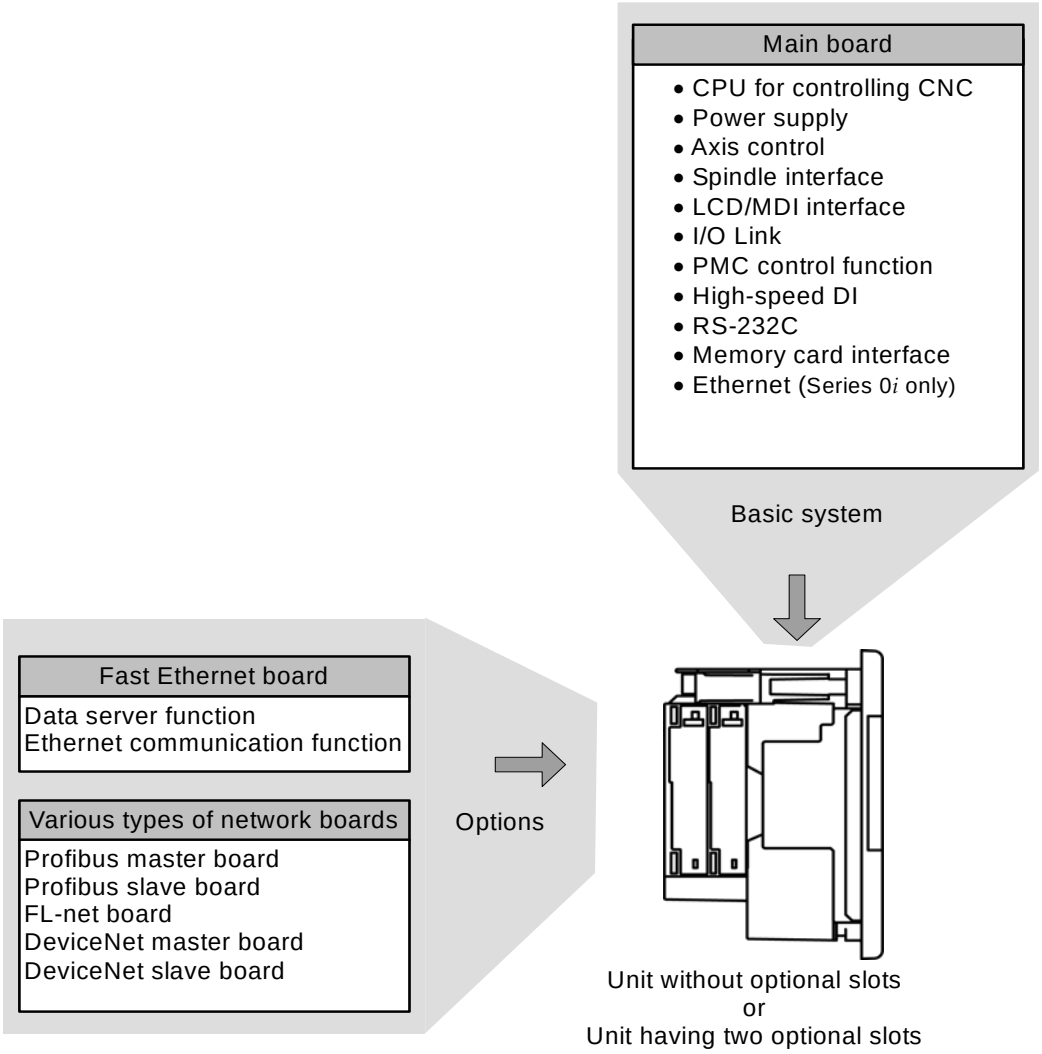


The control unit of the Series 0*i* Mate has no optional slots, so no option board can be inserted.
A unit with optional slots can have as many option boards as option slots.
The Fast Ethernet board can be inserted into only the slot on the LCD side.

# 2 TOTAL CONNECTION DIAGRAMS

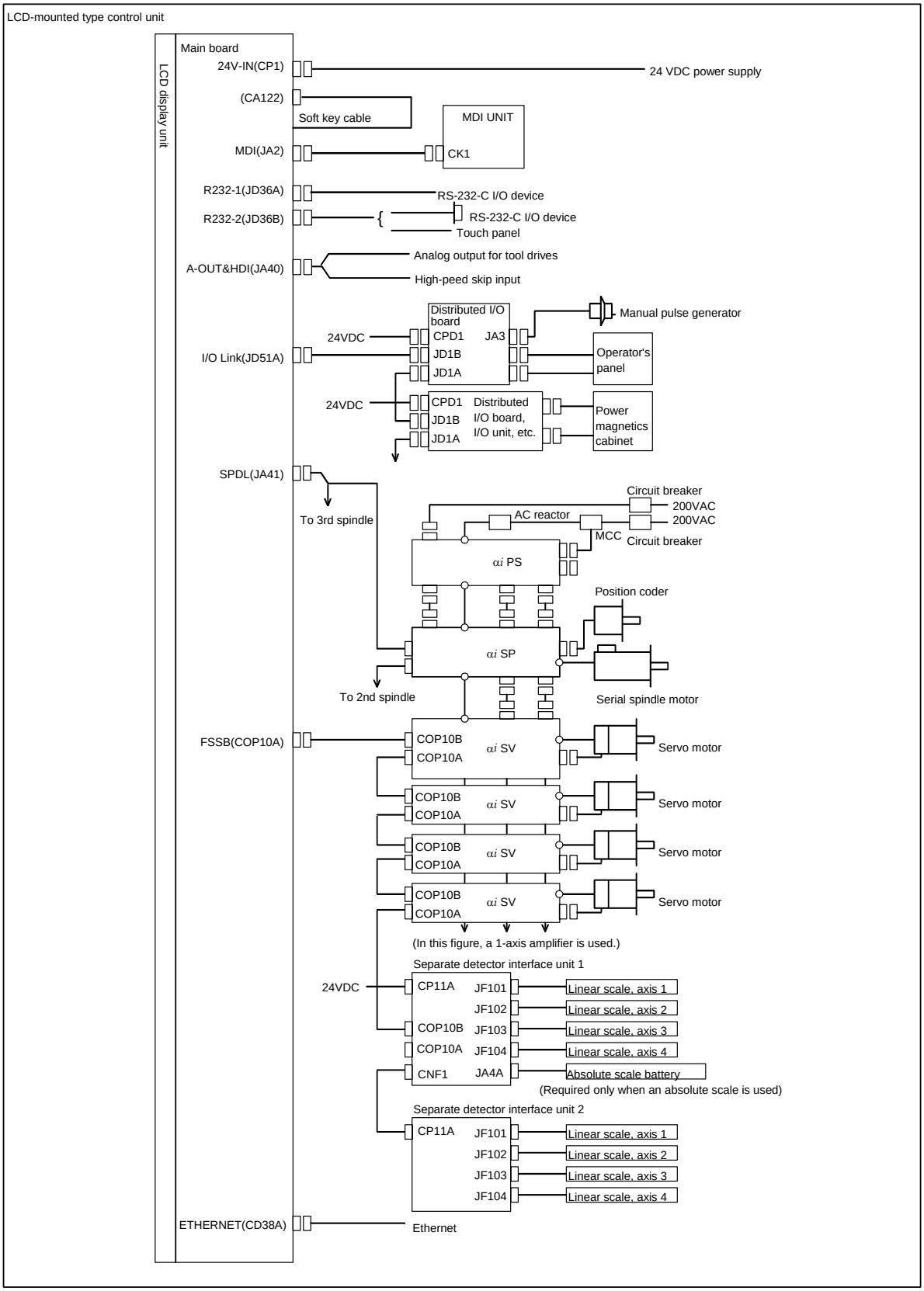

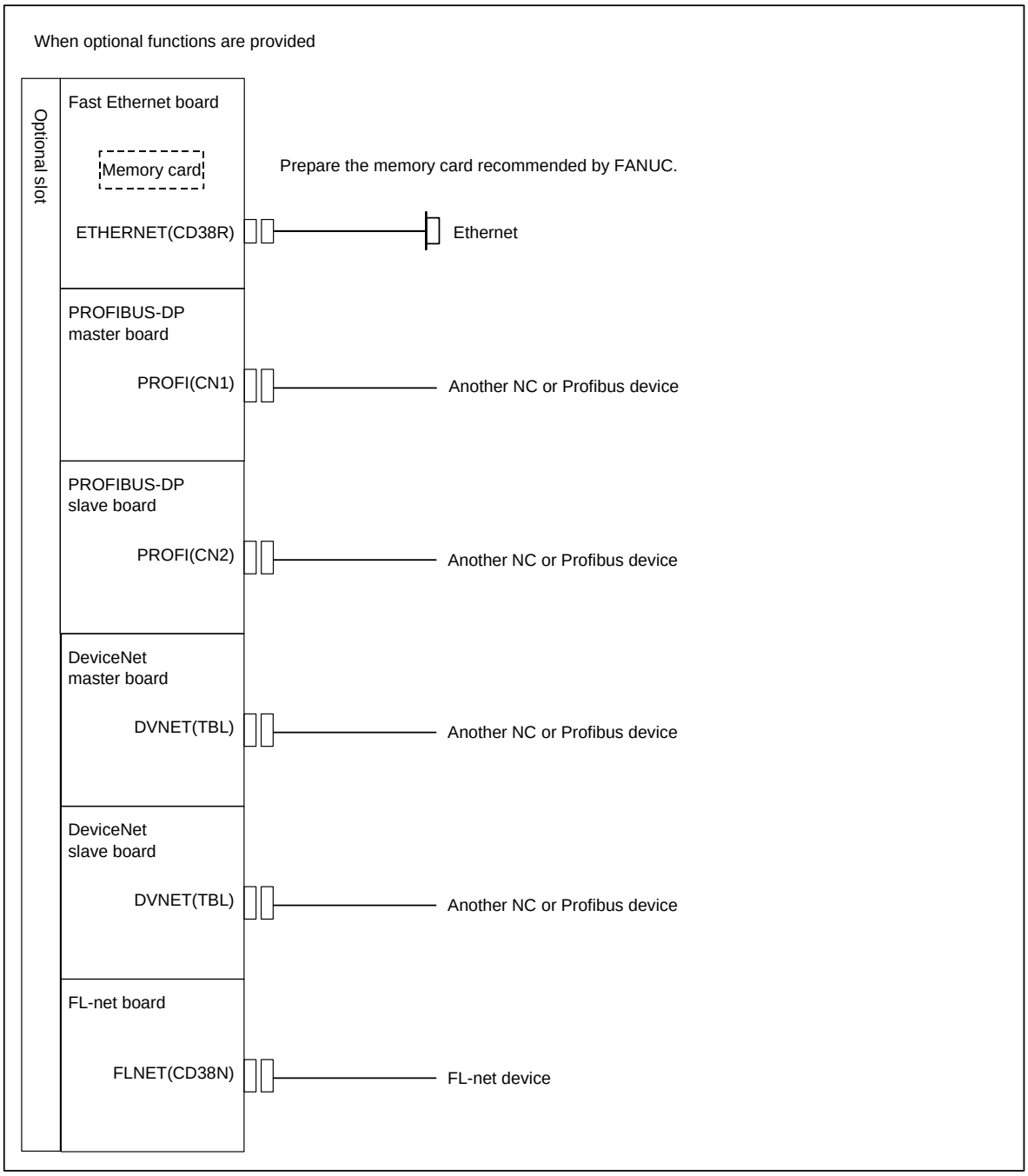
When optional functions are provided
Optional slot
Fast Ethernet board
Memory card
Prepare the memory card recommended by FANUC.
ETHERNET(CD38R)
Ethernet
PROFIBUS-DP
master board
PROFI(CN1)
Another NC or Profibus device
PROFIBUS-DP
slave board
PROFI(CN2)
Another NC or Profibus device
DeviceNet
master board
DVNET(TBL)
Another NC or Profibus device
DeviceNet
slave board
DVNET(TBL)
Another NC or Profibus device
FL-net board
FLNET(CD38N)
FL-net device

## Example of I/O Link connection

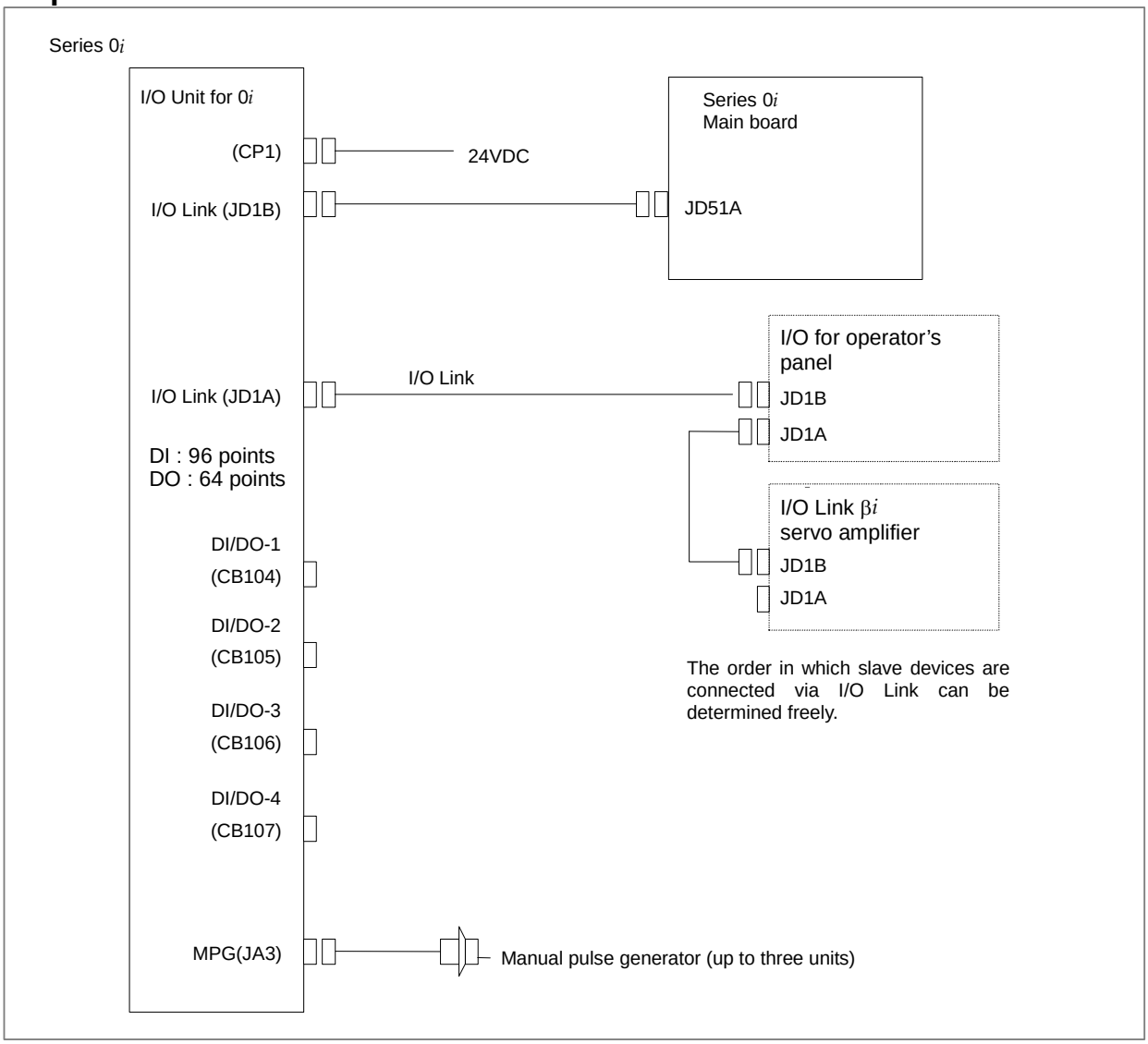


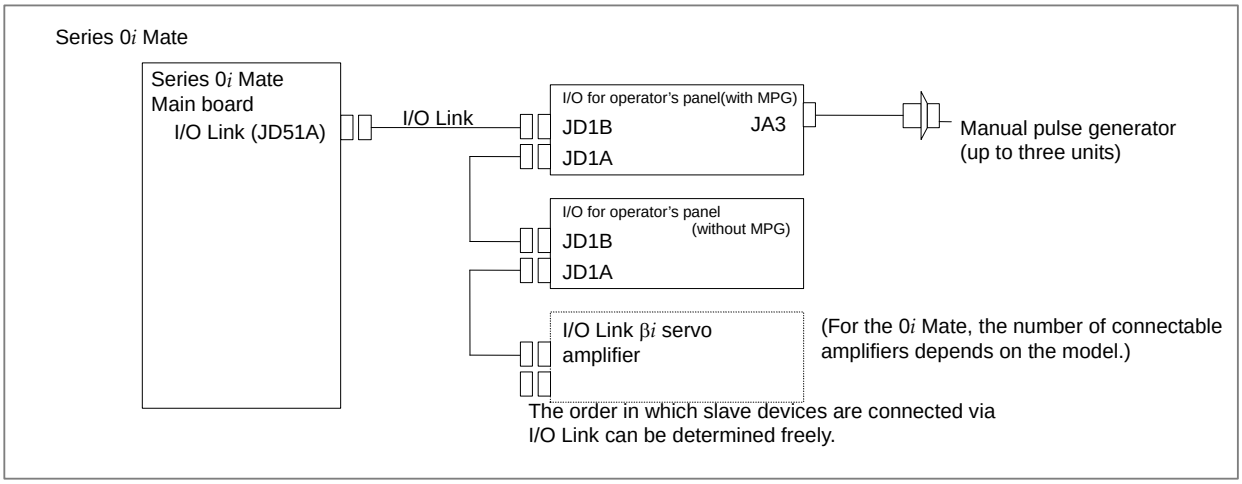

# 3 INSTALLATION

## 3.1 ENVIRONMENTAL REQUIREMENTS

### 3.1.1 Environmental Conditions External to Cabinets

The peripheral units and the control unit have been designed on the assumption that they are housed in closed cabinets. In this manual "cabinet" refers to the following:

- Cabinet manufactured by the machine tool builder for housing the control unit or peripheral units;
- Operation pendant, manufactured by the machine tool builder, for housing the LCD/MDI unit or operator's panel.
- Equivalent to the above.

The environmental conditions when installing these cabinets shall conform to the following table.

| | | |
|---|---|---|
| Ambient temperature of cabinets | Operating | 0°C to 45°C |
| | Storage, Transport | –20°C to 60°C |
| | Temperature change | 0.3°C/minute or less |
| Humidity | Normal | 75%RH or less, no condensation |
| | Short period (less than 1 month) | 95%RH or less, no condensation |
| Vibration | Operating | 0.5G or less |
| | Non-operating | 1.0G or less |
| Meters above sea level | Operating | Up to 1000 m (Note) |
| | Non-operating | Up to 12000 m |
| Environment | | Normal machine factory environment (These conditions need to be reviewed separately when the cabinets are installed in an environment where the concentrations of dust, coolant, organic solvent, and corrosive gases are relatively high.) |

### 3.1.2 Environmental Conditions of the Control Unit

The environmental conditions for installing the control unit in the cabinets are shown in the following table. Section 3.3 describes the installation and design conditions of a cabinet satisfying these conditions.

| | | |
|---|---|---|
| Ambient temperature | Operating | 0°C to 58°C |
| | Storage, Transport | –20°C to 60°C |
| | Temperature change | 0.3°C/minute or less |
| Humidity | Normal | 75%RH or less, no condensation |
| | Short period (less than 1 month) | 95%RH or less, no condensation |
| Vibration | Operating | 0.5G or less<br>A FANUC evaluation test is performed under the following conditions.<br>10 to 58Hz: 0.075 mm (amplitude)<br>58 to 500Hz: 1 G<br>Vibration directions: X, Y, and Z directions<br>Scanning frequency: 10 cycles<br>IEC68-2-6 compliant |
| | Non-operating | 1.0G or less |
| Meters above sea level | Operating | Up to 1000 m (Note) |
| | Non-operating | Up to 12000 m |
| Environment | | Prevent coolant, lubricant, and chippings from being applied directly to on the control unit. Make sure that corrosive gas is not present. |

| | |
|---|---|
| Atmosphere outside the cabinet | Normal machine factory environment (take protective measures when the control unit is used in an environment where the concentration of dust, coolant, organic solvent, corrosive gas is relatively high.) |

**NOTE**

1 If the CNC is installed 1000 m or higher above sea level, the allowable upper ambient temperature of the CNC in the cabinet is changed as follows.
Assume that the allowable upper ambient temperature of the CNC in the cabinet installed 1000 m or higher above sea level decreases by 1.0°C for every 100 m rise in altitude.
Example)
The upper allowable ambient temperature of the CNC in the cabinet installed 1750 m above sea level is:
58°C－(1750-1000)/100×1.0°C＝50.5°C
Therefore, the allowable ambient temperature range is from 0°C to 50.5°C.

2 When using a unit for which the installation conditions are specified separately, the conditions also need to be met.

# 3.2 POWER SUPPLY CAPACITY

## 3.2.1 Power Supply Capacities of CNC-related Units

The following CNC-related units require an input power supply that satisfies the indicated current capacities with a power supply voltage of 24 VDC ±10%. Here, note that momentary voltage changes and ripples are also within ±10% of the power supply voltage.

**Table 3.2.1 (a) Power supply capacity**

| Unit | | Power supply capacity | Remarks |
|---|---|---|---|
| Control unit | With no-optional slot | 1.5A | Note 1) |
| | With two optional slots | 1.7A | Note 1) |
| Optional board | Fast Ethernet board | 0.2A | |
| | Profibus master board | 0.2A | |
| | Profibus slave board | 0.1A | |
| | FL-net board | 0.2A | |
| | DeviceNet master board | 0.1A | |
| | DeviceNet slave board | 0.1A | |

**NOTE**

1 The liquid-crystal display and MDI unit are included. Optional boards are not included.
2 When connecting an RS-232-C unit (powered by the NC) to the RS-232-C port, add the current capacity of the unit. Up to 1 A can be supplied from the two channels of the port.
3 Use memory cards that consume no more than 2 W.
4 For other peripheral units (such as I/O units), see Table 3.2.1 (b) and also refer to the relevant manuals.
5 When you select the input DC power supply for the CNC control section, consider the restrictions other than the power supply capacity. Be sure to see also Subsection 4.2.2.

**Table 3.2.1 (b) Power supply rating (peripheral units)**

| Unit | Power supply capacity | Remarks |
|---|---|---|
| MDI unit | 0A | |
| Standard machine operator's panel | 0.4A | |
| Operator's panel I/O module | 0.3A+7.3mA×DI | |
| Connector panel I/O module (basic) | 0.2A+7.3mA×DI | |
| Connector panel I/O module (additional) | 0.1A+7.3mA×DI | |
| I/O unit for 0*i* | 0.3A+7.3mA×DI | |
| Separate detector interface unit | 0.9A | Basic 4-axis unit only |
| Separate detector interface unit | 1.5A | Basic 4 axes + additional 4 axes |

**NOTE**
The power supply capacity for DO is not assumed for I/O units.

# 3.3 DESIGN AND INSTALLATION CONDITIONS OF THE MACHINE TOOL MAGNETIC CABINET

When a cabinet is designed, it must satisfy the environmental conditions described in Section 3.1. In addition, the magnetic interference on the screen, noise resistance, and maintenance requirements must be considered. The cabinet design must meet the following conditions :

(1) The cabinet must be fully closed.
The cabinet must be designed to prevent the entry of airborne dust, coolant, and organic solvent.
(2) The cabinet must be designed so that the permissible temperature of each unit is not exceeded. For actual heat design, see Section 3.4.
(3) A closed cabinet must be equipped with a fan to circulate the air within. (This is not necessary for a unit with fan.)
The fan must be adjusted so that the air moves at 0.5 m/sec along the surface of each installed unit.

⚠ **CAUTION**
If the air blows directly from the fan to the unit, dust easily adheres to the unit. This may cause the unit to fail. (This is not necessary for a unit with fan.)

(4) For the air to move easily, a clearance of 100 mm is required between each unit and the wall of the cabinet.
(5) Packing materials must be used for the cable port and the door in order to seal the cabinet.
(6) The display unit must not be installed in such a place that coolant would directly fall onto the unit. The control unit has a dust-proof front panel, but the unit should not be placed in a location where coolant would directly fall onto it.
(7) Noise must be minimized.
As the machine and the CNC unit are reduced in size, the parts that generate noise may be placed near noise-sensitive parts in the magnetics cabinet.
The CNC unit is built to protect it from external noise. Cabinet design to minimize noise generation and to prevent it from being transmitted to the CNC unit is necessary. See section 3.5 for details of noise elimination/management.
(8) When placing units in the cabinet, also consider ease of maintenance.
The units should be placed so that they can be checked and replaced easily when maintenance is performed.
(9) The installation conditions of the I/O unit and connector panel I/O module must be satisfied.
To obtain good ventilation in the module, the I/O unit and connector panel I/O module must be installed in the direction shown in the following figure. Clearances of 100 mm or more both above and below the I/O unit are required for wiring and ventilation.

Equipment radiating too much heat must not be put below the I/O unit and connector panel I/O module.

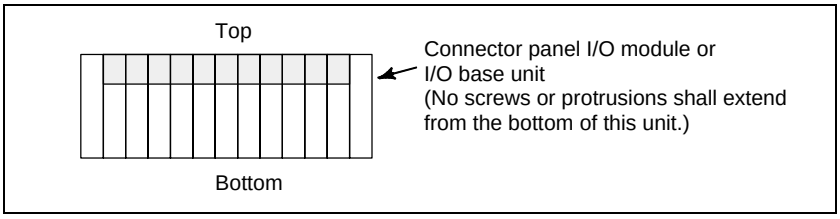


# 3.4 THERMAL DESIGN OF THE MACHINE TOOL MAGNETIC CABINET

The internal air temperature of the cabinet increases when the units and parts installed in the cabinet generate heat. Since the generated heat is radiated from the surface of the cabinet, the temperature of the air in the cabinet and the outside air balance at certain heat levels. If the amount of heat generated is constant, the larger the surface area of the cabinet, the less the internal temperature rises. The thermal design of the cabinet refers to calculating the heat generated in the cabinet, evaluating the surface area of the cabinet, and enlarging that surface area by installing heat exchangers in the cabinet, if necessary. Such a design method is described in the following subsections.

## 3.4.1 Temperature Rise within the Machine Tool Magnetic Cabinet

The cooling capacity of a cabinet made of sheet metal is generally 6 W/°C per 1m$^2$ surface area, that is, when the 6W heat source is contained in a cabinet having a surface area of 1 m$^2$, the temperature of the air in the cabinet rises by 1°C. In this case the surface area of the cabinet refers to the area useful in cooling , that is, the area obtained by subtracting the area of the cabinet touching the floor from the total surface area of the cabinet. There are two preconditions : The air in the cabinet must be circuited by the fun, and the temperature of the air in the cabinet must be almost constant.
In the case of the operator's panel cabinet for example, to limit the temperature within the operator's panel cabinet to 58°C or less when the ambient temperature is 45°C, satisfy the following expression.

Internal heat loss P [W] ≤
6[W/m$^2$·°C] × surface area S[m$^2$] × 13[°C] of rise in temperature

(A cooling capacity of 6 W/°C assumes the cabinet is so large that agitation with the fan motor does not make the temperature distribution uniform. For a small cabinet like the operator's panel, a cooling capacity of 8 W/°C, indicated in Subsection 3.4.4, may be used.)
For example, a cabinet having a surface area of 4m$^2$ has a cooling capacity of 24W/°C. To limit the internal temperature increase to 13°C under these conditions, the internal heat must not exceed 312W. If the actual internal heat is 360W, however, the temperature in the cabinet rises by 15°C or more. When this happens, the cooling capacity of the cabinet must be improved using the heat exchanger.
In the case of the power magnetics cabinet for housing cabinet the I/O unit for 0*i*, limit the internal temperature increase to 10°C or less, not 13°C or less.

## 3.4.2 Heat Output of Each Unit

**Table 3.4.2 (a) Heat output**

| Unit | | Heat output | Remarks |
|---|---|---|---|
| Control unit | With no-optional slot | 33W | Note 1) |
| | With two optional slots | 37W | Note 1) |

| Unit | | Heat output | Remarks |
|---|---|---|---|
| Optional board | Fast Ethernet board | 6W | Note 2) |
| | Profibus master board | 5W | |
| | Profibus slave board | 2W | |
| | FL-net board | 5W | |
| | DeviceNet master board | 3W | |
| | DeviceNet slave board | 3.5W | |

**NOTE**
1 The liquid-crystal display and MDI unit are included. Optional boards are not included.
2 When installing the CF card on the Fast Ethernet board, add 0.3 W for the Fast Ethernet board to the heat output. (The heat output of the CF card may be changed if its specification is changed.)

**Table 3.4.2 (b) Heat output**

| Unit | Heat output | Remarks |
|---|---|---|
| MDI unit | 0W | |
| Standard machine operator's panel | 15W | Note 1) |
| Operator's panel I/O module | 12W | Note 1) |
| Connector panel I/O module (basic) | 8W | Note 1) |
| Connector panel I/O module (additional) | 5W | Note 1) |
| I/O unit for 0*i* | 16W | Note 1) |
| Separate detector interface unit | 9W | Basic 4-axis unit only<br>Note 2) |
| Separate detector interface unit | 14W | Basic 4 axes + additional 4 axes<br>Note 2) |

**NOTE**
1 The indicated values are when 50% of the module input signals are ON.
2 Heat output generated within the separate detector is not included.

## 3.4.3 Thermal Design of Operator's Panel

With a small cabinet like the operator's panel, the heat dissipating capacity of the cabinet is as shown below, assuming that there is sufficient mixing of the air inside the cabinet.
Coated metal surfaces: 8 $W/m^2°C$
Plastic surfaces: 3.7 $W/m^2°C$

An example of the thermal design for the cabinet shown in Fig. 3.4.3 is shown below.

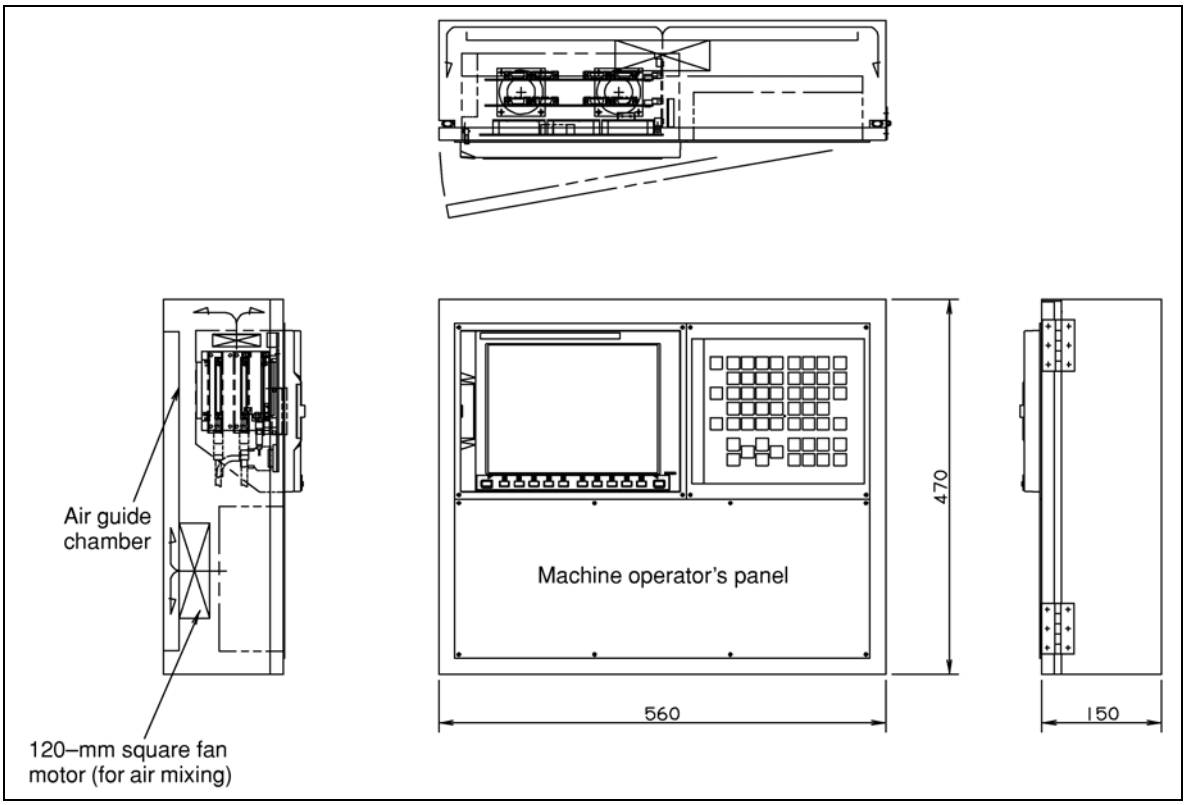


**Fig. 3.4.3**

Assume the following.
Thermal exchange rates

Coated metal surfaces : 8 W/m$^2$·°C
Plastic surfaces : 3.7 W/m$^2$·°C
Allowable temperature rise : 13°C higher than the exterior temperature

Also, assume the following.

Dimensions of pendant type cabinet shown in Fig. 3.4.3 : 560(W) × 470(H) × 150(D) mm
Surface area of metallic sections : 0.5722 m$^2$
Surface area of plastic sections : 0.2632 m$^2$

In this case, the allowable total heat dissipation for the cabinet is:

$8 \times 0.5722 \times 13 + 3.7 \times 0.2632 \times 13 = 72$ W.

In consequence, it can be concluded that the units shown in Table 3.4.3 on the next page can be installed in this cabinet.

**Table 3.4.3**

| | |
|---|---|
| Control unit (Optional two-slots) | 37W |
| Optional board (Fast data server board) | 3W |
| Optional board (Profibus master board) | 5W |
| Standard machine operator's panel | 15W |
| 120-mm square fan motor for air mixing | 8W |
| Total heat dissipation of the above | 68W |

**NOTE**

The 15 W quoted for the standard machine operator's panel represents an example heat output value when half of all the input signals are turned on. This value varies, depending on the mechanical configuration.

# 3.5 COUNTERMEASURES AGAINST NOISE

The CNC has been steadily reduced in size using surface-mount and custom LSI technologies for electronic components. The CNC also is designed to be protected from external noise. However, it is difficult to measure the level and frequency of noise quantitatively, and noise has many uncertain factors. It is important to prevent both noise from being generated and generated noise from being introduced into the CNC. This precaution improves the stability of the CNC machine tool system.
The CNC component units are often installed close to the parts generating noise in the power magnetics cabinet. Possible noise sources into the CNC are capacitive coupling, electromagnetic induction, and ground loops.
When designing the power magnetics cabinet, guard against noise in the machine as described in the following section.

## 3.5.1 Grounding

Grounding the power magnetics cabinet and devices is very important to prevent an electric shock and suppress a noise influence. The following describes the grounding methods for suppressing the noise influence.

### 3.5.1.1 About grounding types

The CNC system uses the following three types of grounding:

(1) Signal grounding
This type of grounding is used to supply a reference potential (0 V) for the electrical signal system.
(2) Frame grounding
This type of grounding is used for safety reasons as well as to suppress external and internal noise. For example, grounding is provided for the device frames, panels, and shielding on the interface cables connecting the devices.
(3) System grounding (PE)
This type of grounding is used to connect frame grounds, which are provided for the individual devices or between the units, to the ground as a system at a single point.

### 3.5.1.2 Grounding methods

Typically, noise that becomes a problem is high–frequency noise. To suppress high–frequency noise, it is important that the devices are grounded at low impedance(NOTE).
The grounding schemes for this purpose are described below.

(1) Multipoint grounding scheme
In this grounding scheme, when grounded at sufficiently low impedance, the cabinet metal plates are used as ground plates, to which grounding is provided in the vicinity of each device.
This scheme has a great effect of suppressing high–frequency noise because it enables grounding to the low–impedance metal plates of the cabinet in the shortest distance. However, the noise suppression effect depends on the cabinet structure because the cabinet metal plates are used as ground plates.
See Subsection 3.5.1.4 for the cabinet. Fig. 3.5.1.2 (a) is a schematic wiring diagram.
When the multipoint grounding scheme is adopted, the units can be grounded at low impedance, and ground wires can be shortened, so that wiring may be simplified.

(2) Single–point grounding scheme
In this grounding scheme, grounding separation is achieved between the signal system and power system, and grounding is provided at a single point to suppress the noise influence of the power system on the signal system.
This scheme tends to need longer connection wires for grounding the devices. To produce a sufficient effect of suppressing high–frequency noise, it is therefore necessary to use larger–diameter wires or use two or more wires for each connection. Fig. 3.5.1.2 (b) is a schematic wiring diagram.

**NOTE**
Impedance includes a resistance component that converts electric current to heat as well as a component called “reactance”, and indicates a characteristic of resistance to the flow of alternating current at a certain frequency.

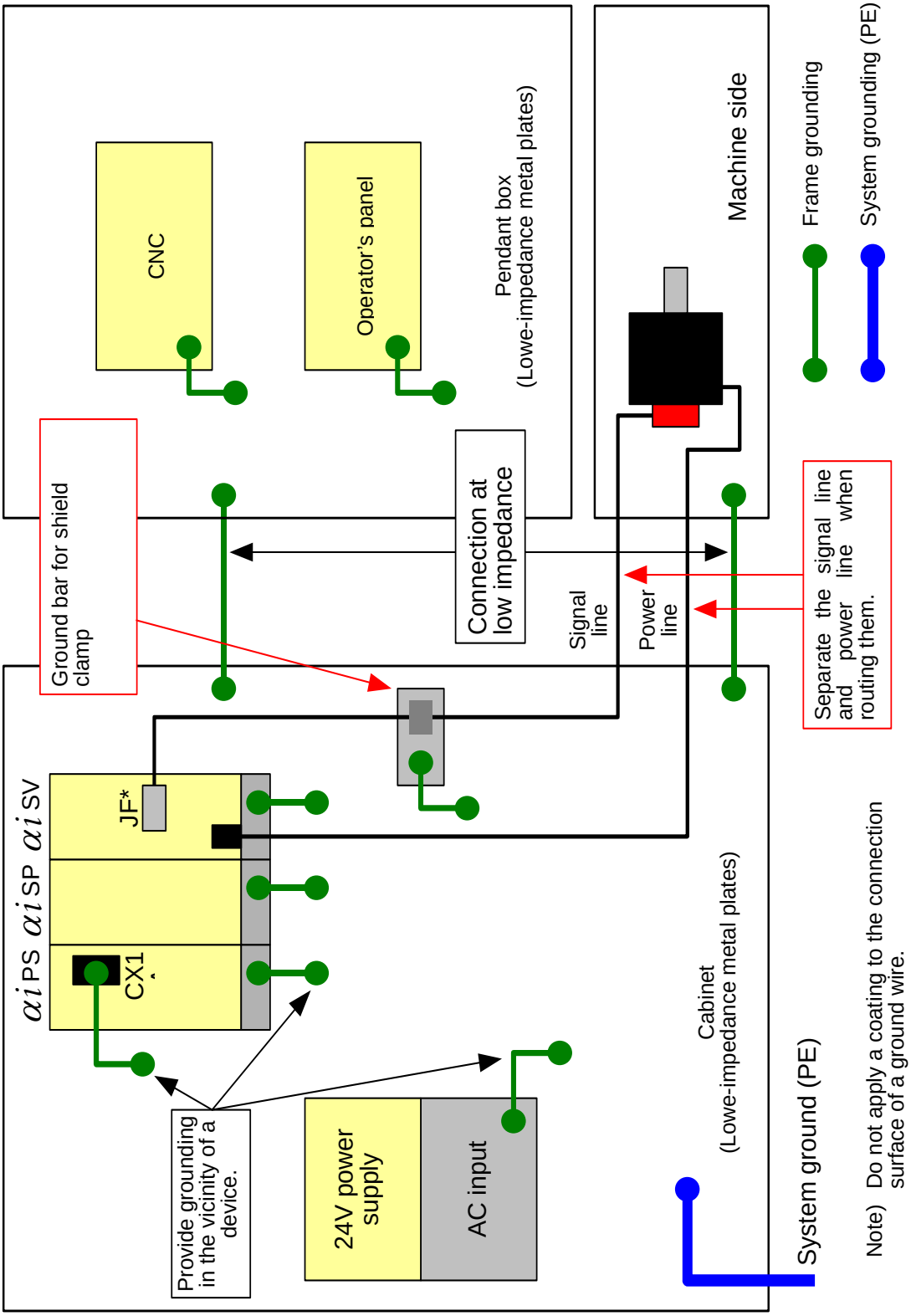


**Fig. 3.5.1.2 (a) Schematic diagram for multipoint grounding scheme**

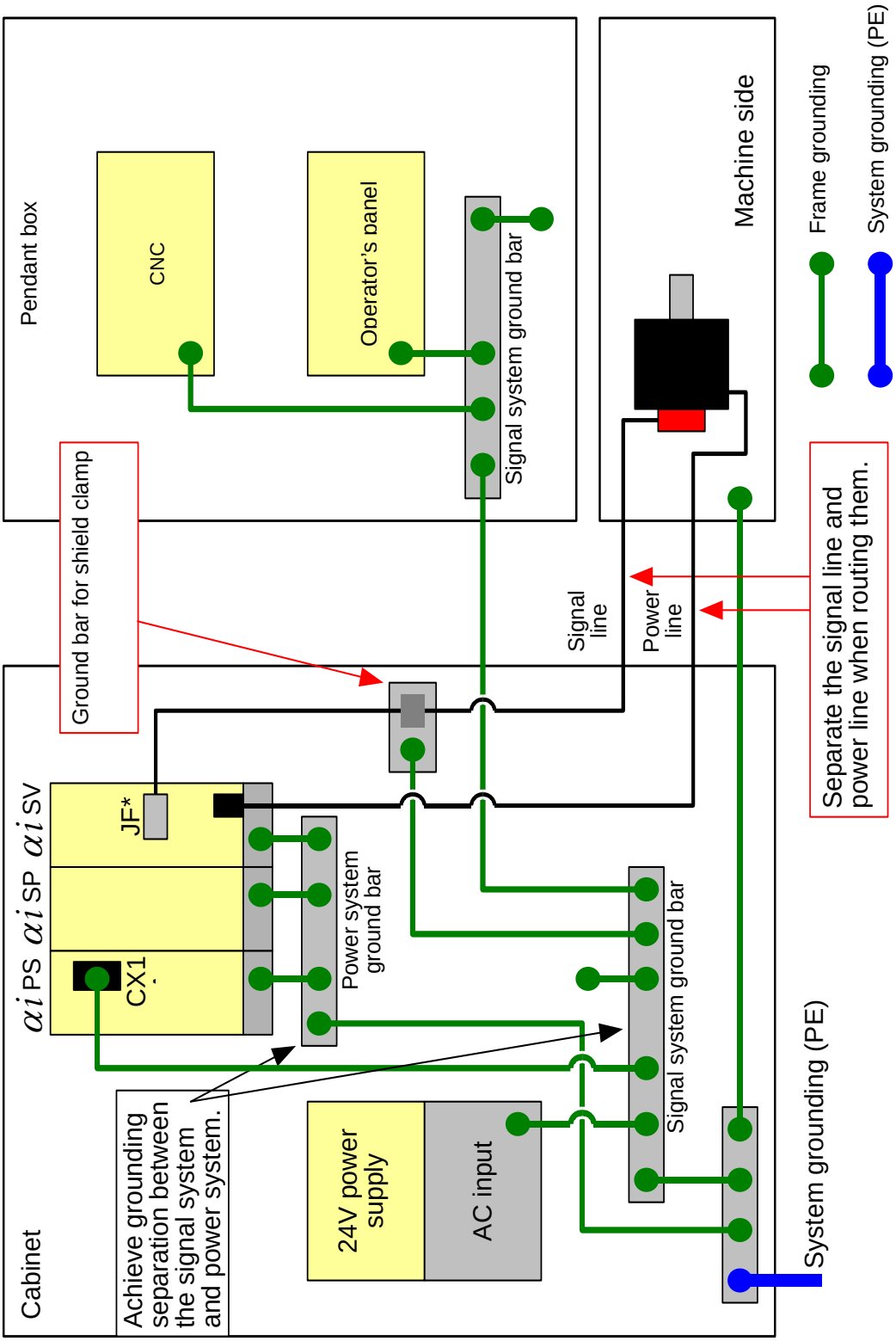


**Fig. 3.5.1.2 (b) Schematic diagram for single–point grounding scheme**

### 3.5.1.3 Cable clamp and shield processing

Signal lines basically require shield clamps. The influence of external noise can be suppressed by properly providing the signal lines with the shield clamps.
Partially peel the sheath off a cable and expose the shield, and press the exposed portion against the ground bar with the clamp. Care should be taken so that the ground bar and shield have a surface contact in a larger area. (See the figure below.)
When the multipoint grounding scheme is used, care should be taken so that the ground bar for the shield clamp and cabinet are connected at low impedance by, for example, preventing the cabinet side contact surface from being coated.

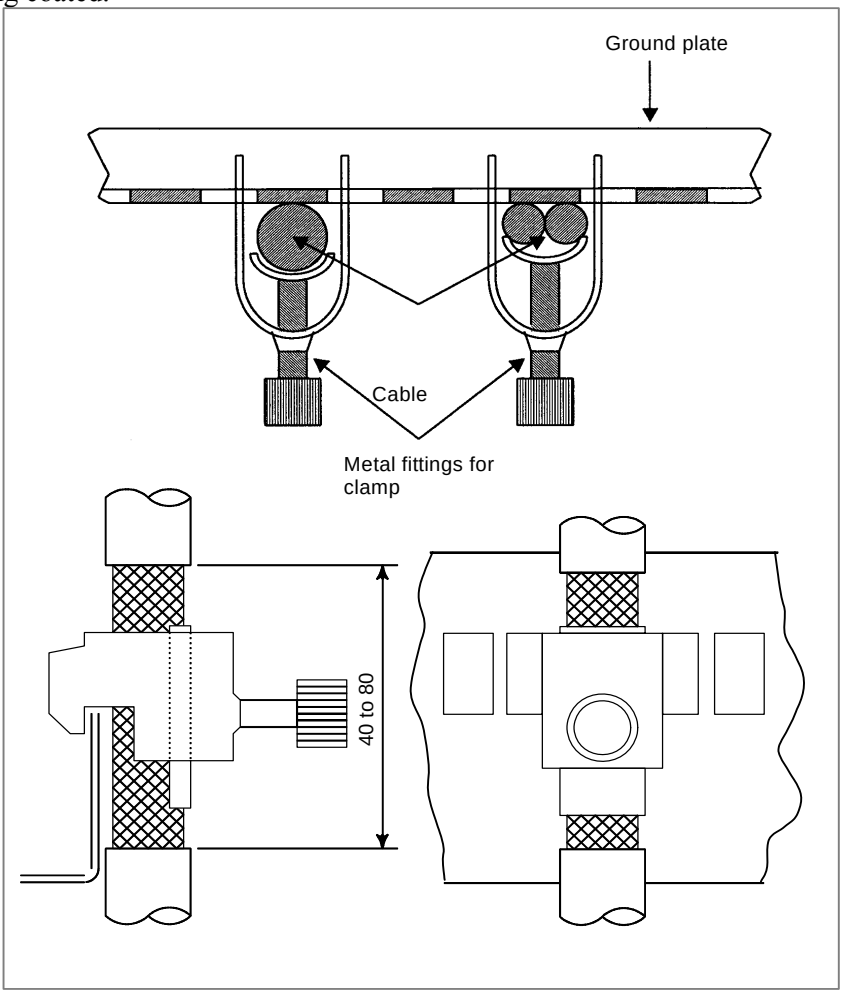


**Fig. 3.5.1.3 (a) Cable clamp (1)**

**NOTE**
Select a cable with a proper length.
If the cable is too long, the noise immunity may be reduced or noise may be caused on other cables. In addition, when the excess length is coiled, the inductance is increased and a high voltage is induced during turning on or off of signals. This may cause a malfunction due to a failure or noise.

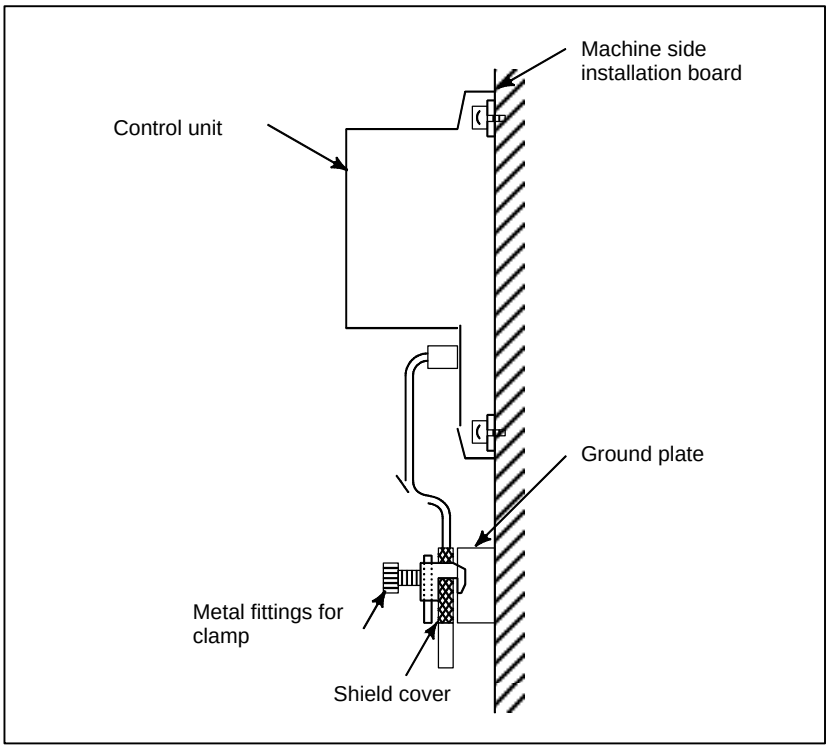


**Fig. 3.5.1.3 (b) Cable clamp (2)**

**NOTE**
Bundle the cables connected to a CNC or amplifier near each unit and shield them.

Prepare ground plate like the following figure.

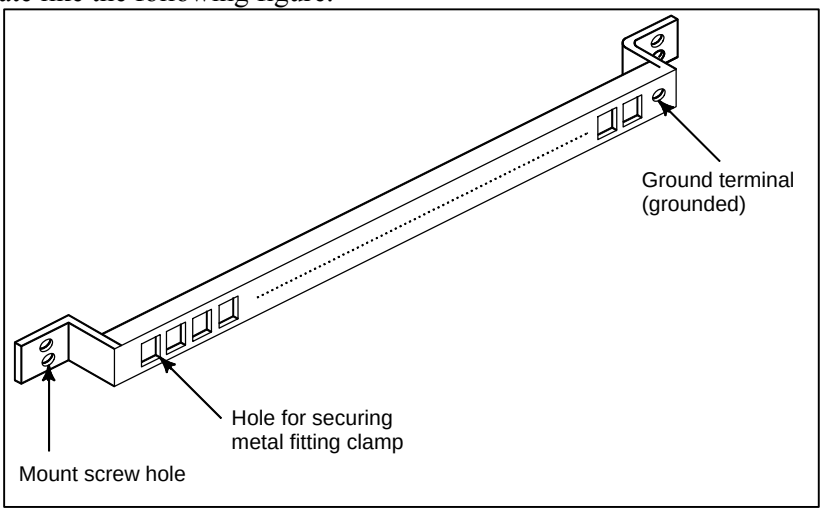


**Fig. 3.5.1.3 (c) Ground plate**

For the ground plate, use a metal plate of 2 mm or thicker, which surface is plated with nickel.

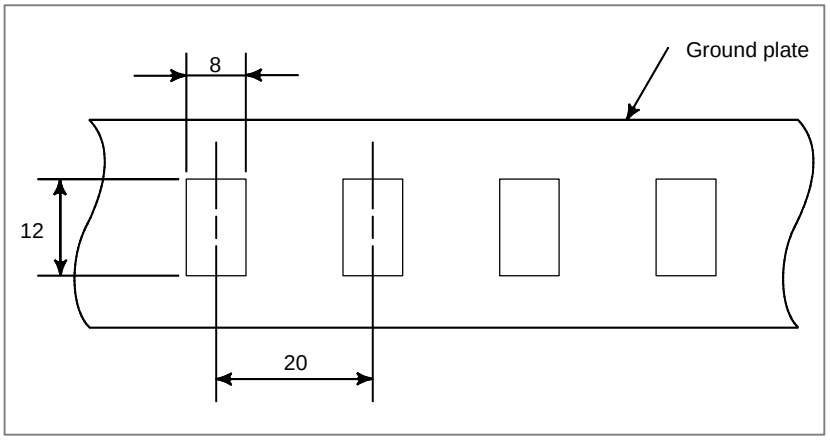


**Fig. 3.5.1.3 (d) Ground plate holes**

(Reference) Outer drawings of metal fittings for clamp.

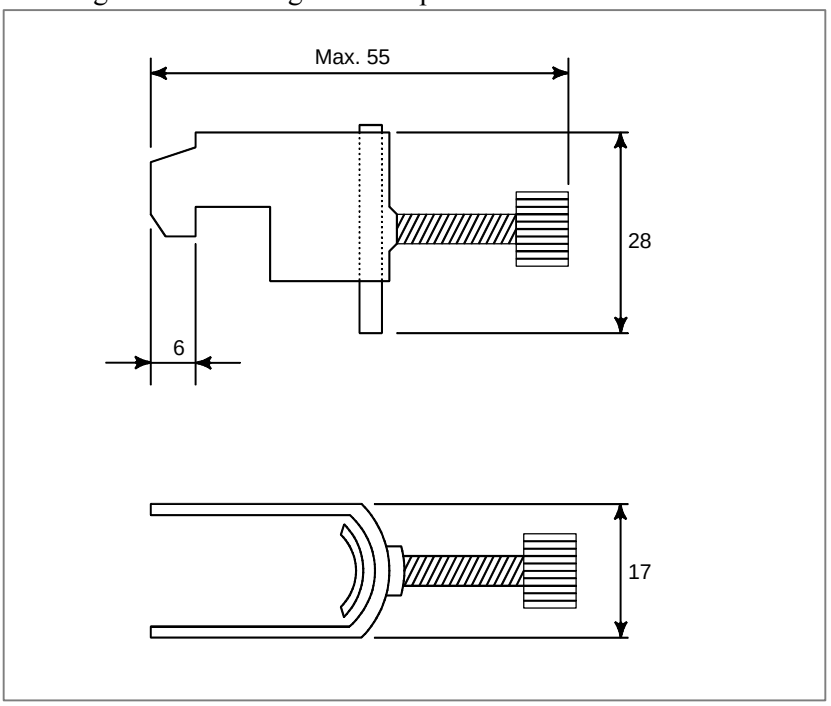


**Fig. 3.5.1.3 (e) Outer drawings of metal fittings for clamp**

Ordering specification for metal fittings for clamp
A02B-0124-K001 (8 pieces)

## 3.5.1.4 Cabinet

A cabinet is an important element in improving noise immunity and suppressing radiated noise. One of the causes of problems related to noise immunity and radiated noise is faulty electrical continuity between the metal plates that make up the cabinet. Typically, noise that becomes a problem is high–frequency noise, against which measures must be taken in the cabinet design.

(1) Basic cabinet structure
A cabinet should basically be made of metal.
To improve noise immunity, there must be low–impedance electrical continuity between the metal plates that make up the cabinet, which are the side plates, top plate, and bottom plate, and a welding–type cabinet structure is recommended.

As for a cabinet welding method, bead welding is more suitable than spot welding for providing low–impedance electrical continuity between the metal plates.
For an assembly–type cabinet structure, provide electrical continuity by bringing the metal plates into direct contact with each other, without applying a coating to their joint surface areas.
In a structure that has the metal plates connected only with wires because of structural constraints, low–impedance connections are more difficult to make than in a structure in which welding is made or the metal plates are brought into direct contact with each other. It is necessary to maintain sufficient levels of items such as the cross–sectional area of a wire to use, continuity of connections, and contact areas.

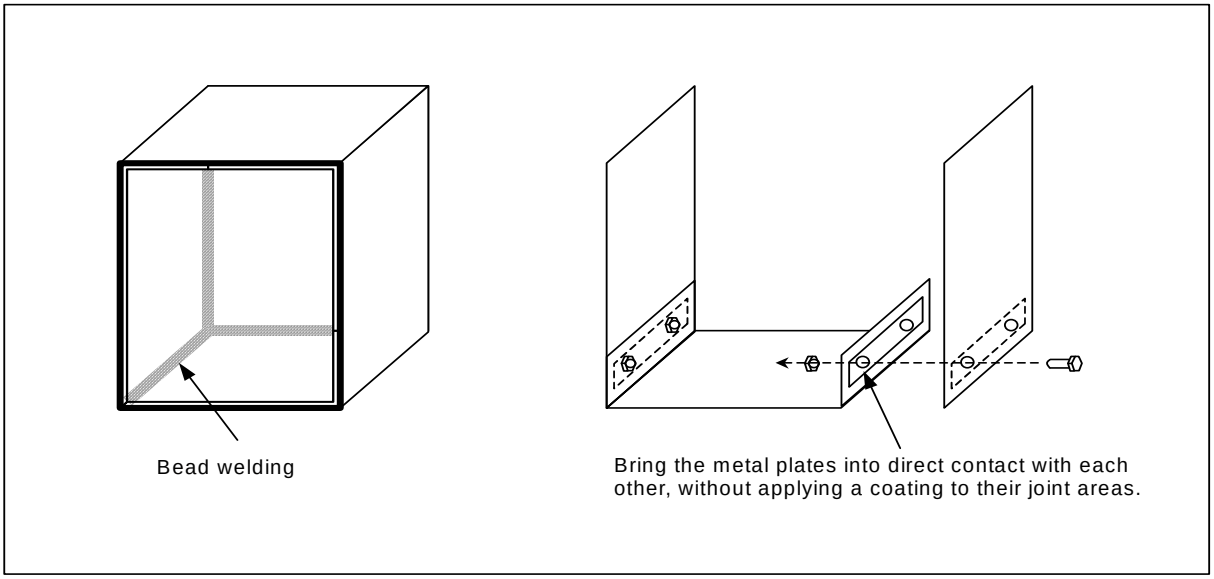


**NOTE**

For improved noise immunity, how to provide low-impedance electrical continuity in the cabinet is described here. To construct a protective circuit, a protective grounding connection must be made between the metal plates by using electric wires with a cross-sectional area appropriate for the AC input power capacity of the unit mounted on each metal plate.

(2) Mounting units on the cabinet

The shortest possible lengths of unit ground wires should be used to make connections. A ground wire with a small conductor diameter causes impedance to high-frequency noise to become particularly higher, leading to an insufficient grounding effect. For the location of the ground terminal of each unit, refer to the manual relevant to the unit. The following shows the recommended method by which the metal plate with the unit mounted is installed on the cabinet. Care should be taken so that the cabinet and metal plate are connected to each other on their broad areas with no coating. It is not recommended that electrical continuity be provided only by screws, because impedance to high frequency cannot be sufficiently low.

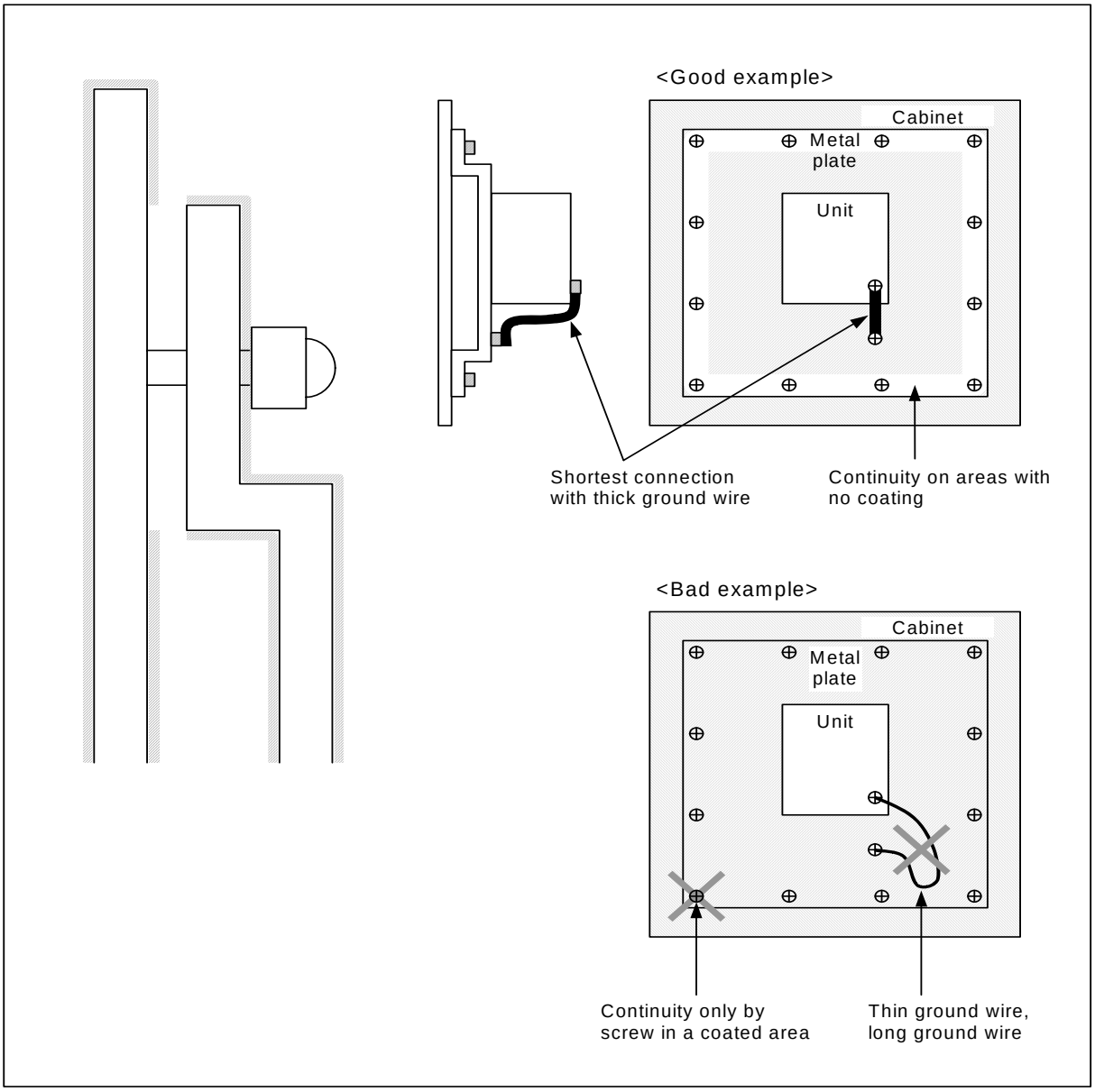


## 3.5.2 Connecting the Ground Terminal of the Control Unit

### Connecting the 0 V output in the CNC to a protective circuit (ground)

The IEC 204-1 and JIS B 6015 standards specify the following:

- Protection against malfunctions due to ground faults

"To make the control circuit prevent malfunctions of a machine tool due to a ground fault and not to prevent the machine tool from stopping, either of the ground and electronic circuits shall be connected to a protective circuit."

Note that for each FANUC CNC, the 0V output in the CNC is connected to a protective circuit (ground).

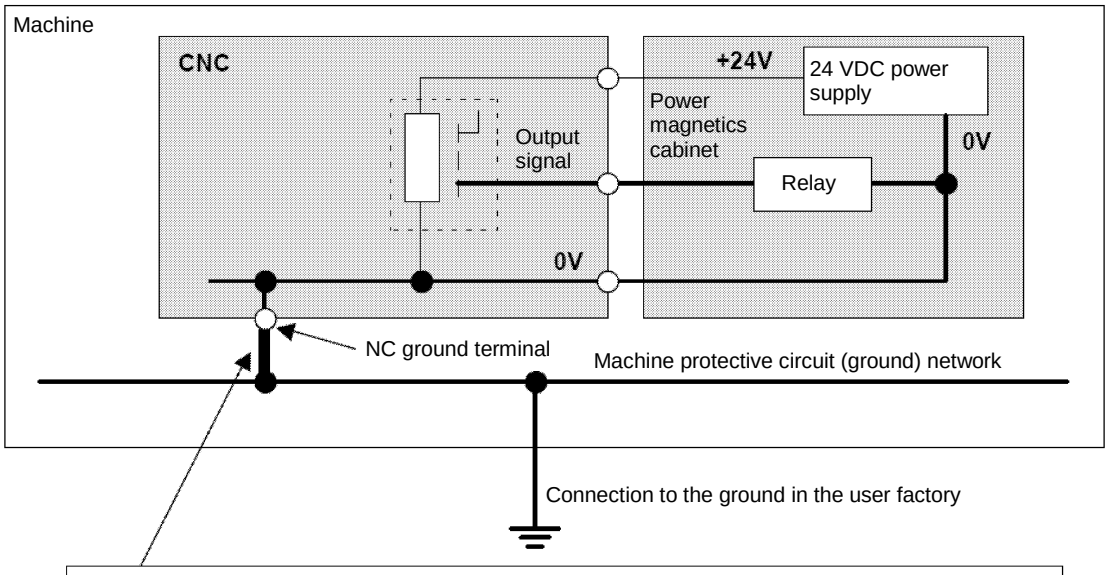


This bold line indicates grounding for the control unit described in the connection manual.
As shown in this figure, by just connecting the ground terminal of the control unit to the machine ground, the 0 V output of the relay circuit in the power magnetics cabinet is connected to the ground (protective circuit).

For the 8.4" LCD/MDI (horizontal) type

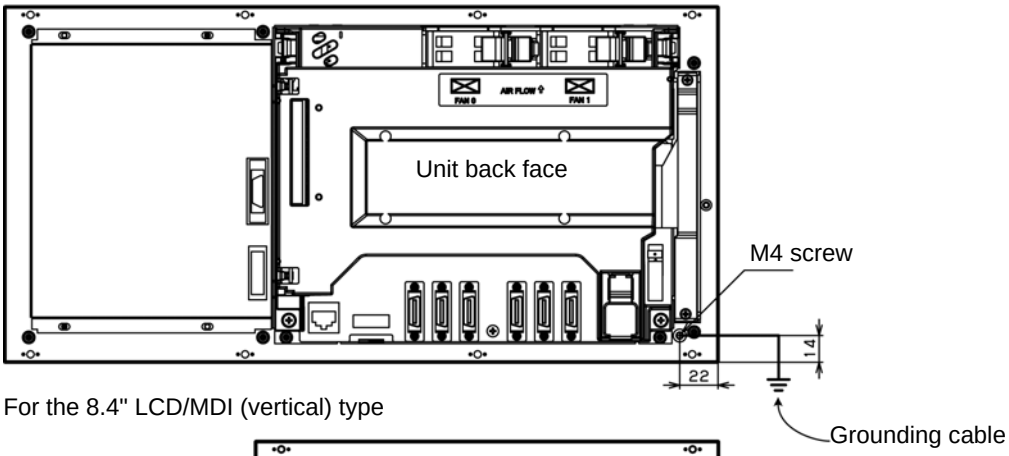


For the 8.4" LCD/MDI (vertical) type

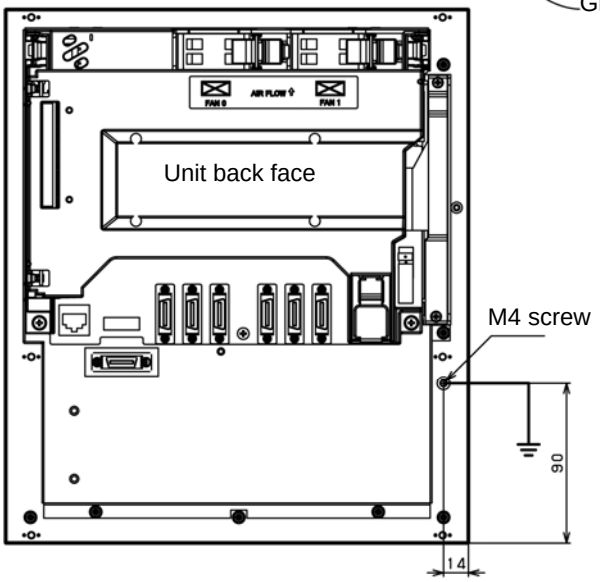


For the 10.4" LCD type

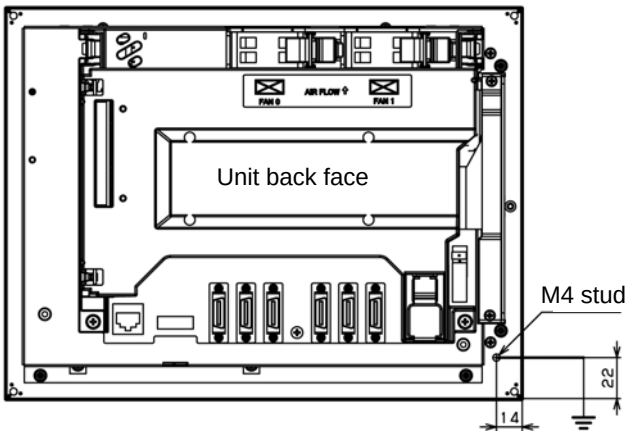


Connect the 0V line in the control unit to the ground plate of the cabinet via the protective ground terminal (shown in the above figure).
For the locations of the ground terminals of the other units, see the external dimensions of each unit in the appendix.

## 3.5.3 Separating Signal Lines

The cables used for the CNC machine tool are classified as listed in the following table.
Process the cables in each group as described in the action column.

| Group | Signal line | Action |
|---|---|---|
| A | Primary AC power line | Bind the cables in group A separately (Note 1) from groups B and C, or cover group A with an electromagnetic shield (Note 2).<br>See Subsection 3.5.4 and connect spark killers or diodes with the solenoid and relay. |
| | Secondary AC power line | |
| | AC/DC power lines (containing the power lines for the servo and spindle motors) | |
| | AC/DC solenoid | |
| | AC/DC relay | |
| B | DC solenoid (24 VDC) | Connect diodes with the DC solenoid and relay.<br>Bind the cables in group B separately from group A, or cover group B with an electromagnetic shield.<br>Separate group B as far from group C as possible.<br>It is desirable to perform shield processing. |
| | DC relay (24 VDC) | |
| | DI/DO cable between the I/O unit and power magnetics cabinet | |
| | DI/DO cable between the I/O unit and machine | |
| | 24 VDC input power cables connected to the control unit and its peripherals | |
| C | Cable between the CNC and I/O unit | Bind the cables in group C separately from group A, or cover group C with an electromagnetic shield.<br>Separate group C as far from group B as possible.<br>Be sure to perform shield processing as described in Subsection 3.5.5. |
| | Cable for position and velocity feedback | |
| | Cable between the CNC and spindle amplifier | |
| | Cable for the position coder | |
| | Cable for the manual pulse generator | |
| | Cable between the CNC and the MDI (Note 3) | |
| | RS–232C and RS–422 interface cable | |
| | Cable for the battery | |
| | Other cables for which shield processing is specified | |

**NOTE**

1 Binding the cables in one group separately from another means that the groups are placed 10 cm or more apart from one another.
2 Covering a group with an electromagnetic shield means that shielding is provided between groups with grounded steel plates.
3 The shield is not required when the cable between the CNC and MDI is no more than 30 cm in length.

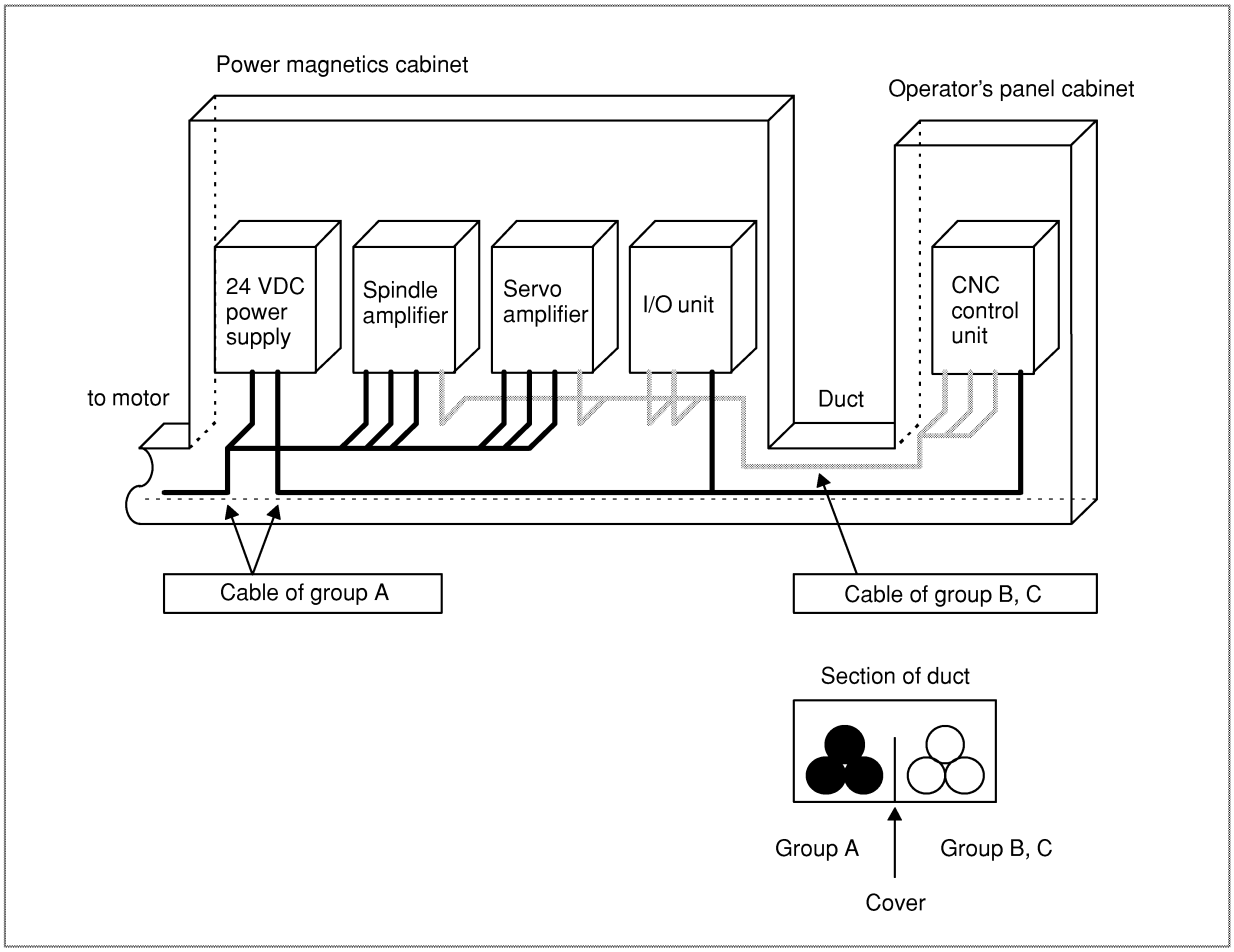


## 3.5.4 Noise Suppressor

The AC/DC solenoid, AC/DC relay, and other devices are used in the power magnetics cabinet.
A high pulse voltage is caused by coil inductance when these devices are turned on or off.
This pulse voltage is induced through a cable or any other component, causing the electronic circuits to be disturbed.
Take the following measures against the pulse voltage:

1) See Subsection 3.5.3 for groups A and B, and use spark killers for AC circuits or diodes for DC circuits.
2) See "Notes on selecting the spark killer" below for information about selection of spark killers or diodes.

### Notes on selecting the spark killer

- Use a CR–type spark killer. (Use it for AC circuits.)
  (A varistor is useful in clamping the peak pulse voltage, but cannot suppress the sudden rise of the pulse voltage. FANUC therefore recommends the use of a CR–type spark killer.)
- The reference CR values of the spark killer shall conform to the following based on the current ((I (A)) and DC resistance of the coil in the stationary state:
  1) Resistance (R) : Equivalent of the DC resistance of the coil
  2) Capacitance (C) : $\frac{I^2}{10} \sim \frac{I^2}{20}$ (μF)
     I :Current of the coil in the stationary state [A]

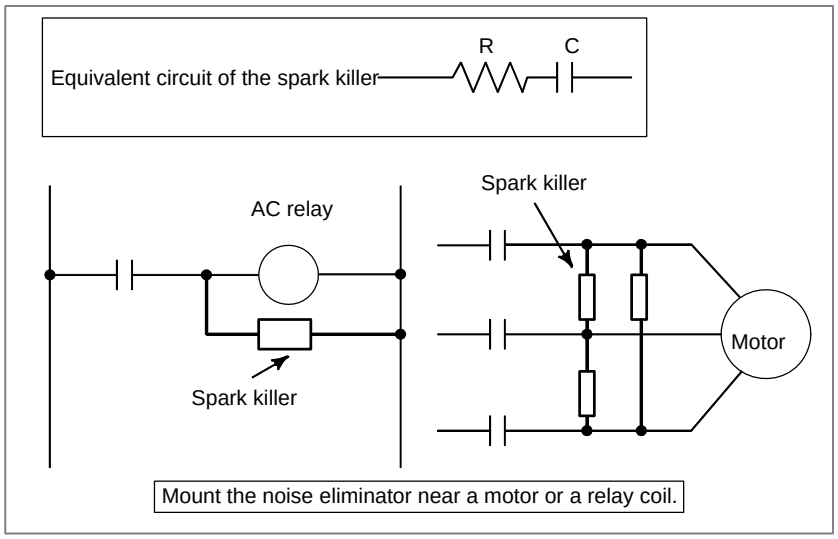


**NOTE**
Use a CR-type noise eliminator. Varistor-type noise eliminators clamp the peak pulse voltage but cannot suppress a sharp rising edge.

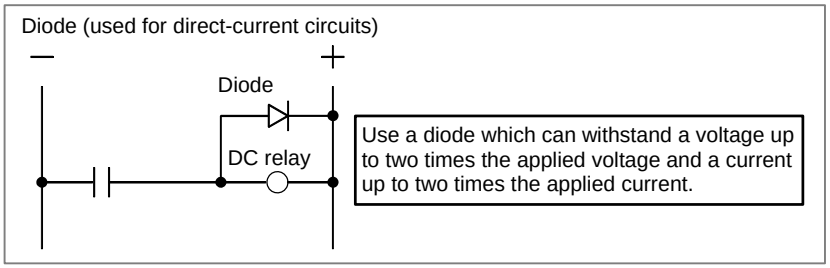


## 3.5.5 Measures Against Surges due to Lightning

To protect equipment from surge voltages caused by lightning, install a lightning surge protector between lines and between a line and ground. For how to install protectors, see Appendix A "FITTING A LIGHTNING SURGE PROTECTION DEVICE" in FANUC SERVO AMPLIFIER $\alpha i$ series DESCRIPTIONS (B-65282EN).

Lightning surge protector specifications

| Ordering number | Specification | Remarks |
|---|---|---|
| A06B-6077-K142 | For line-to-line installation:<br>RAV-781BYZ-2<br>For line-to-ground installation:<br>RAV-781BXZ-4 | Manufactured by Okaya Electric Industries Co., Ltd.<br>For 200VAC line<br>TÜV approved products |
| A06B-6077-K143 | For line-to-line installation:<br>RAV-152BYZ-2A<br>For line-to-ground installation:<br>RAV-801BXZ-4 | Manufactured by Okaya Electric Industries Co., Ltd.<br>For 400VAC line<br>TÜV approved products |
| A06B-6077-K144 | Integration type for line-to-line installation/line-to-ground installation:<br>RCM-601BUZ-4 | Manufactured by Okaya Electric Industries Co., Ltd.<br>For 200VAC line<br>TÜV approved products |

* The line-to-line or line-to-ground installation type (A06B-6077-K144) and the integration type (A06B-6077-K142) are equivalent in performance and specifications.

# 3.6 CONTROL UNIT

## 3.6.1 Installation of the Control Unit

The control unit has a built–in fan motor.
Air enters the control unit through the bottom and is drawn through the fan motor which is located on the top of the control unit.
Space (A), shown in Fig. 3.6.1, must be provided to ensure unrestricted air flow. Also, space (B) should be provided whenever possible. When space (B) cannot be provided, ensure that nothing is placed in the immediate vicinity which could obstruct the air flow.

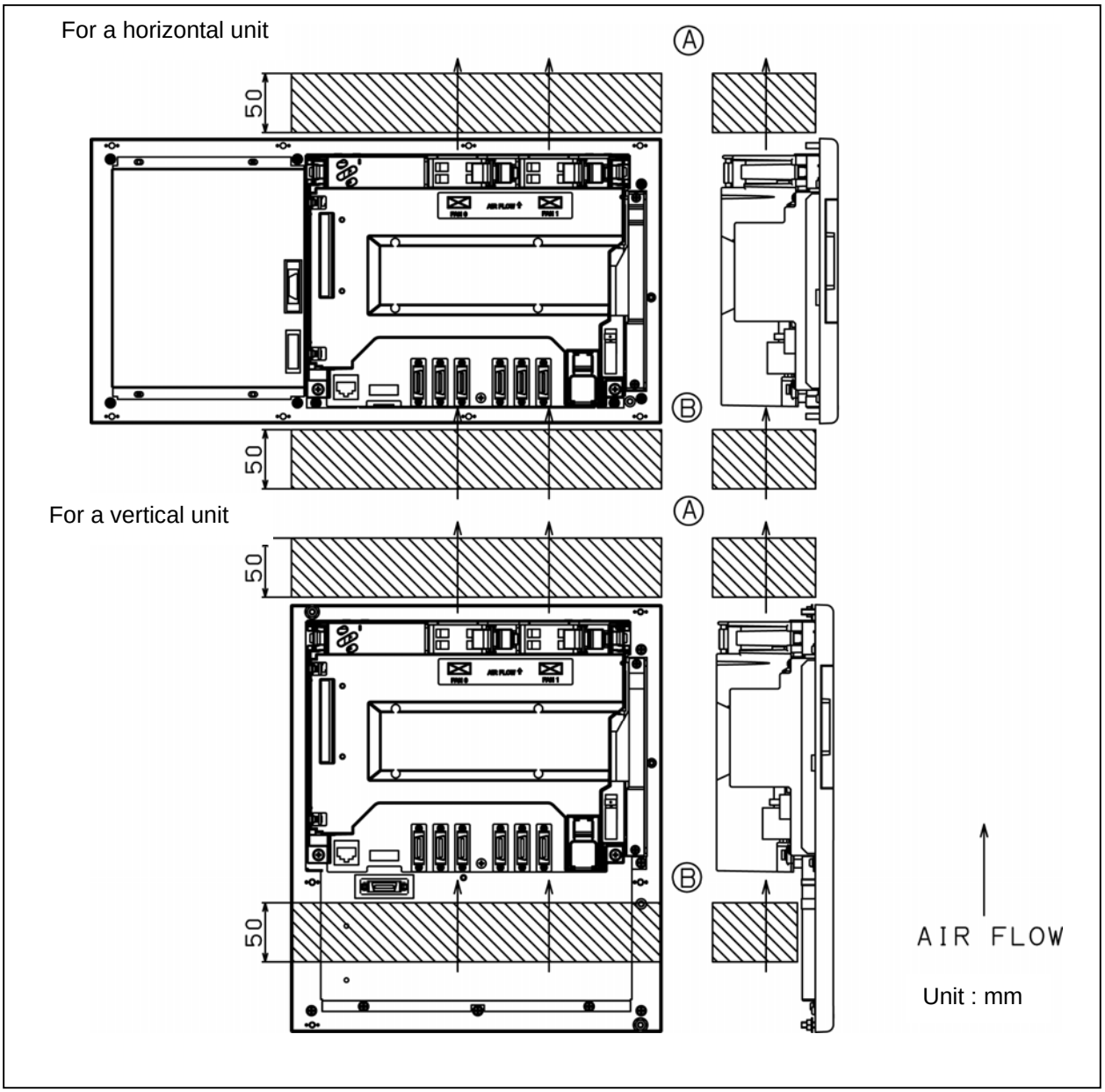


**Fig. 3.6.1**

### Installing the I/O unit for 0*i*

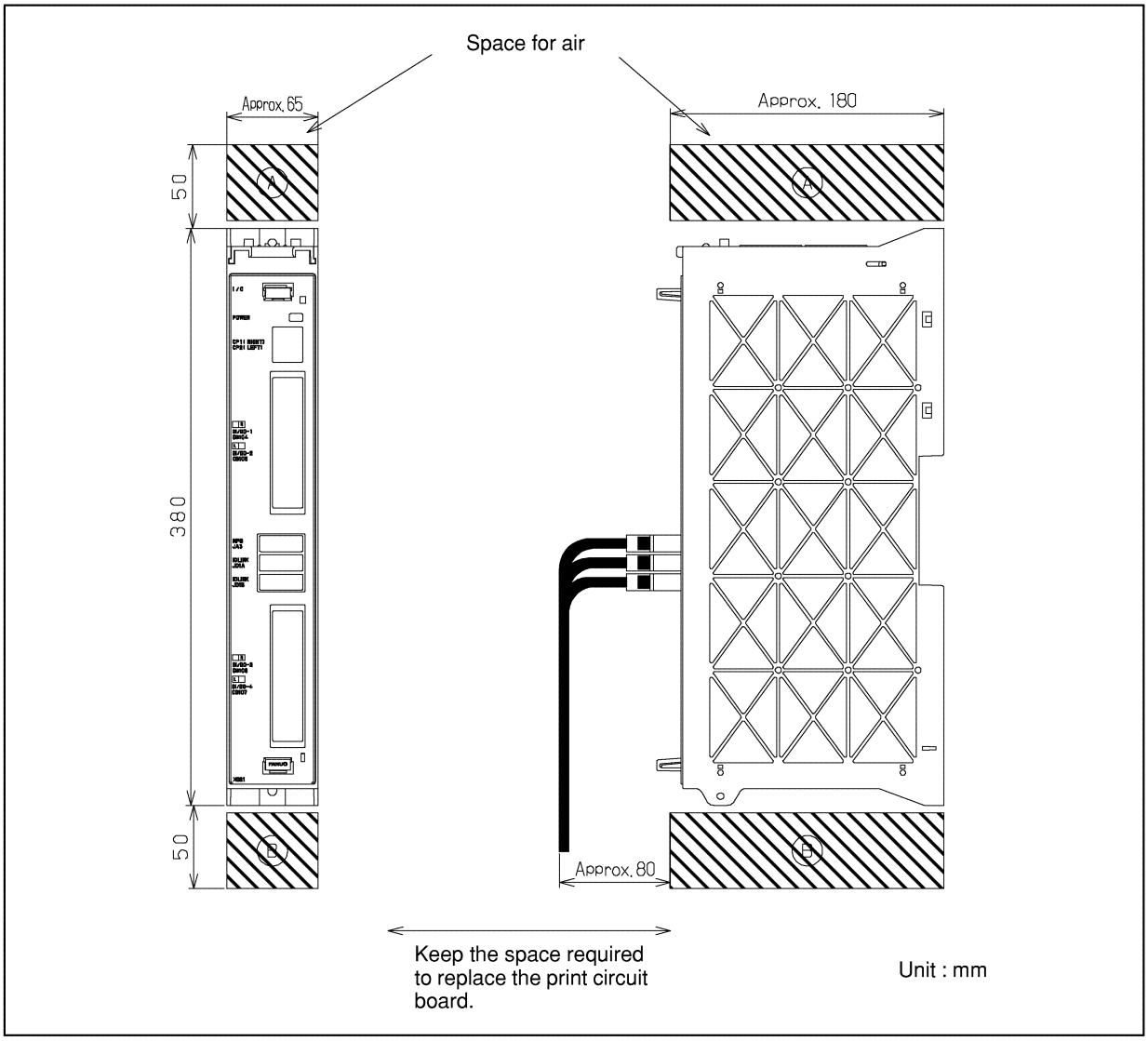


**Fig. 3.6.2**

# 3.7 SEVERE DUST/LIQUID PROTECTION OF CABINETS AND PENDANT BOXES

Since a cabinet or pendant box, which is designed by the machine tool builder, for housing display units or operator's panels is likely to receive dust particles, chippings, or greasy fumes, so keep the following in mind to keep them out.

1) The cabinet and pendant box must be of a hermetically sealed structure.
2) Apply packing to the panel mounting surface to which a display and operator's panel are to be mounted.
   Apply packing to the panel mounting surfaces of other units mounted on the same case for dust/liquid protection.
3) Make sure that the door packing of the cabinet and pendant box is sealed firmly.
4) For a cabinet or pendant box with a rear cover, apply packing to the mounting surface.
5) Make sure that the cable entrance is sealed with packing, connectors for conduits, etc.
6) Make sure that all other openings are blocked, if any.
7) Make sure that the display and operator's panel do not receive cutting debris and coolant directly.

8) Since coolant accumulated on the top of a cabinet or pendant box may drip onto the panel surface of a display unit of operator's panel, use a structure that prevents coolant from being accumulating on the top or from being dripping onto the panel surface. For example, install a canopy over a display unit or operator's panel.
9) The front surface of a display unit must be vertical. Otherwise, coolant is likely to accumulate in the lower part of the display screen.

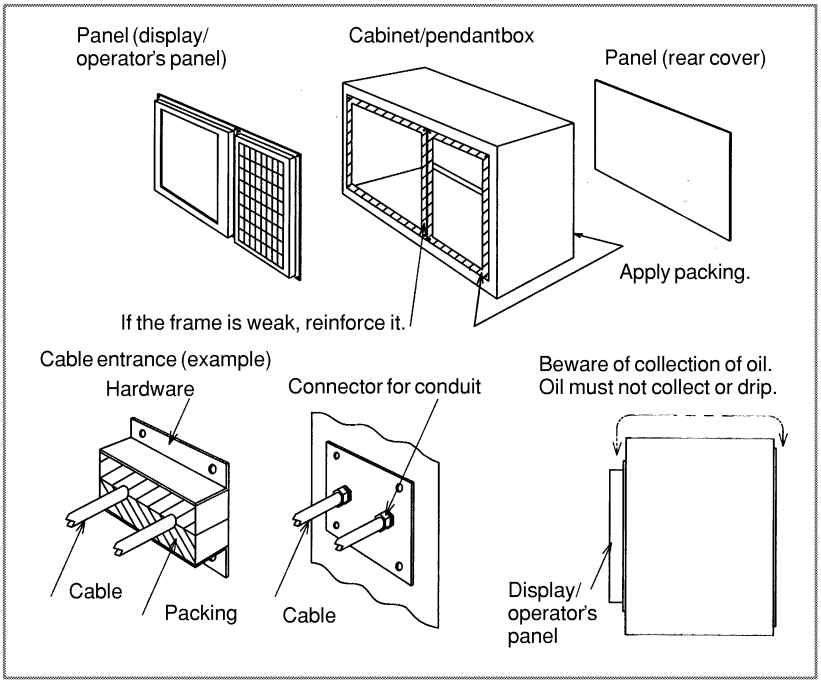

# 4 POWER SUPPLY CONNECTION

## 4.1 GENERAL

This chapter explains the connection of power supply for control unit.

## 4.2 TURNING ON AND OFF THE POWER TO THE CONTROL UNIT

### 4.2.1 Power Supply for the Control Unit

Supply power (24VDC) to the control unit from an external sources.
Provide an ON/OFF circuit for turning the AC power on and off outside the unit as shown in Fig. 4.2.1.
To minimize the effect of noise or voltage fluctuations to the CNC, it is recommended that a power to the CNC be provided independently of the power sources to devices with large noise or load fluctuations.

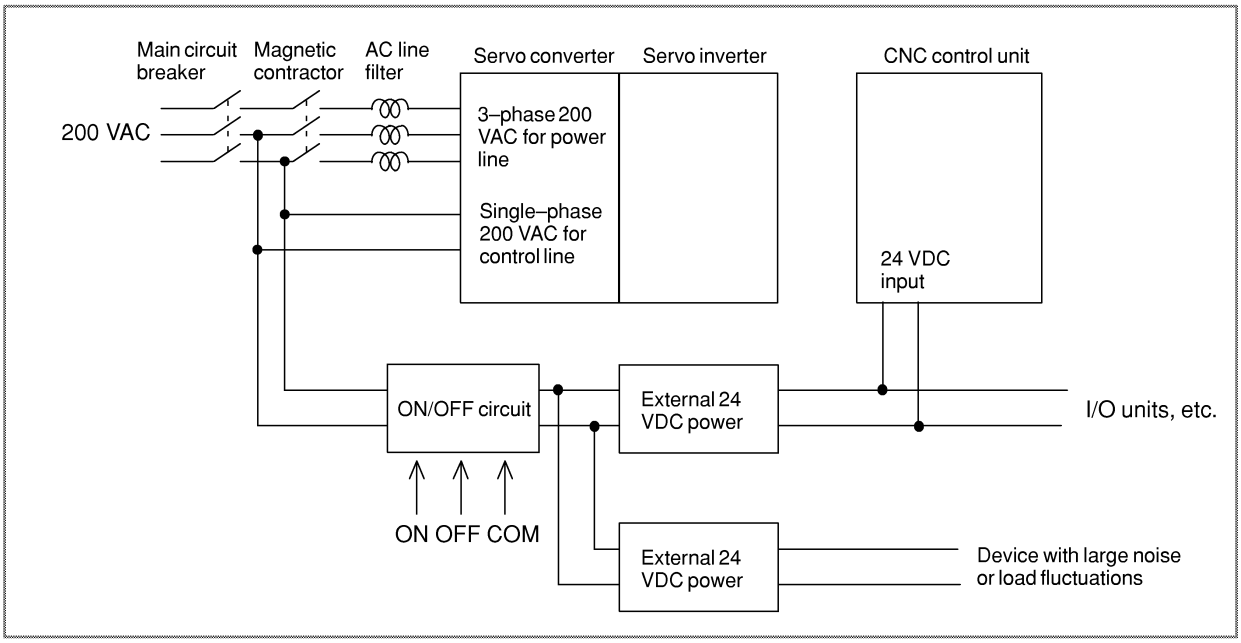


**Fig. 4.2.1**

### 4.2.2 External 24 VDC Power Specification and Circuit Configuration

Specifications of recommended external 24 VDC power supply (regulated power supply): (The power supply must satisfy UL1950.)
Output voltage:
+24 V ±10% (21.6 V to 26.4 V)
(including ripple voltage and noise. See the figure below.)
Output current:
The continuous load current must be larger than the current consumption of the CNC.
(At the maximum temperature inside the power magnetics cabinet in which the power supply is located)

Load fluctuations (including rush current):

The output voltage must not go out of the above range due to load fluctuations by external DO and other factors.

Instantaneous input interruption retention time:

10 ms (for -100%), 20 ms (for -50%)

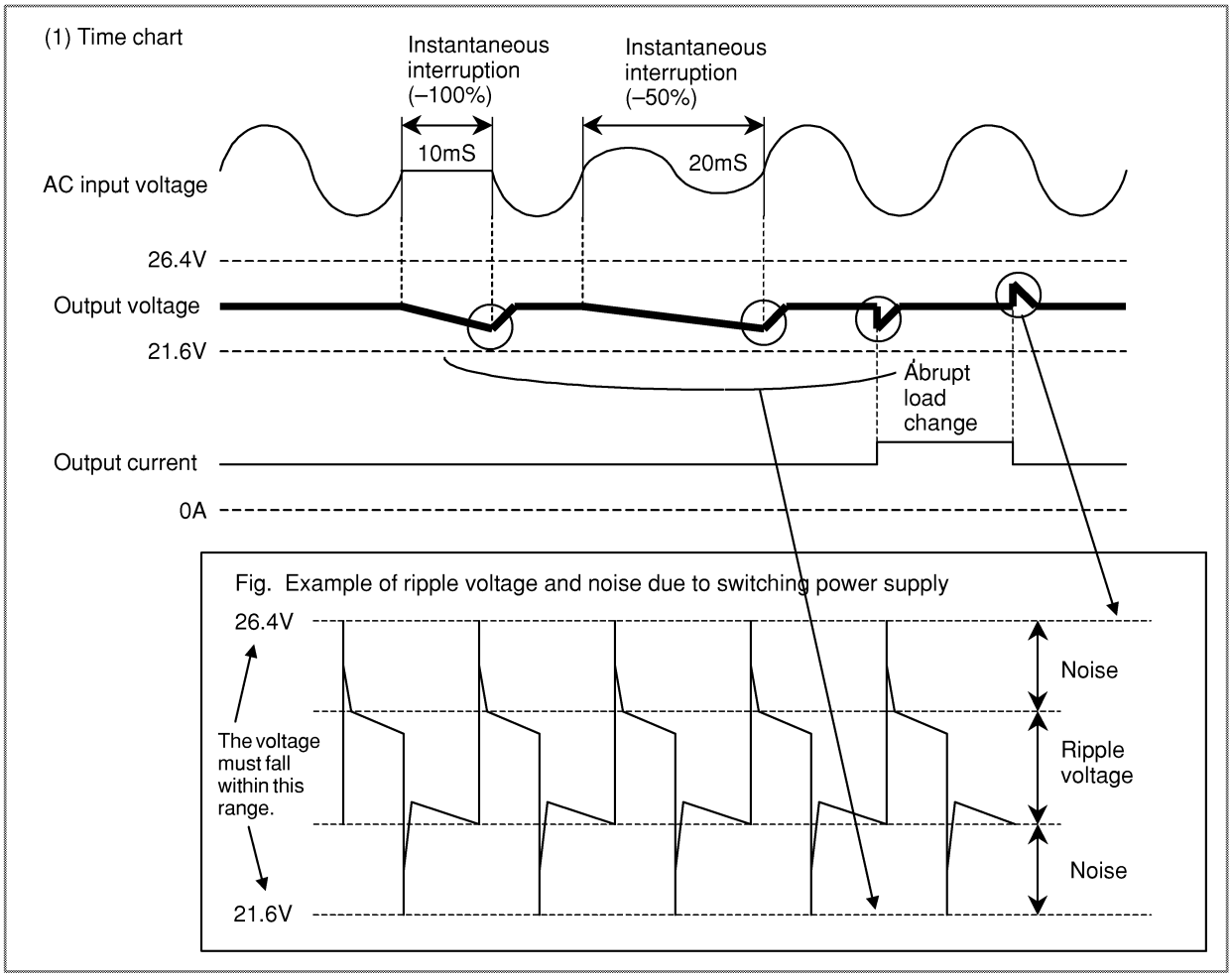


**Fig 4.2.2 (a) Timing chart**

## - Notes to take when the vertical axis exists

When the vertical axis exists, select the DC power supply that has a long voltage hold time to decrease the amount of vertical axis falling during power-off (including a power failure).

If the operating voltage drops to less than or equal to 21.6V, the CNC releases servo activation. Therefore, when the hold time for 24 VDC during AC power-off is too short, servo activation is released before the breaks are applied because some peripheral circuit detects power-off. This may increase the amount of vertical axis falling.

Generally, a power supply with sufficient power capacity tends to increase the hold time during power-off.

## - Circuit configurations

The following circuit configurations are not recommended.

**Forbidden**

<1> Circuit examples that cannot retain the output voltage at an instantaneous interruption (the voltage reduces to 21.6 V or below)

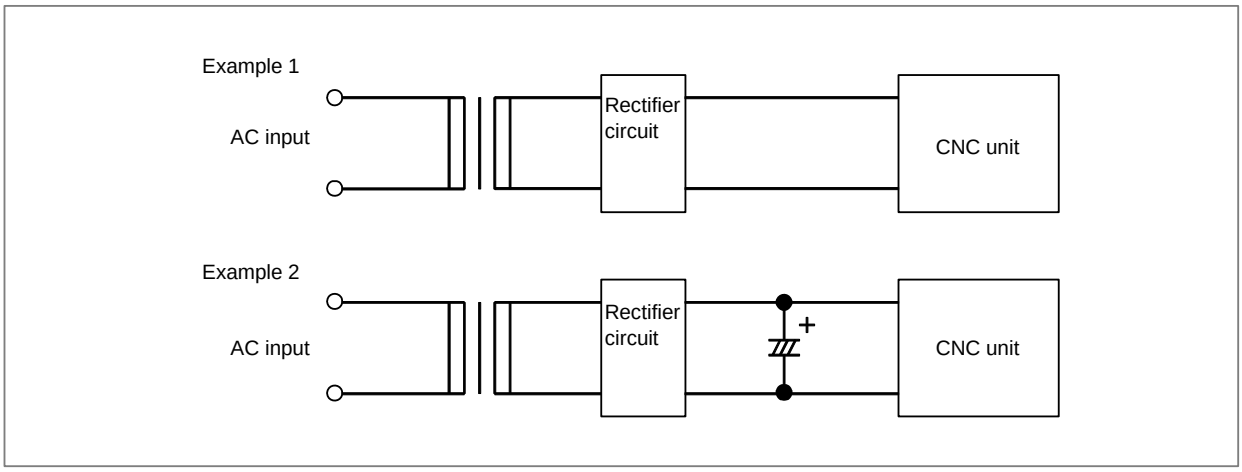


**NOTE**
The rectifier circuit means a circuit using diodes for full-wave rectification.

<2> Circuit examples that exceed the output voltage specifications (21.6 V to 26.4 V) due to an abrupt load change

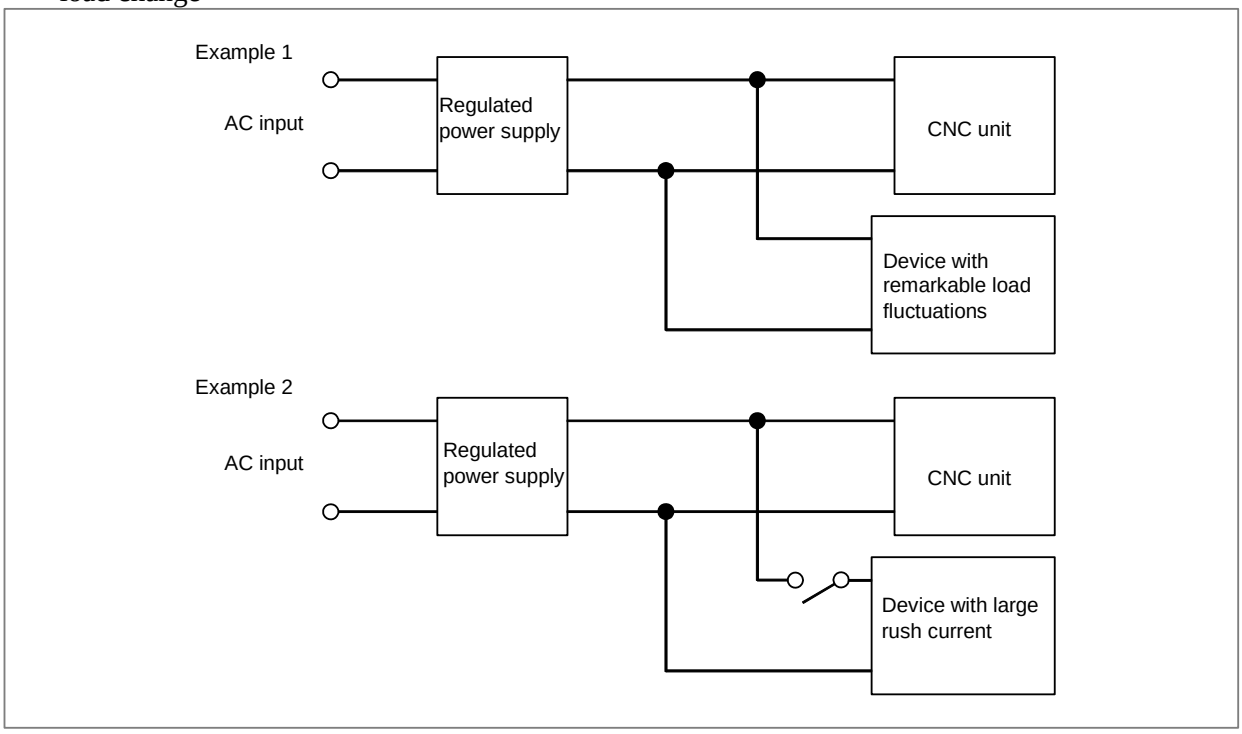


For a circuit configuration in <2>, connect another regulated power supply to be specifically used for the device with remarkable load fluctuations so that the CNC and other units are not affected.
Avoid the use of a configuration in <2> if possible, even in an environment with small load fluctuations or rush current. When two or more units are connected to the same power supply, the 24-VDC power may not be turned on due to a failure in a unit other than the CNC. If this happens, it takes much time to locate the failure because the CNC cannot start and no alarm indication is provided.
When the CNC and other units are connected to the same power supply because of limited space for the power magnetics cabinet or for some other reason, careful consideration must be given to possible rush currents and voltage fluctuations. In addition, to prevent power supply noise from entering the CNC, a noise filter must be inserted before the power to the CNC. (Recommended noise filter: ZGB2203-01U manufactured by TDK)

**Recommended**

The following circuit configuration is recommended.
The power to the CNC and other, FANUC Servo Unit β series with an I/O link (β amplifier with an I/O link), and so on in the sample configuration below) is assumed to be turned on or off at the same time. (The power to any unit is not assumed to be turned on during operation or before the power to the CNC is turned on.

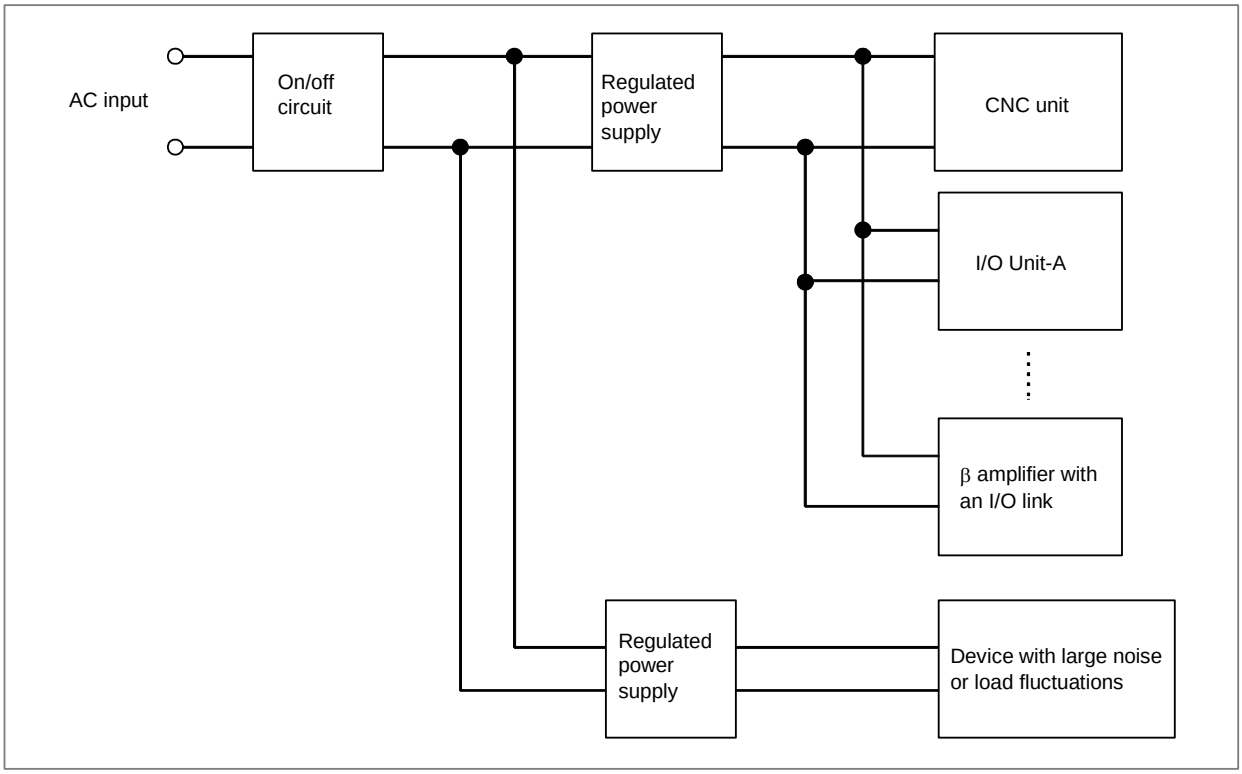


**Fig 4.2.2 (b)**

For example, the following units require 24VDC power sources.

- Various I/O Link slave units
- β servo amplifier and βi servo amplifierβ
- Separate detector unit

**Caution**

Turning the power to units on simultaneously when turning the power to the CNC:
When the following power-on timing condition is satisfied, the power to units is assumed to be turned on simultaneously when the power to the CNC is turned on.

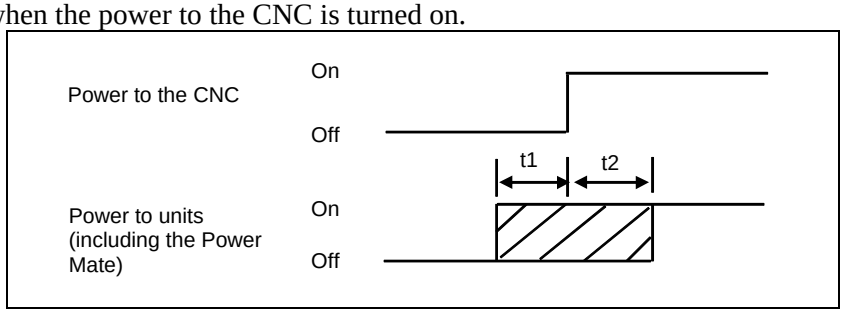


t1:200ms Means that the power to units (including the Power Mate) is turned on within 200 ms before the power to the CNC is turned on.

t2:-500ms Means that the power to units (including the Power Mate) is turned on within 500 ms after the power to the CNC is turned on.

Turning the power to units off simultaneously when turning the power to the CNC off:
This means that the power to units may be turned off within 500 ms before the power to the CNC control unit is turned off. If the power to units is turned off earlier, alarm information is left in the NC.

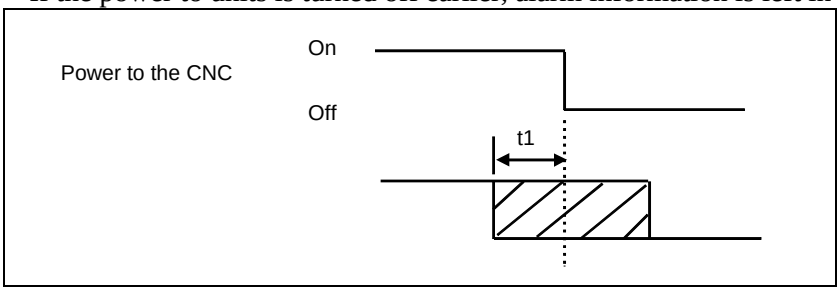


t1:500ms Means that the power to units are turned off within 500 ms before the power to the CNC is turned off.

The power to the CNC must not be turned on or off with the power to units on.

## 4.2.3 Power-on Sequence

Turn on the power to all the units at the same time, or in the following sequence:

1 Power to the overall machine (200 VAC)
2 Servo amplifier control power supply (200 VAC)
3 Power to the slave I/O units connected via the I/O link, the separate detector interface unit, and the stand-alone type LCD unit (24 VDC), power to the CNC controller (24 VDC), power to the separate detector (scale)

"Turning on the power to all the units at the same time" means completing the power–on operations in 1 and 2 above within 500 ms of performing power–on in 3.
Do not remove the memory backup battery (3VDC) and the separate absolute pulse coder battery (6VDC) regardless of whether the power of the CNC controller is on or off. If the batteries are removed when the CNC controller is off, the parameters and programs saved in the CNC controller and the position data in the pulse coder are lost.
For information on replacing the memory backup battery, see Subsection 4.4.1.

## 4.2.4 Power-off Sequence

Turn off the power to all the units at the same time, or in the following sequence:

1 Power to the slave I/O units connected via the I/O link, the separate detector interface unit, and the CNC controller (24 VDC)
2 Servo amplifier control power supply (200 VAC), power to the separate detector (scale)
3 Power to the overall machine (200 VAC)

When turning off the power of the CNC controller, be sure to turn off the power of units such as the slave I/O devices connected through I/O Link, β amplifier with I/O Link, Power Mate and separate detector interface unit, control power supply of the servo amplifier, and separate detector (such as a scale).
"Turning off the power to all units at the same time" means completing the power–off operations in 2 and 3 above within 500 ms before the power–off operation described in 1 above. If the power to the units indicated in 2 or 3 is turned off other than within 500 ms of the power in 1 being turned off, alarm information is left in the NC.
When the power is turned off or when the power is momentarily disconnected, processing must be performed from the machine as necessary, because motor control is disabled.
For example, when movement along a vertical axis is controlled, a brake should be applied to prevent falling. Usually, the brake clamps the motor when the servo is not activated or when the motor is not turning. The clamp is released only when the motor is turning.

When servo axis control is disabled by power-off or momentary power disconnection, the brake usually clamps the servo motor. In this case, before the relay for clamping operates, the controlled axis may fall. So, also consider whether the distance the axis is likely to fall will cause a problem.
When the power is turned off:

Be sure to apply a brake for clamping before turning off the power to CNC.

When the power fails:

If a power failure is detected, a brake must be applied immediately. Select the power supply with a longer DC power retention time after AC power-off, because the servo is deactivated if the power to CNC is turned off.

# 4.3 CABLE FOR POWER SUPPLY TO CONTROL UNIT

Supply the power to the control unit from an external 24 VDC power supply.

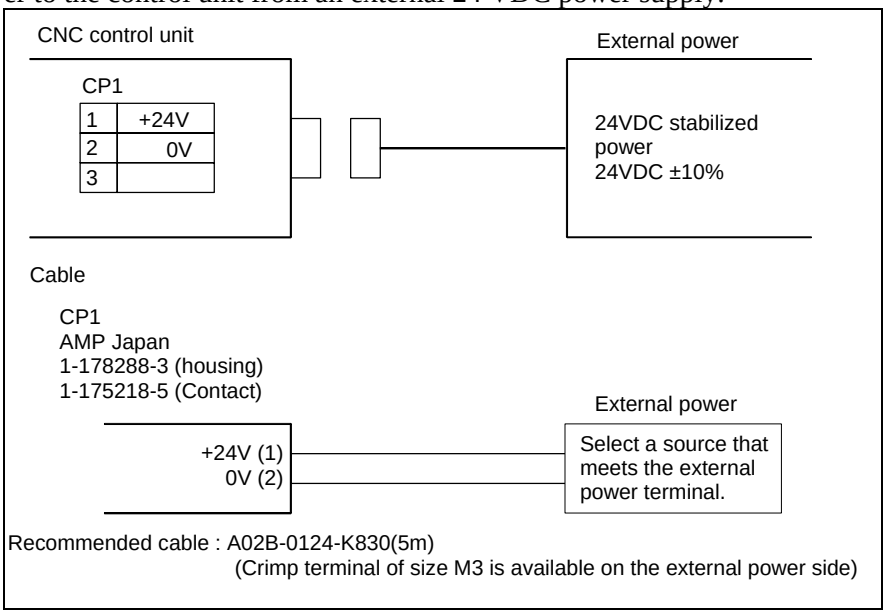


# 4.4 BATTERIES

In a system using this CNC, batteries are used as follows:

| Use | Component connected to battery |
|---|---|
| Memory backup in the CNC control unit | CNC control unit |
| Preservation of the current position indicated by the separate absolute pulse coder | Separate detector interface unit |
| Preservation of the current position indicated by the absolute pulse coder built into the motor | Servo amplifier |

## 4.4.1 Battery for Memory Backup in the CNC Control Unit (3 VDC)

Offset data, and system parameters are stored in SRAM in the control unit. The power to the SRAM is backed up by a lithium battery mounted on the front panel of the control unit. The above data is not lost even when the main battery goes dead. The backup battery is mounted on the control unit at shipping. This battery can maintain the contents of memory for about a year.
When the voltage of the battery becomes low, alarm message "BAT" blinks on the display and the battery alarm signal is output to the PMC. When this alarm is displayed, replace the battery as soon as possible. In general, the battery can be replaced within two or three weeks, however, this depends on the system configuration.

If the voltage of the battery becomes any lower, memory can no longer be backed up. Turning on the power to the control unit in this state causes system alarm to occur because the contents of memory are lost. Clear the entire memory and reenter data after replacing the battery.
FANUC thus recommends that the battery be replaced periodically, once a year, regardless of whether a battery alarm is issued.
The following two kinds of batteries can be used.

- Lithium battery built into the CNC control unit.
- Two alkaline dry cells (size D) in the external battery case.

**NOTE**
A lithium battery is installed as standard at the factory.

## When a lithium battery is used

### - Replacement procedure

Prepare a new battery unit (ordering code: A02B–0309–K102).

(1) Turn on the power to the CNC. After about 30 seconds, turn off the power.
(2) Extract the old battery unit from the lower right of the rear of the CNC unit. (Hold the latch of the battery unit, and extract the unit upward while releasing the claw from the case.)

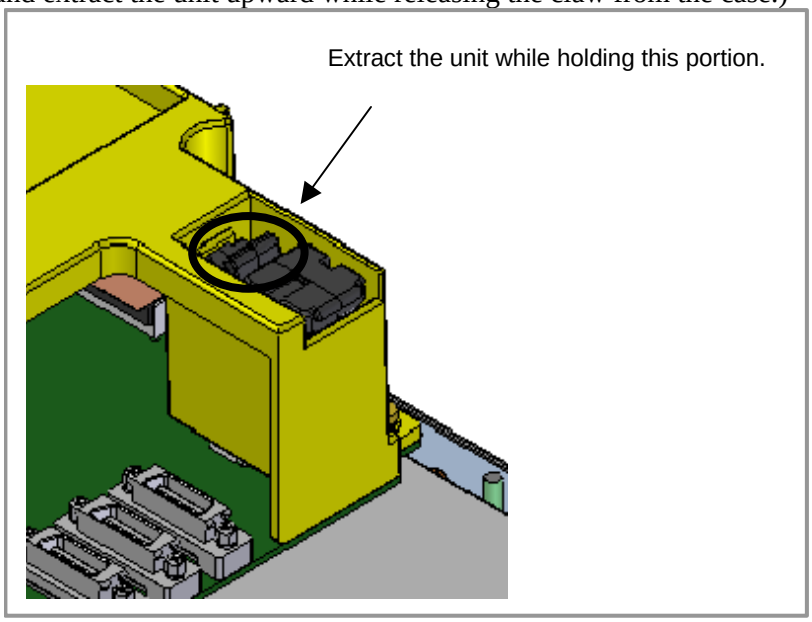


(3) Mount the new battery unit. (Push the battery unit in until the claw is latched into the case.) Ensure that the latch is engaged securely.

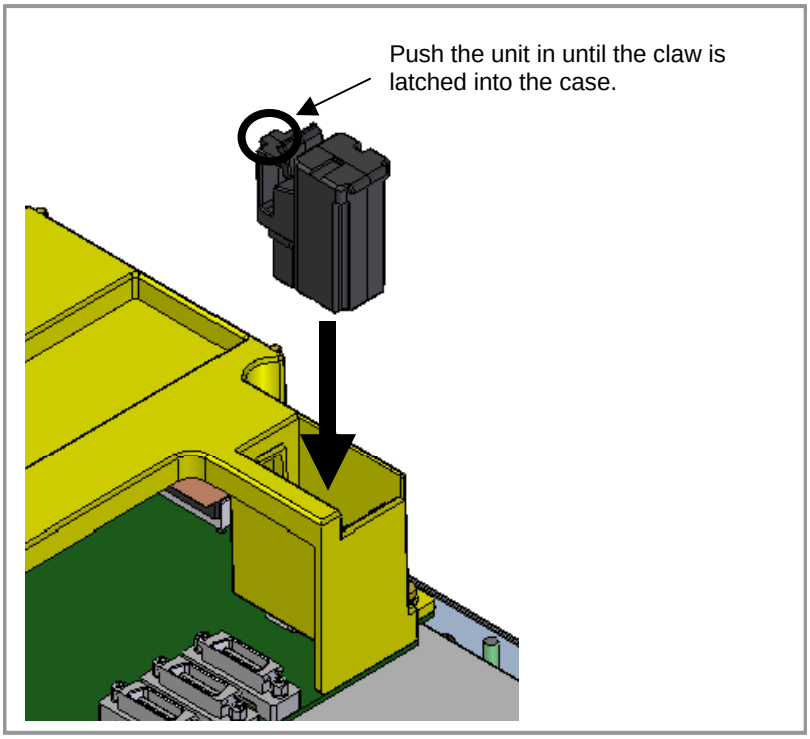


**⚠ WARNING**
Using other than the recommended battery may result in the battery exploding. Replace the battery only with the specified battery (A02B-0309-K102).

**⚠ CAUTION**
Steps 1 to 3 should be completed within 30 minutes. Do not leave the control unit without a battery for any longer than the specified period. Otherwise, the contents of memory may be lost.
If steps 1 to 3 may not be completed within 30 minutes, save all contents of the SRAM memory to the memory card beforehand. Thus, if the contents of the SRAM memory are lost, the contents can be restored easily.

When discarding a battery, observe the applicable ordinances or other rules of your local government. In addition, cover the exposed pins with tape or other insulation materials to prevent a short circuit before discarding the battery.

## When using commercial alkaline dry cells (size D)

To use commercial alkaline dry cells (size D) instead of the lithium battery attached to the control unit, install the battery unit in other than the control unit.

### - Connection method

Remove the factory-mounted lithium battery from the control unit as described in the battery replacement method above. Connect the battery cable (A02B-0309-K103) to the battery case (A02B-0236-C282). This battery cable has the same connector as the lithium battery unit, so connect the connector to the place where the lithium battery unit was installed as shown in the figure below. Since the connector has a simple lock system, make sure that the lock is applied during installation.

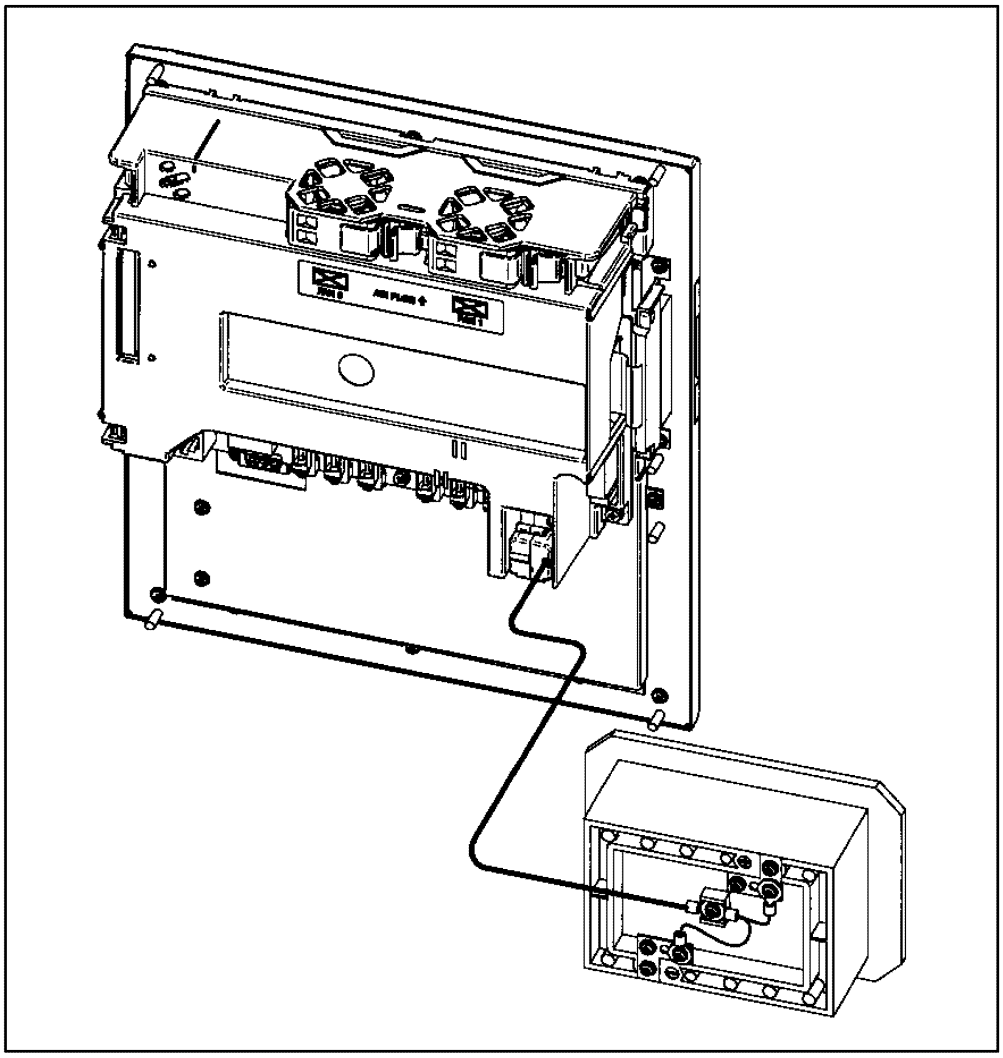

**NOTE**

1 The battery case (A02B-0236-C282) needs to be installed in a position where dry cells can be replaced even when the control unit is powered on.

2 The connector part of this battery cable engages with a simple lock system. Therefore, fix a cable portion up to 500mm long from the connector side without the portion being yanked to prevent the connector being removed by the cable weight or tensile stress.

## Replacing the alkaline dry cells (size D)

### - Replacing the battery

(1) Prepare two new alkaline dry cells (size D).
(2) Turn on the power of the control unit.
(3) Remove the battery case cover.
(5) Replace the batteries, paying careful attention to their orientation.
(6) Replace the battery case cover.

> ⚠ **CAUTION**
> To replace the battery when the power is off, follow the same procedure as that for the replacement of a lithium battery, described above.

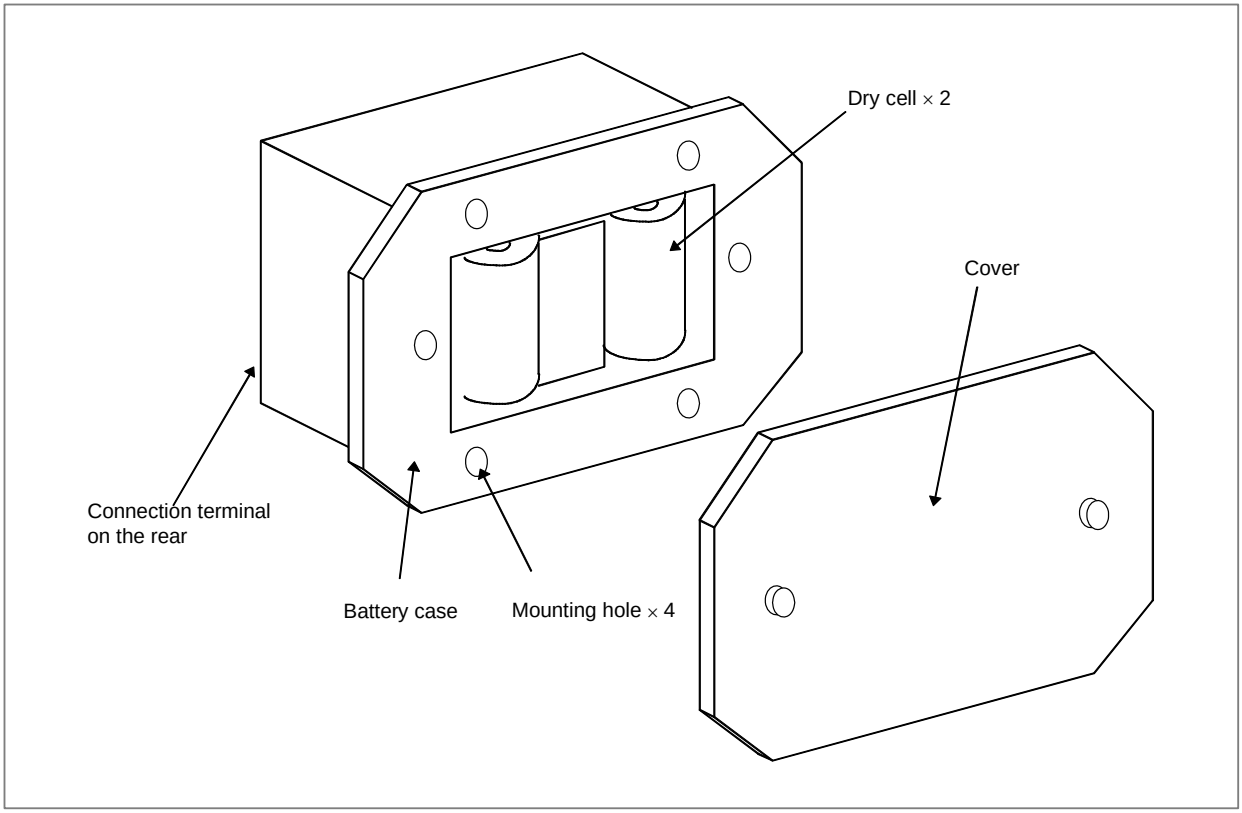

## 4.4.2 Battery for Separate Absolute Pulsecoders (6VDC)

The current position data of the absolute pulse coder connected to the separate detector interface unit is saved by the battery connected to connector JA4A of the separate detector interface unit.
If the voltage of the battery drops, DS alarms 306 to 308 are issued. When DS alarm 307 (battery voltage drop alarm) occurs, replace the battery as soon as possible. Estimated time to run out of the battery is 1 to 2 weeks, but the actual life depends on the number of pulse coders.
If the voltage of the battery further drops, DS alarms 306 (battery zero alarm) occurs. In this case, the current position of the pulse coder cannot be recorded and DS alarm 300 (reference position return alarm) occurs. Replace the battery and perform a reference position return.
Although the battery life depends on the number of pulse coders connected, it is recommended that the battery be replaced annually regardless of the issuance of the above alarms.

### Replacing a battery

Obtain four commercially available alkaline batteries (size D).
(1) Turn on the power of the machine (CNC).
(2) Loosen the screws of the battery case, and remove the cover.
(3) Replace the dry batteries in the case.

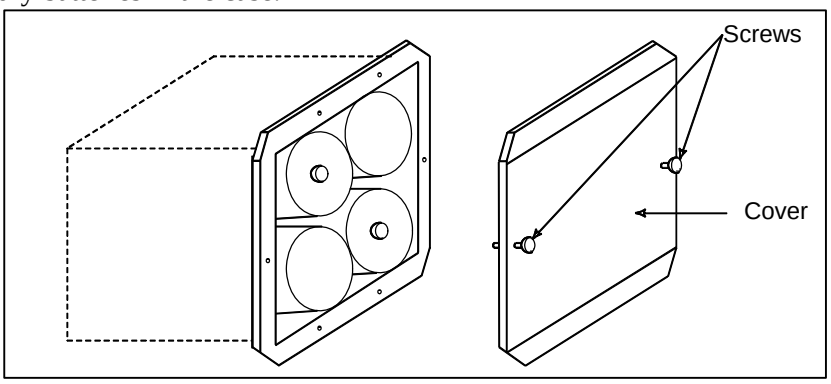


(4) After installing the new batteries, replace the cover.
(5) Turn off the power to the machine (CNC).

> ⚠ **WARNING**
> If the batteries are installed incorrectly, an explosion may occur. Never use batteries other than the specified type (Size D alkaline batteries).

> ⚠ **CAUTION**
> The battery must be replaced with the power of the CNC turned on (the servo amplifier turned on).
> Note that, if batteries are replaced while no power is supplied to the CNC, the recorded absolute position is lost.

## 4.4.3 Battery for Absolute Pulsecoder Built into the Motor (6VDC)

The battery for the absolute pulse coder built into the motor is installed in the servo amplifier. For the methods of connection and replacement, refer to the maintenance manual of your servo amplifier.

# 5 CONNECTION TO CNC PERIPHERALS

## 5.1 CONNECTION WITH DISPLAY UNIT/MDI UNIT

### 5.1.1 Overview

The CNC controller and the display unit are connected within the unit, so a machine tool builder does not need to connect them. The MDI cable is also included except for the 10.4" color LCD, so a machine tool builder does not need to connect it. Therefore, this subsection describes how to connect the CNC control unit and the MDI unit for the 10.4" color LCD.

## 5.1.2 Connection to the MDI Unit

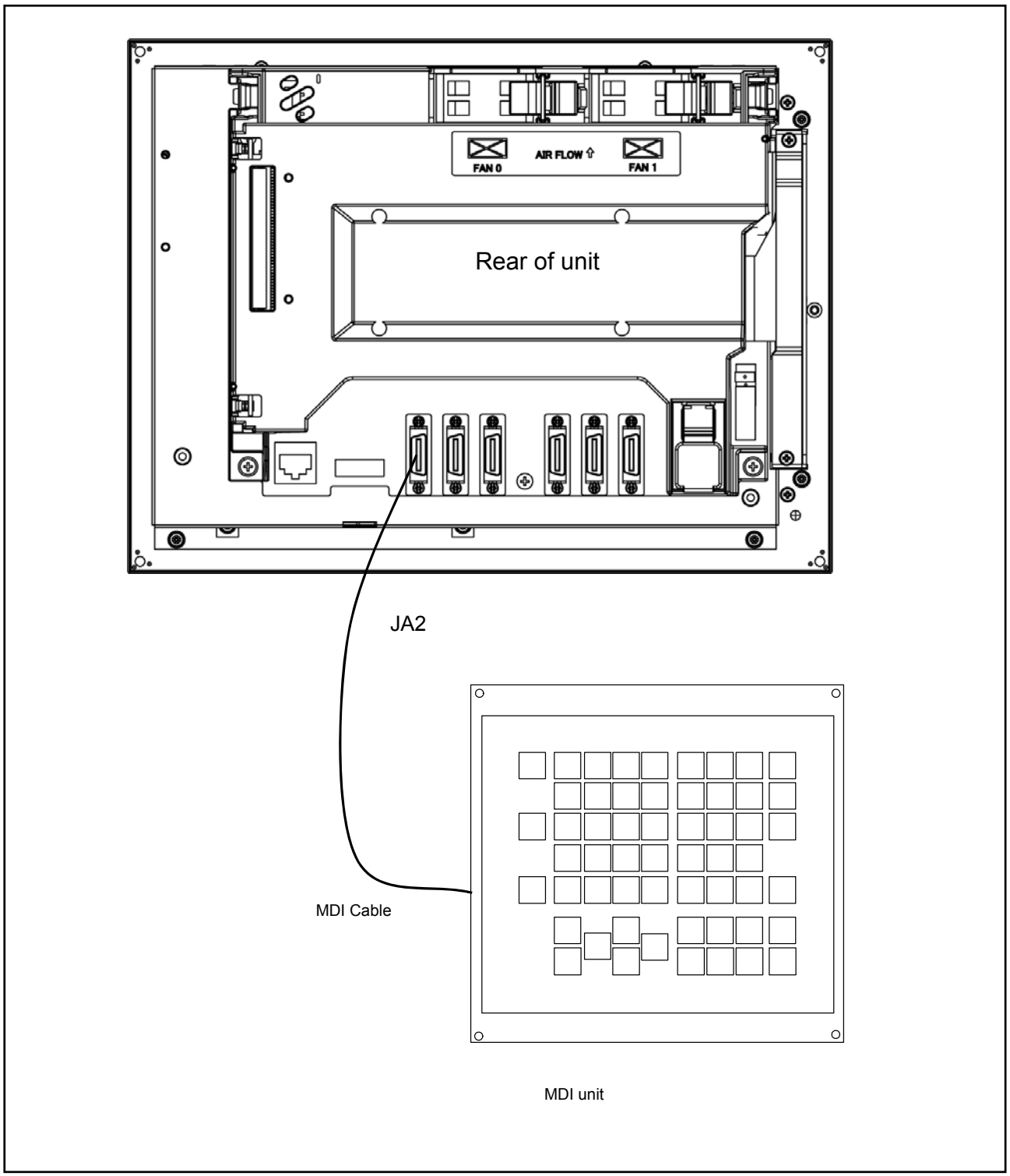

## 5.1.3 Connection with the Standard MDI Unit

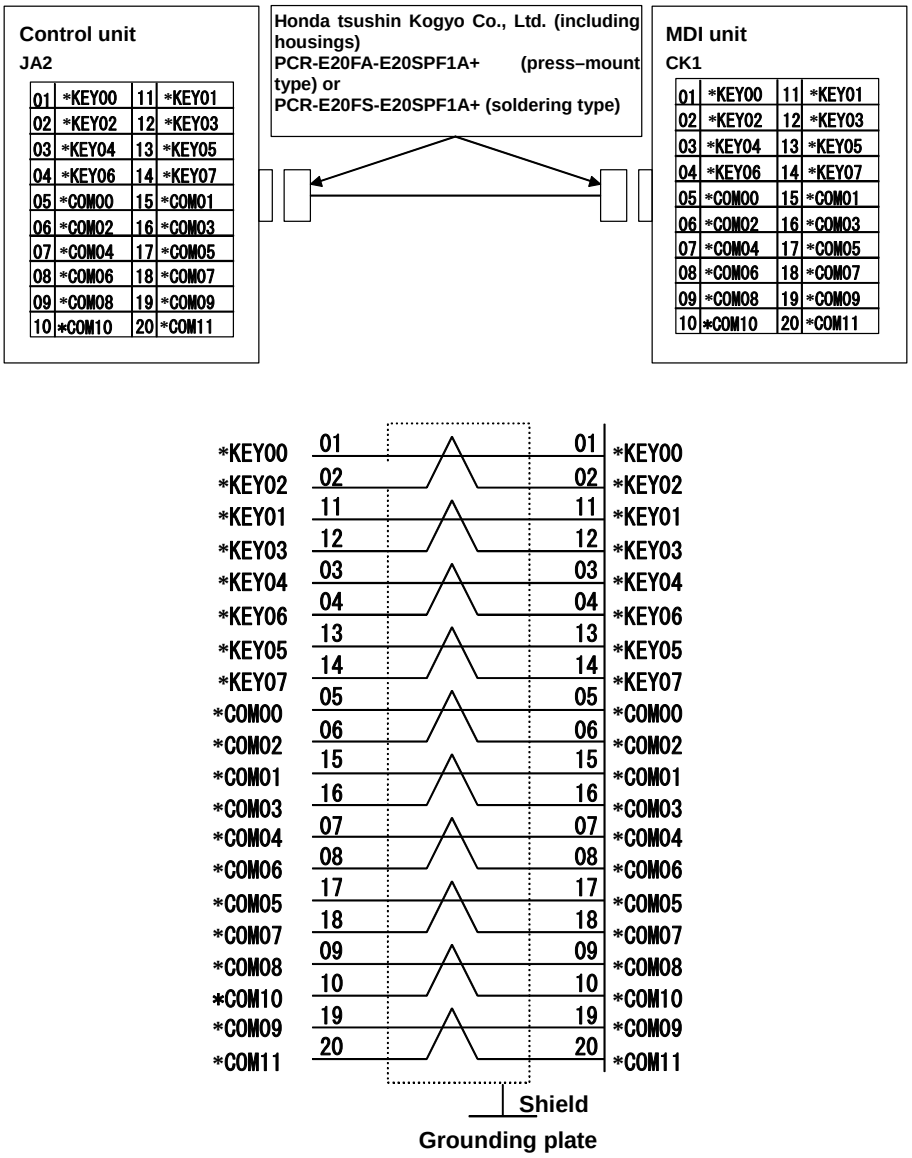


**Recommended cable specification: A02B-0309-K813(45cm)**
**Recommended wire specification:A66L-0001-0284#10P(#28AWG × 10 pairs)**

**NOTE**

The MDI cable needs to be clamped to prevent a heavy load caused by vibration from being applied to the cable. When the cable length is 50 cm or less, however, shielding or clamping is not necessary.

# 5.1.4 Key Layout of MDI

## For Lathe (T series)

### - Standard MDI unit (ONG keys)

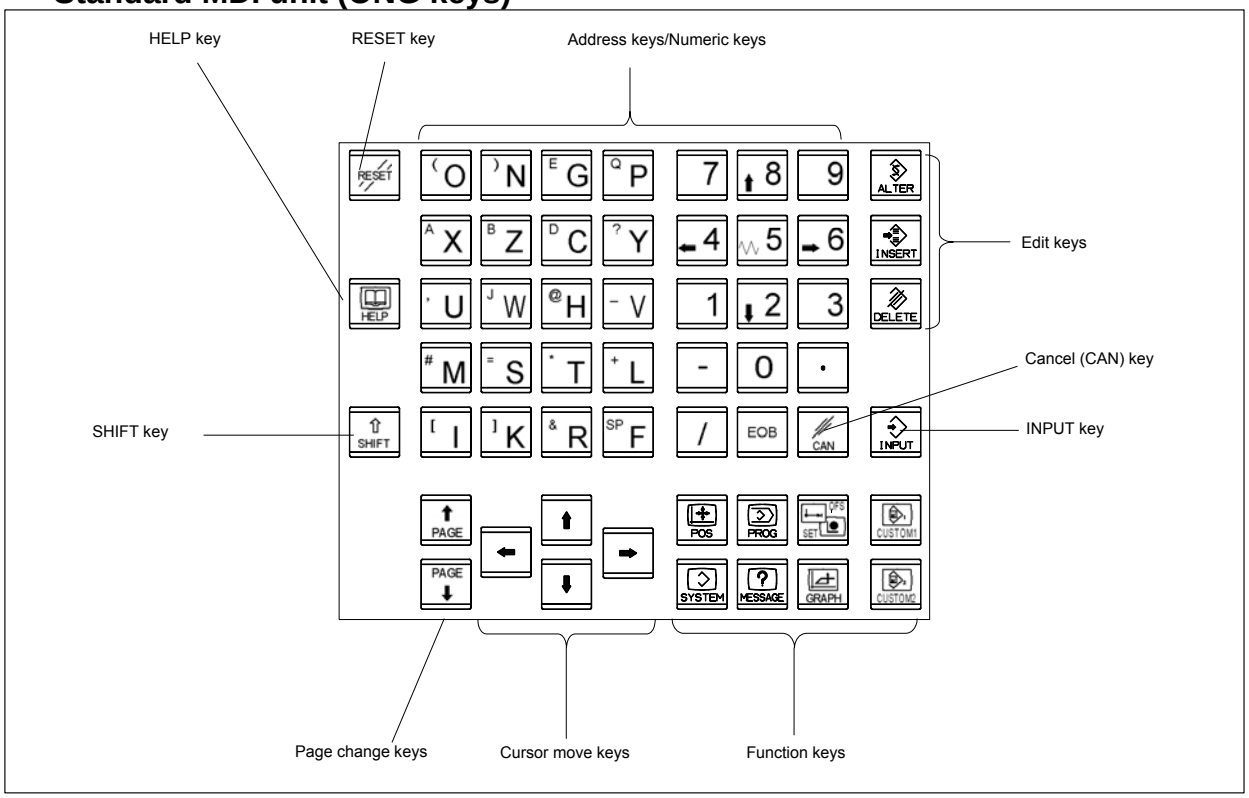


### - Small MDI unit (OGN keys, horizontal type)

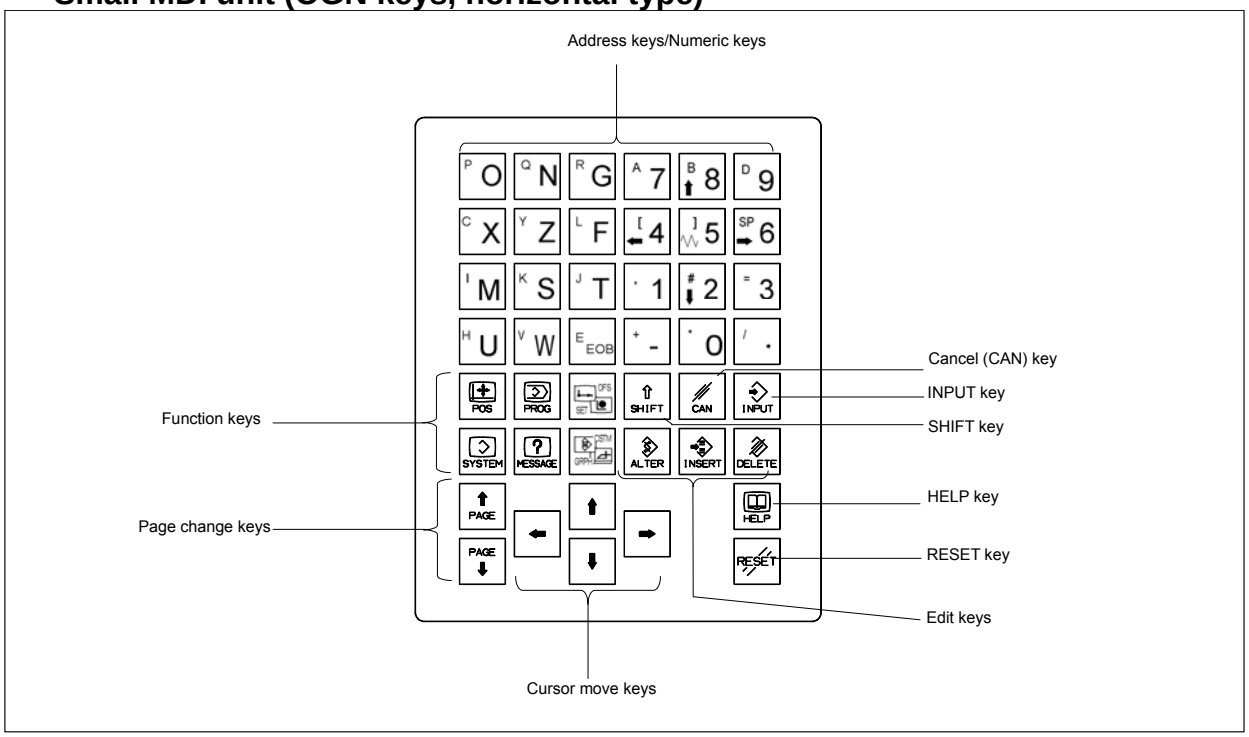

- **Small MDI unit (OGN keys, vertical type)**

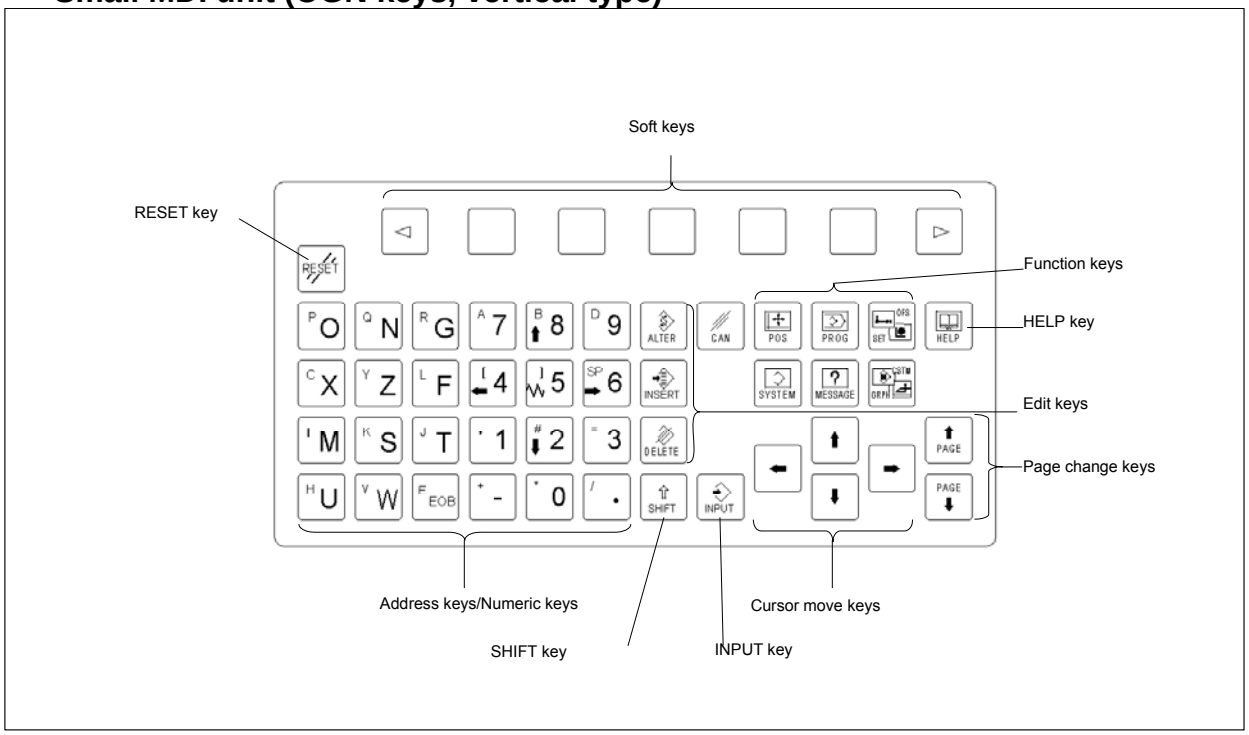


## For Machining center (M series)

- **Standard MDI unit (ONG keys)**

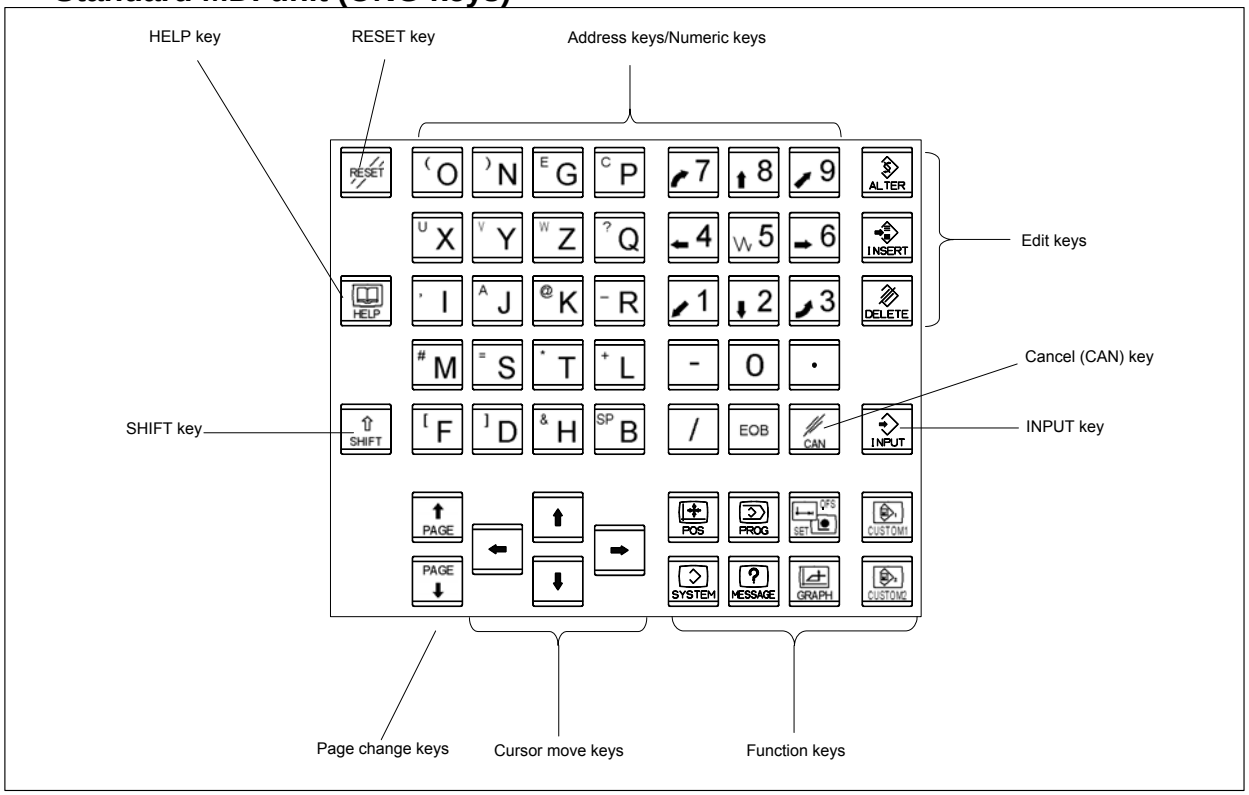

## - Small MDI unit (OGN keys, horizontal type)

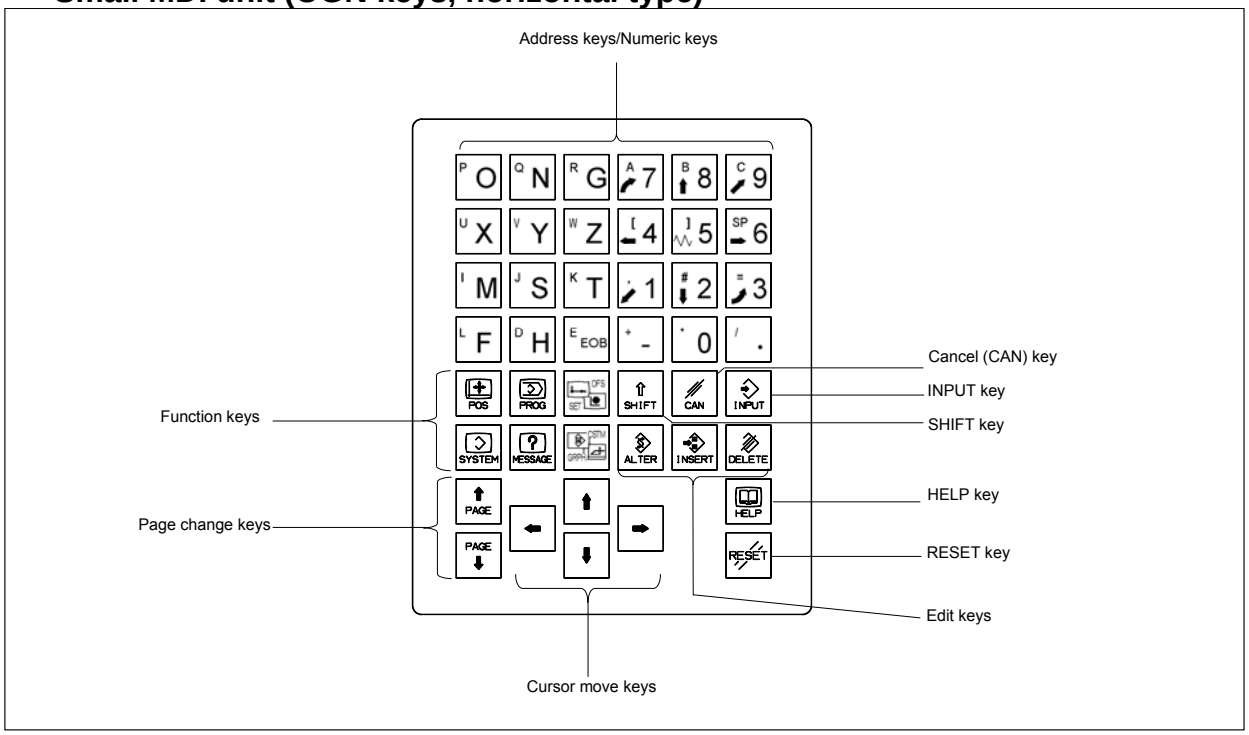


## - Small MDI unit (OGN keys, vertical type)

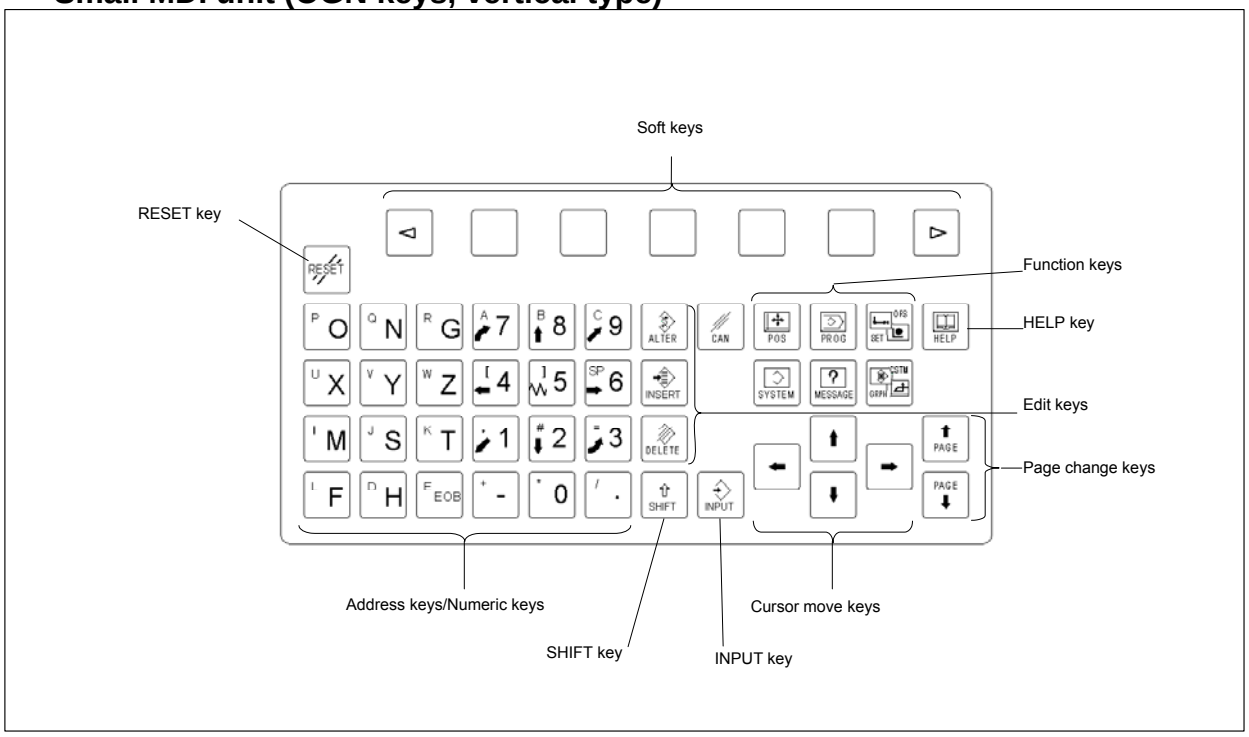

# 5.2 CONNECTION WITH INPUT/OUTPUT DEVICES

## 5.2.1 Overview

An input/output device is used to enter information such as CNC programs and parameters from an external device to the CNC, or to output information from the CNC to an external device.
The interface of the input/output devices electrically conforms to RS-232-C, so that a connection can be made with a device that has an RS-232-C interface.
The tables below indicate the serial ports of this CNC.

| Port name | Interface location | |
|---|---|---|
| First channel (JD36A) | Main control unit | |
| Second channel (JD36B) | Main control unit | Note |

**NOTE**
When using the touch panel, the interface of the second channel cannot be used as the interface of input/output devices because it is used to communicate with the touch panel on the CNC side.

## 5.2.2 Connecting I/O Devices

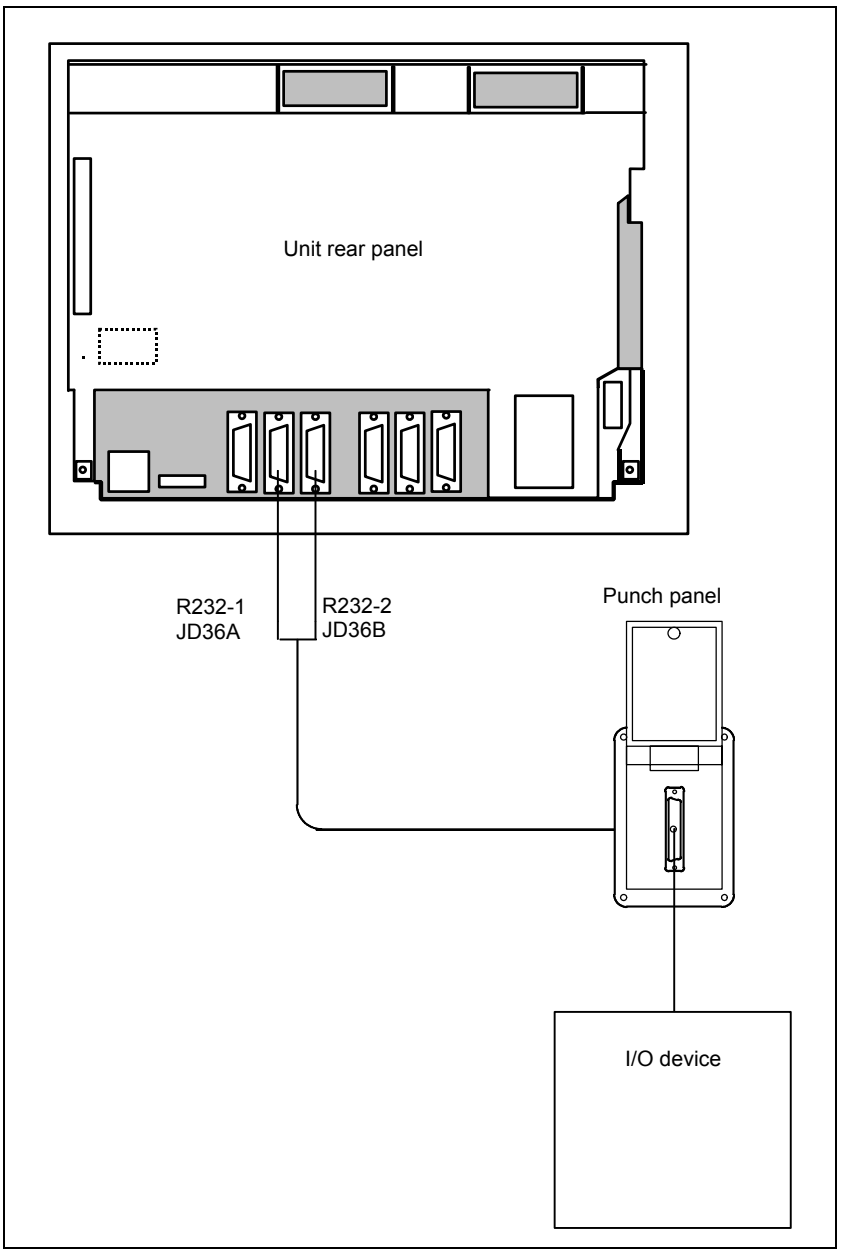


**NOTE**

When the PANEL i is used in the stand-alone type, the RS-232-C interface on the PC side is normally used to input or output parameters or programs. The cases where the PANEL i is used and RS-232-C interface on the CNC side is used are described below.

- Ladder uploading or downloading via RS-232-C using FANUC LADDER or FANUC LADDER II
- Ladder monitoring from an external PC using FANUC LADDER III
- DNC operation via RS-232-C, external I/O device control
- Input/output of parameters and programs by using the CNC screen display function

## 5.2.3 RS-232-C Serial Port

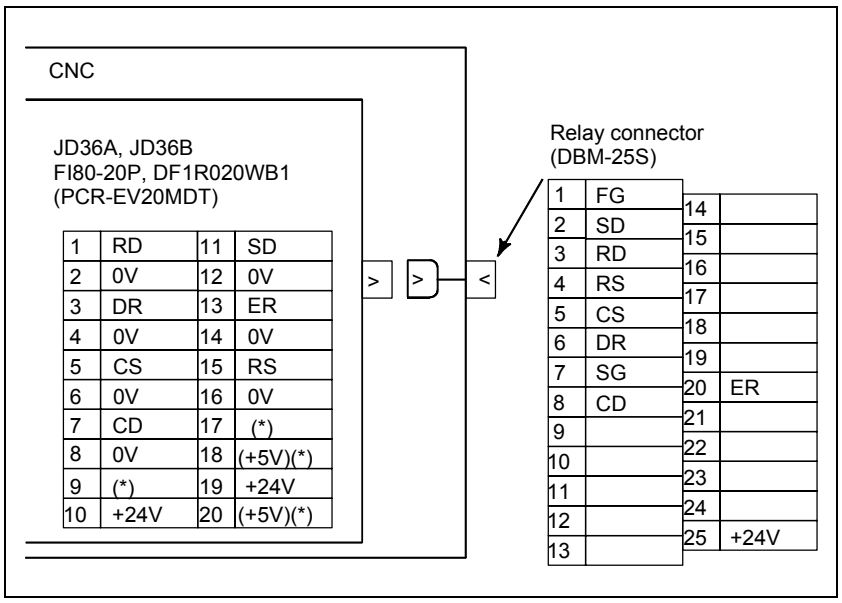


**NOTE**

1 +24 V can be used as the power supply for FANUC RS-232-C equipment.
2 Do not connect anything to those pins for which signal names are not indicated.
3 Pins 18 and 20 (+5V) are provided for touch channel connection.
4 The upper connector names on the CNC side are for the LCD-mounted type. The lower connector name in parentheses is for the stand-alone type.

**Cable connection**

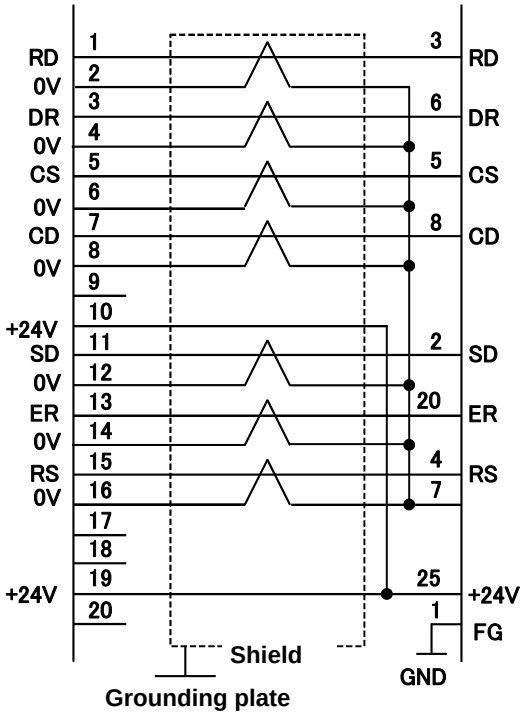


**Recommended wire specification**
**A66L-0001-0284#10P (#28AWG × 10 pairs)**
**Recommended cable–side connectors(JD36A, JD36B)**
**PCR-E20FA (Honda Tsushin Kogyo Co., Ltd.)**
**FI30-20S (Hirose Electric Co., Ltd.)**
**FCN-247J020-G/E (Fujitsu, Ltd.)**
**52622-2011 (Molex Japan Co., Ltd.)**

**Recommended cable specification (Name : PUNCH PANEL)**
**For LCD-mounted type**

**<Narrow width type>**
**A02B-0236-C191 (1m)**
**A02B-0236-C192 (2m)**
**A02B-0236-C193 (5m)**

**Recommended cable specification (Name : PUNCH PANEL)**
**For stand alone type**

**<Narrow width type>**
**A02B-0120-C191 (1m)**
**A02B-0120-C192 (2m)**
**A02B-0120-C193 (5m)**

**NOTE**
1 Do not connect anything to those pins for which signal names are not indicated.
2 Recommended cable connector FI30-20S (Hirose Electric) cannot be used for the stand-alone type.

# 5.2.4 RS-232-C Interface Specification

## RS-232-C Interface signals

Generally signals as follows are used in RS-232-C interface.

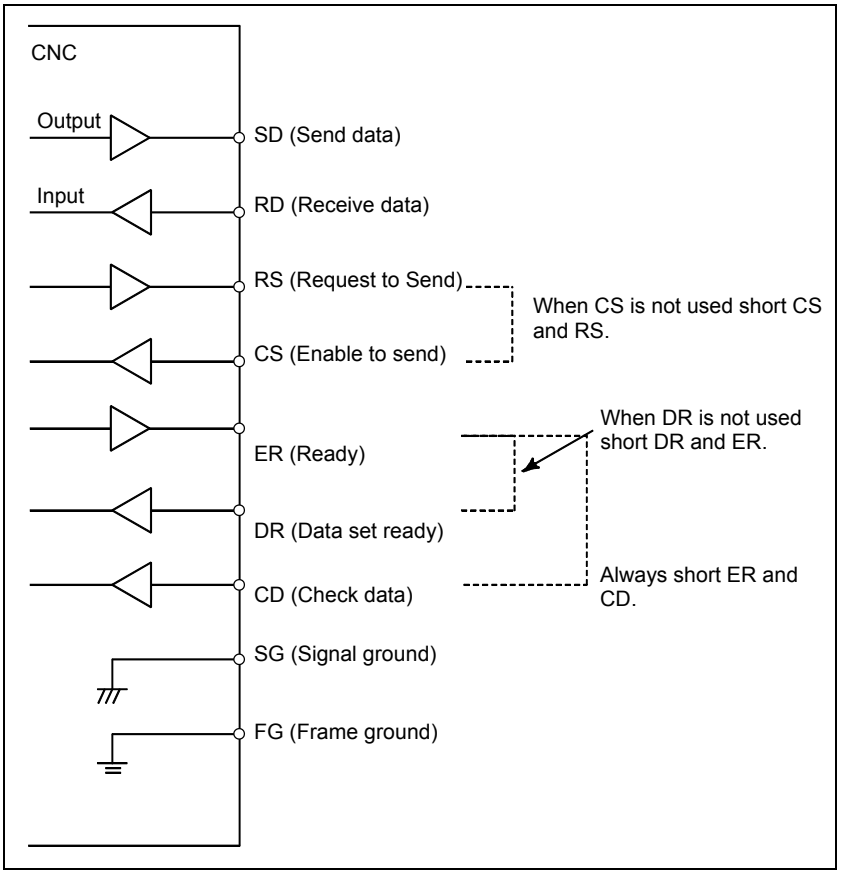


**Fig. 5.3.4 (a) RS-232-C interface**

## Signal description of RS-232-C interface

| Signal name | RS-232C circuit number | I/O | Description | |
|---|---|---|---|---|
| SD | 103 | Output | Sending data | 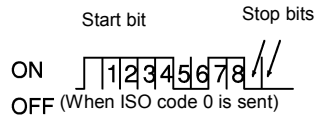  |
| RD | 104 | Input | Receiving data | |
| RS | 105 | Output | Sending request | This signal is set to on when NC starts sending data and is turned off when transmission ends. |
| CS | 106 | Input | Sending permitted | When both this signal and the DR signal are set, the NC can send data. If external device processing is delayed by a punching operation, etc., NC data sending can be stopped by turning off this signal after sending two characters, including the data being sent currently. If this signal will not be used, make sure to strap this signal circuit to the RS signal circuit. |
| DR | 107 | Input | Data set ready | When external device is ready to operate, this signal is set. This signal should usually be connected to the signal indicating external device power supply being on. (ER signal of external device). See Note below.<br>The NC transfers data when this signal is set. If the signals turned off during data transfer, alarm 086 is issued. If the DR signal will not be used, make sure to strap this signal circuit to the ER signal circuit. |

| Signal name | RS-232C circuit number | I/O | Description | |
|---|---|---|---|---|
| ER | 108.2 | Output | NC ready to operation | This signal is set when the NC is ready to operate. External device should regard the SD signal as being significant when the ER signal is set. |
| CD | 109 | Input | Signal Condition | Since this signal is not used in connections with external device, the signal circuit must be strapped, inside the connecting cable, to the ER signal circuit. |
| SG | 102 | | Signal grounding | |
| FG | 101 | | Frame grounding | |

**NOTE**
Signal on/off state is defined as follows;

| | -3V or lower | +3V or higher |
|---|---|---|
| Function | OFF | ON |
| Signal Condition | Marking | Spacing |

## Transmission Method of RS-232-C interface

### - Start-stop

Generally, two transmission methods are available at the serial interface. This CNC use the start-stop method.
With this method, start and stop signals are output before and after each data bit.

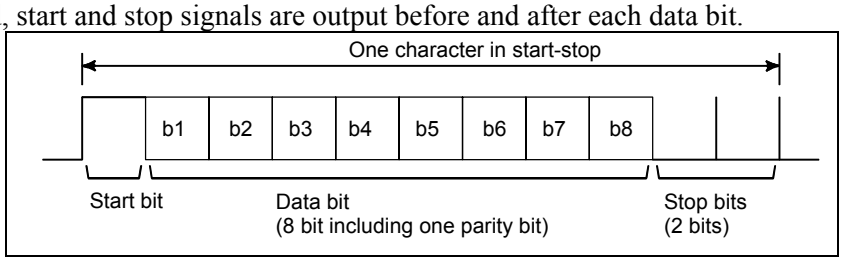


### - Codes

Transmission codes are as follows:
(i) EIA code and Control codes DC1 to DC4.
(ii) ISO code and Control codes DC1 to DC4 (Optional ISO code input is necessary.)
The connected external device must be able to recognize the following control codes, sent from NC.

| Control code | | 8 | 7 | 6 | 5 | 4 | | 3 | 2 | 1 |
|---|---|---|---|---|---|---|---|---|---|---|
| DC1 | Tape reader start | | | | ○ | | ○ | | | ○ |
| DC2 | Tape punch designation | | | | ○ | | ○ | | ○ | |
| DC3 | Tape reader stop | ○ | | | ○ | | ○ | | ○ | ○ |
| DC4 | Tape punch release | | | | ○ | | ○ | ○ | | |

**NOTE**
The listed control codes are used for both EIA and ISO.

In this interface, control codes DC1 to DC4 are used.
(a) NC can control external device by issuing codes DC1 to DC4.
(b) When external processing falls behind the pace of the NC signals (When NC issues data)
  (i) External device can temporarily stop NC data output by using the NC's CS signal. Data output stops within two characters including a currently transmitting character when CS OFF signal is input to NC. When CS signal is turned on again, data transmission start.
  (ii) If control code DC3 is input to NC, NC stops data output within ten characters. When control code DC1 is input to NC, NC starts sending data again.

(c) When the external device is equipped with an ISO/EIA converter, the external device must satisfy the specification shown in Table 5.3.4.

**Table 5.3.4**

| ISO code | | | | | | | | | | EIA code | | | | | | | | | | | Meaning |
|---|---|---|---|---|---|---|---|---|---|---|---|---|---|---|---|---|---|---|---|---|---|
| Character | 8 | 7 | 6 | 5 | 4 | | 3 | 2 | 1 | Character | 8 | 7 | 6 | 5 | 4 | | 3 | 2 | 1 | | |
| 0 | | | ○ | ○ | | ● | | | | 0 | | | ○ | | | ● | | | | | Numeral 0 |
| 1 | ○ | | ○ | ○ | | ● | | | ○ | 1 | | | | | | ● | | | ○ | | Numeral 1 |
| 2 | ○ | | ○ | ○ | | ● | | ○ | | 2 | | | | | | ● | | ○ | | | Numeral 2 |
| 3 | | | ○ | ○ | | ● | | ○ | ○ | 3 | | | | ○ | | ● | | ○ | ○ | | Numeral 3 |
| 4 | ○ | | ○ | ○ | | ● | ○ | | | 4 | | | | | | ● | ○ | | | | Numeral 4 |
| 5 | | | ○ | ○ | | ● | ○ | | ○ | 5 | | | | ○ | | ● | ○ | | ○ | | Numeral 5 |
| 6 | | | ○ | ○ | | ● | ○ | ○ | | 6 | | | | ○ | | ● | ○ | ○ | | | Numeral 6 |
| 7 | ○ | | ○ | ○ | | ● | ○ | ○ | ○ | 7 | | | | | | ● | ○ | ○ | ○ | | Numeral 7 |
| 8 | ○ | | ○ | ○ | ○ | ● | | | | 8 | | | | | ○ | ● | | | | | Numeral 8 |
| 9 | | | ○ | ○ | ○ | ● | | | ○ | 9 | | | | ○ | ○ | ● | | | ○ | | Numeral 9 |
| A | | ○ | | | | ● | | | ○ | a | | ○ | ○ | | | ● | | | ○ | | Address A |
| B | | ○ | | | | ● | | ○ | | b | | ○ | ○ | | | ● | | ○ | | ? | Address B |
| C | ○ | ○ | | | | ● | | ○ | ○ | c | | ○ | ○ | ○ | | ● | | ○ | ○ | | Address C |
| D | | ○ | | | | ● | ○ | | | d | | ○ | ○ | | | ● | ○ | | | ? | Address D |
| E | ○ | ○ | | | | ● | ○ | | ○ | e | | ○ | ○ | ○ | | ● | ○ | | ○ | ? | Address E |
| F | ○ | ○ | | | | ● | ○ | ○ | | f | | ○ | ○ | ○ | | ● | ○ | ○ | | | Address F |
| G | | ○ | | | | ● | ○ | ○ | ○ | g | | ○ | ○ | ○ | | ● | ○ | ○ | ○ | | Address G |
| H | | ○ | | | ○ | ● | | | | h | | ○ | ○ | | ○ | ● | | | | | Address H |
| I | ○ | ○ | | | ○ | ● | | | ○ | i | | ○ | ○ | ○ | ○ | ● | | | ○ | | Address I |
| J | ○ | ○ | | | ○ | ● | | ○ | | j | | ○ | | ○ | | ● | | ○ | ○ | ? | Address J |
| K | | ○ | | | ○ | ● | | ○ | ○ | k | | ○ | | ○ | | ● | | ○ | | | Address K |
| L | ○ | ○ | | | ○ | ● | ○ | | | l | | ○ | | | | ● | | ○ | ○ | ? | Address L |
| M | | ○ | | | ○ | ● | ○ | | ○ | m | | ○ | | ○ | | ● | ○ | | | | Address M |
| N | | ○ | | | ○ | ● | ○ | ○ | | n | | ○ | | | | ● | ○ | | ○ | | Address N |
| O | ○ | ○ | | | ○ | ● | ○ | ○ | ○ | o | | ○ | | | | ● | ○ | ○ | | | Address O |
| P | | ○ | | ○ | | ● | | | | p | | ○ | | ○ | | ● | ○ | ○ | ○ | | Address P |
| Q | ○ | ○ | | ○ | | ● | | | ○ | q | | ○ | | ○ | ○ | ● | | | | | Address Q |
| R | ○ | ○ | | ○ | | ● | | ○ | | r | | ○ | | | ○ | ● | | | ○ | | Address R |
| S | | ○ | | ○ | | ● | | ○ | ○ | s | | | ○ | ○ | | ● | | ○ | | | Address S |
| T | ○ | ○ | | ○ | | ● | ○ | | | t | | | ○ | | | ● | | ○ | ○ | | Address T |
| U | | ○ | | ○ | | ● | ○ | | ○ | u | | | ○ | ○ | | ● | ○ | | | | Address U |
| V | | ○ | | ○ | | ● | ○ | ○ | | v | | | ○ | | | ● | ○ | | ○ | ? | Address V |
| W | ○ | ○ | | ○ | | ● | ○ | ○ | ○ | w | | | ○ | | | ● | ○ | ○ | | | Address W |
| X | ○ | ○ | | ○ | ○ | ● | | | | x | | | ○ | ○ | | ● | ○ | ○ | ○ | | Address X |
| Y | | ○ | | ○ | ○ | ● | | | ○ | y | | | ○ | ○ | ○ | ● | | | | ? | Address Y |
| Z | | ○ | | ○ | ○ | ● | | ○ | | z | | | ○ | | ○ | ● | | | ○ | | Address Z |
| DEL | ○ | ○ | ○ | ○ | ○ | ● | ○ | ○ | ○ | Del | | ○ | ○ | ○ | ○ | ● | ○ | ○ | ○ | * | |
| NUL | | | | | | ● | | | | Blank | | | | | | ● | | | | * | |
| BS | ○ | | | | ○ | ● | | | | BS | | | ○ | | ○ | ● | | ○ | | * | |
| HT | | | | | ○ | ● | | | ○ | Tab | | | ○ | ○ | ○ | ● | ○ | ○ | | * | |
| LF or NL | | | | | ○ | ● | | ○ | | CR or EOB | ○ | | | | | ● | | | | | |
| CR | ○ | | | | ○ | ● | ○ | | ○ | | | | | | | | | | | * | |
| SP | ○ | | ○ | | | ● | | | | SP | | | | ○ | | ● | | | | * | |
| % | ○ | | ○ | | | ● | ○ | | ○ | ER | | | | | ○ | ● | | ○ | ○ | | |
| ( | | | ○ | | ○ | ● | | | | ( 2-4-5 ) | | | | ○ | ○ | ● | | ○ | | | |
| ) | ○ | | ○ | | ○ | ● | | | ○ | ( 2-4-7 ) | | ○ | | | ○ | ● | | ○ | | | |
| + | | | ○ | | ○ | ● | | ○ | ○ | + | | ○ | ○ | ○ | | ● | | | | * | |
| - | | | ○ | | ○ | ● | ○ | | ○ | - | | ○ | | | | ● | | | | | |
| : | | | ○ | ○ | ○ | ● | | ○ | | | | | | | | | | | | | |
| / | ○ | | ○ | | ○ | ● | ○ | ○ | ○ | / | | | ○ | ○ | | ● | | | ○ | | |
| . | | | ○ | | ○ | ● | ○ | ○ | | . | | ○ | ○ | | ○ | ● | | ○ | ○ | | |
| # | ○ | | ○ | | | ● | | ○ | ○ | | | | | | | | | | | | |
| $ | | | ○ | | | ● | ○ | | | | | | | | | | | | | | |
| & | ○ | | ○ | | | ● | ○ | ○ | | & | | | | | ○ | ● | ○ | ○ | | * | |
| □ | | | ○ | | | ● | ○ | ○ | ○ | | | | | | | | | | | * | |
| * | ○ | | ○ | | ○ | ● | | ○ | | | | | | | | | | | | * | |
| , | ○ | | ○ | | ○ | ● | ○ | | | , | | | ○ | ○ | ○ | ● | | ○ | ○ | * | |
| ; | ○ | | ○ | ○ | ○ | ● | | ○ | ○ | | | | | | | | | | | * | |
| < | | | ○ | ○ | ○ | ● | ○ | | | | | | | | | | | | | * | |
| = | ○ | | ○ | ○ | ○ | ● | ○ | | ○ | | | | | | | | | | | * | |
| > | ○ | | ○ | ○ | ○ | ● | ○ | ○ | | | | | | | | | | | | * | |
| ? | | | ○ | ○ | ○ | ● | ○ | ○ | ○ | | | | | | | | | | | * | |
| @ | ○ | ○ | | | | ● | | | | | | | | | | | | | | * | |
| ” | | | ○ | | | | | ○ | | | | | | | | | | | | * | |

**NOTE**

1 When the external device is equipped with an ISO/EIA converter, the following items must be noted in Table 5.3.4 (a).

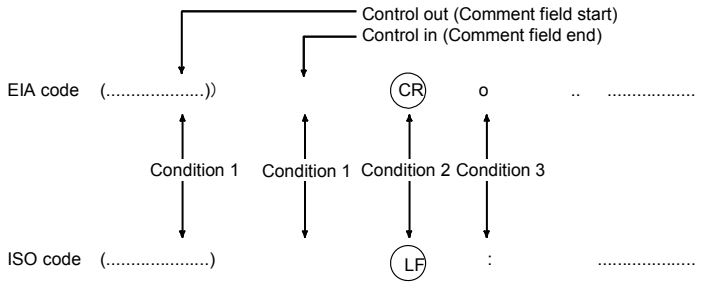


Condition1 Left parenthesis "("of the ISO code punches holes at bits 2, 4 and 5 when used in the EIA code.
Right parenthesis ")"of the ISO code punches holes at bits 2, 4 and 7 when used in the EIA code.

Condition2 EIA code CR is LF in ISO code.

Condition3 EIA code O is : in ISO code.

2 Control codes DC1 to DC4 are transmission codes output from the NC.
So they need not to be punched on the NC tape.

(3) Transmission rate (Baud rate)
The transmission rate (Baud rate) is the number of bits transferred per second.
The following baud rates are available depending on the system parameter.
50, 100, 110, 150, 200, 300, 600, 1200, 2400, 4800, 9600, 19200

[Example]
Baud rate : 110
When using one start bit and two stop bits (totalling 11 bits per character):
Transmission characters/second= 110/11
=10 characters/second (Max.)

(4) Cable length
The cable length depends on the external device type. Consult with the device manufacturers for actual connecting cable lengths.
Cable length is as follows by the specification of NC.
for RS-232C

| | |
|---|---|
| 100m or less | 4800 bauds or less |
| 50m or less | 19200 bauds or less |

## Time chart when the NC receives data (Read into memory)

(1) NC outputs DC1.
(2) The I/O device starts sending data upon receiving DC1.
(3) NC sends DC3 when NC processing is delayed.
(4) The I/O device stops sending data to NC after receiving DC3.
The device may send up to 10 characters after receiving DC3. If it sends more than 10 characters, alarm 087 will occur.
(5) NC reissues DC1 upon completing delayed processing.
(6) The I/O device restarts data output upon receiving the DC1 code (the data must be the next data to the preceding.)
(7) NC sends DC3 upon completing data read.
(8) The I/O device stops sending data.

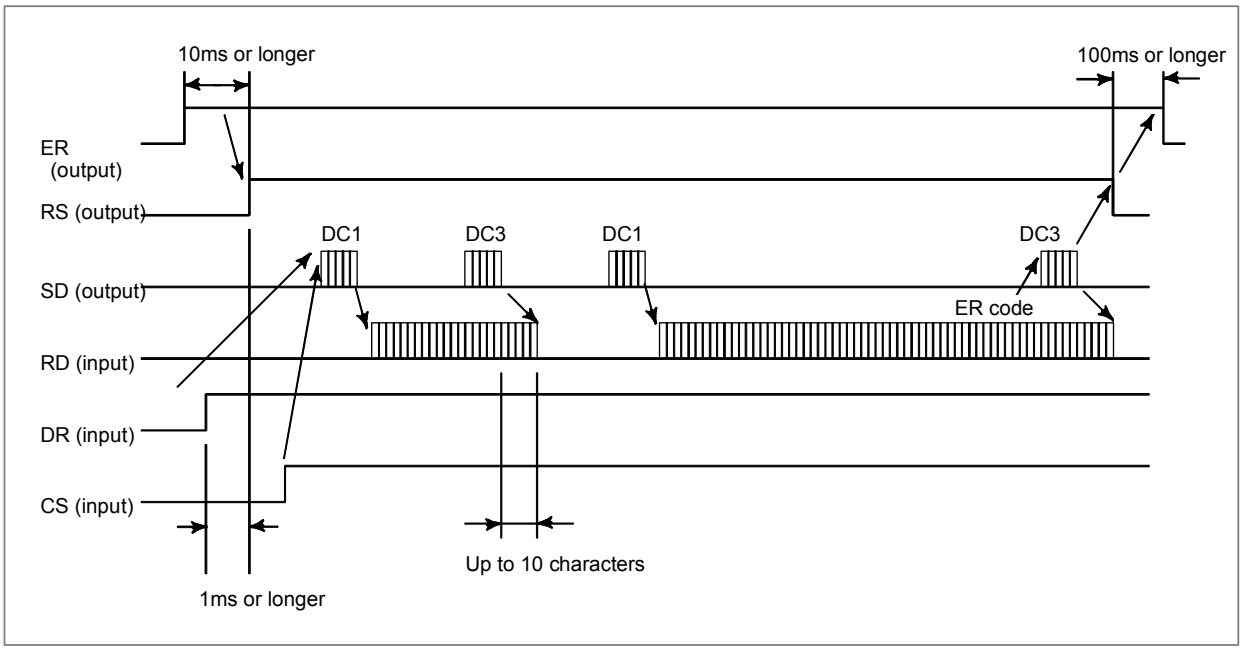


## Time chart when the NC send data (Punch out)

(1) NC output DC2.
(2) NC outputs punch data in succession.
(3) When data processing is delayed at the I/O device.
  (a) Data output stops within two characters including a currently transmitting character when CS signal is turned off.
  When CS signal is turned on again, data transmission starts. (See Fig. 5.3.4 (b))
  (b) If control code DC3 is input to NC, NC stops data output within ten characters. When control code DC1 is input to NC, NC starts sending data again. (See Fig. 5.3.4 (c))
(4) The NC starts sending the next data if the CS signal is turned on after the I/O device completes data processing.
(5) The NC issues DC4 upon completing data output.

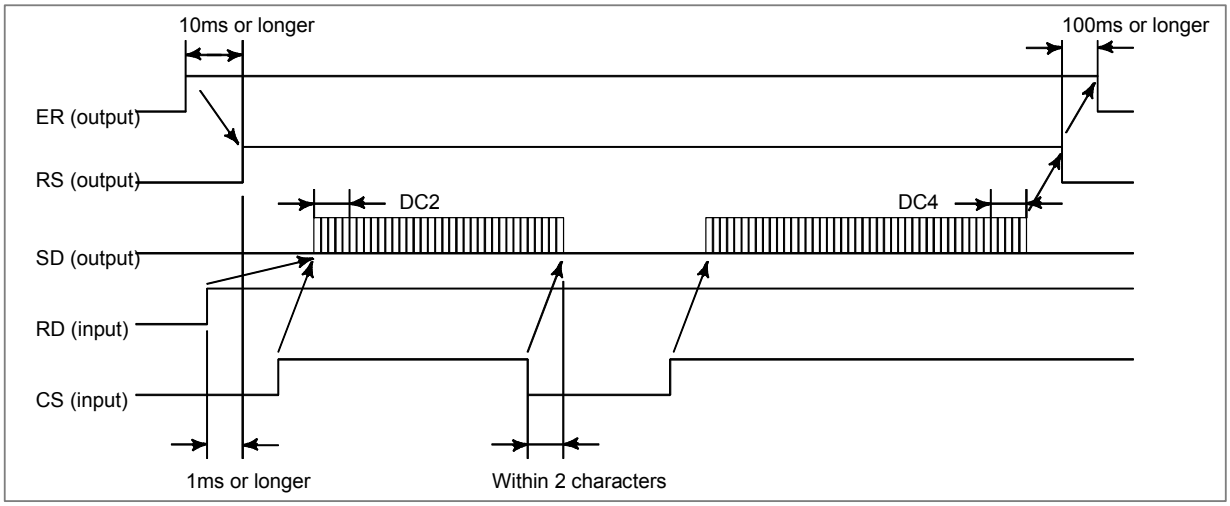


**Fig. 5.3.4 (c)**

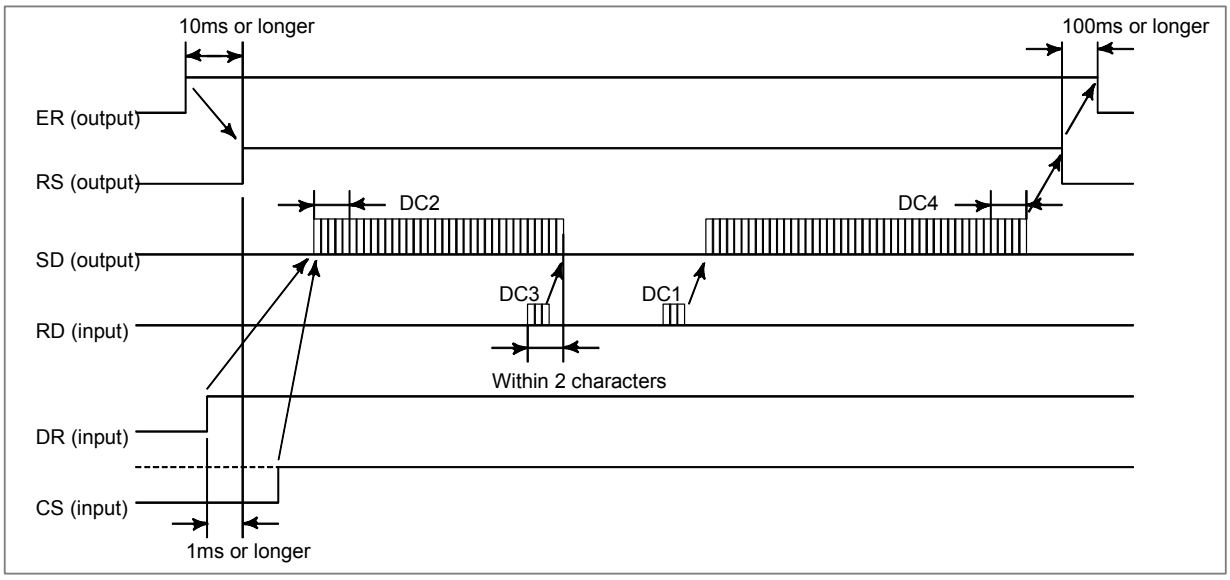


**Fig. 5.3.4 (c)**

## Connection between RS-232-C interface and external device

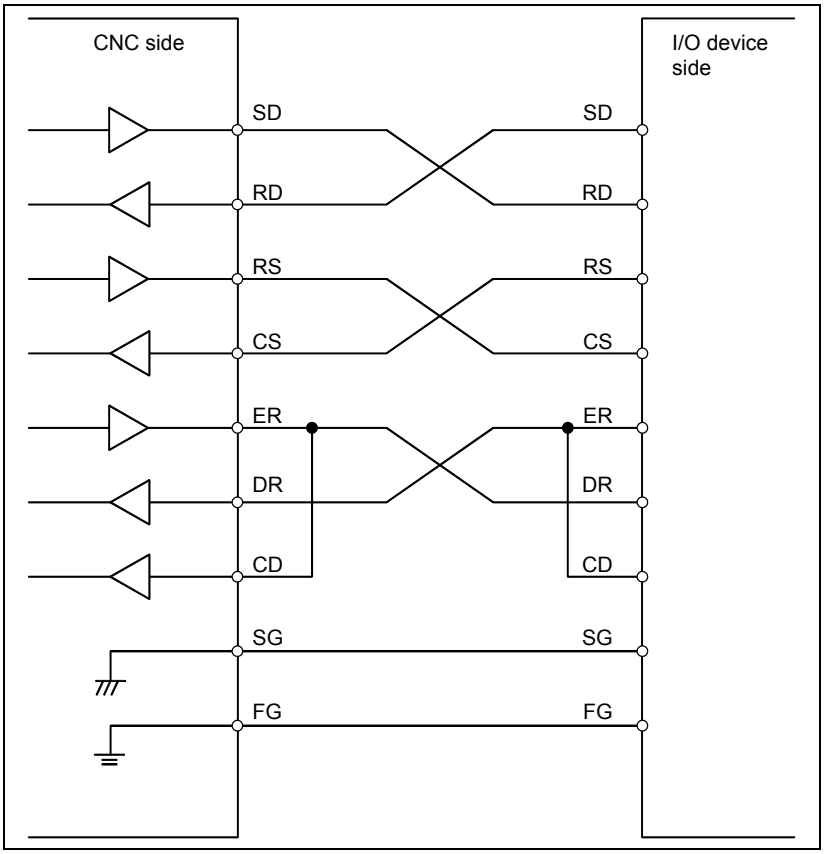

- Use the connection shown in the figure below when the ER and DR signals are not used for handshaking.

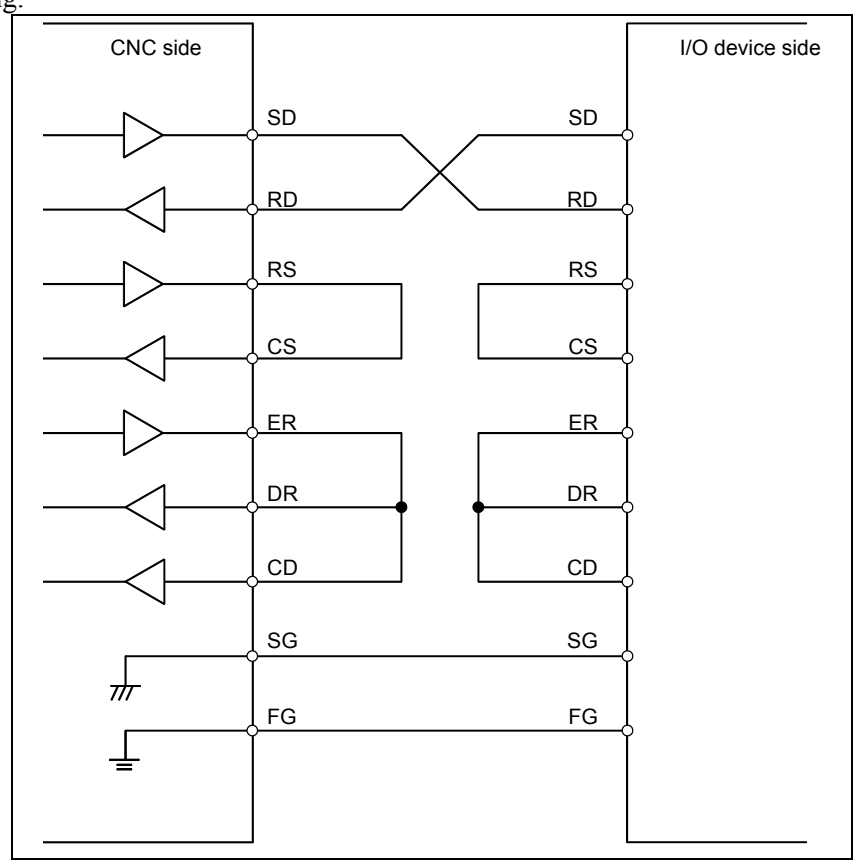


he cable for connecting the I/O device to the CNC should be connected as shown in the below diagram.

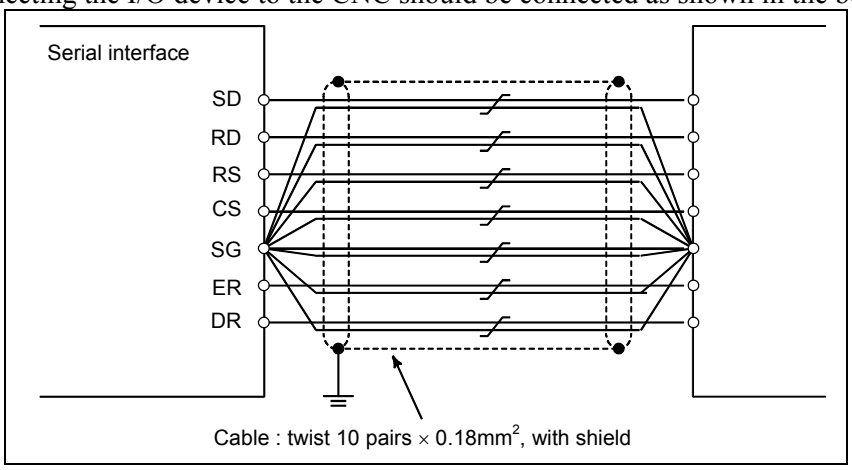

# 5.3 CONNECTING THE HIGH-SPEED SKIP (HDI)

## 5.3.1 Connecting the High-speed Skip (HDI)

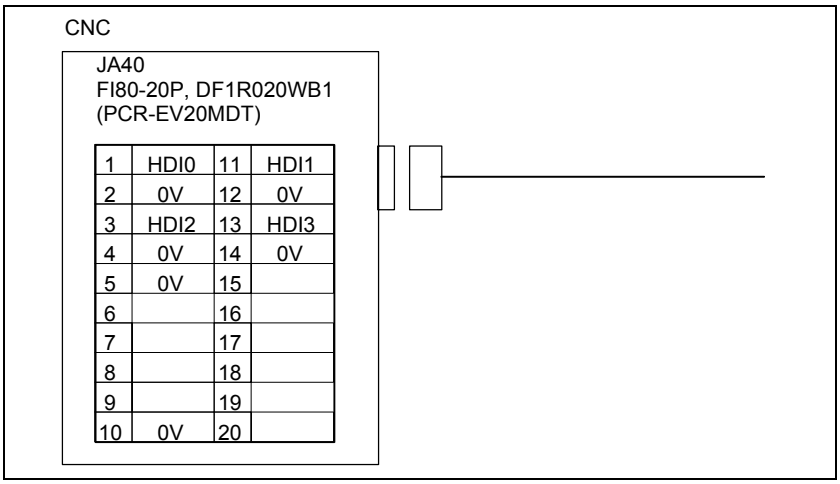


| | | | |
|---|---|---|---|
| 1 | HDI0 | 11 | HDI1 |
| 2 | 0V | 12 | 0V |
| 3 | HDI2 | 13 | HDI3 |
| 4 | 0V | 14 | 0V |
| 5 | 0V | 15 | |
| 6 | | 16 | |
| 7 | | 17 | |
| 8 | | 18 | |
| 9 | | 19 | |
| 10 | 0V | 20 | |

**NOTE**

1 The upper connector specification on the JA40 is for the LCD-mounted type. The lower connector specification in parentheses is for the stand-alone type.

2 Do not connect any signal to the pins with no signal name.

### Cable connections

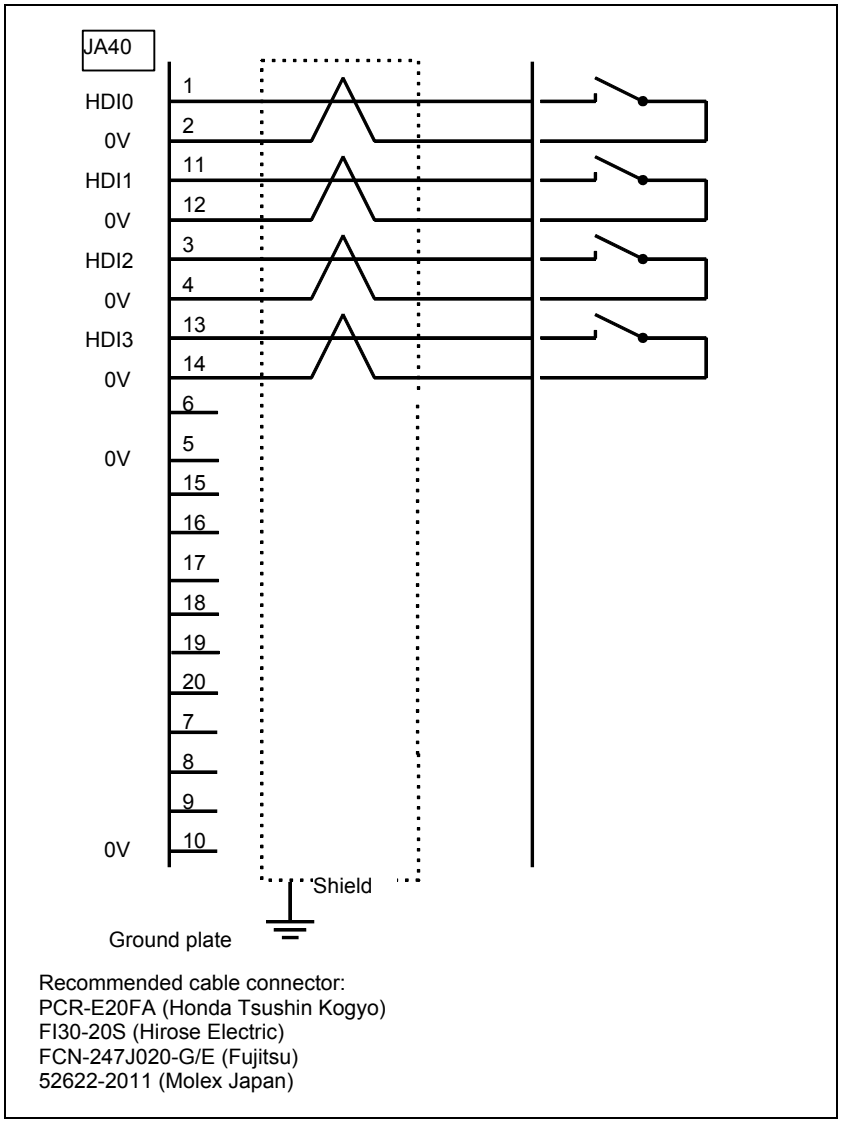


**NOTE**
Recommended cable connector FI30-20S (Hirose Electric) cannot be used for the stand-alone type.

## 5.3.2 Input Signal Rules for the High-speed Skip (HDI)

### Circuit configuration

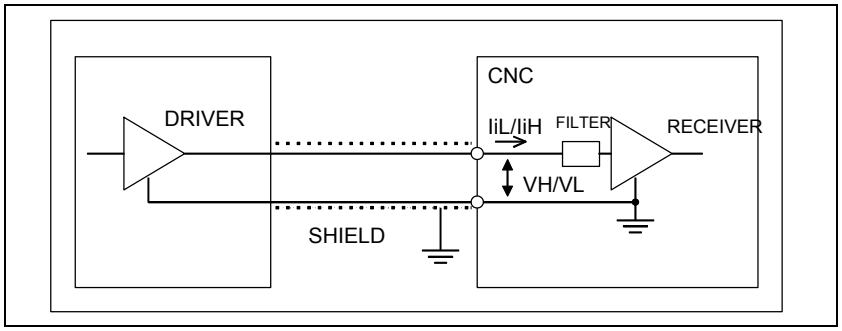

Absolute maximum rating
Input voltage range Vin: -3.6 to +13.6 V
Input characteristics

| Unit | Symbol | Specification | Unit | Remark |
|---|---|---|---|---|
| High level input voltage | VH | 3.6 to 11.6 | V | |
| Low level input voltage | VL | 0 to 1.0 | V | |
| High level input current | IiH | 2 (max) | mA | Vin=5V |
| | | 11 (max) | mA | Vin=10V |
| Low level input current | IiL | -8.0 (max) | mA | Vin=0V |
| Input signal pulse duration | | 20 (min) | μs | |
| Input signal delay or variations | | 0.02 (max) | ms | |

**NOTE**
1 The plus (+) sign of IiH/IiL represents the direction of flow into the receiver. The minus (-) sign of IiH/IiL represents the direction of flow out of the receiver.
2 The high-speed skip signal is assumed to be 1 when the input voltage is at the low level and 0 when it is at the high level.
3 The input level for the CNC receiver is high when the circuit is open. So, the input level for the external driver must be low.

# 5.4 LINKING THE EMBEDDED ETHERNET INTERFACE

⚠ **CAUTION**
Before attaching or removing cables, power off the CNC main unit, and confirm that the power is off.
Ask the respective manufacturers for explanations about how to build a network and about conditions for using units (such as a media converter, hub, transceiver, and cable) other than the CNC unit. When installing network cables, exercise sufficient caution so that the network will not be affected by any noise source. Electrically separate the network wiring sufficiently from noise sources like motors and their power lines. Also, ground each unit as required. If the grounding impedance is high, it may cause trouble in communication.
Once the equipment is installed, conduct communication tests to verify normal operation before starting actual use of the equipment.
FANUC is not liable to any damage related to trouble arising from any unit other than the CNC unit.

## 5.4.1 Connection to the Ethernet Interface

The 100BASE-TX interface are available. A hub (line concentrator) is used to connect the CNC unit to a system. A typical connection example is shown below.

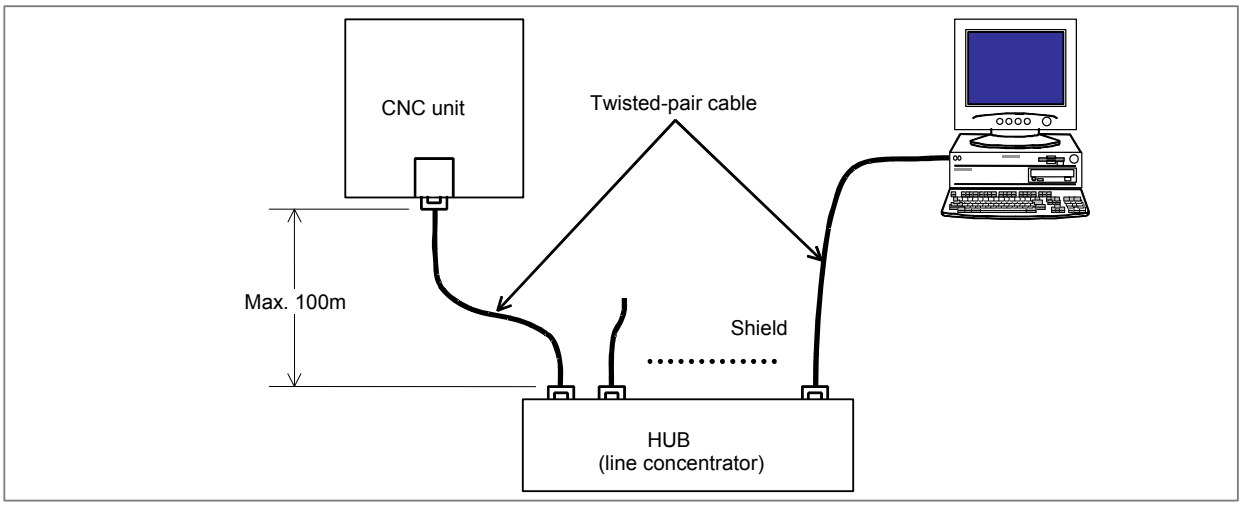


**NOTE**

1 To make a connection to the 10BASE-T Ethernet, use a hub that meets the following conditions.
- Compliant with 100BASE-TX
- With the auto-negotiation function
- Support for the store & forward system

2 Some of the units (hub, transceiver, etc.) required to build a network are not dust-proof/water-proof (oil-proof). Using them in an atmosphere with dust or oil mist may lead to a communication error or failure. They should be enclosed in a dust-proof/water-proof (oil-proof) cabinet.

## Leading in Ethernet cables

An Ethernet cable should be fixed with a clamp or the like so that pulling it will not cause tension to be applied to the connector (RJ-45) at the end of the cable. The clamp not only fixes the cable but also grounds the shield of the cable.

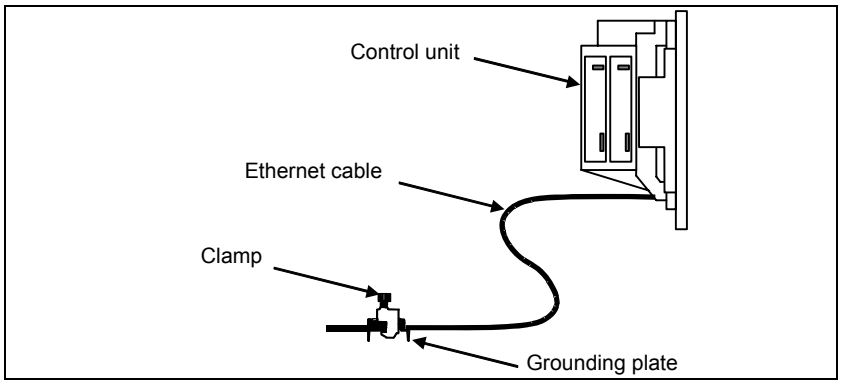


## Pin arrangement of the 10BASE-T/100BASE-TX connector (CD38A)

CD38A

| Pin No. | Signal name | Description |
|---|---|---|
| 1 | TX+ | Transmit + |
| 2 | TX- | Transmit - |
| 3 | RX+ | Receive + |
| 4 | | Not used |
| 5 | | Not used |
| 6 | RX- | Receive - |
| 7 | | Not used |

| Pin No. | Signal name | Description |
|---|---|---|
| 8 | | Not used |

## 5.4.2 Specification of Twisted-Pair Cable

### Cable connection

The connectors of a cable for connecting between the 100BASE-TX interface (CD38A) and the hub have the pin arrangement shown below.

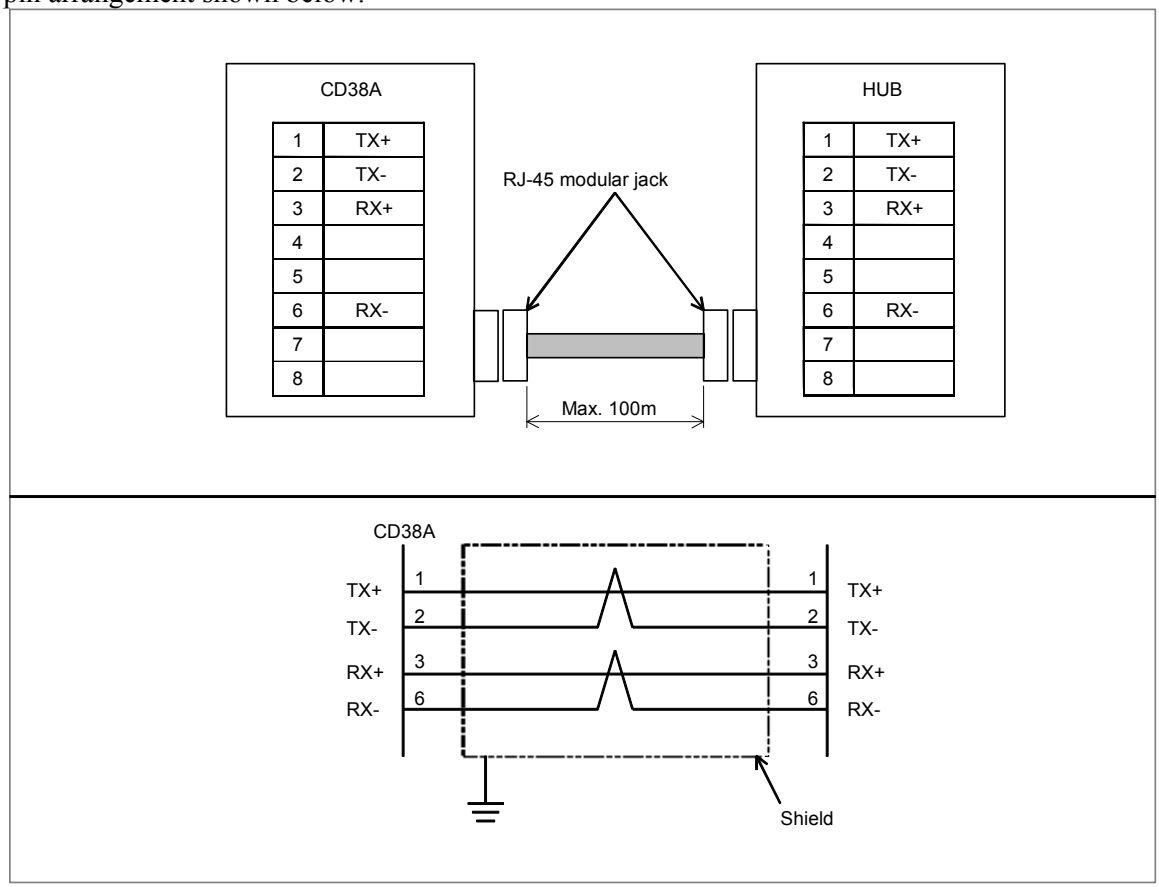


**NOTE**
The cable can be up to 100 m long (for the FANUC- recommended cable for movable sections, up to 50 m). Do not make the cable longer than necessary.

### Cable Wires

Many cables without a shield (UTP cables) are commercially available as twisted pair cables conforming to 10BASE-T or 100BASE-TX. To improve noise immunity in factory automation environments, however, be sure to use twisted pair cables (STP cables) with a common shield in category 5.

Recommended cables (for fixed parts)

| Manufacturer | Specification | Remark |
|---|---|---|
| Furukawa Electric Co., Ltd. | DTS5087C-4P | Twisted wires |
| Nissei Electric Co., Ltd. | F-4PFWMF | Single-wire cable |

**NOTE**
No cable recommended for use in fixed sections shall be used in movable sections. Be sure to use the following movable-section cables.

Recommended cable (for movable sections)

| Manufacturer | Specification | Remark |
|---|---|---|
| Oki Electric Cable Co., Ltd. | AWG26 4P TPMC-C5-F(SB) | Dedicated to FANUC products |

Cable specification (FANUC original product, with no connector)

Drawing number: A66L-0001-0453
Manufacturer: Oki Electric Cable Co., Ltd.
Specification

- Electrical characteristic:
  Complying with EIA/TIA 568A categories 3 and 5
  The length of the cable to the hub must be kept within 50 m because of its attenuation performance.
- Structure: Common-shield braided cable with drain wire
  The conductors of the cable are AWG26 annealed-copper strand wire, with a sheath 0.8 mm thick and an outer diameter of 6.7 ± 0.3 mm
- Fire resistance: UL1581 VW-1
- Oil resistance:
  As per FANUC's internal standard (Equivalent to conventional oil-resistant electrical cable)
- Flex resistance:
  Million or more bending cycles with a bending radius of 50 mm (U-shaped bend test)
- UL style No.: AWM20276 (80°C/30V/VW-1)

**NOTE**
Use the TM21CP-88P(03) connector made by Hirose Electric Co., Ltd. to this cable.

About cable assemblies
Oki Electric Cable Co., Ltd. can offer a cable assembly that uses the TM21CP-88P(03) connector made by Hirose Electric Co., Ltd. To get this cable assembly, negotiate directly with the manufacturer on its specifications (cable length, shipping test, package, etc.).

## Connector specification

An 8-pin modular connector called the RJ-45 is used with a twisted-pair cable for Ethernet interfaces. Use the connector listed below or equivalent.

| | Specification | Manufacturer | Remark |
|---|---|---|---|
| Connector used with cable AWG26 4P TPMC-C5-F(SB) | TM21CP-88P(03) | Hirose Electric Co., Ltd. | (Note) |

**NOTE**
About TM21CP-88P(03)
Connector (manufacturer's standard product)
Drawing number: A63L-0001-0823#P
Manufacturer: Hirose Electric Co., Ltd.
Manufacturer's model number: TM21CP-88P(03)
Complying with EIA/TIA 568A categories 3 and 5
Ask Hirose Electric Co., Ltd. for explanations about how to attach the connector to a cable.

(Hirose Electric Co., Ltd. offers the TM21CP-88P(03) Wiring Procedure Specification (Engineering Specification No. ATAD-E2367) to explain the related technical information.)

## 5.4.3 Anti-Noise Measure

### Separating signal lines

Ethernet cable wires belong to group C. See descriptions elsewhere for explanations about how to separate them from wires in group A or B.

### Cable clamp and shield processing

If any cable led into the CNC requires shielding, clamp it as shown below. The same method is used also to shield Ethernet twisted-pair cables. The clamp shown in the figure works not only for cable fixing but also for shield processing. Shield processing is very important to maintain the stable operation of the system. Do not forget attach this clamp. See Subsection 3.5.1.3 "Cable Clamp and Shield Processing," for details.

## 5.4.4 Network Installation

Even when the machine satisfies its grounding requirements, noise from the machine may get on communication lines depending on the way the machine is installed and its environment, resulting in a communication error. Separating and isolating the Ethernet backbone cable and PC from the machine can prevent noise from getting on the communication lines.
An example of connection is shown below.

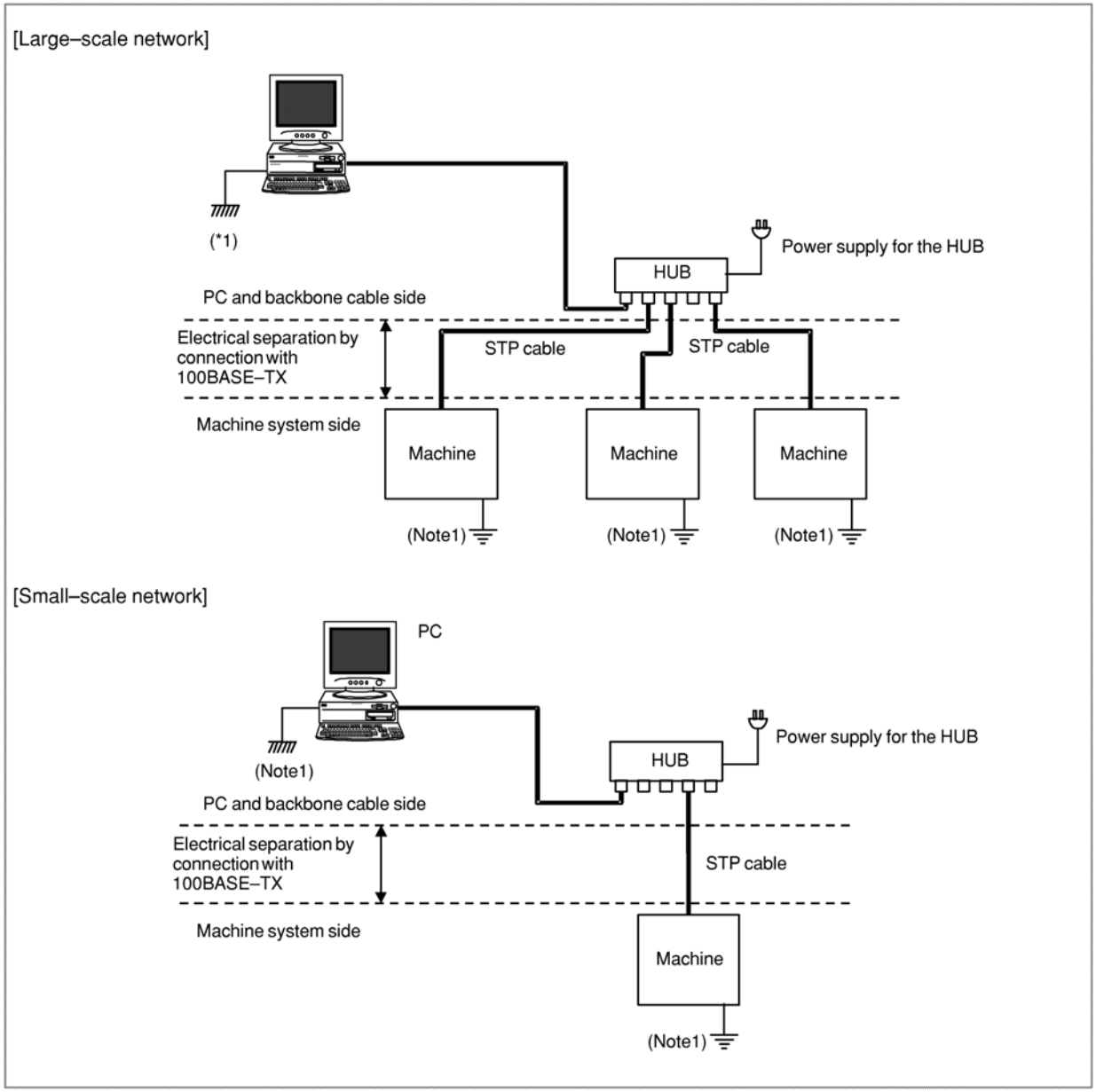


**NOTE**

1 Ground the PC and backbone cable separately from the machine system.
If this is impossible because there is only one grounding point, use separate grounding wires for the PC/backbone cable and the machine system up to the grounding point.
The grounding resistance must not be higher than 100 Ω (class 3 grounding).
The grounding wire must not be thinner than the AC power line conductor, and its cross-sectional area must not smaller than 5.5 $mm^2$.

2 In some cases, the aforementioned isolation/separation method based on 100BASE-TX cannot assure normal communication because of influence by noise. In such worst environments, use optical fiber media to completely isolate the machine from the PC.

# 5.5 CONNECTION TO THE TOUCH PANEL

## 5.5.1 Connection of the LCD Unit with a Touch Panel

When the LCD unit with a touch panel is used, RS232C serial port 2CH (JD36B) cannot be used as a general-purpose port because it is used for touch panel communication. Since the touch panel communication cable is routed before shipment from FANUC, the tool builder does not need to route it.

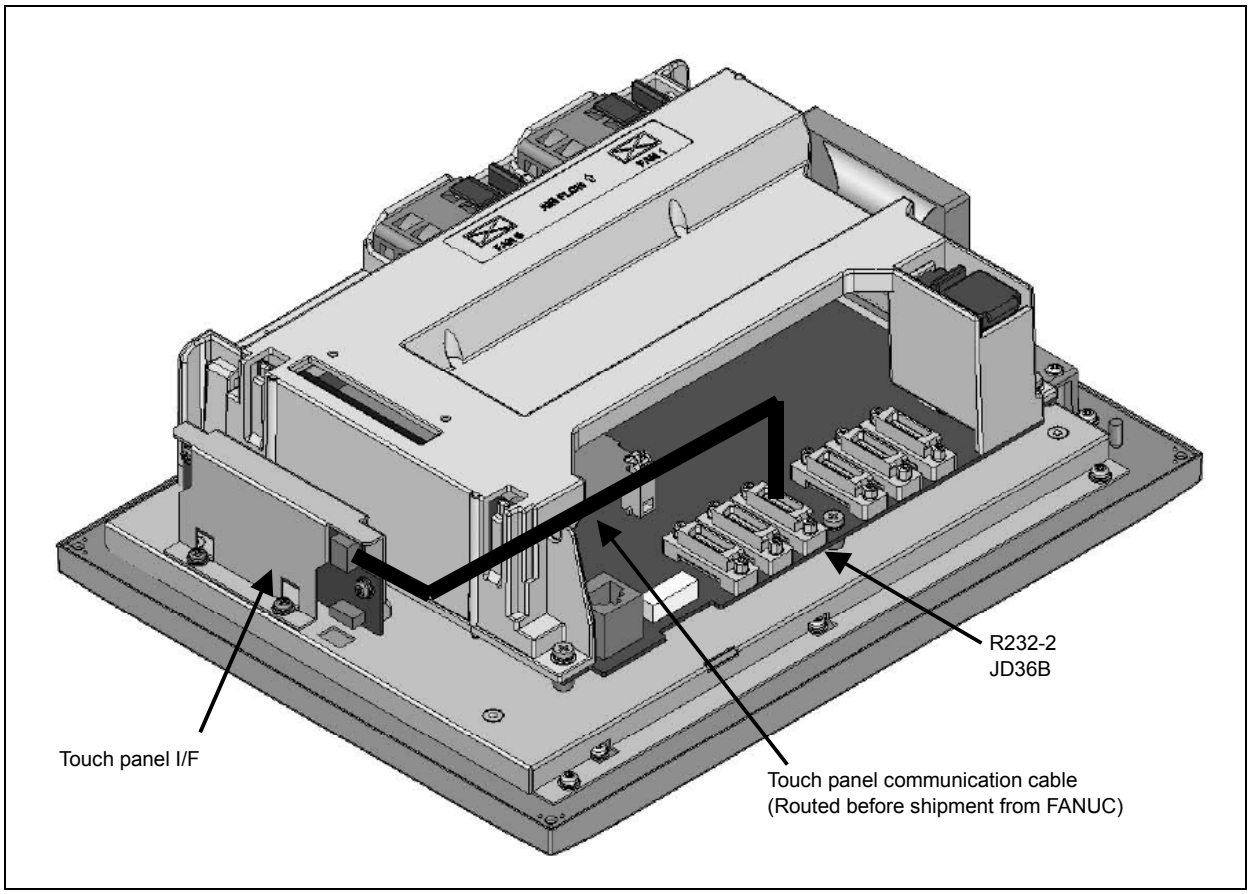

## 5.5.2 External Touch Panel Interface

The external touch panel interface function can be used to connect to the external touch panel that supports the SNP-X protocol. In this case, RS232C serial port 2CH (JD36B) is used to connect between the CNC and the external touch panel.

### Connection cable

The connection diagram is shown below.

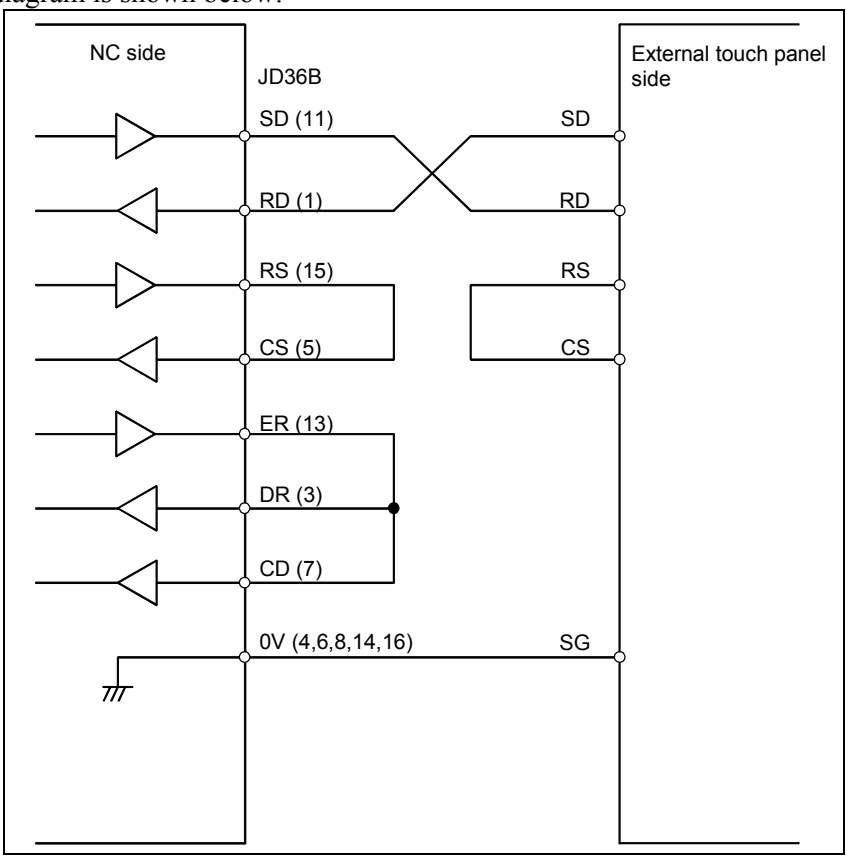

The connection cable needs to be created as shown below.

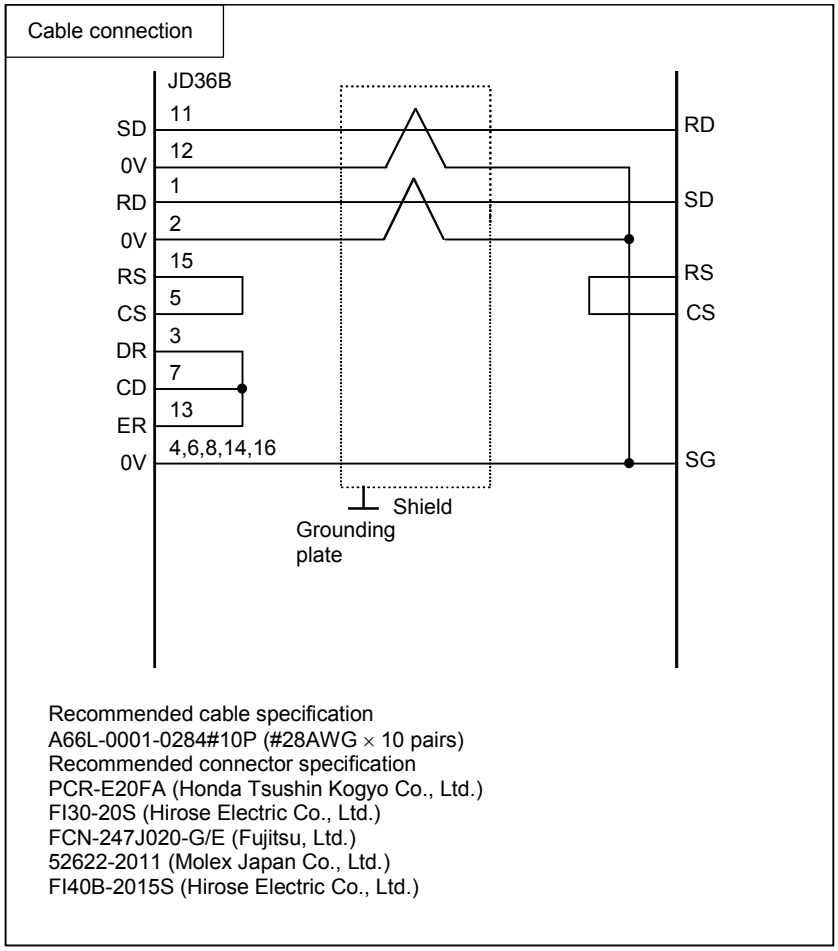


**NOTE**

Recommended cable connector FI30-20S (Hirose Electric) cannot be used for the stand-alone type.

# 6 SPINDLE CONNECTION

The figure below shows the spindle–related connections. Note that the number of connectable spindles depends on the model. So, see the tables that follow the figure below.

## For Series 0*i* Mate

| Number of spindles | Serial spindle | | Analog spindle | Position coder for analog spindle |
|---|---|---|---|---|
| | First | Second | | |
| 1 | ○ | | | |
| | | | ○ | Usable |

The spindles marked with ○ are to be selected.

## For Series 0*i* (1-path control)

| Number of spindles | Serial spindle | | Analog spindle | Position coder for analog spindle |
|---|---|---|---|---|
| | First | Second | | |
| 1 | ○ | | | |
| | | | ○ | Usable |
| 2 | ○ | ○ | | |
| | ○ | | ○ | Unusable |

The spindles marked with ○ are to be selected.

## For Series 0*i* (2-path control)

| Number of spindles | Serial spindle | | | Analog spindle | Position coder for analog spindle |
|---|---|---|---|---|---|
| | First | Second | Third | | |
| 1 | ○ | | | | |
| | | | | ○ | Usable |
| 2 | ○ | ○ | | | |
| | ○ | | | ○ | Unusable |
| 3 | ○ | ○ | ○ | | |
| | ○ | ○ | | ○ | Unusable |

The spindles marked with ○ are to be selected.

When using third serial spindle, the serial spindle connector panel is necessary.

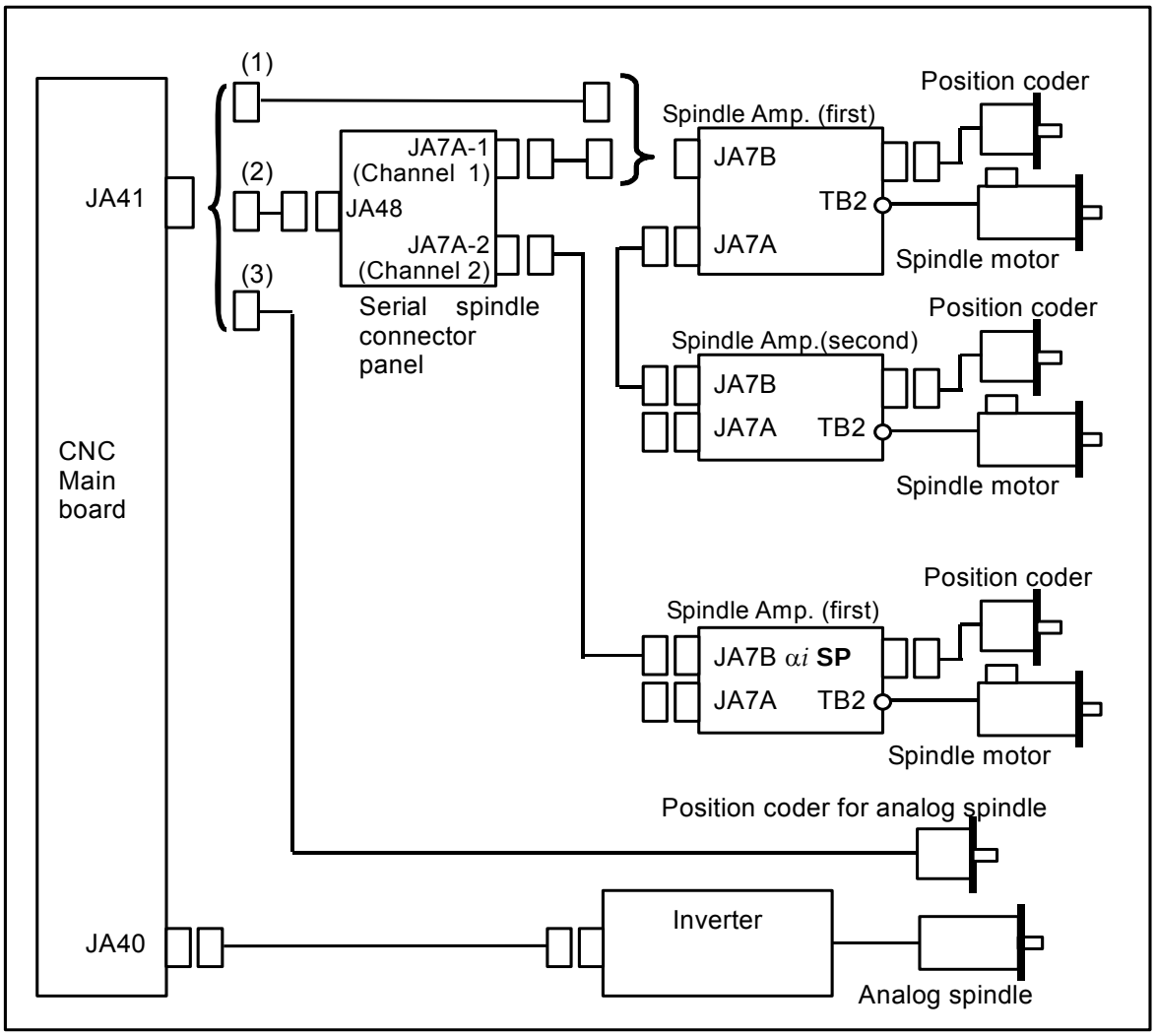


(1) To use one serial spindle, make a direct connection from JA41 on CNC to the spindle amplifier. And, to two serial spindles, make a direct connection from JA7A on the first amplifier to the second spindle amplifier.

(2) To use third serial spindle, make a connection from JA41 on CNC to the serial spindle connector panel for a branch. And, make a connection from JA7A-1 on the serial spindle connector panel for a branch to the first spindle amplifier, make a connection from JA7A-2 on the serial spindle connector panel for a branch to the third spindle amplifier

(3) To use the position coder for an analog spindle, make a direct connection from JA41 to the position coder.

**NOTE**

When using the serial spindle interface, the position coder interface for analog spindles cannot be used.

# 6.1 SERIAL SPINDLE

## 6.1.1 Connection of One to Two Serial Spindles

When connecting one serial spindle amplifier, connect it to JA41. When connecting a second serial spindle amplifier, connect it to JA7A of the first serial spindle amplifier.
Electric cables are usually used to connect serial spindles, but optical fiber cables and optical adapters need to be used when:

- The cable length is 20 m or more.
- A ground wire with a cross-sectional area of 5.5 mm2 or more cannot be used to connect between the power magnetics cabinet having spindle amplifiers installed and the operator's panel cabinet having the CNC control unit installed.
- Cables may be significantly affected by noise. For example, when there is a strong electromagnetic noise generator such as a welding machine near the cables or when the cables runs long in parallel with a power line that generates noise or a power magnetic cable

**NOTE**
The conventional optical I/O Link adapter (A13B-0154-B001) cannot be used.
Use optical adapter (A13B-0154-B003).

Connection diagram (when only electric cables are used)

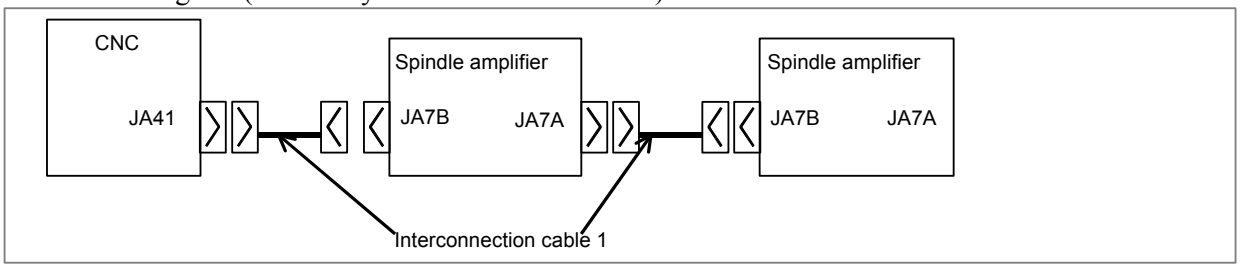


Connection diagram (when an optical cable is used)

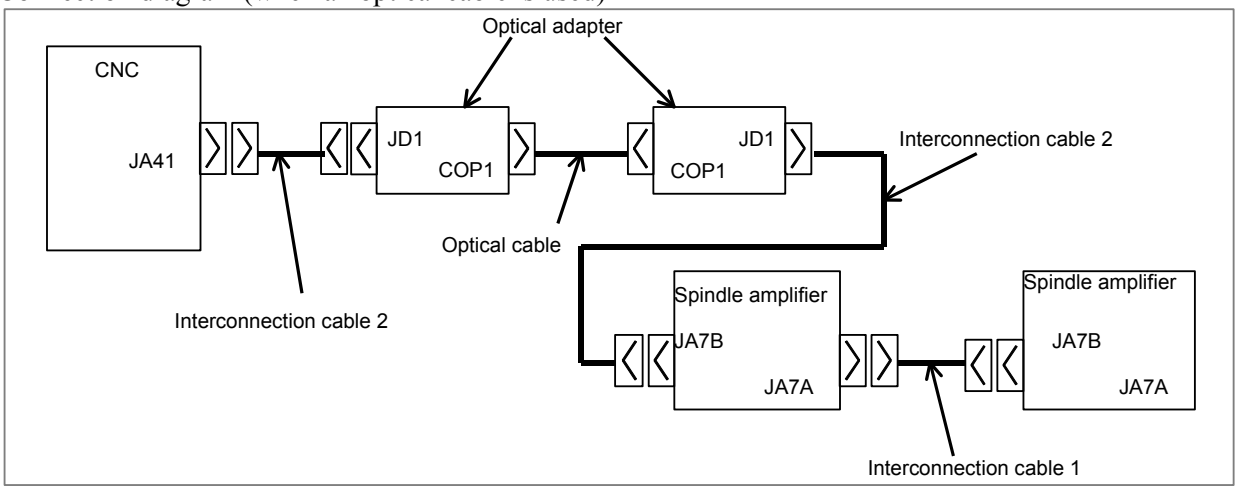

Interconnection cable 1

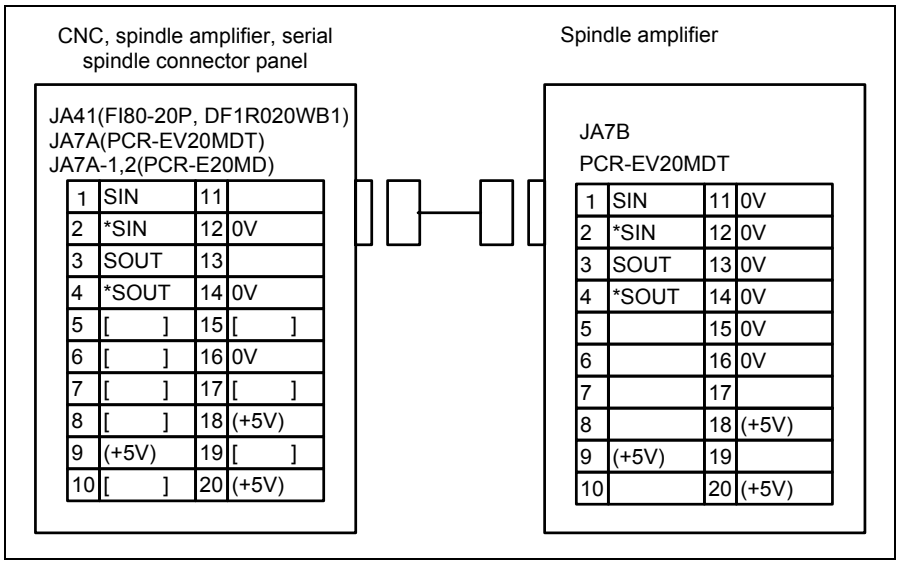


| | | | |
|---|---|---|---|
| 1 | SIN | 11 | |
| 2 | *SIN | 12 | 0V |
| 3 | SOUT | 13 | |
| 4 | *SOUT | 14 | 0V |
| 5 | [ ] | 15 | [ ] |
| 6 | [ ] | 16 | 0V |
| 7 | [ ] | 17 | [ ] |
| 8 | [ ] | 18 | (+5V) |
| 9 | (+5V) | 19 | [ ] |
| 10 | [ ] | 20 | (+5V) |

| | | | |
|---|---|---|---|
| 1 | SIN | 11 | 0V |
| 2 | *SIN | 12 | 0V |
| 3 | SOUT | 13 | 0V |
| 4 | *SOUT | 14 | 0V |
| 5 | | 15 | 0V |
| 6 | | 16 | 0V |
| 7 | | 17 | |
| 8 | | 18 | (+5V) |
| 9 | (+5V) | 19 | |
| 10 | | 20 | (+5V) |

**NOTE**

1 When an optical cable is used for connection between the NC and a spindle amplifier, the +5V signals indicated in parentheses are used to feed power to the optical adapter.

2 The signals indicated in angle brackets [ ] are reserved for functional expansion, so no connection to them is allowed.

3 The upper connector specification of JA41 is for the LCD-mounted type. The lower connector specification is for the stand-alone type.

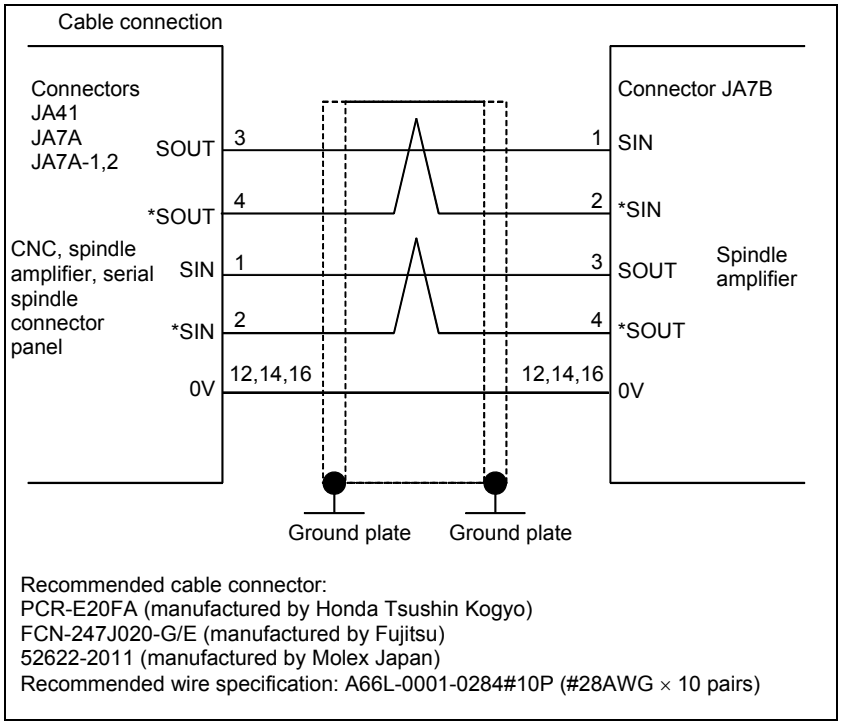

Interconnection cable 2

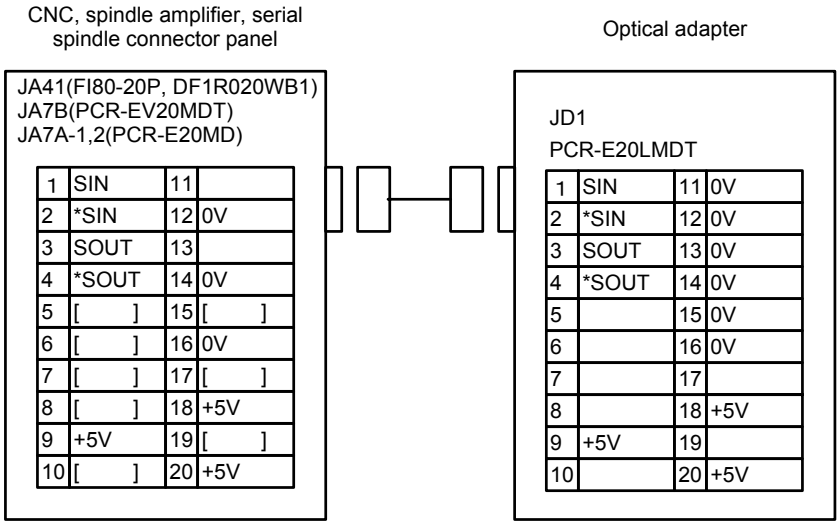


| | | | |
|---|---|---|---|
| 1 | SIN | 11 | |
| 2 | *SIN | 12 | 0V |
| 3 | SOUT | 13 | |
| 4 | *SOUT | 14 | 0V |
| 5 | [ ] | 15 | [ ] |
| 6 | [ ] | 16 | 0V |
| 7 | [ ] | 17 | [ ] |
| 8 | [ ] | 18 | +5V |
| 9 | +5V | 19 | [ ] |
| 10 | [ ] | 20 | +5V |

| | | | |
|---|---|---|---|
| 1 | SIN | 11 | 0V |
| 2 | *SIN | 12 | 0V |
| 3 | SOUT | 13 | 0V |
| 4 | *SOUT | 14 | 0V |
| 5 | | 15 | 0V |
| 6 | | 16 | 0V |
| 7 | | 17 | |
| 8 | | 18 | +5V |
| 9 | +5V | 19 | |
| 10 | | 20 | +5V |

**NOTE**

1 The signals indicated in angle brackets are reserved for functional expansion, so no connection to them is allowed.

2 The upper connector specification of JA41 is for the LCD-mounted type.
The lower connector specification is for the stand-alone type.

Outline drawing of an optical adapter

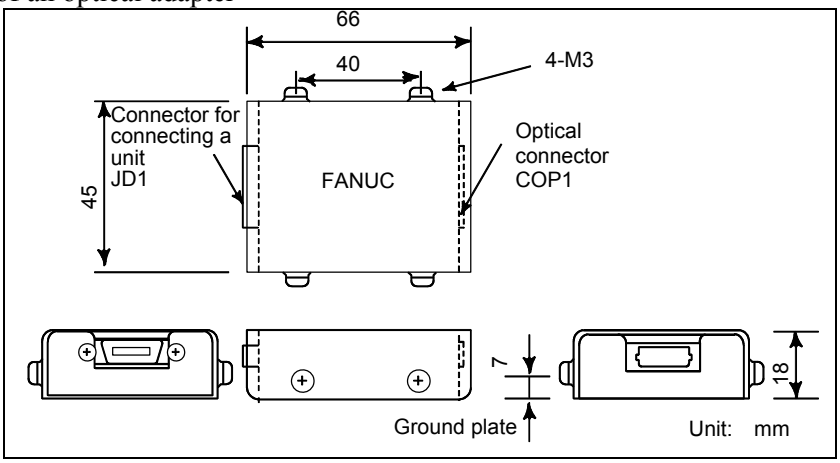


## 6.1.2 Connecting Three Serial Spindles

When three serial spindles are connected, the serial spindle connector panel is necessary.
Serial spindle connector panel specification: A13B-0180-B001
Outside dimensions of the serial spindle connector panel
The outside dimensions of the serial spindle connector panel are the same as those for the optical adapter (A13B-0154-B003).

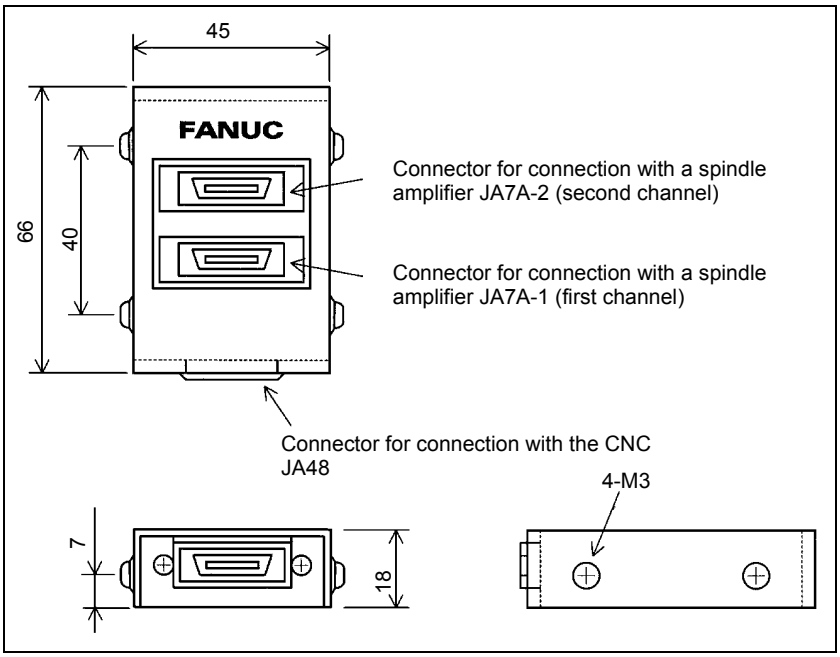


Conditions for installing the serial spindle connector panel

- The serial spindle connector panel does not have an enclosed structure. So, install the serial spindle connector panel in an enclosed cabinet as used for the CNC.
- Ground the case by using the case mounting screws of the serial spindle connector panel.
- The serial spindle connector panel is light, so that it need not be secured with screws. However, ensure that the serial spindle connector panel does not contact other electrical circuits and thus cause a short circuit. When securing the serial spindle connector panel to the cabinet, for example, attach an L-shaped metal fitting as shown below with a case mounting screw (M3) of the serial spindle connector panel.

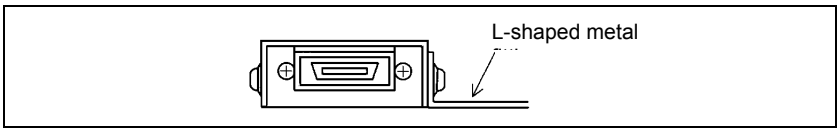


Connection diagram
(Connection diagram when only electrical cables are used)

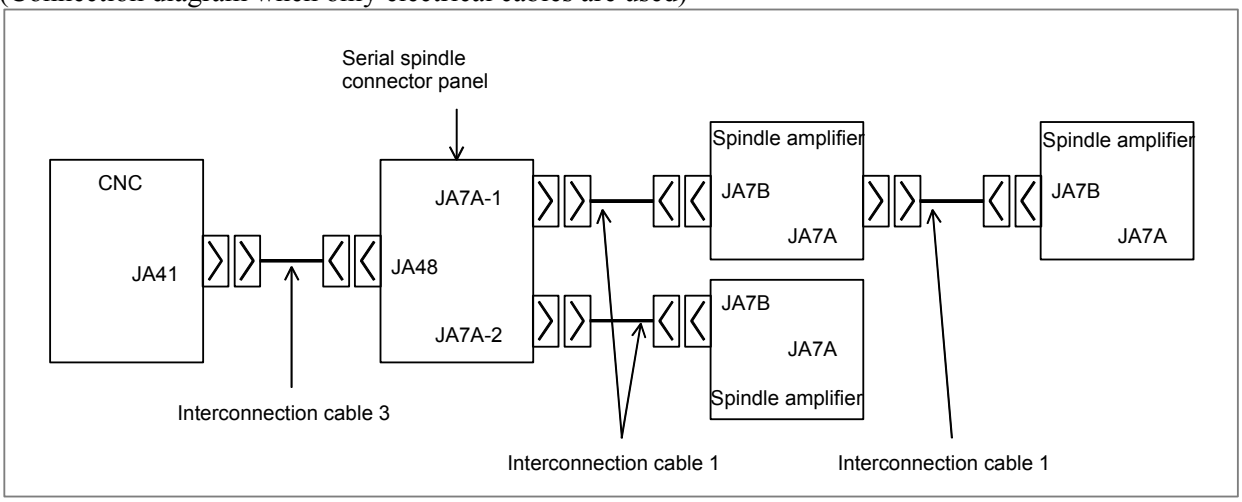

(Connection diagram when optical cables are used)

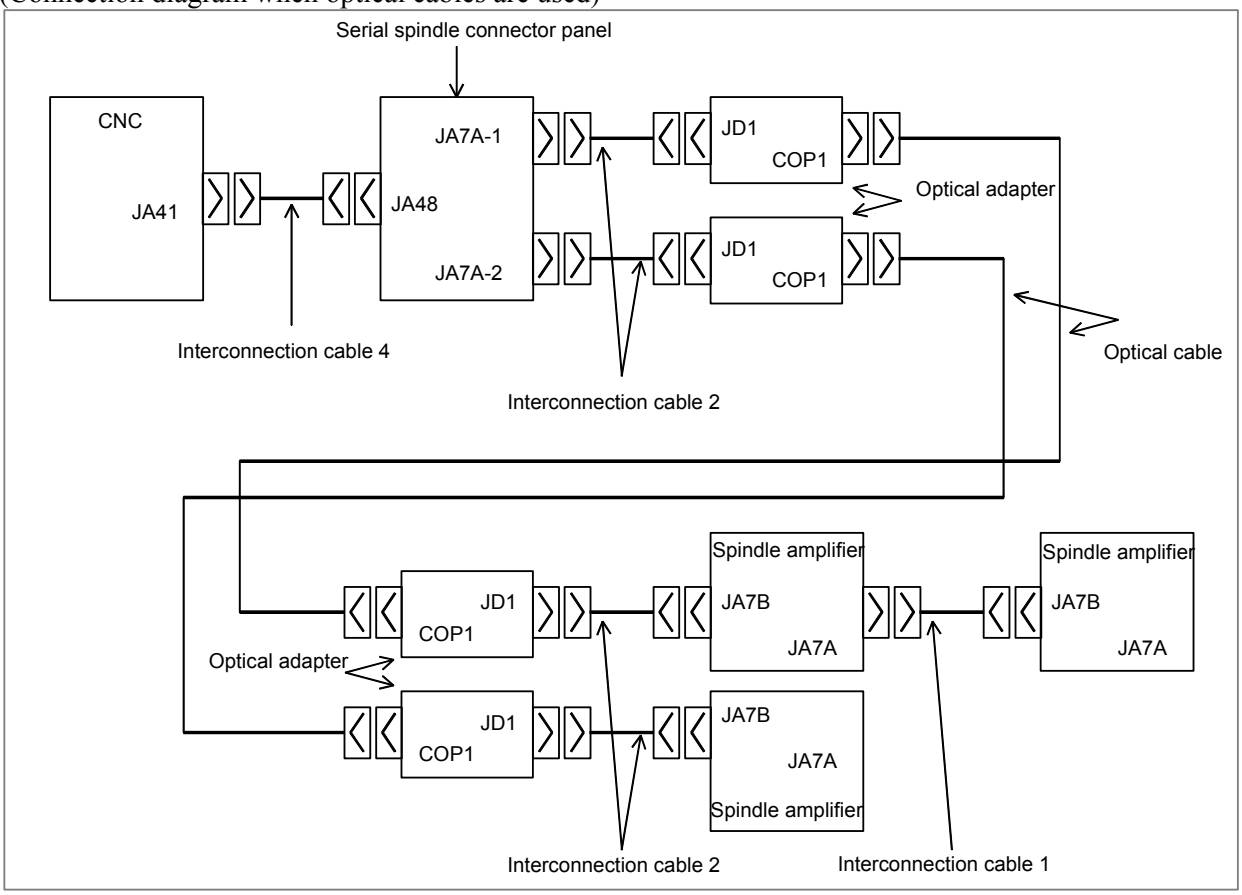


(Cable connections when only electrical cables are used)
Cable connection between the CNC and serial spindle connector panel
(Interconnection cable 3)

CNC

JA41 (main board)
FI80-20P, DF1R020WB1
(PCR-EV20MDT)

| | | | |
|---|---|---|---|
| 1 | SINA | 11 | |
| 2 | *SINA | 12 | 0V |
| 3 | SOUTA | 13 | |
| 4 | *SOUTA | 14 | 0V |
| 5 | < > | 15 | SINB |
| 6 | < > | 16 | 0V |
| 7 | < > | 17 | *SINB |
| 8 | < > | 18 | (+5V) |
| 9 | (+5V) | 19 | SOUTB |
| 10 | *SOUTB | 20 | (+5V) |

Serial spindle connector panel

JA48
PCR-E20MDT

| | | | |
|---|---|---|---|
| 1 | SINA | 11 | |
| 2 | *SINA | 12 | 0V |
| 3 | SOUTA | 13 | |
| 4 | *SOUTA | 14 | 0V |
| 5 | | 15 | SOUTB |
| 6 | | 16 | 0V |
| 7 | | 17 | *SOUTB |
| 8 | | 18 | (+5V) |
| 9 | (+5V) | 19 | SINB |
| 10 | *SINB | 20 | (+5V) |

**NOTE**

1 When an optical cable is used for the connection between the CNC and a spindle, the +5V signals indicated in parentheses are used to feed power to the optical adapter.
2 No connections must be made to the pins with angle brackets (< >) because they are reserved for expansions.
3 The upper connector specification of JA41 is for the LCD-mounted type.
The lower connector specification in parentheses is for the stand-alone type.

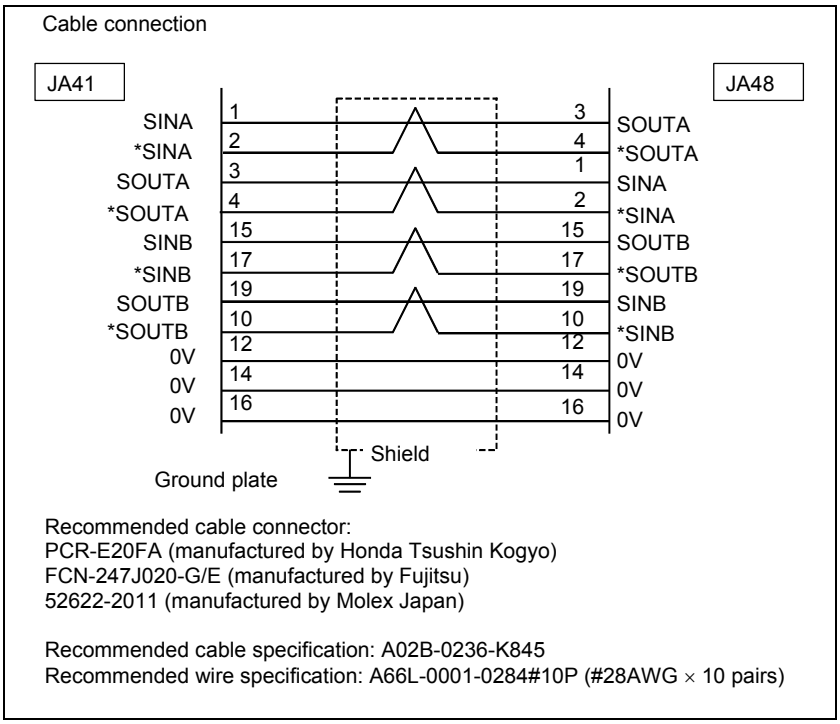


**NOTE**

When this cable is installed close to other cables such as a power line, a shielded wire must be connected to the ground plate. When the CNC is installed close to the serial spindle connector panel, however, no connection to the ground plate is necessary.

(Cable connections when optical cables are used)
Cable connection between the CNC and serial spindle connector panel
(Interconnection cable 4)

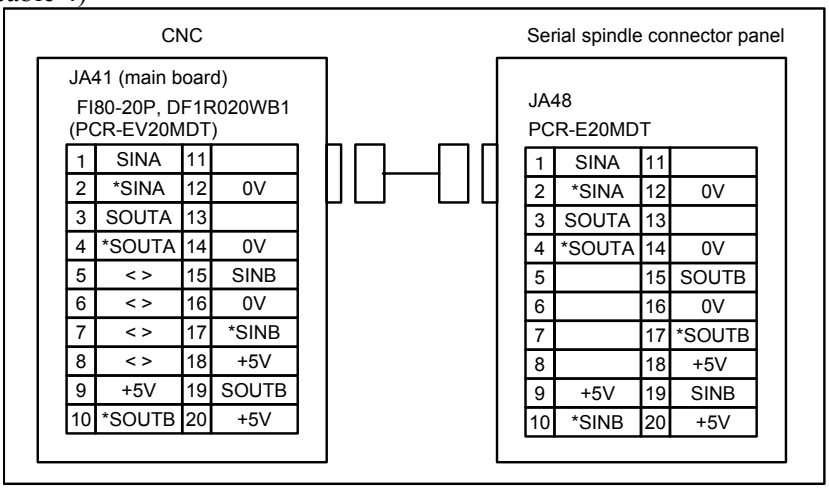


| | | | |
|---|---|---|---|
| 1 | SINA | 11 | |
| 2 | *SINA | 12 | 0V |
| 3 | SOUTA | 13 | |
| 4 | *SOUTA | 14 | 0V |
| 5 | < > | 15 | SINB |
| 6 | < > | 16 | 0V |
| 7 | < > | 17 | *SINB |
| 8 | < > | 18 | +5V |
| 9 | +5V | 19 | SOUTB |
| 10 | *SOUTB | 20 | +5V |

| | | | |
|---|---|---|---|
| 1 | SINA | 11 | |
| 2 | *SINA | 12 | 0V |
| 3 | SOUTA | 13 | |
| 4 | *SOUTA | 14 | 0V |
| 5 | | 15 | SOUTB |
| 6 | | 16 | 0V |
| 7 | | 17 | *SOUTB |
| 8 | | 18 | +5V |
| 9 | +5V | 19 | SINB |
| 10 | *SINB | 20 | +5V |

**NOTE**

1 No connections must be made to the pins with angle brackets (< >) because they are reserved for expansions.
2 The upper connector specification of JA41 is for the LCD-mounted type. The lower connector name in parentheses is for the stand-alone type.

Cable connection

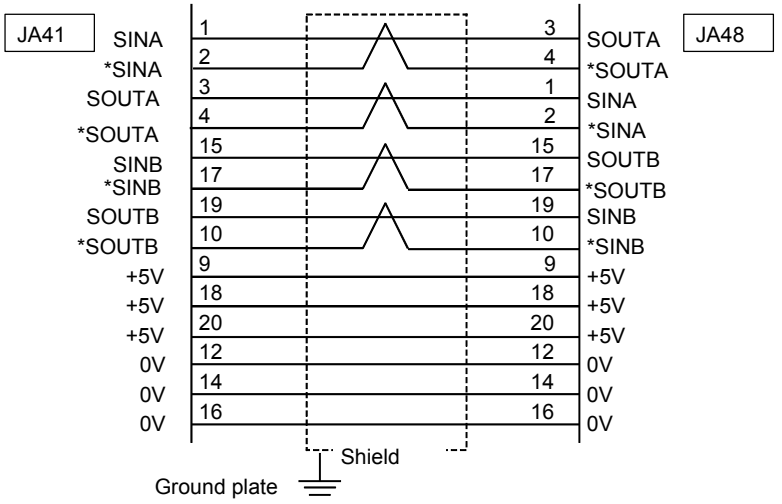


Recommended cable connector:
PCR-E20FA (manufactured by Honda Tsushin Kogyo)
FCN-247J020-G/E (manufactured by Fujitsu)
52622-2011 (manufactured by Molex Japan)

Recommended cable specification: A02B-0236-K847
Recommended wire specification: A66L-0001-0284#10P (28AWG × 10 pairs)

**NOTE**

1 When this cable is installed close to other cables such as a power line, a shielded wire needs to be connected to the ground plate. When the CNC is installed close to the serial spindle connector panel, however, a connection to the ground plate is unnecessary.
2 Connection cable 1 between the serial spindle connector panel and the spindle amplifier, and connection cable 2 between the serial spindle connector panel and the optical module are the same as those used when one or two serial spindles are connected.
3 When this cable is installed close to other cables such as a power line, a shielded wire needs to be connected to the ground plate. However, when the serial spindle connector panel is installed near the spindle amplifier or when the serial spindle connector panel is installed near the optical module, no connection to the ground plate is necessary.

# 6.2 ANALOG SPINDLE

CNC

JA40 (main board)
FI80-20P, DF1R020WB1
(PCR-EV20MDT)

| | | | |
|---|---|---|---|
| 1 | ( ) | 11 | ( ) |
| 2 | (0V) | 12 | |
| 3 | ( ) | 13 | ( ) |
| 4 | | 14 | |
| 5 | ES | 15 | ( ) |
| 6 | ( ) | 16 | |
| 7 | SVC | 17 | ( ) |
| 8 | ENB1 | 18 | |
| 9 | ENB2 | 19 | ( ) |
| 10 | | 20 | |

| Signal name | Description |
|---|---|
| SVC,ES | Spindle voltage command and common |
| ENB1,ENB2 | Spindle enable |

Cable connection

Analog spindle servo unit or inverter

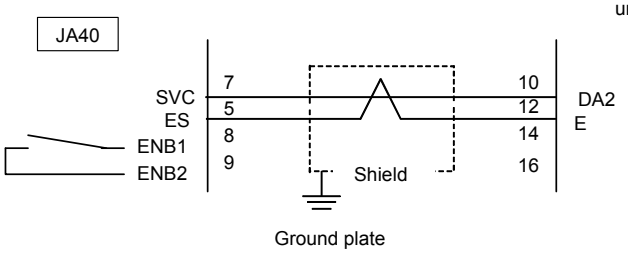


Recommended cable connector:
PCR-E20FA (manufactured by Honda Tsushin Kogyo)
FCN-247J020-G/E (manufactured by Fujitsu)
52622-2011 (manufactured by Molex Japan)

Recommended wire specification: A66L-0001-0284#10P (28AWG × 10 pairs)

**NOTE**

1 ENB1 and ENB2 are turned on when the spindle voltage command is valid. These signals are used when other than the FANUC analog spindle servo unit is used.
2 The rating of analog output is shown below.
Output voltage: ±10 V
Output current: 2 mA (Max.)
Output impedance: 100 Ω
3 The signals enclosed by parentheses ( ) are used for high-speed skip (HDI).
4 The upper connector specification of JA40 is for the LCD-mounted type.
The lower connector name in parentheses is for the stand-alone type.

# 6.3 POSITION CODER

CNC

JA41 (main board)
FI80-20P, DF1R020WB1
(PCR-EV20MDT)

| | | | |
|---|---|---|---|
| 1 | ( ) | 11 | ( ) |
| 2 | ( ) | 12 | 0V |
| 3 | ( ) | 13 | ( ) |
| 4 | ( ) | 14 | 0V |
| 5 | PA | 15 | SC |
| 6 | *PA | 16 | 0V |
| 7 | PB | 17 | *SC |
| 8 | *PB | 18 | +5V |
| 9 | +5V | 19 | ( ) |
| 10 | ( ) | 20 | +5V |

| Signal name | Description |
|---|---|
| SC,*SC | Position coder C phase signal |
| PA,*PA | Position coder A phase signal |
| PB,*PB | Position coder B phase signal |

Cable connection

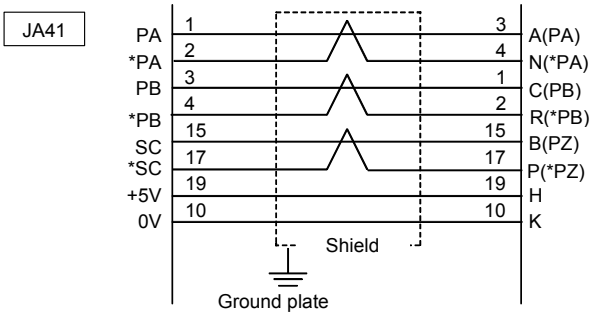


Recommended cable connector:
PCR-E20FA (manufactured by Honda Tsushin Kogyo)
FCN-247J020-G/E (manufactured by Fujitsu)
52622-2011 (manufactured by Molex Japan)

Recommended wire specification: A66L-0001-0284#10P (28AWG × 10 pairs)

**NOTE**

1 The signals enclosed by parentheses ( ) are used for serial spindles. These signals are not used for analog spindles.
2 The 15-pin soldering connector (FI40B-2015S (conventionally, FI40-2015S)) manufactured by Hirose Electric cannot be used for the connector on the cable side.
3 The upper connector specification of JA41 is for the LCD-mounted type.
The lower connector name in parentheses is for the stand-alone type.

# 7 SERVO INTERFACE

## 7.1 CONNECTION TO THE SERVO AMPLIFIERS

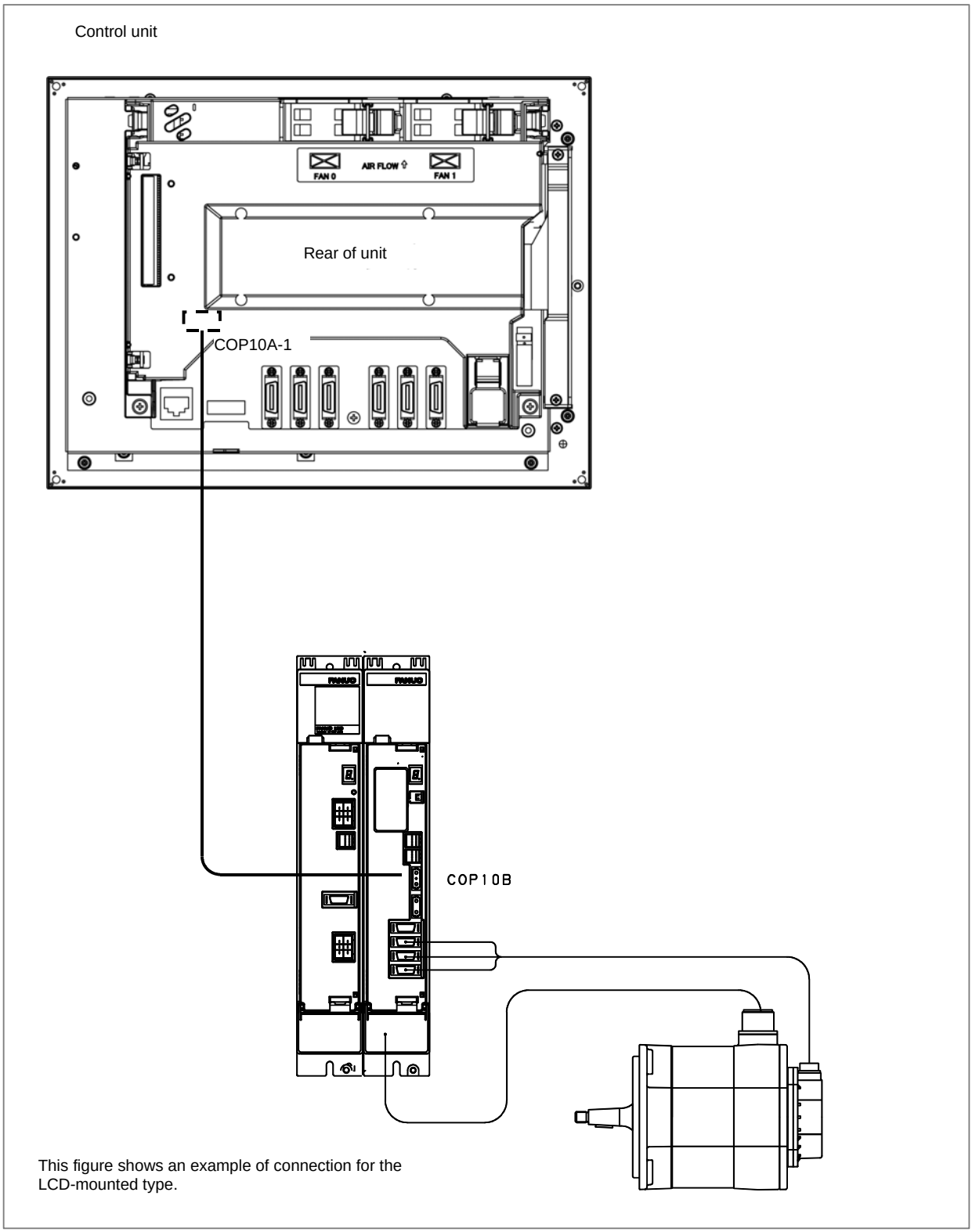


This figure shows an example of connection for the LCD-mounted type.

## 7.1.1 Overview

This chapter generally describes connections between this CNC and servo units.
For details on connections to servo amplifiers, refer to the manual of each servo amplifier.

## 7.1.2 Interface to the Servo Amplifiers

The connections between the CNC control unit and servo amplifiers should be made using optical cables. The optical connector is present on the axis card.

<Optical cable types>

| Usage | Cable drawing number | Cable length restriction |
|---|---|---|
| For internal connection | A02B-0236-K851 to -K856<br>(A66L-6001-0023#~) | Within 10 m |
| For external connection | A66L-6001-0026#~ | Within 50 m<br>Within 40 m (between slave units) |

<Cable length restriction>

(1) Total cable length of each FSSB line is as follows

| Control mode | Maximum total length |
|---|---|
| HRV2 | 500m |
| HRV3 | 200m |

(2) The cable length between CNC and the first slave unit is
- Within 50m with A66L-6001-0026#~

(3) Within 40m between slave units

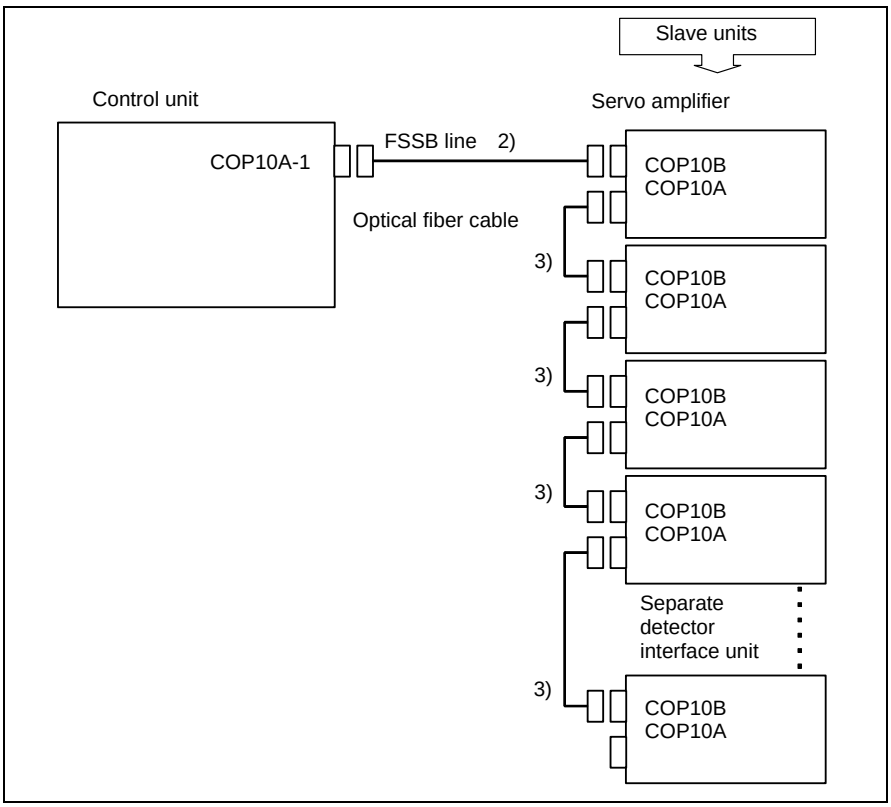


**NOTE**
For details and handling of optical cables, see Appendix D.

# 7.2 SEPARATE DETECTOR INTERFACE

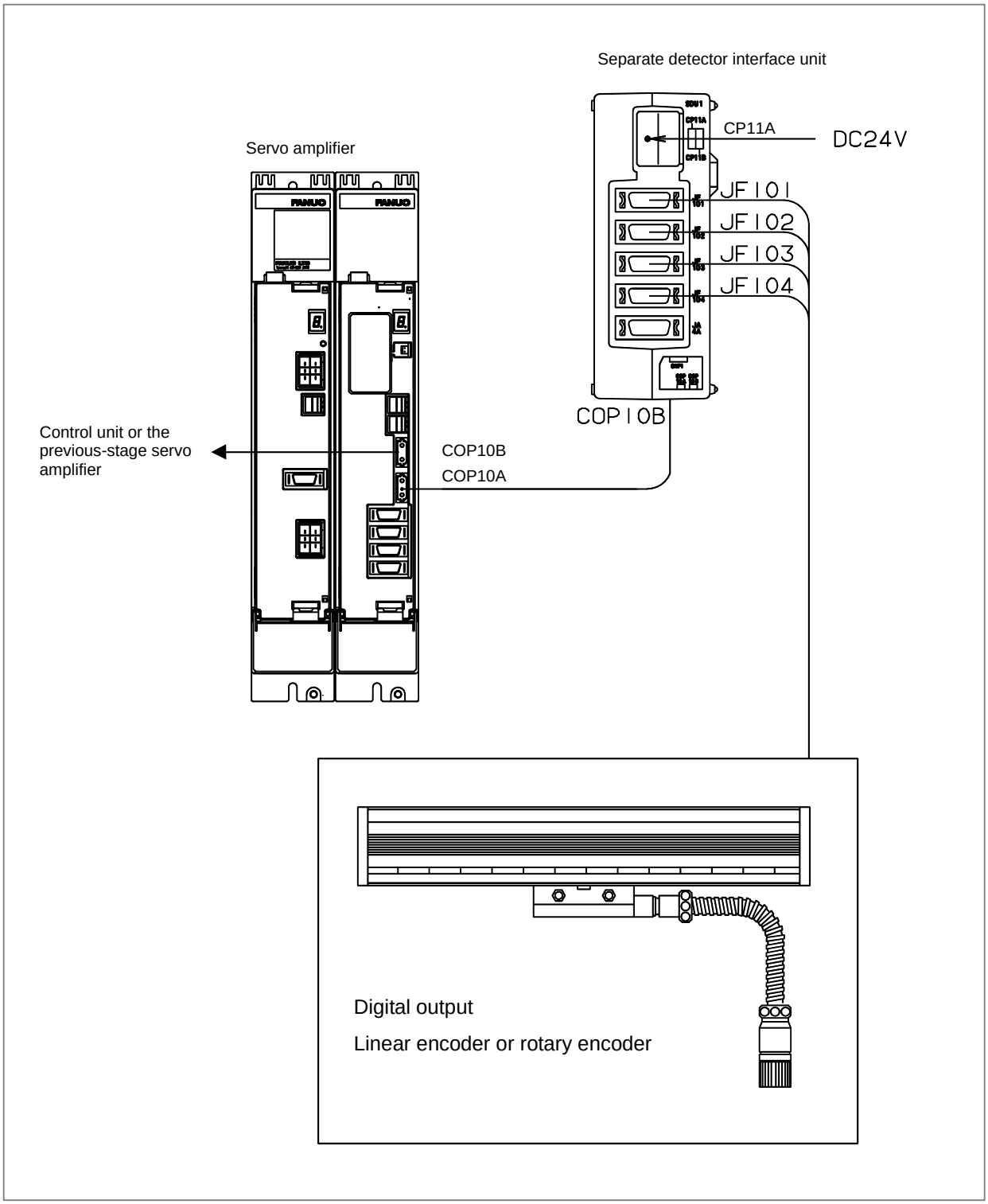

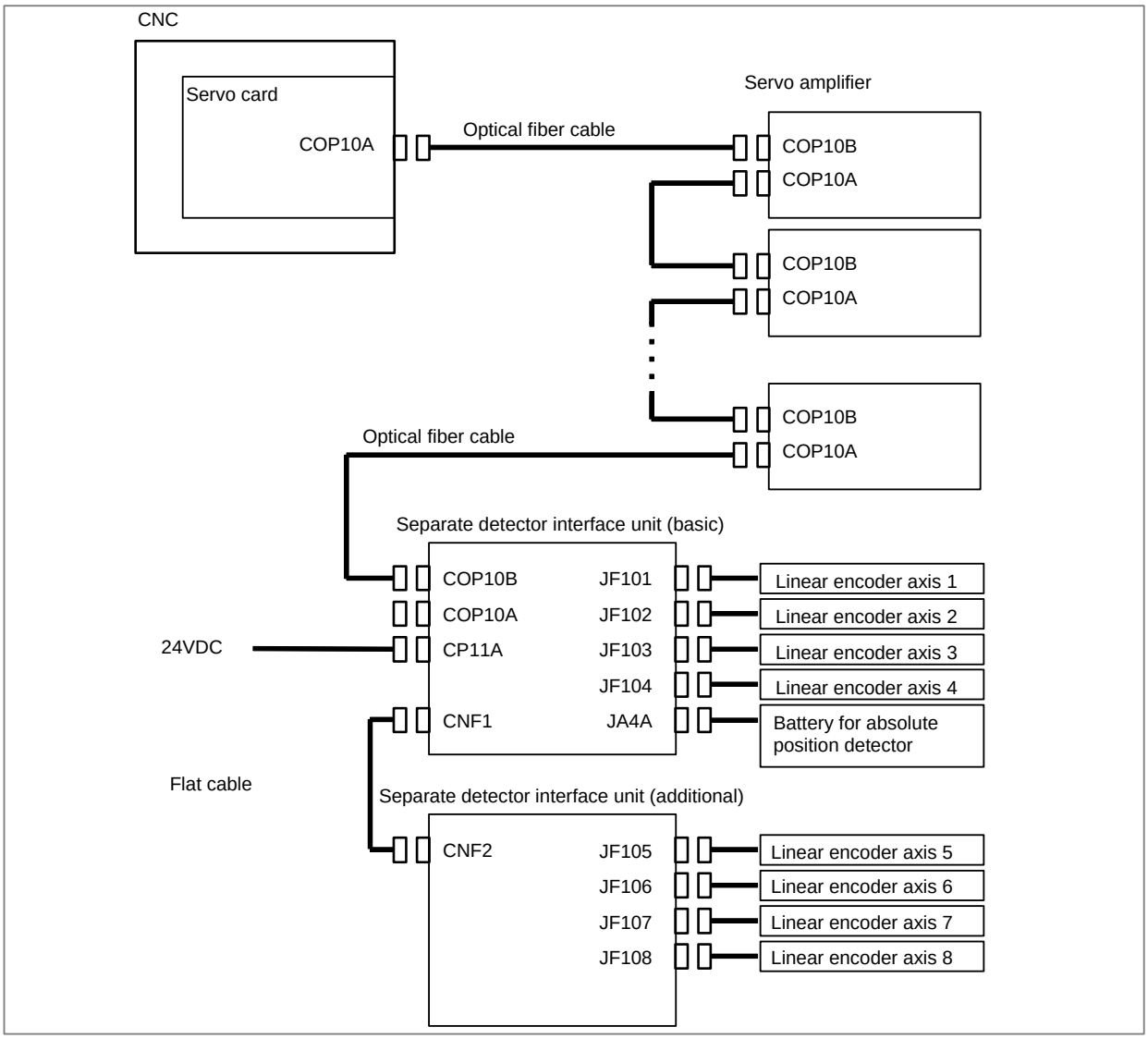


When a separate detector such as a separate rotary encoder or linear encoder is used, a separate detector interface unit is required. The separate detector interface unit is connected through an optical fiber cable as an unit on an FSSB line.
A separate detector interface unit consists of basic units and additional units. Up to four pulse coders or liner scales can be connected by adding an additional unit (up to eight units can be connected as a total). An additional unit is connected to a basic unit through a flat cable. The maximum number of separate detector interface units that can be connected to an FSSB line is two for HRV2 and HRV3.

**NOTE**
1 Unused optical connectors must be covered with the caps.
2 When using an encoder with an analog output of 1 Vp-p, see the description of the analog input separate detector interface.

## 7.2.1 Separate Detector Interface Unit Specification

| Item | Specification |
|---|---|
| Power supply capacity | Voltage 24 VDC ±10%<br>Current 0.9 A (basic unit only)<br>1.5 A (basic unit + additional unit) |

| Item | Specification |
|---|---|
| Ordering information | A02B-0303-C205 (basic)<br>A02B-0236-C204 (additional) |
| Method of installation | An interface unit can be installed by using screws or a DIN rail. |

## 7.2.2 Connection of Power Supply

Power to the separate detector interface unit should be supplied from an external 24 V DC power supply. An extended unit is powered by a basic unit.

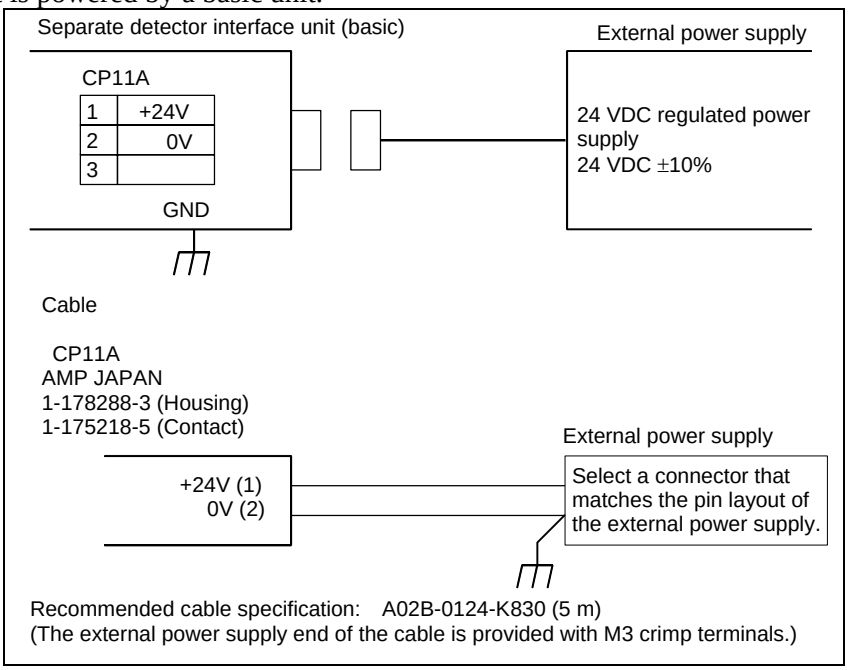


The 24 VDC input to CP11A can be output at CP11B for use in branching. The connection of CP11B is identical to that of CP11A. In this case, the power supplied to CP11A should be equal to the sum of the rating of the separate detector interface unit and that of the units after CP11B.

Be sure to ground the 0-V line of the power supply to the separate detector interface unit. In addition, keep any noise source (such as an AC power cable and contactor) away from the power line of the separate detector interface unit as far as possible to prevent noise from being picked up through the power line.

Secure the ground line to the ground terminal (GND) for signals of a separate detector interface unit, which is located at the bottom of the unit, with an M3 screw as shown in the figure below. Connect the ground line to the ground plate of the cabinet.

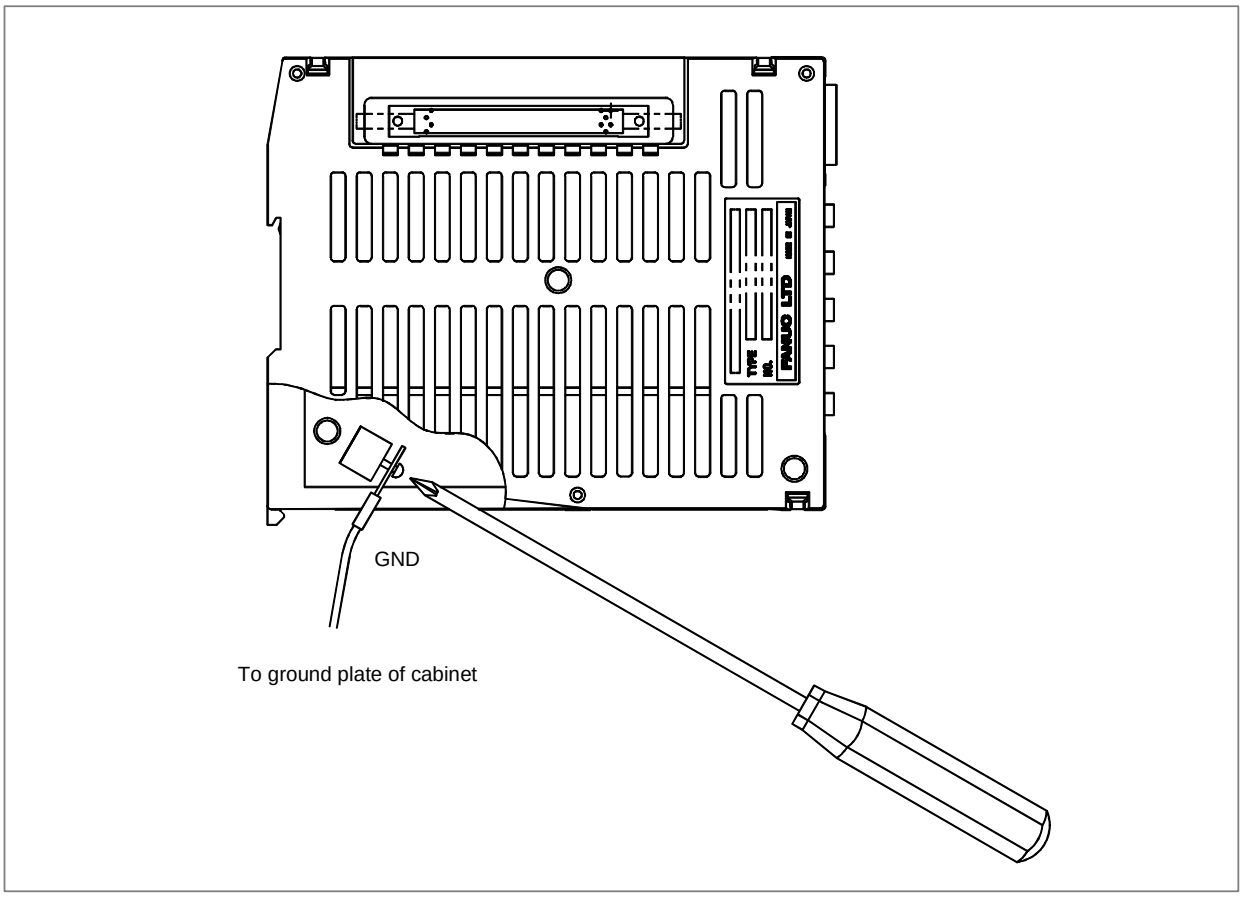


**NOTE**

The torque with which a screw is tightened is 5 kgf·cm or less.

## 7.2.3 Separate Detector Interface (Serial Interface)

Separate detector interface unit

JF101 to JF108
(PCR-EV20MDT)

| | | | |
|---|---|---|---|
| 1 | SD | 11 | |
| 2 | ＊SD | 12 | 0V |
| 3 | | 13 | |
| 4 | | 14 | 0V |
| 5 | REQ | 15 | |
| 6 | ＊REQ | 16 | 0V |
| 7 | (+6V) | 17 | |
| 8 | | 18 | +5V |
| 9 | +5V | 19 | |
| 10 | | 20 | +5V |

Separate detector

The +6V signal is provided for absolute position detectors that require battery backup.

Cable connection

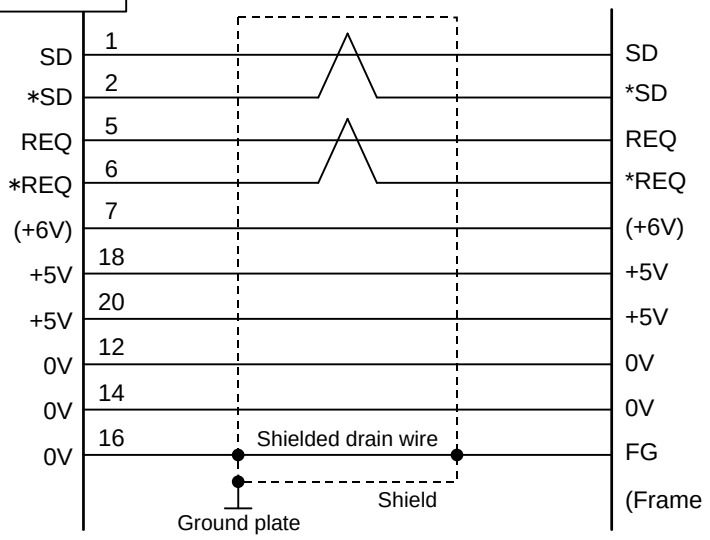


Recommended cable:
A66L-0001-0286 (#20AWG × 6 + #24AWG × 3-pair)

Recommended connectors:
PCR-E20FA (Honda Tsushin Kogyo)
FI30-20S (Hirose Electric)
FCN-247J020-G/E (Fujitsu)
52622-2011 (Molex)
FI40B-2015S (Hirose Electric)

**NOTE**

1 The +5V signals above can be used to feed power to the detectors. The supply current per linear scale is 0.35 A maximum.
Lower limit of the 5V signals: 4.95 V for the basic unit, and 4.9 V for the additional unit

2 If the cable is connected to JA4A when the separate absolute pulse coder battery case contains the battery, the battery voltage is applied to the battery power supply pin (+6 V) for each of the feedback connectors (JF101 to JF108). In this case, if the battery line and 0 V are short-circuited, the battery may heat up or the protection circuit within the separate detector interface unit may fail. First, make sure the battery case contains no battery or the cable is not connected to JA4A. Then, complete all cabling work and confirm cables are correctly connected. Finally, place the battery or connect the cable to JA4A.

# 7.2.4 Separate Detector Interface (Parallel interface)

Separate detector interface unit

JF101 to JF108
(PCR-EV20MDT)

| | | | |
|---|---|---|---|
| 1 | PCA | 11 | |
| 2 | ∗PCA | 12 | 0V |
| 3 | PCB | 13 | |
| 4 | ∗PCB | 14 | 0V |
| 5 | PCZ | 15 | |
| 6 | ∗PCZ | 16 | 0V |
| 7 | (+6V) | 17 | |
| 8 | (REQ) | 18 | +5V |
| 9 | +5V | 19 | |
| 10 | | 20 | +5V |

Separate detector

The +6V and REQ signals are provided for absolute position detectors that require battery backup.

Cable connection

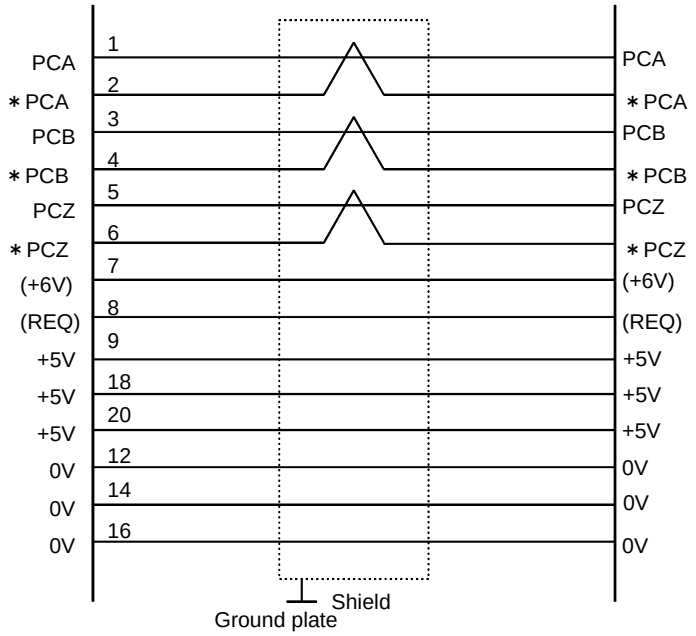


RECOMMENDED CABLE MATERIAL
A66L-0001-0286 (#20AWG × 6 + #24AWG × 3-pair)

Recommended connectors:
PCR-E20FA (Honda Tsushin Kogyo)
FI30-20S (Hirose Electric)
FCN-247J020-G/E (Fujitsu)
52622-2011 (Molex)
FI40B-2015S (Hirose Electric)

**NOTE**

1 The +5V signals above can be used to feed power to the detectors. The supply current per detector is 0.35 A maximum.
Minimum tolerance to 5 V: 4.95 V for main unit and 4.9 V for added section

2 If the cable is connected to JA4A when the separate absolute pulse coder battery case contains the battery, the battery voltage is applied to the battery power supply pin (+6 V) for each of the feedback connectors (JF101 to JF108). In this case, if the battery line and 0 V are short-circuited, the battery may heat up or the protection circuit within the separate detector interface unit may fail. First, make sure the battery case contains no battery or the cable is not connected to JA4A. Then, complete all cabling work and confirm cables are correctly connected. Finally, place the battery or connect the cable to JA4A.

## 7.2.5 Input Signal Requirements (Parallel interface)

The feedback signals from the separate detectors connected via the parallel interface are defined as follows:

(1) A and B phase signal input
This is a method to input position information by the mutual 90 degree phase slip of A and B phase signals.
Detection of the position is performed with the state in which the B phase is leading taken as a shift in the plus direction, and the state in which the A phase is leading as a shift in the minus direction.

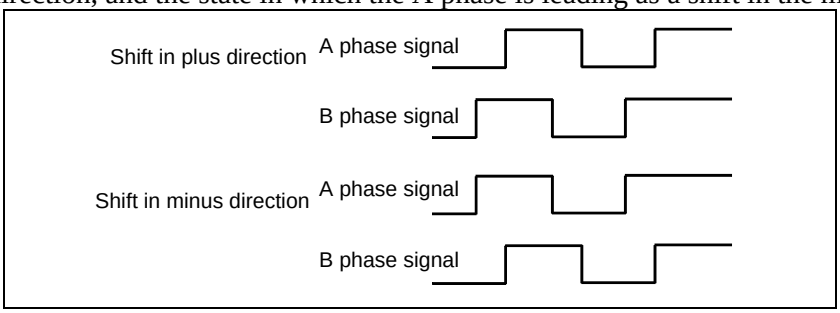


(2) Phase difference and minimum repeat frequency

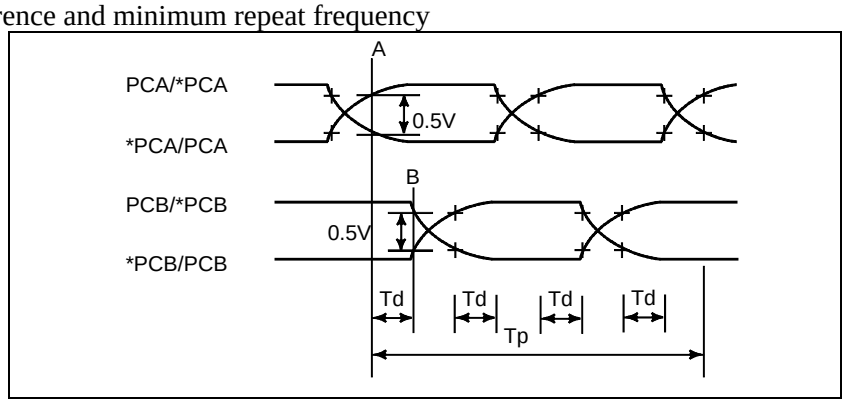

(3) Z phase signal input

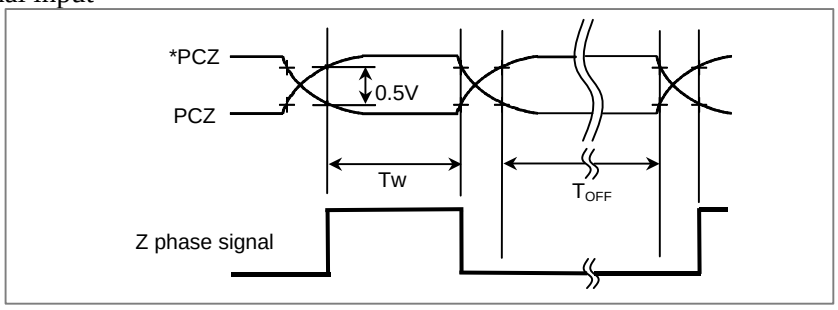


## Time requirements

Requirements for the signals at the input pins of input connectors JF101 to JF108. The signals for these connectors are differential input signals with A and B phases. An important factor is time TD from point A, when the potential difference between PCA and *PCA exceeds 0.5V, to point B, when the potential difference between PCB and *PCB becomes lower than 0.5V. The minimum value of TD is 0.15msec. The period and pulse width of the signals must be long enough to satisfy the above requirements.

The Z phase signal is also a differential signal. The following conditions are stipulated for the time from when the potential difference between PCZ and *PCZ exceeds 0.5 V to when the potential difference becomes lower than 0.5 V.

Tw ≥ 1/4 frequency of A phase or B phase
TOFF > 1.5 msec

## Input voltage requirements

The voltage of the A and B phase signals must meet the following requirements:
High level: 2.4 V or more
Low level: 0.8 V or less

## Receiver circuit

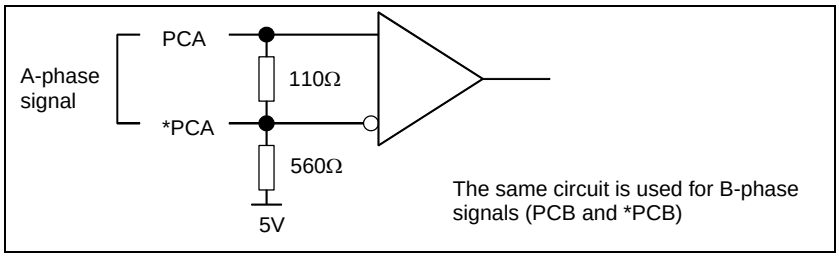


## Rotation directions of a servo motor and separate rotary encoder

If a separate rotary encoder rotates in a direction opposite to the direction of servo motor rotation when the servo motor is rotating, the connection of the feedback cable from the separate rotary encoder must be changed as follows:

(1) Exchange signal PCA with signal PCB.
(2) Exchange signal *PCA with signal *PCB.

## 7.2.6 Connection of Battery for Absolute Position Detector

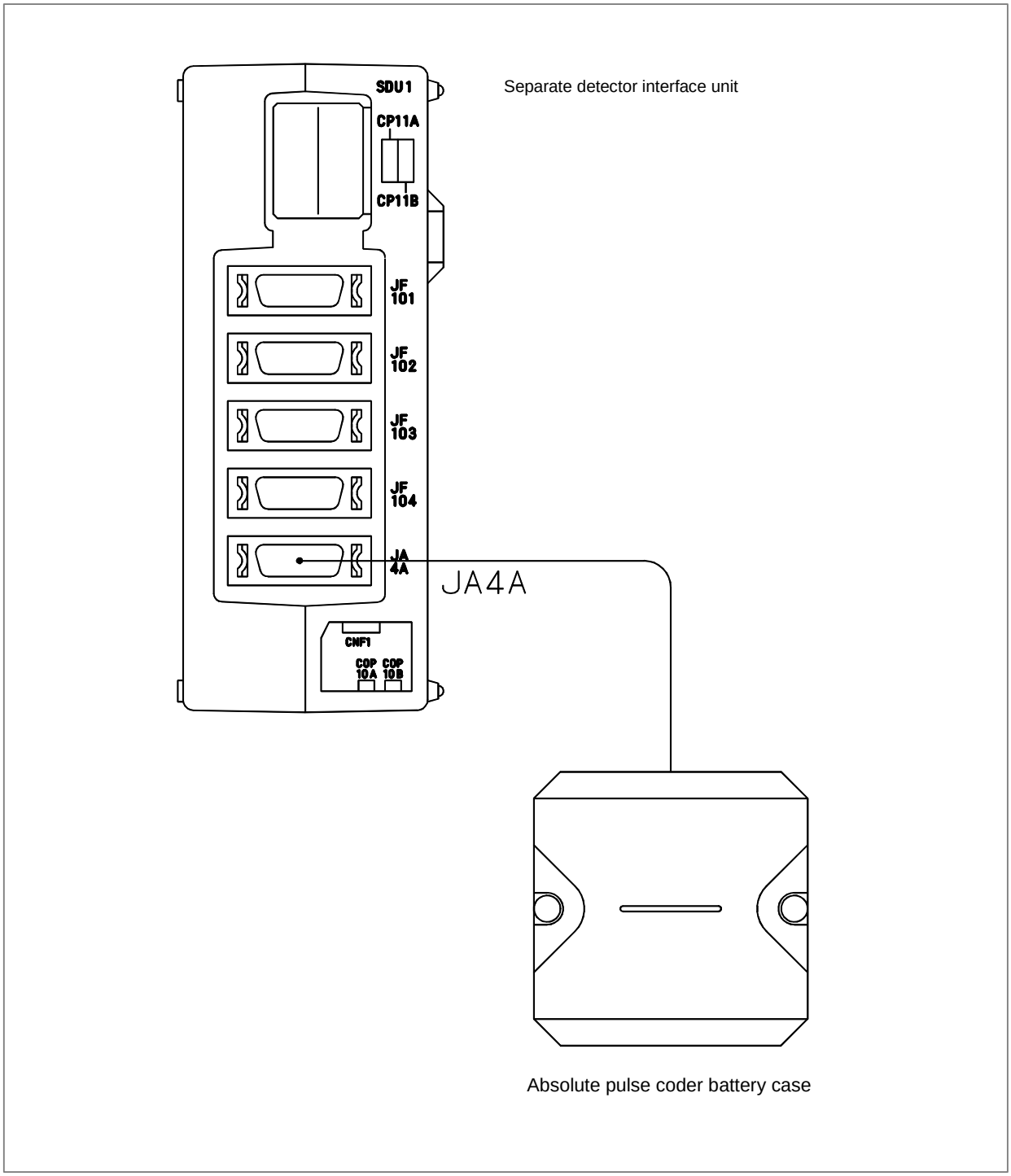


When the separate absolute position detector that needs battery backup is connected, the battery case for the separate absolute pulse coder must be connected.

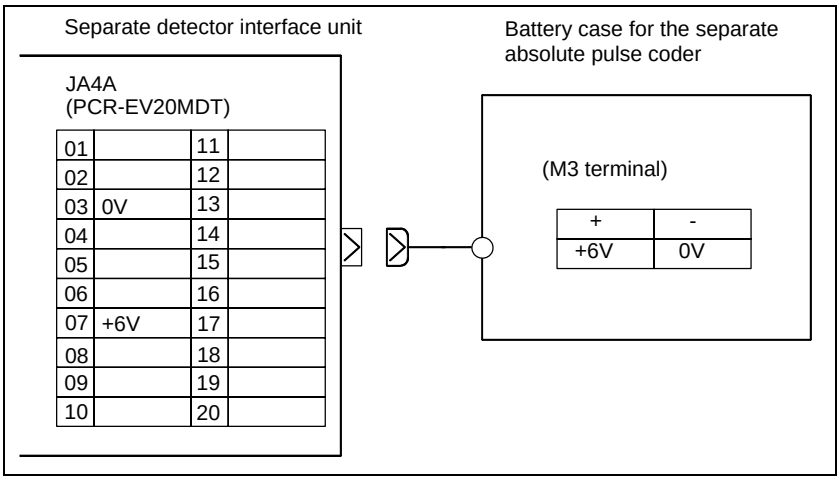


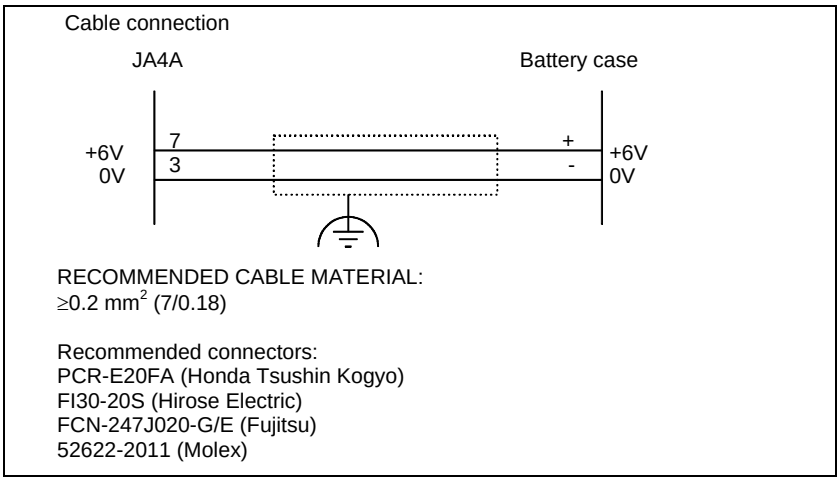


**NOTE**

If the cable is connected to JA4A when the separate absolute pulse coder battery case contains the battery, the battery voltage is applied to the battery power supply pin (+6 V) for each of the feedback connectors (JF101 to JF108). In this case, if the battery line and 0 V are short-circuited, the battery may heat up or the protection circuit within the separate detector interface unit may fail. First, make sure the battery case contains no battery or the cable is not connected to JA4A. Then, complete all cabling work and confirm cables are correctly connected. Finally, place the battery or connect the cable to JA4A.

## 7.2.7 Connection Between the Basic Unit and Additional Unit

A flat cable is used to make a connection between the basic unit and additional unit as shown below.
A flat cable not longer than 100 mm must be used.

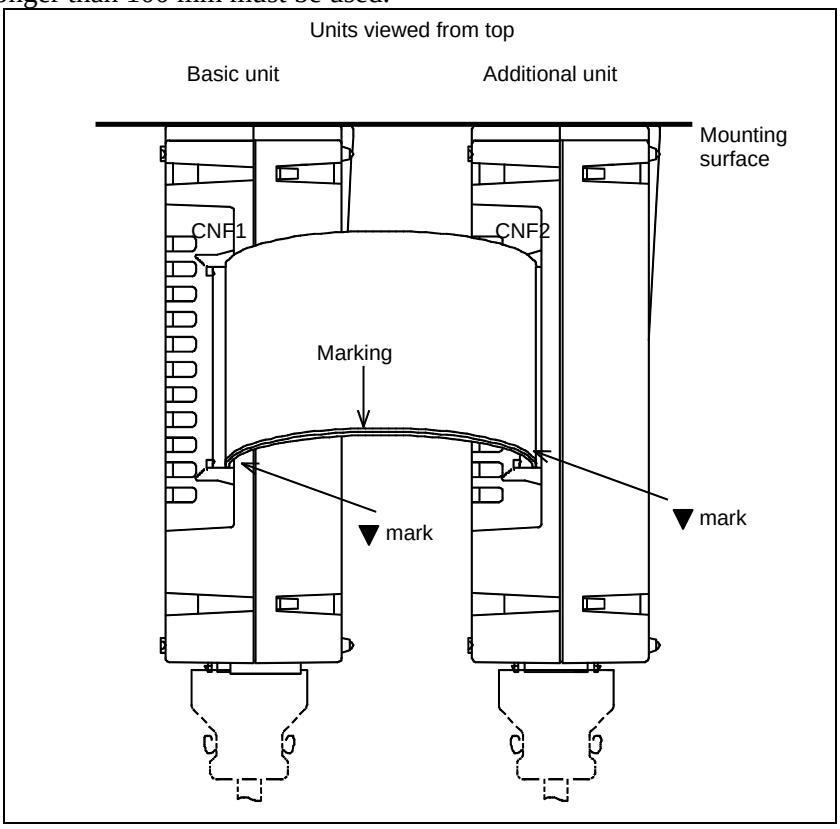


Place an order on a flat cable together with separate detector interface units.

## 7.2.8 Connector Locations

Connector locations on the basic unit

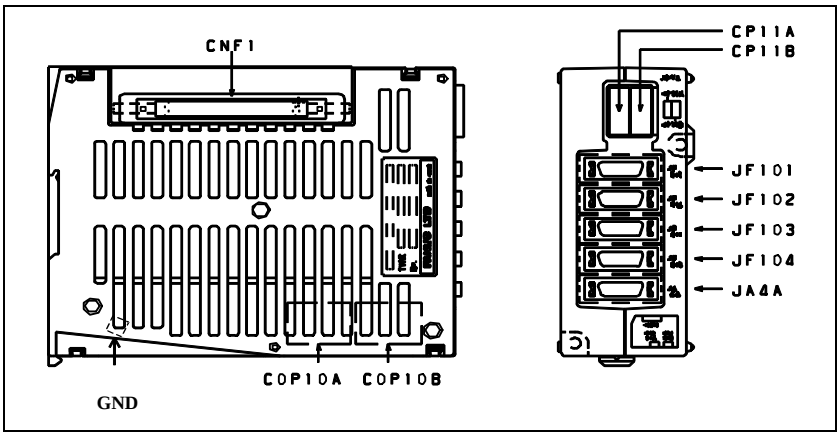

Connector locations on the additional unit

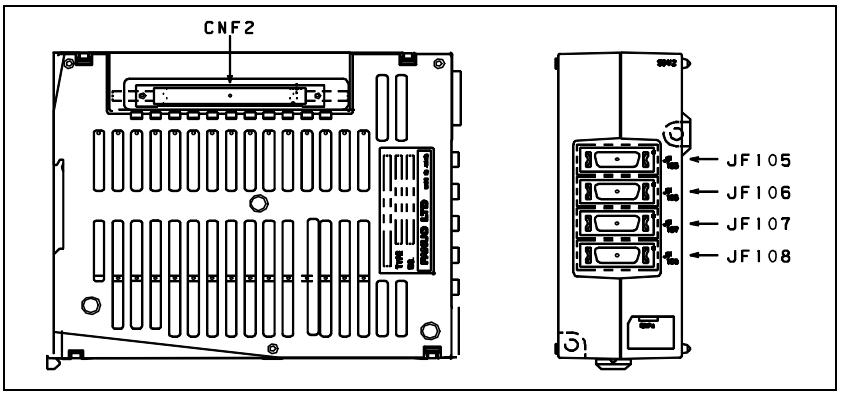


For the outside dimensions, see Appendix A.

## 7.2.9 Installation

1) Notes on installation
   (1) Use an interface unit in a completely enclosed cabinet.
   (2) Install an interface unit on a vertical surface, and provide a space of 100 mm above and below the unit. Below an interface unit, do not place equipment that generates a large amount of heat.
   (3) When using a basic unit and additional unit, place the units as shown below so that the flat cable connecting the units does not block the vent holes. A flat cable not longer than 100 mm must be used.

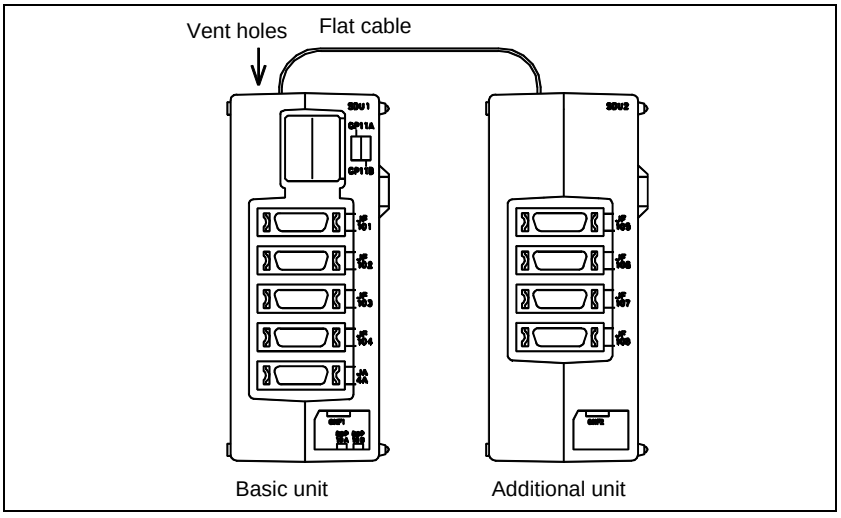

2) Installation using screws

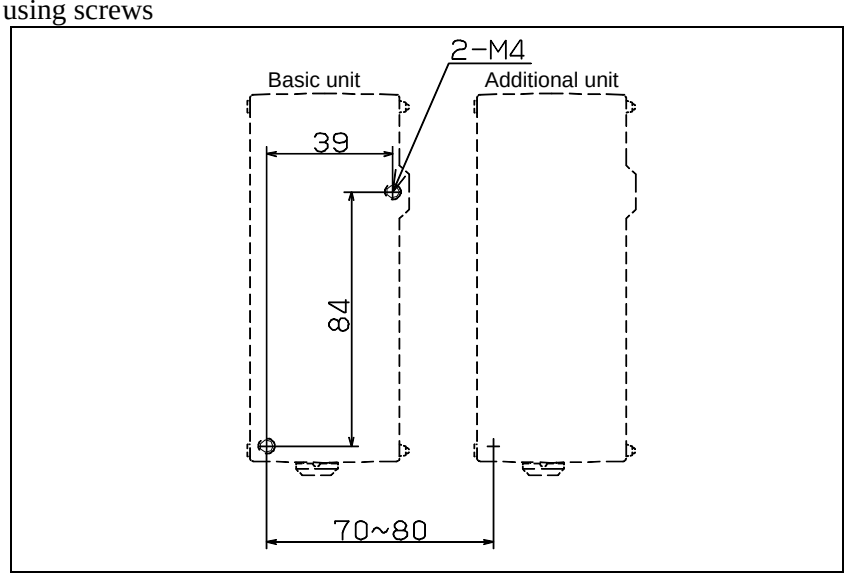


When using both a basic unit and additional unit, install the units as shown above, with the mounting holes horizontally separated by 70 to 80 mm.

## 7.2.10 Notes on Installing a Separate Detector Interface Unit

⚠ **CAUTION**

To install/remove the unit, a screwdriver must be inserted obliquely. So, sufficient access clearances are required on both sides of the unit. As a guideline, if the front of an adjacent unit appears flush with the unit or slightly set back, allow a clearance of about 20 mm between the unit and the adjacent unit. If the front of an adjacent unit protrudes beyond the front of the unit, allow a clearance of about 70 mm between the unit and the adjacent unit. Also, when installing the unit near a side of the cabinet, allow a clearance of about 70 mm between the unit and the side of the cabinet.

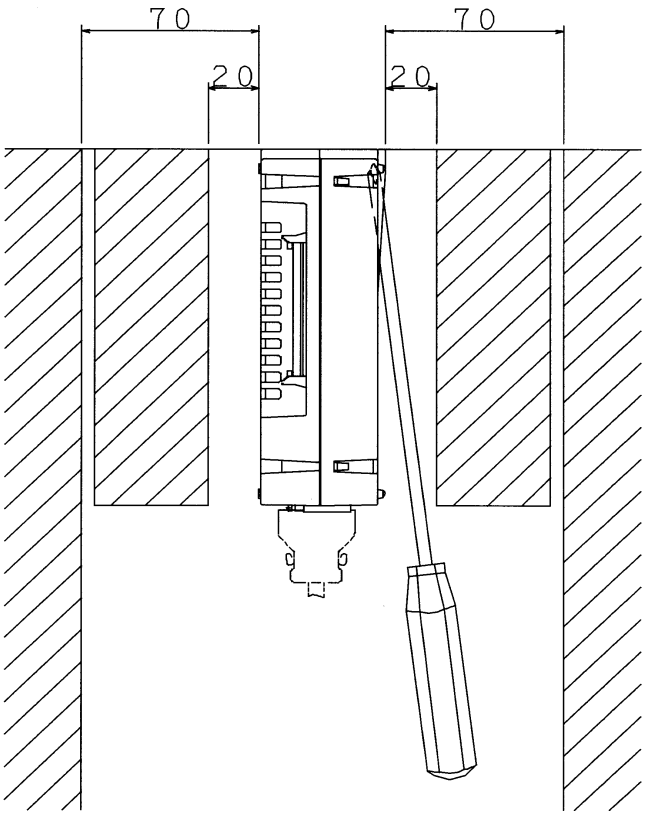


Access clearance near a separate detector interface unit

Installing the unit on the DIN rail

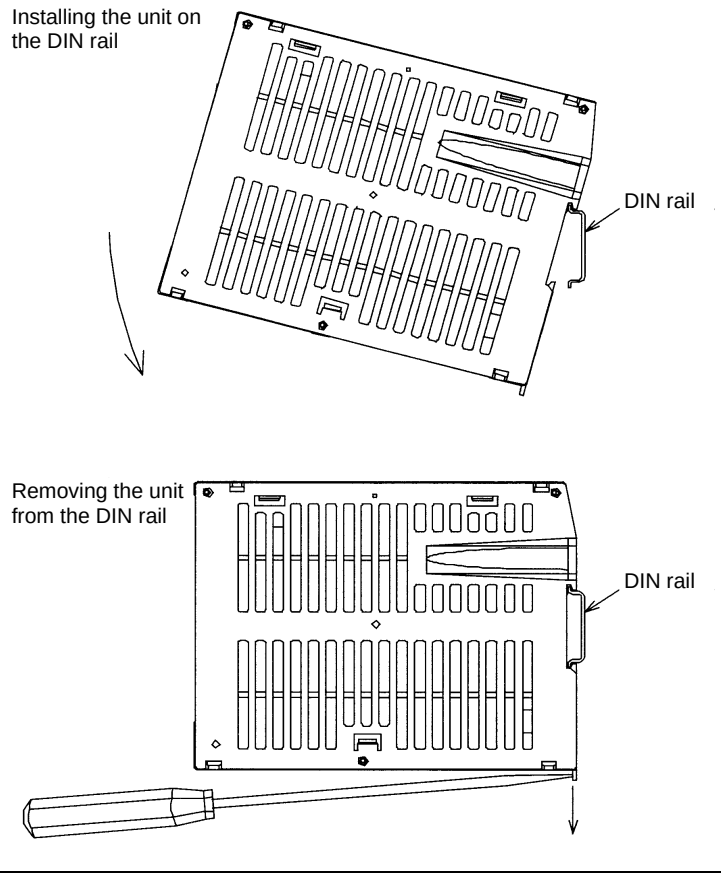

Installing the unit:
1. Hook the unit on the top of the DIN rail.
2. Push the unit in until it clicks.

Removing the unit:
1. Push down the lock by using a screwdriver.
2. Remove the unit by pulling the lower end of the unit towards you.

> ⚠ **CAUTION**
> When removing the unit, be careful not to damage the lock by applying excessive force. When installing and removing the unit, hold the upper and lower ends of the unit so that stress is not applied to the side (that surface with the slits) of the unit.

# 7.3 ANALOG INPUT SEPARATE DETECTOR INTERFACE

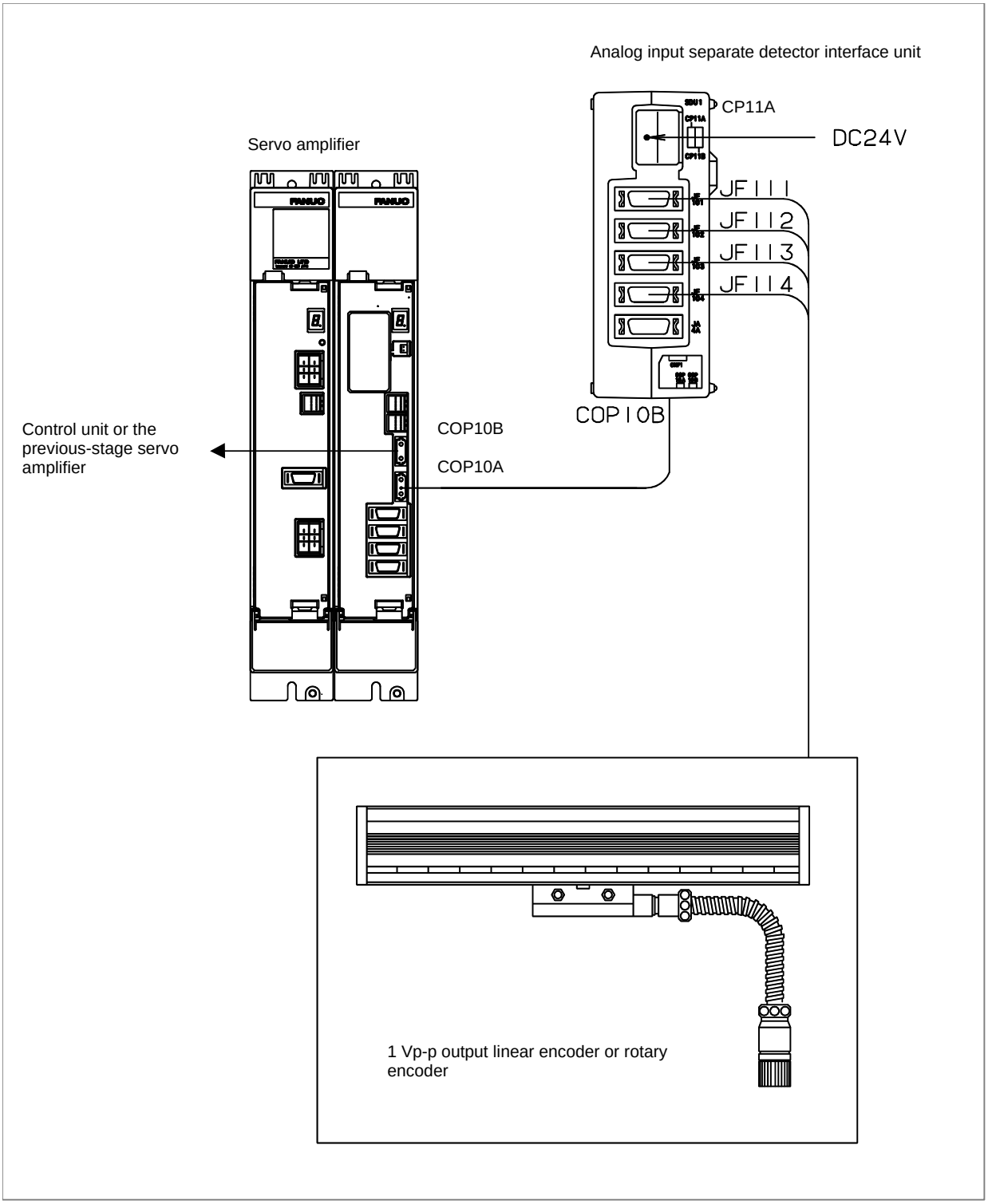

## 7.3.1 Overview

When a separate detector such as a rotary encoder or linear encoder with an analog output of 1 Vp-p is used, an analog input separate detector interface unit is used. The analog input separate detector unit is connected via an optical cable as a unit on the FSSB line. Up to four 1-Vp-p output separate detectors can be connected to a basic unit.
One additional unit (A02B-0236-C204) can be connected to the basic unit with a flat cable. Four separate detectors with digital output can be connected to the additional unit. When five or more 1-Vp-p output separate detectors are to be used, more than one basic unit (analog input separate detector interface unit) is required. The JA4A connector is provided for the battery for absolute position detectors connected to the additional unit.
The maximum number of separate detector interface units that can be connected to one FSSB line is two for HRV2 and HRV3, regardless of which input type, the analog input type or digital input type, is used.

**NOTE**
1 Unused optical connectors must be covered with the caps.
2 A digital output encoder refers to an encoder that outputs A and B rectangular waveforms (parallel) or a FANUC serial interface output encoder (serial).
3 No 1-Vp-p output encoder can be connected to additional units.

(1) Connecting 1-Vp-p output encoders to the 1st to 4th axes

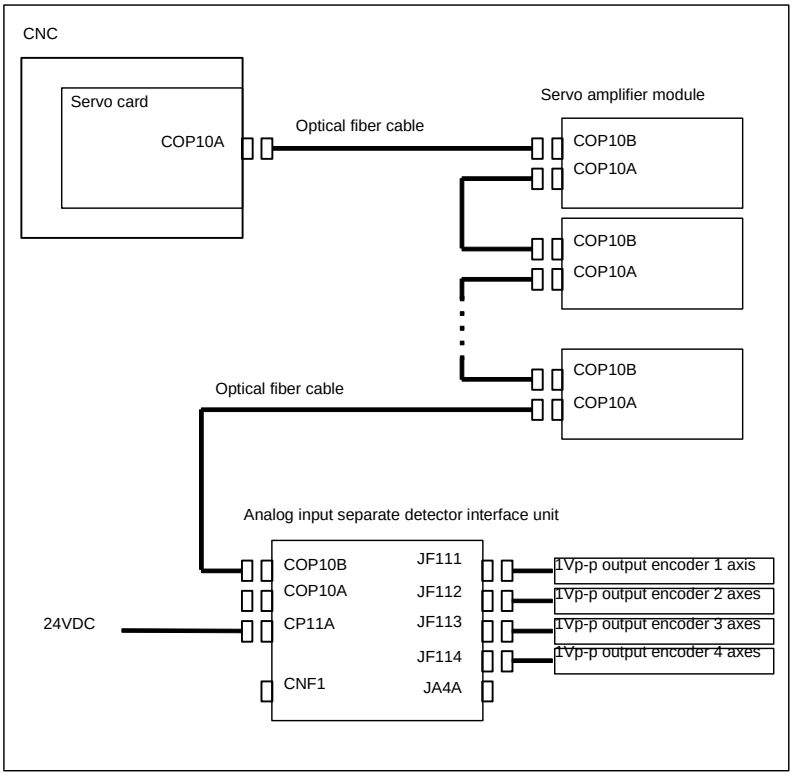

(2) Connecting 1-Vp-p output encoders to the 5th to 8th axes

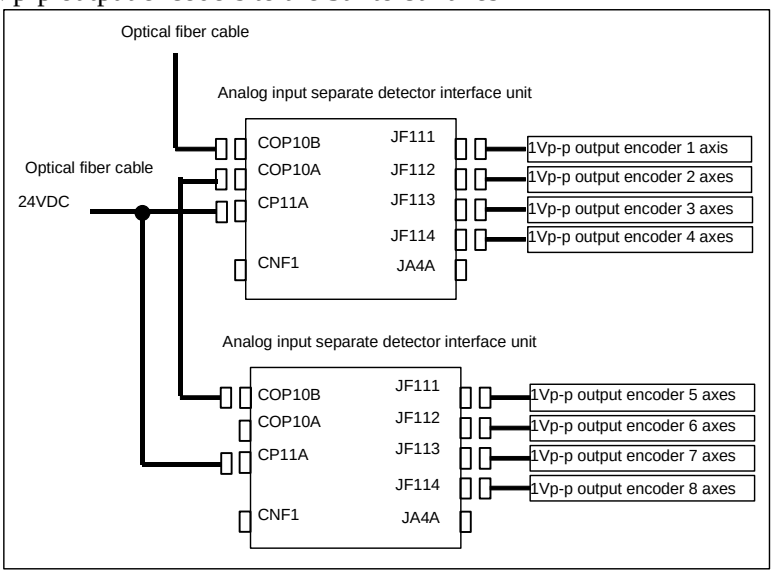


(3) Connecting 1-Vp-p output encoders to the 1st to 4th axes and digital output encoders to the 1st to 4th axes

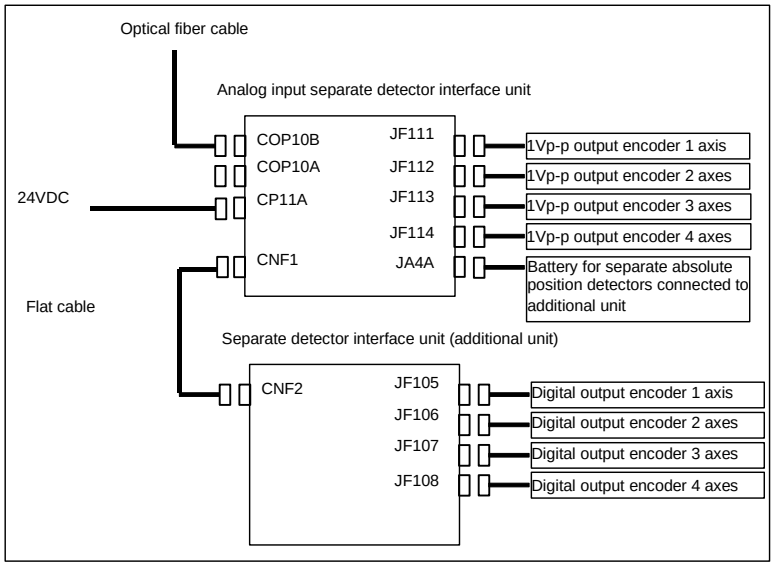

(4) Connecting 1-Vp-p output encoders to the 1st to 4th axes and digital output encoders to the 5th to 8th axes

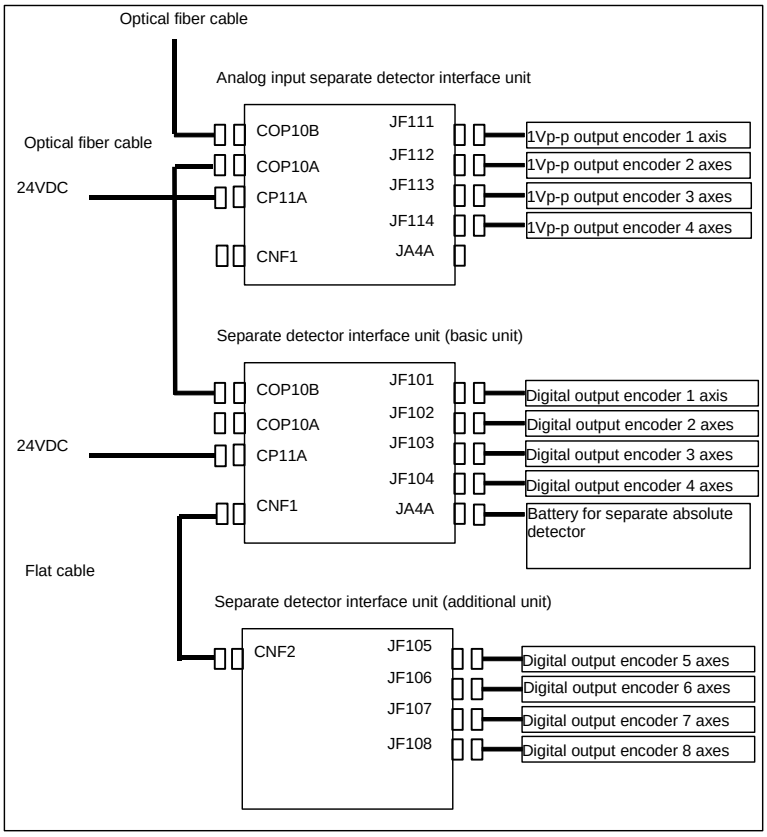


## 7.3.2 Analog Input Separate Detector Interface Unit Specification

| Item | Specification |
|---|---|
| Power supply capacity | Voltage 24 VDC ±10%<br>Current 0.9 A (basic unit only)<br>1.5 A (basic unit + additional unit) |
| Ordering information | A02B-0305-C201 (basic) |
| Method of installation | An interface unit can be installed by using screws or a DIN rail. |

## 7.3.3 Connection of Power Supply

Power to the analog input separate detector interface unit should be supplied from an external 24 VDC power supply. An extended unit is powered by a basic unit.

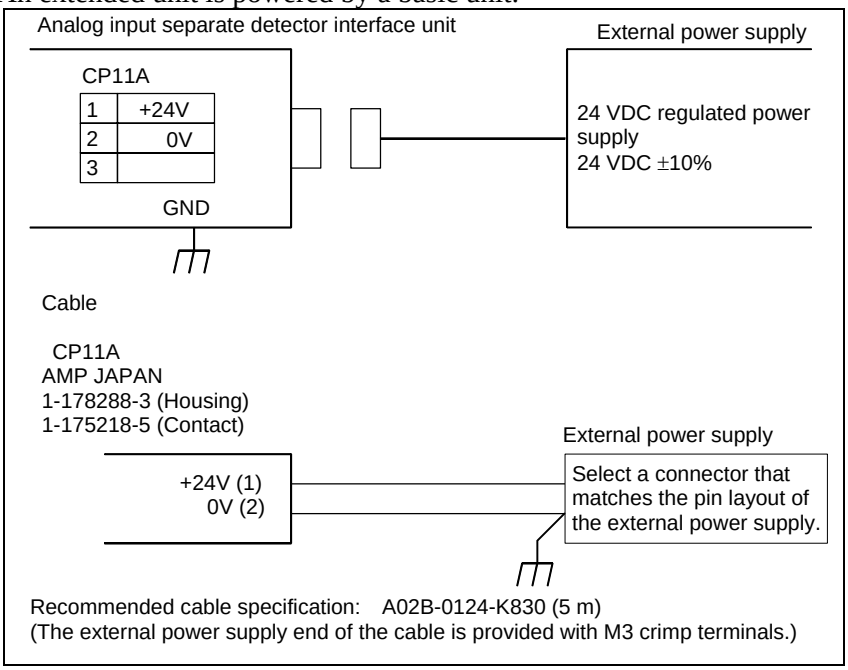


The 24 VDC input to CP11A can be output at CP11B for use in branching. The connection of CP11B is identical to that of CP11A. In this case, the power supplied to CP11A should be equal to the sum of the rating of the analog input separate detector interface unit and that of the units after CP11B.

Be sure to ground the 0-V line of the power supply to the analog input separate detector interface unit. In addition, keep any noise source (such as an AC power cable and contactor) away from the power line of the analog input separate detector interface unit as far as possible to prevent noise from being picked up through the power line.

Secure the ground line to the ground terminal (GND) for signals of an analog input separate detector interface unit, which is located at the bottom of the unit, with an M3 screw as shown in the figure below. Connect the ground line to the ground plate of the cabinet.

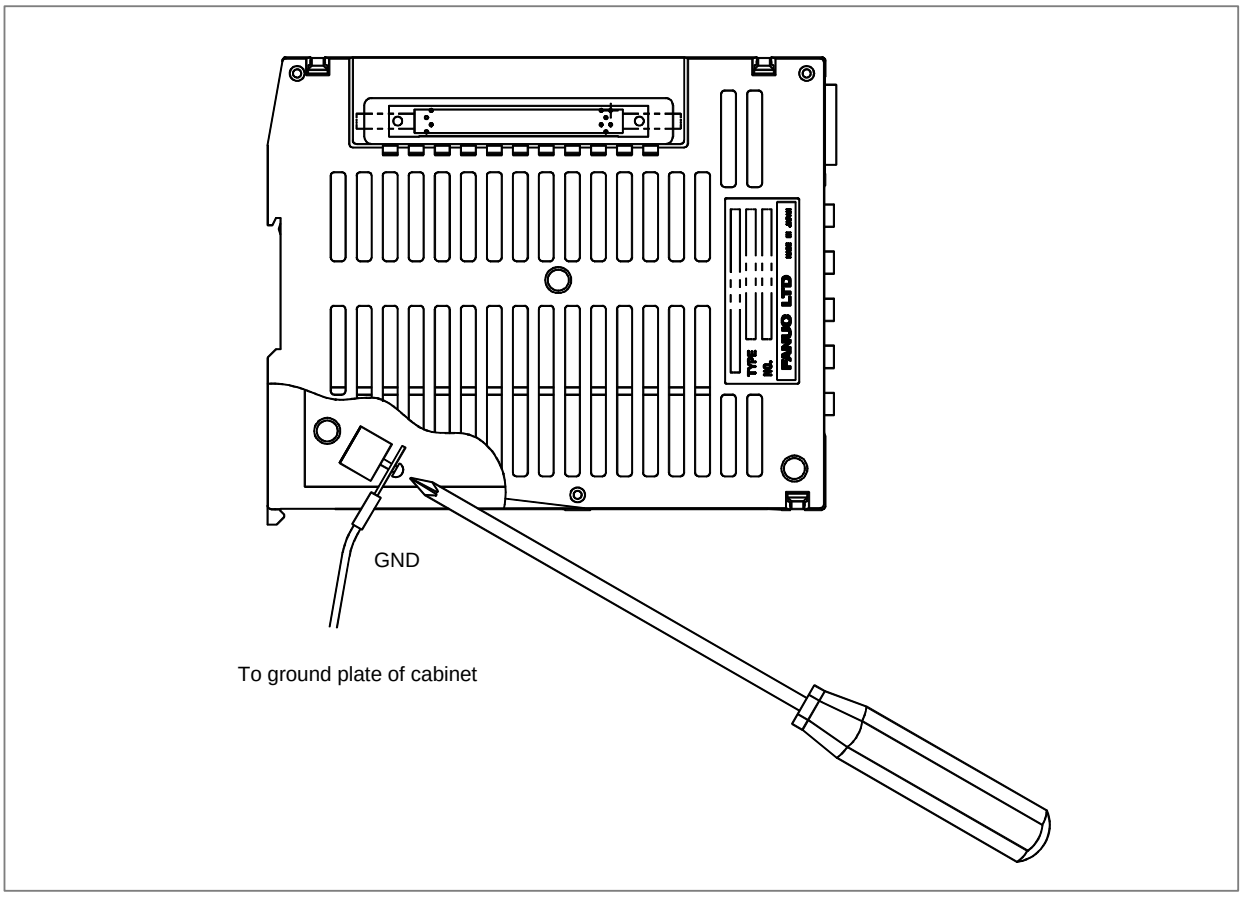


**NOTE**

The torque with which a screw is tightened is 5 kgf·cm or less.

# 7.3.4 Analog Input Separate Detector Interface (Analog 1Vp-p Interface)

Analog Input Separate Detector Interface

Analog 1Vp-p output encoder

JF111 to F114
(PCR-EV20MDT)

| | | | |
|---|---|---|---|
| 1 | PCA | 11 | NC |
| 2 | ∗PCA | 12 | 0V |
| 3 | PCB | 13 | NC |
| 4 | ∗PCB | 14 | 0V |
| 5 | PCZ | 15 | NC |
| 6 | ∗PCZ | 16 | 0V |
| 7 | | 17 | |
| 8 | | 18 | +5V |
| 9 | +5V | 19 | NC |
| 10 | | 20 | +5V |

Leave NC (No Connection) open.

Cable connection

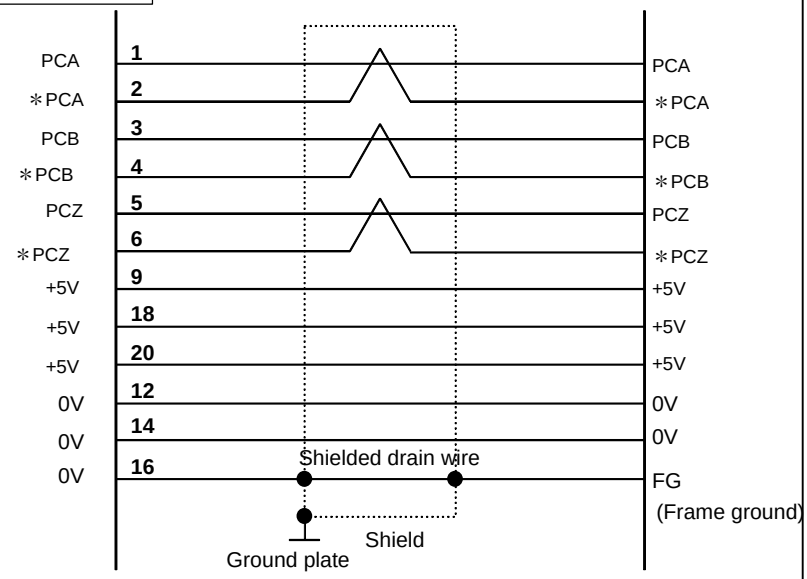


Recommended cable:
A66L-0001-0286 (#20AWG × 6 + #24AWG × 3-pair)

Recommended connectors:
PCR-E20FA (Honda Tsushin Kogyo)
FI30-20S (Hirose Electric)
FCN-247J020-G/E (Fujitsu)
52622-2011 (Molex)
FI40B-2015S (Hirose Electric)

**NOTE**

When supplementary descriptions other than warnings and notes are provided, the above +5V signals can be used as the power supply of detectors.
In this case, the maximum current consumption per detector is 0.35 A.
Lower limit of the 5V signals: 4.95 V for the basic unit, and 4.9 V for the additional unit

## 7.3.5 Input Signal Specifications

A/B (Type I)

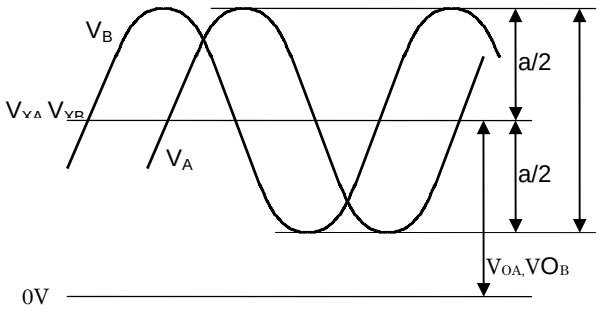


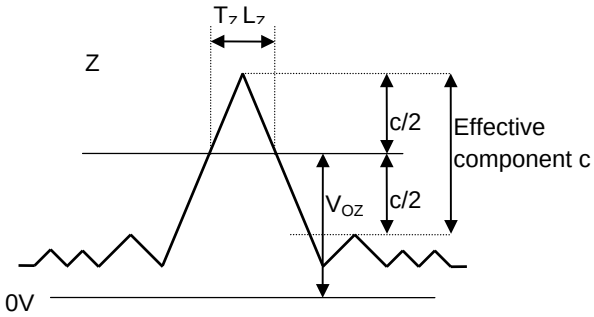


A/B (Type II)

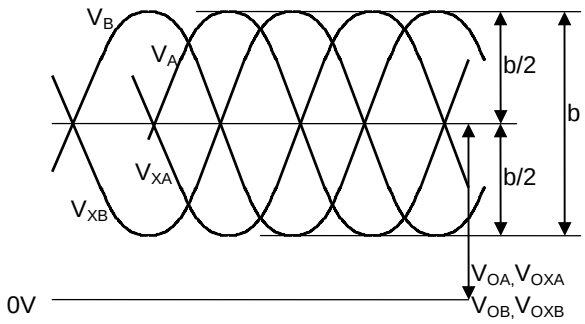


| Item | Symbol | Min. spec. | Standard spec. | Max. spec. | Unit |
|---|---|---|---|---|---|
| Amplitude (phase A/B) | Type I a of phase A and phase B<br>Type II Sum of b of phase A and b of phase XA Sum of b of phase B and b of phase XB | 0.6 | 1.0 | 1.5 | $V_{P-P}$ |
| Amplitude (phase Z) | Sum of c of Z and c of XZ (analog signal) | 0.2 | 0.4 | - | V |
| Center value (DC level) | Type I $V_{OA}$,$V_{XA}$ ,$V_{OB}$,$V_{XB}$<br>Type II $V_{OA}$,$V_{OXA}$ ,$V_{OB}$,$V_{OXB}$<br>$V_{OZ}$,$V_{OXZ}$ | 2.0 | 2.5 | 3.0 | V |
| Offset voltage (phase A/B) | Type I $V_{OA}$-$V_{XA}$ , $V_{OB}$-$V_{XB}$<br>Type II $V_{OA}$-$V_{OXA}$ , $V_{OB}$-$V_{OXB}$ | -0.1 | 0 | +0.1 | V |
| Offset voltage (phase Z) | $V_{OZ}$-$V_{OXZ}$ | -0.05 | 0 | +0.05 | V |
| Pulse width of phase Z | $T_Z$ | 600 | - | - | nSec |
| Length of phase Z | $L_Z$ | 1/4 | - | - | Pitch of A (or B) |
| Input impedance | | 100 | 120 | 140 | Ω |
| Input frequency | | - | - | 200 | kHz |

* The detection precision depends on the precision of signals from the encoder.

## 7.3.6 Connection of Battery for Absolute Position Detector

When a separate absolute position detector that requires battery backup is connected to an additional unit, a battery case for the separate absolute pulse coder must be connected to JA4A of the analog input separate detector interface unit.

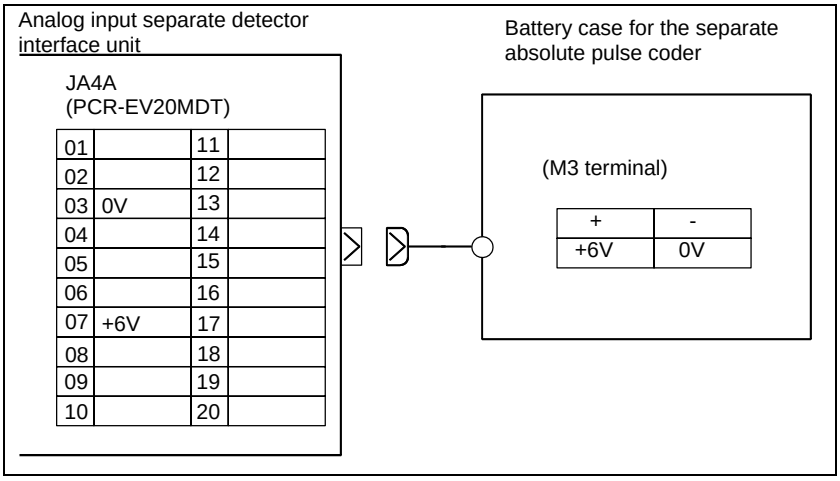


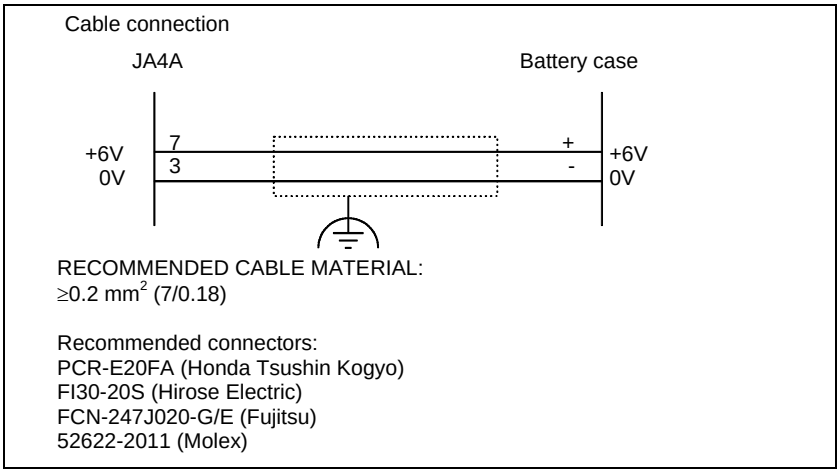


**NOTE**

If the cable is connected to JA4A when the separate absolute pulse coder battery case contains the battery, the battery voltage is applied to the battery power supply pin (+6 V) for each of the feedback connectors (JF105 to JF108). In this case, if the battery line and 0 V are short-circuited, the battery may heat up or the protection circuit within the separate detector interface unit may fail. First, make sure the battery case contains no battery or the cable is not connected to JA4A. Then, complete all cabling work and confirm cables are correctly connected. Finally, place the battery or connect the cable to JA4A.

## 7.3.7 Connection Between the Analog Input Separate Detector Interface Unit and Additional Unit

A flat cable is used to connect the analog input separate detector interface unit and additional unit as shown below.
The flat cable is 100 mm long.

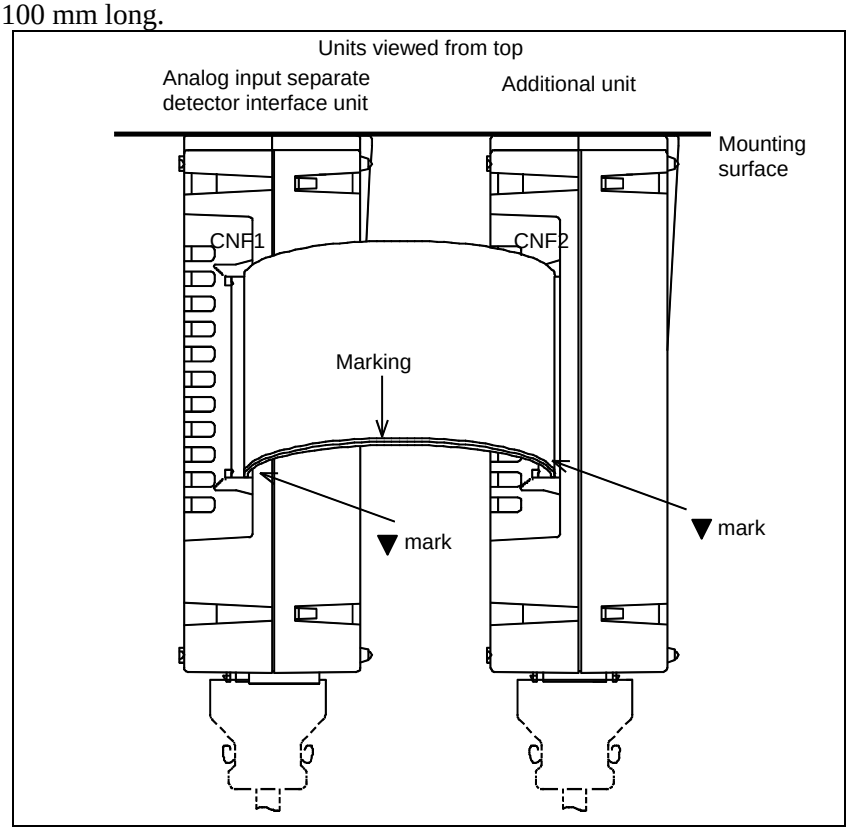


Place an order on a flat cable together with separate detector interface units.

## 7.3.8 Connector Locations

Connector locations on the analog input separate detector interface unit

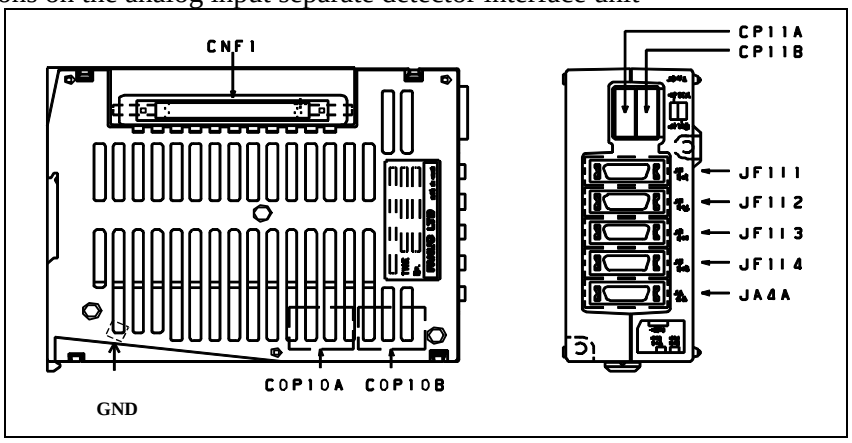


For the outside dimensions, see Appendix A.

# 7.3.9 Installation

1) Notes on installation
   (1) Use an interface unit in a completely enclosed cabinet.
   (2) Install an interface unit on a vertical surface, and provide a space of 100 mm above and below the unit. Below an interface unit, do not place equipment that generates a large amount of heat.
   (3) When using an analog input separate detector interface unit and addition unit, place the units as shown below so that the flat cable connecting the units does not block the vent holes. A flat cable not longer than 100 mm must be used.

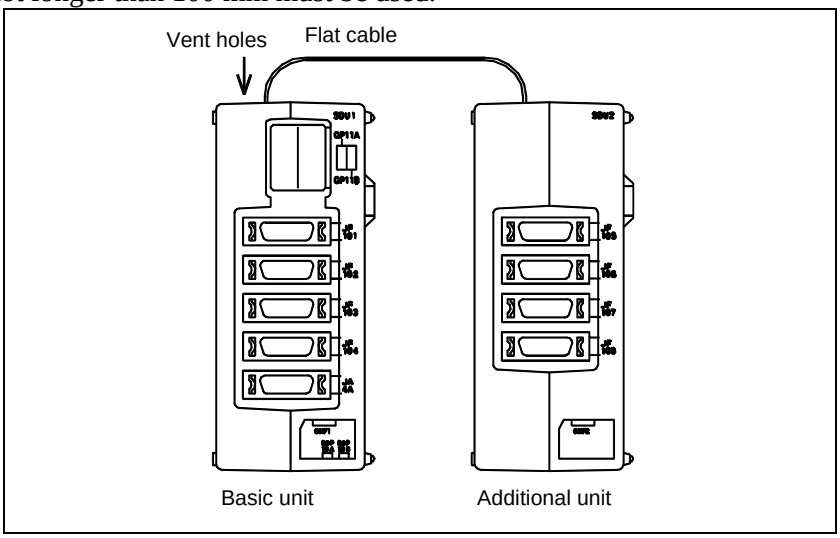


2) Installation using screws

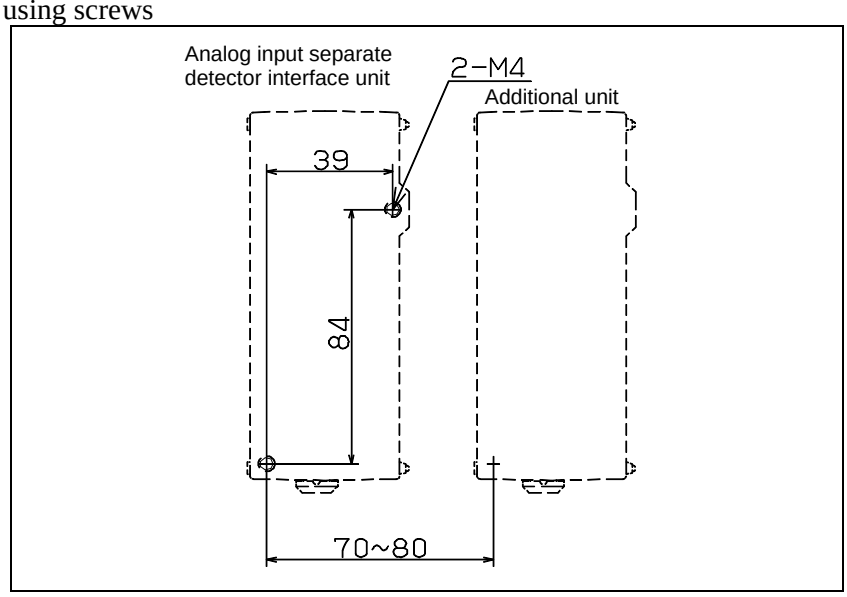


When using both an analog input separate detector interface unit and additional unit, install the units as shown above, with the mounting holes horizontally separated by 70 to 80 mm.

## 7.3.10 Notes on Installing an Analog Input Separate Detector Interface Unit

**⚠ CAUTION**

To install/remove the unit, a screwdriver must be inserted obliquely. So, sufficient access clearances are required on both sides of the unit. As a guideline, if the front of an adjacent unit appears flush with the unit or slightly set back, allow a clearance of about 20 mm between the unit and the adjacent unit. If the front of an adjacent unit protrudes beyond the front of the unit, allow a clearance of about 70 mm between the unit and the adjacent unit. Also, when installing the unit near a side of the cabinet, allow a clearance of about 70 mm between the unit and the side of the cabinet.

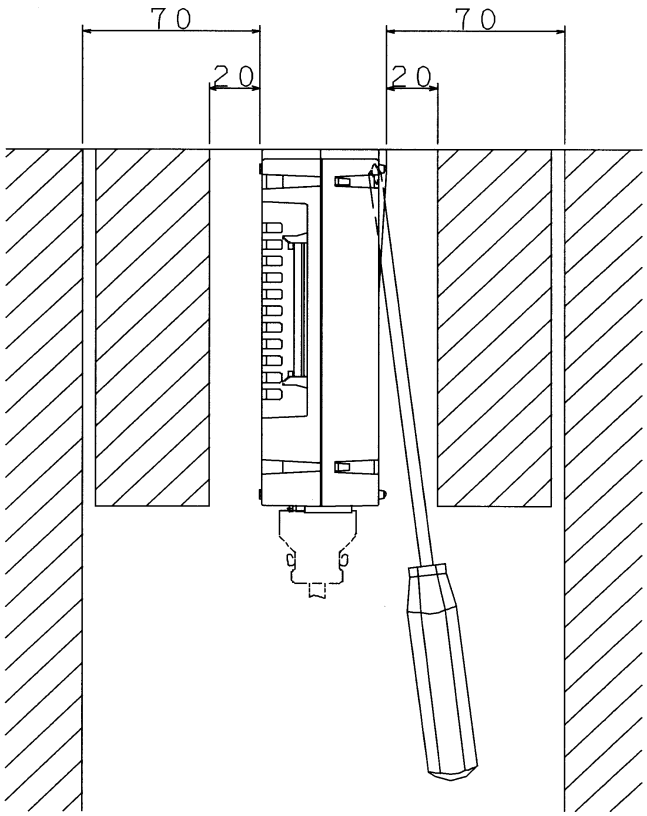


Access clearance near an analog input separate detector interface unit

Installing the unit on the DIN rail

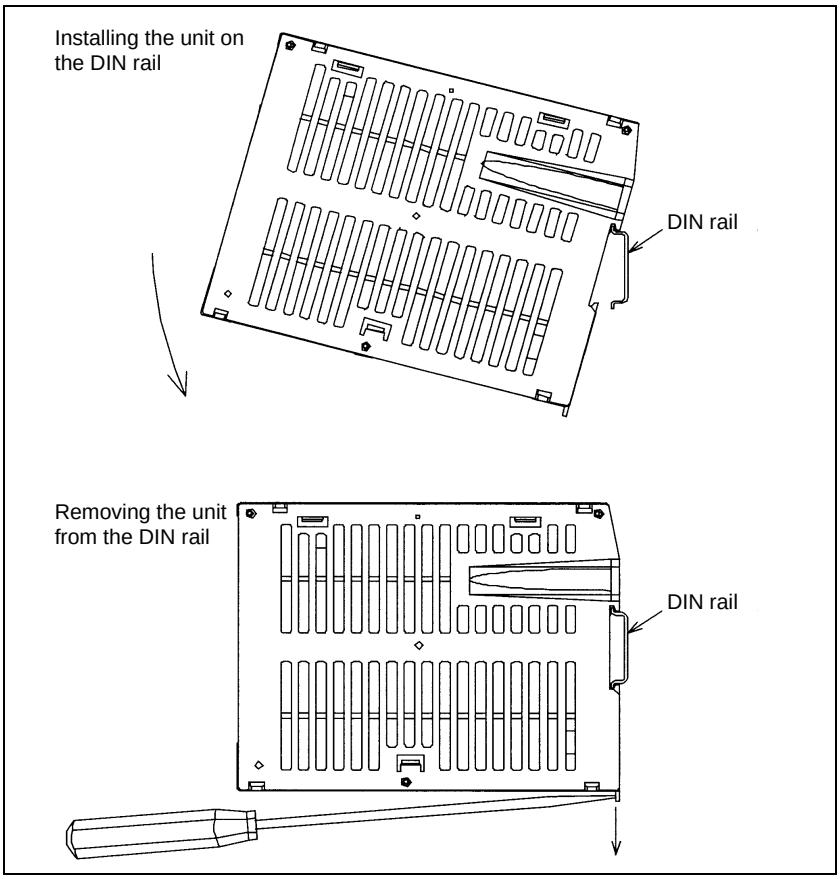


Installing the unit:
1. Hook the unit on the top of the DIN rail.
2. Push the unit in until it clicks.

Removing the unit:
1. Push down the lock by using a screwdriver.
2. Remove the unit by pulling the lower end of the unit towards you.

> ⚠ **CAUTION**
> When removing the unit, be careful not to damage the lock by applying excessive force. When installing and removing the unit, hold the upper and lower ends of the unit so that stress is not applied to the side (that surface with the slits) of the unit.

# 8 CONNECTION TO FANUC I/O Link

> ⚠ **WARNING**
> There is a possibility that I/O Link slave module will not operate normally due to a failure of CNC or I/O module, or abnormally power supply voltage. To prevent accidents even in this case, design the machine to operate safely by making a safety circuit outside the I/O Link slave module.

## 8.1 OVERVIEW

FANUC I/O Link is a serial interface that has a CNC, a cell controller, various I/O units, the machine operator's panel, or the Power Mate connected and receives or sends I/O signals (bit data) at high speed between the devices. The FANUC I/O Link regards one device as the master and other devices as slaves when more than one device is connected. Input signals from the slaves are sent to the master at specified intervals. Output signals from the master are also sent to the slaves at specified intervals.

## 8.2 CONNECTION

The I/O Link interface connector JD51A is provided on the main board.
In the I/O there are the master station and its slave stations. The master is the control unit of the CNC, and the slave is the I/O unit-A. The slaves are divided into groups, and up to 16 groups can be connected to one I/O Link. (For the Series 0*i* Mate, however, the number of I/O points are limited.)
The I/O Link is connected in different ways depending on the types of units actually used and the I/O points. To connect the I/O Link, the assignment and addresses of the I/O signals have been made programmable with the PMC program. The total number of I/O points for each channel of I/O Link is 1024 or less.
There are two I/O Link connectors: JD1A and JD1B. These connectors are provided for all units that have the I/O Link function. A cable must be connected from JD1A to JD1B. Although JD1A of the last unit is not used and left open, it need not be connected with a terminator.
The pin assignments of connectors JD1A and JD1B are common to all units on the I/O Link, and are illustrated on Subsec. 8.2.1. Use the figures when connecting the I/O Link irrespective of the type of unit.

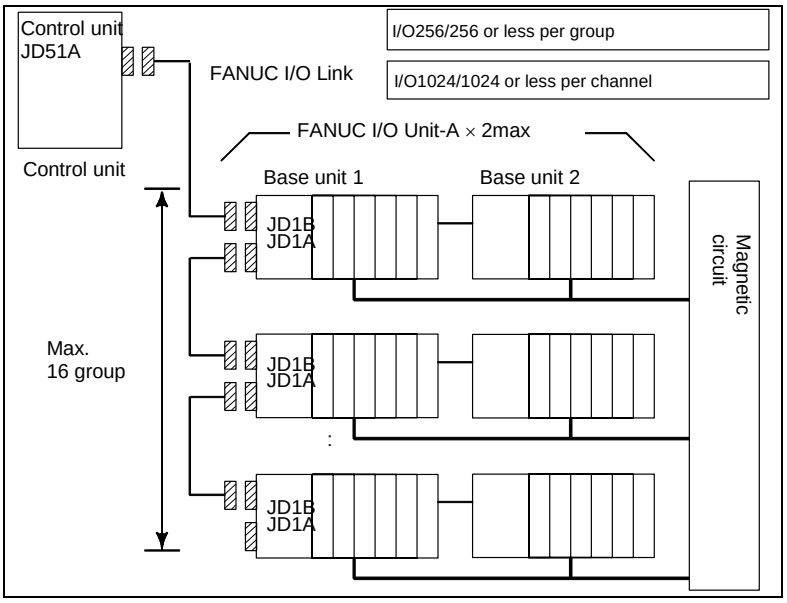


**Fig. 8.2 I/O Link connection diagram**

## Example of I/O Link connection of the Series 0*i* Mate

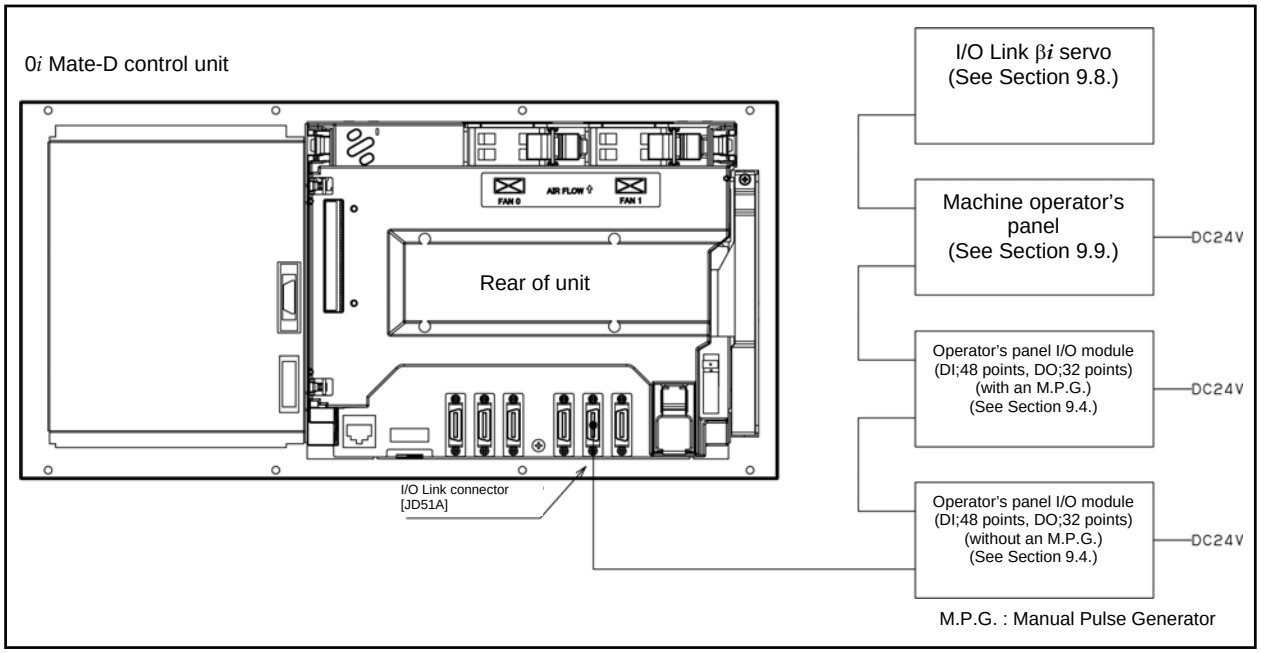


The following example assumes that two operator's panel I/Os and one machine operator's panel are used.

**DI space map**

| | |
|---|---|
| X4 | Operator's panel I/O 48 DI points |
| X5 | |
| : | |
| X9 | |
| X10 | Reserved |
| : | Reserved |
| X15 | Reserved |
| X16 | 1st MPG |
| X17 | 2nd MPG |
| X18 | 3rd MPG |
| X19 | DO alarm detection |
| X20 | Operator's panel I/O 48 DI points |
| X21 | |
| : | |
| X25 | |
| X26 | Reserved |
| : | Reserved |
| : | Reserved |
| X34 | Reserved |
| X35 | DO alarm detection |
| X36 | Machine operator's panel |
| : | |
| X47 | |

**DO space map**

| | |
|---|---|
| Y0 | Operator's panel I/O 32 DO points |
| Y1 | |
| Y2 | |
| Y3 | |
| Y4 | Operator's panel I/O 32 DO points |
| Y5 | |
| Y6 | |
| Y7 | |
| Y8 | Machine operator's panel |
| Y9 | |
| Y10 | |
| Y11 | |
| Y12 | |
| Y13 | |
| Y14 | |
| Y15 | |

**NOTE**

1 The manual pulse generators in X16 to X18 are directly read by the CNC, so only the above allocation must be performed by the PMC.
2 For DO alarm detection in X19 and X35, see Subsection 9.4.9.
3 For the Series 0*i* Mate, up to 256 DI points and up to 256 Do points can be used.

## Example of I/O Link connection of the Series 0*i*

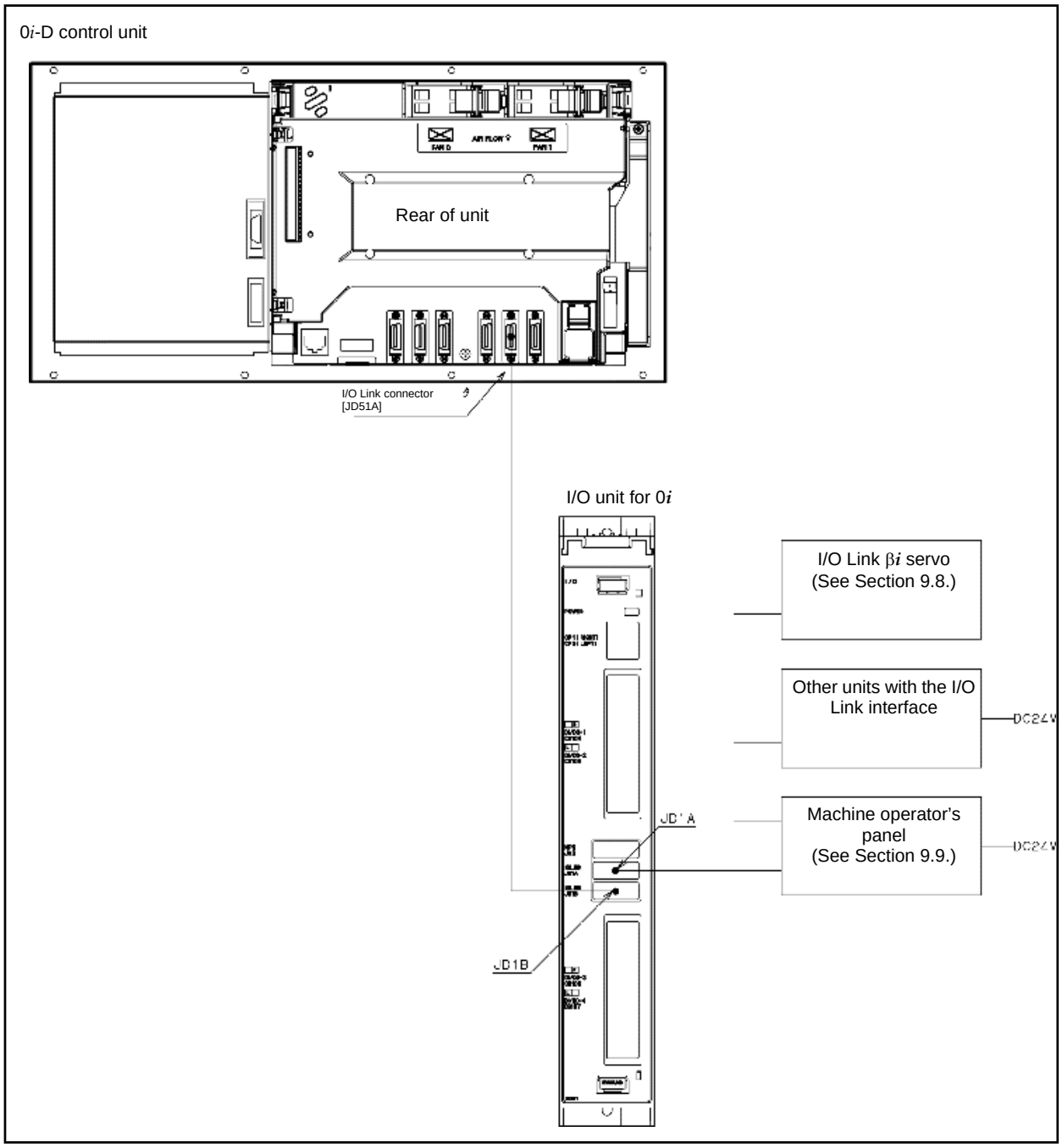

**DI space map**

| | |
|---|---|
| X0 | I/O Unit for 0i-D<br>96 DI points |
| X1 | |
| X2 | |
| X3 | |
| X4 | |
| X5 | |
| X6 | |
| X7 | |
| X8 | |
| X9 | |
| X10 | |
| X11 | |
| X12 | I/O Unit for 0i-D: 1st MPG |
| X13 | I/O Unit for 0i-D: 2nd MPG |
| X14 | I/O Unit for 0i-D: 3rd MPG |
| X15 | I/O Unit for 0i-D: DO alarm detection |
| X16 | Machine operator's panel, other I/O |
| X17 | |
| X18 | |
| X19 | |
| X20 | |
| . | |
| . | |
| . | |

**DO space map**

| | |
|---|---|
| Y0 | I/O Unit for 0i-D<br>64 DO points |
| Y1 | |
| Y2 | |
| Y3 | |
| Y4 | |
| Y5 | |
| Y6 | |
| Y7 | |
| Y8 | Machine operator's panel, other I/O |
| Y9 | |
| Y10 | |
| Y11 | |
| Y12 | |
| Y13 | |
| Y14 | |
| Y15 | |
| Y16 | |
| Y17 | |
| Y18 | |
| Y19 | |
| Y20 | |
| . | |
| . | |
| . | |

**NOTE**
1 The manual pulse generators in X12 to X14 are directly read by the CNC, so only the above allocation must be performed by the PMC.
2 For DO alarm detection in X15, see Section 9.6.

## 8.2.1 Connection of FANUC I/O Link by Electric Cable

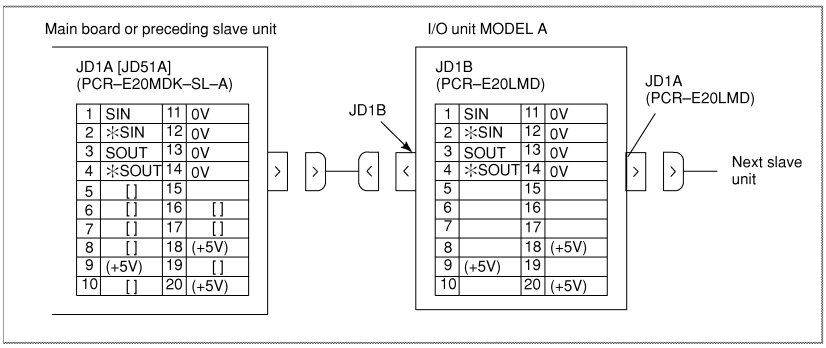


+5 V terminals are for an optical I/O Link adapter. They are not necessary when connecting with a metal cable.
A line for the +5V terminal is not required when the Optical I/O Link Adapter is not used.
No connections must be made to the pins with brackets ([ ]) because they are used in JD51A when the second channels are connected in the FANUC I/O Link.
Do not make a connection to a pin for which no signal is assigned.

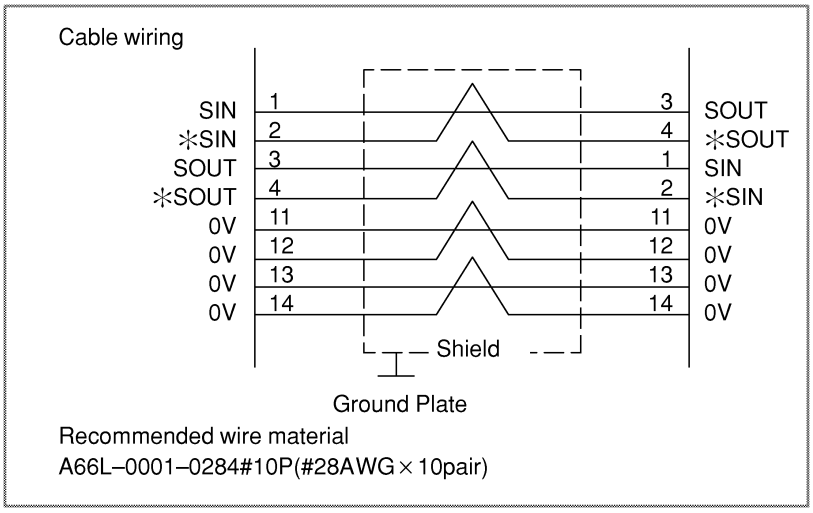


Recommended cable connectors

PCR-E20FA (Honda Tsushin Kogyo Co., Ltd.)
FCN-247J020-G/E (Fujitsu Ltd.)
52622-2011 (Molex Japan Co., Ltd.)

## 8.2.2 Connection of FANUC I/O Link by Optical Fiber Cable

The FANUC I/O Link can be extended to the maximum length of 200 m with optical fiber cables using an optical I/O Link adapter. The length of the electrical cable connected to the optical conversion adapter must not exceed 2 m.

In the following cases, use an optical fiber cable.

- When the cable is more than 10 meters long. When the cable is more than 15 meters long if it is laid within the same cabinet.
- When the cable is run between different cabinets, and the cabinets cannot be connected with each other via a ground wire of 5.5 $mm^2$ or more.
  If the power magnetics cabinet includes an I/O Link slave unit, and cables are connected through a duct to the operator's panel (as shown below), the control section I/O Link slave unit can be assumed to be incorporated in the same cabinet.

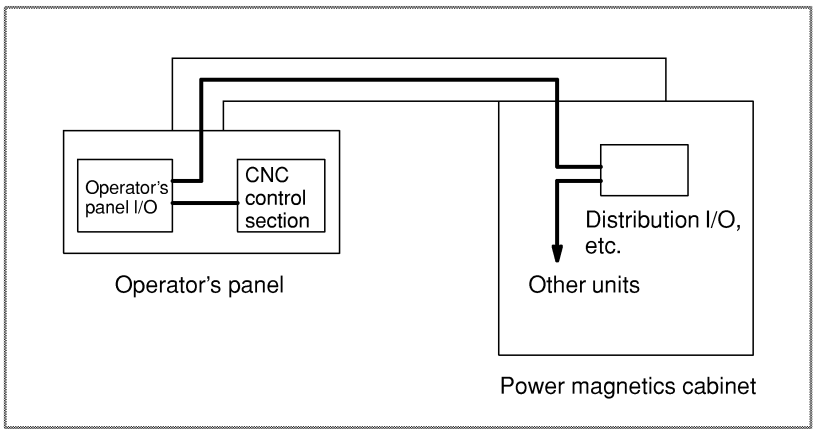


- When there is concern that the cable is influenced by strong noise; for example :When there is a strong electromagnetic noise source beside the cable such as a welding machine.
  When a noise generating cable such as a power cable runs for a long distance in parallel with the cable.

## External dimension of optical link adapter

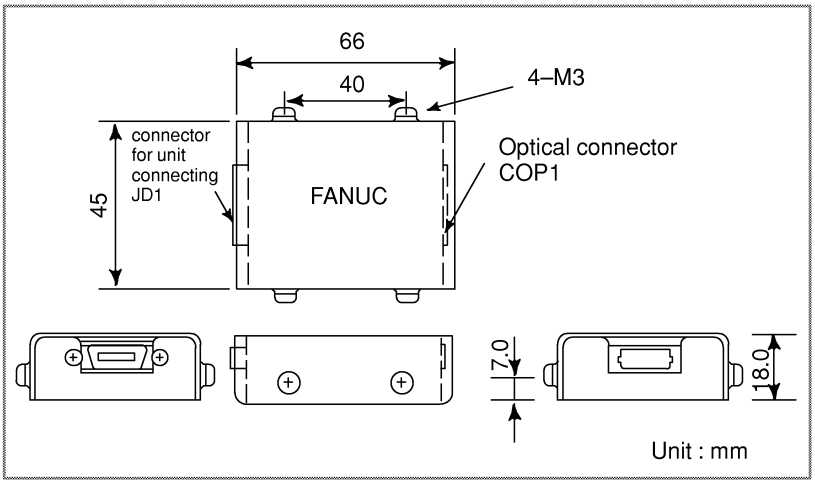


## Weight of optical link adapter

Main body: Approx. 100 g.

### - Connection

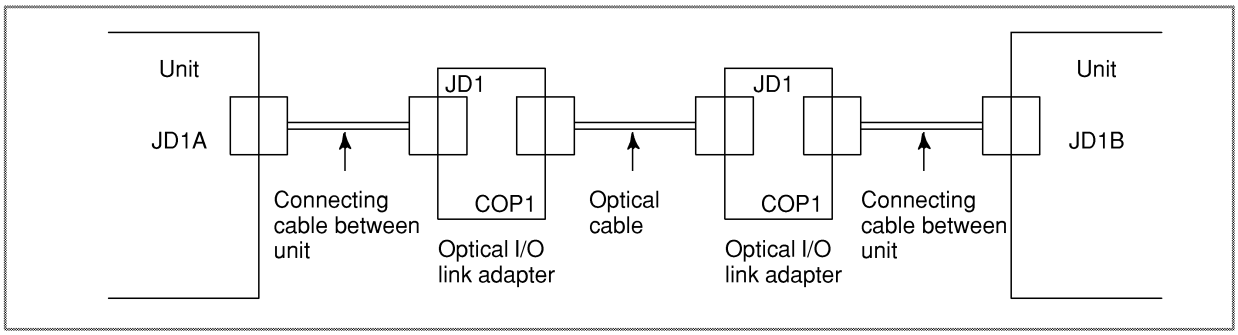


### - Connection diagram

| | | | |
|---|---|---|---|
| 01 | SIN | 11 | 0V |
| 02 | *SIN | 12 | 0V |
| 03 | SOUT | 13 | 0V |
| 04 | *SOUT | 14 | 0V |
| 05 | | 15 | 0V |
| 06 | | 16 | |
| 07 | | 17 | |
| 08 | | 18 | +5V |
| 09 | +5V | 19 | |
| 10 | | 20 | +5V |

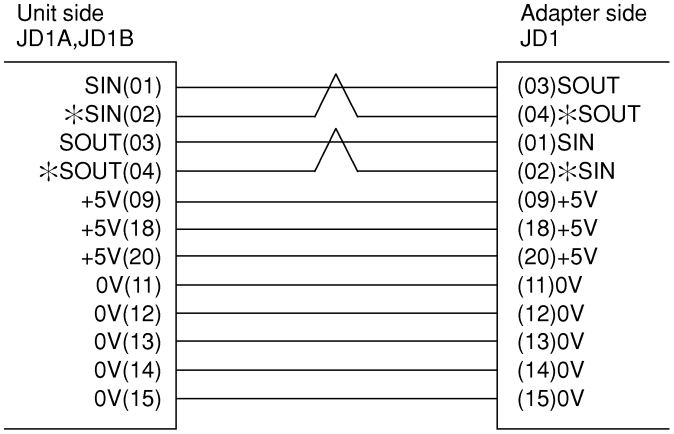


1 Recommended cable connectors
   PCR-E20FA (Honda Tsushin Kogyo Co., Ltd.)
   FCN-247J020-G/E (Fujitsu Ltd.)
   52622-2011 (Molex Japan Co., Ltd.)
2 Recommended cable (wire material) : A66L-0001-0284#10P
3 Cable length : Max. 2 m (when the recommended cable is used)

### - Optical cable

**NOTE**
For handling of optical cables, see Appendix D.

- Optical cable specification
  A66L-6001-0026#L or later
  For #L or later, specify the cable length. (See the Appendix D, “OPTICAL FIBER CABLE.”)

- Maximum number of connectable stages
  Up to 16 high-speed type I/O link adapter stages can be connected in one I/O link, while only up to five conventional I/O link adapters (standard type) can be connected.
  1) Standard type (A13B-0154-B001)..... up to 5 adapter stages can be connected in series
  2) High-speed type (A13B-0154-B004)..... up to 16 adapter stages can be connected in series

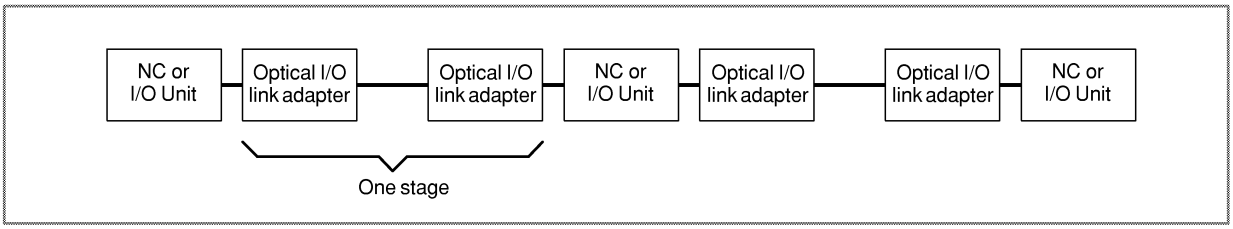


**NOTE**
It is impossible to use both high-speed and standard type adapters on the same line.

- Power supply
  The same power supply type can be used for both the standard type (A13B-0154-B001) and high-speed type (A13B-0154-B004).
  (a) Power supply voltage: 4.75 to 5.25 V (at receiving end)
  (b) Required current: 200 mA
- Installation conditions
  (a) The optical link adapter enclosure is not fully sealed ; install it with the CNC control unit in the fully enclosed cabinet.
  (b) Ground the case using the case fixing screw of the optical link adapter.
  (c) The optical link adapter is light, and it may not be necessary to mount it with screws. However, keep it from coming in contact with other circuits to prevent possible short-circuits. When mounting the optical link adapter in a cabinet, attach it with an L-type fitting using the case fixing screws (M3) of the optical link adapter.

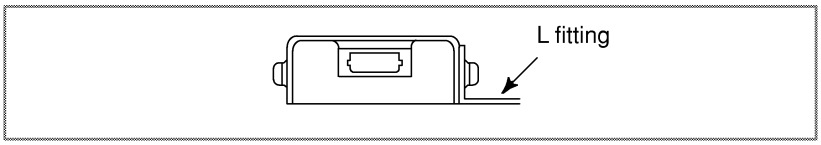


- Required parts
  (a) For making up an I/O Link using the optical link adapter, the following parts are necessary:
  <1> Optical I/O Link adapter ..... 2
  <2> Interunit connecting cable..... 2
  <3> Optical cable ..... 1
- Relay with an optical fiber relay adapter
  For the outline drawing of the optical fiber relay adapter, see Appendix D.

**NOTE**
Optical fiber cables can be relayed only at are location.
When a high-speed optical link adapter is used, no optical fiber relay adapter can be used.

- Maximum transmission distance with an optical fiber cable(s)
  The table below shows the maximum transmission distance with an optical fiber cable(s), which varies depending on whether a connection adapter is used for a relay.

| | Number of relay | Maximum transmission distance |
|---|---|---|
| Standard type | 0 | 200m |
| | 1 | 100m (total) |
| High-speed type | 0 | 100m |
| | 1 | N/A |

## 8.2.3 Connection when Multiple Channels of FANUC I/O Links are Used

For the Series 0*i*, up to two channels of FANUC I/O Link interfaces can be used. This function can be used to expand the number of I/O points to 2048/2048.
Signals for two channels are assigned to the FANUC I/O Link connector (JD51A) on the main board. When using only one channel, see Subsection 8.2.1.
When using the second channel, use the I/O Link branching adapter for two channels to branch the FANUC I/O Link.

**NOTE**
When Dual Check Safety is used in the Series 0*i*, up to three channels of FANUC I/O Link interfaces can be used. However, the third channel can be used only for connection of safety-related I/Os in Dual Check Safety. For connection when using Dual Check Safety, refer to the FANUC Series 0*i*-MODEL D Dual Check Safety Connection Manual (B-64303EN-4).

### Using the second channel

To use the second channel, use the I/O Link branching adapter to set a branch in the FANUC I/O Link.

### Connection

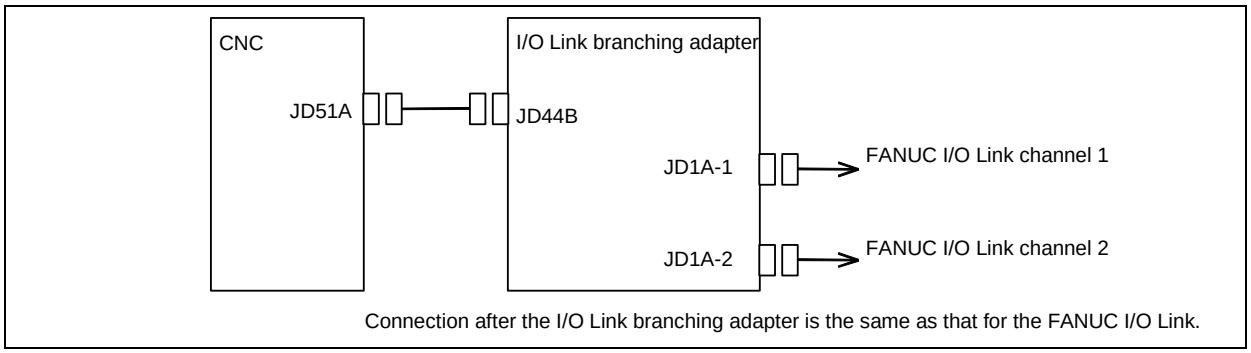


Part number of the I/O Link branching adapter: A20B-1007-0680 (60 g)

## Connection between the CNC and I/O Link branching adapter

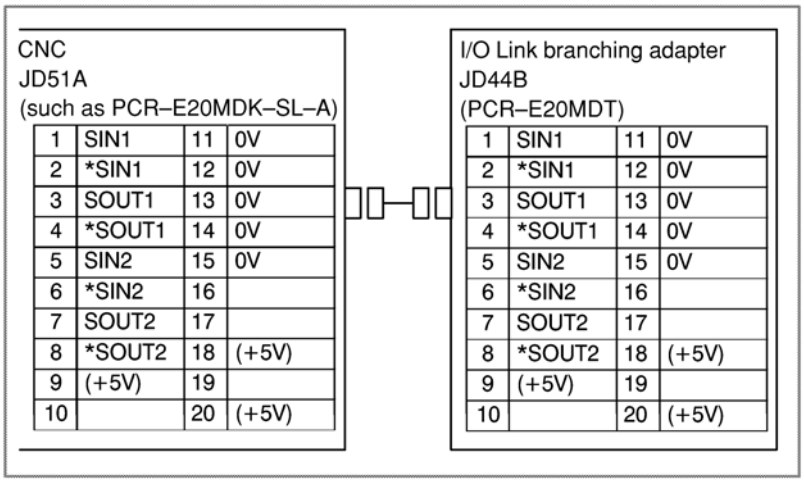


The +5V pin is provided to use the optical I/O Link adapter for optical fiber transmission. When not using the optical I/O Link adapter, leave the +5V pin unconnected.

## Cabling

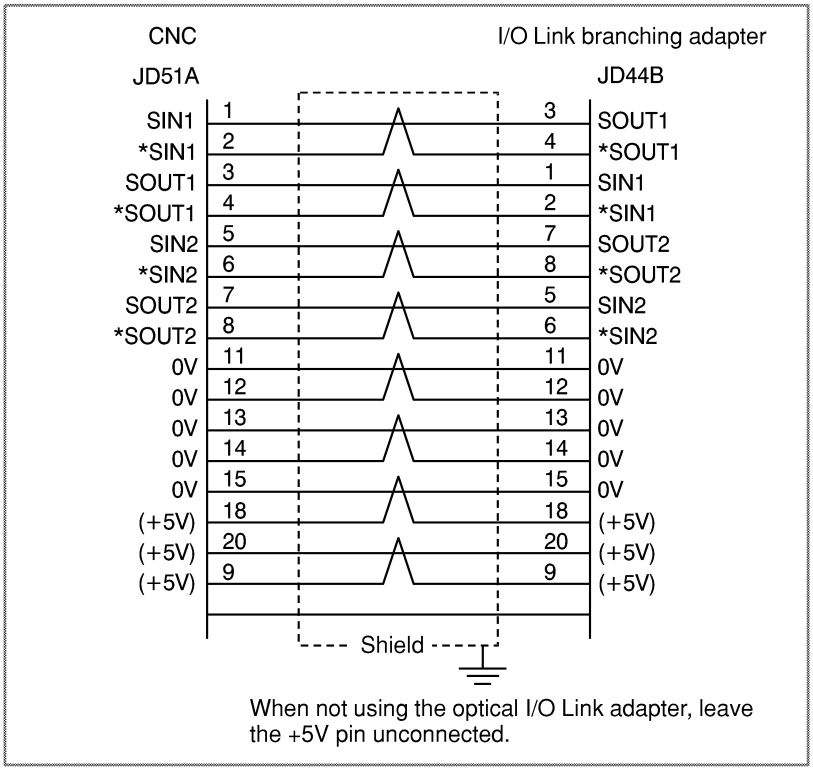


Recommended cable connectors:

PCR-E20FA (Honda Tsushin Kogyo Co., Ltd.)
FI30-20S (Hirose Electric Co., Ltd.)
FCN-247J020-G/E (Fujitsu)
52622-2011 (Molex Japan Co., Ltd.)

Recommended cable: A66L-0001-0284#10P

## Connection between the I/O Link branching adapter and slave I/O devices

The I/O Link branching adapter can be connected to slave I/O devices in the same way as for the conventional FANUC I/O Link. See 8.2.1.

## Cable length

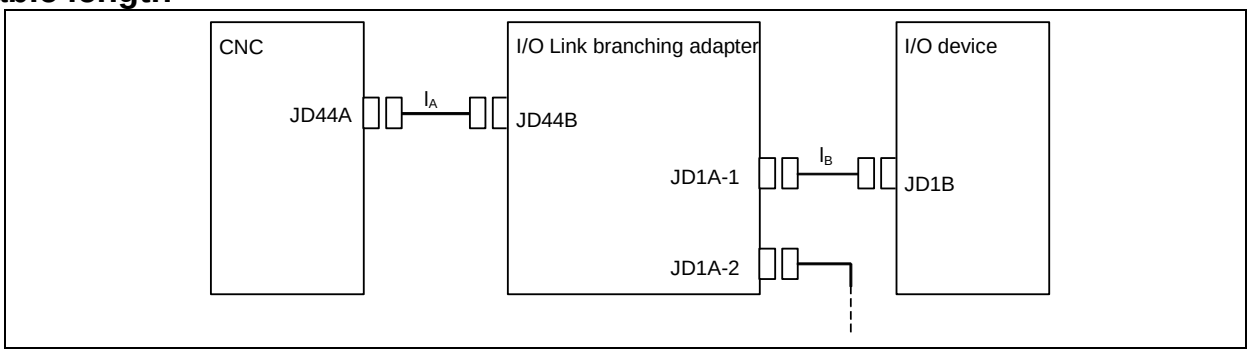


The total of $l_A$ and $l_B$ must not exceed 10 m; where $l_A$ is the length of the cable between connector JD44A on the CNC and connector JD44B on the I/O Link branching adapter, and lB is the length of the cable between connector JD1A-1 or JD1A-2 on the I/O Link branching adapter and connector JD1B on the I/O unit. When all cables are accommodated in the same cabinet, however, a total cable length of up to 15 m is allowed.

## Installation of the I/O Link branching adapter

Install the I/O Link branching adapter in a hermetically sealed cabinet like the CNC.

## External dimensions of the I/O Link branching adapter

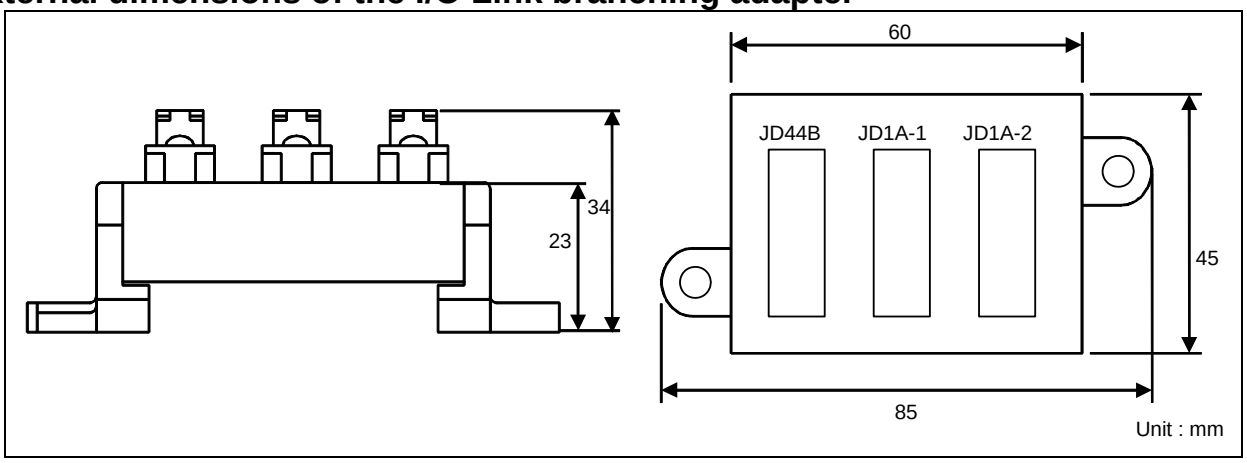


Allow a clearance of about 10 cm above the adapter for connection and routing of cables.

## Installation of the I/O Link branching adapter

1) Installation on the DIN rail

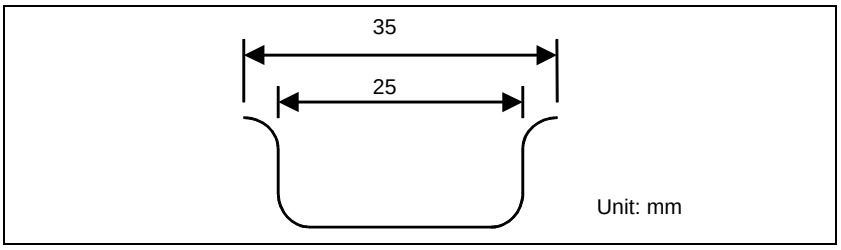


**Recommended DIN rail**

2) Screwing

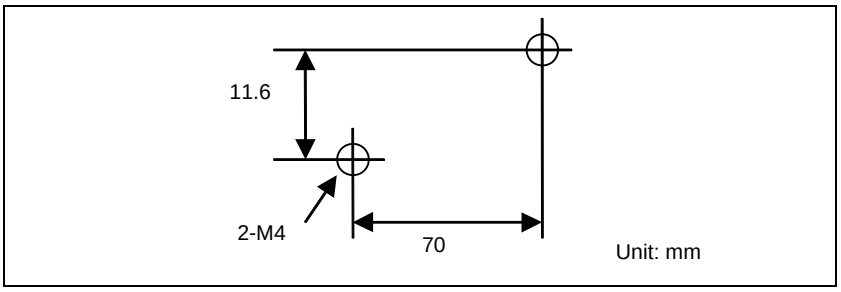


**Drilling on the plate**

## 8.2.4 Power Supply Precautions

Take the following precautions about the power supply of a slave unit connected through the FANUC I/O Link.

- During power–up, supply +24 V when or before turning on the CNC.
- When turning off a slave unit, be sure to turn off the other units connected through the same I/O Link.

These are general rules. Therefore, when additional rules are specified for each unit, be sure to observe them.

# 9 CONNECTION OF I/O Link SLAVE DEVICES

> ⚠ **WARNING**
> There is a possibility that I/O Link slave module will not operate normally due to a failure of CNC or I/O module, or abnormally power supply voltage. To prevent accidents even in this case, design the machine to operate safely by making a safety circuit outside the I/O Link slave module.

## 9.1 UNITS CONNECTABLE WITH THE FANUC I/O LINK

Basically, those units that have the slave interface of the FANUC I/O Link can be connected. The table provides a list of general units that can be connected. A detailed description of each unit listed in the table is provided later. For details of other units, refer to their manuals.

**General units that are connectable**

| Unit name | General description | Reference |
|---|---|---|
| FANUC I/O Unit-MODEL A | I/O unit with a module configuration that can flexibly handle a combination of input/output signals required for the power magnetics circuit | Connection and Maintenance Manual B-61813E |
| FANUC I/O Unit-MODEL B | I/O unit of distribution type that can flexibly handle a combination of input/output signals required for the power magnetics circuit | Connection and Maintenance Manual B-62163E |
| Handy Machine Operator's Panel | Small hand-held operator's panel that is operated on the machine side and has a manual pulse generator, emergency stop switch, enable switch, display unit, and input keys | Connection Manual B-63753EN |
| Distribution I/O Connector Panel I/O Module | I/O unit of distribution type that can flexibly handle a combination of input/output signals required for the power magnetics circuit. This unit has an interface with a manual pulse generator. | Section 9.2 |
| Distribution I/O Operator's Panel I/O Module (for Matrix Input) | Unit that has an interface with the machine operator's panel. This unit has an interface with a manual pulse generator. | Section 9.3 |
| Distribution I/O Operator's Panel I/O Module | Unit that has an interface with the machine operator's panel. This unit can also handle input/output signals required for the power magnetics circuit. This unit has an interface with a manual pulse generator. | Section 9.4 |
| Distribution I/O Power Magnetics Cabinet I/O Module | Unit that has an interface with the power magnetics cabinet. This unit can also handle input/output signals required for the power magnetics circuit. | Section 9.4 |
| Distribution I/O I/O Module Type-2 for Connector Panel | I/O unit of distribution type that can flexibly handle a combination of input/output signals required for the power magnetics circuit. This unit has an interface with a manual pulse generator. | Section 9.5 |
| Connection Of I/O Units for 0*i* | As an I/O unit for a machine interface, an I/O unit for 0*i* that has a function equivalent to the function of the I/O card built into the Series 0*i*-B can be used. The number of DI/DO points for 0*i* is 96/64. | Section 9.6 |
| Fanuc I/O Link Connection Unit | Unit that makes a connection with a FANUC I/O Link master to transfer DI/DO signals | Section 9.7 |
| Connecting the Fanuc Servo Unit β Series With I/O Link | Unit that makes a connection with a CNC through the FANUC I/O Link for servo motor control | Section 9.8 |

| Unit name | General description | Reference |
|---|---|---|
| Connection To Standard Machine Operator's Panel | Standard machine operator's panel. This panel can be easily customized. | Section 9.9 |
| Connection to the Small Machine Operator's Panel or Small Machine Operator's Panel B | Small machine operator's panel. The operator's panel has 30 keys, an emergency stop switch, and two rotary switches for override. Two types are available: small machine operator's panel and small machine operator's panel B. | Section 9.10 |
| Terminal Type I/O Module | I/O module that is equivalent to a connector panel I/O module. Input/output signals are connected on a spring-type terminal block (ferrule terminal block). | Section 9.11 |
| I/O Link-As-I Converter | Converter unit that connects the FANUC I/O Link with the AS-i (Actuator Sensor Interface), which is an I/O-level open network | Section 9.12 |

# 9.2 CONNECTION OF CONNECTOR PANEL I/O MODULE

## 9.2.1 Configuration

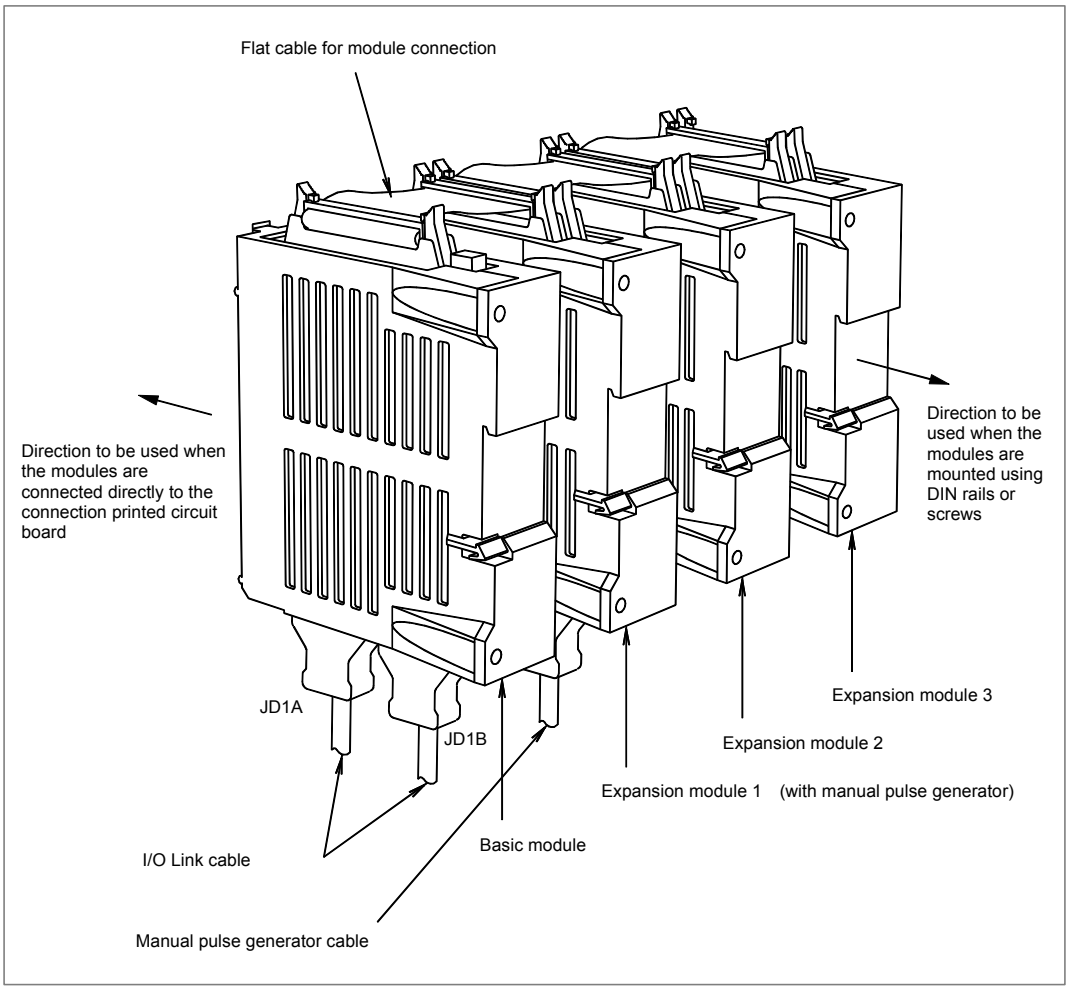


**NOTE**

For direction connection to the connection printed circuit board, expansion modules are installed to the right of the basic module on the installation plane. For installation using DIN rails or screws, expansion modules are installed to the left of the basic module on the installation plane.

## 9.2.2 Connection Diagram

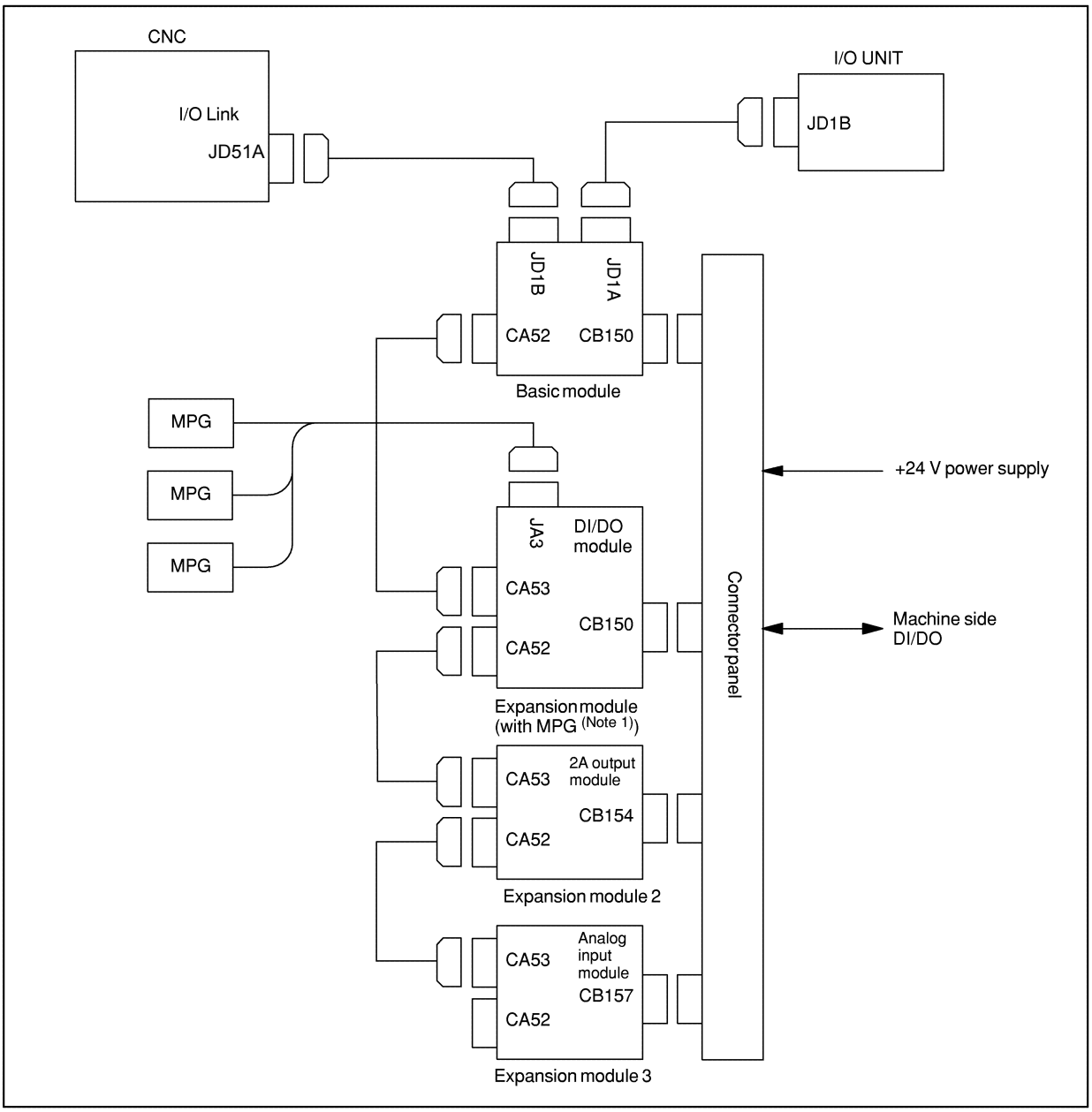


**NOTE**

1 Ensure that the expansion module with the MPG interface is located nearest to the basic module, as shown in the figure. When this module is used with other units (such as I/O modules for the operator's panel) that are connected to the I/O Link and have the MPG interface, only the MPG interface of the unit (module) that is on the I/O Link and is nearest to the CNC is enabled.

2 The connection diagram above shows an example of using a DI/DO module, 2A output module, and analog input module as expansion modules. These expansion modules can be used in any combination.

## 9.2.3 Module Specifications

Types of modules

| Name | Drawing No. | Specifications | Remarks |
|---|---|---|---|
| I/O module for connection (basic module) | A03B-0815-C001 | DI/DO : 24/16 | |
| I/O module for connection (expansion module A) | A03B-0815-C002 | DI/DO : 24/16<br>With MPG interface | |
| I/O module for connection (expansion module B) | A03B-0815-C003 | DI/DO : 24/16<br>Without MPG interface | |
| I/O module for connection (expansion module C) | A03B-0815-C004 | DO : 16<br>2A output module | |
| I/O module for connection (expansion module D) | A03B-0815-C005 | Analog input module | NOTE 1 |
| Fuse (accessory) | A03B-0815-K002 | 1A<br>(for basic module) | |
| Inter–module flat cable | A03B-0815-K100 | 20 mm long<br>Suitable for a module interval of 32 mm | |

NOTE 1 It is possible to connect up to two Analog input modules to one Basic module.

Module specifications (common items)

| Item | Specifications | Remarks |
|---|---|---|
| Interface with CNC | FANUC I/O Link connection | Expandable up to 16 units or 1024/1024 points as CNC slaves |
| Interface between basic module and expansion modules | Bus connection using a flat cable | Up to three expansion modules connectable per basic module |

For the specifications (such as signal input requirements) specific to each module, see the relevant pages of each item.

### Installation conditions

| | |
|---|---|
| Ambient temperature for the unit | Operation: 0°C to 55°C<br>Storage and transportation: -20°C to 60°C |
| Temperature change | 1.1°C/minute maximum |
| Humidity | Normal condition: 75% (relative humidity)<br>Short term (within one month): 95% (relative humidity) |
| Vibration | Operation: 0.5 G or less |
| Atmosphere | Normal machining factory environment (For use in an environment with relatively high levels of dust, coolant, organic solutions, and so forth, additional measures are required.) |

| | |
|---|---|
| Other conditions | (1) Use each I/O module in a completely sealed cabinet.<br>(2) For ventilation within each I/O module, each module must be installed in the orientation shown below.<br>Moreover, for ventilation and wiring, allow a clearance of 100 mm or more above and below each module. Never place a device that generates a large amount of heat below an I/O module.<br>(3) While referring to Subsection 9.2.7, ensure that the vent hole of the basic module is not obstructed by the flat cable.<br> 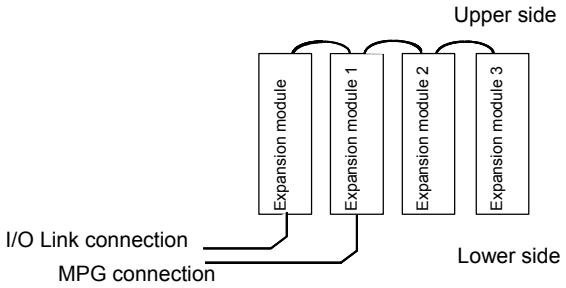 <br> |

## Power supply rating

| Module | Power supply voltage | Power supply rating | Remarks |
|---|---|---|---|
| Basic module | 24 VDC ±10% is fed through the I/O connector (CB150) of 0.2A+7.3mA±DI the basic module;<br>±10% includes momentary variations and ripples. | 0.2A+7.3mA×DI | Number of DI points with DI=ON |
| Expansion modules A and B | | 0.1A+7.3mA×DI | Number of DI points with DI=ON |
| Expansion module C (2A module) | | 0.1A | |
| Expansion module D (analog input module) | | 0.1A | |

As a guideline for the heat dissipation, assume [power supply capacity × 24 (W)].

## 9.2.4 DI/DO Connector Pin Assignment

This section describes the DI/DO connector pin allocation of the basic module and expansion modules A and B.

CB150 (HONDA MR–50RMA)

| | | | | | |
|---|---|---|---|---|---|
| 33 | DOCOM | | | 01 | DOCOM |
| 34 | Yn+0.0 | 19 | 0V | 02 | Yn+1.0 |
| 35 | Yn+0.1 | 20 | 0V | 03 | Yn+1.1 |
| 36 | Yn+0.2 | 21 | 0V | 04 | Yn+1.2 |
| 37 | Yn+0.3 | 22 | 0V | 05 | Yn+1.3 |
| 38 | Yn+0.4 | 23 | 0V | 06 | Yn+1.4 |
| 39 | Yn+0.5 | 24 | DICOM0 | 07 | Yn+1.5 |
| 40 | Yn+0.6 | 25 | Xm+1.0 | 08 | Yn+1.6 |
| 41 | Yn+0.7 | 26 | Xm+1.1 | 09 | Yn+1.7 |
| 42 | Xm+0.0 | 27 | Xm+1.2 | 10 | Xm+2.0 |
| 43 | Xm+0.1 | 28 | Xm+1.3 | 11 | Xm+2.1 |
| 44 | Xm+0.2 | 29 | Xm+1.4 | 12 | Xm+2.2 |
| 45 | Xm+0.3 | 30 | Xm+1.5 | 13 | Xm+2.3 |
| 46 | Xm+0.4 | 31 | Xm+1.6 | 14 | Xm+2.4 |
| 47 | Xm+0.5 | 32 | Xm+1.7 | 15 | Xm+2.5 |
| 48 | Xm+0.6 | | | 16 | Xm+2.6 |
| 49 | Xm+0.7 | | | 17 | Xm+2.7 |
| 50 | +24V | | | 18 | +24V |

50 male pins with fittings for fixing the connector covers

**NOTE**

1 The DI and DO addresses for the basic and expansion modules run contiguously. These basic and expansion module DI and DO addresses are allocated to the I/O Link as a group. For example, when the DI and DO top addresses are X0004 and Y0000 (m = 4 and n = 0), respectively, then the addresses are allocated as shown in the following table.

2 Pins 18 and 50 (+24V) of connector CB150 are used to apply 24 V externally to a module. Be sure to connect these pins because the +24 V applied to the module is used internally.

| | DI | DO |
|---|---|---|
| Basic module | X4 to X6 | Y0 to Y1 |
| Expansion module 1 | X7 to X9 | Y2 to Y3 |
| Expansion module 2 | X10 to X12 | Y4 to Y5 |
| Expansion module 3 | X13 to X15 | Y6 to Y7 |

## 9.2.5 DI (Input Signal) Connection

This section describes the DI (input signal) connections of the basic module and expansion modules A and B.

- A maximum of 96 points are provided (24 points per module; 1 basic module + 3 expansion modules).

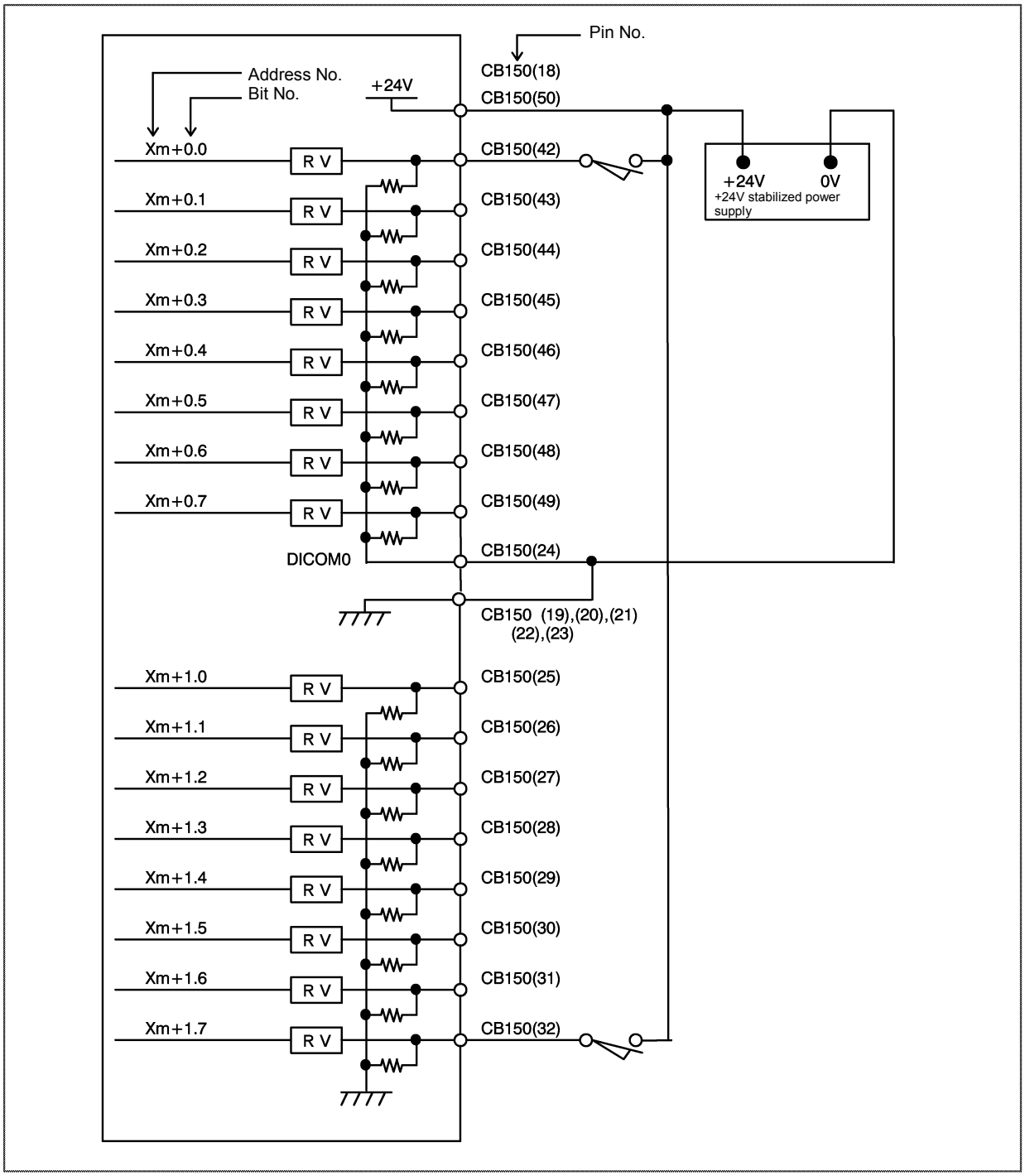

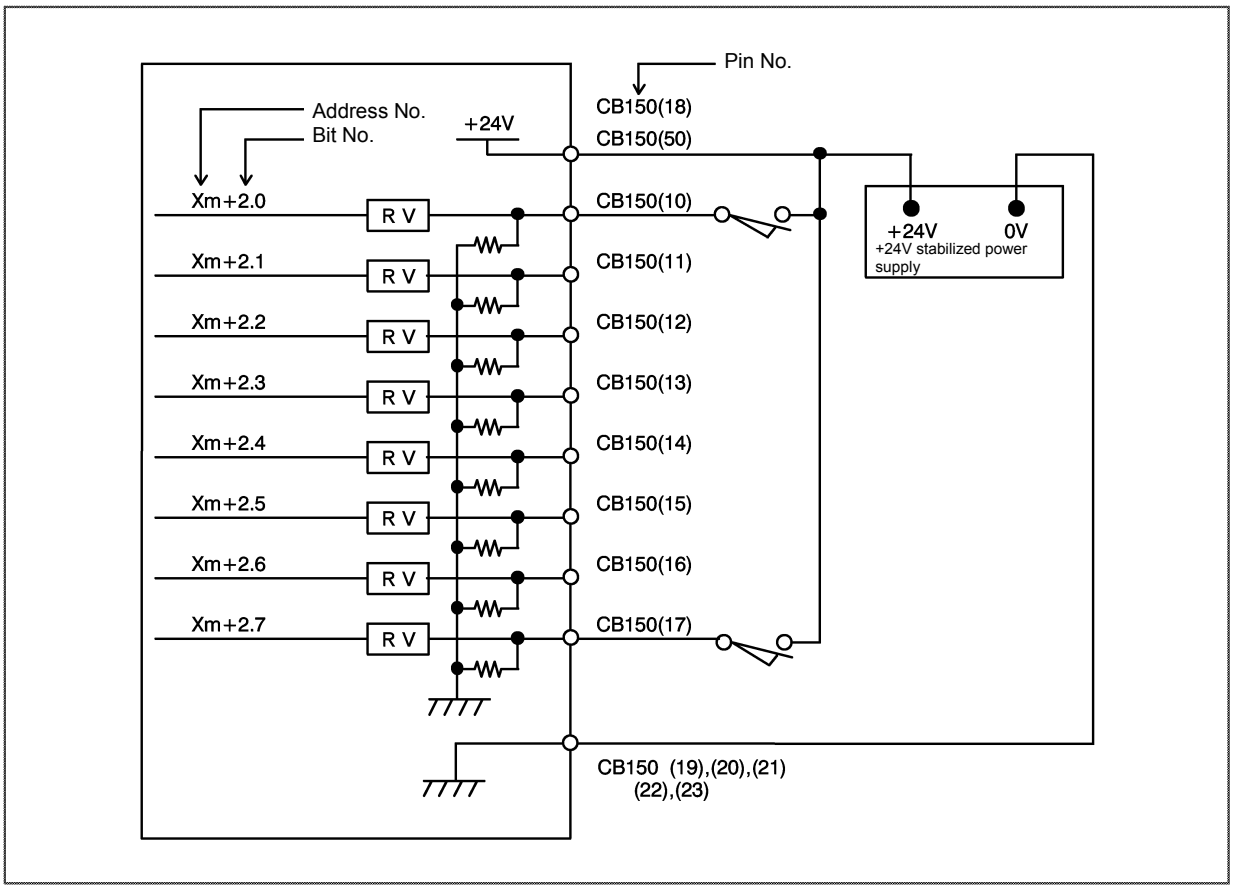


**NOTE**

Xm+0.0 through Xm+0.7 are DI pins for which a common voltage can be selected. That is, by connecting the DICOM0 CB150(24) pin to the +24 V power supply, a DI signal can be input with its logical state reversed. If, however, a cable is connected to ground, it has the same effect as inputting an ON state DI signal. To prevent such accidents, the connection of the DICOM0 CB150(24) pin to the 0 V power supply is recommended whereever possible.

For safety reasons, the emergency stop signal needs to be allocated to an appropriate bit of the addresses for which the common voltage is fixed, ranging from Xm+1.0 to Xm+1.7 or from Xm+2.0 to Xm+2.7. See Subsection 8.4.19 for information about how to allocate the emergency stop signal.

For unused DI pins allocated to the addresses for which the common voltage is fixed (fromXm+1.0 to Xm+1.7 and from Xm+2.0 to Xm+2.7), the logic is fixed to “0”. For unused pins allocated to Xm+0.0 to Xm+0.7 for which the common voltage can be selected, the logic is fixed to “0” when the DICOM0 CB150(24) pin is connected to the 0 V power supply. When the DICOM0 CB150(24) pin is connected to the +24 V power supply, the logic is fixed to “1”. The logic of the unused pins allocated to Xm+0.0 to Xm+0.7 is variable when the contact of the DICOM0 CB150(24) pin is open.

## 9.2.6 DO (Output Signal) Connection

This section describes the DO (output signal) connections of the basic module and expansion modules A and B.

- A maximum of 64 points are provided (16 points per module; 1 basic module + 3 expansion modules).

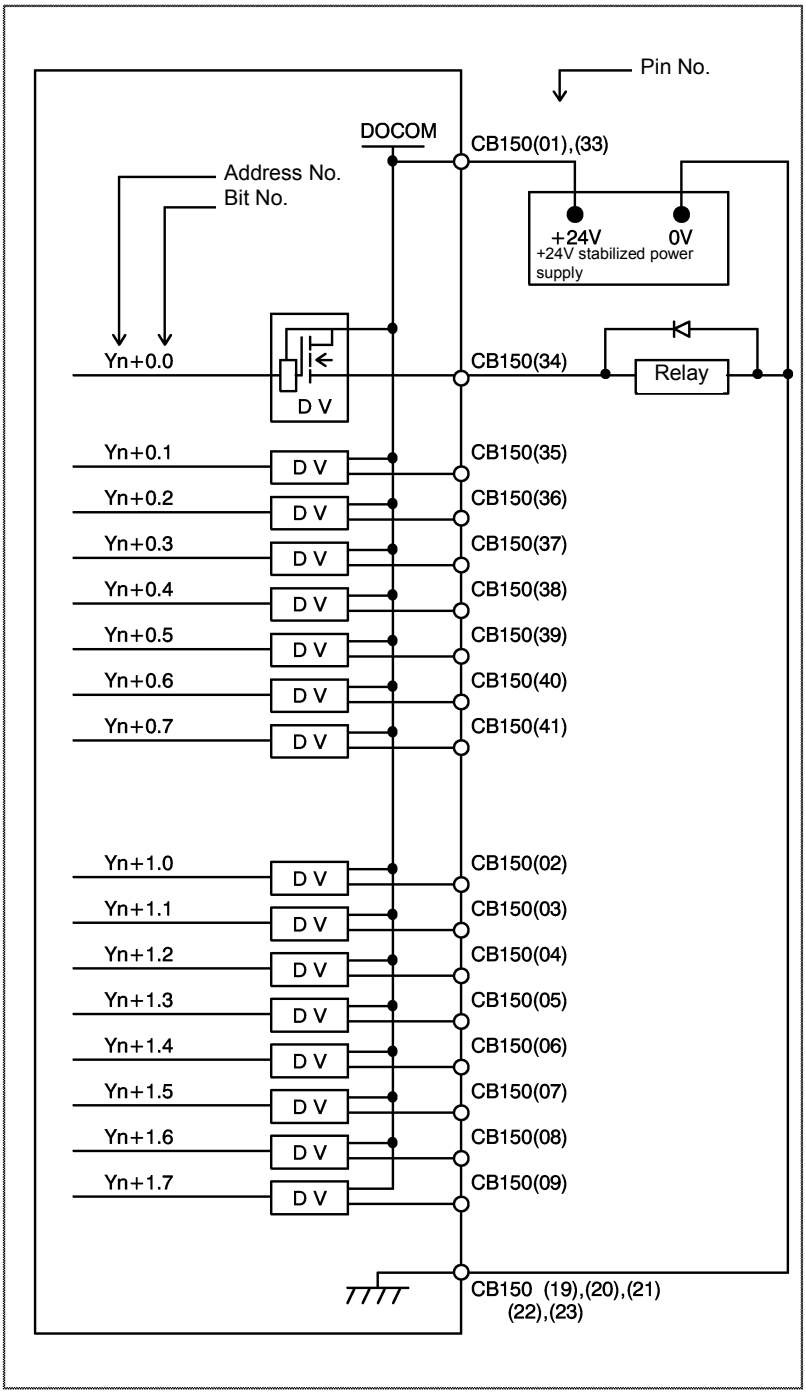

## 9.2.7 DI/DO Signal Specifications

This section describes the specifications of the DI/DO signals used with the basic module and expansion modules A and B.

DI (input signal specifications)

| Number of points | 24 points (per module) |
|---|---|
| Contact rating | 30 VDC, 16 mA or more |
| Leakage current between contacts when opened | 1 mA or less (26.4 V) |
| Voltage decrease between contacts when closed | 2 V or less (including a cable voltage decrease) |
| Delay time | The receiver delay time is 2 ms (maximum). In addition, [I/O Link transfer time between CNC and I/O module (2 ms maximum)] + [ladder scan period (depending on CNC)] must be considered. |

DO (output signal specifications)

| Number of points | 16 points (per module) |
|---|---|
| Maximum load current when ON | 200 mA or less including momentary variations |
| Saturation voltage when ON | 1 V (maximum) when the load current is 200 mA |
| Withstand voltage | 24 V +20% or less including momentary variations |
| Leakage current when OFF | 20 µA or less |
| Delay time | The driver delay time is 50 µs (maximum). In addition, [I/O Link transfer time between CNC and I/O module (2 ms maximum)] + [ladder scan period (depending on CNC)] needs to be considered. |

ON/OFF of the power supply (DO common) for DO signals (output signals)
By turning off (opening) the power supply pin (DOCOM) for the DO signals (output signals), all the DO signals of each module can be turned off at the same time. At this time, the DO state is as shown below.

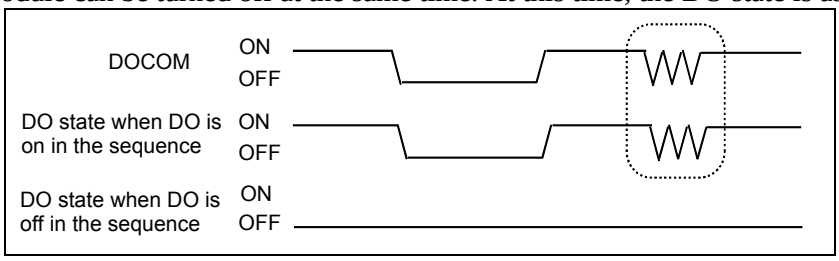


**NOTE**
When DO is on in the sequence, the ON/OFF state of DOCOM is directly reflected in the DO state as indicated above by the dashed box. The +24 V signal to be supplied to the I/O module must not be turned off during operation. Otherwise, a CNC communication alarm is issued. Ensure that +24 V is supplied either when or before the power to the CNC is turned on, and that +24 V is removed either when or after the power to the CNC is turned off.

Parallel DO (output signal) connection
A DO load current of twice the level can be obtained by connecting DO points in parallel and exercising ON/OFF control at the same time in the sequence. Namely, the maximum load current per DO point is 200 mA.
By connecting two DO points in parallel and turning on the two DO points at the same time, 400 mA can be obtained. In this case, however, the leakage current is doubled up to 40 µA when the DO points are turned off.

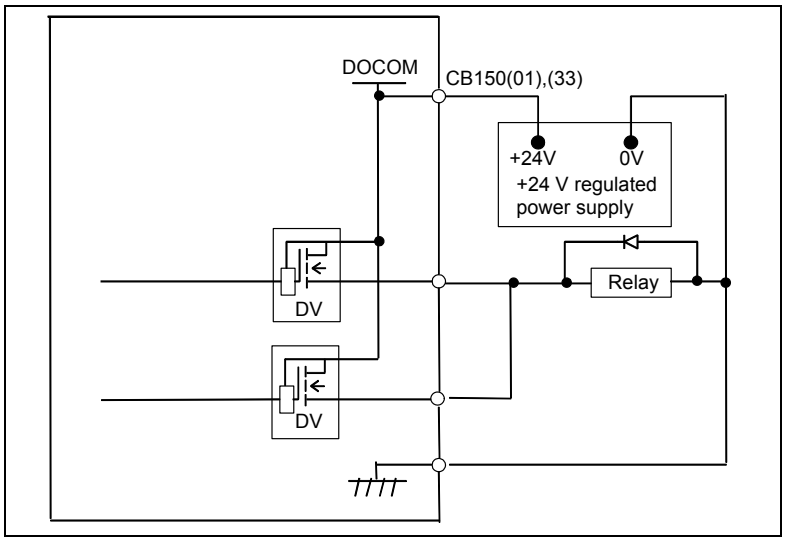


## 9.2.8 2A Output Connector Pin Allocation

This section describes the 2A output connector pin allocation of expansion module C.

CB154 (HONDA MR–50RMA)

| | | | | | |
|---|---|---|---|---|---|
| 33 | DOCOMA | | | 01 | DOCOMA |
| 34 | Yn+0.0 | 19 | GNDA | 02 | Yn+1.0 |
| 35 | Yn+0.1 | 20 | GNDA | 03 | Yn+1.1 |
| 36 | Yn+0.2 | 21 | GNDA | 04 | Yn+1.2 |
| 37 | Yn+0.3 | 22 | GNDA | 05 | Yn+1.3 |
| 38 | Yn+0.4 | 23 | GNDA | 06 | Yn+1.4 |
| 39 | Yn+0.5 | 24 | | 07 | Yn+1.5 |
| 40 | Yn+0.6 | 25 | | 08 | Yn+1.6 |
| 41 | Yn+0.7 | 26 | | 09 | Yn+1.7 |
| 42 | | 27 | | 10 | |
| 43 | | 28 | | 11 | |
| 44 | | 29 | | 12 | |
| 45 | | 30 | | 13 | |
| 46 | | 31 | | 14 | |
| 47 | | 32 | | 15 | |
| 48 | | | | 16 | |
| 49 | DOCOMA | | | 17 | DOCOMA |
| 50 | DOCOMA | | | 18 | DOCOMA |

50 pins, male,
with a metal fitting for securing
the connector cover

**NOTE**

1 The DI/DO addresses of an expansion module and the DI/DO addresses of the basic module are contiguous.
Addresses allocated to I/O Link are handled as a group covering the basic and expansion modules. That is, when the first addresses allocated are X0004 and Y0000 (m = 4, n = 0), the DI/DO addresses are as listed below.

2 When the 2A output module is used, the DI addresses of the module cannot be used. (When the 2A output module is used as expansion module 3, X13 through X15 cannot be used.)

| | DI | DO |
|---|---|---|
| Basic module | X4 to X6 | Y0 to Y1 |
| Basic module 1 | X7 to X9 | Y2 to Y3 |

| | DI | DO |
|---|---|---|
| Basic module 2 | X10 to X12 | Y4 to Y5 |
| Basic module 3 | X13 to X15 | Y6 to Y7 |

## 9.2.9 2A DO (Output Signal) Connection

This section describes the 2A output connector connections of expansion module C.

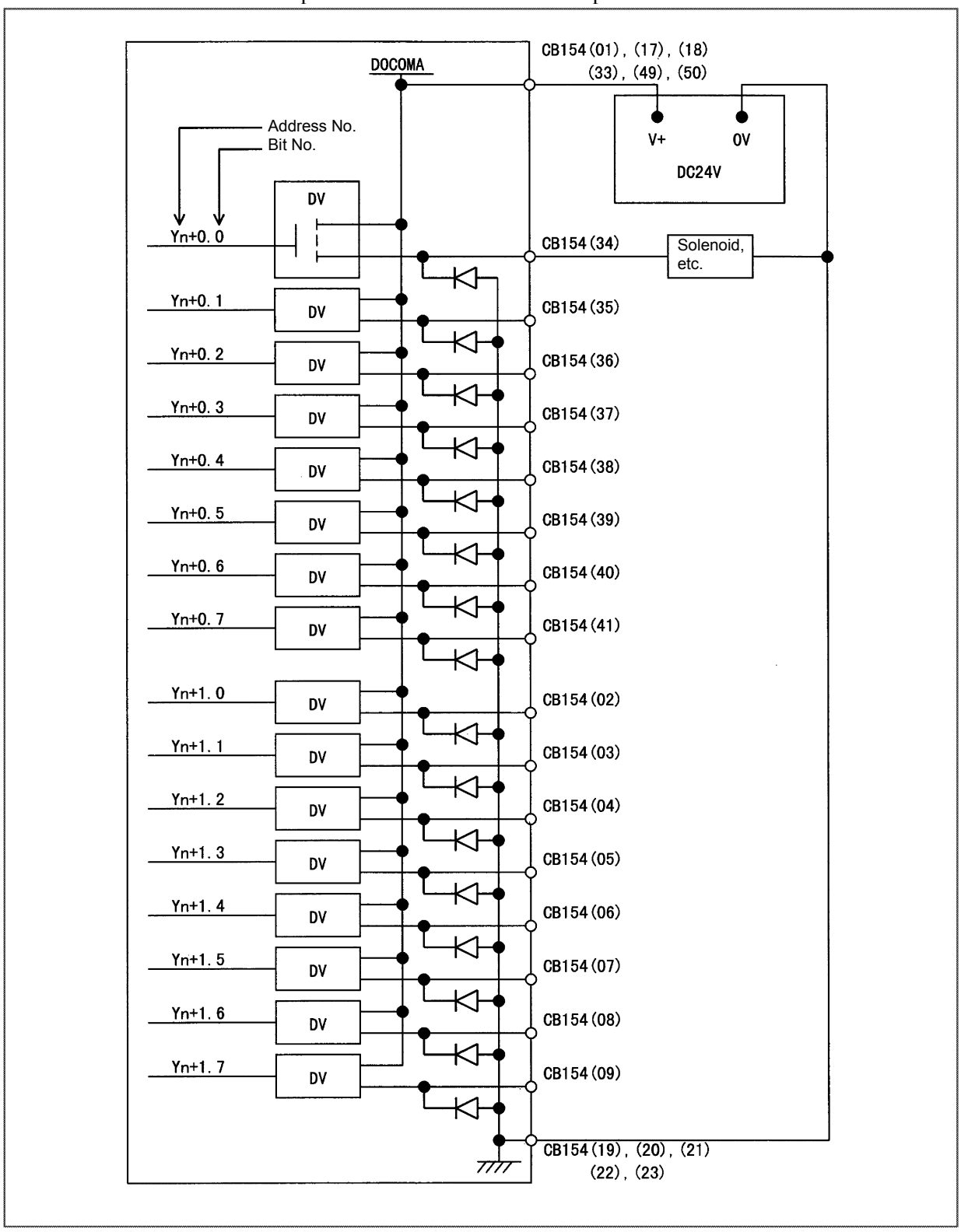

## 9.2.10 2A Output DO Signal Specifications

This section describes the specifications of the 2A output DO signals used with expansion module C.

DO (output signal specifications)

| Number of points | 32 points (per module) |
|---|---|
| Maximum load current when ON | 2 A or less per point.<br>12 A maximum for the entire module (DO: 16 points) (including momentary variations). |
| Withstand voltage | 24 V +20% or less<br>(including momentary variations) |
| Leakage current when OFF | 100 μA or less |
| Delay time | [I/O Link transfer time (2 ms maximum)] + [ladder scan period (depending on CNC)] must be considered. |

ON/OFF of the power supply (DO common) for DO signals (output signals)
By turning off (opening) the power supply pin (DOCOM) for the DO signals (output signals), all the DO signals of each module can be turned off at one time. At this time, the DO state is as shown below.

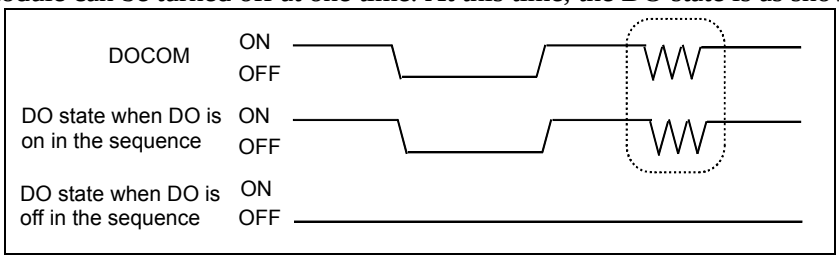


**NOTE**
When DO is on in the sequence, the ON/OFF state of DOCOM is directly reflected in the DO state as indicated above by the dashed box. The +24 V signal to be supplied to the I/O module must not be turned off during operation. Otherwise, a CNC communication alarm is issued. Ensure that +24 V is supplied either when or before the power to the CNC is turned on, and that +24 V is removed either when or after the power to the CNC is turned off.

Parallel DO (output signal) connection
The 2A output module does not allow parallel DO connections including parallel connections with the DO signals of other modules.

## 9.2.11 Analog Input Connector Pin Allocation

This section describes the analog input connector pin allocation of expansion module D.

CB157 (HONDA MR–50RMA)

| | | | | | |
|---|---|---|---|---|---|
| 33 | INM3 | | | 01 | INM1 |
| 34 | COM3 | 19 | FGND | 02 | COM1 |
| 35 | FGND3 | 20 | FGND | 03 | FDND1 |
| 36 | INP3 | 21 | FGND | 04 | INP1 |
| 37 | JMP3 | 22 | FGND | 05 | JMP1 |
| 38 | INM4 | 23 | FGND | 06 | INM2 |
| 39 | COM4 | 24 | | 07 | COM2 |
| 40 | FGND4 | 25 | | 08 | FGND2 |
| 41 | INP4 | 26 | | 09 | INP2 |
| 42 | JMP4 | 27 | | 10 | JMP2 |
| 43 | | 28 | | 11 | |
| 44 | | 29 | | 12 | |
| 45 | | 30 | | 13 | |
| 46 | | 31 | | 14 | |
| 47 | | 32 | | 15 | |
| 48 | | | | 16 | |
| 49 | | | | 17 | |
| 50 | | | | 18 | |

50 pins, male,
with a metal fitting for securing
the connector cover

**NOTE**

1 The DI/DO addresses of an expansion module and the DI/DO addresses of the basic module are contiguous.
Addresses allocated to I/O Link are handled as a group covering the basic and expansion modules. That is, when the first addresses allocated are X0004 and Y0000 (m = 4, n = 0), the DI/DO addresses are as listed below.

2 With the analog input module, the DO space is also used as an input channel selection area.

| | DI | DO |
|---|---|---|
| Basic module | X4 to X6 | Y0 to Y1 |
| Basic module 1 | X7 to X9 | Y2 to Y3 |
| Basic module 2 | X10 to X12 | Y4 to Y5 |
| Basic module 3 | X13 to X15 | Y6 to Y7 |

## 9.2.12 Analog Input Signal Connections

This section provides a diagram of the analog input connector connections of expansion module D.

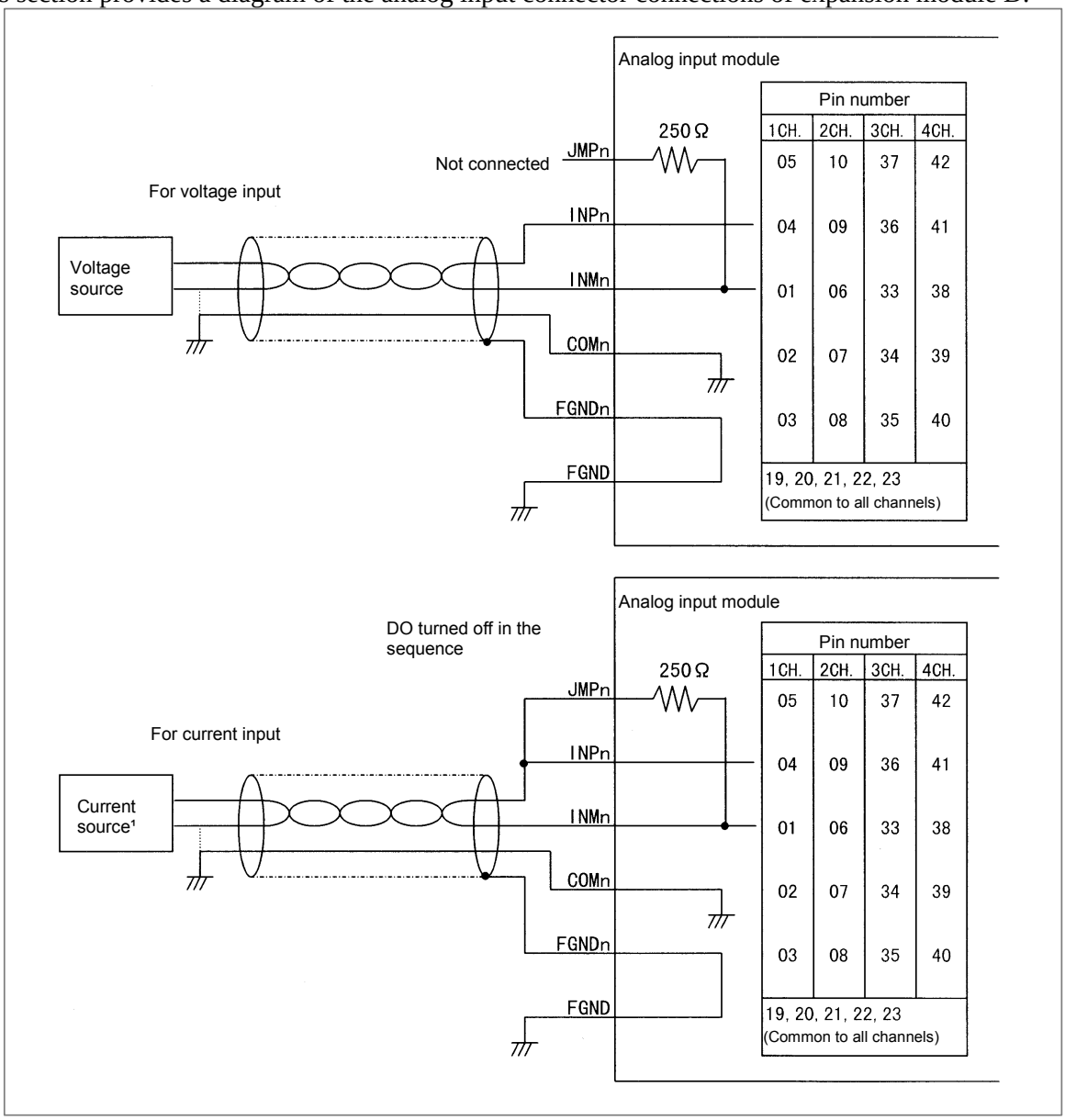


**NOTE**

1 In the diagram above, n represents each channel (n = 1, 2, 3, 4).
2 Current input or voltage input can be selected on a channel–by–channel basis. For current input, connect JMPn to INPn.
3 For the connection, use a shielded twisted pair.
4 In the diagram above, the shield of each channel is connected to FGNDn, and FGND is used for shield processing of all channels. However, the shield of a channel may be directly connected to frame ground with a cable clamp, instead of using FGNDn.
5 If the voltage (current) source has a GND pin, as shown in the figure above, connect COMn to this pin. Otherwise, connect INMn and COMn together in the analog input module.

## 9.2.13 Analog Input Signal Specifications

This section describes the specifications of the analog input signals used with expansion module D.

| Item | Specifications | Remarks |
|---|---|---|
| Number of input channels (Note) | Four channels | |
| Analog input | DC-10 to +10V (Input resistance: 4.7 MΩ)<br>DC-20 to +20mA (Input resistance: 250 Ω) | Voltage input or current input can be selected on channel–by–channel basis. |
| Digital output (Note) | 12 bits (binary) | Represented as two's complement |
| Input/output correspondence | Analog input / Digital output<br>+10V / +2000<br>+5V or +20mA / +1000<br>0V or 0mA / 0<br>-5V or -20mA / -1000<br>-10V / -2000 | |
| Resolution | 5 mV or 20 μA | |
| Overall precision | Voltage input: ±0.5%<br>Current input: ±1% | With respect to full scale |
| Maximum input voltage/current | ±15V/±30mA | |
| Minimum conversion time (Note) | Ladder scan period of CNC connected | |
| Number of occupied input/output points (Note) | DI = 3 bytes, DO = 2 bytes | |

**NOTE**

This analog input module has four input channels. The digital output section consists of a group of 12 bits within the three–byte occupied input points. This means that the channel to be used can be dynamically selected by the ladder. The channel switching DO point for channel selection is included in the two–byte occupied output points.

## 9.2.14 Analog Input Specifications

(Digital output)

This digital input module has four input channels. The digital output section consists of a group of 12 bits within the three–byte occupied input points. The output format is indicated below.

| Address in the module | 7 | 6 | 5 | 4 | 3 | 2 | 1 | 0 |
|---|---|---|---|---|---|---|---|---|
| Xm(even–numbered address) | D07 | D06 | D05 | D04 | D03 | D02 | D01 | D00 |
| Xm+1(odd–numbered address) | 0 | 0 | CHB | CHA | D11 | D10 | D09 | D08 |

D00 to D11 represent 12–bit digital output data. D00 and D11 correspond to weightings of 20 and 211, respectively.

D11 is a sign bit expressed as a two's complement. CHA and CHB represent analog input channels.

This means that when the two bytes above are read with a PMC program, the A–D converted data of the CHA and CHB input channels can be read from D11 to D00. For CHA and CHB, see the description of channel selection, below.

When data is read with a PMC program, some notes need to be observed. See "(Address allocation)" on the next page.

(Channel selection)
With this analog input module, which of the four channels is to be output to the digital output section must be determined with a PMC program.
The DO points used for this selection are CHA and CHB (two–byte occupied output points). These are mapped as indicated below.

| Address in the module | 7 | 6 | 5 | 4 | 3 | 2 | 1 | 0 |
|---|---|---|---|---|---|---|---|---|
| Yn | X | X | X | X | X | X | X | X |
| Yn+1 | X | X | X | X | X | X | CHB | CHA |

By writing the values indicated below to CHA and CHB, the corresponding channel is selected, and the A–D converted data of the channel and the data of the selected channel can be read as DI data. The character X indicated above represents an unused bit, so that either 1 or 0 may be written in place of X.

| CHB | CHA | Channel selected |
|---|---|---|
| 0 | 0 | Channel 1 |
| 0 | 1 | Channel 2 |
| 1 | 0 | Channel 3 |
| 1 | 1 | Channel 4 |

Immediately after channel switching, some time is required until the channel is switched to the selected one and A-D converted data is enabled. Be sure to confirm the channel before obtaining A-D converted data.

(Address allocation)
The start address of X (DI) of the basic modules including the analog input module must always be allocated at an even–numbered address. With this allocation, the digital output addresses of the analog input module are as described below, depending on where the analog input module is allocated

- When the analog input module is allocated in the space for expansion module 1 (m represents the allocation start address.)

| Address in the module | 7 | 6 | 5 | 4 | 3 | 2 | 1 | 0 |
|---|---|---|---|---|---|---|---|---|
| Xm+3(odd–numbered address) | Undefined | | | | | | | |
| Xm+4(even–numbered address) | D07 | D06 | D05 | D04 | D03 | D02 | D01 | D00 |
| Xm+5(odd–numbered address) | 0 | 0 | CHB | CHA | D11 | D10 | D09 | D08 |

- When the analog input module is allocated in the space for expansion module 2 (m represents the allocation start address.)

| Address in the module | 7 | 6 | 5 | 4 | 3 | 2 | 1 | 0 |
|---|---|---|---|---|---|---|---|---|
| Xm+6(even–numbered address) | D07 | D06 | D05 | D04 | D03 | D02 | D01 | D00 |
| Xm+7(odd–numbered address) | 0 | 0 | CHB | CHA | D11 | D10 | D09 | D08 |
| Xm+8(even–numbered address) | Undefined | | | | | | | |

- When the analog input module is allocated in the space for expansion module 3 (m represents the allocation start address.)

| Address in the module | 7 | 6 | 5 | 4 | 3 | 2 | 1 | 0 |
|---|---|---|---|---|---|---|---|---|
| Xm+9(odd–numbered address) | Undefined | | | | | | | |
| Xm+10(even–numbered address) | D07 | D06 | D05 | D04 | D03 | D02 | D01 | D00 |
| Xm+11(odd–numbered address) | 0 | 0 | CHB | CHA | D11 | D10 | D09 | D08 |

**NOTE**
When two–byte digital output addresses are to be referenced with a PMC program, a read must always be performed word–by–word (16 bits).

## 9.2.15 Manual Pulse Generator Connection

An example in which three manual pulse generators are connected to expansion module A is shown below.

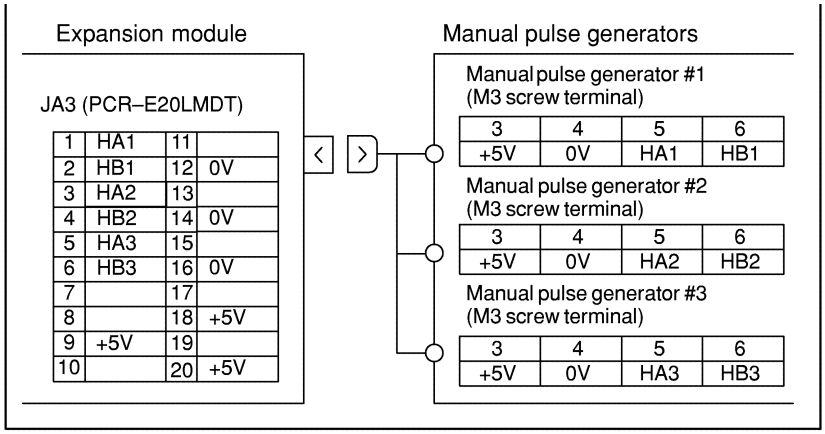


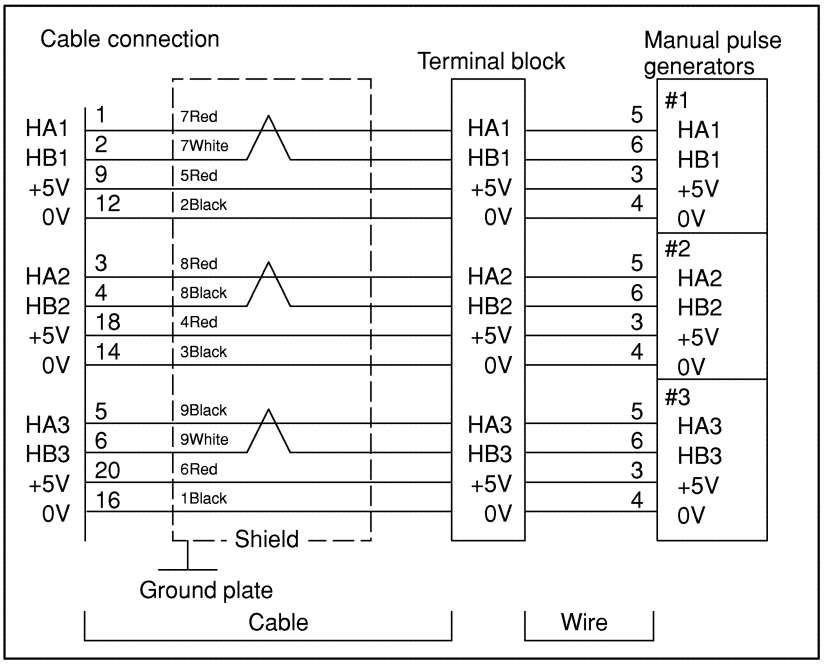


Recommended wire material:

A66L-0001-0286 (#20AWG×6+#24AWG×3 pairs)

Recommended connector:

A02B-0120-K303 (including the following connector and case)
(Connector: Hirose Electric Co., Ltd. FI40-2015S, soldering type)
(Case: Hirose Electric Co., Ltd. FI40-20-CV5)

Recommended cables:

A02B-0120-K841 (7m) (for connecting three manual pulse generators)
A02B-0120-K848 (7m) (for connecting two manual pulse generators)
A02B-0120-K847 (7m) (for connecting one manual pulse generator)

(These cables do not include the wire shown in the above figure.)

**NOTE**

The number of connectable manual pulse generators depends on the type and option configuration.

## 9.2.16 Cable Length for Manual Pulse Generator

Like a pulse coder, the manual pulse generator operates on 5 VDC. The supply voltage drop due to the cable resistance must be held below 0.2 V (when those of the 0–volt and 5–volt wires are combined), as expressed in the following expression:

$$0.2 \geq \frac{0.1 \times R \times 2L}{m}$$

Where 0.1 : Manual pulse generator supply current [0.1 A]
R : Resistance per unit cable length [μ/m]
m : Number of 0–volt and 5–volt wires
L : Cable length [m].

$$L \leq \frac{m}{R}$$

Therefore, the cable length can be determined using the following expression.
In the case of the A66L–0001–0286 cable, for example, when three pairs of signal wires and six power supply wires (20/0.18, 0.0394 Ω/m) are used (three power supply wires connected to 5 V and the other three to 0 V), the cable length is:

$$L \leq \frac{3}{0.0394} = 76.75[m]$$

However, the maximum pulse transmission distance for the manual pulse generator is 50 m. Taking this into consideration, the cable length may be extended to:
38.37 m (when two generators are used), or
25.58 m (when three generators are used).

## 9.2.17 Connection of Basic and Expansion Modules

Modules can be connected in the same way, regardless of whether you are connecting the basic module to an expansion module or connecting two expansion modules. Connect the modules by using 34–pin flat cable connectors as shown in the figure below. Ensure that all 34 pins at one end of the cable are connected to the corresponding pins at the other end;
e.g., connect the A1 pin to the pin having the same designation (A1) at the other end.

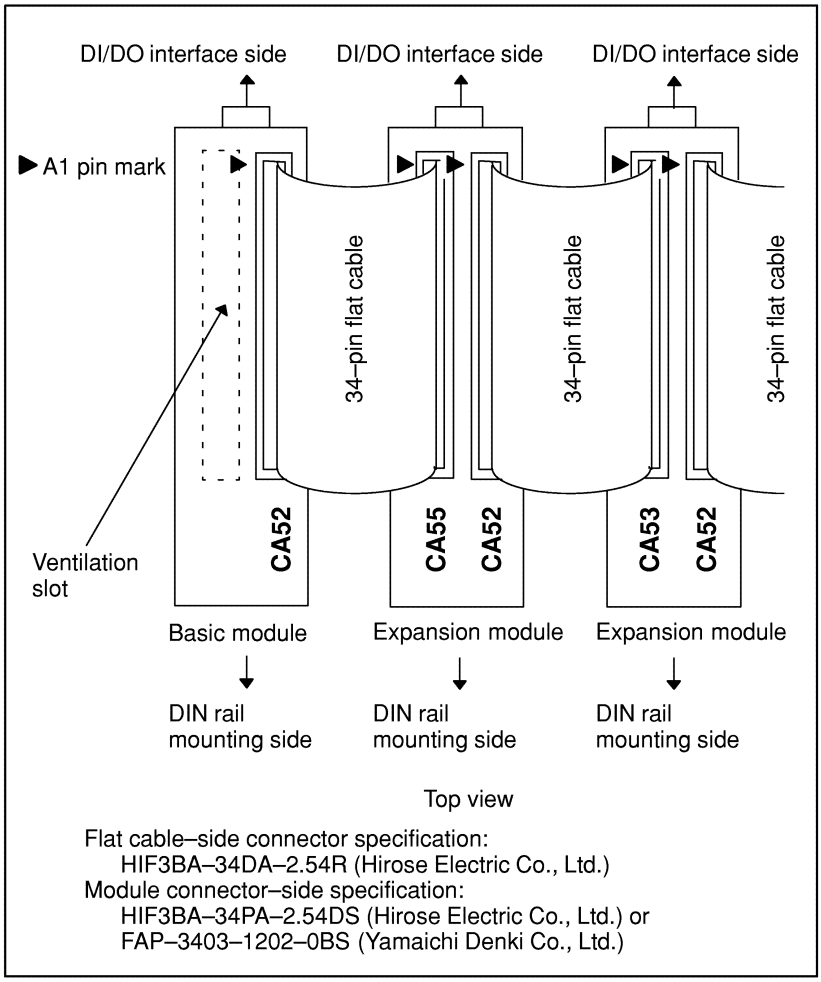


**NOTE**

Modules need to be spaced at least 32 mm apart, in which case a flat cable of about 20 mm in length is required. To install modules further away from each other, the cable length will be 20 mm plus the extra distance. Note that the maximum length of a flat cable is 300 mm. To ensure adequate ventilation, install the modules in such a way that the flat cables lie on top of them. The basic module has a vent at the top (as indicated by the dotted lines in the above figure). When connecting modules, install expansion modules so that the flat cables do not cover the vent, as shown in the above figure.
Therefore, for direct connection to the connection printed circuit board, expansion modules are installed to the right of the basic module on the installation plane. For installation using DIN rails or screws, expansion modules are installed to the left of the basic module on the installation plane.

## 9.2.18 Module Installation

When connecting a connector panel printed circuit board directly
(external module view and mounting diagram)

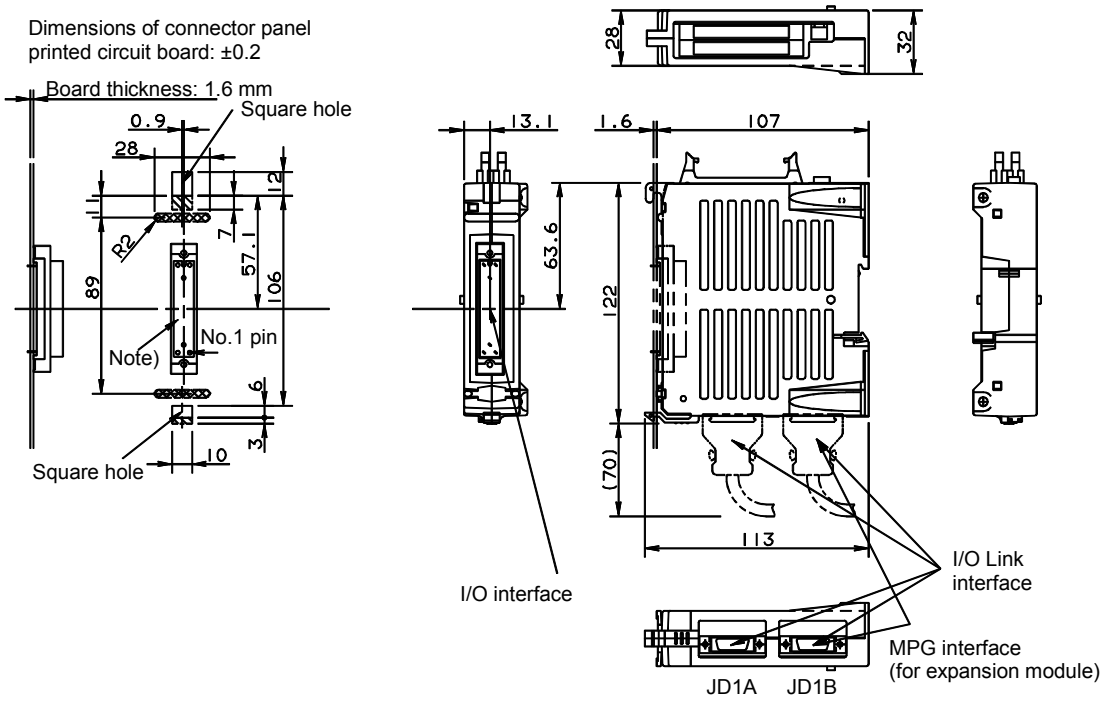


Connector panel printed circuit board connector specification:
HONDA MRH–50FD (50–pin female straight connector without fitting)

**NOTE**

1 A connector with a fitting (HONDA MRH–50RMA) is used for the module–side I/O interface.
Always use a connector having no fitting for the connector panel printed circuit board.

2 Area where pattern printing is prohibited
: Prohibited area on component side
: Prohibited area on soldered side

When connecting a connector panel printed circuit board directly (mounting and dismounting a module)

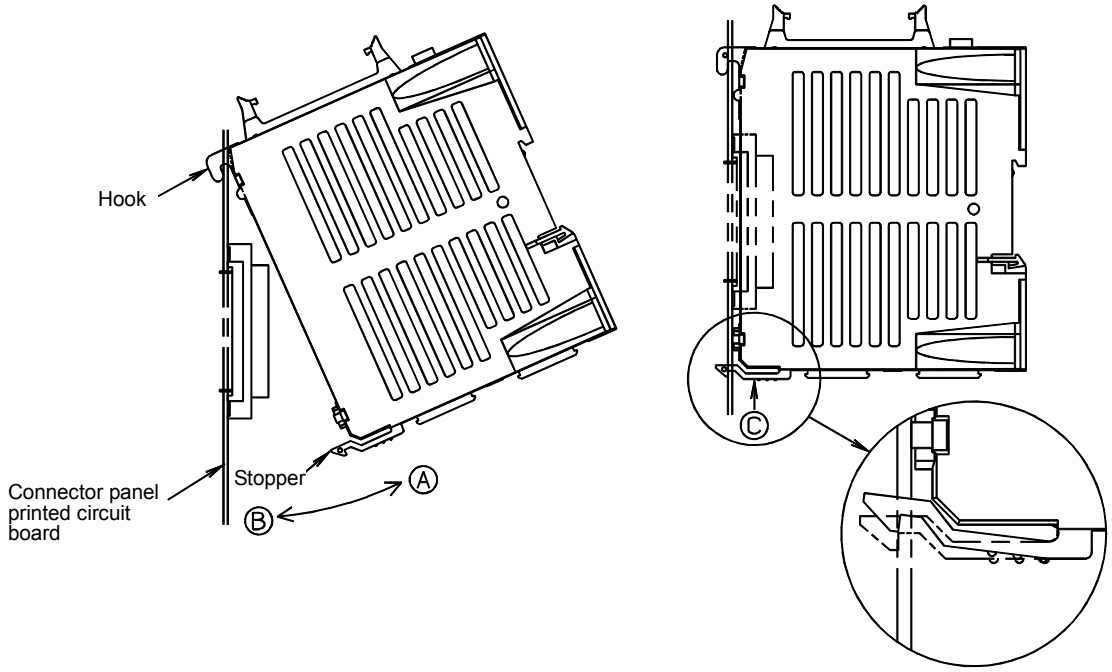


Mounting the module
1. Insert the hook of the module into the square hole located at the upper part of the connector panel printed circuit board.
2. Using the hook as a fulcrum, push the module in the direction of Ⓑ, and attach the module's connector to the connector on the printed circuit board.
3. Push the stopper into the lower hole of the printed circuit board until it clicks into place.

Dismounting the module
1. Press the stopper Ⓒ upward.
2. Using the hook as a fulcrum, pull the lower part of the module in the direction of Ⓐ .

**NOTE**

When mounting and dismounting a module, hold the module by its top and bottom surfaces.
Avoid applying force to the sides where there are slits.

When mounting a DIN rail (external module view and mounting diagram)

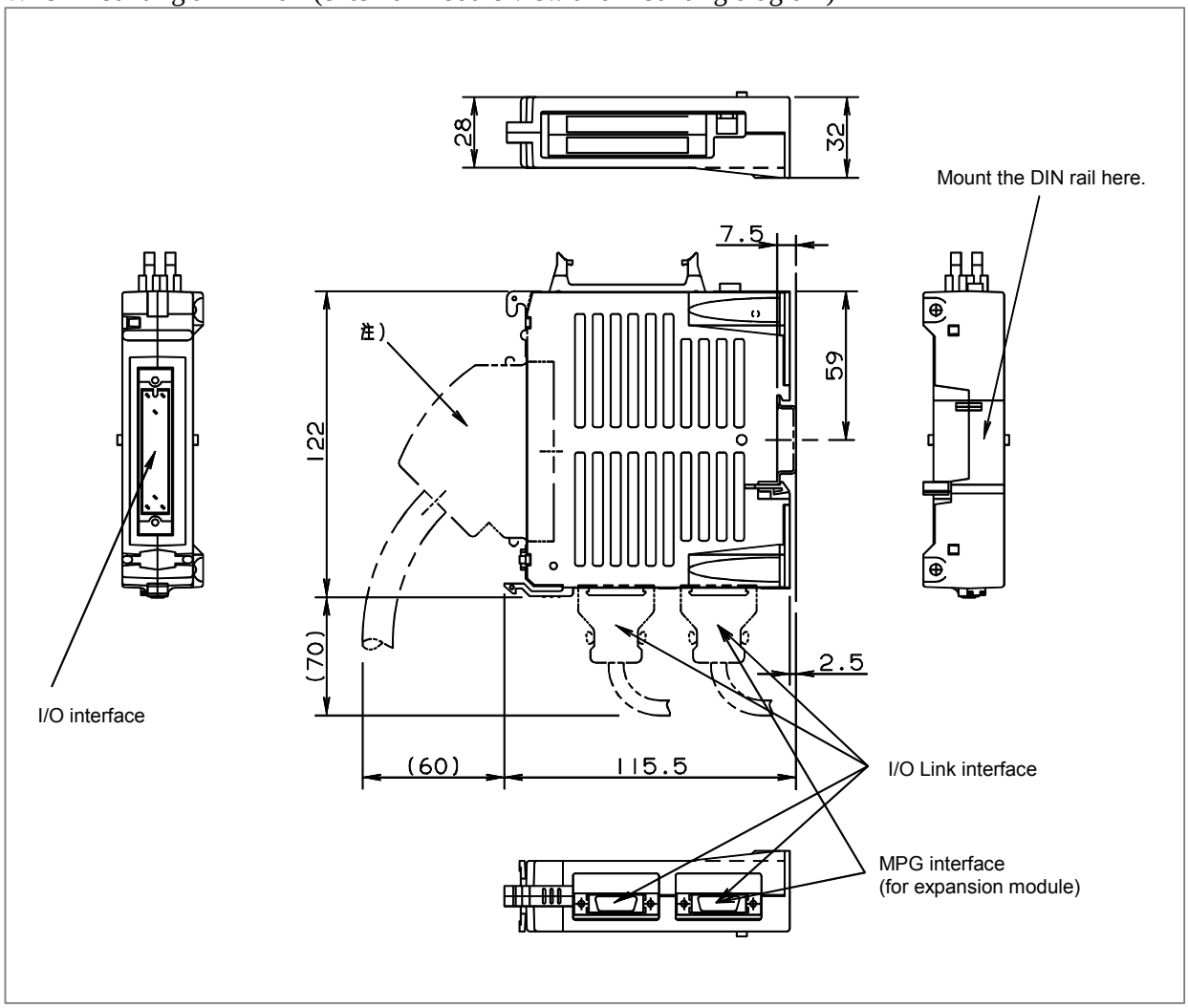


**NOTE**

Recommended connector:

A02B–0098–K891 (including the following connector and case)
(Connector: HONDA MR–50FH solder type)
(Case: HONDA MR–50NSB angled type)

Recommended wire material:

A66L–0001–0042 (7/0.18, 50 pins)

When mounting a DIN rail (mounting and dismounting a module)

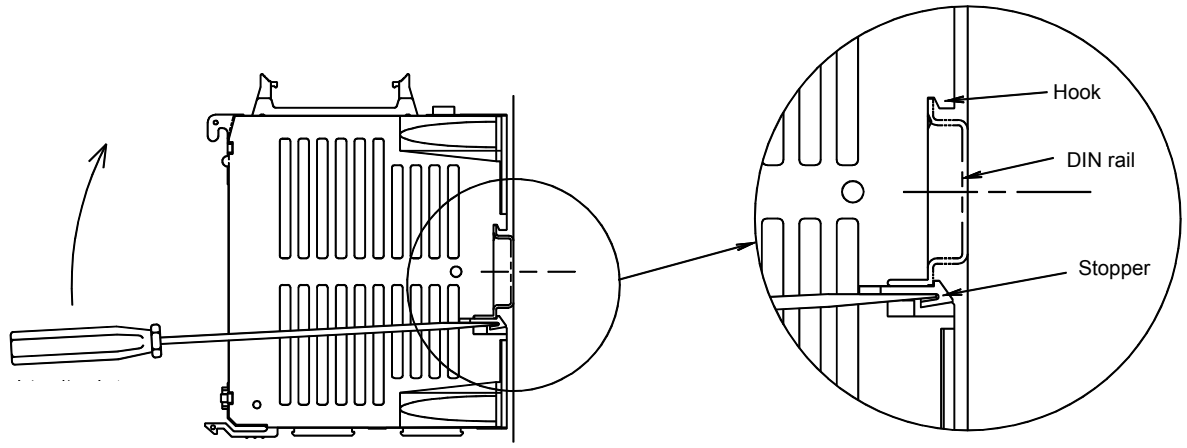


Mounting the module
1. Hook the module at the upper end of the DIN rail.
2. Push the stopper into the slit located at the lower end of the rail until it clicks into place.

Dismounting the module
1. Insert the tip of the slotted screwdriver and push out the stopper in the direction indicated by the arrow.

**NOTE**

When dismounting the module, take care not to damage the stopper by applying excessive force with the screwdriver.
When mounting and dismounting a module, hold the module by its top and bottom surfaces.
Avoid applying force to the sides where there are slits.

When mounting a module using screws (external module view and mounting diagram)

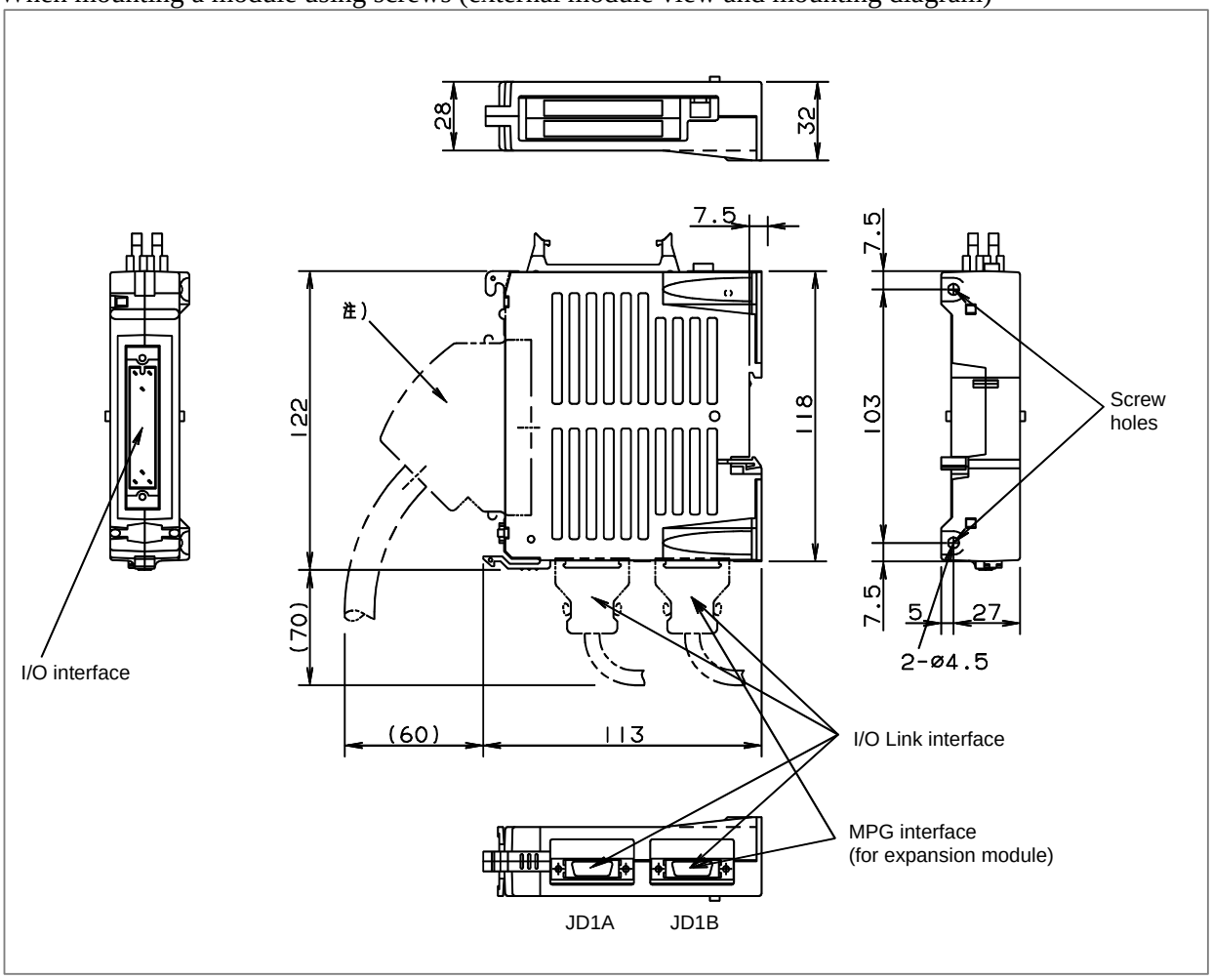


**NOTE**

Recommended connector:

A02B–0098–K891 (including the following connector and case)

(Connector: HONDA MR–50FH solder type)

(Case: HONDA MR–50NSB angled type)

Recommended wire material:

A66L–0001–0042 (7/0.18, 50 pins)

## 9.2.19 Other Notes

### DO signal reaction to a system alarm

There is a possibility that the I/O module will not operate normally due to a failure of CNC or I/O Link slave module, or abnormally power supply voltage. To prevent accidents even in this case, design the machine to operate safely by making a safety circuit outside the I/O module.

The circuit of this I/O module is designed so that all DO signals are turned off if a system alarm is occurred in the CNC which controls the I/O module, or if a power of the CNC or the I/O module is turned off. However, it cannot be guaranteed that DO signals of the I/O module will certainly be turned off. Therefore, manage signals related to safety by making a safety circuit outside this I/O module.

## Address allocation

For the connector panel I/O module, I/O addresses are mapped as follows.

DI space map

| | |
|---|---|
| Xm | Basic module |
| Xm+1 | |
| Xm+2 | |
| Xm+3 | Expansion module 1 |
| Xm+4 | |
| Xm+5 | |
| Xm+6 | Expansion module 2 |
| Xm+7 | |
| Xm+8 | |
| Xm+9 | Expansion module 3 |
| Xm+10 | |
| Xm+11 | |
| Xm+12(for 1st MPG) | Expansion module 1 |
| Xm+13(for 2nd MPG) | |
| Xm+14(for 3rd MPG) | |
| Xm+15(DO alarm detection) | Basic module |

DO space map

| | |
|---|---|
| Yn | Basic module |
| Yn+1 | |
| Yn+2 | Expansion module 1 |
| Yn+3 | |
| Yn+4 | Expansion module 2 |
| Yn+5 | |
| Yn+6 | Expansion module 3 |
| Yn+7 | |

The basic connector panel I/O module is allocated a group of DI addresses (16 bytes) and a group of DO addresses (8 bytes). Up to three hardware expansion modules can be added or removed as required. The reason for this address allocation is explained below.

The MPG interface (MPG counter) occupies a DI space from Xm+12 through Xm+14. These addresses are fixed regardless of whether expansion module 2 or 3 is used, and Xm+12 through Xm+14 must be allocated as a DI work area to enable the use of the MPG. Therefore, when using an MPG for the i series CNC, allocate DI addresses in units of 16 bytes. Do not use the DI space from Xm+12 through Xm+14 for Ladder; the CNC processes the MPG counter value directly.

DI address Xm+15 is used for detecting overcurrent and overheating alarms that occur in the IC used in the DO driver. [For details, see the section describing the detection of DO (output signal) alarms.] This address is fixed regardless of whether expansion module 2 or 3 is used, and it must be allocated as a work area before it can be used. When using this area, therefore, allocate DI addresses in units of 16 bytes.

Basically, I/O addresses can be allocated to the connector panel I/O modules freely. When allocating DI addresses, however, consider also the addresses that are directly supervised by the CNC, and keep the following in mind.

Fixed addresses directly supervised by the CNC (Example: Series 0*i*)

| | 7 | 6 | 5 | 4 | 3 | 2 | 1 | 0 |
|---|---|---|---|---|---|---|---|---|
| X0004 | SKIP | ESKIP<br>SKIP6 | -MIT2<br>SKIP5 | +MIT2<br>SKIP4 | -MIT1<br>SKIP3 | +MIT1<br>SKIP2 | XAE2<br>SKIP8 | XAE1<br>SKIP7 |
| | SKIP | ESKIP<br>SKIP6 | SKIP5 | SKIP4 | SKIP3 | XAE3<br>SKIP2 | XAE2<br>SKIP8 | XAE1<br>SKIP7 |
| X0005 | | | | | | | | |
| X0006 | | | | | | | | |
| X0007 | | | | | | | | |
| X0008 | | | | *ESP | | | | |
| X0009 | | | | *DEC5 | *DEC4 | *DEC3 | *DEC2 | *DEC1 |

The upper row indicates the T series (first path), and the lower row indicates the M series.

When DI addresses are allocated in units of 16 bytes, starting at X0004

| | | |
|---|---|---|
| X0004 | Basic module | ← SKIPn and other fixed signals |
| X0005 | | |
| X0006 | | |
| X0007 | Expansion module 1 | |
| X0008 | | ← *ESP fixed signal |
| X0009 | | ← *DECn fixed signal |
| X0010 | Expansion module 2 | |
| X0011 | | |
| X0012 | | |
| X0013 | Expansion module 3 | |
| X0014 | | |
| X0015 | | |
| X0016 (for 1st MPG) | Expansion module 1 | |
| X0017 (for 2nd MPG) | | |
| X0018 (for 3rd MPG) | | |
| X0019 (DO alarm detection) | Basic module | |

The minimum configuration consists of the basic module and expansion module 1. Expansion modules 2 and 3 may be added as required. This allows fixed signals, such as SKIPn and *DECn, to always be used and the *ESP fixed signal to be allocated to an address for which the common voltage is fixed to 24 V. Also, with the i series CNC, the MPG interface provided by expansion module 1 can always be used.

When DI addresses are allocated in units of 16 bytes, starting at X0007

| | | |
|---|---|---|
| X0007 | Basic module | |
| X0008 | | ← *ESP fixed signal |
| X0009 | | ← *DECn fixed signal |
| X0010 | Expansion module 1 | |
| X0011 | | |
| X0012 | | |
| X0013 | Expansion module 2 | |
| X0014 | | |
| X0015 | | |
| X0016 | Expansion module 3 | |
| X0017 | | |
| X0018 | | |
| X0019 (for 1st MPG) | Expansion module 1 | |
| X0020 (for 2nd MPG) | | |
| X0021 (for 3rd MPG) | | |
| X0022 (DO alarm detection) | Basic module | |

The minimum configuration consists of the basic module only. Expansion modules 1, 2, and 3 may be added as required. In the minimum configuration, SKIP and other fixed signals and the MGP interface of expansion module 1 cannot be used. In this case, however, the *DECn fixed signal can always be used and the *ESP fixed signal can be allocated to an address for which the common voltage is fixed to 24 V in the minimum configuration.

## DO (output signal) alarm detection

The DO driver of the Basic and Expansion module A/B is capable of detecting an overcurrent and measuring its own temperature. If an accident, such as the connecting of the cable to ground, causes an abnormal increase in the load current or in the driver temperature, a protection circuit, which is provided for each DO driver (1 byte), is activated and keeps the DO signal for the relevant 1 byte in the OFF state until the cause of the problem is eliminated. Even if this occurs, the CNC and I/O module continue operating. The DI address (Xm+15) identifies the DO driver which has detected the alarm. The table below shows the correspondence between the DI address (Xm+15) bits and the DO addresses. Bit value "1" indicates that the corresponding DO driver has detected an alarm. The contents of the Xm+15 area can be checked by using the DGN screen of the CNC or by performing alarm processing for the area in advance by using Ladder. This helps alarm detection and recovery.

| Alarm detection address and bit | DO address | Location |
|---|---|---|
| Xm+15.0 | Yn+0 | Basic module |
| Xm+15.1 | Yn+1 | Basic module |
| Xm+15.2 | Yn+2 | Expansion module 1 |
| Xm+15.3 | Yn+3 | Expansion module 1 |
| Xm+15.4 | Yn+4 | Expansion module 2 |
| Xm+15.5 | Yn+5 | Expansion module 2 |

| Alarm detection address and bit | DO address | Location |
|---|---|---|
| Xm+15.6 | Yn+6 | Expansion module 3 |
| Xm+15.7 | Yn+7 | Expansion module 3 |

**NOTE**
This function is not supported by the 2A output module or analog input module.

### Allocation of the 2A output module and analog input module

The 2A output module and analog input module can be allocated to any of the spaces for expansion modules 1, 2, and 3. When an MPG interface is required, the module occupies the space for expansion module 1; no 2A output module or analog input module can be allocated in the space for expansion module 1.

The 2A output module does not involve DI points, so that the DI area of the space in which a 2A output module is allocated is unusable. When a 2A output module is allocated to the space for expansion module 2, for example, the areas from Xm+6 to Xm+8 cannot be used. (The spaces for the other modules are not shifted. In this case, the DI space of expansion module 3 remains at Xm+9 through Xm+11.)

## 9.2.20 Distribution I/O Setting

By changing the setting (rotary switch) for the expansion modules, connections can be made by omitting some expansion modules as shown below.

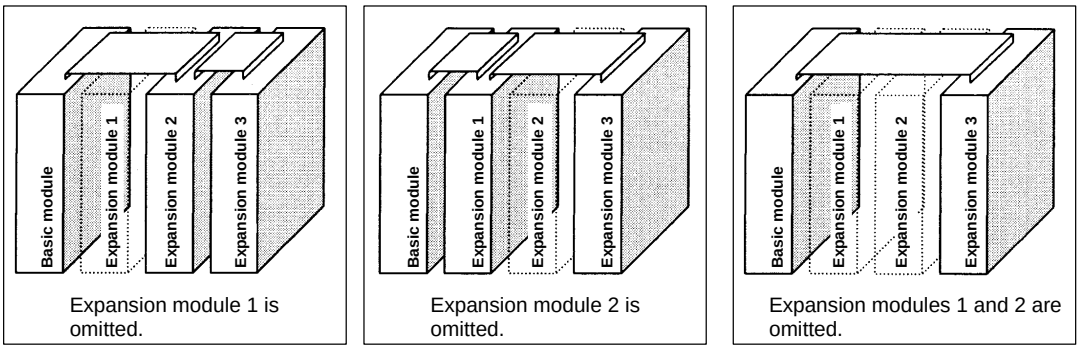


Method of setting (control and method of setting the control)

As shown below, the control (rotary switch) is located on an expansion module. To change the setting, turn the switch with a flat-bladed screwdriver with a tip width of about 2.5 mm.

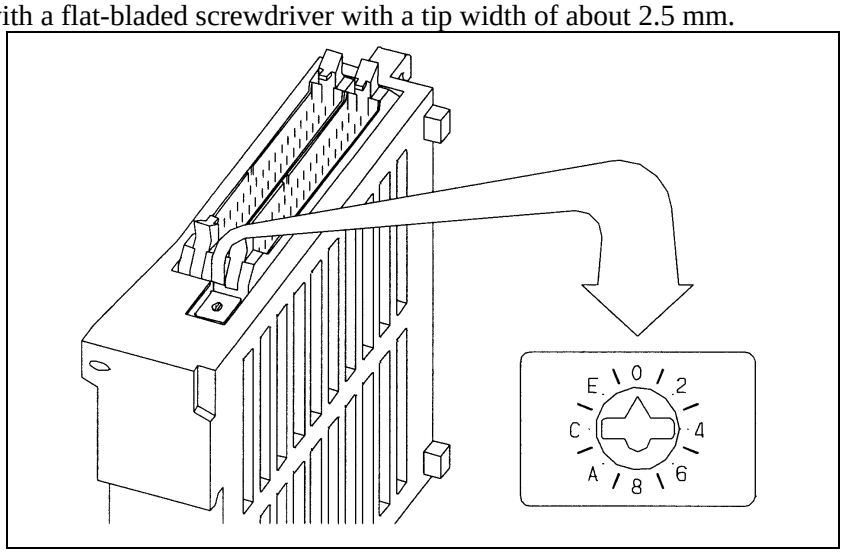

Each setting position of the rotary switch has the following meaning:

| Setting position | Actual indication | Meaning of setting |
|---|---|---|
| 0 | 0 | This is the standard setting. The rotary switch is factory-set to this position. This setting is used when no expansion module is omitted. |
| 1 | - | Set the rotary switch on an expansion module to this position when the preceding expansion module is omitted. |
| 2 | 2 | Set the rotary switch on an expansion module to this position when the preceding two expansion modules are omitted. |
| 3 | - | This setting is prohibited. |
| 4 to F | 4, -, 6, -,<br>8, -, A, -,<br>C, -, E, -, | 4, 8, or C has the same effect as 0.<br>5, 9, or D has the same effect as 1.<br>6, A, or E has the same effect as 2.<br>7, B, or F has the same effect as 3. (This setting, however, is prohibited.) |

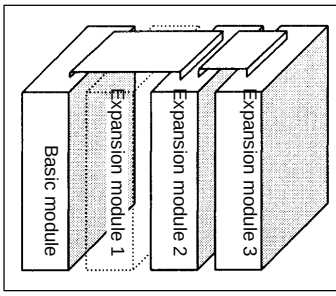


(When expansion module 1 is omitted)
On expansion module 2, set the rotary switch to setting position 1. On expansion module 3, keep the rotary switch set to setting position 0.

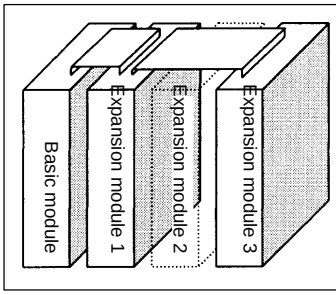


(When expansion module 2 is omitted)
On expansion module 3, set the rotary switch to setting position 1. On expansion module 1, keep the rotary switch set to setting position 0.

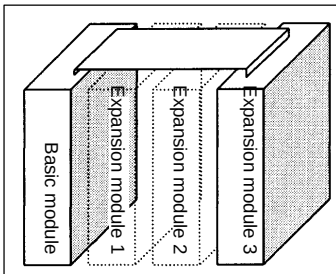


(When expansion modules 1 and 2 are omitted)
On expansion module 3, set the rotary switch to setting position 2.

**NOTE**

1 Expansion module A (DI/DO = 24/16, with manual pulse interface) (A03B-0815-C002) is fitted with an additional rotary switch as other types of modules are modified. However, expansion module A is always mounted at the location of expansion module 1, so that its factory setting need not be changed.

2 This setting is a function that was added newly.
This function is not provided in the expansion models shipped in August 1998 or earlier.

# 9.3 CONNECTION OF OPERATOR'S PANEL I/O MODULE (FOR MATRIX INPUT)

## 9.3.1 Overall Connection Diagram

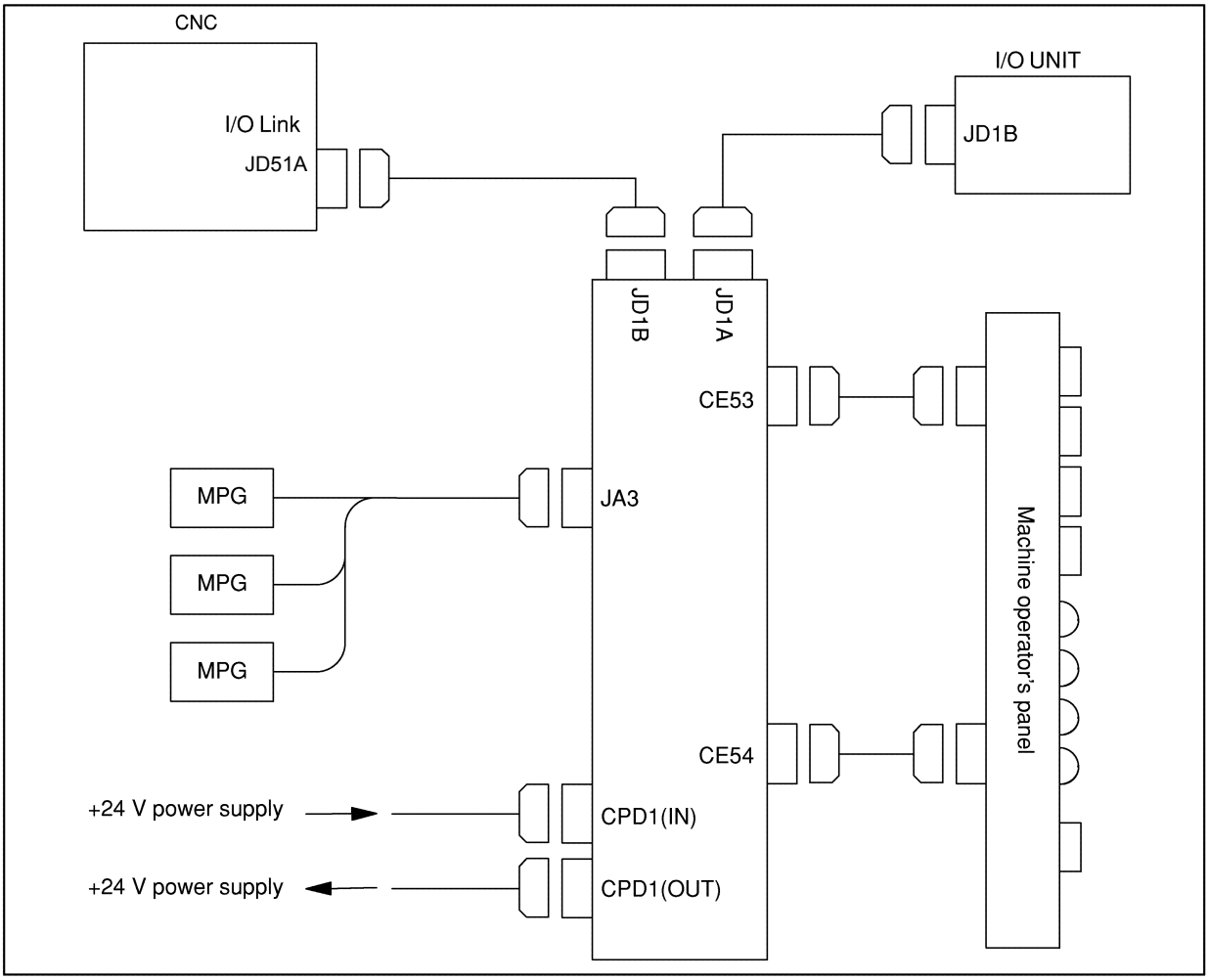


**NOTE**

When the operator's panel I/O module is used together with a unit (connector panel I/O module) connected to the I/O Link supporting another MPG interface, only the MPG interface of the unit (module) closest to the CNC connected to the I/O Link is enabled. The following screw type connectors cannot be used to connect the I/O Link or MPG.

Connectors that cannot be used on the cable side

| | Specification | Manufacturer |
|---|---|---|
| Connector case | FI-20-CV7 | Hirose Electric Co., Ltd. |
| Connector case and connector | FI30-20S-CV7 | Hirose Electric Co., Ltd. |

## 9.3.2 Power Connection

Provide the CPD1 (IN) connector, shown below, with the power necessary for printed circuit board operation and that for DI operation. To facilitate power division, the power is output to CPD1 (OUT) exactly as it is input from CPD1 (IN). When power division is required, use CPD1 (OUT).
Up to 1.0 A can be supplied by branching.

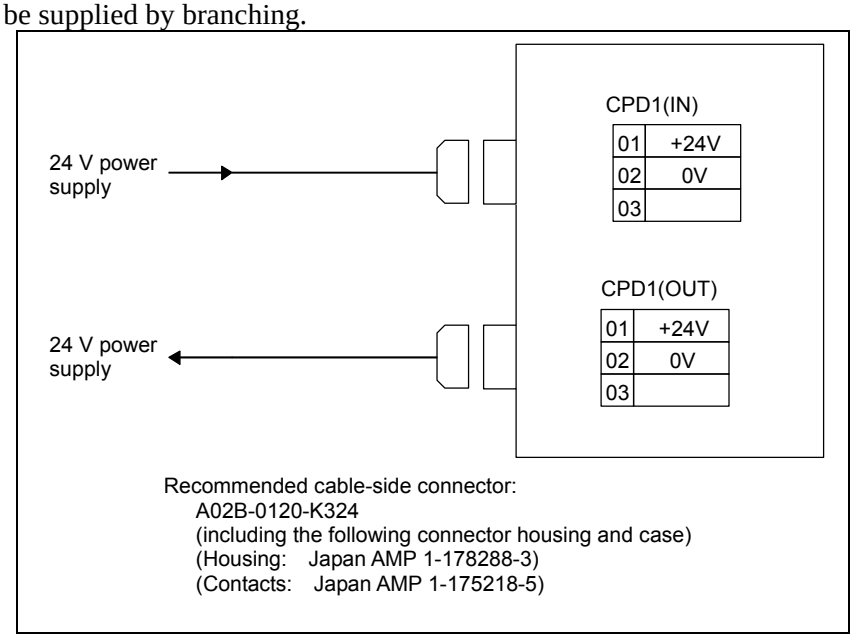


**NOTE**

The specification of the power supply connector CPD1 (IN) is the same as that for CPD1 (OUT). There are no indications on the printed circuit board to distinguish between the IN and OUT connectors. Do not turn off the +24 V supply to the connector during operation. Turning off the +24 V supply will cause a CNC communication alarm. When turning on the power, the +24 V supply to the I/O module must be turned on before or at the same time as the power supply to the CNC. When turning off the power, the +24 V supply to the I/O module must be turned off after or at the same time as the power supply to the CNC.

## 9.3.3 DI/DO Connector Pin Arrangement

**CE53**

| | A | B |
|---|---|---|
| 01 | 0V | 0V |
| 02 | N.C. | +24V |
| 03 | Xm+0.0 | Xm+0.1 |
| 04 | Xm+0.2 | Xm+0.3 |
| 05 | Xm+0.4 | Xm+0.5 |
| 06 | Xm+0.6 | Xm+0.7 |
| 07 | Yn+0.0 | Yn+0.1 |
| 08 | Yn+0.2 | Yn+0.3 |
| 09 | Yn+0.4 | Yn+0.5 |
| 10 | Yn+0.6 | Yn+0.7 |
| 11 | Yn+1.0 | Yn+1.1 |
| 12 | Yn+1.2 | Yn+1.3 |
| 13 | Yn+1.4 | Yn+1.5 |
| 14 | Yn+1.6 | Yn+1.7 |
| 15 | Yn+2.0 | Yn+2.1 |
| 16 | Yn+2.2 | Yn+2.3 |
| 17 | Yn+2.4 | Yn+2.5 |
| 18 | Yn+2.6 | Yn+2.7 |
| 19 | KYD0 | KYD1 |
| 20 | KYD2 | KYD3 |
| 21 | KYD4 | KYD5 |
| 22 | KYD6 | KYD7 |
| 23 | KCM1 | KCM2 |
| 24 | KCM3 | KCM4 |
| 25 | DOCOM | DOCOM |

**CE54**

| | A | B |
|---|---|---|
| 01 | 0V | 0V |
| 02 | COM1 | +24V |
| 03 | Xm+1.0 | Xm+1.1 |
| 04 | Xm+1.2 | Xm+1.3 |
| 05 | Xm+1.4 | Xm+1.5 |
| 06 | Xm+1.6 | Xm+1.7 |
| 07 | Yn+3.0 | Yn+3.1 |
| 08 | Yn+3.2 | Yn+3.3 |
| 09 | Yn+3.4 | Yn+3.5 |
| 10 | Yn+3.6 | Yn+3.7 |
| 11 | Yn+4.0 | Yn+4.1 |
| 12 | Yn+4.2 | Yn+4.3 |
| 13 | Yn+4.4 | Yn+4.5 |
| 14 | Yn+4.6 | Yn+4.7 |
| 15 | Yn+5.0 | Yn+5.1 |
| 16 | Yn+5.2 | Yn+5.3 |
| 17 | Yn+5.4 | Yn+5.5 |
| 18 | Yn+5.6 | Yn+5.7 |
| 19 | Yn+6.0 | Yn+6.1 |
| 20 | Yn+6.2 | Yn+6.3 |
| 21 | Yn+6.4 | Yn+6.5 |
| 22 | Yn+6.6 | Yn+6.7 |
| 23 | KCM5 | KCM6 |
| 24 | KCM7 | DOCOM |
| 25 | DOCOM | DOCOM |

Flat cable-side connector specification:
A02B-0120-K342
(HIFBB-50D-2.54R (Hirose Electric Co., Ltd.))
50 contacts
Cable material specification:
A02B-0120-K886
(61-meter, 50-pin cable (Hitachi Cable, Ltd. or Oki Electric Cable Co., Ltd.))

**NOTE**
An output DC voltage of +24 V at CE53 (B02) and CE54 (B02) is for DI signals. Do not supply 24 VDC to these pins from the outside.

## 9.3.4 DI (General-purpose Input Signal) Connection

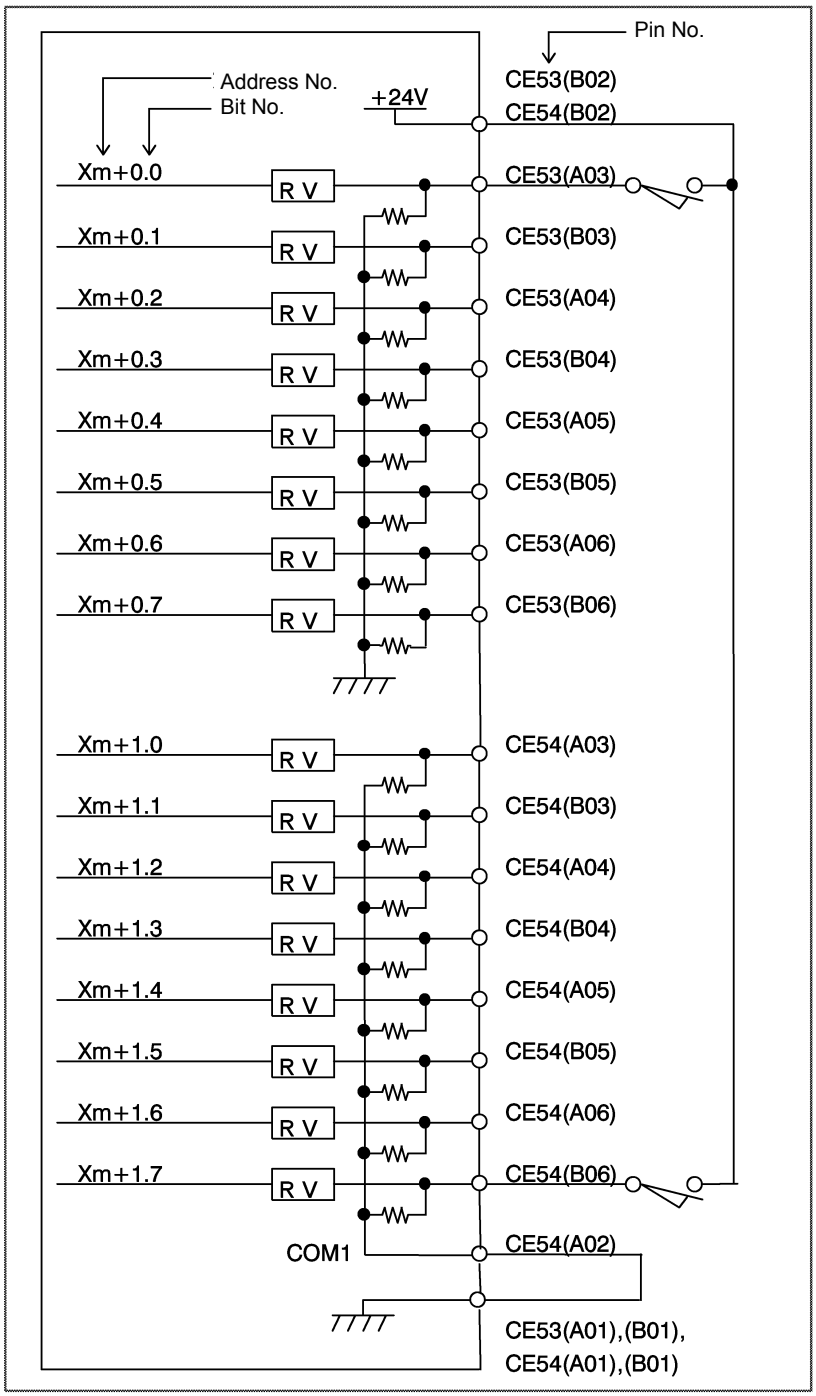

**NOTE**

1 Xm+1.0 through Xm+1.7 are DI pins for which a common voltage can be selected. That is, by connecting the COM1 CE54(A02) pin to the +24 V power supply, a DI signal can be input with its logical state reversed. If, however, a cable is connected to ground, it has the same effect as inputting an ON state DI signal. To prevent this from occurring, the connection of the COM1 CE54(A02) pin to the 0 V power supply is recommended whereever possible.
For safety reasons, the emergency stop signal needs to be allocated to an appropriate bit of the addresses for which the common voltage is fixed, ranging from Xm+0.0 to Xm+0.7. See "Address allocation" in Section 8.5.10 for details of how to allocate the emergency stop signal.
For unused DI pins allocated to the addresses for which the common voltage is fixed (from Xm+0.0 to Xm+0.7), the logic is fixed to "0". For unused pins allocated to Xm+1.0 to Xm+1.7 for which the common voltage can be selected, the logic is fixed to "0" when the COM1 CE54(A02) pin is connected to the 0 V power supply. When the COM1 CE54(A02) pin is connected to the +24 V power supply, the logic is fixed to "1". The logic of the unused pins allocated to Xm+1.0 to Xm+1.7 is variable when the contact of the COM1 CE54(A02) pin is open.

2 An output DC voltage of +24 V at CE53 (B02) and CE54 (B02) is for DI signals. Do not supply 24 VDC to these pins from the outside.

## 9.3.5 DI (Matrix Input Signal) Connection

○ A maximum of 56 points are provided.

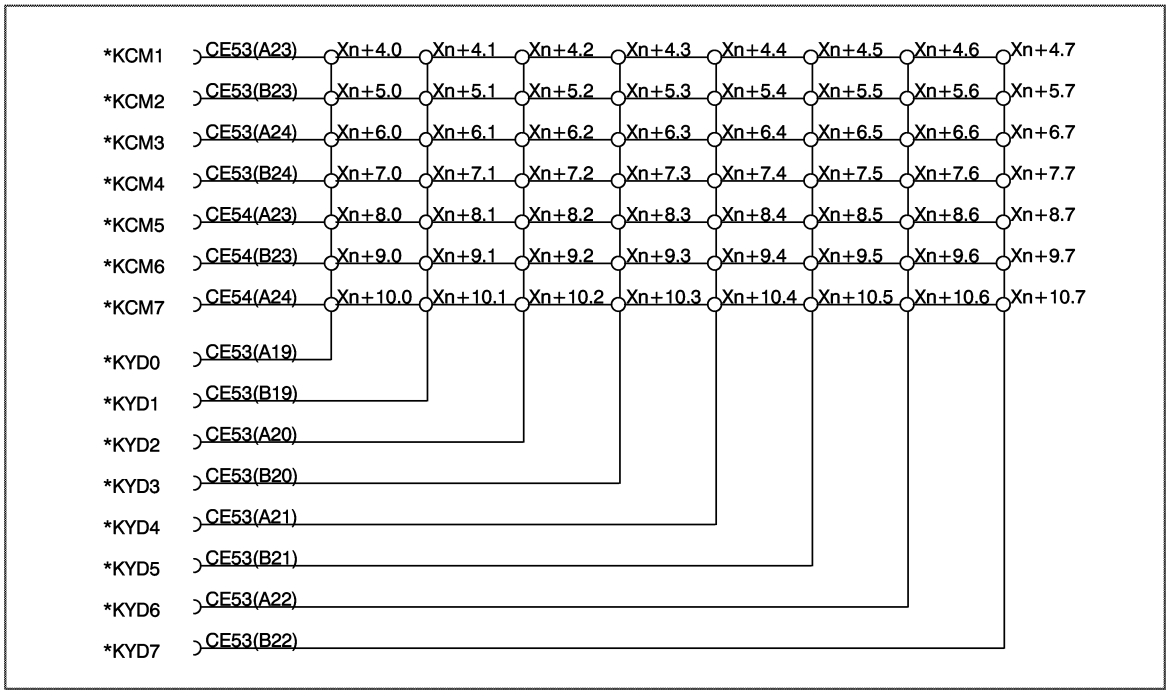

**NOTE**

1 Detour prevention diodes must be incorporated for matrix signal input, as shown in the following figure. Otherwise, only two signals can be input at the same time. Inputting three or more signals simultaneously without using detour prevention diodes may result in data input errors.

2 A cable for matrix input signals must be 150 mm or less in length.

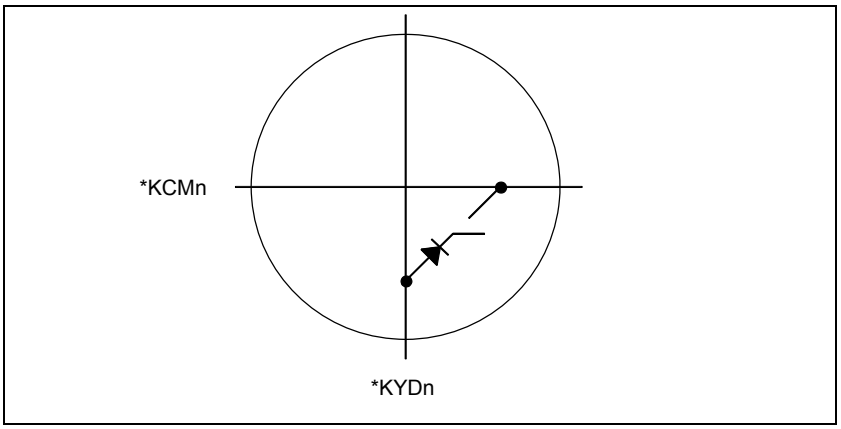

## 9.3.6 DO (Output Signal) Connection

○ A maximum of 56 points are provided.

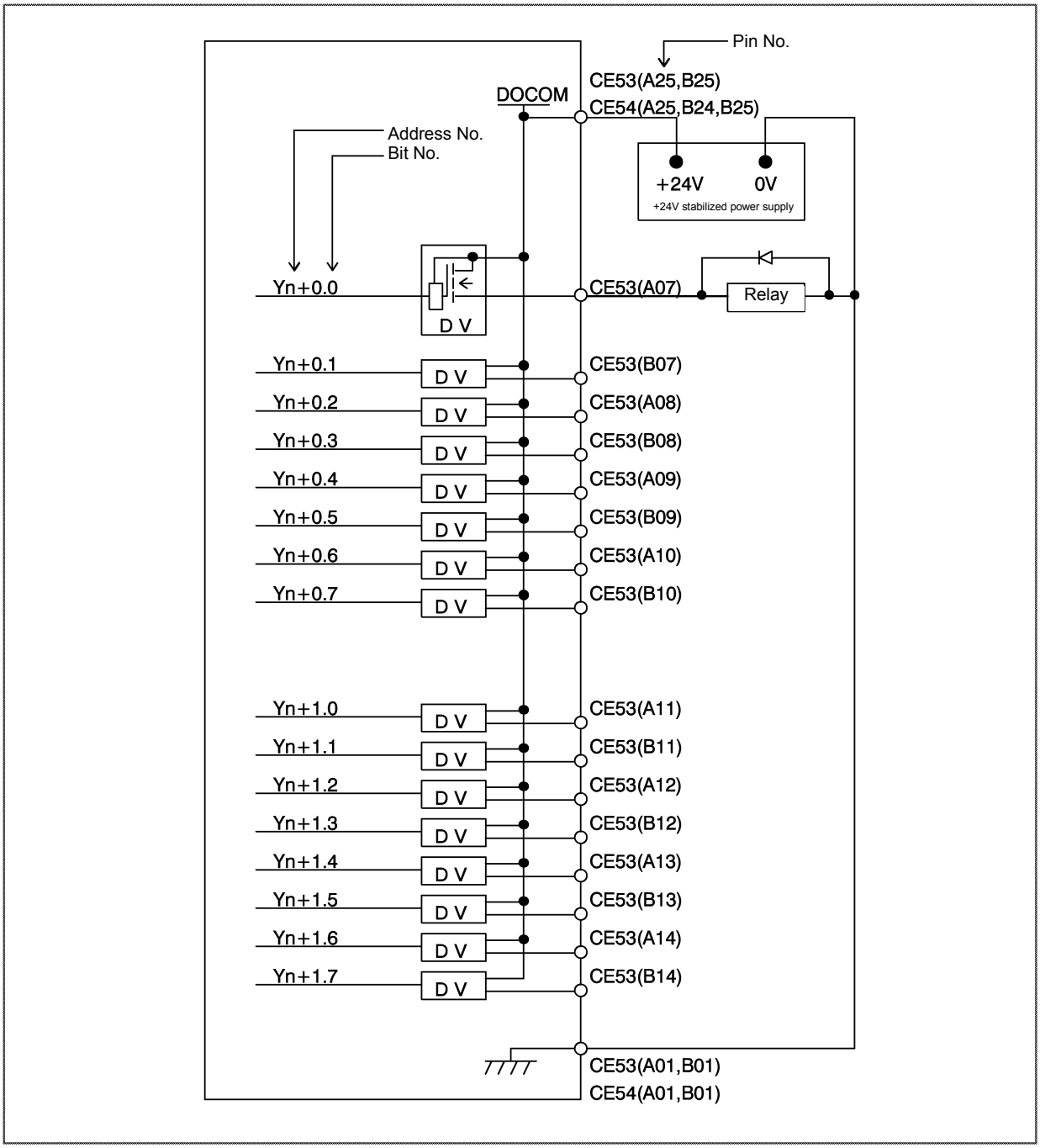

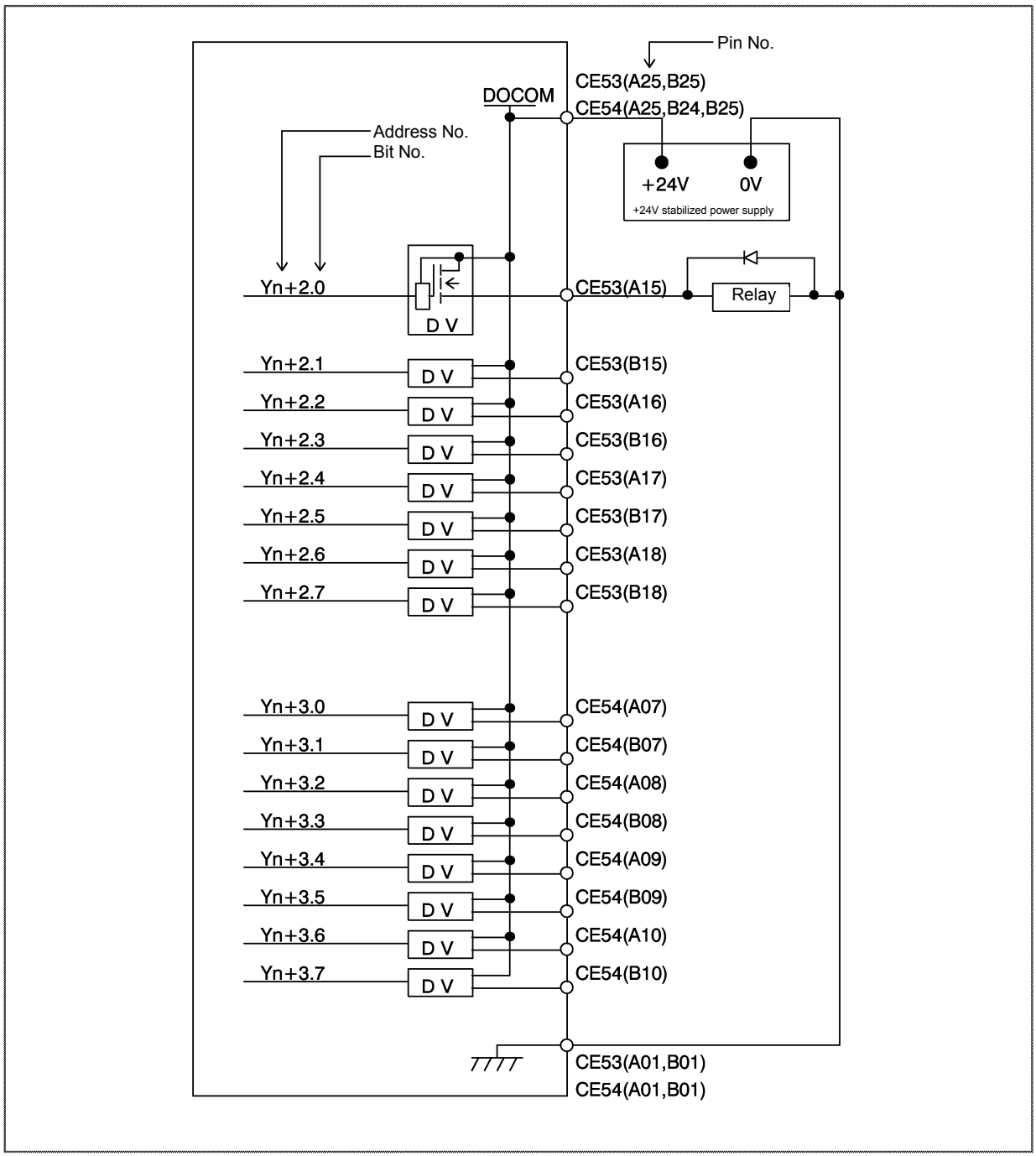
Pin No.
CE53(A25,B25)
CE54(A25,B24,B25)
DOCOM
Address No.
Bit No.
+24V
0V
+24V stabilized power supply
Yn+2.0
D V
CE53(A15)
Relay
Yn+2.1
CE53(B15)
Yn+2.2
CE53(A16)
Yn+2.3
CE53(B16)
Yn+2.4
CE53(A17)
Yn+2.5
CE53(B17)
Yn+2.6
CE53(A18)
Yn+2.7
CE53(B18)
Yn+3.0
CE54(A07)
Yn+3.1
CE54(B07)
Yn+3.2
CE54(A08)
Yn+3.3
CE54(B08)
Yn+3.4
CE54(A09)
Yn+3.5
CE54(B09)
Yn+3.6
CE54(A10)
Yn+3.7
CE54(B10)
CE53(A01,B01)
CE54(A01,B01)

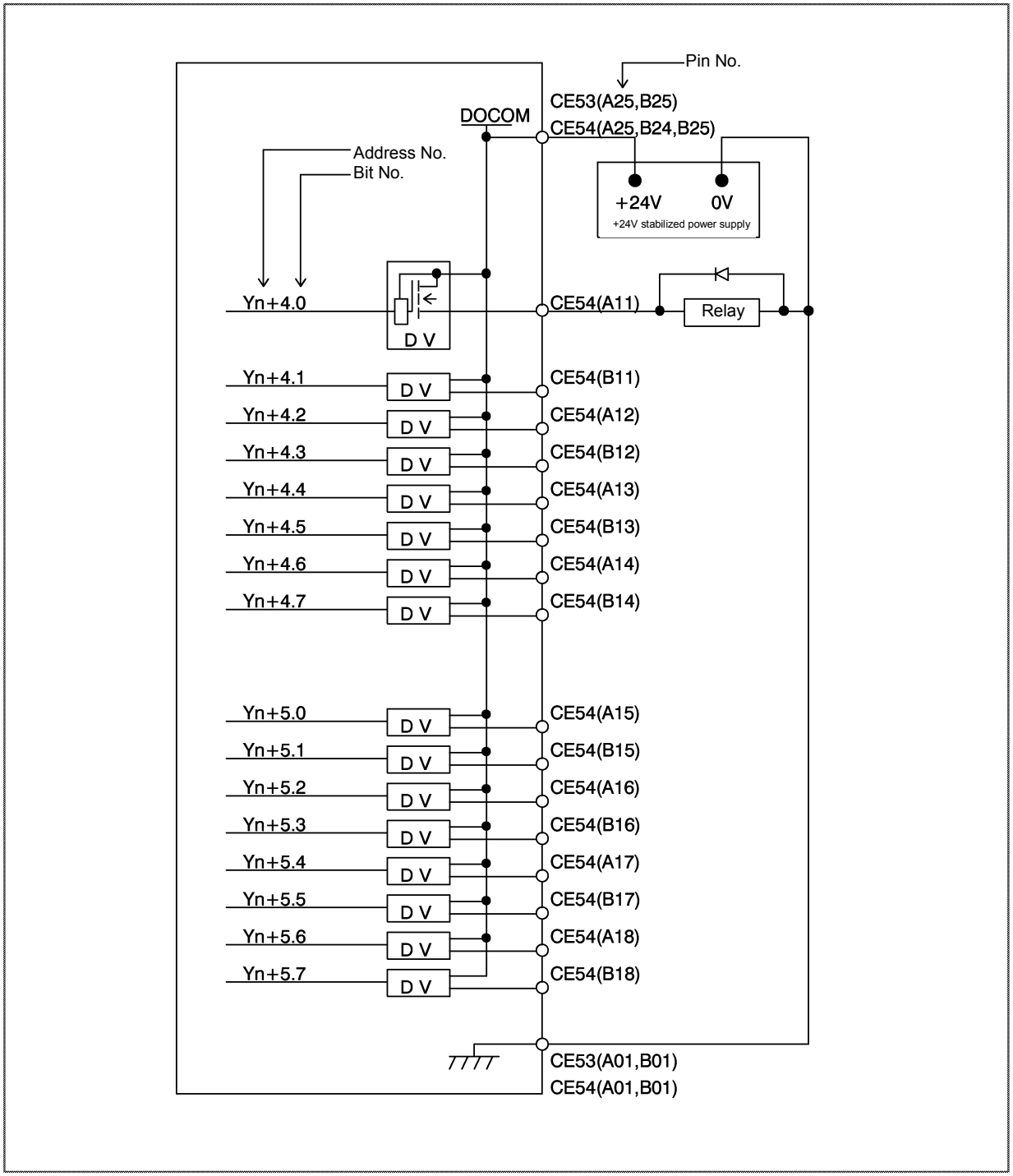
Pin No.
CE53(A25,B25)
DOCOM
CE54(A25,B24,B25)
Address No.
Bit No.
+24V
0V
+24V stabilized power supply
Yn+4.0
CE54(A11)
Relay
D V
Yn+4.1
CE54(B11)
Yn+4.2
CE54(A12)
Yn+4.3
CE54(B12)
Yn+4.4
CE54(A13)
Yn+4.5
CE54(B13)
Yn+4.6
CE54(A14)
Yn+4.7
CE54(B14)
Yn+5.0
CE54(A15)
Yn+5.1
CE54(B15)
Yn+5.2
CE54(A16)
Yn+5.3
CE54(B16)
Yn+5.4
CE54(A17)
Yn+5.5
CE54(B17)
Yn+5.6
CE54(A18)
Yn+5.7
CE54(B18)
CE53(A01,B01)
CE54(A01,B01)

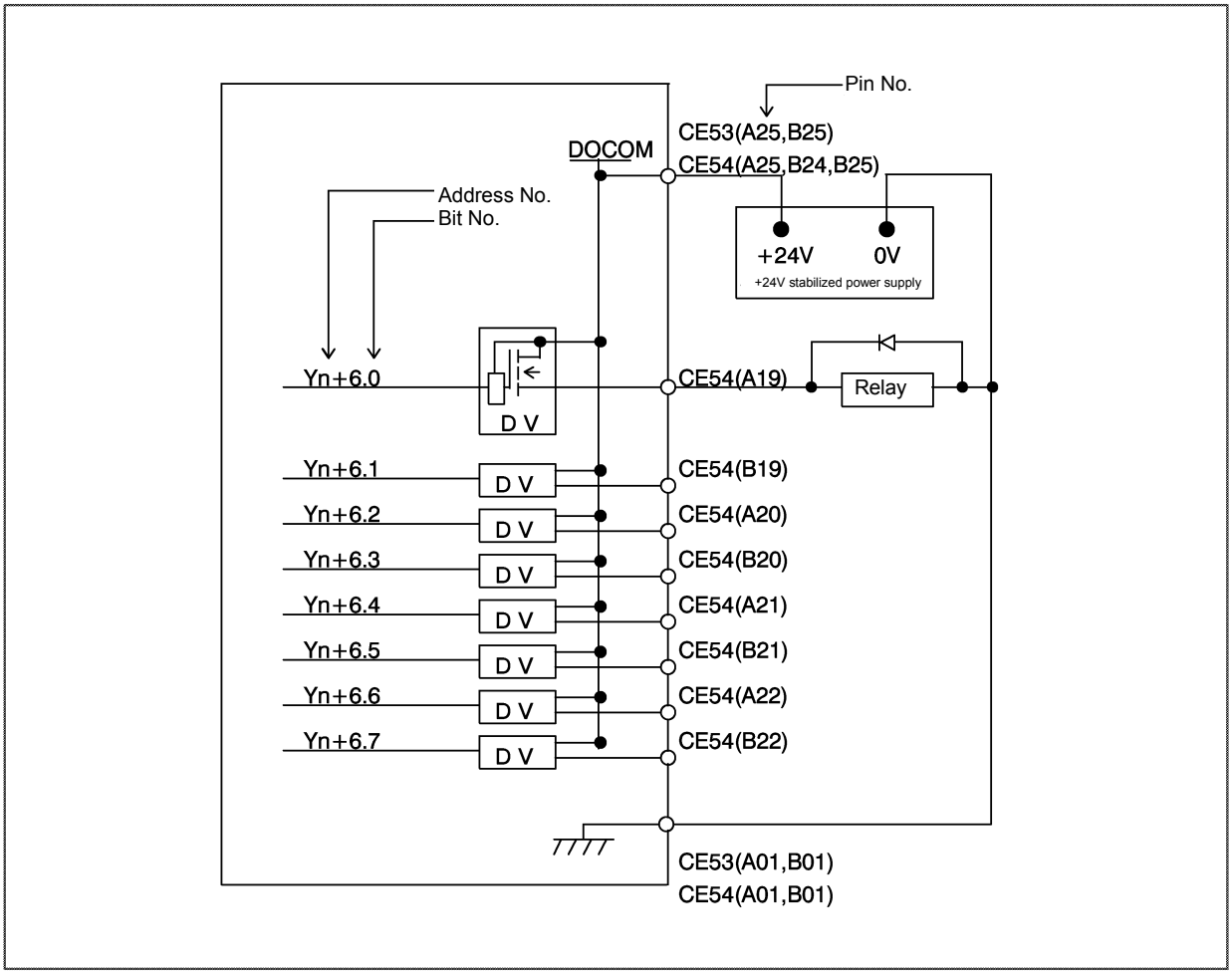
Pin No.
CE53(A25,B25)
CE54(A25,B24,B25)
DOCOM
Address No.
Bit No.
+24V
0V
+24V stabilized power supply
Yn+6.0
D V
CE54(A19)
Relay
Yn+6.1
CE54(B19)
Yn+6.2
CE54(A20)
Yn+6.3
CE54(B20)
Yn+6.4
CE54(A21)
Yn+6.5
CE54(B21)
Yn+6.6
CE54(A22)
Yn+6.7
CE54(B22)
CE53(A01,B01)
CE54(A01,B01)

## 9.3.7 Manual Pulse Generator Connection

For details of the connection of the manual pulse generator, see Subsection 9.2.15.

## 9.3.8 External View

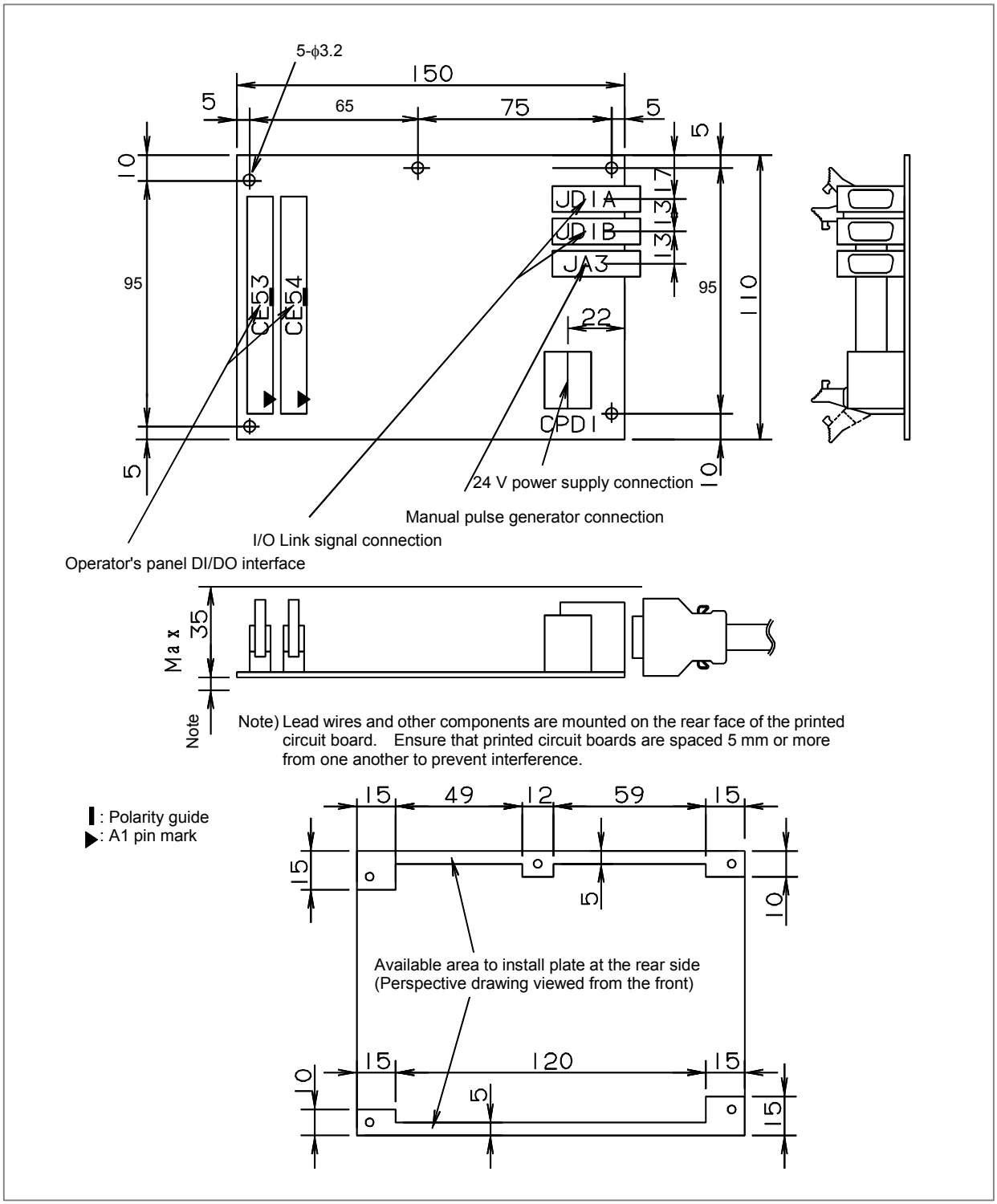

# 9.3.9 Specifications

Installation specifications

| | |
|---|---|
| **Ambient temperature** | During operation 0°C to 58°C<br>During storage and transportation -20°C to 60°C |
| **Temperature change** | Max. 1.1°C/min. |
| **Relative humidity** | Normal 75% or less<br>Short term (1 month or less) 95% or less |
| **Vibration** | During operation 0.5 G or less |
| **Environment** | Ordinary machining factory environment (Special consideration is required when installing the module in a dusty location or where highly concentrated cutting lubricant or organic solvent is used.) |
| **Other requirements** | (1) Install the I/O module in a fully enclosed cabinet. |

Ordering specifications

| Item | Specification | Remarks |
|---|---|---|
| Operator's panel I/O module | A20B-2002-0470 | General-purpose DI: 16 points<br>Matrix DI: 56 points<br>DO: 56 points<br>MPG interface is supported. |
| Fuse (replacement part) | A03B-0815-K001 | 1A |

Module specifications

| Item | Specification | Remarks |
|---|---|---|
| General-purpose DI | 16 points | 24-V input |
| Matrix DI | 56 points (8 × 7) | 5-V input |
| DO points | 56 points | 24 V source type output |
| CNC interface | FANUC I/O Link connection | Up to 16 modules can be connected as CNC slaves. Or, amaximum of 1024 points can be supported on both the input and output sides. |
| MPG interface | Max. 3 units | |

Power supply rating

| Module | Supply voltage | Current rating | Remarks |
|---|---|---|---|
| Operator's panel I/O module | 24 VDC ±10% supplied from the power supply connector CPD1. The allowance of ±10% should include instantaneous voltage and ripple voltage. | 0.35A | The total powerconsumption of DI points is included.<br>(This is true when all generalDI points are turned on.)<br>The power consumption of DO points is not included. |

DI (input signal) specifications
(General-purpose input signal)

| | |
|---|---|
| **Contact rating** | 30 VDC, 16 mA or more |
| **Open circuit intercontact leakage current** | 1 mA or less (at 26.4 V) |
| **Closed circuit intercontact voltage drop** | 2 V or less (including cable voltage drop) |
| **Delay** | Receiver delay: Max. 2 ms<br>The time required for I/O Link transmission between the CNC and I/O module (max. 2 ms + CNC ladder scan cycle) must also be taken into account. |

(Matrix input signal)

| | |
|---|---|
| **Contact rating** | 6 VDC, 2 mA or more |
| **Open circuit intercontact leakage current** | 0.2 mA or less (at 6 V) |
| **Closed circuit intercontact voltage drop** | 0.9 V or less (with a current of 1 mA) |
| **Delay** | The maximum matrix period of 16 ms, the maximum time of I/O Link transfer between CNC and I/O module of 2 ms, and the ladder scanning period (by CNC) must be considered. |

**NOTE**
When detour prevention diodes are used, the voltage drop across closed contacts indicated above must be maintained, including the diode voltage drop.

DO (output signal) specifications

| | |
|---|---|
| **Maximum load current in ON state** | 200 mA or less (including momentary current) |
| **Saturation voltage in ON state** | Max. 1 V (when load current is 200 mA) |
| **Withstand voltage** | 24 V ±20% or less (including momentary values) |
| **Leakage current in OFF state** | 20 μA or less |
| **Delay** | Driver delay: Max. 50 μs<br>The time required for I/O Link transmission between the CNC and I/O module (max. 2 ms + CNC ladder scan cycle) must also be taken into account. |

**NOTE**
Ensure that the maximum current per DOCOM pin (DO power supply pin) does not exceed 0.7 A.

## 9.3.10 Other Notes

### DO signal reaction to a system alarm

There is a possibility that the I/O module will not operate normally due to a failure of CNC or I/O Link slave module, or abnormally power supply voltage. To prevent accidents even in this case, design the machine to operate safely by making a safety circuit outside the I/O module.
The circuit of this I/O module is designed so that all DO signals are turned off if a system alarm is occurred in the CNC which controls the I/O module, or if a power of the CNC or the I/O module is turned off. However, it cannot be guaranteed that DO signals of the I/O module will certainly be turned off. Therefore, manage signals related to safety by making a safety circuit outside this I/O module.

## Address allocation

For the operator's panel I/O module, I/O addresses are mapped as follows.

DI space map

| | |
|---|---|
| Xm | General-purpose input signal |
| Xm+1 | |
| Xm+2 | Reserved |
| Xm+3 | |
| Xm+4 | Matrix input signal |
| Xm+5 | |
| Xm+6 | |
| Xm+7 | |
| Xm+8 | |
| Xm+9 | |
| Xm+10 | |
| Xm+11 | Reserved |
| Xm+12 (for 1st MPG) | MPG |
| Xm+13 (for 2nd MPG) | |
| Xm+14 (for 3rd MPG) | |
| Xm+15 (DO alarm detection) | DO alarm detection |

DO space map

| | |
|---|---|
| Yn | Output signal |
| Yn+1 | |
| Yn+2 | |
| Yn+3 | |
| Yn+4 | |
| Yn+5 | |
| Yn+6 | |
| Yn+7 | Reserved |

The operator's panel I/O module is allocated a group of DI addresses (16 bytes) and a group of DO addresses (8 bytes). This address allocation is explained below.

The MPG interface (MPG counter) occupies DI space from Xm+12 through Xm+14. These addresses are fixed, and Xm+12 through Xm+14 must be allocated as a DI work area to enable the use of the MPG. Therefore, when using an MPG for the i series CNC, allocate DI addresses in units of 16 bytes. Do not use the DI space from Xm+12 through Xm+14 for Ladder; the CNC processes the MPG counter value directly.

DI address Xm+15 is used for detecting overcurrent and overheating alarms that may occur in the IC used in the DO driver. [For details, see the section describing the detection of DO (output signal) alarms.] This address is fixed, and must be allocated as a work area before it can be used. Therefore, when using this area, allocate DI addresses in units of 16 bytes.

Basically, I/O addresses can be allocated to the operator's panel I/O module freely. When allocating DI addresses, however, consider also the fixed addresses that are directly supervised by the CNC, and keep the following in mind.

Fixed addresses directly supervised by the CNC (Example: Series 0*i*)

| | 7 | 6 | 5 | 4 | 3 | 2 | 1 | 0 |
|---|---|---|---|---|---|---|---|---|
| X0004 | SKIP | ESKIP<br>SKIP6 | -MIT2<br>SKIP5 | +MIT2<br>SKIP4 | -MIT1<br>SKIP3 | +MIT1<br>SKIP2 | XAE2<br>SKIP8 | XAE1<br>SKIP7 |
| | SKIP | ESKIP<br>SKIP6 | SKIP5 | SKIP4 | SKIP3 | XAE3<br>SKIP2 | XAE2<br>SKIP8 | XAE1<br>SKIP7 |
| X0005 | | | | | | | | |
| X0006 | | | | | | | | |
| X0007 | | | | | | | | |
| X0008 | | | | *ESP | | | | |
| X0009 | | | | *DEC5 | *DEC4 | *DEC3 | *DEC2 | *DEC1 |

The upper row indicates the T series (first path), and the lower row indicates the M series.

When DI addresses are allocated in units of 16 bytes, starting at X0008

| | | |
|---|---|---|
| X0008 | General-purpose input signal | ← *ESP fixed signal |
| X0009 | | ← *DECn fixed signal |
| X0010 | Reserved | |
| X0011 | | |
| X0012 | Matrix input signal | |
| X0013 | | |
| X0014 | | |
| X0015 | | |
| X0016 | | |
| X0017 | | |
| X0018 | | |
| X0019 | Reserved | |
| X0020(for 1st MPG) | MPG | |
| X0021(for 2nd MPG) | | |
| X0022(for 3rd MPG) | | |
| X0023(DO alarm detection) | DO alarm detection | |

Although fixed signals such as SKIP cannot be used, allocating DI addresses starting from X0008 allows the *DECn signal to be used and the *ESP fixed signal to be allocated to an address for which the common voltage is fixed to 24 V.
(Fixed signals cannot be allocated to the for the matrix input signals.)

Turning the DO (output signal) power on and off (DOCOM)
All the DO signals can be turned off simultaneously by turning off (opening) the DO (output signal) power supply pin "DOCOM". Doing so causes the DO signal status to change as shown below.

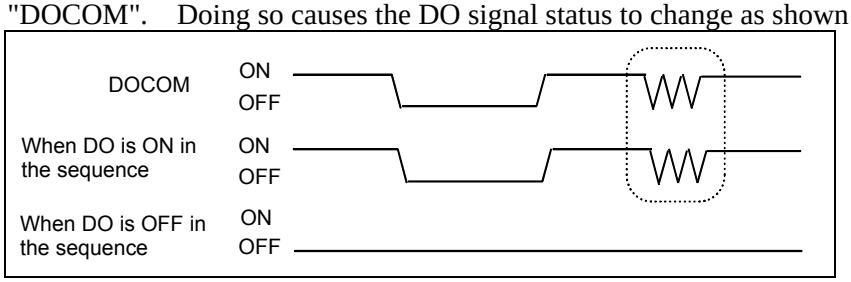


**NOTE**

When the DO signal is in the ON state in the sequence, the ON or OFF state of the DOCOM pin determines the state of the signal, as indicated by the dotted lines in the above figure. Do not turn off the +24 V supply, provided by the CPD1 to the I/O module, during the operation. Turning off the +24 V supply would cause a CNC communication alarm. When turning on the power, the +24 V supply to the I/O module must be turned on before or at the same time as the power supply to the CNC. When turning off the power, the +24 V supply to the I/O module must be turned off after or at the same time as the power supply to the CNC.

Parallel DO (output signal) connection
The DO load current can be doubled by connecting two DO points in parallel and turning them on and off simultaneously in sequence, as shown in the figure below. The maximum load current per DI point is 200 mA. Connecting two DO points in parallel and turning them on at the same time produces a current of 400 mA. Note that, however, when two DO points are connected in parallel, the leakage current also doubles while they are off (max. 40 mA).

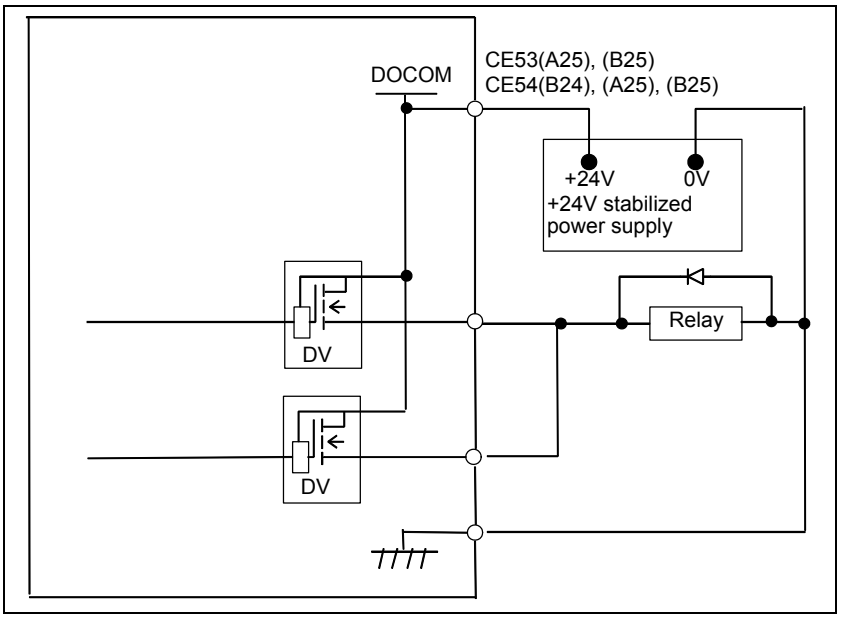


DO (output signal) alarm detection

The DO driver of the I/O module is capable of detecting an overcurrent and measuring its own temperature. If an accident, such as connecting the cable to ground, causes an abnormal increase in the load current or in the driver temperature, a protection circuit, which is provided for each DO driver (1 byte), is activated which keeps the DO signal for the relevant 1 byte in the OFF state until the cause of the problem is eliminated. Even if this occurs, the CNC and the I/O module continue operating. The DI address (Xm+15) identifies which DO driver has detected an alarm. The following table shows the correspondence between the DI address (Xm+15) bits and the DO addresses. Bit value "1" indicates that the corresponding DO driver has detected an alarm. The contents of the Xm+15 area can be checked by using the DGN screen of the CNC or by performing the alarm processing for the area in advance by using Ladder. This helps alarm detection and recovery.

| Alarm detection address and bit | DO address | Remarks |
|---|---|---|
| Xm+15.0 | Yn+0 | |
| Xm+15.1 | Yn+1 | |
| Xm+15.2 | Yn+2 | |
| Xm+15.3 | Yn+3 | |
| Xm+15.4 | Yn+4 | |
| Xm+15.5 | Yn+5 | |
| Xm+15.6 | Yn+6 | |
| Xm+15.7 | Yn+7 | Reserved |

# 9.4 CONNECTION OF OPERATOR'S PANEL I/O MODULE AND POWER MAGNETICS CABINET I/O MODULE

The difference between the operator's panel I/O module and the power magnetics cabinet I/O module lies in whether an interface to a manual pulse generator is provided. The power magnetics cabinet does not provide an interface to a manual pulse generator.

## 9.4.1 Overall Connection Diagram

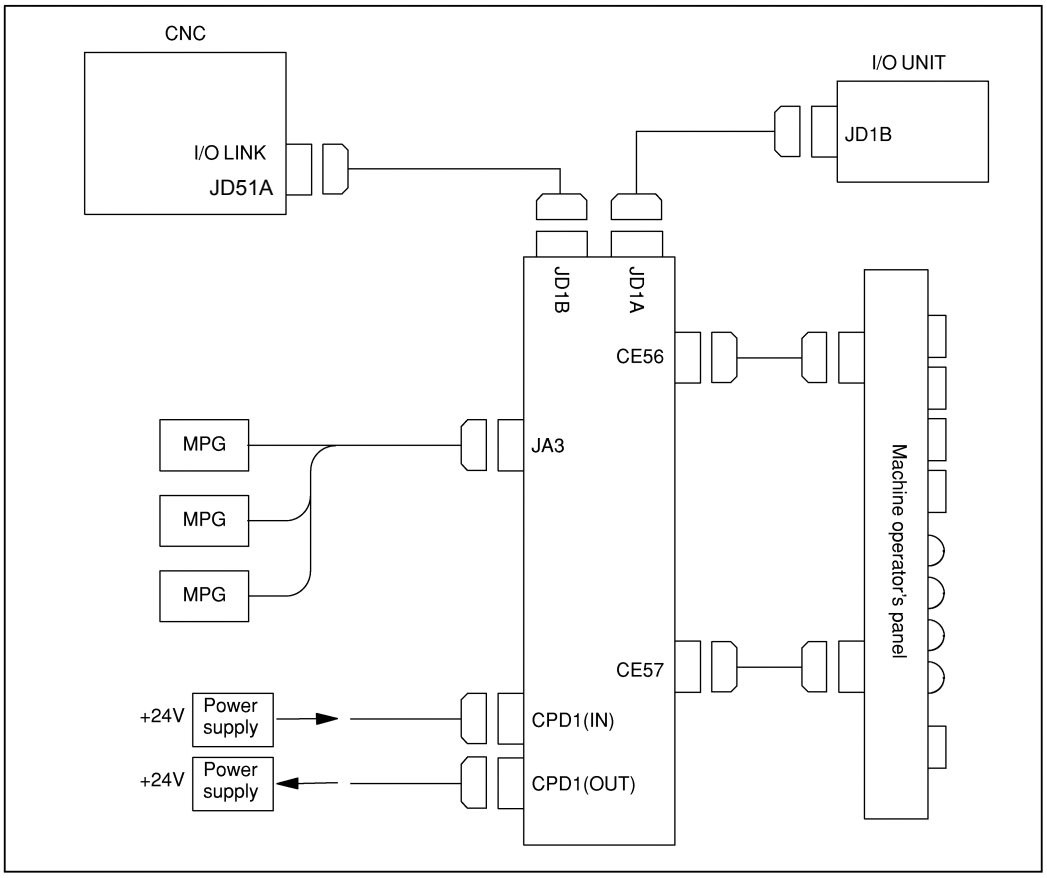


**NOTE**

When the operator's panel I/O module is used together with a unit (connector panel I/O module) connected to the I/O Link supporting another MPG interface, only the MPG interface of the unit (module) closest to the CNC connected to the I/O Link is enabled. The following screw type connectors cannot be used to connect the I/O Link or MPG.

Connectors that cannot be used on the cable side

| | Specification | Manufacturer |
|---|---|---|
| Connector case | FI-20-CV7 | Hirose Electric Co., Ltd. |
| Connector case and connector | FI30-20S-CV7 | Hirose Electric Co., Ltd. |

## 9.4.2 Power Connection

Provide the CPD1 (IN) connector, shown below, with the power necessary for the printed circuit board operation and that for DI operation. To facilitate power division, the power is output to CPD1 (OUT) exactly as it is input from CPD1 (IN). When power division is required, use CPD1 (OUT).
Up to 1.0 A can be supplied by branching.

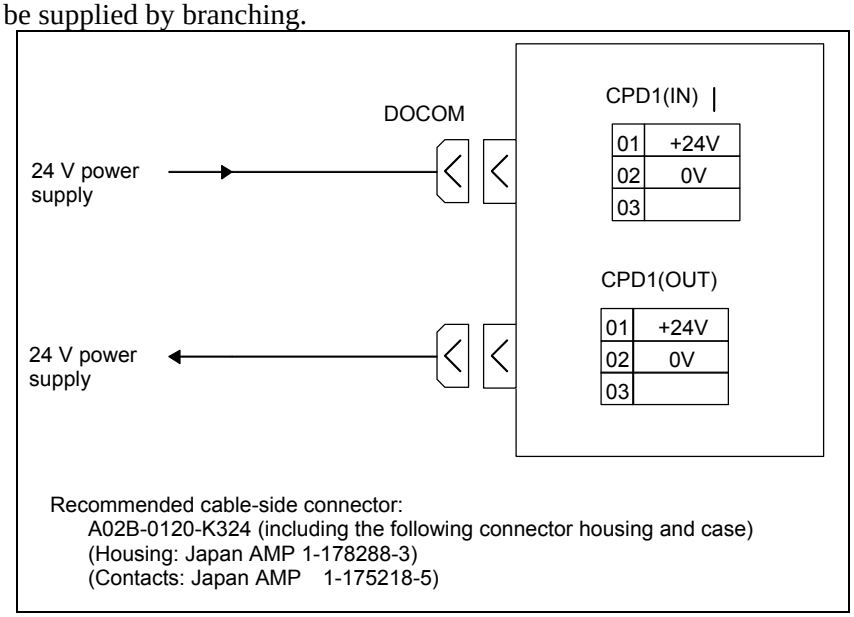


**NOTE**

The specification of the power supply connector CPD1 (IN) is the same as that for CPD1 (OUT). There are no indications on the printed circuit board to distinguish between the IN and OUT connectors. Do not turn off the +24 V supply to the connector during operation. Turning off the +24 V supply will cause a CNC communication alarm. When turning on the power, the +24 V supply to the I/O module must be turned on before or at the same time as the power supply to the CNC. When turning off the power, the +24 V supply to the I/O module must be turned off after or at the same time as the power supply to the CNC.

## 9.4.3 DI/DO Connector Pin Arrangement

CE56

| | A | B |
|---|---|---|
| 01 | 0V | +24V |
| 02 | Xm+0.0 | Xm+0.1 |
| 03 | Xm+0.2 | Xm+0.3 |
| 04 | Xm+0.4 | Xm+0.5 |
| 05 | Xm+0.6 | Xm+0.7 |
| 06 | Xm+1.0 | Xm+1.1 |
| 07 | Xm+1.2 | Xm+1.3 |
| 08 | Xm+1.4 | Xm+1.5 |
| 09 | Xm+1.6 | Xm+1.7 |
| 10 | Xm+2.0 | Xm+2.1 |
| 11 | Xm+2.2 | Xm+2.3 |
| 12 | Xm+2.4 | Xm+2.5 |
| 13 | Xm+2.6 | Xm+2.7 |
| 14 | DICOM0 | |
| 15 | | |
| 16 | Yn+0.0 | Yn+0.1 |
| 17 | Yn+0.2 | Yn+0.3 |
| 18 | Yn+0.4 | Yn+0.5 |
| 19 | Yn+0.6 | Yn+0.7 |
| 20 | Yn+1.0 | Yn+1.1 |
| 21 | Yn+1.2 | Yn+1.3 |
| 22 | Yn+1.4 | Yn+1.5 |
| 23 | Yn+1.6 | Yn+1.7 |
| 24 | DOCOM | DOCOM |
| 25 | DOCOM | DOCOM |

CE57

| | A | B |
|---|---|---|
| 01 | 0V | +24V |
| 02 | Xm+3.0 | Xm+3.1 |
| 03 | Xm+3.2 | Xm+3.3 |
| 04 | Xm+3.4 | Xm+3.5 |
| 05 | Xm+3.6 | Xm+3.7 |
| 06 | Xm+4.0 | Xm+4.1 |
| 07 | Xm+4.2 | Xm+4.3 |
| 08 | Xm+4.4 | Xm+4.5 |
| 09 | Xm+4.6 | Xm+4.7 |
| 10 | Xm+5.0 | Xm+5.1 |
| 11 | Xm+5.2 | Xm+5.3 |
| 12 | Xm+5.4 | Xm+5.5 |
| 13 | Xm+5.6 | Xm+5.7 |
| 14 | | DICOM5 |
| 15 | | |
| 16 | Yn+2.0 | Yn+2.1 |
| 17 | Yn+2.2 | Yn+2.3 |
| 18 | Yn+2.4 | Yn+2.5 |
| 19 | Yn+2.6 | Yn+2.7 |
| 20 | Yn+3.0 | Yn+3.1 |
| 21 | Yn+3.2 | Yn+3.3 |
| 22 | Yn+3.4 | Yn+3.5 |
| 23 | Yn+3.6 | Yn+3.7 |
| 24 | DOCOM | DOCOM |
| 25 | DOCOM | DOCOM |

Flat cable–side connector specification:
A02B–0120–K342
(HIF3BB–50D–2.54R (Hirose Electric Co., Ltd.))
50 contacts
Cable material specification:
A02B–0120–K886
(61–meter, 50–pin cable
(Hitachi Cable, Ltd. or Oki Electric Cable Co., Ltd.))

**NOTE**
An output DC voltage of +24 V at CE56 (B01) and CE57 (B01) is for DI signals. Do not supply 24 VDC to these pins from the outside.

## 9.4.4 DI (General-purpose Input Signal) Connection

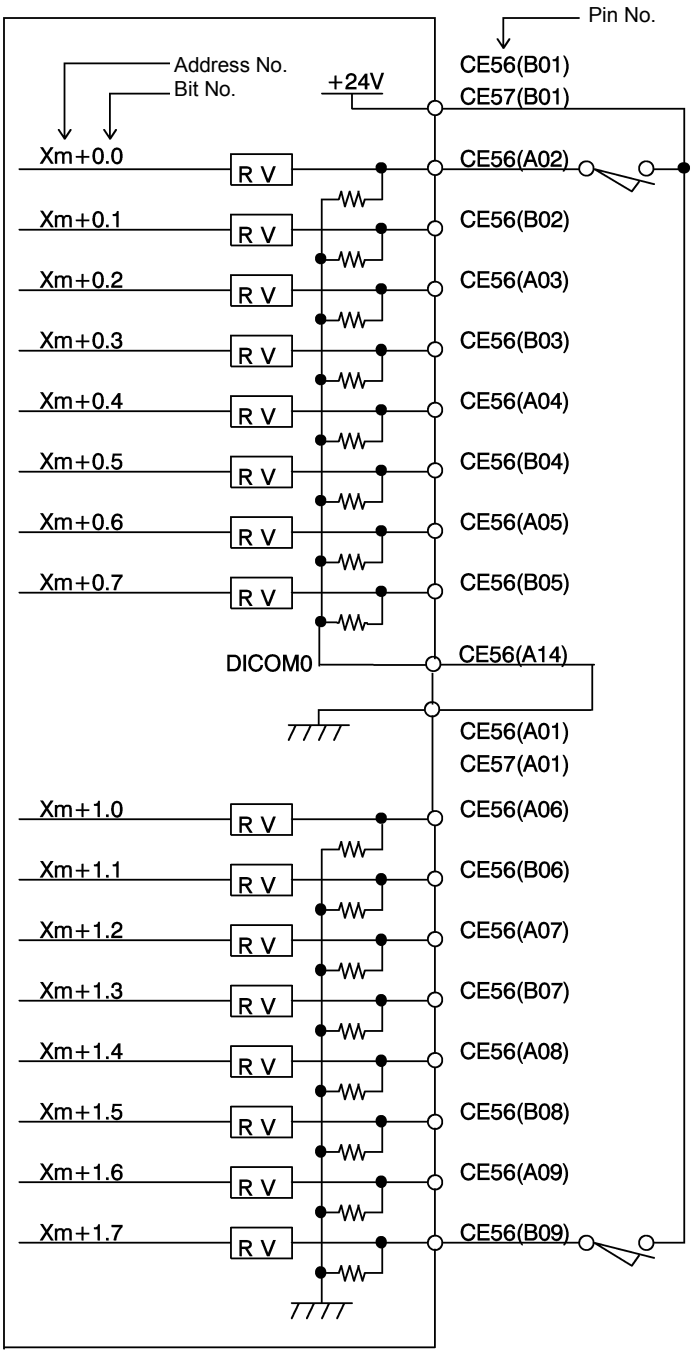

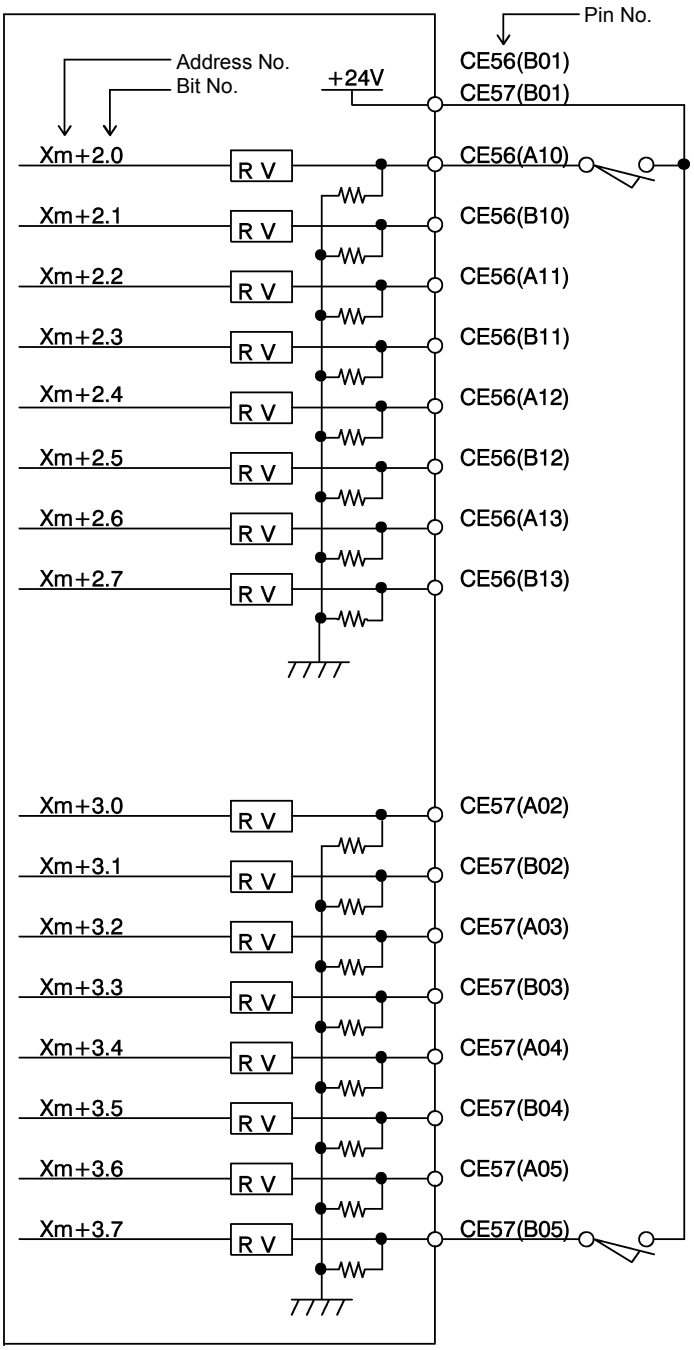
Pin No.
Address No.
Bit No.
+24V
CE56(B01)
CE57(B01)
Xm+2.0
Xm+2.1
Xm+2.2
Xm+2.3
Xm+2.4
Xm+2.5
Xm+2.6
Xm+2.7
R V
CE56(A10)
CE56(B10)
CE56(A11)
CE56(B11)
CE56(A12)
CE56(B12)
CE56(A13)
CE56(B13)
Xm+3.0
Xm+3.1
Xm+3.2
Xm+3.3
Xm+3.4
Xm+3.5
Xm+3.6
Xm+3.7
CE57(A02)
CE57(B02)
CE57(A03)
CE57(B03)
CE57(A04)
CE57(B04)
CE57(A05)
CE57(B05)

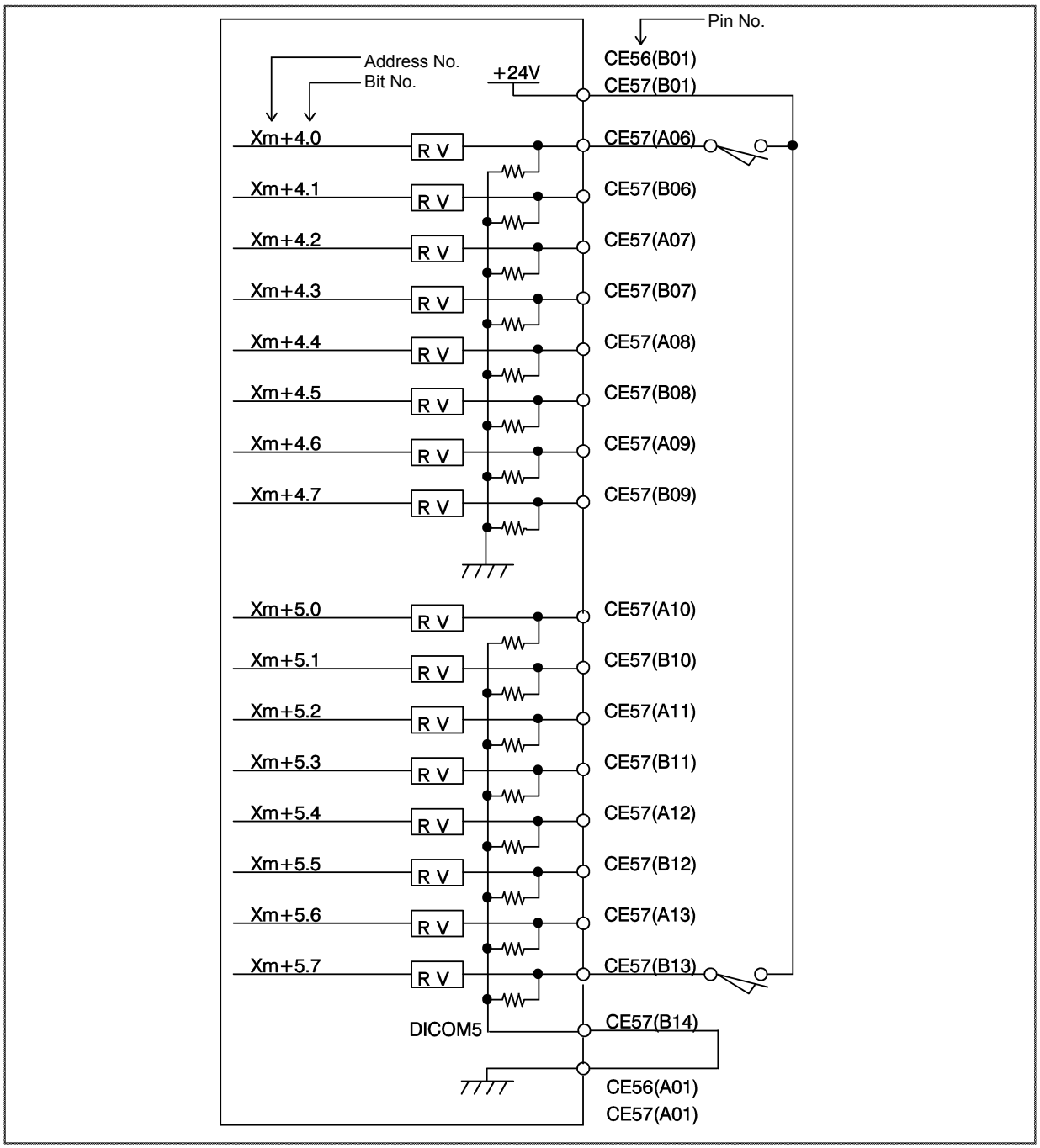
Pin No.
Address No.
Bit No.
+24V
CE56(B01)
CE57(B01)
Xm+4.0
R V
CE57(A06)
Xm+4.1
CE57(B06)
Xm+4.2
CE57(A07)
Xm+4.3
CE57(B07)
Xm+4.4
CE57(A08)
Xm+4.5
CE57(B08)
Xm+4.6
CE57(A09)
Xm+4.7
CE57(B09)
Xm+5.0
CE57(A10)
Xm+5.1
CE57(B10)
Xm+5.2
CE57(A11)
Xm+5.3
CE57(B11)
Xm+5.4
CE57(A12)
Xm+5.5
CE57(B12)
Xm+5.6
CE57(A13)
Xm+5.7
CE57(B13)
DICOM5
CE57(B14)
CE56(A01)
CE57(A01)

**NOTE**

1 Xm+0.0 through Xm+0.7 and Xm+5.0 through Xm+5.7 are DI pins for which a common voltage can be selected. That is, by connecting the DICOM0 CE56(A14) or DICOM5 CE57(B14) pin to the +24 V power supply, a DI signal can be input with its logical state reversed. If, however, a cable is connected to ground, it has the same effect as inputting an ON state DI signal. To prevent this from occurring, the connection of the DICOM0 CE56(A14) and DICOM5 CE57(B14) pins to the 0 V power supply is recommended whereever possible. For safety reasons, the emergency stop signal needs to be allocated to an appropriate bit of the addresses for which the common voltage is fixed. See "Address allocation" in Section 9.6.9 for details of how to allocate the emergency stop signal.
For unused DI pins allocated to the addresses for which the common voltage is fixed, the logic is fixed to "0". For unused pins allocated to the addresses for which the common voltage can be selected, the logic is fixed to "0" when the DICOM0 CE56(A14) or DICOM5 CE57(B14) pin is connected to the 0 V power supply. When the DICOM0 CE56(A14) or DICOM5 CE57(B14) pin is connected to the +24 V power supply, the logic is fixed to "1". The logic of the unused pins is variable when the contacts of the DICOM0 CE56(A14) and DICOM5 CE57(B14) pins are open.

2 An output DC voltage of +24 V at CE56 (B01) and CE57 (B01) is for DI signals. Do not supply 24 VDC to these pins from the outside.

## 9.4.5 DO (Output Signal) Connection

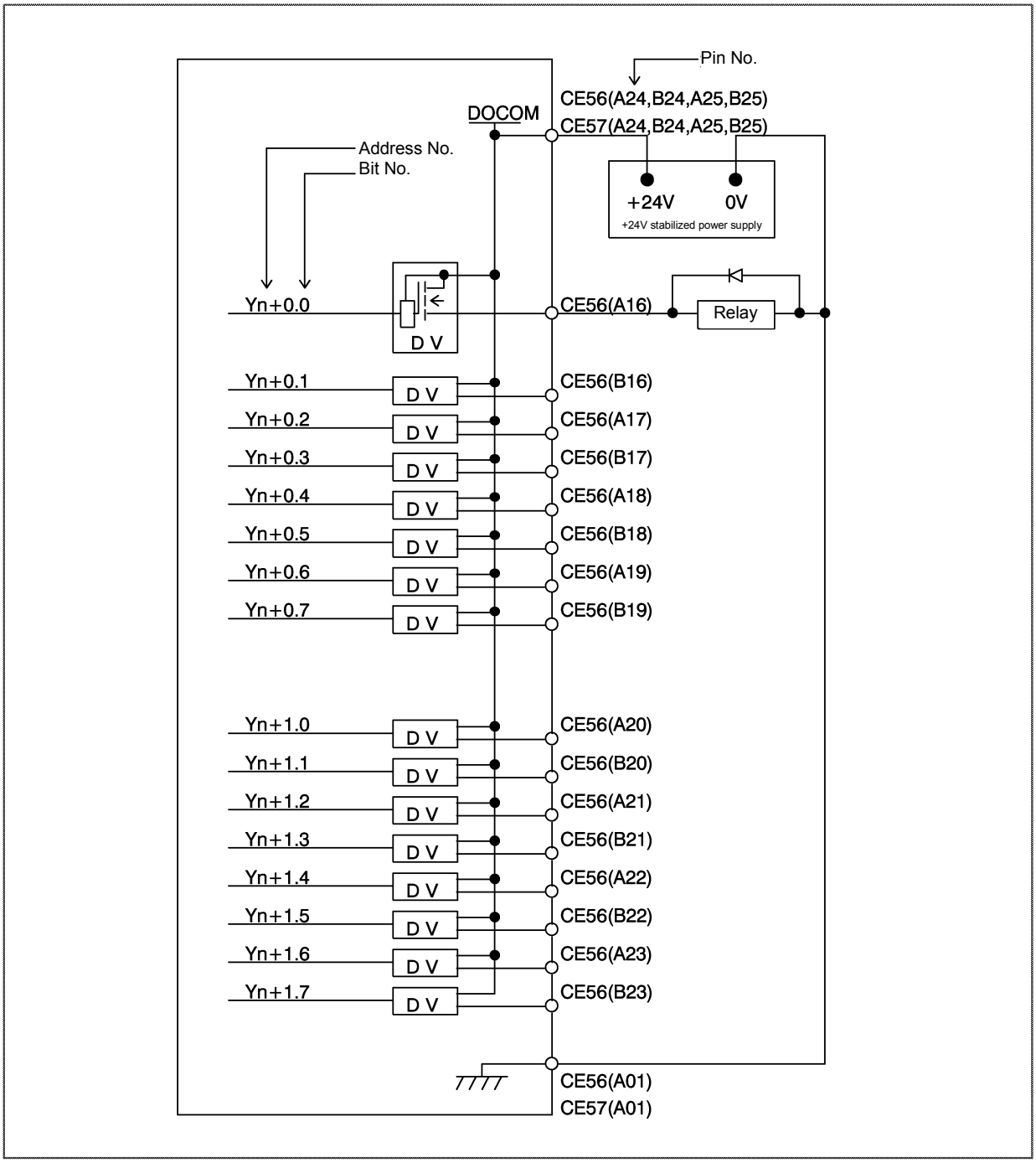

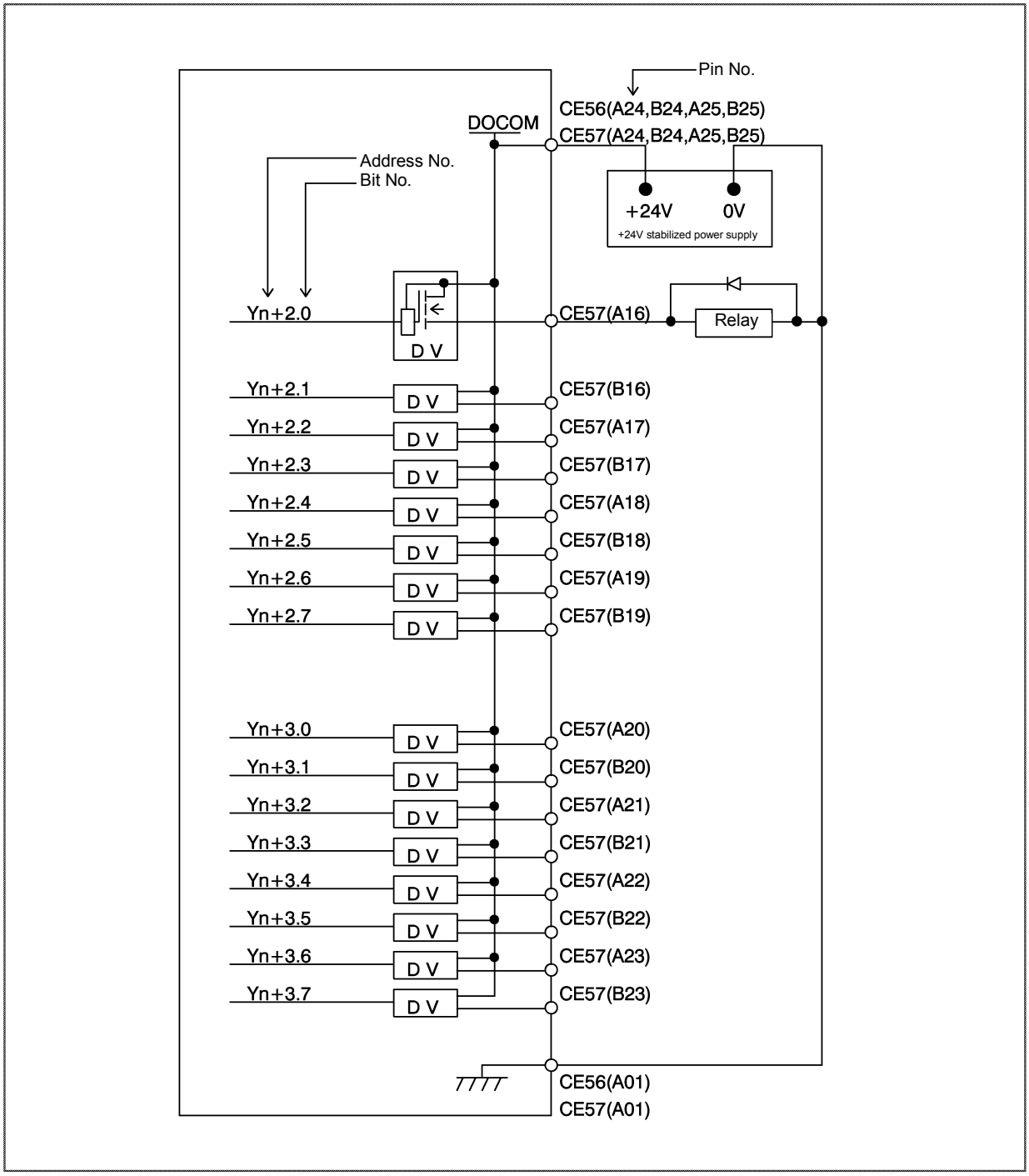


## 9.4.6 Manual Pulse Generator Connection

For details of the connection of the manual pulse generator, see Section 9.2.15.

# 9.4.7 External View

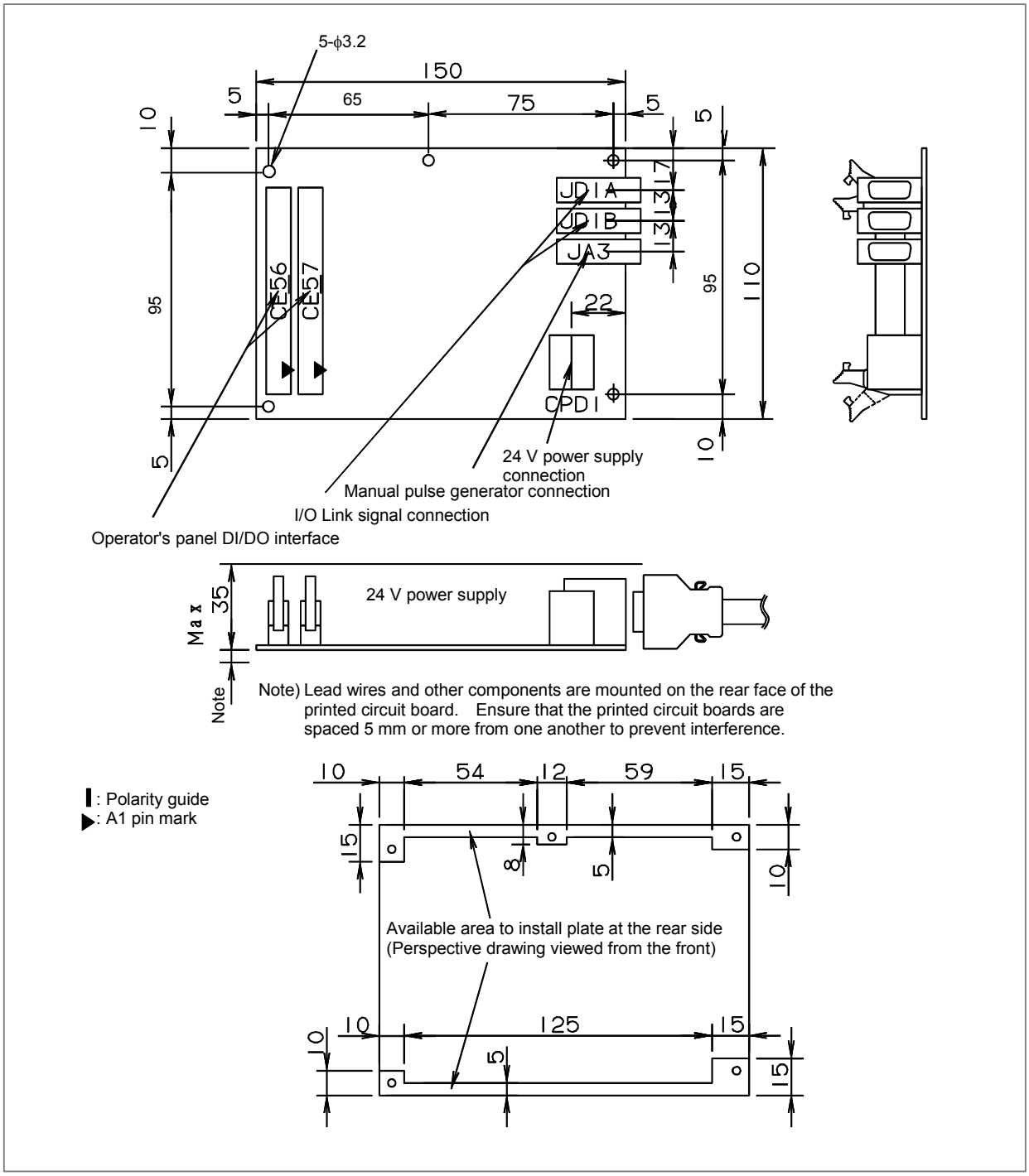

## 9.4.8 Specifications

Installation specifications

| | |
|---|---|
| **Ambient temperature** | During operation 0°C to 58°C<br>During storage and transportation -20C to 60°C |
| **Temperature change** | Max. 1.1°C/min. |
| **Relative humidity** | Normal 75% or less<br>Short term (1 month or less) 95% or less |
| **Vibration** | During operation 0.5 G or less |
| **Environment** | Ordinary machining factory environment (Special consideration is required when installing the module in a dusty place or where highly concentrated cutting lubricant or organic solvent is used.) |
| **Other requirements** | (1) Install the I/O module in a fully enclosed cabinet. |

Ordering specifications

| Item | Specification | Remarks |
|---|---|---|
| Operator's panel I/O module (with MPG interface) | A20B-2002-0520 | DI : 48 points<br>DO : 32 points<br>MPG interface is supported. |
| Power magnetics panel I/O module (without MPG interface) | A20B-2002-0521 | DI : 48 points<br>DO : 32 points<br>MPG interface is not supported. |
| Fuse (replacement part) | A03B-0815-K001 | 1A |

Module specifications

| Item | Specification | Remarks |
|---|---|---|
| DI points | 48 points | 24 V input |
| DO points | 32 points | 24 V source type output |
| CNC interface | FANUC I/O Link connection | Up to 16 modules can be connected as CNC slaves. Or, a maximum of 1024 points can be supported on both the input and output sides. |
| MPG interface | Max. 3 units | |

Power supply rating

| Module | Supply voltage | Power supply rating | Remarks |
|---|---|---|---|
| Operator's panel I/O module and power magnetics cabinet I/O module | 24 VDC ±10% is supplied from power supply connector CPD1. The tolerance of ±10% includes momentary and ripple currents. | 0.3A+7.3mA×DI | DI = number of DI points in the ON state |

DI (input signal) specifications
(general-purpose input signal)

| | |
|---|---|
| **Contact rating** | 30 VDC, 16 mA or more |
| **Open circuit intercontact leakage current** | 1 mA or less (at 26.4 V) |
| **Closed circuit intercontact voltage drop** | 2 V or less (including cable voltage drop) |
| **Delay** | Receiver delay: Max. 2 ms<br>The time required for I/O Link transmission between the CNC and I/O module (max. 2 ms + CNC ladder scan cycle) must also be taken into account. |

DO (output signal) specifications

| | |
|---|---|
| **Maximum load current in ON state** | 200 mA or less (including momentary current) |
| **Saturation voltage in ON state** | Max. 1 V (when load current is 200 mA) |
| **Withstand voltage** | 24 V +20% or less (including momentary values) |
| **Leakage current in OFF state** | 20 μA or less |
| **Delay** | Driver delay: Max. 50 μs<br>The time for I/O Link transmission between the CNC and I/O module (max. 2 ms + CNC ladder scan cycle) must also be taken into account. |

**NOTE**
Ensure that the maximum current per DOCOM pin (DO power supply pin) does not exceed 0.7 A.

## 9.4.9 Other Notes

### DO signal reaction to a system alarm

There is a possibility that the I/O module will not operate normally due to a failure of CNC or I/O Link slave module, or abnormally power supply voltage. To prevent accidents even in this case, design the machine to operate safely by making a safety circuit outside the I/O module.
The circuit of this I/O module is designed so that all DO signals are turned off if a system alarm is occurred in the CNC which controls the I/O module, or if a power of the CNC or the I/O module is turned off. However, it cannot be guaranteed that DO signals of the I/O module will certainly be turned off. Therefore, manage signals related to safety by making a safety circuit outside this I/O module.

### Address allocation

For the operator's panel I/O module, I/O addresses are mapped as follows.

DI space map

| | |
|---|---|
| Xm | Input signal |
| Xm+1 | |
| Xm+2 | |
| Xm+3 | |
| Xm+4 | |
| Xm+5 | |
| Xm+6 | Not used |
| Xm+7 | |
| Xm+8 | |
| Xm+9 | |
| Xm+10 | |
| Xm+11 | |
| Xm+12 (for 1st MPG) | MPG |
| Xm+13 (for 2nd MPG) | |
| Xm+14 (for 3rd MPG) | |
| Xm+15 (DO alarm detection) | DO alarm detection |

DO space map

| | |
|---|---|
| Yn | Output signal |
| Yn+1 | |
| Yn+2 | |
| Yn+3 | |

Basically, this 48/32-point I/O module is allocated a group of DI addresses (16 bytes) and a group of DO addresses (4 bytes). This address allocation is explained below.

The MPG interface (MPG counter) occupies DI space from Xm+12 through Xm+14. These addresses are fixed, and Xm+12 through Xm+14 must be allocated as a DI work area to enable the use of the MPG. Therefore, when using an MPG for the i series CNC, allocate DI addresses in units of 16 bytes.
Do not use the DI space from Xm+12 through Xm+14 for Ladder; the CNC processes the MPG counter value directly.

DI address Xm+15 is used for detecting overcurrent and overheating alarms that occur in the IC used in the DO driver. (For details, see the section describing the detection of DO (output signal) alarms.) This address is fixed, and must be allocated as a work area before it can be used. When using this area, therefore, allocate DI addresses in units of 16 bytes.

Basically, I/O addresses can be allocated to the 48/32-point I/O module freely. When allocating DI addresses, however, consider also the fixed addresses that are directly supervised by the CNC, and keep the following in mind.

Fixed addresses directly supervised by the CNC (Example: Series 0*i*)

| | 7 | 6 | 5 | 4 | 3 | 2 | 1 | 0 |
|---|---|---|---|---|---|---|---|---|
| X0004 | SKIP | ESKIP<br>SKIP6 | -MIT2<br>SKIP5 | +MIT2<br>SKIP4 | -MIT1<br>SKIP3 | +MIT1<br>SKIP2 | XAE2<br>SKIP8 | XAE1<br>SKIP7 |
| | SKIP | ESKIP<br>SKIP6 | SKIP5 | SKIP4 | SKIP3 | XAE3<br>SKIP2 | XAE2<br>SKIP8 | XAE1<br>SKIP7 |
| X0005 | | | | | | | | |
| X0006 | | | | | | | | |
| X0007 | | | | | | | | |
| X0008 | | | | *ESP | | | | |
| X0009 | | | | *DEC5 | *DEC4 | *DEC3 | *DEC2 | *DEC1 |

The upper row indicates the T series (first path), and the lower row indicates the M series.

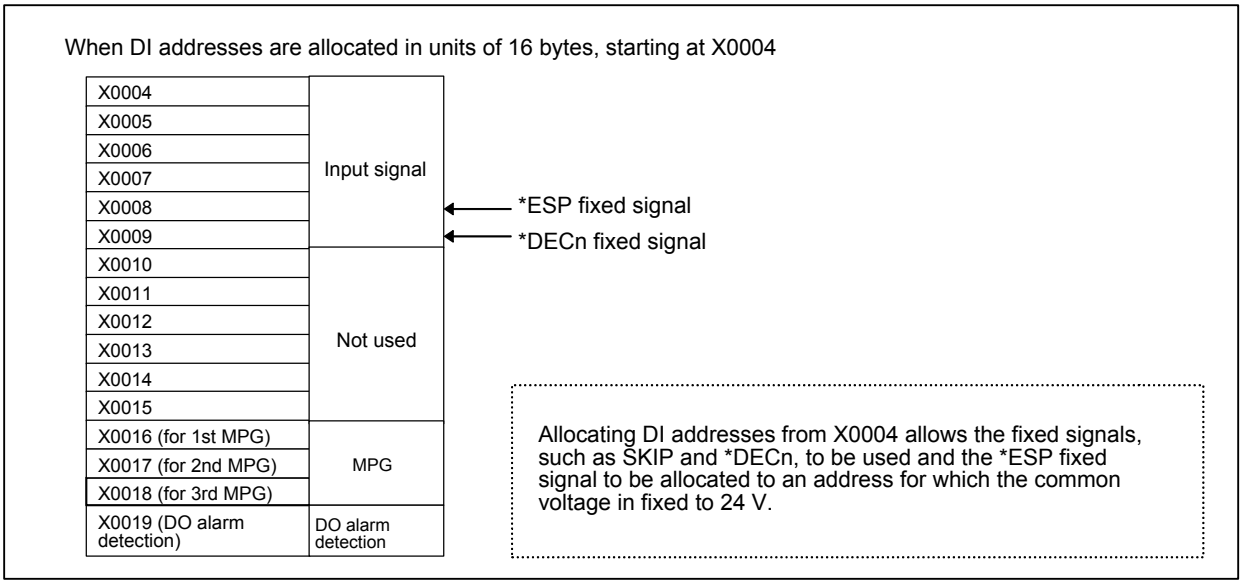


Turning the DO (output signal) power on and off (DOCOM)

All the DO signals can be turned off simultaneously by turning off (opening) the DO (output signal) power supply pin "DOCOM". Doing so causes the DO signal status to change as shown below.

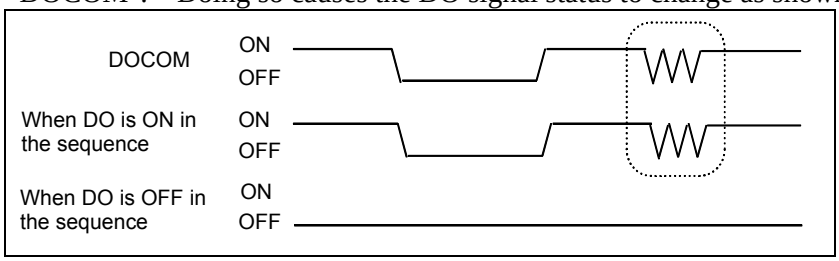

**NOTE**

When the DO signal is in the ON state in the sequence, the ON or OFF state of the DOCOM pin determines the state of the signal, as shown within dotted lines in the above figure. Do not turn off the +24 V supply provided by the CPD1 to the I/O module during the operation. Turning off the +24 V supply causes a CNC communication alarm. When turning on the power, the +24 V supply to the I/O module must be turned on before or at the same time as the power supply to the CNC. When turning off the power, the +24 V supply to the I/O module must be turned off after or at the same time as the power supply to the CNC.

Parallel DO (output signal) connection

The DO load current can be doubled by connecting two DO points in parallel and turning them on and off simultaneously in sequence, as shown in the figure below. The maximum load current per DI point is 200 mA. Connecting two DO points in parallel and turning them on at the same time produces a current of 400 mA. Note that, however, when two DO points are connected in parallel, the leakage current also doubles when they are off (max. 40 mA).

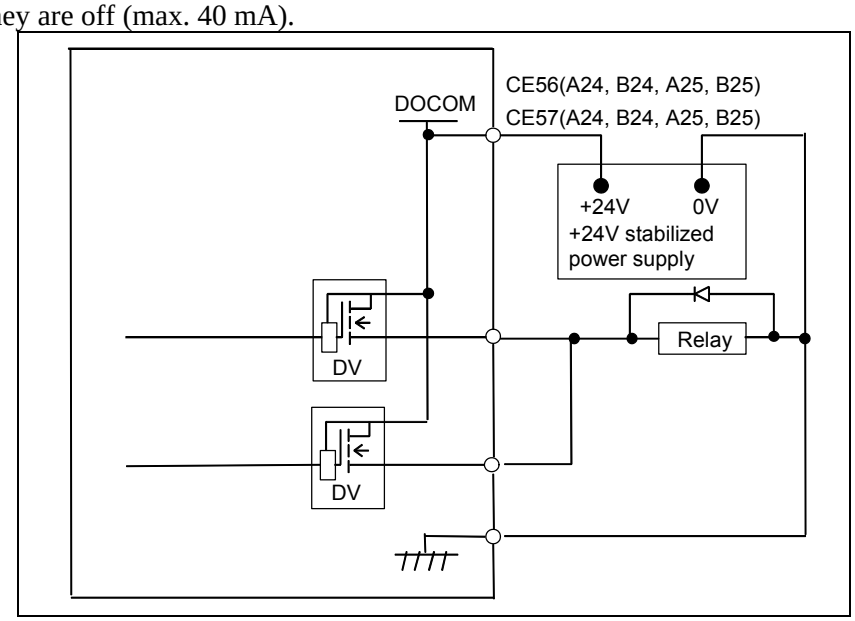


DO (output signal) alarm detection

The DO driver of the I/O module is capable of detecting an overcurrent and measuring its own temperature. If an accident, such as the connecting of the cable to ground, causes an abnormal increase in the load current or in the driver temperature, a protection circuit, which is provided for each DO driver (1 byte), is activated and keeps the DO signal for the relevant 1 byte in the OFF state until the cause of the problem is eliminated. Even if this occurs, the CNC and I/O module continue operating. The DI address (Xm+15) identifies the DO driver which has detected the alarm. The following table shows the correspondence between the DI address (Xm+15) bits and the DO addresses. Bit value "1" indicates that the corresponding DO driver has detected an alarm. The contents of the Xm+15 area can be checked by using the DGN screen of the CNC or by performing alarm processing for the area in advance by using Ladder. This helps alarm detection and recovery.

| Alarm detection address and bit | DO address | Remarks |
|---|---|---|
| Xm+15.0 | Yn+0 | |
| Xm+15.1 | Yn+1 | |
| Xm+15.2 | Yn+2 | |
| Xm+15.3 | Yn+3 | |
| Xm+15.4 | Yn+4 | Reserved |

| Alarm detection address and bit | DO address | Remarks |
|---|---|---|
| Xm+15.5 | Yn+5 | Reserved |
| Xm+15.6 | Yn+6 | Reserved |
| Xm+15.7 | Yn+7 | Reserved |

# 9.5 I/O MODULE TYPE-2 FOR CONNECTOR PANEL

## 9.5.1 Configuration

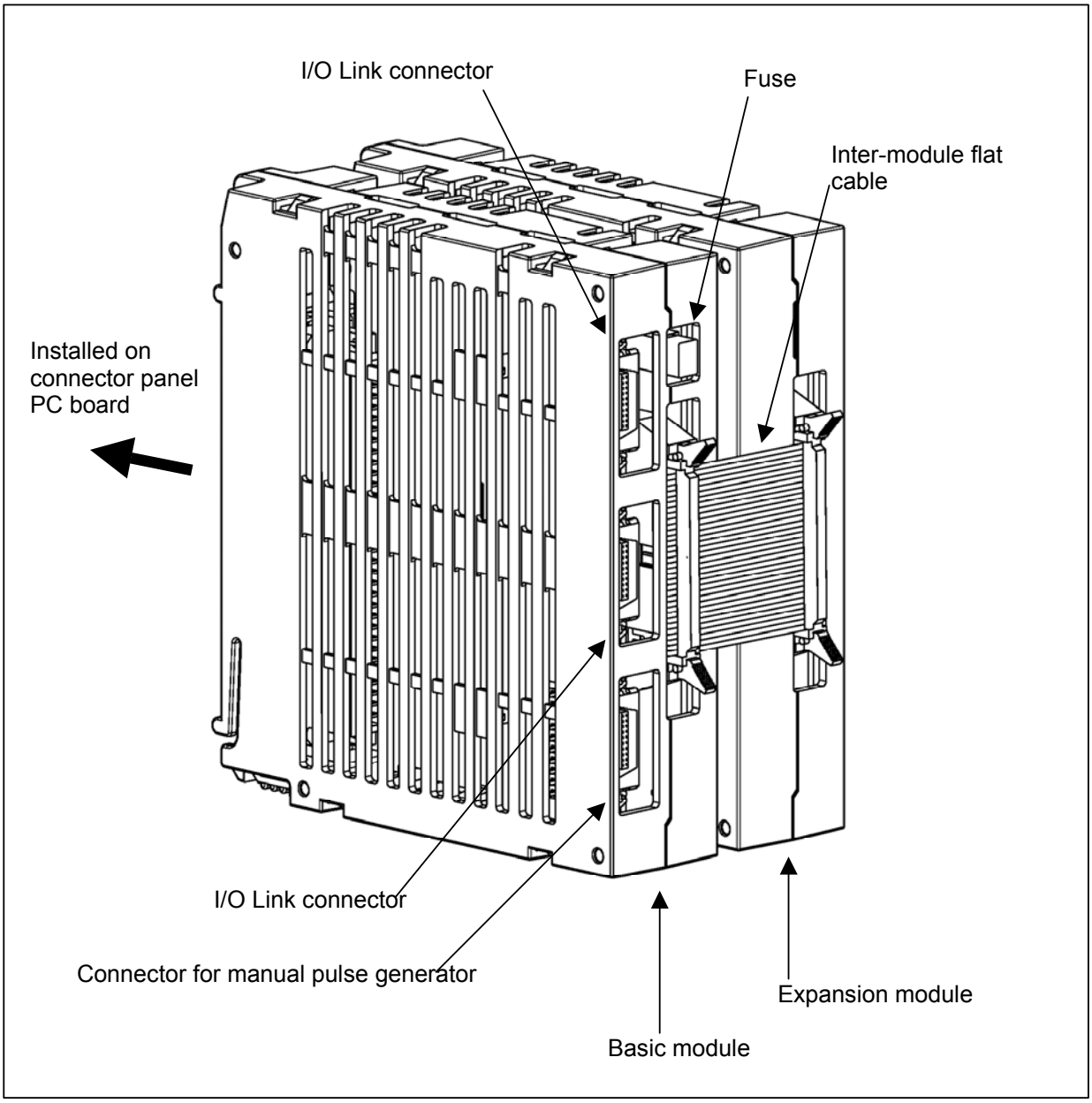


**NOTE**

Be sure to install the basic module on the left side of the expansion module.
This unit cannot be installed on the DIN rail.
In a maximum configuration, one basic module plus one expansion module can be installed per group as shown above (DI/DO=96/64).

## 9.5.2 Connector Layout Diagram

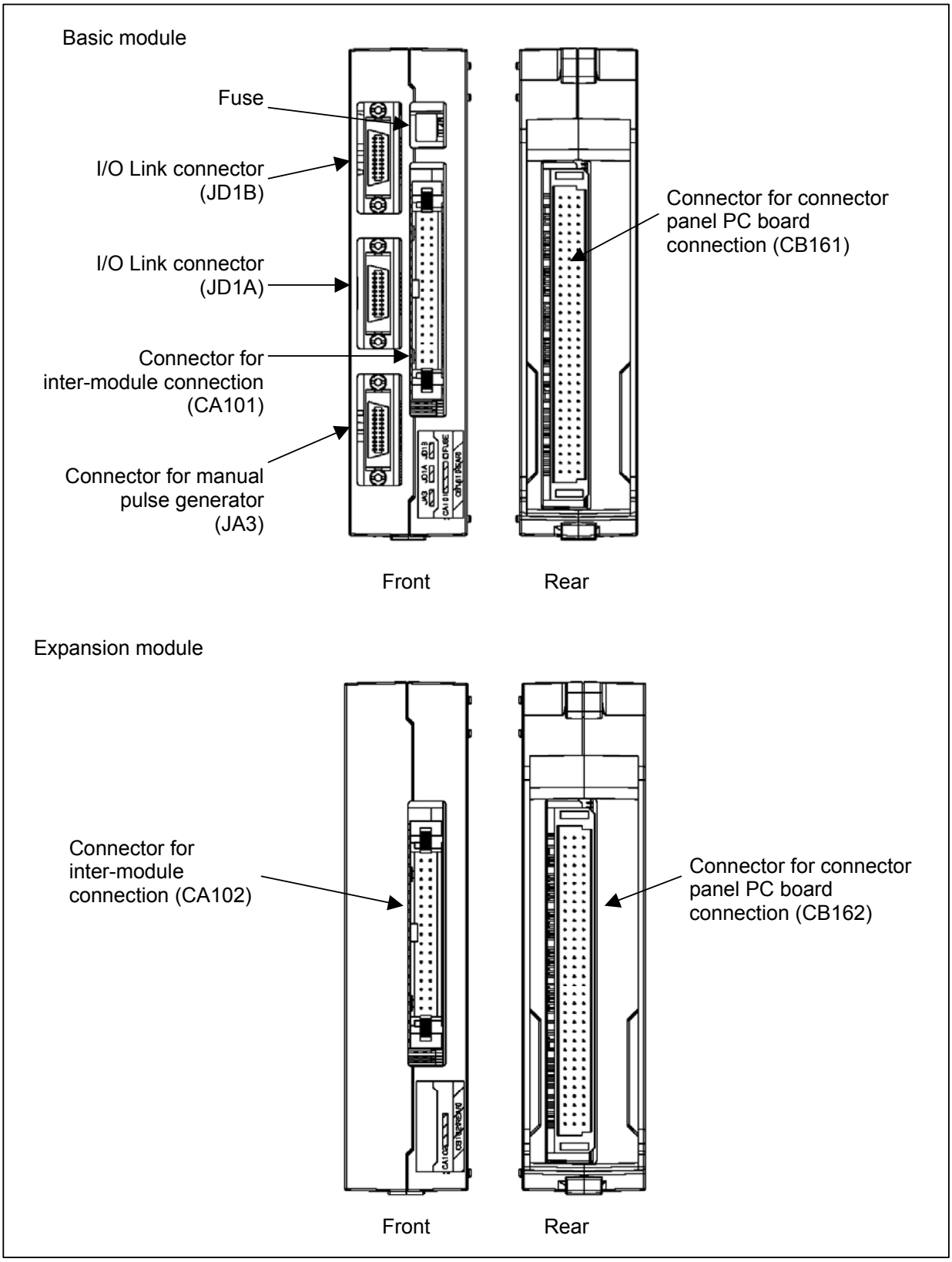

## 9.5.3 Connection Diagram

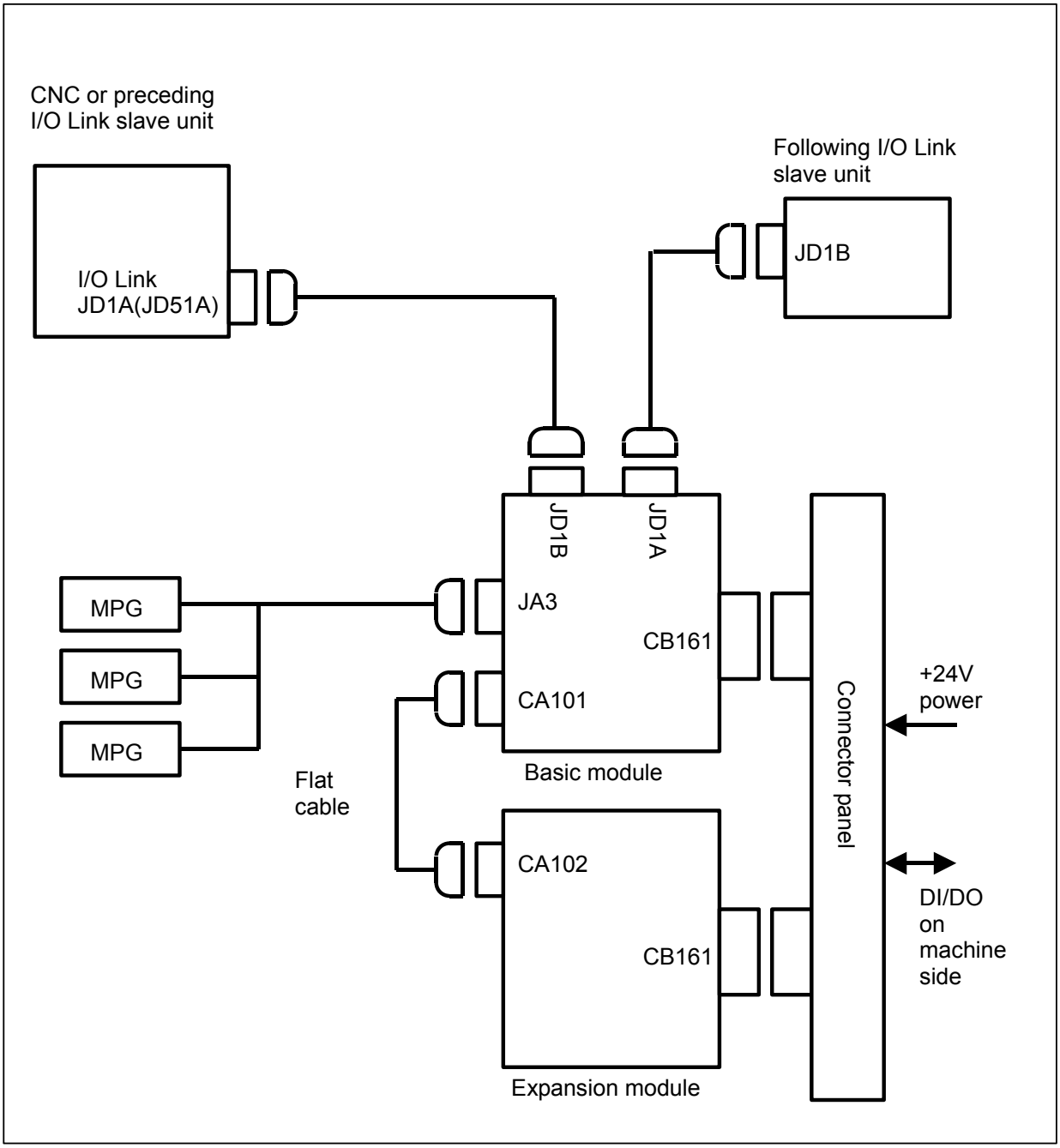


**NOTE**

The maximum configuration of a group consists of one basic module plus one expansion module as shown above. At this time, the number of input points is 96, and the number of output points is 64. To add points, connect an additional slave onto the I/O Link.

# 9.5.4 Module Specifications

Types of modules

| Name | Drawing No. | Specifications |
|---|---|---|
| Distribution I/O type-2<br>(Basic module B1) | A03B-0815-C040 | DI/DO=48/32<br>With MPG interface |
| Distribution I/O type-2<br>(Basic module B2) | A03B-0815-C041 | DI/DO=48/32<br>Without MPG interface |
| Distribution I/O type-2<br>(Expansion module E1) | A03B-0815-C042 | DI/DO=48/32 |
| Fuse (accessory) | A03B-0815-K002 | 1 A (for basic module) |
| Inter-module flat cable | A03B-0815-K102 | Cable length: 35 mm<br>Module interval: 5 mm |

## Installation conditions

| | |
|---|---|
| **Ambient temperature for the unit** | Operation: 0°C to 55°C<br>Storage and transportation: -20°C to 60°C |
| **Temperature change** | 1.1°C/minute maximum |
| **Humidity** | Normal condition: 75% (relative humidity) or less, no condensation<br>Short term (within one month): 95% or less (relative humidity), no condensation |
| **Vibration** | Operation: 0.5 G or less. FANUC performs evaluation test under the following conditions:<br>10 Hz to 58 Hz: 0.075 mm (amplitude)<br>58 Hz to 500 Hz: 1 G<br>Vibration direction: X, Y, and Z<br>Number of sweeps: 10 cycles<br>Compliance with IEC68-2-6<br>Non-operation: 1.0 G or less |
| **Atmosphere** | Normal machining factory environment (For use in an environment with relatively high levels of dust, coolant, organic solutions, and so forth, additional measures are required.) |
| **Other conditions** | (1) Use each I/O module in a completely sealed cabinet.<br>(2) For ventilation within each I/O module, allow a clearance of 40 mm or more between modules. Moreover, allow a clearance of 50 mm or more above and below each module.<br>Never place a device that generates a large amount of heat below an I/O module.<br>(3) When mounting I/O modules, ensure that the basic module is mounted on the left side when viewed from the flat cable. |

## Power supply rating

| Module | Power supply voltage | Power supply rating | Remarks |
|---|---|---|---|
| Basic module | 24 VDC ±10% is fed through CB161 and CB162; ±10% includes momentary variations and ripples. | 0.3A+7.3mA × DI | Number of DI points with DI=ON |
| Expansion module | | 0.2A+7.3mA × DI | Number of DI points with DI=ON |

As a guideline for heat dissipation, assume [power supply rating × 24 (W)].

## 9.5.5 DI/DO Connector Pin Assignment

This subsection describes the DI/DO connector pin assignment of the basic module and expansion module.

Basic module
CB161 (HONDA MRF-96ML)

| | A | B | C |
|---|---|---|---|
| 32 | +24V | +24V | +24V |
| 31 | 0V | 0V | 0V |
| 30 | 0V | 0V | 0V |
| 29 | | DICOM0 | Xm+0.0 |
| 28 | Xm+0.1 | Xm+0.2 | Xm+0.3 |
| 27 | Xm+0.4 | Xm+0.5 | Xm+0.6 |
| 26 | Xm+0.7 | Xm+1.0 | Xm+1.1 |
| 25 | Xm+1.2 | Xm+1.3 | Xm+1.4 |
| 24 | Xm+1.5 | Xm+1.6 | Xm+1.7 |
| 23 | Xm+2.0 | Xm+2.1 | Xm+2.2 |
| 22 | Xm+2.3 | Xm+2.4 | Xm+2.5 |
| 21 | Xm+2.6 | Xm+2.7 | Xm+3.0 |
| 20 | Xm+3.1 | Xm+3.2 | Xm+3.3 |
| 19 | Xm+3.4 | Xm+3.5 | Xm+3.6 |
| 18 | Xm+3.7 | Xm+4.0 | Xm+4.1 |
| 17 | Xm+4.2 | Xm+4.3 | Xm+4.4 |
| 16 | Xm+4.5 | Xm+4.6 | Xm+4.7 |
| 15 | Xm+5.0 | Xm+5.1 | Xm+5.2 |
| 14 | Xm+5.3 | Xm+5.4 | Xm+5.5 |
| 13 | Xm+5.6 | Xm+5.7 | DICOM3 |
| 12 | Yn+3.5 | Yn+3.6 | Yn+3.7 |
| 11 | Yn+3.2 | Yn+3.3 | Yn+3.4 |
| 10 | Yn+2.7 | Yn+3.0 | Yn+3.1 |
| 9 | Yn+2.4 | Yn+2.5 | Yn+2.6 |
| 8 | Yn+2.1 | Yn+2.2 | Yn+2.3 |
| 7 | DOCOM23 | DOCOM23 | Yn+2.0 |
| 6 | Yn+1.5 | Yn+1.6 | Yn+1.7 |
| 5 | Yn+1.2 | Yn+1.3 | Yn+1.4 |
| 4 | Yn+0.7 | Yn+1.0 | Yn+1.1 |
| 3 | Yn+0.4 | Yn+0.5 | Yn+0.6 |
| 2 | Yn+0.1 | Yn+0.2 | Yn+0.3 |
| 1 | DOCOM01 | DOCOM01 | Yn+0.0 |

Expansion module
CB162 (HONDA MRF-96ML)

| | A | B | C |
|---|---|---|---|
| 32 | +24V | +24V | +24V |
| 31 | 0V | 0V | 0V |
| 30 | 0V | 0V | 0V |
| 29 | | DICOM6 | Xm+6.0 |
| 28 | Xm+6.1 | Xm+6.2 | Xm+6.3 |
| 27 | Xm+6.4 | Xm+6.5 | Xm+6.6 |
| 26 | Xm+6.7 | Xm+7.0 | Xm+7.1 |
| 25 | Xm+7.2 | Xm+7.3 | Xm+7.4 |
| 24 | Xm+7.5 | Xm+7.6 | Xm+7.7 |
| 23 | Xm+8.0 | Xm+8.1 | Xm+8.2 |
| 22 | Xm+8.3 | Xm+8.4 | Xm+8.5 |
| 21 | Xm+8.6 | Xm+8.7 | Xm+9.0 |
| 20 | Xm+9.1 | Xm+9.2 | Xm+9.3 |
| 19 | Xm+9.4 | Xm+9.5 | Xm+9.6 |
| 18 | Xm+9.7 | Xm+10.0 | Xm+10.1 |
| 17 | Xm+10.2 | Xm+10.3 | Xm+10.4 |
| 16 | Xm+10.5 | Xm+10.6 | Xm+10.7 |
| 15 | Xm+11.0 | Xm+11.1 | Xm+11.2 |
| 14 | Xm+11.3 | Xm+11.4 | Xm+11.5 |
| 13 | Xm+11.6 | Xm+11.7 | DICOM9 |
| 12 | Yn+7.5 | Yn+7.6 | Yn+7.7 |
| 11 | Yn+7.2 | Yn+7.3 | Yn+7.4 |
| 10 | Yn+6.7 | Yn+7.0 | Yn+7.1 |
| 9 | Yn+6.4 | Yn+6.5 | Yn+6.6 |
| 8 | Yn+6.1 | Yn+6.2 | Yn+6.3 |
| 7 | DOCOM67 | DOCOM67 | Yn+6.0 |
| 6 | Yn+5.5 | Yn+5.6 | Yn+5.7 |
| 5 | Yn+5.2 | Yn+5.3 | Yn+5.4 |
| 4 | Yn+4.7 | Yn+5.0 | Yn+5.1 |
| 3 | Yn+4.4 | Yn+4.5 | Yn+4.6 |
| 2 | Yn+4.1 | Yn+4.2 | Yn+4.3 |
| 1 | DOCOM45 | DOCOM45 | Yn+4.0 |

**NOTE**

1 Each of Xm and Yn represents the start address of the module on the I/O Link.
2 The A32, B32, and C32 pins of each connector are used to feed 24 V to the module externally. Be sure to connect these pins.

## 9.5.6 DI (Input Signal) Connection

This subsection describes the DI (input signal) connections of the basic module and expansion modules.
○ 96 points maximum (Up to 48 points (basic module) + 48 points (expansion module) can be connected.)

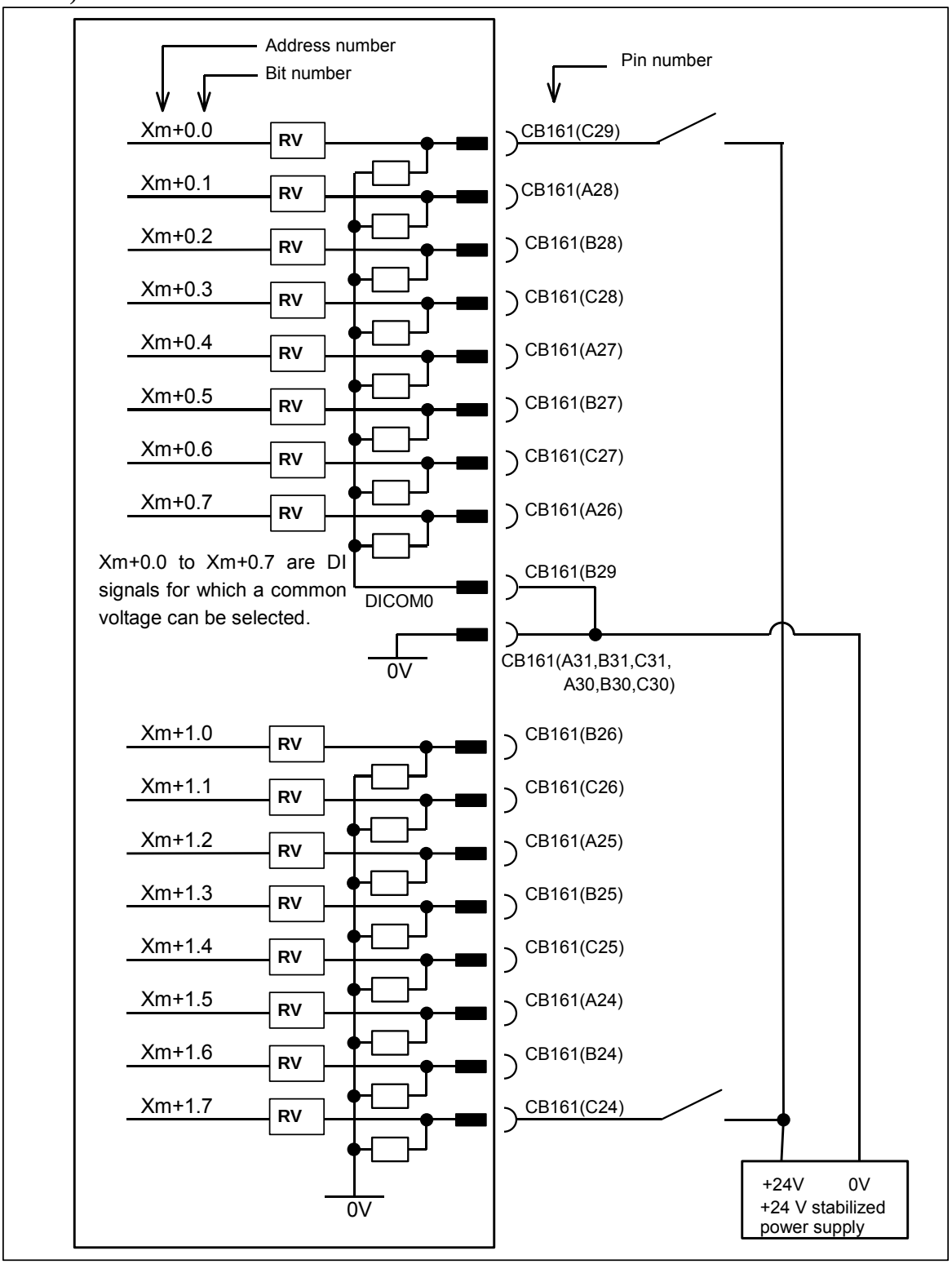

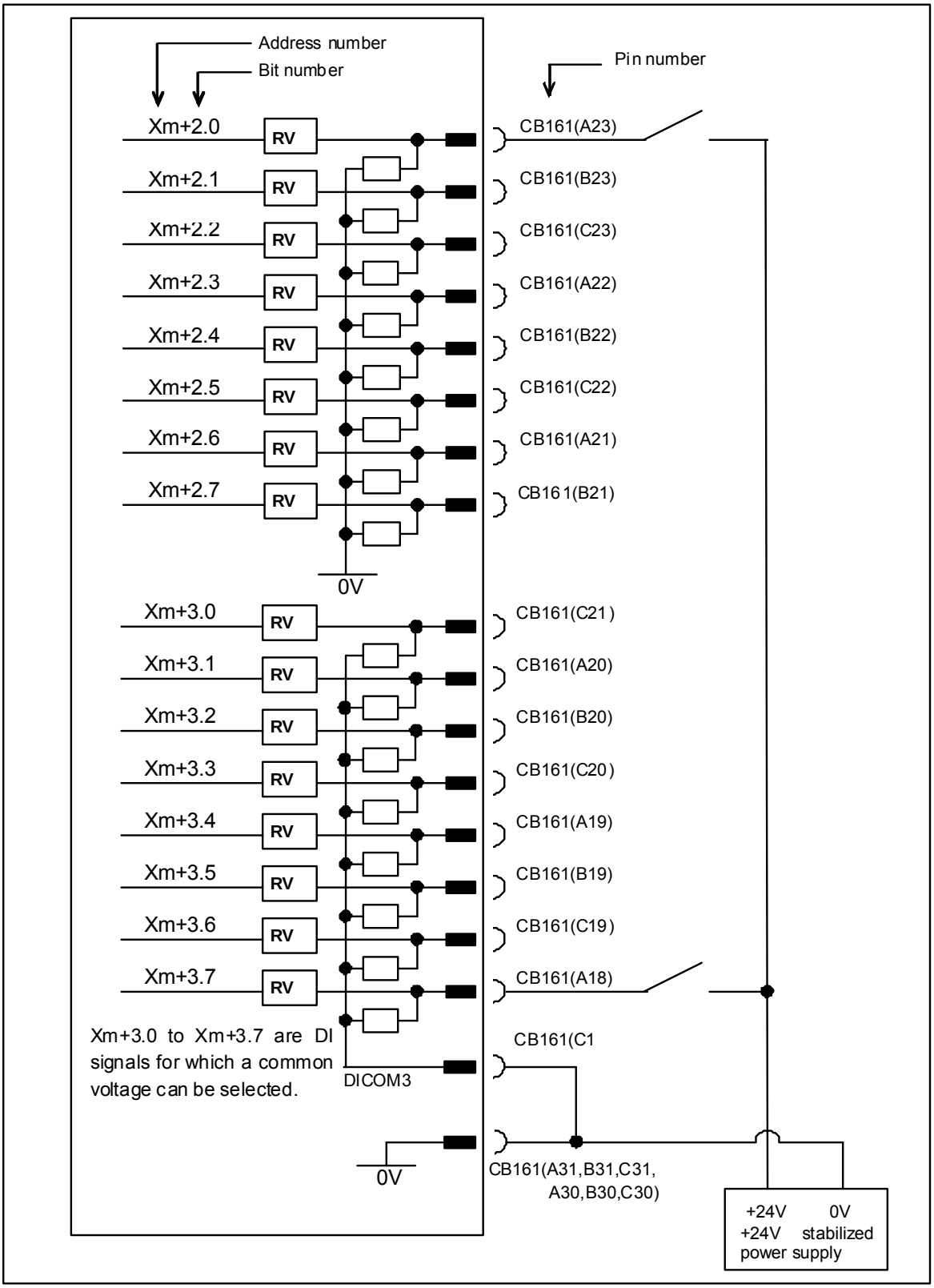
Address number
Bit number
Pin number
Xm+2.0
Xm+2.1
Xm+2.2
Xm+2.3
Xm+2.4
Xm+2.5
Xm+2.6
Xm+2.7
RV
CB161(A23)
CB161(B23)
CB161(C23)
CB161(A22)
CB161(B22)
CB161(C22)
CB161(A21)
CB161(B21)
0V
Xm+3.0
Xm+3.1
Xm+3.2
Xm+3.3
Xm+3.4
Xm+3.5
Xm+3.6
Xm+3.7
CB161(C21)
CB161(A20)
CB161(B20)
CB161(C20)
CB161(A19)
CB161(B19)
CB161(C19)
CB161(A18)
Xm+3.0 to Xm+3.7 are DI signals for which a common voltage can be selected.
DICOM3
CB161(C1
0V
CB161(A31,B31,C31, A30,B30,C30)
+24V 0V
+24V stabilized
power supply

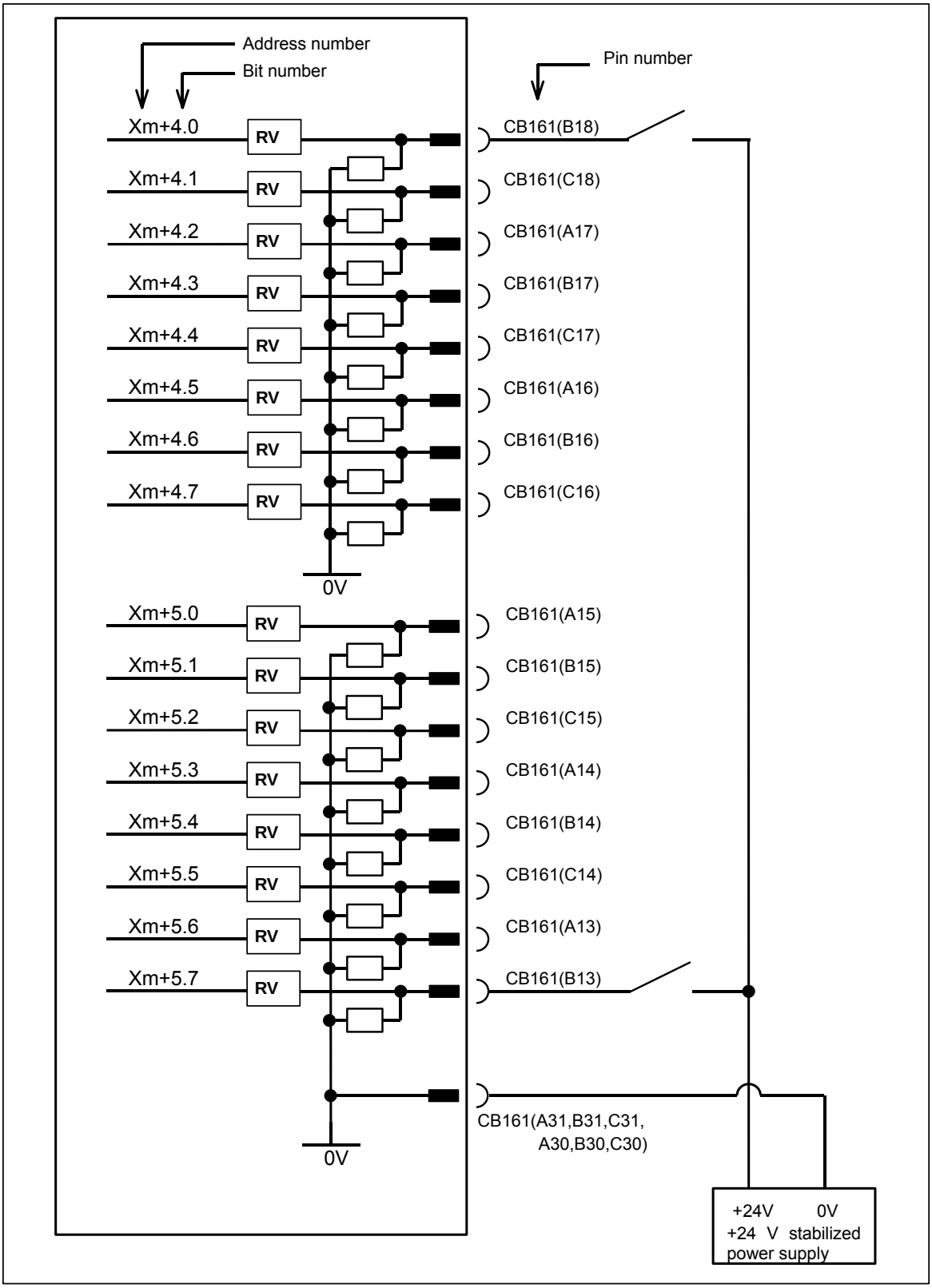
Address number
Bit number
Pin number
Xm+4.0
Xm+4.1
Xm+4.2
Xm+4.3
Xm+4.4
Xm+4.5
Xm+4.6
Xm+4.7
RV
CB161(B18)
CB161(C18)
CB161(A17)
CB161(B17)
CB161(C17)
CB161(A16)
CB161(B16)
CB161(C16)
0V
Xm+5.0
Xm+5.1
Xm+5.2
Xm+5.3
Xm+5.4
Xm+5.5
Xm+5.6
Xm+5.7
CB161(A15)
CB161(B15)
CB161(C15)
CB161(A14)
CB161(B14)
CB161(C14)
CB161(A13)
CB161(B13)
CB161(A31,B31,C31,
A30,B30,C30)
0V
+24V 0V
+24 V stabilized
power supply

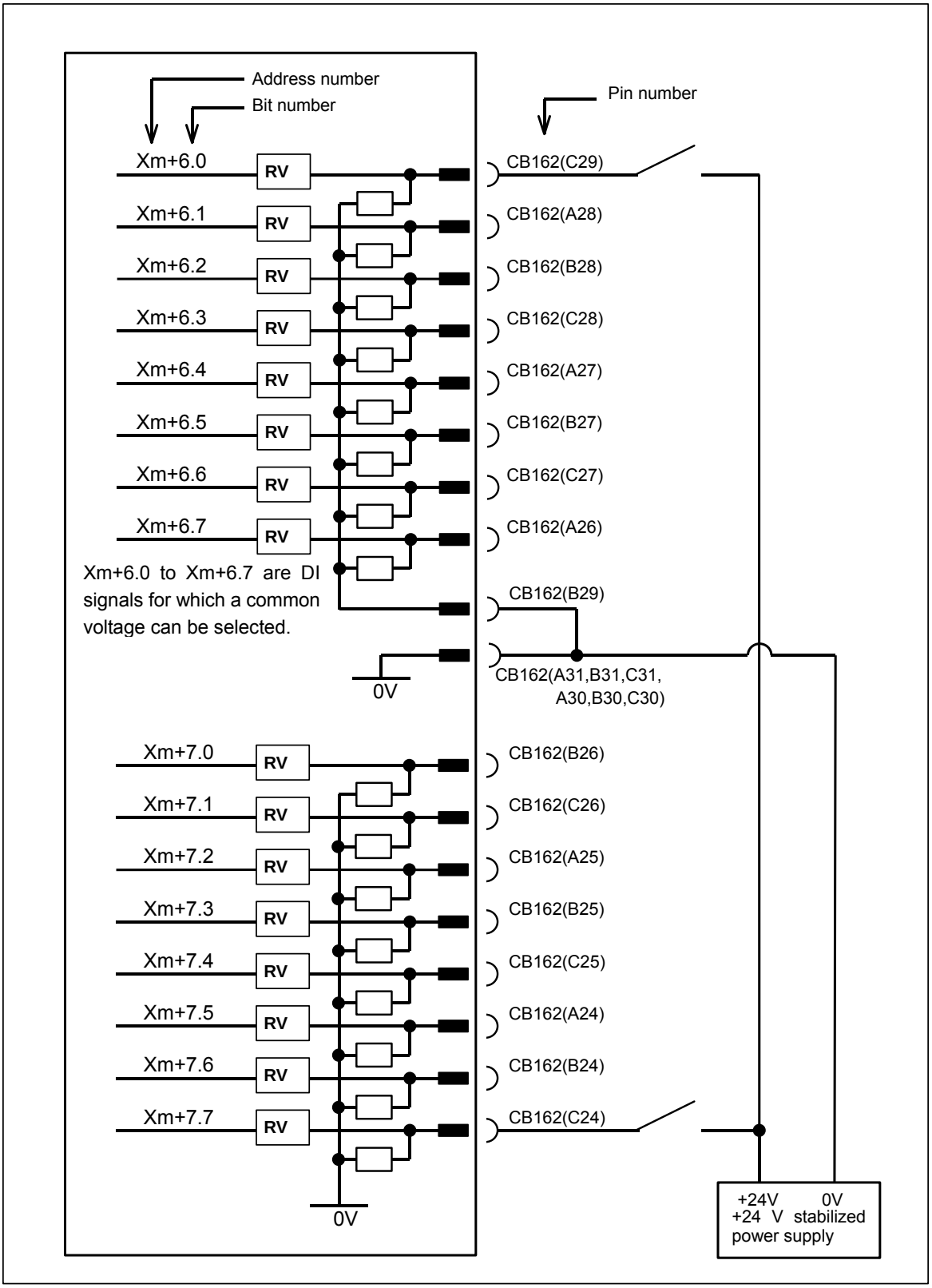
Address number
Bit number
Pin number
Xm+6.0
Xm+6.1
Xm+6.2
Xm+6.3
Xm+6.4
Xm+6.5
Xm+6.6
Xm+6.7
RV
CB162(C29)
CB162(A28)
CB162(B28)
CB162(C28)
CB162(A27)
CB162(B27)
CB162(C27)
CB162(A26)
Xm+6.0 to Xm+6.7 are DI signals for which a common voltage can be selected.
CB162(B29)
0V
CB162(A31,B31,C31, A30,B30,C30)
Xm+7.0
Xm+7.1
Xm+7.2
Xm+7.3
Xm+7.4
Xm+7.5
Xm+7.6
Xm+7.7
CB162(B26)
CB162(C26)
CB162(A25)
CB162(B25)
CB162(C25)
CB162(A24)
CB162(B24)
CB162(C24)
0V
+24V 0V
+24 V stabilized power supply

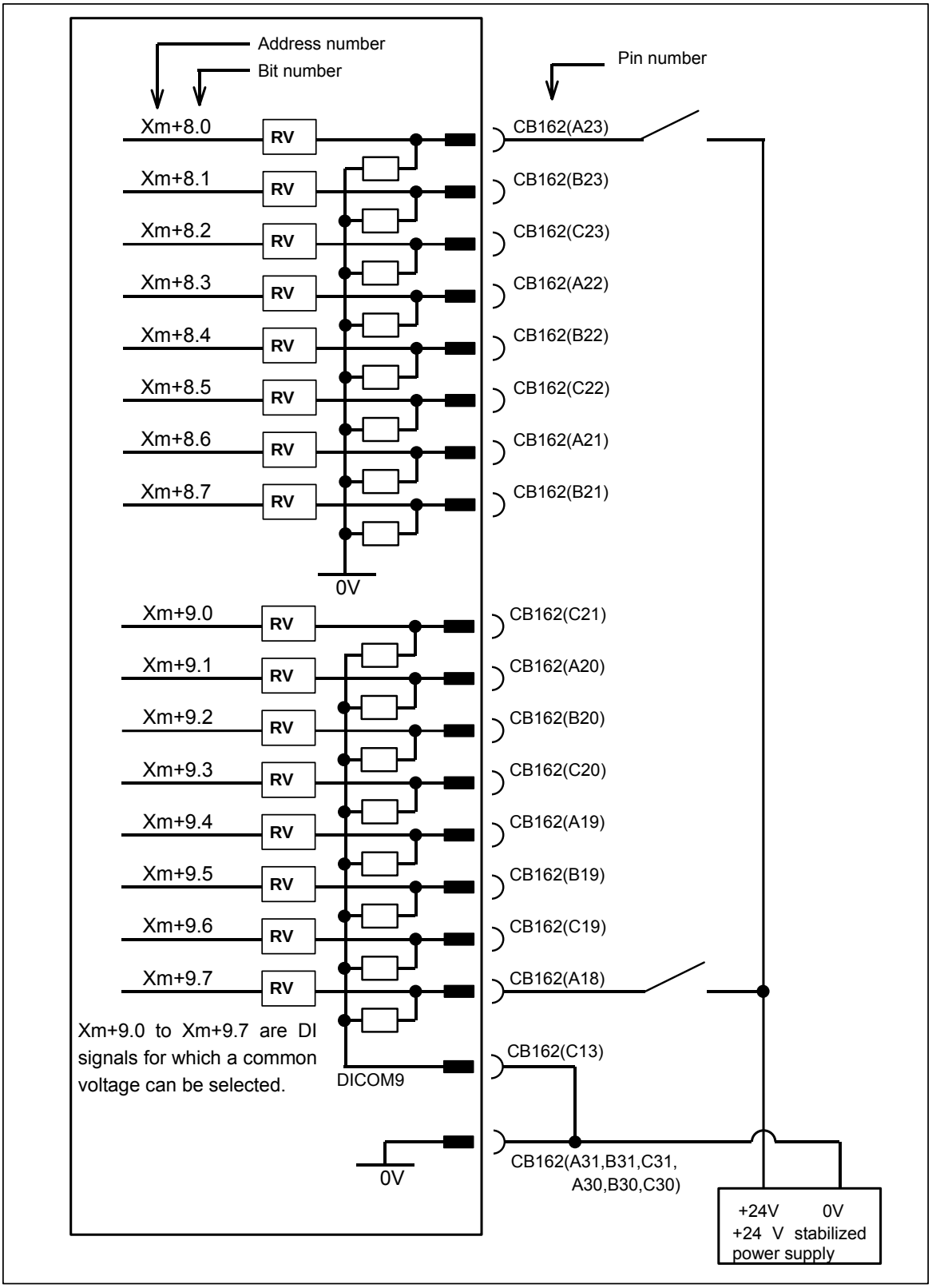
Address number
Bit number
Pin number
Xm+8.0
Xm+8.1
Xm+8.2
Xm+8.3
Xm+8.4
Xm+8.5
Xm+8.6
Xm+8.7
RV
CB162(A23)
CB162(B23)
CB162(C23)
CB162(A22)
CB162(B22)
CB162(C22)
CB162(A21)
CB162(B21)
0V
Xm+9.0
Xm+9.1
Xm+9.2
Xm+9.3
Xm+9.4
Xm+9.5
Xm+9.6
Xm+9.7
CB162(C21)
CB162(A20)
CB162(B20)
CB162(C20)
CB162(A19)
CB162(B19)
CB162(C19)
CB162(A18)
Xm+9.0 to Xm+9.7 are DI signals for which a common voltage can be selected.
DICOM9
CB162(C13)
0V
CB162(A31,B31,C31, A30,B30,C30)
+24V 0V
+24 V stabilized power supply

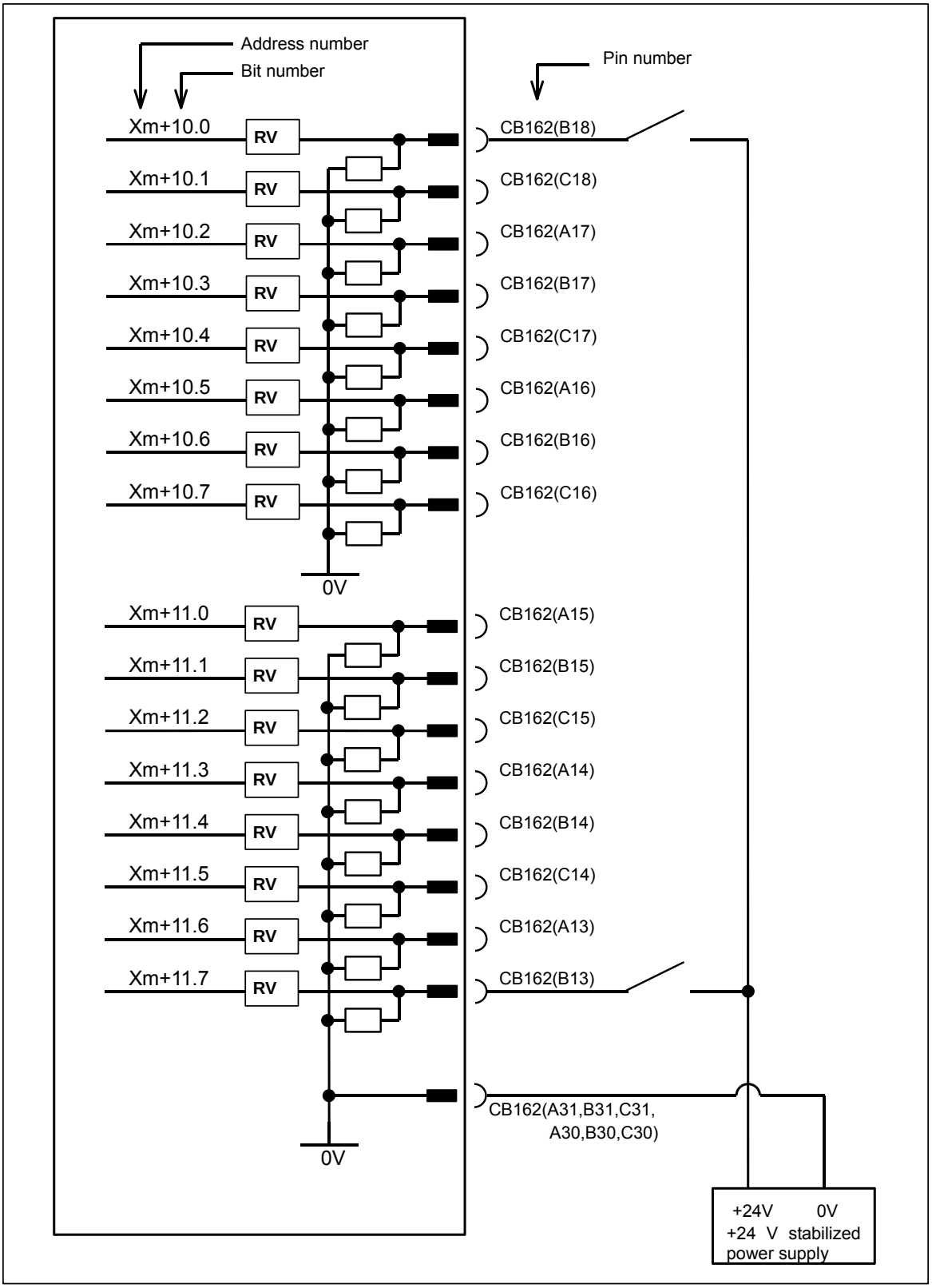
Address number
Bit number
Pin number
Xm+10.0
Xm+10.1
Xm+10.2
Xm+10.3
Xm+10.4
Xm+10.5
Xm+10.6
Xm+10.7
RV
CB162(B18)
CB162(C18)
CB162(A17)
CB162(B17)
CB162(C17)
CB162(A16)
CB162(B16)
CB162(C16)
0V
Xm+11.0
Xm+11.1
Xm+11.2
Xm+11.3
Xm+11.4
Xm+11.5
Xm+11.6
Xm+11.7
CB162(A15)
CB162(B15)
CB162(C15)
CB162(A14)
CB162(B14)
CB162(C14)
CB162(A13)
CB162(B13)
CB162(A31,B31,C31,
A30,B30,C30)
0V
+24V 0V
+24 V stabilized
power supply

## 9.5.7 DO (Output Signal) Connection

This subsection describes the DO (output signal) connections of the basic module and expansion module.
○ 64 points maximum (Up to 32 points (basic module) + 32 points (expansion module) can be connected.)

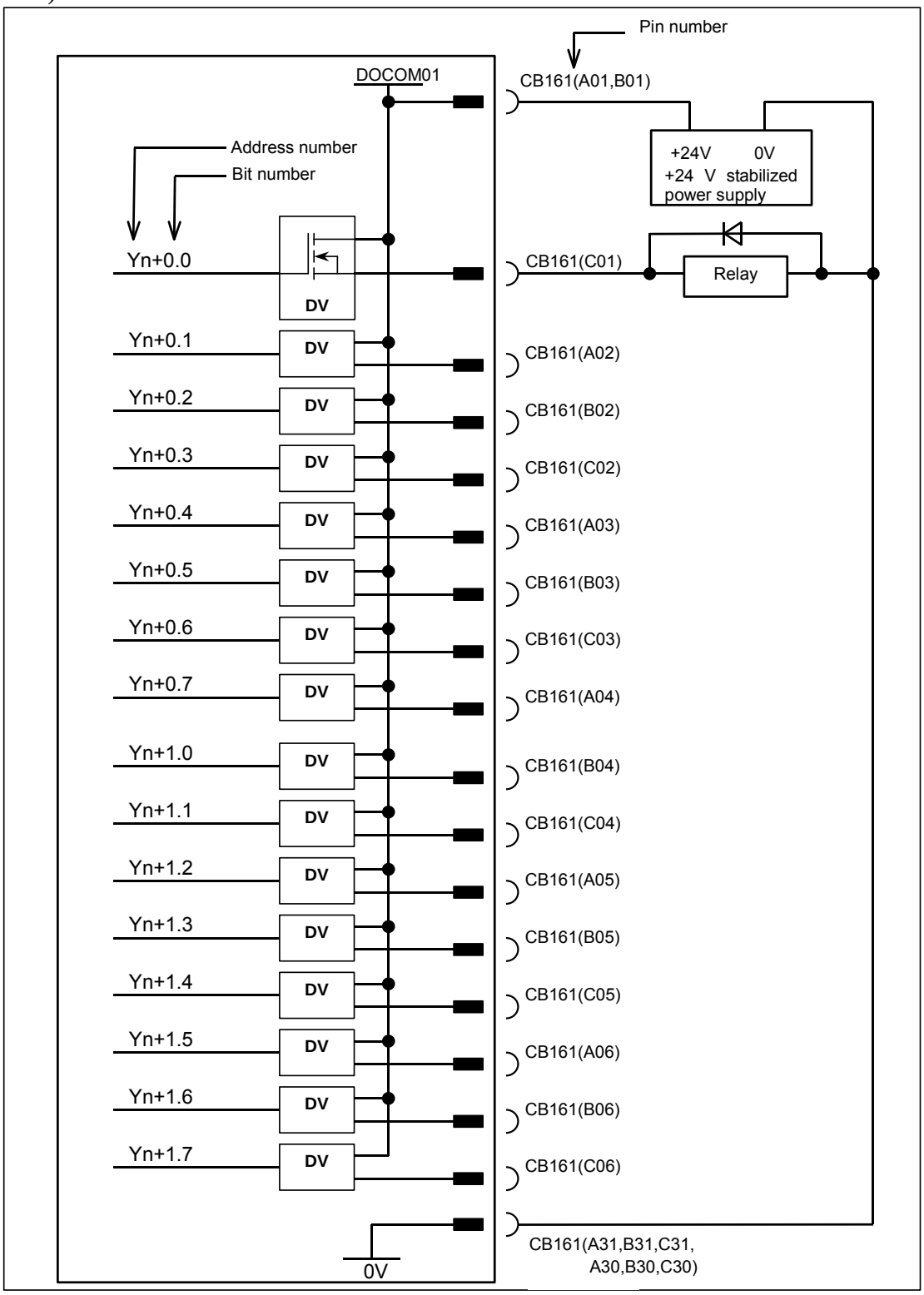

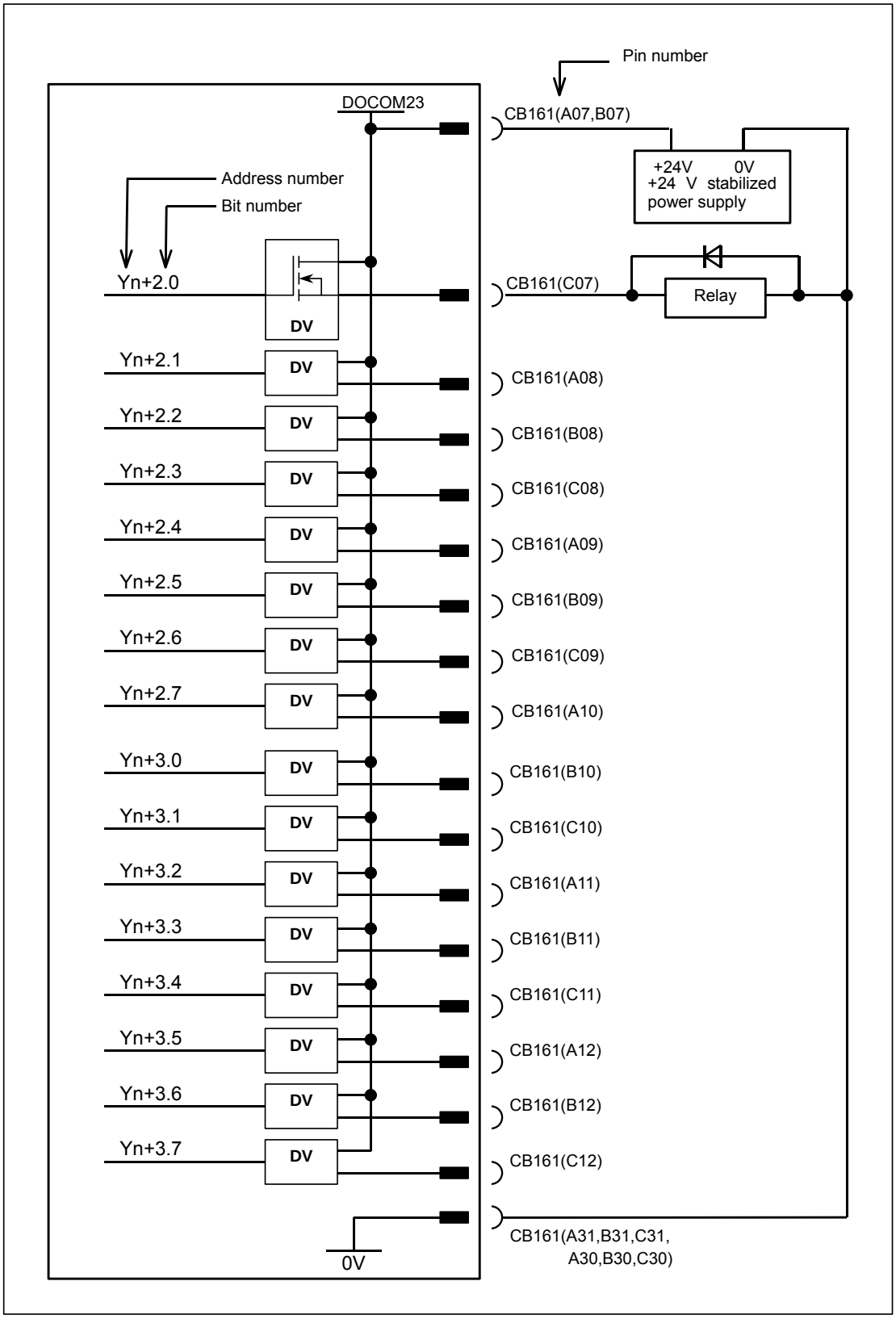
Pin number
DOCOM23
CB161(A07,B07)
+24V 0V
+24 V stabilized
power supply
Address number
Bit number
Yn+2.0
CB161(C07)
Relay
DV
Yn+2.1
CB161(A08)
Yn+2.2
CB161(B08)
Yn+2.3
CB161(C08)
Yn+2.4
CB161(A09)
Yn+2.5
CB161(B09)
Yn+2.6
CB161(C09)
Yn+2.7
CB161(A10)
Yn+3.0
CB161(B10)
Yn+3.1
CB161(C10)
Yn+3.2
CB161(A11)
Yn+3.3
CB161(B11)
Yn+3.4
CB161(C11)
Yn+3.5
CB161(A12)
Yn+3.6
CB161(B12)
Yn+3.7
CB161(C12)
CB161(A31,B31,C31,
A30,B30,C30)
0V

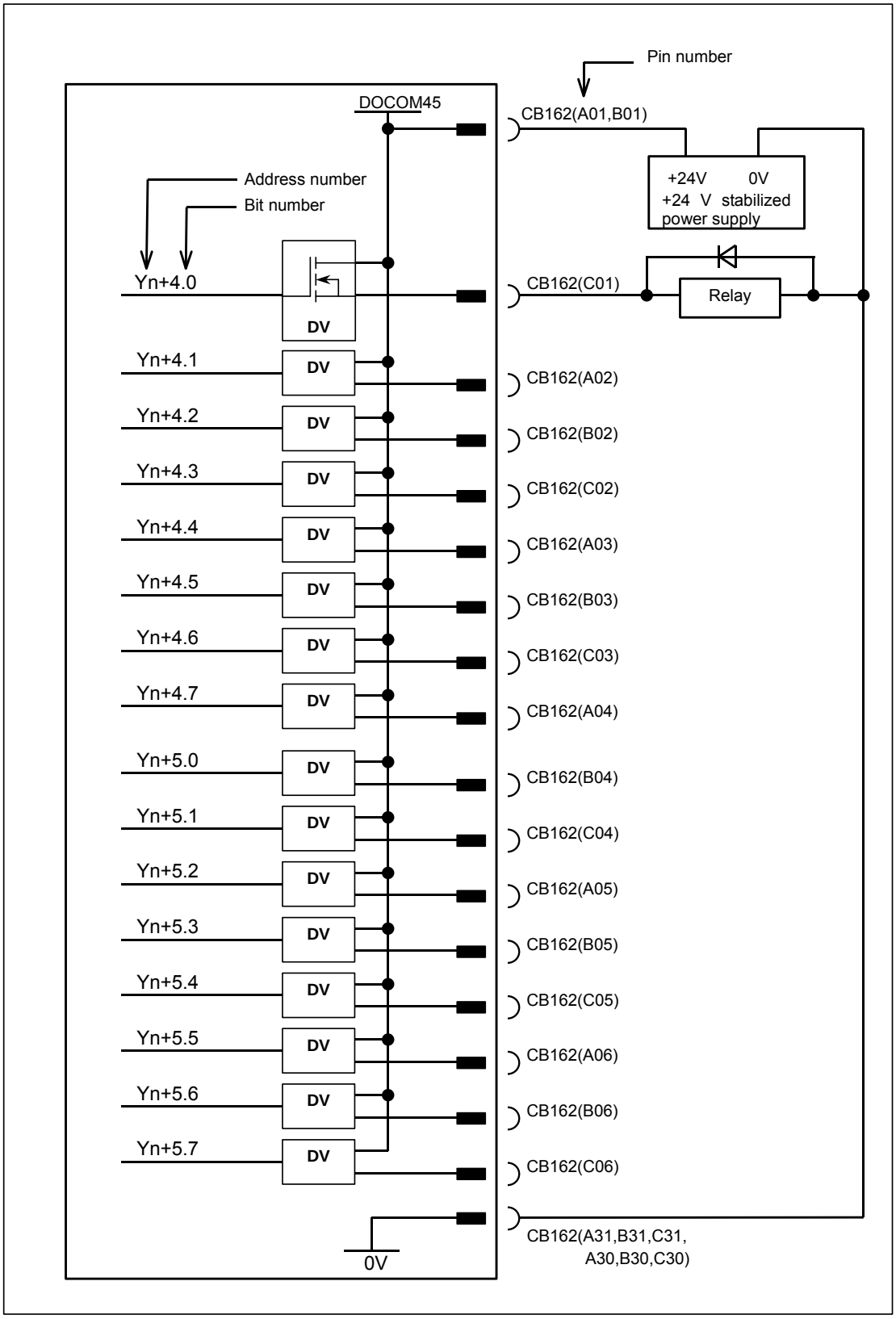
Pin number
DOCOM45
CB162(A01,B01)
+24V 0V
+24 V stabilized
power supply
Address number
Bit number
Yn+4.0
CB162(C01)
Relay
DV
Yn+4.1
CB162(A02)
Yn+4.2
CB162(B02)
Yn+4.3
CB162(C02)
Yn+4.4
CB162(A03)
Yn+4.5
CB162(B03)
Yn+4.6
CB162(C03)
Yn+4.7
CB162(A04)
Yn+5.0
CB162(B04)
Yn+5.1
CB162(C04)
Yn+5.2
CB162(A05)
Yn+5.3
CB162(B05)
Yn+5.4
CB162(C05)
Yn+5.5
CB162(A06)
Yn+5.6
CB162(B06)
Yn+5.7
CB162(C06)
CB162(A31,B31,C31,
A30,B30,C30)
0V

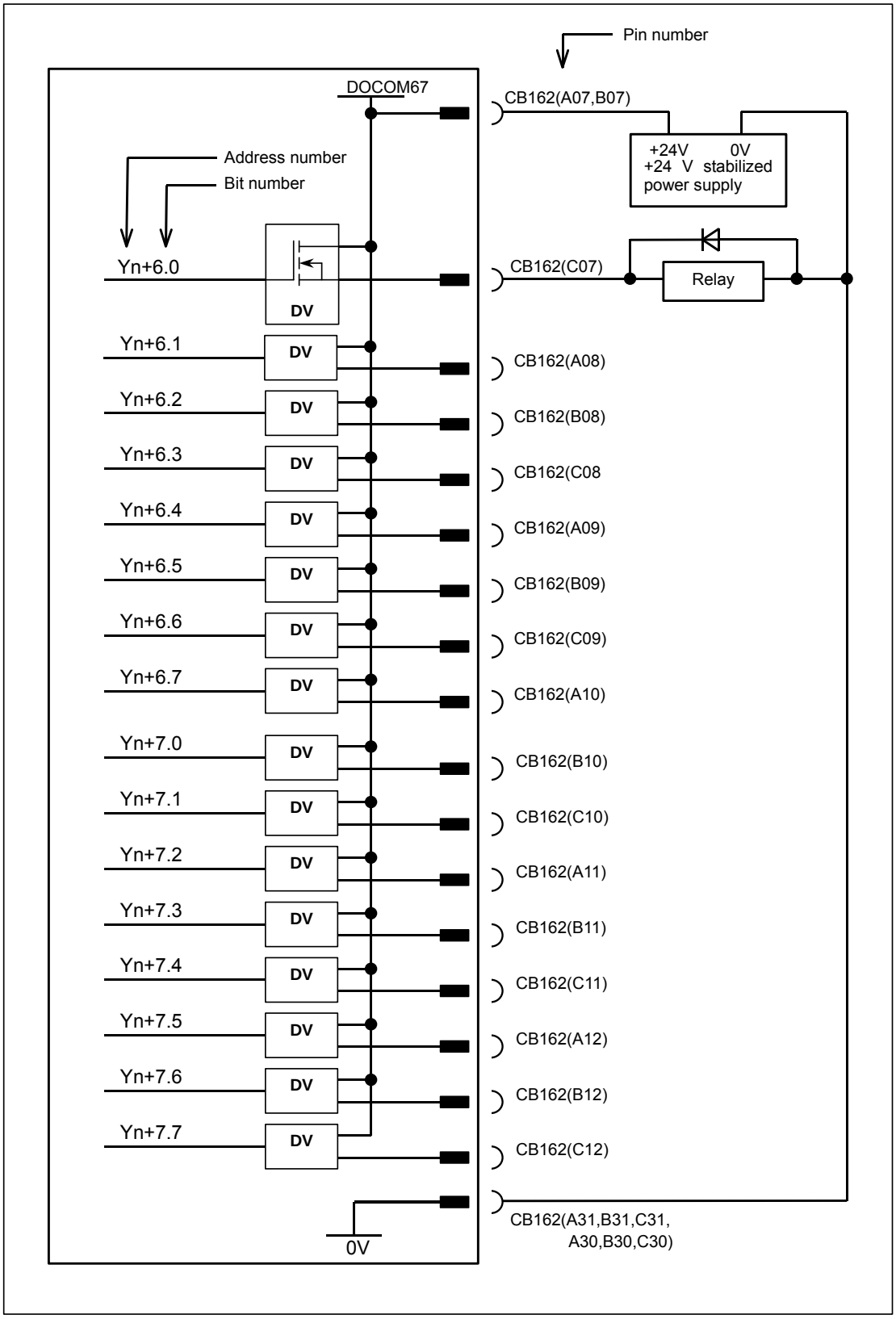
Pin number
DOCOM67
CB162(A07,B07)
+24V 0V
+24 V stabilized
power supply
Address number
Bit number
Yn+6.0
CB162(C07)
Relay
DV
Yn+6.1
CB162(A08)
Yn+6.2
CB162(B08)
Yn+6.3
CB162(C08
Yn+6.4
CB162(A09)
Yn+6.5
CB162(B09)
Yn+6.6
CB162(C09)
Yn+6.7
CB162(A10)
Yn+7.0
CB162(B10)
Yn+7.1
CB162(C10)
Yn+7.2
CB162(A11)
Yn+7.3
CB162(B11)
Yn+7.4
CB162(C11)
Yn+7.5
CB162(A12)
Yn+7.6
CB162(B12)
Yn+7.7
CB162(C12)
CB162(A31,B31,C31,
A30,B30,C30)
0V

## 9.5.8 DI/DO Signal Specifications

This subsection describes the specifications of the DI/DO signals used with the basic module and expansion module.

DI (input signal specifications)

| Number of points | 48 points (per module) |
|---|---|
| Contact rating | 30 VDC, 16 mA or more |
| Leakage current between contacts when opened | 1 mA or less (26.4 V) |
| Leakage current between contacts when closed | 2 V or less (including a cable voltage decrease) |
| Delay time | The receiver delay time is 2 ms (maximum).<br>In addition, [I/O Link transfer time between CNC and I/O module (2 ms maximum)] + [ladder scan period (depending on CNC)] must be considered. |

DO (output signal specifications)

| Number of points | 32 points (per module) |
|---|---|
| Maximum load current when ON | 200 mA or less including momentary variations |
| Saturation voltage when ON | 1 V (maximum) when the load current is 200 mA |
| Withstand voltage | 24 V +20% or less including momentary variations |
| Leakage current when OFF | 20 μA or less |
| Delay time | The driver delay time is 50 μs (maximum). In addition, [I/O Link transfer time between CNC and I/O module (2 ms maximum)] + [ladder scan period (depending on CNC)] needs to be considered. |

ON/OFF of the power supply (DO common) for DO signals (output signals)
By turning off (opening) the power supply pin (DOCOM) for the DO signals (output signals), all the DO signals of each module can be turned off at the same time. At this time, the DO state is as shown below.

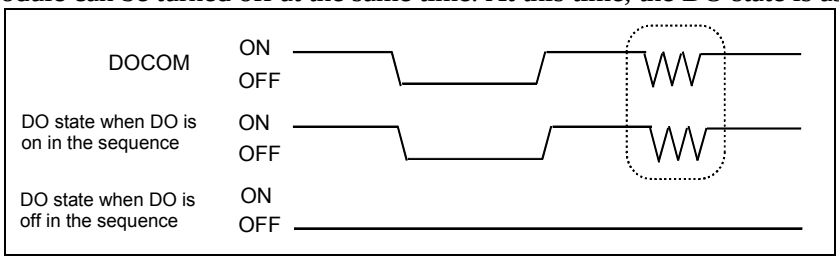


**NOTE**

When DO is on in the sequence, the ON/OFF state of DOCOM is directly reflected in the DO state as indicated above by the dashed box.
The +24 V signal to be supplied to the I/O module must not be turned off during operation. Otherwise, a CNC communication alarm is issued. Ensure that +24 V is supplied either when or before the power to the CNC is turned on, and that +24 V is removed either when or after the power to the CNC is turned off.

Parallel DO (output signal) connection
A DO load current two times larger can be obtained by connecting DO points in parallel and exercising ON/OFF control at the same time in the sequence as shown below. Namely, the maximum load current per DO point is 200 mA, but 400 mA can be obtained by connecting two DO points in parallel and turning on the two DO points at the same time. In this case, however, the leakage current is also doubled up to 40 μA when the DO points are turned off.

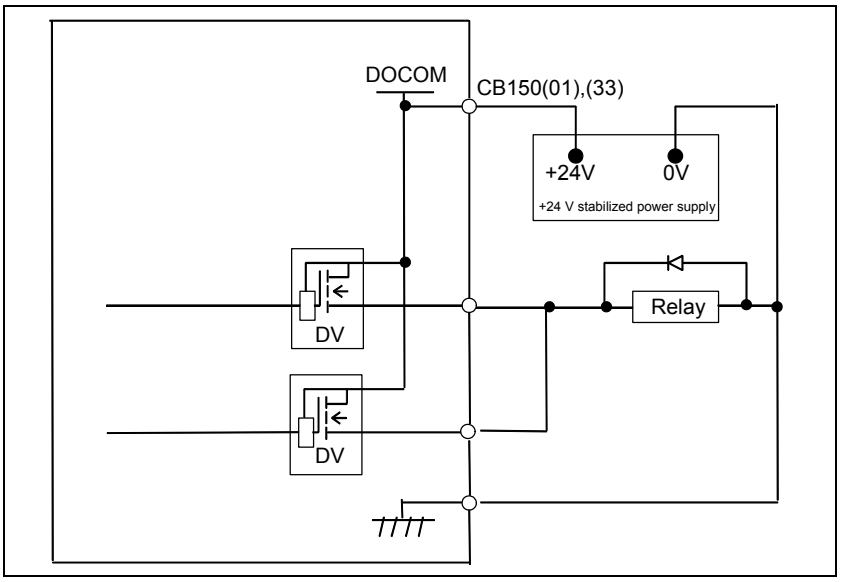


## 9.5.9 Power Supply Connection

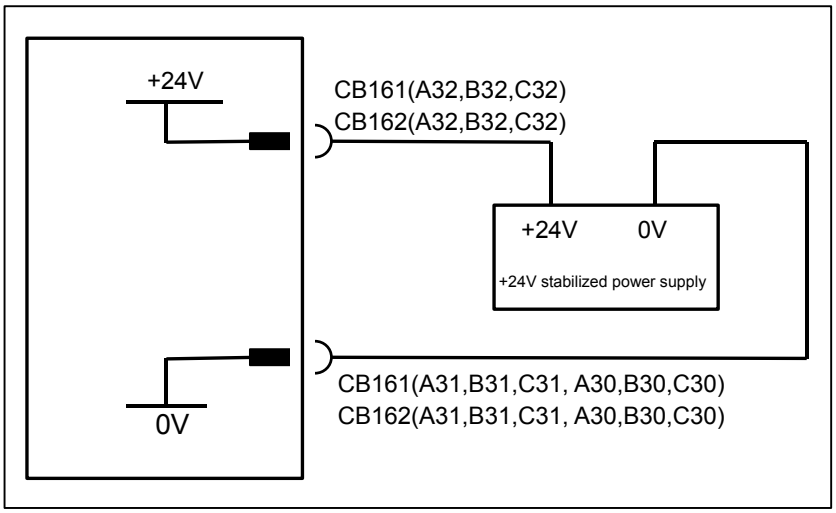


**NOTE**

The +24 V signal to be supplied to the I/O module must not be turned on/off during operation.
If the +24V signal is turned off during operation, a CNC communication alarm is issued. Ensure that +24 V is supplied either when or before the power to the CNC is turned on, and that +24 V is removed either when or after the power to the CNC is turned off.

## 9.5.10 Manual Pulse Generator Connection

See Subsection 9.2.15, "Manual Pulse Generator Connection".

## 9.5.11 Cable Length for Manual Pulse Generator

See Subsection 9.2.16, "Cable Length for Manual Pulse Generator".

## 9.5.12 Connection between Modules

Connect the basic module with an expansion module by using a 34-pin flat cable. At this time, install an expansion module on the right side of the basic module to prevent the I/O Link connector from being covered by the flat cable.

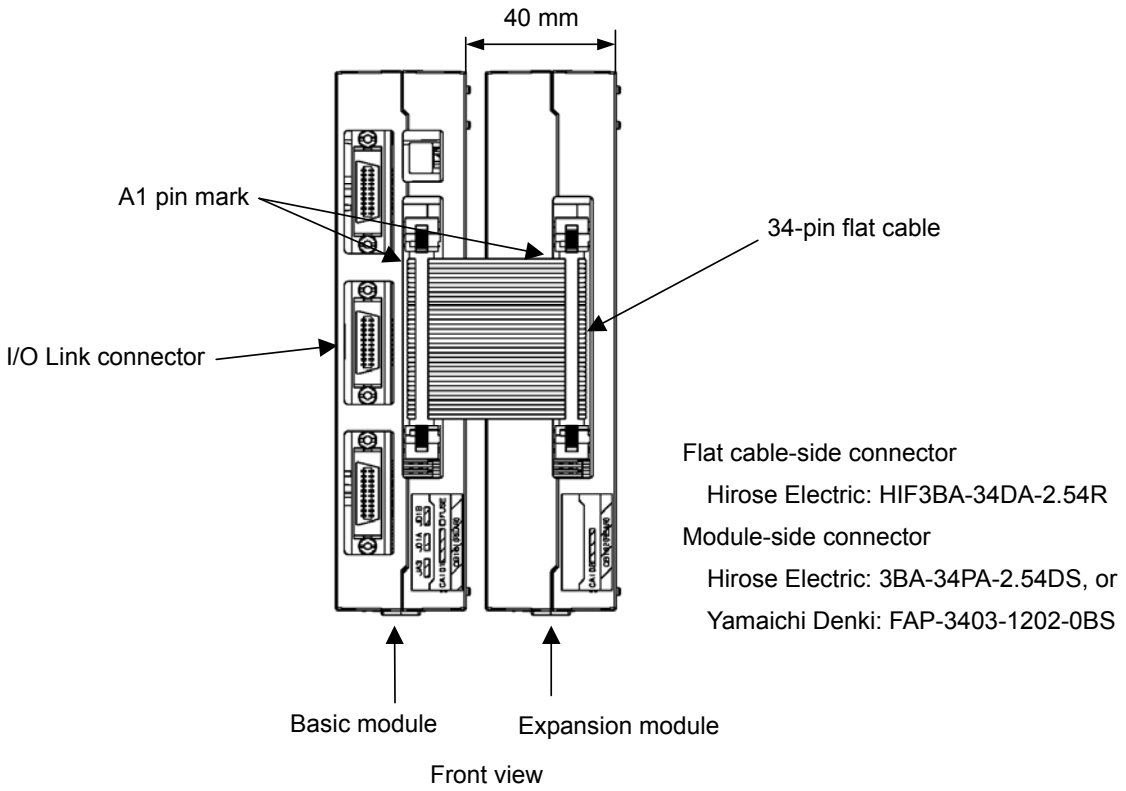


**NOTE**

When installing a flat cable, ensure that all pins are connected on a one-to-one basis.
The modules must be spaced at least 40 mm apart.
In this case, the length of the flat cable is about 35 mm. When the modules are separated furthermore, the length of the flat cable is:
35 mm + (module spacing - 40 mm)
Note, however, that the maximum allowable flat cable length is 300 mm.

## 9.5.13 Unit Dimensions

The basic module and expansion module have the same dimensions.

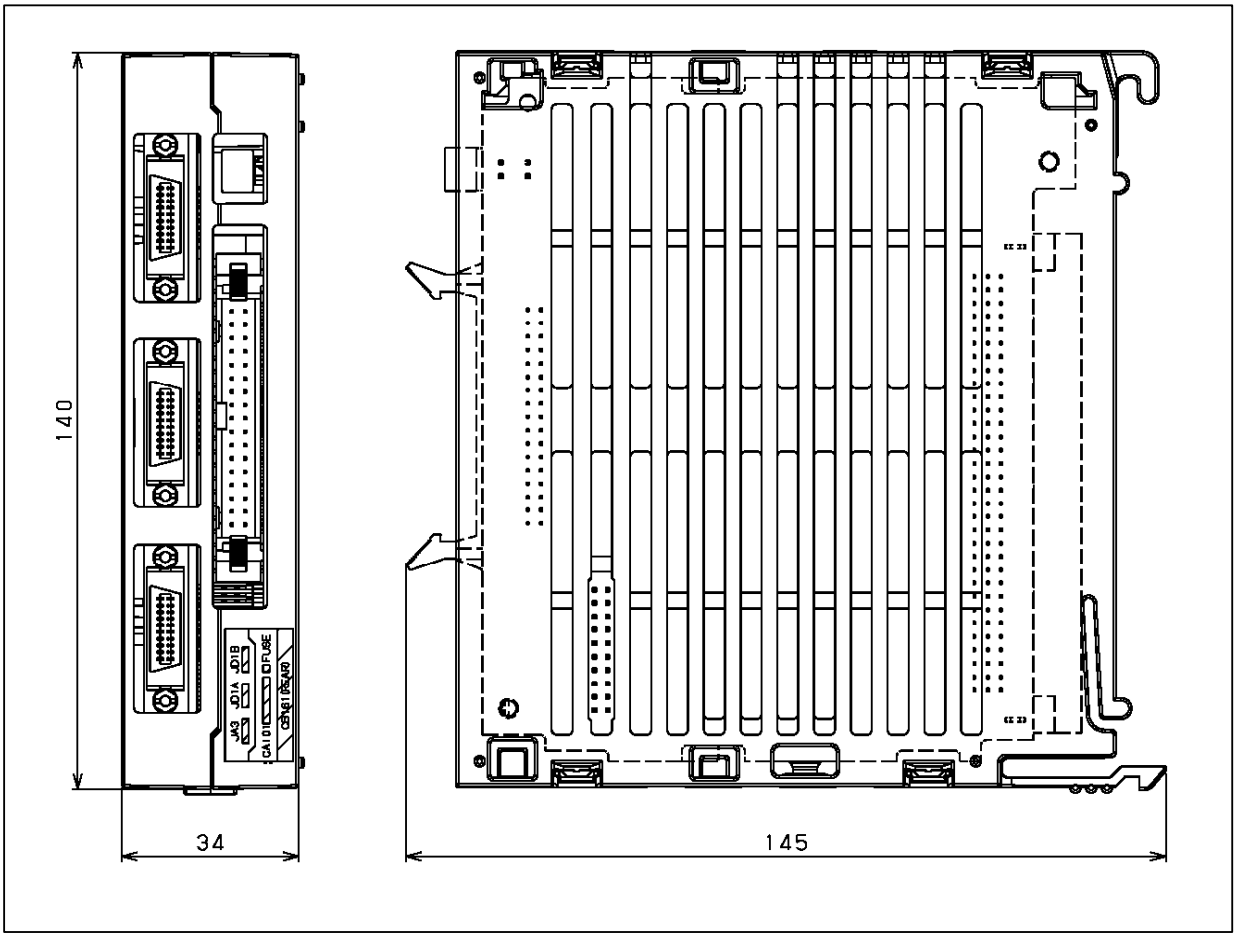


Weight: Basic module 280 g
Expansion module 210 g

## 9.5.14 Mounting the Module

Mounting the module

1. Insert the hook of the module into the square hole located at the upper part of the connector panel printed circuit board.
2. Using the hook as a fulcrum, push the module in the direction of A and mate the module's connector with the connector on the printed circuit board.
3. Push the stopper into the square hole located at the lower part of the connector panel printed circuit board until it clicks into place.

Dismounting the module

1. Press point B of the stopper.
2. Using the hook as a fulcrum, pull the lower part of the module in the direction of C.

**NOTE**

When mounting and dismounting a module, hold the module by its top and bottom surfaces. Avoid applying force to the sides (where slits are provided).

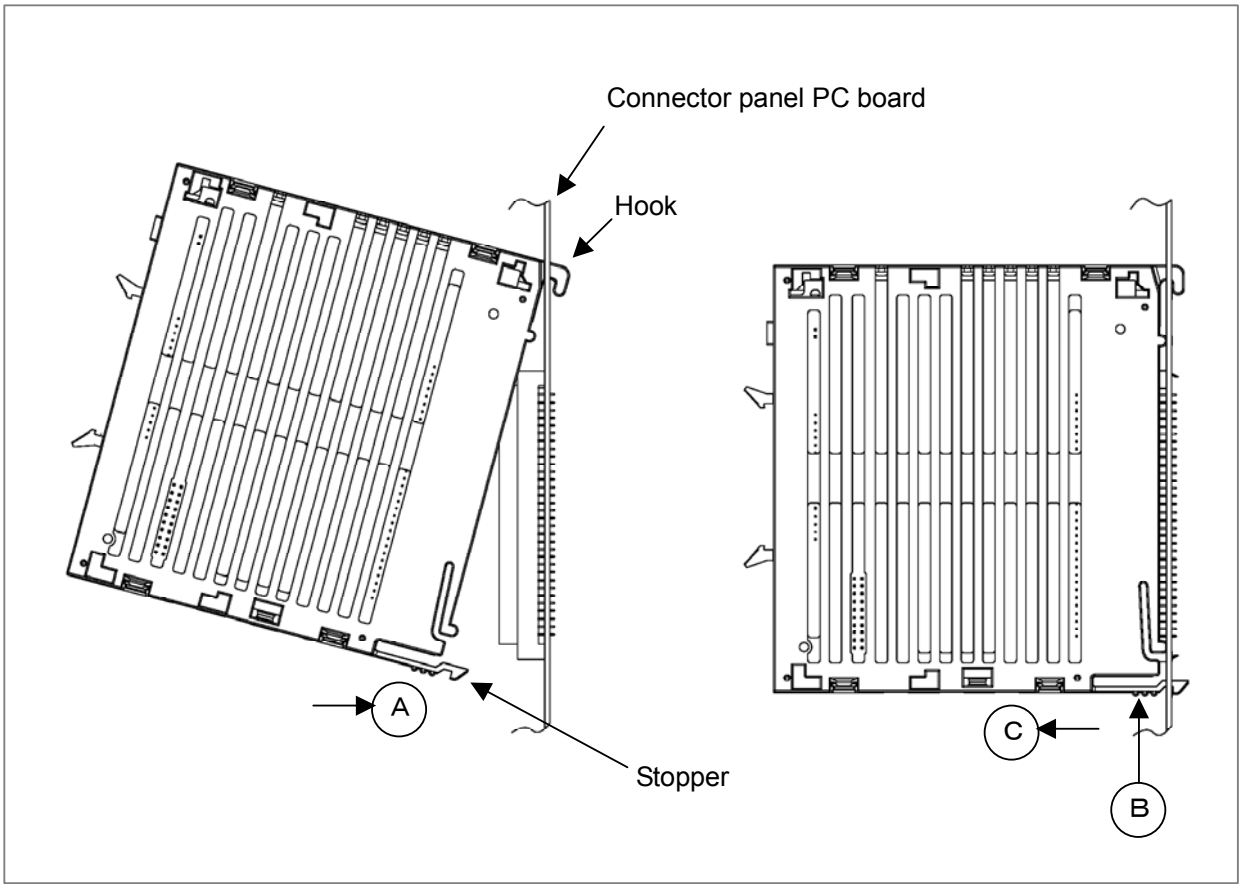
Connector panel PC board
Hook
A
Stopper
C
B

## 9.5.15 Connector Panel Printed Circuit Board

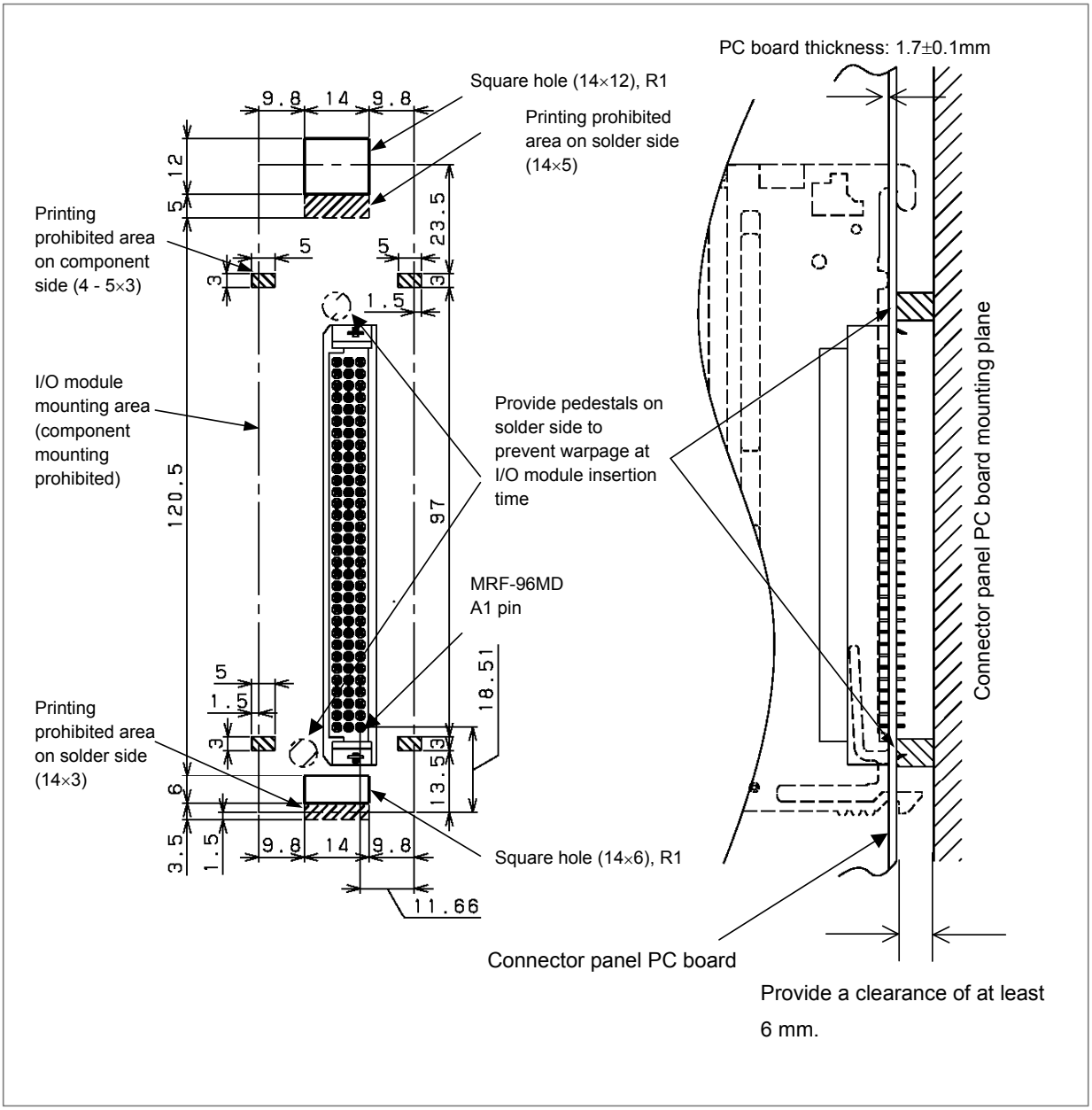

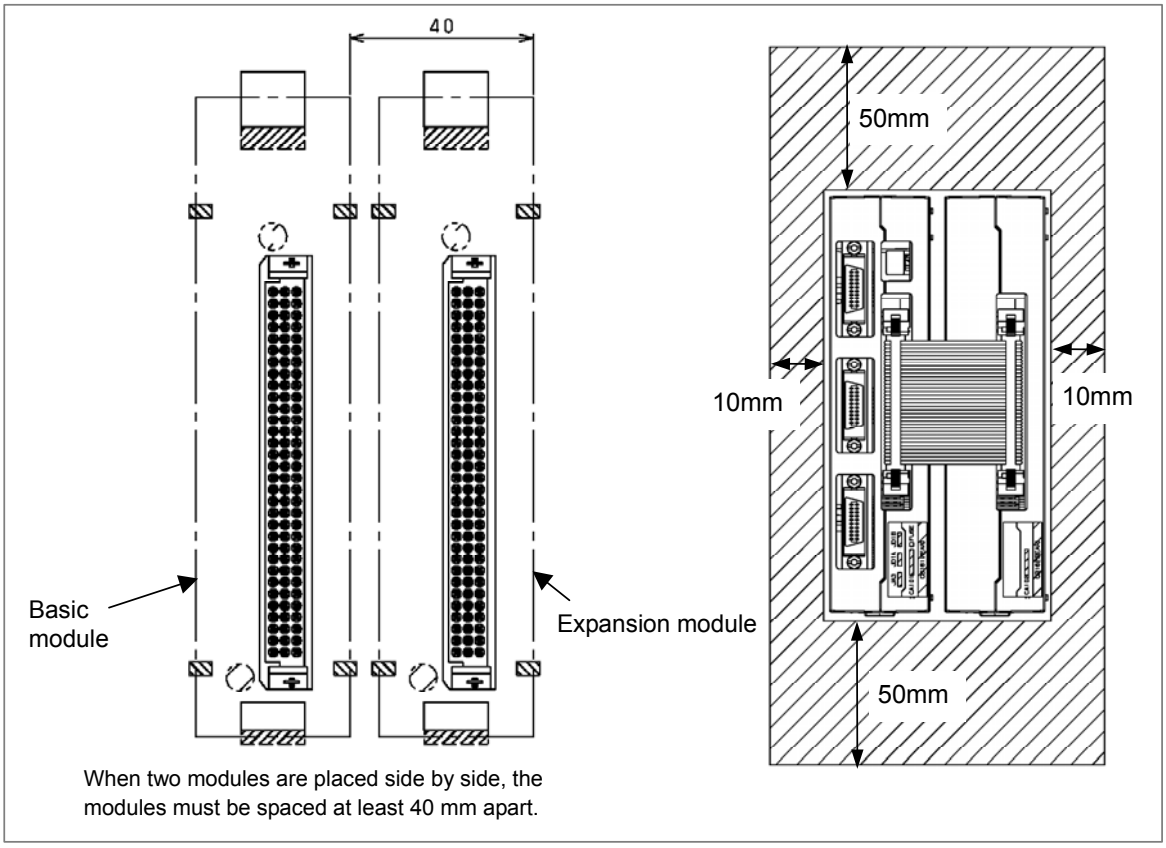


**NOTE**

1 To ensure adequate ventilation within an I/O module, allow a clearance of 50 mm or more above and below the module and a clearance of 10 mm or more on the left and right sides. Never place a device that generates a large amount of heat below an I/O module.

2 To the front panel of an I/O module, the cables for the I/O Link and manual pulse generator are connected.
For cabling, allow a clearance of about 70 mm at the front of an I/O module.

3 Space the basic module and expansion module at least 40 mm apart from each other.

4 An I/O module is secured to the connector panel by inserting the hook into a hole on the connector panel as with the current distribution I/O module. Allow a clearance for hooking on the rear side of the connector panel.

5 For securing an I/O module, four printing prohibited areas are provided on the surface of the connector panel, and a printing prohibited area is also provided beside the upper and lower square holes on the rear side.

6 When mounting the basic module and expansion module side by side, ensure that the basic module is mounted on the left side when viewed from the I/O Link connector.

7 When inserting an I/O module into the connector panel, provide pedestals at positions nearest to the connector of the connector panel to support the top and bottom areas of the connector from the rear side to protect the connector panel from being warped.

8 Ensure that the thickness of the connector panel printed circuit board is 1.7 mm ±0.1 mm.

Dimensions of the connector (MRF-96FD) for the connector panel printed circuit board
(Part order specification drawing number: : A03B-0815-K030)

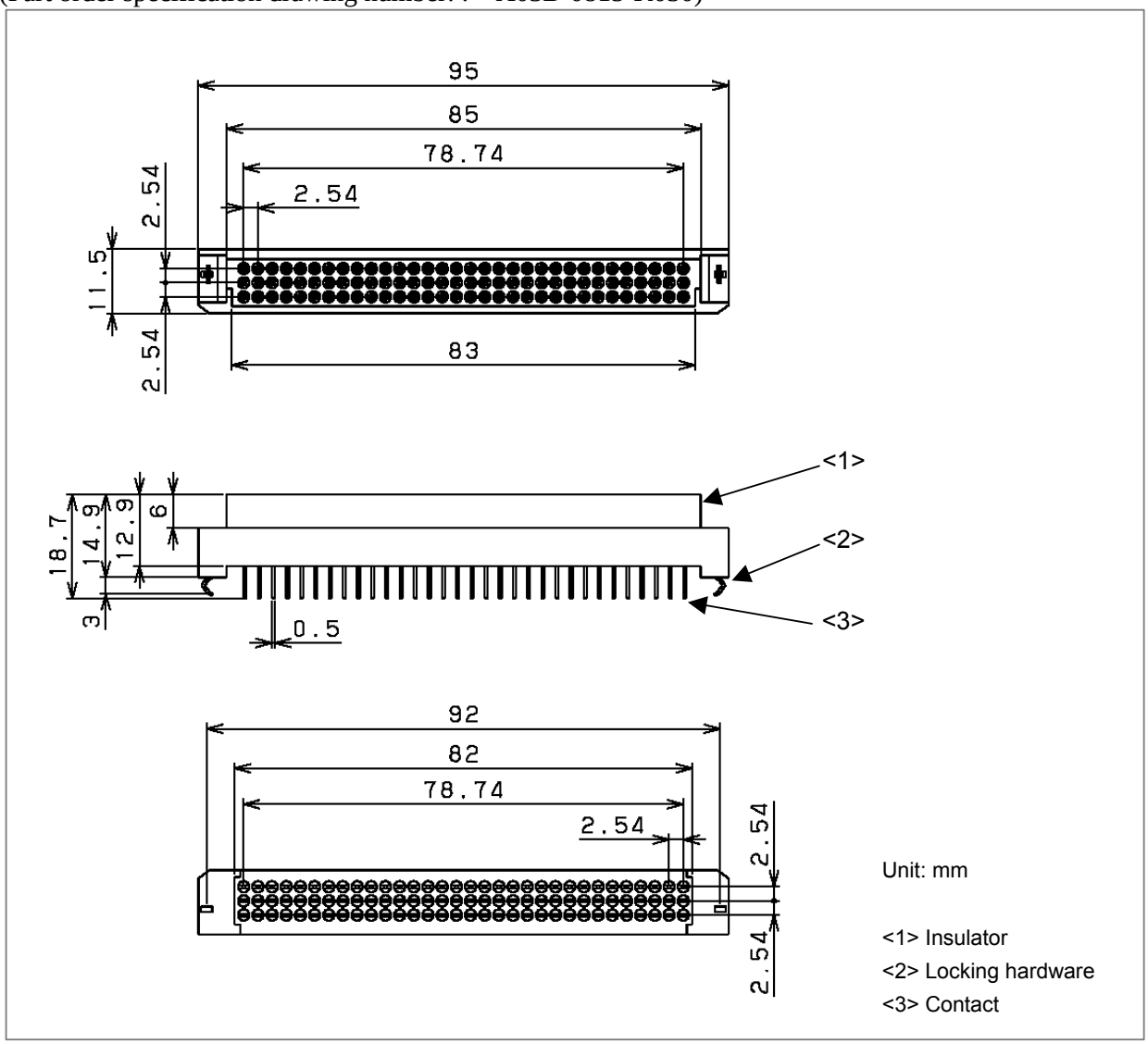


## 9.5.16 Other Notes

### DO signal reaction to a system alarm

There is a possibility that the I/O module will not operate normally due to a failure of CNC or I/O Link slave module, or abnormally power supply voltage. To prevent accidents even in this case, design the machine to operate safely by making a safety circuit outside the I/O module.

The circuit of this I/O module is designed so that all DO signals are turned off if a system alarm is occurred in the CNC which controls the I/O module, or if a power of the CNC or the I/O module is turned off. However, it cannot be guaranteed that DO signals of the I/O module will certainly be turned off. Therefore, manage signals related to safety by making a safety circuit outside this I/O module.

## Address allocation

For the connector panel I/O module, I/O addresses are mapped as follow:

DI space map

| | |
|---|---|
| Xm | Basic module |
| Xm + 1 | |
| Xm + 2 | |
| Xm + 3 | |
| Xm + 4 | |
| Xm + 5 | |
| Xm + 6 | Expansion module |
| Xm + 7 | |
| Xm + 8 | |
| Xm + 9 | |
| Xm + 10 | |
| Xm + 11 | |
| Xm + 12 (for 1st MPG) | Basic module |
| Xm + 13 (for 2nd MPG) | |
| Xm + 14 (for 3rd MPG) | |
| Xm + 15 (for DO alarm detection) | |

DO space map

| | |
|---|---|
| Yn | Basic module |
| Yn + 1 | |
| Yn + 2 | |
| Yn + 3 | |
| Yn + 4 | Expansion module |
| Yn + 5 | |
| Yn + 6 | |
| Yn + 7 | |

Each of Xm and Yn represents the start address of the module on the I/O Link.
Basically, I/O module type-2 is allocated a group of DI addresses (16 bytes) and a group of DO addresses (8 bytes). Add or remove expansion module hardware as required. The reason is explained below.

The MPG interface (MPG counter) occupies a DI space from Xm+12 to Xm+14. These addresses are fixed regardless of whether an expansion module is used, and Xm+12 to Xm+14 must be allocated as a DI work area to enable the use of an MPG. Therefore, when using an MPG, allocate DI addresses in units of 16-byte groups. The CNC directly processes the value of the MPG counter. So, ensure that the ladder does not use this area.

DI address Xm+15 is used to detect an overheating alarm issued for a cause such as overcurrent of the IC used for a DO driver. Address Xm+15 is fixed regardless of whether an expansion module is used. This address must be allocated as a work area before this address can be used.

For the reason mentioned above, allocate DI addresses for I/O module type-2 in units of 16-byte groups.

DO (output signal) alarm detection
The DO driver of the basic module and expansion module A/B has a function for detecting a load overcurrent and its temperature. If an accident such as the connecting of the cable to ground causes an abnormal increase in the load current or in the DO driver temperature, a protection circuit, which is provided for each DO driver (1 byte), is activated and keeps the 1-byte DO signal in the OFF state until the cause of the problem is eliminated. Even in this case, the CNC and I/O module continue operation with no alarm issued. However, the DI address (Xm+15) identifies the DO driver that has detected the alarm. The table below indicates the correspondence between the DI address (Xm+15) bits and the DO addresses. Bit value "1" of the DI address (Xm+15) indicates that the corresponding DO driver has detected an alarm. If a DO alarm is issued, troubleshooting and recovery can be enhanced by checking the contents of the Xm+15 area with the DGN screen of the CNC or by performing Xm+15 alarm processing in advance with the ladder.

| Alarm detection address and bit | DO address | Location |
|---|---|---|
| Xm+15.0 | Yn+0 | Basic module |
| Xm+15.1 | Yn+1 | |
| Xm+15.2 | Yn+2 | |
| Xm+15.3 | Yn+3 | |
| Xm+15.4 | Yn+4 | Expansion module |
| Xm+15.5 | Yn+5 | |
| Xm+15.6 | Yn+6 | |
| Xm+15.7 | Yn+7 | |

# 9.6 CONNECTION OF I/O UNITS FOR 0*i*

## 9.6.1 Overview

With the I/O unit for 0*i*, up to 96 DI points and up to 64 DO points can be used.
I/O Link is used to connect to controls. For the connection method, see Subsection 8.2.1.
For the I/O unit for 0*i*, it is necessary to perform I/O Link assignment.

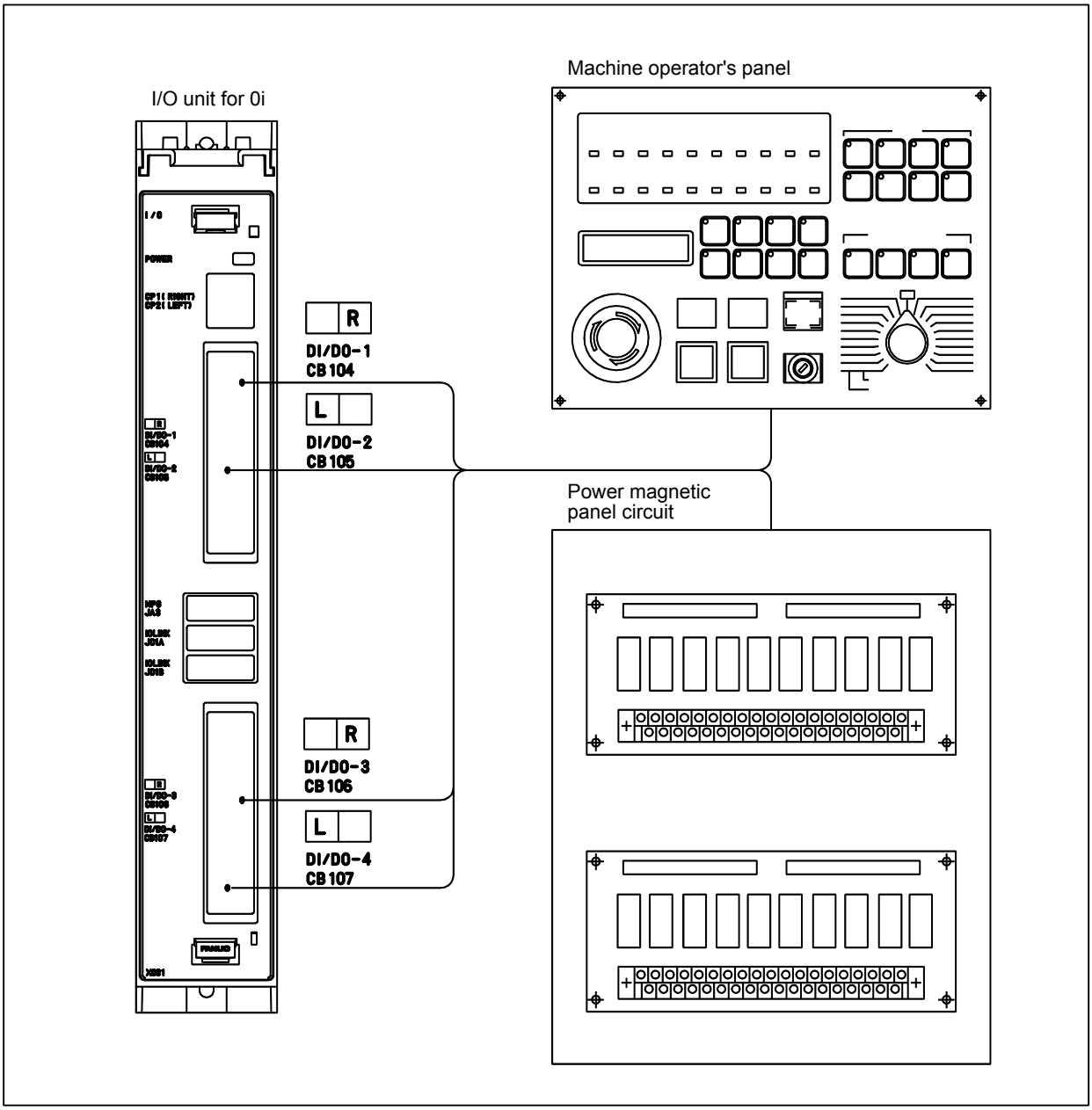

## Built-in I/O assignment

**DI space map**

| | |
|---|---|
| X0 | DI 96 points |
| X1 | |
| X2 | |
| X3 | |
| X4 | |
| X5 | |
| X6 | |
| X7 | |
| X8 | |
| X9 | |
| X10 | |
| X11 | |
| X12 | First MPG |
| X13 | Second MPG |
| X14 | Third MPG |
| X15 | DO alarm detection |

Module name: CM16I

**DO space map**

| | |
|---|---|
| Y0 | DO 64 points |
| Y1 | |
| Y2 | |
| Y3 | |
| Y4 | |
| Y5 | |
| Y6 | |
| Y7 | |

Module name: CM08O

**NOTE**
Since readout from a manual pulse generator (X12 to X14) is directly performed by the CNC, only the above assignment must be performed by the PMC.

If the number of DI/DO points is not sufficient, external I/O units such as the dispersed I/O can be added using the FANUC I/O Link.
A MIL-compatible ribbon cable connector is used as the interface connector of the I/O unit for 0*i* to simplify connection to the connector panel.
The connector can also be used for the Series 0*i* Mate.

## DO signal reaction to a system alarm

There is a possibility that the I/O unit will not operate normally due to a failure of CNC or I/O Link slave module, or abnormally power supply voltage. To prevent accidents even in this case, design the machine to operate safely by making a safety circuit outside the I/O unit.
The circuit of this I/O unit is designed so that all DO signals are turned off if a system alarm is occurred in the CNC which controls the I/O unit, or if a power of the CNC or the I/O unit is turned off. However, it cannot be guaranteed that DO signals of the I/O unit will certainly be turned off. Therefore, manage signals related to safety by making a safety circuit outside this I/O unit.

## DO (output signal) alarm detection

The DO driver of the I/O unit for 0*i* is capable of detecting an overcurrent and measuring its own temperature. If an accident, such as the connecting of the cable to ground, causes an abnormal increase in the load current or in the driver temperature, a protection circuit, which is provided for each DO driver (1 byte), is activated and keeps the DO signal for the relevant 1 byte in the OFF state until the cause of the problem is eliminated. Even if this occurs, the CNC and I/O module continue operating. The DI address (Xm+15) identifies the DO driver which has detected the alarm. The following table shows the correspondence between the DI address (Xm+15) bits and the DO addresses. Bit value "1" indicates that the corresponding DO driver has detected an alarm. The contents of the Xm+15 area can be checked by using the DGN screen of the CNC or by performing alarm processing for the area in advance by using Ladder. This helps alarm detection and recovery.

| Alarm detection address and bit | DO address |
|---|---|
| Xm+15.0 | Yn+0 |
| Xm+15.1 | Yn+1 |
| Xm+15.2 | Yn+2 |
| Xm+15.3 | Yn+3 |
| Xm+15.4 | Yn+4 |
| Xm+15.5 | Yn+5 |
| Xm+15.6 | Yn+6 |
| Xm+15.7 | Yn+7 |

## 9.6.2 Cautions

The following cautions must be observed when using I/O signal receivers and drivers for the machine interface.

### DI Signals and Receivers

DI signals are basically of the sink type (a type that drains energy). Some DI signals, however, can be set to either sink type or source type (a type that supplies energy). See the description of the I/O board in the following section for details.

A common signal is provided for selectable receivers. Whether the common signal is connected to 0 V or 24 V determines whether a DI signal is of sink or source type.

A source type DI signal is undesirable from the viewpoint of safety, however, because if the input signal line is grounded, it will be latched in the same state as that existing when the contact is closed. It is recommended that all DI signals be set to sink type.

Always connect the common signal to either 0 or 24 V; do not leave it open.

### DO Signals and Drivers

The driver of DO signals is source type (a type that supplies energy, non-insulating).

There is a possibility that the I/O unit will not operate normally due to a failure of CNC or I/O Link slave module, or abnormally power supply voltage. To prevent accidents even in this case, design the machine to operate safely by making a safety circuit outside the I/O unit.

The circuit of this I/O unit is designed so that all DO signals are turned off if a system alarm is occurred in the CNC which controls the I/O unit, or if a power of the CNC or the I/O unit is turned off. However, it cannot be guaranteed that DO signals of the I/O unit will certainly be turned off. Therefore, manage signals related to safety by making a safety circuit outside this I/O unit.

## 9.6.3 Cable for Power Supply to Control Unit

Supply power to the I/O unit for 0*i* from external resource.

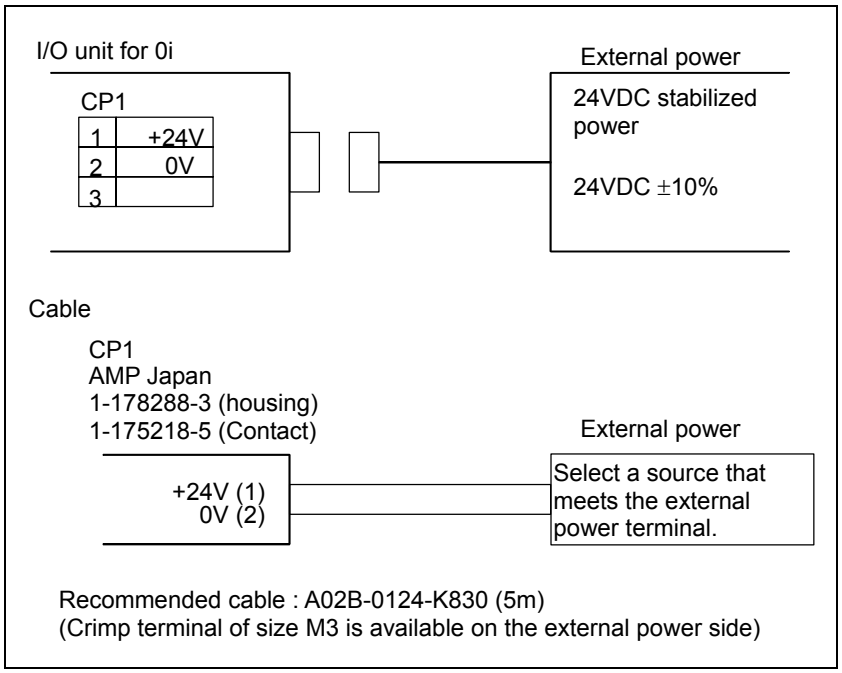


Part of the 24 VDC power input to CP1 can be taken out from CP2 by branching. CP2 should be connected as shown below. In this case, the rating of the external 24 VDC power supplied to CP1 must be the sum of the power consumed within the control unit and that supplied to external equipment via CP2. The maximum capacity of power that can be obtained from a branch is 1.0 A.

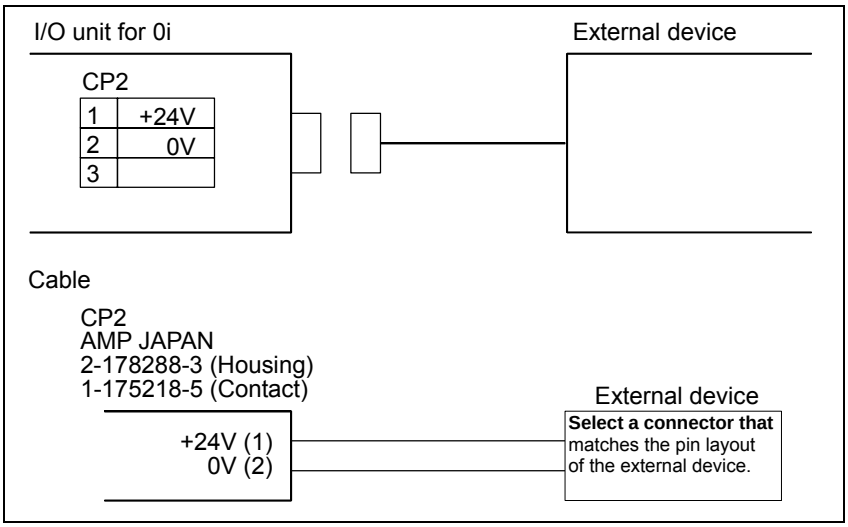


**NOTE**

Do not interrupt +24 V supplied to this connector during operation. Otherwise, an alarm about communication with the CNC is issued.
A voltage of +24 V must not be supplied after power-on of the CNC and +24 V must not be interrupted before power-off of the CNC. When powering off the CNC body, be sure to power off the I/O unit for 0*i*.

## 9.6.4 Connector Pin Arrangement

CB104

HIROSE 50PIN

| | A | B |
|---|---|---|
| 01 | 0V | +24V |
| 02 | Xm+0.0 | Xm+0.1 |
| 03 | Xm+0.2 | Xm+0.3 |
| 04 | Xm+0.4 | Xm+0.5 |
| 05 | Xm+0.6 | Xm+0.7 |
| 06 | Xm+1.0 | Xm+1.1 |
| 07 | Xm+1.2 | Xm+1.3 |
| 08 | Xm+1.4 | Xm+1.5 |
| 09 | Xm+1.6 | Xm+1.7 |
| 10 | Xm+2.0 | Xm+2.1 |
| 11 | Xm+2.2 | Xm+2.3 |
| 12 | Xm+2.4 | Xm+2.5 |
| 13 | Xm+2.6 | Xm+2.7 |
| 14 | | |
| 15 | | |
| 16 | Yn+0.0 | Yn+0.1 |
| 17 | Yn+0.2 | Yn+0.3 |
| 18 | Yn+0.4 | Yn+0.5 |
| 19 | Yn+0.6 | Yn+0.7 |
| 20 | Yn+1.0 | Yn+1.1 |
| 21 | Yn+1.2 | Yn+1.3 |
| 22 | Yn+1.4 | Yn+1.5 |
| 23 | Yn+1.6 | Yn+1.7 |
| 24 | DOCOM | DOCOM |
| 25 | DOCOM | DOCOM |

CB105

HIROSE 50PIN

| | A | B |
|---|---|---|
| 01 | 0V | +24V |
| 02 | Xm+3.0 | Xm+3.1 |
| 03 | Xm+3.2 | Xm+3.3 |
| 04 | Xm+3.4 | Xm+3.5 |
| 05 | Xm+3.6 | Xm+3.7 |
| 06 | Xm+8.0 | Xm+8.1 |
| 07 | Xm+8.2 | Xm+8.3 |
| 08 | Xm+8.4 | Xm+8.5 |
| 09 | Xm+8.6 | Xm+8.7 |
| 10 | Xm+9.0 | Xm+9.1 |
| 11 | Xm+9.2 | Xm+9.3 |
| 12 | Xm+9.4 | Xm+9.5 |
| 13 | Xm+9.6 | Xm+9.7 |
| 14 | | |
| 15 | | |
| 16 | Yn+2.0 | Yn+2.1 |
| 17 | Yn+2.2 | Yn+2.3 |
| 18 | Yn+2.4 | Yn+2.5 |
| 19 | Yn+2.6 | Yn+2.7 |
| 20 | Yn+3.0 | Yn+3.1 |
| 21 | Yn+3.2 | Yn+3.3 |
| 22 | Yn+3.4 | Yn+3.5 |
| 23 | Yn+3.6 | Yn+3.7 |
| 24 | DOCOM | DOCOM |
| 25 | DOCOM | DOCOM |

CB106

HIROSE 50PIN

| | A | B |
|---|---|---|
| 01 | 0V | +24V |
| 02 | Xm+4.0 | Xm+4.1 |
| 03 | Xm+4.2 | Xm+4.3 |
| 04 | Xm+4.4 | Xm+4.5 |
| 05 | Xm+4.6 | Xm+4.7 |
| 06 | Xm+5.0 | Xm+5.1 |
| 07 | Xm+5.2 | Xm+5.3 |
| 08 | Xm+5.4 | Xm+5.5 |
| 09 | Xm+5.6 | Xm+5.7 |
| 10 | Xm+6.0 | Xm+6.1 |
| 11 | Xm+6.2 | Xm+6.3 |
| 12 | Xm+6.4 | Xm+6.5 |
| 13 | Xm+6.6 | Xm+6.7 |
| 14 | COM4 | |
| 15 | | |
| 16 | Yn+4.0 | Yn+4.1 |
| 17 | Yn+4.2 | Yn+4.3 |
| 18 | Yn+4.4 | Yn+4.5 |
| 19 | Yn+4.6 | Yn+4.7 |
| 20 | Yn+5.0 | Yn+5.1 |
| 21 | Yn+5.2 | Yn+5.3 |
| 22 | Yn+5.4 | Yn+5.5 |
| 23 | Yn+5.6 | Yn+5.7 |
| 24 | DOCOM | DOCOM |
| 25 | DOCOM | DOCOM |

CB107

HIROSE 50PIN

| | A | B |
|---|---|---|
| 01 | 0V | +24V |
| 02 | Xm+7.0 | Xm+7.1 |
| 03 | Xm+7.2 | Xm+7.3 |
| 04 | Xm+7.4 | Xm+7.5 |
| 05 | Xm+7.6 | Xm+7.7 |
| 06 | Xm+10.0 | Xm+10.1 |
| 07 | Xm+10.2 | Xm+10.3 |
| 08 | Xm+10.4 | Xm+10.5 |
| 09 | Xm+10.6 | Xm+10.7 |
| 10 | Xm+11.0 | Xm+11.1 |
| 11 | Xm+11.2 | Xm+11.3 |
| 12 | Xm+11.4 | Xm+11.5 |
| 13 | Xm+11.6 | Xm+11.7 |
| 14 | | |
| 15 | | |
| 16 | Yn+6.0 | Yn+6.1 |
| 17 | Yn+6.2 | Yn+6.3 |
| 18 | Yn+6.4 | Yn+6.5 |
| 19 | Yn+6.6 | Yn+6.7 |
| 20 | Yn+7.0 | Yn+7.1 |
| 21 | Yn+7.2 | Yn+7.3 |
| 22 | Yn+7.4 | Yn+7.5 |
| 23 | Yn+7.6 | Yn+7.7 |
| 24 | DOCOM | DOCOM |
| 25 | DOCOM | DOCOM |

**NOTE**

1 The B01 +24 V pins of the connectors (CB104, CB105, CB106, and CB107) are used for the DI input signals, and which output 24 VDC.
Do not connect +24 V of an external power supply to these pins.

2 Each DOCOM is connected in the printer board. If using the DO signal (Y) of a connector, be sure to input 24 VDC to each pin of the DOCOM of that connector.

- Connector recommended for use on the cable side
  HIF3BB-50D-2.54R (Hirose) : Refer to Appendix C6.

## 9.6.5 Connecting DI/DO

### For example, connecting DI

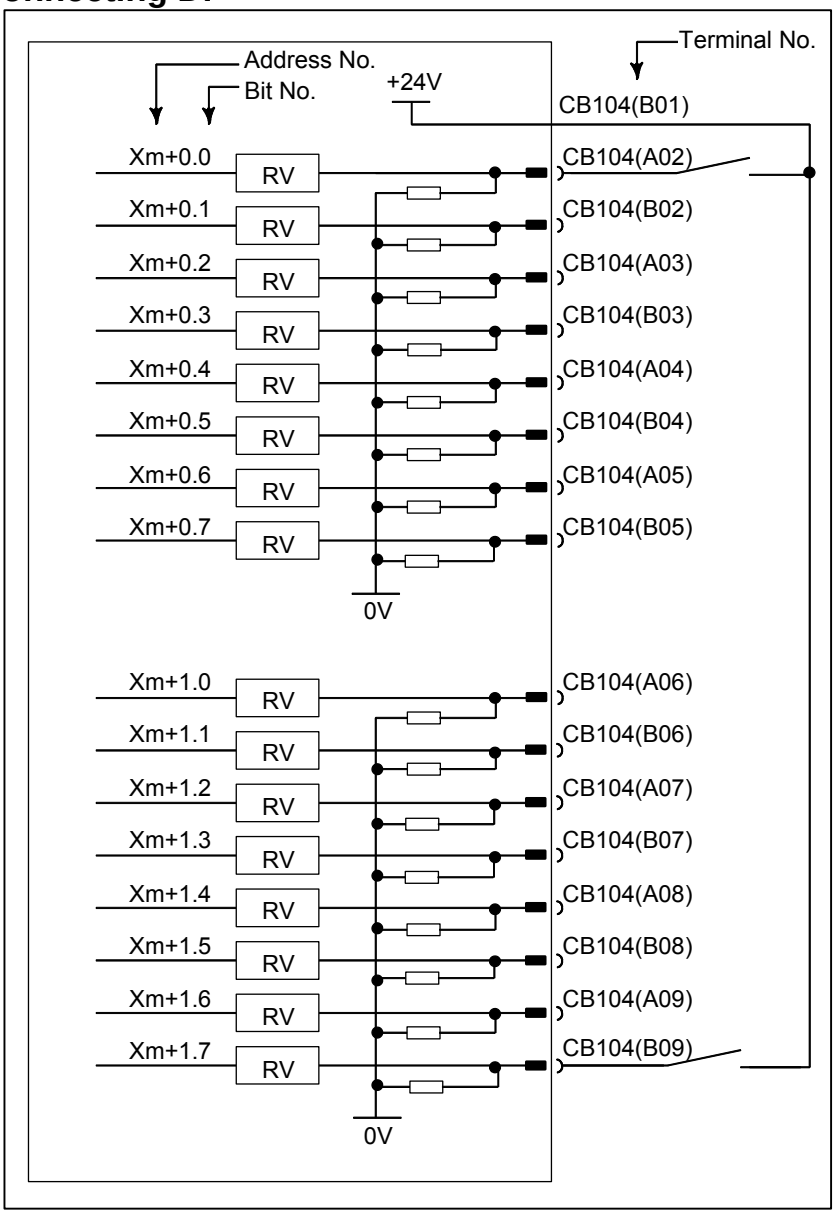

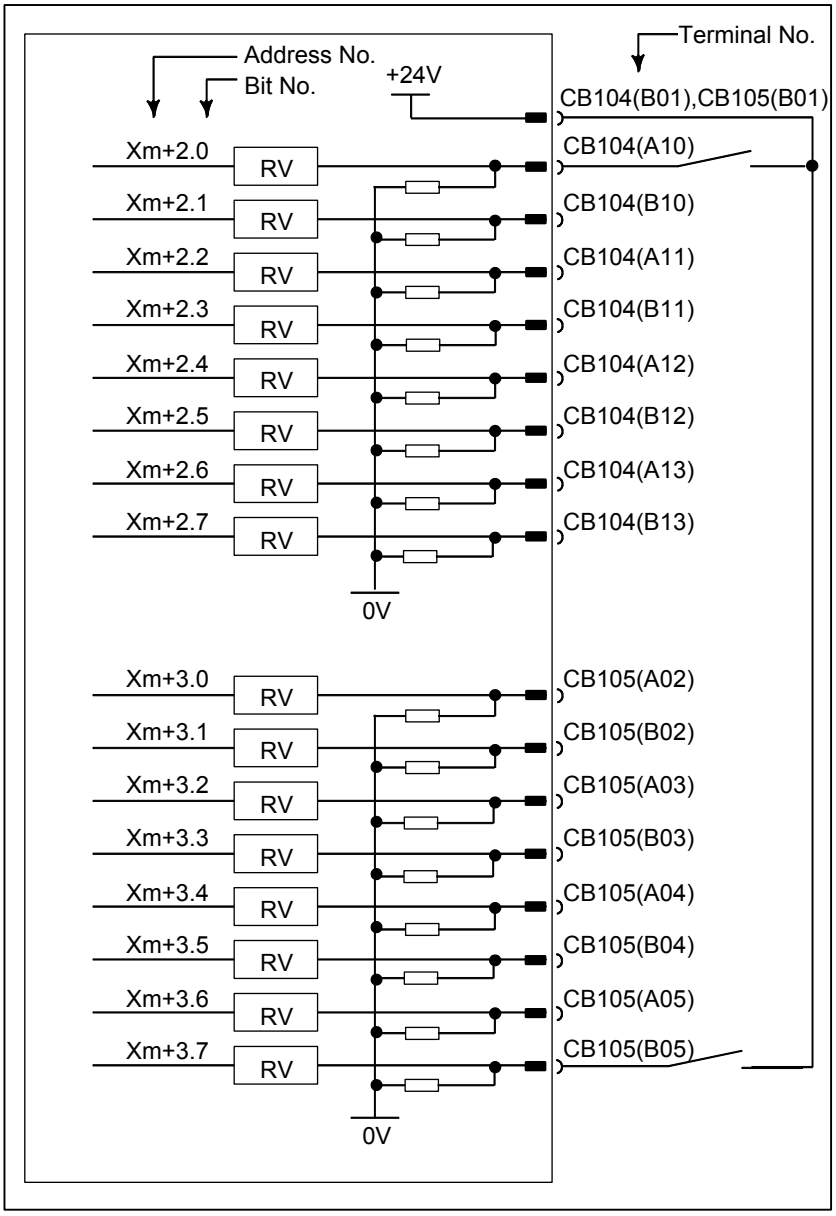
Address No.
Bit No.
+24V
Terminal No.
CB104(B01),CB105(B01)
Xm+2.0
Xm+2.1
Xm+2.2
Xm+2.3
Xm+2.4
Xm+2.5
Xm+2.6
Xm+2.7
RV
CB104(A10)
CB104(B10)
CB104(A11)
CB104(B11)
CB104(A12)
CB104(B12)
CB104(A13)
CB104(B13)
0V
Xm+3.0
Xm+3.1
Xm+3.2
Xm+3.3
Xm+3.4
Xm+3.5
Xm+3.6
Xm+3.7
CB105(A02)
CB105(B02)
CB105(A03)
CB105(B03)
CB105(A04)
CB105(B04)
CB105(A05)
CB105(B05)
0V

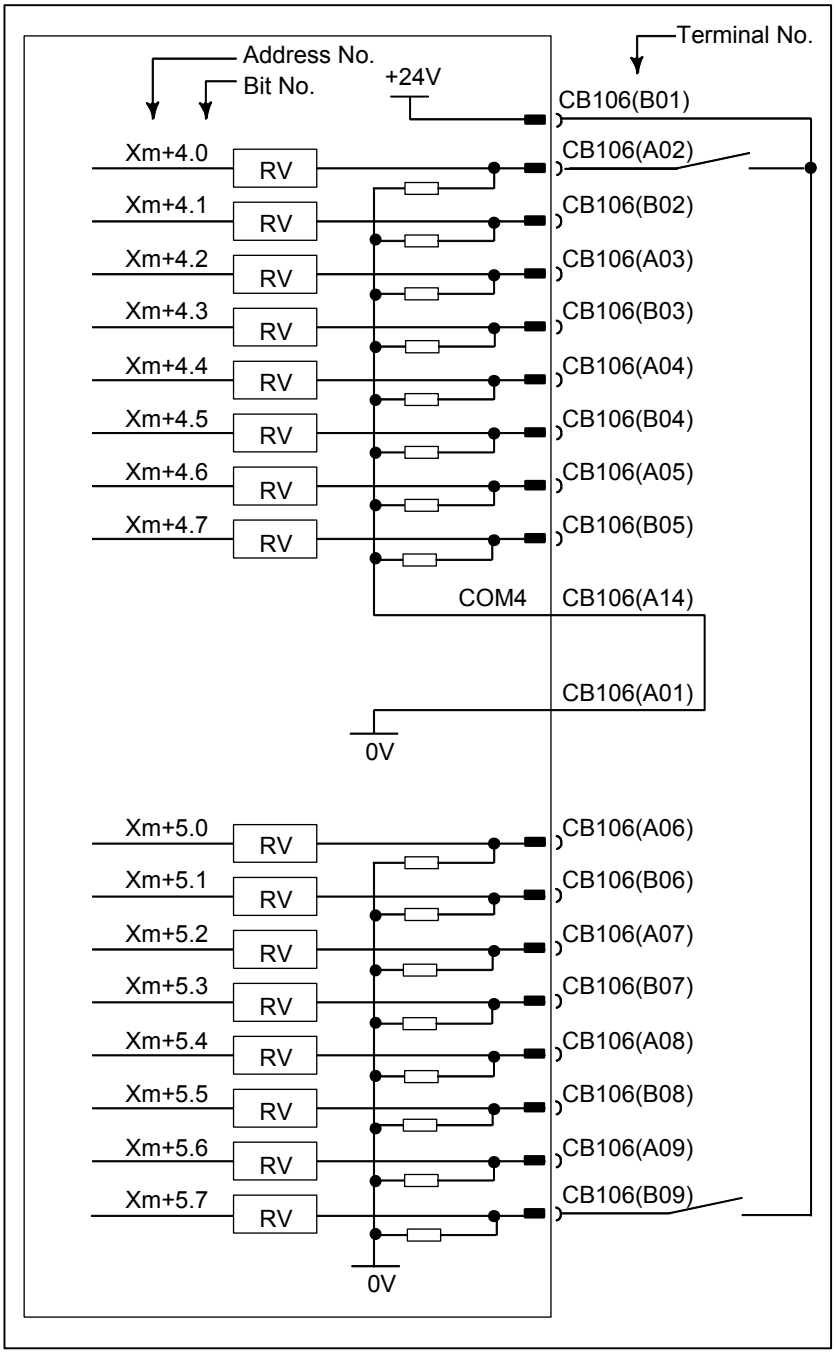


For address Xm+4, either a source or sink type (with a 0- or 24-V common voltage) can be selected. COM4 must be connected to either 24 or 0 V; never leave it open. From the viewpoint of safety standards, it is recommended that a sink type signal be used. The above diagram shows an example in which the signal is of sink type (with a 24-V common voltage).

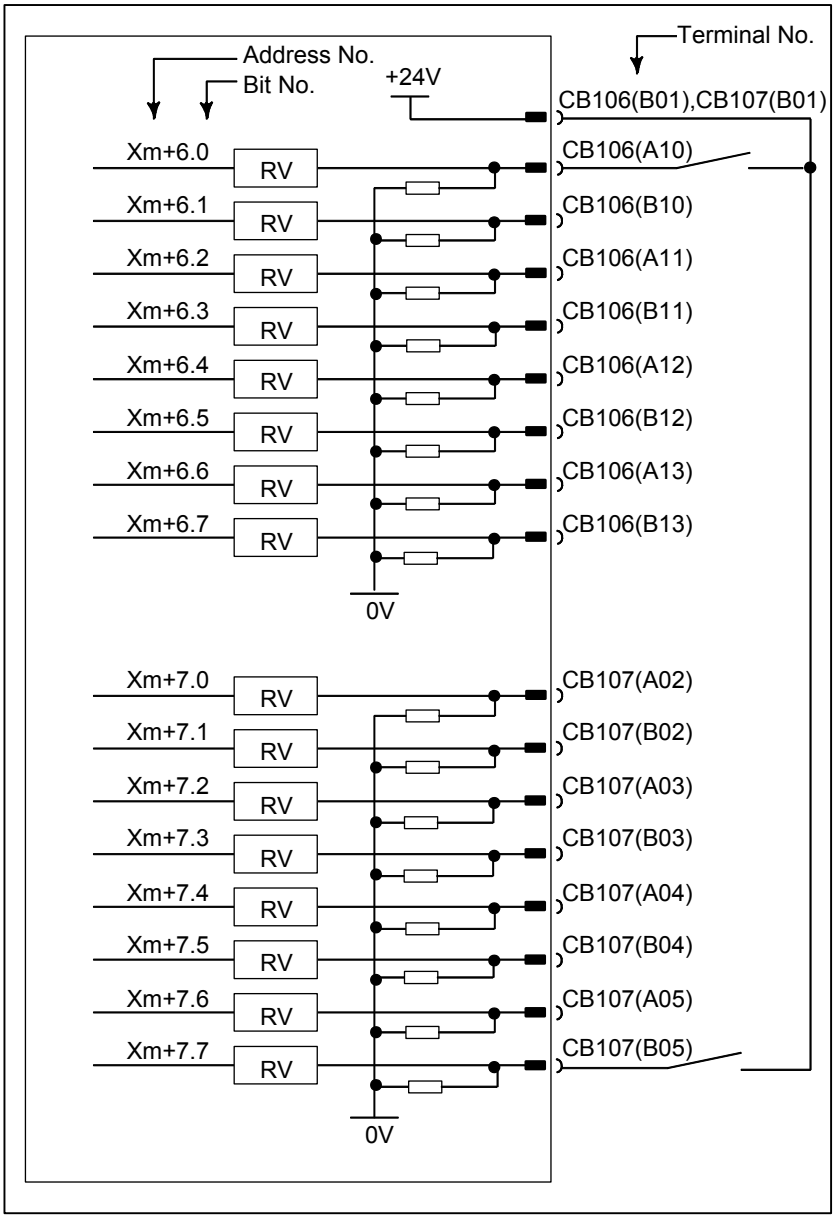
Address No.
Bit No.
+24V
Terminal No.
CB106(B01),CB107(B01)
Xm+6.0
Xm+6.1
Xm+6.2
Xm+6.3
Xm+6.4
Xm+6.5
Xm+6.6
Xm+6.7
RV
CB106(A10)
CB106(B10)
CB106(A11)
CB106(B11)
CB106(A12)
CB106(B12)
CB106(A13)
CB106(B13)
0V
Xm+7.0
Xm+7.1
Xm+7.2
Xm+7.3
Xm+7.4
Xm+7.5
Xm+7.6
Xm+7.7
CB107(A02)
CB107(B02)
CB107(A03)
CB107(B03)
CB107(A04)
CB107(B04)
CB107(A05)
CB107(B05)
0V

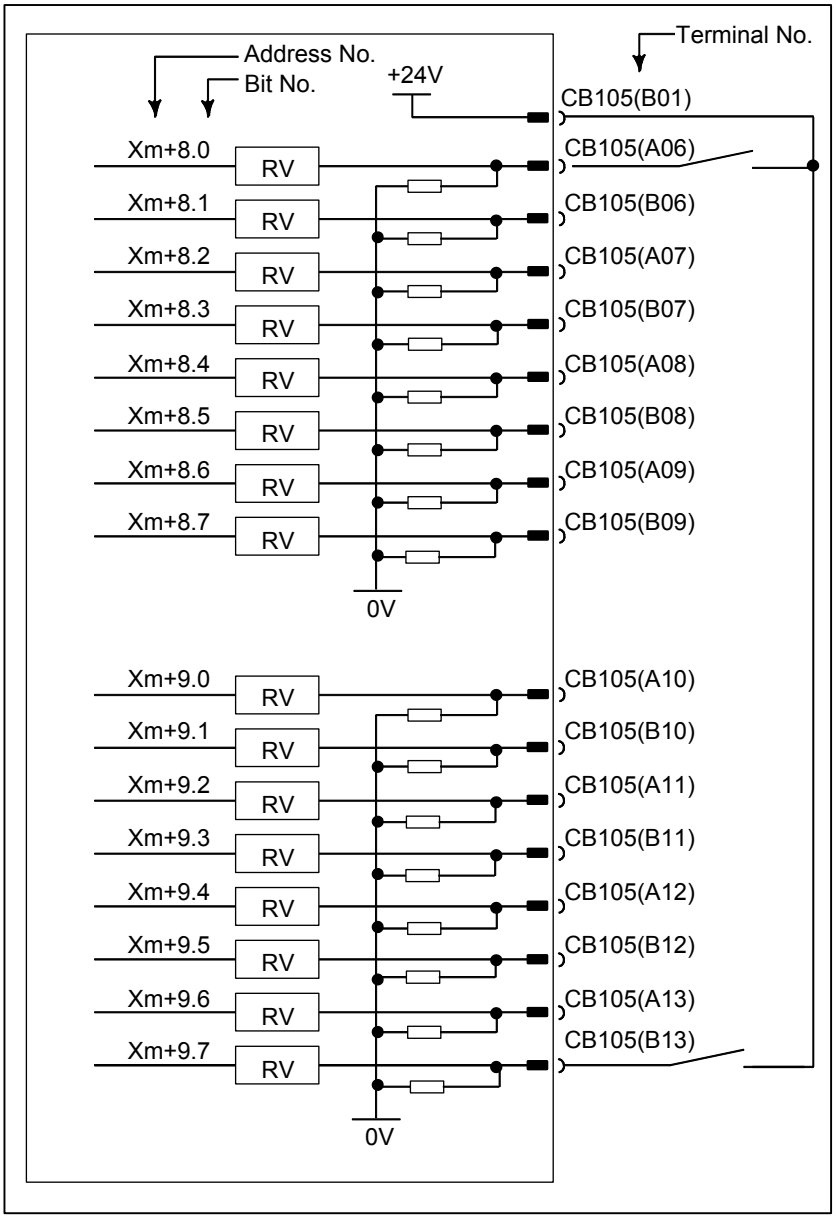
Address No.
Bit No.
+24V
Terminal No.
CB105(B01)
Xm+8.0
RV
CB105(A06)
Xm+8.1
RV
CB105(B06)
Xm+8.2
RV
CB105(A07)
Xm+8.3
RV
CB105(B07)
Xm+8.4
RV
CB105(A08)
Xm+8.5
RV
CB105(B08)
Xm+8.6
RV
CB105(A09)
Xm+8.7
RV
CB105(B09)
0V
Xm+9.0
RV
CB105(A10)
Xm+9.1
RV
CB105(B10)
Xm+9.2
RV
CB105(A11)
Xm+9.3
RV
CB105(B11)
Xm+9.4
RV
CB105(A12)
Xm+9.5
RV
CB105(B12)
Xm+9.6
RV
CB105(A13)
Xm+9.7
RV
CB105(B13)
0V

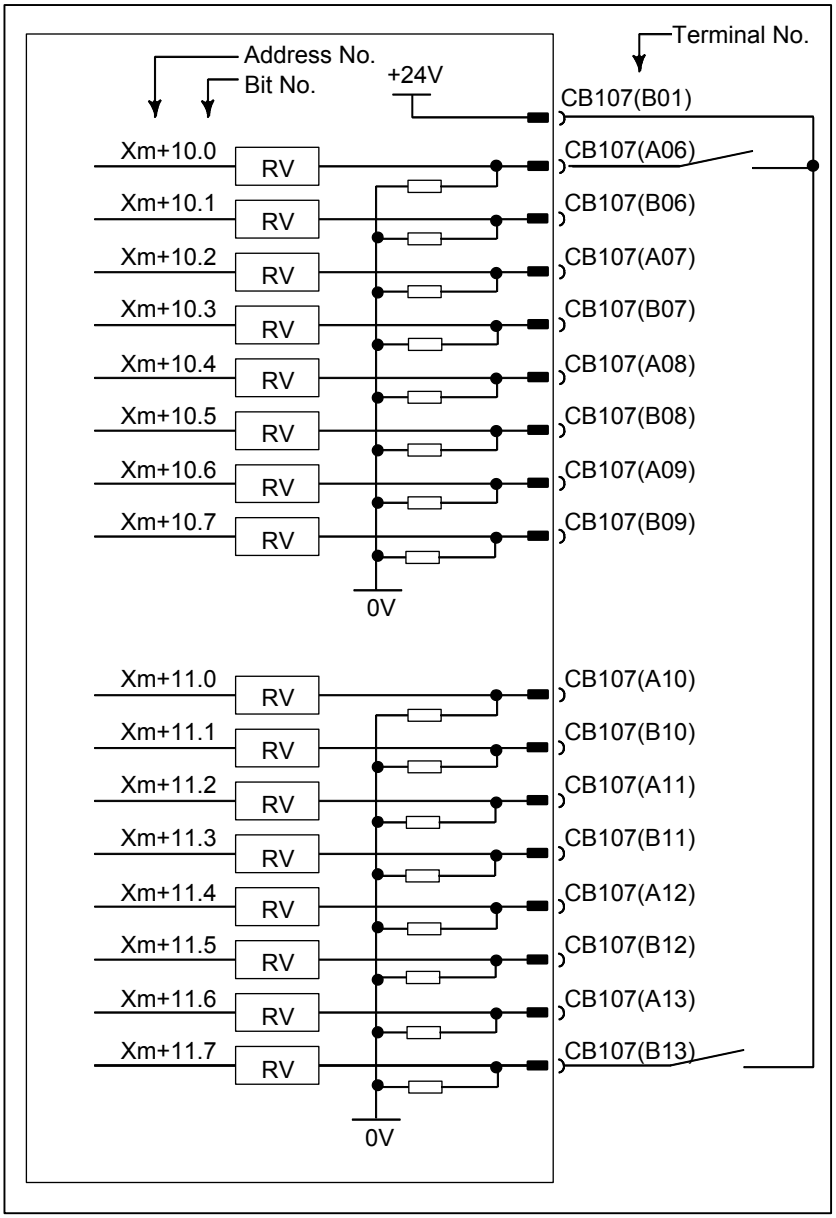
Address No.
Bit No.
+24V
Terminal No.
CB107(B01)
Xm+10.0
RV
CB107(A06)
Xm+10.1
RV
CB107(B06)
Xm+10.2
RV
CB107(A07)
Xm+10.3
RV
CB107(B07)
Xm+10.4
RV
CB107(A08)
Xm+10.5
RV
CB107(B08)
Xm+10.6
RV
CB107(A09)
Xm+10.7
RV
CB107(B09)
0V
Xm+11.0
RV
CB107(A10)
Xm+11.1
RV
CB107(B10)
Xm+11.2
RV
CB107(A11)
Xm+11.3
RV
CB107(B11)
Xm+11.4
RV
CB107(A12)
Xm+11.5
RV
CB107(B12)
Xm+11.6
RV
CB107(A13)
Xm+11.7
RV
CB107(B13)
0V

## For example, connecting DO

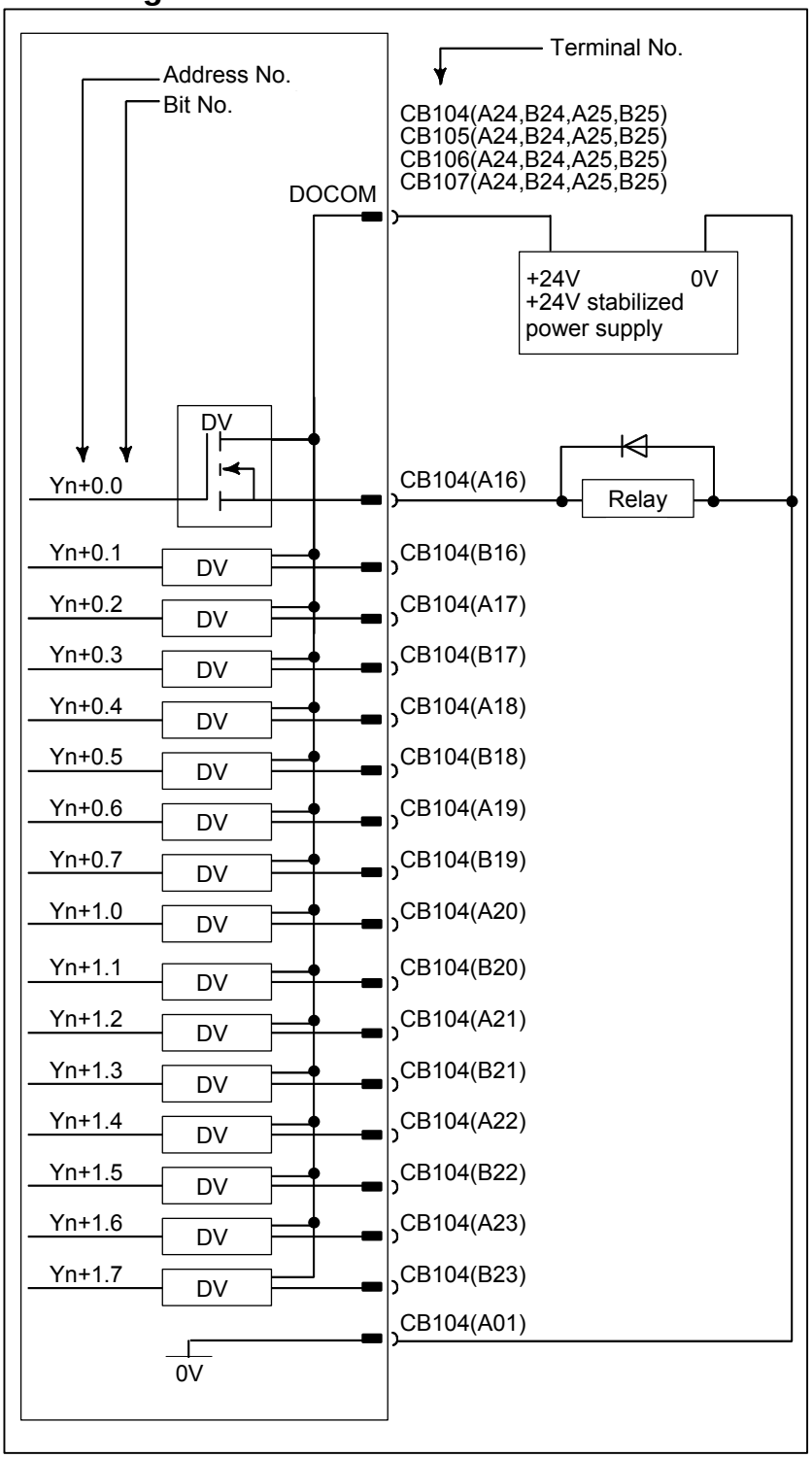

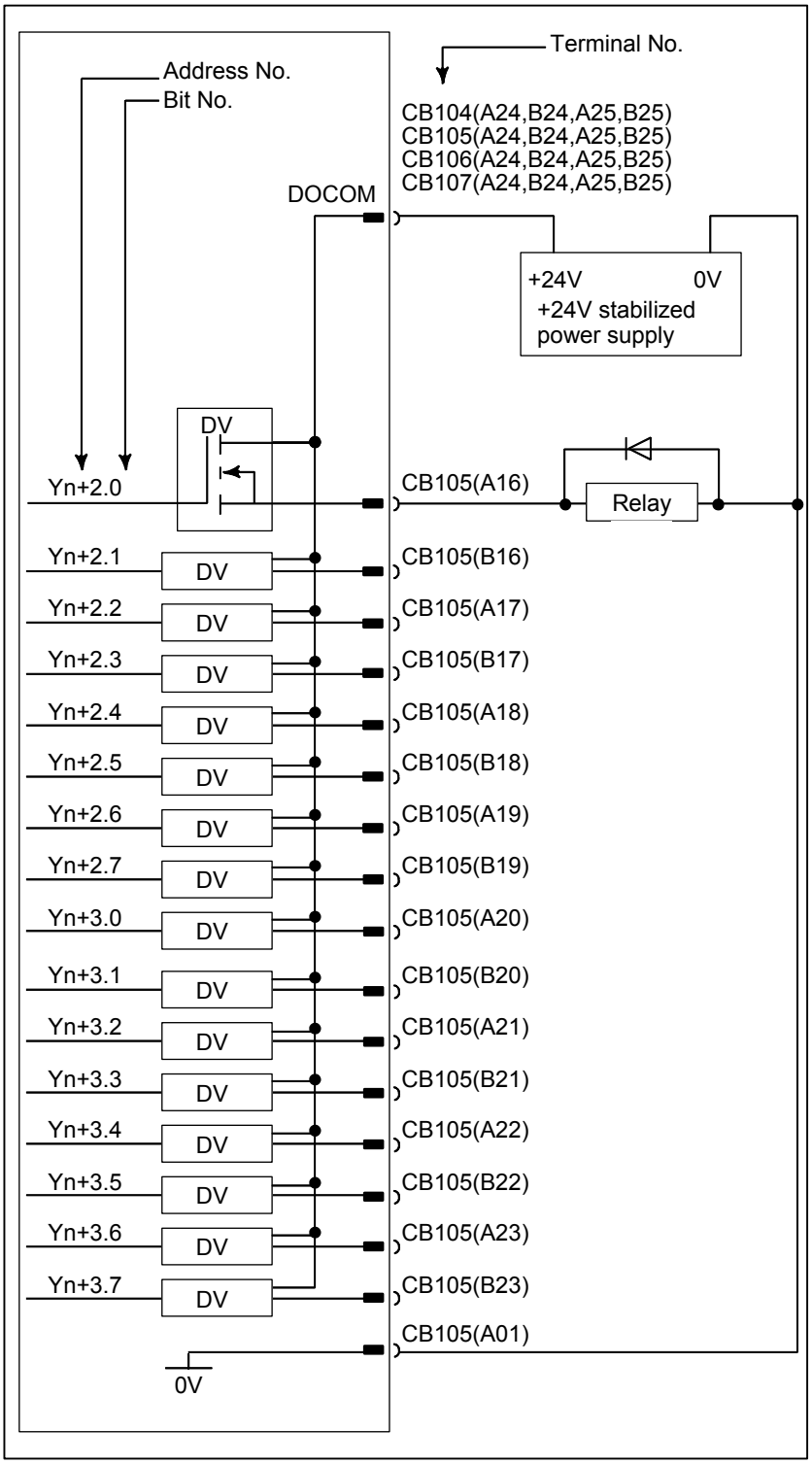
Terminal No.
Address No.
Bit No.
CB104(A24,B24,A25,B25)
CB105(A24,B24,A25,B25)
CB106(A24,B24,A25,B25)
CB107(A24,B24,A25,B25)
DOCOM
+24V
0V
+24V stabilized power supply
DV
Yn+2.0
CB105(A16)
Relay
Yn+2.1
CB105(B16)
Yn+2.2
CB105(A17)
Yn+2.3
CB105(B17)
Yn+2.4
CB105(A18)
Yn+2.5
CB105(B18)
Yn+2.6
CB105(A19)
Yn+2.7
CB105(B19)
Yn+3.0
CB105(A20)
Yn+3.1
CB105(B20)
Yn+3.2
CB105(A21)
Yn+3.3
CB105(B21)
Yn+3.4
CB105(A22)
Yn+3.5
CB105(B22)
Yn+3.6
CB105(A23)
Yn+3.7
CB105(B23)
CB105(A01)
0V

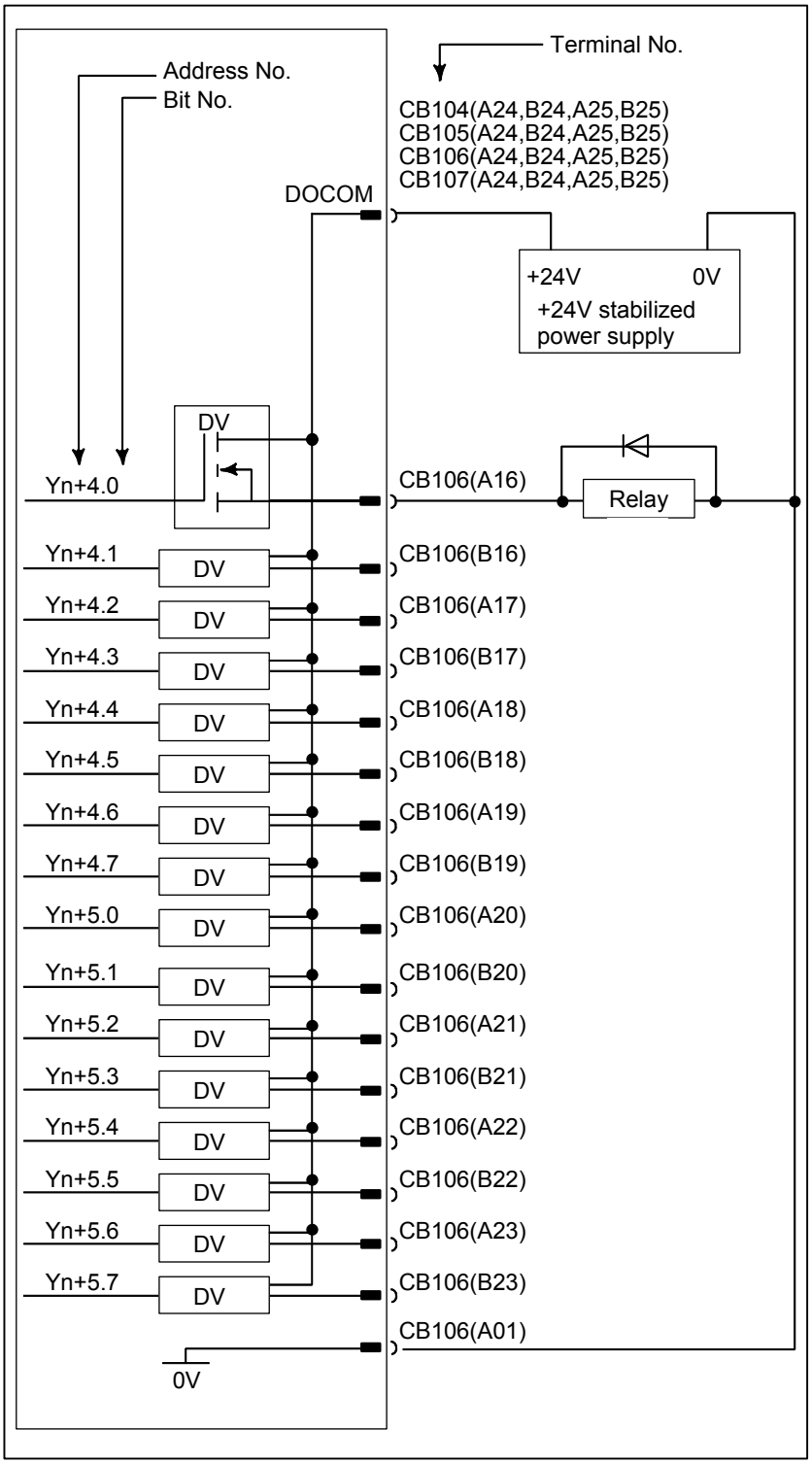
Terminal No.
Address No.
Bit No.
CB104(A24,B24,A25,B25)
CB105(A24,B24,A25,B25)
CB106(A24,B24,A25,B25)
CB107(A24,B24,A25,B25)
DOCOM
+24V
0V
+24V stabilized power supply
DV
Yn+4.0
CB106(A16)
Relay
Yn+4.1
CB106(B16)
Yn+4.2
CB106(A17)
Yn+4.3
CB106(B17)
Yn+4.4
CB106(A18)
Yn+4.5
CB106(B18)
Yn+4.6
CB106(A19)
Yn+4.7
CB106(B19)
Yn+5.0
CB106(A20)
Yn+5.1
CB106(B20)
Yn+5.2
CB106(A21)
Yn+5.3
CB106(B21)
Yn+5.4
CB106(A22)
Yn+5.5
CB106(B22)
Yn+5.6
CB106(A23)
Yn+5.7
CB106(B23)
CB106(A01)
0V

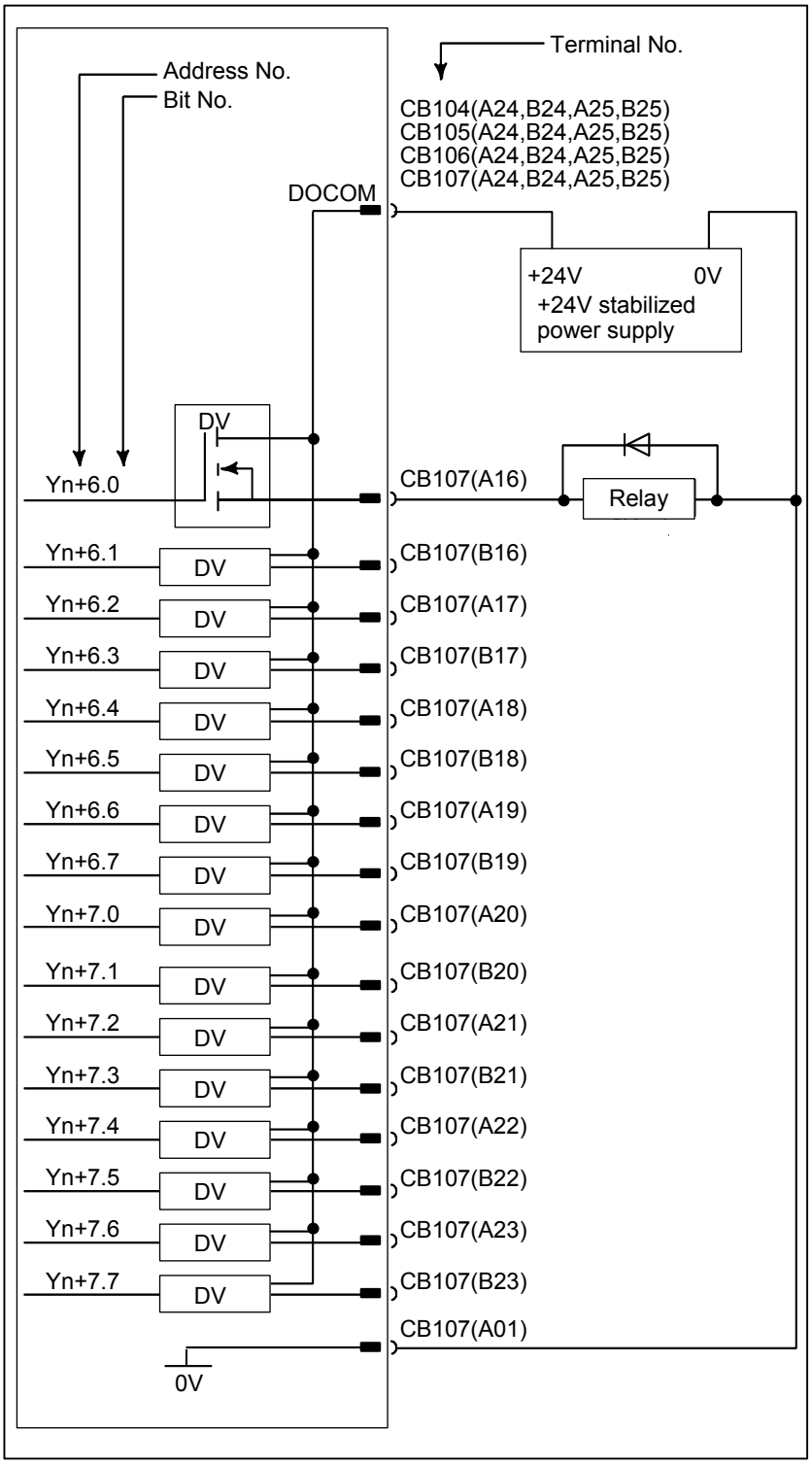


## 9.6.6 I/O Signal Requirements and External Power Supply for DO

Requirements for DI signals

Contact capacity :

30 VDC 16 mA or more

Leakage current between contact points for an open circuit :

1 mA or less (at 26.4 V)

Voltage drop between contact points for a closed circuit :

2 V or less (including the voltage drop in the cables)

Ratings for the DO output driver

Maximum load current when turned on :

200 mA or less, including momentary surges

(The maximum current for one DOCOM (power supply) pin must be 0.7 A or less.)

Saturation voltage when turned on :

1.0 V max when the load current is 200 mA

Dielectric strength :

24 V +20% or less, including momentary surges

Leakage current when turned off :

100 μA or less

External power supply for DO

Power supply voltage :

24V±10%

Power supply current :

(Sum of maximum load current including momentary surges + 100 mA) or more

Power-on sequence :

Turn on the external power supply at the same time or before turning on the control unit.

Power-off sequence :

Turn off the external power supply at the same time or after turning off the control unit.

**⚠CAUTION**

1 Never use the following DO parallel connection.

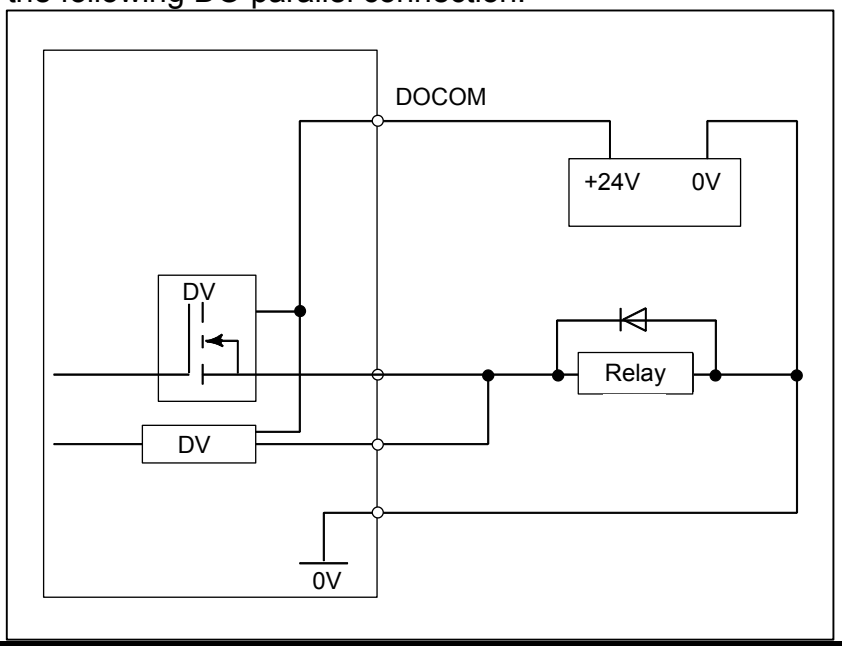

**⚠CAUTION**

2 When using a dark lighting resistor as shown in the following figure, use a leakage-proof diode.

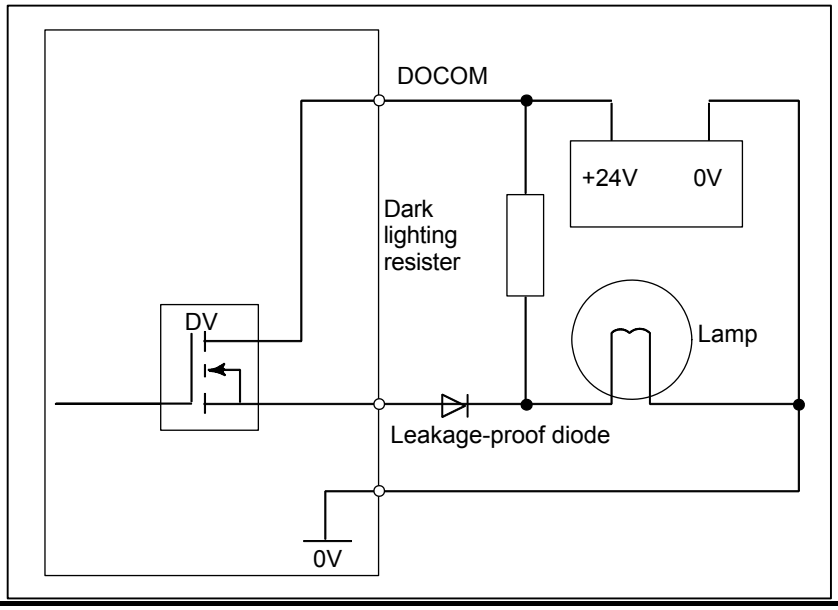

**NOTE**

Output signal driver
Each of the output signal driver devices used on this I/O board outputs eight signals.

A driver device monitors the current of each output signal. If it detects an overcurrent on an output, it turns off the output. Once an overcurrent causes an output to turn off, the overcurrent is no longer present. Then, the output is turned on again. In ground-fault or overload conditions, outputs may turn on and off alternately. This phenomenon also occurs when a load with a high surge current is connected.

Each driver device contains an overheat detector circuit. If an overcurrent is observed on an output continuously because of a ground-fault or similar reason and the temperature in the device rises, the overheat detector circuit turns off all eight outputs. The output-off state is maintained. This state can be released by logically turning off then on again the outputs after the internal temperature of the device drops to a specified level. This state can also be released by turning off the system power supply.

The output signals of the driver devices are assigned the following addresses:
Device #0: Yn+0.0 to Yn+0.7
Device #1: Yn+1.0 to Yn+1.7
Device #2: Yn+2.0 to Yn+2.7
Device #3: Yn+3.0 to Yn+3.7
Device #4: Yn+4.0 to Yn+4.7
Device #5: Yn+5.0 to Yn+5.7
Device #6: Yn+6.0 to Yn+6.7
Device #7: Yn+7.0 to Yn+7.7
If NC diagnosis shows that an output is on but the output is actually not turned on, an overload on that output or another output in the same device may have turned off the eight outputs of that device. In such a case, turn off the system power supply and remove the cause of the overload.

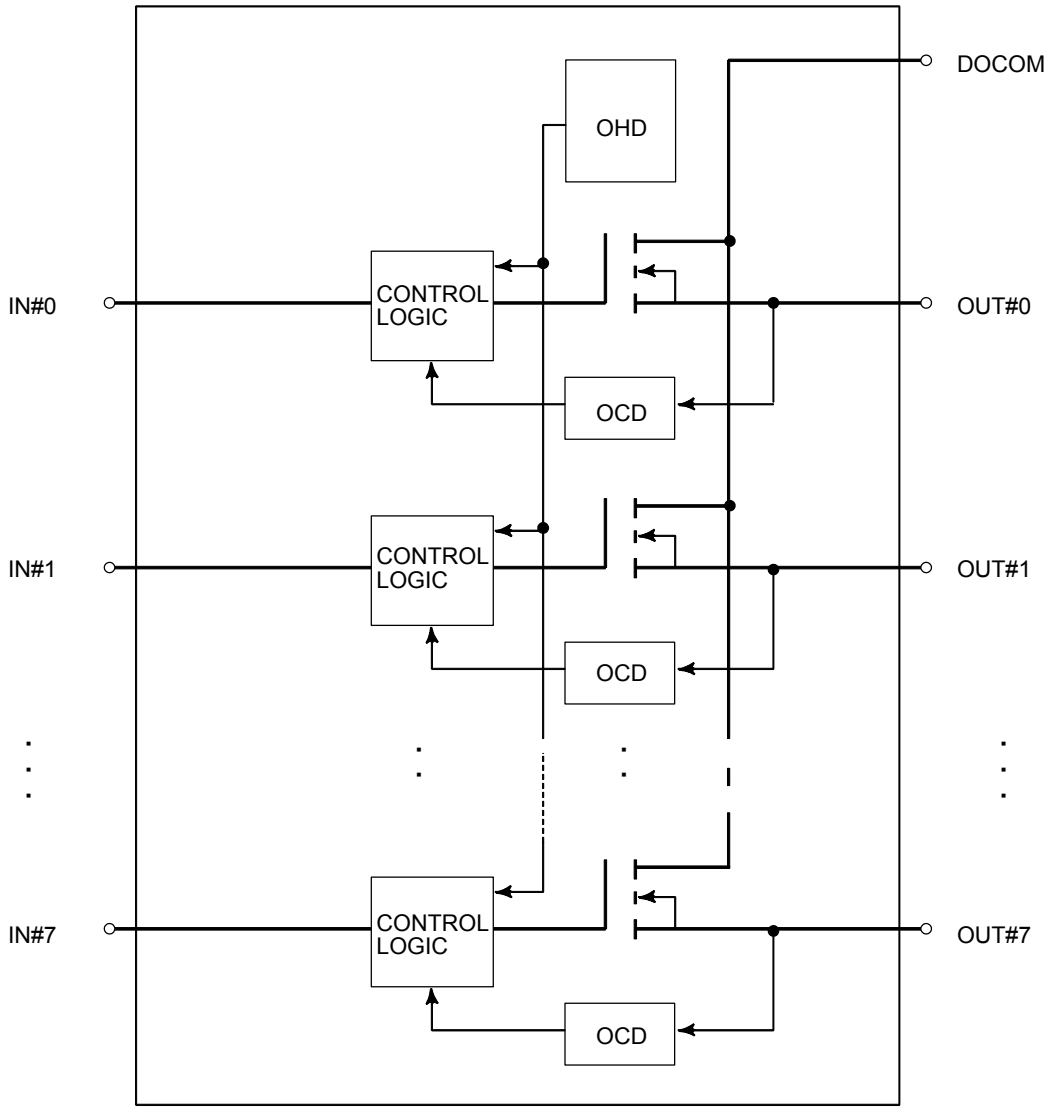


HD: Over-heat detector circuit, OCD: Over-current detector circuit

## 9.6.7 Connecting the Manual Pulse Generator

Manual pulse generators are used to manually move an axis in the handle feed mode.

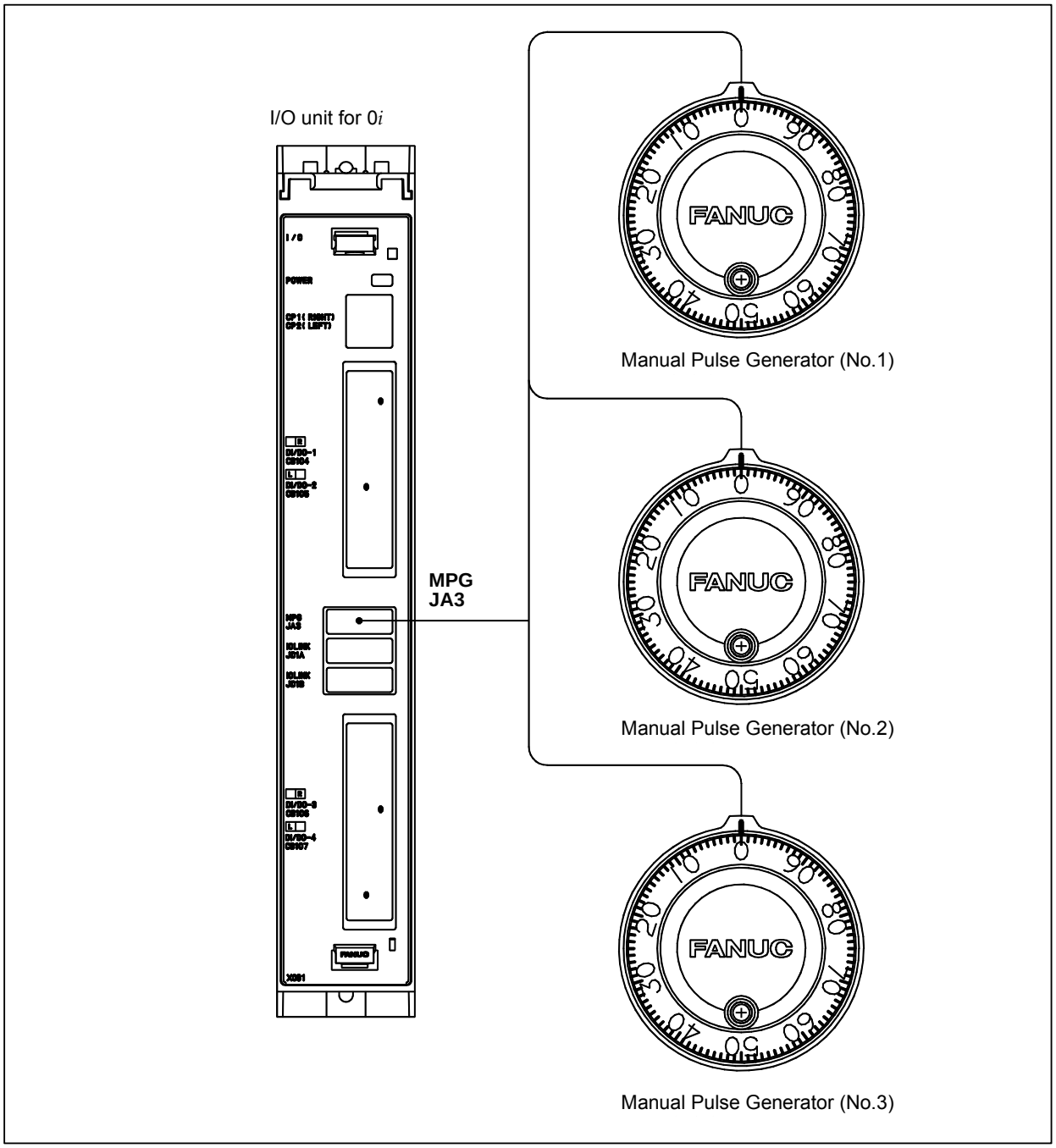

## Connection to Manual Pulse Generators

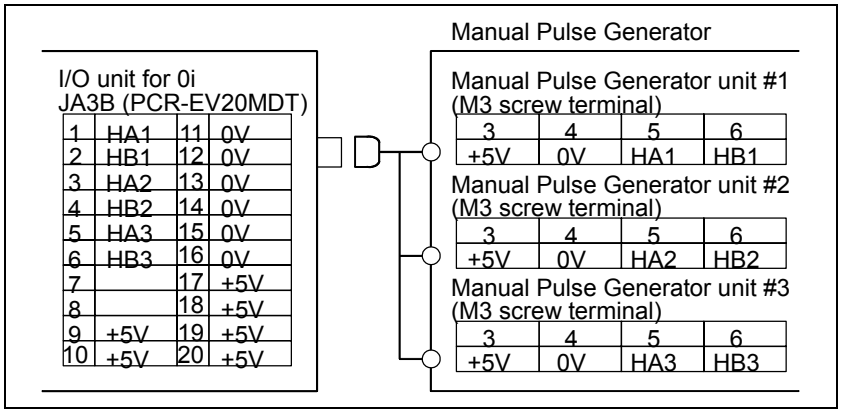


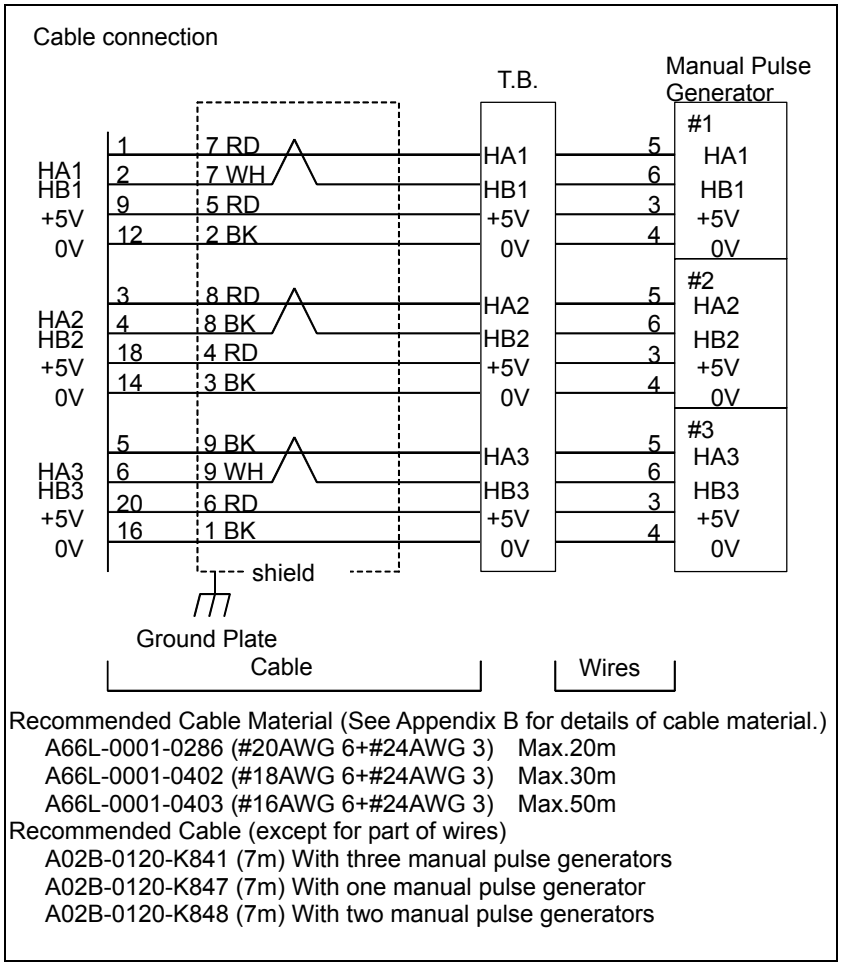


## Cable Length When Manual Pulse Generator is Used

Manual pulse generators are supplied with 5 VDC power the same as pulse coders. The drop in voltage due to cable resistance must not exceed 0.2V (on 0V and 5V lines in total).

$$0.2 \geqq \frac{0.1 \times R \times 2L}{m}$$

where

$$L \leqq \frac{m}{R}$$

| | | |
|---|---|---|
| 0.1 | : | Power supply current for the manual pulse generator = 0.1 A |
| R | : | Wire resistance per unit length [Ω/m] |
| m | : | Number of 0-V wires (= number of 5-V wires) |
| L | : | Cable length [m] |

Therefore,

$$L \leqq \frac{3}{0.0394} = 76.75 \text{ [m]}$$

Example: When cable A66L-0001-0286 is used
This cable consists of three pairs of signal lines and six power wires (20/0.18, 0.0394 Ω/m).
When these three cables are used for 0V and 5V lines, the cable length is:

The maximum distance is, however, 50 m for the transmission of a pulse signal from the manual pulse generator. The cable length is, therefore, up to 50 m.
The maximum cable length is 38.37 m when using the two manual pulse generators, or 25.58 m when using the three generators.

## Manual Handle Allocation Function

Usually, if two or more units equipped with a manual handle interface are connected with an I/O LINK, the manual handle interface of the first unit connected to the I/O LINK will be automatically enabled.
The use of this function enables the manual handle interfaces of the second and subsequent units. By setting bit 1 of parameter No. 7105, the manual handles associated with the X addresses set in parameters Nos. 12305 to 12307 can be allocated as the first, second, and third manual handles, respectively.
Up to three manual handles can be allocated.

## Connection example

Connection example in which more than one unit equipped with a manual handle interface is connected with an I/O LINK

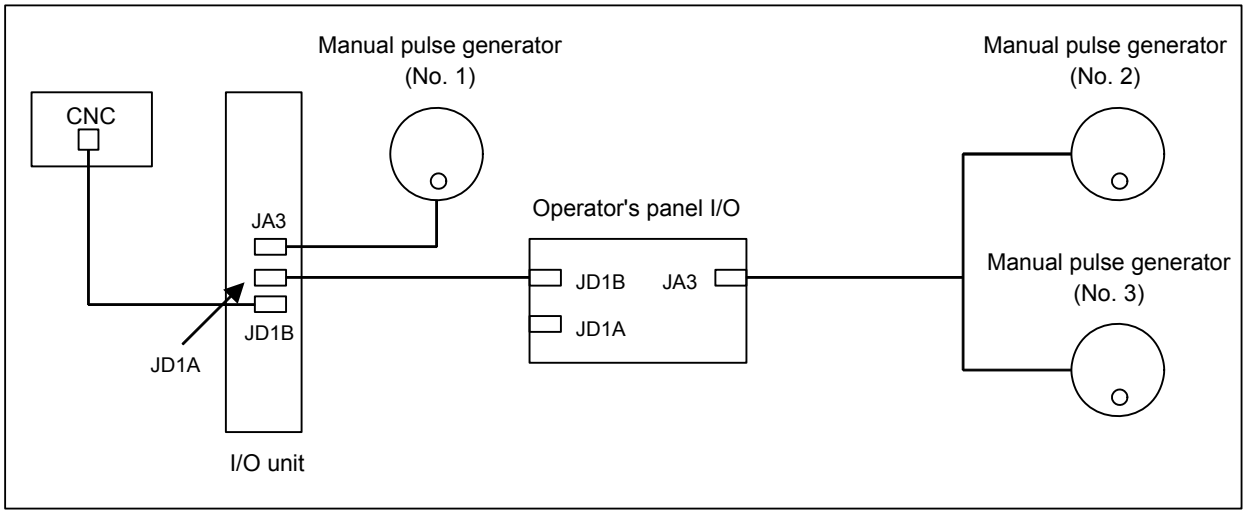


## Parameter

| | #7 | #6 | #5 | #4 | #3 | #2 | #1 | #0 |
|---|---|---|---|---|---|---|---|---|
| 7105 | | | | | | | HDX | |

[Data type] Bit

**#1 HDX** The manual handles connected with an I/O LINK are:
0: Automatically allocated in the order in which they are connected to the I/O LINK.
1: Allocated to the X signal addresses set in the appropriate parameters.

| | |
|---|---|
| 12300 | X signal address associated with the first manual handle |
| 12301 | X signal address associated with the secnd manual handle |

| 12302 | X signal address associated with the third manual handle |
|---|---|

[Data type] Word
[Valid data range] 0 to 127
Set the addresses of the X signals used with the respective manual handles.
These parameters are effective when HDX, bit 1 of parameter No. 7105, is 1.
The manual handles will not operate if the addresses of the manual handles of the units connected with the I/O LINK are not set correctly.

# 9.7 FANUC I/O LINK CONNECTION UNIT

## 9.7.1 Overview

This unit connects FANUC I/O Link master devices' such as the CNC, via an I/O Link to enable the transfer of DI/DO signals.

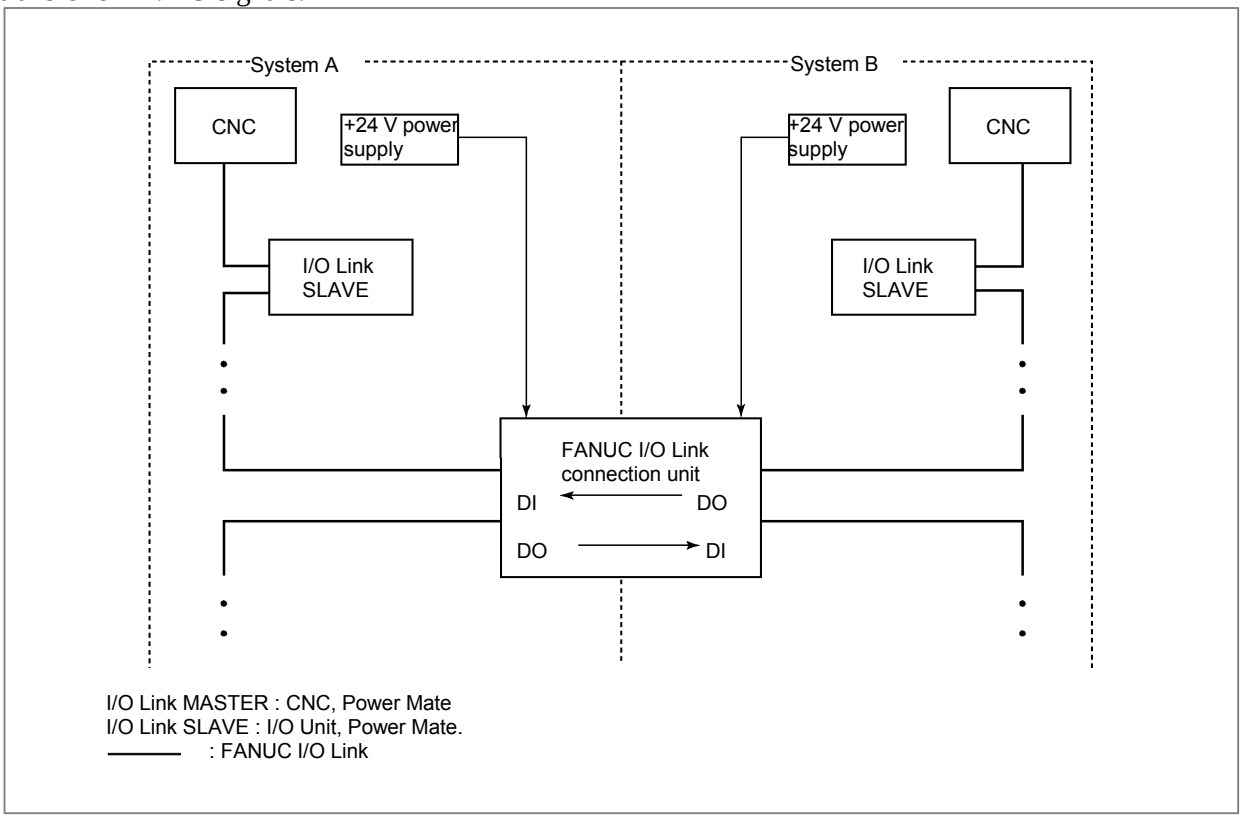


**Fig. 9.7.1 System which uses FANUC I/O Link connection units**

This system enable I/O data transfer between two independent FANUC I/O Link master devices. When the system is adjusted and maintained, the FANUC I/O Link can be operated with the system power for one of the FANUC I/O Link lines switched off, that is, the link operation is stopped.

**NOTE**

Take the following point into consideration when you design your system.

1. If one of the links is stopped, the system power supply is turned off for maintenance or adjustment, or the link is stopped due to a failure of CNC or I/O Link slave module, the circuit of this unit is designed so that all DI signals sent from a system at rest consists entirely of zeros.
2. If one of the links is stopped, either abnormally or normally, it takes up to several hundred milliseconds for NOTE 1 function to take effect. During this period, that data which exists immediately before the link stops is sent out. Take this into account when designing your system.
3. It cannot be guaranteed that the operation described to NOTE 1 and NOTE2 is carried out that way. Therefore, manage signals related to safety by making a safety circuit outside this FANUC I/O Link connection unit.

## 9.7.2 Specification

| Item | Specification |
|---|---|
| I/O Link function | Provided with two slave mode I/O Link interface channels, between which DI/DO data can be transferred.<br><br>[Interface types]<br>Electrical - optical<br>Electrical - electrical<br>Optical - optical<br>One of the following combinations is selected: |
| Number of DI/DO data items | DI: Up to 256, DO: Up to 256<br>(The number of data items actually used varies depending on the amount of data assigned in the host.) |
| Power supply | Each I/O Link interface must be independently supplied with +24 VDC.<br>Voltage: +24 VDC +10%, -15%<br>Current: 0.2 A (excluding surge)<br>If a master unit does not have sufficient capacity to supply power to each unit (0.2 A per slot), use an external power supply unit. The power supply must be switched on, either simultaneously with or before, the I/O Link master.<br>The two systems can be switched on and off independently of each other. Data from a system to which no power is supplied appears as zeros when viewed from the other system. The data becomes 0 within 200 ms of the power being switched off. |
| External dimensions | 180 mm (width) × 150 mm (height) × about 50 mm (depth)<br>W H D<br>Fig. 9.7.2 (b) is an outline drawing of the unit. |
| Installation | The unit, which is a stand-alone type, is installed in the power magnetics cabinet. Fig. 9.7.2 (c) shows how to mount the unit. |
| Operating environment | Temperature : 0 to 60°C<br>Humidity : 5 to 75% RH (non-condensing)<br>Vibration : 0.5 G or less |

### Ordering information

| Interface type | Specification |
|---|---|
| Electrical-optical interface | A20B-2000-0410 |
| Electrical-electrical interface | A20B-2000-0411 |
| Optical-optical interface | A20B-2000-0412 |

**NOTE**

The optical interface of this unit is equivalent to the standard type (A13B-0154-B001) of an optical I/O Link adapter. Therefore, when this unit is combined with an optical I/O Link adapter, the optical I/O Link adapter must be of the standard type (A13B-0154-B001).

## LED indications

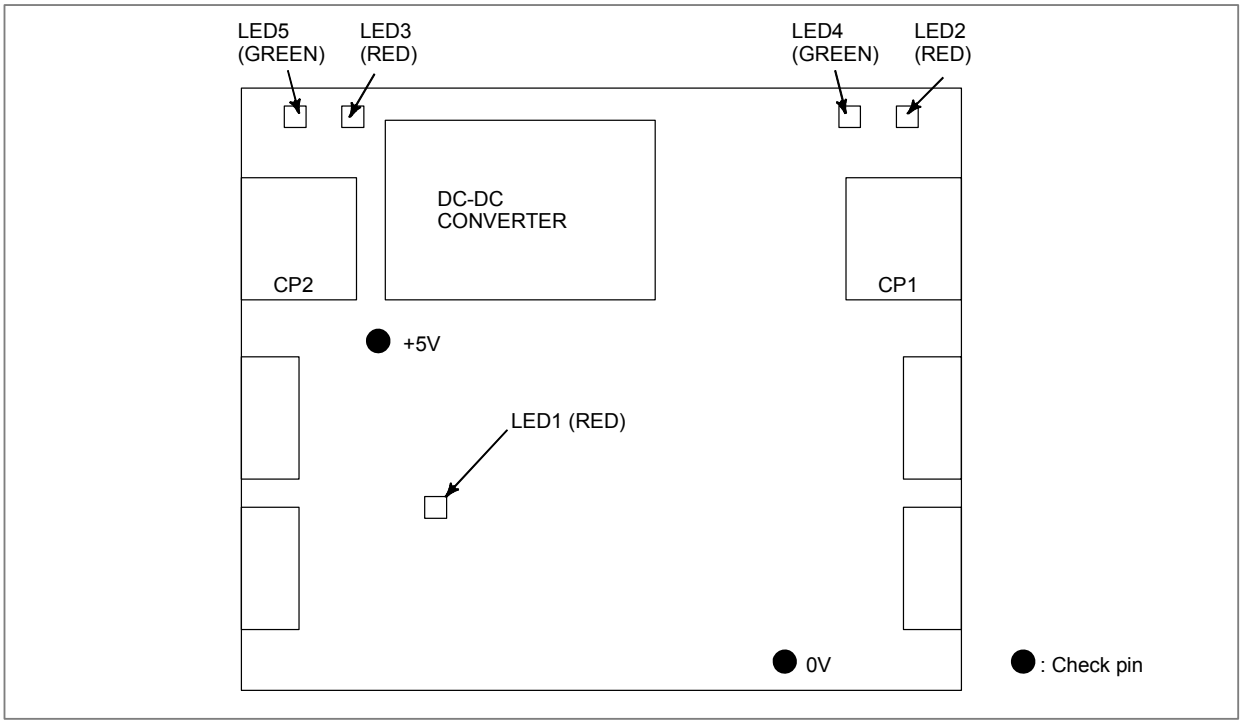


**Fig. 9.7.2 (a) LED locations**

| | LED status | Description |
|---|---|---|
| 1 | LED1 □ | Normal |
| | LED1 ■ | A RAM parity error occurred because of a hardware failure. |
| 2 | LED4 ■ LED2 □ | CP1 is supplied with the specified voltage.<br>(Pilot lamp) |
| | LED4 □ LED2 ■ | CP1 is supplied with a voltage that is lower than specified or zero. |
| | LED4 ■ LED2 ■ | A communication error occurred in a channel of CP1. |
| 3 | LED5 ■ LED3 □ | CP2 is supplied with the specified voltage.<br>(Pilot lamp) |
| | LED5 □ LED3 ■ | CP2 is supplied with a voltage that is lower than specified or zero. |
| | LED5 ■ LED3 ■ | A communication error occurred in a channel of CP2. |

■ : On □ : Off

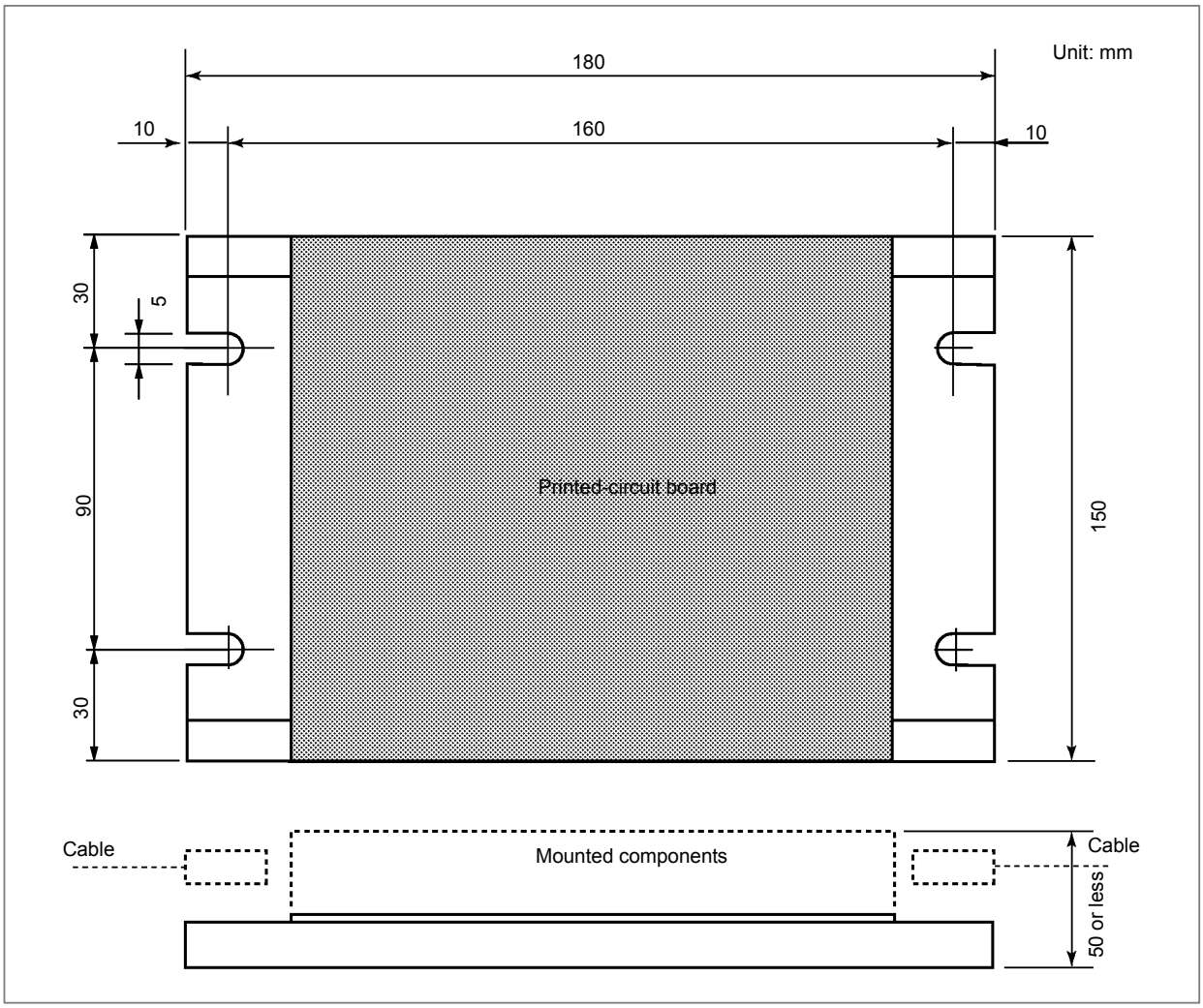


**Fig. 9.7.2 (b) Outline drawing**

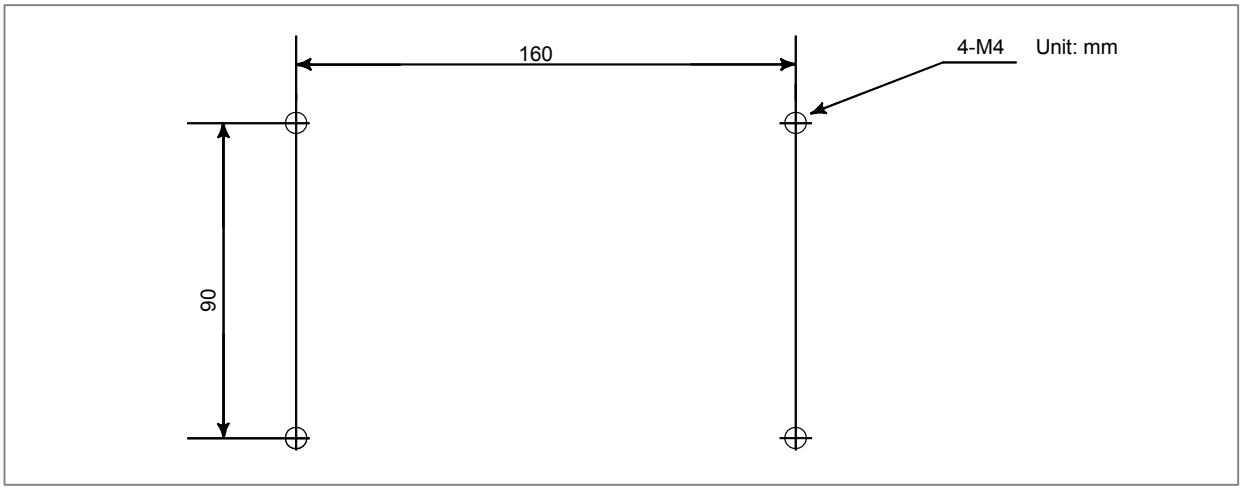


**Fig. 9.7.2 (c) Mounting location**

# 9.7.3 Connection

## 9.7.3.1 I/O Link interface

(1) Connection diagram (example)

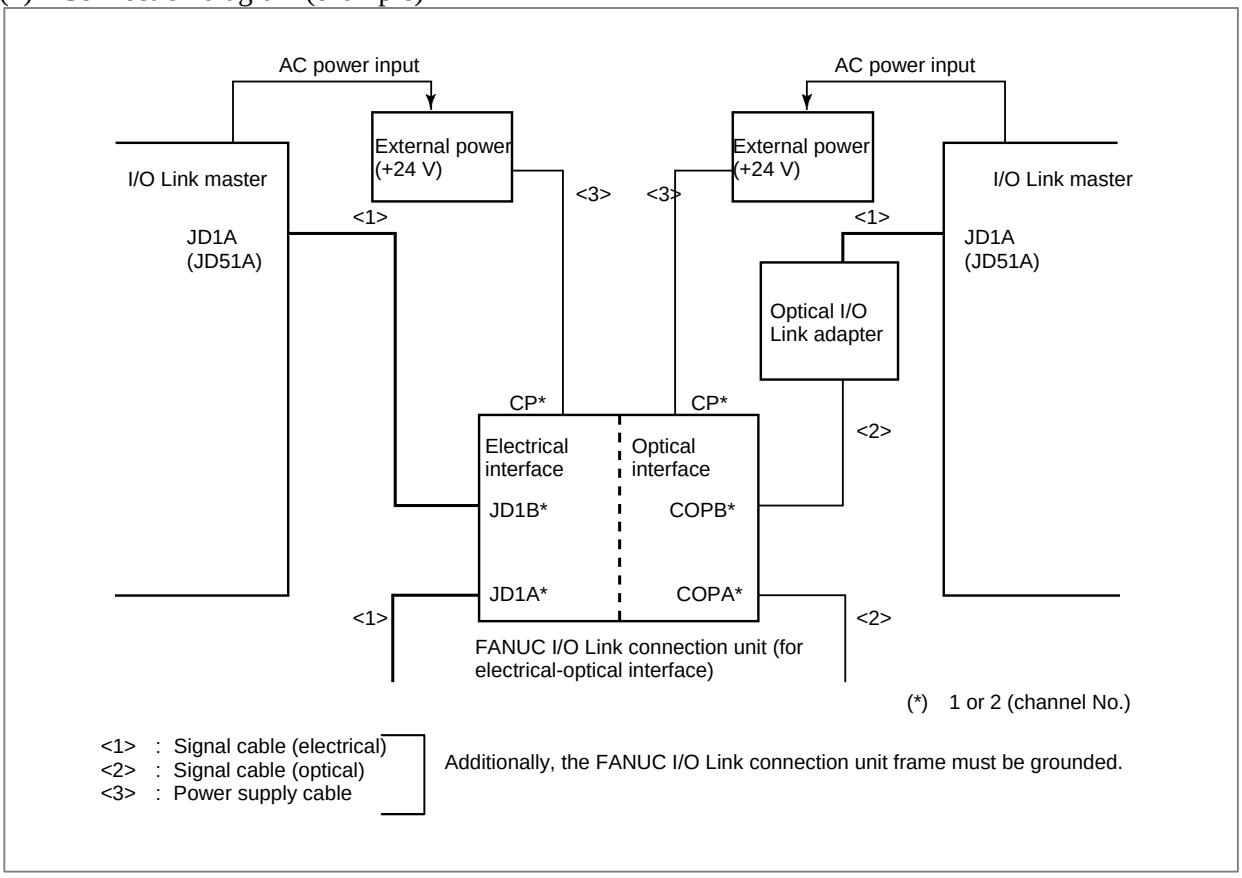


[Name of I/O Link connection unit connectors]

**Electrical-optical**

| Connector name I/O Link interface | |
|---|---|
| **Channel 1** | **Channel 2** |
| JD1A1 | COPA2 |
| JD1B1 | COPB2 |
| CP1 | CP2 |

**Electrical-electrical**

| Connector name I/O Link interface | |
|---|---|
| **Channel 1** | **Channel 2** |
| JD1A1 | JD1A2 |
| JD1B1 | JD1B2 |
| CP1 | CP2 |

**Optical-optical**

| Connector name I/O Link interface | |
|---|---|
| **Channel 1** | **Channel 2** |
| COPA1 | COPA2 |
| COPB | COPB2 |
| CP1 | CP2 |

(2) Signal cable (electrical)

JD1A1/JD1A2

| | | | |
|---|---|---|---|
| 11 | 0V | 1 | RXB |
| 12 | 0V | 2 | ∗RXB |
| 13 | 0V | 3 | TXB |
| 14 | 0V | 4 | ∗TXB |
| 15 | 0V | 5 | |
| 16 | 0V | 6 | |
| 17 | | 7 | |
| 18 | – | 8 | |
| 19 | | 9 | – |
| 20 | – | 10 | |

JD1B1/JD1B2

| | | | |
|---|---|---|---|
| 11 | 0V | 1 | RXA |
| 12 | 0V | 2 | ∗RXA |
| 13 | 0V | 3 | TXA |
| 14 | 0V | 4 | ∗TXA |
| 15 | 0V | 5 | |
| 16 | 0V | 6 | |
| 17 | | 7 | |
| 18 | – | 8 | |
| 19 | | 9 | – |
| 20 | – | 10 | |

This unit (JD1A1/JD1A2) ⇔ Another device (JD1B)
or
Another device (JD1A) ⇔ This unit (JD1B1/JD1B2)

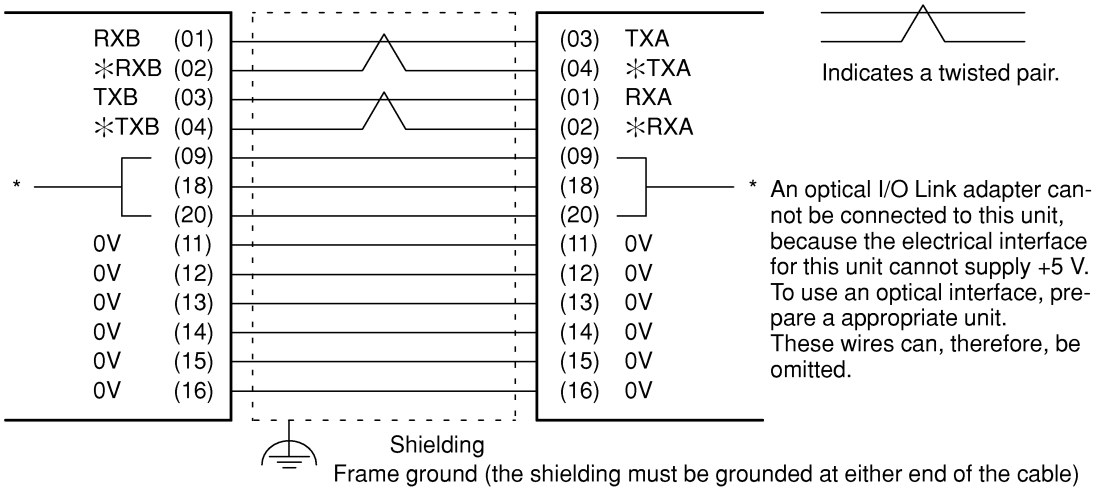


- Cable–side connector specification : PCR–E20FA (manufactured by Honda Tsushin)
- Cable specification : A66L–0001–0284#10P or equivalent
- Cable length : 10 m (maximum)

(3) Signal cable (optical)

- Optical cable specification : A66L-6001-0026#XXXX
  (where XXXX is a cable length specification)
  Cable specification examples
  10m - L10R03
  100m - L100R3
- Cable length : 200 m (maximum)

(4) Power supply cable

**CP1/CP2 connector**

| | 1 | 2 | 3 | |
|---|---|---|---|---|
| Y | +24V | 0V | | (Input) |
| X | +24V | 0V | | (Output) |

- 24 VDC is supplied via a Y-connector. Provided the power supply has sufficient capacity, power can be supplied to another device with the X-side as output.
- Power must be supplied to both CP1 and CP2.
- Cable-side connector specification
  Y-connector : A63L-0001-0460#3LKY (AMP Japan, 2-178288-3)
  X-connector : A63L-0001-0460#3LKX (AMP Japan, 1-178288-3)
  Contact: A63L-0001-0456#BS (AMP Japan, 175218-5)
  Ordering information:
  Y + 3 contacts : A02B-0120-K323
  X + 3 contacts : A02B-0120-K324
  Cable material :
  Vinyl-insulated electrical wire AWG20-16
  Cable length :
  Determine the length of the cable such that the supplied voltage at the receiving end satisfies the requirements, because the voltage may fluctuate and drop as a result of the resistance of the cable conductor.

(5) Frame grounding
Ground the frame of the unit using a wire having a cross section of at least 5.5 $m^2$ (class 3 or higher). An M4 frame ground terminal is provided.

# 9.8 CONNECTING THE FANUC SERVO UNIT β SERIES WITH I/O LINK

## 9.8.1 Overview

The FANUC servo unit β series with I/O Link (called the β amplifier with I/O Link) is a servo unit that can be easily connected to a CNC control unit via the FANUC I/O Link.

## 9.8.2 Connection

The β amplifier with I/O Link is connected to the control unit using the usual FANUC I/O Link connection.

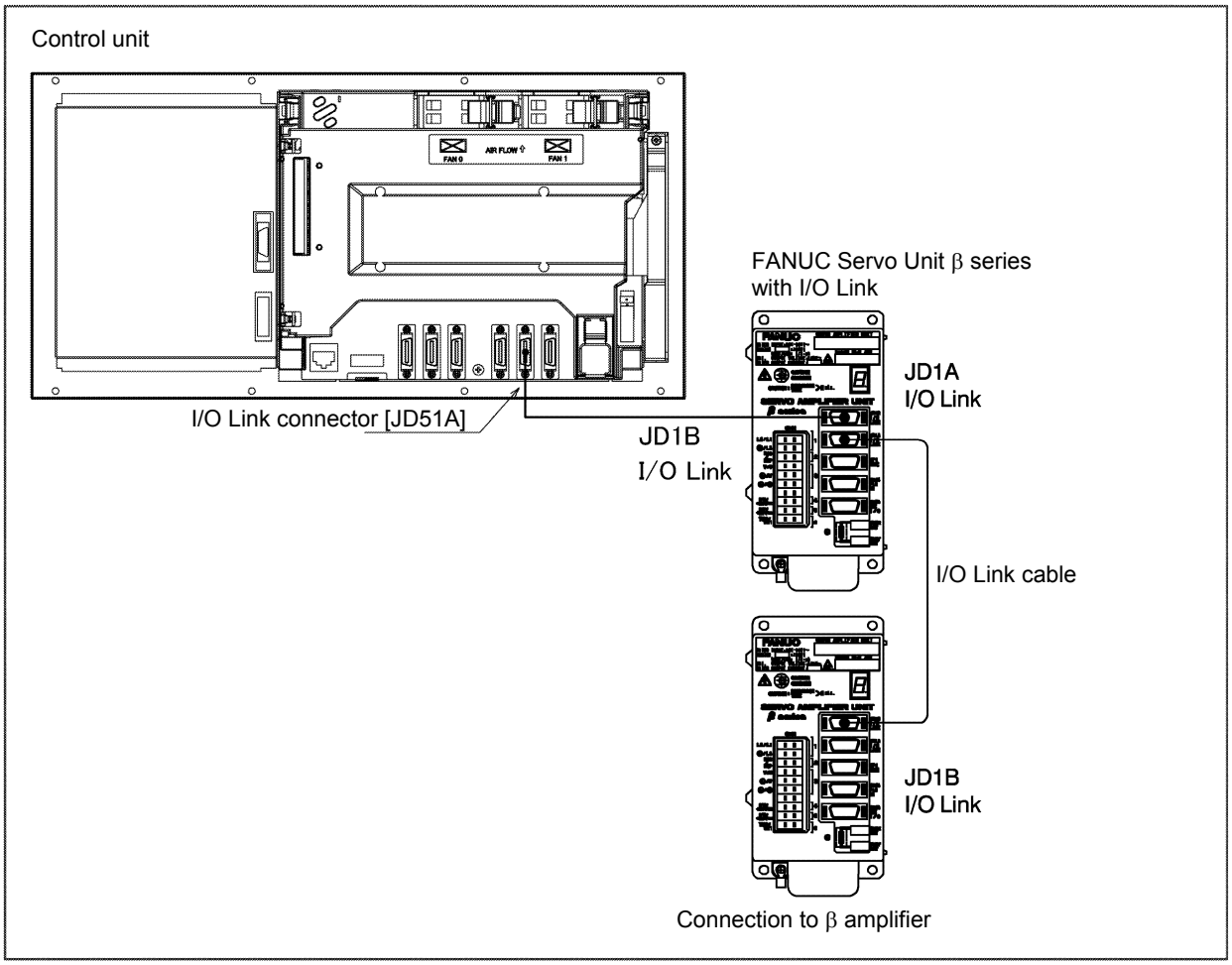


## 9.8.3 Maximum Number of Units that can be Connected

For the 0*i*-D, the maximum number of β amplifiers with I/O Link that can be connected to a control unit depends on the maximum number of FANUC I/O Link points provided by that control unit, as well as their assignments. The maximum number of DI/DO points of the FANUC I/O Link is 1024/1024. On the other hand, the number of DI/DO points occupied by a β amplifier with I/O Link is 128/128. So, if only β amplifiers with I/O Link are connected to the FANUC I/O Link, up to eight β amplifiers with I/O Link can be connected. For the 0*i* Mate, number of connectable amplifiers depends on the model.

## 9.8.4 Address Assignment by Ladder

If the β amplifier with I/O Link is used as an I/O Link slave, I/O addresses are assigned in the PMC in the CNC. Because data output from the slave is made in 16-byte units, the number of input/output points must be set to 128.
The module names are OC02I (input) and OC02O (output).
The BASE is always 0, and the SLOT is 1.

# 9.9 CONNECTION TO STANDARD MACHINE OPERATOR'S PANEL

## 9.9.1 Overview

Standard machine operator's panel is connected with CNC by I/O Link, which is composed by some following operator's panels.

Main panel

All key tops are detachable. MTB can customize keys and make his original key layout easily.

Sub panel

Operator's panel with switches such as an emergency stop switch, memory protect switch, and rotary switch for override

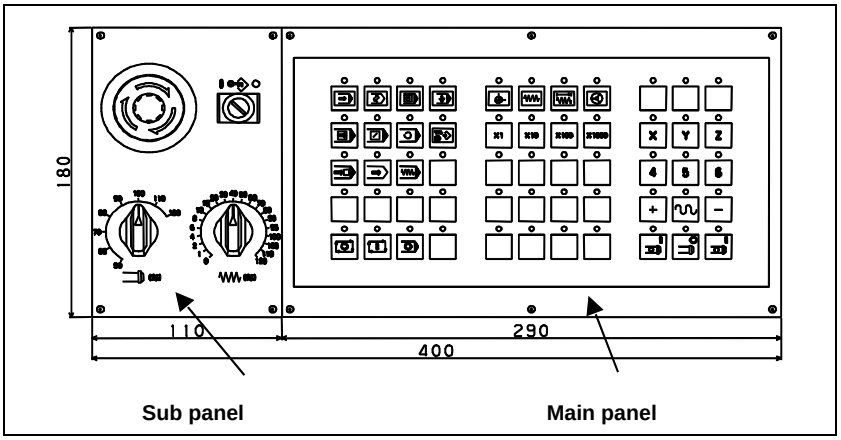


**NOTE**

As the main panel for a standard machine operator's panel, use a 3-keystroke support model, which does not accept more than three simultaneous keystrokes. See Subsection 9.9.6.2, "Order specification".

## 9.9.2 Total Connection Diagram

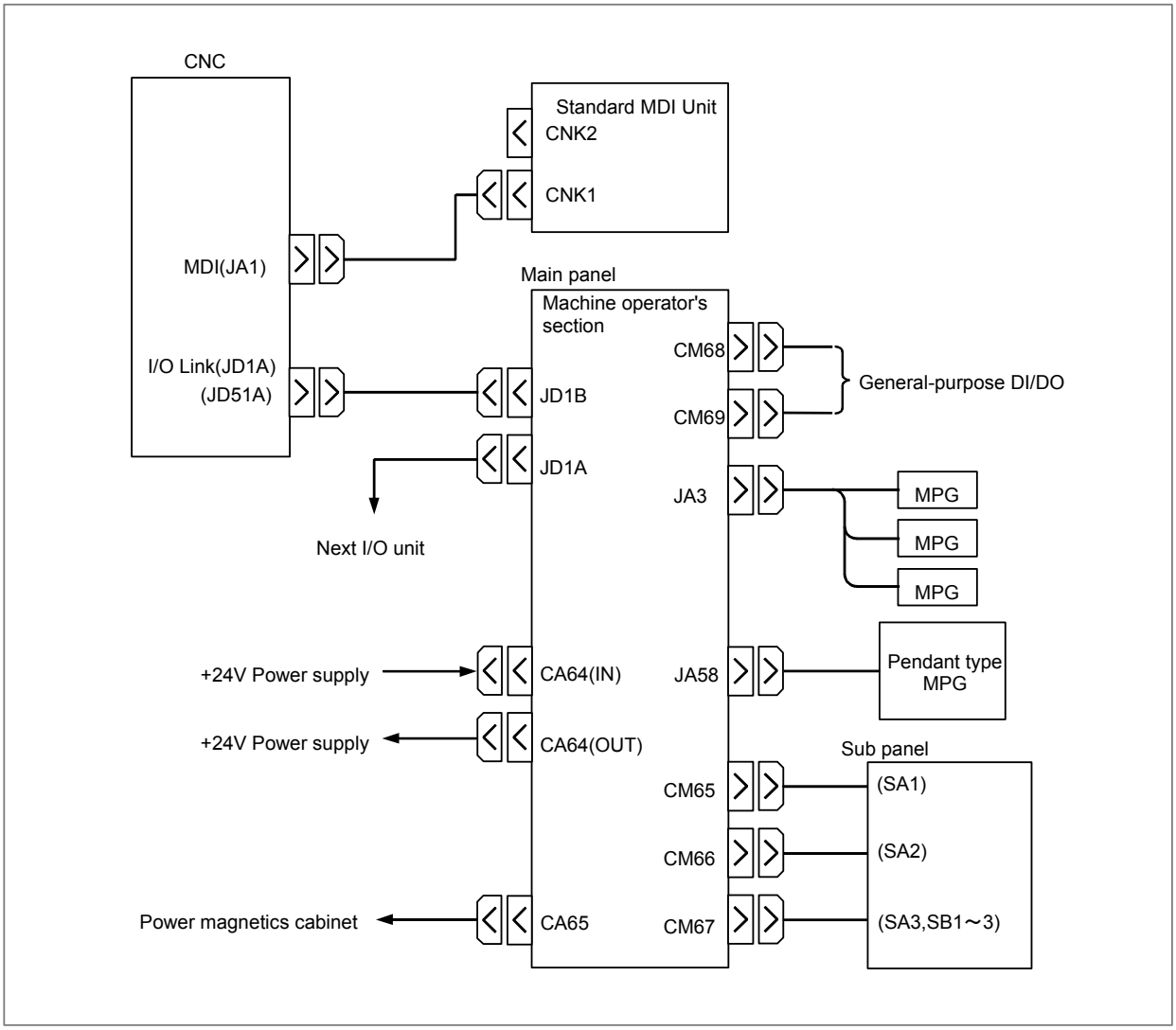


**NOTE**

1 This CNC is only possible to use the MPG interface on this operator's panel. If Series 0*i* uses some I/O unit having MPG interface (ex. Dispersion type I/O module for panel) and this operator's panel, the MPG interface nearest the CNC is only available on the I/O Link connection.
To enable the MPG interface of a second or subsequent unit, use the manual handle allocation function.

2 MPG cannot be connected with either of JA3 and JA58.

## 9.9.3 Each Connections

### 9.9.3.1 Pin assignment

CA64 (Power source)

| | | | | | |
|---|---|---|---|---|---|
| 3 | | 2 | 0V | 1 | +24V |
| 6 | | 5 | 0V | 4 | +24V |

Recommended connector for cable:
Housing : AMP 1–178288–3 (3 pins type)
Contact : AMP 1–175218–5

CM67 (ON/OFF, Program protect, ESP)

| | | | |
|---|---|---|---|
| A01 | EON | B01 | EOFF |
| A02 | COM1 | B02 | COM2 |
| A03 | Xm+1.4 | B03 | KEYCOM |
| A04 | *ESP | B04 | ESPCM1 |
| A05 | TR1 | B05 | TR2 |

Recommended connector for cable:
Housing : AMP 178289–5
Contact : AMP 1–175218–5

CM65 (General–purpose DI)

| | | | |
|---|---|---|---|
| A01 | | B01 | |
| A02 | | B02 | Xm+0.5 |
| A03 | Xm+0.1 | B03 | Xm+0.3 |
| A04 | +24V | B04 | Xm+0.4 |
| A05 | Xm+0.2 | B05 | Xm+0.0 |

Recommended connector for cable:
Hirose electric : HIF3BA–10D–2.54R

CM68 (General–purpose DI/DO)

| | | | |
|---|---|---|---|
| A01 | +24V | B01 | Xm+1.5 |
| A02 | Xm+1.6 | B02 | Xm+1.7 |
| A03 | Xm+2.0 | B03 | Xm+2.1 |
| A04 | Xm+2.2 | B04 | Xm+2.3 |
| A05 | Xm+2.4 | B05 | Xm+2.5 |
| A06 | TR3 | B06 | TR4 |
| A07 | TR5 | B07 | TR6 |
| A08 | Yn+5.3 | B08 | Yn+5.7 |
| A09 | Yn+6.3 | B09 | Yn+6.7 |
| A10 | DOCOM | B10 | 0V |

Recommended connector for cable:
Housing : AMP 178289–8
Contact : AMP 1–175218–5

CA65 (Power magnetic cabinet)

| | | | |
|---|---|---|---|
| A01 | EON | B01 | EOFF |
| A02 | COM1 | B02 | COM2 |
| A03 | *ESP | B03 | ESPCM1 |
| A04 | TR1 | B04 | TR2 |
| A05 | TR3 | B05 | TR4 |
| A06 | TR5 | B06 | TR6 |
| A07 | TR7 | B07 | TR8 |
| A08 | | B08 | |
| A09 | | B09 | |
| A10 | | B10 | |

Recommended connector for cable:
Hirose electric : HIF3BA–20D–2.54R

CM66 (General–purpose DI)

| | | | |
|---|---|---|---|
| A01 | | B01 | |
| A02 | | B02 | Xm+1.3 |
| A03 | Xm+0.7 | B03 | Xm+1.1 |
| A04 | +24V | B04 | Xm+1.2 |
| A05 | Xm+1.0 | B05 | Xm+0.6 |

Recommended connector for cable:
Hirose electric : HIF3BA–10D–2.54R

CM69 (General–purpose DI/DO)

| | | | |
|---|---|---|---|
| A01 | +24V | B01 | Xm+2.6 |
| A02 | Xm+2.7 | B02 | Xm+3.0 |
| A03 | Xm+3.1 | B03 | Xm+3.2 |
| A04 | Xm+3.3 | B04 | Xm+3.4 |
| A05 | Xm+3.5 | B05 | Xm+3.6 |
| A06 | Xm+3.7 | B06 | DICOM |
| A07 | TR7 | B07 | TR8 |
| A08 | Yn+7.3 | B08 | Yn+7.4 |
| A09 | Yn+7.5 | B09 | Yn+7.6 |
| A10 | DOCOM | B10 | 0V |

Recommended connector for cable:
Housing : AMP 178289–8
Contact : AMP 1–175218–5

**NOTE**

Input/output Pins shaded by ▒ are in pairs. Only one in each pair is usable. Pins shaded by ■ are those for forwarding signals. Pins with the same name are connected directly to one another.

JA3 (Manual pulse generator)

| | | | |
|---|---|---|---|
| 1 | HA1 | 11 | |
| 2 | HB1 | 12 | 0V |
| 3 | HA2 | 13 | |
| 4 | HB2 | 14 | 0V |
| 5 | HA3 | 15 | |
| 6 | HB3 | 16 | 0V |
| 7 | | 17 | |
| 8 | | 18 | +5V |
| 9 | +5V | 19 | |
| 10 | | 20 | +5V |

JA58 (Pendant type manual pulse generator)

| | | | |
|---|---|---|---|
| 1 | HA1 | 11 | Xm+1.5 |
| 2 | HB1 | 12 | 0V |
| 3 | Xm+2.2 | 13 | Xm+1.6 |
| 4 | Xm+2.3 | 14 | 0V |
| 5 | Xm+2.4 | 15 | Xm+1.7 |
| 6 | Xm+2.5 | 16 | 0V |
| 7 | Yn+5.3 | 17 | Xm+2.0 |
| 8 | Xm+2.1 | 18 | +5V |
| 9 | +5V | 19 | +24V |
| 10 | +24V | 20 | +5V |

Recommended connector for cable of JA3 and JA58
When the depth of the operator's panel is 60mm min.
Hirose electric :FI30-20S (Connector), FI-20-CV7 (Case)
When the depth of the operator's panel is 80mm min.
Recommended connector for cable of JA3:
Hirose electric : FI40B-2015S (Connector), FI-20-CV (Case)
Recommended connector for cable of JA58:
Honda : PCR-E20FA (Connector), PCR-V20LA (Case)
Hirose electric : FI30-20S (Connector), FI-20-CV2 (Case)
Fujitsu : FCN-247J020-G/E (Connector), FCN-240C020-Y/S (Case)
Molex : 52622-2011 (Connector), 52624-2015 (Case)

## 9.9.3.2 Power supply connection

The power required for the operation of this operator's panel and for a general DI must be supplied to connector CA64 (IN) in the following figure. Since the power input from CA64 (IN) is output to CA64 (OUT) for easy branching, use the power from CA64 (OUT) when the power must be branched.

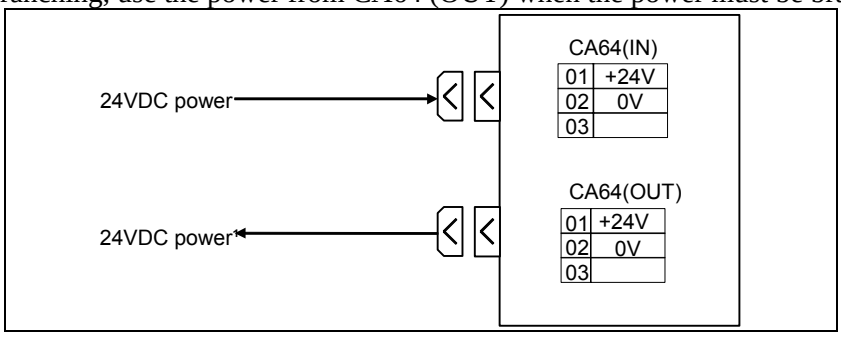


**NOTE**

1 Both connectors CA64(IN) and CA64(OUT) are same specification. And there is not indication of (IN) and (OUT) on the PCB.

2 Power supply for the operator's panel must not turn off at operation. If +24V is turned off at operation, CNC happen to get system alarm(Communication alarm between CNC and operator's panel). +24V for operator's panel must be supplied before or same time CNC power on.

## 9.9.3.3 I/O Link connection

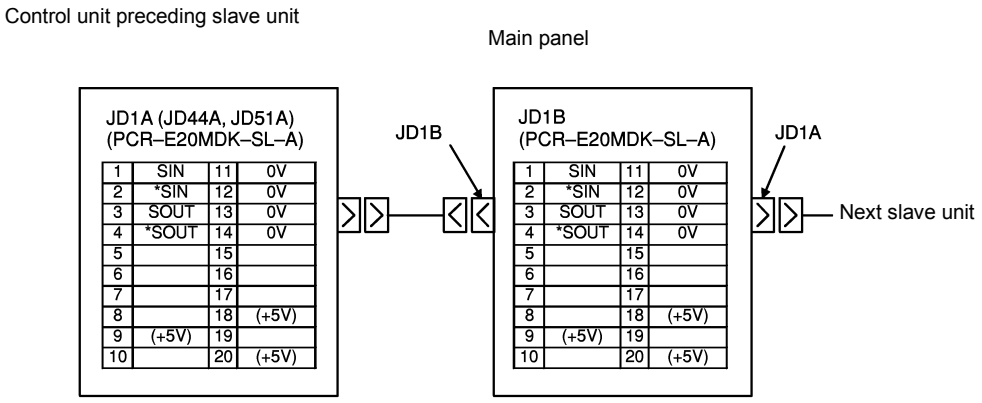


| | | | |
|---|---|---|---|
| 1 | SIN | 11 | 0V |
| 2 | *SIN | 12 | 0V |
| 3 | SOUT | 13 | 0V |
| 4 | *SOUT | 14 | 0V |
| 5 | | 15 | |
| 6 | | 16 | |
| 7 | | 17 | |
| 8 | | 18 | (+5V) |
| 9 | (+5V) | 19 | |
| 10 | | 20 | (+5V) |

| | | | |
|---|---|---|---|
| 1 | SIN | 11 | 0V |
| 2 | *SIN | 12 | 0V |
| 3 | SOUT | 13 | 0V |
| 4 | *SOUT | 14 | 0V |
| 5 | | 15 | |
| 6 | | 16 | |
| 7 | | 17 | |
| 8 | | 18 | (+5V) |
| 9 | (+5V) | 19 | |
| 10 | | 20 | (+5V) |

Recommended connector for cable of JD1A and JD1B on Main panel
When the depth of the operator's panel is 60mm min.
Hirose electric : FI30-20S (Connector), FI-20-CV7 (Case)
When the depth of the operator's panel is 80mm min.
Honda : PCR-E20FA (Connector), PCR-V20LA (Case)
Hirose electric : FI30-20S (Connector), FI-20-CV2 (Case)
Fujitsu : FCN-247J020-G/E (Connector), FCN-240C020-Y/S (Case)
Molex : 52622-2011 (Connector), 52624-2015 (Case)

+5V terminals are for an optical I/O Link adapter. They are not necessary when connecting with a metal cable.
A line for the +5V terminal is not required when the Optical I/O Link Adapter is not used.

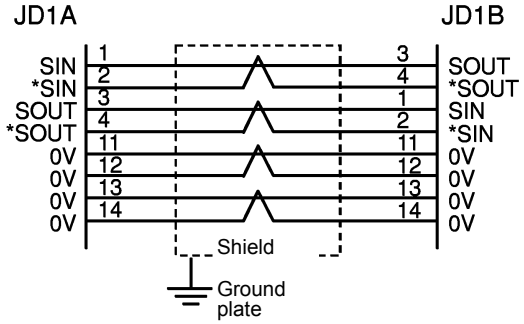


Recommended wire material:
A66L-0001-0284#10P (#AWG28 × 10 pairs)

## 9.9.3.4 Emergency stop signal connection

A signal generated by the emergency stop switch on the standard machine operator's panel can be sent to the power magnetics cabinet. (This signal cannot be sent to the FANUC I/O Link.)
When MTB uses the Sub panel A/D, wiring to the emergency stop switch is contained in the Sub panel A/D.

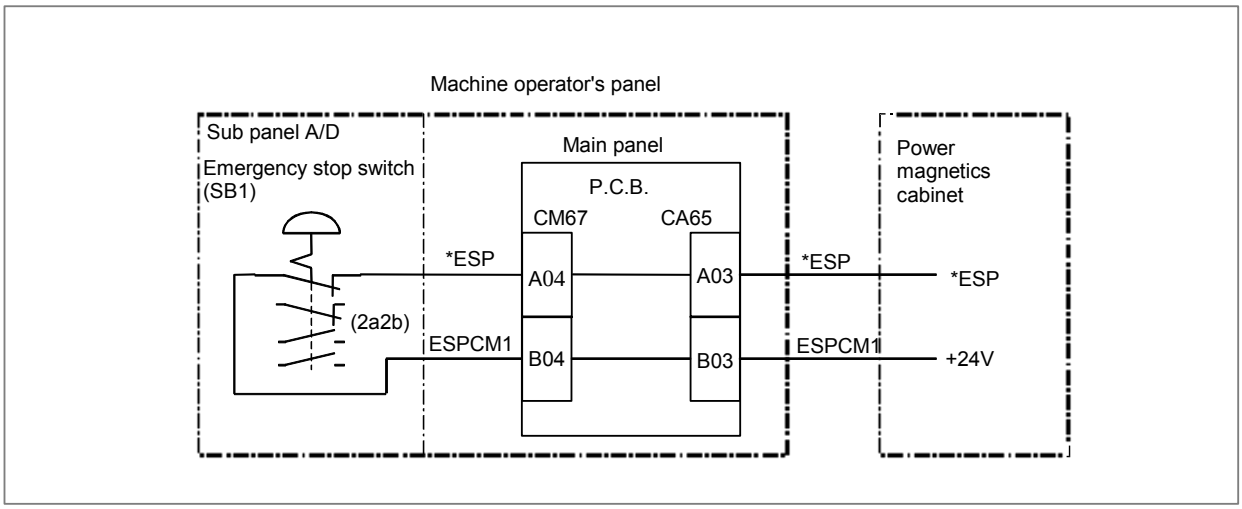


## 9.9.3.5 Power ON/OFF control signal connection

Signal generated by the power ON/OFF control switches on the standard machine operator's panel can be sent to the power magnetics cabinet. (This signal cannot be sent to the FANUC I/O Link.)
When MTB uses the Sub panel A/D, wiring to the ON/OFF control switches are contained in the Sub panel A/D.

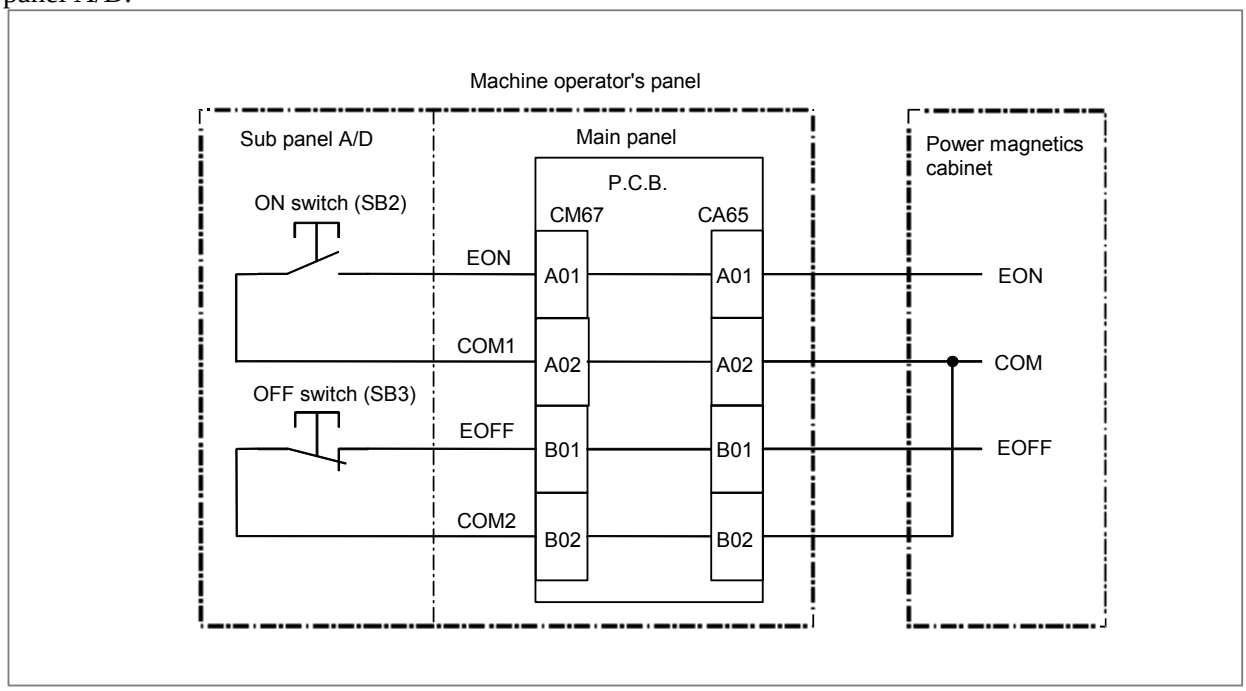

## 9.9.3.6 General-purpose DI signal connection

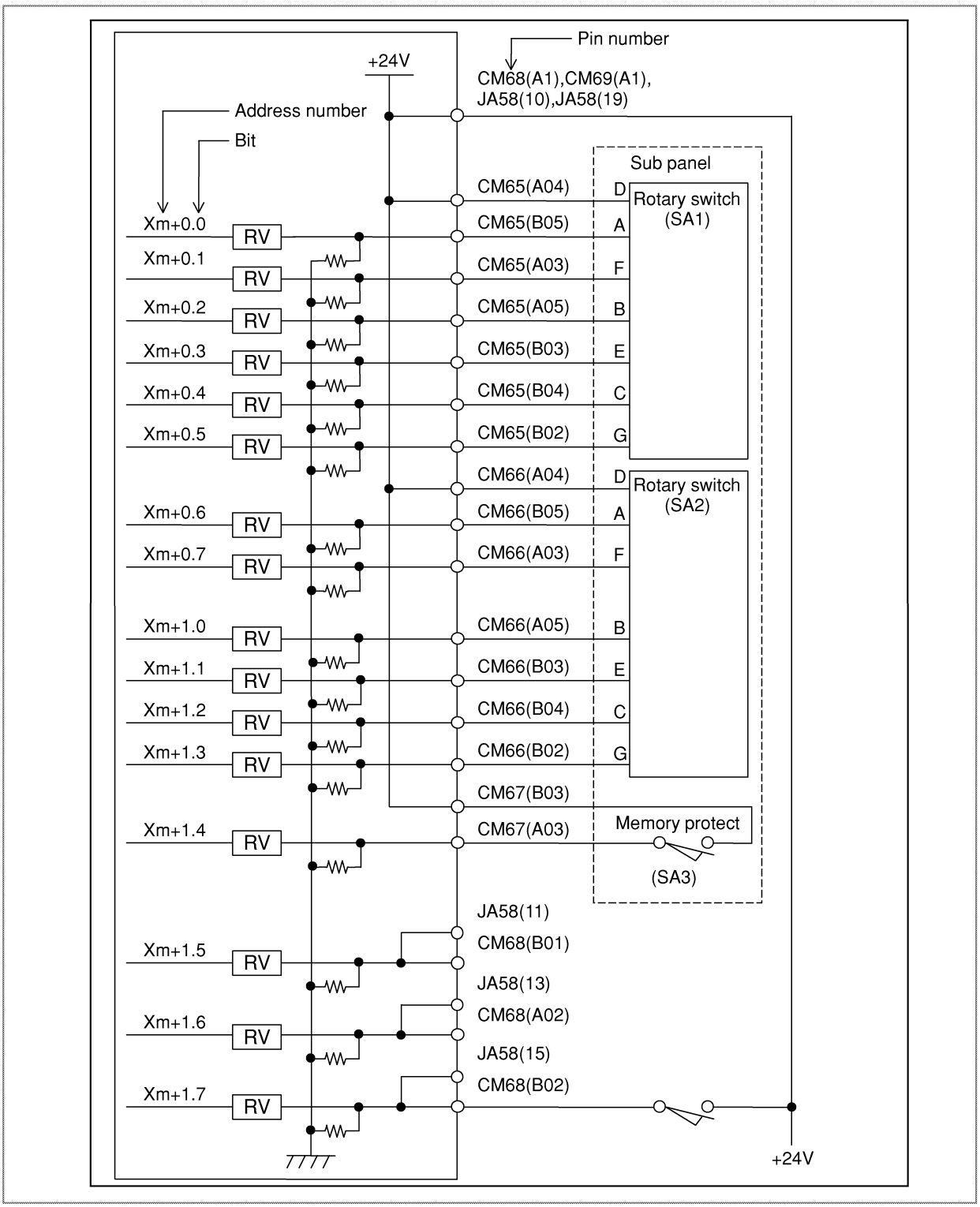


**NOTE**

Connection of Xm+0.0 to Xm+0.7, Xm+1.0 to Xm+1.4 shows when the Sub panel is used.

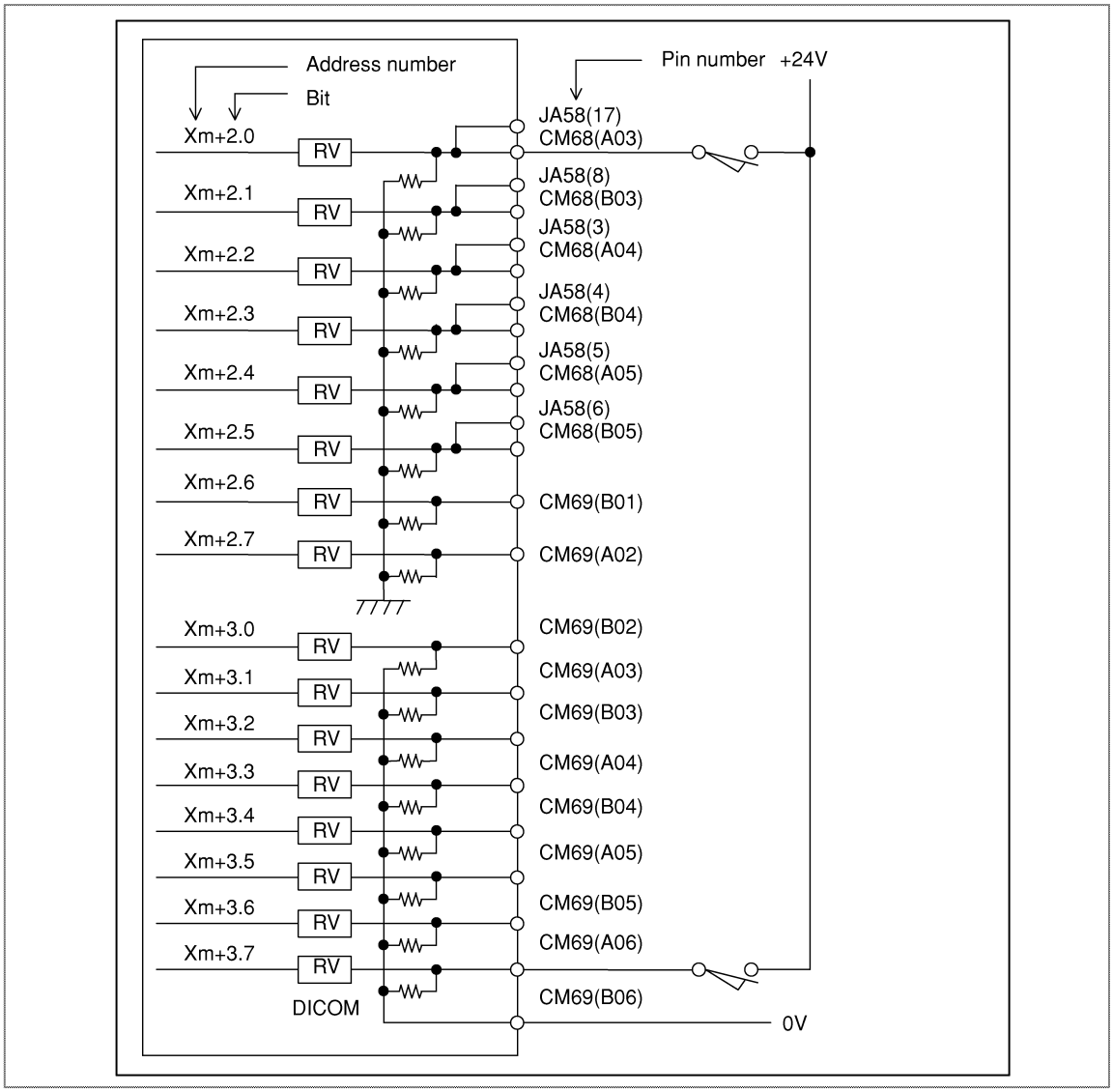


**NOTE**

1 Xm+3.0 to 3.7 have a common line that is possible to select the source/sink type. If DICOM (CM69-B06pin) is connected to +24V, the DI signal logic is negative. But in this connection, if the DI signal wires happen to drop the ground level, the status of the DI signal is same as the DI signal is "ON". From the safety viewpoint, DICOM should be connected 0V.

2 From the safety viewpoint, Emergency Stop signal must be assigned on the address Xm+0.0 to 0.7 or Xm+1.0 to 1.7 or Xm+2.0 to 2.7. As refer to the 5. DI/DO mapping, assign the Emergency stop DI.

3 Xm+0.0 to 0.7, Xm+1.0 to 1.7 and Xm+2.0 to 0.7 common lines are fixed. So, if these DI pins in this address open, the status of these one stay "0". And in case of Xm+3.0 to 3.7 which have a selectable common line, if the DICOM (CM69-B06pin) is connected to 0V and these DI pins open, the status of these one stay "0". And if the DICOM are connected to +24V and these DI pins open, the status of these one stay "1". And if the DICOM is not connected to 0V or +24V and these DI pins open, the status of these one don't care.

## 9.9.3.7 General-purpose DO signal connection

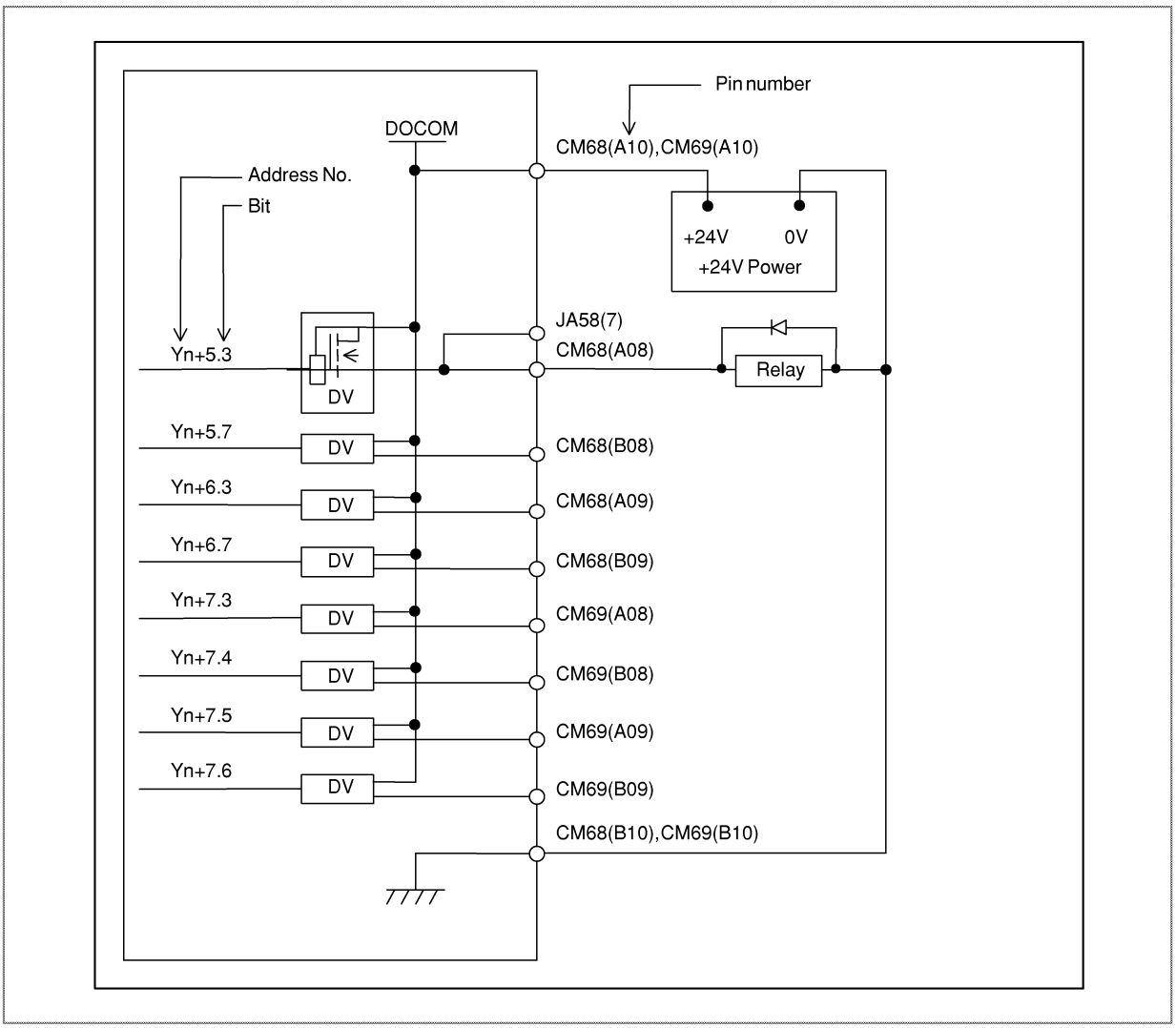


### DO signal reaction to a system alarm

There is a possibility that the Operator's panel will not operate normally due to a failure of CNC or I/O Link slave module, or abnormally power supply voltage. To prevent accidents even in this case, design the machine to operate safely by making a safety circuit outside the Operator's panel.

The circuit of this Operator's panel is designed so that all DO signals are turned off if a system alarm is occurred in the CNC which controls the Operator's panel, or if a power of the CNC or the Operator's panel is turned off. However, it cannot be guaranteed that DO signals of the Operator's panel will certainly be turned off. Therefore, manage signals related to safety by making a safety circuit outside this Operator's panel.

## 9.9.3.8 Manual pulse generator connection

### When only the manual pulse generator.

Example of the 3 manual pulse generator connection is as follows. If this CNC uses some I/O unit having MPG interface (ex. Dispersion type I/O module for panel) and this operator's panel, the MPG interface nearest the CNC is only available on the I/O Link connection.

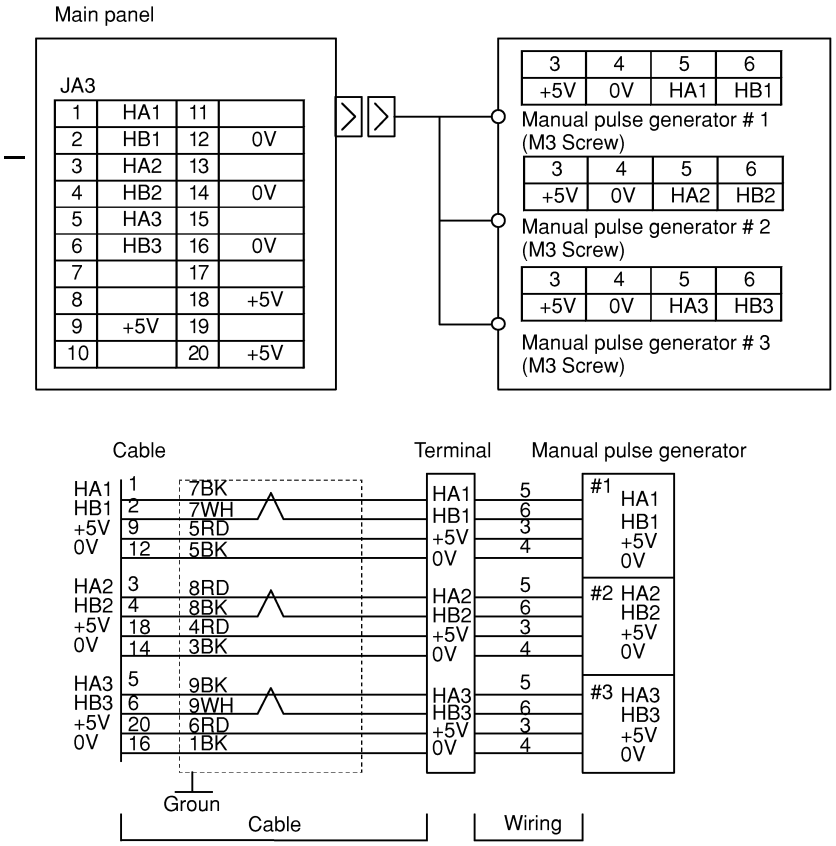


When the depth of the operator's panel is 80mm min.
Recommended wire material : A66L-0001-0286(#20AWG × 6+#24AWG × 3 pairs)
Recommended connector : A02B-0120-K303 (Including below connector and case)
(Connector : HIROSE FI40B-2015S Soldering type)
(Case : HIROSE FI-20-CV)
Recommended cable : A02B-0120-K841(7m) (MPG 3 units)
A02B-0120-K848(7m) (MPG 2 units)
A02B-0120-K847(7m) (MPG 1 unit)
(These cables don't include the wiring part in the figure.)
When the depth of the operator's panel is 60mm min.
Recommended wire material : A66L-0001-0284#10P(#28AWG × 10pairs)
Recommended connector : A02B-0236-K302 (Including below connector and case)
(Connector : HIROSE FI30-20S Stand wire press-mount type)
(Case : HIROSE FI-20-CV7)

**NOTE**
Calculate the MPG cable max. Length as refer to the following calculation.

MPG needs a 5VDC power supply and the voltage must be less than 0.2V dropping. (the 0.2V dropping includes the resistance in the cable.)

$$0.2 \geq \frac{0.1 \times R \times 2L}{m}$$

0.1 : MPG power supply current 0.1A
R : Resistance per wire length (Ω/m)
m : Wire Number (Both 0V and 5V)
L : Cable length (m)
Because

$$L \leq \frac{m}{R}$$

Example: In case of cable A66L-0001-0286
It has 3 pairs signal wires and 6 power line wires (20/0.18, 0.0394 Ω/m).
If the cable is used and each 3 wires are used for 0V and 5V power line, then max. cable length is as follows.

$$L \leq \frac{3}{0.0394} = 76.75(m)$$

The answer is 76.75m, if MPG unit is 1.
(But FANUC decide any cable must be less than 50m.)
The answer is 38.37m, if MPG units are 2.
The answer is 25.58m, if MPG units are 3.
And In case of cable A66L-0001-0284#10P
The answer is 12.88m, if MPG units are 1.
The answer is 6.44m, if MPG units are 2.
The answer is 4.29m, if MPG units are 3.

## When a pendant-type manual pulse generator

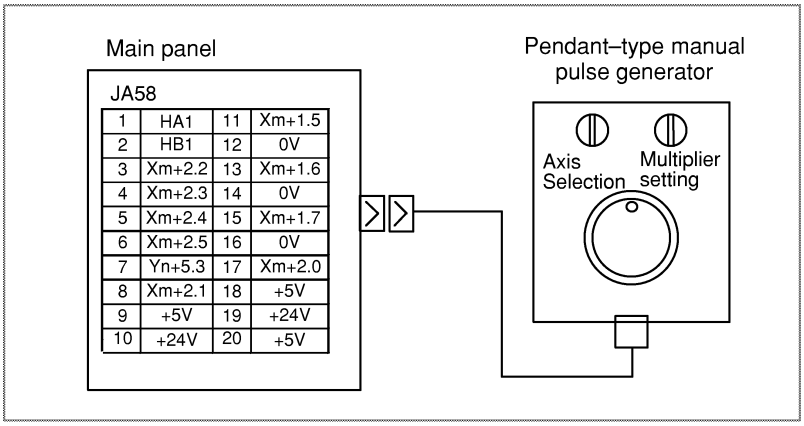


**NOTE**

1 When Xm+1.5 to Xm+2.5 of connector JA58 are allocated as the Dis used for the axis selection and multiplier setting, Xm+1.5 to Xm+2.5 of connector CM68 cannot be used.
2 One DO is available for the manual pulse generator side at the user's direction. When this is used, Yn+5.3 of CM68 cannot be used, as in the case for DIs above.

### 9.9.3.9 Connector (on the cable side) specifications

| Connector | Manufacture specification | | Order specification |
|---|---|---|---|
| JD1A, JD1B, JA3, JA58<br>(Operators panel depth=60mm min.) | Stand wire press-mount type | Hirose<br>FI30-20S (Connector)<br>FI-20-CV7 (Case) | A02B-0236-K302 |
| JD1A, JD1B, JA58<br>(Operators panel depth=80mm min.) | Soldering type | Honda<br>PCR-E20FS (Connector)<br>PCR-V20LA (Case) | A02B-0120-K301 |
| | | Hirose<br>FI40B-20S (Connector)<br>FI-20-CV2 (Case) | |
| | Stand wire press-mount type | Honda<br>PCR-E20FA (Connector)<br>PCR-V20LA (Case) | A02B-0120-K302 |
| | | Hirose<br>FI30-20S (Connector)<br>FI-20-CV2 (Case) | |
| JA3 (Operators panel depth=80mm min.) | Soldering type | Hirose<br>FI40B-2015S (Connector)<br>FI-20-CV (Case) | A02B-0120-K303 |
| CA64 (IN),<br>CA64 (OUT) | AMP<br>1-178288-3 (Housing)<br>1-175218-5 (Contact) | | A02B-0120-K324 |
| CM67 | AMP<br>178289-5 (Housing)<br>1-175218-5 (Contact) | | A02B-0236-K312 |
| CM68,<br>CM69 | AMP<br>178289-8 (Housing)<br>1-175218-5 (Contact) | | A02B-0236-K313 |
| CM65,<br>CM66 | Hirose<br>HIF3BA-10D-2.54R | | A02B-0236-K314 |
| CA65 | Hirose<br>HIF3BA-20D-2.54R | | A02B-0120-K343 |

# 9.9.4 I/O Address

## 9.9.4.1 Keyboard of main panel

I/O address of Keyswitches and LED on the keyboard of Main panel are as follows.

| BIT / Key/LED | 7 | 6 | 5 | 4 | 3 | 2 | 1 | 0 |
|---|---|---|---|---|---|---|---|---|
| Xm+4/Yn+0 | B4 | B3 | B2 | B1 | A4 | A3 | A2 | A1 |
| Xm+5/Yn+1 | D4 | D3 | D2 | D1 | D4 | C3 | C2 | C1 |
| Xm+6/Yn+2 | A8 | A7 | A6 | A5 | E4 | E3 | E2 | E1 |
| Xm+7/Yn+3 | C8 | C7 | C6 | C5 | B8 | B7 | B6 | B5 |
| Xm+8/Yn+4 | E8 | E7 | E6 | E5 | D8 | D7 | D6 | D5 |
| Xm+9/Yn+5 | | B11 | B10 | B9 | | A11 | A10 | A9 |
| Xm+10/Yn+6 | | D11 | D10 | D9 | | C11 | C10 | C9 |
| Xm+11/Yn+7 | | | | | | E11 | E10 | E9 |

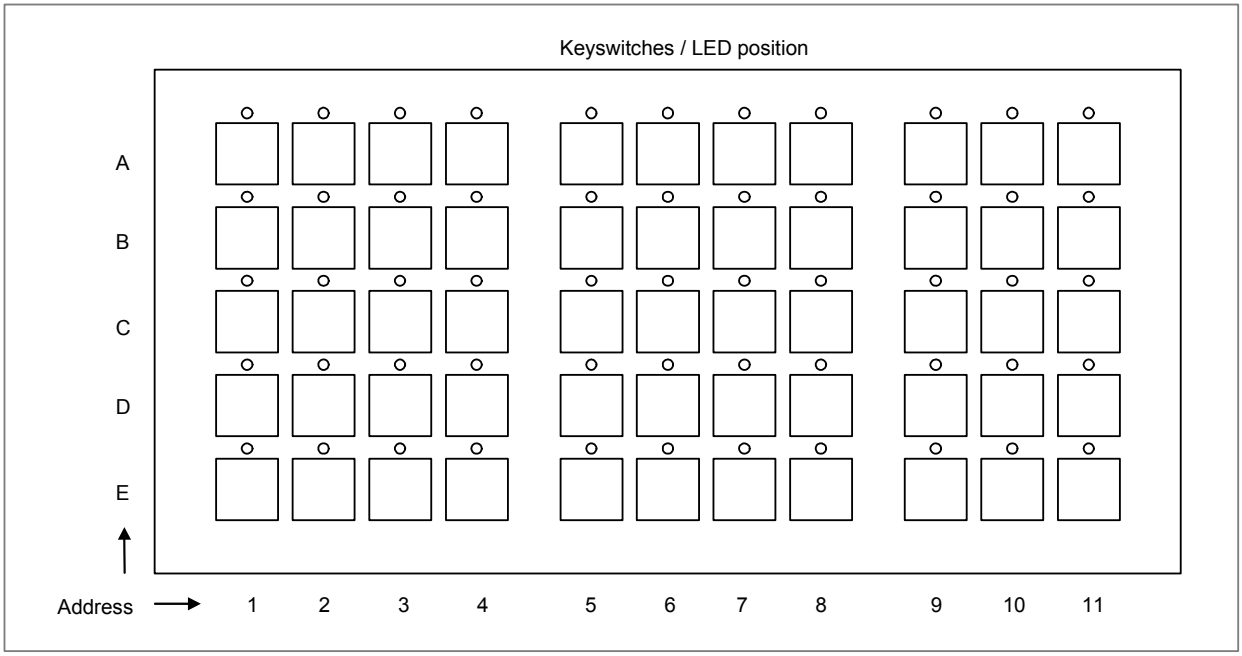


## 9.9.4.2 Override signals

When a Sub panel is used, gray code is output from each rotary switch according to the following table:

### Rotary switch (SA1)

| % | 0 | 1 | 2 | 4 | 6 | 8 | 10 | 15 | 20 | 30 | 40 | 50 | 60 | 70 | 80 | 90 | 95 | 100 | 105 | 110 | 120 |
|---|---|---|---|---|---|---|---|---|---|---|---|---|---|---|---|---|---|---|---|---|---|
| **Xm+0.0** | 0 | 1 | 1 | 0 | 0 | 1 | 1 | 0 | 0 | 1 | 1 | 0 | 0 | 1 | 1 | 0 | 0 | 1 | 1 | 0 | 0 |
| **Xm+0.1** | 0 | 0 | 1 | 1 | 1 | 1 | 0 | 0 | 0 | 0 | 1 | 1 | 1 | 1 | 0 | 0 | 0 | 0 | 1 | 1 | 1 |
| **Xm+0.2** | 0 | 0 | 0 | 0 | 1 | 1 | 1 | 1 | 1 | 1 | 1 | 1 | 0 | 0 | 0 | 0 | 0 | 0 | 0 | 0 | 1 |
| **Xm+0.3** | 0 | 0 | 0 | 0 | 0 | 0 | 0 | 0 | 1 | 1 | 1 | 1 | 1 | 1 | 1 | 1 | 1 | 1 | 1 | 1 | 1 |
| **Xm+0.4** | 0 | 0 | 0 | 0 | 0 | 0 | 0 | 0 | 0 | 0 | 0 | 0 | 0 | 0 | 0 | 0 | 1 | 1 | 1 | 1 | 1 |
| **Xm+0.5** | 0 | 1 | 0 | 1 | 0 | 1 | 0 | 1 | 0 | 1 | 0 | 1 | 0 | 1 | 0 | 1 | 0 | 1 | 0 | 1 | 0 |

**NOTE**
Xm+0.5 is a parity bit.

### Rotary switch (SA2)

| % | 50 | 60 | 70 | 80 | 90 | 100 | 110 | 120 |
|---|---|---|---|---|---|---|---|---|
| **Xm+0.6** | 0 | 1 | 1 | 0 | 0 | 1 | 1 | 0 |
| **Xm+0.7** | 0 | 0 | 1 | 1 | 1 | 1 | 0 | 0 |
| **Xm+1.0** | 0 | 0 | 0 | 0 | 1 | 1 | 1 | 1 |
| **Xm+1.1** | 0 | 0 | 0 | 0 | 0 | 0 | 0 | 0 |
| **Xm+1.2** | 0 | 1 | 0 | 1 | 0 | 1 | 0 | 1 |
| **Xm+1.3** | 0 | 0 | 0 | 0 | 0 | 0 | 0 | 0 |

**NOTE**
Xm+1.2 is a parity bit.

## 9.9.5 I/O Mapping

I/O address map is as follows.

DI map

| | |
|---|---|
| Xm+0 | General–purpose DI/DO |
| Xm+1 | |
| Xm+2 | |
| Xm+3 | |
| Xm+4 | Keyboard of Main panel (Keyswitch–input signal) |
| Xm+5 | |
| Xm+6 | |
| Xm+7 | |
| Xm+8 | |
| Xm+9 | |
| Xm+10 | |
| Xm+11 | |
| Xm+12 (1st MPG) | MPG |
| Xm+13 (2nd MPG) | |
| Xm+14 (3rd MPG) | |
| Xm+15 | Reserved |

DO map

| | |
|---|---|
| Yn+0 | Keyboard (LED) Include general–Purpose DO |
| Yn+1 | |
| Yn+2 | |
| Yn+3 | |
| Yn+4 | |
| Yn+5 | |
| Yn+6 | |
| Yn+7 | |

DI mapping should be assigned 1 group = 16 byte mapping and DO mapping should be assigned 1 group = 8 byte mapping. The reason is as follows.
MPG interface(the counter for MPG) uses Xm+12 to Xm+14 area and it is fixed. And if MPG interface will be used, Xm+12 to Xm+14 area must be assigned. therefore, in case of 30*i* series and using MPG interface, DI mapping must be assigned 16 byte mapping. MPG counter area are directly processed by CNC software. So you must not use this area by customer ladder.
When the MPG interface is not used, its DI area may be assigned to another I/O group. I/O mapping of the standard machine operator's panel can basically be assigned to any area of addresses. As for DI mapping, however, there are fixed signals directly monitored by the CNC. The fixed signals cannot be assigned to the keyswitch-input area. To use the fixed signals, therefore, assign them to an area other than the keyswitch-input area.

## 9.9.5.1 Connector locations of main panel

### In case of main panel A

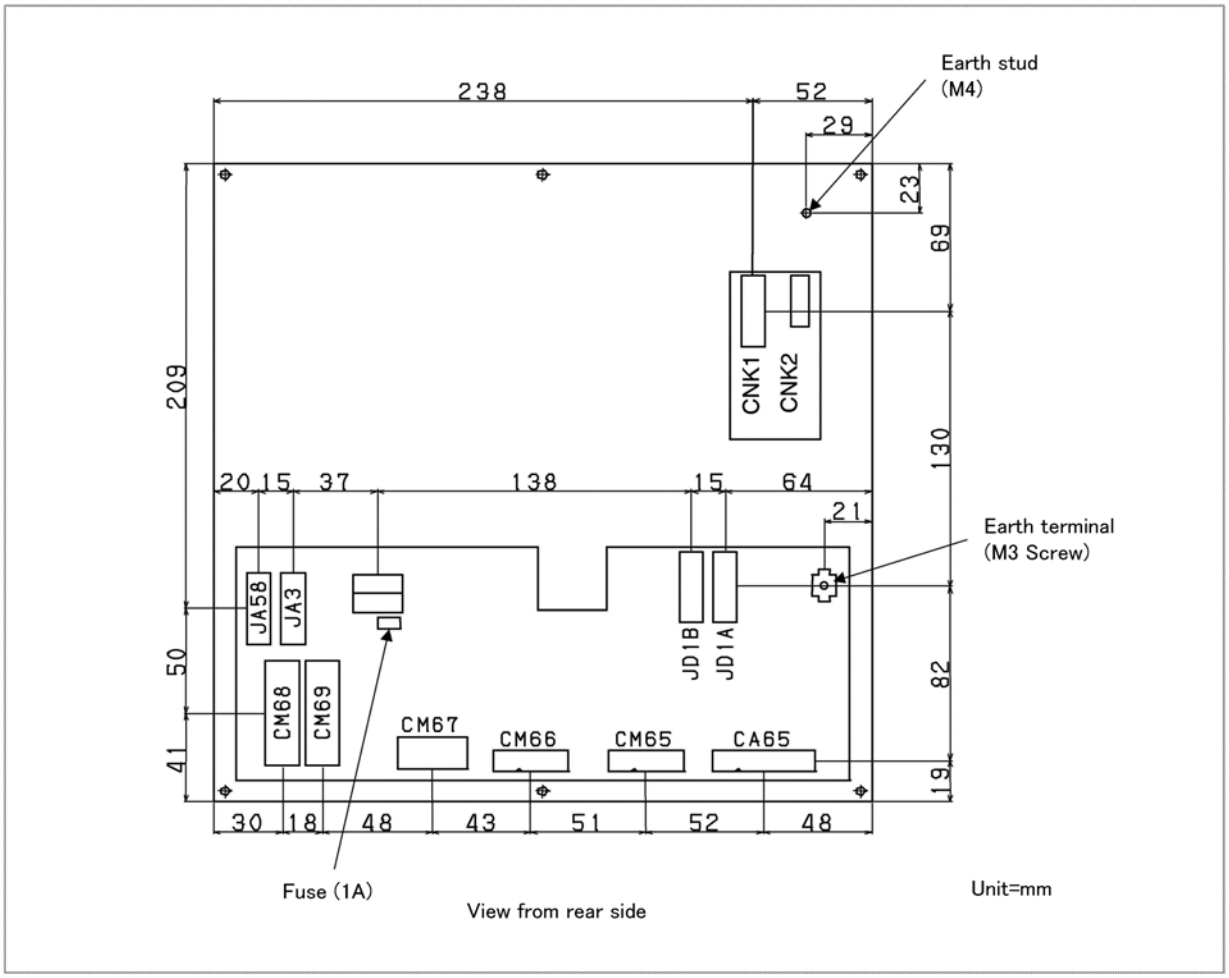

## In case of main panel B

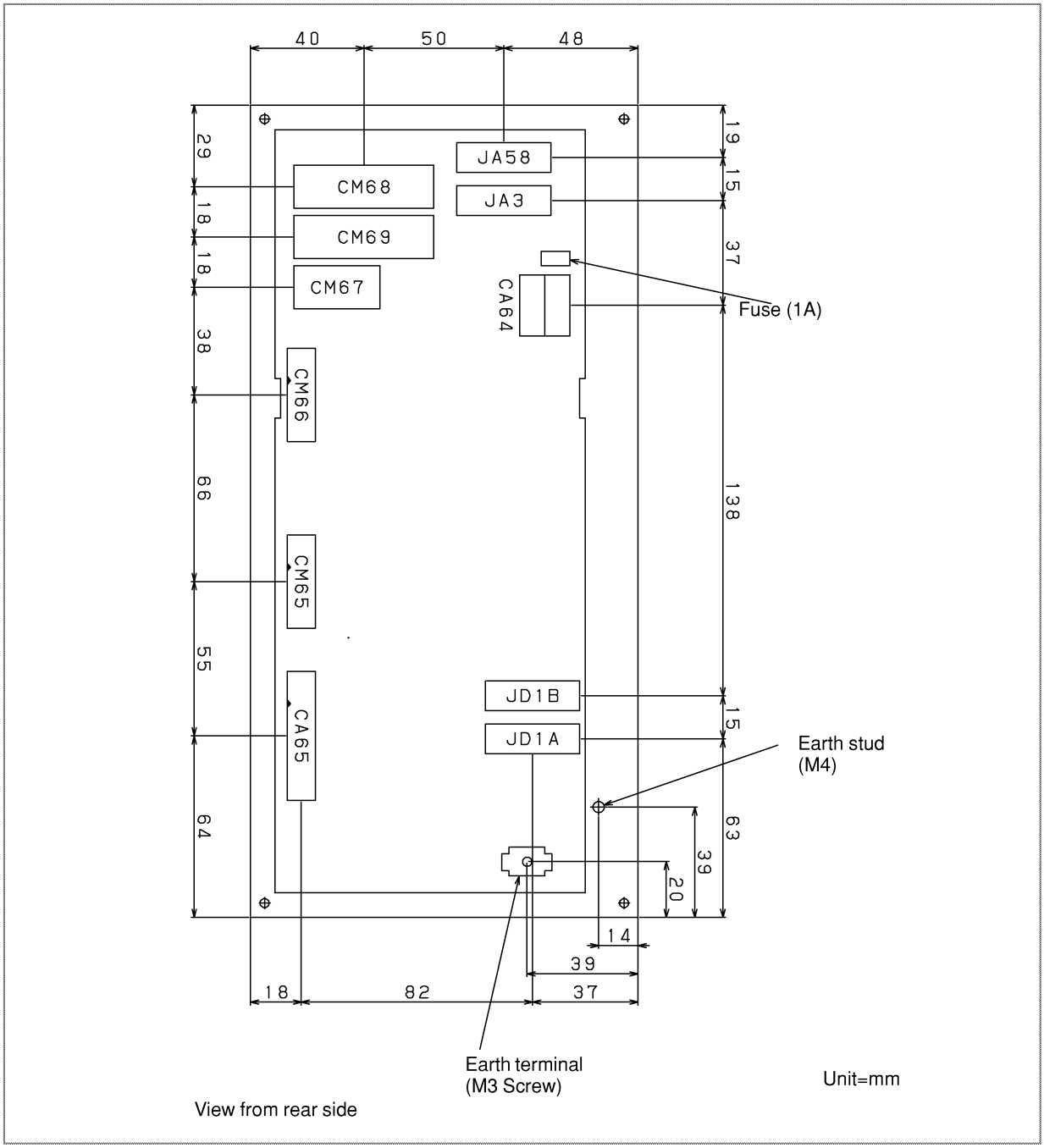

# 9.9.6 Specifications

## 9.9.6.1 Environmental requirement

| | | |
|---|---|---|
| **Temperature Around a unit** | At operation<br>Storing or transporting | 0°C to 55°C<br>-20°C to 60°C |
| **Temperature variance** | Max. | 1.1°C/min |
| **Humidity** | Normally<br>Short time(Within one month) | 75% or less (Relative humidity)<br>95% or less (Relative humidity) |
| **Vibration** | Operating | 0.5G or less |
| **Atmosphere** | Normal FA atmosphere (Consult us when using the system under environments with higher degree of dust, coolant, or organic solution.) | |

## 9.9.6.2 Order specification

| Name | Specification | Remark |
|---|---|---|
| Standard machine operators panel Main panel A | A02B-0319-C242 | Keys with both symbol and English characters/3-keystroke support model |
| Standard machine operators panel Main panel B | A02B-0319-C243 | Keys with both symbol and English characters/3-keystroke support model |
| Standard machine operators panel Sub panel A | A02B-0236-C232 | |
| Standard machine operators panel Sub panel B1 | A02B-0236-C235 | |
| Set of transparent key tops | A02B-0236-K170 | 55 key tops |
| Set of blank key tops | A02B-0236-K171 | 55 key tops |
| Set of symbol English key tops | A02B-0236-K174 | 34 labeled key tops + 21 blank key tops |
| Fuse(Spare part) | A02B-0815-K001 | 1A |

## 9.9.6.3 Main panel specification

| Item | Specification | Remark |
|---|---|---|
| General-purpose DI points | 32 points | 24VDC type input |
| General-purpose DO points | 8 points | 24VDC type output |
| Keyswitches of MDI | 65 keys | Full alphabet key (Main panel A) |
| Keyswitches of Machine operators panel | 55 keys | Matrix DI |
| LED | Color : Green | Attached to all keyswitches, Matrix DO |
| MPG interface | Max. 3 units | |
| Interface to CNC | FANUC I/O Link connection | Max. 16 modules or total points max. 1024/1024 will be available. |

## 9.9.6.4 Sub panel A/B1 specification

| Item | Specification of Sub panel | | Remark |
|---|---|---|---|
| | A | B1 | |
| Override rotary switch | 2 | 2 | 5 bit Gray code output (with a parity bit) |
| Emergency stop switch | 1 | 1 | Number of Contact : 4 (contact a × 2, contact b × 2)<br>M3.5 Screw |
| Program protect key | 1 | 1 | |
| ON/OFF switch | ON/OFF | - | |

### 9.9.6.5 Power supply specification

| Voltage | Capacity | Remark |
|---|---|---|
| 24VDC±10% (from Power connector CA64, including momentary values) | 0.4A | Including all DI consumption |

### 9.9.6.6 General-purpose DI signal definition

| | |
|---|---|
| **Capacity** | 30VDC, 16mA or more |
| **Interconnect leakage current in closed circuit** | 1mA or less(at 26.4V) |
| **Interconnect voltage drop in closed circuit** | 2V or less(including the voltage drop in the cables) |
| **Delay time** | Receiver delay : Max. 2ms<br>Need to consider about the serial communication (I/O Link) delay between CNC and operators panel 2ms(MAX)+Scan cycle of ladder (Scan cycle is different each CNCs). |

### 9.9.6.7 General-purpose DO signal definition

| | |
|---|---|
| **Maximum load current in ON state** | 200mA or less (including momentary values) |
| **Saturation voltage in ON state** | Max. 1V (When load current is 200mA) |
| **Withstand voltage** | 24V±20% or less (including momentary values) |
| **Leakage current in OFF state** | 20μA or less |
| **Delay time** | Driver delay : Max. 50μs<br>Need to consider about the serial communication (I/O Link) delay between CNC and operator's panel 2ms (MAX)+Scan cycle of ladder (Scan cycle is different each CNCs). |

## 9.9.7 Key Symbol Indication on Machine Operator’s Panel

### 9.9.7.1 Meaning of key symbols

| Symbol | English | Meaning of key |
|---|---|---|
| | AUTO | AUTO mode selection signal; Sets automatic operation mode. |
| | EDIT | EDIT mode selection signal; Sets program edit operation mode. |
| | MDI | MDI mode selection; Sets MDI mode. |
| | REMOTE | DNC operation mode; Sets DNC operation mode. |
| | REF RETURN | Reference position return mode selection; Sets reference position return mode. |
| | JOG | JOG feed mode selection; Sets jog feed mode. |
| | INC JOG | Step feed mode selection; Sets step feed mode. |
| | HANDLE | Manual handle feed mode selection; Sets manual handle feed mode. |
| | TEACH | Teach-in jog (reach-in handle) mode selection signal; Sets teach-in jog (teach-in handle) mode. |

| Symbol | English | Meaning of key |
|---|---|---|
| | SINGLE BLOCK | Single block signal; Executes program one by one. This key is used to check a program. |
| | BLOCK DELETE | Block delete; Skips the execution of the blocks d ending with the end of block (;) when this button is pressed during automatic operation. |
| | PRG STOP | Program stop(output only); Turns on the LED on the button when automatic operation is stopped by M00 specified in the program. |
| | OPT STOP | Optional stop; Stops automatic operation after execution of the block of a program where M01 is specified in the program. |
| | RESTART | Program restart; A program may be restart at a block by specifying the sequence number of the block, after automatic operation is stopped because of a broken tool or for holidays. |
| | DRY RUN | Dry run; Sets the axis feedrate to the jog feedrate instead of a programmed feedrate when automatic operation is performed by setting this button to on. This function is used to check only the movement of the tool when no workpiece is mounted. |
| | MC LOCK | Machine lock; Updates only position display on the screen without making any axis movement, when automatic operation is performed by setting this button to on. This function is used to check a program. |
| | CYCLE START | Cycle start; Start automatic operation. |
| | CYCLE STOP | Cycle stop; Stops automatic operation. |
| X1<br>X10<br>X100<br>X1000 | | Manual handle feed magnification:<br>Magnification for manual handle feed.<br>Magnified by 1, 10, 100, 1000. |
| X Y Z<br>4 5 6 | | Manual feed axis selection; Axes are selected, when these buttons are set to on in the jog feed mode or step feed mode. |
| + − | | Manual feed operation; Performs movement along selected axes when these buttons are set on in the jog feed mode or step feed mode. |
| | TRVRS | Traverse; Performs jog feed at rapid traverse rate when this button is set to on. |
| | SPDL CW | Positive spindle rotation direction; Rotates the spindle motor in the positive direction. |
| | SPDL CCW | Negative spindle rotation direction; Rotates the spindle motor in the negative direction. |
| | SPDL STOP | Spindle stop; Stops the spindle motor rotation. |

## 9.9.7.2 Detachable key top

Keyboard of machine operator's panel has 55 keys. All key tops are detachable. MTB can customize keys and make his original key layout easily. And using transparent key top (optional), a film sheet with marking is inserted into the key.

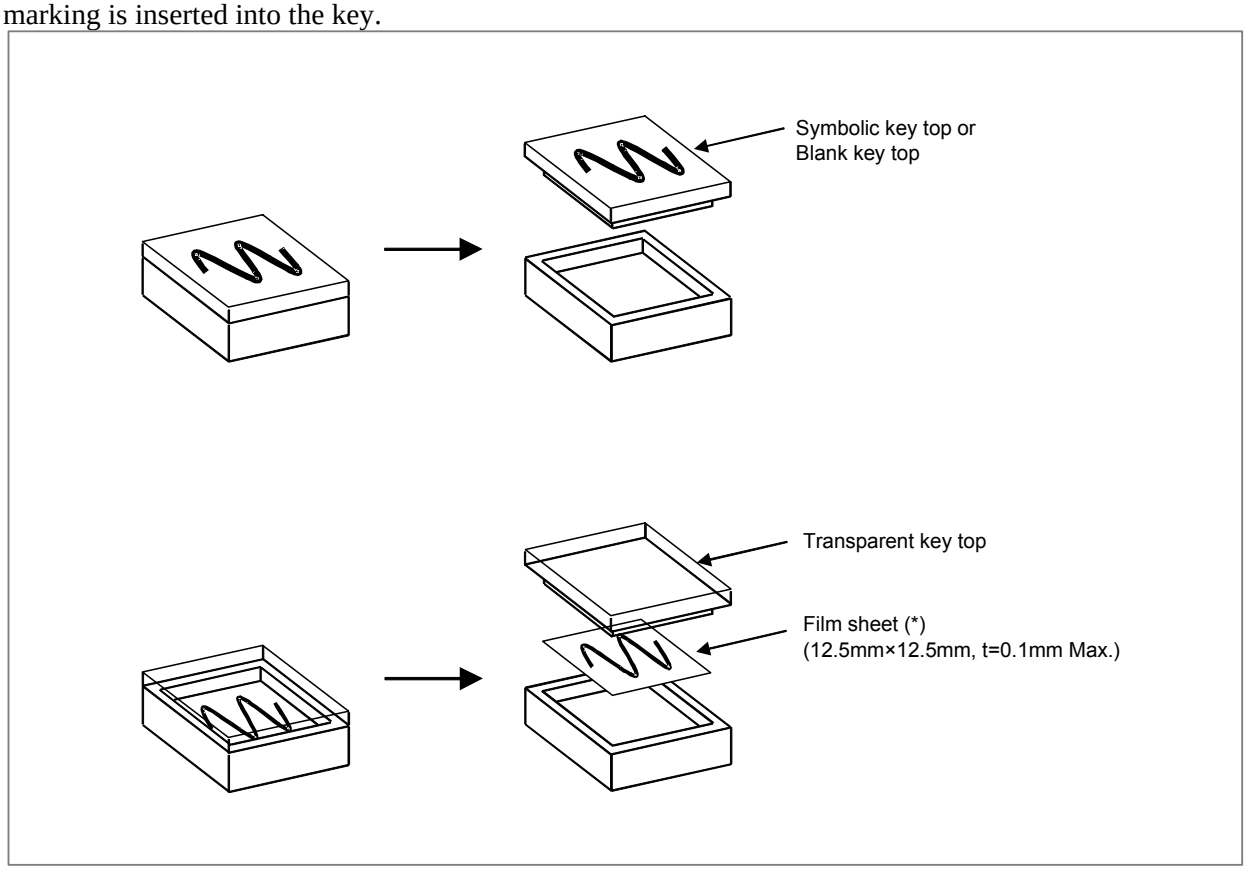


**NOTE**
(*) Use the oil-proof sheet in the environment which oil is used for.

# 9.10 CONNECTION TO THE SMALL MACHINE OPERATOR'S PANEL OR SMALL MACHINE OPERATOR'S PANEL B

## 9.10.1 Overview

The small machine operator's panel or small machine operator's panel B is a machine operator's panel connected to the CNC with an I/O Link. The operator's panel contains 30 keys, an emergency stop switch, and two override rotary switches.

**NOTE**
Use a 3-keystroke support model, which does not accept more than three simultaneous keystrokes. See Subsection 9.10.10.2, "Order specification".

## 9.10.2 Overall Connection Diagram

### For small machine operator's panel

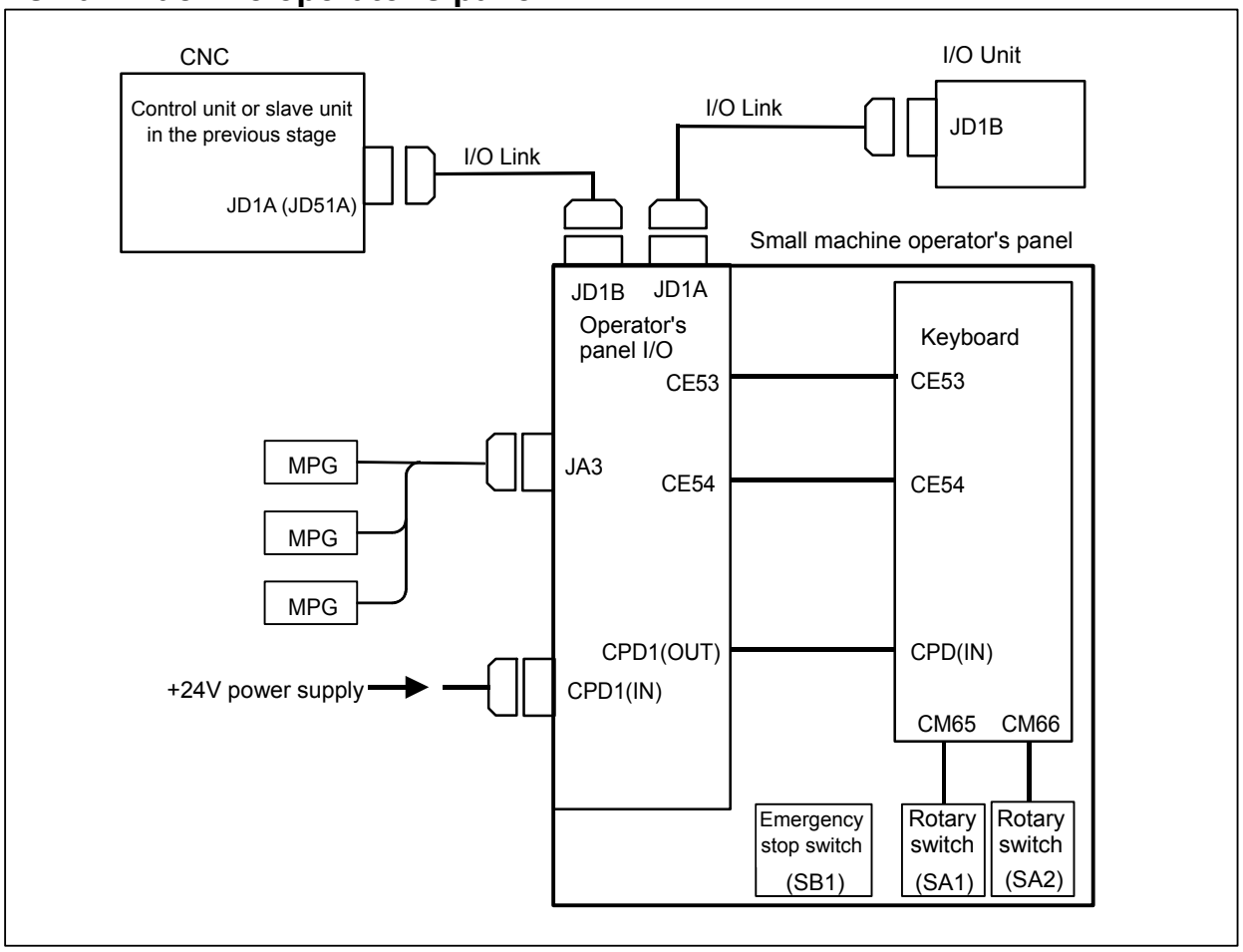

## For small machine operator's panel B

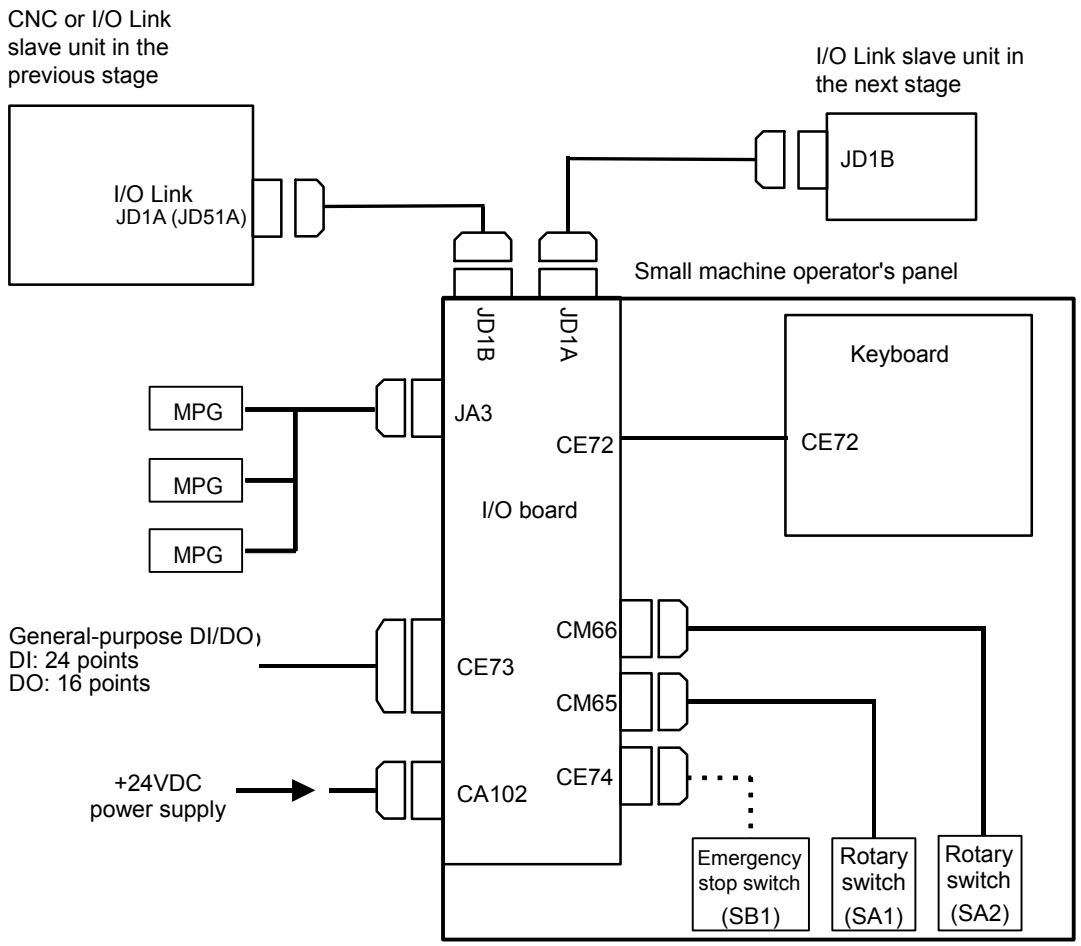


The small machine operator's panel B is different from the small machine operator's panel in connection as described below.

- The emergency stop switch (SB1) can be connected to connector CE74. Connector CE74 is connected to general-purpose DI address Xm2+4.4 in the I/O board.
- The following general-purpose DI/DO points can be connected: 24 DI points and 16 DO points.

**NOTE**

1 If this operator's panel is used together with a unit (such as an I/O module for branching) connected to an I/O Link having another MPG interface, only the MPG interface of the unit (module) nearest the CNC connected to the I/O Link will be enabled by default. To enable the MPG interfaces of the second and subsequent units, set appropriate parameters. For details, refer to the manual supplied with the NC used.

2 The following screw-on connectors cannot be used for the connection of an I/O Link and manual pulse generator.

Connectors that cannot used on the cable side

| | Specification | Manufacturer |
|---|---|---|
| Connector case | FI-20-CV7 | Hirose Electric Co., Ltd. |
| Connector case and connector | FI30-20S-CV7 | Hirose Electric Co., Ltd. |

## 9.10.3 Connection of Each Section

### 9.10.3.1 Power connection

To the CPD1 connector, shown in the figure below, supply the power necessary for this operator's panel to operate, as well as the power for the general-purpose DI.

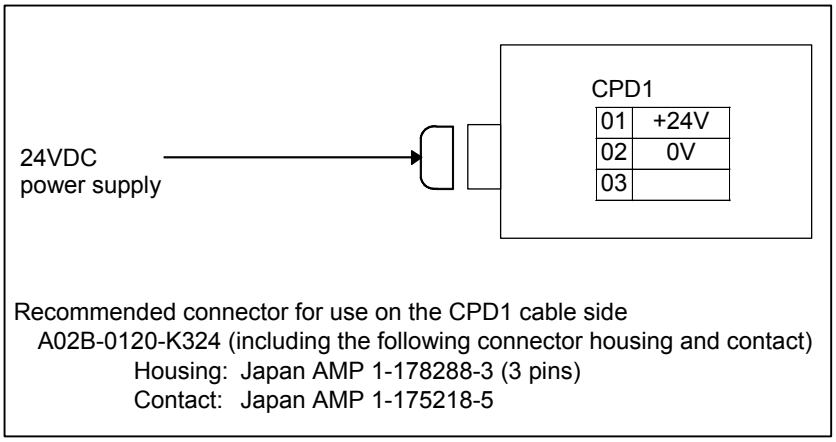


**NOTE**

The +24V power supplied to this connector must be turned OFF during operation. Turning it OFF will cause a CNC communication alarm to be generated. Make sure that at power ON, the supply of this +24V power is at the same time as or earlier than the supply of the power to the CNC and that at power OFF, it is at the same time as or later than the interruption of the power to the CNC.
When the CNC connected to this operator's panel with an I/O Link is to be turned off, the power to this operator's panel must also be turned off.

### 9.10.3.2 Emergency stop switch

The emergency stop switch has contact A in two circuits and contact B in two circuits. (This signal is not sent to the CNC with a FANUC I/O Link.)
The machine tool builder is required to connect the switch to other DI/DO devices.

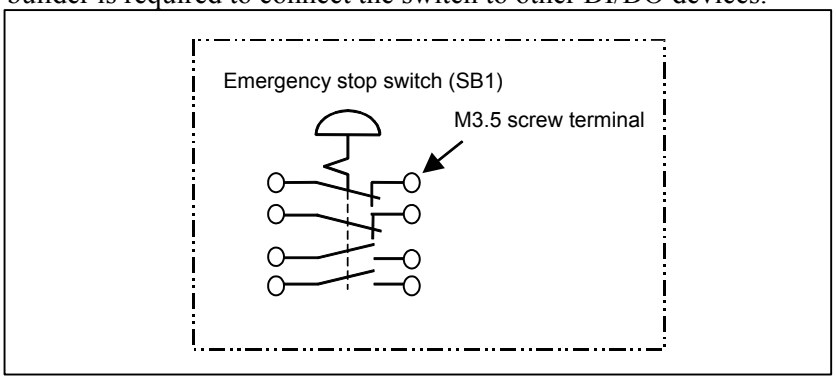


With the small machine operator's panel B, the input (pin 02) of the emergency stop input connector (CE74) is connected to general-purpose DI address Xm2+4.4 in the I/O board as shown below.
When the general-purpose DI start address is X0004, the input of CE74 is X0008.4, to which the signal of the emergency stop switch can be directly connected.

When the input signal (Xm2+4.4) is used as an emergency stop signal, the signal should be input to pin 02 of the emergency stop input connector (CE74) or pin A08 of the general-purpose DI/DO connector (CE73).

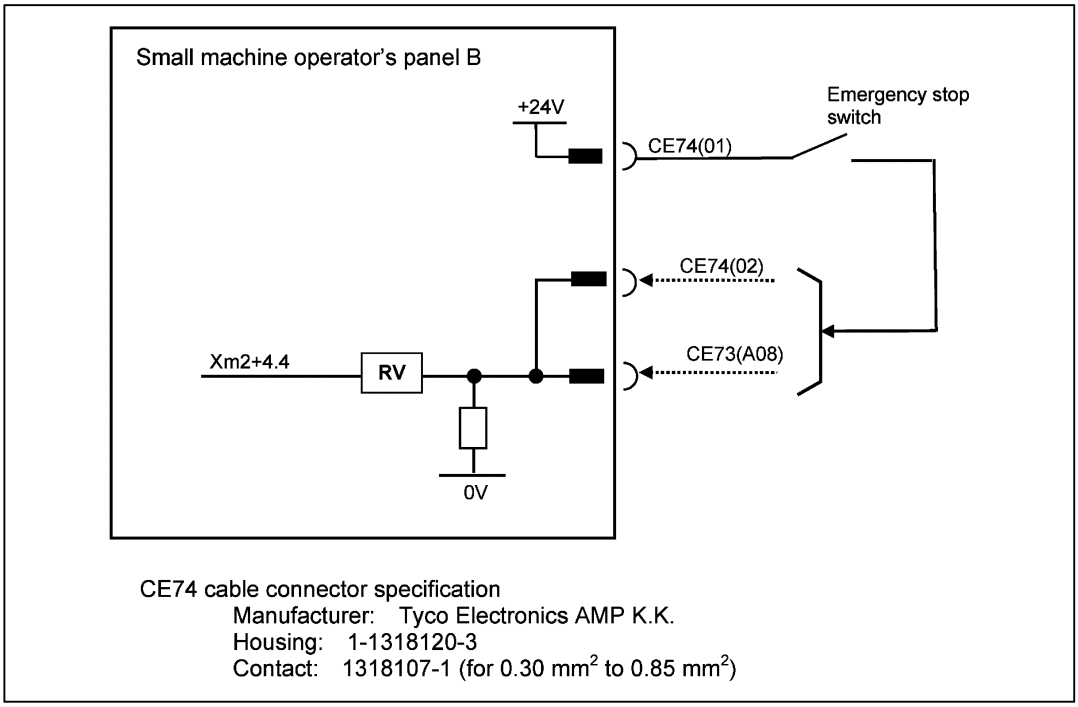


## 9.10.3.3 I/O Link connection

See Section 8.2.

## 9.10.3.4 Manual pulse generator connection

An example in which three manual pulse generators are connected is given below. If this operator's panel is used together with a unit (such as an I/O module for connection) connected to an I/O Link having another MPG interface, only the MPG interface of the unit (module) nearest the CNC connected to the I/O Link will be enabled by default. To enable the MPG interfaces of the second and subsequent units, set appropriate parameters. For details, refer to the manual supplied with the CNC used.

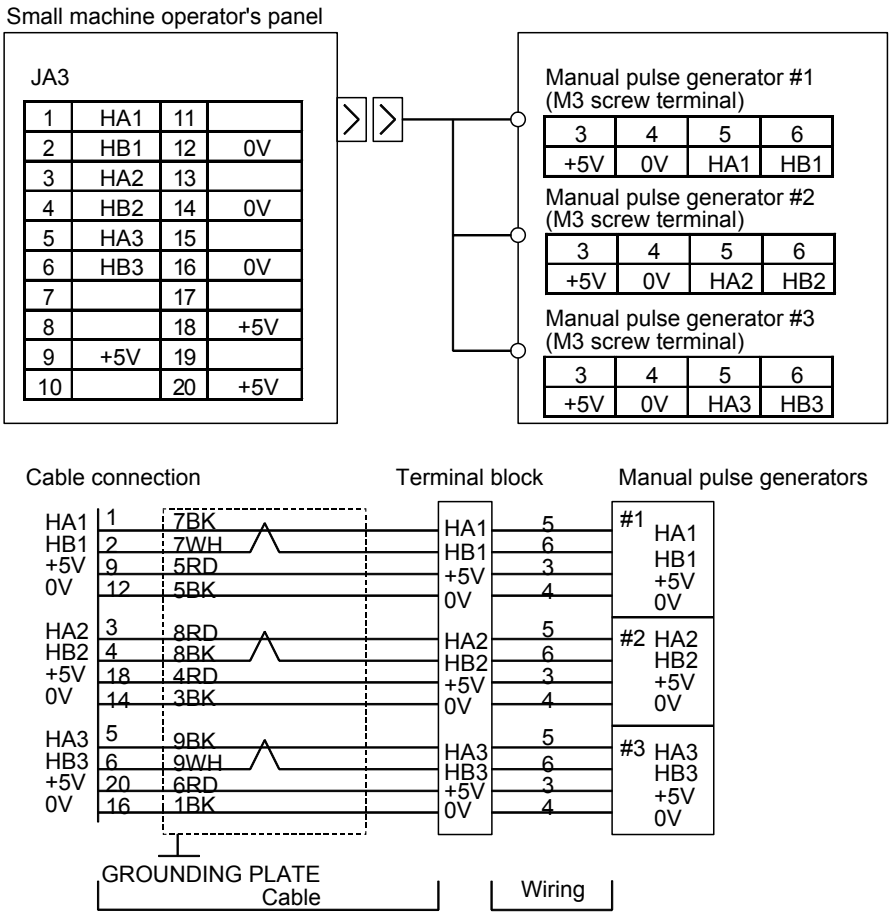


Recommended wire material: A66L-0001-0286 (#20 AWG y 6 + #24 AWG y 3 pair)
Recommended connectors: A02B-0120-K303 (including the following connector and case)
(Connector: Hirose Electric FI40B-2015S Soldering type)
(Case: Hirose Electric FI-20-CV)
Recommended cable: A02B-0120-K841 (7 m) (cable for three manual pulse generators)
A02B-0120-K848 (7 m) (cable for two manual pulse generators)
A02B-0120-K847 (7 m) (cable for one manual pulse generator)
(These cables are not used for the connection in the portion indicated by "Wiring".)

Calculate the maximum allowable length of the cable for the manual pulse generator, with the method described below.

Manual pulse generators are supplied with 5 VDC power. The drop in voltage due to cable resistance must not exceed 0.2V (on 0V and 5V lines in total).

$$0.2 \geqq \frac{0.1 \times R \times 2L}{m}$$

Where

$$L \leqq \frac{m}{R}$$

0.1 : Power supply current for the manual pulse generator = 0.1 A
R : Wire resistance per unit length [Ω/m]
m : Number of 0-V wires (= number of 5-V wires)
L : Cable length [m]

Therefore,

$$L \leqq \frac{3}{0.0394} = 76.75 \text{ [m]}$$

Example: When cable A66L-0001-0286 is used

This cable consists of three pairs of signal lines and six power wires (20/0.18, 0.0394 Ω/m).

When these three cables are used for 0V and 5V lines, the cable length is:

Thus, the length is 76.75 m. (Because of the applicable regulation of FANUC, however, the length is limited to 50 m.)
For two units, the cable can be extended to 38.37 m.
For three units, it can be extended to 25.58 m.

If the cable A66L-0001-0284#10P is used,
the cable can be extended to 12.88 m for one unit,
6.44 m for two units, and
4.29 m for three units.

## 9.10.4 DI Signal Connection (Rotary Switch Connection)

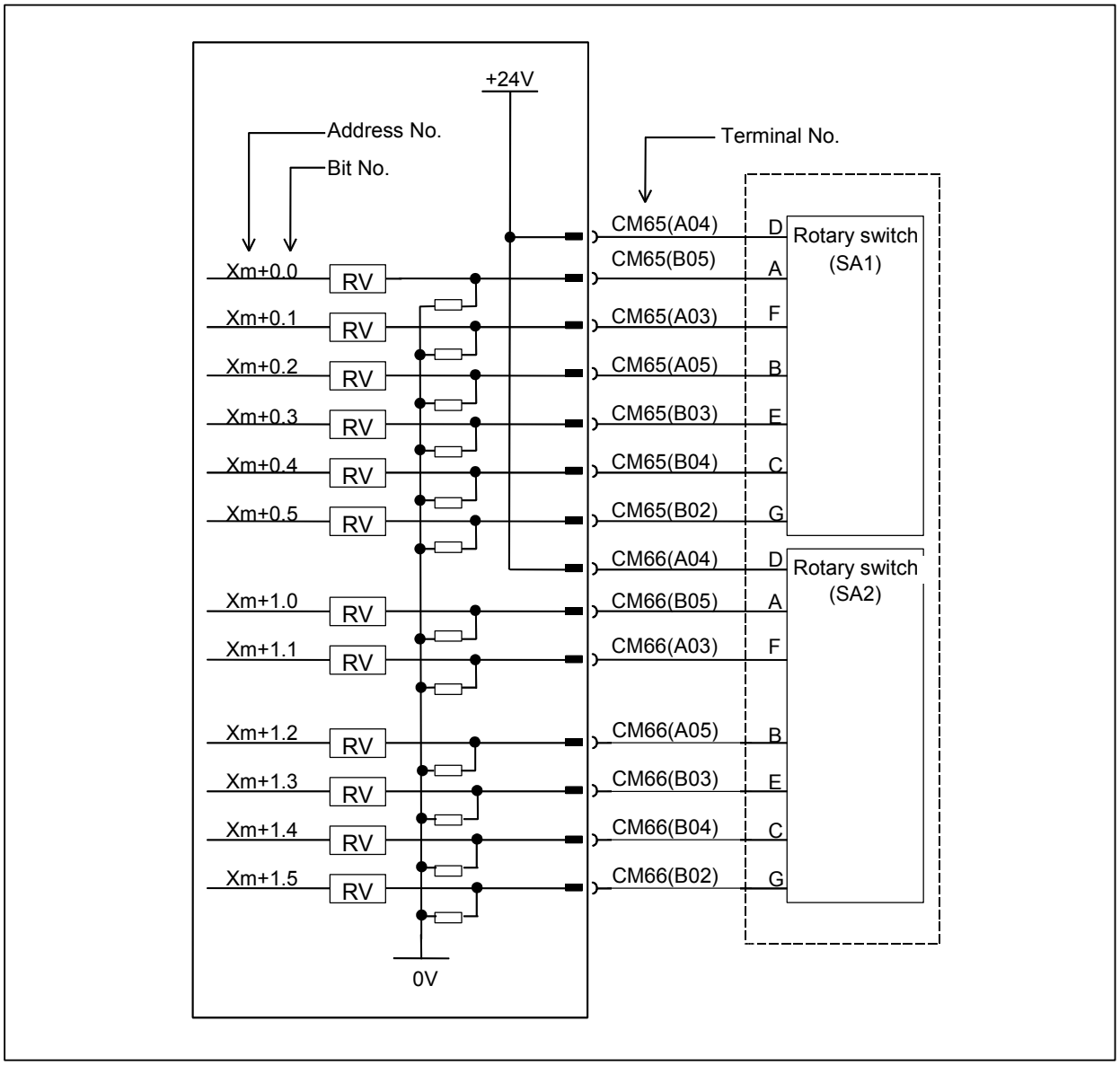

## 9.10.5 General-purpose DI/DO Connection (Only for the Small Machine Operator's Panel B)

### 9.10.5.1 Connector pin allocation

**General-purpose DI/DO (CE73)**

| | A | B |
|---|---|---|
| 01 | 0V | +24V |
| 02 | Xm2+0.0 | Xm2+0.1 |
| 03 | Xm2+0.2 | Xm2+0.3 |
| 04 | Xm2+0.4 | Xm2+0.5 |
| 05 | Xm2+0.6 | Xm2+0.7 |
| 06 | Xm2+4.0 | Xm2+4.1 |
| 07 | Xm2+4.2 | Xm2+4.3 |
| 08 | Xm2+4.4 | Xm2+4.5 |
| 09 | Xm2+4.6 | Xm2+4.7 |
| 10 | Xm2+5.0 | Xm2+5.1 |
| 11 | Xm2+5.2 | Xm2+5.3 |
| 12 | Xm2+5.4 | Xm2+5.5 |
| 13 | Xm2+5.6 | Xm2+5.7 |
| 14 | DICOM0 | DICOM5 |
| 15 | | |
| 16 | Yn2+0.0 | Yn2+0.1 |
| 17 | Yn2+0.2 | Yn2+0.3 |
| 18 | Yn2+0.4 | Yn2+0.5 |
| 19 | Yn2+0.6 | Yn2+0.7 |
| 20 | Yn2+1.0 | Yn2+1.1 |
| 21 | Yn2+1.2 | Yn2+1.3 |
| 22 | Yn2+1.4 | Yn2+1.5 |
| 23 | Yn2+1.6 | Yn2+1.7 |
| 24 | DOCOM | DOCOM |
| 25 | DOCOM | DOCOM |

Flat cable connector specification:
A02B-0120-K342
(Hirose Electric Co., Ltd. HIF3BB-50D-2.54R)
50 contacts
Cable wire specification:
A02B-0120-K886
(50-pin cable (Hitachi Cable, Ltd. or Oki Electric Cable Co., Ltd.))
Maximum cable length:
50m

**NOTE**
1 Xm2 and Yn2 indicate the general-purpose DI/DO start addresses in the I/O Link.
2 The B01 pin, +24 V, is 24 VDC output for DI signals. Do not supply 24 VDC to this pin from the outside.

## 9.10.5.2 General-purpose DI (input signal) connection

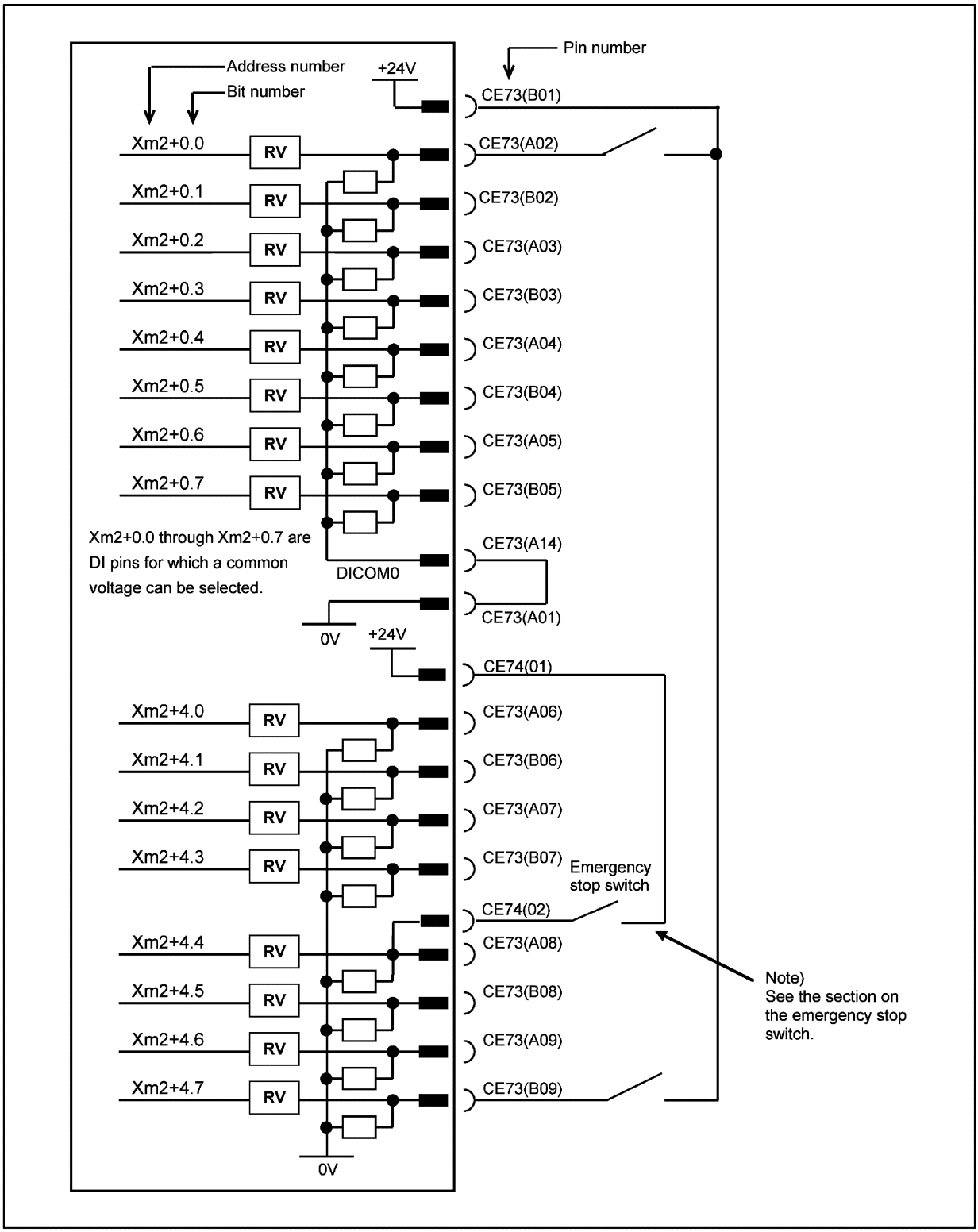

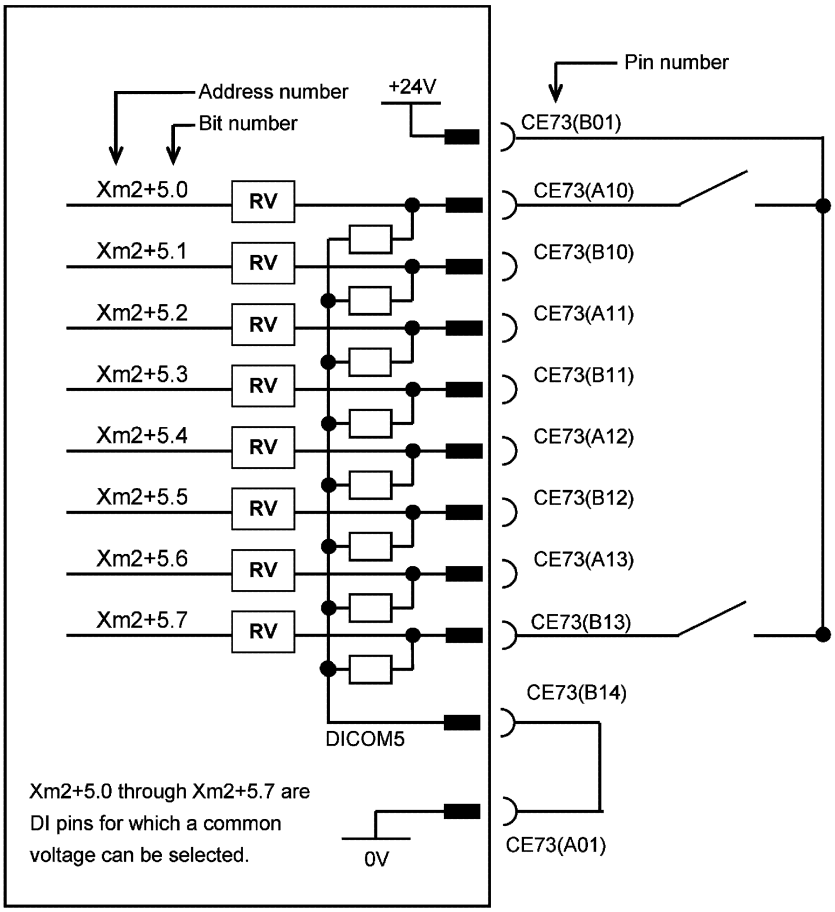
Address number
Bit number
+24V
Pin number
Xm2+5.0
Xm2+5.1
Xm2+5.2
Xm2+5.3
Xm2+5.4
Xm2+5.5
Xm2+5.6
Xm2+5.7
RV
CE73(B01)
CE73(A10)
CE73(B10)
CE73(A11)
CE73(B11)
CE73(A12)
CE73(B12)
CE73(A13)
CE73(B13)
CE73(B14)
DICOM5
Xm2+5.0 through Xm2+5.7 are
DI pins for which a common
voltage can be selected.
0V
CE73(A01)

## 9.10.5.3 General-purpose DO (output signal) connection

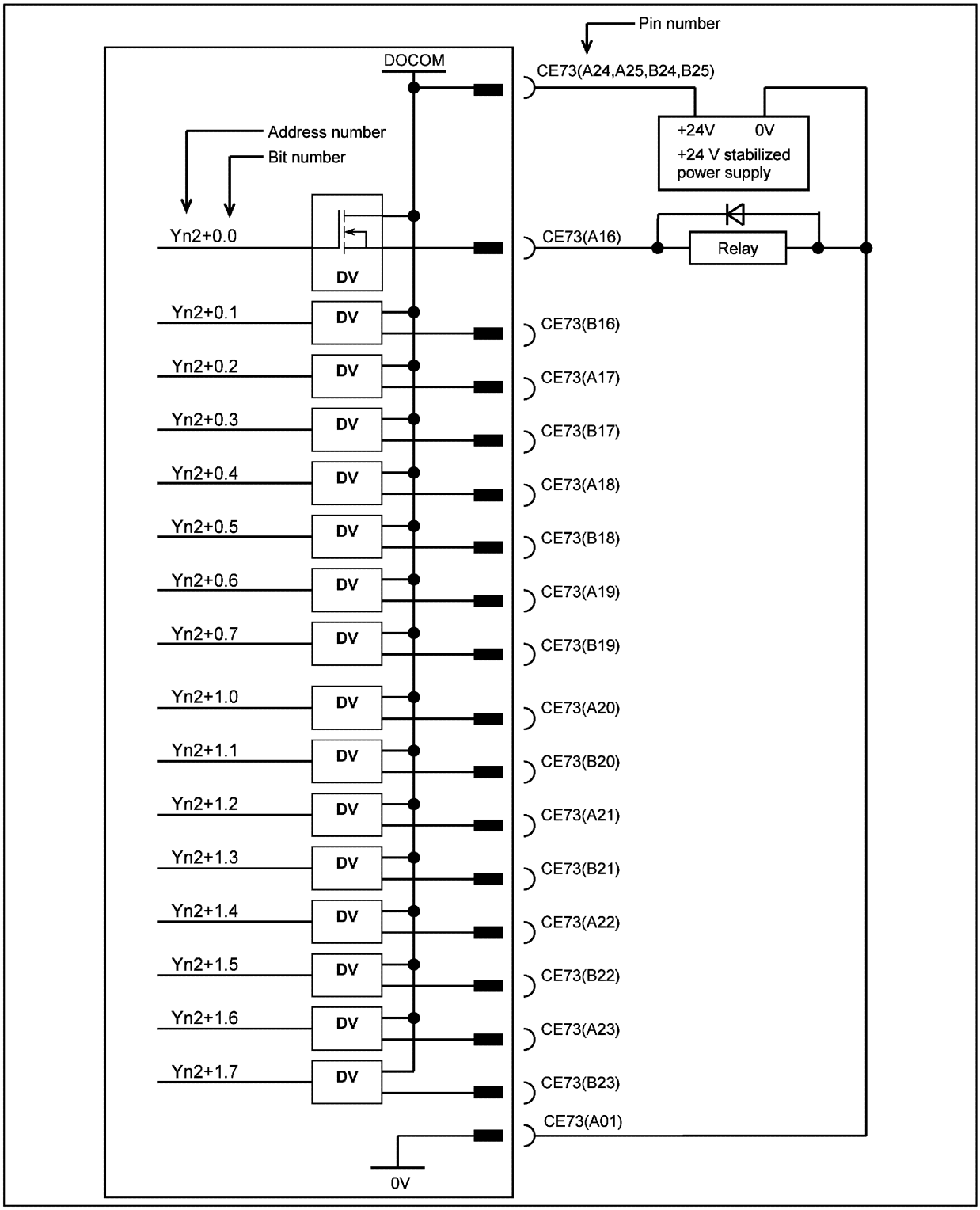

### DO signal reaction to a system alarm

There is a possibility that the Operator's panel will not operate normally due to a failure of CNC or I/O Link slave module, or abnormally power supply voltage. To prevent accidents even in this case, design the machine to operate safely by making a safety circuit outside the Operator's panel.

The circuit of this Operator's panel is designed so that all DO signals are turned off if a system alarm is occurred in the CNC which controls the Operator's panel, or if a power of the CNC or the Operator's panel is turned off. However, it cannot be guaranteed that DO signals of the Operator's panel will certainly be turned off. Therefore, manage signals related to safety by making a safety circuit outside this Operator's panel.

## 9.10.6 I/O Address

### 9.10.6.1 Keyboard of the operator's panel

The I/O address correspondence between the key switches on the machine operator's panel and LEDs are as follows.

| BIT / Key/LED | 5 | 4 | 3 | 2 | 1 | 0 |
|---|---|---|---|---|---|---|
| Xm+4/Yn+0 | A6 | A5 | A4 | A3 | A2 | A1 |
| Xm+5/Yn+1 | B6/ Without LED | B5/ Without LED | B4/ Without LED | B3 | B2 | B1 |
| Xm+6/Yn+2 | C6/ Without LED | C5/ Without LED | C4/ Without LED | C3 | C2 | C1 |
| Xm+7/Yn+3 | D6/ Without LED | D5/ Without LED | D4/ Without LED | D3 | D2 | D1 |
| Xm+8/Yn+4 | E6 | E5 | E4 | E3 | E2 | E1 |

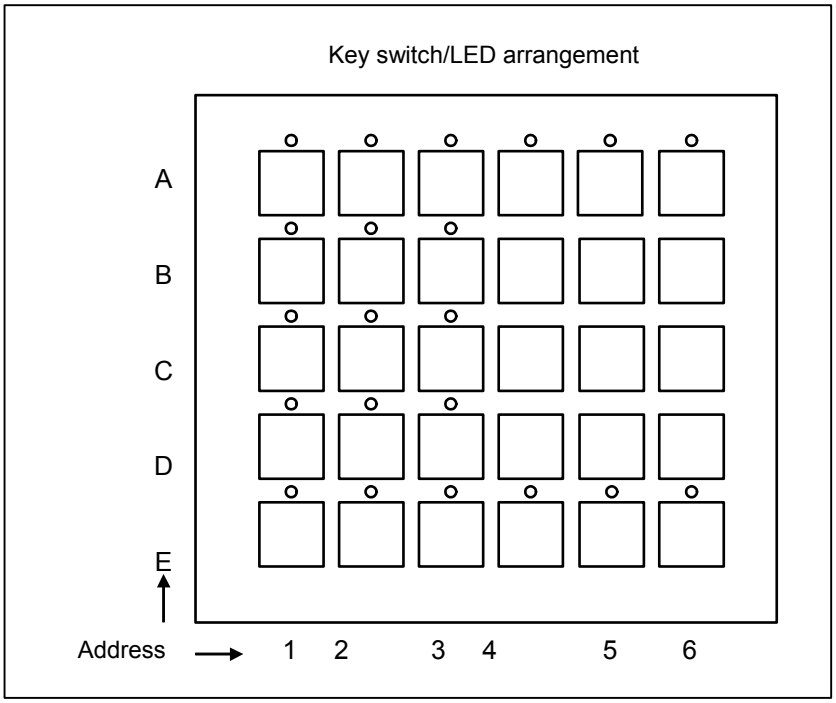

## 9.10.6.2 Override signals

Gray codes are output according to the table below.

**Rotary switch (SA1)**

| % | 0 | 1 | 2 | 4 | 6 | 8 | 10 | 15 | 20 | 30 | 40 | 50 | 60 | 70 | 80 | 90 | 95 | 100 | 105 | 110 | 120 |
|---|---|---|---|---|---|---|---|---|---|---|---|---|---|---|---|---|---|---|---|---|---|
| Xm+0.0 | 0 | 1 | 1 | 0 | 0 | 1 | 1 | 0 | 0 | 1 | 1 | 0 | 0 | 1 | 1 | 0 | 0 | 1 | 1 | 0 | 0 |
| Xm+0.1 | 0 | 0 | 1 | 1 | 1 | 1 | 0 | 0 | 0 | 0 | 1 | 1 | 1 | 1 | 0 | 0 | 0 | 0 | 1 | 1 | 1 |
| Xm+0.2 | 0 | 0 | 0 | 0 | 1 | 1 | 1 | 1 | 1 | 1 | 1 | 1 | 0 | 0 | 0 | 0 | 0 | 0 | 0 | 0 | 1 |
| Xm+0.3 | 0 | 0 | 0 | 0 | 0 | 0 | 0 | 0 | 1 | 1 | 1 | 1 | 1 | 1 | 1 | 1 | 1 | 1 | 1 | 1 | 1 |
| Xm+0.4 | 0 | 0 | 0 | 0 | 0 | 0 | 0 | 0 | 0 | 0 | 0 | 0 | 0 | 0 | 0 | 0 | 1 | 1 | 1 | 1 | 1 |
| Xm+0.5 | 0 | 1 | 0 | 1 | 0 | 1 | 0 | 1 | 0 | 1 | 0 | 1 | 0 | 1 | 0 | 1 | 0 | 1 | 0 | 1 | 0 |

**Rotary switch (SA2)**

| % | 50 | 60 | 70 | 80 | 90 | 100 | 110 | 120 |
|---|---|---|---|---|---|---|---|---|
| Xm+1.0 | 0 | 1 | 1 | 0 | 0 | 1 | 1 | 0 |
| Xm+1.1 | 0 | 0 | 1 | 1 | 1 | 1 | 0 | 0 |
| Xm+1.2 | 0 | 0 | 0 | 0 | 1 | 1 | 1 | 1 |
| Xm+1.3 | 0 | 0 | 0 | 0 | 0 | 0 | 0 | 0 |
| Xm+1.4 | 0 | 1 | 0 | 1 | 0 | 1 | 0 | 1 |
| Xm+1.5 | 0 | 0 | 0 | 0 | 0 | 0 | 0 | 0 |

**NOTE**

1 Xm+0.5 and Xm+1.4 are parity bits.

2 If parity bits are used, the output timing of override signals may differ from that of the parity bits.

## 9.10.7 I/O Address Allocation

The I/O address maps for the main panel are as follows.

### 9.10.7.1 For small machine operator's panel

Map of the DI space

| | |
|---|---|
| Xm+0 | General-purpose DI (Rotary switch) |
| Xm+1 | |
| Xm+2 | Reserved |
| Xm+3 | |
| Xm+4 | Operator's panel Keyboard (Key switch) |
| Xm+5 | |
| Xm+6 | |
| Xm+7 | |
| Xm+8 | |
| Xm+9 | |
| Xm+10 | |
| Xm+11 | |
| Xm+12 (1st MPG) | MPG |
| Xm+13 (2nd MPG) | |
| Xm+14 (3rd MPG) | |
| Xm+15 | Reserved |

Map for the DO space

| | |
|---|---|
| Yn+0 | Operator's panel Keyboard (LED) |
| Yn+1 | |
| Yn+2 | |
| Yn+3 | |
| Yn+4 | |
| Yn+5 | Reserved |
| Yn+6 | |
| Yn+7 | |

## 9.10.7.2 For small machine operator's panel B

For I/O Link allocation, each unit is usually allocated as one group. However, as shown below, one unit of the small machine operator's panel B has two functions, the machine operator's panel section and the general-purpose DI/DO section, which are allocated as sequential groups in that order.
The following is an example in which the machine operator's panel section is allocated as group 0.
In this case, the general-purpose DI/DO section is allocated as group 1.
The I/O module in the next stage is allocated as group 2.

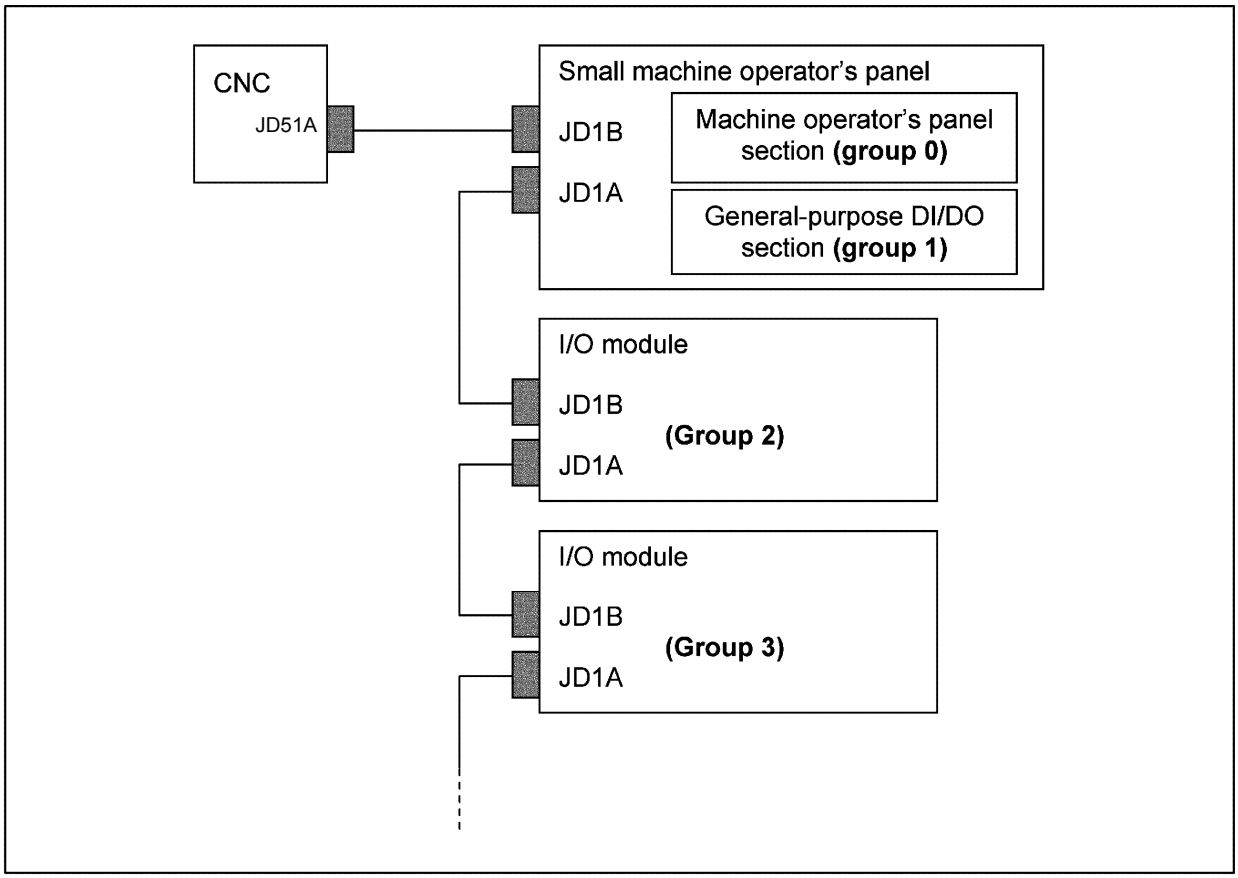

## I/O address maps of the small machine operator's panel B

Machine operator's panel section (group #0)

DI space map

| | |
|---|---|
| Xm1 + 0 | Rotary switch (SA1) |
| Xm1 + 1 | Rotary switch (SA2) |
| Xm1 + 2 | Reserved |
| Xm1 + 3 | Machine operator's panel Keyboard (key switch) |
| Xm1 + 4 | |
| Xm1 + 5 | |
| Xm1 + 6 | |
| Xm1 + 7 | |
| Xm1 + 8 | |
| Xm1 + 9 | Reserved |
| Xm1 + 10 | |
| Xm1 + 11 | |
| Xm1 + 12 | MPG axis 1 |
| Xm1 + 13 | MPG axis 2 |
| Xm1 + 14 | MPG axis 3 |
| Xm1 + 15 | DO alarm |

DO space map

| | |
|---|---|
| Yn1 + 0 | Machine operator's panel Keyboard (LED) |
| Yn1 + 1 | |
| Yn1 + 2 | |
| Yn1 + 3 | |
| Yn1 + 4 | |
| Yn1 + 5 | Reserved |
| Yn1 + 6 | |
| Yn1 + 7 | |

General-purpose DI/DO section (group #1)

DI space map

| | |
|---|---|
| Xm2 + 0 | General-purpose DI |
| Xm2 + 1 | Reserved |
| Xm2 + 2 | |
| Xm2 + 3 | |
| Xm2 + 4 | General-purpose DI |
| Xm2 + 5 | General-purpose DI |
| Xm2 + 6 | Reserved |
| Xm2 + 7 | |
| Xm2 + 8 | |
| Xm2 + 9 | |
| Xm2 + 10 | |
| Xm2 + 11 | |
| Xm2 + 12 | |
| Xm2 + 13 | |
| Xm2 + 14 | |
| Xm2 + 15 | DO alarm |

DO space map

| | |
|---|---|
| Yn2 + 0 | General-purpose DO |
| Yn2 + 1 | General-purpose DO |

Xm1 and Yn1 indicate the start addresses for the machine operator's panel section of the small machine operator's panel B in the I/O Link, while Xm2 and Yn2 indicate the start addresses for the general-purpose DI/DO section.

**Module name**

| | DI | DO |
|---|---|---|
| Machine operator's panel section | CM16I (16byte) | CM08O (8byte) |
| General-purpose DI/DO section | CM06I (6byte) | CM02O (2byte) |

To use a DO alarm in the general-purpose DI/DO space, 16-byte allocation is required. In this case, set CM16I as a DI module name in the general-purpose DI/DO section.

When DI addresses in the general-purpose DI/DO section are allocated starting at X0004, the fixed signals such as SKIP, *DECn, and *ESP can be allocated as shown below.

**Fixed addresses directly supervised by the CNC**

| | 7 | 6 | 5 | 4 | 3 | 2 | 1 | 0 |
|---|---|---|---|---|---|---|---|---|
| X004 | SKIP | ESKIP<br>SKIP6 | -MIT2<br>SKIP5 | +MIT2<br>SKIP4 | -MIT1<br>SKIP3 | +MIT1<br>SKIP2 | ZAE<br>SKIP8 | XAE<br>SKIP7 |
| | SKIP | ESKIP<br>SKIP6 | SKIP5 | SKIP4 | SKIP3 | ZAE<br>SKIP2 | YAE<br>SKIP8 | XAE<br>SKIP7 |
| X005 | | | | | | | | |
| X006 | | | | | | | | |
| X007 | | | | | | | | |
| X008 | | | | *ESP | | | | |
| X009 | | | | | *DEC4 | *DEC3 | *DEC2 | *DEC1 |

# 9.10.8 External Dimensions

## 9.10.8.1 Outline drawing and panel-cut drawing of the small machine operator's panel

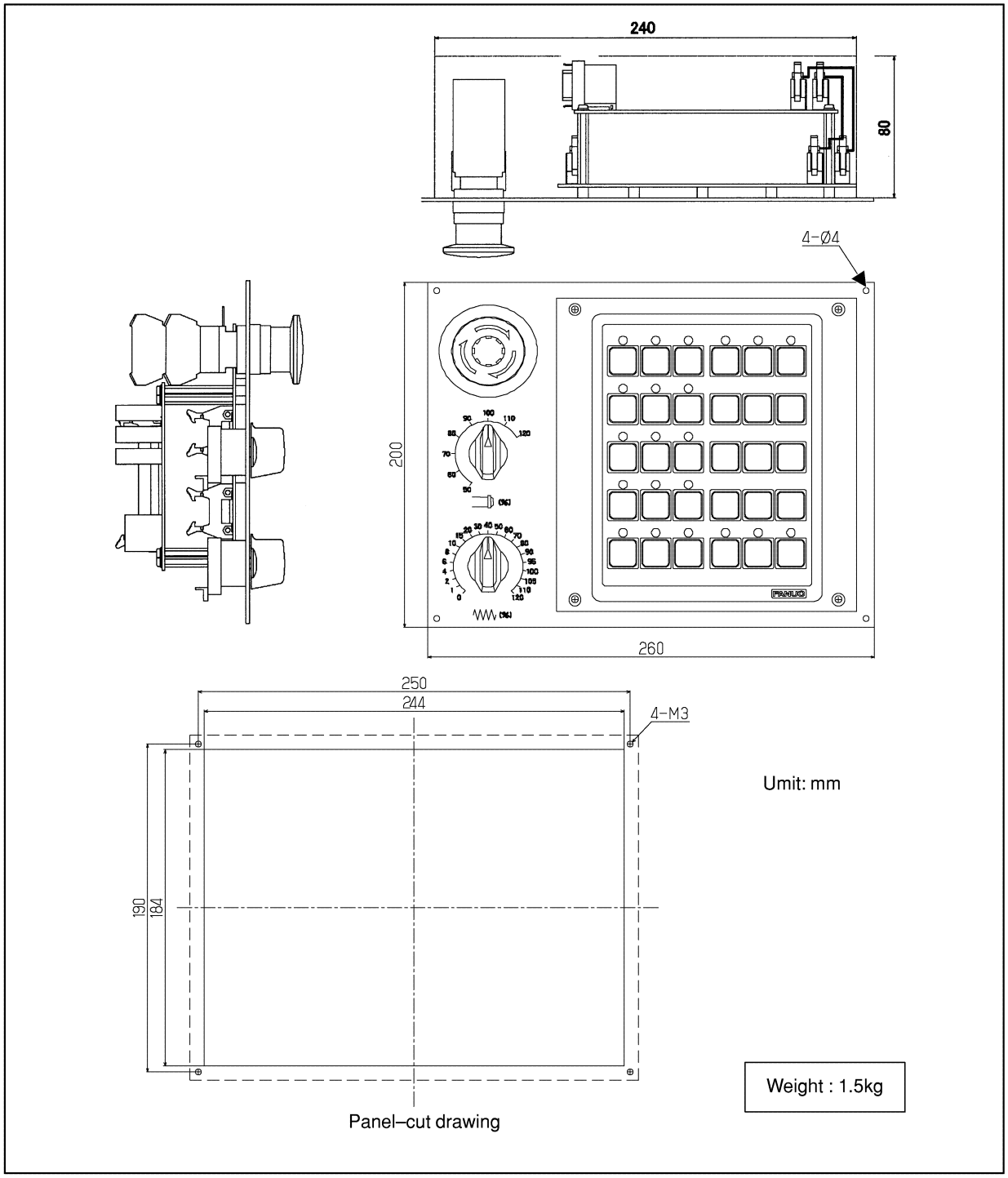

## Small machine operator's panel B

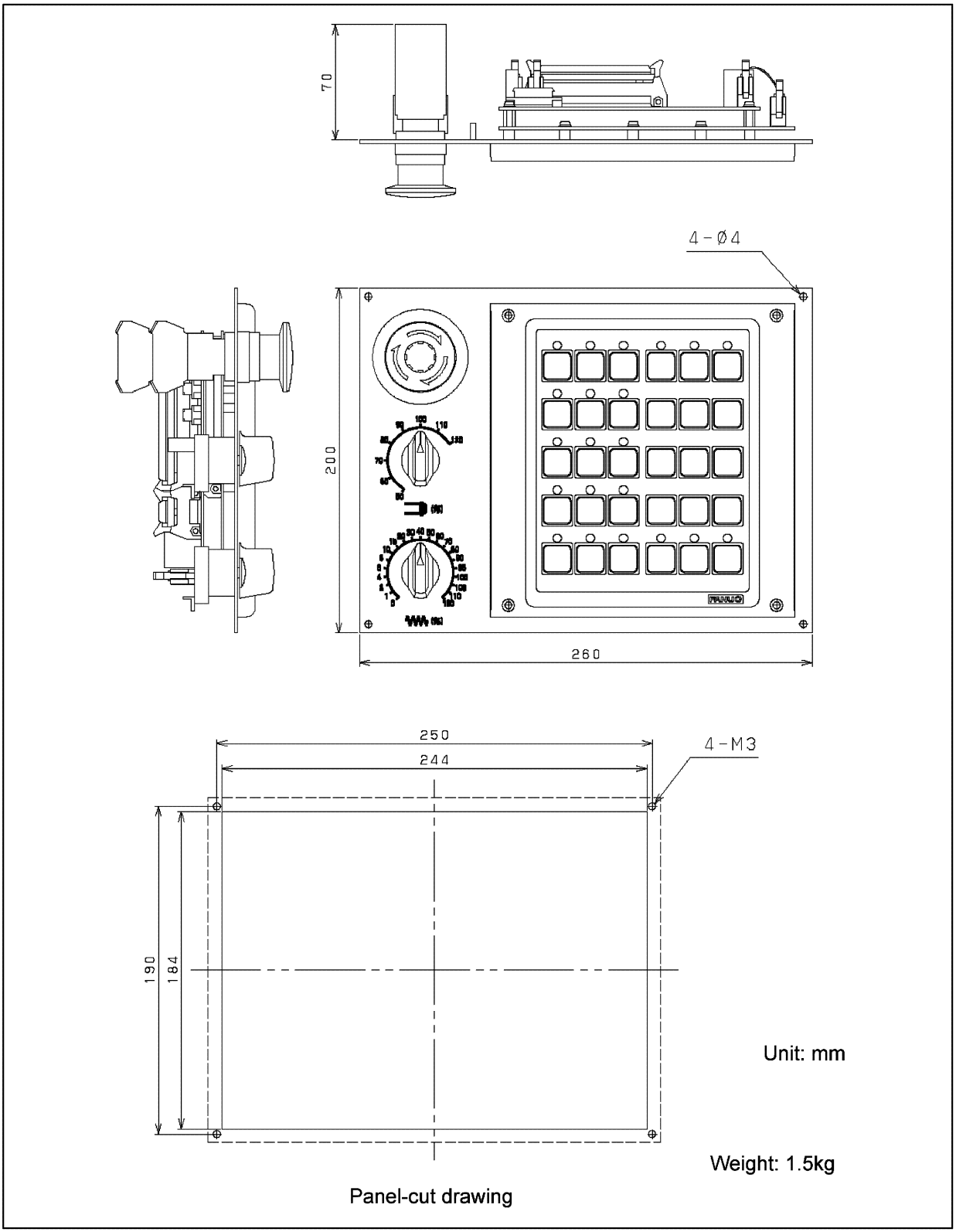

## 9.10.8.2 Layout of the key sheet (Same for both the small machine operator's panel and small machine operator's panel B)

### M series

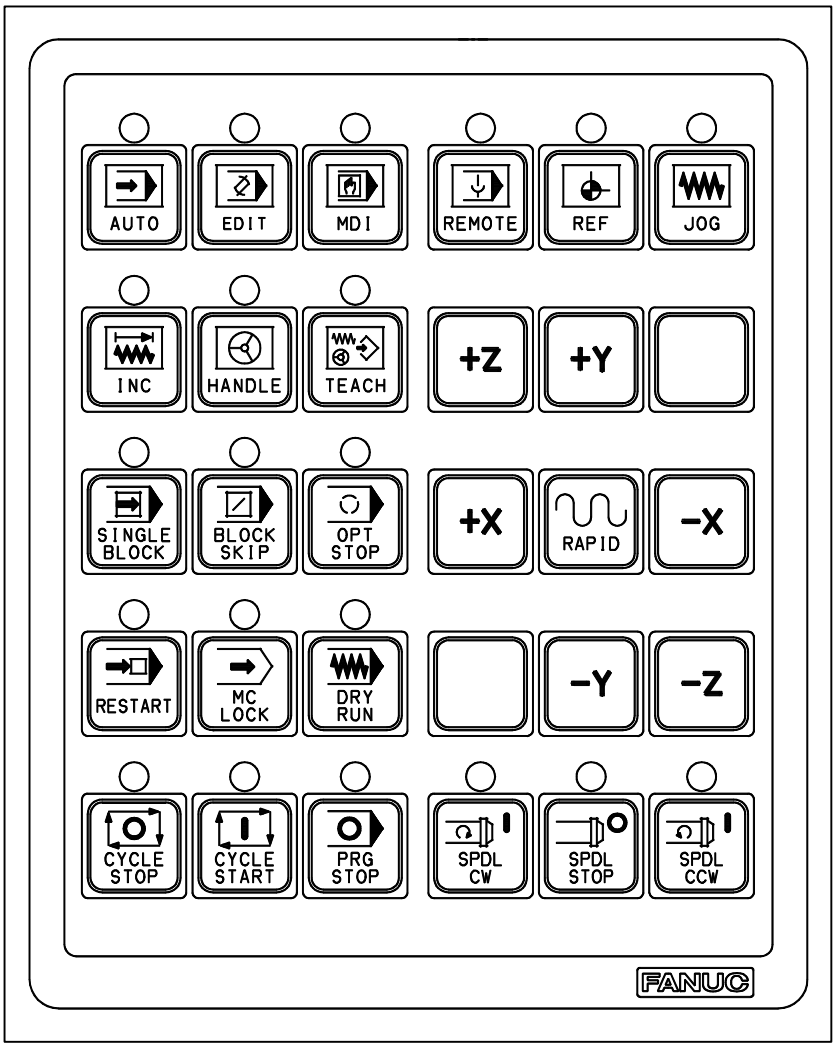

## T series

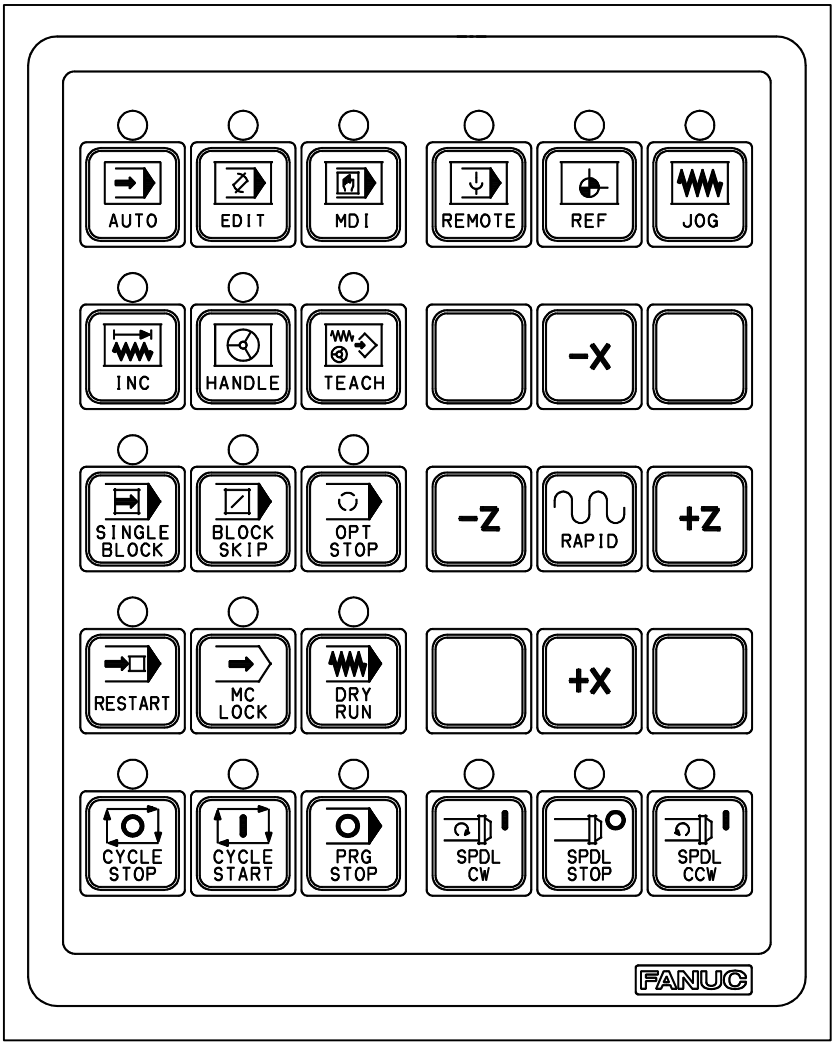
AUTO
EDIT
MDI
REMOTE
REF
JOG
INC
HANDLE
TEACH
-X
SINGLE BLOCK
BLOCK SKIP
OPT STOP
-Z
RAPID
+Z
RESTART
MC LOCK
DRY RUN
+X
CYCLE STOP
CYCLE START
PRG STOP
SPDL CW
SPDL STOP
SPDL CCW
FANUC

## 9.10.9 Connector Layout of the Small Machine Operator's Panel

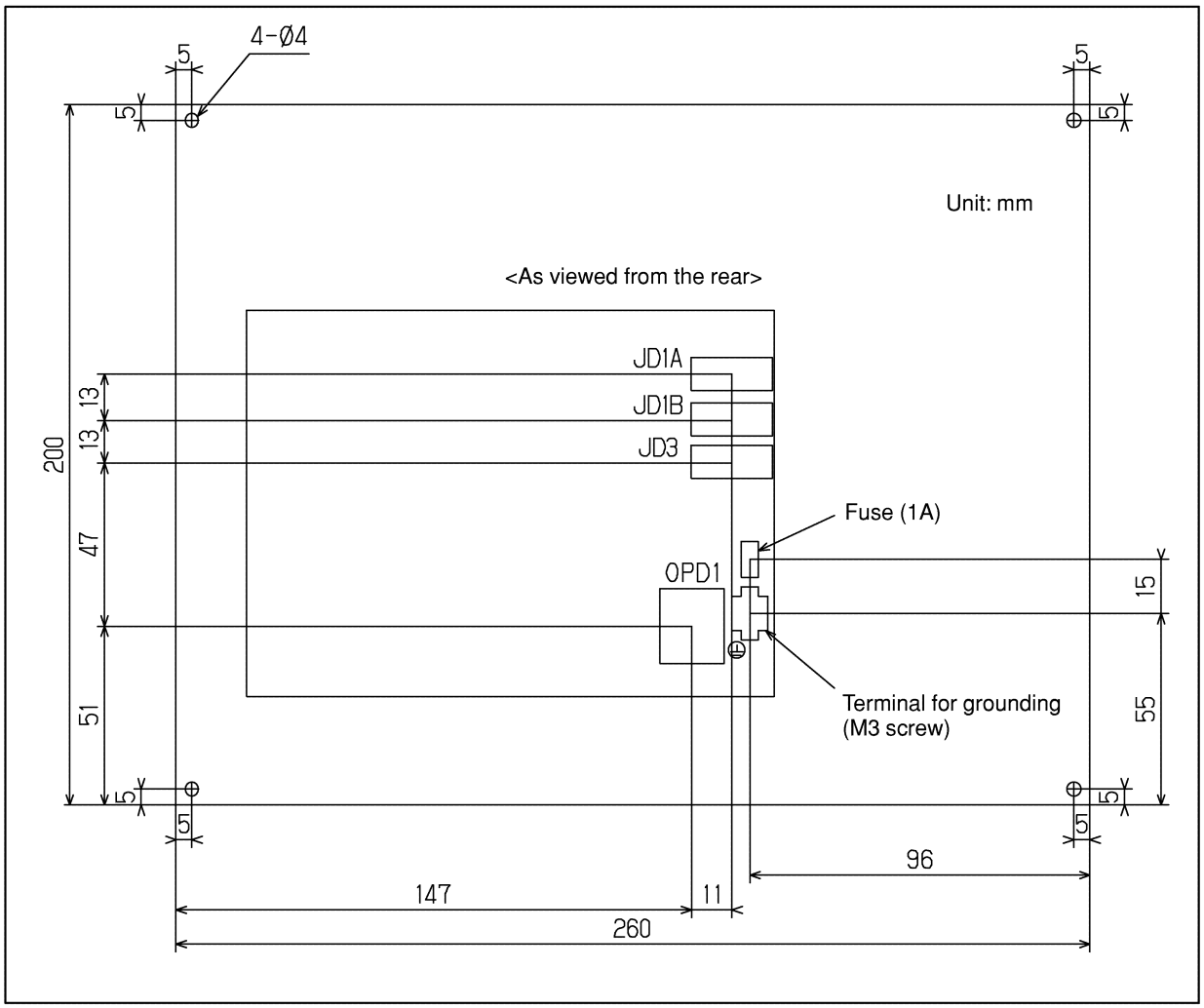

### Connector Layout of the small machine operator's panel B

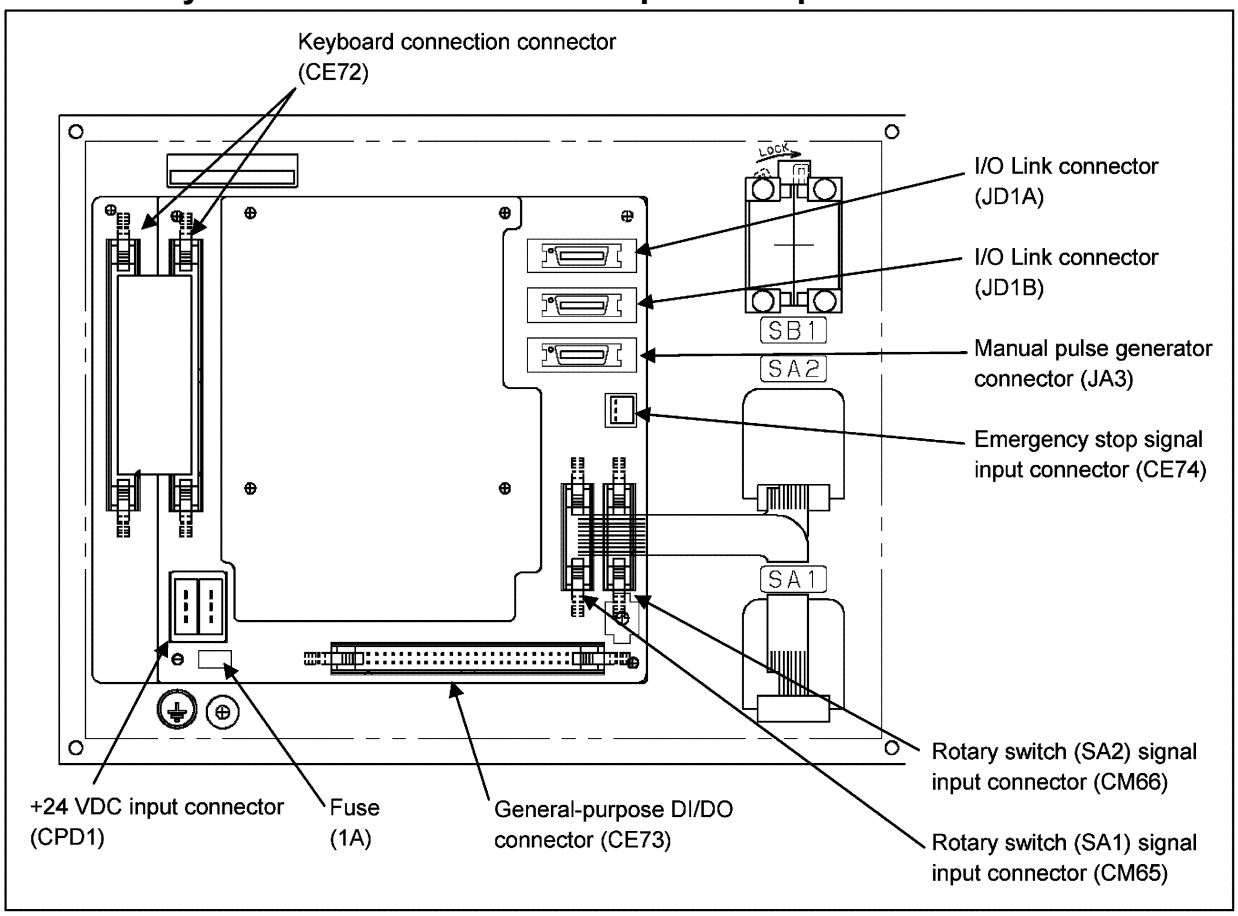


# 9.10.10 Specifications

## 9.10.10.1 Environmental requirement

| | |
|---|---|
| Temperature around a unit | At operation 0°C to 55°C<br>Storing or transporting -20°C to 60°C |
| Temperature variance | Max. 1.155°C/min |
| Humidity | Normally 75% or less (Relative humidity)<br>Short time (Within one month 95% or less (Relative humidity) |
| Vibration | Operating 0.5G or less |
| Atmosphere | Normal FA atmosphere (Consult us when using the system under environments with higher degree of dust, coolant, or organic solution.) |

## 9.10.10.2 Order specification

| Name | Specification | Remarks |
|---|---|---|
| Small machine operator's panel | A02B-0299-C152#M | M series, 3-keystroke support model |
| Small machine operator's panel | A02B-0299-C152#T | T series, 3-keystroke support model |
| Small machine operator's panel B | A02B-0309-C151#M | M series, 3-keystroke support model |
| Small machine operator's panel B | A02B-0309-C151#T | T series, 3-keystroke support model |
| Transparent keysheet | A02B-0299-K210 | Three transparent keysheets |
| Fuse (Spare part) | A02B-0815-K001 | 1A |

## 9.10.10.3 Operator's panel specification

| Item | Specification | Remarks |
|---|---|---|
| Keyswitches of machine operator's panel | 30 keys | Matrix DI |
| LED | Green | Supplied with 21 key switches |
| Override rotary switch | 2 | Gray code output (with a parity bit) |
| Emergency stop switch | 1 | Number of Contact : 4 (Contact a × 2, Contact b × 2)<br>M3.5 Screw |
| MPG interface | Max. 3 units | |
| Interface to CNC | FANUC I/O Link connection | |

## 9.10.10.4 Power supply specification

| Item | Specification | Remarks |
|---|---|---|
| 24VDC ±10% (from Power connector CPD1, including momentary values)<br>Momentary values and ripples are also included in ±10%. | 0.4A | Including all DI consumption |

# 9.10.11 Key Symbol Indication on Machine Operator's Panel

## 9.10.11.1 Meaning of key symbols

| Symbol indication | English | Meaning of key |
|---|---|---|
| | AUTO | AUTO mode selection signal; Sets automatic operation mode. |
| | EDIT | EDIT mode selection signal; Sets program edit operation mode. |
| | MDI | MDI mode selection; Sets MDI mode. |
| | REMOTE | DNC operation mode; Sets DNC operation mode. |
| | REF | Reference position return mode selection; Sets reference position return mode. |
| | JOG | JOG feed mode selection; Sets jog feed mode. |
| | INC | Step feed mode selection; Sets step feed mode. |
| | HANDLE | Manual handle feed mode selection; Sets manual handle feed mode. |
| | TEACH | Teach-in jog (reach-in handle) mode selection signal; Sets teach-in jog (teach-in handle) mode. |
| | SINGLE BLOCK | Single block signal; Executes program one by one. This key is used to check a program. |
| | BLOCK SKIP | Block skip: Pressing this button during automatic operation causes the block under execution to stop, skipping to the end of block (;). |
| | PRG STOP | Program stop (output only); Turns on the LED on the button when automatic operation is stopped by M00 specified in the program. |

| Symbol indication | English | Meaning of key |
|---|---|---|
| | OPT STOP | Optional stop; Stops automatic operation after execution of the block of a program where M01 is specified in the program. |
| | RESTART | Program restart; A program may be restart at a block by specifying the sequence number of the block, after automatic operation is stopped because of a broken tool or for holidays. |
| | DRY RUN | Dry run; Sets the axis feedrate to the jog federate instead of a programmed feedrate when automatic operation is performed by setting this button to on.<br>This function is used to check only the movement of the tool when no workpiece is mounted. |
| | MC LOCK | Machine lock; Updates only position display on the screen without making any axis movement, when automatic operation is performed by setting this button to on.<br>This function is used to check a program. |
| | CYCLE START | Cycle start; Start automatic operation. |
| | CYCLE STOP | Cycle stop; Stops automatic operation. |
| +X -X<br>+Y -Y<br>+Z -Z | | Manual feed axis selection; Performs jog feed (or step feed) in the direction in which this button is set to ON in jog feed (or step feed) mode. |
| | RAPID | Traverse; Performs jog feed at rapid traverse rate when this button is set to on. |
| | SPDL CW | Positive spindle rotation direction; Rotates the spindle motor in the positive direction. |
| | SPDL CCW | Negative spindle rotation direction; Rotates the spindle motor in the negative direction. |
| | SPDL STOP | Spindle stop; Stops the spindle motor rotation. |

## 9.10.11.2 Customization of the key sheet

If a customer wishes to partially modify the standard key sheet, he or she can customize the key sheet.

- The machine tool builder prints out the desired key indication on a sticker prepared by the machine tool builder.
- Apply the sticker on the standard key sheet.
- Remove the screws from the front side, remove the escutcheon, apply a transparent key sheet on the standard key sheet, taking care not to get dust or air caught between them. Finally, put back the escutcheon.
- The transparent key sheet is an option.
  Specification: A02B-0299-K210 (set of three transparent key sheets)

Size of the sticker

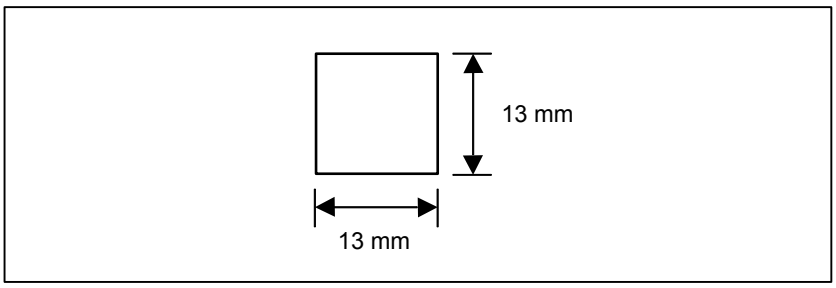

**NOTE**
If a small machine operator's panel customized in this way is to be maintained (replaced), the application of the sticker must be performed by the customer. The customer must prepare a sticker. Once peeled off, the transparent sheet cannot be reused. Another transparent sheet must be used.

### 9.10.12 Maintenance Parts

Consumables

| Name | Ordering specification | Remarks |
|---|---|---|
| Fuse (Operator's panel I/O printed circuit board) | A60L-0001-0290#LM10 | Rated: 1A |

Items to be repaired

| Name | Ordering specification | Remarks |
|---|---|---|
| Operator's panel I/O printed circuit board for small machine operator's panel | A20B-2002-0470 | |
| Keyboard printed circuit board for small machine operator's panel | A20B-2004-0220 | |
| Small machine operator's panel | A02B-0299-C152#M | M series |
| | A02B-0299-C152#T | T series |
| Operator's panel I/O printed circuit board for small machine operator's panel B | A20B-2004-0160 | |
| Keyboard printed circuit board for small machine operator's panel B | A20B-2004-0170 | |
| Small machine operator's panel B | A02B-0309-C151#M | M series |
| | A02B-0309-C151#T | T series |

## 9.11 CONNECTION OF TERMINAL TYPE I/O MODULE

### 9.11.1 Overview

The terminal type I/O module can be connected to the I/O Link, and the specifications of the existing connector panel I/O module (Section 9.1) are applicable to the terminal type I/O module. The terminal type I/O module has the following features:

- Input/output signals are connected on a spring-type terminal block (ferrule terminal block).
- A terminal block can be attached to or detached from the main body of the module.
- An LED for state indication is provided for each I/O signal.
- The digital output circuit is photocoupler-insulated.
- The terminal type I/O module can be installed on the DIN rail.
- By using expansion modules, the maximum number of digital input points can be extended to 96 and the maximum number of digital output points can be extended to 64.
- An expansion module with a manual pulse generator (MPG) interface is available.

**NOTE**
Expansion module D has no LED for state indication.

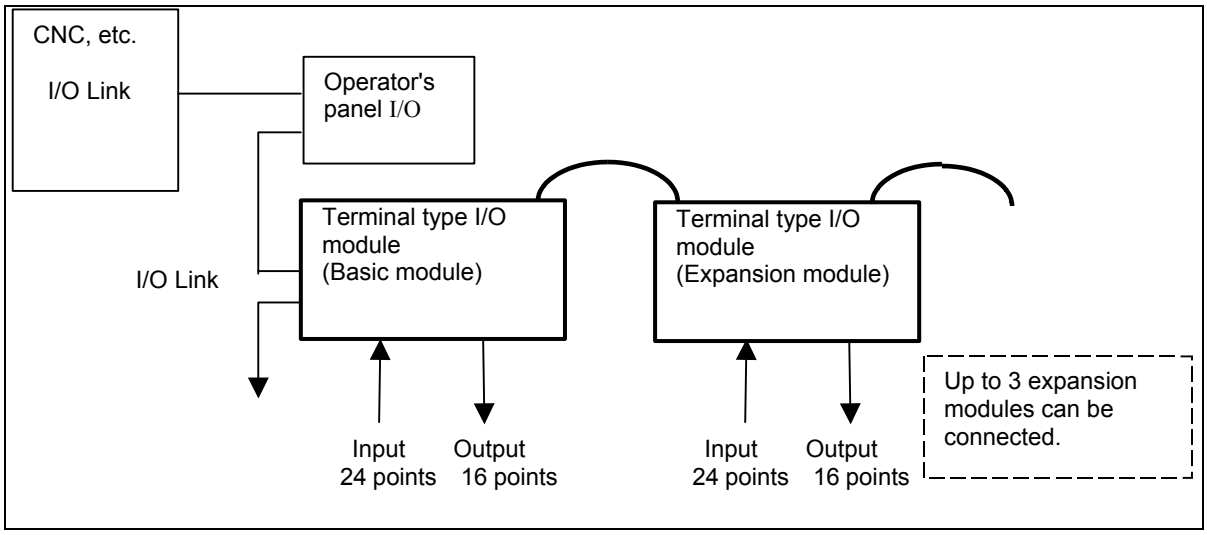


## 9.11.2 Module Specifications

### 9.11.2.1 Types of modules

| Name | Drawing No. | Specifications |
|---|---|---|
| Basic module | A03B-0823-C001 | DI/DO : 24/16 |
| Expansion module A | A03B-0823-C002 | DI/DO : 24/16<br>With MPG interface |
| Expansion module B | A03B-0823-C003 | DI/DO : 24/16<br>Without MPG interface |
| Expansion module C | A03B-0823-C004 | DO : 16<br>2-A output module |
| Expansion module D | A03B-0823-C005 | Analog input module |
| Fuse (accessory) | A03B-0823-K001 | 2 A (for basic module) |
| Spare terminal block set<br>(for basic module and expansion module A/B) | A03B-0823-K010 | Cable-side terminal block set (including each of T1 through T4) |
| Spare terminal block set<br>(for expansion module C) | A03B-0823-K011 | Cable-side terminal block set (including each of T1 and T2) |
| Spare terminal block set<br>(for expansion module D) | A03B-0823-K012 | Cable-side terminal block set (including each of T1 and T2) |
| Inter-module cable A | A03B-0823-K100 | Cable length: 100 mm<br>Used for expansion module connection |

**NOTE**
A cable-side terminal block is shipped with the main unit. Spare terminal blocks are used for replacement.

Module specifications (common items)

| Item | Specifications | Remarks |
|---|---|---|
| Interface with CNC | FANUC I/O Link connection | Expandable up to 16 units or 1024/1024 points as CNC slaves |
| Interface between basic module and expansion modules | Bus connection using a flat cable | Up to three expansion modules connectable per basic module |

For the specifications (such as signal input requirements) specific to each module, see the relevant pages of each item.

## 9.11.2.2 Installation conditions

| | |
|---|---|
| Ambient temperature for the unit | Operation: 0°C to 55°C<br>Storage and transportation: -20°C to 60°C |
| Temperature change | 1.1°C/minute maximum |
| Humidity | Normal condition: 75% or less (relative humidity)<br>Short term (within one month): 95% or less (relative humidity) |
| Vibration | Operation: 0.5 G or less<br>Non-operation: 1.0 G or less<br>FANUC performs evaluation test under the following conditions:<br>10 Hz to 58 Hz: 0.075 mm (amplitude)<br>58 Hz to 500 Hz: 1 G<br>Vibration direction: X, Y, and Z<br>Number of sweeps: 10 cycles<br>Compliance with IEC60068-2-6 |
| Atmosphere | Normal machining factory environment (For use in an environment with relatively high levels of dust, coolant, organic solutions, and so forth, additional measures are required.) |

## 9.11.2.3 I/O signal specifications

### Basic module, expansion modules A and B

| Digital input | |
|---|---|
| Number of points | 24 points |
| Common | 8 points/common (6 common terminals) |
| Rated input voltage | 24 VDC (+10%, −10%) |
| Rated input current | 7 mA (average) |
| Polarity | Sink type |
| ON voltage/current | 20 VDC or more, 6 mA or more |
| OFF voltage/current | 8 VDC or less, 1.5 mA or less |
| Response time | Driver delay time: 50μs(MAX)<br>In addition, the I/O Link transfer time between the CNC and the I/O module and the ladder scan cycle time (by the CNC) need to be taken into account. |

| Digital output | |
|---|---|
| Number of points | 16 points |
| Common | 8 points/common (8 common terminals) |
| Rated output voltage | 12 VDC to 24 VDC (+20%, −15%) |
| Rated output current | 0.2 A/pt |
| Polarity | Source type |
| Maximum voltage decrease when ON | 0.63 V (load current × 1.25Ω) |
| Maximum leakage current when OFF | 40 μA |
| Insulation method | Photocoupler insulation |
| Output protection function | Protection against overheat and overcurrent |
| Response time | Driver delay time: 50μs(MAX)<br>In addition, the I/O Link transfer time between the CNC and the I/O module and the ladder scan cycle time (by the CNC) need to be taken into account. |

## Expansion module C

| Digital output | |
|---|---|
| Number of points | 16 points |
| Common | 4 points/common |
| Rated output voltage | 12 VDC to 24 VDC (+20%, −15%) |
| Rated output current | 2 A/pt (4 A/common) |
| Polarity | Source type |
| Maximum voltage decrease when ON | 0.18 V (load current × 0.09Ω) |
| Maximum leakage current when OFF | 0.1 mA |
| Insulation method | Photocoupler insulation |
| Output protection function | Protection against overheat, overcurrent, short-circuiting, and open load |
| Response time | Driver delay time: 50μs(MAX)<br>In addition, the I/O Link transfer time between the CNC and the I/O module and the ladder scan cycle time (by the CNC) need to be taken into account. |

## Expansion module D

| Analog input | | |
|---|---|---|
| Number of input channels | 4 channels | |
| Analog input range | -10 VDC to +10 VDC<br>(Input resistance: 4.7 MΩ) | Voltage input or current input can be selected on a channel–by–channel basis by wiring. |
| | -20 VDC to +20 mA<br>(Input resistance: 250Ω) | |
| Digital conversion range | 12 bits (binary), two's complement representation | |
| Input/output correspondence | | |
| Resolution | 5 mV or 20 μA | |
| Overall precision | Voltage input: ±0.5% (with respect to full scale)<br>Current input: ±1.0% (with respect to full scale) | |
| Maximum input voltage/current | ±15 V/±30 mA | |
| A-D conversion time | 2 ms or less | |
| Minimum update period of digital output | Ladder scan period of CNC connected | |
| Number of occupied input/output points | DI = 3 bytes, DO = 2 bytes(NOTE) | |

| Analog input | Digital output |
|---|---|
| +10 V | +2000 |
| +5 V or +20 mA | +1000 |
| 0 V or 0 mA | 0 |
| -5 V or -20 mA | -1000 |
| -10 V | -2000 |

**NOTE**

This module has four analog input channels but has only one 12-bit digital output channel within the occupied input points (3 bytes). Namely, a channel for conversion is selected dynamically using a ladder program. Channel switching DO points for selecting a channel are present in the occupied output points (2 bytes).
(See "Addresses of expansion module D" in Subsection 9.11.6.1, "Address map".)

### 9.11.2.4 Power supply capacity

| Module name | Power supply voltage | Current rating |
|---|---|---|
| Basic module | 24 VDC ±10% | 0.2 A + 7.3 mA × DI<br>(DI: Number of DI points in the ON state) |
| Expansion module A, B | Supplied from the basic module | 0.1 A + 7.3 mA × DI<br>(DI: Number of DI points in the ON state) |
| Expansion module C | Supplied from the basic module | 0.1 A |
| Expansion module D | Supplied from the basic module | 0.1 A |

### 9.11.2.5 Heat dissipation

The heat dissipation of a module is the sum of "Basic heat dissipation" in the table below plus the total obtained by multiplying each of "Heat dissipation per input point" and "Heat dissipation per output point" in the table below by the number of points that are turned on at the same time.

| Module name | Basic heat dissipation (W) | Heat dissipation per input point (W) | Heat dissipation per output point (W)<br>IL: Output load current |
|---|---|---|---|
| Basic module | 4.8 | 0.23 | $0.04+0.9\times IL^2$ |
| Expansion module A, B | 2.4 | 0.23 | $0.04+0.9\times IL^2$ |
| Expansion module C | 2.4 | - | $0.04+0.1\times IL^2$ |
| Expansion module D | 2.4 | - | - |

### 9.11.2.6 Weight

| Module name | Weight (g) |
|---|---|
| Basic module | 420 |
| Expansion module A | 400 |
| Expansion module B | 380 |
| Expansion module C | 440 |
| Expansion module D | 400 |

## 9.11.2.7 Applicable wire

Electric wires and ferrule terminals used for connection with a terminal block of this module should have the following dimensions:

Electric wire size

Ferrule terminal

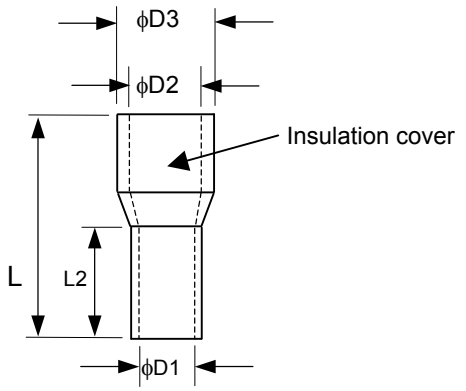


The dimensions indicated below are based on the products of Weidmuller Color., Ltd.

| Cross sectional area of electric wire ($mm^2$) | JIS VSF KIV ($mm^2$) | JIS IV ($mm^2$) | UL1007 (AWG) | UL1015 (AWG) | Electric wire sheath stripped length (mm) | Overall length L1 (mm) | Length of metallic part L2 (mm) | Inner diameter of conductor D1 (mm) | Inner diameter of sheath D2 (mm) | Outer diameter of sheath D3 (mm) |
|---|---|---|---|---|---|---|---|---|---|---|
| 0.5 | - | - | 20 | - | 10 | 14 | 8 | 1 | 2.6 | 3.1 |
| | | | | | 12 | 16 | 10 | | | |
| 0.75 | 0.5 | - | 18 | 20 | 10 | 14 | 8 | 1.2 | 2.8 | 3.3 |
| | | | | | 12 | 16 | 10 | | | |
| 1.0 | 0.75 | 0.9 | - | 18 | 10 | 14 | 8 | 1.4 | 3 | 3.5 |
| | | | | | 12 | 16 | 10 | | | |

**NOTE**
Use a ferrule terminal from the viewpoint of long-term reliability.

## 9.11.3 External View and Dimensions

### 9.11.3.1 Dimensions (common to the modules)

Unit: mm

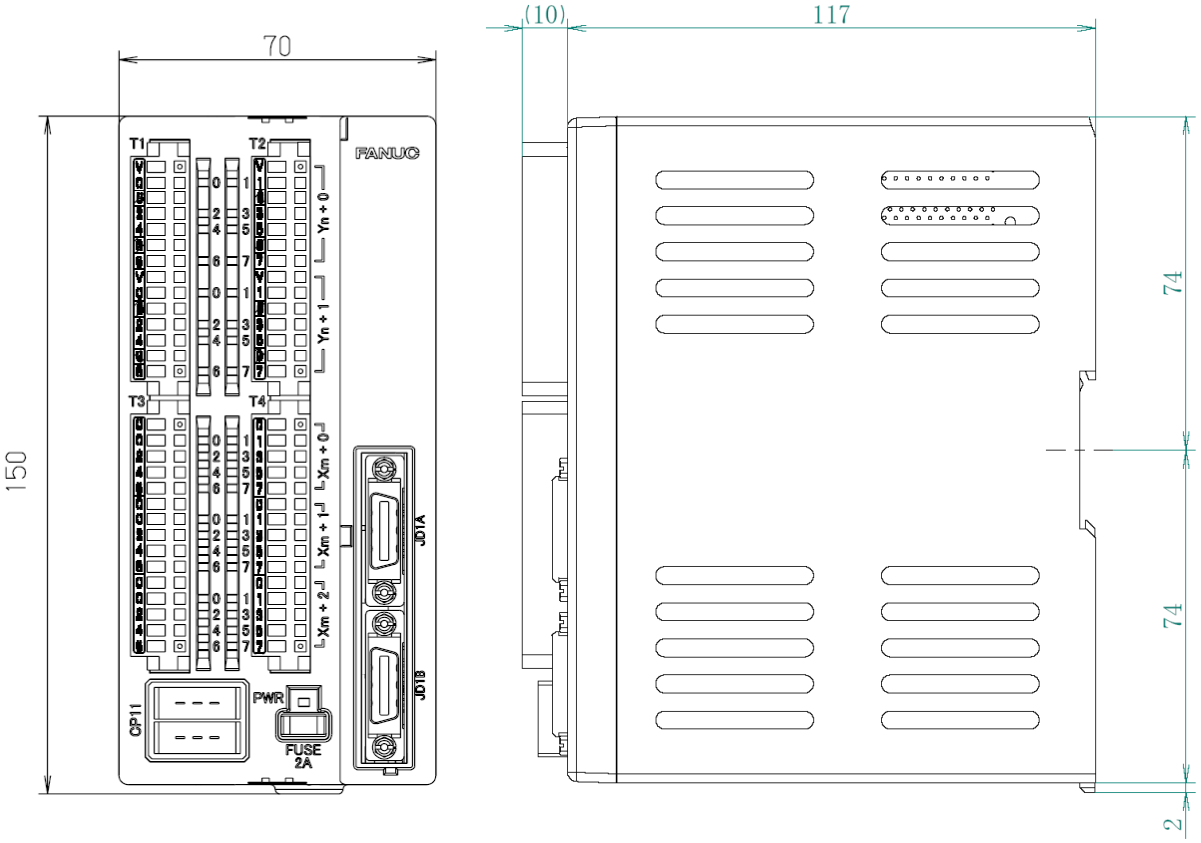


### 9.11.3.2 Dimensions in a maximum configuration (one basic module + three expansion modules)

Unit: mm

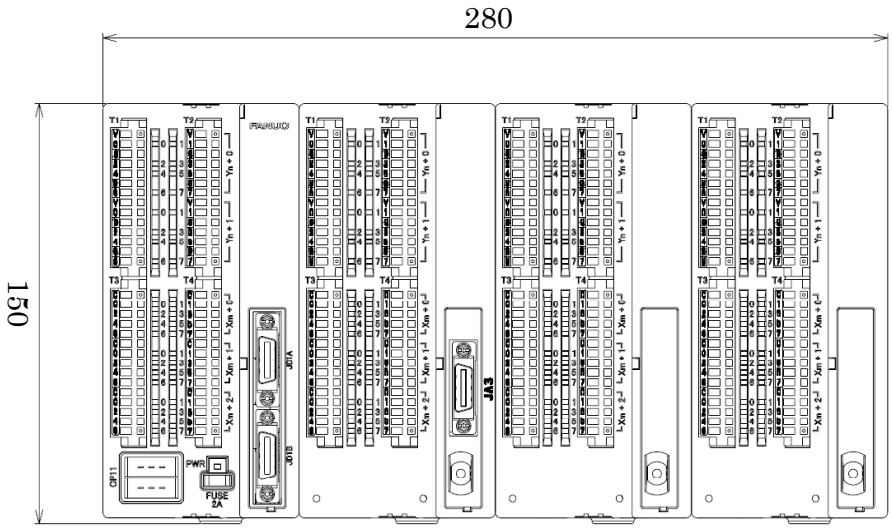

## 9.11.3.3 Component names

### Basic module (A03B-0823-C001)

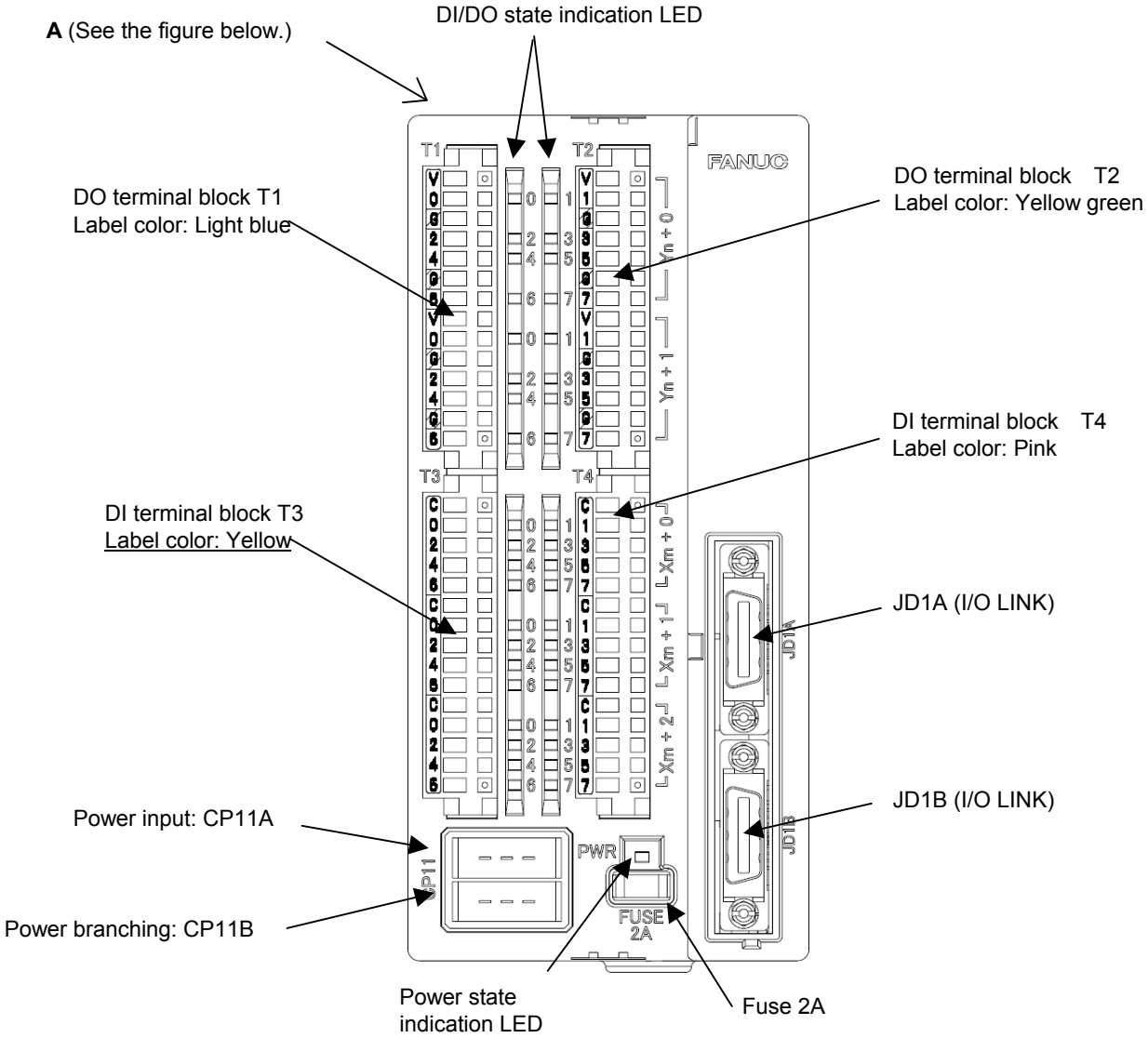


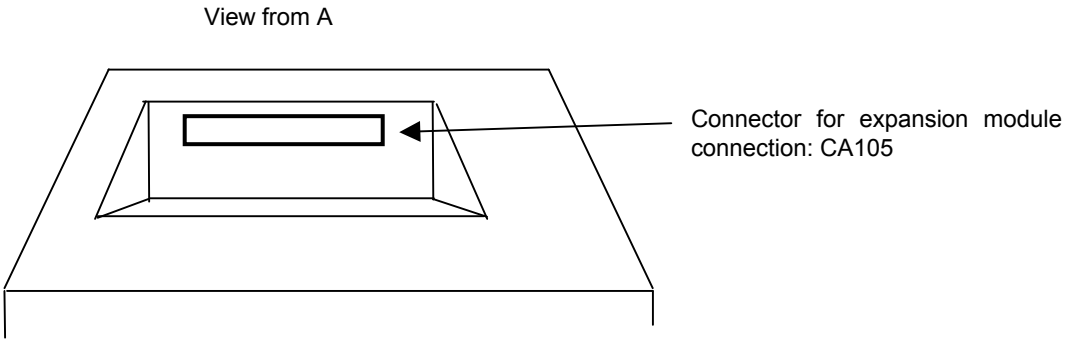

## Expansion module A (A03B-0823-C002)

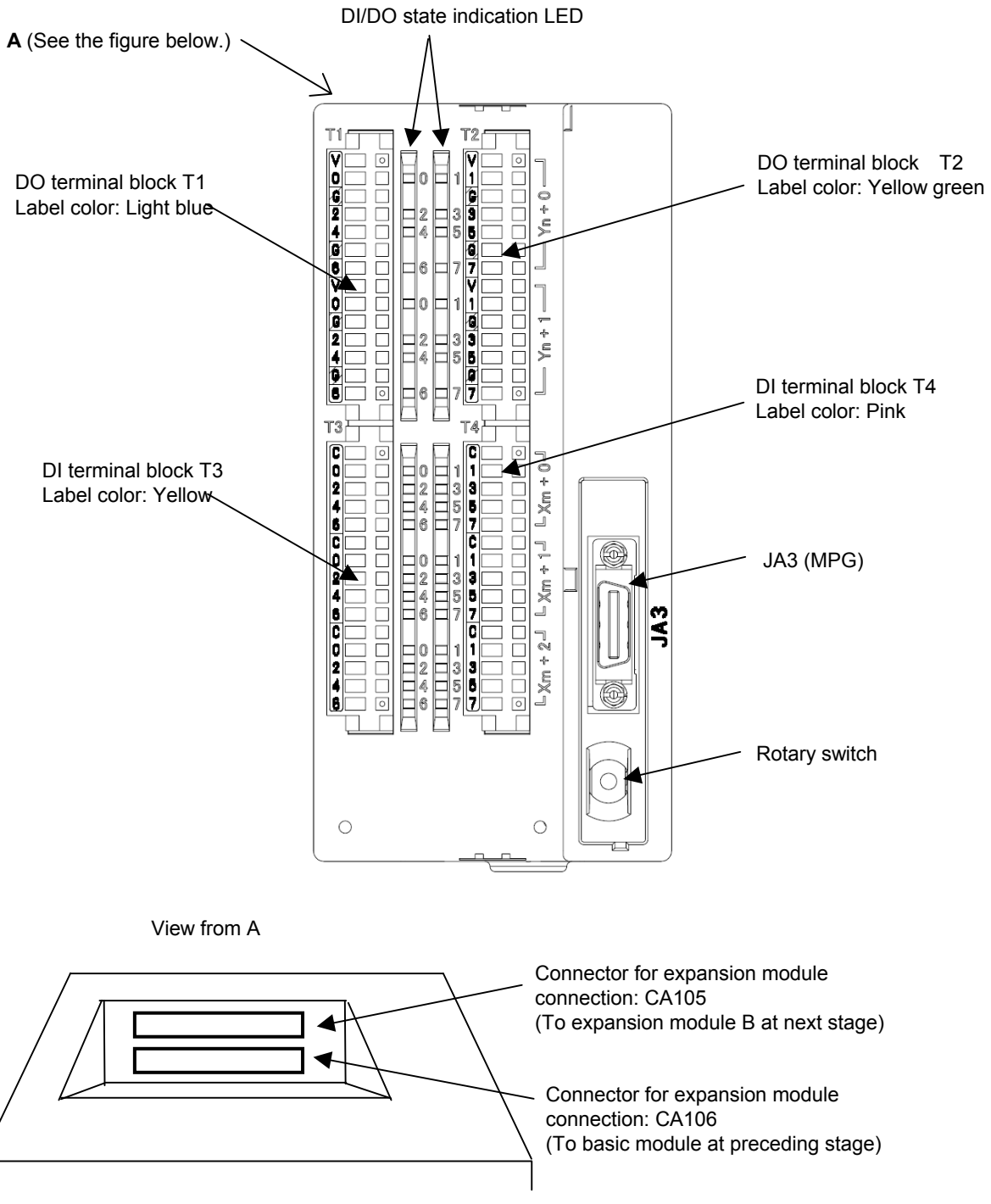


**NOTE**
Be sure to connect expansion module A beside the basic module.

## Expansion module B (A03B-0823-C003)

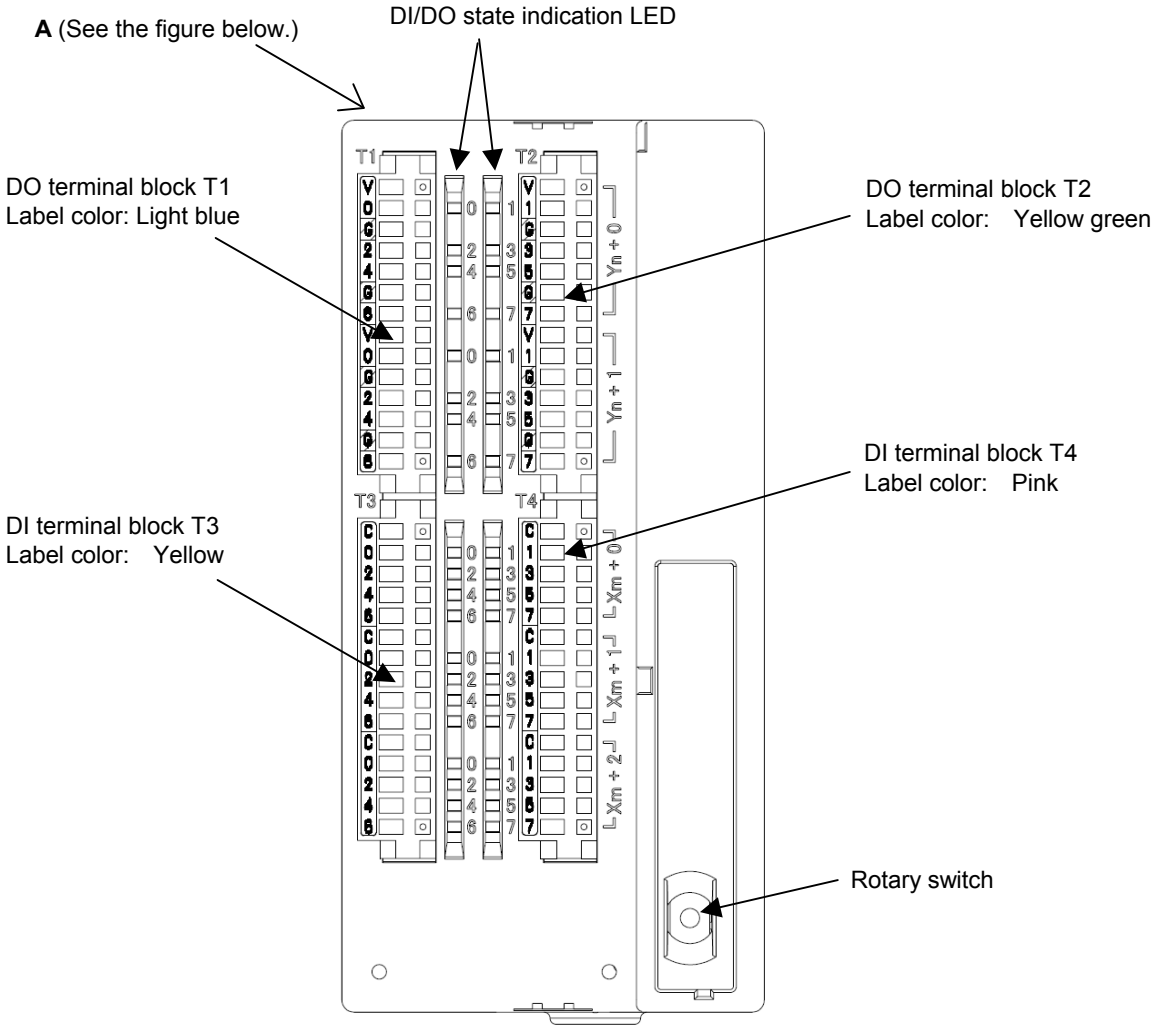


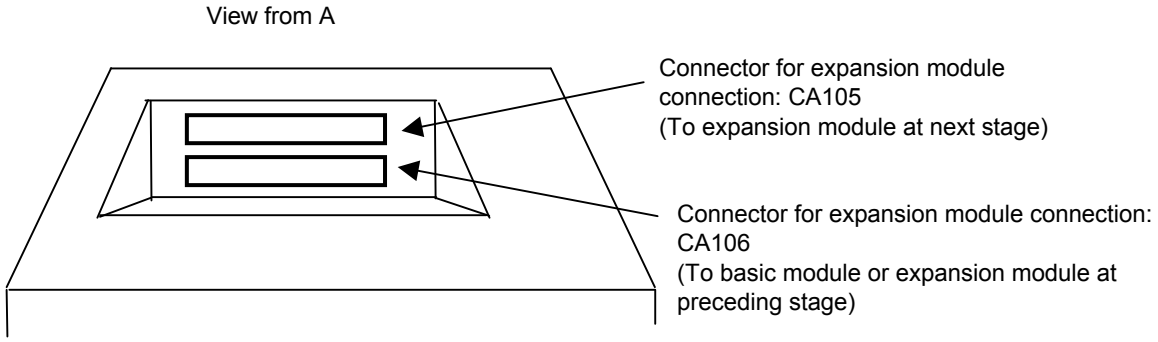

## Expansion module C (A03B-0823-C004)

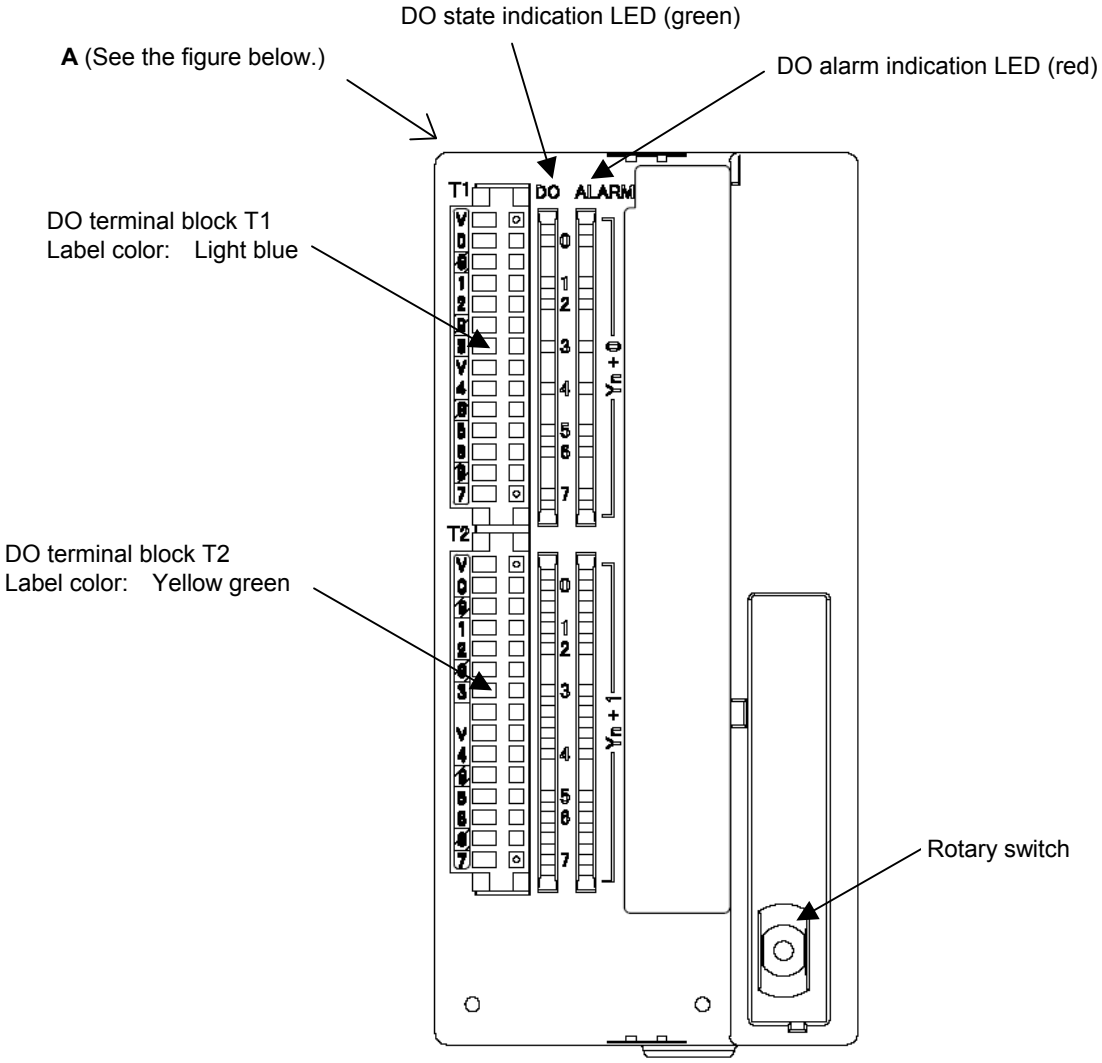


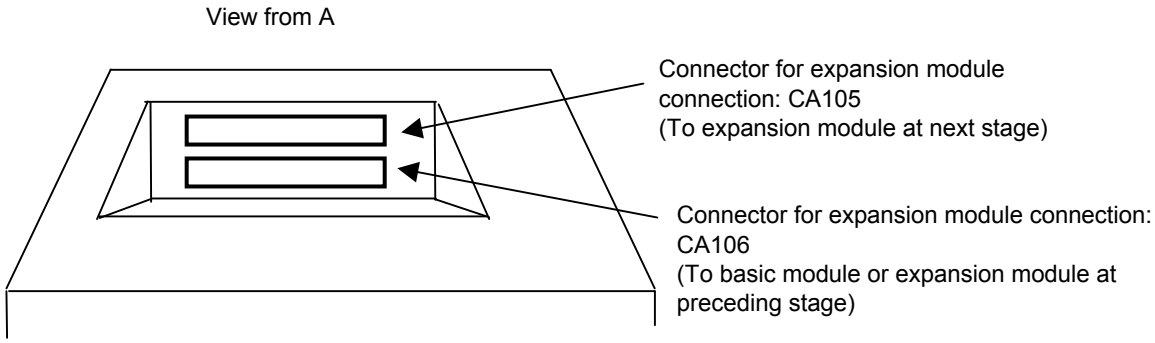

## Expansion module D (A03B-0823-C005)

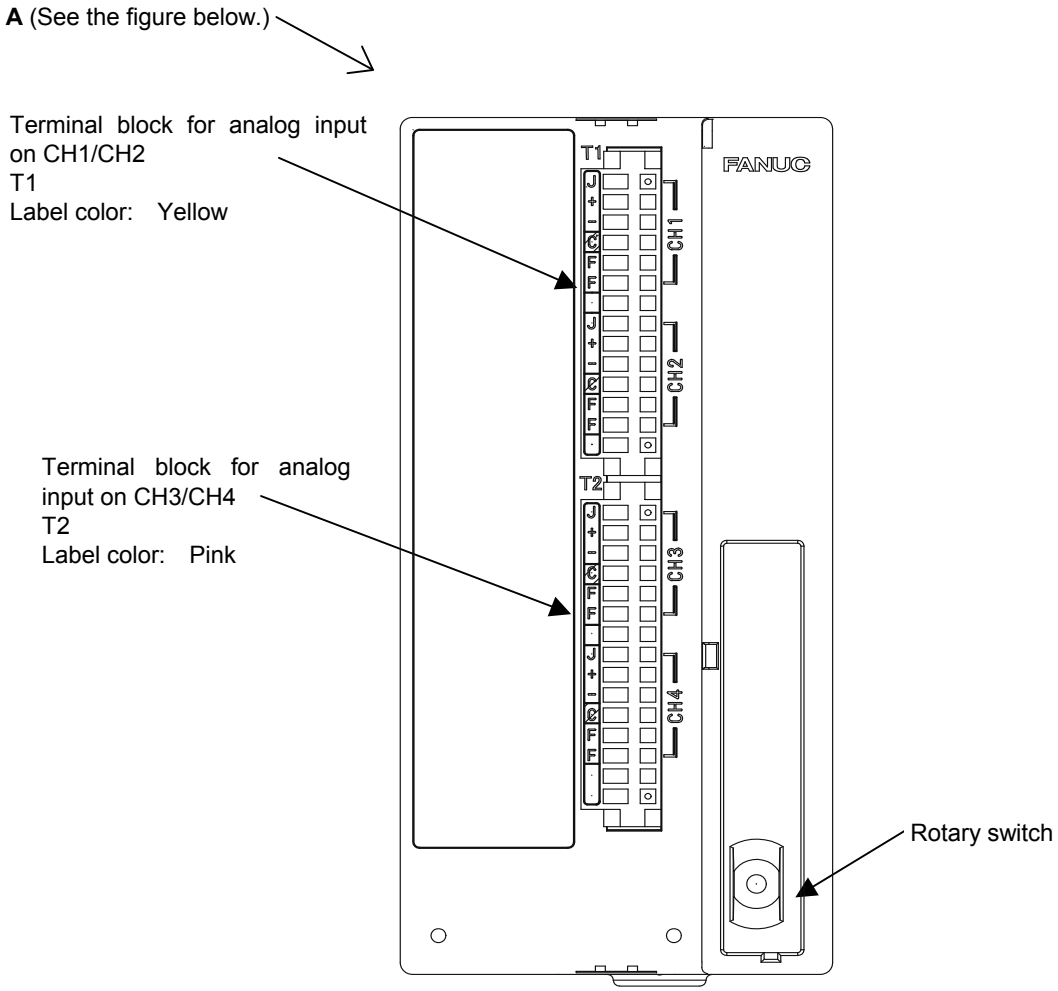


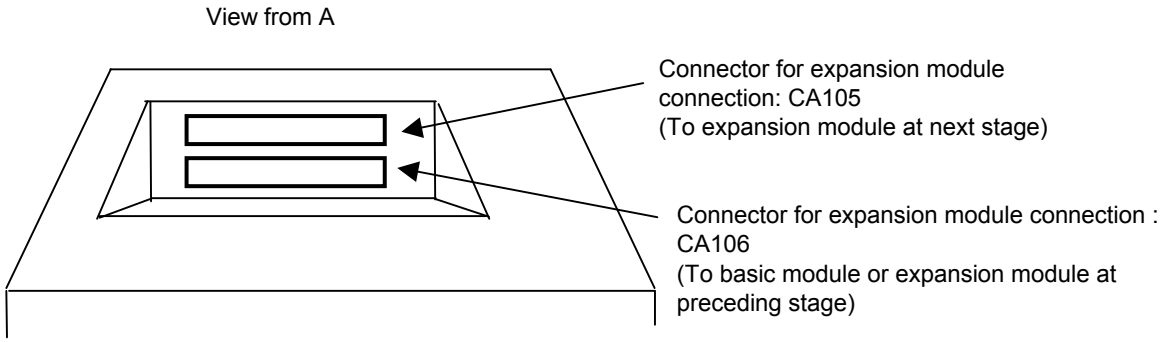

# 9.11.4 Installation

## Notes on installation

1) Use a module in a completely sealed cabinet.
2) Be sure to install a module on a vertical plane and allow a clearance of 100 mm or more above and below the module. Do not place a device that generates a large amount of heat below the module.

## Mounting holes for screwing

Unit: mm

**Front view of the module**

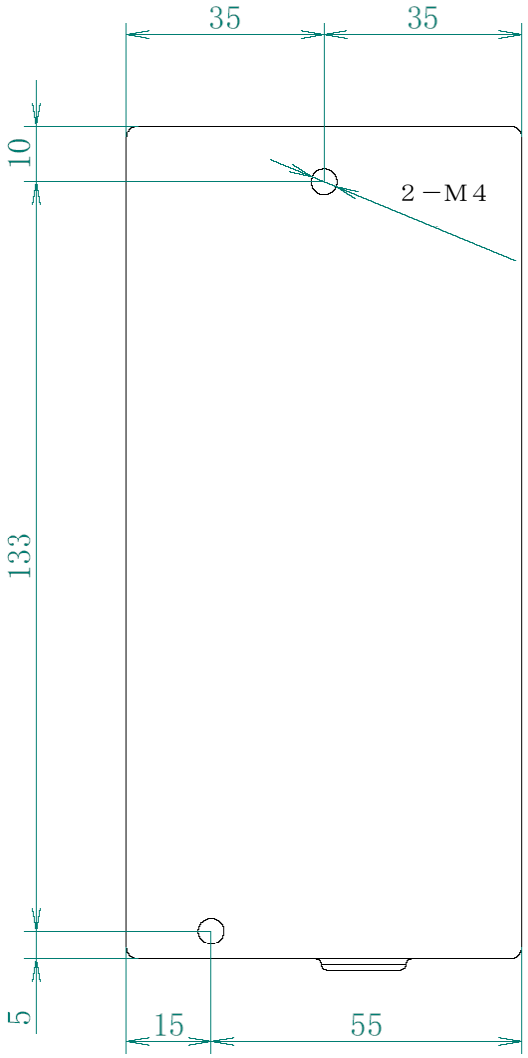

## Using a DIN rail for mounting

### 1) Method of mounting

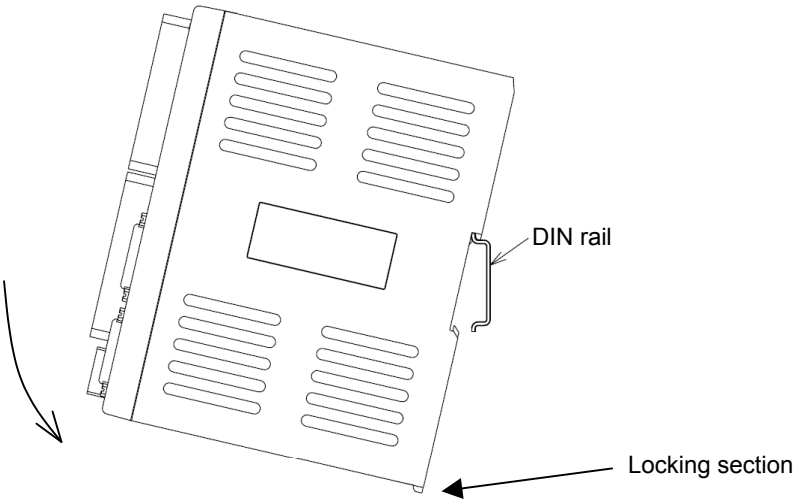


1) Place the hook of the module onto the top of the DIN rail.
2) Push the module until it clicks into place.

**NOTE**
Ensure that the locking section is not left lowered.

### 2) Method of dismounting

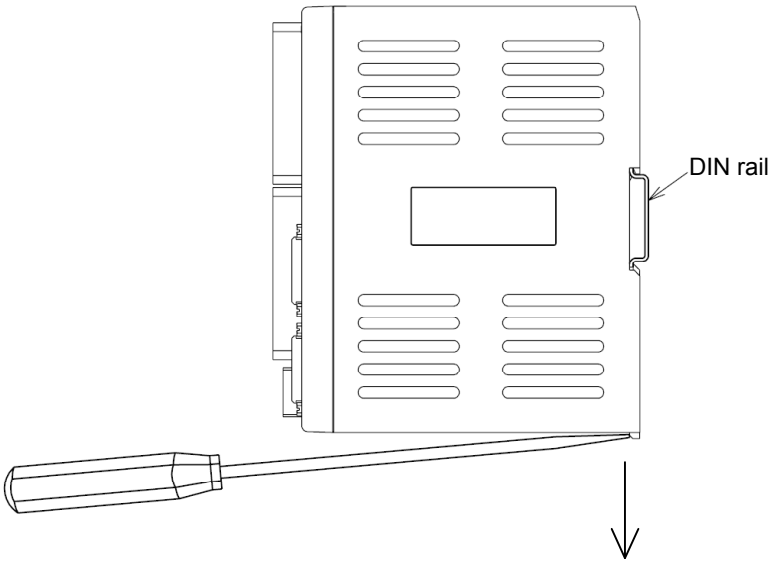


1) Lower the locking section with a flat-blade screwdriver.
2) Pull the lower part of the module toward you.

**NOTE**
When dismounting the module, be careful not to damage the locking section by applying an excessive force.

# 9.11.5 Connection

## 9.11.5.1 Overall connection diagram

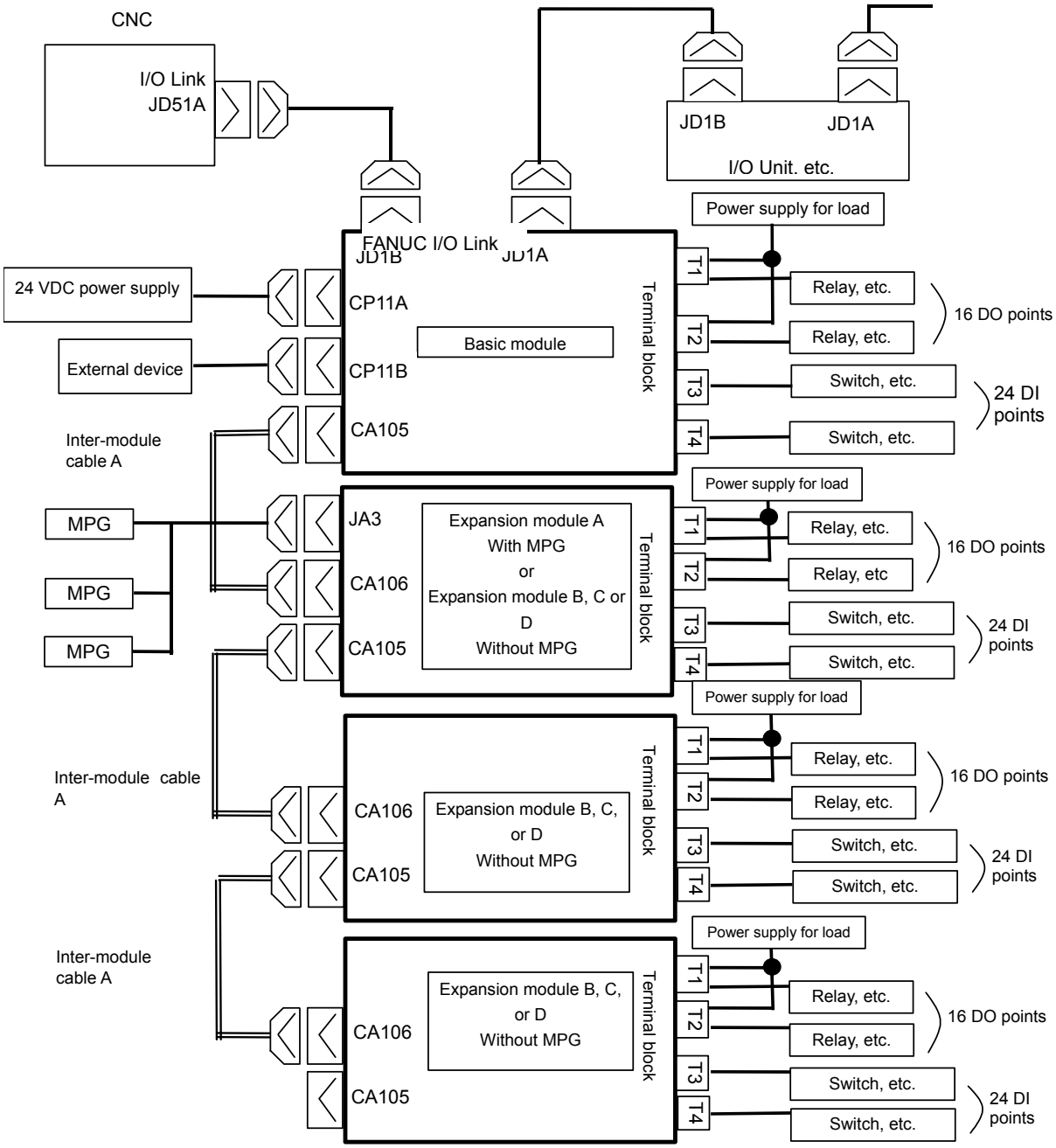


**NOTE**

Expansion module C does not have DI points.
With expansion module D, only the terminal blocks for analog input, T1 and T2, are available.

## 9.11.5.2 Power connection

Supply power to the basic module from the CNC or an external 24 VDC regulated power supply.

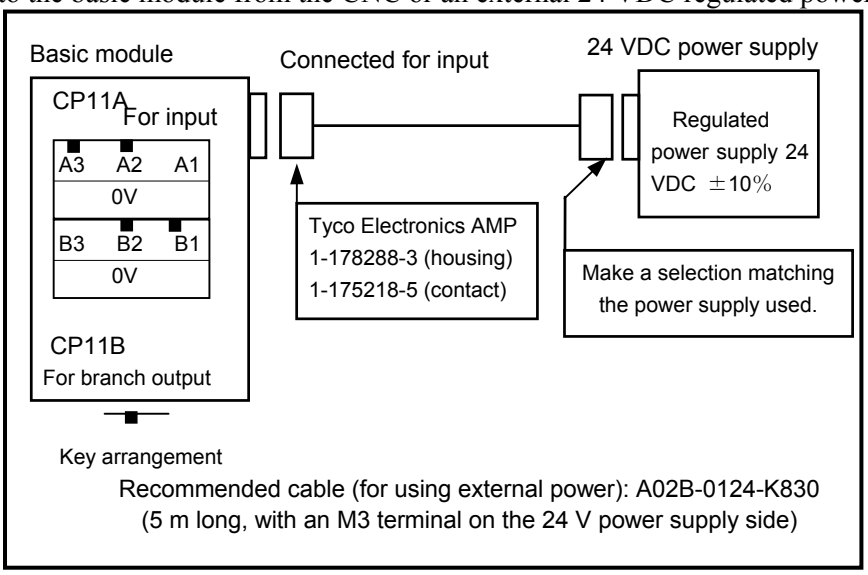


The 24 VDC input to CP11A (A1, A2) can be output from CP11B (B1, B2) for branching. CP11B (B1, B2) is connected as shown below. In this case, the external 24 VDC power supply needs to provide CP11A (A1, A2) with a current which is equal to the sum of the current consumed by the control unit and the current used via CP11B (B1, B2).

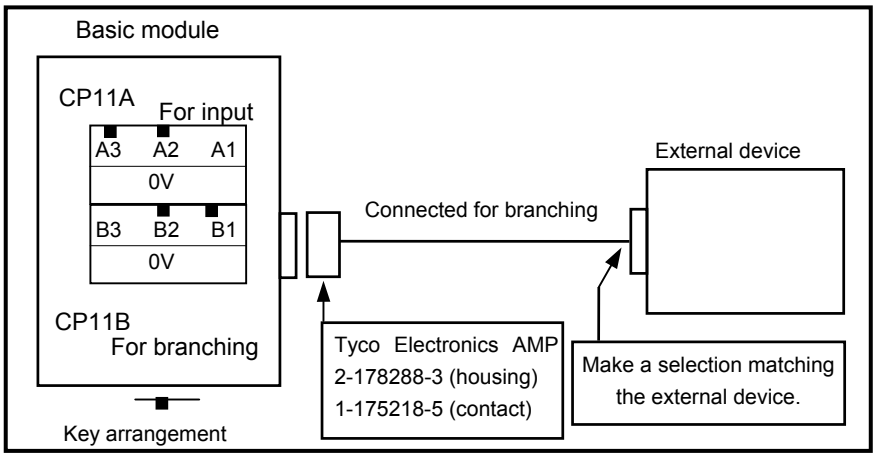


The maximum DC output supplied by the CP11B is 2 A.

**NOTE**

1 Ensure that +24 V is supplied either when or before the power to the CNC is turned on, and that +24 V is removed either when or after the power to the CNC is turned off.

2 When turning off the power to the CNC control unit, be sure to turn off the power to the terminal type I/O module and other slave I/O units connected via the I/O Link as well.

## 9.11.5.3 Signal assignment on terminal blocks

### Basic module, expansion modules A and B

- **Assignment of signals for output**

T1 (Label color: Light blue) / Label indication

| | | |
|---|---|---|
| 1 | DOCOM0 | V |
| 2 | Yn+0.0 | 0 |
| 3 | 0V-0 | G |
| 4 | Yn+0.2 | 2 |
| 5 | Yn+0.4 | 4 |
| 6 | 0V-0 | G |
| 7 | Yn+0.6 | 6 |
| 8 | DOCOM1 | V |
| 9 | Yn+1.0 | 0 |
| 10 | 0V-1 | G |
| 11 | Yn+1.2 | 2 |
| 12 | Yn+1.4 | 4 |
| 13 | 0V-1 | G |
| 14 | Yn+1.6 | 6 |

T2 (Label color: Yellow green) / Label indication

| | | |
|---|---|---|
| 1 | DOCOM0 | V |
| 2 | Yn+0.1 | 1 |
| 3 | 0V-0 | G |
| 4 | Yn+0.3 | 3 |
| 5 | Yn+0.5 | 5 |
| 6 | 0V-0 | G |
| 7 | Yn+0.7 | 7 |
| 8 | DOCOM1 | V |
| 9 | Yn+1.1 | 1 |
| 10 | 0V-1 | G |
| 11 | Yn+1.3 | 3 |
| 12 | Yn+1.5 | 5 |
| 13 | 0V-1 | G |
| 14 | Yn+1.7 | 7 |

- **Assignment of signals for input**

T3 (Label color: Yellow) / Label indication

| | | |
|---|---|---|
| 1 | DICOM | C |
| 2 | Xm+0.0 | 0 |
| 3 | Xm+0.2 | 2 |
| 4 | Xm+0.4 | 4 |
| 5 | Xm+0.6 | 6 |
| 6 | DICOM | C |
| 7 | Xm+1.0 | 0 |
| 8 | Xm+1.2 | 2 |
| 9 | Xm+1.4 | 4 |
| 10 | Xm+1.6 | 6 |
| 11 | DICOM | C |
| 12 | Xm+2.0 | 0 |
| 13 | Xm+2.2 | 2 |
| 14 | Xm+2.4 | 4 |
| 15 | Xm+2.6 | 6 |

T4 (Label color: Pink) / Label indication

| | | |
|---|---|---|
| 1 | DICOM | C |
| 2 | Xm+0.1 | 1 |
| 3 | Xm+0.3 | 3 |
| 4 | Xm+0.5 | 5 |
| 5 | Xm+0.7 | 7 |
| 6 | DICOM | C |
| 7 | Xm+1.1 | 1 |
| 8 | Xm+1.3 | 3 |
| 9 | Xm+1.5 | 5 |
| 10 | Xm+1.7 | 7 |
| 11 | DICOM | C |
| 12 | Xm+2.1 | 1 |
| 13 | Xm+2.3 | 3 |
| 14 | Xm+2.5 | 5 |
| 15 | Xm+2.7 | 7 |

- **Terminal block specification**

| Terminal block name | Terminal block specification on cable side | Remarks |
|---|---|---|
| T1<br>T2 | Weidmuller BLZF3.5/14F | Each of terminal blocks T1 and T2 has a different color assigned by the label attached to the main unit. |
| T3<br>T4 | Weidmuller BLZF3.5/15F | Each of terminal blocks T3 and T4 has a different color assigned by the label attached to the main unit. |

**NOTE**
The terminal blocks on the cable side are shipped with the terminal type I/O module.

## Expansion module C

### - Assignment of signals for output

T1 (Label color: Light blue) Label indication

| | | |
|---|---|---|
| 1 | DOCOM0 | V |
| 2 | Yn+0.0 | 0 |
| 3 | 0V-0 | G |
| 4 | Yn+0.1 | 1 |
| 5 | Yn+0.2 | 2 |
| 6 | 0V-0 | G |
| 7 | Yn+0.3 | 3 |
| 8 | DOCOM1 | V |
| 9 | Yn+0.4 | 4 |
| 10 | 0V-1 | G |
| 11 | Yn+0.5 | 5 |
| 12 | Yn+0.6 | 6 |
| 13 | 0V-1 | G |
| 14 | Yn+0.7 | 7 |

T2 (Label color: Yellow green) Label indication

| | | |
|---|---|---|
| 1 | DOCOM2 | V |
| 2 | Yn+1.0 | 0 |
| 3 | 0V-2 | G |
| 4 | Yn+1.1 | 1 |
| 5 | Yn+1.2 | 2 |
| 6 | 0V-2 | G |
| 7 | Yn+1.3 | 3 |
| 8 | | |
| 9 | DOCOM3 | V |
| 10 | Yn+1.4 | 4 |
| 11 | 0V-3 | G |
| 12 | Yn+1.5 | 5 |
| 13 | Yn+1.6 | 6 |
| 14 | 0V-3 | G |
| 15 | Yn+1.7 | 7 |

### - Terminal block specification

| Terminal block name | Terminal block specification on cable side |
|---|---|
| T1 | Weidmuller BLZF3.5/14F |
| T2 | Weidmuller BLZF3.5/15F |

**NOTE**

The terminal blocks on the cable side are shipped with the terminal type I/O module.

## Expansion module D

### - Assignment of signals for analog input

T1 (Label color: Yellow) Label indication

| | | |
|---|---|---|
| 1 | JMP0 | J |
| 2 | INP0 | + |
| 3 | INM0 | - |
| 4 | COM0 | C |
| 5 | FG0I | F |
| 6 | FG0O | F |
| 7 | | |
| 8 | JMP1 | J |
| 9 | INP1 | + |
| 10 | INM1 | - |
| 11 | COM1 | C |
| 12 | FG1I | F |
| 13 | FG1O | F |
| 14 | | |

T2 (Label color: Pink) Label indication

| | | |
|---|---|---|
| 1 | JMP2 | J |
| 2 | INP2 | + |
| 3 | INM2 | - |
| 4 | COM2 | C |
| 5 | FG2I | F |
| 6 | FG2O | F |
| 7 | | |
| 8 | JMP3 | J |
| 9 | INP3 | + |
| 10 | INM3 | - |
| 11 | COM3 | C |
| 12 | FG3I | F |
| 13 | FG3O | F |
| 14 | | |
| 15 | | |

### - Terminal block specification

| Terminal block name | Terminal block specification on cable side |
|---|---|
| T1 | Weidmuller BLZF3.5/14F |
| T2 | Weidmuller BLZF3.5/15F |

**NOTE**

The terminal blocks on the cable side are shipped with the terminal type I/O module.

## 9.11.5.4 DI/DO connection

### Basic module, expansion modules A and B

#### DI connection

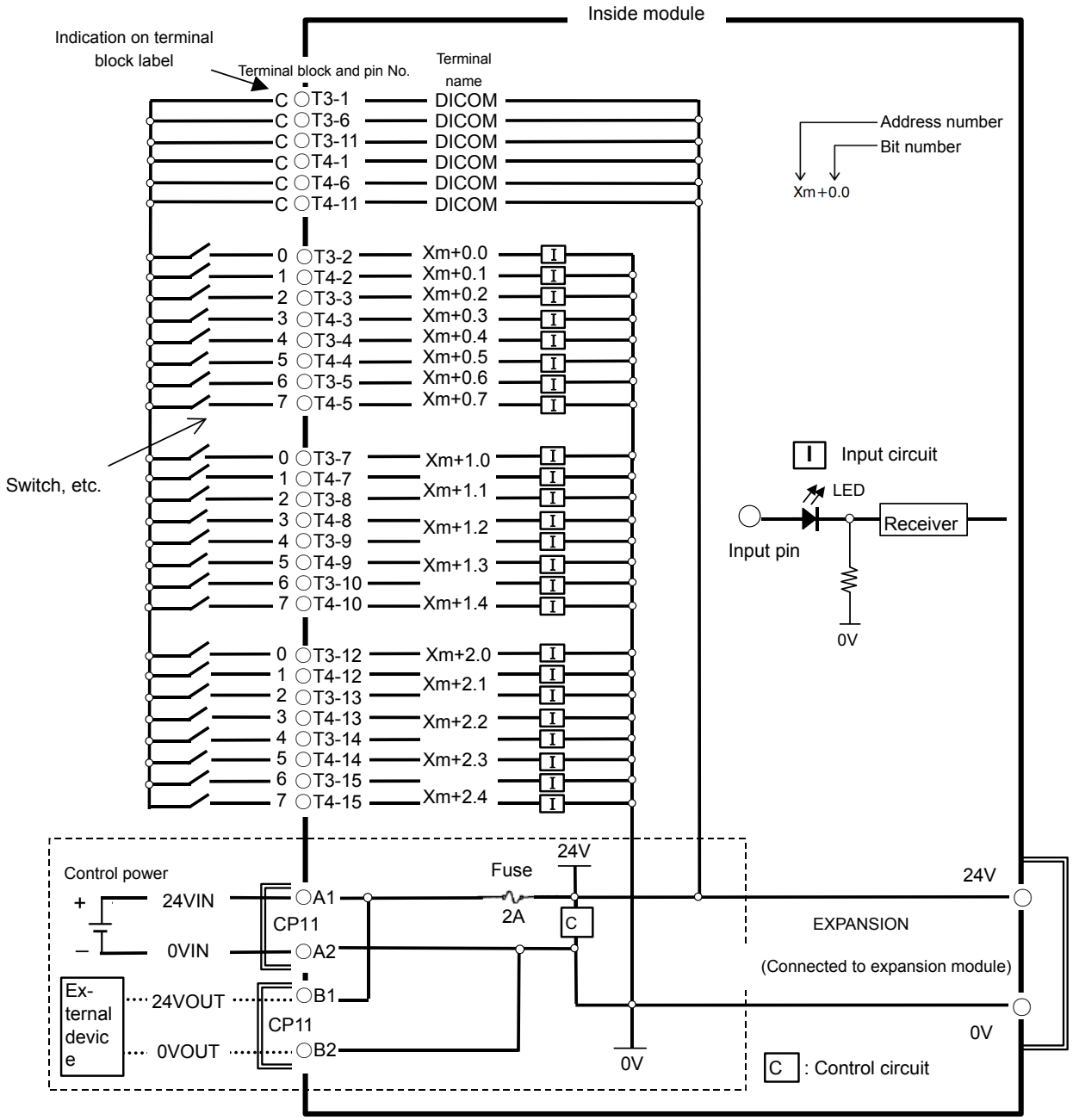


**NOTE**

The circuitry enclosed in the dashed rectangle shown above is mounted on the basic module only. In the case of an expansion module, 24 V for DICOM is supplied via the extension cable from the basic module or the expansion module at the preceding stage.

## DO connection

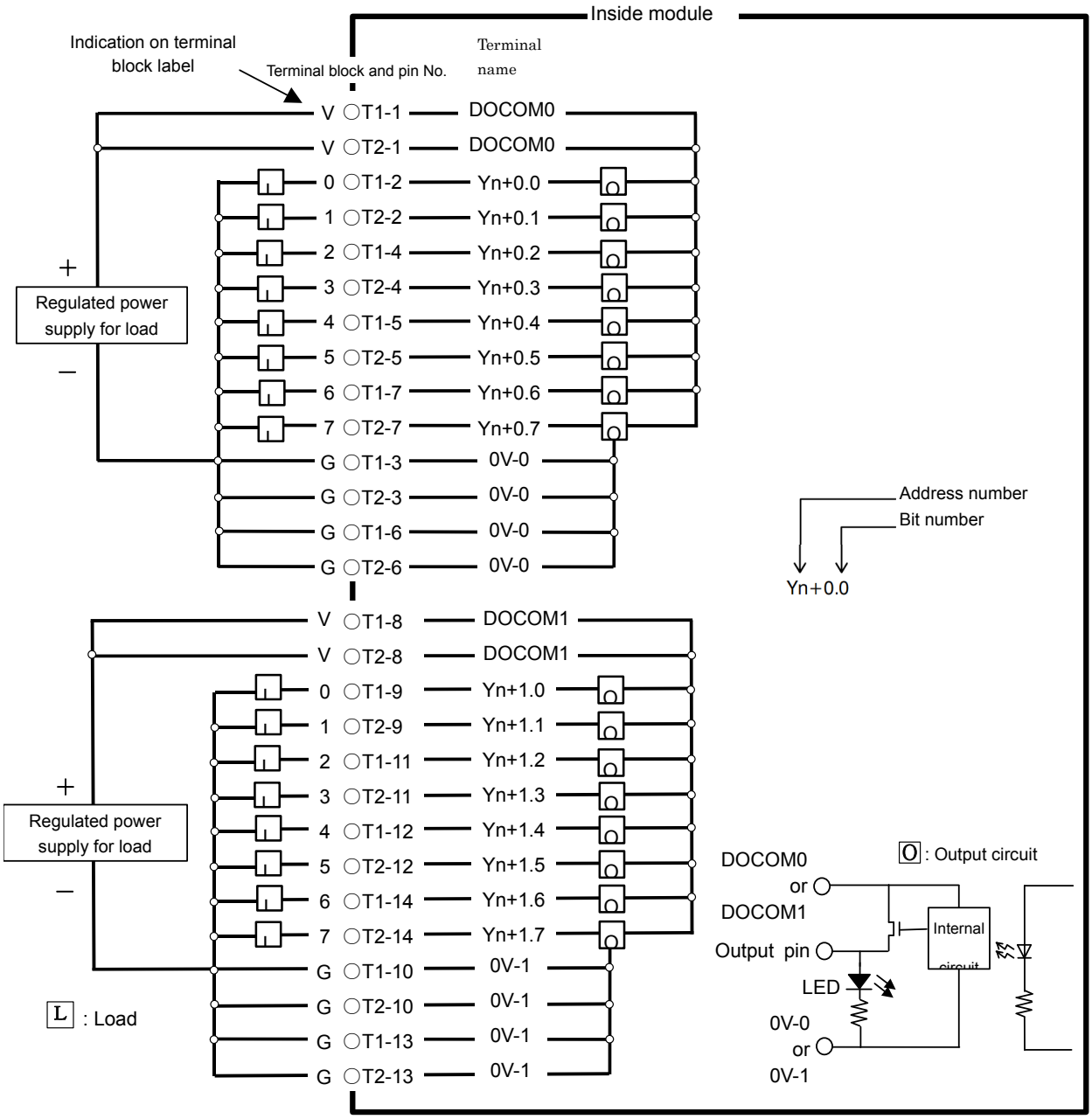


**NOTE**

Be sure to connect the 0 V signal from the regulated power supply for load to the 0 V terminal (with label indication "G") of the module. Otherwise, a load error can occur.

## Expansion module C

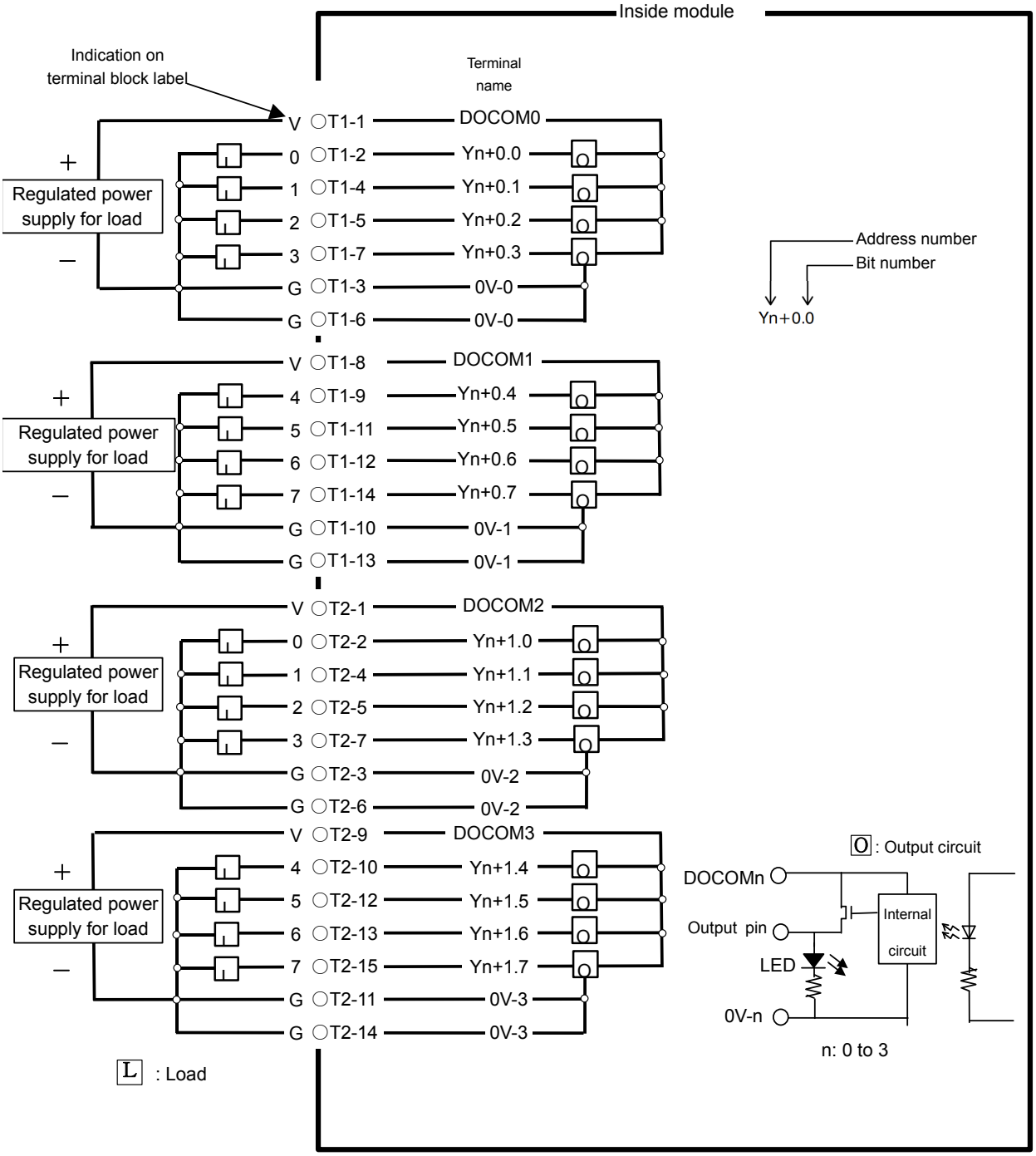


**NOTE**

Be sure to connect the 0 V signal from the regulated power supply for load to the 0 V terminal (with label indication "G") of the module. Otherwise, a load error can occur.

## Expansion module D

In the example of connection below, CH1 is used for voltage input, CH3 is used for current input, and CH2 and CH4 are not used.

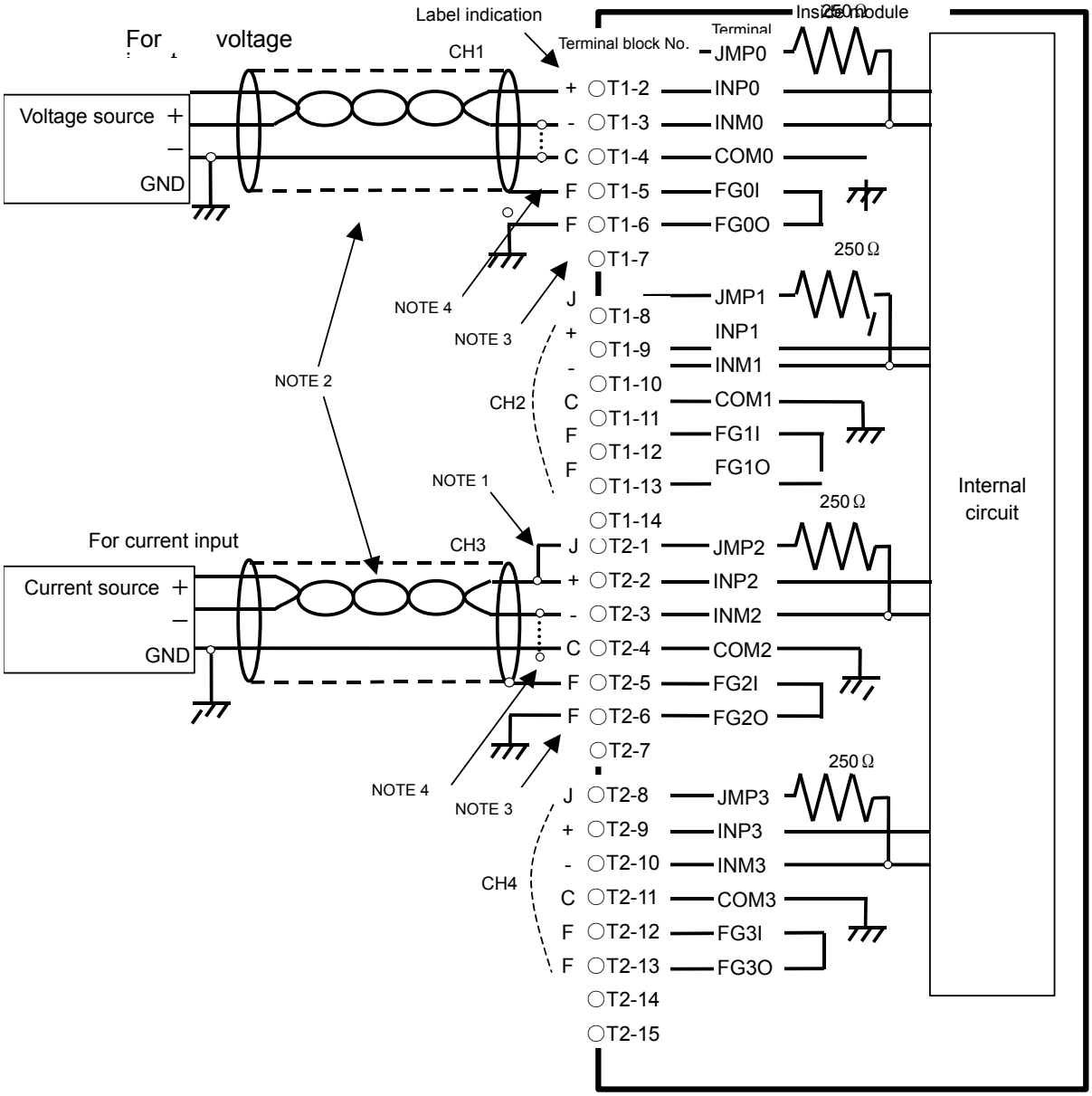


**NOTE**

1 When JMPn and INPn (n=0, 1, 2, 3) are connected with each other, the channel becomes a current input channel.
2 For the connection cable, use a shielded twisted pair.
3 In the figure above, the shield is connected to FGnI for grounding to FGnO. However, the shield may be directly connected to frame ground by using a cable clamp without using FGnI and FGnO.
4 When a voltage source (current source) has a GND terminal as shown above, connect COMn to the terminal. When no GND terminal is provided, connect INMn and COMn with each other on the analog input module as indicated by the dotted line. COMn of each channel is connected to the common analog ground inside the module.

## 9.11.5.5 Manual pulse generator connection

Up to three manual pulse generators can be connected to expansion module A. The method of manual pulse generator connection is the same as for the connector panel I/O module. For details, see Subsection 9.2.15 and Subsection 9.2.16.

## 9.11.5.6 Inter-module connection

The same inter-module connection method is applied to between the basic module and an expansion module and between expansion modules. For inter-module connection, connect a 52-pin flat cable connector to the expansion connectors CA105 and CA106 provided on each module as shown below. At this time, connect all 52 pins, paying attention to the connector orientation.

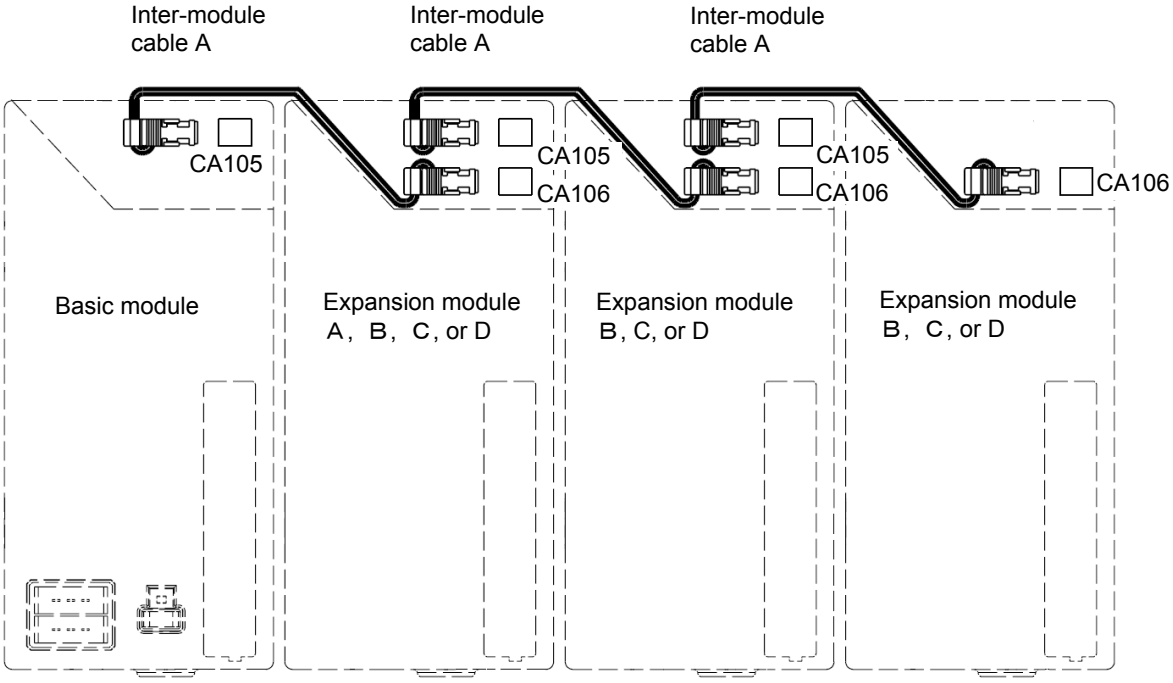


**<Cross sectional view>**

**Method of detaching a connected cable**

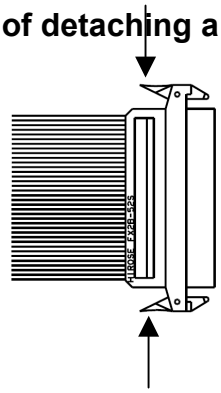

When detaching a connected cable from a module, release the lock by pushing the latch of the connector on the cable side in the arrow directions shown at the left.

## 9.11.5.7 Cable connection to a terminal block

(1) Insert a flat-blade screwdriver with a tip width of about 2.5 mm into a clamp of a terminal block to open the fixing bracket.

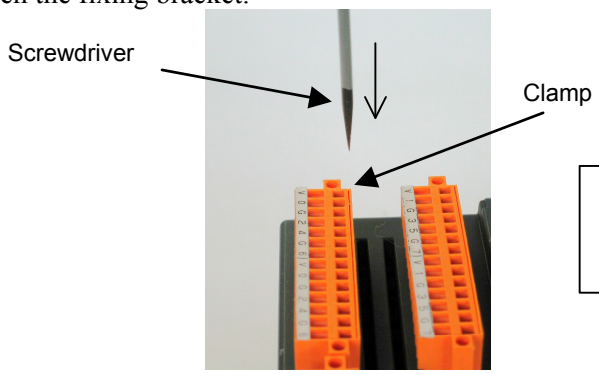


Recommended screwdriver
Weidmuller
Product number: SDI 0.4X2.5X80

(2) Insert a cable with a ferrule terminal.

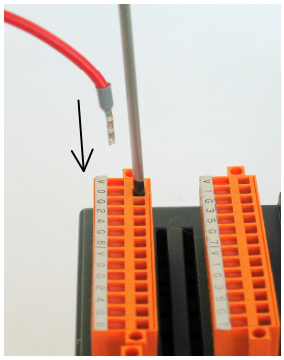

(3) Extract the screwdriver from the clamp to complete cabling.

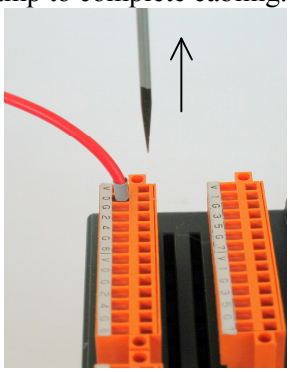

**NOTE**
Do not pry the screwdriver in a clamp. Otherwise, the terminal block can be damaged.

## 9.11.5.8 Detaching a terminal block

A terminal block can be detached from the main module by loosening the mounting screws at the both ends of the terminal block.

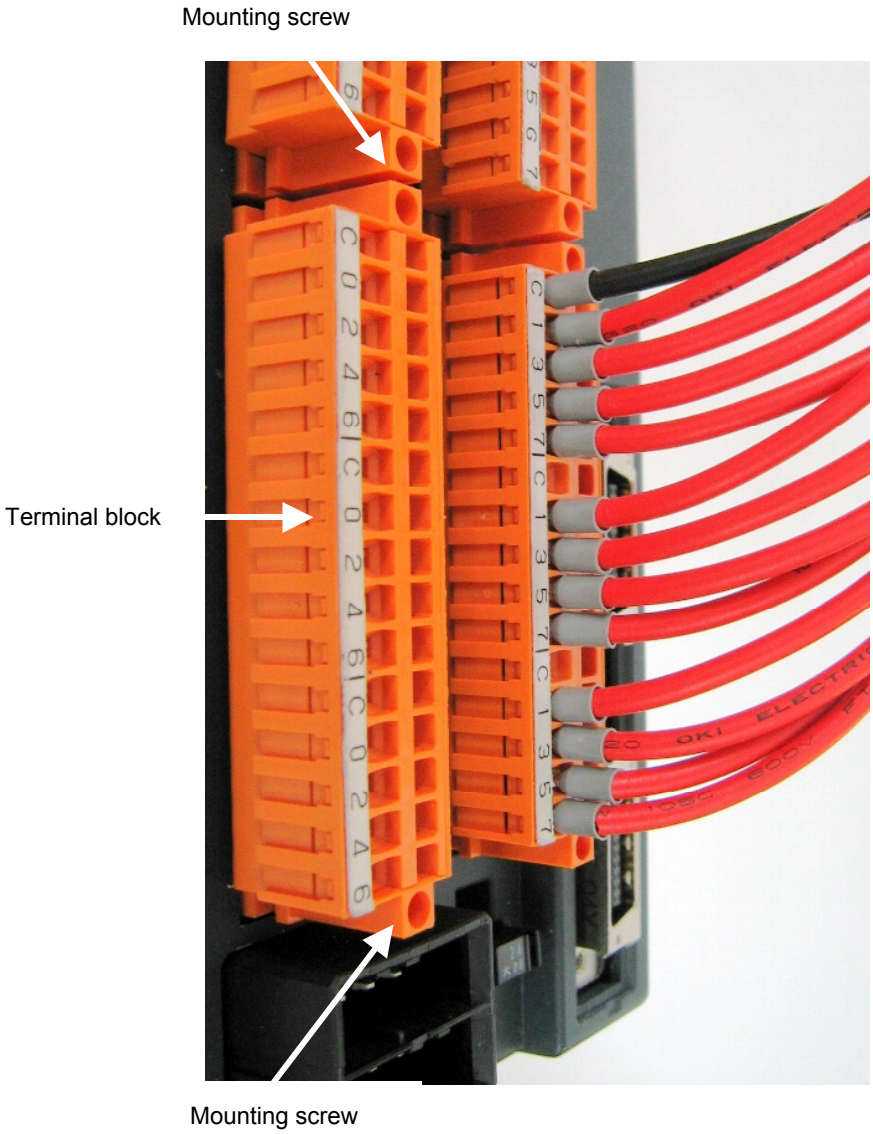


Tightening torque for the mounting screw: 0.4 Nm maximum

# 9.11.6 Settings

## 9.11.6.1 Address map

| Address | Module, etc. |
|---|---|
| Xm | Basic module DI |
| Xm+1 | |
| Xm+2 | |
| Xm+3 | Expansion module 1 DI |
| Xm+4 | |
| Xm+5 | |
| Xm+6 | Expansion module 2 DI |
| Xm+7 | |
| Xm+8 | |
| Xm+9 | Expansion module 3 DI |
| Xm+10 | |
| Xm+11 | |
| Xm+12 | 1st MPG (Expansion module 1) |
| Xm+13 | 2nd MPG (Expansion module 1) |
| Xm+14 | 3rd MPG (Expansion module 1) |
| Xm+15 | DO alarm detection (This address is not used with expansion module C.) |

| Address | Module |
|---|---|
| Yn | Basic module DO |
| Yn+1 | |
| Yn+2 | Expansion module 1 DO |
| Yn+3 | |
| Yn+4 | Expansion module 2 DO |
| Yn+5 | |
| Yn+6 | Expansion module 3 DO |
| Yn+7 | |

Basically, the module is allocated a group of DI addresses (16 bytes) and a group of DO addresses (8 bytes). Add or remove up to three expansion modules by hardware as required. The reason is explained below.
The MPG interface (MPG counter) occupies a DI space from Xm+12 to Xm+14. These addresses are fixed regardless of whether expansion module 2 or 3 is used, and Xm+12 to Xm+14 must be allocated as a DI work area to enable the use of the MPG. Therefore, when using an MPG with the ***i*** series, allocate DI addresses in units of 16-byte groups. The CNC directly processes the value of the MPG counter. So, ensure that the ladder does not use this area.
DI address Xm+15 is used to detect an overheating alarm issued for a cause such as overcurrent of the IC used for a DO driver. (For details, see Subsection 9.11.6.2, "DO alarm detection".) Address Xm+15 is fixed regardless of whether expansion module 2 or 3 is used. This address must be allocated as a work area before this address can be used. When using this area, therefore, allocate DI addresses in units of 16-byte groups.

### Addresses of expansion module C

Expansion module C is a module with 16 points for output only but can be allocated in any space of expansion module 1, 2, or 3. With this module, DO alarm information (2 bytes/module, with DO alarm information provided for each DO point), which is described later, is allocated to the DI area. For the relationship between DO bits and DO alarm information, see "Expansion module C" in Subsection 9.11.6.2.

### Addresses of expansion module D

#### <Digital output>

Expansion module D has four analog input channels and has only one 12-bit digital output channel in the 3-byte DI area. The DI format is as indicated below. The digital output addresses start at the first even-numbered address in the 3-byte area. (See the next page.)

| Address in expansion module D | 7 | 6 | 5 | 4 | 3 | 2 | 1 | 0 |
|---|---|---|---|---|---|---|---|---|
| Xm (even address) | D07 | D06 | D05 | D04 | D03 | D02 | D01 | D00 |
| Xm+1 (odd address) | 0 | 0 | CHB | CHA | D11 | D10 | D09 | D08 |

D00 to D11 represent 12-bit digital output data (represented as a complement). D00 corresponds to the weight of $2^0$, and D11 corresponds to the weight of $-2^{11}$. This means that D11 corresponds to the sign bit of a two's complement.
CHA and CHB select a converted data channel. This means that when the two bytes above are read by a ladder program, A-D converted data on an input channel selected by CHA and CHB is read as D11 to D00.

### <Channel selection>

When expansion module D is used, which of the four channels is to be output to the DI area of the module needs to be selected by a ladder program. The channel switching DO points, CHA and CHB, are mapped to the DO area of the module as indicated below. The symbol × represents an unused bit, and an unused bit may be set to either 1 or 0.

| Address in expansion module D | 7 | 6 | 5 | 4 | 3 | 2 | 1 | 0 |
|---|---|---|---|---|---|---|---|---|
| Yn | × | × | × | × | × | × | × | × |
| Yn+1 | × | × | × | × | × | × | CHB | CHA |

CHA and CHB select a channel as indicated in the table below. The A-D converted data of a selected channel and the selected channel data are written to the DI area.

| CHB | CHA | Channel selected |
|---|---|---|
| 0 | 0 | Channel 1 |
| 0 | 1 | Channel 2 |
| 1 | 0 | Channel 3 |
| 1 | 1 | Channel 4 |

### <Address>

Be sure to allocate the start address in the DI area of the basic module including expansion module D at an even-numbered address. When the start address is allocated in this way, the digital output address of expansion module D is as indicated below, depending on the allocation area.

- When expansion module D is allocated as expansion module 1 (**Xm represents an allocation start address.)**

| Address in the module | 7 | 6 | 5 | 4 | 3 | 2 | 1 | 0 |
|---|---|---|---|---|---|---|---|---|
| Xm+3 (odd address) | Undefined | | | | | | | |
| Xm+4 (even address) | D07 | D06 | D05 | D04 | D03 | D02 | D01 | D00 |
| Xm+5 (odd address) | 0 | 0 | CHB | CHA | D11 | D10 | D09 | D08 |

- When expansion module D is allocated as expansion module 2 (**Xm represents an allocation start address.)**

| Address in the module | 7 | 6 | 5 | 4 | 3 | 2 | 1 | 0 |
|---|---|---|---|---|---|---|---|---|
| Xm+6 (even address) | D07 | D06 | D05 | D04 | D03 | D02 | D01 | D00 |
| Xm+7 (odd address) | 0 | 0 | CHB | CHA | D11 | D10 | D09 | D08 |
| Xm+8 (even address) | Undefined | | | | | | | |

- When expansion module D is allocated as expansion module 3 (**Xm represents an allocation start address.)**

| Address in the module | 7 | 6 | 5 | 4 | 3 | 2 | 1 | 0 |
|---|---|---|---|---|---|---|---|---|
| Xm+9 (odd address) | Undefined | | | | | | | |
| Xm+10 (even address) | D07 | D06 | D05 | D04 | D03 | D02 | D01 | D00 |
| Xm+11 (odd address) | 0 | 0 | CHB | CHA | D11 | D10 | D09 | D08 |

**NOTE**
When referencing a 2-byte digital output address with a ladder program, be sure to read from the address in units of 16-bit words.

## 9.11.6.2 DO alarm detection

### Basic module, expansion modules A and B

The DO driver has a function for detecting a load overcurrent and its temperature. If an accident such as the connecting of the cable to ground causes an abnormal increase in the load current or in the DO driver temperature, a protection circuit, which is provided for each DO driver (1 byte), is activated and keeps the 1-byte DO signal in the OFF state until the cause of the problem is eliminated. Even in this case, the CNC and I/O module continue operation with no alarm issued. However, the DI address (Xm+15) identifies the DO driver that has detected the alarm. The table below indicates the correspondence between the DI address (Xm+15) bits and the DO addresses.
Bit value "1" of the DI address (Xm+15) indicates that the corresponding DO driver has detected an alarm. If a DO alarm is issued, troubleshooting and recovery can be enhanced by checking the contents of the Xm+15 area with the DGN screen of the CNC or by performing Xm+15 alarm processing in advance with the ladder.

| Alarm detection address and bit | DO address | Location |
|---|---|---|
| Xm+15.0 | Yn+0 | Basic module |
| Xm+15.1 | Yn+1 | Basic module |
| Xm+15.2 | Yn+2 | Expansion module 1 |
| Xm+15.3 | Yn+3 | Expansion module 1 |
| Xm+15.4 | Yn+4 | Expansion module 2 |
| Xm+15.5 | Yn+5 | Expansion module 2 |
| Xm+15.6 | Yn+6 | Expansion module 3 |
| Xm+15.7 | Yn+7 | Expansion module 3 |

**NOTE**
DO alarm information of expansion module C is not written to Xm+15. See the next item.
Expansion module D does not have this function.

### Expansion module C

The DO driver of expansion module C has not only the overheat protection function (overcurrent detection and temperature detection) as available with the basic module and expansion modules A and B but also an over voltage protection function and disconnection detection function, and a DO bit is allocated to each protection circuit.
When any of these functions is activated, the bit corresponding to the LED "ALARM" of the module is turned on. The CNC continues operation with no alarm issued. However, the DI address area identifies which DO driver has detected an alarm. The next page indicates the correspondence between the DI address bits and the DO address bits.

DO alarm bit addresses when expansion module C is allocated as expansion modules 1 to 3 (0: No DO alarm issued, 1: DO alarm issued). *=Don't care

| Address | Bit 7 | Bit 6 | Bit 5 | Bit 4 | Bit 3 | Bit 2 | Bit 1 | Bit 0 | Module |
|---|---|---|---|---|---|---|---|---|---|
| Xm+3 | Bit 7 of Yn+2 | Bit 6 of Yn+2 | Bit 5 of Yn+2 | Bit 4 of Yn+2 | Bit 3 of Yn+2 | Bit 2 of Yn+2 | Bit 1 of Yn+2 | Bit 0 of Yn+2 | DO alarm on expansion module 1 |
| Xm+4 | Bit 7 of Yn+3 | Bit 6 of Yn+3 | Bit 5 of Yn+3 | Bit 4 of Yn+3 | Bit 3 of Yn+3 | Bit 2 of Yn+3 | Bit 1 of Yn+3 | Bit 0 of Yn+3 | |
| Xm+5 | * | * | * | * | * | * | * | * | |
| Xm+6 | Bit 7 of Yn+4 | Bit 6 of Yn+4 | Bit 5 of Yn+4 | Bit 4 of Yn+4 | Bit 3 of Yn+4 | Bit 2 of Yn+4 | Bit 1 of Yn+4 | Bit 0 of Yn+4 | DO alarm on expansion module 2 |
| Xm+7 | Bit 7 of Yn+5 | Bit 6 of Yn+5 | Bit 5 of Yn+5 | Bit 4 of Yn+5 | Bit 3 of Yn+5 | Bit 2 of Yn+5 | Bit 1 of Yn+5 | Bit 0 of Yn+5 | |
| Xm+8 | * | * | * | * | * | * | * | * | |
| Xm+9 | Bit 7 of Yn+6 | Bit 6 of Yn+6 | Bit 5 of Yn+6 | Bit 4 of Yn+6 | Bit 3 of Yn+6 | Bit 2 of Yn+6 | Bit 1 of Yn+6 | Bit 0 of Yn+6 | DO alarm on expansion module 3 |
| Xm+10 | Bit 7 of Yn+7 | Bit 6 of Yn+7 | Bit 5 of Yn+7 | Bit 4 of Yn+7 | Bit 3 of Yn+7 | Bit 2 of Yn+7 | Bit 1 of Yn+7 | Bit 0 of Yn+7 | |
| Xm+11 | * | * | * | * | * | * | * | * | |

How to view the table above
DO alarm data assigned to bit 5 of address Yn+3 is written to bit 5 of Xm+4.

**NOTE**
1 DO alarm information on expansion module C is written not to Xm+15 but to the address indicated above.
2 Xm+5, Xm+8, and Xm+11 cannot be used with expansion module C.
3 Even when expansion module A or B is allocated as expansion module 1 or 2, address space is not shifted.

The DO driver with the DI address bit set to 1 has detected an alarm. If a DO alarm is issued, troubleshooting and recovery can be enhanced by checking the contents of the DI area with the DGN screen of the CNC or by performing DI alarm processing in advance with the ladder.
If a protection function is activated, turn off the DO power and system power then correct the cause that has activated the protection function.

The table below indicates the DO output state and alarm bit state set when each protection function is activated.

State when each protection function is activated

| State | PMC output | Module DO output | DO state indication LED (green) | DO alarm LED (red) | DO alarm information allocated to DI area |
|---|---|---|---|---|---|
| Normal operation | 0 | OFF | Turned off | Turned off | 0 |
| | 1 | ON | Turned on | Turned off | 0 |
| Overheat protection | 0 | OFF | Turned off | Turned off | 0 |
| function operation | 1 | OFF | Turned off | Turned on | 1 |
| Over voltage protection | 0 | OFF | Turned off | Turned on | 1 |
| function operation | 1 | OFF | Turned off | Turned off | 0 |
| Disconnection | 0 | OFF | Turned off | Turned off | 0 |
| detection | 1 | ON | Turned on | Turned on | 1 |

**NOTE**

1 If the overheat protection function or over voltage protection function among the protection functions above is activated, the DO bit is kept OFF until the cause is eliminated. When the cause is eliminated, the DO bit is set to ON without restarting the system.

2 Disconnection detection is performed by monitoring, with an output element in the module, the current flowing through a load when DO output is ON. When the detected current value is about 100 mA or less, disconnection detection is assumed. So, when a device (such as an LED) with a small load current is connected, the DO alarm state results, assuming disconnection detection. Unlike the other protection functions, however, this function does not turn off DO output. If a connection is reactivated after the state of disconnection is once set, disconnection detection is canceled without restarting the system.

## 9.11.6.3 Setting the rotary switch

By changing the setting (rotary switch) for the expansion modules, connections can be made by omitting some expansion modules as shown below.

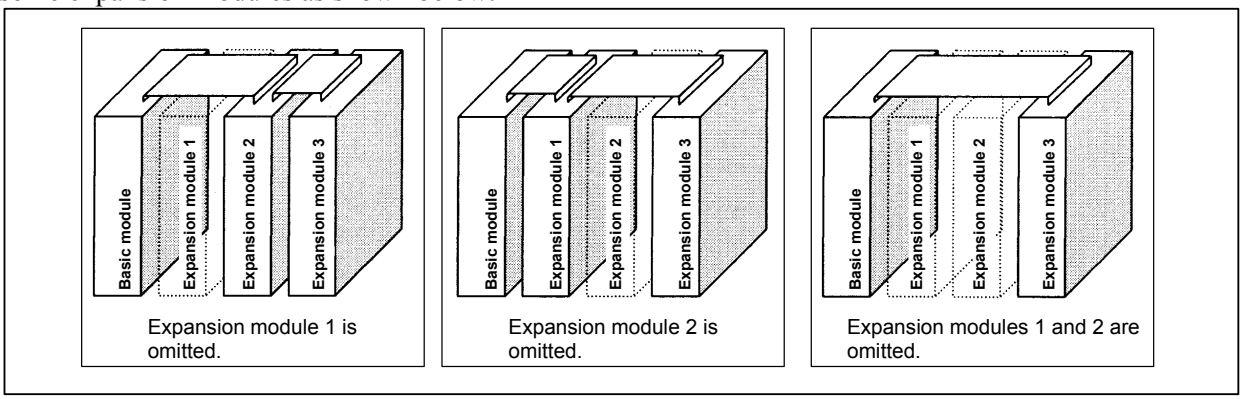


### Method of setting (control and method of setting the control)

As shown below, the control (rotary switch) is located on an expansion module. To change the setting, turn the switch with a flat-bladed screwdriver with a tip width of about 2.5 mm.

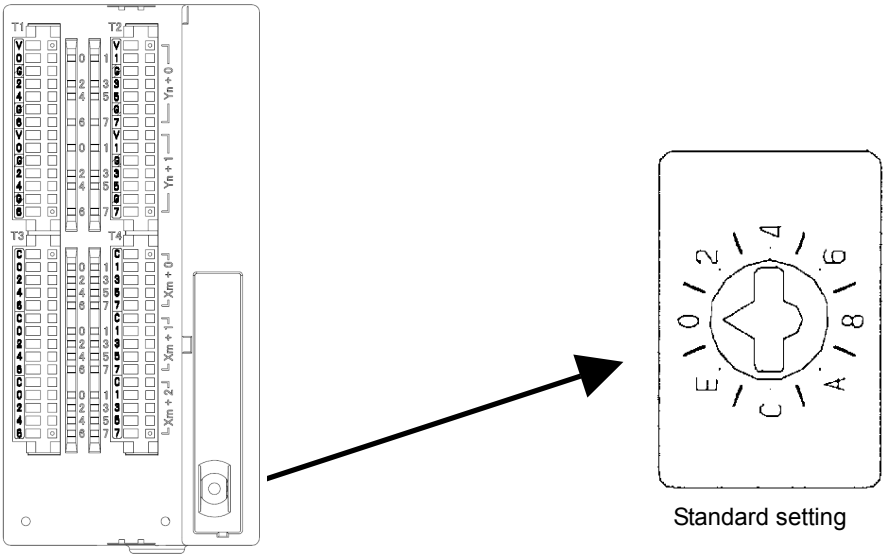

Each setting position of the rotary switch has the following meaning:

| Setting position | Actual indication | Meaning of setting |
|---|---|---|
| 0 | 0 | This is the standard setting. The rotary switch is factory-set to this position. This setting is used when no expansion module is omitted. |
| 1 | — | Set the rotary switch on an expansion module to this position when the preceding expansion module is omitted. |
| 2 | 2 | Set the rotary switch on an expansion module to this position when the preceding two expansion modules are omitted. |
| 3 | — | This setting is prohibited. |
| 4～F | 4, -, 6, -,<br>8, -, A, -,<br>C, -, E, -, | 4, 8, or C has the same effect as 0.<br>5, 9, or D has the same effect as 1.<br>6, A, or E has the same effect as 2.<br>7, B, or F has the same effect as 3. (This setting, however, is prohibited.) |

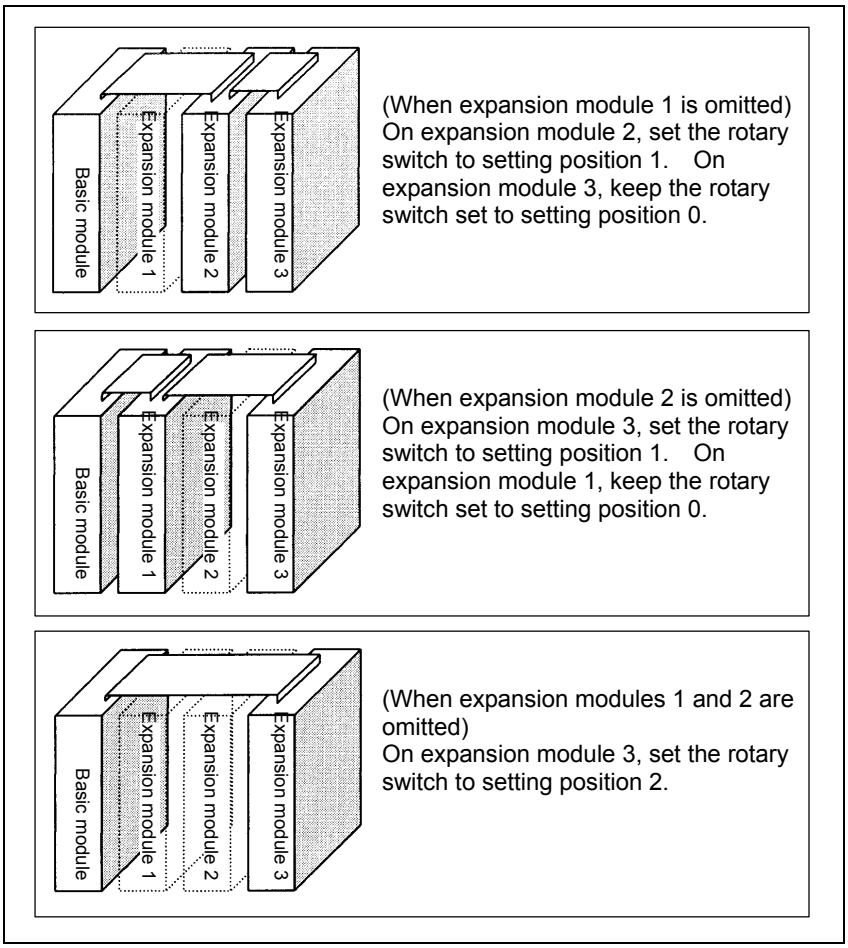


**NOTE**

Expansion module A (A03B-0823-C002, with a manual pulse generator interface) is always mounted at the location of expansion module 1, so that its setting need not be changed.

# 9.11.7 Others

## 9.11.7.1 Method of common pin expansion

Additional common pins can be provided by mounting (screwing) a commercially available terminal block on the top cover of an expansion module.

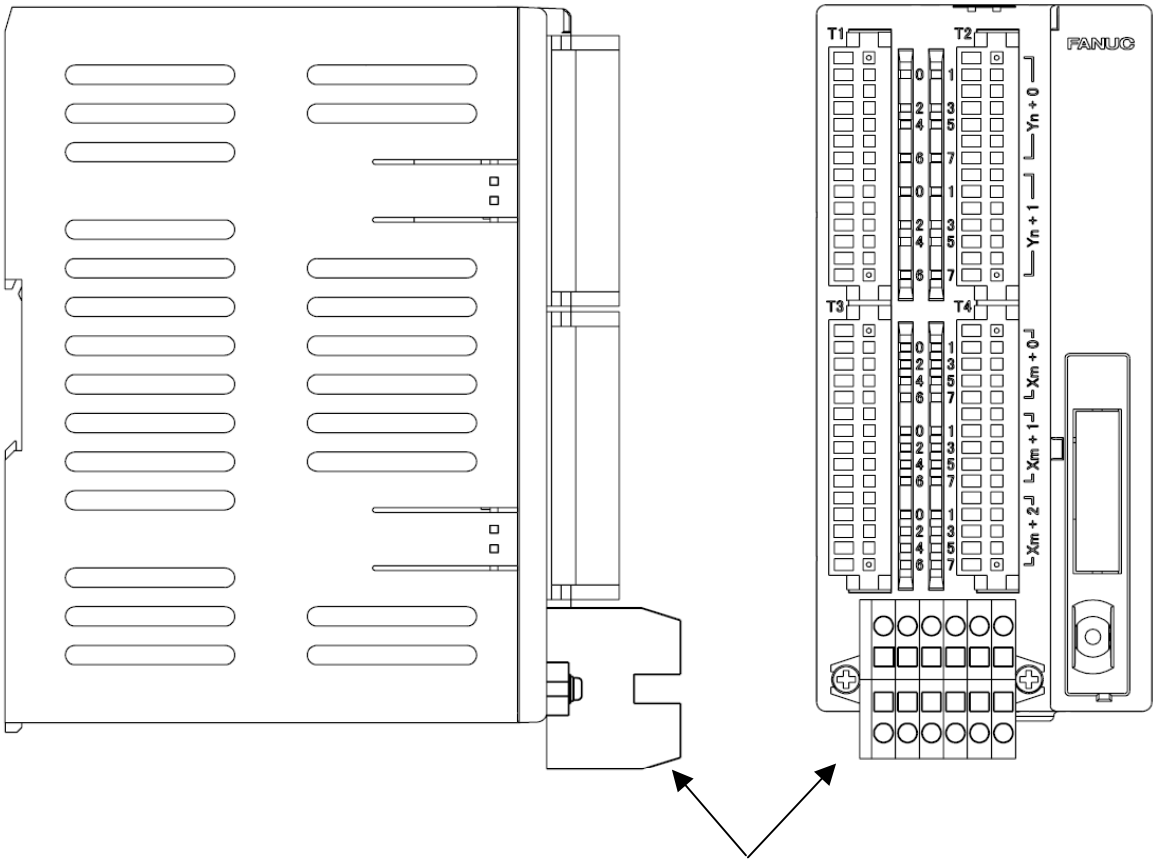


Examples of commercial terminal blocks

| Manufacturer | Model | Maximum number of poles |
|---|---|---|
| WAGO | 869 series | 12 |
| Weidmuller | ZDUB2.5 series | 10 |
| OSADA | TWM10B series | 14 |

For details of the terminal blocks, contact the respective manufacturers.

**Mounting dimensions of a commercial terminal block**

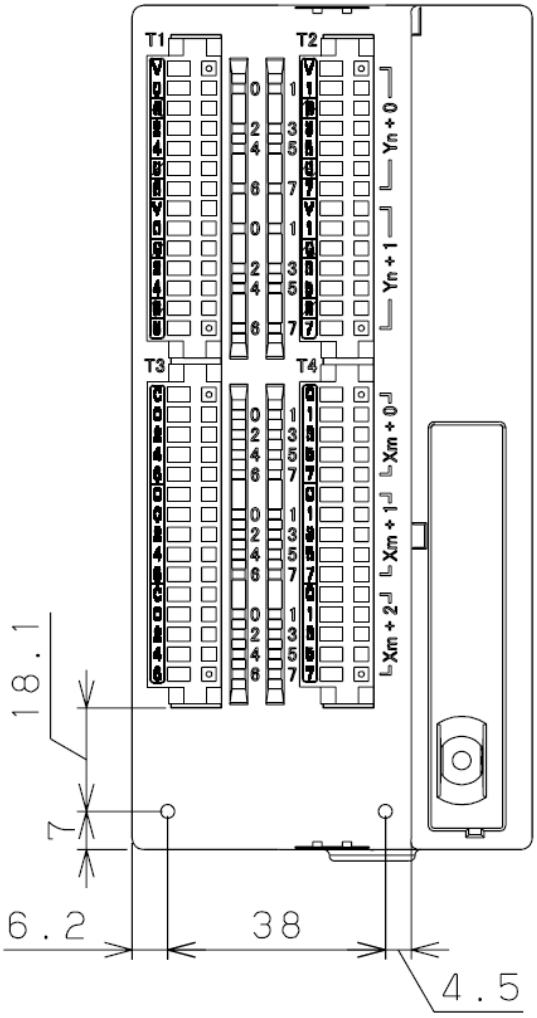


Unit: mm

**NOTE**
To fasten a terminal block, use M3 tap screws not longer than 10 mm.

## 9.11.7.2 DO signal reaction to a system alarm

There is a possibility that the I/O module will not operate normally due to a failure of CNC or I/O Link slave module, or abnormally power supply voltage. To prevent accidents even in this case, design the machine to operate safely by making a safety circuit outside the I/O module.
The circuit of this I/O module is designed so that all DO signals are turned off if a system alarm is occurred in the CNC which controls the I/O module, or if a power of the CNC or the I/O module is turned off. However, it cannot be guaranteed that DO signals of the I/O module will certainly be turned off. Therefore, manage signals related to safety by making a safety circuit outside this I/O module.

## 9.11.7.3 Parallel DO (output signal) connection

### Basic module, expansion modules A and B

With the basic module and expansion modules A and B, a DO load current two times larger can be obtained by connecting DO points in parallel and exercising ON/OFF control at the same time in the sequence as shown below. Namely, the maximum load current per DO point is 200 mA, but 400 mA can be obtained by connecting two DO points in parallel and turning on the two DO points at the same time. In this case, however, the leakage current is also doubled up to 40 μA when the DO points are turned off. Note that the bits that can be set to ON/OFF at the same time must belong to the same address. (For example, bits at address Yn+3 may be set to ON/OFF at the same time.)

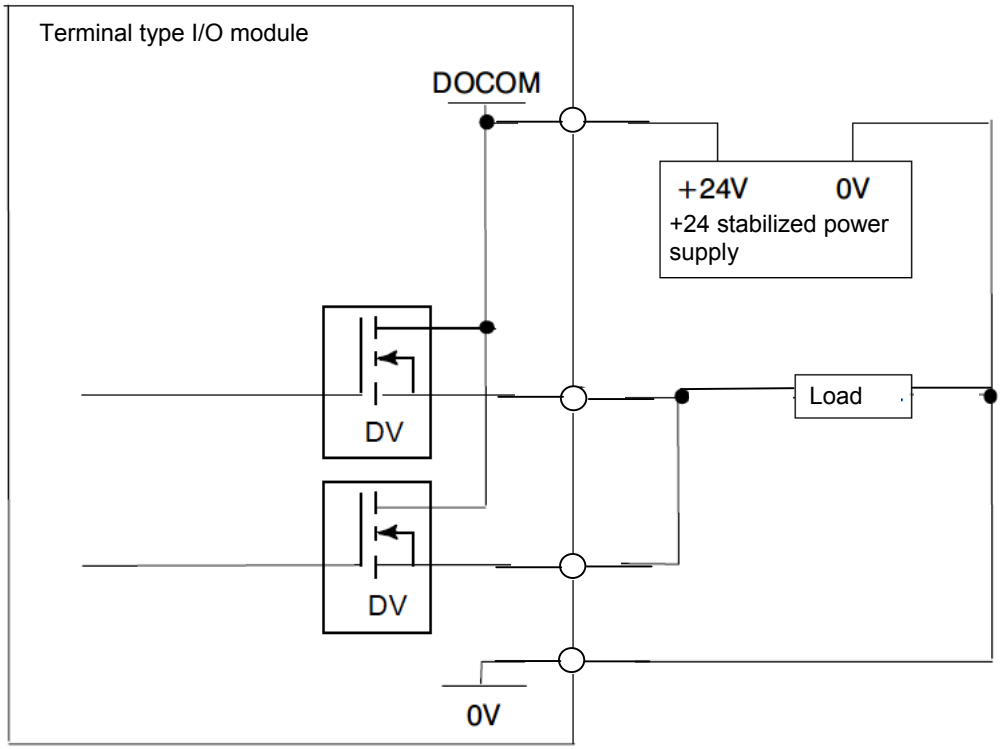


**NOTE**
Expansion module C does not allow parallel DO connection.

# 9.12 CONNECTION OF THE I/O LINK-AS-i CONVERTER

## 9.12.1 Overview

The FANUC I/O Link-AS-i converter unit (hereinafter referred to as the AS-i converter) is a stand-alone unit that converts I/O Link data to the Actuator Sensor Interface (hereinafter referred to as the AS-i), which is an I/O-level open network.

### 9.12.1.1 Features

The AS-i converter converts the AS-i to the I/O Link so that the DI/DO signals of an AS-i slave module can be used by the PMC of a CNC that has the I/O Link.

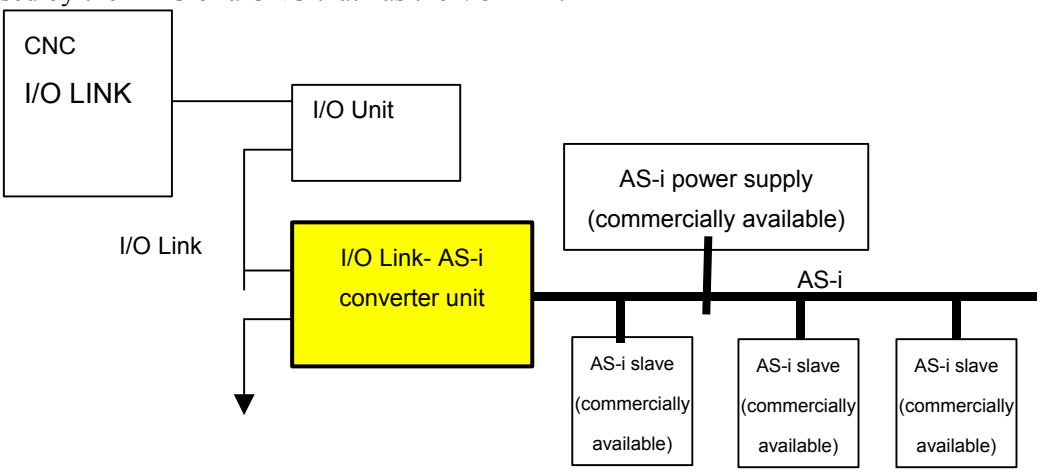


### 9.12.1.2 AS-i versions and ordering information

Two major versions of the AS-i are available: Ver. 2.0 and Ver. 2.1.

| **AS-i version** | Ver. 2.0 | Ver. 2.1 |
|---|---|---|
| **Maximum number of I/O points** | 124 input points/124 output points | 248 input points/186 output points |
| **Maximum number of slaves** | 31 (standard slave) | 62 (A/B slave)<br><br>Caution) When standard slaves such as analog slaves are used, the maximum number of slaves is 31. |
| **Maximum cable length** | 100 m | 100 m |
| **Cycle time** | 5 ms/31 units | 10 ms/62 units |
| **Analog input/output** | The user needs to make a data control sequence. | Input/output can be performed easily with a command. |
| **Ordering information of the AS-i converter** | A03B-0817-C001 | A03B-0817-C002 |

### 9.12.1.3 Applicable CNC

The AS-i converter can be used when any of the following CNCs is used as the master of the I/O Link.

Series 0*i*/15*i*/16*i*/8*i*/30*i*/31*i*/2*i*/Power Mate *i*-D/H

**NOTE**
Note that when the AS-i converter is used, a large number of I/O points are occupied on the I/O Link side as described in Subsection 9.12.4.

### 9.12.1.4 Specification of the I/O Link side

| | **For Ver. 2.0 A03B-0817-C001** | **For Ver. 2.1 A03B-0817-C002** |
|---|---|---|
| Number of occupied points | 256 input points/256 output points | 512 input points/512 output points<br><br>Note) Two successive groups are occupied. |

### 9.12.1.5 Support for AS-i profiles

| | **For Ver. 2.0 A03B-0817-C001** | **For Ver. 2.1 A03B-0817-C002** |
|---|---|---|
| Master profile | Equivalent to M1 | Equivalent to M1e |
| Analog profile | 7.1 / 7.2<br><br>Note) The user needs to make a data control sequence. | 7.3 / 7.4 |

## 9.12.2 Specifications

### 9.12.2.1 Specifications of the AS-i converter

**Power supply**

Input power supply: 24 VDC (±10%)

| | **For Ver. 2.0 A03B-0817-C001** | **For Ver. 2.1 A03B-0817-C002** |
|---|---|---|
| Power supply capacity | 100 mA | 120 mA |
| Heat dissipation | 2.4 W | 2.9 W |

**Weight**

| **For Ver. 2.0 A03B-0817-C001** | **For Ver. 2.1 A03B-0817-C002** |
|---|---|
| 350 g | 370 g |

## 9.12.2.2 Installation conditions

| | |
|---|---|
| **Ambient temperature for the module** | Operation: 0°C to 55°C<br>Storage and transportation: -20°C to 60°C |
| **Temperature change** | 1.1°C/minute maximum |
| **Humidity** | Normal condition: 75% (relative humidity)<br>Short term (within one month): 95% (relative humidity) |
| **Vibration** | Operation: 0.5 G or less<br>Non-operation: 1.0 G or less<br>FANUC performs evaluation test under the following conditions:<br>10 Hz to 58 Hz: 0.075 mm (amplitude)<br>58 Hz to 500 Hz: 1 G<br>Vibration direction: X, Y, and Z<br>Number of sweeps: 10 cycles<br>Compliance with IEC60068-2-6 |
| **Atmosphere** | Normal machining factory environment (For use in an environment with relatively high levels of dust, coolant, organic solutions, and so forth, additional measures are required.) |

## 9.12.2.3 Dimensions and connector layout

Unit: mm

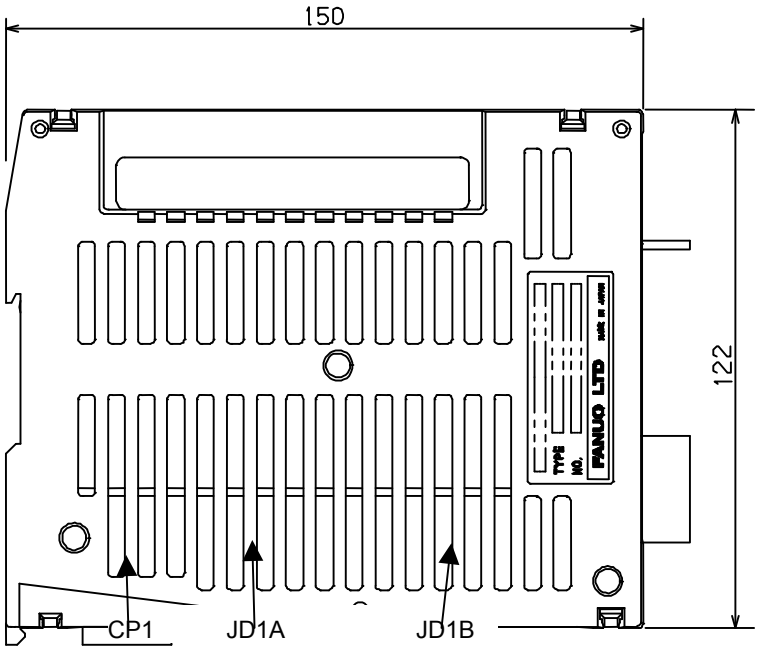


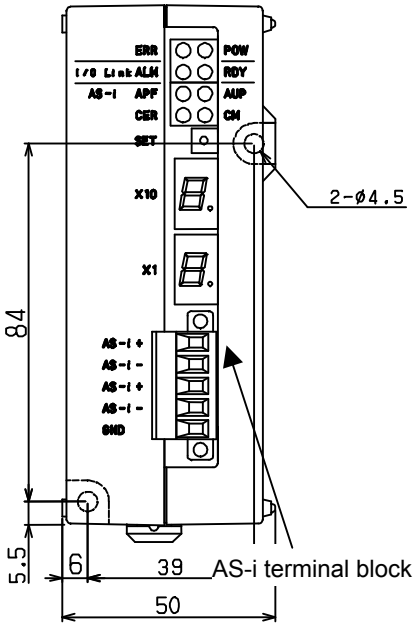

## 9.12.2.4 Installation

### Notes on installation

(1) Use the unit in a completely sealed cabinet.
(2) Be sure to install the unit on a vertical plane and allow a clearance of 100 mm or more above and below the unit. Do not place a device that generates a large amount of heat below the unit.

### Mounting hole for screwing

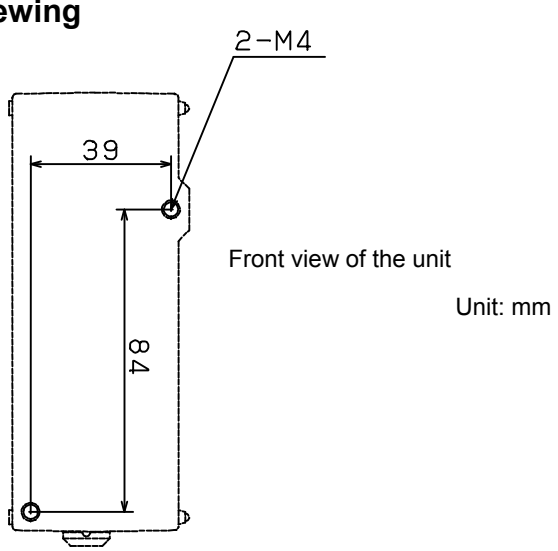


**NOTE**

1 A screwdriver is inserted on a slant to mount and dismount the unit, so that a sufficient maintenance space is required on both sides of the unit. When the front face of an adjacent unit is flush with the front face of the unit or is recessed, provide a clearance of about 20 mm from the adjacent unit. When the front face of an adjacent unit is more projected toward you than the front face of the unit, provide a clearance of about 70 mm from the adjacent unit.
2 When the unit is to be installed near a side plane of the cabinet, provide a clearance of about 70 mm between the unit and the side plane of the cabinet.

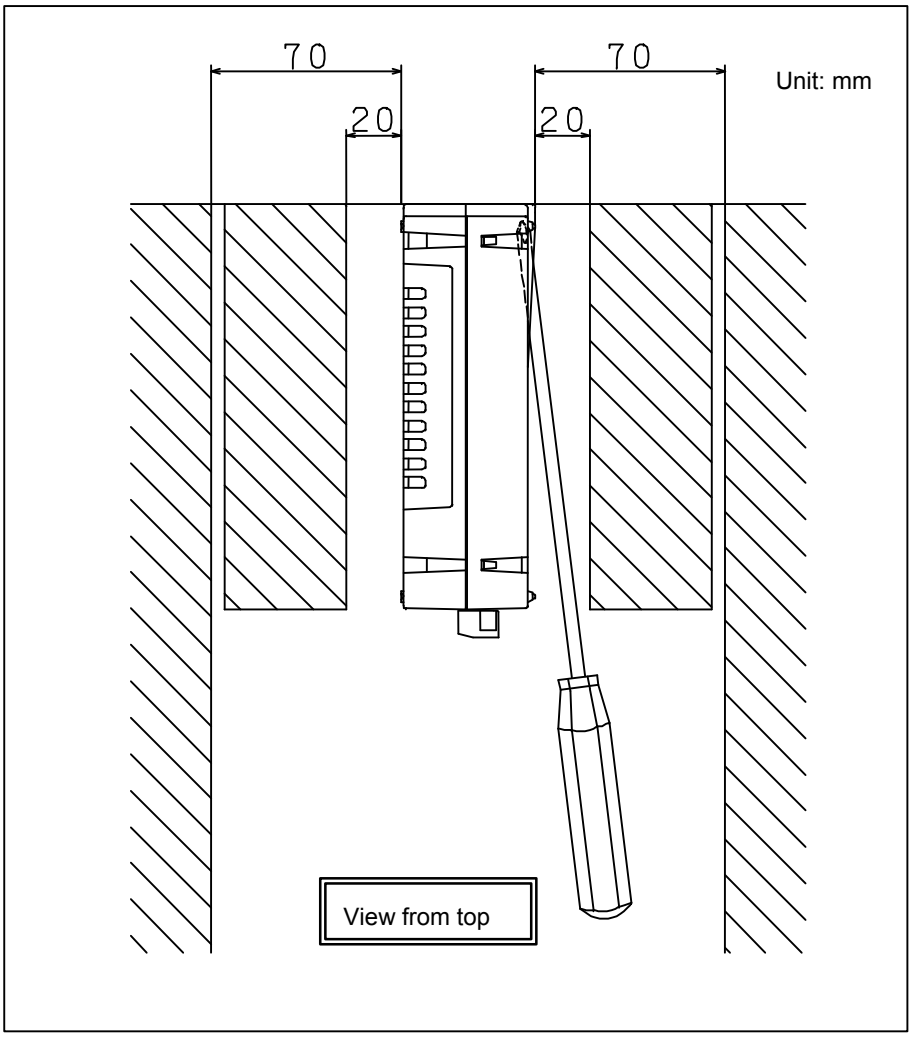
70
70
Unit: mm
20
20
View from top

**Using a DIN rail for mounting**

**1) Method of mounting**

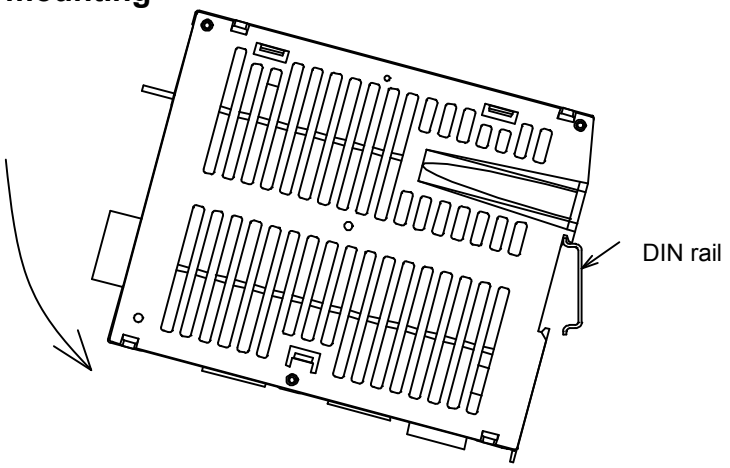


1. Place the hook of the unit onto the top of the DIN rail.
2. Push the unit until it clicks into place.

**2) Method of dismounting**

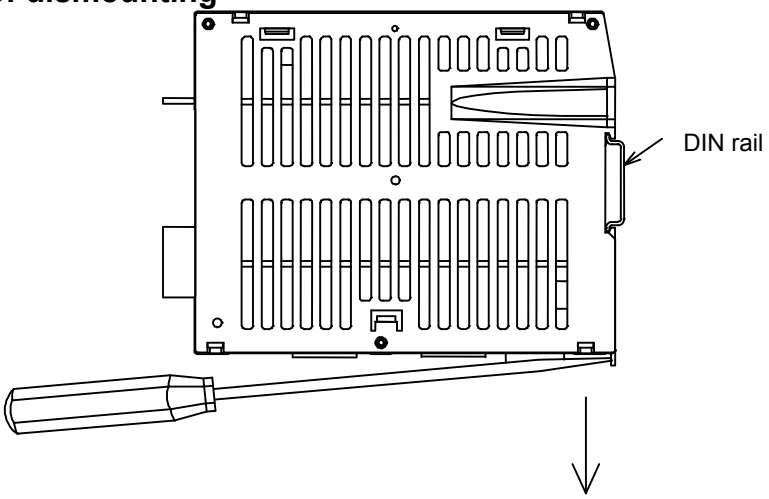


1. Lower the locking section with a flat-blade screwdriver.
2. Pull the lower part of the unit toward you.

**NOTE**

When dismounting the unit, be careful not to damage the locking section by applying an excessive force. When mounting and dismounting the unit, hold the unit by its top and bottom surfaces. Avoid applying force to the sides (where slits are provided).

## 9.12.3 Connection

### 9.12.3.1 Overall connection diagram

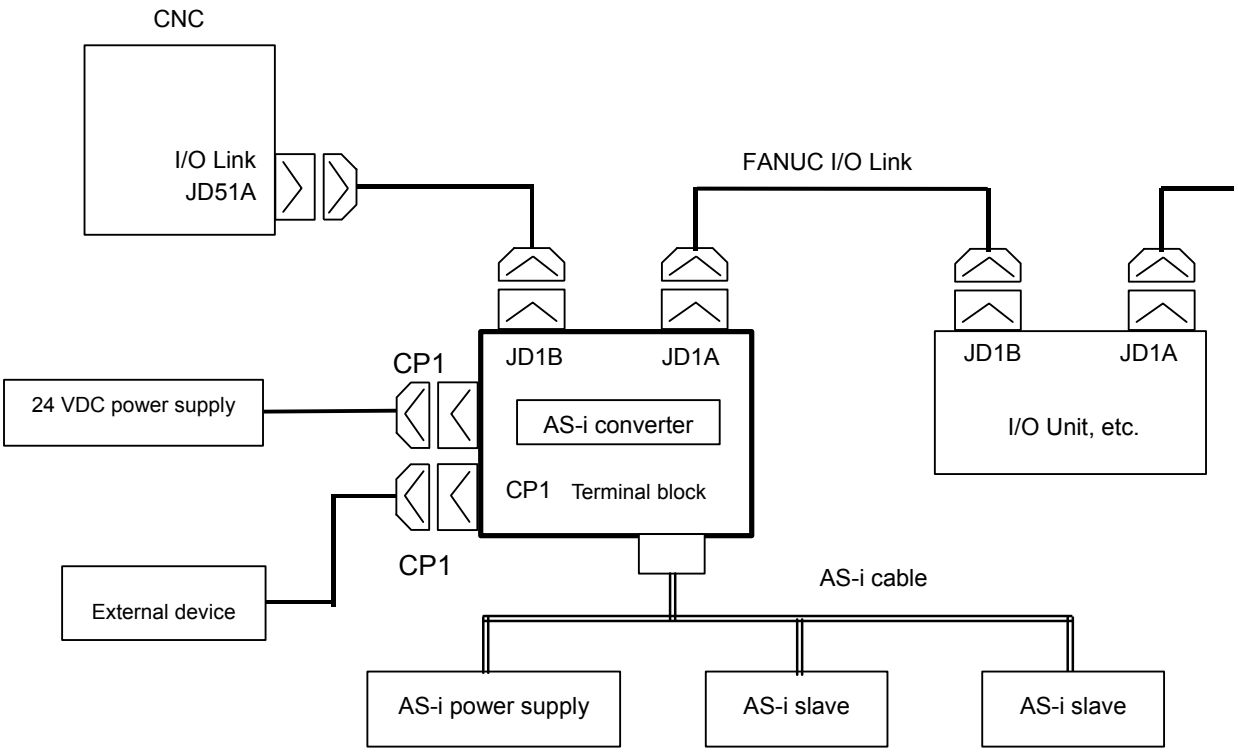


### 9.12.3.2 Power connection

Supply power to the AS-i converter from the CNC or an external 24 VDC regulated power supply.

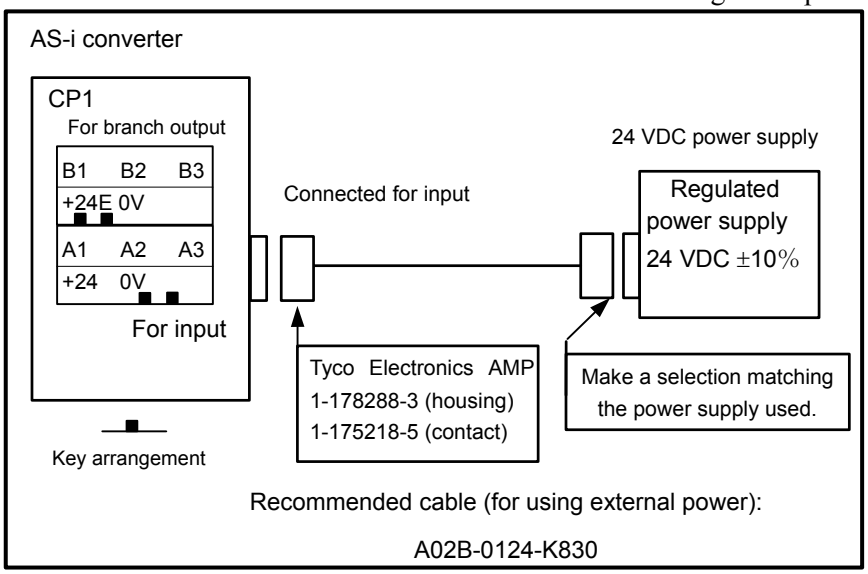


The 24 VDC input to CP1 (A1, A2) can be output from CP1 (B1, B2) for branching. CP1 (B1, B2) is connected as shown below. In this case, the external 24 VDC power supply needs to provide CP1 (A1, A2) with a current which is equal to the sum of the current consumed by the control unit and the current used via CP1 (B1, B2).

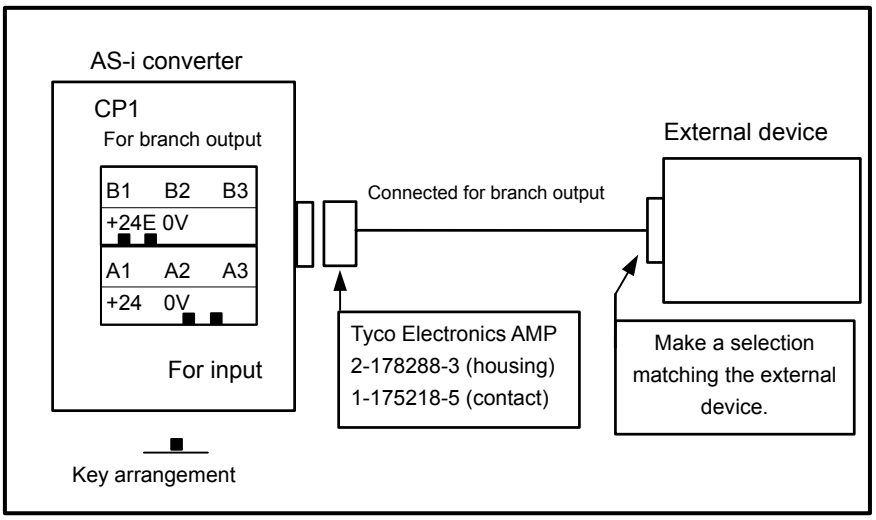


The DC output current supplied from CP1 (B1, B2) is 1 A maximum.

**NOTE**

1 Ensure that +24 V is supplied either when or before the power to the CNC is turned on, and that +24 V is removed either when or after the power to the CNC is turned off.

2 When turning off the power to the CNC control unit, be sure to turn off the power to the AS-i converter and other slave I/O units connected via the I/O Link as well.

3 Turn on the power to the AS-i power supply (power supply connected to the AS-i communication cable) either when or before the power to the CNC control unit is turned on. If the power to the AS-i power supply is turned on after the power to the CNC control unit is turned on, the system may not be started.

## 9.12.3.3 I/O Link connection

Refer to the connection manual of the control unit to be connected. The same connection method applies to all units connected to the I/O Link.

## 9.12.3.4 AS-i connection

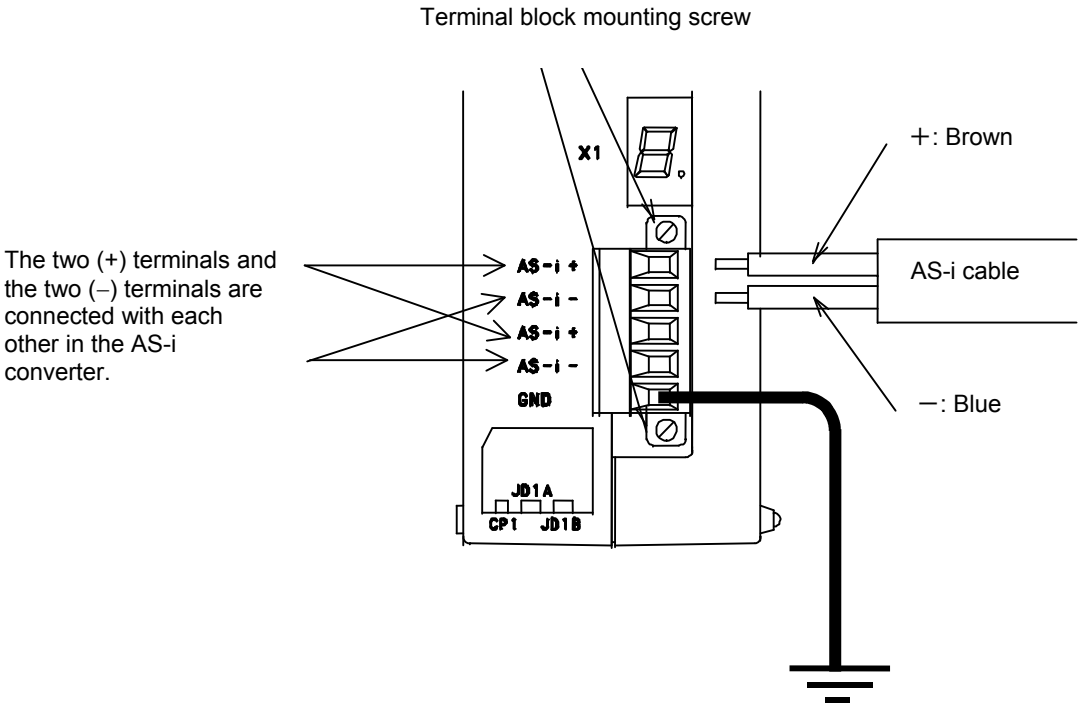


1) Peel off the coating of the AS-i cable then screw the cable onto the terminal block of the AS-i converter.
2) This terminal block is detachable, and work can be done on the terminal block after being detached from the AS-i converter. When attaching the terminal block, firmly tighten the screws for mounting the terminal block.
3) To facilitate AS-i cable branching, two AS-i + terminals and two AS-i – terminals are provided. A + terminal and a – terminal are connected with each other in the AS-i converter. Use those terminals that can be handled more easily.
4) Do not connect two cables to each terminal.
5) Connect the GND terminal to ground.

**NOTE**

To protect against induction noise, separate high-voltage lines and the power line from the AS-i communication cable as much as possible. (It is recommended to separate high-voltage lines and the power line from the AS-i communication cable by 300 mm or more.) Moreover, attach a surge absorber to a device that tends to generate noise.

## 9.12.4 DI/DO Mapping on the I/O Link

### 9.12.4.1 For AS-i Ver. 2.0 (A03B-0817-C001)

On the I/O Link, 32 bytes are assigned for input and 32 bytes are assigned for output.
Assignment name: OC03I for input, OC03O for output

<Input>

| X | bit 7-4 | bit 3-0 |
|---|---|---|
| +0 | DI #1 | Reserved |
| +1 | DI #3 | DI #2 |
| +2 | DI #5 | DI #4 |
| +3 | DI #7 | DI #6 |
| +4 | DI #9 | DI #8 |
| +5 | DI #11 | DI #10 |
| +6 | DI #13 | DI #12 |
| +7 | DI #15 | DI #14 |
| +8 | DI #17 | DI #16 |
| +9 | DI #19 | DI #18 |
| +10 | DI #21 | DI #20 |
| +11 | DI #23 | DI #22 |
| +12 | DI #25 | DI #24 |
| +13 | DI #27 | DI #26 |
| +14 | DI #29 | DI #28 |
| +15 | DI #31 | DI #30 |
| +16 | AS-i master status (1) | |
| +17 | AS-i master status (2) | |
| +18 | Board status (1) | |
| +19 | Board status (2) | |
| +20 | Slave list (1) #1 to #7 | |
| +21 | Slave list (2) #8 to #15 | |
| +22 | Slave list (3) #16 to #23 | |
| +23 | Slave list (4) #24 to #31 | |
| +24 | Command status | |
| +25 | Command error code | |
| +26 | Command response data (1) | |
| +27 | Command response data (2) | |
| +28 | Command response data (3) | |
| +29 | Command response data (4) | |
| +30 | Reserved | |
| +31 | Reserved | |

<Output>

| Y | bit 7-4 | bit 3-0 |
|---|---|---|
| +0 | DO #1 | Reserved |
| +1 | DO #3 | DO #2 |
| +2 | DO #5 | DO #4 |
| +3 | DO #7 | DO #6 |
| +4 | DO #9 | DO #8 |
| +5 | DO #11 | DO #10 |
| +6 | DO #13 | DO #12 |
| +7 | DO #15 | DO #14 |
| +8 | DO #17 | DO #16 |
| +9 | DO #19 | DO #18 |
| +10 | DO #21 | DO #20 |
| +11 | DO #23 | DO #22 |
| +12 | DO #25 | DO #24 |
| +13 | DO #27 | DO #26 |
| +14 | DO #29 | DO #28 |
| +15 | DO #31 | DO #30 |
| +16 | Command flag | |
| +17 | Command code | |
| +18 | Command parameter (1) | |
| +19 | Command parameter (2) | |
| +20 | Command parameter (3) | |
| +21 | Command parameter (4) | |
| +22 | Reserved | |
| +23 | Reserved | |
| +24 | Reserved | |
| +25 | Reserved | |
| +26 | Reserved | |
| +27 | Reserved | |
| +28 | Reserved | |
| +29 | Reserved | |
| +30 | Reserved | |
| +31 | Reserved | |

**NOTE**
A number after # represents an AS-i slave number.

## 9.12.4.2 For AS-i Ver. 2.1 (A03B-0817-C002)

On the I/O Link, 64 bytes are assigned for input and 64 bytes are assigned for output.
Assignment name: OC03I for input, OC03O for output. Two successive groups are assigned.

**<Input>**

Group α

| X | bit 7-4 | bit 3-0 |
|---|---|---|
| +0 | DI #1A | Reserved |
| +1 | DI #3A | DI #2A |
| +2 | DI #5A | DI #4A |
| +3 | DI #7A | DI #6A |
| +4 | DI #9A | DI #8A |
| +5 | DI #11A | DI #10A |
| +6 | DI #13A | DI #12A |
| +7 | DI #15A | DI #14A |
| +8 | DI #17A | DI #16A |
| +9 | DI #19A | DI #18A |
| +10 | DI #21A | DI #20A |
| +11 | DI #23A | DI #22A |
| +12 | DI #25A | DI #24A |
| +13 | DI #27A | DI #26A |
| +14 | DI #29A | DI #28A |
| +15 | DI #31A | DI #30A |
| +16 | AS-i master status (1) | |
| +17 | AS-i master status (2) | |
| +18 | Board status (1) | |
| +19 | Board status (2) | |
| +20 | Slave list (1) #1A to #7A | |
| +21 | Slave list (2) #8A to #15A | |
| +22 | Slave list (3) #16A to #23A | |
| +23 | Slave list (4) #24A to #31A | |
| +24 | Command status | |
| +25 | Command error code | |
| +26 | Command response data (1) | |
| +27 | Command response data (2) | |
| +28 | Command response data (3) | |
| +29 | Command response data (4) | |
| +30 | Reserved | |
| +31 | Reserved | |

Group α+1

| X' | bit 7-4 | bit 3-0 |
|---|---|---|
| +0 | DI #1B | Reserved |
| +1 | DI #3B | DI #2B |
| +2 | DI #5B | DI #4B |
| +3 | DI #7B | DI #6B |
| +4 | DI #9B | DI #8B |
| +5 | DI #11B | DI #10B |
| +6 | DI #13B | DI #12B |
| +7 | DI #15B | DI #14B |
| +8 | DI #17B | DI #16B |
| +9 | DI #19B | DI #18B |
| +10 | DI #21B | DI #20B |
| +11 | DI #23B | DI #22B |
| +12 | DI #25B | DI #24B |
| +13 | DI #27B | DI #26B |
| +14 | DI #29B | DI #28B |
| +15 | DI #31B | DI #30B |
| +16 | Reserved | |
| +17 | Reserved | |
| +18 | Reserved | |
| +19 | Reserved | |
| +20 | Slave list (5) #1B to #7B | |
| +21 | Slave list (6) #8B to #15B | |
| +22 | Slave list (7) #16B to #23B | |
| +23 | Slave list (8) #24B to #31B | |
| +24 | Reserved | |
| +25 | Reserved | |
| +26 | Command response data (5) | |
| +27 | Command response data (6) | |
| +28 | Command response data (7) | |
| +29 | Command response data (8) | |
| +30 | Reserved | |
| +31 | Reserved | |

**NOTE**
A number and letter after # represent an AS-i slave number.

**<Output>**

Group α

| Y | bit 7-4 | bit 3-0 |
|---|---|---|
| +0 | DO #1A | Reserved |
| +1 | DO #3A | DO #2A |
| +2 | DO #5A | DO #4A |
| +3 | DO #7A | DO #6A |
| +4 | DO #9A | DO #8A |
| +5 | DO #11A | DO #10A |
| +6 | DO #13A | DO #12A |
| +7 | DO #15A | DO #14A |
| +8 | DO #17A | DO #16A |
| +9 | DO #19A | DO #18A |
| +10 | DO #21A | DO #20A |
| +11 | DO #23A | DO #22A |
| +12 | DO #25A | DO #24A |
| +13 | DO #27A | DO #26A |
| +14 | DO #29A | DO #28A |
| +15 | DO #31A | DO #30A |
| +16 | Command flag | |
| +17 | Command code | |
| +18 | Command parameter (1) | |
| +19 | Command parameter (2) | |
| +20 | Command parameter (3) | |
| +21 | Command parameter (4) | |
| +22 | Command parameter (5) | |
| +23 | Reserved | |
| +24 | Reserved | |
| +25 | Reserved | |
| +26 | Reserved | |
| +27 | Reserved | |
| +28 | Reserved | |
| +29 | Reserved | |
| +30 | Reserved | |
| +31 | Reserved | |

Group α+1

| Y' | bit 7-4 | bit 3-0 |
|---|---|---|
| +0 | DO #1B | Reserved |
| +1 | DO #3B | DO #2B |
| +2 | DO #5B | DO #4B |
| +3 | DO #7B | DO #6B |
| +4 | DO #9B | DO #8B |
| +5 | DO #11B | DO #10B |
| +6 | DO #13B | DO #12B |
| +7 | DO #15B | DO #14B |
| +8 | DO #17B | DO #16B |
| +9 | DO #19B | DO #18B |
| +10 | DO #21B | DO #20B |
| +11 | DO #23B | DO #22B |
| +12 | DO #25B | DO #24B |
| +13 | DO #27B | DO #26B |
| +14 | DO #29B | DO #28B |
| +15 | DO #31B | DO #30B |
| +16 | Reserved | |
| +17 | Reserved | |
| +18 | Command parameter (6) | |
| +19 | Command parameter (7) | |
| +20 | Command parameter (8) | |
| +21 | Command parameter (9) | |
| +22 | Reserved | |
| +23 | Reserved | |
| +24 | Reserved | |
| +25 | Reserved | |
| +26 | Reserved | |
| +27 | Reserved | |
| +28 | Reserved | |
| +29 | Reserved | |
| +30 | Reserved | |
| +31 | Reserved | |

**NOTE**

1 A number and letter after # represent an AS-i slave number.

2 To group α, the standard slave or an A slave of the A/B slaves is assigned.
To group α+1, a B slave of the A/B slaves is assigned.

# 9.12.5 Details of I/O Link DI/DO

## 9.12.5.1 Input/output data area

### For AS-i Ver. 2.0 (A03B-0817-C001)

Input signals are assigned to X+0 to X+15, and output signals are assigned to Y+0 to Y+15. Each bit set to 1 represents the ON state, and each bit set to 0 represents the OFF state.

**<Input>**

| Address | bit 7 | bit 6 | bit 5 | bit 4 | bit 3 | bit 2 | bit 1 | bit 0 |
|---|---|---|---|---|---|---|---|---|
| X+0 | DI of slave address #1 | | | | Reserved | | | |
| | IN4 | IN3 | IN2 | IN1 | Reserved | Reserved | Reserved | Reserved |
| X+1 | DI of slave address #3 | | | | DI of slave address #2 | | | |
| | IN4 | IN3 | IN2 | IN1 | IN4 | IN3 | IN2 | IN1 |
| :<br>: | :<br>: | :<br>: | :<br>: | :<br>: | :<br>: | :<br>: | :<br>: | :<br>: |
| X+15 | DI of slave address #31 | | | | DI of slave address #30 | | | |
| | IN4 | IN3 | IN2 | IN1 | IN4 | IN3 | IN2 | IN1 |

**<Output>**

| Address | bit 7 | bit 6 | bit 5 | bit 4 | bit 3 | bit 2 | bit 1 | bit 0 |
|---|---|---|---|---|---|---|---|---|
| Y+0 | DO of slave address #1 | | | | Reserved | | | |
| | OUT4 | OUT3 | OUT2 | OUT1 | Reserved | Reserved | Reserved | Reserved |
| Y+1 | DO of slave address #3 | | | | DO of slave address #2 | | | |
| | OUT4 | OUT3 | OUT2 | OUT1 | OUT4 | OUT3 | OUT2 | OUT1 |
| :<br>: | :<br>: | :<br>: | :<br>: | :<br>: | :<br>: | :<br>: | :<br>: | :<br>: |
| Y+15 | DO of slave address #31 | | | | DO of slave address #30 | | | |
| | OUT4 | OUT3 | OUT2 | OUT1 | OUT4 | OUT3 | OUT2 | OUT1 |

### For AS-i Ver. 2.1 (A03B-0817-C002)

Input signals are assigned to X+0 to X+15 (group α) and X'+0 to X'+15 (group α+1), and output signals are assigned to Y+0 to Y+15 (group α) and Y'+0 to Y'+15 (group α+1). Each bit set to 1 represents the ON state, and each bit set to 0 represents the OFF state.

**<Input>**

| | Address | bit 7 | bit 6 | bit 5 | bit 4 | bit 3 | bit 2 | bit 1 | bit 0 |
|---|---|---|---|---|---|---|---|---|---|
| Group α | X+0 | DI of slave address #1A | | | | Reserved | | | |
| | | IN4 | IN3 | IN2 | IN1 | Reserved | Reserved | Reserved | Reserved |
| | X+1 | DI of slave address #3A | | | | DI of slave address #2A | | | |
| | | IN4 | IN3 | IN2 | IN1 | IN4 | IN3 | IN2 | IN1 |
| | :<br>: | :<br>: | :<br>: | :<br>: | :<br>: | :<br>: | :<br>: | :<br>: | :<br>: |
| | X+15 | DI of slave address #31A | | | | DI of slave address #30A | | | |
| | | IN4 | IN3 | IN2 | IN1 | IN4 | IN3 | IN2 | IN1 |
| Group α+1 | X'+0 | DI of slave address #1B | | | | Reserved | | | |
| | | IN4 | IN3 | IN2 | IN1 | Reserved | Reserved | Reserved | Reserved |
| | X'+1 | DI of slave address #3B | | | | DI of slave address #2B | | | |
| | | IN4 | IN3 | IN2 | IN1 | IN4 | IN3 | IN2 | IN1 |
| | :<br>: | :<br>: | :<br>: | :<br>: | :<br>: | :<br>: | :<br>: | :<br>: | :<br>: |
| | X'+15 | DI of slave address #31B | | | | DI of slave address #30B | | | |
| | | IN4 | IN3 | IN2 | IN1 | IN4 | IN3 | IN2 | IN1 |

**<Output>**

| | Address | bit 7 | bit 6 | bit 5 | bit 4 | bit 3 | bit 2 | bit 1 | bit 0 |
|---|---|---|---|---|---|---|---|---|---|
| Group α | Y+0 | DO of slave address #1A | | | | Reserved | | | |
| | | OUT4(NOTE) | OUT3 | OUT2 | OUT1 | Reserved | Reserved | Reserved | Reserved |
| | Y+1 | DO of slave address #3A | | | | DO of slave address #2A | | | |
| | | OUT4(NOTE) | OUT3 | OUT2 | OUT1 | OUT4(NOTE) | OUT3 | OUT2 | OUT1 |
| | : | : | : | : | : | : | : | : | : |
| | : | : | : | : | : | : | : | : | : |
| | X+15 | DO of slave address #31A | | | | DO of slave address #30A | | | |
| | | OUT4(NOTE) | OUT3 | OUT2 | OUT1 | OUT4(NOTE) | OUT3 | OUT2 | OUT1 |
| Group α+1 | Y'+0 | DO of slave address #1B | | | | Reserved | | | |
| | | Reserved | OUT3 | OUT2 | OUT1 | Reserved | Reserved | Reserved | Reserved |
| | Y'+1 | DO of slave address #3B | | | | DO of slave address #2B | | | |
| | | Reserved | OUT3 | OUT2 | OUT1 | Reserved | OUT3 | OUT2 | OUT1 |
| | : | : | : | : | : | : | : | : | : |
| | : | : | : | : | : | : | : | : | : |
| | Y'+15 | DO of slave address #31B | | | | DO of slave address #30B | | | |
| | | Reserved | OUT3 | OUT2 | OUT1 | Reserved | OUT3 | OUT2 | OUT1 |

**NOTE**

A number and letter after # represent an AS-i slave number.
When the standard slave is used, DI/DO signals are assigned to group α (X+0 to X+15 and Y+0 to Y+15).
When the A/B slave is used, OUT4 is reserved and cannot be used.

## 9.12.5.2 AS-i master status indication

| Address | Bit | Item | Bit status | Condition for ON |
|---|---|---|---|---|
| X+16 | 0 | Offline phase status | 0: Not offline<br>1: Offline | When a command for setting the offline status such as a command for configuration registration is executed or the AS-i power supply is turned off |
| | 1 | AS-i power supply monitor | 0: Normal<br>1: Decreased voltage or OFF | When the AS-i power supply voltage has decreased or the AS-i power supply is turned off |
| | 2 | Operation status | 0: Initialization in progress or start-up operation in progress<br>1: Normal operation mode | The normal operation mode is set when AS-i communication is enabled. |
| | 3 | Operation mode | 0: Protection mode<br>1: Configuration mode | When the configuration mode is set |
| | 4 | Status of automatic addressing | 0: Disabled<br>1: Enabled | Status where automatic addressing is enabled (when the protection mode is set, automatic addressing is enabled, and one slave is detached) |
| | 5 | Reserved | | |
| | 6 | Connection of slave with address 0 | 0: Not connected<br>1: Connected | When a slave with address 0 is connected |
| | 7 | Matching of current configuration with registered configuration | 0: Mismatch<br>1: Match | When the registered configuration matches detected slaves |

| Address | Bit | Item | Bit status | Condition for ON |
|---|---|---|---|---|
| X+17 | 0 | Offline operation status | 0: Not offline<br>1: Offline | |
| | 1 | Reserved | | |
| | 2 | EEPROM status in AS-i master | 0: Abnormal<br>1: Normal | When the EEPROM in the AS-i master is normal |
| | 3 | Automatic addressing enable status | 0: Disabled<br>1: Enabled | When automatic addressing is enabled |
| | 4 to 7 | Reserved | | |

## 9.12.5.3 Board status

| Address | Bit | Item | Bit status | |
|---|---|---|---|---|
| X+18 | 0 | AS-i data ready | 0: DI/DO data is invalid. | 1: DI/DO data is valid. |
| | 1 | Error status | 0: Normal | 1: Alarm |
| | 2 | AS-i master error | 0: Normal | 1: AS-i master error |
| | 3 | ROM error | 0: Normal | 1: ROM error |
| | 4 | RAM error | 0: Normal | 1: RAM error |
| | 5 | Watchdog alarm | 0: Normal | 1: CPU watchdog alarm |
| | 6 | Reserved | | |
| | 7 | Reserved | | |
| X+19 | 0 to 3 | Software version | | |
| | 4 to 7 | Hardware version | | |

**NOTE**

To use the AS-i safely, be sure to monitor the AS-i status.
When using DI/DO data on the AS-i side, be sure to monitor the AS-i power supply monitor information in Subsection 9.12.5.2, the AS-i data ready bit in Subsection 9.12.5.3, and other error information items. If any of these information items indicates an error or illegal status, the DI/DO data on the AS-i converter side is also invalid. So, correct the system to maintain the safe status.

## 9.12.5.4 Slave list

From addresses X+20 to X+23 (plus X'+20 to X'+23 for Ver. 2.1), data is output in one of four different modes, depending on the list output mode setting (bits 6 and 7 of Y+16 (Subsection 9.12.6.3)).

### For AS-i Ver. 2.0 (A03B-0817-C001)

| Address | bit 7 | bit 6 | bit 5 | bit 4 | bit 3 | bit 2 | bit 1 | bit 0 |
|---|---|---|---|---|---|---|---|---|
| X+20 | #7 | #6 | #5 | #4 | #3 | #2 | #1 | Reserved |
| X+21 | #15 | #14 | #13 | #12 | #11 | #10 | #9 | #8 |
| X+22 | #23 | #22 | #21 | #20 | #19 | #18 | #17 | #16 |
| X+23 | #31 | #30 | #29 | #28 | #27 | #26 | #25 | #24 |

**For AS-i Ver. 2.1 (A03B-0817-C002)**

| Group | Address | bit 7 | bit 6 | bit 5 | bit 4 | bit 3 | bit 2 | bit 1 | bit 0 |
|---|---|---|---|---|---|---|---|---|---|
| α | X+20 | #7A | #6A | #5A | #4A | #3A | #2A | #1A | Reserved |
| | X+21 | #15A | #14A | #13A | #12A | #11A | #10A | #9A | #8A |
| | X+22 | #23A | #22A | #21A | #20A | #19A | #18A | #17A | #16A |
| | X+23 | #31A | #30A | #29A | #28A | #27A | #26A | #25A | #24A |
| α+1 | X'+20 | #7B | #6B | #5B | #4B | #3B | #2B | #1B | Reserved |
| | X'+21 | #15B | #14B | #13B | #12B | #11B | #10B | #9B | #8B |
| | X'+22 | #23B | #22B | #21B | #20B | #19B | #18B | #17B | #16B |
| | X'+23 | #31B | #30B | #29B | #28B | #27B | #26B | #25B | #24B |

**Mode 0**: Discrepancy between LPS (list of configured slaves) and LES (list of detected slaves)
0: There is no discrepancy between LPS and LES.
1: There is a discrepancy between LPS and LES.

**Mode 1**: Contents of LES (list of detected slaves)
0: Slaves not connected
1: Slaves currently connected

**Mode 2**: Contents of LAS (list of active slaves)
0: Slaves not active
1: Slaves currently active

**Mode 3**: Contents of LPS (list of configured slaves)
0: Slaves not configured
1: Slaves configured

Check LES (mode 1) to know which slave is connected.
Check LPS (mode 2) to know which slave is configured.
Set mode 0 in normal operation. If a configuration mismatch error occurs during operation in the protection mode, a mismatching slave can be identified by the discrepancy between LPS and LES (mode 0).

**NOTE**
If the list output mode is switched, up to about 3 seconds may be required until an output change actually takes place after the mode switching. When reading with a ladder, be sure to check the list output mode in status information beforehand.

## 9.12.6 Command Execution by a Ladder Program

A ladder program can read or write the parameter of an AS-i slave unit, can change addresses, and can read the I/O configuration and ID code.

### 9.12.6.1 Types of commands executable by a ladder program

| | Command code (HEX) | Description | Parameter byte length | Response data byte length |
|---|---|---|---|---|
| | 0AH | Writes the parameter of a particular slave to the EEPROM. | 2 | 0 |
| | 0BH | Reads the parameter of a particular slave from the EEPROM. | 1 | 1 |
| | 0CH | Writes a parameter to a particular slave. | 2 | 1 |
| | 0DH | Reads the parameter of a particular slave. | 1 | 1 |
| | 12H | Reads the I/O configuration and ID code of a particular slave. | 1 | 2 |
| | 17H | Changes the address of a particular slave. | 2 | 0 |
| For Ver. 2.1 only | 29H | Reads the analog input data of a particular slave. | 1 | 8 |
| For Ver. 2.1 only | 2AH | Writes analog output data to a particular slave. | 9 | 0 |

### 9.12.6.2 Command interface with a ladder program

**DO (PMC → AS-i converter)**

| | Address | Name | Description |
|---|---|---|---|
| | Y+16 | Command flag | Command execution request flag, list output setting mode |
| | Y+17 | Command code | Command code |
| | Y+18 | Command parameter 1 | When the command has a parameter |
| | Y+19 | Command parameter 2 | Same as above |
| | Y+20 | Command parameter 3 | Same as above |
| | Y+21 | Command parameter 4 | Same as above |
| For Ver. 2.1 only | Y+22 | Command parameter 5 | Same as above |
| For Ver. 2.1 only | Y'+18 | Command parameter 6 | Same as above |
| For Ver. 2.1 only | Y'+19 | Command parameter 7 | Same as above |
| For Ver. 2.1 only | Y'+20 | Command parameter 8 | Same as above |
| For Ver. 2.1 only | Y'+21 | Command parameter 9 | Same as above |

**DI (AS-i converter → PMC)**

| | Address | Name | Description |
|---|---|---|---|
| | X+24 | Command status | End flag, list output status |
| | X+25 | Command error status | Error code of the executed command |
| | X+26 | Command response data 1 | When the command has response data |
| | X+27 | Command response data 2 | Same as above |
| | X+28 | Command response data 3 | Same as above |
| | X+29 | Command response data 4 | Same as above |
| For Ver. 2.1 only | X'+26 | Command response data 5 | Same as above |
| For Ver. 2.1 only | X'+27 | Command response data 6 | Same as above |
| For Ver. 2.1 only | X'+28 | Command response data 7 | Same as above |
| For Ver. 2.1 only | X'+29 | Command response data 8 | Same as above |

## 9.12.6.3 Details of command flags and status

<table>
<tr><th>Address</th><th>Bit</th><th>Description</th></tr>
<tr><td rowspan="3">Y+16</td><td>0</td><td>Request flag 1: Requested</td></tr>
<tr><td>1 to 5</td><td>Reserved</td></tr>
<tr><td>6<br>7</td><td>List output request mode
<table>
<tr><th>Bit 7</th><th>Bit 6</th><th>Description</th></tr>
<tr><td>0</td><td>0</td><td>Discrepancy between LPS and LES</td></tr>
<tr><td>0</td><td>1</td><td>LES (list of detected slaves)</td></tr>
<tr><td>1</td><td>0</td><td>LAS (list of active slaves)</td></tr>
<tr><td>1</td><td>1</td><td>LPS (list of configured slaves)</td></tr>
</table></td></tr>
</table>

<table>
<tr><td rowspan="3">X+24</td><td>0</td><td>End flag 1: End of command</td></tr>
<tr><td>1</td><td>Error flag 1: Command error (For details, see Subsection 9.12.6.4, "Error codes".)</td></tr>
<tr><td>2 to 5</td><td>Reserved</td></tr>
<tr><td></td><td>6<br>7</td><td>List output mode
<table>
<tr><th>Bit 7</th><th>Bit 6</th><th>Description</th></tr>
<tr><td>0</td><td>0</td><td>Discrepancy between LPS and LES</td></tr>
<tr><td>0</td><td>1</td><td>LES (list of detected slaves)</td></tr>
<tr><td>1</td><td>0</td><td>LAS (list of active slaves)</td></tr>
<tr><td>1</td><td>1</td><td>LPS (list of configured slaves)</td></tr>
</table></td></tr>
</table>

## 9.12.6.4 Error codes

| Error code (HEX) | Description |
|---|---|
| 00H | Normal command termination |
| 02H | Slave address error |
| 03H | The specified slave is not active (not listed in LAS). |
| 04H | A slave with address 0 exists. |
| 05H | AS-i communication error |
| 06H | EEPROM error |
| 07H | Command or parameter error |
| 08H | In executable command |
| 09H | Command error (command code error) |

## 9.12.6.5 Command handshake sequence

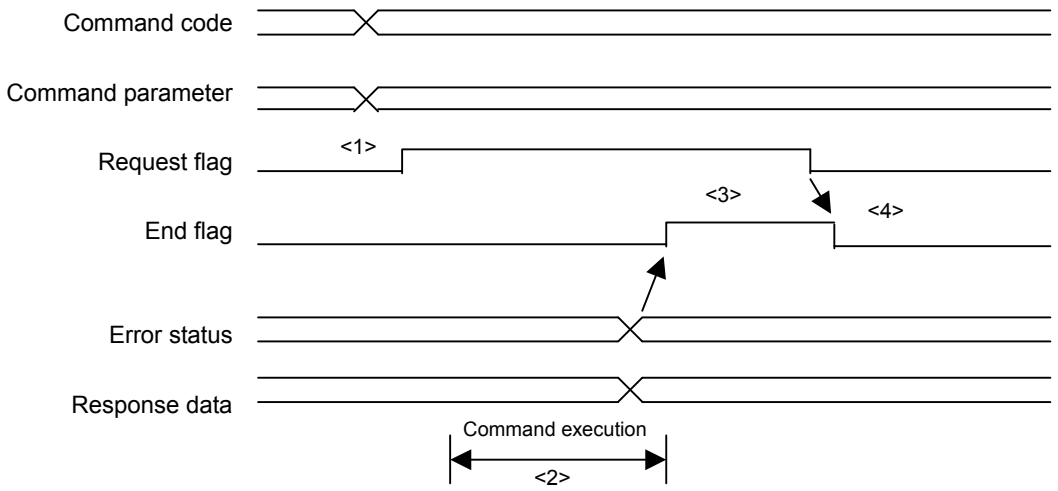

**<1> PMC side**: Command code is written after checking that both of the request flag and end flag are OFF. If the command has parameter data, the parameter data is written simultaneously. Next, the request flag is set to ON. Within the same scan period, command code may be written and the request flag may be set to ON.

**<2> Converter side**: When the request flag is set, command code is read then the command is executed. Upon completion of command execution, error status and response data are transferred then the end flag is set to ON.

**<3> PMC side**: The end flag set to ON is awaited. When the end flag is set to ON, error status is read. In the case of normal termination with response data, the response data is read. Upon completion of processing, the end flag is set to OFF.

**<4> Converter side**: When the request flag is set to OFF, the end flag is set to OFF.

**NOTE**
The operations of <2> and <4> are performed by the AS-i converter.

## 9.12.6.6 Details of commands

### (1) Writing the parameter of a particular slave to the EEPROM of the AS-i master

| | Address | bit 7 | bit 6 | bit 5 | bit 4 | bit 3 | bit 2 | bit 1 | bit 0 |
|---|---|---|---|---|---|---|---|---|---|
| Execution data | Y+17 | 0AH | | | | | | | |
| | Y+18 | Slave address (01H to 1FH, 21H to 3FH)(NOTE) | | | | | | | |
| | Y+19 | 0 | | | | Parameter value | | | |
| | Y+20 to Y+21 | Not set | | | | | | | |
| Response data | X+25 | Error code | | | | | | | |

A parameter value written to the EEPROM of the AS-i master is not transferred to slaves at the time of command execution but is transferred to each slave when the power is turned on next time.

### (2) Reading the parameter of a particular slave from the EEPROM of the AS-i master

| | Address | bit 7 | bit 6 | bit 5 | bit 4 | bit 3 | bit 2 | bit 1 | bit 0 |
|---|---|---|---|---|---|---|---|---|---|
| Execution data | Y+17 | 0BH | | | | | | | |
| | Y+18 | Slave address (01H to 1FH, 21H to 3FH)(NOTE) | | | | | | | |
| | Y+19 to Y+21 | Not set | | | | | | | |
| Response data | X+25 | Error code | | | | | | | |
| | X+26 | 0 | | | | Parameter value | | | |

### (3) Writing a parameter to a particular slave

| | Address | bit 7 | bit 6 | bit 5 | bit 4 | bit 3 | bit 2 | bit 1 | bit 0 |
|---|---|---|---|---|---|---|---|---|---|
| Execution data | Y+17 | 0CH | | | | | | | |
| | Y+18 | Slave address (01H to 1FH, 21H to 3FH)(NOTE) | | | | | | | |
| | Y+19 | 0 | | | | Parameter value | | | |
| | Y+20 to Y+21 | Not set | | | | | | | |
| Response data | X+25 | Error code | | | | | | | |
| | X+26 | 0 | | | | Parameter echo | | | |

A parameter value is transferred to a slave at the time of command execution. However, the parameter value is not stored in the EEPROM of the AS-i master, so that the parameter value is lost when the power is turned off.

### (4) Reading the parameter of a particular slave

| | Address | bit 7 | bit 6 | bit 5 | bit 4 | bit 3 | bit 2 | bit 1 | bit 0 |
|---|---|---|---|---|---|---|---|---|---|
| Execution data | Y+17 | 0DH | | | | | | | |
| | Y+18 | Slave address (01H to 1FH, 21H to 3FH)(NOTE) | | | | | | | |
| | Y+19 to Y+21 | Not set | | | | | | | |
| Response data | X+25 | Error code | | | | | | | |
| | X+26 | 0 | | | | Parameter value | | | |

### (5) Reading the I/O configuration and ID code of a particular slave

| | Address | bit 7 | bit 6 | bit 5 | bit 4 | bit 3 | bit 2 | bit 1 | bit 0 |
|---|---|---|---|---|---|---|---|---|---|
| Execution data | Y+17 | 12H | | | | | | | |
| | Y+18 | Slave address (01H to 1FH, 21H to 3FH)(NOTE) | | | | | | | |
| | Y+19 to Y+21 | Not set | | | | | | | |
| Response data | X+25 | Error code | | | | | | | |
| | X+26 | 0 | | | | ID code | | | |
| | X+27 | 0 | | | | I/O configuration | | | |

### (6) Changing the address of a particular slave

| | Address | bit 7 | bit 6 | bit 5 | bit 4 | bit 3 | bit 2 | bit 1 | bit 0 |
|---|---|---|---|---|---|---|---|---|---|
| Execution data | Y+17 | 17H | | | | | | | |
| | Y+18 | Slave address before change (01H to 1FH, 21H to 3FH)(NOTE) | | | | | | | |
| | Y+19 | Slave address after change (01H to 1FH, 21H to 3FH)(NOTE) | | | | | | | |
| | Y+20 to Y+21 | Not set | | | | | | | |
| Response data | X+25 | Error code | | | | | | | |

This command cannot be executed when a slave with address 0 is connected.

### (7) Reading the analog input data of a particular slave

| | Address | bit 7 | bit 6 | bit 5 | bit 4 | bit 3 | bit 2 | bit 1 | bit 0 |
|---|---|---|---|---|---|---|---|---|---|
| Execution data | Y+17 | 29H | | | | | | | |
| | Y+18 | Slave address (01H to 1FH)(NOTE) | | | | | | | |
| | Y+19 to Y+21 | Not set | | | | | | | |
| | Y'+18 to Y'+21 | Not set | | | | | | | |
| Response data | X+25 | Error code | | | | | | | |
| | X+26 | Channel 1 input data (higher byte) | | | | | | | |
| | X+27 | Channel 1 input data (lower byte) | | | | | | | |
| | X+28 | Channel 2 input data (higher byte) | | | | | | | |
| | X+29 | Channel 2 input data (lower byte) | | | | | | | |
| | X'+26 | Channel 3 input data (higher byte) | | | | | | | |
| | X'+27 | Channel 3 input data (lower byte) | | | | | | | |
| | X'+28 | Channel 4 input data (higher byte) | | | | | | | |
| | X'+29 | Channel 4 input data (lower byte) | | | | | | | |

This command can be executed only with an AS-i converter of Ver. 2.1.

### (8) Writing analog output data to a particular slave

| | Address | bit 7 | bit 6 | bit 5 | bit 4 | bit 3 | bit 2 | bit 1 | bit 0 |
|---|---|---|---|---|---|---|---|---|---|
| Execution data | Y+17 | 2AH | | | | | | | |
| | Y+18 | Slave address (01H to 1FH)(NOTE) | | | | | | | |
| | Y+19 | Channel 1 output data (higher byte) | | | | | | | |
| | Y+20 | Channel 1 output data (lower byte) | | | | | | | |
| | Y+21 | Channel 2 output data (higher byte) | | | | | | | |
| | Y+22 | Channel 2 output data (lower byte) | | | | | | | |
| | Y'+18 | Channel 3 output data (higher byte) | | | | | | | |
| | Y'+19 | Channel 3 output data (lower byte) | | | | | | | |
| | Y'+20 | Channel 4 output data (higher byte) | | | | | | | |
| | Y'+21 | Channel 4 output data (lower byte) | | | | | | | |
| Response data | X+25 | Error code | | | | | | | |

This command can be executed only with an AS-i converter of Ver. 2.1.

**NOTE**

Input an AS-i slave address number as follows:

| Slave type | Address input method |
|---|---|
| Standard slave or A slave | Input an address number directly in hexadecimal (01H to 1FH). |
| B slave | Input an address number added to 32 (20hex) in hexadecimal.<br><br>Example) When the address is 10B<br>10 + 32 → 42 (Input 2Ahex.) |

An analog slave is a standard slave to which address distinction between A and B is not applicable. So, input an address number directly in hexadecimal (01H to 1FH).

## 9.12.7 LED Status Indication and Setting Switch Operation

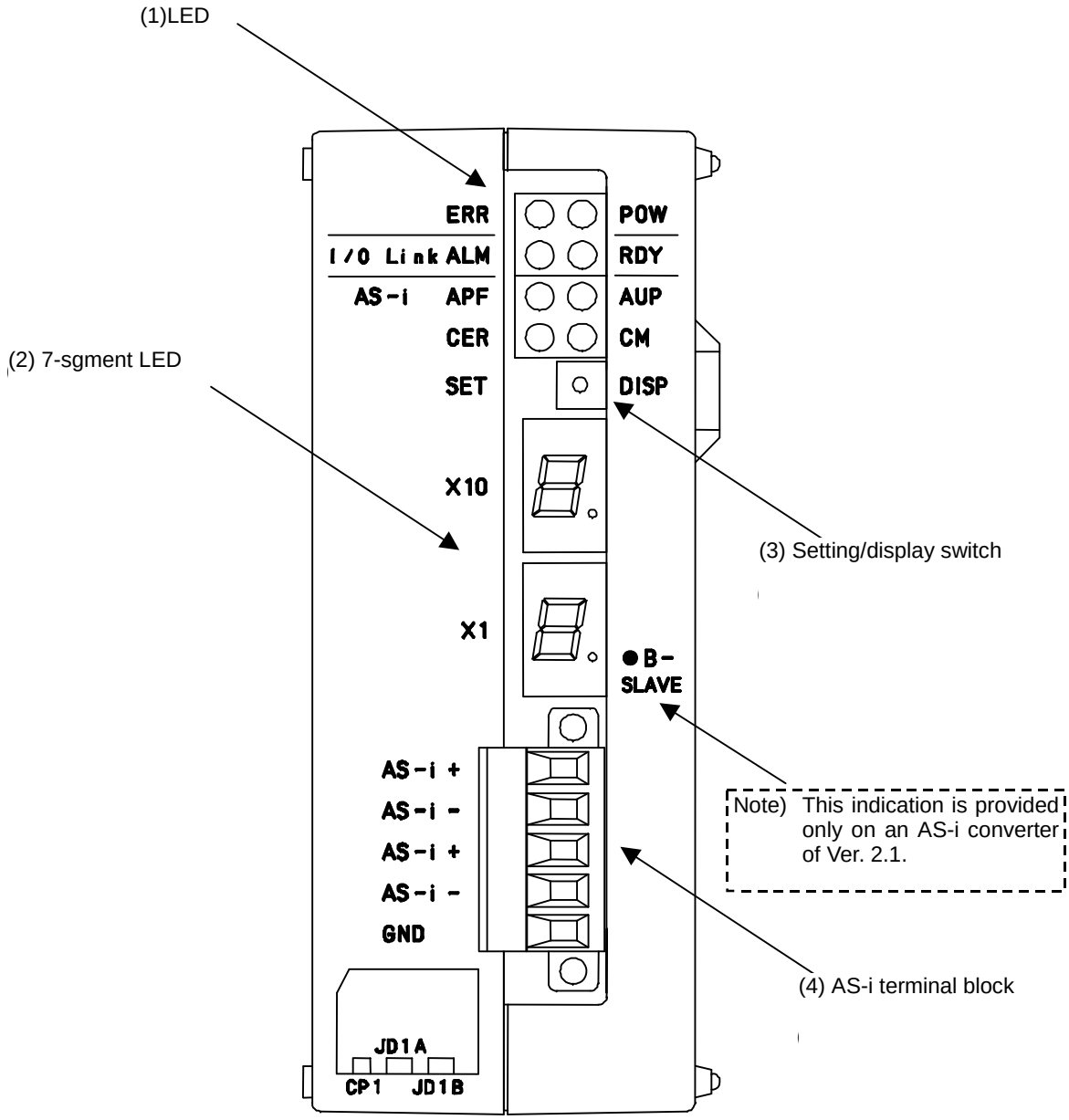


### 9.12.7.1 LED indication

| | Name | Color | Description |
|---|---|---|---|
| Overall | POW | Green | Indicates that the power to the AS-i converter is on. |
| | ERR | Red | Turned on when there is an error. (For error details, check the other LEDs, 7-segment LEDs, and status on the I/O Link.) |
| I/O Link | RDY | Green | Turned on when the I/O Link is ready for communication. |
| | ALM | Red | Indicates that an alarm is issued on the I/O Link. (For error details, check the 7-segment LEDs.) |

| | Name | Color | Description |
|---|---|---|---|
| AS-i | AUP | Green | Turned on when the operation mode is the protection mode and automatic addressing is enabled. |
| | CM | Green | Turned on when the operation mode is the configuration mode and turned off when the operation mode is the protection mode. |
| | APF | Red | Turned on when the voltage of the AS-i power supply is low. |
| | CER | Red | Turned on when there is a discrepancy between the configured slaves and the currently connected slaves (when there is a discrepancy in LPS, ID code, or I/O configuration). |

## 9.12.7.2 7-segment LED indication

| LED indication | Description |
|---|---|
| No indication | Normal operation |
| E0 | AS-i master error |
| E1 | AS-i master EEPROM error |
| E2 | ROM error |
| E3 | RAM error |
| E5 | Command execution error, SET switch execution error |
| E6 | I/O Link slave watchdog alarm |
| E7 | I/O Link RAM error |
| E8 | Watchdog alarm 1 |
| E9 or "." (dot) of X10 | Watchdog alarm 2 |
| 00 to 31 | Slave address indication (See the table below and the next page.) |
| "." (dot) of X1 | Turned on when a B slave address is indicated. |
| 88 | Initialization in progress, mode switching in progress, AS-i power supply voltage decrease |

| Operation mode | In normal operation | When the setting switch (DISP) is pressed |
|---|---|---|
| Configuration mode | No display | Displays all connected slaves at intervals of about one second (display of LES). |
| Protection mode | The smallest slave address among those of the configuration-mismatching slaves is displayed. | Displays all configuration-mismatching slaves at intervals of about one second (displays a list of discrepancies between LPS and LES).<br>* No data is displayed when there is no configuration-mismatching slave. |

### Order of slave number display with Ver. 2.1

Slave numbers are displayed in the order from standard slaves or A slaves (with "." of X1 turned off) to B slaves (with "." of X1 turned on).

(Example)

When the following slaves are connected, the slave numbers are displayed in the order shown below:

| | |
|---|---|
| Address #10 | Standard slave |
| Address #20A | A/B slave |
| Address #20B | A/B slave |
| Address #30 | Standard slave |

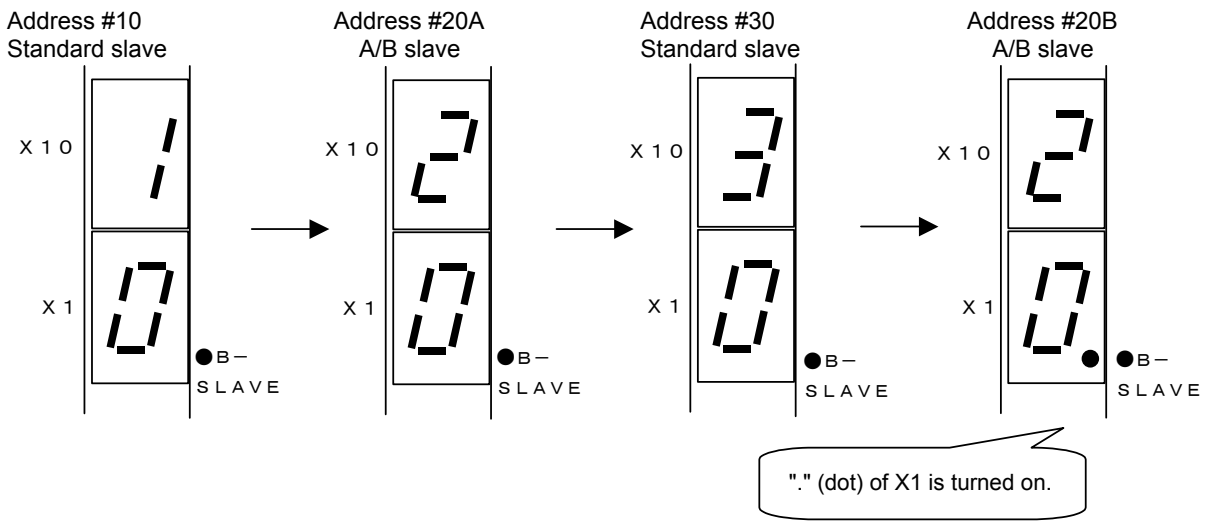


## 9.12.7.3 Setting/display switch

| Switch | Operation mode | |
|---|---|---|
| | **Configuration mode** | **Protection mode** |
| DISP | The addresses of slaves are displayed.<br>No additional input is accepted until the addresses of all slaves are displayed. | |
| | The addresses of all slaves are displayed at intervals of about 1 second. (LES is displayed). | The addresses of all configuration-mismatching slaves are displayed at intervals of about 1 second. (A list of discrepancies between LPS and LES is displayed.)<br><br>No data is displayed when there is no configuration-mismatching slave. |
| SET | The operation mode is switched.<br>Holding down this switch continually does not switch the mode successively. Be sure to turn off this switch for 1 second or more before switching to the next mode. | |
| | Pressing this switch for 5 seconds or more registers the current slave configuration (LPS, ID code, I/O configuration, and parameters), enables automatic addressing, and switches the mode to the protection mode.<br><br>Pressing this switch for less than 5 seconds changes the mode to the protection mode. In this case, however, the configuration is not registered and automatic addressing is not enabled. | Pressing this switch for 5 seconds or more changes the mode to the configuration mode.<br><br>Pressing this switch for less than 5 seconds does not change the mode. |

**NOTE**

If a slave with address 0 is connected, the configuration cannot be registered and the mode is not switched to the protection mode. Alarm E5 is indicated.

## 9.12.7.4 Error processing

Check the error state with the LED indication and the status signals on the I/O Link.

| Alarm or warning | LED indication | | Status signals on I/O Link | | | Cause and corrective action |
|---|---|---|---|---|---|---|
| | LED | 7-segment LED | ERR X+18 bit 1 | AS-i data ready X+18 bit 0 | Others | |
| Normal operation | - | Turned off | 0 | 1 | - | - |
| Configuration mismatch | CER turned on | (NOTE) | 0 | 1 | X+16 bit 7=0 | There are discrepancies between the registered configuration and the current slave configuration. Pressing DISP in the protection mode displays the addresses of configuration-mismatching slaves.<br>The cause may be a slave unit failure, AS-i cable disconnection, or AS-i communication error due to noise. |
| Initialization in progress, or mode switching in progress | - | 88 | 0 | 0 | X+16 bit 0=1 or X+17 bit 0=1 | |
| AS-i power supply voltage decrease | APF turned on | 88 | 1 | 0 | X+16 bit 1=1 | Check if the AS-i power supply is normal and check also if the cable from the AS-i power supply is normal.<br>This error is automatically recovered when the AS-i power supply becomes normal. |
| AS-i master EEPROM error | ERR turned on | E1 | 1 | 0 | X+17 bit 2=0 | Restart the power supply. The registered configuration may have been destroyed. So, register the configuration again (according to NOTE below).<br>If this error still occurs, replace the AS-i converter. |
| AS-i master error | ERR turned on | E0 | 1 | 0 | X+18 bit 2=1 | Restart the power supply. If this error still occurs, replace the AS-i converter. |
| ROM error | ERR turned on | E2 | 1 | 0 | X+18 bit 3=1 | Replace the AS-i converter. |
| RAM error | ERR turned on | E3 | 1 | 0 | X+18 bit 4=1 | Replace the AS-i converter. |
| Watchdog 1 | ERR turned on | E8 | 1 | 0 | X+18 bit 5=1 | Replace the AS-i converter. |
| Watchdog 2 | ERR turned on | E9 or "." of X10 | 1 | 0 | - | An I/O Link system alarm is issued on the NC side.<br>Replace the AS-i converter. |
| I/O Link slave watchdog | ERR turned on | E6 | - | - | - | An I/O Link system alarm is issued on the NC side.<br>The power to another device connected to the I/O Link may be turned off, or the I/O Link cable may be disconnected.<br>An I/O Link communication error may have occurred due to noise. |
| I/O Link RAM error | ERR turned on | E7 | - | - | - | An I/O Link system alarm is issued on the NC side.<br>Replace the AS-i converter. |

**NOTE**

1 In the protection mode, the smallest one of the addresses of the configuration-mismatching slaves is displayed. No data is displayed in the configuration mode.
2 Use a ladder program to detect and display an AS-i converter error.
3 When an AS-i converter error occurs, both of the DO signals and DI signals are turned off.
4 When AS-i communication fails, a watchdog alarm is issued on the slave unit side. When a slave watchdog alarm is issued, the behavior of DO signals is determined by the type of slave unit and parameter setting. For details, refer to the specifications of the slave unit.
5 Corrective action for an AS-i master EEPROM error
When the 7-segment LEDs indicate E1, the registered configuration may have been destroyed. So, register the configuration again according to the procedure below.

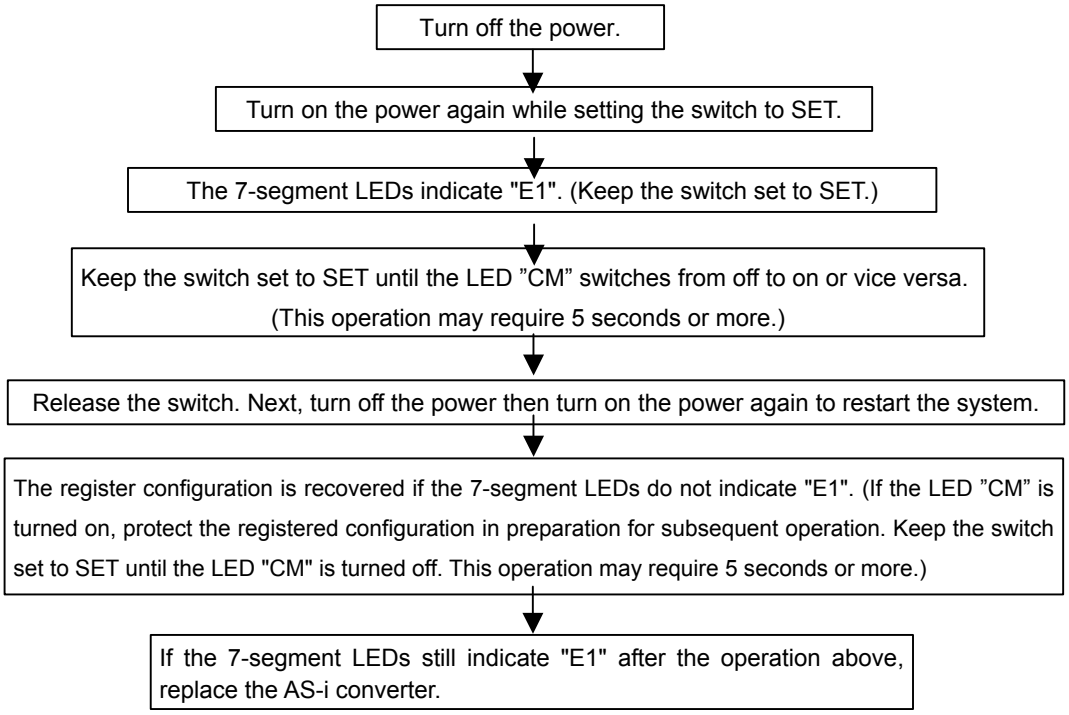


* Note that if "E1" is indicated, the CNC may not be started.

AS-i converters with this function were shipped in June, 2005 or later.
The corrective action mentioned above cannot be applied to those AS-i converters that were shipped earlier. In this case, replace the AS-i converter if an EEPROM error occurs.

## 9.12.8 How to Use the I/O Link-AS-i Converter

### 9.12.8.1 Installation

The operation below can be performed even when the I/O Link is not connected (for example, when the power to the CNC is not turned on with only the power to the AS-i converter and AS-i power supply turned on or when the I/O Link cable is not connected).

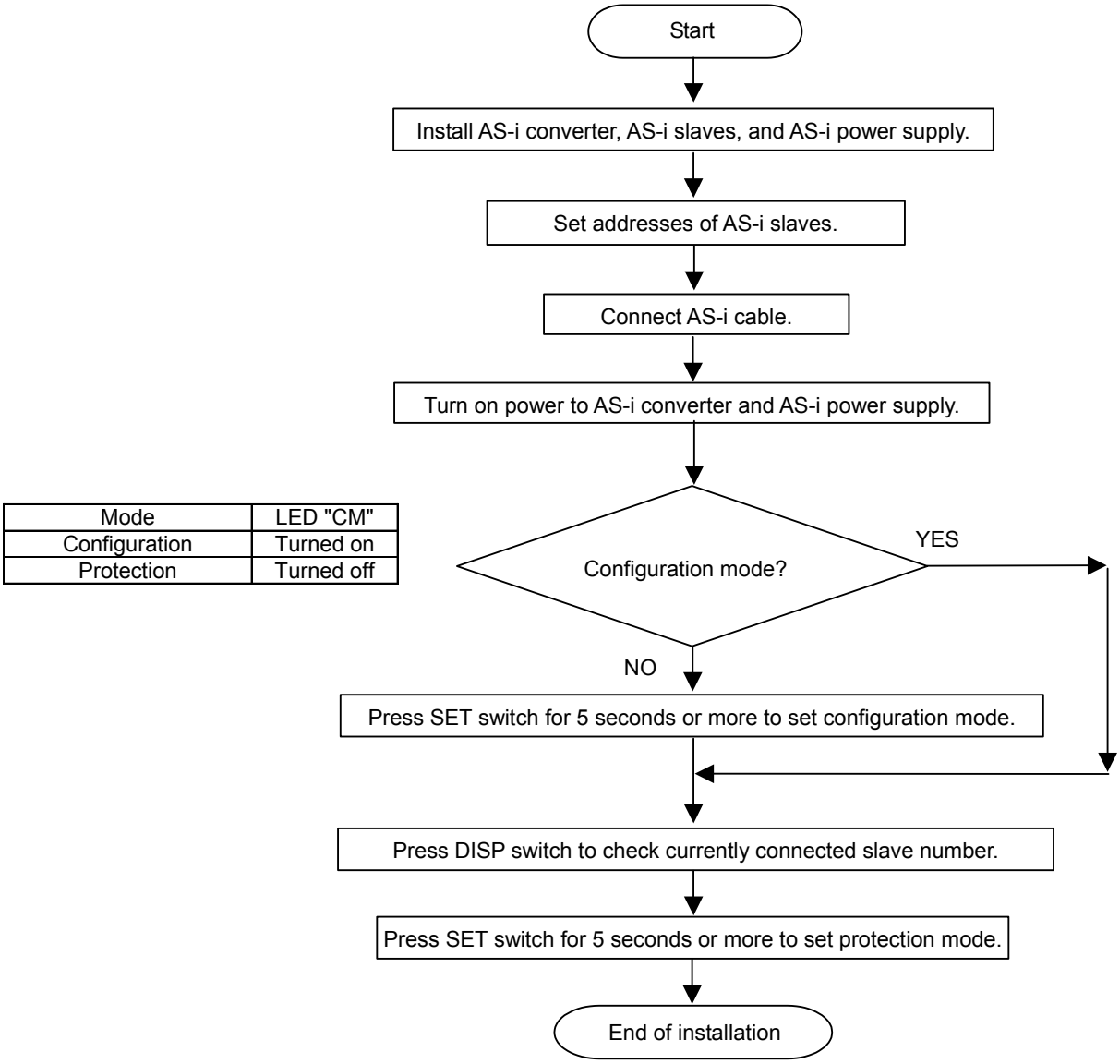


| Mode | LED "CM" |
|---|---|
| Configuration | Turned on |
| Protection | Turned off |

**NOTE**

1 When the operation mode is switched to the protection mode, the slave configuration is registered and automatic addressing is enabled.

2 The operation mode remains unchanged, regardless of whether the power to the AS-i converter is turned on or off. To switch the operation mode, use the SET switch.

## 9.12.8.2 Normal operation

### (1) Operation mode

The protection mode is used in normal operation.
In this mode, a configuration mismatch error occurs and CER is turned on if communication with an AS-i slave unit is disabled for a cause such as a disconnected cable, AS-i communication error, and slave unit failure.

### (2) Alarm monitor

Monitor the alarm signal (alarm issued by bit 1 of X+18 set to 1) on the I/O Link with a CNC ladder program and ensure that a PMC alarm is issued to notify maintenance staff if an error occurs.
Check the cause of an alarm with the LED indications and the status signals (X+16 to X+18) on the I/O Link then take a proper corrective action.

### (3) Configuration mismatch

A configuration mismatch means that the current slave configuration differs from the slave configuration registered when the operation mode is switched from the configuration mode to the protection mode.
Pressing the DISP switch in the protection mode when CER is turned on displays all configuration-mismatching slave numbers sequentially.
Monitor for this configuration-mismatching error (bit 7 of X+16) with a CNC ladder program and ensure that a PMC alarm is issued to notify maintenance staff if this error occurs. To take a proper corrective action, maintenance staff can identify the slave number in question by pressing the DISP switch as mentioned earlier.
With a ladder program, configuration-mismatching slave numbers can be displayed on the display unit of the CNC.

### (4) Causes of configuration mismatch and corrective action

A configuration mismatch can occur for a cause such as a disconnected cable, communication error, and AS-i slave unit failure.

#### a) Disconnected cable

The cause may be identified as a disconnected cable if all slaves after a particular slave are configuration-mismatching slaves.

#### b) Communication error

A temporary communication error may be recovered by restarting the operation. In this case, however, check whether a large noise source is located nearby and whether all connections are made normally.

#### c) Slave unit failure

If normal operation cannot be resumed after a restart, the cause may be a slave unit hardware failure.
When only one slave unit is to be replaced, an address number can be automatically set with the automatic addressing function.
When multiple slave units are to be replaced, addresses for the slave units can be set on a one-by-one basis with the automatic addressing function or addresses for all slaves can be set beforehand using the addressing device.

#### d) No address setting

An AS-i slave with address "0" is connected.

### (5) AS-i data ready flag (X+18: Bit 0)

Before reading DI signals with a ladder, check that the AS-i data ready flag is set to 1. If the flag is set to 0, do not use DI signals.

## 9.12.9 Others

### 9.12.9.1 CE marking

The AS-i converter has CE marking certification.
Note, however, that because of its conformance to the AS-i EN standard (EN50295), the AS-i converter has not undergone surge test.

### 9.12.9.2 Fuse

The AS-i converter has a built-in fuse. If the fuse blows, replace the fuse after correcting the cause.

| Blown fuse indication | Rating | Ordering information |
|---|---|---|
| POW is off. | 1 A | A03B-0815-K001 |

A fuse is installed on the printed circuit board inside the unit.

# 10 STOP AND EMERGENCY STOP

## 10.1 STOP MODES

There are the following stop modes:
1. Stop by shutting off the motor power
2. Controlled stop without shutting off the motor power
3. Stop by shutting off the motor power after a controlled stop

A controlled stop is the quickest. However, a stop may be made by immediately shutting off the motor power for safety reasons.

> ⚠ **WARNING**
> Pressing the RESET key stops the running program. As a result, the servo axis stops and the spindle axis remains rotating without changing the speed. The RESET key may not function due to an MDI failure or the like, so, for safety, use the emergency stop button instead of the RESET key to stop the motor safely. When a failure of the CNC, machine contact, or connection is also assumed, further safety actions must be taken.

## 10.2 SHUTTING OFF THE MOTOR POWER

The motor power may be shut off through an IGBT (transistor) or an electromechanical scheme that controls mechanical contacts. When an $\alpha i$ series amplifier is used, the motor power is shut off by an IGBT (transistor) based on the CNC alarm state (or Ladder program). To shut off the motor power through an electromechanical scheme, a line contactor must be installed on the power input line in the power supply module, thereby providing a direct contactor shut-off route. (See Fig. 10.5 in Section 10.5, "EMERGENCY STOP SIGNAL.")
The power supply module provides MCC control signals (MCCOFF3 and MCCOFF4) for controlling the contactor. However, these signals are enabled only when the motor power to all servo and spindle amplifiers connected to the power supply module is shut off through the IGBT.
Example 1)
When the *ESP signal is input to the power supply module
The motor power to both servo and spindle amplifiers is shut off by the IGBT, after which MCC control signals are output.
Example 2)
When a servo alarm occurs
The motor power to the servo amplifier is shut off by the IGBT. When the spindle works without any trouble, however, the spindle can be controlled independently and the motor power to the spindle amplifier is not shut off by the IGBT. In this case, MCC control signals are not output. When a spindle emergency stop signal is input using the Ladder program, the spindle motor is decelerated to a stop. Then, the motor power is shut off through the IGBT, MCC control signals are output, and the motor power is shut off electromechanically.
A failure in the amplifier may disable MCC control signals. To ensure motor power shut-off, therefore, a circuit must be designed in a redundancy configuration having a route that is independent of the shut-off function of the amplifier.

# 10.3 STOPPING THE SPINDLE MOTOR

While the spindle motor is running, shutting off the motor power allows the spindle motor to coast at a speed maintained before shut-off and eventually stop (after a while). However, there may be cases where the spindle motor should be stopped as soon as possible for safety reasons. In such cases, a stop of the spindle motor depends on a Ladder program prepared by the machine tool builder. If the CNC detects an abnormal condition, it outputs an alarm to the PMC. The Ladder program should specify processing to be performed when an alarm is output: allowing the spindle to continue running, decelerating the spindle to a stop, or causing the spindle to coast, for example.
To decelerate the spindle to a stop, a spindle emergency stop signal (such as *ESPA (G71.1) or *ESPB (G75.1)) can be input in the PMC. Inputting this signal cause the spindle to be decelerated to a stop. (A Ladder program must be created so that this signal is input if an alarm occurs.) The same effect can be achieved by using the PSM emergency stop input (connector CX4). When an emergency stop signal is connected to the *EMGPSM emergency stop input (connector CX4), therefore, the spindle is decelerated to a stop if the CNC enters the emergency stop state.

**⚠ CAUTION**

1 If the CNC enters the system alarm state, the Ladder program does not run. In this case, the spindle amplifier can be decelerated to a stop. Make proper parameter settings because such a stop depends on the settings.
2 If the spindle motor cannot be controlled due to an alarm in the spindle amplifier itself or for some other reason, the motor power is shut off by the IGBT immediately. After the servo motor has stopped, an MCC control signal is output.

# 10.4 STOPPING THE SERVO MOTOR

Shutting off the motor power brings the servo motor to a dynamic brake stop. A dynamic brake stop is braking performed by separating the synchronous rotator from the driving power, and consuming generated electric energies with the coil as well as the built-in resistor of the servo amplifier. With this function, shutting off the motor power does not allow the servo motor to coast like the spindle motor.
Servo motor stop mode depends on the type of a CNC alarm.
Example)

1. PS alarm caused by an NC program error or the like
   The motor power is not shut off.
2. CNC fan stop
   A single-block stop is made. The motor power is not shut off.
3. Emergency stop state
   A dynamic stop is made as a rule. By setting relevant parameters, however, it is also possible to decelerate the servo motor to a stop, and then to shut off the servo motor power.
4. System alarm
   A dynamic brake stop is made.

If the servo motor cannot be controlled, a dynamic brake stop is unconditionally made.

# 10.5 EMERGENCY STOP SIGNAL

⚠ **CAUTION**

Using the emergency stop signal effectively enables the design of safe machine tools. See "Cautions for configuring an emergency stop circuit in compliance with safety standards."

The emergency stop signal is provided to bring a machine tool to an emergency stop. It is input to the CNC controller and $\alpha i$ series power supply module. The power supply module outputs a motor power MCC control signal, which can be used to switch the power applied to the power supply module on and off. An emergency stop signal is usually generated by closing the B contact of a pushbutton switch.

When the emergency stop signal (*ESP) contact is closed, the CNC controller enters the emergency stop released state, such that the servo and spindle motors can be controlled and operated.

When the emergency stop signal (*ESP) contact opens, the CNC controller is reset and enters the emergency stop state, and the servo and spindle motors stop.

Inputting an emergency stop signal causes the servo motor power to be shut off through the IGBT, bringing the servo motor to a dynamic brake stop. Even in this case, however, a servo motor attached to a vertical axis can move under the force of gravity. To overcome this problem, use a servo motor with a brake.

By using relevant parameters, it is also possible to decelerate the servo motor to a stop, and then to shut off the servo motor power.

While the spindle motor is running, shutting off the motor power to the spindle amplifier allows the spindle motor to continue running under its own inertia, which may be quite dangerous. With an $\alpha i$ series amplifier, when the emergency stop signal (*ESP) contact opens, it is possible to confirm that the spindle motor is decelerated to a stop, and then to shut off the spindle motor power through the IGBT.

When the motor power to both servo and spindle amplifiers is shut off through the IGBT, the power supply module outputs a motor power MCC control signal, which can be used to directly shut off the power with an external line contactor.

The CNC controller is designed to detect overtravel by using a software limit function. Normally, no hardware limit switch is required to detect overtravel. If the machine goes beyond a software limit because of a servo feedback failure, however, it is necessary to provide a stroke end limit switch, which should be connected so that the emergency stop signal can be used to stop the machine.

Fig. 10.5 shows an example showing how to make connections for the emergency stop signal with this CNC controller and $\alpha i$ series servo amplifier.

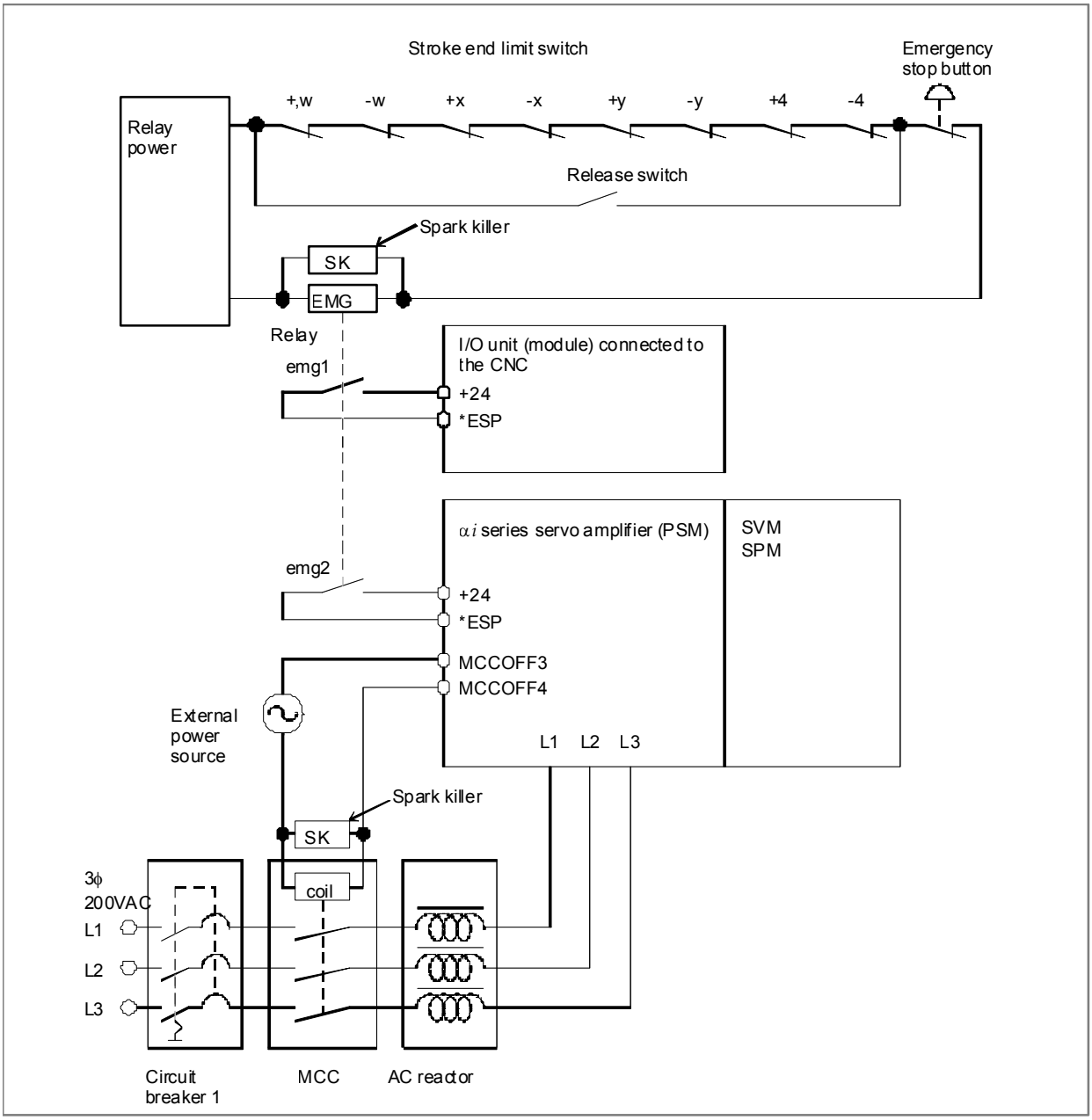


**Fig. 10.5**

> ⚠ **WARNING**
> To use a spindle motor and amplifier produced by a manufacturer other than FANUC, refer to the corresponding documentation as well as this manual. Design the emergency stop sequence such that, if the emergency stop signal contact opens while the spindle motor is rotating, the spindle motor is decelerated until it stops.

**Cautions for configuring an emergency stop circuit in compliance with safety standards**

To configure an emergency stop circuit in compliance with JIS safety standards(*), observe the following cautions. Compliance with these JIS safety standards is a prerequisite for complying with the EC Machine Instructions.
The method for shutting off the motor power section in the amplifier is based on an IGBT (transistor) rather than an electromechanical scheme.

When configuring an emergency stop circuit, therefore, install a line contactor on the power input line for motor power in the power supply module in order to ensure electromechanical shut-off, and apply voltage to the control coil of the contactor via the contactor control output of the power supply module.
A failure in the amplifier may disable the output relay of the power supply module from going off, thus preventing the line contactor from shutting off the power, even when the emergency stop command input (*ESP) of the amplifier becomes low.
To secure motor power shut-off, design the emergency stop circuit in a redundancy configuration. To be specific, the emergency stop circuit must have a direct line contactor shut-off route based on an emergency stop switch that is independent of the shut-off function of the amplifier.
If a spindle amplifier module is used, shutting off the motor power line during spindle rotation disables the spindle from stopping quickly because the power regenerative function does not work, allowing the spindle to coast. So, provide the redundancy circuit mentioned above with a delay function based on an off-delay timer that allows a usual stop time.
Refer to the following material for detailed descriptions about cautions related to safety circuits.
A-71429-S13J:
About Requirements for Safety Circuits and Configuration Samples
To get a copy of this material, contact your FANUC sales representative.

# 11 CONNECTION TO OTHER NETWORKS

It is possible to make connection to other networks. For an explanation of how to make the connection, refer to the manuals listed below:

| Manual title | Manual code |
|---|---|
| Fast Ethernet / Fast Data Server OPERATOR'S MANUAL | B-64414EN |
| PROFIBUS-DP Board CONNECTION MANUAL | B-64403EN |
| DeviceNet Board CONNECTION MANUAL | B-64443EN |
| FL-net Board CONNECTION MANUAL | B-64453EN |

# 12 CONNECTION OF THE STAND-ALONE TYPE

## 12.1 OVERVIEW

The Series 0*i*-D supports the stand-alone type in which the display unit is separated from the control unit. (The Series 0*i* Mate-D does not have the stand-alone type.)

The stand-alone type Series 0*i*-D uses the FANUC PANEL *i* or an IBM PC compatible PC as a display device.

This chapter mainly provides descriptions specific to connection of the stand-alone type. For descriptions common to the stand-alone type and LCD-mounted type, which are not given in this chapter, see other chapters. For connection of the FANUC PANEL *i*, refer to the FANUC PANEL *i* Connection and Maintenance Manual (B-64223EN).

The type in which the display unit is integrated with the control unit is called the LCD-mounted type and the type in which the display unit is separated from the control unit is called the stand-alone type below.

# 12.2 CONTROL UNIT CONFIGURATION AND COMPONENT NAMES

The configuration and component names of control units are shown in the figures given below. The numbers in parentheses () in the figures are keyed to the item numbers of the descriptions in this manual. The numbers in brackets [] in the figures are connector numbers.

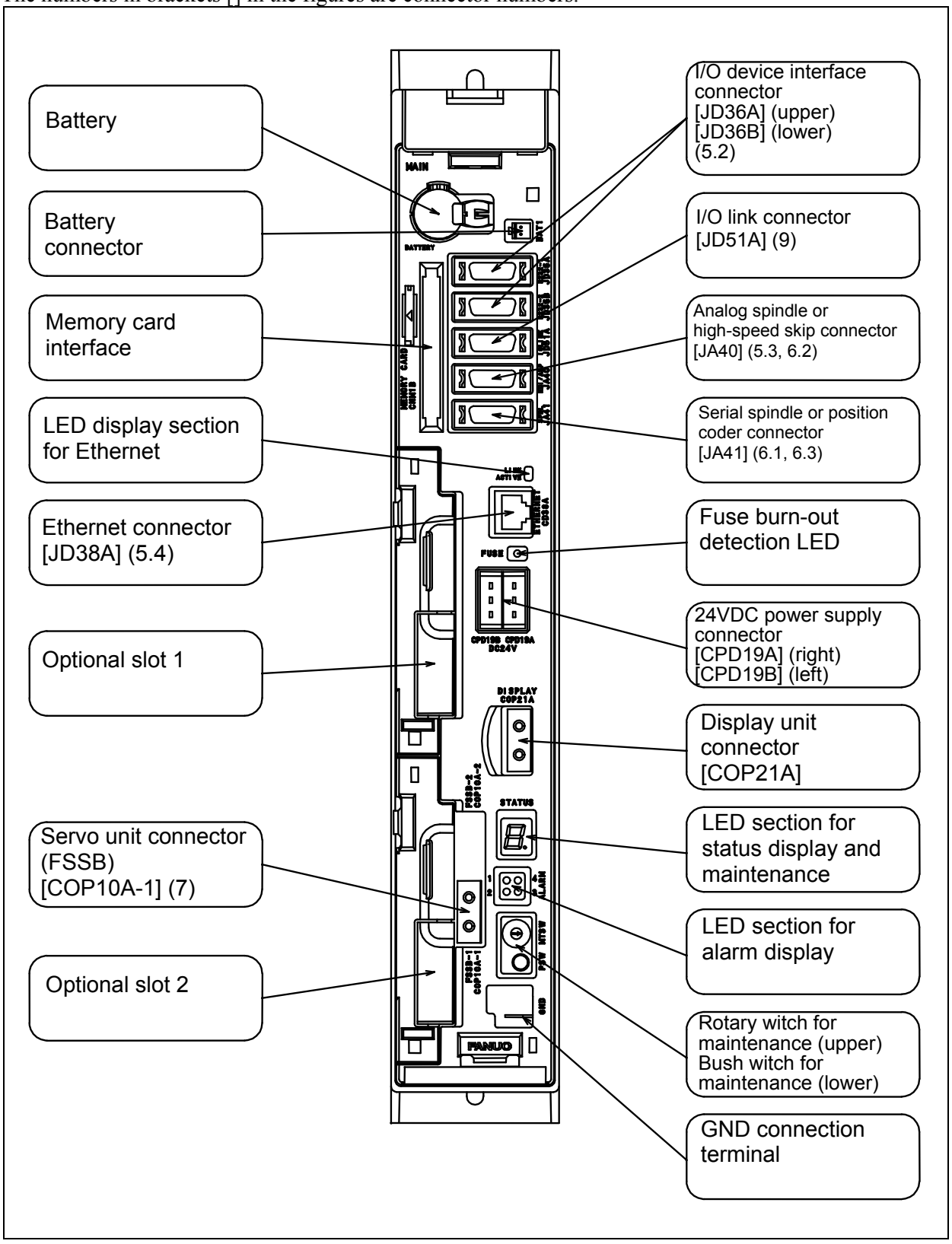

# 12.3 CONTROL UNIT OVERVIEW

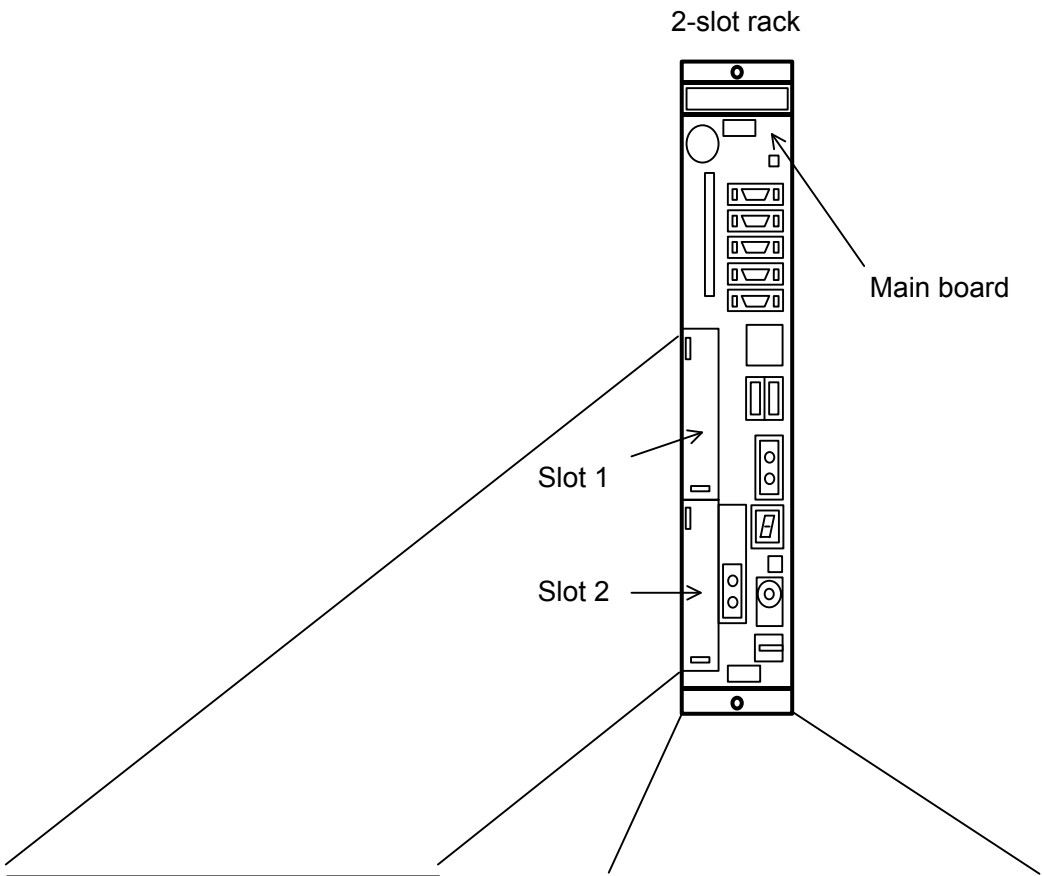

# 12.4 TOTAL CONNECTION DIAGRAMS

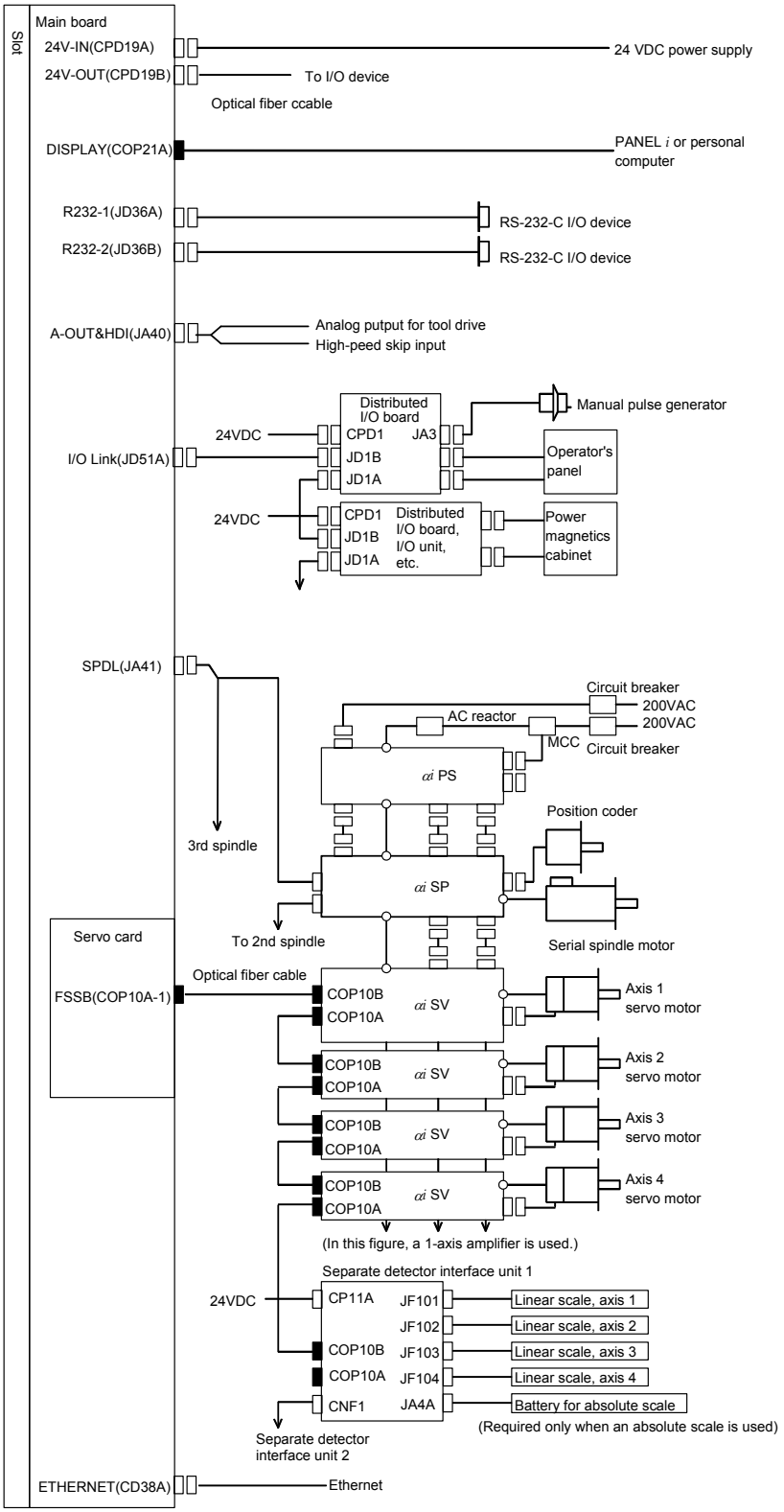

# 12.5 INSTALLATION

## 12.5.1 Environmental Conditions of the Control Unit

The operating ambient temperature of control unit for the stand-alone type is 0°C to 55°C, which is different from that of the control unit for the LCD-mounted type.

| | | |
|---|---|---|
| Ambient temperature | Operating | 0°C to 55°C |

The other conditions are the same as those of the LCD-mounted type. See the Subsection 3.1.2, "Environmental Conditions of the Control Unit."

## 12.5.2 Power Supply Capacity

The power supply capacity of the control unit for the stand-alone type is shown below. The power supply capacities of optional boards are the same as those of the LCD-mounted type. Notes on the power supply capacity are the same as those of the LCD-mounted type. See the Subsection 3.2.1, "Power Supply Capacities of CNC-related Units."

**Table 12.5.2 Power supply capacity**

| Unit | | Power supply capacity | Remarks |
|---|---|---|---|
| Stand-alone type control unit | Control unit (single) | 1.6A | |

**NOTE**
See FANUC PANEL *i* CONNECTION AND MAINTENANCE MANUAL (B-64223EN), for PANEL *i*.

## 12.5.3 Heat Output of Each Unit

The heat output of the stand-alone type control unit is shown below. The heat output of optional boards is the same as that of the LCD-mounted type.

**Table 12.5.3 Heat output**

| Unit | | Heat output | Remarks |
|---|---|---|---|
| Stand-alone type control unit | Control unit (single) | 30W | |

## 12.5.4 Connecting the Ground Terminal of the Control Unit

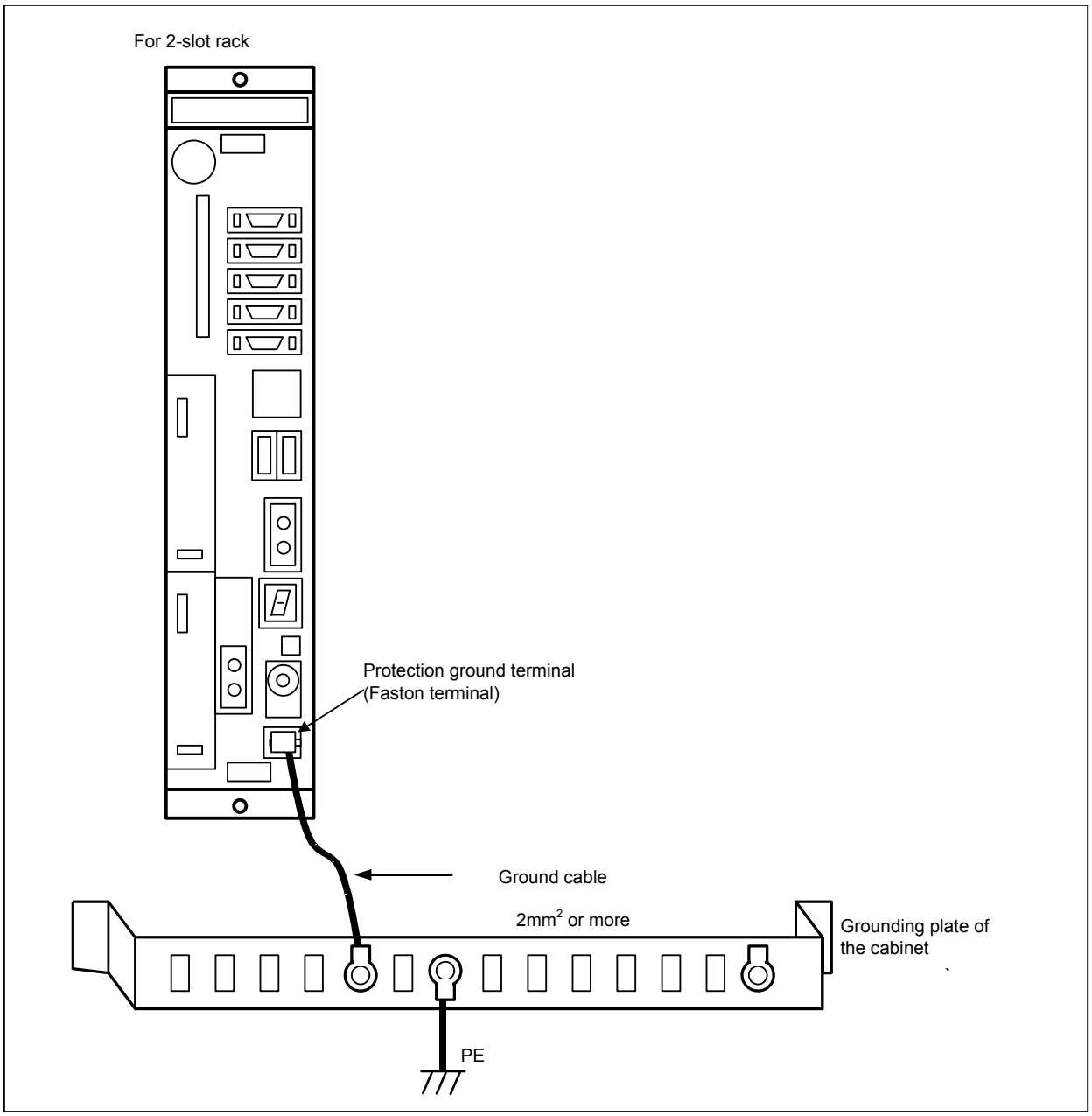


Connect the 0-V lines of the electronic circuits in the control unit to the ground plate of the cabinet via the protection ground terminal (above figure).
Use the Faston terminal (FANUC specification: A02B-0166-K330).

## 12.5.5 Installing the Control Unit

The control unit is equipped with a fan motor.
Air is fed into the bottom of the unit and output from the fan motor mounted on the top of the unit.
The spaces shown in Fig. 12.5.5 (areas Ⓐ and Ⓑ) are always required to ensure smooth air flow.
Also, adequate service access space is required in front of and at the top of the unit so that printed circuit boards and the fan motor can be replaced easily if necessary.

There is a spare connector located at the far end (at middle height) on the right side of the control unit. This connector is used for controller testing and other purposes. Therefore, space (area Ⓒ) for handling the connector is required.

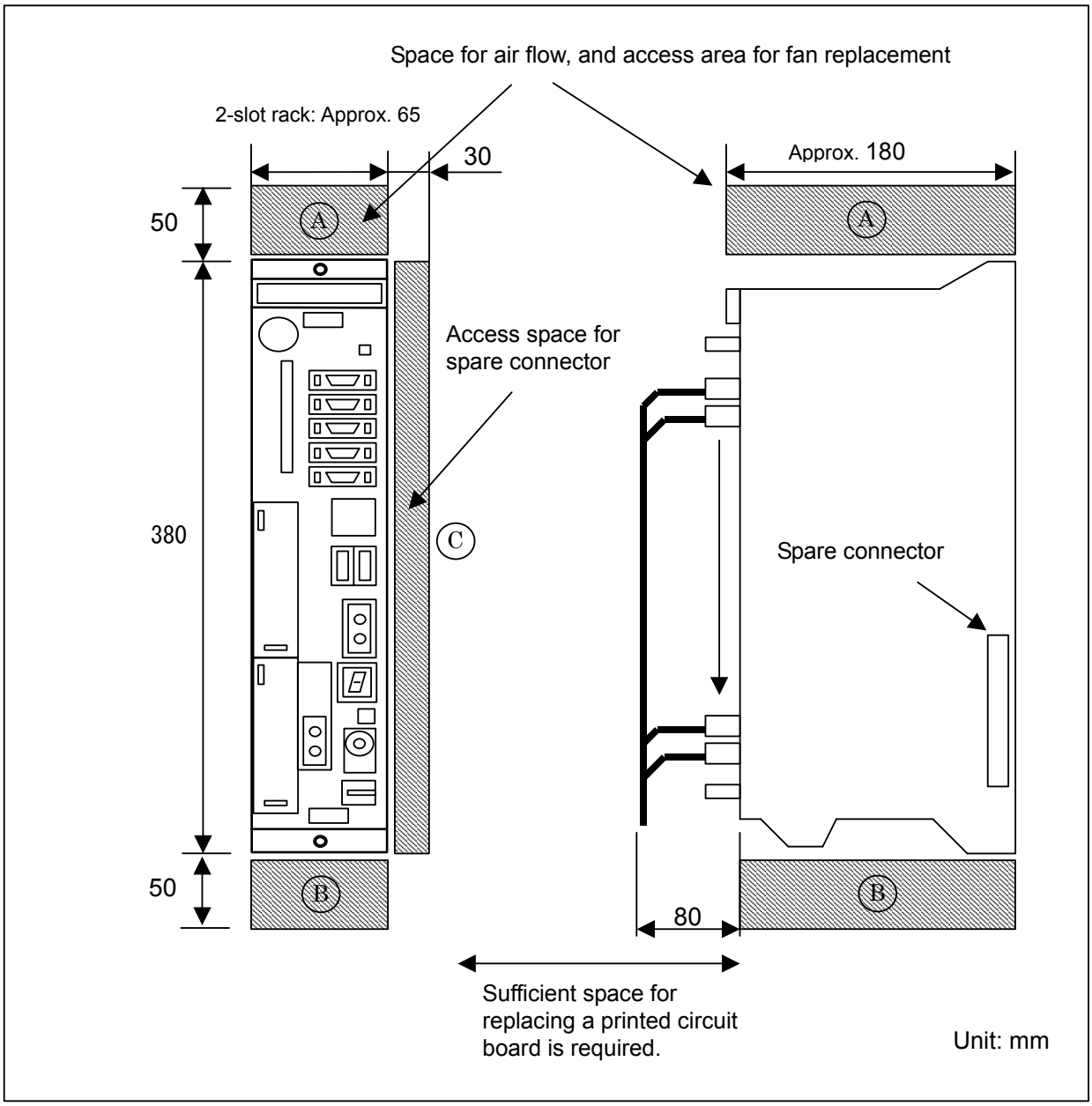


**Fig. 12.5.5**

# 12.6 POWER SUPPLY CONNECTION

## 12.6.1 TURNING ON AND OFF THE POWER TO THE CONTROL UNIT

### 12.6.1.1 Power-on Sequence

The power-on sequence of the stand-alone type is the same as that of the LCD-mounted type.
The power-on sequence between the PANEL *i* and the CNC control unit is not defined.

### 12.6.1.2 Power-off Sequence

The power-off sequence of the stand-alone type is the same as that of the LCD-mounted type.
The power-off sequence between the PANEL *i* and the CNC control unit is not defined.

## 12.6.2 Cable for Power Supply to Control Unit

Supply the power to the control unit from an external 24 VDC power supply.

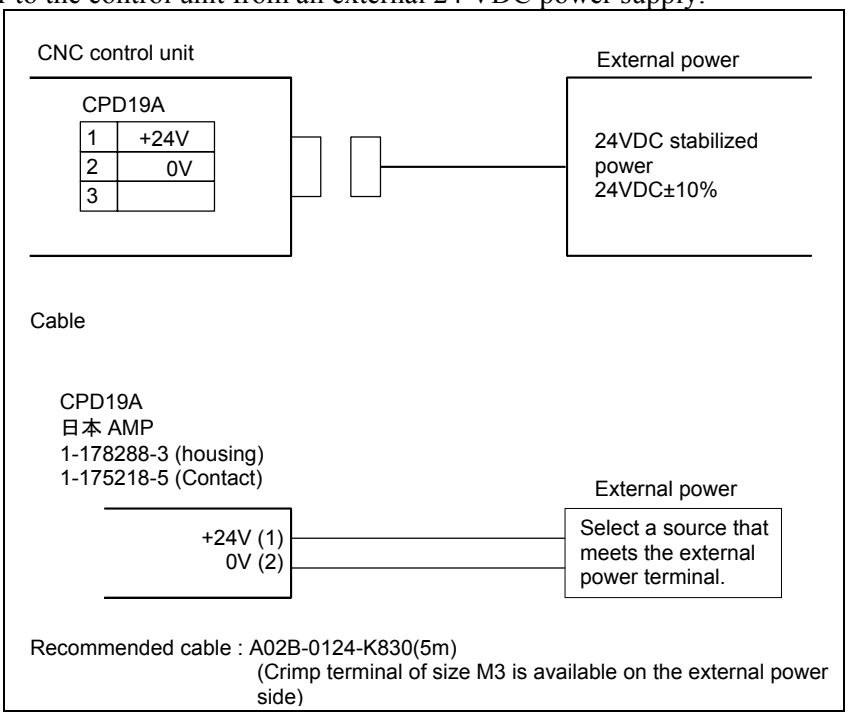


As for an stand-alone type control unit, part of the 24 VDC power input to CPD19A can be taken out from CPD19B by branching. CPD19B should be connected as shown below. In this case, the rating of the external 24 VDC power supplied to CPD19A must be the sum of the power consumed within the control unit and that supplied to external equipment via CPD19B. Up to 1.0 A can be supplied to the external equipment.

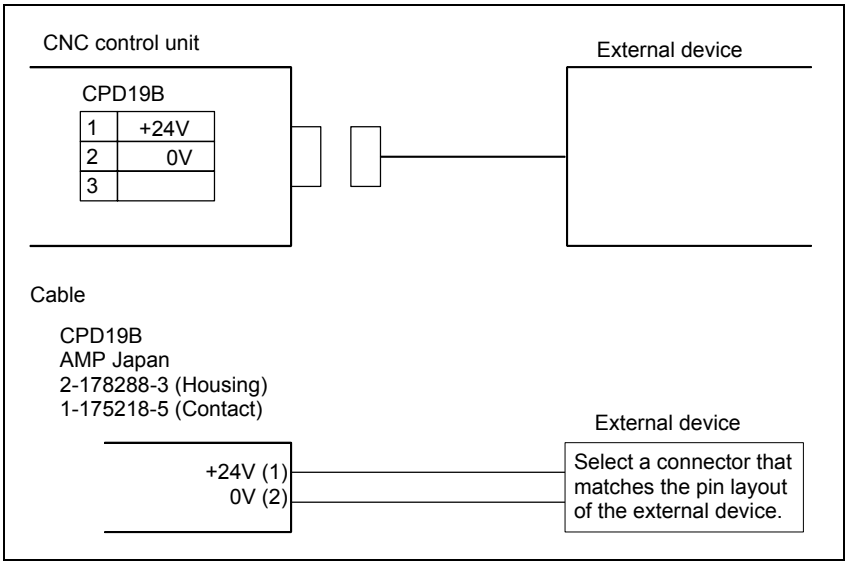

## 12.6.3 Batteries

### Replacing the battery for stand-alone type control unit

If a lithium battery is used, have A02B-0200-K102 (FANUC internal code: A98L-0031-0012) handy.

1 Turn the CNC on. About 30 seconds later, turn the CNC off.
2 Remove the battery from the top area of the CNC unit.
First, pull the battery cable to unplug the connector. Then, remove the battery from the battery case.
The battery case is provided in the top area of the face plate of the main board.
3 Replace the battery, then connect the connector.

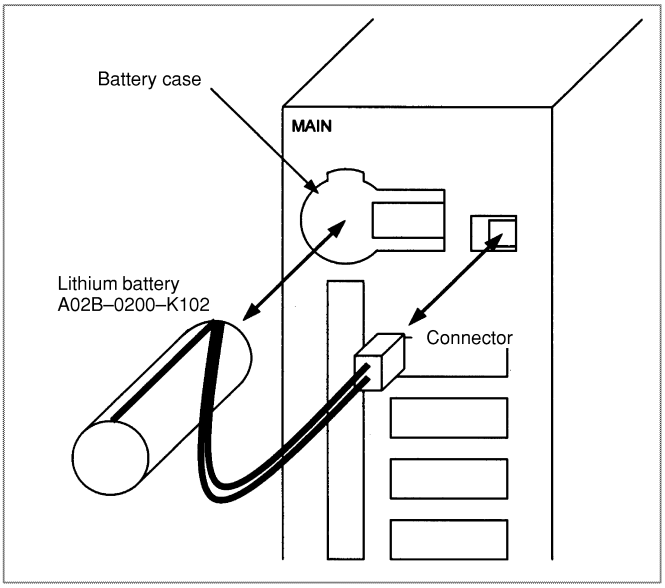


**⚠ WARNING**
Using other than the recommended battery may result in the battery exploding. Replace the battery only with the specified battery (A02B-0200-K102).

**⚠ CAUTION**
Steps 1 to 3 should be completed within 30 minutes. Do not leave the control unit without a battery for any longer than the specified period. Otherwise, the contents of memory may be lost.
If steps 1 to 3 may not be completed within 30 minutes, save all contents of the SRAM memory to the memory card beforehand. Thus, if the contents of the SRAM memory are lost, the contents can be restored easily. For the method of operation, refer to Maintenance manual.

Discard the dead battery, observing appropriate municipal rules and regulations. When discarding the battery, insulate the terminal with a tape so that no short-circuit would occur.

# 12.7 HIGH-SPEED SERIAL BUS (HSSB)

## 12.7.1 Overview

The high-speed serial bus (HSSB) enables the high-speed transfer of large amounts of data between a commercially available IBM PC or compatible personal computer and a CNC, by connecting them via a high-speed optical fiber.
For a stand-alone type CNC, the HSSB interface is provided as a standard feature.
On the personal computer, an appropriate interface board is installed.
You can use the FANUC PANEL *i* instead of a commercial PC. The FANUC PANEL *i* comes standard with the HSSB interface.

## 12.7.2 Cautions

The use of the HSSB requires an IBM PC/AT compatible computer or FANUC intelligent terminal. The machine tool builder or end user is required to procure and maintain the personal computer.

To enable the use of the HSSB, Windows XP must have been installed on the personal computer.

FANUC owns the copyright for the HSSB device driver.

The software mentioned above and the contents of the related manuals may not be used or reproduced in part or whole without the prior written permission of FANUC.

**NOTE**
IBM is a registered trademark of IBM Corp. of the US.
Windows XP is registered trademarks of Microsoft Corp. of the US.
The company and product names mentioned in this manual are trademarks or registered trademarks of the respective companies.

## 12.7.3 Connection Diagram

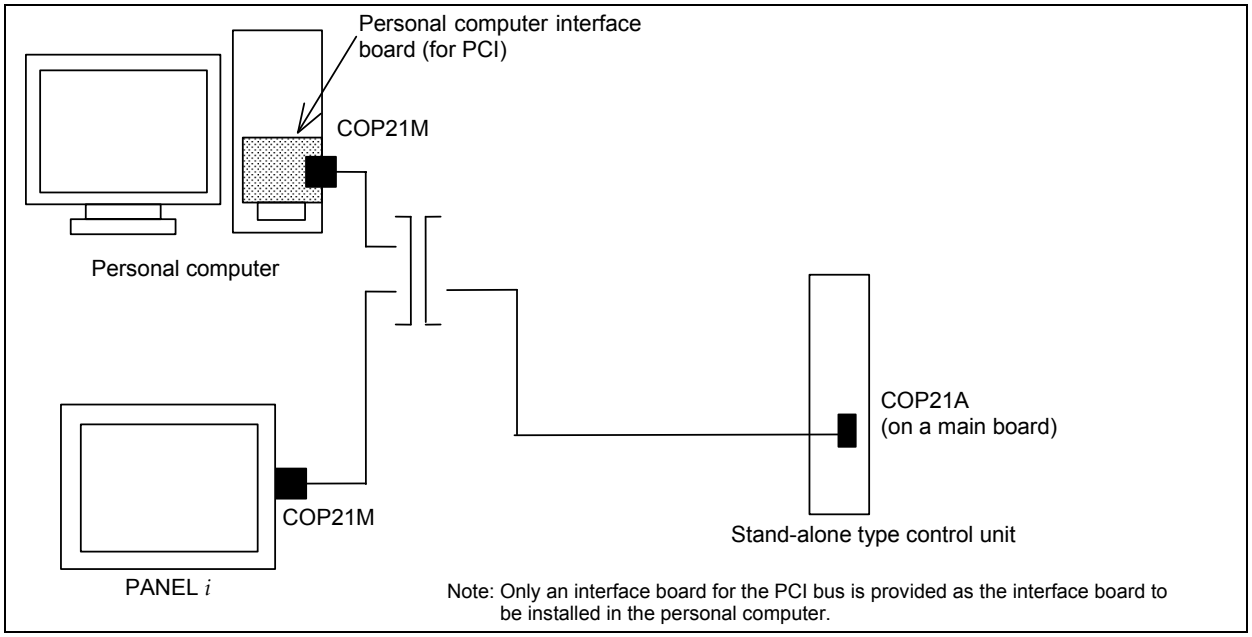

## 12.7.4 Personal Computer Specification

> ⚠ **CAUTION**
> 1 The machine tool builder or end user is required to procure and maintain the personal computer.
> 2 FANUC is not liable for any problems resulting from the operation of users' personal computers, regardless of whether the operations are normal or abnormal.

(1) The personal computer must have a PCI slot (5 V).
(2) When this board is used, an HSSB driver must be installed in the personal computer.
(3) Please examine the connection test including the communication between the personal computer and CNC controller sufficiently.
(4) Following shows the required power of the interface board for PCI type.

| Drawing No. | Specification | Power supply requirements | Remarks |
|---|---|---|---|
| A20B-8101-0162 | 2ch specification | +5V 1.5A | |
| A20B-8101-0163 | 1ch specification | +5V 1A | |

## 12.7.5 Installation Environment

HSSB Interface Board For Personal Computer

| | | |
|---|---|---|
| Ambient temperature | Operating | 0 to 55 °C |
| | Non-operating | -20 to 60 °C |
| Humidity | Usual | 10 to 75% (non-condensing) |
| | Short-term (within one month) | 10 to 95% (non-condensing) |

If the environmental requirement of the using personal computer is different from the above, please keep the environmental requirement to be satisfied by the both equipments.

## 12.7.6 Procedure for Installing Personal Computer Interface Boards

> ⚠ **WARNING**
> Before starting to mount or remove a personal computer interface board, switch off the personal computer and its peripheral devices, and disconnect their power supply cables. Otherwise, there is a serious danger of electric shock.

(1) Remove the covering plate of extension slot on the personal computer.
(2) Insert the interface board for the personal computer to the PCI connector tightly.
(3) Screw the plate of interface board to the computer.
(4) Confirm connection (in only case of HSSB multi-connection)
Confirm following items for installing drivers of HSSB interface board in case of HSSB multi-connection.
- PCI slot number which HSSB board is mounted (slot number is marked to PCB normally).
- Correspondence between HSSB channel and CNC

(5) Restore the covering plate.

> ⚠ **CAUTION**
> Do not touch the leads running to the card edge of the interface board (that match with connectors).

### 12.7.7 Handling Precautions

(1) Personal computer interface board
  (a) Electrostatic interference
  The personal computer interface board is shipped in an anti-static bag. To store or transport the interface board, always place it in the anti-static bag. Before removing the interface board from the anti-static bag, ground your body.
  (b) Protection of card edge terminals
  When handling the personal computer interface board, do NOT touch its card edge terminals (the gold-plated contacts which engage with a mating connector). If you accidentally touch any card edge terminal, wipe it gently with clean or ethyl alcohol-dipped tissue paper or absorbent cotton. Do not use any organic solvent other than ethyl alcohol.
(2) Optical connector and fiber cable
  See Appendix D, “OPTICAL FIBER CABLE.”

### 12.7.8 Recommended Cables

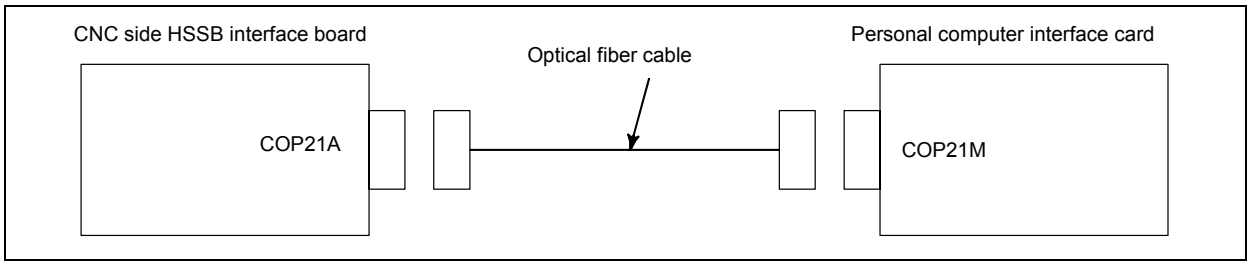


For the available optical fiber cables, see Appendix D.

## 12.8 PERIPHERAL EQUIPMENT AND CONNECTION

### 12.8.1 Connection with the MDI Unit

When using the MDI unit together with the stand-alone type, connect the MDI unit to the FANUC PANEL *i*. For details on the connection, refer to the FANUC PANEL *i* Connection and Maintenance Manual (B-64223EN).

# 12.9 EXTERNAL DIMENSIONS OF EACH UNIT

## 12.9.1 External Dimensions of Stand-alone type Control Unit

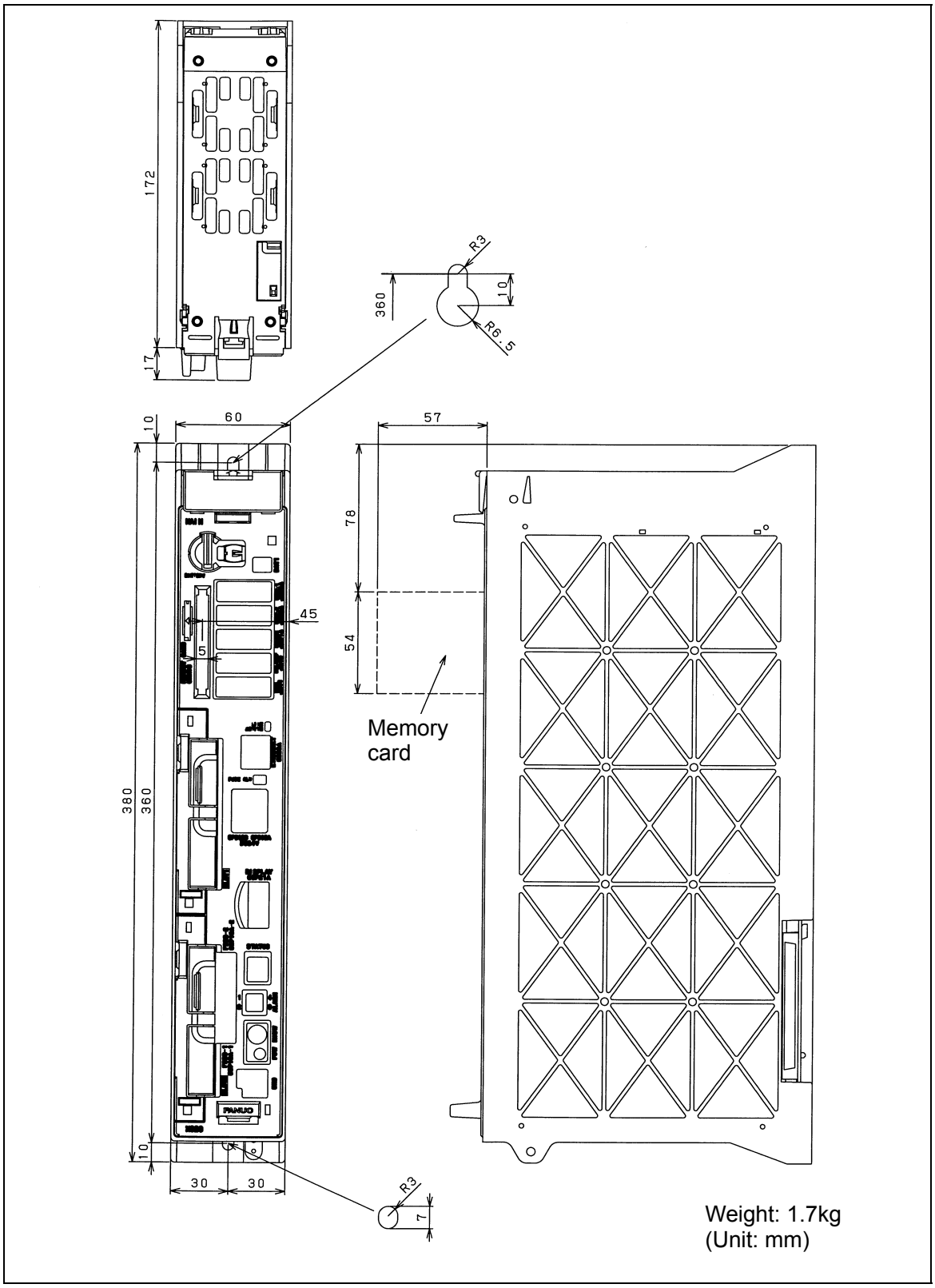

## 12.9.2 Punch Panel (for Stand-alone Type Control Unit)

Specification: A02B-0120-C191,C192,C193

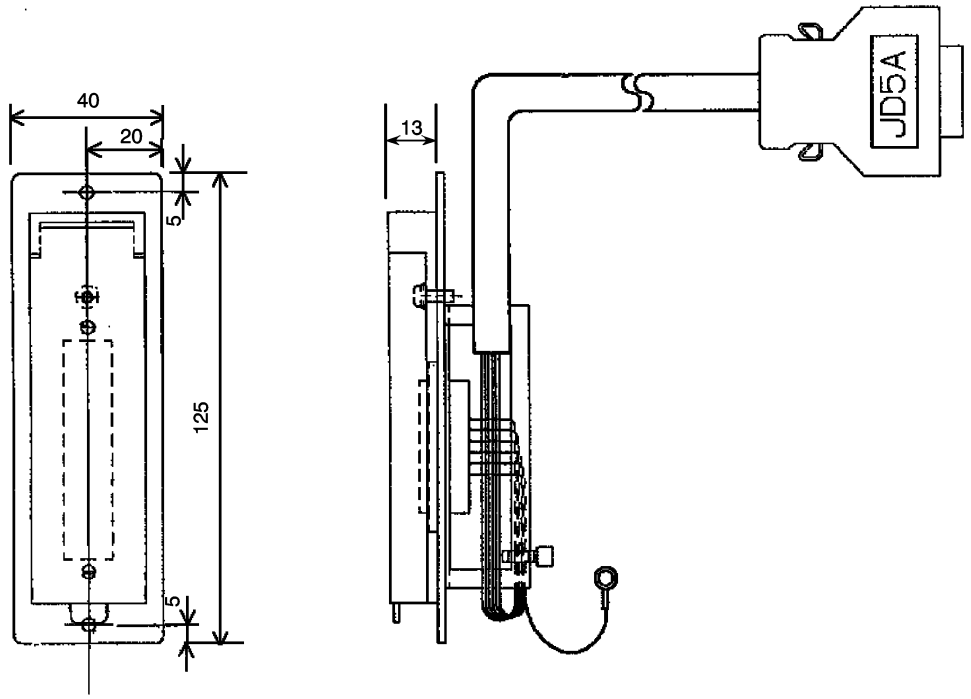


A paint masking zone 8 mm wide is provided on the periphery of the rear of the plate.

The panel cut dimensions of this punch panel are indicated below.

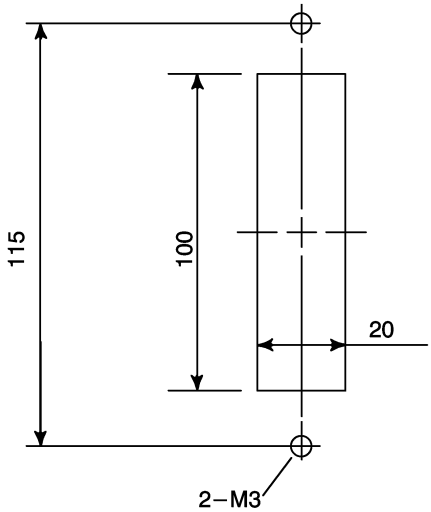


**NOTE**
This punch panel cannot used for the PANEL *i*.

# APPENDIX

# A EXTERNAL DIMENSIONS OF EACH UNIT

| Outline drawing name | | Specification drawing number | Fig. |
|---|---|---|---|
| CNC control unit (8.4” color LCD/MDI horizontal type) | | | Fig. U1 |
| CNC control unit (8.4” color LCD/MDI vertical type) | | | Fig. U2 |
| CNC control unit (10.4” color LCD) | | | Fig. U3 |
| MDI unit | Horizontal type | A02B-0319-C125#T,<br>A02B-0319-C125#M | Fig. U4 (a) |
| | Vertical type | A02B-0319-C126#T,<br>A02B-0319-C126#M | Fig. U4 (b) |
| | Small type | A02B-0303-C120#T,<br>A02B-0303-C120#M | Fig. U4 (c) |
| Portion in which each CNC control unit is installed | | | Fig. U6 |
| I/O unit for 0*i* | | A02B-0309-C001 | Fig. U7 |
| $\alpha i$ position coder | 10000 $min^{-1}$ | A860-2109-T302 | Fig. U17 |
| Manual pulse generator | | A860-0203-T001 | Fig. U18 |
| Pendant type manual pulse generator | | A860-0203-T004 | Fig. U19 |
| | | A860-0203-T005 | |
| | | A860-0203-T007 | |
| | | A860-0203-T010 | |
| | | A860-0203-T012 | |
| | | A860-0203-T013 | |
| Separate detector interface unit | | A02B-0303-C205<br>A02B-0236-C204 | Fig. U20 |
| Battery case for separate detector interface unit (ABS) | | A06B-6050-K060 | Fig. U21 |
| CNC battery unit for external installation | | A02B-0236-C282 | Fig. U22 |
| Punch panel Narrow width type | Cable length: 1m | A02B-0236-C191 | Fig. U24 |
| | Cable length: 2m | A02B-0236-C192 | |
| | Cable length: 5m | A02B-0236-C193 | |
| Machine operator's panel: Main panel A | | A02B-0319-C242 | Fig. U25 |
| Machine operator's panel: Main panel B | | A02B-0319-C243 | Fig. U26 |
| Machine operator's panel: Sub panel A | | A02B-0236-C232 | Fig. U27 |
| Machine operator's panel: Sub panel B1 | | A02B-0236-C235 | Fig. U28 |
| Screw cap (for small MDI unit) | | A02B-0303-K190,<br>A02B-0303-K191 | Fig. U29 |

## Fig. U1 CNC control unit (8.4” color LCD/MDI horizontal type)

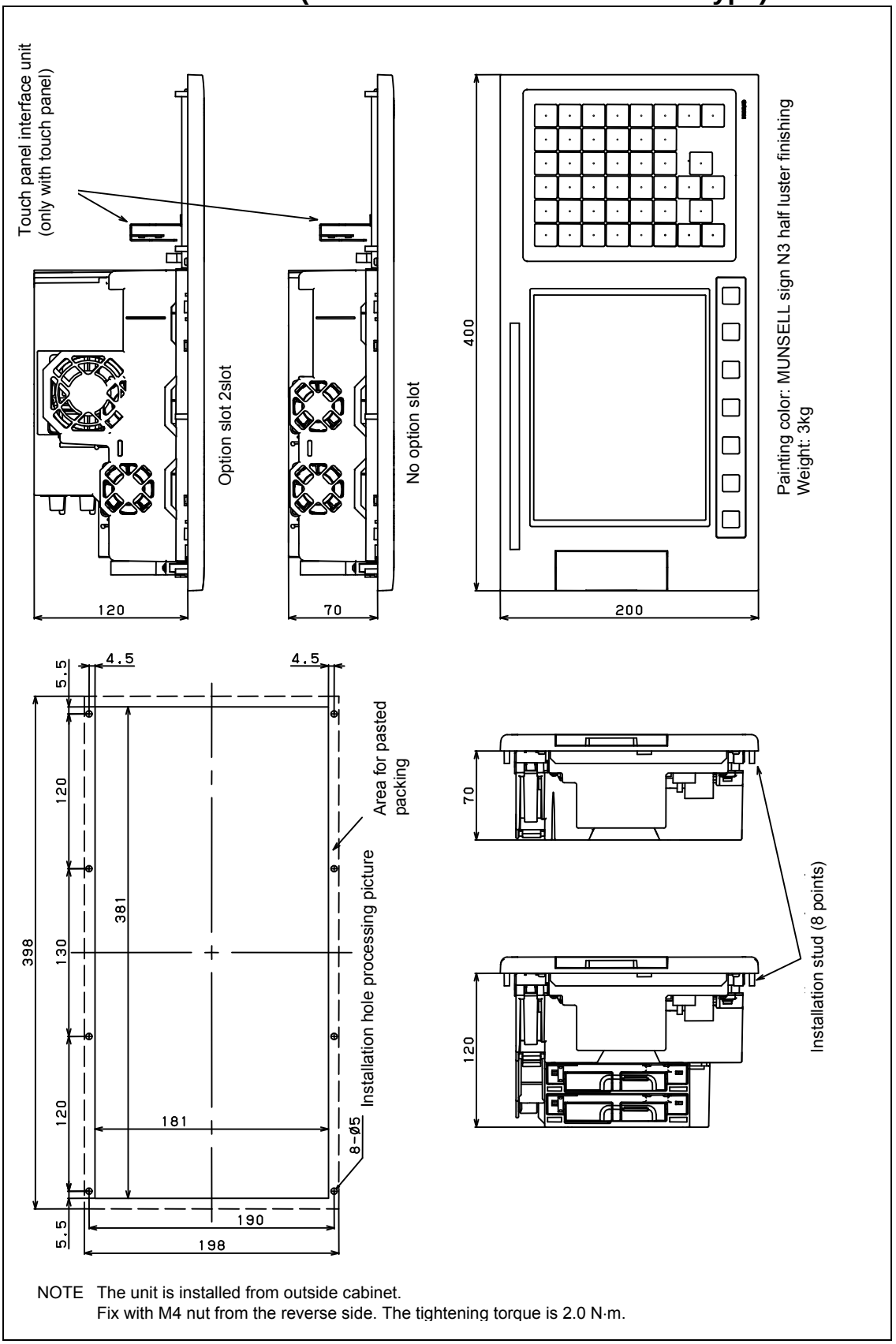


NOTE The unit is installed from outside cabinet.
Fix with M4 nut from the reverse side. The tightening torque is 2.0 N·m.

## Fig. U2 CNC control unit (8.4” color LCD/MDI vertical type)

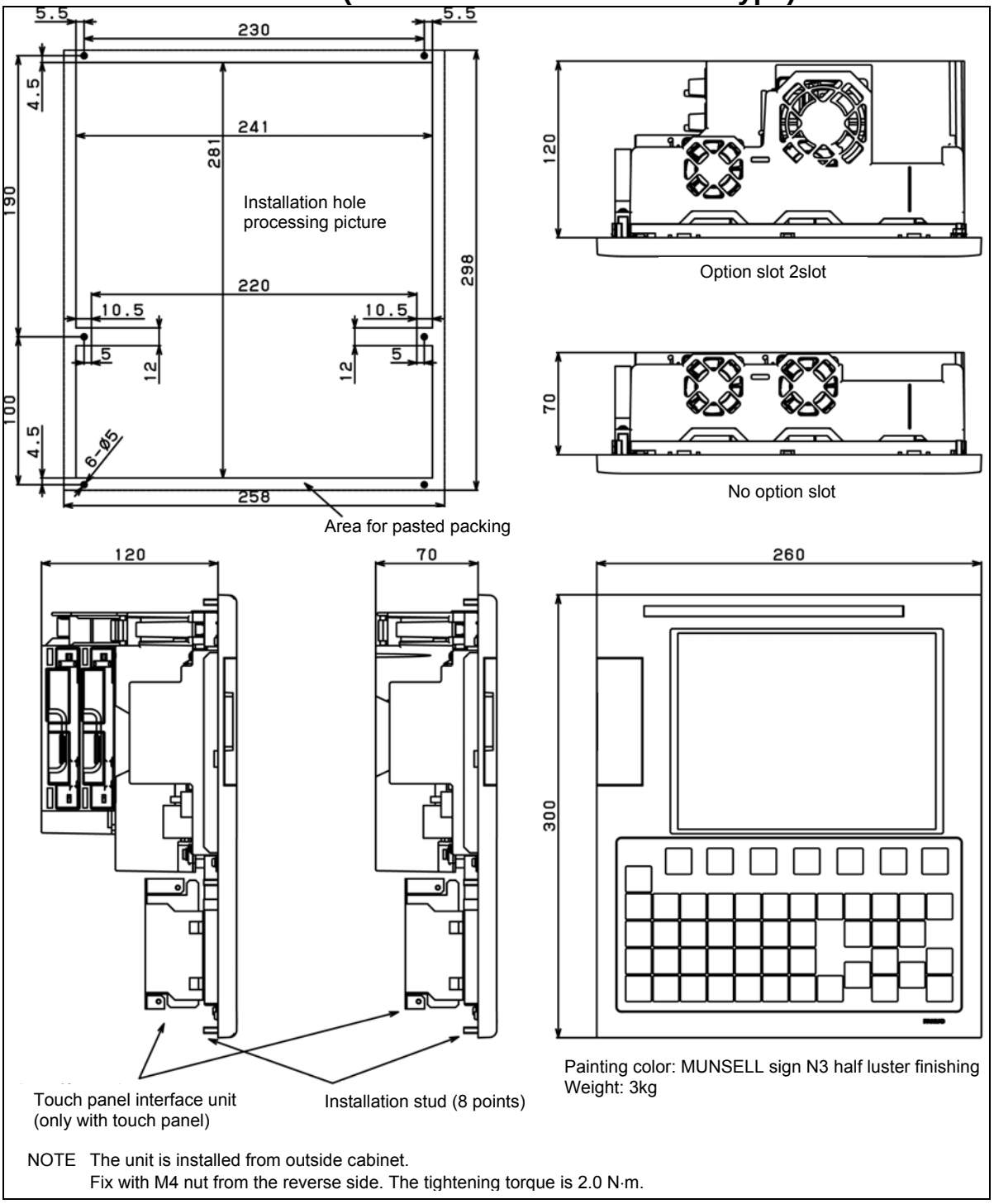


NOTE The unit is installed from outside cabinet.
Fix with M4 nut from the reverse side. The tightening torque is 2.0 N·m.

## Fig. U3 CNC control unit (10.4” color LCD)

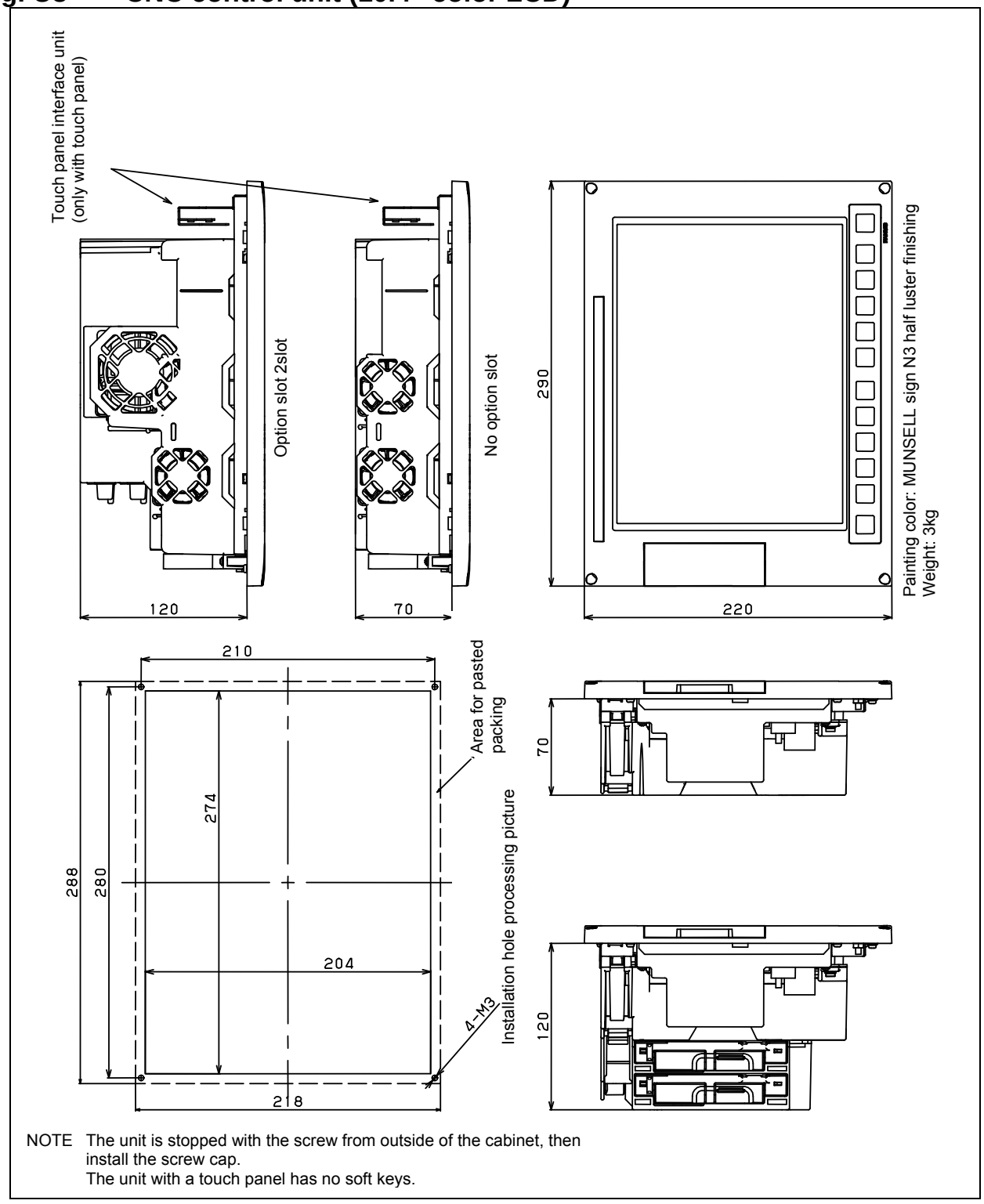


NOTE The unit is stopped with the screw from outside of the cabinet, then install the screw cap.
The unit with a touch panel has no soft keys.

## Fig. U4(a) MDI unit (horizontal type)

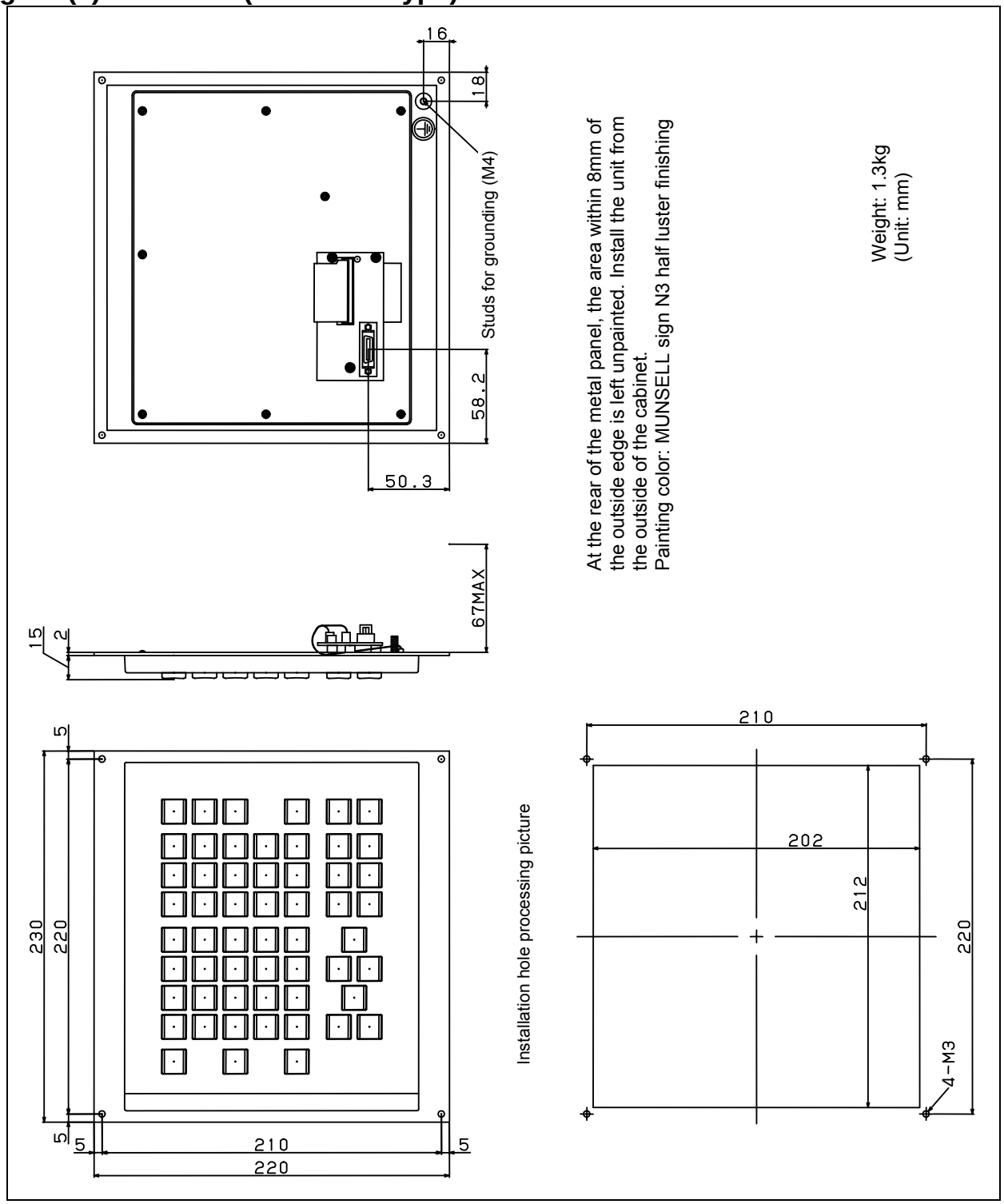

## Fig. U4(b) MDI unit (vertical type)

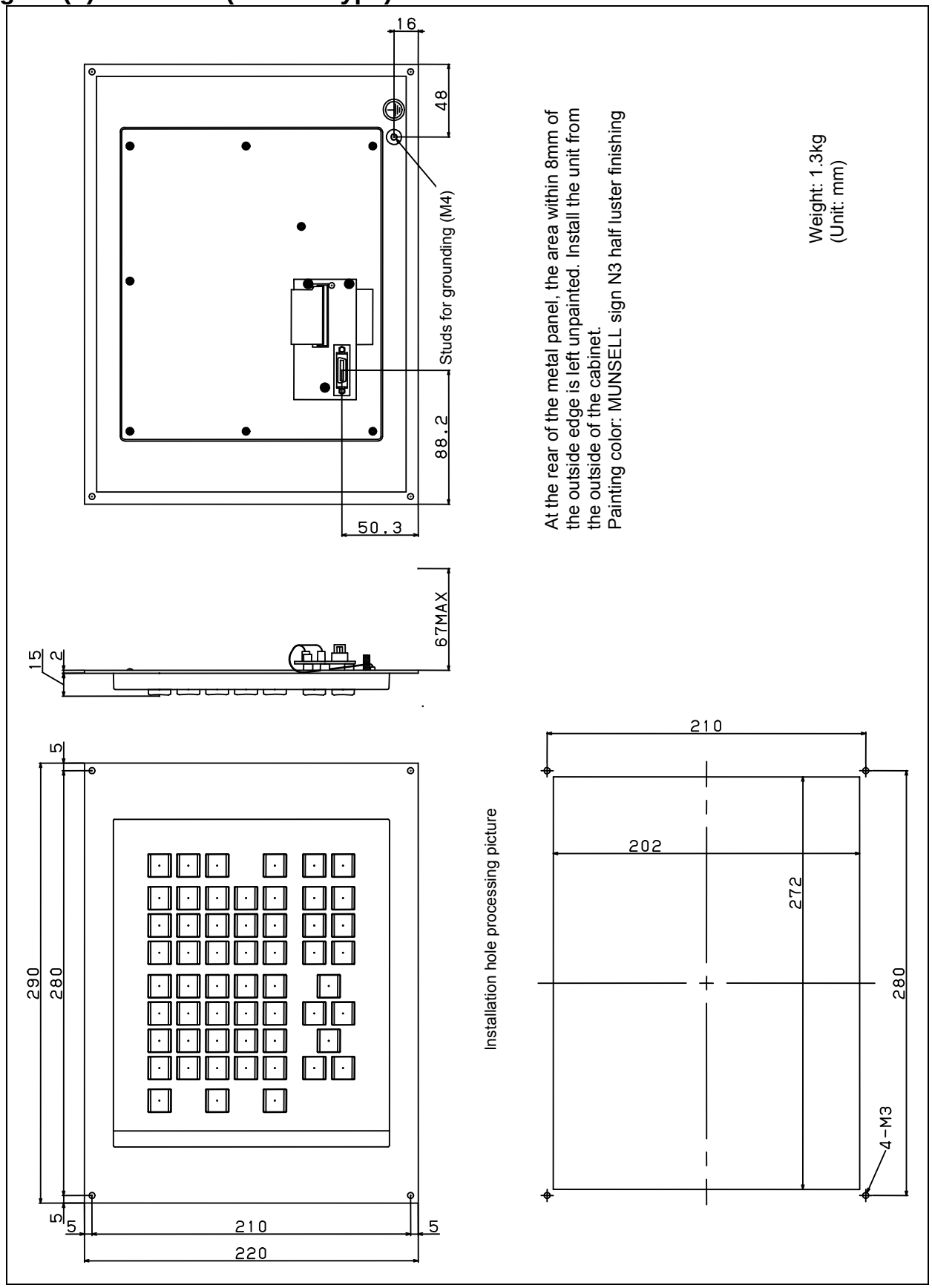

## Fig. U4(c) MDI unit (small type)

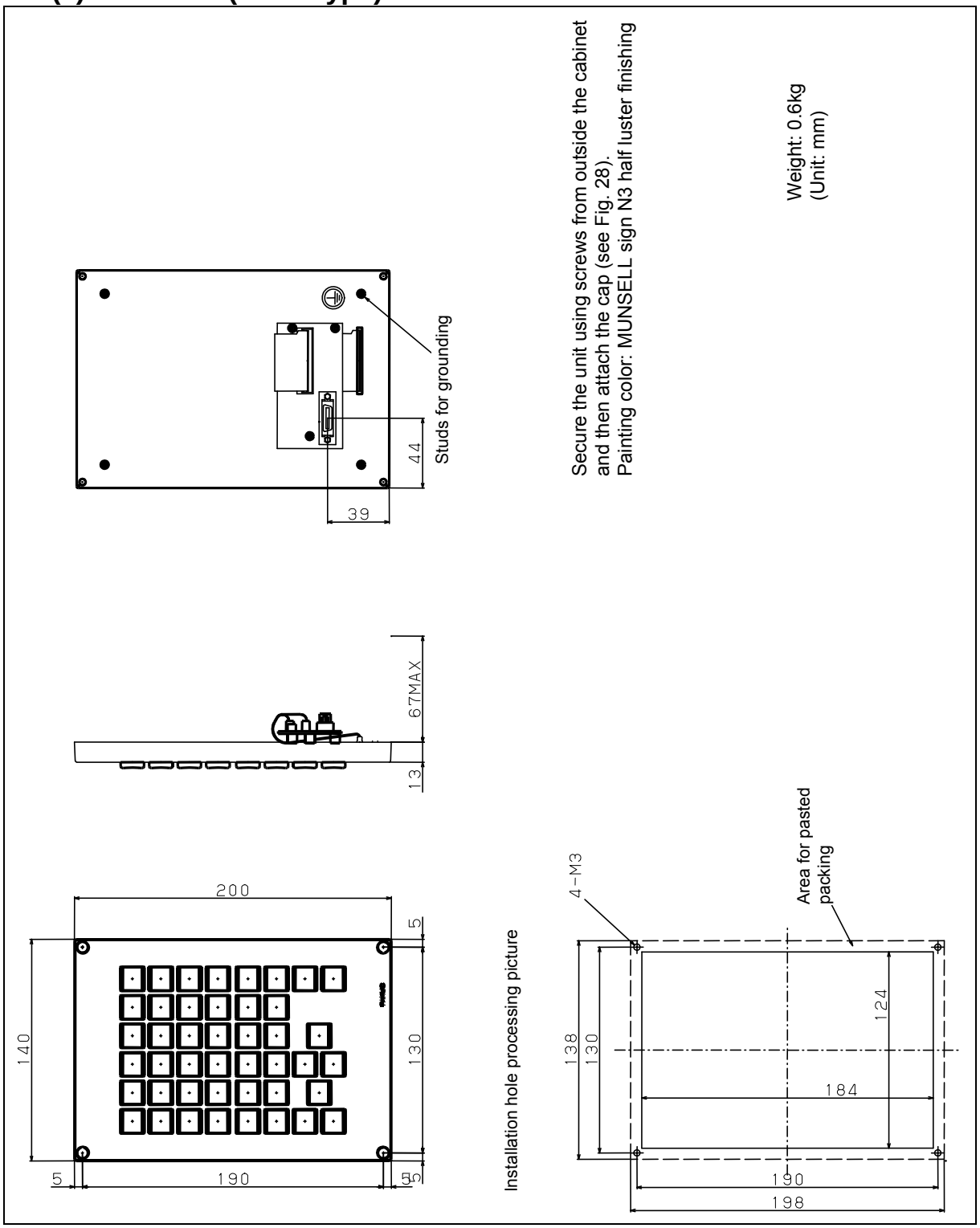

## Fig. U6 Portion in which each CNC control unit is installed

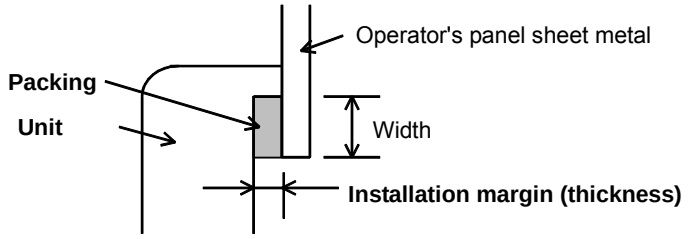


CAUTION
When installing the control unit, be sure to seal between the unit and the operator's panel with packing.
For the installation margin (thickness) and width, see the table below.

| Display unit type | Installation margin (thickness) | Width |
|---|---|---|
| 8.4" color LCD/MDI (horizontal type) | 0.8mm | 8.5mm |
| 8.4" color LCD/MDI (vertical type) | | |
| 10.4" color LCD | 0.8mm | 7mm |

**Fig. U7 I/O unit for 0*i***

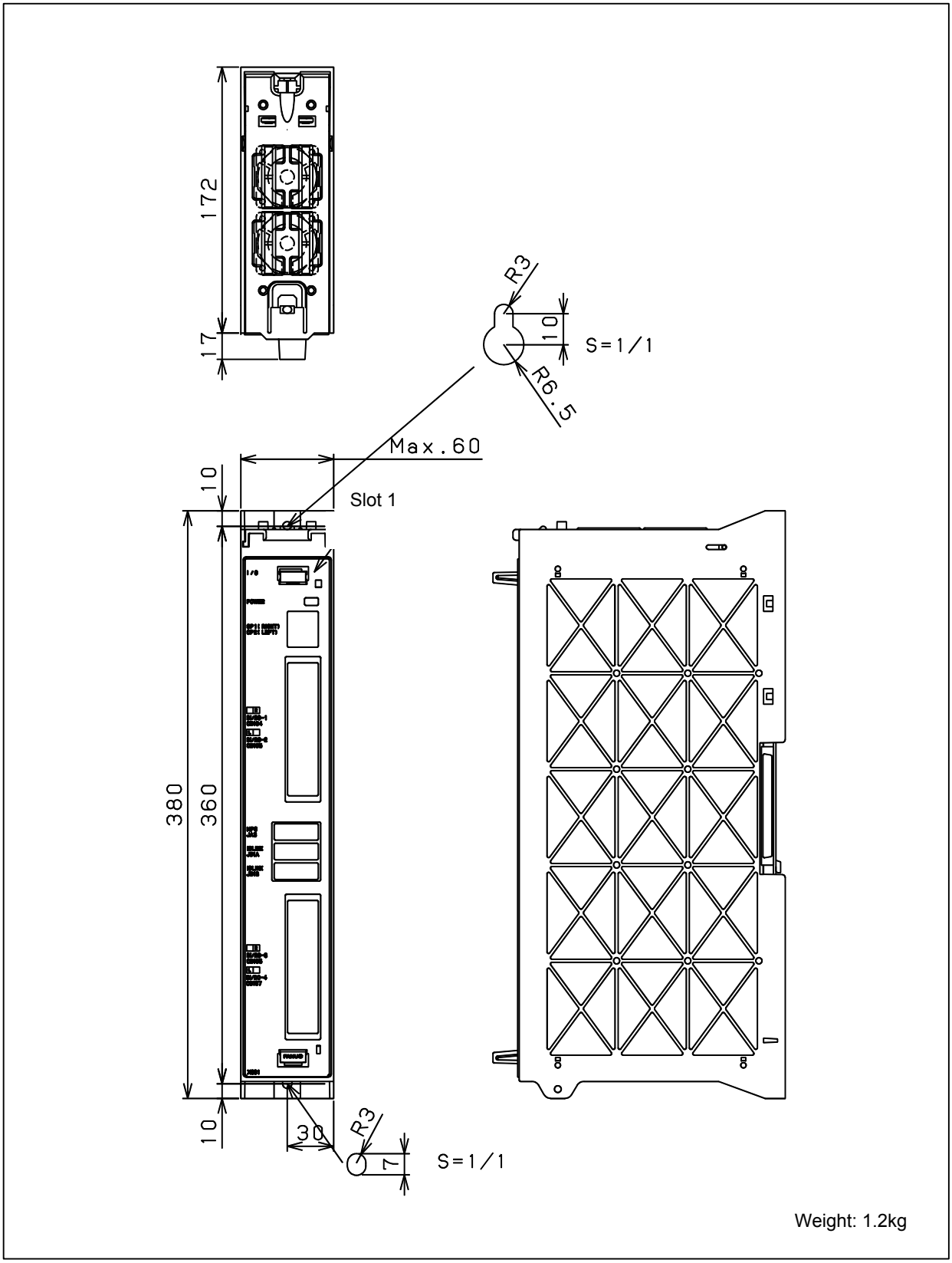

**Fig. U17 $\alpha i$ position coder**

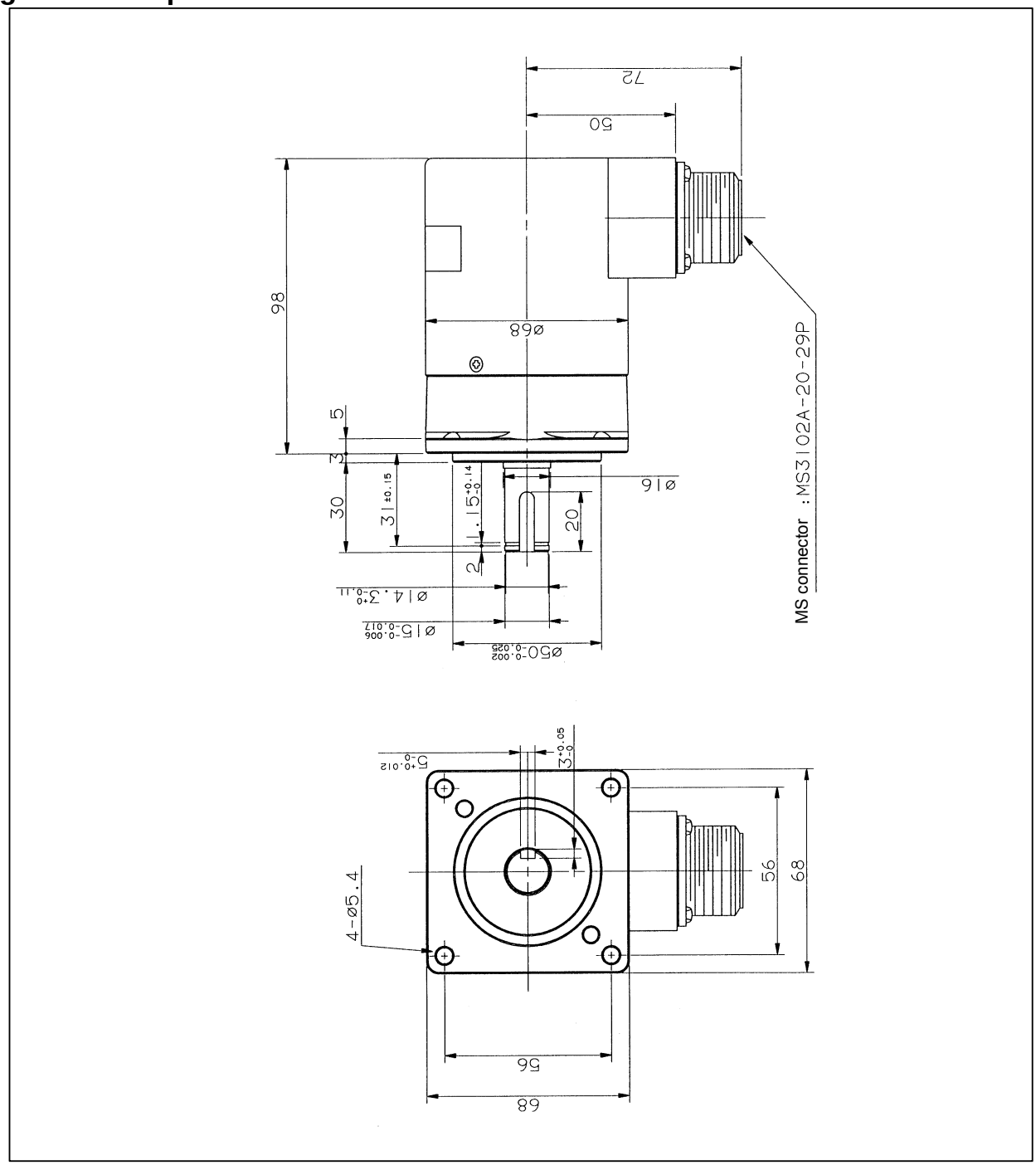

**Fig. U18 Manual pulse generator**

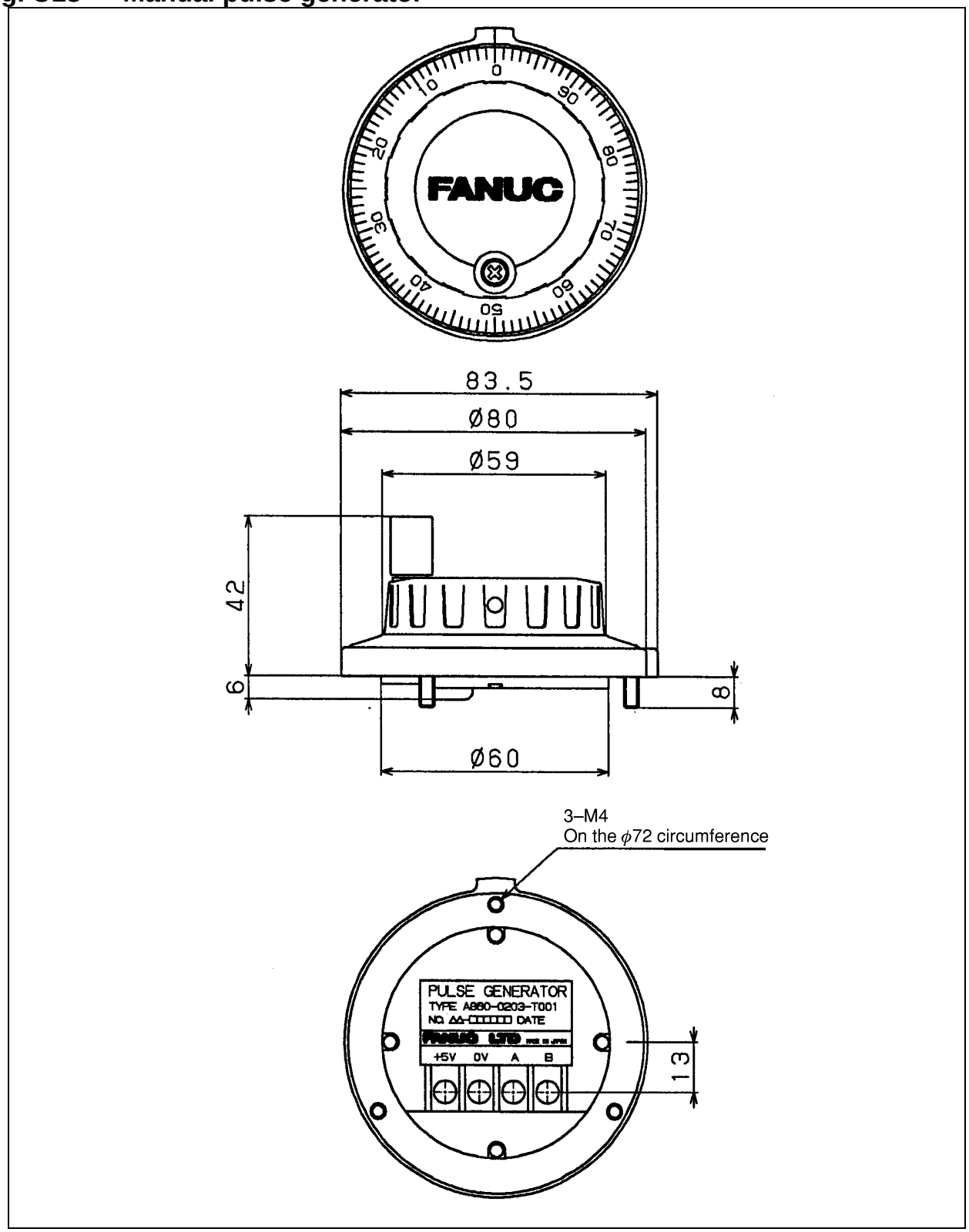

## Fig. U19 Pendant type manual pulse generator

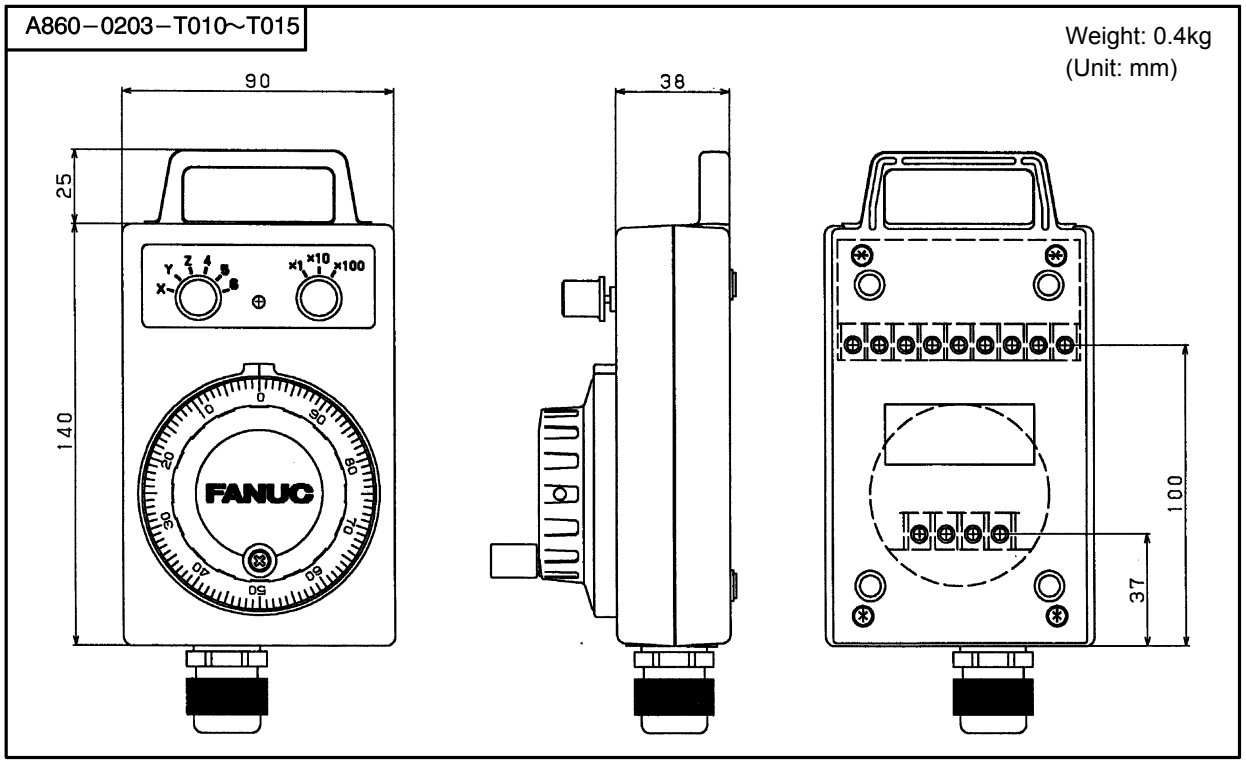

## Fig. U20 Separate detector interface unit

Weight: 0.4kg
(Unit: mm)

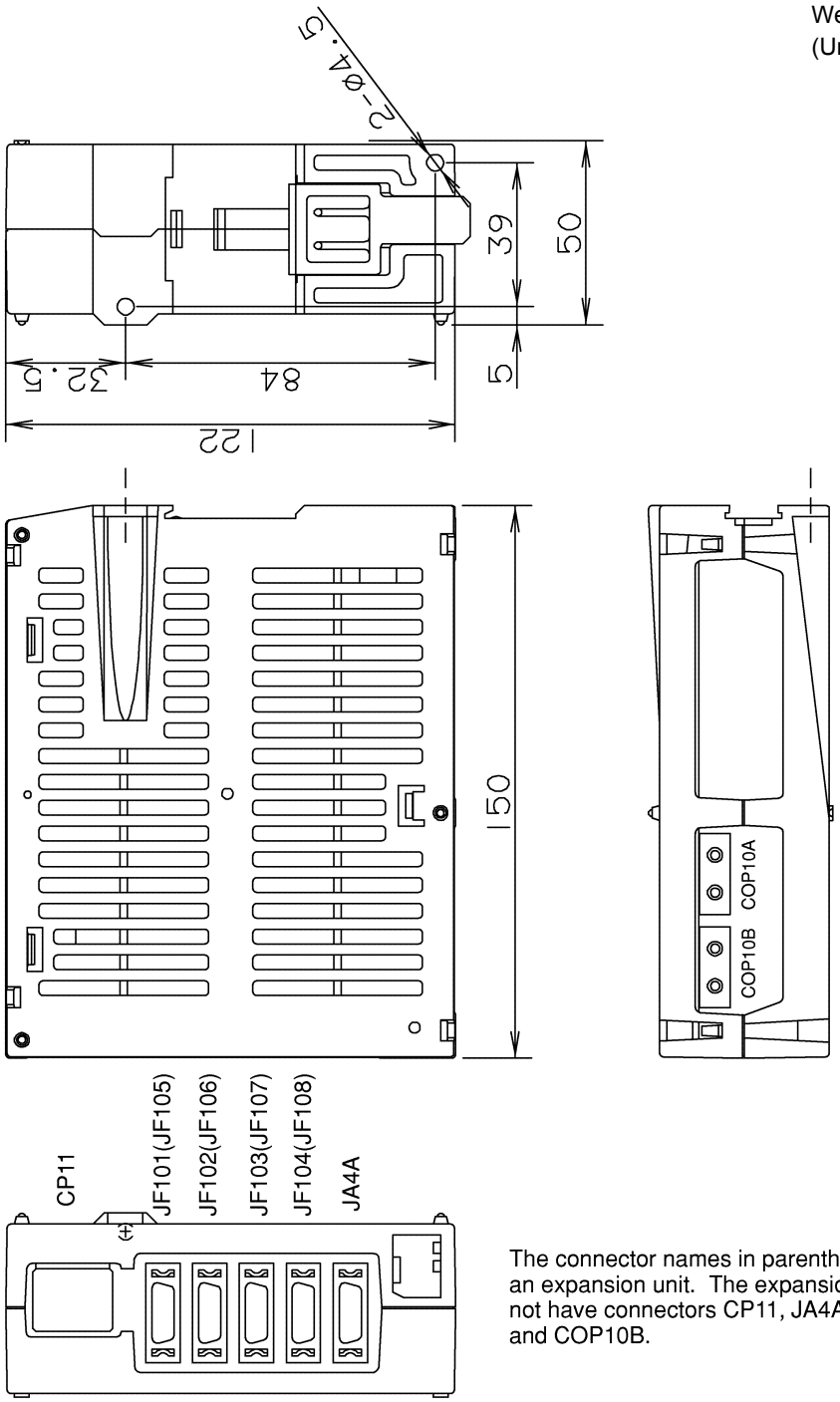


The connector names in parentheses are for an expansion unit. The expansion unit does not have connectors CP11, JA4A, COP10A, and COP10B.

**Fig. U21 Battery case for separate detector interface unit (ABS)**

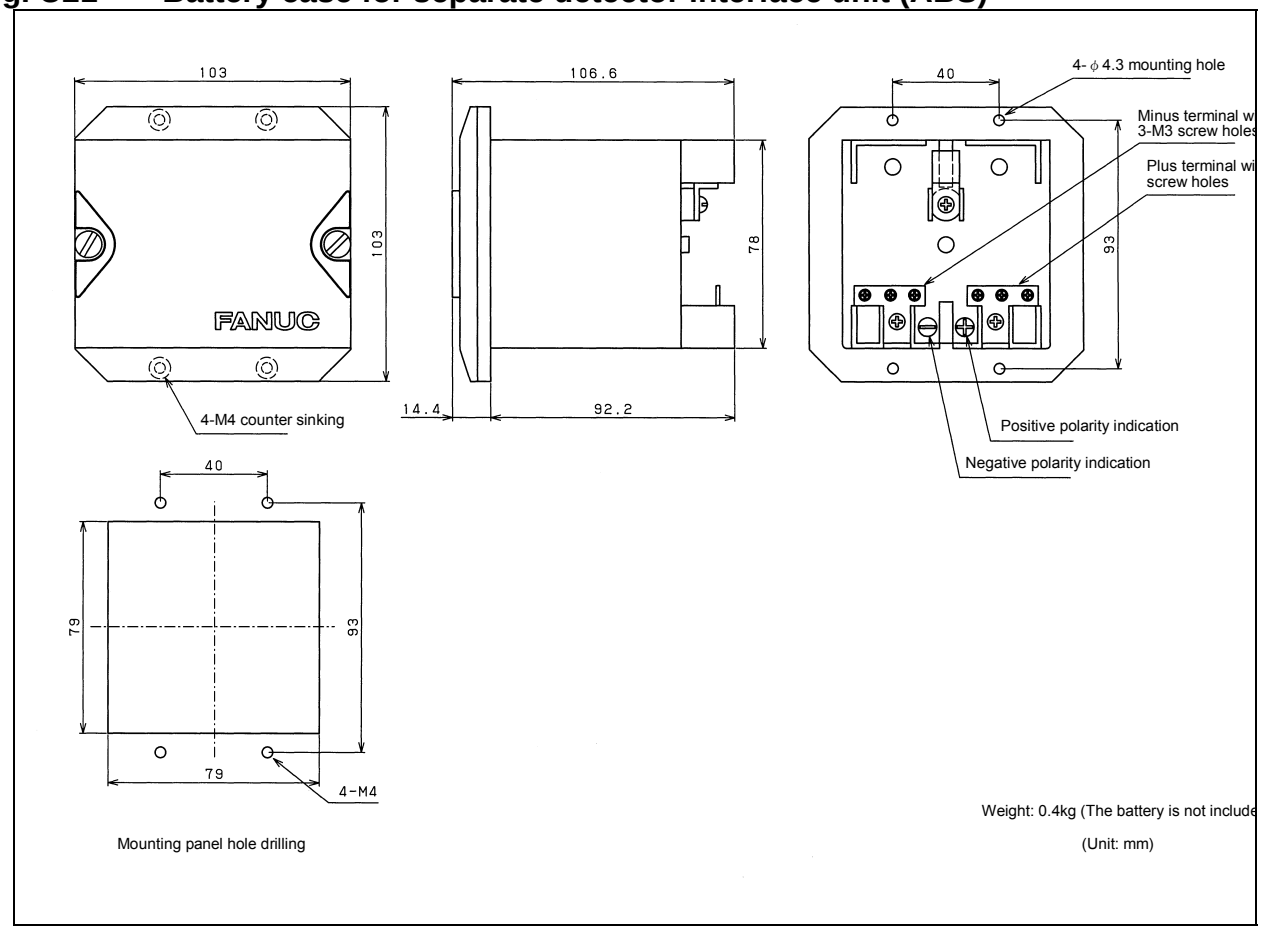

## Fig. U22 CNC battery unit for external installation

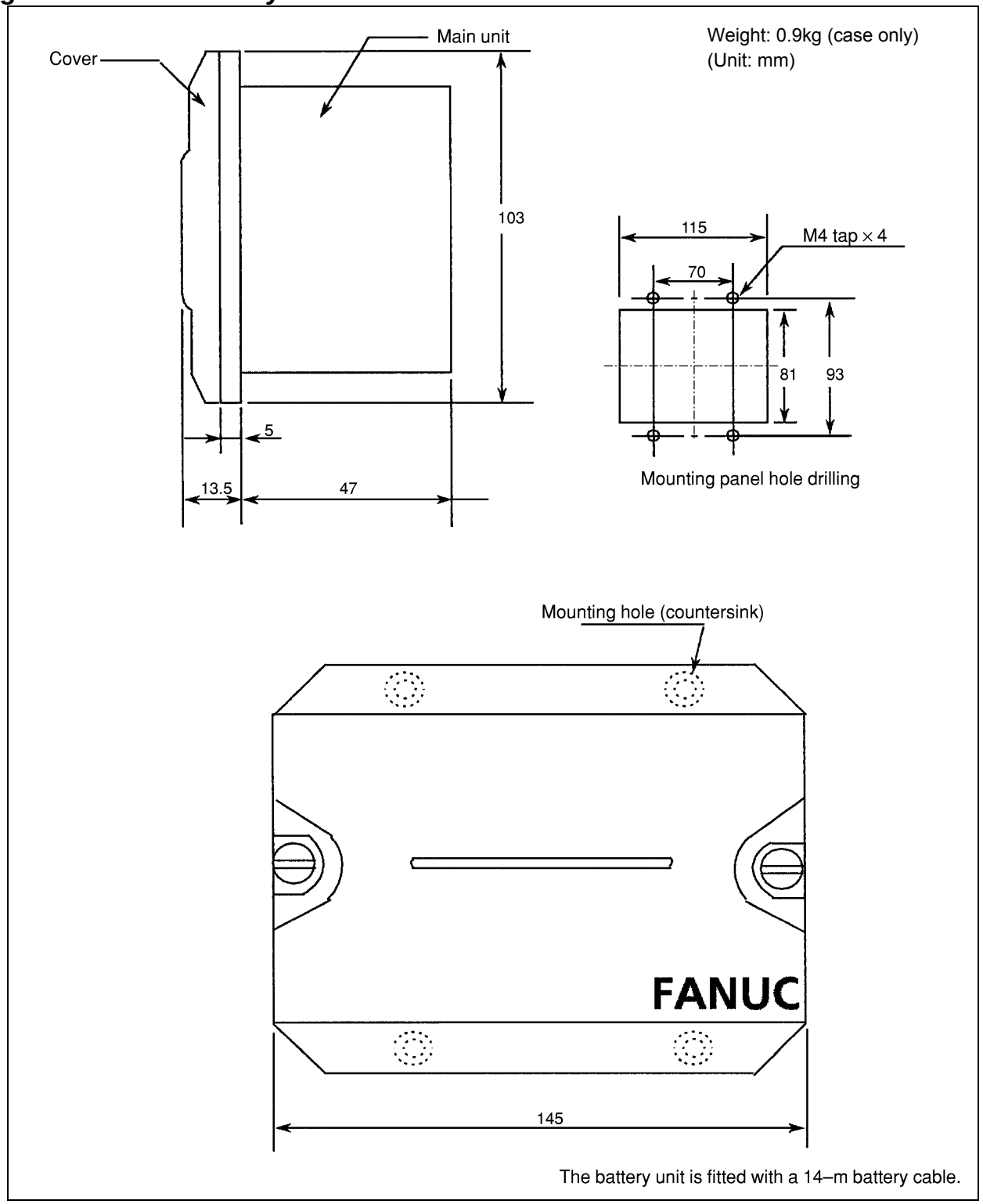

## Fig. U24 Punch panel Narrow width type

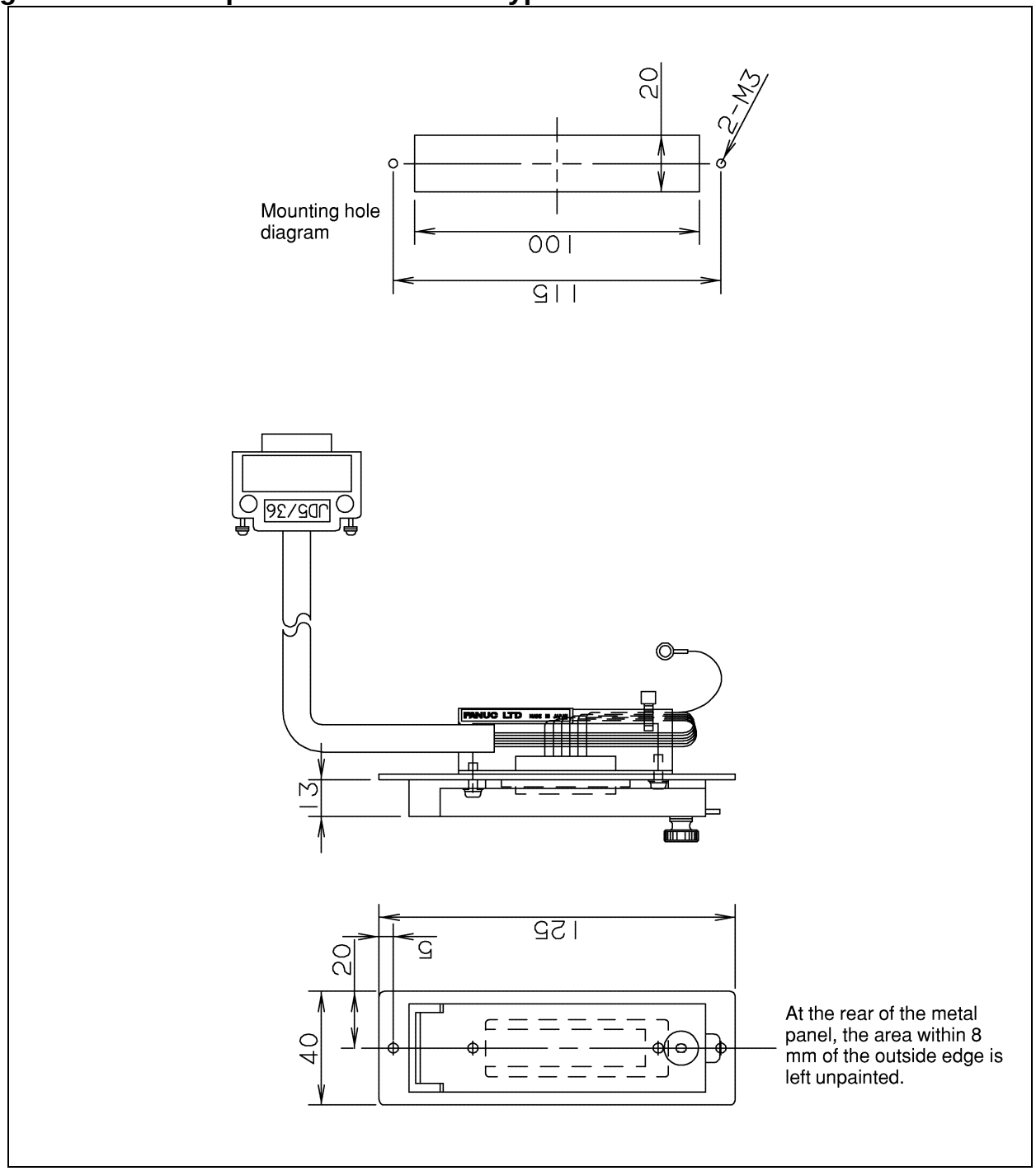

## Fig. U25 Machine operator's panel: Main panel A

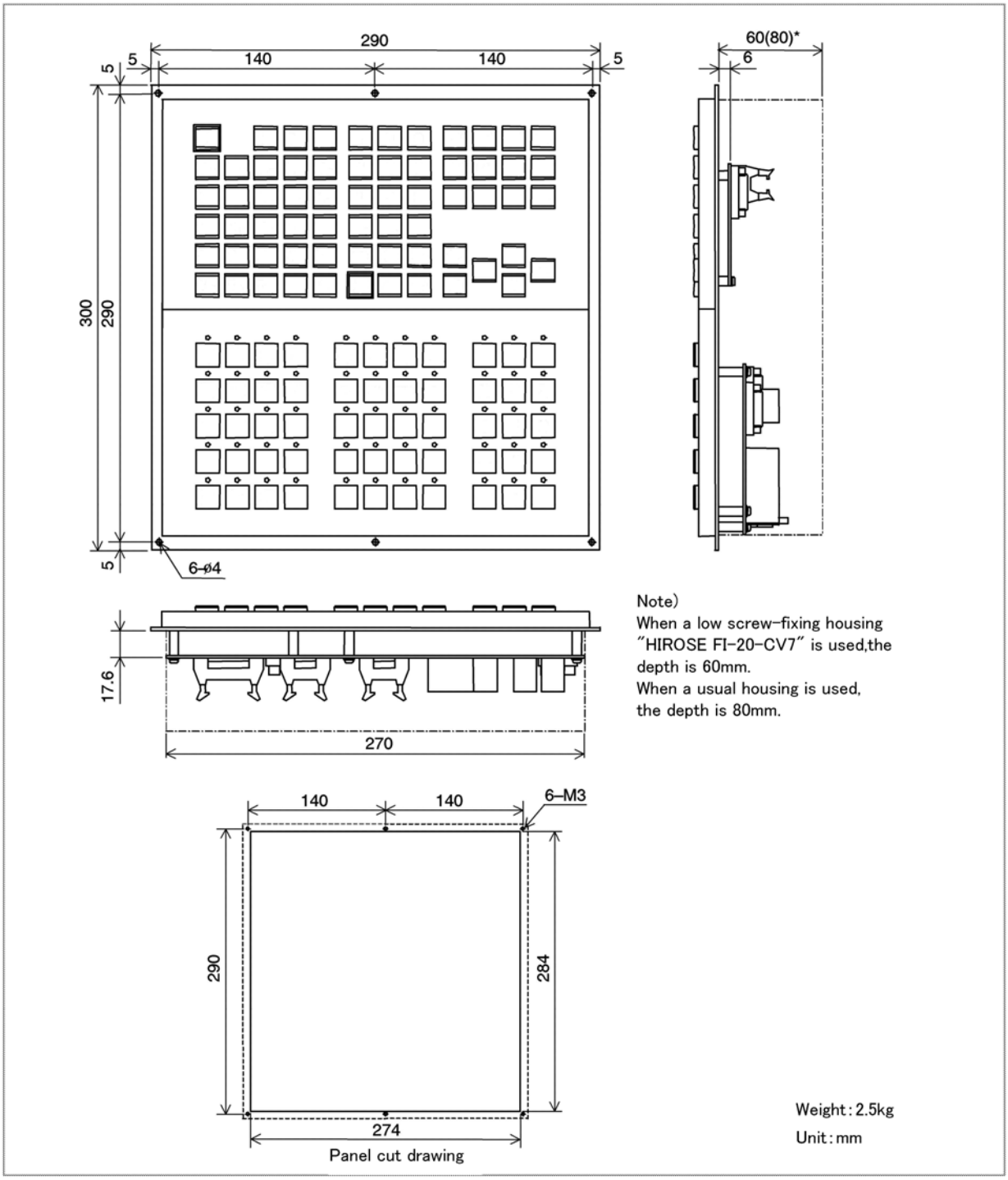

## Fig. U26 Machine operator's panel: Main panel B

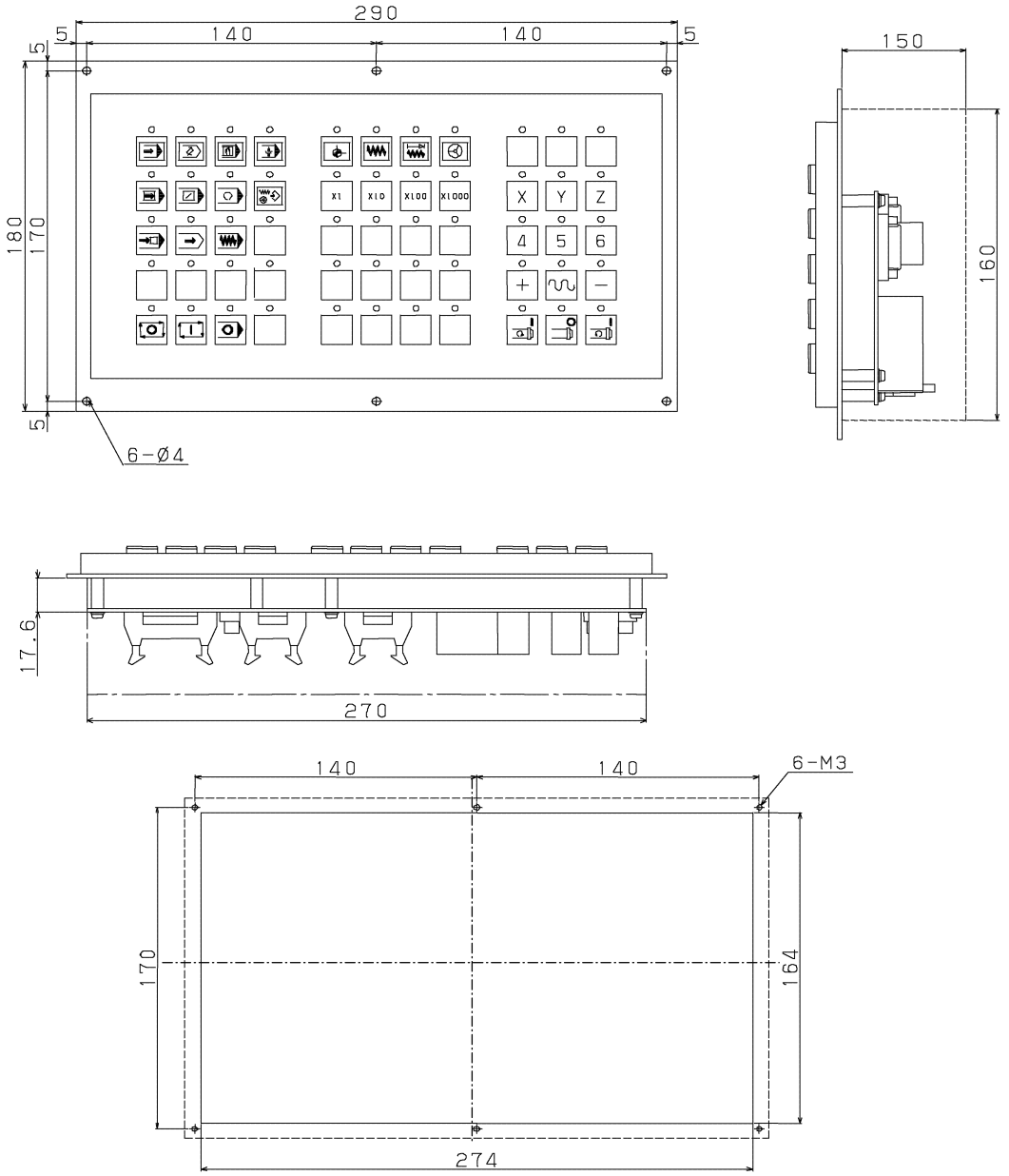


Unit = mm

Weight: 1.6kg

Panel cut drawing

## Fig. U27 Machine operator's panel: Sub panel A

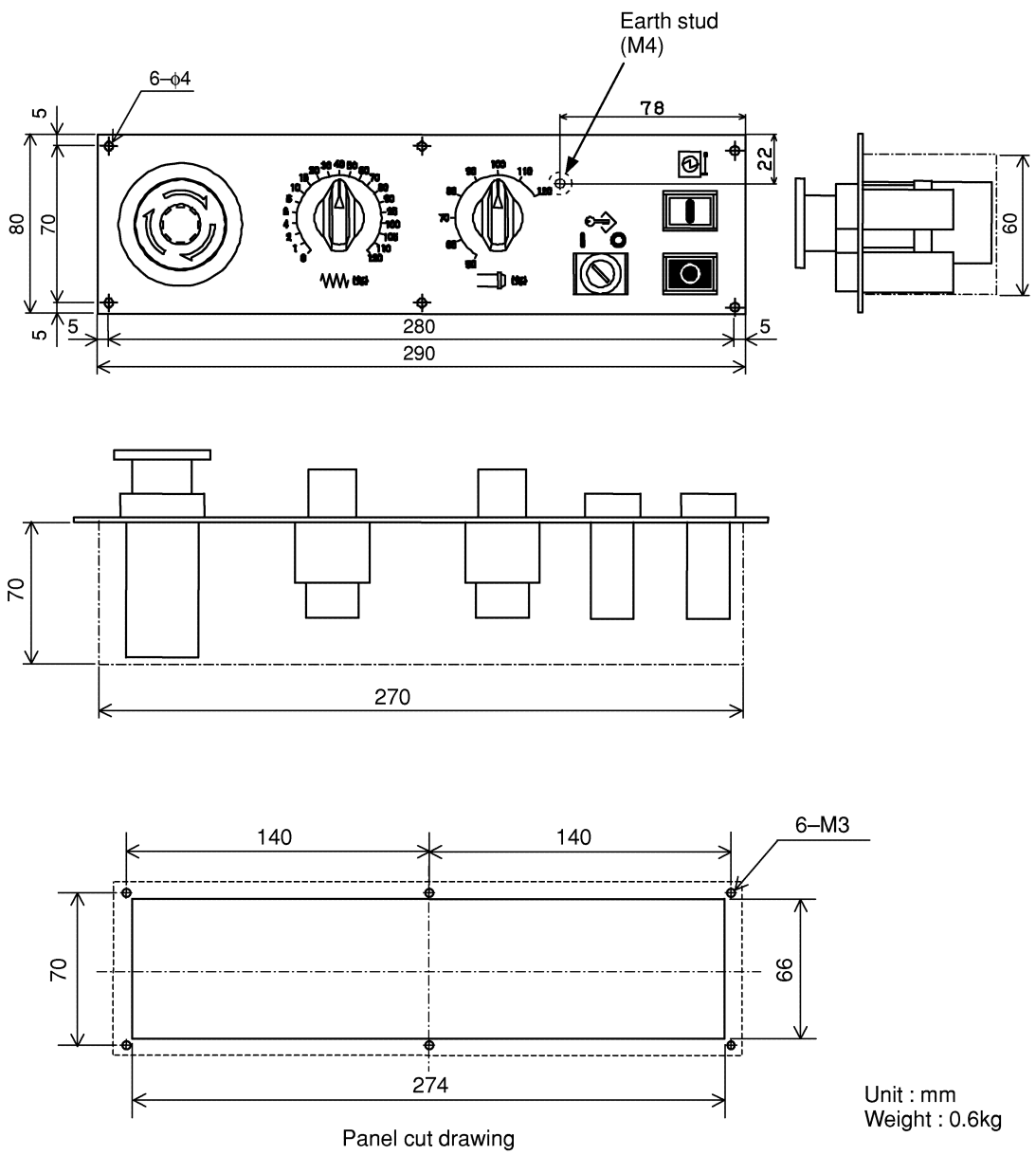

## Fig. U28 Machine operator's panel: Sub panel B1

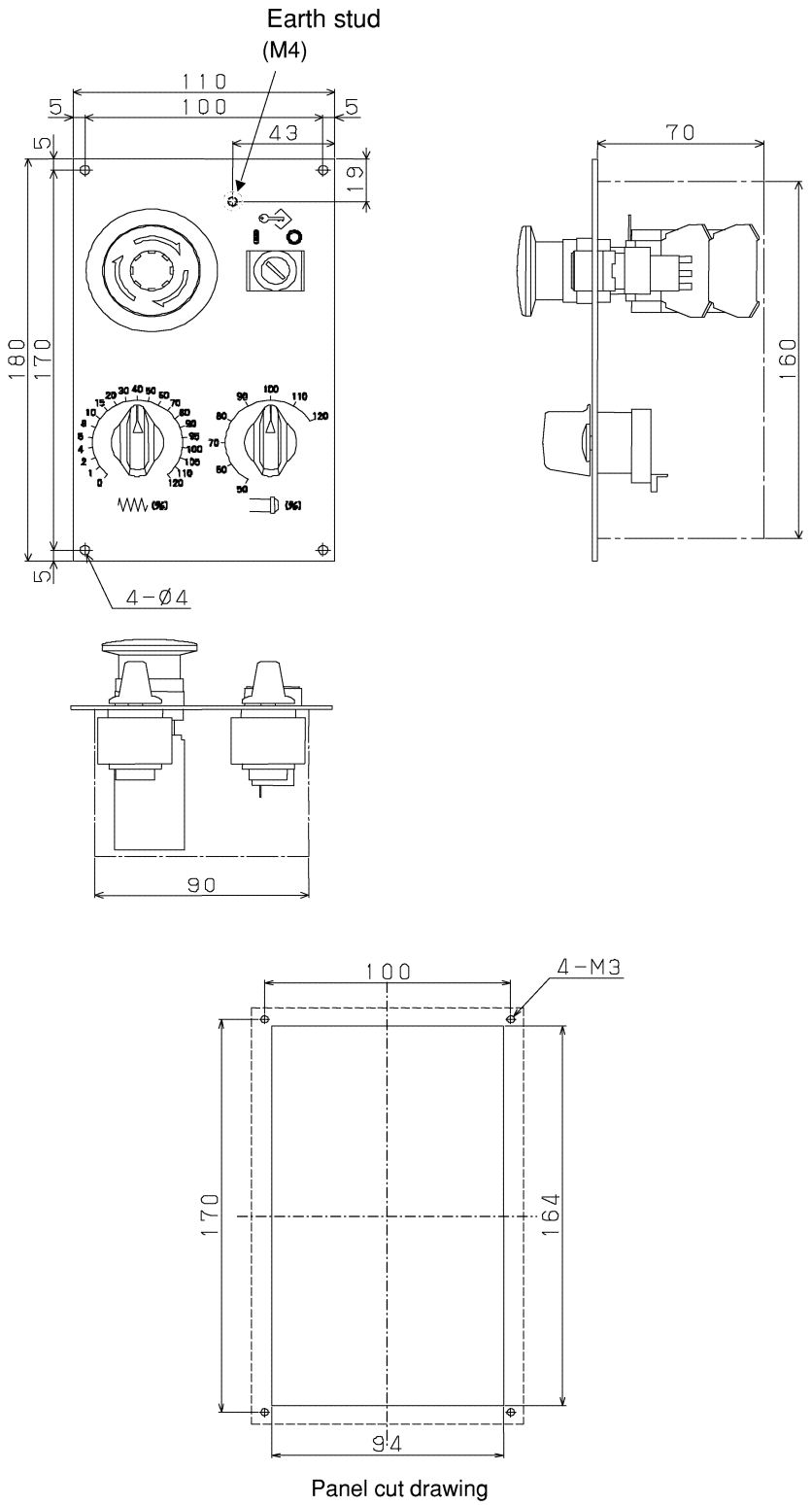


Unit = mm

Weight: 0.6kg

Panel cut drawing

## Fig. U29 Screw cap (for small MDI unit)

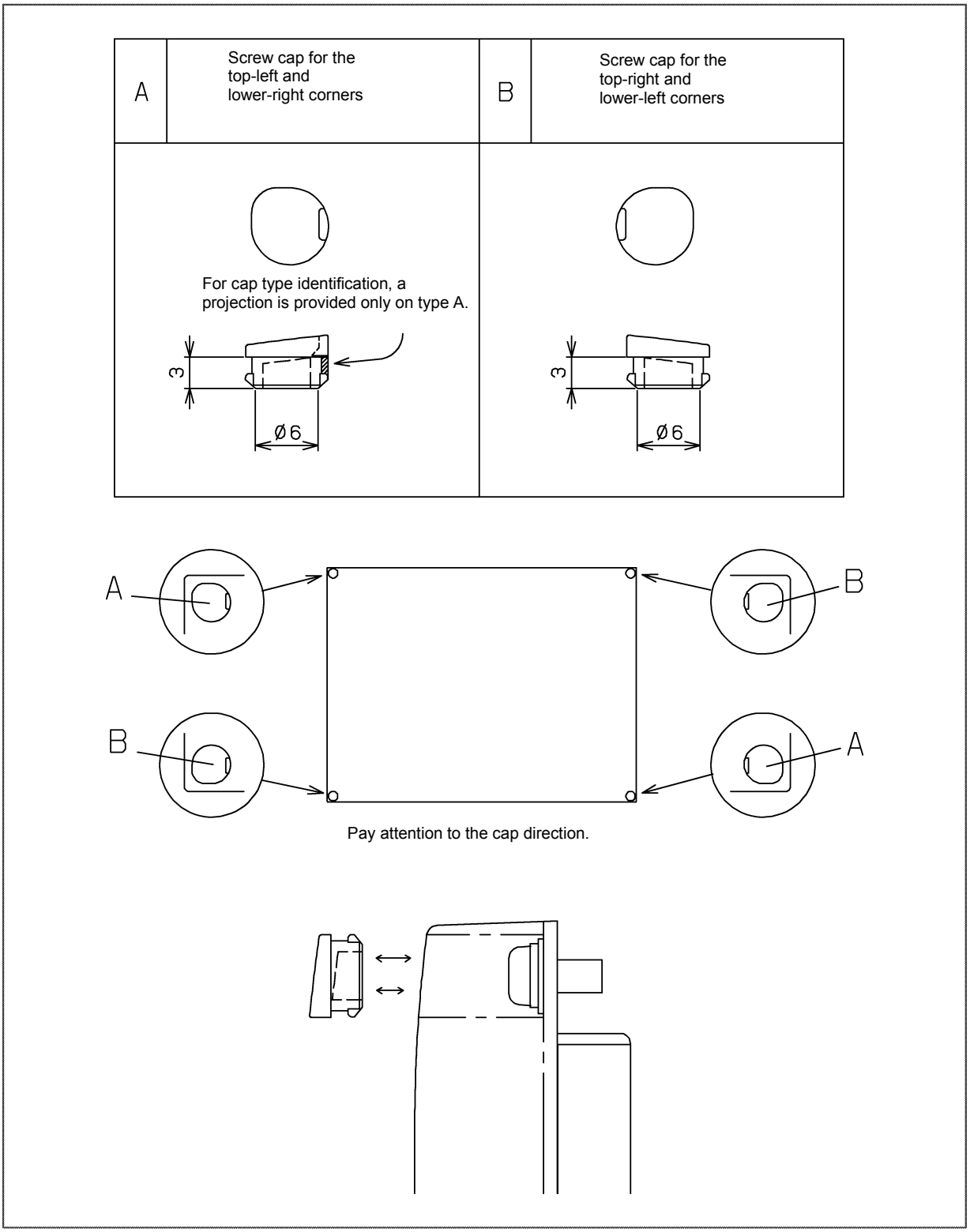

## Connectors

| Outline drawing name | Specification drawing number | Fig. |
|---|---|---|
| PCR connector (soldering type) | PCR-E20FS | Fig. C1 (a) |
| FI40 connector | FI40-2015S | Fig. C1 (b) |
| Connector case (HONDA PCR type) | PCR-V20LA/PCR-V20LB | Fig. C2 (a) |
| Connector case (HIROSE FI type) | FI-20-CV | Fig. C2 (b) |
| Connector case (FUJITSU FCN type) | FCN-240C20-Y/S | Fig. C2 (c) |
| Connector case (PCR type (Hirose Electric)) | FI-20-CV7 | Fig. C2 (d) |
| AMP connector (1): On the servo side | AMP1-178128-3 | Fig. C3 (a) |
| AMP connector (2): On the servo side | AMP2-178128-3 | Fig. C3 (b) |
| AMP connector (3): For +24 V power supply | AMP1-178288-3 | Fig. C3 (c) |
| AMP connector (4): For +24 V power supply | AMP2-178288-3 | Fig. C3 (d) |
| Contact for AMP connector | AMP1-175218-2/5<br>AMP1-175196-2/5 | Fig. C3 (e) |
| HONDA connector (case) | | Fig. C4 (a) |
| Honda connector (angled–type case) | | Fig. C4 (b) |
| HONDA connector (male) | | Fig. C4 (c) |
| HONDA connector (female) | | Fig. C4 (d) |
| HONDA connector (terminal layout) | | Fig. C4 (e) |
| Connector made by FCI Japan (3 pins,black) | SMS3PN-5 | Fig. C5 |
| Connector for HIROSE Flat cable | HIF3BB-50D-2.54R<br>HIF3BB-34D-2.54R | Fig. C6 |
| Punch panel connector for reader/puncher interface | | Fig. C8 (a) |
| Locking plate plate for reader/puncher interface connector | | Fig. C8 (b) |
| Honda connector (for the distributed I/O connector printed circuit board) | MRH-50FD | Fig. C9 |

## Fig. C1 (a) PCR connector (soldering type)

TYPE : HONDA PCR–E20FS (SOLDERING TYPE)
USAGE : GENERAL
MATING
HOUSING : HONDA PCR–V20LA (PLASTIC)

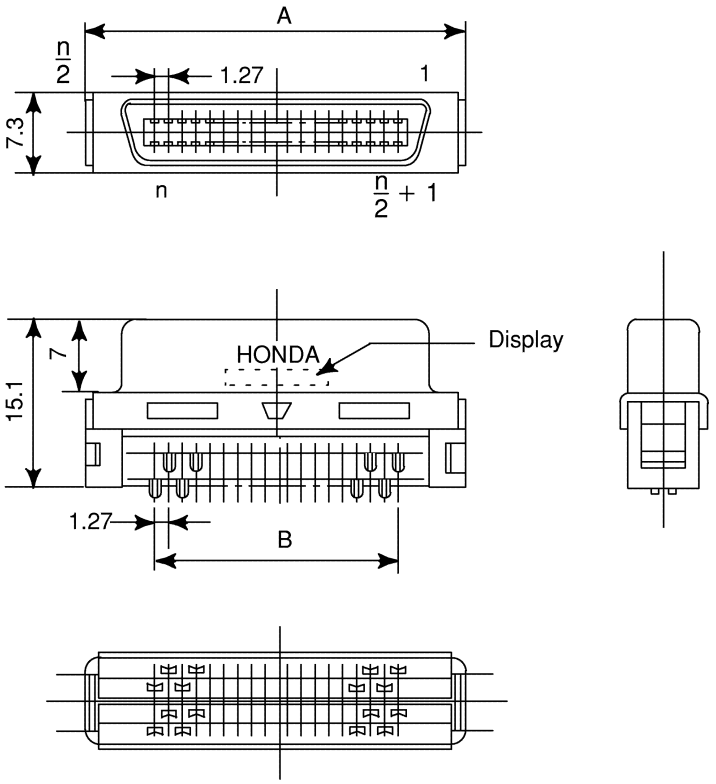


| | A | B |
|---|---|---|
| PCR–E20FS | 21.65 | 11.43 |

## Fig. C1 (b) FI40 connector

TYPE : HIROSE FI40–2015S
USAGE : PULSE CODER INTERFACE
LINEAR SCALE INTERFACE
MPG INTERFACE
MATING/HOUSING : HIROSE FI–20–CV

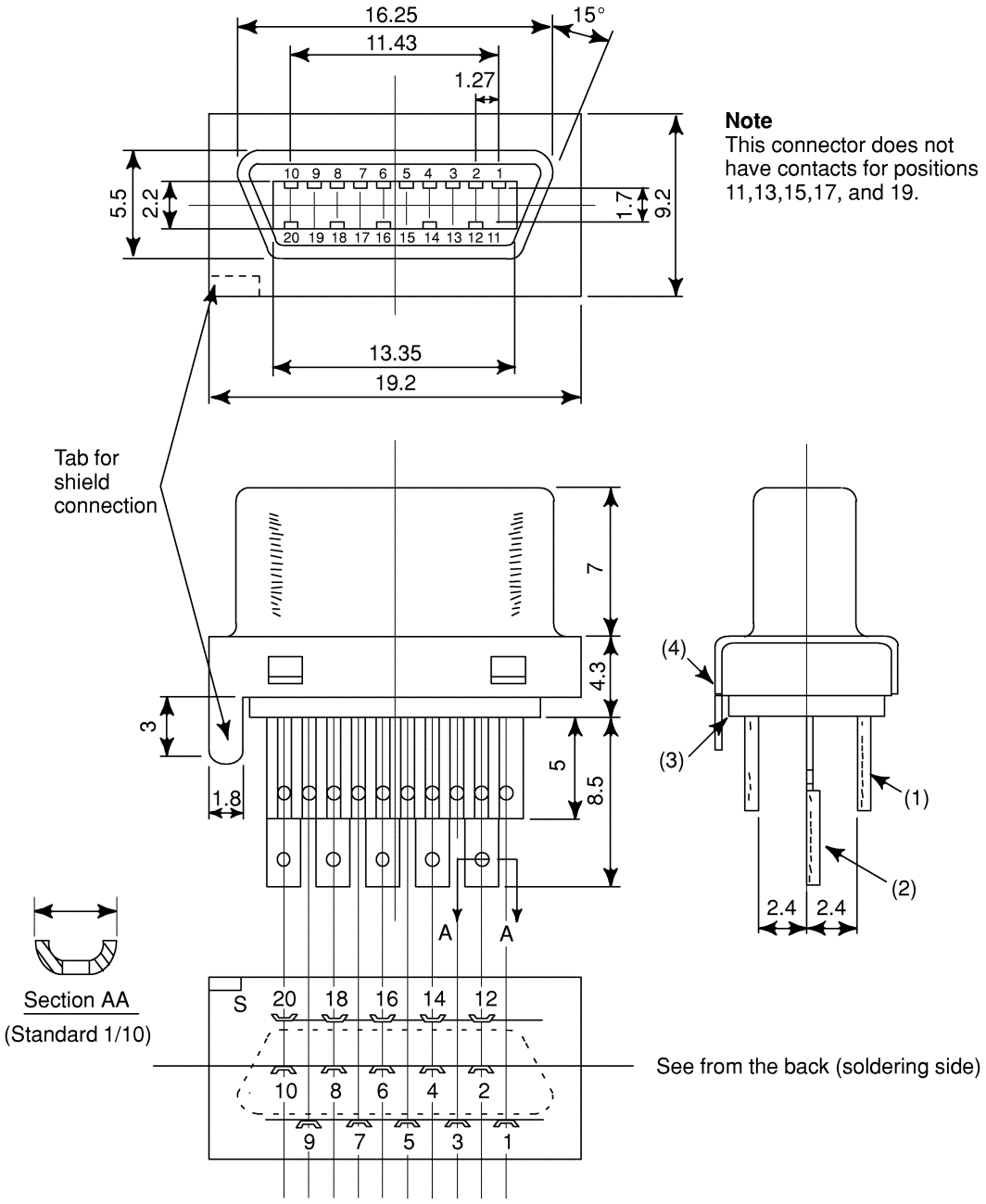


**Note**
This connector does not have contacts for positions 11,13,15,17, and 19.

## Fig. C2 (a) Connector case (HONDA PCR type)

TYPE : HONDA PCR–V20LA (for 6 dia. cable)
USAGE : GENERAL

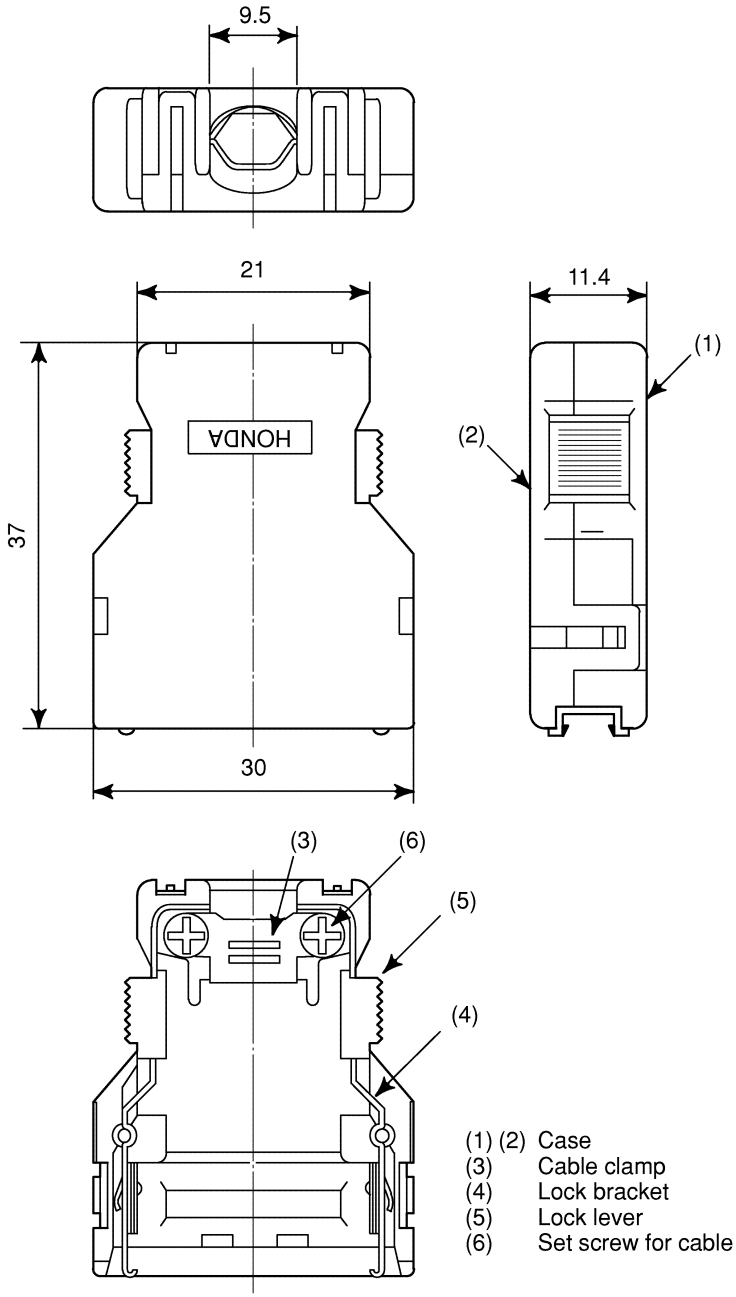


(1) (2) Case
(3) Cable clamp
(4) Lock bracket
(5) Lock lever
(6) Set screw for cable clamp

## Fig. C2 (b) Connector case (HIROSE FI type)

TYPE : HIROSE FI–20–CV
USAGE : PULSE CODER INTERFACE
LINEAR SCALE INTERFACE
MANUAL PULSE GENERATOR INTERFACE

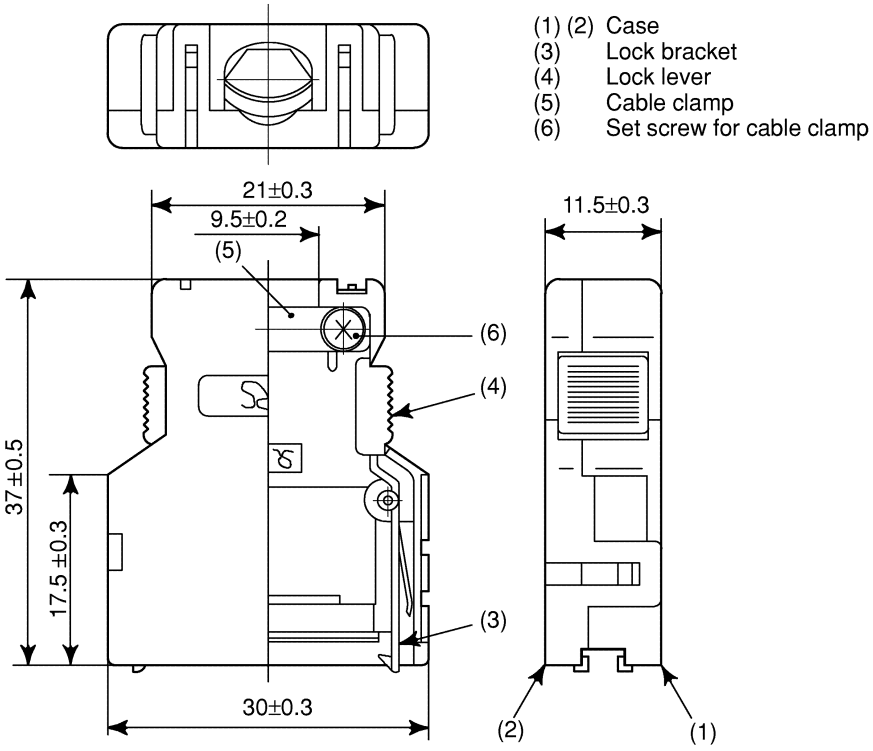

## Fig. C2 (c) Connector case (FUJITSU FCN type)

TYPE : FUJITSU FCN–240C20–Y/S (for 5.8 dia. cable)
USAGE : GENERAL

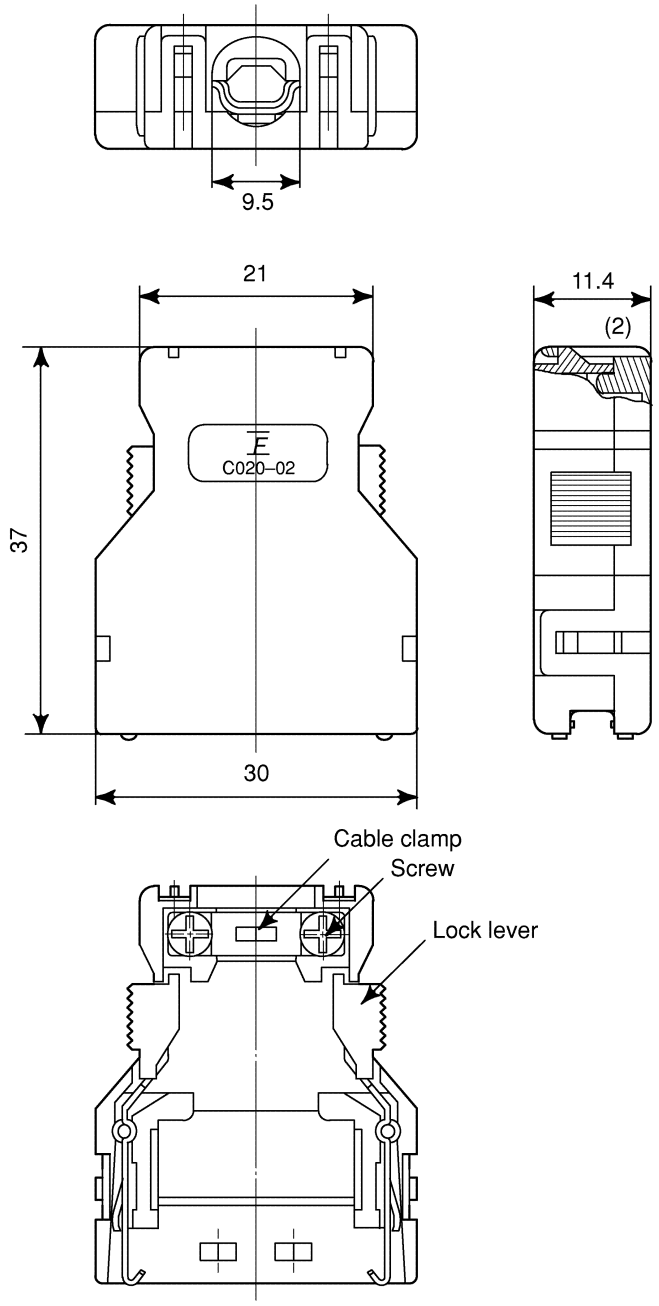

## Fig. C2 (d) Connector case (PCR type (Hirose Electric))

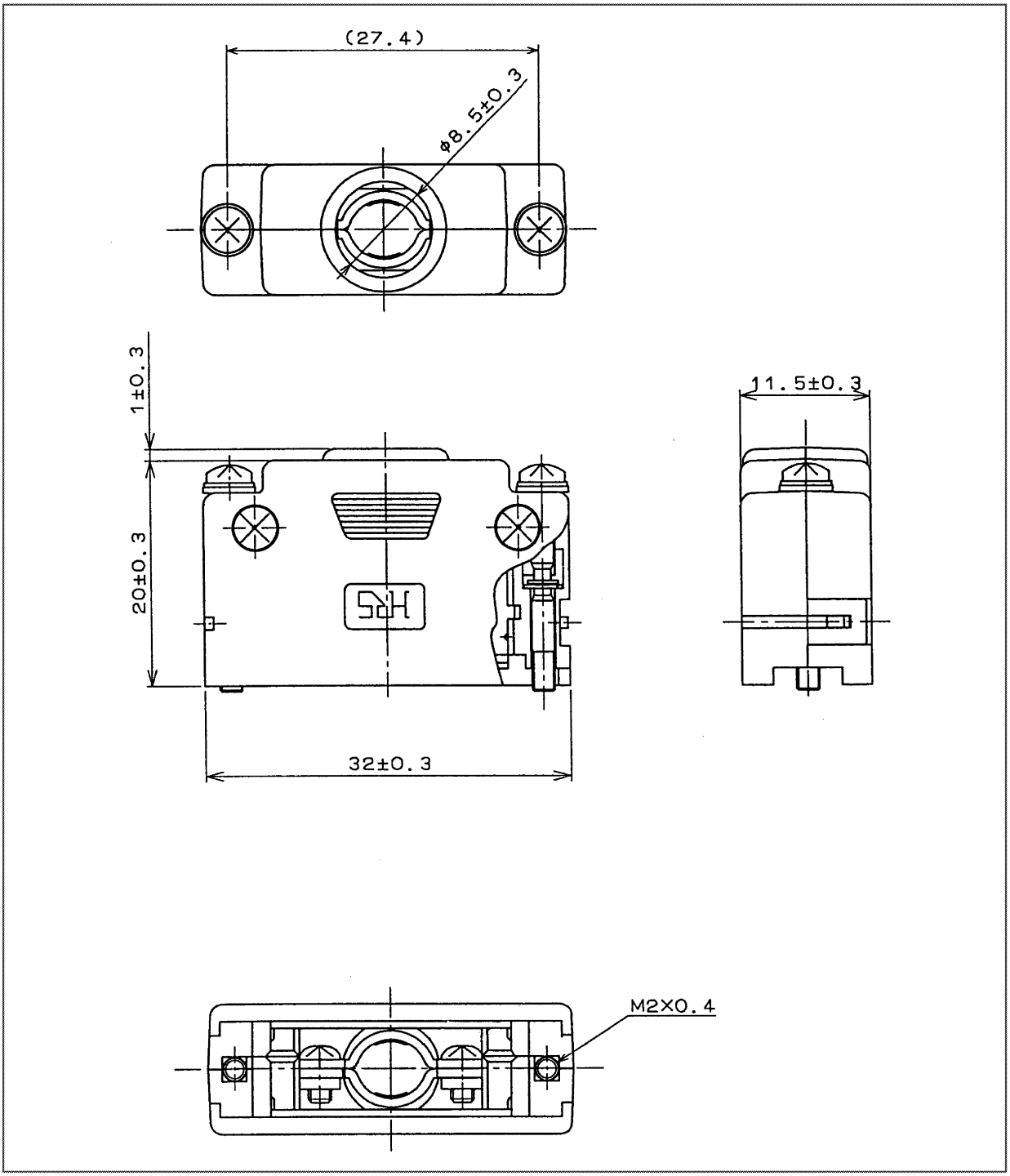

## Fig. C3 (a) AMP connector (1): On the servo side

TYPE : AMP1–178128–3

DIMENSION

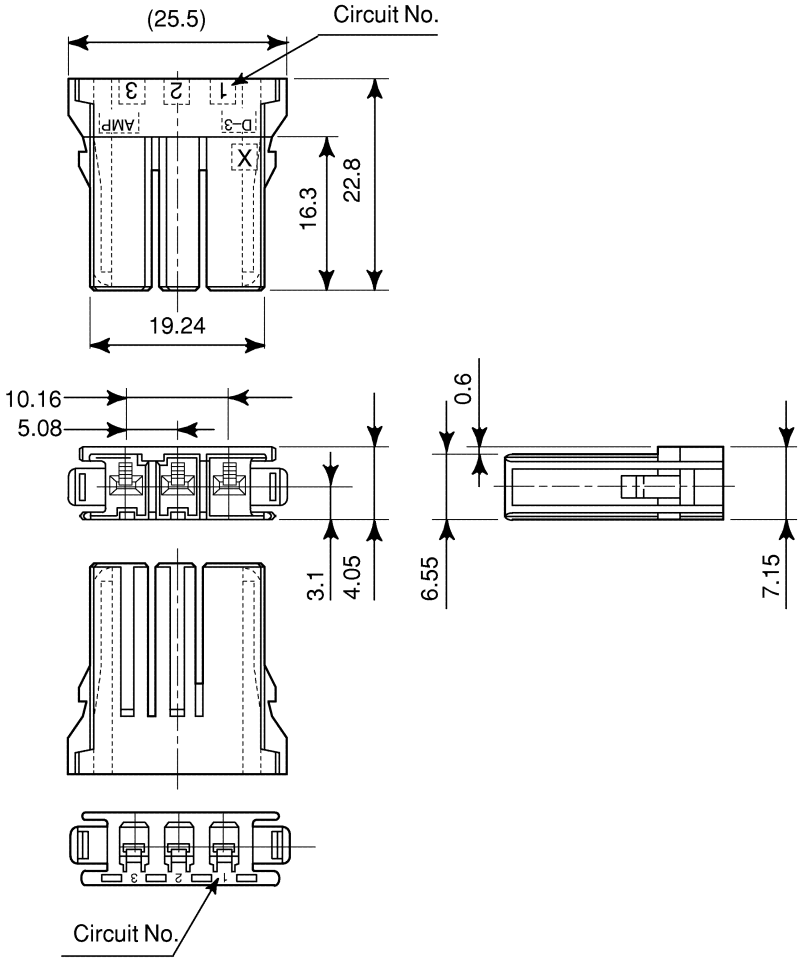

## Fig. C3 (b) AMP connector (2): On the servo side

TYPE : AMP2–178128–3

DIMENSION

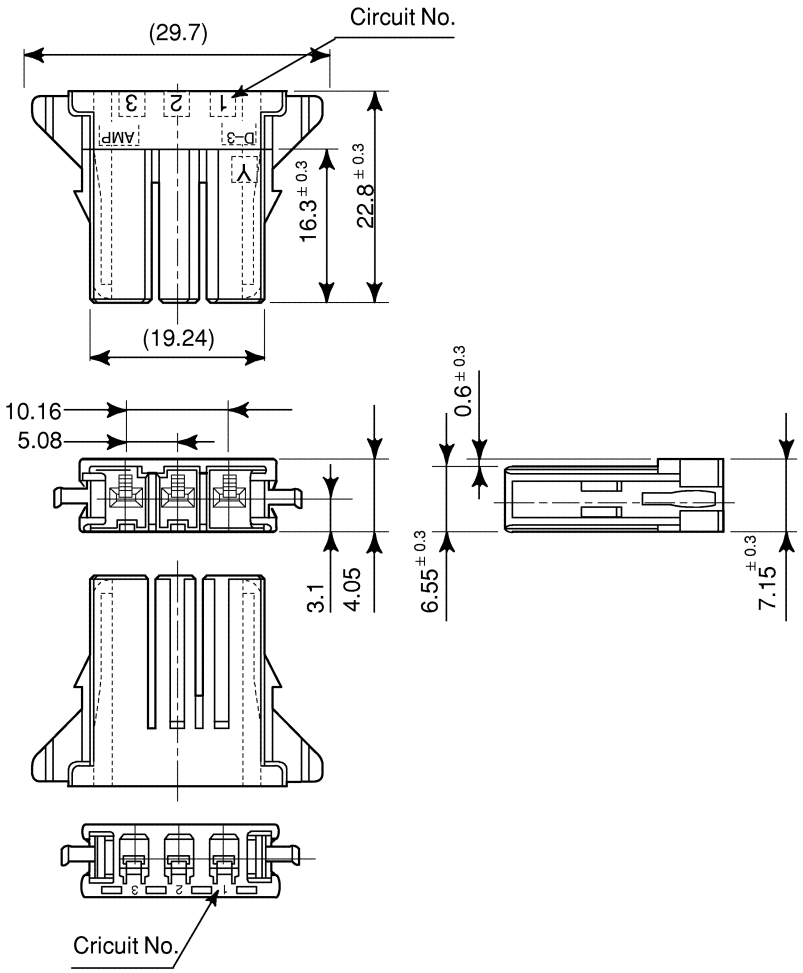

## Fig. C3 (c) AMP connector (3): For +24 V power supply

TYPE : AMP1–178288–3

USAGE : POWER SUPPLY UNIT CP1A
+24V INPUT

| | |
|---|---|
| 3 | |
| 2 | 0V |
| 1 | +24V |

DIMENSION

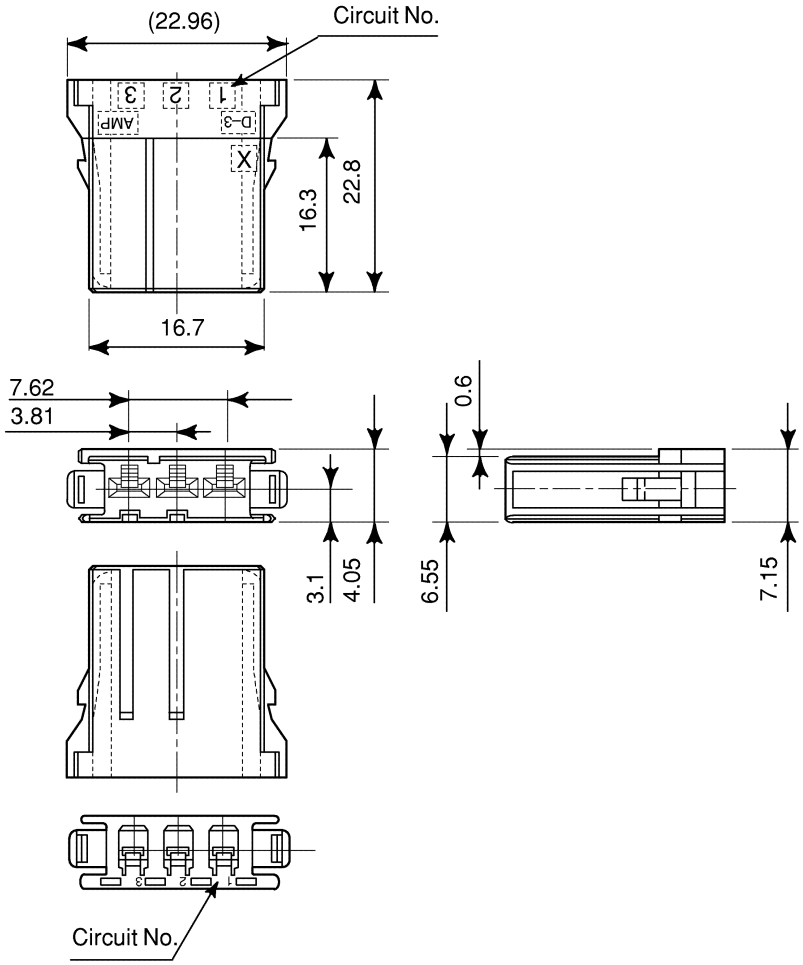

## Fig. C3 (d) AMP connector (4): For +24 V power supply

TYPE : AMP2–178288–3

USAGE : POWER CP1B
+24V OUTPUT

| | |
|---|---|
| 3 | |
| 2 | 0V |
| 1 | +24V |

DIMENSION

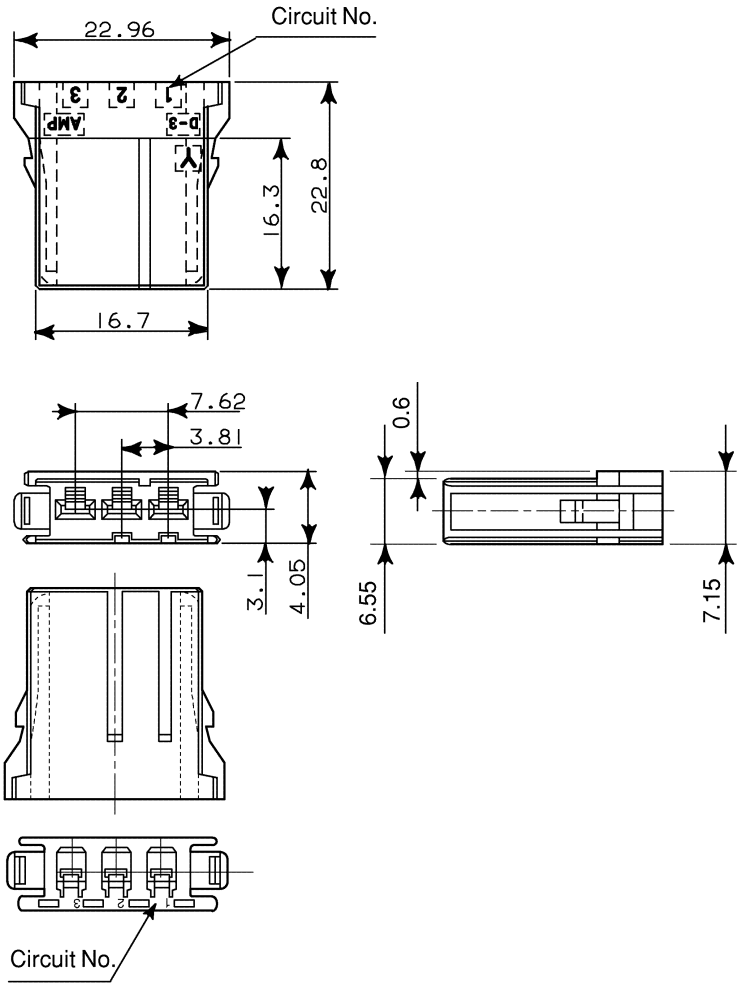

## Fig. C3 (e) Contact for AMP connector

SEPARATE : AMP1–175218–2(Gold coated)
AMP1–175218–5(Tin coated)

REEL : AMP1–175196–2(Gold coated)
AMP1–175196–5(Tin coated)

WIRE : AWG 16, 18, 20

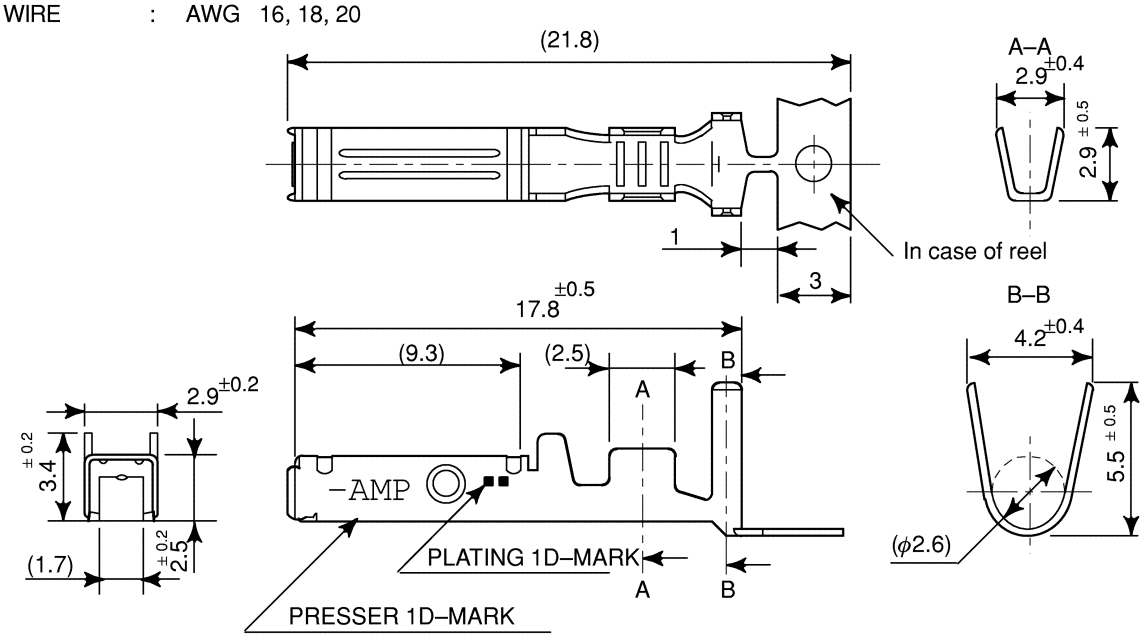

## Fig. C4 (a) HONDA connector (case)

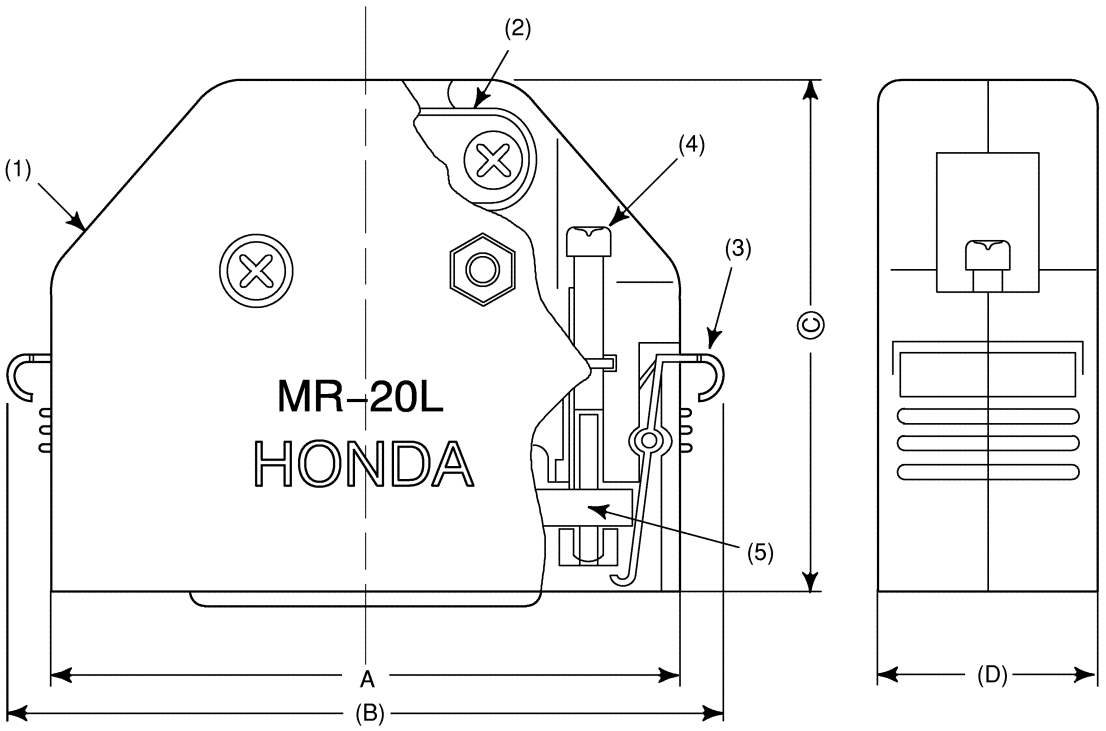


| Specification \ Symbol | A | (B) | C | (D) |
|---|---|---|---|---|
| MR–20LMH (Plug) | 39.3 | 44.9 | 39.8 | 17 |
| MR–20LFH (Jack) | | | | |
| MR–50LMH (Plug) | 67.9 | 73.5 | 44.8 | 18 |
| MR–50LFH (Jack) | | | | |

| Number of terminals |
|---|
| 20 |
| 50 |

| Symbol | Name |
|---|---|
| 1 | Connector cover |
| 2 | Cable clamp |
| 3 | Stopper |
| 4 | Screw for cable clamp |
| 5 | Plug (MR–20, 50MH) |
| | Jack (MR–20, 50FH) |

Outer diameter of the cable
MR–20L dia.10mm max
MR–50L dia.16mm max

## Fig. C4 (b) Honda connector (angled–type case)

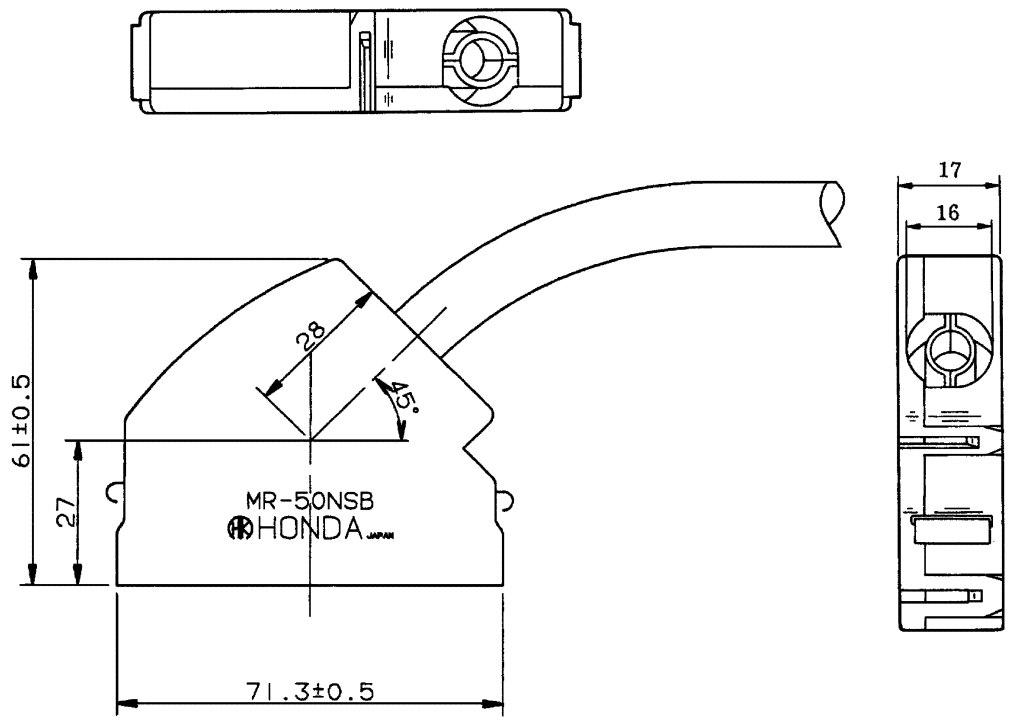


External dimensions of 50–pin connector

## Fig. C4 (c) HONDA connector (male)

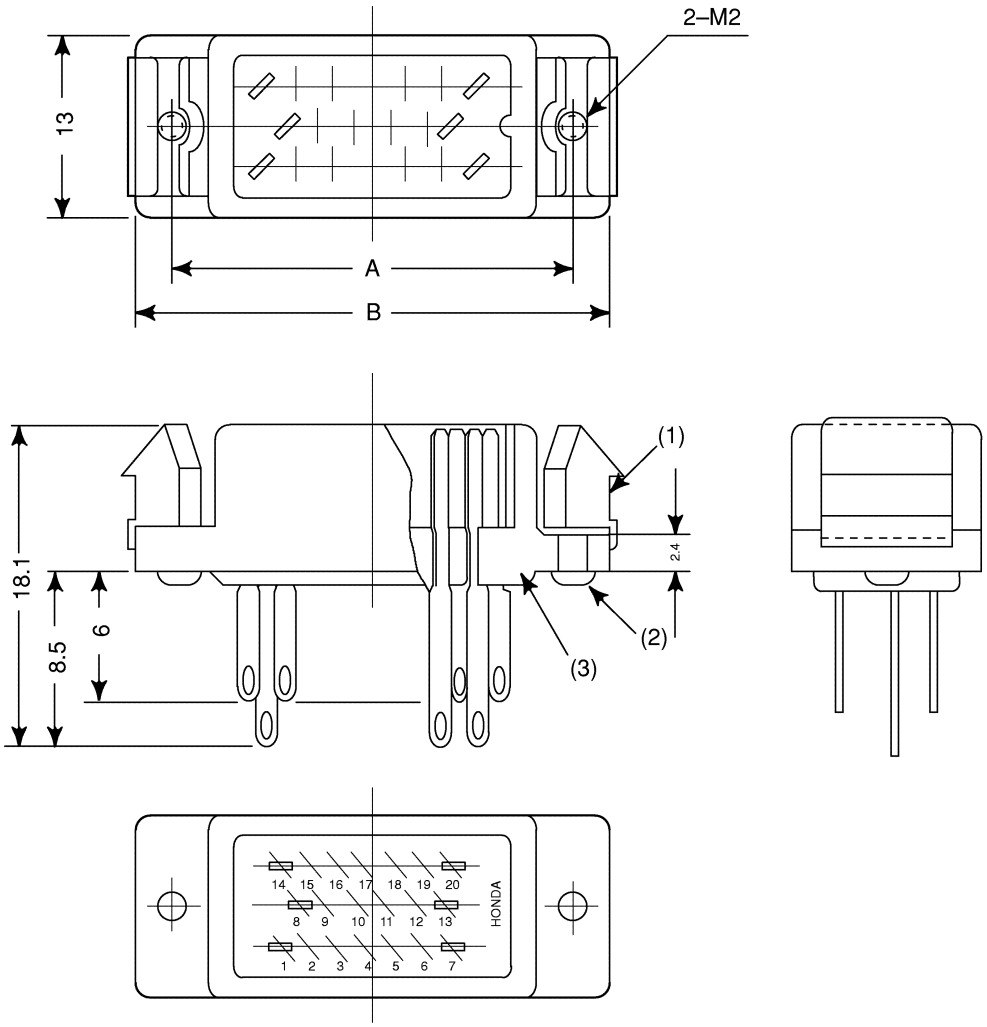


| | A | B | Number of terminals |
|---|---|---|---|
| MR–20RMH | 32.8 | 27.8 | 20 |
| MR–50RHF | 61.4 | 56.4 | 50 |

| Symbol | Name |
|---|---|
| 1 | Cable clamp |
| 2 | Screw 2.6dia.×8 |
| 3 | Connector (MR–20,–50MH) |

## Fig. C4 (d) HONDA connector (female)

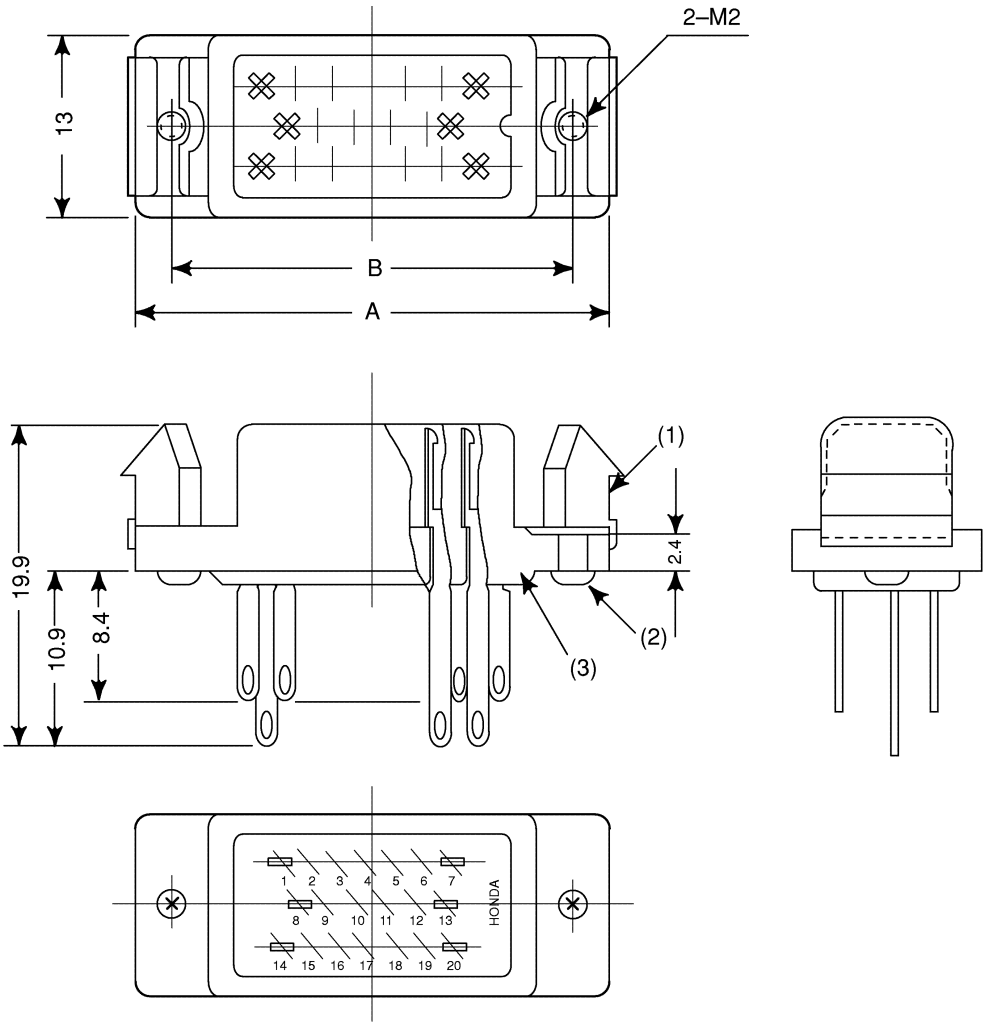


| | A | B |
|---|---|---|
| MR–20RMH | 32.8 | 27.8 |
| MR–50RMH | 61.4 | 56.4 |

| Number of terminals |
|---|
| 20 |
| 50 |

| Symbol | Name |
|---|---|
| 1 | Cable clamp |
| 2 | Screw 2.6dia.×8 |
| 3 | Connector ( MR–20,– 50FH) |

## Fig. C4 (e) HONDA connector (terminal layout)

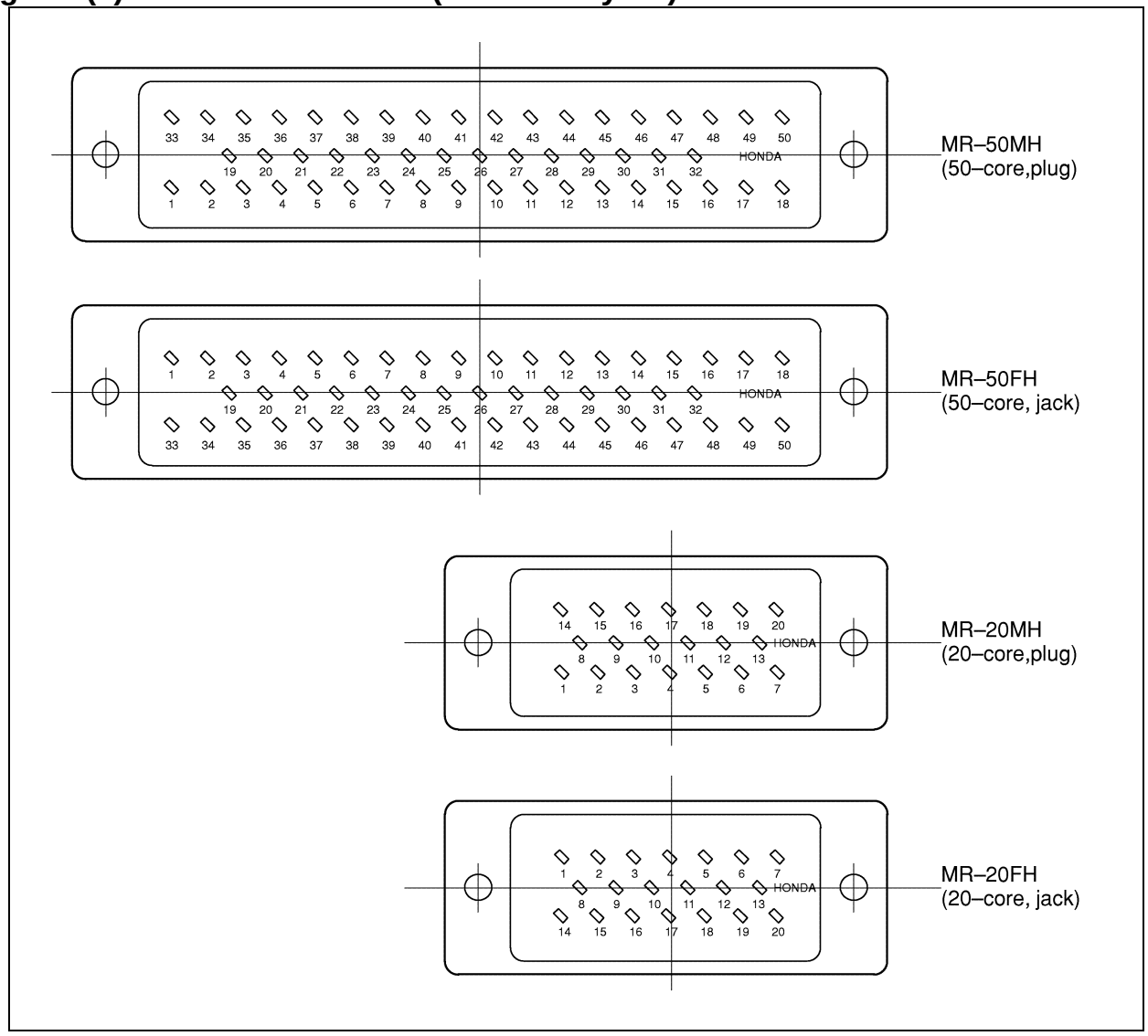

## Fig. C5 Connector made by FCI Japan (3 pins,black)

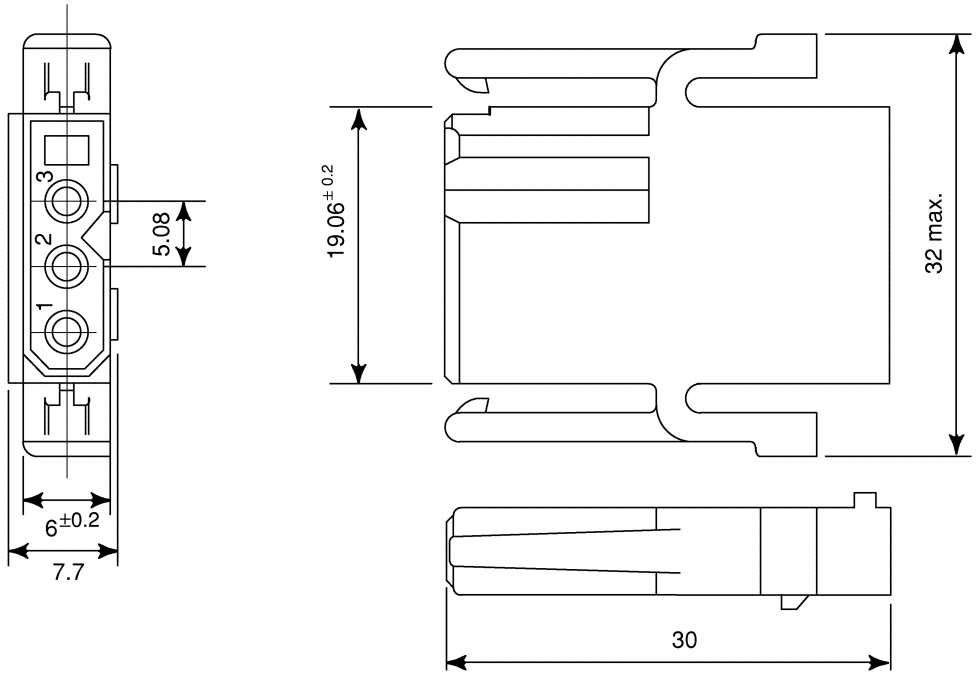


Manufacturer : FCI Japan

| Name | | Specification (Connector maker number) | Remarks |
|---|---|---|---|
| Connector housing for cable | | SMS3PNS–5 | Brown |
| Contact | (Crimp type) | RC16M–23T3 | For details on tools required for crimp terminals,contact the manufacturer. |
| | (Solder type) | RC16M–SCT3 | |

Cables : Cross sectional area : 0.75mm$^2$(30/0.18)
Insulation diameter : 2.8mm max
Peeling length : 7.2mm

## Fig. C6 Connector for HIROSE Flat cable

CONNECTOR FOR FLAT CABLE (HIROSE ELEC. CO.)

Specification HIROSE ELEC. CO.

HIF3BB

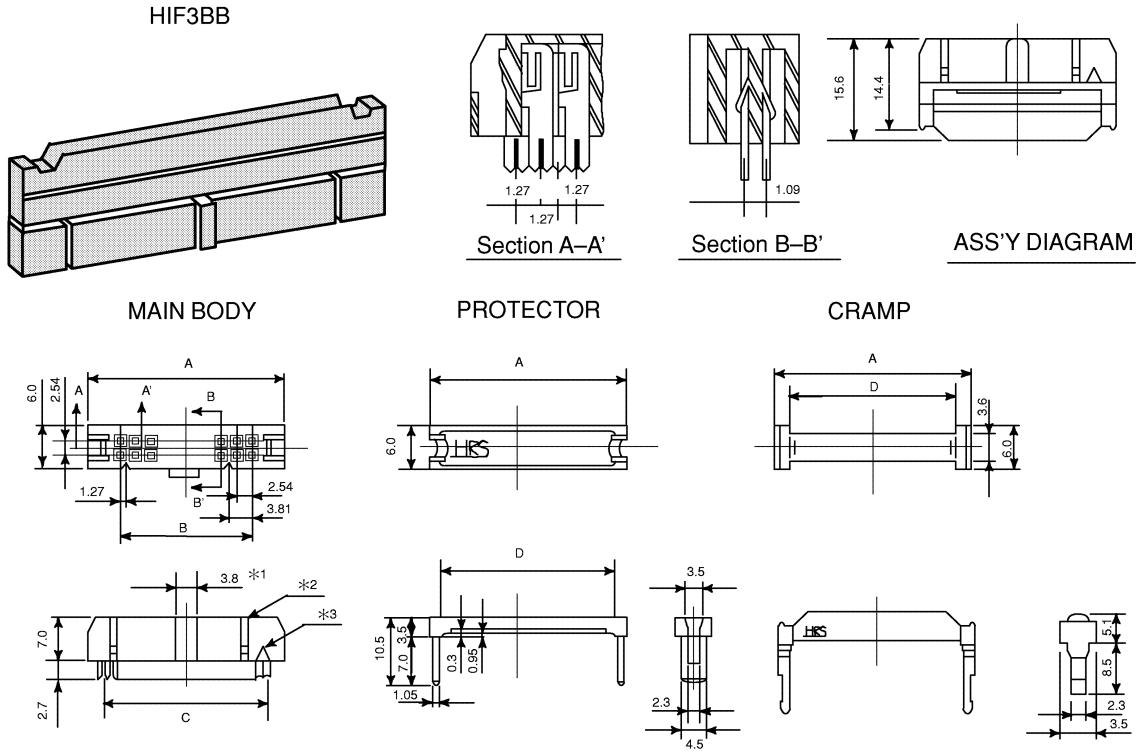


Dimensions

| Description | No.of contact | A | B | C | D |
|---|---|---|---|---|---|
| HIF3BB–34D–2.54R | 34 | 47.75 | 40.64 | 41.91 | 43.23 |
| HIF3BB–50D–2.54R | 50 | 68.07 | 60.96 | 62.23 | 63.6 |

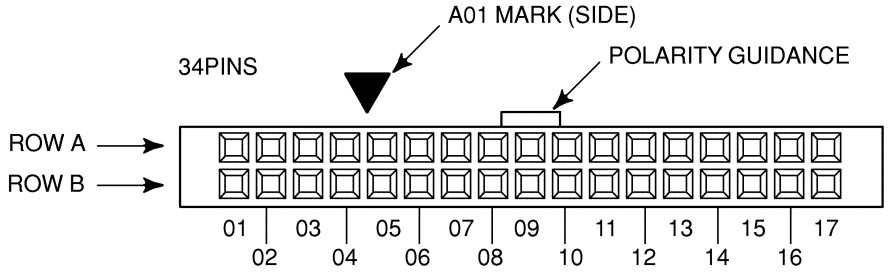


OUTVIEW FROM CONNECTOR SIDE.

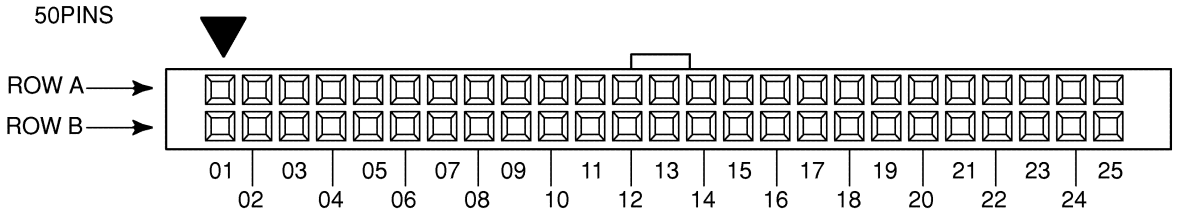


OUTVIEW FROM CONNECTOR SIDE.

## Fig. C8 (a) Punch panel connector for reader/puncher interface

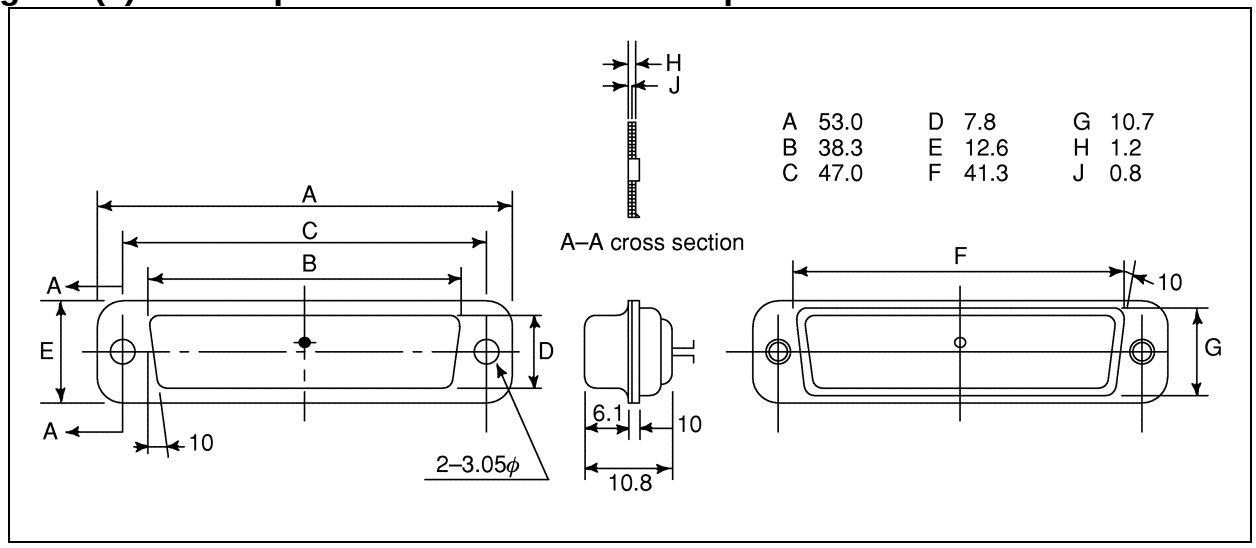


## Fig. C8 (b) Locking plate plate for reader/puncher interface connector

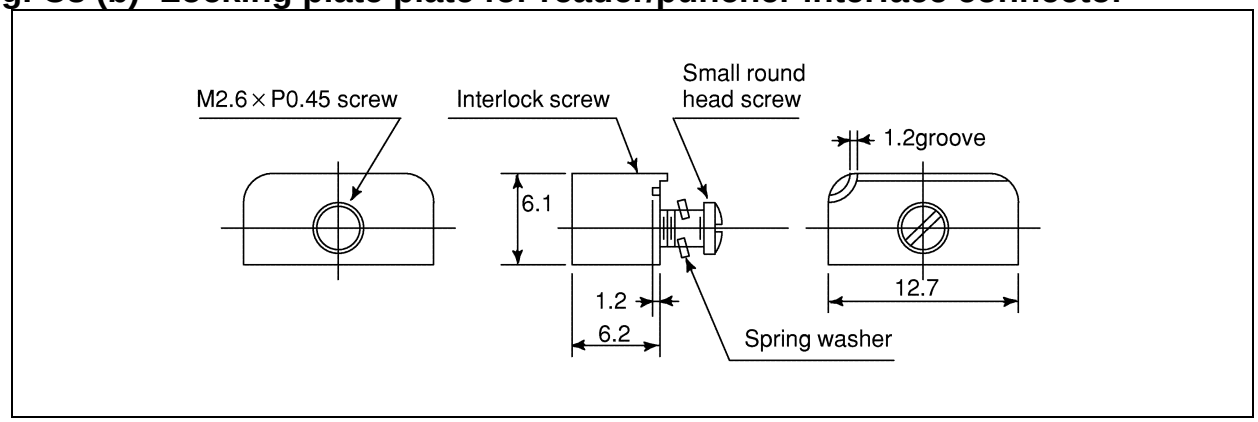

## Fig. C9 Honda connector (for the distributed I/O connector printed circuit board)

Honda MR type, 50 pins, male, connection printed circuit board soldering type connector

Type No. Honda Tsushin Kogyo Co., Ltd.
MRH–50FD

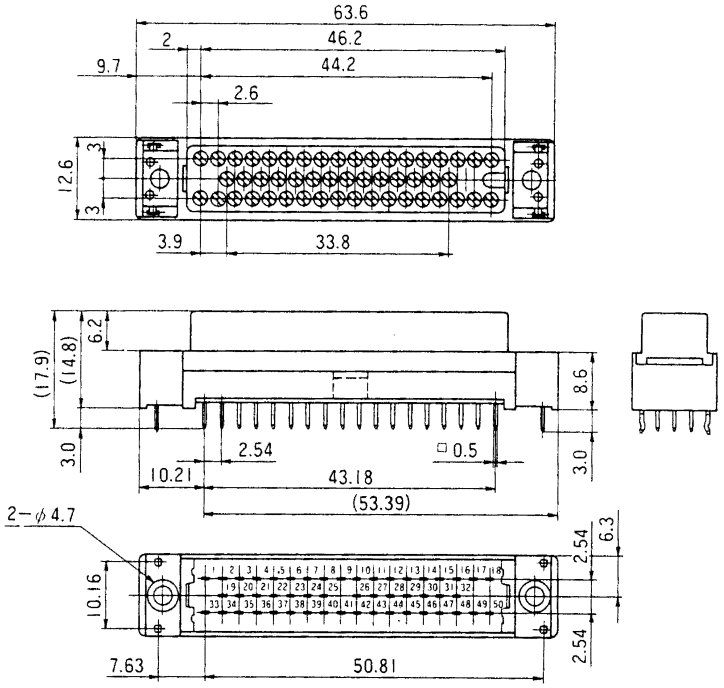


MRH-50FD

Pin configuration of Honda MR connector, 50 pins, male

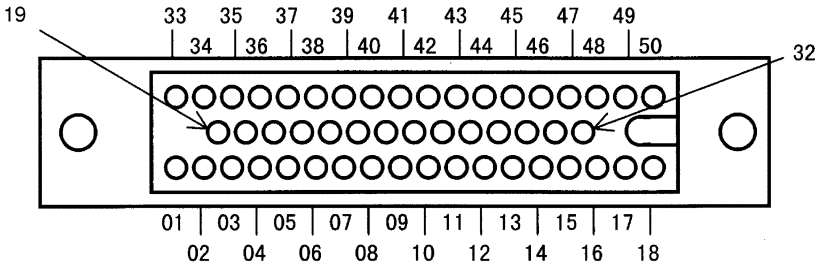


Viewed from the connector side

# B 20-PIN INTERFACE CONNECTORS AND CABLES

## B.1 BOARD-MOUNTED CONNECTORS

### B.1.1 Vertical-type Connectors

Models: PCR-EV20MDT (Honda Tsushin)
52618-2011 (Molex Japan)

These board-mounted connectors have been specially developed to achieve the high packing density required for FANUC products. As explained in the following subsection, Honda PCR series connectors can be used as cable connectors because the mating mechanism of the newly developed connectors is compatible with that of the Honda PCR series connectors. To support this specification extensively, many connector manufacturers are now developing custom-tailored cable connectors. (Note that these cables cannot be used with screw-fixing cable connector housings.)

### B.1.2 Straight and Right-angled Connectors (for Spring and Screw-fixing Connector Housings)

Models: FI80-20P (HIROSE) (straight connector)
DF1R020WB1 (JAE) (straight connector)
PCR-E20LMDETZ-SL (Honda Tsushin) (right-angled connector)

These connectors are used for the main and option boards. As cable connectors, they are compatible with screw-fixing connector housings as well as the spring locking connector housings.

## B.2 CABLE CONNECTORS

Models: Hirose Electric: FI80-20P (straight connector)
Japan Aviation Electronics Industry: DF1R020WB1 (straight connector)
Honda Tsushin: PCR-E20LMDETZ-SL (right-angled connector)

Cable connectors consist of a connector main body and housing. The models listed below are available. Those connectors not marked with an asterisk are currently being mass-produced as manufacturer's standard models. Those marked with an asterisk are produced according to custom specifications by FANUC.

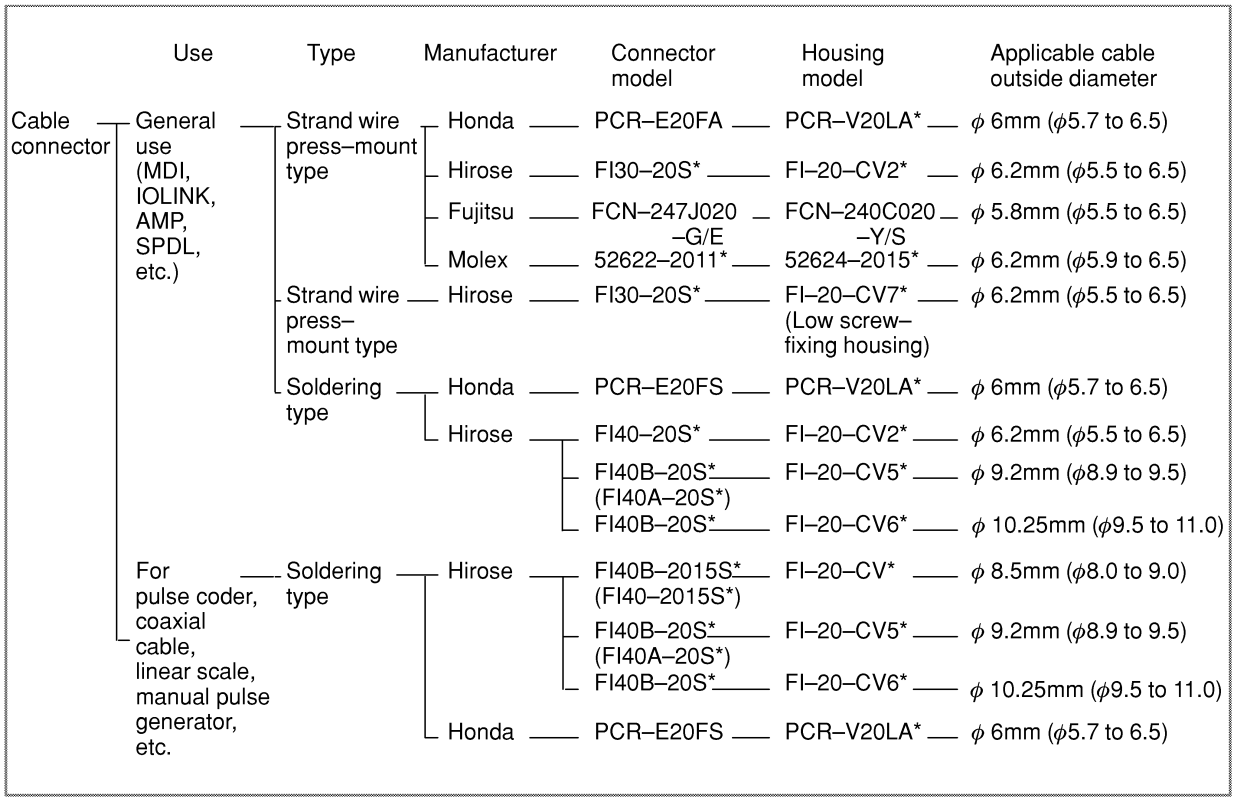


**Fig. B.2 Cable connectors**

## B.2.1 Strand Wire Press-mount Connector

With this connector, #28AWG wires are press-connected to each pin at the same time. The cost of producing a cable/connector assembly with this connector model is much lower than with connectors designed for crimping or soldering.

| Connector model (manufacturer) | Supplementary description |
|---|---|
| FI-20-CV7 (Hirose) | Small and low-profile case. This connector is fixed to the board-mounted connector with screws. This connector can be connected to the board-mounted connector on the main board of the LCD-mounted type, but cannot be connected to the board-mounted connector on the main board of the stand-alone type. |

## B.2.2 Soldering Type Connector

Details of soldering type connectors and their housings are summarized below.

**Table B.2 Details of soldering type connectors and housings**

| Connector model (manufacturer) | Supplementary description |
|---|---|
| PCR-E20FS (Honda) | Soldering type connector for general signals. This is suitable for producing cable assemblies in small quantities, as well as on-site. |
| FI40-20S (Hirose) | Equivalent to Honda PCR-E20FS |
| FI40B-20S (Hirose) (formerly, FI40A-20S) | Has the same number of pins as the FI40-20S, but features a wider soldering pitch, facilitating soldering and enabling the use of thicker wires. Its reinforced pins allow wires as thick as #17AWG to be soldered to the FI40B-20S (wires no thicker than #20AWG can be used with the FI40A-20S). Note, however, that a thick wire, such as #17AWG, should be used with a more robust housing like the FI-20-CV6. |
| FI40B-2015S (Hirose) | Features a wider soldering pitch, attained by using the space provided by thinning |

| Connector model (manufacturer) | Supplementary description |
|---|---|
| (formerly, FI40-2015S) | out some pins. Also features tougher pins, compared with its predecessor, the FI40-2015S. These pins can be soldered to wires as thick as #17AWG, provided that the cable diameter does not exceed 8.5 mm. |

| Housing model (manufacturer) | Supplementary description |
|---|---|
| FI-20-CV5 (Hirose) | Should be used with the FI40B-20S. This is a plastic housing designed for use with a cable that is 9.2 mm in diameter. |
| FI-20-CV6 (Hirose) | Should be used with the FI40B-20S. This housing, however, can be used with a thicker cable (such as 10.25 mm) than is possible with the FI-20-CV5. Its components are die cast. |

In addition to the combinations shown in Fig. B.2, Hirose soldering-type connectors can be combined with the housings listed below. Ensure that the diameter of the cable used with each housing satisfies the requirements of that housing.

| Connector model | | Housing model (applicable cable diameter) |
|---|---|---|
| FI40B-2015S<br>(formerly FI40-2015S) | ⇔ | FI-20-CV (8.5 mm in diameter) only |
| FI40-20S<br>FI40B-20S<br>(formerly FI40A-20S) | ⇔ | FI-20-CV2 (ϕ6.2mm)<br>FI-20-CV5 (ϕ9.2mm)<br>FI-20-CV6 (ϕ10.25mm) |

Those listed on the left can be used.

# B.3 RECOMMENDED CONNECTORS, APPLICABLE HOUSINGS, AND CABLES

**Table B.3 Recommended connectors, applicable housings, and cables**

| Connector name referenced in the Connection Manual | FANUC-approved connector(manufacturer) | FANUC-approved housing (manufacturer) | Compatible cable(cable diameter) FANUC development FANUC specification number | Remark |
|---|---|---|---|---|
| PCR-E20FA<br>Strand wire<br>press-mount type | PCR-E20FA<br>(Honda Tsushin) | PCR-V20LA(Honda Tsushin) | A66L-0001-0284#10P<br>(6.2 mm in diameter) | Plastic housing |
| | FI30-20S<br>(Hirose Electric) | FI-20-CV2(Hirose Electric) | | Metal housing |
| | FCN-247J020-G/E<br>(FUJITSU COMPONENT) | FCN-240C020-Y/S<br>(FUJITSU COMPONENT) | | Plastic housing |
| | 52622-2011<br>(Molex) | 52624-2015(Molex) | | Plastic housing |
| PCR-E20FA<br>Strand wire<br>press-mount type | FI30-20S<br>(Hirose Electric) | FI-20-CV7<br>(Hirose Electric) | | Plastic housing |
| PCR-E20FS<br>Soldering type | PCR-E20FS<br>(Honda Tsushin) | PCR-V20LA<br>(Honda Tsushin) | | Plastic housing |
| | FI40-20S<br>(Hirose Electric) | FI-20-CV2<br>(Hirose Electric) | | Plastic housing |
| FI40B-2015S<br>(formerly FI40-2015S)<br>15-pin soldering type | FI40B-2015S<br>(formerly FI40-2015S)<br>(Hirose Electric) | FI-20-CV<br>(Hirose Electric) | A66L-0001-0286(Note)<br>A66L-0001-0402(Note)<br>(8.5 mm in diameter) | Plastic housing |

| Connector name referenced in the Connection Manual | FANUC-approved connector(manufacturer) | FANUC-approved housing (manufacturer) | Compatible cable(cable diameter) FANUC development FANUC specification number | Remark |
|---|---|---|---|---|
| FI40B-20S (formerly FI40A-2015S) Soldering type | FI40B-20S (formerly FI40A-205) (Hirose Electric) | FI-20-CV5 (Hirose Electric) | A66L-0001-0367 A66L-0001-0368 (9.2 mm in diameter) | Plastic housing |
| | FI40B-20S (Hirose Electric) | FI-20-CV6 (Hirose Electric) | A66L-0001-0403(Note) (9.8 mm in diameter) | Metal housing |

**NOTE**

Cable A66L-0001-0286 has been recommended for use as a pulse coder cable. It can be up to 20 m long. Two cables, A66L-0001-0402 and A66L-0001-0403, have recently been developed. A66L-0001-0402 and A66L-0001-0403 can be as long as 30 m and 50 m, respectively. (See Fig. 2 for detailed specifications.) Both cables have the same level of oil and bending resistance (cable, 100 mm in diameter, capable of withstanding at least 10 million bending cycles) as conventional cables, and are UL- and CSA-certified.

## B.3.1 Recommended Connectors

### Press-mount type connector assembly tools and jigs

| Connector model referenced in the Connection Manual | FANUC-approved connector (manufacturer) | Wire forming tool | Press-mounting tool | Remark |
|---|---|---|---|---|
| PCR-E20FA | PCR-E20FA (Honda Tsushin) | PCS-K2A | FHPT-918A | Low cost |
| | | JGPS-015-1/1-20 JGPS-014 | MFC-K1 PCS-K1 | (Note 1) |
| | | FHAT-918A | | |
| | FI30-20S (Hirose Electric) | FI30-20CAT | FI30-20/ID | Low cost |
| | | FI30-20CAT1 | HHP-502 FI30-20GP | |
| | FCN-247J020-G/S (Fujitsu) | FCN-237T-T043/H | FCN-237T-T109/H FCN-247T-T066/H | |
| | | FCN-237T-T044/H | | |
| | | FCN-237T-T062/H | | |
| | 52622-2011 (Molex) | 57829-5000 | 57830-5000 | Low cost |
| | | 57823-5000 | 57824-5000 | |

**NOTE**

1 Those tools indicated by shading are available from FANUC (specification number A02B-0120-K391).
2 The tools available from each manufacturer are specifically designed for use with the connectors manufactured by that manufacturer.

# B.3.2 Applicable Cables

## Materials for cable assemblies

Machine tool builders are required to manufacture or procure the materials for the cable assemblies to be used with their products. FANUC recommends the following materials as being suitable for interface connectors. Individual machine tool builders are encouraged to contact each cable manufacturer for themselves, as required.

| Material | Use | Constitution | FANUC specification number | Manufacturer | Remark |
|---|---|---|---|---|---|
| 10-pair cable | General use | 0.08mm$^2$<br>10-pair | A66L-0001-0284<br>#10P | Hitachi Cable, Ltd.<br>Oki Electric Cable Co., Ltd.<br>SHINKO ELECTRIC INDUSTRIES CO., LTD. | |
| 12-conductor composite cable | Pulse coder, linear scale, manual pulse generator | 0.5mm$^2$<br>6-conductor<br>0.18mm$^2$<br>3-pair | A66L-0001-0286 | Hitachi Cable, Ltd.<br>Oki Electric Cable Co., Ltd.<br>SHINKO ELECTRIC INDUSTRIES CO., LTD. | 20 m or less |
| | | 0.75mm$^2$<br>6-conductor<br>0.18mm$^2$<br>3-pair | A66L-0001-0402 | Oki Electric Cable Co., Ltd. | 30 m or less<br>Usable on movable parts |
| | | 1.25mm$^2$<br>6-conductor<br>0.18mm$^2$<br>3-pair | A66L-0001-0403 | Oki Electric Cable Co., Ltd. | 50 m or less<br>Usable on movable parts |
| 5-core coaxial cable | CRT interface | 5-conductor coaxial | A66L-0001-0371 | Hitachi Cable, Ltd. | 50 m or less |

## 10-pair cable

(a) Specifications

| Item | | Unit | Specifications |
|---|---|---|---|
| Product No. | | - | A66L-0001-0284#10P |
| Manufacturer | | - | Hitachi Cable,Ltd.<br>Oki Electric Cable, Co.,Ltd.<br>SHINKO ELECTRIC INDUSTRIES CO., LTD. |
| Rating | | - | 80°C 30V : UL20276 |
| Material | Conductor | - | Stranded wire of tinned annealed copper |
| | Insulator | - | Vinyl |
| | Shield braid | - | Tinned annealed copper wire |
| | Sheath | - | Heat-resistant oilproof vinyl |
| Number of pairs | | Pairs | 10 |
| Conductor | Size | AWG | 28 |
| | Structure | Conductors/mm | 7/0.127 |
| | Outside diameter | mm | 0.38 |
| Insulator | Thickness | mm | 0.1<br>Thinnest portion : 0.8 (3.1mm) |
| | Outside diameter (approx.) | mm | 0.58 |
| Twisted pair | Outside diameter (approx.) | mm | 1.16 |
| | Pitch | mm | 20 or less |
| Lay | | - | Collect the required number of twisted pairs into a cable, then wrap binding tape around the cable. To make the cable round, apply a cable separator as required. |
| Lay diameter (approx.) | | mm | 3.5 |

| Item | | Unit | Specifications |
|---|---|---|---|
| Drain wire | | Conductors/mm | Hitachi Cable : Not available<br>Oki Electric Cable : Available,10/0.12<br>SHINKO ELECTRIC INDUSTRIES CO., LTD. : Not available |
| Shield braid | Element wire diameter | mm | 0.12 |
| | Braid density | % | 85 or more |
| Sheath | Color | - | Black |
| | Thickness | mm | 1.0 |
| | Outside diameter (approx.) | mm | 6.2 |
| Standard length | | m | 200 |
| Packing method | | - | Bundle |
| Electrical performance | Electric resistance (at 20°C ) | Ω/km | 233 or less |
| | Insulation resistance (at 20°C ) | MΩ-km | 10 or less |
| | Dielectric strength (AC) | V/min. | 300 |
| Flame resistance | | - | Shall pass flame resistance test VW-1SC of UL standards. |

(b) Structure drawing

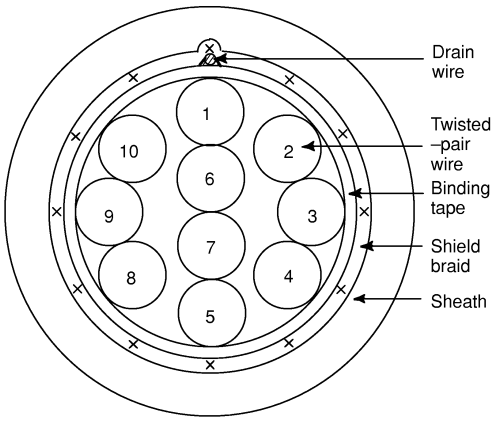


Wire identification table

| Pair No. | Insulator color | Dot mark (1 pitch) | Dot mark color: First wire | Dot mark color: Second wire |
|---|---|---|---|---|
| 1 | Orange | — | Red | Black |
| 2 | Gray | — | Red | Black |
| 3 | white | — | Red | Black |
| 4 | Yellow | — | Red | Black |
| 5 | Pink | — | Red | Black |
| 6 | Orange | — — | Red | Black |
| 7 | Gray | — — | Red | Black |
| 8 | White | — — | Red | Black |
| 9 | Yellow | — — | Red | Black |
| 10 | Pink | — — | Red | Black |

The numbers assigned to the wires correspond to the numbers in the table at right.

## Composite 12-core cable

(a) Specifications

| Item | | Unit | Specifications | |
|---|---|---|---|---|
| Product No. | | - | A66L-0001-0286 | |
| Manufacturer | | - | Hitachi Electric Cable Co., Ltd.<br>Oki Cable, Ltd.<br>SHINKO ELECTRIC INDUSTRIES CO., LTD. | |
| Rating | | - | 80°C, 30V | |
| Material | Conductor,braid-shielded wire,drain wire | - | Strand wire of tinned annealed | |
| | Insulator | - | Heat-resistant flame-retardant vinyl | |
| | Sheath | - | Oilproof, heat-resistant, flame-retardant vinyl | |
| Number of wires (wire ons.) | | Cores | 6 (1 to 6) | 6 (three pairs) (7 to 9) |

| Item | | Unit | Specifications | |
|---|---|---|---|---|
| Conductor | Size | $mm^2$ | 0.5 | 0.18 |
| | Structure | Conductors/mm | 20/0.18 | 7/0.18 |
| | Outside diameter | mm | 0.94 | 0.54 |
| Insulator | Standard thickness (The minimum thickness is at least 80% of the standard thickness.) | mm | 0.25 | 0.2 |
| | Outside diameter | mm | 1.50 | 0.94 |
| Twisted pair | Outside diameter | mm | | 1.88 |
| | Direction of lay | - | | Left |
| | Pitch | mm | | 20 or less |
| Lay | | - | Twist the wires at an appropriate pitch so the outermost layer is right-twisted, and wrap tape around the outermost layer. Apply a cable separator as required. | |
| Lay diameter (approx.) | | mm | 5.7 | |
| Drain wire | Size | $mm^2$ | 0.3 | |
| | Structure | Wires/mm | 12/0.18 | |
| | Outside diameter | mm | 0.72 | |
| Shield braid | Element wire diameter | mm | 0.12 | |
| | Thickness | mm | 0.3 | |
| | Braid density | % | 70 | |
| | Outside diameter | mm | 6.3 | |
| Sheath | Color | - | Black | |
| | Standard thickness (The minimum thickness is at least 85% of the standard thickness.) | mm | 1.1 | |
| | Outside diameter | mm | 8.5Max. 9.0 (Note) | |
| Standard length | | m | 100 | |
| Packing method | | - | Bundle | |
| Electrical performance | Electric resistance (at 20°C) (wire nos.) | Ω/km | 39.4 (1 to 6) | 113 (7 to 9) |
| | Insulation resistance (at 20°C) | MΩ-km | 15 | |
| | Dielectric strength (AC) | V/min. | 500 | |
| Flame resistance | | - | Shall pass flame resistance test VW-1SC of UL standards. | |

**NOTE**

The maximum outside diameter applies to portions other than the drain wire.

(b) Cable structure

The cable structure is shown below.

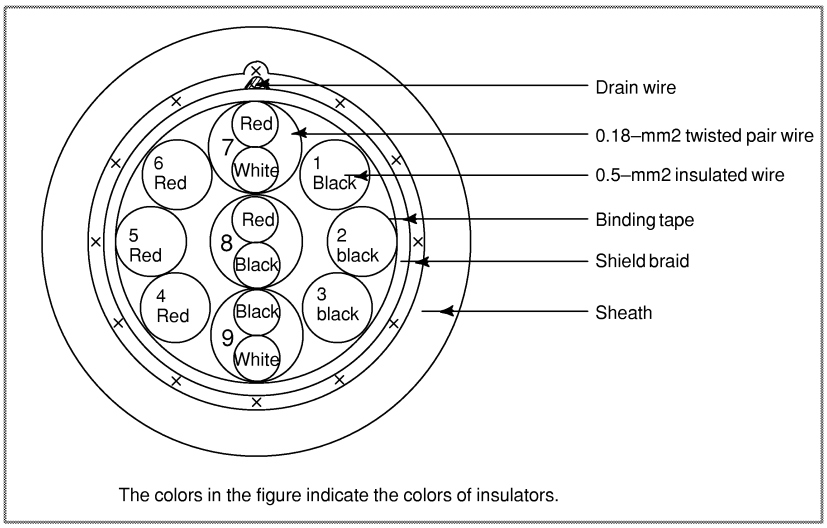


(c) Specifications

| Item | | Specification | | | |
|---|---|---|---|---|---|
| FANUC specification number | | A66L-0001-0402 | | A66L-0001-0403 | |
| Manufacturer | | Oki Electric Cable Co., Ltd. | | | |
| | | A-conductor | B-conductor | A-conductor | B-conductor |
| Conductor | Constitution Number of conductors/ mm | 16/0.12 (0.18mm$^2$) | 3/22/0.12 (0.75mm$^2$) | 16/0.12 (0.18mm$^2$) | 7/16/0.12 (1.25mm$^2$) |
| | Typical outside diameter (mm) | 0.55 | 1.20 | 0.55 | 1.70 |
| Insulation (polyester) | Color | White, red, black | Red, black | White, red, black | Red, black |
| | Typical thickness (mm) | 0.16 | 0.23 | 0.16 | 0.25 |
| | Typical outside diameter (mm) | 0.87 | 1.66 | 0.87 | 2.20 |
| Pair twisting | Constitution | White-red, white-black, and black-red | | White-red, white-black, and black-red | |
| | Direction of twisting | Left Typical pitch: 20 mm | | Left Typical pitch: 20 mm | |
| Assembling by twisting | Number of strands or conductors | 3 | 6 | 3 | 6 |
| | Direction of twisting | Left | | Left | |
| | Taping | Twisting is wrapped with washi, or Japanese paper, tape. | | Twisting is wrapped with washi, or Japanese paper, tape. | |
| | Typical outside diameter (mm) | 5.7 | | 6.9 | |
| Braided shielding | Typical strand diameter (mm) | 0.14 | | | |
| | Typical density (mm) | 80 | | | |
| | Drain | A 12/0.18 mm wire is roughly wrapped under braided shielding. | | | |
| | Typical outside diameter (mm) | 6.4 | | 7.6 | |

| Item | | Specification | | | |
|---|---|---|---|---|---|
| Sheath (polyurethane) | Color | Black (matted) | | | |
| | Typical thickness (mm) | 1.05 | | 1.1 | |
| | Vertical taping | Vertically taped with washi under sheathing. | | | |
| | Outside diameter (mm) | 8.5±0.3 | | 9.8±0.3 | |
| Finished assembly | Typical length (m) | 100 | | | |
| | Short size | Basically not approved. | | | |
| Finished assembly performance | Rating | 80°C 30V | | | |
| | Standard | Shall comply with UL STYLE 20236 and CSA LL43109 AWM I/II A 80°C 30V FT-1. | | | |
| | Flame resistance | Shall comply with VW-1 and FT-1. | | | |
| Electrical performance | Conductor resistance Ω/km (20°C) | 103 or lower | 25.5 or lower | 103 or lower | 15.0 or lower |
| | Insulation resistance MΩ/km (20°C) | 1 or higher | | | |
| | Dielectric strength V-min | A.C 500 | | | |
| Insulation performance | Tensile strength N/mm$^2$ | 9.8 or higher | | | |
| | Elongation % | 100 or higher | | | |
| | Tensile strength after aging % | At least 70% of that before aging | | | |
| | Elongation after aging % | At least 65% of that before aging | | | |
| | Aging condition | For 168 hours at 113°C | | | |
| Sheathing performance | Tensile strength N/mm$^2$ | 9.8 or higher | | | |
| | Elongation % | 100 or higher | | | |
| | Tensile strength after aging % | At least 70% of that before aging | | | |
| | Elongation after aging % | At least 65% of that before aging | | | |
| | Aging condition | For 168 hours at 113°C | | | |
| Cable cross section | 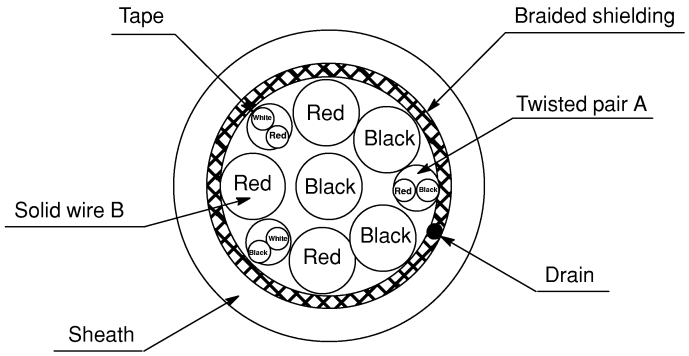  | | | | |

## 5-core coaxial cable

(a) Specifications

| Item | Unit | Description |
|---|---|---|
| Specification | - | A66L-0001-0371 |
| Manufacture | - | HITACHI CABLE CO., LTD. |
| Number of Conductors | Core | 5 |

| Item | | Unit | Description |
|---|---|---|---|
| Inside Conductor | Size | $mm^2$ | 0.14 |
| | Components | Conductors(PCS)/mm | 7/0.16 |
| | Material | - | Tin-coated Soft Copper Wire |
| | Diameter (approx.) | mm | 0.48 |
| Insulator | Material (Color) | - | Polyethylene (White), heat-resistant 80°C |
| | Thickness | mm | 0.71 |
| | Diameter (approx.) | mm | 1.90 |
| Outside Conductor | Material | - | Tin-coated Soft Copper Wire (Rolled) |
| | Diameter of Component-Wire | mm | 0.08 |
| | Density | % | 95 or more |
| | Thickness | mm | 0.2 |
| Jacket | Material | - | Vinyl, heat-resistant 80°C |
| | Color | - | Black. White. Red. Green. Blue |
| | Thickness | mm | 0.15 |
| | Diameter (approx.) | mm | 2.6 |
| Twisted Assembly Diameter (approx.) | | mm | 7.1 |
| Thickness of Paper Tape | | mm | 0.05 |
| Shield braid | Wire dia. Material | mm | 0.12 (Tin-coaded soft copper wire) |
| | Density | % | 80 or more (typ 82%) |
| | Thickness | mm | 0.3 |
| | Diameter | mm | 7.8 |
| Sheath | Material, Color | - | Oil Tight Vinyl (A), Black, heat-resistant 80°C |
| | Thickness | mm | 0.7 (Min. thickness: 0.56) |
| Finish Diameter | | mm | 9.2±0.3 |
| Conductor Resistance (20°C) | | Ω/km | 143 or less |
| Dielectric strength (between internal conductor and external conductor) | | - | 1000 VAC must be withstood for one minute. |
| Insulation resistance (between internal conductor and external conductor, 20°C) | | MΩ-km | 1000 or more |
| Impedance (10MHz) | | Ω | 75±5 |
| Standard Capacitance (1MHz) | | nF/km | 56 |
| Standard Attention | | dB/km | 53 |
| Weight | | kg/km | 105 |
| Standard Length | | m | 200 |
| Package form | | - | Bundle |

An example of circuit testing 20-pin interface cable

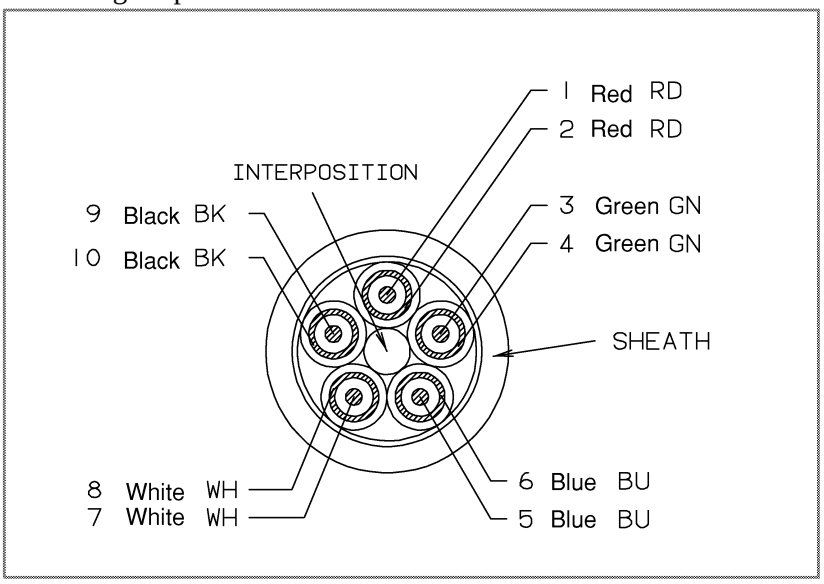


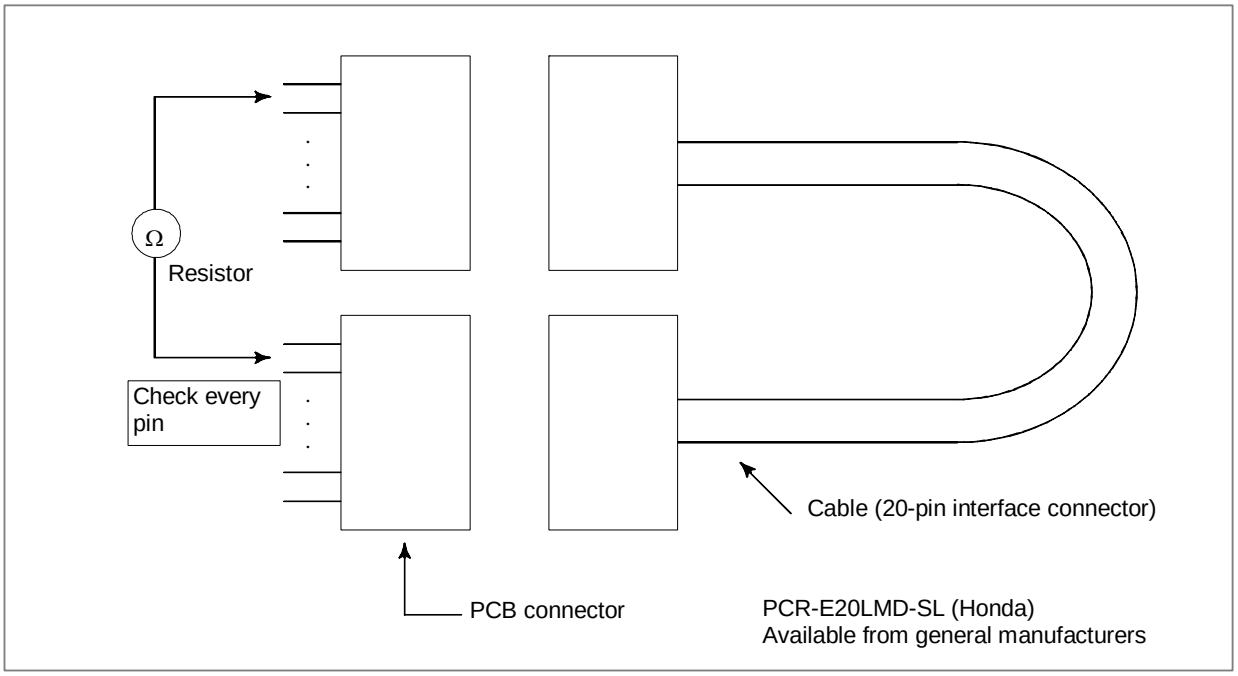

# C CONNECTION CABLE (SUPPLIED FROM US)

Maximum allowable cable length between units

| Cable type | Use and condition | Maximum cable length (m) |
|---|---|---|
| MDI cable | Control unit-to-MDI unit | 20m |
| I/O Link cable | Electrical cable | 10m (Note 2) |
| | Electrical-to-optical conversion adapter | 2m |
| | Optical cable | 200m |
| Serial spindle cable | Electrical cable (control unit-to-spindle servo unit) | 20m |
| | Electrical-to-optical conversion adapter | 2m |
| | Optical cable | 200m |
| Position coder cable | Control unit-position coder | 50m |
| MPG cable | Connector panel I/O operator's panel I/O module-to-manual pulse generator | 50m |
| FSSB cable | See APPENDIX D. | |
| HSSB cable | See APPENDIX D. | |
| RS-232-C communication cable | 4800 baud or less | 100m |
| | 9600 baud or less | 50m |
| RS-422 communication cable | 9600 baud or less | 800m |
| | 19.2 k baud | 50m |

**NOTE**

1 The maximum cable lengths listed above apply only when the respective recommended cables stated in the text are used. If a non-recommended cable is used, the maximum cable length may not be guaranteed. Cables other than the above are used. See the respective descriptions in this manual for details of these cables.

2 This cable can be extended to up to 15 m if it is used within the cabinet.

| Purpose | Description | Specification | Length |
|---|---|---|---|
| Spindle signal cable<br><br>Electrical-to-electrical | 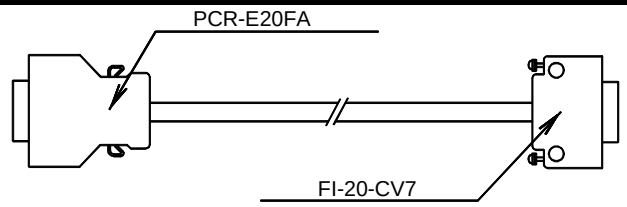 | A02B-0236-K845 | 5m |
| Spindle signal cable<br><br>For inter-spindle serial connection<br><br>Electrical-to-electrical | 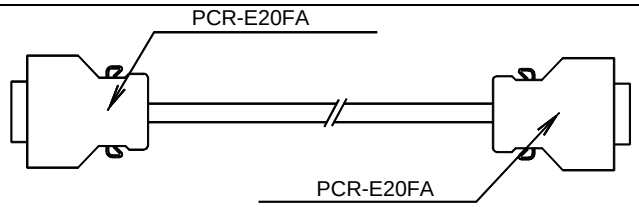 | A02B-0236-K846 | 5m |

| Purpose | Description | Specification | Length |
|---|---|---|---|
| Spindle signal cable<br>↑<br>↓<br>For optical adapter | 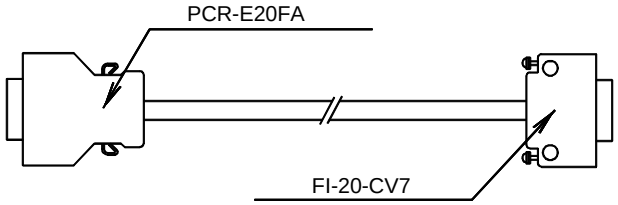 | A02B-0236-K847 | 1m |
| MDI signal cable<br>control unit (JA2)<br>↑<br>↓<br>MDI unit<br>(CK1) | 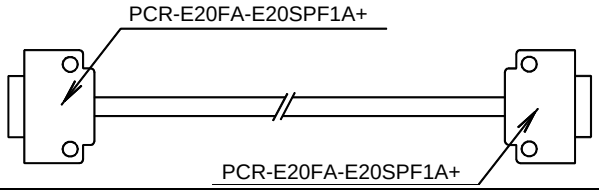 | A02B-0309-K813 | 45cm |
| External installation<br>controller battery cable<br>control unit (CA114)<br>↑<br>↓<br>External installation<br>controller battery<br>(terminal block) | 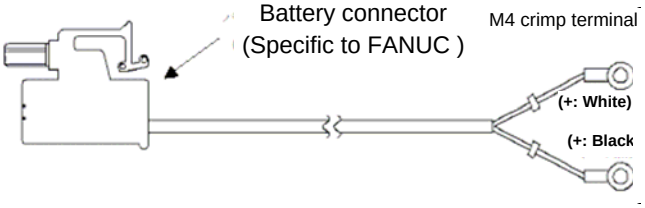 | A02B-0309-K103 | 14m |
| Manual pulse generator<br>cable (for one unit)<br>Control unit (JA3)<br>↑<br>↓<br>Manual pulse generator<br>terminal board | 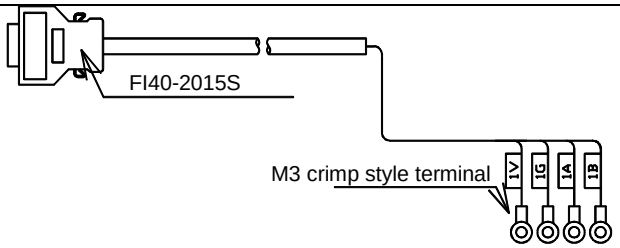 | A02B-0120-K847 | 7m |
| Manual pulse generator<br>cable (for two units)<br>Control unit (JA3)<br>↑<br>↓<br>Manual pulse generator<br>terminal board | 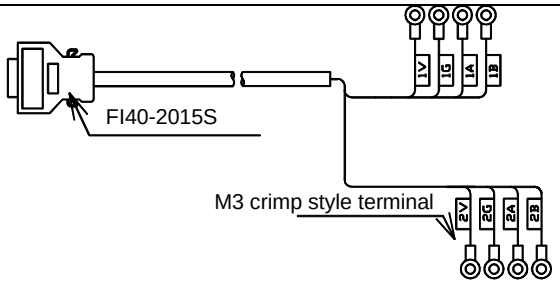 | A02B-0120-K848 | 7m |
| Manual pulse generator<br>cable (for three units)<br>Control unit (JA3)<br>↑<br>↓<br>Manual pulse generator<br>terminal board | 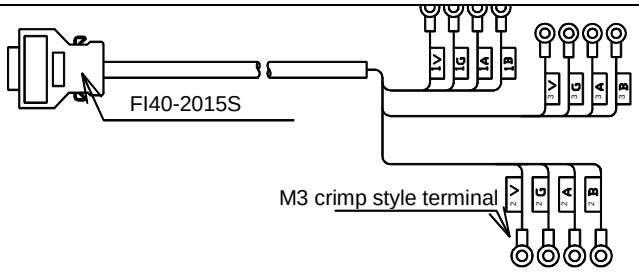 | A02B-0120-K841 | 7m |
| I/O Link cable<br>Control unit (JD1A)<br>↑<br>↓<br>I/O unit (JD1B) | 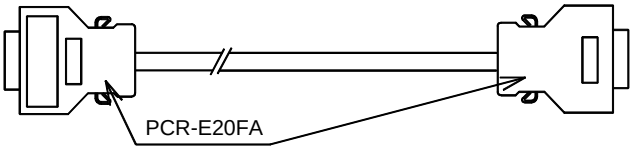 | A02B-0120-K842 | 5m |

| Purpose | Description | Specification | Length |
|---|---|---|---|
| Control unit power supply cable<br><br>Stabilized power supply (24 VDC)<br>↑<br>↓<br>Control unit (CP1A) | 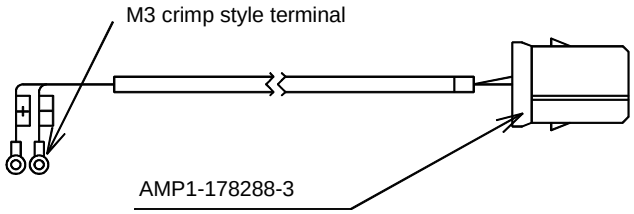 | A02B-0124-K830 | 5m |

# D OPTICAL FIBER CABLE

Optical fiber cables for the following interfaces are available. This table lists the usable combinations.

| Interface | Relay enabled / disabled | Recommended optical cable | Maximum allowable transmission distance | Applicable junction adapter |
|---|---|---|---|---|
| Serial spindle interface *1 | Disabled | A66L-6001-0026#L~ | 100m | |
| | Enabled | A66L-6001-0029#L~ | 55m *2 | A63L-0020-0004 |
| I/O Link interface *1 | Disabled | A66L-6001-0026#L~ | 200m | |
| | Enabled | A66L-6001-0026#L~ | 100m *2 | A63L-0020-0002 |
| High-speed serial bus (HSSB) interface | Disabled | A66L-6001-0023#L~ | 10m | |
| | Disabled | A66L-6001-0026#L~ | 50m | |
| | Disabled | A66L-6001-0049#L~ | 100m | |
| | Enabled | A66L-6001-0029#L~ | 35m *2 | A63L-0020-0004 |
| | Enabled | A66L-6001-0049#L~ | 55m *2 | A63L-0020-0004 |
| Serial servo bus (FSSB) interface | Disabled | A66L-6001-0023#L~ | 10m | |
| | Disabled | A66L-6001-0026#L~ | 50m *3 | |

**⚠ CAUTION**

1 During connection with optical fiber cables

2 To relay a connection with optical fiber cables, only one replay point is allowed. In addition, the total length of two cables must be the maximum allowable transmission distance or less.

3 See Subsection 7.2.2, “Interface to the Servo Amplifiers” for length restriction of FSSB line.

- The length between the CNC and the first slave unit is 50 m or less.
- The length between slave units is 40 m or less.
- The total length including the above is 500 m or less.

## Notes on the specifications of optical fiber cable

### (1) Supported optical cables

<1> Internal cord type cable ..... A66L-6001-0023#LxRxxx
Cable length ..... 0.15 to 10m
Code diameter ..... ϕ2.2mm × 2 cords
Tensile strength
Optical fiber cord 7 kg per cord
Between optical fiber cord and connector ..... 2kg
Minimum bending radius of optical fiber cord ..... 25mm
Operating temperature ..... -20 to 70 °C

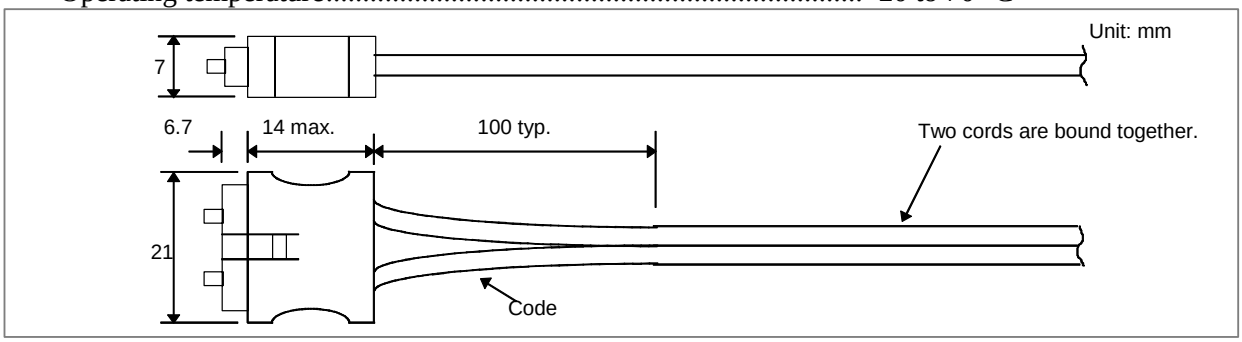


**Fig. D (a) External dimensions of internal cord type cable**

<1> External type cable ..... A66L-6001-0026#LxRxxx
..... A66L-6001-0029#LxRxxx
..... A66L-6001-0049#LxRxxx
Cable length ..... 1 to 200m
Optical fiber cord diameter ..... ϕ2.2mm × 2 cords
Diameter of cable with reinforced cover ..... ϕ7.6mm (A66L-6001-0026, -0029)
..... ϕ8.2mm(A66L-6001-0049)
Tensile strength
Cable with reinforced cover ..... 75kg
Optical fiber cord ..... 7 kg per cord
Between optical fiber cord and connector ..... 2kg
Minimum bending radius of optical fiber cord ..... 25mm
Minimum bending radius of cable with reinforced cover ..... 50mm
Bending resistance (cable with reinforced cover) ..... 10 million bending cycles at room temperature (when the bending radius is 100 mm)
Flame resistance ..... Equivalent to UL VW-1
Operating temperature ..... -20 to 70 °C

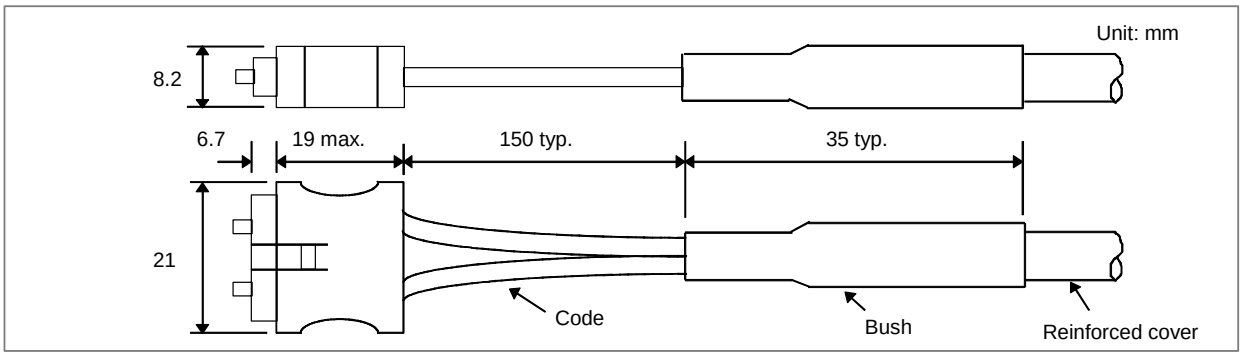


**Fig. D (b) External dimensions of external cable**

**Table D (a) Standard cable length**

| Internal cord type cable | | External cable | |
|---|---|---|---|
| A66L-6001-0023# | | A66L-6001-0026# | |
| **Specification** | **Length** | **Specification** | **Length** |
| L150R0 | 0.15m | L1R003 | 1.0 m |
| L300R0 | 0.3 m | L2R003 | 2.0 m |
| L500R0 | 0.5 m | L3R003 | 3.0 m |
| L1R003 | 1.0 m | L5R003 | 5.0 m |
| L2R003 | 2.0 m | L7R003 | 7.0 m |
| L3R003 | 3.0 m | L10R03 | 10.0m |
| L5R003 | 5.0 m | L15R03 | 15.0m |
| L7R003 | 7.0 m | L20R03 | 20.0m |
| L10R03 | 10.0 m | L30R03 | 30.0m |
| | | L50R03 | 50.0m |
| | | L100R03 | 100m |
| | | L200R03 | 200m |

## (2) Cable selection

- Always use an external cable (A66L-6001-0026#~) when the cable is to be laid outside the power magnetics cabinet or main unit cabinet, where it may be pulled, rubbed, or stepped on.

- Use an external cable when part of the cabling is to be subject to movement. For example, when connecting a movable portable operation pendant box to the power magnetics cabinet, the use of an external cable is desirable because the cable is likely to be bent, pulled, or twisted repeatedly even though frequent system operation is not expected. However, the force likely to be applied when the cable is installed or moved for maintenance purposes does not need to be taken into consideration.
- Use an external cable in locations where sparks or flame are a danger. Although the internal cord type cable (A66L-6001-0023#~) is covered by nonflammable resin, the cover, if exposed to frame for a long time, may melt, allowing the fiber cable inside to burn.
- Use an external cable when the cable is expected to be pulled with considerable force during installation (the force applied to the cable must be within the specified tensile strength limit at all times). For example, even though installing a cable in a cable duct can be regarded as internal cabling, a cable of the appropriate type must be selected according to the tensile force to be applied to the cable during installation.
- Both the internal cord type and external cables have the same oil and heat resistance properties.

## (3) Procuring the cable

All the optical fiber cables mentioned above are special cable products with optical connectors, which are designed, produced, and tested to ensure the required system performance and reliability. It is technically impossible for users to produce these cables or process (cut and reconnect) them after purchase. Users are requested to purchase cables of the necessary length from an appropriate supplier. Cables are available from either FANUC or any of the FANUC-approved manufacturers listed in Table D(d).
(Purchase A66L-6001-0029#~ and A66L-6001-0049#~ from FANUC, however.)

**Table D(d) FANUC-approved cable manufacturers and cable model numbers (retail)**

<1> Internal cord type cable : A66L-6001-0023#LxRxxx

| Manufacturer | Model number | Remark |
|---|---|---|
| Tyco Electronics AMP | *-353373-* | |
| Japan Aviation Electronics Industry | PF-2HB209-**M-F-1 | ** indicates the cable length (m). |
| Hirose Electric Co., Ltd. | H07-P22-F2VCFA-** | ** indicates the cable length (m). |

<2> External Cable : A66L-6001-0026#LxRxxx

| Manufacturer | Model number | Remark |
|---|---|---|
| Tyco Electronics AMP | *-353199-* | |
| Japan Aviation Electronics Industry) | CF-2HB208-**M-F-1 | ** indicates the cable length (m). |
| Hirose Electric Co., Ltd. | H07-P22-F2NCFA-** | ** indicates the cable length (m). |
| Oki Electric Cable Co., Ltd. | OPC201HPXF-**MB | ** indicates the cable length (m). |

## (4) Handling precautions

<1> Protection during storage

When the electrical/optical conversion module mounted on the printed circuit board and the optical fiber cable are not in use, their mating surfaces must be protected with the lid and caps with which they are supplied. If left uncovered, the mating surfaces are likely to become dirty, possibly resulting in a poor cable connection.

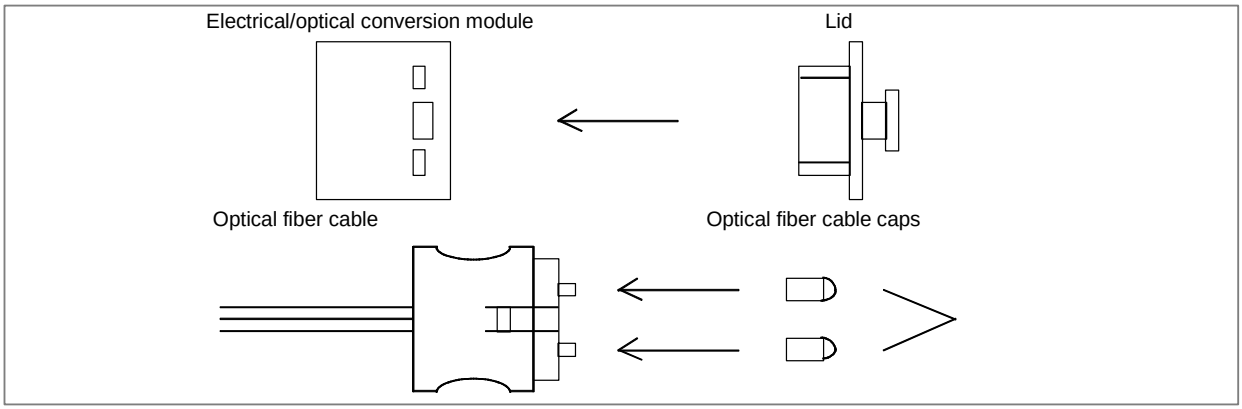


**Fig. D (c) Protection of electrical/optical conversion module and optical fiber cable (when not in use)**

<2> Optical fiber cable

- Make sure that the bending radius and tensile strength of the cable are always within their ranges described in the specifications (see the first item), regardless of whether the cable is stored or routed and whether operation is in progress or not.
- Although the reinforcing cover of the external cable has sufficient mechanical strength, be careful not to drop heavy objects on the cable.
- Grasp the optical connector firmly when connecting or disconnecting the cable. Do not pull on the optical fiber cord itself. (The maximum tensile strength between the fiber cord and connector is 2 kg. Applying greater force to the cord is likely to cause the connector to come off, making the cable unusable.)
- Once connected, the optical connector is automatically locked by the lock levers on its top. To remove the connector, release the lock levers and pull the connector.
- Although optical connectors cannot be connected in other than the correct orientation, always take note of the connector's orientation before making the connection.
- Before installing an external cable, fix either a wire with a hook or a tension member to the reinforcing cover of the optical connector and pull the wire or tension member, as shown in Fig. D(d). This is done to prevent a tensile force from being applied between the fiber cord and connector. If no tensile force is applied between the fiber cord and connector when installing the cable, you can hold the reinforcing cover of the connector directly and pull it. In the case of an internal cord, which does not have a reinforcing cover, apply the same protective measures, as instructed in Fig. D(d), for that portion of the cable where the two cords are bound together, in order to prevent a tensile force from being applied between the fiber cord and connector. In the same way as for an external cable, if no tensile force is applied between the fiber cord and connector during installation, you can hold the shielded part of the cable directly and pull it. Because the combined tensile strength of the two cords is only 14 kg, however, avoid applying too great a force to the cable during installation, regardless of whether you have taken the protective measures.

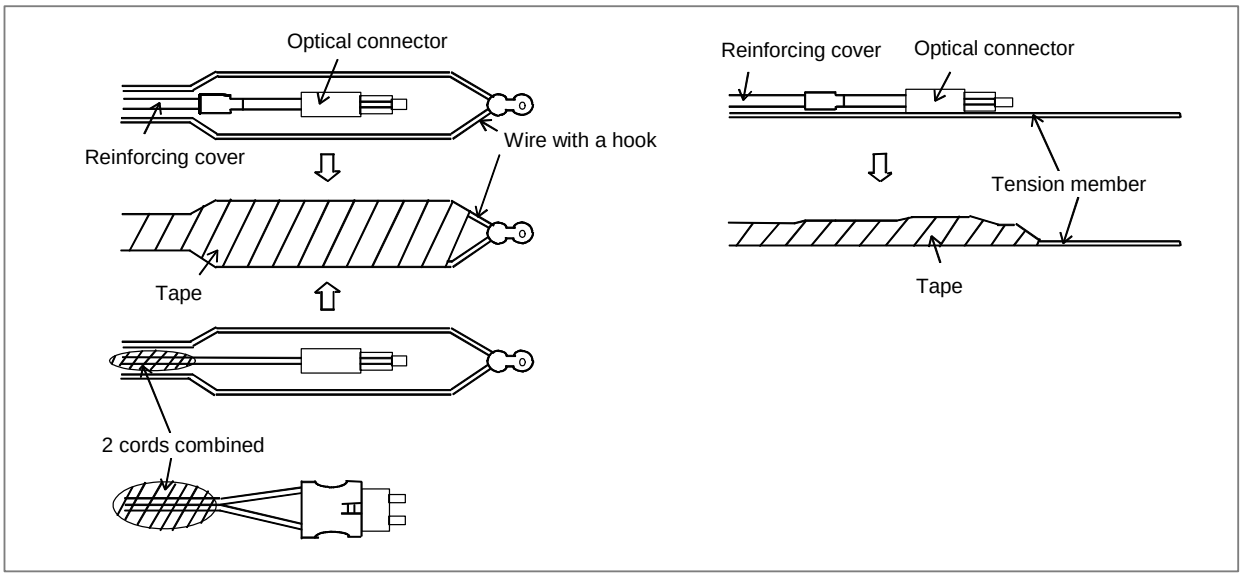


**Fig. D (d) Prior to installing a cable**

- Take care to keep both parts of the optical connector (cable side and PCB side) clean. If they become dirty, wipe them with tissue paper or absorbent cotton to remove dirt. The tissue paper or absorbent cotton may be moistened with ethyl alcohol. Do not use any organic solvent other than ethyl alcohol.
- Fix the reinforcing cover of the external cable or the cord binding portion of the internal cord type cable by using a cable clamp, as shown in Fig. D(e), to prevent the weight of the optical fiber cable from being applied directly to the connecting part of the optical connector.

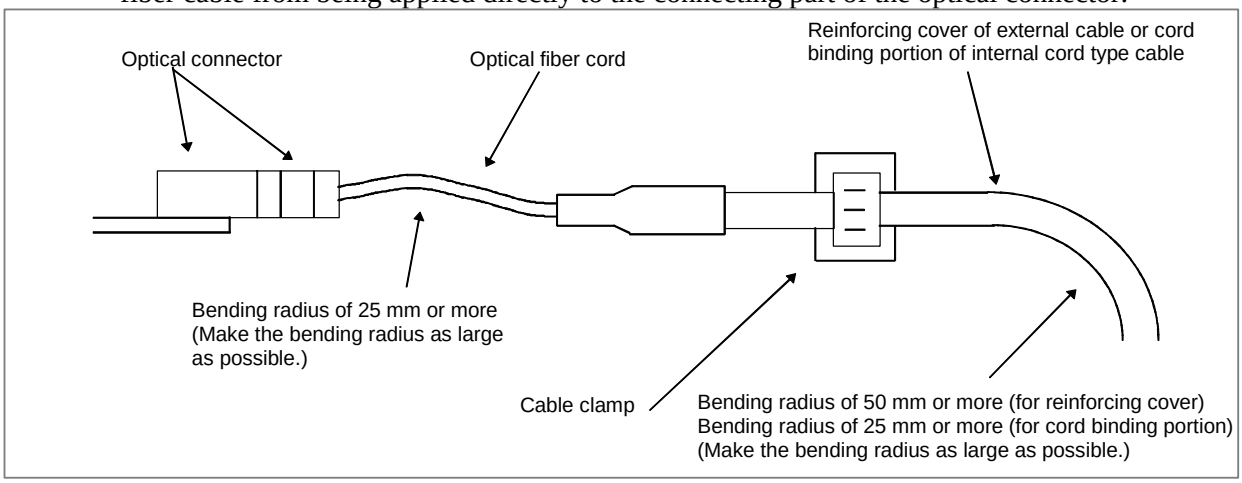


**Fig. D(e) Fixing the cable with a clamp**

- Any superfluous portion of the cable may be wound into a loops. Should this prove necessary, make sure the diameter of each loop is at least 150 mm (for an external cable) or at least 100 mm (for an internal cord type cable). Winding the cable into smaller loops may produce sharp curves that exceed the specified bending radius limit without the user being aware. Such bending can result in a greater transmission loss, ultimately leading to a communication failure.
- When using a nylon band (cable tie) as a cable clamp, follow the instructions given below. Also, take care not to apply a bending force to one particular part of the cable when fixing it with a clamp. Failing to clamp the cable correctly may cut or damage it.

(External cable)

Do not clamp the uncovered portion of the cable with a nylon band. When clamping the cable by the reinforcing cover, the clamping force is not an important factor to consider. However, ensure that the clamping force is as small as possible to ensure that the reinforcing cover is not deformed by the clamping. If possible, the clamping force should be 5 kg or less.

(Internal cord type cable)

Lightly clamp the optical cable with a nylon band so that the cable shield is not deformed. If possible, the clamping force should be 1 or 2 kg (make sure that no force is applied to the cable). Due care is required when clamping the internal cord type cable because its cable shield is weaker than the reinforcing cover of the external cable.

### (5) Optical fiber cable relay of FANUC I/O Link

When used for the FANUC I/O Link application, optical fiber cables can be connected by using an optical fiber adapter, as follows.

(a) External view of an optical fiber adapter

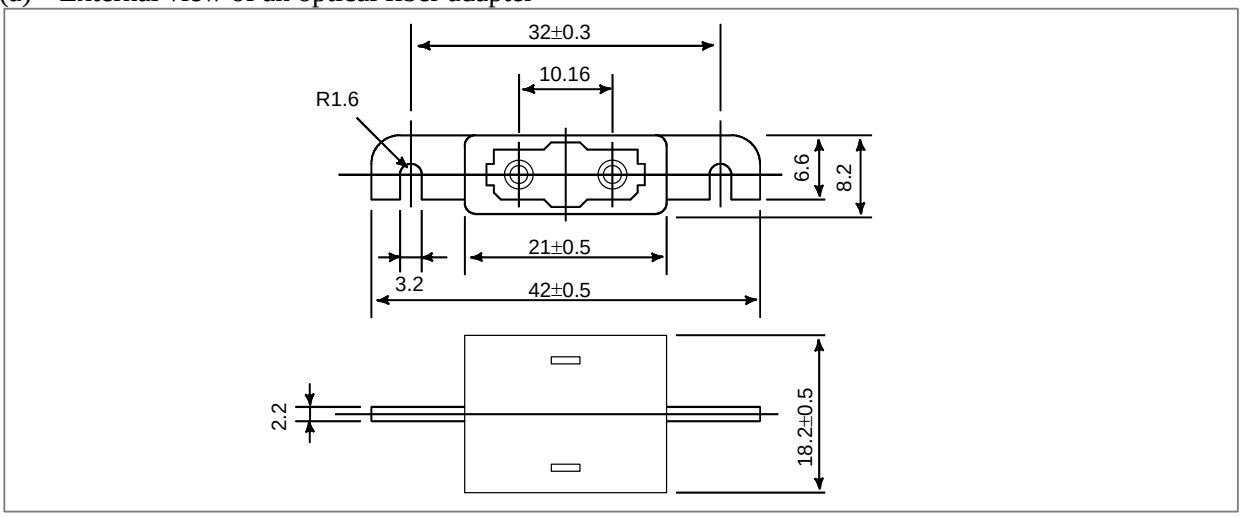


(b) Example of the use of an optical fiber adapter

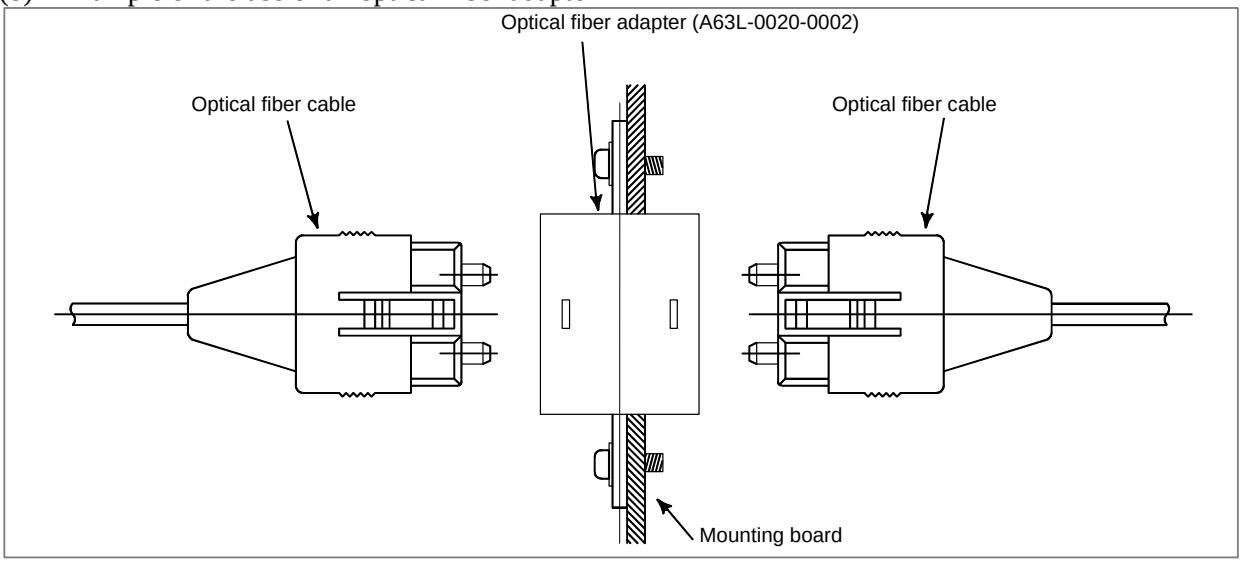


**NOTE**

Up to one relay points are permitte.

## (6) Optical fiber cable relay of FANUC high-speed serial bus

With the FANUC high-speed serial bus, special low-loss optical cables can be connected by using a special low-loss optical relay adapter as an optical fiber relay adapter.

(a) External view of the low-loss optical relay adapter

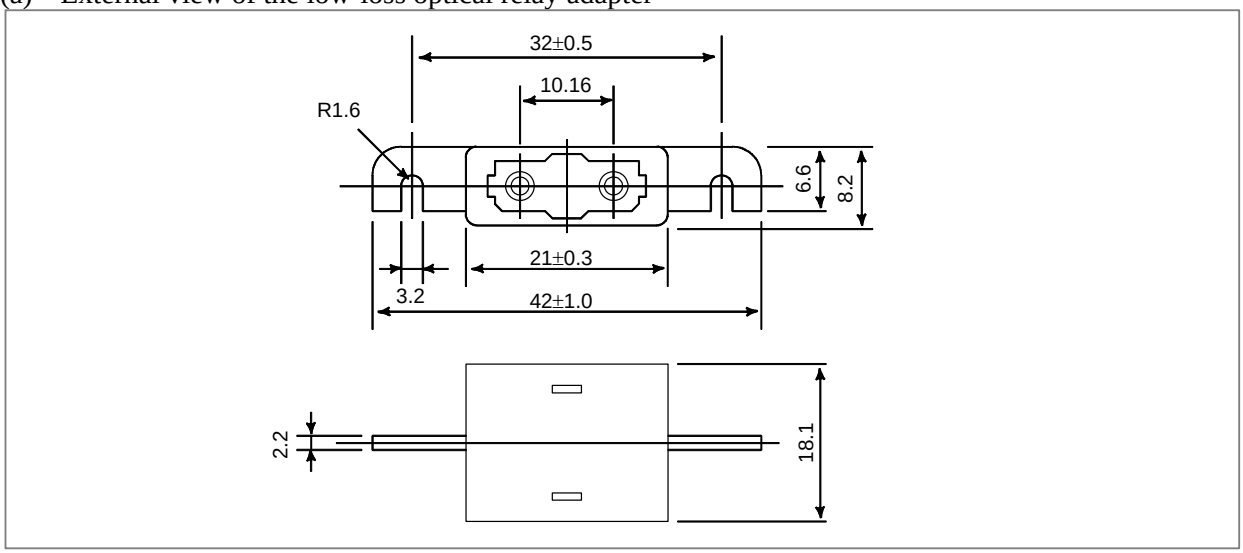


(b) Example of use of the optical fiber relay adapter

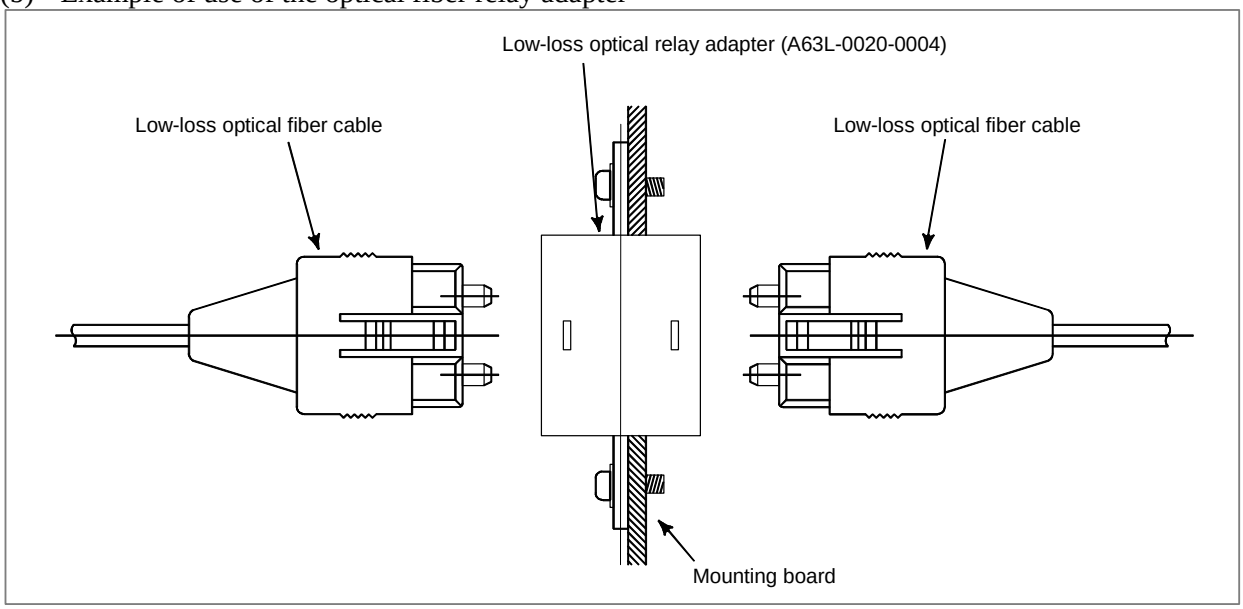


**NOTE**
Only one relay point is permitted.

## (7) Precautions for connection with low-loss optical junction adapter

- Features and attention in use of low-loss optical junction adapter (A63L-0020-0004)
  When optical connectors for a conventional optical junction adapter (A63L-0020-0002) are jointed, the facing ferrules (Note 1) are located about 60 um from each other. This is because the optical fiber of conventional PCF (plastic clad silica fiber) cables (A66L-6001-0026) may protrude from the tip of the ferrules (by up to about several um), resulting in the fiber protrusion being damaged when the ferrules are butted against each other.

In the low-loss optical junction adapter, the ferrules are butted against each other, thus greatly reducing the reduction in repeater loss. Therefore, the two optical cables used with the low-loss optical junction adapters must be dedicated to the adapters.
If a conventional PCF (plastic clad silica fiber) cable (A66L-6001-0026) is used as even one of the two optical fiber cables for joining the low-loss optical junction adapter, both cables may be damaged, resulting in deteriorated characteristics.

**NOTE**
Ferrule: Movable metal at the tip of an optical connector; the fiber is bonded to the ferrule.

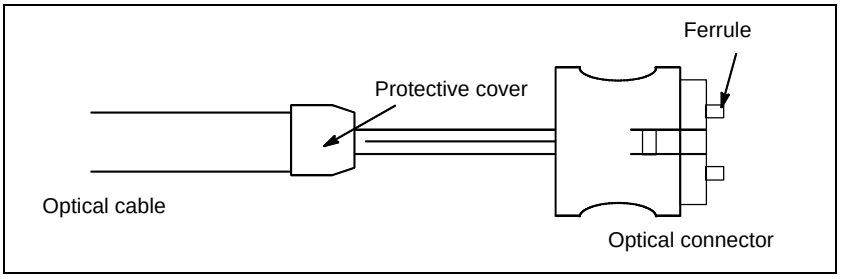


- Features of low-loss optical cable (A66L-6001-0029#~)
  A low-loss optical cable is selected from conventional PCF optical cables (A66L-6601-0026). The selected cable offers low loss, and its connector section is given special treatment; the fiber ends are provided with a depression so that the ferrules can be butted against each other
- Features of high-speed, low-loss optical cable (A66L-6001-0049#~)
  The type of optical fiber used for a high-speed, low-loss optical cable has optical properties different from that of conventional PCF optical cables (A66L-6001-0026 and A66L-6001-0029) to support high-speed, long-distance communication. They are different in how the light propagates within the fiber. Relaying different types of optical fibers may increase repeater loss, resulting in an optical communication failure.
- When using a low-loss optical relay adapter, be sure to use the same type of optical cable (high-speed, low-loss optical cables or low-loss optical cables).
- Colors of low-loss optical relay adapter and low-loss optical cable (distinguishing them from conventional products)
  While the color of the body of the conventional optical relay adapter is black, that of the low-loss optical relay adapter is blue. While the color of the protection cover (Refer to above figure) of the conventional PCF optical cable is black, that of the low-loss optical cable is blue.

### (8) Installing the optical fiber junction adapter

The optical fiber junction adapter should be installed within a cabinet, as a rule. If it is impossible to avoid installing it within a cabinet, protect the adapter and the optical cable portions (such as connectors and cords) not covered with reinforcement coating from the outside air by, for example, covering them with packing.

### (9) Environmental resistance of the optical fiber junction adapter

- The optical fiber junction adapter is not waterproof. Even when optical cables are attached to both ends of the adapter, there are very small gaps in the linked portions, so water resistance can not be expected.

- When optical cables are attached to both ends of the junction adapter installed in a normal environment (such as within a cabinet), it is unlikely that dust will penetrate between the adapter and optical fiber to the degree that it may hamper normal optical linkage. If one or both ends of the adapter are left open, dust and dirt may accumulate even when the adapter is in a normal environment (such as within a cabinet). The dust and dirt on the adapter ends is likely to hamper normal optical linkage when the optical cables are attached. In such a case, clean the junction adapter and the optical connector using the optical fiber junction adapter cleaning method described below.
- Do not allow cutting fluid to splash over the adapter or those optical cable portions (such as connectors and cords) that are not covered with reinforcement coating. If the inside of the adapter and fiber end surfaces are contaminated with cutting fluid, a malfunction may occur.

### (10) Cleaning

If the optical fiber junction adapter, optical-to-electrical conversion module, or optical cable are soiled, clean them according to the following procedures.

- Cleaning the optical fiber junction adapter and optical-to-electrical conversion module
  First, clean the entire housing by wiping it with a cloth moistened with, or by washing it in, ethyl alcohol. Similarly, wash the two sleeves in the adapter or wipe them with a cotton swab or the like.
- Cleaning optical cables
  For the optical cables, it is important to clean the connectors at their ends. Any soiling on the optical fiber end surfaces will hamper optical transmission, resulting in a malfunction. Wipe the optical fiber end surfaces (that is, the ferrule end surfaces) thoroughly with a soft, clean cloth (like gauze) moistened with ethyl alcohol, in the same way as described above. The use of cotton swabs may prove convenient. The fiber end surfaces of low-loss optical cables are lower than the ferrules. To remove any soiling from the fiber end surfaces completely, push the cotton swab or gauze into the depressions all the way through while rotating the ferrule.
  If the ferrules and optical connectors are contaminated with oily substances, and they may extend over a cleaned fiber end surface when it is attached to the optical-to-electrical conversion module, it is a good idea to wash them before wiping the optical fiber end surfaces, using the procedure stated above.

# E LIQUID CRYSTAL DISPLAY (LCD)

## LCD with a touch panel

The touch panel is operated by directly touching the LCD screen. For this operation, be sure to use a FANUC-supplied pen (A02B-0236-K111) dedicated to the touch panel. If a sharp-pointed pen is used, for example, to touch the LCD screen, the LCD surface may be flawed or damaged. Moreover, do not touch the LCD screen directly with a finger. Otherwise, the operability of the LCD may deteriorate, and the LCD screen may get dirty.

## Protection sheet for the touch panel

A protection sheet is attached the face of an LCD with a touch panel to protect the thin film of the touch panel and LCD. If the protection sheet is damaged, it can be replaced. For the replacement method, refer to the maintenance manual. (The protection sheet is a consumable part.)

# F MEMORY CARD INTERFACE

## Overview

The LCD-mounted type can input and output data within the CNC using the memory card interface on the left side of the LCD, and edit or execute a machine program in the CF card inserted into the memory card interface.
The stand-alone type can input and output data within the CNC using the memory card interface of the control unit. (The stand-alone type cannot edit or execute a machine program in the CF card inserted into the memory card interface.) For an explanation of remote diagnosis using a modem card, see the related document.

## CF card

Since a CF card includes flash memory, if read operation is repeated over a long period of time, an data error occurs in some rare cases due to internal data corruption. Commercial CF cards generally do not sufficiently address such a data error. In addition, read operation may take much time depending on the state of internal memory; if there is a delay in transferring data to the CNC during DNC operation, the finished quality of the machined surface may be affected.
The CF cards recommended below have a superior capability of correcting data automatically and are designed so as not to read incorrect data even if a data error occurs. If these cards are used under the machining conditions defined below, the finished quality of the machined surface is not affected.

1. Recommended memory cards
   The recommended memory cards and their usages are shown in the table below.

**Table 1-1. Recommended memory cards**

| Order specification | Capacity | Usage | | | | Remarks |
|---|---|---|---|---|---|---|
| | | Data I/O | DNC operation by memory card | Data server | | |
| | | | | 100 Base | 10 Base | |
| A02B-0281-K601 | 128 MB | ○ | ○ | ○ | ○ | CF |
| A02B-0213-K211 | 256 MB | ○ | ○ | ○ | ○ | CF |
| A02B-0213-K212 | 1 GB | ○ | ○ | ○ | ○ | CF |

○: Normal operation confirmed.
×: Normal operation not guaranteed.
CF: Compact flash
*: Compact flash adapter
- The compact flash card adapter (A02B-0303-K150) was used to check the data I/O and automatic operation on the PCMCIA port.
- The adapter (SDCF-31-03) manufactured by SanDisk was used to check the operation of the data server.

2. Others
   - The format of the flash ATA card is the quick format.
     An unformatted flash ATA card needs to be formatted by your PC using FAT16. Other formats are not supported.

## Using the compact flash adapter (LCD-mounted type only)

1. Attachment
   - Attach the compact flash card to the compact flash card adapter (A02B-0303-K150, called the CF adapter later).
   - Make sure lock lever A is in the upper position and then insert the CF adapter above into the memory card interface.
   - Push lock lever A downward.

- Close the cover of the memory card interface.

**NOTE**
1 To perform continuous operation with the CF adapter attached, be sure to push lock lever A downward and then close the cover of the memory card interface.
2 The lock function is enabled only when the CF adapter (A02B-0303-K150) is used.
3 The CF adapter must be inserted with label surface facing toward the screen.

2. Removal
   - Open the cover of the memory card interface.
   - Push lock lever A upward.
   - Push eject button B once to project the button.
   - Push eject button B again to eject the CF adapter.
   - Remove the CF card with your fingers.
   - Close the cover of the memory card interface.

**NOTE**
1 When lock lever A is in the lower position (in the locked state), eject button B cannot be pushed.

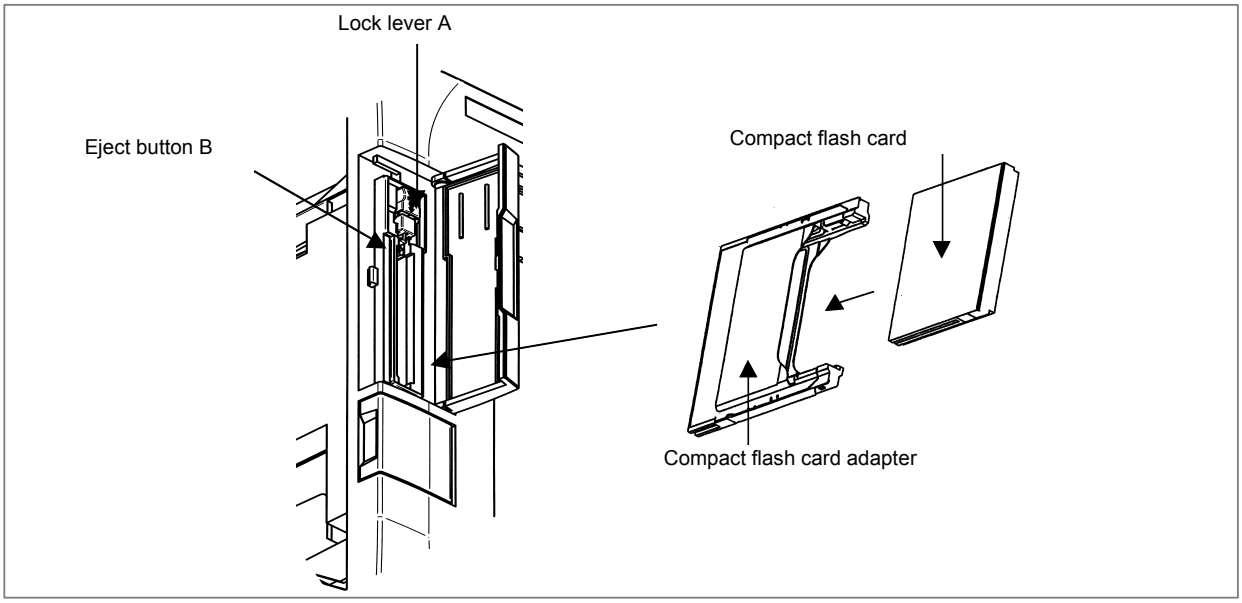


## Notes on DNC operation and memory operation using a memory card attached to the memory card interface

Since a CF card includes flash memory, if read operation is repeated over a long period of time, an data error occurs in some rare cases due to internal data corruption.
This CF card has a capability of correcting data automatically and is designed so as not to read incorrect data even if a data error occurs, but it temporarily takes much time.
The delay in read operation affects the performance (speed) of DNC operation and memory operation and the finished quality, so this must be considered while the use conditions are determined. Set the processing time for one block to 4 ms or more.
When high performance is required or an expensive workpiece is machined, use the data server (DNC operation). In DNC operation on the data server, the above delay in read operation does not affect the performance or finished quality.
Use ISO code as format of NC program.

# G ANALOG SERVO ADAPTER

**NOTE**
Analog servo adapter is available only for retrofit purpose.

## G.1 OVERVIEW

When a motor driven by analog servo amplifier is used, Analog servo adapter is required. Analog servo adapter is connected through an optical fiber cable as a unit on FSSB line.

## G.2 SPECIFICATIONS

- Two types of analog servo interface
  - Type F analog servo interface
    The ready signal and alarm signal from servo amplifier are 5VDC signals.
  - Type M analog servo interface
    The ready signal and alarm signal from servo amplifier are 24VDC signals.

- Analog servo adapter consists of basic unit and additional unit. The basic unit has two analog servo axis interface and feedback interface. The additional unit has two analog servo axis interface and feedback interface. Therefore, up to 4 analog servo can be connected to Analog servo adapter.

- The maximum number of interface units like Analog servo adapter or a separate detector interface unit that can be connected to one FSSB line is two.

- Separate absolute pulse coder can be connected.

- A quad B or FANUC serial interface encoder can be connected.

- Environmental temperature of unit is 0˚C to 55 ˚C in operation, -20˚C to 60˚C in store or transportation.

## G.3 ORDER SPECIFICATIONS

| Item | Specification | Remarks |
|---|---|---|
| Analog servo adapter basic unit | A02B-0303-C180 | Up to 2 axes |
| Analog servo adapter additional unit | A02B-0259-C181 | Up to 2 axes |
| Flat cable | A02B-0259-K850 | |
| Spare fuse | A02B-0200-K103 | 24VDC 5.0A |

# G.4 CONNECTION DIAGRAM

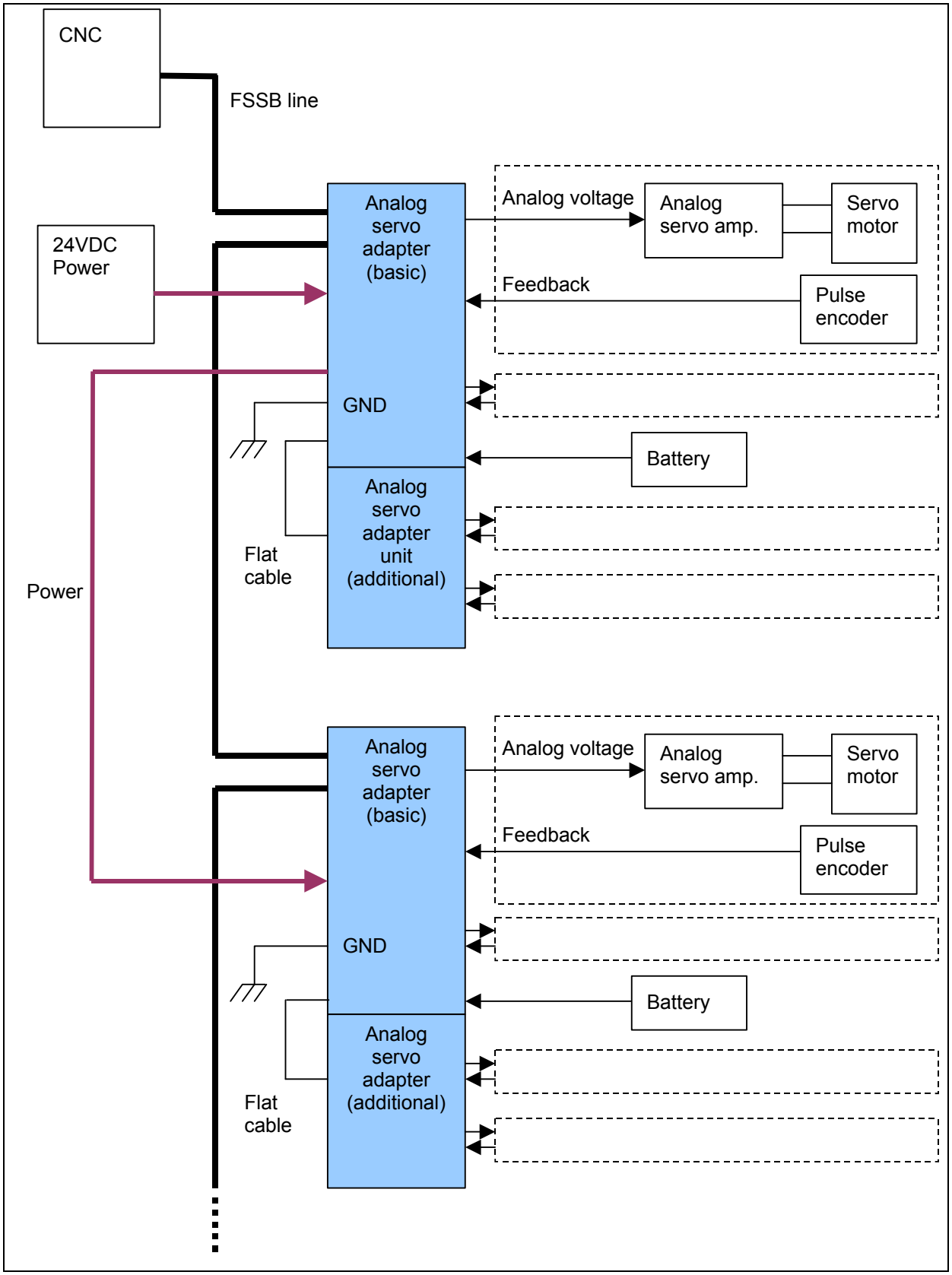

# G.5 CONNECTION OF TYPE F ANALOG SERVO INTERFACE

## G.5.1 System Structure

### G.5.1.1 In case of using the built-in pulse coder

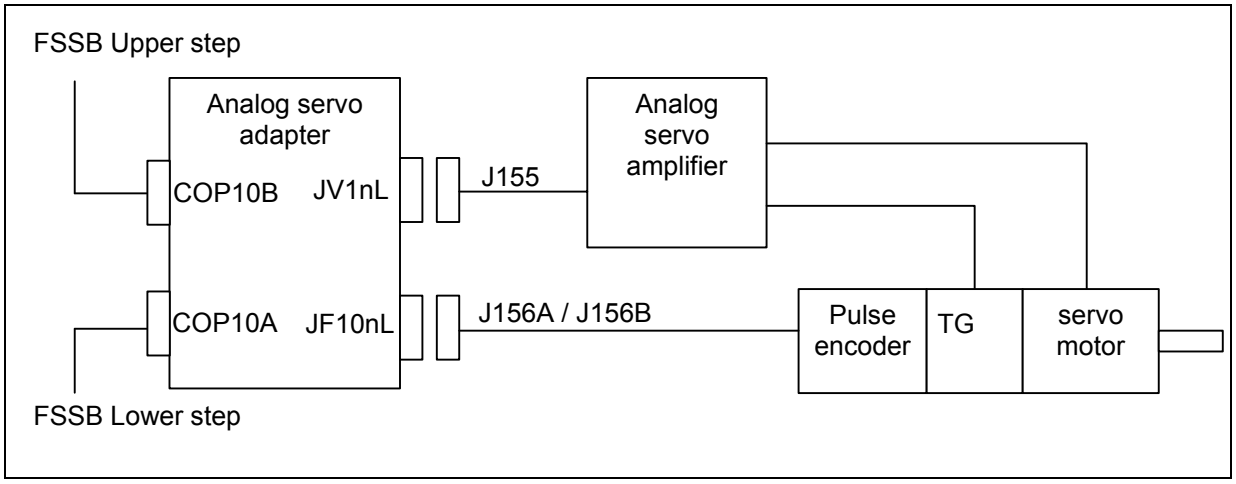


### G.5.1.2 In case of using the separate detector

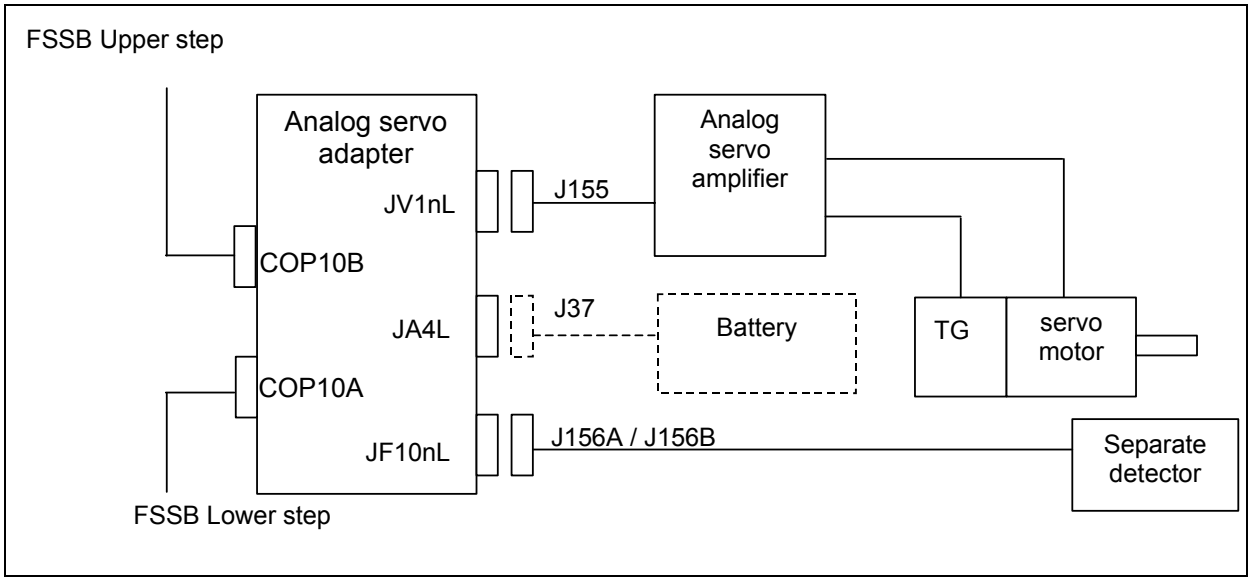

# G.5.2 Detail of Connection

## G.5.2.1 Cable J155

Cable J155 is for between Analog servo adapter (JV1nL) and analog servo amplifier.

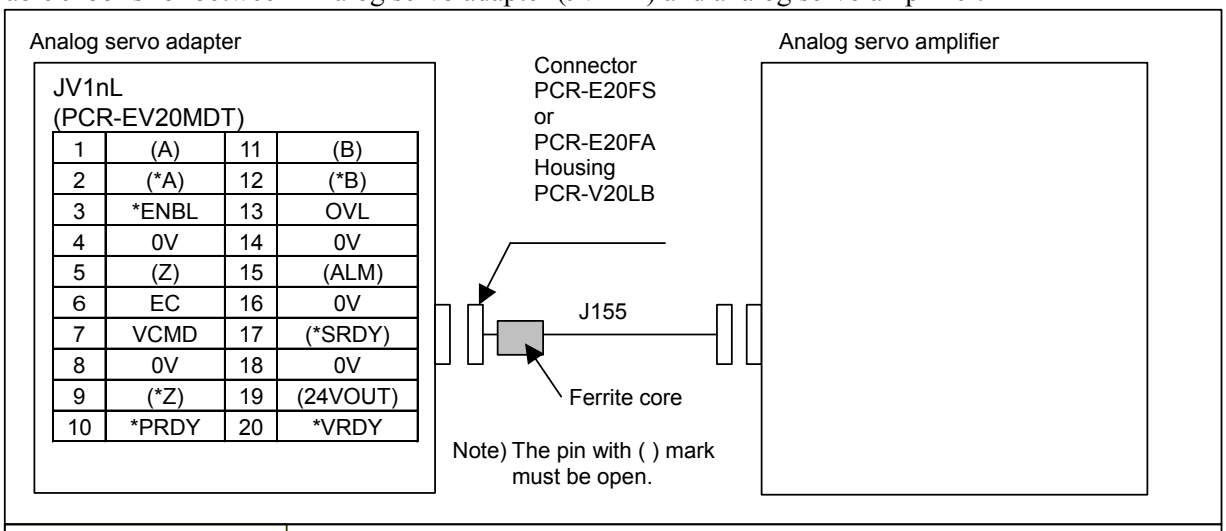


| | | | |
|---|---|---|---|
| 1 | (A) | 11 | (B) |
| 2 | (*A) | 12 | (*B) |
| 3 | *ENBL | 13 | OVL |
| 4 | 0V | 14 | 0V |
| 5 | (Z) | 15 | (ALM) |
| 6 | EC | 16 | 0V |
| 7 | VCMD | 17 | (*SRDY) |
| 8 | 0V | 18 | 0V |
| 9 | (*Z) | 19 | (24VOUT) |
| 10 | *PRDY | 20 | *VRDY |

Cable connection (J155)

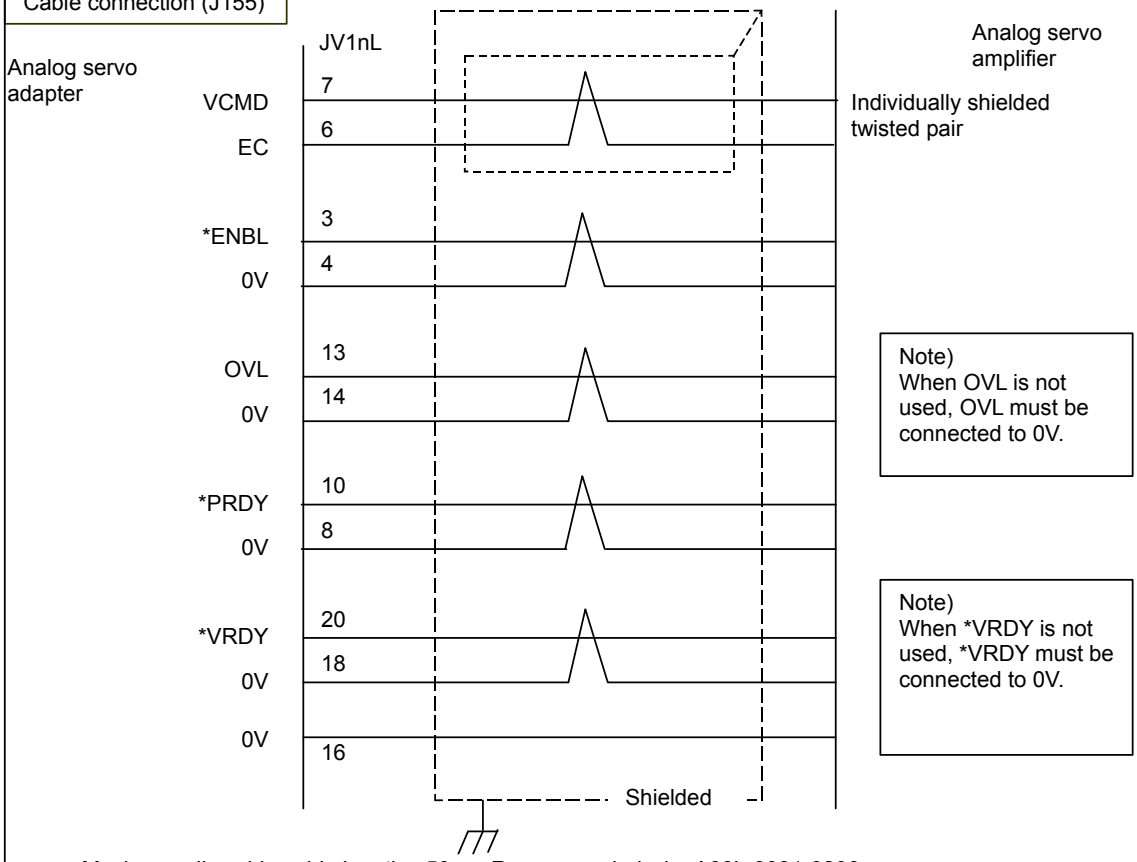


Maximum allowable cable length：50m Recommended wire A66L-0001-0206
(Individually shielded twisted pair #24AWG x 3 pairs + twisted pair #24AWG x 7 pairs)
The external cable diameter is ∅11, preventing the use of the cable, as is, with connector case PCR-V20LB (∅8). Peel backs the sheath at the point where the cable meets the connector to reduce the cable diameter.
Recommended ferrite core：TDK ZCAT2032-0930
Set ferrite core near Analog servo adapter.

## G.5.2.2 Cable J156A (A quad B interface)

Cable J156A is for between Analog servo adapter (JF10nL) and an encoder.

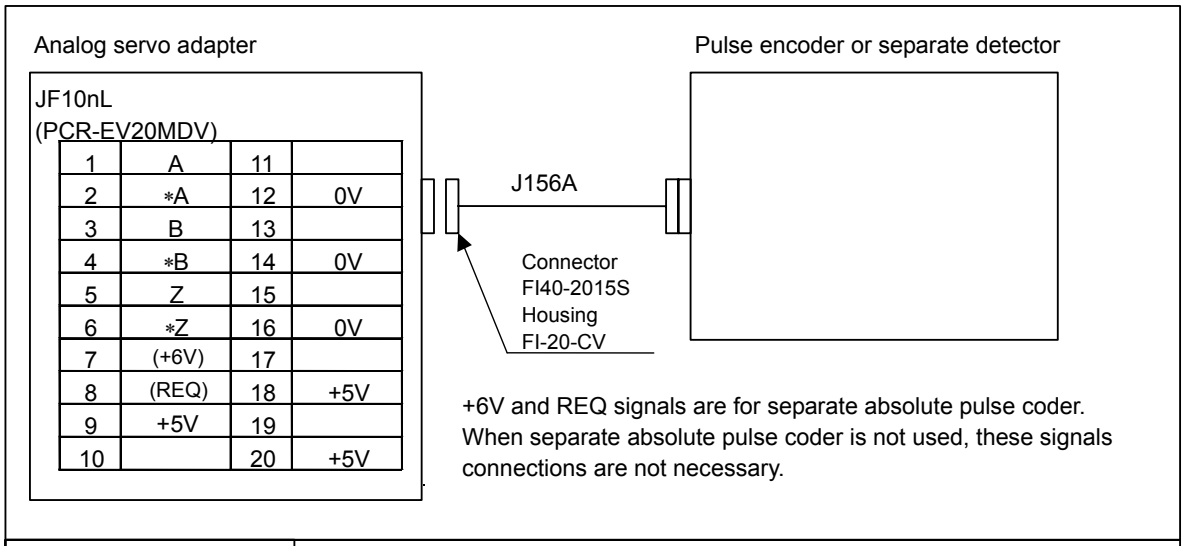


| | | | |
|---|---|---|---|
| 1 | A | 11 | |
| 2 | *A | 12 | 0V |
| 3 | B | 13 | |
| 4 | *B | 14 | 0V |
| 5 | Z | 15 | |
| 6 | *Z | 16 | 0V |
| 7 | (+6V) | 17 | |
| 8 | (REQ) | 18 | +5V |
| 9 | +5V | 19 | |
| 10 | | 20 | +5V |

Cable connection (J156A)

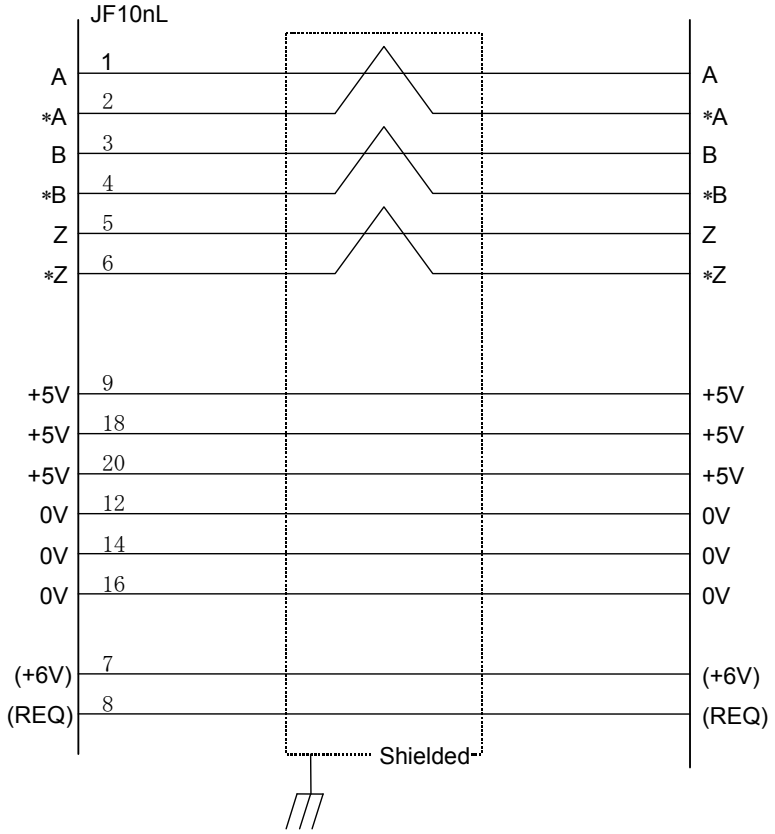


Maximum allowable cable length: 50m
Recommended wire: A66L-0001-0286 (#20AWG x 6 + #24AWG x 3 pairs)

## G.5.2.3 Cable J156B (FANUC serial interface)

Cable J156B is for between Analog servo adapter (JF10nL) and pulse encoder / separate detector.

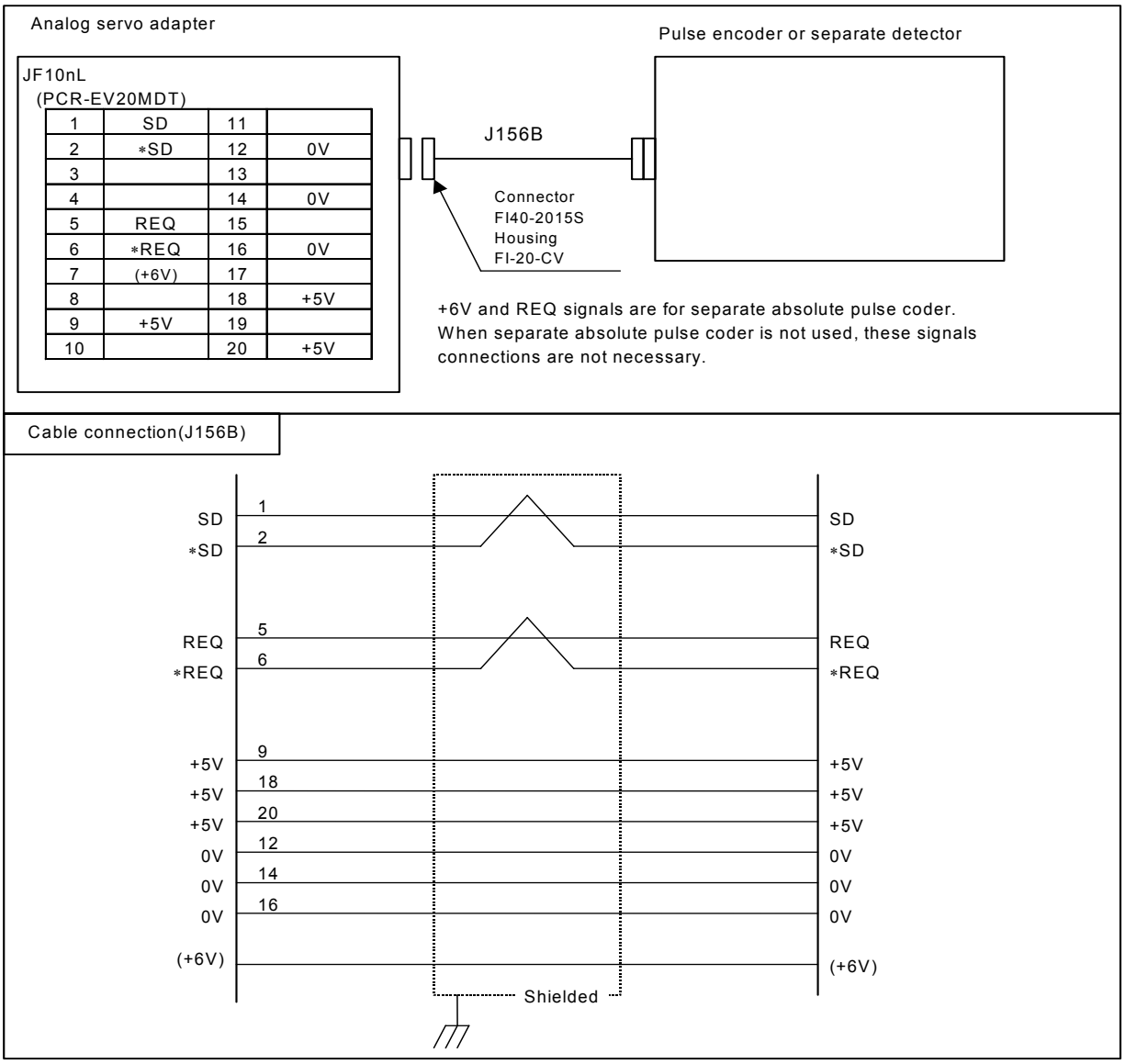


| | | | |
|---|---|---|---|
| 1 | SD | 11 | |
| 2 | *SD | 12 | 0V |
| 3 | | 13 | |
| 4 | | 14 | 0V |
| 5 | REQ | 15 | |
| 6 | *REQ | 16 | 0V |
| 7 | (+6V) | 17 | |
| 8 | | 18 | +5V |
| 9 | +5V | 19 | |
| 10 | | 20 | +5V |

Maximum allowable cable length: 50m
Recommended wire: A66L-0001-0286 (#20AWG x 6 + #24AWG x 3 pairs)

## G.5.2.4 Cable J37

Cable J37 is for between Analog servo adapter (JA4L) and the battery for separate detector.

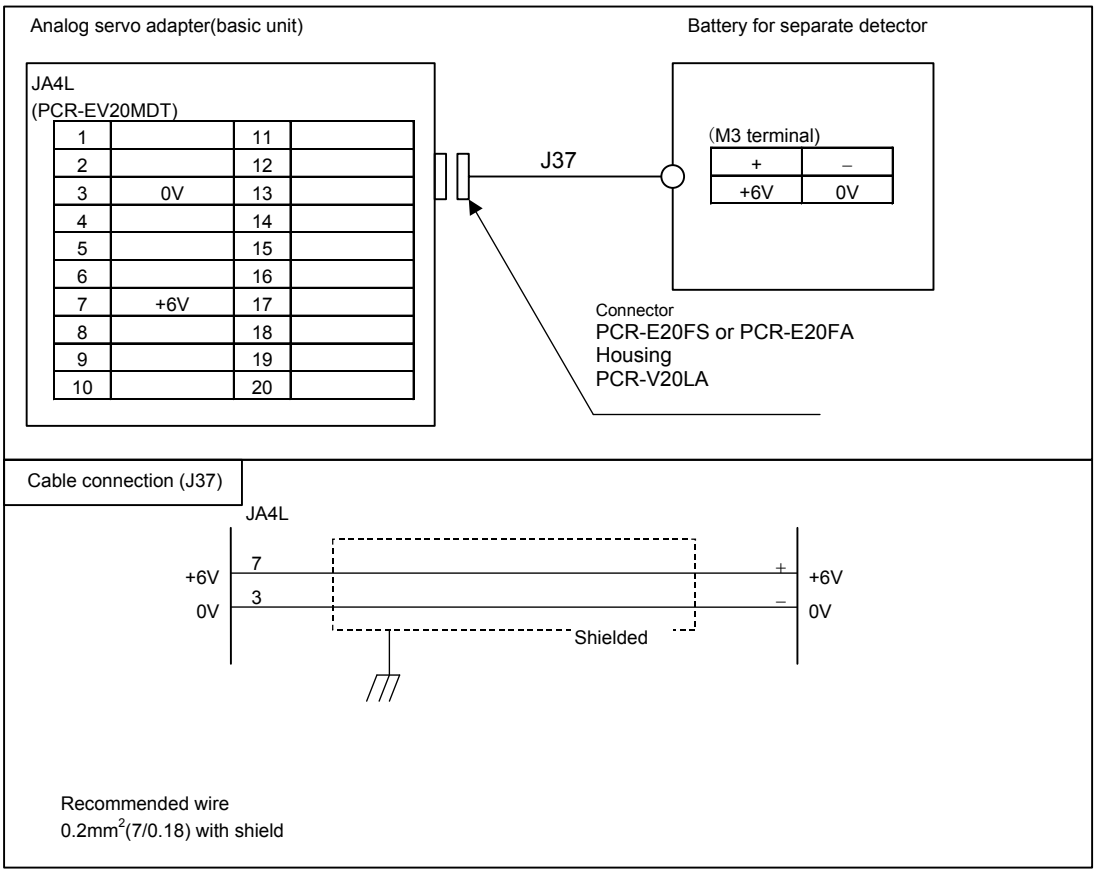


**NOTE**

If the cable is connected to JA4L when the separate absolute pulse coder battery case contains the battery, the battery voltage is applied to the battery power supply pin (+6 V) for each of the feedback connectors (JF101L to JF104L). In this case, if the battery line and 0 V are short-circuited, the battery may heat up or the protection circuit within Analog servo adapter may fail. First, make sure the battery case contains no battery or the cable is not connected to JA4L. Then, complete all cabling work and confirm cables are correctly connected. Finally, place the battery or connect the cable to JA4L.

## G.5.2.5 Detail of signals

### (1) VCMD,EC (output)

VCMD and EC are the speed command signals for the servo amplifier. The voltage of VCMD with respect to EC represents the speed command voltage. (The speed command voltage is enabled only while the *ENBL signal is on.)

Electrical characteristics

Output voltage: -10V to +10V

Output current: 2mA

Output impedance: 100Ω

### (2) *ENBL (output)

*ENBL is the enable signal for the servo amplifier. While this signal is on (connected to OV), the VCMD signal is enabled. *ENBL is open collector.

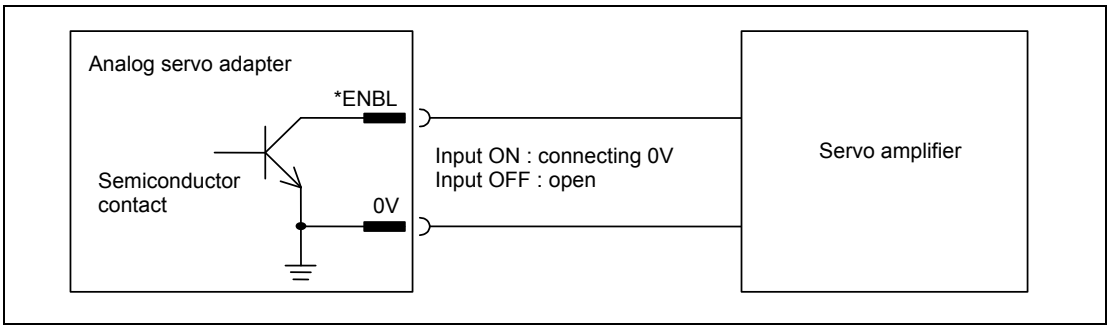


Electrical characteristics

Maximum load current when output is on: -10V to +10V
Maximum output voltage when output is on: $6I_L$ (VOlt), where $I_L$: Load current
Withstand voltage when output is of: No more than 24V, including momentary values
Leakage current when output is of: No more than 100μA

### (3) OVL (input)

OVL is the overload alarm signal issued by the servo amplifier. When this signal enters the release state (high level), the CNC assumes that the servo system has entered the overload state, and turns off the *PRDY and *ENBL signals for the axis. If this signal is not used, connect OVL and 0V to each other (low level).
When an overload alarm is issued, the servo amplifier must stop the motor regardless of the state of the VCMD signal.

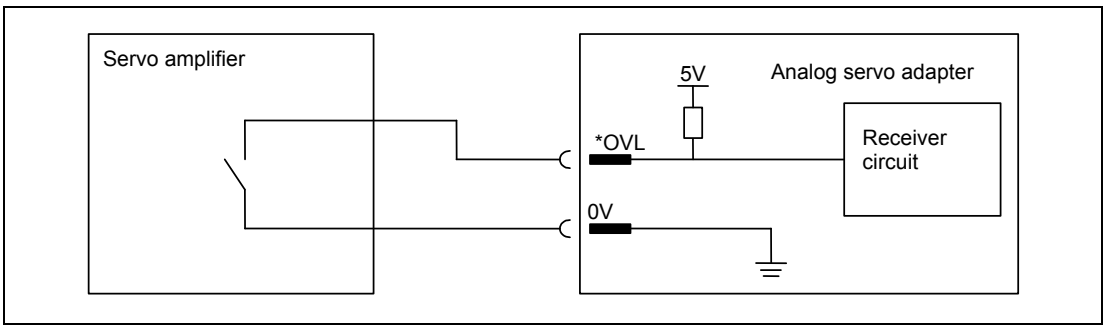


Electrical characteristics

Absolute maximum rating

| Item | Symbol | Specification | Unit | Supplement |
|---|---|---|---|---|
| Input voltage range | Vin | -3.6 to +13.6 | V | |

Input characteristics

| Item | Symbol | Specification | Unit | Supplement |
|---|---|---|---|---|
| High level input voltage | VH | 3.6 to 10.5 | V | Note |
| Low level input voltage | VL | 0 to 1.0 | V | |
| High level input current | Iih | +1.5 max | mA | Vin=5V |
| | | +8.8 max | mA | Vin=10V |
| Low level input current | Iil | -8.0 max | mA | Vin=0V |

The plus sign (+) of Iih and Iil represents the direction of flow into the receiver, while the minus sign (–) represents the direction of flow from the receiver.

**NOTE**
The input release state is also assumed to be the high level.

### (4) *PRDY (output)

*PRDY is the ready signal, issued by the CNC to the servo amplifier. The electrical characteristics of this signal are the same as those of *ENBL.

### (5) *VRDY (input)

*VRDY is the ready signal issued by the servo amplifier. When the power to the servo amplifier is turned on to set the normal startup state, and the *PRDY signal from the CNC is subsequently turned on, the servo amplifier must immediately turn on (short–circuit) the *VRDY signal. If the servo amplifier encounters an error, the *VRDY signal must be turned off (released) to report the error to the CNC. If this signal is not used, connect *VRDY and 0V to each other (low level), and set bit 1 (CVR) of parameter No. 1800 to 1.
If the servo amplifier encounters an error, stop the motor regardless of the state of the VCMD signal.
The electrical characteristics of this signal are the same as those of *ENBL.

### (6) A, *A, B, *B, Z, *Z

These signals are received from the Pulsecoder.

- A–phase and B–phase signals (A, *A, B, *B)
  The A–phase and B–phase signals are shifted by 90 degrees relative to each other, and are used to transfer incremental position information. A position is detected, assuming that the direction of movement is positive while the B–phase signal is advanced, or that the direction of movement is negative while the A–phase signal is advanced.

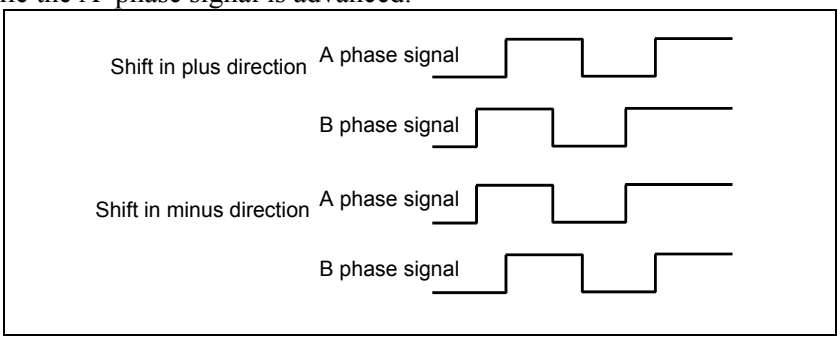


The differential input signals shown below are applied to the connectors. The time duration, TD, from point α where the relative potential difference between A and *A becomes 0.5 V or more, to point β where the relative potential difference between B and *B becomes 0.5 V or less, must satisfy the condition indicated below. (This condition may restrict the maximum speed of movement.)

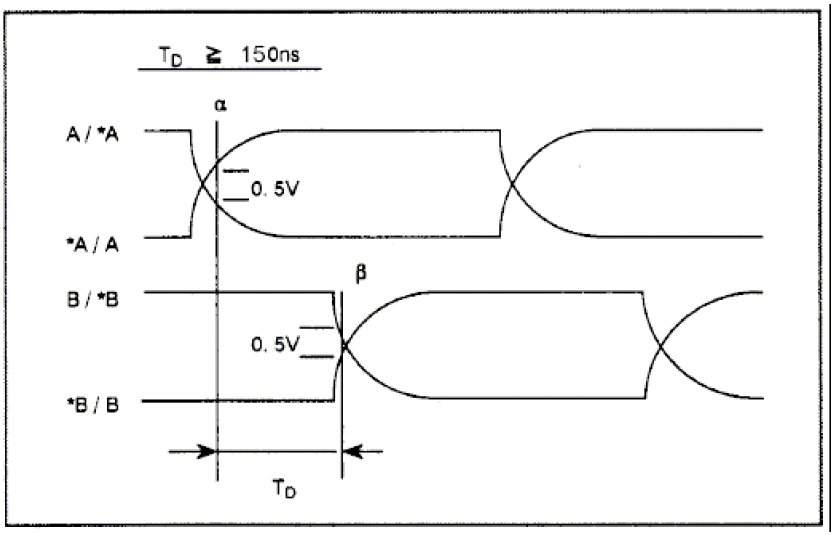


- Z–phase signal input
  The Z–phase signal (one–rotation signal) requires a signal width of no less than quarter period of the A–phase or B–phase signal. If the motor does not have this signal, ensure that the machine supplies this signal. An absolute pulse coder supports the following reference position setting modes, which do not use the Z–phase signal:
  1) External reference position setting
  2) Butt–type reference position setting

- Input voltage requirments
  The voltage of A and B phase signals must meet the following requirments
  High level: 2.4V or more
  Low level: 0.8V or less

# G.6 CONNECTION OF TYPE M ANALOG SERVO INTERFACE

## G.6.1 System Structure

### G.6.1.1 In case of using the built-in pulse coder

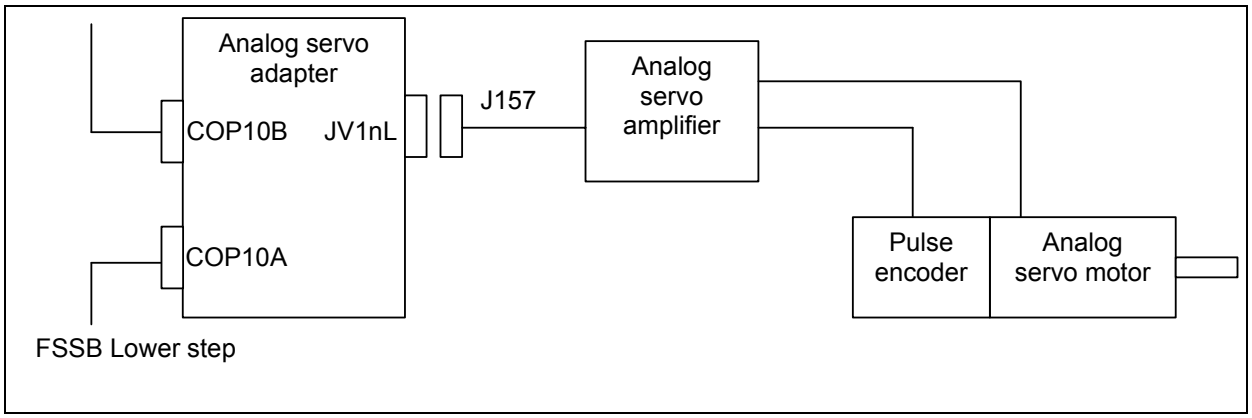

### G.6.1.2 In case of using the separate detector

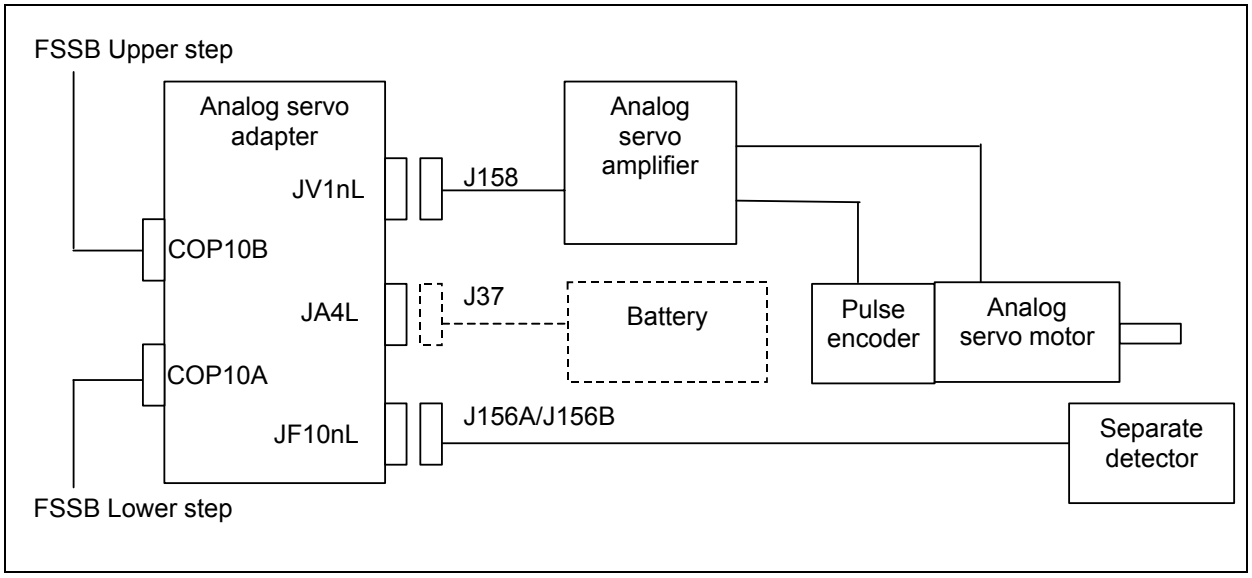


## G.6.2 Detail of Connection

### G.6.2.1 Cables J156A/B

Refer to Subsections G.5.2.2 and G.5.2.3.

### G.6.2.2 Cable J37

Refer to Subsection G.5.2.4.

### G.6.2.3 Cable J157

Cable J157 is for Analog servo adapter (JV1nL) and analog servo amplifier.

Analog servo adapter

JV1nL

(PCR-EV20MDT)

| | | | |
|---|---|---|---|
| 1 | A | 11 | B |
| 2 | *A | 12 | *B |
| 3 | (*ENBL) | 13 | (OVL) |
| 4 | (0V) | 14 | (0V) |
| 5 | Z | 15 | ALM |
| 6 | EC | 16 | 0V |
| 7 | VCMD | 17 | *SRDY |
| 8 | (0V) | 18 | 0V |
| 9 | *Z | 19 | 24VOUT |
| 10 | *PRDY | 20 | (*VRDY) |

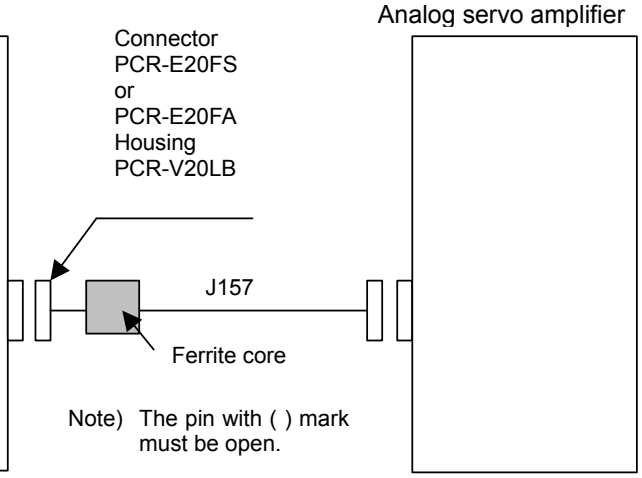


Note) The pin with ( ) mark must be open.

Cable connection (J157)

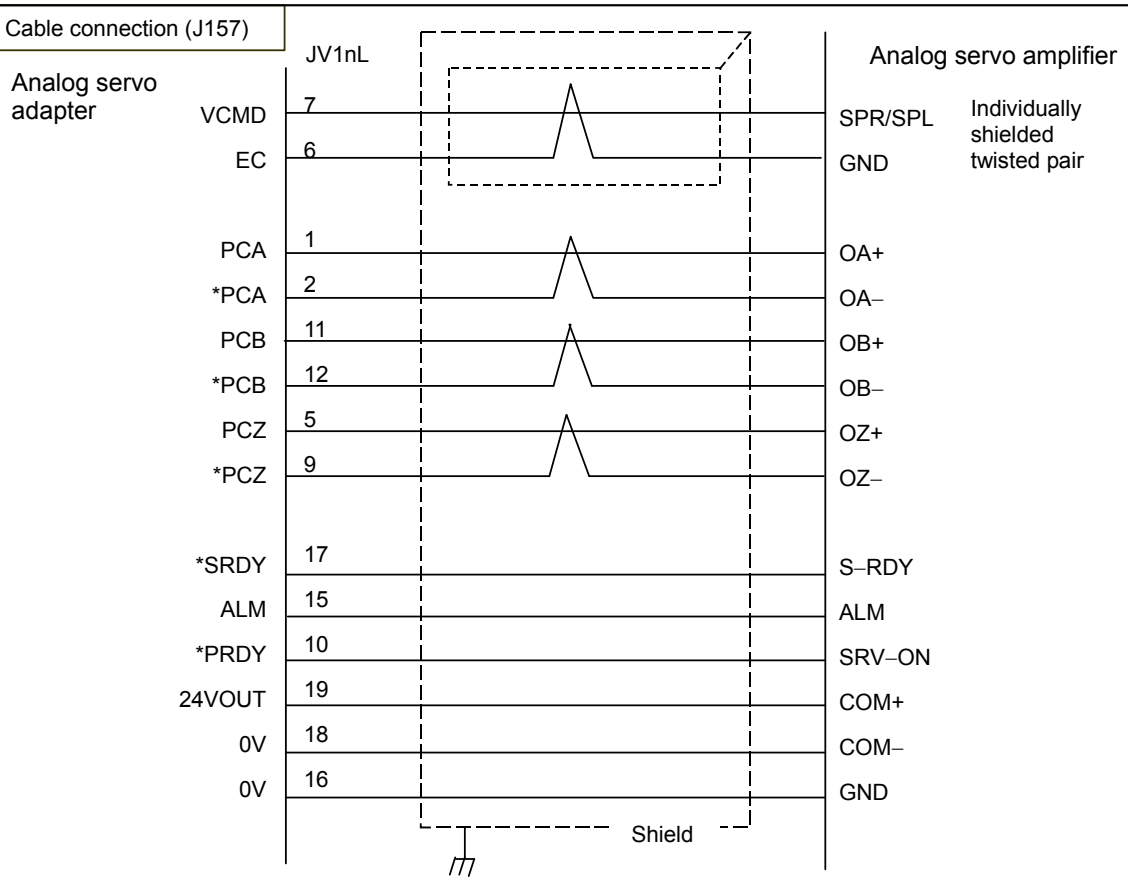


Maximum allowable cable length：50m (cable length has limitation by voltage drop)
Recommended wire A66L-0001-0206
(Individually shielded twisted pair #24AWG x 3 pairs + twisted pair #24AWG x 7 pairs)
The external cable diameter is ∅11, preventing the use of the cable, as is, with connector case PCR-V20LB (∅8).
Peel backs the sheath at the point where the cable meets the connector to reduce the cable diameter.」
Recommended ferrite core：TDK ZCAT2032-0930
Set ferrite core near Analog servo adapter.

## G.6.2.4 Cable J158

Cable J158 is for Analog servo adapter (JV1nL) and analog servo amplifier.

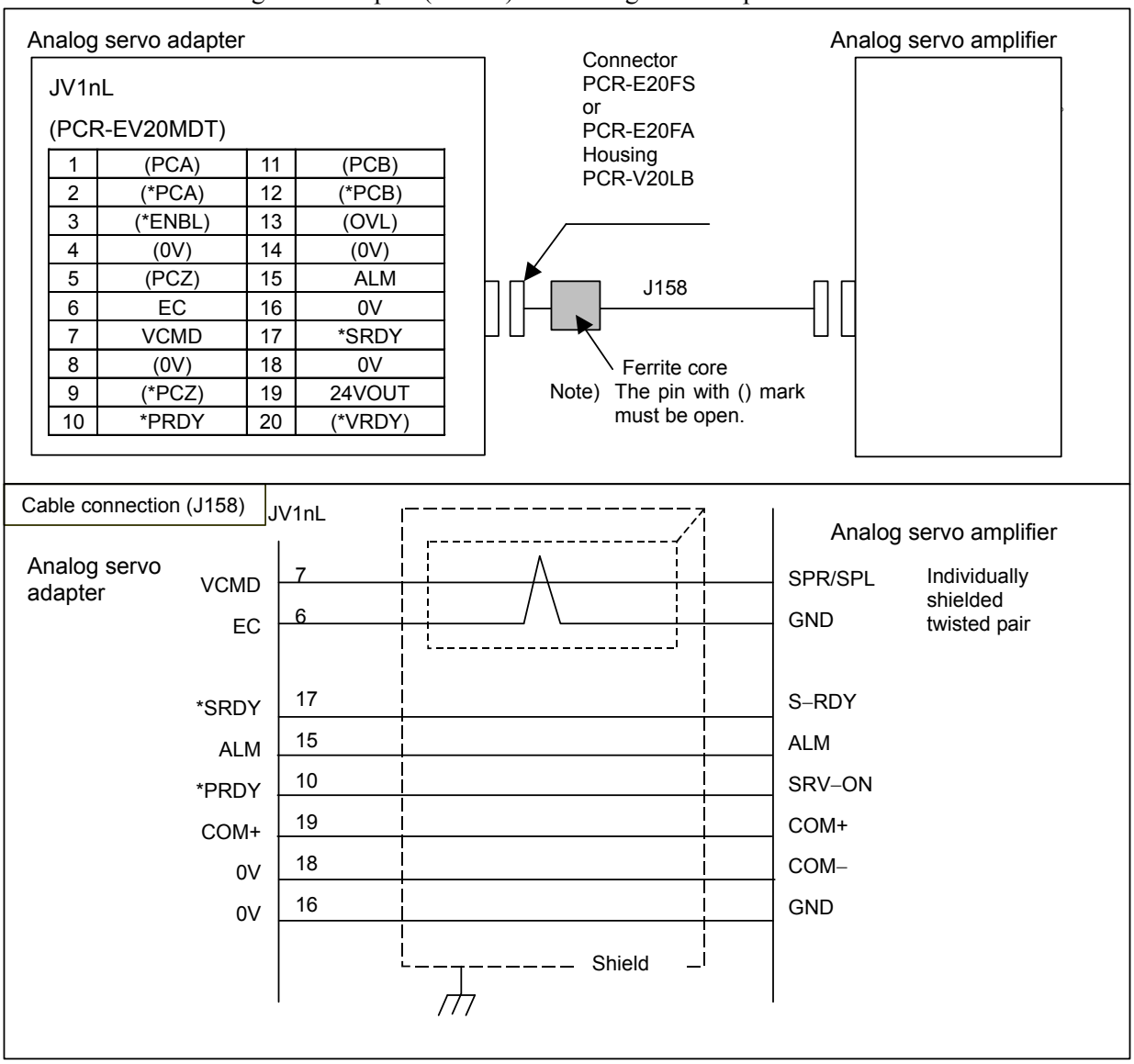


| | | | |
|---|---|---|---|
| 1 | (PCA) | 11 | (PCB) |
| 2 | (*PCA) | 12 | (*PCB) |
| 3 | (*ENBL) | 13 | (OVL) |
| 4 | (0V) | 14 | (0V) |
| 5 | (PCZ) | 15 | ALM |
| 6 | EC | 16 | 0V |
| 7 | VCMD | 17 | *SRDY |
| 8 | (0V) | 18 | 0V |
| 9 | (*PCZ) | 19 | 24VOUT |
| 10 | *PRDY | 20 | (*VRDY) |

Maximum allowable cable length：50m (cable length has limitation by voltage drop)
Recommended wire A66L-0001-0206
(Individually shielded twisted pair #24AWG x 3 pairs + twisted pair #24AWG x 7 pairs)
The external cable diameter is ∅11, preventing the use of the cable, as is, with connector case PCR-V20LB (∅8).
Peel backs the sheath at the point where the cable meets the connector to reduce the cable diameter.
Recommended ferrite core：TDK ZCAT2032-0930
Set ferrite core near Analog servo adapter.

## G.6.2.5 Detail of signals

### (1) VCMD, EC (output)

VCMD and EC are the speed command signals for the servo amplifier. Refer to Subsection G.5.2.5, “Details of signals.”

### (2) A,*A,B,*B,Z,*Z (input)

These signals are received from the pulse coder. Refer to Subsection G.5.2.5, “Details of signal.”

### (3) *PRDY (output)

*PRDY is the ready signal, issued by Analog servo adapter to the servo amplifier. Refer to Subsection G.5.2.5, “Details of signal.”

### (4) ALM (input)

ALM is the alarm signal, issued by the servo amplifier to Analog servo adapter. While this signal is off (open or high level), the CNC assumes that the servo system has entered the alarm state. When this signal is not used, connect ALM and 0V to each other (low level).

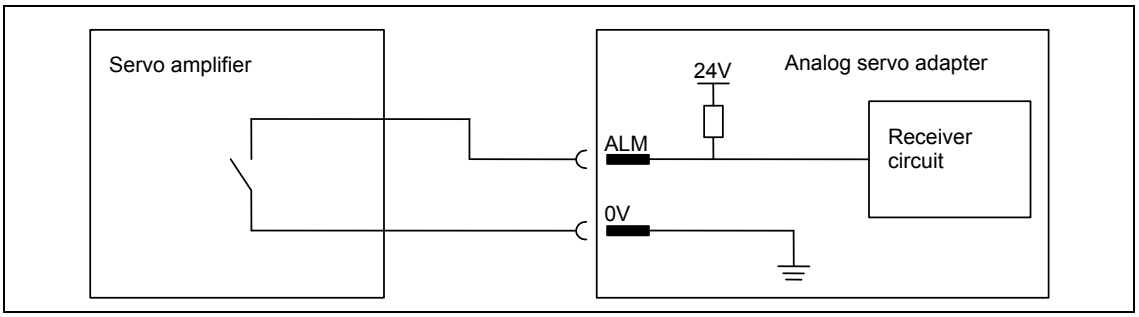


Electrical characteristics

Contact capacity: 30VDC, 16mV or greater

Open-circuit contact-to-contact leakage: 1mA or less (for 26.4V)

Closed-circuit contact-to-contact voltage drop: 2V or less (for8.5mA, including a voltage drop across the cable)

### (5) *SRDY (input)

*SRDY is the ready signal, issued by the servo amplifier to Analog servo adapter. While this signal is on (short or low level), the CNC assumes that the servo system has entered the ready state.
Electrical characteristics are as same as ALM.

### (6) 24VOUT (output)

24VOUT is 24VDC power for the servo amplifier from Analog servo adapter.
24V±10%,Up to 250mA / one JV1n connector (Up to 500mA / 1 unit)
Pay careful attention to the voltage drop caused by the cable resistance for the specifications of the servo amplifier.

# G.7 POWER AND HEAT GENERATED

The power of Analog servo adapter must be supplied from external power supply 24VDC.

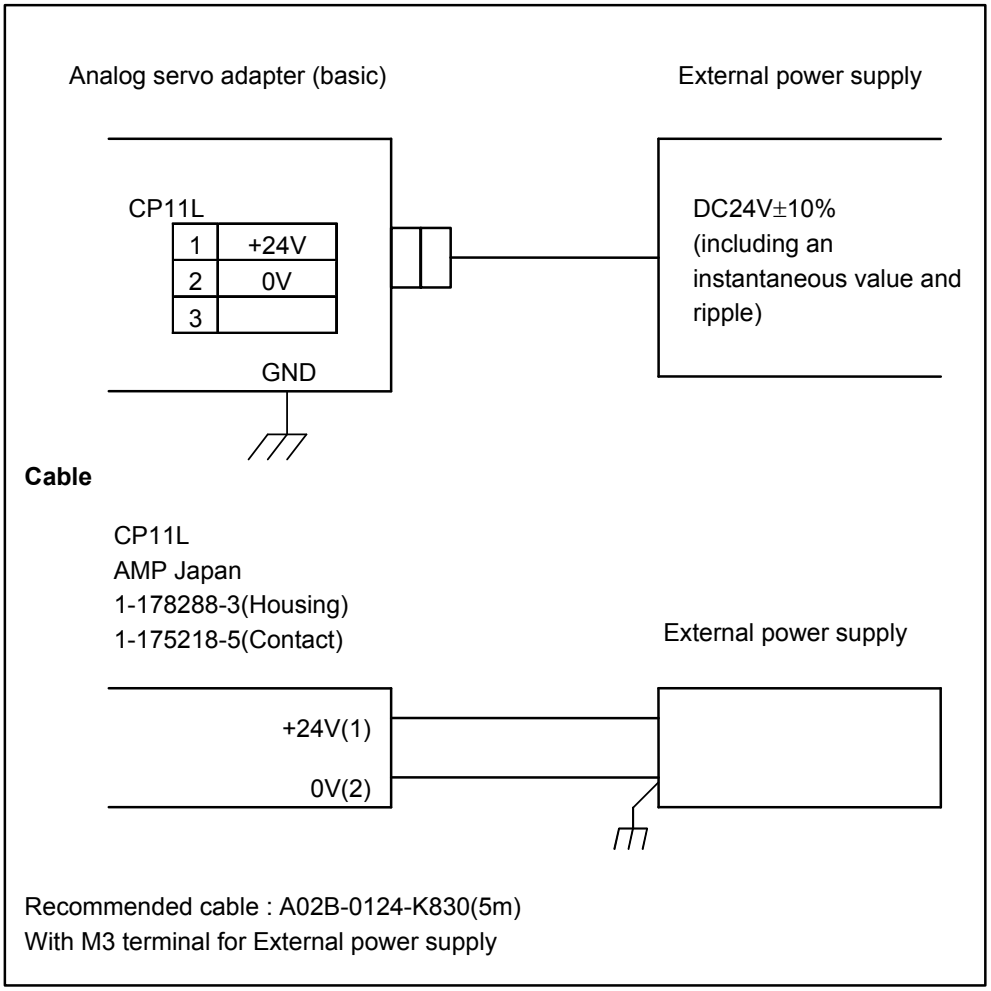


24VDC are supplied through the connector CP11L. The power can be supplied from CP11M to the next unit.

Be sure to ground the 0-V line of the power supply to Analog servo adapter. In addition, keep any noise source (such as an AC power cable and contactor) away from the power line of Analog servo adapter as far as possible to prevent noise from being picked up through the power line.

Secure the ground line to the ground terminal (GND) for signals of Analog servo adapter, which is located at the bottom of the unit, with an M3 screw as shown in the figure below. Connect the ground line to the ground plate of the cabinet.

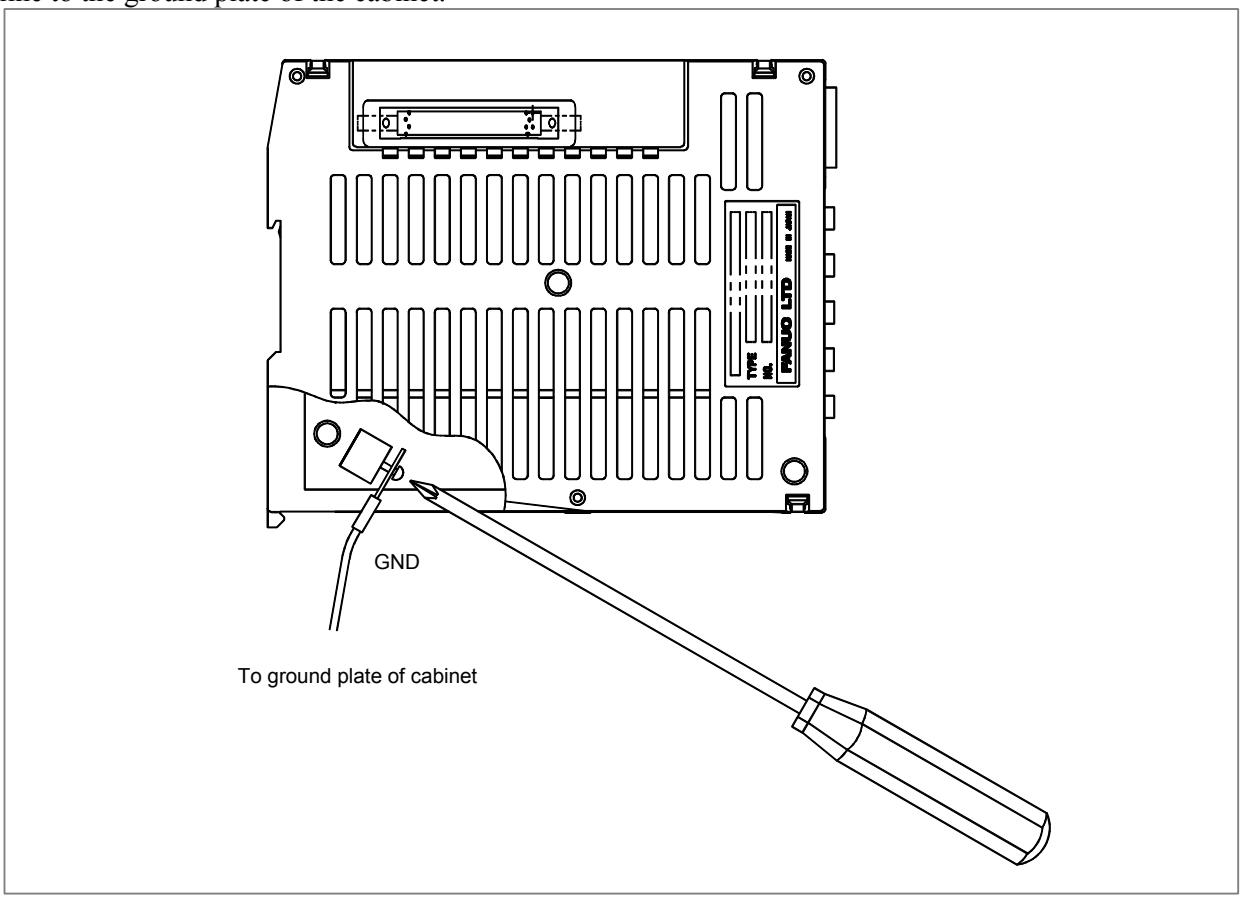


**NOTE**
The torque with which a screw is tightened is 5 kgf × cm or less.

## G.7.1 Power Supply Rating

Power Supply of 24 VDC±10% (including instantaneous voltage and ripple voltage )

| | One basic unit | One basic unit + one expansion unit |
|---|---|---|
| Type F | 0.7A | 1.0A |
| Type M | 1.2A（Note） | 2.0A（Note） |

**NOTE**
In case of type M, 24VDC 0.25A per one axes is included for analog servo amplifier.

## G.7.2 Heat Generated

| | One basic unit | One basic unit + one expansion unit |
|---|---|---|
| Type F | 10W | 14W |
| Type M | 17W | 28W |

# G.8 SELECT SWITCH SW1

The input level of ready signal (input) and alarm signal (input) of type F analog servo interface are different from the input level of ready signal (input) and alarm signal (input) of type M analog servo interface. Type F or Type M is decided by select switch SW1.
Select switch SW1 has two positions “F” and ”M” (See Note).

| SW1 | Ready signal | Alarm signal | Remarks |
|---|---|---|---|
| F side | *VRDY | OVL | Type F analog servo interface (5VDC) |
| M side | *SRDY | ALM | Type M analog servo interface (24VDC) |

**NOTE**
Actual select switch SW1 has three positions. Up side to base PCB is M, middle and down side is F.

# G.9 EXTERNAL DIMENSION

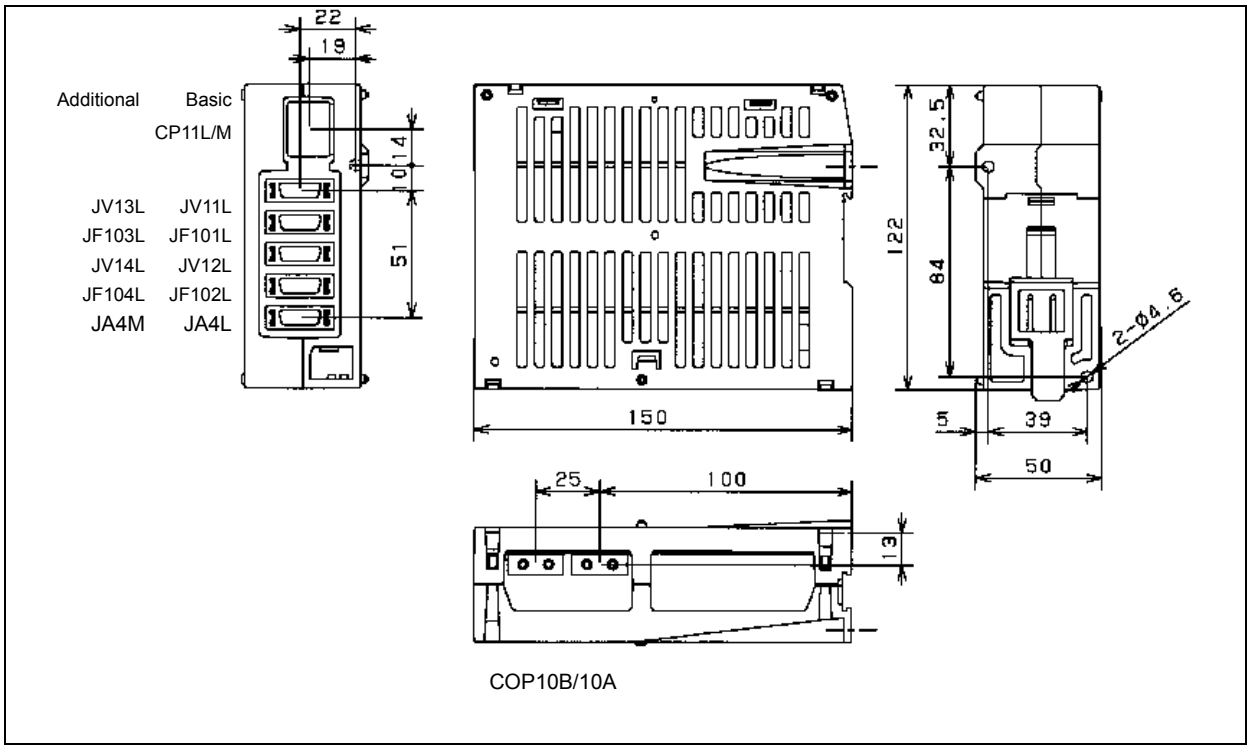


# G.10 NOTICE

- The maximum number of interface units like Analog servo adapter or a separate detector interface unit that can be connected to one FSSB line is two.
  When Analog servo adapter is connected to the FSSB line, the number of the separate detector interface unit can be connected to the same FSSB line is one.

- Analog servo adapter has four encoder interfaces. The unused one can be used for full closed control.

- Analog servo adapter does not apply “CE Marking”.

- When system alarm is occurred on CNC or communication alarm between CNC and Analog servo adapter is occurred, the signals *ENBL and *PRDY will be OFF. When the power of CNC or Analog servo adapter is turn off, the signals *ENBL and *PRDY will be OFF.

- The way to install this unit is similar to the one of the separate detector interface unit. Please refer to the Section 7.2.

- The sequence of power on/off is similar to the separate detector interface unit. Refer to the Subsections 4.2.3 and 4.2.4. But if the position feedback with A quad B interface is used and the +5VDC power is not supplied to it from Analog servo adapter, it is necessary to turn on the power for it before the power for Analog servo adapter is turned on. Furthermore, in this situation, it is also necessary that the A quad B interface signals of the separate detector become stable before turning on Analog servo adapter.

# G.11 PARAMETER SETTING

### (1) At emergency stop, turn on the power of CNC.

### (2) Follow the procedure below to set parameters concerned with FSSB.

In the case of using Analog servo adapter, the FSSB automatic setting function is not available. It is necessary to set the value of No.1023, No.1815, No.1905, No.14340 to14349, No.14376 to 14391 and No.1936 to 1937 in the manual setting No.2 mode. Refer to “FSSB setting” of the connection manual (function edition) about the detail of the setting.
When this parameter is set, Analog servo adapter is basically treated in the similar way to the separate type detector interface unit. (After this, Analog servo adapter and the separate type detector interface unit are called “an interface unit”.)
Follow the explanation below and the Parameter Manual (B-64310EN) of CNC and set the appropriate value.

- Setting of servo axis number

| No. | |
|---|---|
| 1023 | Number of the servo axis for each axis |

[Data type] Byte axis
[Valid data range] 1,2,3,…controllable axis number
Set the servo axis number for each axis. Refer to the “FSSB setting” of Connection Manual (Function) (B-64303EN-1).

- Setting of the position detector

| No. | 7 | 6 | 5 | 4 | 3 | 2 | 1 | 0 |
|---|---|---|---|---|---|---|---|---|
| 1815 | | | APC | APZ | | | | |

APC 0: Position detector is other than absolute pulse coder.
1: Position detector is absolute pulse coder.

APZ Zero position of absolute pulse coder is:
0: Not established.
1: Established. (Automatically set to 1 after the zero position is established.)

- FSSB manual setting

| No. | 7 | 6 | 5 | 4 | 3 | 2 | 1 | 0 |
|---|---|---|---|---|---|---|---|---|
| 1902 | | | | | | | | FMD |

[Data type] Byte axis

FMD The setting mode of FSSB is
0: Automatic.
1: Manual setting 2.

**NOTE**
If you want to use Analog servo adapter, set 1.

- Setting of bit parameter

| No. | 7 | 6 | 5 | 4 | 3 | 2 | 1 | 0 |
|---|---|---|---|---|---|---|---|---|
| 1905 | PM2 | PM1 | | | | | | |

[Data type] Bit axis

PM1 The first interface unit is:
0: Not used.
1: Used.
PM2 The second interface unit is:
0: Not used.
1: Used.

The interface unit that is connected to the FSSB line on a servo card and is near the CNC is the first interface unit (1st IF unit). Another one connected to the FSSB line is the second interface unit (2nd IF unit).

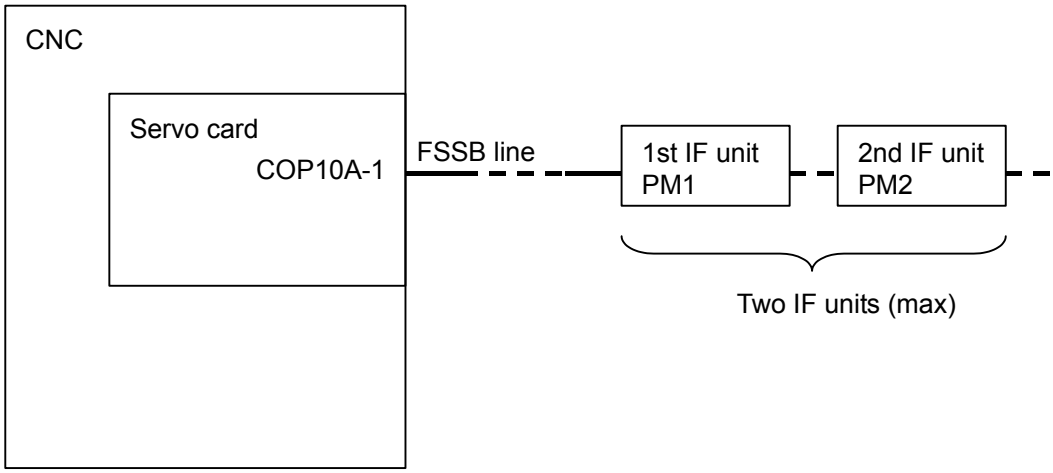


- Setting connector number

| No. | |
|---|---|
| 1936 | Connector number of the first interface unit |
| 1937 | Connector number of the second interface unit |

[Data type] Byte axis
[Valid data range] 0 to 3 (in case of Analog servo adapter)
0 to 7 (in case of separate type detector interface unit)

In case of using interface unit, set the value, which subtracts 1 from the connector number of each axis. (In case of using Analog servo adapter, set 0 to 3 to the axes connected with connector JV1nL to JV4nL.)
Set 0 to the axis without interface unit.
It is possible to use any connectors at any axis.

- Setting Address Conversion Table for slave number

| No. | |
|---|---|
| 14340 | ATR value corresponding to slave 01 on the FSSB line |
| to | |
| 14349 | ATR value corresponding to slave 10 on the FSSB line |

[Data type] Byte
[Valid data range] 0 to 7, 64, -56, -96

The amplifier or interface unit connected to CNC by the optical cable is called “Slave”. Each one axis servo amplifier or one interface unit (with or without the additional unit) consists of one slave. Two axes amplifier consists of two slaves and three axes amplifier consists of three slaves.
The analog servo amplifier is numbered as if it was connected from the terminal slave (the most far slave from CNC). Each one-axis analog servo amplifier is numbered one slave number. For example, if the terminal unit connected to FSSB is slave 5, the analog servo amplifiers are numbered from 6. (Refer to the example described later.)
This parameter is set as follows.

- In case of amplifier (including analog amplifier):
  Set a value obtained by subtracting 1 from the setting of parameter No.1023 for the axis to which the amplifier is assigned.

- In case of interface unit:
  Set 64 for 1st interface unit and set -56 for the 2nd interface unit respectively.
  Please see below figure.

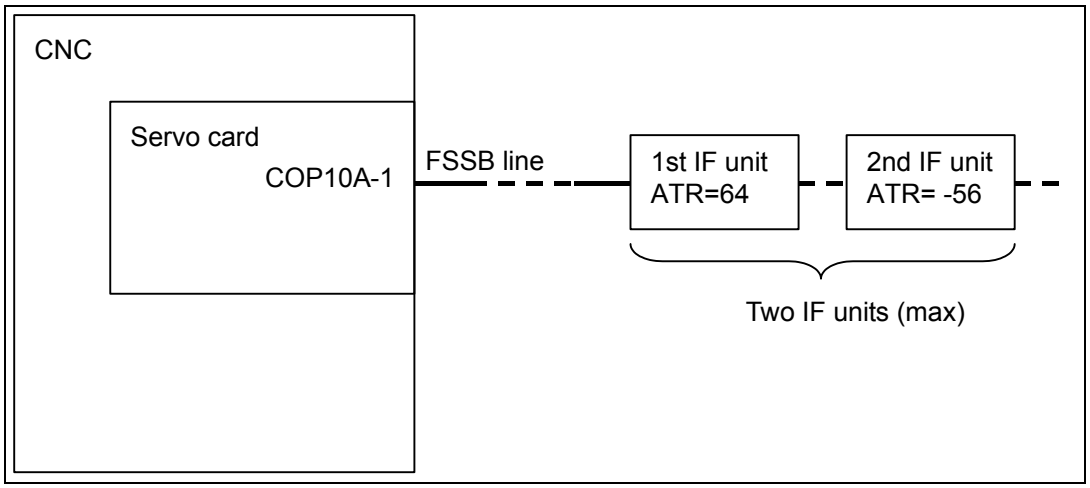


- In case of no slave:
  Set -96.

- Setting Address Conversion Table for connector

| No. | |
|---|---|
| 14376 | ATR value corresponding to connector 1 on the 1st interface unit |
| to | |
| 14383 | ATR value corresponding to connector 8 on the 1st interface unit |

[Data type] Byte
[Valid data range] 0 to 7 and 32

| No. | |
|---|---|
| 14384 | ATR value corresponding to connector 1 on the 2nd interface unit |
| to | |
| 14391 | ATR value corresponding to connector 8 on the 2nd interface unit |

[Data type] Byte
[Valid data range] 0 to 7 and 32

Each of these parameters sets the value(ATR value) of the address translation table corresponding to each connector on a interface unit.
In each of these parameters, set a value obtained by subtracting 1 from the setting of parameter No.1023 for the axis connected to a connector on an interface unit.
When there is an axis for which bit 6 or 7 of parameter No.1905 is set to use an interface unit, set 32 for those connectors that are not used.

### (3) Turning off/on the power to CNC

The description of setting continues to 4. Servo initial setting.

(Reference)
FSSB Setting example in case of using Analog servo adapter

[Example 1 : in case of two analog servo axis]
Analog servo adapter is slave 1. Analog servo amplifiers are considered as they are connected after Analog servo adapter. So they are slaves 2 and 3.

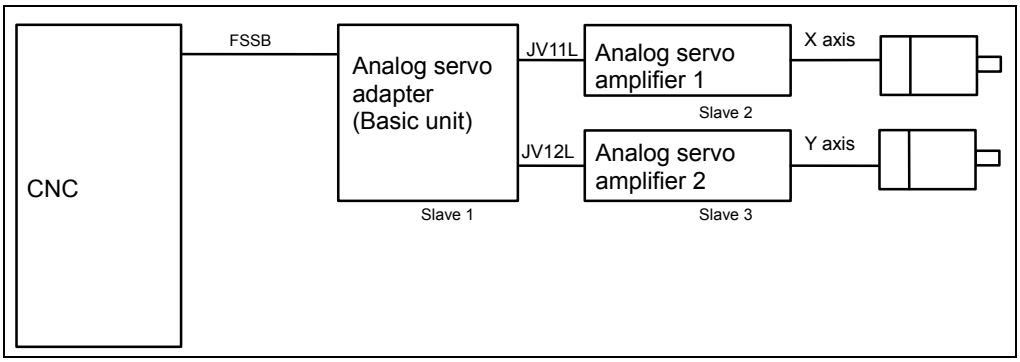


| No. | 14340 | 14341 | 14342 | 14343 to 14349 |
|---|---|---|---|---|
| Value | 64 | 0 | 1 | -96 |

| No. | 14376 | 14377 | 14378 to 14383 |
|---|---|---|---|
| Value | 0 | 1 | 32 |

| No. | No.1023 | No.1905 | No.1936 | No.1937 |
|---|---|---|---|---|
| X | 1 | 01000000 | 0 | 0 |
| Y | 2 | 01000000 | 1 | 0 |

[Example 2 : in case of one digital and one analog servo axis]

Digital servo amplifier is slave 1 and Analog servo adapter is slave 2. Analog servo amplifier is slave 3.

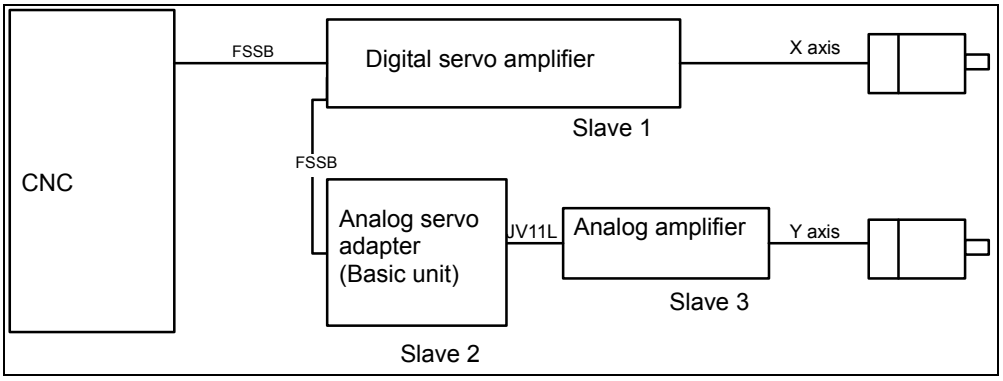


| No. | 14340 | 14341 | 14342 | 14343 to 14349 |
|---|---|---|---|---|
| Value | 0 | 64 | 1 | -96 |

| No. | 14376 | 14377 to 14383 |
|---|---|---|
| Value | 1 | 32 |

| No. | No.1023 | No.1905 | No.1936 | No.1937 |
|---|---|---|---|---|
| X | 1 | 00000000 | 0 | 0 |
| Y | 2 | 01000000 | 0 | 0 |

## (4) Initial setting of servo parameter

Set the following of analog servo axis.

| Parameter number | Description | Data |
|---|---|---|
| No.2000 | Automatic setting | 00000000 |
| No.2020 | Motor type | 252 |
| No.2001 | AMR | 00000000 |
| No.1820 | CMR | Set the value similar to the one of digital servo according to mechanical system. |
| No.2084 | F × FG (Numerator) | |
| No.2085 | F × FG (Denominator) | |
| No.2022 | Rotation direction | 111 (CCW) or -111 (CW) |
| No.1821 | Reference counter size | Set the number (after F×FG) of pulse per one motor revolution as digital servo. |
| No.2023 | Feedback pulse for velocity detection | Set value = 1536.797 × E<br>E : the voltage (V) proportional to the 1000min$^{-1}$ velocity command |
| No.2024 | Feedback pulse for position detection | Set the number (before F × FG) of pulse per one motor revolution as digital servo. |

## (5) Power OFF/ON

## (6) Setting to validate the analog servo interface function

Set the following of analog servo axis.

| No. | 7 | 6 | 5 | 4 | 3 | 2 | 1 | 0 |
|---|---|---|---|---|---|---|---|---|
| 2009 | | | | ANALOGG | | | | SERDMY |

[Data type] Bit axis

SERDMY The serial feedback dummy function is:
0: Invalidated.
1: Validated.

**NOTE**
In case of analog servo axis, set 1.

ANALOG The analog servo interface function is:
0: Invalidated.
1: Validated.

**NOTE**
In case of analog servo axis, set 1.
After setting this bit, please turn off the power of CNC more than one time.

| No. | |
|---|---|
| 2165 | Maximum amplifier current |

[Data type] Byte axis

**NOTE**
In case of analog servo axis, set 0.

When the initial setting of servo shown in previous section is done, 45 is set to this address automatically. But clear this parameter to be 0. (If this parameter of analog servo axis is not 0, the combination alarm of motor and amplifier will emerge.)

# INDEX

## <Number>

20-PIN INTERFACE CONNECTORS AND CABLES ....411
2A DO (Output Signal) Connection ....135
2A Output Connector Pin Allocation ....134
2A Output DO Signal Specifications ....136
7-segment LED indication ....339

## <A>

About grounding types ....15
Address Assignment by Ladder ....237
Address map ....308
Analog Input Connector Pin Allocation ....137
ANALOG INPUT SEPARATE DETECTOR INTERFACE ....100
Analog Input Separate Detector Interface (Analog 1Vp-p Interface) ....106
Analog Input Separate Detector Interface Unit Specification ....103
Analog Input Signal Connections ....138
Analog Input Signal Specifications ....139
Analog Input Specifications ....139
ANALOG SERVO ADAPTER ....437
ANALOG SPINDLE ....80
Anti-Noise Measure ....66
Applicable Cables ....415
Applicable CNC ....318
Applicable wire ....287
AS-i connection ....325
AS-i master status indication ....330
AS-i versions and ordering information ....317

## <B>

Batteries ....37,360
Battery for Absolute Pulsecoder Built into the Motor (6VDC) ....42
Battery for Memory Backup in the CNC Control Unit (3 VDC) ....37
Battery for Separate Absolute Pulsecoders (6VDC) ....42
Board status ....331
BOARD-MOUNTED CONNECTORS ....411

## <C>

Cabinet ....21
Cable clamp and shield processing ....19
Cable connection to a terminal block ....306
CABLE CONNECTORS ....411
Cable for Power Supply to Control Unit ....37,210,359
Cable J155 ....440
Cable J156A (A quad B interface) ....441
Cable J156B (FANUC serial interface) ....442
Cable J157 ....447
Cable J158 ....449
Cable J37 ....443,447
Cable Length for Manual Pulse Generator ....142,199
Cables J156A/B ....447
Cautions ....209,361
CE marking ....345
Command Execution by a Ladder Program ....333
Command handshake sequence ....334
Command interface with a ladder program ....333
Component names ....289
Configuration ....1,125,183
Configurations of Control Units ....1
Connecting DI/DO ....212
Connecting I/O Devices ....50
CONNECTING THE FANUC SERVO UNIT β SERIES WITH I/O LINK ....236
Connecting the Ground Terminal of the Control Unit ....23,357
Connecting the High-speed Skip (HDI) ....60
Connecting the Manual Pulse Generator ....226
Connecting Three Serial Spindles ....75
Connection ....113,234,237,296,323
Connection between Modules ....200
Connection Between the Analog Input Separate Detector Interface Unit and Additional Unit ....109
Connection Between the Basic Unit and Additional Unit ....95
CONNECTION CABLE (SUPPLIED FROM US) ....422
Connection Diagram ....126,185,361,438
Connection of Basic and Expansion Modules ....142
Connection of Battery for Absolute Position Detector ....93,108
CONNECTION OF CONNECTOR PANEL I/O MODULE ....125
Connection of Each Section ....260
Connection of FANUC I/O Link by Electric Cable ....116
Connection of FANUC I/O Link by Optical Fiber Cable ....117
CONNECTION OF I/O Link SLAVE DEVICES ....124
CONNECTION OF I/O UNITS FOR 0*i* ....*207*
Connection of One to Two Serial Spindles ....73
CONNECTION OF OPERATOR'S PANEL I/O MODULE (FOR MATRIX INPUT) ....153
CONNECTION OF OPERATOR'S PANEL I/O MODULE AND POWER MAGNETICS CABINET I/O MODULE ....169
Connection of Power Supply ....86,104
CONNECTION OF TERMINAL TYPE I/O MODULE ....282
CONNECTION OF THE I/O LINK-AS-i CONVERTER ....317
Connection of the LCD Unit with a Touch Panel ....68
CONNECTION OF THE STAND-ALONE TYPE ....352
CONNECTION OF TYPE F ANALOG SERVO INTERFACE ....439
CONNECTION OF TYPE M ANALOG SERVO INTERFACE ....446

CONNECTION TO CNC PERIPHERALS .....43
CONNECTION TO FANUC I/O Link .....113
CONNECTION TO OTHER NETWORKS .....351
CONNECTION TO STANDARD MACHINE OPERATOR'S PANEL .....238
Connection to the Ethernet Interface.....62
Connection to the MDI Unit.....44
CONNECTION TO THE SERVO AMPLIFIERS.....82
CONNECTION TO THE SMALL MACHINE OPERATOR'S PANEL OR SMALL MACHINE OPERATOR'S PANEL B .....258
CONNECTION TO THE TOUCH PANEL.....68
Connection when Multiple Channels of FANUC I/O Links are Used .....120
CONNECTION WITH DISPLAY UNIT/MDI UNIT ...43
CONNECTION WITH INPUT/OUTPUT DEVICES....49
Connection with the MDI Unit.....363
Connection with the Standard MDI Unit.....45
Connector (on the cable side) specifications.....249
Connector Layout Diagram.....184
Connector Layout of the Small Machine Operator's Panel.....278
Connector Locations .....95,109
Connector locations of main panel.....252
Connector Panel Printed Circuit Board.....203
Connector pin allocation .....264
Connector Pin Arrangement.....211
CONTROL UNIT .....29
CONTROL UNIT CONFIGURATION AND COMPONENT NAMES .....1,353
Control Unit Overview.....5,354
COUNTERMEASURES AGAINST NOISE.....15
Customization of the key sheet .....281

## <D>

DEFINITION OF WARNING, CAUTION, AND NOTE.....s-1
DESIGN AND INSTALLATION CONDITIONS OF THE MACHINE TOOL MAGNETIC CABINET.....11
Detachable key top.....257
Detaching a terminal block .....307
Detail of Connection .....440,447
Detail of signals .....443,449
Details of command flags and status.....334
Details of commands.....335
Details of I/O Link DI/DO .....329
DI (General-purpose Input Signal) Connection.....156,172
DI (Input Signal) Connection.....130,188
DI (Matrix Input Signal) Connection .....157
DI Signal Connection (Rotary Switch Connection) .....263
DI/DO connection .....301
DI/DO Connector Pin Arrangement.....155,171
DI/DO Connector Pin Assignment.....129,187
DI/DO Mapping on the I/O Link.....326
DI/DO Signal Specifications.....133,198
Dimensions (common to the modules).....288
Dimensions and connector layout .....319
Dimensions in a maximum configuration (one basic module + three expansion modules).....288
Distribution I/O Setting.....151
DO (Output Signal) Connection.....132,159,176,194
DO alarm detection .....310
DO signal reaction to a system alarm.....315

## <E>

Each Connections.....240
EMERGENCY STOP SIGNAL.....348
Emergency stop signal connection .....243
Emergency stop switch.....260
Environmental Conditions External to Cabinets .....9
Environmental Conditions of the Control Unit .....9,356
Environmental requirement.....254,279
ENVIRONMENTAL REQUIREMENTS.....9
Error codes .....334
Error processing .....341
External 24 VDC Power Specification and Circuit Configuration .....32
EXTERNAL DIMENSION.....453
External Dimensions .....274
External Dimensions of Stand-alone type Control Unit .....364
EXTERNAL DIMENSIONS OF EACH UNIT ....364,369
External Touch Panel Interface .....69
External View.....163,178
External View and Dimensions.....288

## <F>

FANUC I/O LINK CONNECTION UNIT .....230
Features .....317
For AS-i Ver. 2.0 (A03B-0817-C001).....326
For AS-i Ver. 2.1 (A03B-0817-C002).....327
For small machine operator's panel .....270
For small machine operator's panel B .....271
Fuse .....345

## <G>

General-purpose DI (input signal) connection .....265
General-purpose DI signal connection .....244
General-purpose DI signal definition .....255
General-purpose DI/DO Connection (Only for the Small Machine Operator's Panel B).....264
General-purpose DO (output signal) connection.....267
General-purpose DO signal connection.....246
General-purpose DO signal definition.....255
Grounding .....15
Grounding methods.....15

## <H>

Handling Precautions .....363
HARDWARE OVERVIEW.....5
Heat dissipation.....286
Heat Generated.....452
Heat Output of Each Unit.....12,356
HIGH-SPEED SERIAL BUS (HSSB) .....361
How to Use the I/O Link-AS-i Converter .....343

**<I>**

I/O Address .....250,268
I/O Address Allocation.....270
I/O Link connection .....242,261,325
I/O Link interface.....234
I/O Mapping.....251
I/O MODULE TYPE-2 FOR CONNECTOR PANEL.183
I/O Signal Requirements and External Power Supply for DO .....221
I/O signal specifications.....284
In case of using the built-in pulse coder.....439,446
In case of using the separate detector.....439,447
Input Signal Requirements (Parallel interface) .....91
Input Signal Rules for the High-speed Skip (HDI) .....61
Input Signal Specifications.....107
Input/output data area.....329
Installation..... 9,96,110,294,320,343,356
Installation conditions .....284,319
Installation Environment.....362
Installation of the Control Unit .....29
Installing the Control Unit.....357
Interface to the Servo Amplifiers .....83
Inter-module connection .....305

**<K>**

Key Layout of MDI.....46
Key Symbol Indication on Machine Operator’s Panel .....255,280
Keyboard of main panel .....250
Keyboard of the operator's panel.....268

**<L>**

Layout of the key sheet (Same for both the small machine operator's panel and small machine operator's panel B).....276
LED indication.....338
LED Status Indication and Setting Switch Operation ..338
LINKING THE EMBEDDED ETHERNET INTERFACE.....62
LIQUID CRYSTAL DISPLAY (LCD).....434

**<M>**

Main panel specification .....254
Maintenance Parts .....282
Manual Pulse Generator Connection ..... 141,163,177,199,246,261,305
Maximum Number of Units that can be Connected .....237
Meaning of key symbols .....255,280
Measures Against Surges due to Lightning.....28
MEMORY CARD INTERFACE .....435
Method of common pin expansion .....314
Module Installation .....144
Module Specifications..... 127,186,283
Mounting the Module.....201

**<N>**

Network Installation.....66
Noise Suppressor.....27
Normal operation .....344
Notes on Installing a Separate Detector Interface Unit ..97
Notes on Installing an Analog Input Separate Detector Interface Unit .....111
NOTICE .....453

**<O>**

Operator's panel specification .....280
OPTICAL FIBER CABLE.....425
Order specification .....254,279
ORDER SPECIFICATIONS.....437
Other Notes ..... 148,165,180,205
Others .....314,345
Outline drawing and panel-cut drawing of the small machine operator's panel .....274
Overall Connection Diagram..... 153,169,258,296,323
Override signals .....250,269

**<P>**

Parallel DO (output signal) connection .....316
PARAMETER SETTING .....454
PERIPHERAL EQUIPMENT AND CONNECTION..363
Personal Computer Specification .....362
Pin assignment .....240
POSITION CODER .....81
POWER AND HEAT GENERATED .....451
Power connection .....260,297,323
Power Connection .....154,170
Power ON/OFF control signal connection .....243
Power Supply Capacities of CNC-related Units.....10
Power Supply Capacity .....10,286,356
Power Supply Connection.....32,199,241,358
Power Supply for the Control Unit.....32
Power Supply Precautions.....123
Power Supply Rating.....452
Power supply specification.....255,280
Power-off Sequence .....36,359
Power-on Sequence .....36,358
PREFACE ..... p-1
Procedure for Installing Personal Computer Interface Boards .....362
Punch Panel (for Stand-alone Type Control Unit) .....365

**<R>**

Recommended Cables .....363
Recommended Connectors.....414
RECOMMENDED CONNECTORS, APPLICABLE HOUSINGS, AND CABLES .....413
RS-232-C Interface Specification.....53
RS-232-C Serial Port.....51

**<S>**

SELECT SWITCH SW1 .....453
SEPARATE DETECTOR INTERFACE .....84
Separate Detector Interface (Parallel interface).....90
Separate Detector Interface (Serial Interface) .....88
Separate Detector Interface Unit Specification .....85
Separating Signal Lines.....26

SERIAL SPINDLE .....73
SERVO INTERFACE.....82
Setting the rotary switch.....312
Setting/display switch .....340
Settings.....308
SEVERE DUST/LIQUID PROTECTION OF
CABINETS AND PENDANT BOXES .....30
SHUTTING OFF THE MOTOR POWER.....346
Signal assignment on terminal blocks .....298
Slave list.....331
Soldering Type Connector .....412
Specification.....231
Specification of the I/O Link side .....318
Specification of Twisted-Pair Cable.....64
Specifications ..... 164,179,254,279,318,437
Specifications of the AS-i converter .....318
SPINDLE CONNECTION.....71
STOP AND EMERGENCY STOP .....346
STOP MODES .....346
STOPPING THE SERVO MOTOR.....347
STOPPING THE SPINDLE MOTOR .....347
Straight and Right-angled Connectors (for Spring and
Screw-fixing Connector Housings) .....411
Strand Wire Press-mount Connector .....412
Sub panel A/B1 specification.....254
Support for AS-i profiles.....318
System Structure .....439,446

***<T>***

Temperature Rise within the Machine Tool Magnetic
Cabinet .....12
Thermal Design of Operator's Panel .....13
THERMAL DESIGN OF THE MACHINE TOOL
MAGNETIC CABINET .....12
Total Connection Diagram.....239
TOTAL CONNECTION DIAGRAMS.....6,355
TURNING ON AND OFF THE POWER TO THE
CONTROL UNIT .....32,358
Types of commands executable by a ladder program ..333
Types of modules .....283

***<U>***

Unit Dimensions.....201
UNITS CONNECTABLE WITH THE FANUC I/O
LINK .....124

***<V>***

Vertical-type Connectors .....411

***<W>***

Weight.....286

# Revision Record

## FANUC Series 0*i*/0*i* Mate-MODEL D CONNECTION MANUAL (HARDWARE) (B-64303EN)

| | | | | | |
|---|---|---|---|---|---|
| | | | | | |
| | | | | | |
| 03 | Jul., 2009 | • Deletion of Series 00*i*-D<br>• Modification of “Measures Against Surges due to Lightning”<br>• Correction of errors | | | |
| 02 | May, 2009 | • Addition of Series 00*i*-D<br>• Addition of stand-alone type<br>• Addition of options<br>• Correction of errors | | | |
| 01 | May, 2008 | _____ | | | |
| Edition | Date | Contents | Edition | Date | Contents |

B-64303EN/03

| TECHNICAL REPORT (MANUAL) | No. TMN 10/ 016 E |
|---|---|

Date February 15, 2010
General Manager of
CNC Laboratory

# FANUC Series 0*i*-MODEL D/0*i* Mate-MODEL D
## The correction in CONNECTION MANUAL (HARDWARE)

**1. Communicate this report to:**

| | |
|---|---|
| ○ | Your information |
| ○ | ~~Fanuc CNC America~~, FANUC CNC Europe |
| | FANUC Robotics America, FANUC Robotics Europe |
| ○ | Machine tool builder |
| | Sales agency |
| | End user |

**2. Summary for Sales Documents**

**3. Notice**

This document describes the correction of the diagram of cable wiring for position coder in item 6.3.

**4. Attached Document:**

Export Control:

☐ Controlled (Related item No. of Foreign Exchange Order Attachment List of Japan:_____)

☑ Non-controlled for item No. 2 to 15 of Foreign Exchange Order Attachment List of Japan

| Drawing No. | B-64303EN/03-1 (2 pages) CONNECTION MANUAL (HARDWARE) |
|---|---|

| Acceptance (Technical Administration Dept.) | | | |
|---|---|---|---|
| Manager | Section Manager | Chief | Person in Charge |
| 技術管理部 23.3.-4 部長 藤田 | 技術管理課 技術管理課 23.3.-4 課長 佐藤 | | 技術管理課 管理課 23.3.4 主任研究員 佐藤 |

| Original section of issuer of issue | | | |
|---|---|---|---|
| Vice General Manager | Department Manager | Section Manager | Person in Charge |
| | | 22.2.16 課長 伊藤 | CNC研 一部二課 10.2.15 主任研究員 大槻 |

FANUC Series 0*i*-MODEL D/0*i* Mate-MODEL D
The correction of CONNECTION MANUAL (HARDWARE)
(B-64303EN/03)

1. Type of applied technical documents

| | |
|---|---|
| Name | FANUC Series 0*i*-MODEL D/0*i* Mate-MODEL D<br>The correction of CONNECTION MANUAL (HARDWARE) |
| Spec.No. /Version | B-64303EN/03 |

2. Summary of change

| Group | Name/Outline | New,Add, Correct,Delete | Applicable Date |
|---|---|---|---|
| Basic Function | | | |
| Optional Function | | | |
| Unit | | | |
| Maintenance Parts | | | |
| Notice | | | |
| Correction | This document describes the correction of the diagram of cable wiring for position coder in item 6.3. | | |
| Others | | | |

| | | | | | |
|---|---|---|---|---|---|
| | | | | TITLE | FANUC Series 0*i*-MODEL D/0*i* Mate-MODEL D<br>The correction of CONNECTION MANUAL (HARDWARE) |
| 01 | 10.02.15 | H.Otsuki | First issued. | DRAW. NO. B-64303EN/03-1 | CUST. |
| EDIT. | DATE | DESIG. | DESCRIPTION | FANUC LTD | SHEET 1/2 |

# 6.3 POSITION CODER

CNC

JA41 (main board)

FI80-20P, DF1R020WB1 (PCR-EV20MDT)

| | | | |
|---|---|---|---|
| **1** | ( ) | 11 | ( ) |
| 2 | ( ) | 12 | 0V |
| 3 | ( ) | 13 | ( ) |
| 4 | ( ) | 14 | 0V |
| 5 | PA | 15 | SC |
| 6 | *PA | 16 | 0V |
| 7 | PB | 17 | *SC |
| 8 | *PB | 18 | +5V |
| 9 | +5V | 19 | ( ) |
| 10 | ( ) | 20 | +5V |

| Signal name | Description |
|---|---|
| SC,*SC | Position coder C phase signal |
| PA,*PA | Position coder A phase signal |
| PB,*PB | Position coder B phase signal |

Cable connection

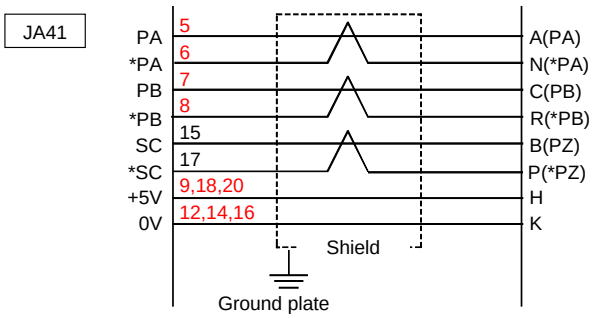


Recommended cable connector:
PCR-E20FA (manufactured by Honda Tsushin Kogyo)
FCN-247J020-G/E (manufactured by Fujitsu)
52622-2011 (manufactured by Molex Japan)

Recommended cable specification:
A66L–0001–0286 (#20AWG x 6 + #24AWG x 3), max. length 20 m

**NOTE**

1 The signals enclosed by parentheses ( ) are used for serial spindles. These signals are not used for analog spindles.
2 The 15-pin soldering connector (FI40B-2015S (conventionally, FI40-2015S)) manufactured by Hirose Electric cannot be used for the connector on the cable side.
3 The upper connector specification of JA41 is for the LCD-mounted type. The lower connector name in parentheses is for the stand-alone type.

# FANUC Series 0*i*-MODEL D/0*i* Mate-MODEL D
# The modification of CONNECTION MANUAL(HARDWARE)

1. Type of applied technical documents

| | |
|---|---|
| Name | FANUC Series 0*i*-MODEL D/0*i* Mate-MODEL D CONNECTION MANUAL(HARDWARE) |
| Spec.No./Version | B-64303EN/03 |

2. Summary of change

| Group | Name / Outline | New, Add, Correct, Delete | Applicable Date |
|---|---|---|---|
| Basic Function | | | |
| Optional Function | | | |
| Unit | | | |
| Maintenance parts | | | |
| Notice | | | |
| Correction | | | |
| Another | Item 10.1 STOP MODES<br>Item 10.5. EMERGENCY STOP SIGNAL | Correct | Immediately |

## Item 10.1 STOP MODES

Modified as Following.

If the control unit enters the alarm state, the servo and spindle motors stop (Note).

**NOTE**
A servo motor attached to a vertical axis or spindle which is not manufactured by FANUC may not stop. And, a stop of the spindle motor depends on a Ladder program.

There are the following stop modes:

1. Stop by shutting off the motor power
2. Controlled stop without shutting off the motor power
3. Stop by shutting off the motor power after a controlled stop

A controlled stop is the quickest. However, a stop may be made by immediately shutting off the motor power for safety reasons.

⚠ **WARNING**
Pressing the RESET key stops the running program. As a result, the servo axis stops and the spindle axis remains rotating without changing the speed. The RESET key may not function due to a MDI failure or the like, so, for safety, use the emergency stop button instead of the RESET key to stop the motor safely. When a failure of the control unit, machine contact, or connection is also assumed, further safety actions must be taken.

## Item 10.5 EMERGENCY STOP SIGNAL

Modified as Following.

**Warning**
The safety machine should be designed based on the evaluation results of machine risk assessment. Use the emergency stop signal properly in order to design the safety machine.

To configure an emergency stop circuit in compliance with the safety standards of IEC60204-1 in which requirements for electrical components of machine are specified, observe the following cautions. IEC60204-1 specifies that an emergency stop circuit shall function as a category 0 or 1 stop.

Category 0 stop:
Stopping by immediate removal of power to the machine actuators (Uncontrolled stop)

Category 1 stop:
A controlled stop with power to the machine actuators available to achieve the stop and then removal of power when the stop is achieved
(Controlled stop)

Fig. 10.5(a) or Fig. 10.5(b) or Fig. 10.5(c) shows an example showing how to make connections for the emergency stop signal with this CNC controller and servo amplifier (α*i* series or β*i* series or β*i* SVSP) to comply with the EU Machine Instructions. Fig. 10.5(d) shows a flow diagram of the emergency stop circuit signals.

The emergency stop signal is input to the Safety relay module. The output signal from the relay is input to the CNC controller and Power Supply (PS). The Power Supply outputs control signal for a motor power magnetic contactor, which can be used to switch the power applied to the Power Supply on and off. An emergency stop signal is usually generated by closing the B contact of a pushbutton switch.

When the emergency stop signal (*ESP) contact is closed, the CNC controller enters the emergency stop released state, such that the servo and spindle motors can be controlled and operated.

When the emergency stop signal (*ESP) contact opens, the CNC controller enters the emergency stop state, and the servo and spindle motors stop. In case of Fig. 10.5(a) or 10.5(b) or 10.5(c), the spindle motor power is shut off after the spindle motor is decelerated to a stop (Category 1 stop). Meanwhile, the servo motor is forced to be a dynamic stop as a rule (Category 0 stop). By setting relevant parameter, however, it is also possible to decelerate the servo motor to a stop, and then to shut off the servo motor power (Category 1 stop).

Regarding how the Spindle motor or the Servo motor stops when the emergency stop button is pushed, refer to the Item 10.3 and the Item 10.4. Regarding specifications of parameters related in these matters, refer to the FANUC AC SERVO parameters manual(B-65270JA).

The example of the emergency stop signal circuit showed in Fig.10.5(a) or Fig. 10.5(b) or Fig. 10.5(c) complies with the requirements of the safety standard ISO13849-1, Performance Level(PL) c or d. However, when calculating PL value concretely, the calculation should be based on the safety standard ISO13849-1 with the reliability data provided by each parts supplier. In case for the reliability data of CNC, please contact FANUC sales office.

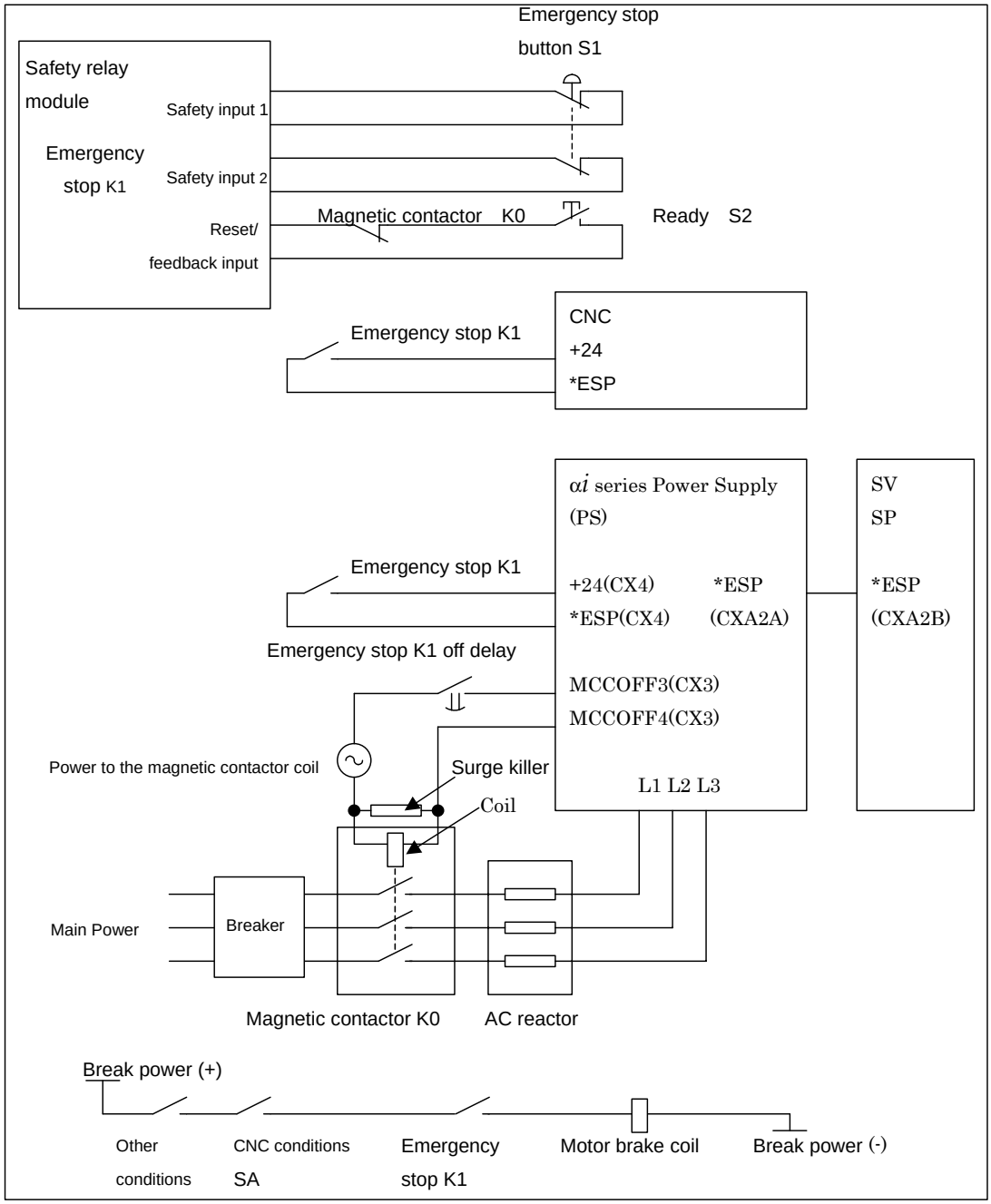


Fig. 10.5(a) Example of connections with an αi series servo amplifier

**NOTE**

1 When Emergency stop button S1 is pushed, Emergency stop K1 opens and Magnetic contactor K0 shuts off the power for Power Supply.

2 Set the off delay timer for shutting the power to the magnetic contactor coil in the above example as follows:
- Set a value which allows the time required to normally stop by the spindle.
- Set a value which allows the feed axis stop time also when the feed axis quick stop function and vertical axis fall prevention function are used.

3 Connect the auxiliary contact to the feedback input on the Safety relay module in order to detect the failure of the magnetic contactor K0.

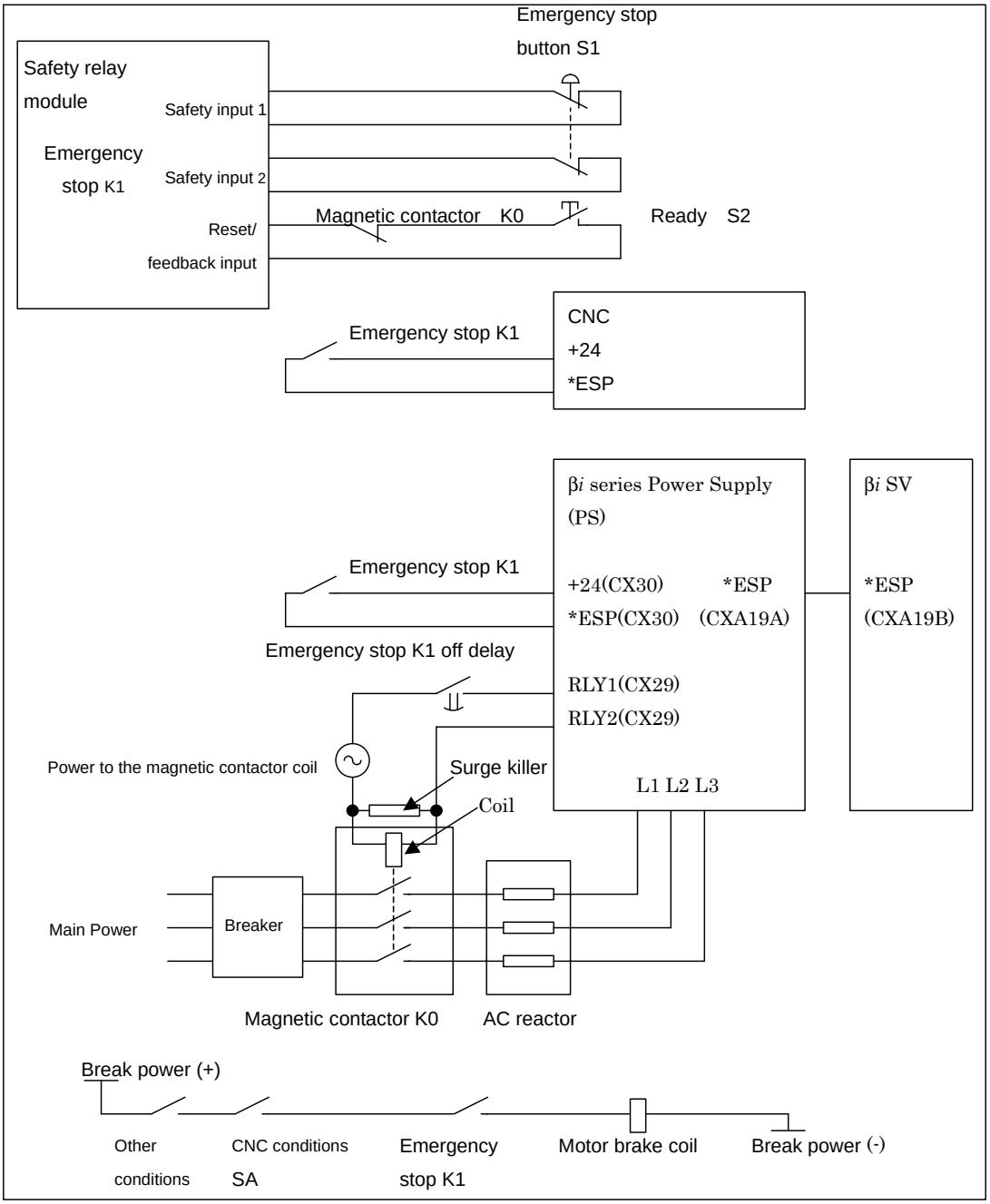


Fig. 10.5(b) Example of connections with an βi series servo amplifier

**NOTE**

1 When Emergency stop button S1 is pushed, Emergency stop K1 opens and Magnetic contactor K0 shuts off the power for Power Supply.

2 Set the off delay timer for shutting the power to the magnetic contactor coil in the above example as follows:
- Set a value which allows the time required to normally stop by the spindle.
- Set a value which allows the feed axis stop time also when the feed axis quick stop function and vertical axis fall prevention function are used.

3 Connect the auxiliary contact to the feedback input on the Safety relay module in order to detect the failure of the magnetic contactor K0.

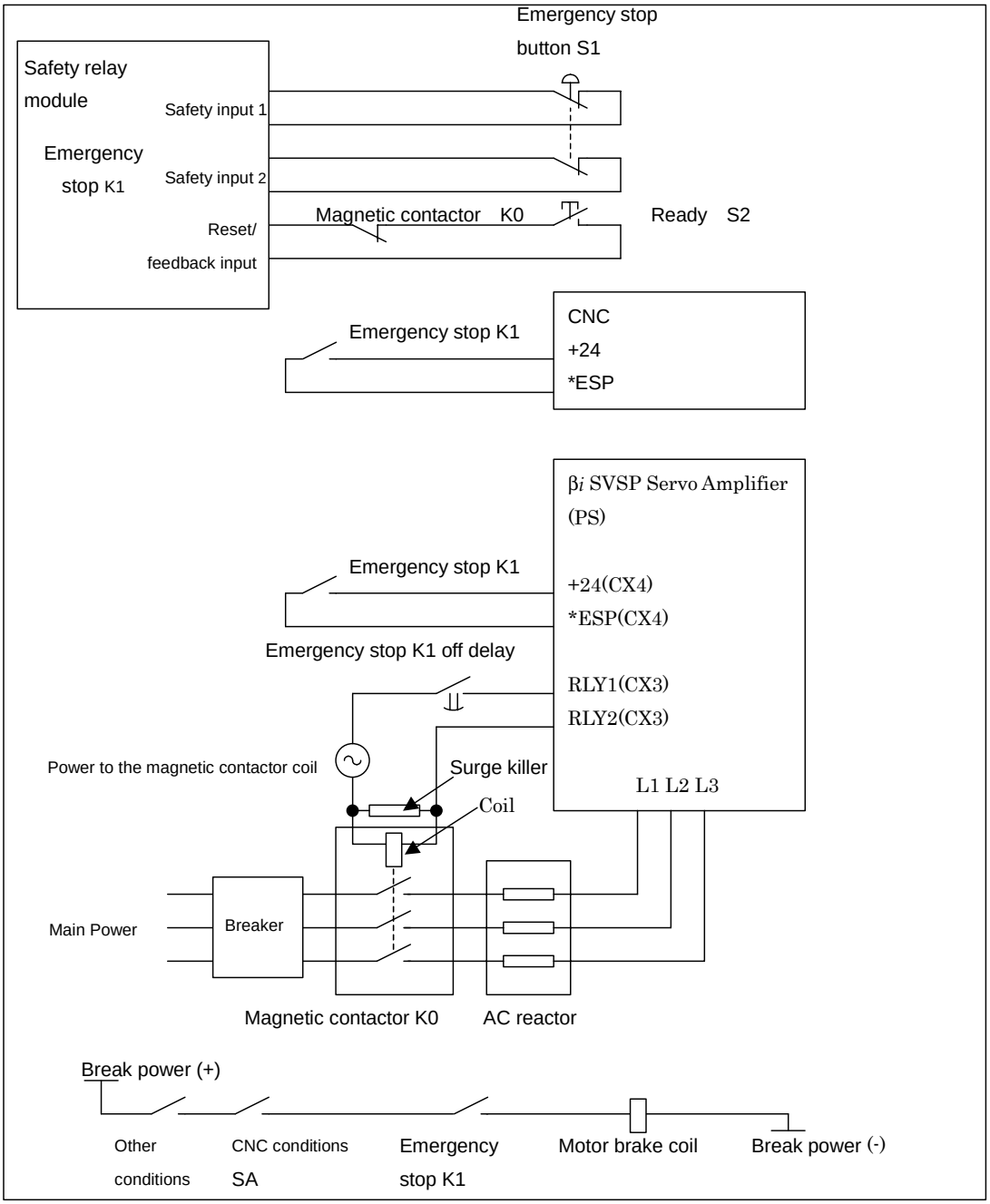


Fig. 10.5(c) Example of connections with an βi SVSP servo amplifier

**NOTE**

1 When Emergency stop button S1 is pushed, Emergency stop K1 opens and Magnetic contactor K0 shuts off the power for Power Supply.

2 Set the off delay timer for shutting the power to the magnetic contactor coil in the above example as follows:
- Set a value which allows the time required to normally stop by the spindle.
- Set a value which allows the feed axis stop time also when the feed axis quick stop function and vertical axis fall prevention function are used.

3 Connect the auxiliary contact to the feedback input on the Safety relay module in order to detect the failure of the magnetic contactor K0.

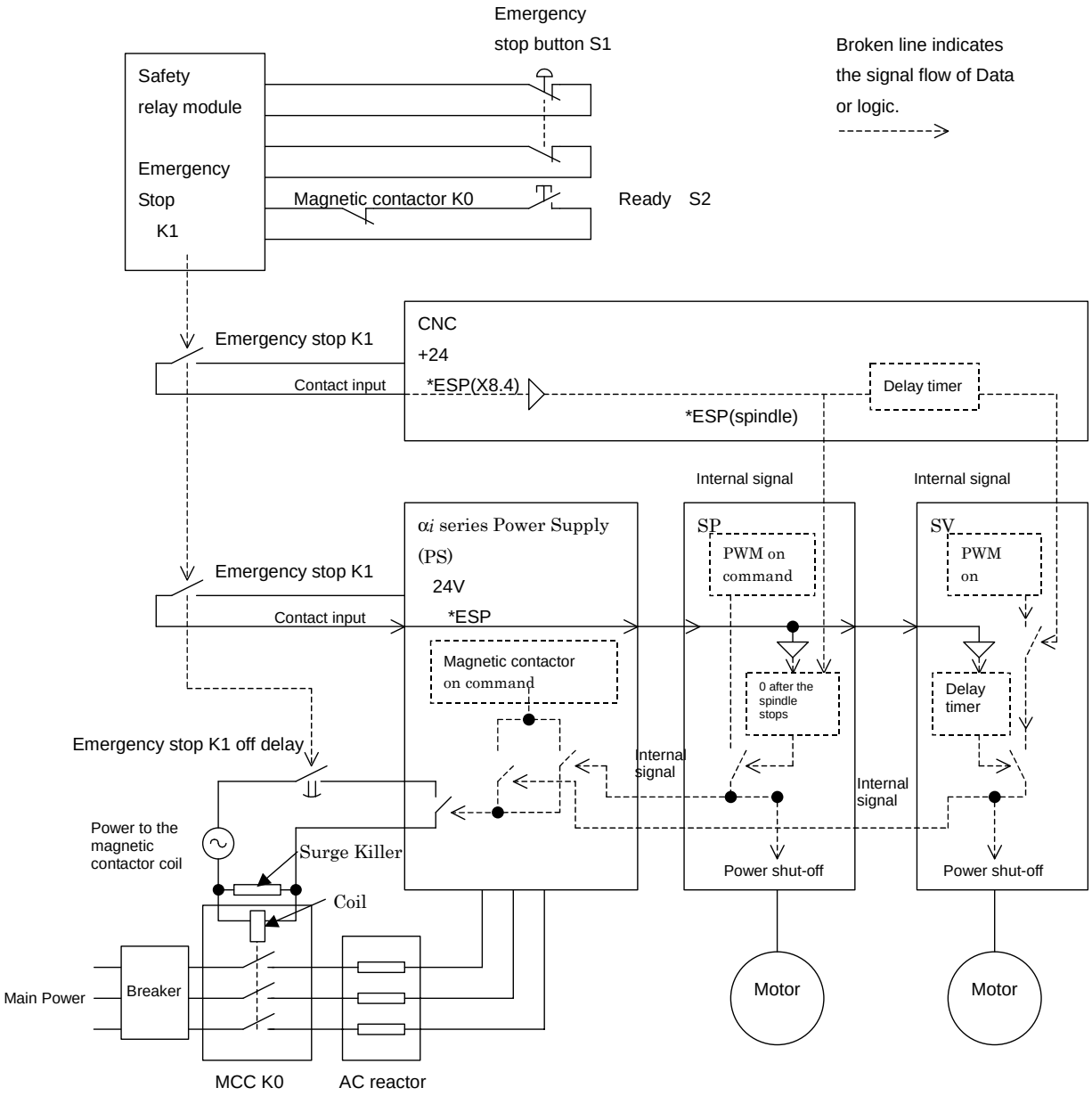


Fig. 10.5(d) Flow diagram of emergency stop circuit signals

**⚠ CAUTION**

1 This CNC controller can detect overtravel by using a software limit function. If the software limit function does not operate effectively due to a failure, resulting in a possible serious accident or loss, install a safety circuit, for example, a stroke end limit switch arranged in series with the emergency stop button.

2 To use a spindle motor and amplifier produced by a manufacturer other than FANUC, refer to the corresponding documentation as well as this manual. Design the emergency stop sequence such that, if the emergency stop signal contact opens while the spindle motor is rotating, the spindle motor is decelerated until it stops.

FANUC Series 0i-MODEL D
FANUC Series 0i Mate-MODEL D
CONNECTION MANUAL (HARDWARE)
Correction of APPENDIX G

1. Type of applied technical documents

| | |
|---|---|
| Name | FANUC Series 0i-MODEL D<br>FANUC Series 0i Mate-MODEL D<br>CONNECTION MANUAL (HARDWARE) |
| Spec. No. / Version | B-64303EN/03 |

2. Summary of change

| Group | Name / Outline | New, Add., Correct, Del. | Applicable Date |
|---|---|---|---|
| Basic Function | | | |
| Optional Function | | | |
| Unit | Correction of the description of parameter setting (APPENDIX G. section 11)<br><br>ATR value for the slaves on the FSSB line<br>Original: No.14340 to 14349<br>Correction: No. 14340 to 14357<br><br>Refer to following pages of this report for corrected G.11. | Correct | At once |
| Maintenance Parts | | | |
| Notice | | | |
| Correction | | | |
| Another | | | |

# G.11 PARAMETER SETTING

## (1) At emergency stop, turn on the power of CNC.

## (2) Follow the procedure below to set parameters concerned with FSSB.

In the case of using Analog servo adapter, the FSSB automatic setting function is not available. It is necessary to set the value of No.1023, No.1815, No.1905, No.14340 to14357, No.14376 to 14391 and No.1936 to 1937 in the manual setting No.2 mode. Refer to “FSSB setting” of the connection manual (function edition) about the detail of the setting.
When this parameter is set, Analog servo adapter is basically treated in the similar way to the separate type detector interface unit. (After this, Analog servo adapter and the separate type detector interface unit are called “an interface unit”.)
Follow the explanation below and the Parameter Manual (B-64310EN) of CNC and set the appropriate value.

- Setting of servo axis number

| No. | |
|---|---|
| 1023 | Number of the servo axis for each axis |

[Data type] Byte axis
[Valid data range] 1,2,3,…controllable axis number
Set the servo axis number for each axis. Refer to the “FSSB setting” of Connection Manual (Function) (B-64303EN-1).

- Setting of the position detector

| No. | 7 | 6 | 5 | 4 | 3 | 2 | 1 | 0 |
|---|---|---|---|---|---|---|---|---|
| 1815 | | | APC | APZ | | | | |

APC 0: Position detector is other than absolute pulse coder.
1: Position detector is absolute pulse coder.

APZ Zero position of absolute pulse coder is:
0: Not established.
1: Established. (Automatically set to 1 after the zero position is established.)

- FSSB manual setting

| No. | 7 | 6 | 5 | 4 | 3 | 2 | 1 | 0 |
|---|---|---|---|---|---|---|---|---|
| 1902 | | | | | | | | FMD |

[Data type] Byte axis

FMD The setting mode of FSSB is
0: Automatic.
1: Manual setting 2.

**NOTE**
If you want to use Analog servo adapter, set 1.

- Setting of bit parameter

| No. | 7 | 6 | 5 | 4 | 3 | 2 | 1 | 0 |
|---|---|---|---|---|---|---|---|---|
| 1905 | PM2 | PM1 | | | | | | |

[Data type] Bit axis

PM1 The first interface unit is:
0: Not used.
1: Used.
PM2 The second interface unit is:
0: Not used.
1: Used.

The interface unit that is connected to the FSSB line on a servo card and is near the CNC is the first interface unit (1st IF unit). Another one connected to the FSSB line is the second interface unit (2nd IF unit).

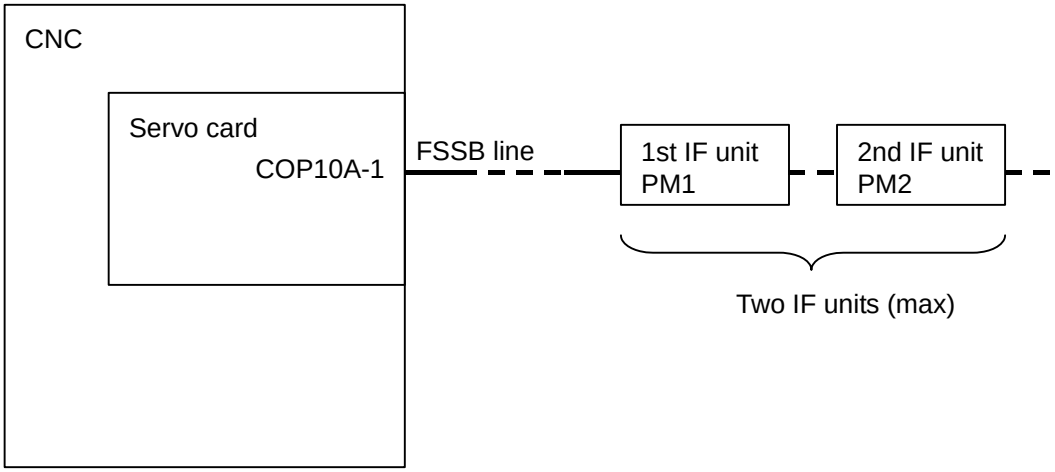


- Setting connector number

| No. | |
|---|---|
| 1936 | Connector number of the first interface unit |
| 1937 | Connector number of the second interface unit |

[Data type] Byte axis
[Valid data range] 0 to 3 (in case of Analog servo adapter)
0 to 7 (in case of separate type detector interface unit)
In case of using interface unit, set the value, which subtracts 1 from the connector number of each axis. (In case of using Analog servo adapter, set 0 to 3 to the axes connected with connector JV1nL to JV4nL.)
Set 0 to the axis without interface unit.
It is possible to use any connectors at any axis.

- Setting Address Conversion Table for slave number

| No. | |
|---|---|
| 14340 | ATR value corresponding to slave 01 on the FSSB line |
| to | |
| 14357 | ATR value corresponding to slave 18 on the FSSB line |

[Data type] Byte
[Valid data range] 0 to 7, 64, -56, -96
The amplifier or interface unit connected to CNC by the optical cable is called “Slave”. Each one axis servo amplifier or one interface unit (with or without the additional unit) consists of one slave. Two axes amplifier consists of two slaves and three axes amplifier consists of three slaves.

The analog servo amplifier is numbered as if it was connected from the terminal slave (the most far slave from CNC). Each one-axis analog servo amplifier is numbered one slave number. For example, if the terminal unit connected to FSSB is slave 5, the analog servo amplifiers are numbered from 6. (Refer to the example described later.)
This parameter is set as follows.

- In case of amplifier (including analog amplifier):
  Set a value obtained by subtracting 1 from the setting of parameter No.1023 for the axis to which the amplifier is assigned.

- In case of interface unit:
  Set 64 for 1st interface unit and set -56 for the 2nd interface unit respectively.
  Please see below figure.

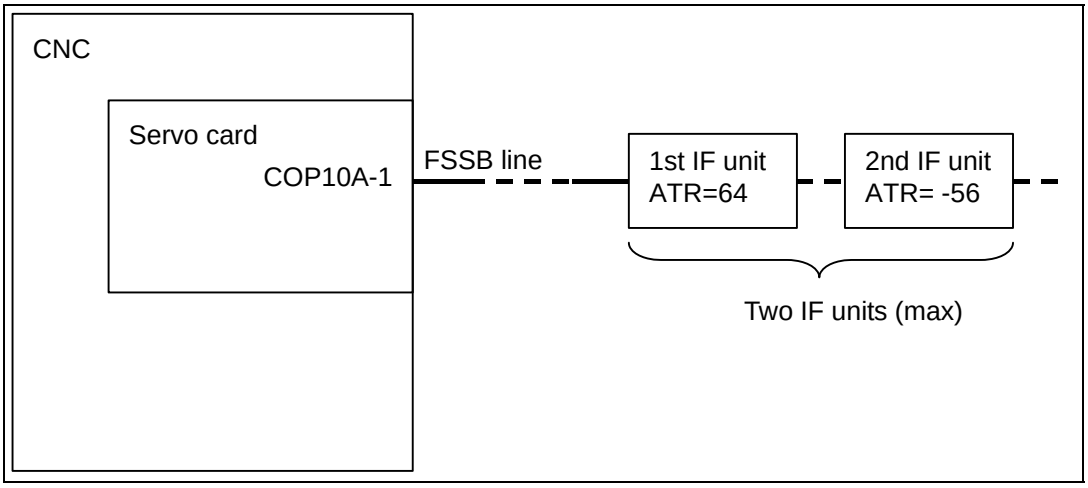


- In case of no slave:
  Set -96.

- Setting Address Conversion Table for connector

| No. | |
|---|---|
| **14376** | **ATR value corresponding to connector 1 on the 1st interface unit** |
| **to** | |
| **14383** | **ATR value corresponding to connector 8 on the 1st interface unit** |

[Data type] Byte
[Valid data range] 0 to 7 and 32

| No. | |
|---|---|
| **14384** | **ATR value corresponding to connector 1 on the 2nd interface unit** |
| **to** | |
| **14391** | **ATR value corresponding to connector 8 on the 2nd interface unit** |

[Data type] Byte
[Valid data range] 0 to 7 and 32
Each of these parameters sets the value(ATR value) of the address translation table corresponding to each connector on a interface unit.
In each of these parameters, set a value obtained by subtracting 1 from the setting of parameter No.1023 for the axis connected to a connector on an interface unit.
When there is an axis for which bit 6 or 7 of parameter No.1905 is set to use an interface unit, set 32 for those connectors that are not used.

## (3) Turning off/on the power to CNC

The description of setting continues to 4. Servo initial setting.

(Reference)
FSSB Setting example in case of using Analog servo adapter

[Example 1 : in case of two analog servo axis]
Analog servo adapter is slave 1. Analog servo amplifiers are considered as they are connected after Analog servo adapter. So they are slaves 2 and 3.

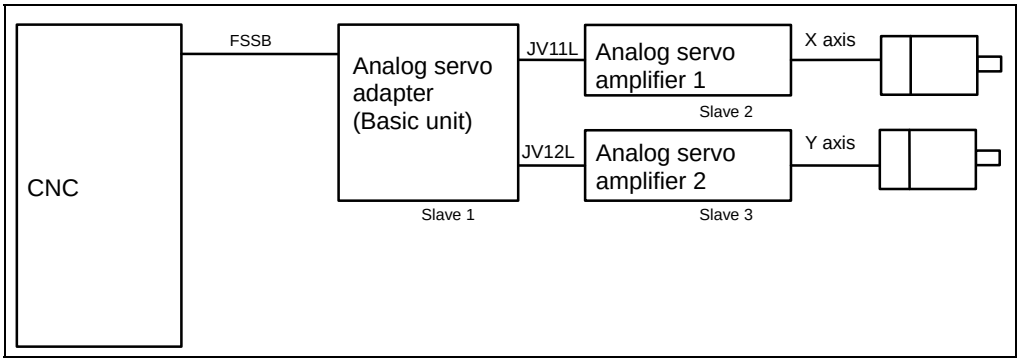


| No. | 14340 | 14341 | 14342 | 14343 to 14357 |
|---|---|---|---|---|
| Value | 64 | 0 | 1 | -96 |

| No. | 14376 | 14377 | 14378 to 14383 |
|---|---|---|---|
| Value | 0 | 1 | 32 |

| No. | No.1023 | No.1905 | No.1936 | No.1937 |
|---|---|---|---|---|
| X | 1 | 01000000 | 0 | 0 |
| Y | 2 | 01000000 | 1 | 0 |

[Example 2 : in case of one digital and one analog servo axis]
Digital servo amplifier is slave 1 and Analog servo adapter is slave 2. Analog servo amplifier is slave 3.

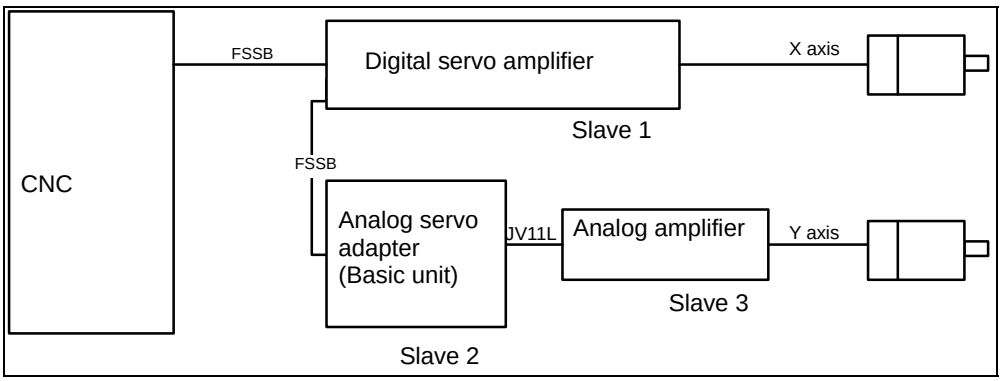


| No. | 14340 | 14341 | 14342 | 14343 to 14357 |
|---|---|---|---|---|
| Value | 0 | 64 | 1 | -96 |

| No. | 14376 | 14377 to 14383 |
|---|---|---|
| Value | 1 | 32 |

| No. | No.1023 | No.1905 | No.1936 | No.1937 |
|---|---|---|---|---|
| X | 1 | 00000000 | 0 | 0 |
| Y | 2 | 01000000 | 0 | 0 |

## (4) Initial setting of servo parameter

Set the following of analog servo axis.

| Parameter number | Description | Data |
|---|---|---|
| No.2000 | Automatic setting | 00000000 |
| No.2020 | Motor type | 252 |
| No.2001 | AMR | 00000000 |
| No.1820 | CMR | Set the value similar to the one of digital servo according to mechanical system. |
| No.2084 | F × FG (Numerator) | |
| No.2085 | F × FG (Denominator) | |
| No.2022 | Rotation direction | 111 (CCW) or -111 (CW) |
| No.1821 | Reference counter size | Set the number (after F×FG) of pulse per one motor revolution as digital servo. |
| No.2023 | Feedback pulse for velocity detection | Set value = 1536.797 × E<br>E : the voltage (V) proportional to the 1000min$^{-1}$ velocity command |
| No.2024 | Feedback pulse for position detection | Set the number (before F × FG) of pulse per one motor revolution as digital servo. |

## (5) Power OFF/ON

## (6) Setting to validate the analog servo interface function

Set the following of analog servo axis.

| No. | 7 | 6 | 5 | 4 | 3 | 2 | 1 | 0 |
|---|---|---|---|---|---|---|---|---|
| **2009** | | | | **ANALOGG** | | | | **SERDMY** |

[Data type] Bit axis

SERDMY The serial feedback dummy function is:
0: Invalidated.
1: Validated.

> **NOTE**
> In case of analog servo axis, set 1.

ANALOG The analog servo interface function is:
0: Invalidated.
1: Validated.

> **NOTE**
> In case of analog servo axis, set 1.
> After setting this bit, please turn off the power of CNC more than one time.

No.

| 2165 | Maximum amplifier current |
|---|---|

[Data type] Byte axis

**NOTE**
In case of analog servo axis, set 0.

When the initial setting of servo shown in previous section is done, 45 is set to this address automatically. But clear this parameter to be 0. (If this parameter of analog servo axis is not 0, the combination alarm of motor and amplifier will emerge.)

# Addition and correction of
# FAUMC Series 0i-MODEL D
# CONNECTION MANUAL (HARDWARE)

1. Type of applied technical documents

| | |
|---|---|
| Name | FANUC Series 0i-MODEL D<br>CONNECTION MANUAL (HARDWARE) |
| Spec.No./Version | B-64303EN/03 |

2. Summary of change

| Group | Name / Outline | New, Add, Correct, Delete | Applicable Date |
|---|---|---|---|
| Basic Function | | | |
| Optional Function | | | |
| Unit | | | |
| Maintenance parts | | | |
| Notice | | | |
| Correction | | | |
| Another | The module specifications of extension module C for connection to the I/O Link i is corrected and added. | | Immediately |
| | Item 9.11.2.3 I/O signal specifications<br>Item 9.11.6.2 DO alarm detection | Add<br>Add, Correct | |

| | | | | | |
|---|---|---|---|---|---|
| | | | | TITLE | Addition and correction of FANUC Series 0i -MODEL D CONNECTION MANUAL (HARDWARE) |
| 01 | 11.07.04 | Yamanak | First issue | DRAW. NO. B-64303EN/03-05 | CUST. |
| EDIT. | DATE | DESIG. | DESCRIPTION | FANUC CORPORATION | SHEET 1/3 |

**Item 9.11.2.3 Note is added.**

## 9.11.2.3 I/O signal specifications

**Basic module、Extension modules A and B**

⚠ **WARNING**

1 The protection function is intended to protect the components internal to the modules rather than external units.
2 No protection function of modules can protect their internal components in all cases. Once any protection function has worked, remove the cause promptly. If an absolute maximum rating is exceeded, for example, it is likely that protection functions may not work or an IC may break down before the related protection function works, depending on the way or situation in which the modules are used.
3 If an output protection function is defective, it is likely that, if the load current exceeds its rating continuously for a long time, smoke or ignition may occur.

**Extension module C**

⚠ **WARNING**

1 The protection function is intended to protect the components internal to the modules rather than external units.
2 No protection function of modules can protect their internal components in all cases. Once any protection function has worked, remove the cause promptly. If an absolute maximum rating is exceeded, for example, it is likely that protection functions may not work or an IC may break down before the related protection function works, depending on the way or situation in which the modules are used.
3 If an output protection function is defective, it is likely that, if the load current exceeds its rating continuously for a long time, smoke or ignition may occur.

**Item 9.11.6.2 Note is corrected and added.**

## 9.11.6.2 DO alarm detection

**States when the protection function is activated in extension module C**

⚠ **CAUTION**

1 If the overheat protection function or over voltage protection function among the protection functions above is activated, the DO bit is kept OFF until the cause is eliminated. When the cause is eliminated, the DO bit is set to ON without restarting the system.

2 Disconnection detection is performed by monitoring, with an output element in the module, the current flowing through a load when DO output is ON. When the detected current value is about 200 mA or less, disconnection detection is assumed. So, when a device (such as an LED) with a small load current is connected, the DO alarm state results, assuming disconnection detection. Unlike the other protection functions, however, this function does not turn off DO output. If a connection is reactivated after the state of disconnection is once set, disconnection detection is canceled without restarting the system.

3 When the ratings current value of the load is larger than the disconnection detection current value, and the rise time of the current that flows to the connected load (such as an solenoid) is late, the disconnection detection function might work. For that case, the disconnection detecting function when DO output is ON can be evaded by programming it to refer to DO alarm allocated to DI after the fixed time has passed since DO was turned on.