FANUC Series 0*i*-MODEL F Plus

PARAMETER MANUAL

B-64700EN/01

- No part of this manual may be reproduced in any form.
- The appearance and specifications of this product are subject to change without notice.

The products in this manual are controlled based on Japan's “Foreign Exchange and Foreign Trade Law". The export from Japan may be subject to an export license by the government of Japan.
Further, re-export to another country may be subject to the license of the government of the country from where the product is re-exported. Furthermore, the product may also be controlled by re-export regulations of the United States government.
Should you wish to export or re-export these products, please contact FANUC for advice.

In this manual, we endeavor to include all pertinent matters.
There are, however, a very large number of operations that must not or cannot be performed, and if the manual contained them all, it would be enormous in volume.
It is, therefore, requested to assume that any operations that are not explicitly described as being possible are "not possible".

This manual contains the program names or device names of other companies, some of which are registered trademarks of respective owners. However, these names are not followed by ® or ™ in the main body.

DEFINITION OF WARNING, CAUTION, AND NOTE

This manual includes safety precautions for protecting the user and preventing damage to the machine. Precautions are classified into Warning and Caution according to their bearing on safety. Also, supplementary information is described as a Note. Read the Warning, Caution, and Note thoroughly before attempting to use the machine.

⚠ **WARNING**
Applied when there is a danger of the user being injured or when there is a danger of both the user being injured and the equipment being damaged if the approved procedure is not observed.

⚠ **CAUTION**
Applied when there is a danger of the equipment being damaged, if the approved procedure is not observed.

NOTE
The Note is used to indicate supplementary information other than Warning and Caution.

- Read this manual carefully, and store it in a safe place.

PREFACE

Applicable models

The models covered by this manual, and their abbreviations are :

Model name	Abbreviation		
FANUC Series 0*i*-TF Plus	0*i*-TF Plus	Series 0*i*-F Plus	Series 0*i*
FANUC Series 0*i*-MF Plus	0*i*-MF Plus		

NOTE

1 For an explanatory purpose, the following descriptions may be used according to the types of path control used:
- 0*i*-TF Plus : For the lathe system (T series)
- 0*i*-MF Plus : For the machining center system (M series)

2 Some functions described in this manual may not be applied to some products. For details, refer to the DESCRIPTIONS (B-64692EN).

Related manuals of Series 0*i*- MODEL F Plus

The following table lists the manuals related to Series 0*i*-F Plus.
This manual is indicated by an asterisk(*).

Table 1 Related manuals

Manual name	Specification number	
DESCRIPTIONS	B-64692EN	
CONNECTION MANUAL (HARDWARE)	B-64693EN	
CONNECTION MANUAL (FUNCTION)	B-64693EN-1	
OPERATOR'S MANUAL (Common to Lathe System/Machining Center System)	B-64694EN	
OPERATOR'S MANUAL (For Lathe System)	B-64694EN-1	
OPERATOR'S MANUAL (For Machining Center System)	B-64694EN-2	
MAINTENANCE MANUAL	B-64695EN	
PARAMETER MANUAL	B-64700EN	*
Programming		
Macro Executor PROGRAMMING MANUAL	B-63943EN-2	
Macro Compiler PROGRAMMING MANUAL	B-66263EN	
C Language Executor PROGRAMMING MANUAL	B-63943EN-3	
PMC		
PMC PROGRAMMING MANUAL	B-64513EN	
Network		
PROFIBUS-DP Board CONNECTION MANUAL	B-63993EN	
Industrial Ethernet CONNECTION MANUAL	B-64013EN	
Fast Ethernet / Fast Data Server OPERATOR'S MANUAL	B-64014EN	
DeviceNet Board CONNECTION MANUAL	B-64043EN	
FL-net Board CONNECTION MANUAL	B-64163EN	
CC-Link Board CONNECTION MANUAL	B-64463EN	
Operation guidance function		
MANUAL GUIDE *i* (Common to Lathe System/Machining Center System) OPERATOR'S MANUAL	B-63874EN	
MANUAL GUIDE *i* (For Machining Center System) OPERATOR'S MANUAL	B-63874EN-2	
MANUAL GUIDE *i* (Set-up Guidance Functions) OPERATOR'S MANUAL	B-63874EN-1	
MANUAL GUIDE 0 *i* OPERATOR'S MANUAL	B-64434EN	

Dual Check Safety		
Dual Check Safety CONNECTION MANUAL	B-64483EN-2	

Related manuals of SERVO MOTOR αi/βi series

The following table lists the manuals related to SERVO MOTOR αi/βi series

Table 2 Related manuals

Manual name	Specification number
FANUC AC SERVO MOTOR αi series DESCRIPTIONS	B-65262EN
FANUC AC SERVO MOTOR αi series / FANUC AC SERVO MOTOR βi series / FANUC LINEAR MOTOR LiS series / FANUC SYNCHRONOUS BUILT-IN SERVO MOTOR DiS series PARAMETER MANUAL	B-65270EN
FANUC AC SPINDLE MOTOR αi-B / βi-B series DESCRIPTIONS	B-65452EN
FANUC AC SPINDLE MOTOR αi/βi series, BUILT-IN SPINDLE MOTOR Bi series PARAMETER MANUAL	B-65280EN
FANUC SERVO AMPLIFIER αi–B series DESCRIPTIONS	B-65412EN
FANUC AC SERVO MOTOR αi series / FANUC AC SPINDLE MOTOR αi series / FANUC SERVO AMPLIFIER αi series MAINTENANCE MANUAL	B-65285EN

This manual mainly assumes that the FANUC SERVO MOTOR αi series of servo motor is used. For servo motor and spindle information, refer to the manuals for the servo motor and spindle that are actually connected.

TABLE OF CONTENTS

DEFINITION OF WARNING, CAUTION, AND NOTE s-1

PREFACE p-1

1 DISPLAYING PARAMETERS 1

2 SETTING PARAMETERS FROM MDI 2

3 INPUTTING AND OUTPUTTING PARAMETERS 4

3.1 OUTPUTTING PARAMETERS THROUGH THE RS-232C INTERFACE 4
3.2 INPUTTING PARAMETERS THROUGH THE RS-232C INTERFACE 5
3.3 I/O FORMATS 6
3.3.1 Keywords 6
3.3.2 Inch/Metric Switching 7
3.3.3 Bit Format 7
3.3.4 Bit Machine Group Format 7
3.3.5 Bit Path Format 8
3.3.6 Bit Axis Format 8
3.3.7 Bit Spindle Format 9
3.3.8 Byte/Word/Two-Word Format 9
3.3.9 Byte/Word/Two-Word Machine Group Format 9
3.3.10 Byte/Word/Two-Word Path Format 10
3.3.11 Byte/Word/Two-Word Axis Format 10
3.3.12 Byte/Word/Two-Word Spindle Format 11
3.3.13 Real Number Format 11
3.3.14 Real Number Machine Group Format 12
3.3.15 Real Number Path Format 12
3.3.16 Real Number Axis Format 13
3.3.17 Real Number Spindle Format 13
3.3.18 Start and End of a Record 14

4 DESCRIPTION OF PARAMETERS 15

4.1 INPUT TYPE 15
4.2 DATA TYPE 15
4.3 REPRESENTATION OF PARAMETERS 16
4.4 STANDARD PARAMETER SETTING TABLES 17
4.5 PARAMETERS OF SETTING 19
4.6 PARAMETERS OF RS-232C INTERFACE 21
4.6.1 Parameters Common to All Channels 22
4.6.2 Parameters of Channel 1 (I/O CHANNEL=0) 26
4.6.3 Parameters of Channel 1 (I/O CHANNEL=1) 27
4.6.4 Parameters of Channel 2 (I/O CHANNEL=2) 28
4.7 PARAMETERS OF CNC SCREEN DISPLAY FUNCTIONS 29
4.8 PARAMETERS OF ETHERNET/DATA SERVER FUNCTIONS 29
4.9 PARAMETERS OF POWER MATE CNC 35

4.10 PARAMETERS OF ETHERNET/ INDUSTRIAL ETHERNET FUNCTIONS. 35
4.11 PARAMETERS OF SYSTEM CONFIGURATION 37
4.12 PARAMETERS OF AXIS CONTROL/INCREMENT SYSTEM (1 OF 3) 39
4.13 PARAMETERS OF COORDINATE SYSTEM (1 OF 2) 50
4.14 PARAMETERS OF STORED STROKE CHECK 57
4.15 PARAMETERS OF CHUCK AND TAIL STOCK BARRIER 63
4.16 PARAMETERS OF FEEDRATE 69
4.17 PARAMETERS OF ACCELERATION/DECELERATION CONTROL (1 OF 2) 80
4.18 PARAMETERS OF SERVO (1 OF 2) 101
4.19 PARAMETERS OF DI/DO (1 OF 2) 138
4.20 PARAMETERS OF DISPLAY AND EDIT (1 OF 6) 148
4.21 PARAMETERS OF PROGRAMS (1 OF 5) 181
4.22 PARAMETERS OF PITCH ERROR COMPENSATION 196
4.23 PARAMETERS OF SPINDLE CONTROL 203
4.24 PARAMETERS OF TOOL COMPENSATION (1 OF 3) 253
4.25 PARAMETERS OF CANNED CYCLES 271
4.25.1 Parameters of Canned Cycle for Drilling (1 of 2) 271
4.25.2 Parameters of Thread Cutting Cycle 282
4.25.3 Parameters of Multiple Repetitive Canned Cycle 283
4.25.4 Parameters of Canned Cycle for Drilling (2 of 2) 287
4.25.5 Parameters of Canned Cycle for Grinding (for Grinding Machine) (1 of 2) 292
4.26 PARAMETERS OF RIGID TAPPING 296
4.27 PARAMETERS OF SCALING/COORDINATE ROTATION 311
4.28 PARAMETERS OF SINGLE DIRECTION POSITIONING 313
4.29 PARAMETERS OF POLAR COORDINATE INTERPOLATION 314
4.30 PARAMETERS OF NORMAL DIRECTION CONTROL 316
4.31 PARAMETERS OF INDEX TABLE INDEXING 317
4.32 PARAMETERS OF FLEXIBLE SYNCHRONIZATION CONTROL (1 OF 2) 320
4.33 PARAMETERS OF STRAIGHTNESS COMPENSATION (1 OF 2) 325
4.34 PARAMETERS OF INCLINATION COMPENSATION 328
4.35 PARAMETERS OF CUSTOM MACROS 330
4.36 PARAMETERS OF PATTERN DATA INPUT 353
4.37 PARAMETERS OF POSITIONING BY OPTIMUM ACCELERATION 354
4.38 PARAMETERS OF SKIP FUNCTION 356
4.39 PARAMETERS OF EXTERNAL DATA INPUT/OUTPUT 366
4.40 PARAMETERS OF MANUAL HANDLE RETRACE (1 OF 2) 367
4.41 PARAMETERS OF GRAPHIC DISPLAY (1 OF 4) 374
4.42 PARAMETERS OF SCREEN DISPLAY COLORS (1 OF 2) 376
4.43 PARAMETERS OF RUN HOUR AND PARTS COUNT DISPLAY 377
4.44 PARAMETERS OF TOOL MANAGEMENT FUNCTIONS (1 OF 2) 380
4.45 PARAMETERS OF TOOL LIFE MANAGEMENT (1 OF 2) 381
4.46 PARAMETERS OF POSITION SWITCH FUNCTIONS 389
4.47 PARAMETERS OF MANUAL OPERATION AND AUTOMATIC OPERATION (1 OF 2) 393
4.48 PARAMETERS OF MANUAL HANDLE (1 OF 2) 395

4.49 PARAMETERS OF REFERENCE POINT WITH MECHANICAL STOPPER 400
4.50 PARAMETERS OF SOFTWARE OPERATOR'S PANEL 402
4.51 PARAMETERS OF PROGRAM RESTART (1 OF 2) 406
4.52 PARAMETERS OF POLYGON TURNING 409
4.53 PARAMETERS OF ELECTRONIC GEAR BOX (EGB) 418
4.54 PARAMETERS OF PMC AXIS CONTROL (1 OF 4) 429
4.55 PARAMETERS OF MULTI-PATH CONTROL 440
4.56 PARAMETERS OF 0*i*-F Plus BASIC FUNCTIONS 444
4.57 PARAMETERS OF INTERFERENCE CHECK BETWEEN PATHS 451
4.58 PARAMETERS OF SYNCHRONOUS/COMPOSITE CONTROL AND SUPERIMPOSED CONTROL (1 OF 3) 455
4.59 PARAMETERS OF ANGULAR AXIS CONTROL 469
4.60 PARAMETERS OF AXIS SYNCHRONOUS CONTROL 471
4.61 PARAMETERS OF SEQUENCE NUMBER COMPARISON AND STOP 480
4.62 PARAMETERS OF HIGH PRECISION OSCILLATION FUNCTION (1 OF 2) 480
4.63 PARAMETERS OF AI CONTOUR CONTROL (1 OF 2) 482
4.64 PARAMETERS OF HIGH-SPEED POSITION SWITCH (1 OF 2) 484
4.65 OTHER PARAMETERS 487
4.66 PARAMETERS OF MAINTENANCE 492
4.67 PARAMETERS OF INCORRECT OPERATION PREVENTION FUNCTION 496
4.68 PARAMETERS OF AUTOMATIC DATA BACKUP 504
4.69 PARAMETERS OF AXIS CONTROL 505
4.70 PARAMETERS OF AXIS SWITCHING 507
4.71 PARAMETERS OF PMC AXIS CONTROL (2 OF 4) 507
4.72 PARAMETERS OF SCREEN DISPLAY COLORS (2 OF 2) 508
4.73 PARAMETERS OF MANUAL OPERATION AND AUTOMATIC OPERATION (2 OF 2) 508
4.74 PARAMETERS OF DUAL CHECK SAFETY (1 OF 2) 509
4.75 PARAMETERS OF WAVEFORM DIAGNOSIS 510
4.76 PARAMETERS OF TROUBLE DIAGNOSIS FUNCTION 510
4.77 PARAMETERS OF FEEDRATE CONTROL AND ACCELERATION/DECELERATION CONTROL (1 OF 2) 510
4.78 PARAMETERS OF SPINDLE CONTROL WITH SERVO MOTOR (1 OF 2) 513
4.79 PARAMETERS OF TILTED WORKING PLANE INDEXING COMMAND 522
4.80 PARAMETERS OF AXIS CONTROL/INCREMENT SYSTEM (2 OF 3) 524
4.81 PARAMETERS OF DI/DO (2 OF 2) 525
4.82 PARAMETERS OF PROGRAMS (2 OF 5) 526
4.83 PARAMETERS OF FEEDRATE CONTROL AND ACCELERATION/DECELERATION CONTROL (2 OF 2) 526
4.84 PARAMETERS OF PROGRAM RESTART (2 OF 2) 529
4.85 PARAMETERS OF COORDINATE SYSTEM (2 OF 2) 531

4.86 PARAMETERS OF SYNCHRONOUS/COMPOSITE CONTROL AND SUPERIMPOSED CONTROL (2 OF 3) 533
4.87 PARAMETERS OF PROGRAMS (3 OF 5) 534
4.88 PARAMETERS OF DISPLAY AND EDIT (2 OF 6) 534
4.89 PARAMETERS OF EMBEDDED MACRO (1 OF 2) 541
4.90 PARAMETERS OF DISPLAY AND EDIT (3 OF 6) 542
4.91 PARAMETERS OF GRAPHIC DISPLAY (2 OF 4) 545
4.92 PARAMETERS OF DISPLAY AND EDIT (4 OF 6) 549
4.93 PARAMETERS OF TOOL COMPENSATION (2 OF 3) 565
4.94 PARAMETERS OF OPTIMUM ACCELERATION/DECELERATION FOR RIGID TAPPING 568
4.95 PARAMETERS OF ARBITRARY SPEED THREADING 571
4.96 PARAMETERS OF PROGRAMS (4 OF 5) 575
4.97 PARAMETERS OF SMOOTH TOLERANCE+ CONTROL (1 OF 2) 596
4.98 PARAMETERS OF SERVO (2 OF 2) 597
4.99 PARAMETERS OF PMC AXIS CONTROL (3 OF 4) 602
4.100 PARAMETERS OF PMC 603
4.101 PARAMETERS OF EMBEDDED MACRO (2 OF 2) 615
4.102 PARAMETERS OF HIGH-SPEED POSITION SWITCH (2 OF 2) 616
4.103 PARAMETERS OF MALFUNCTION PROTECTION 618
4.104 PARAMETERS OF MANUAL HANDLE (2 OF 2) 618
4.105 PARAMETERS OF SYNCHRONOUS/COMPOSITE CONTROL AND SUPERIMPOSED CONTROL (3 OF 3) 626
4.106 PARAMETERS OF PMC AXIS CONTROL (4 OF 4) 627
4.107 PARAMETERS OF EXTERNAL DECELERATION POSITIONS EXPANSION 628
4.108 PARAMETERS OF DISPLAY AND EDIT (5 OF 6) 632
4.109 PARAMETERS OF TOOL MANAGEMENT FUNCTIONS (2 OF 2) 641
4.110 PARAMETERS OF TOOL LIFE MANAGEMENT (2 OF 2) 652
4.111 PARAMETERS OF STRAIGHTNESS COMPENSATION (2 OF 2) 653
4.112 PARAMETERS OF FLEXIBLE SYNCHRONIZATION CONTROL (2 OF 2) 655
4.113 PARAMETERS OF PROGRAMS (5 OF 5) 658
4.114 PARAMETERS OF MANUAL LINER/CIRCULAR INTERPOLATION 660
4.115 PARAMETERS OF CANNED CYCLES FOR DRILLING M CODE OUTPUT IMPROVEMENT 661
4.116 PARAMETERS OF MACHINING CONDITION SELECTION FUNCTION 662
4.117 PARAMETERS OF PARAMETER CHECK SUM FUNCTION 667
4.118 PARAMETERS OF PROFINET IO DEVICE SAFETY FUNCTION 669
4.119 PARAMETERS OF DUAL CHECK SAFETY (2 OF 2) 669
4.120 PARAMETERS OF SAFETY FUNCTION BY FL-net 670
4.121 PARAMETERS OF EtherNet/IP ADAPTER SAFETY FUNCTION 670
4.122 PARAMETERS OF AXIS CONTROL/INCREMENT SYSTEM (3 OF 3) 671
4.123 PARAMETERS OF LINEAR SCALE WITH ABSOLUTE ADDRESS REFERENCE POSITION 672
4.124 PARAMETERS OF FSSB (1 OF 2) 672

4.125 PARAMETERS OF SERVO GUIDE Mate 673
4.126 PARAMETERS OF GRAPHIC DISPLAY (3 OF 4) 673
4.127 PARAMETERS OF EMBEDDED ETHERNET 675
4.128 PARAMETERS OF MANUAL HANDLE RETRACE (2 OF 2) 679
4.129 PARAMETERS OF AI CONTOUR CONTROL (2 OF 2) 681
4.130 PARAMETERS OF CYLINDRICAL INTERPOLATION 683
4.131 PARAMETERS OF OPTIMAL TORQUE ACCELERATION/ DECELERATION 685
4.132 PARAMETERS OF SMOOTH TOLERANCE+ CONTROL (2 OF 2) 687
4.133 PARAMETERS OF TOOL COMPENSATION (3 OF 3) 689
4.134 PARAMETERS OF TILTED WORKING PLANE INDEXING / 3-DIMENSIONAL MANUAL FEED (M SERIES) 692
4.135 PARAMETERS OF FSSB (2 OF 2) 705
4.136 PARAMETERS OF DISPLAY AND EDIT (6 OF 6) 711
4.137 PARAMETERS OF FINE SURFACE SETTING 728
4.138 PARAMETERS OF HIGH PRECISION OSCILLATION FUNCTION (1 OF 2) 730
4.139 PARAMETERS OF SPINDLE CONTROL WITH SERVO MOTOR (2 OF 2) 732
4.140 PARAMETERS OF ACCELERATION/DECELERATION CONTROL (2 OF 2) 734
4.141 PARAMETERS OF SPINDLE CONTROL MODE CHANGING BY PROGRAM COMMAND 735
4.142 PARAMETERS OF GRAPHIC DISPLAY (4 OF 4) 737
4.143 PARAMETERS OF SET-UP GUIDANCE FUNCTION 752

APPENDIX

A CHARACTER CODE LIST 755

1 DISPLAYING PARAMETERS

Follow the procedure below to display parameters.

1 Press the function key [SYSTEM] on the MDI unit as many times as required, or alternatively, press the function key [SYSTEM] once, then the chapter selection soft key [PARAM]. The parameter screen is then selected.

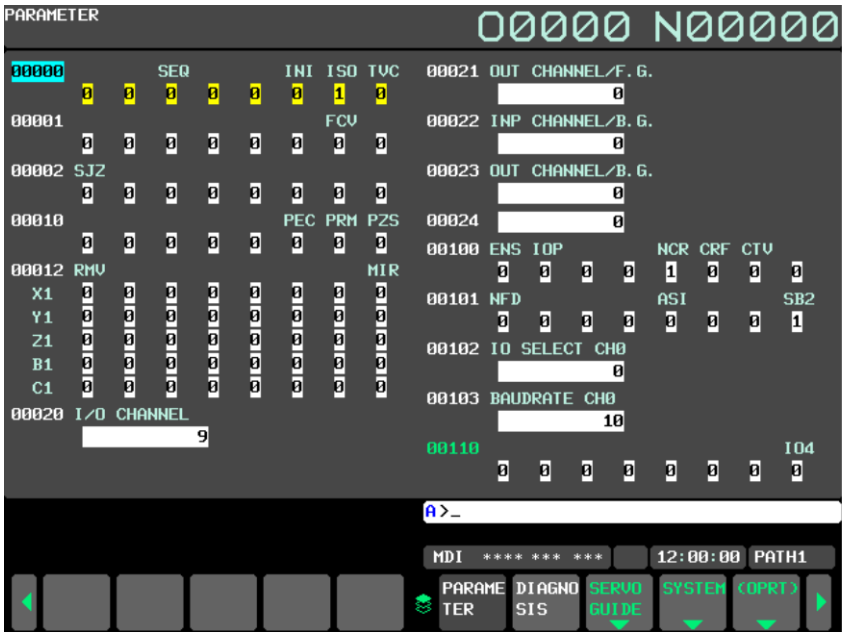

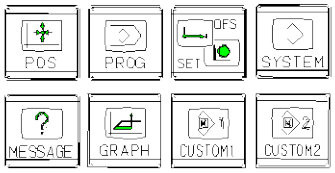

Function keys

2 The parameter screen consists of multiple pages. Use step (a) or (b) to display the page that contains the parameter you want to display.

(a) Use the page change keys or the cursor keys to display the desired page.

(b) Enter the data number of the parameter you want to display from the keyboard, then press the soft key [NO.SRH]. The parameter page containing the specified data number appears with the cursor positioned at the data number. (The data is displayed in reverse video.)

NOTE

If key entry is started with the chapter selection soft keys displayed, they are replaced automatically by operation selection soft keys including [NO.SRH]. Pressing the soft key [(OPRT)] can also cause the operation selection soft keys to be displayed.

2 SETTING PARAMETERS FROM MDI

Follow the procedure below to set parameters.

1 Place the NC in the MDI mode or the emergency stop state.

2 Follow the substeps below to enable writing of parameters.

2-1 To display the setting screen, press the function key [SET] as many times as required, or alternatively press the function key [SET] once, then the chapter selection soft key [SETTING]. (The first page of the setting screen appears.)

```
SETTING (HANDY)

PARAMETER WRITE= 1 (0:DISABLE 1:ENABLE)
TV CHECK       = 0 (0:OFF   1:ON)
OUTPUT CODE    = 1 (0:EIA   1:ISO)
INPUT UNIT     = 0 (0:MM    1:INCH)
I/O CHANNEL    = 9 (0-35:CHANNEL NO.)
SEQUENCE NO.   = 0 (0:OFF   1:ON)
PROGRAM FORMAT = 0 (0:NO CNV  1:F15)
SEQUENCE STOP  =       0 (PROGRAM NO.)
SEQUENCE STOP  =       0 (SEQUENCE NO.)
```

2-2 Position the cursor on "PARAMETER WRITE" using the cursor keys.

```
NO. SRH | ON:1 | OFF:0 | +INPUT | INPUT |
```

2-3 Press the soft key [(OPRT)] to display operation selection soft keys.

2-4 To set "PARAMETER WRITE=" to 1, press the soft key [ON:1], or alternatively enter 1 and press the soft key [INPUT]. From now on, the parameters can be set. At the same time an alarm SW0100, “PARAMETER WRITE ENABLE” occurs in the CNC.

3 To display the parameter screen, press the function key [SYSTEM] as many times as required, or alternatively press the function key [SYSTEM] once, then the chapter selection soft key [PARAM]. (See Chapter 1, "DISPLAYING PARAMETERS.")

4 Display the page containing the parameter you want to set, and position the cursor on the parameter. (See Chapter 1, "DISPLAYING PARAMETERS.")

5 Enter data, then press the soft key [INPUT]. The parameter indicated by the cursor is set to the entered data.

[Example] 12000 [INPUT]

```
SETTING (PARAMETER)

01411 INIT.CUTTING F
        12000.000
01451 F1 FEEDRATE
            0.000
01452 F2 FEEDRATE
            0.000
01453 F3 FEEDRATE
            0.000
01454 F4 FEEDRATE
            0.000
01455 F5 FEEDRATE
            0.000
```

Data can be entered continuously for parameters, starting at the selected parameter, by separating each data item with a semicolon (;).

[Example]

Entering 10;20;30;40 and pressing the soft key [INPUT] assigns values 10, 20, 30, and 40 to parameters in order starting at the parameter indicated by the cursor.

6 Repeat steps 4 and 5 as required.

7 If parameter setting is complete, set "PARAMETER WRITE=" to 0 on the setting screen to disable further parameter setting.

8 Reset the NC to release the alarm SW0100.

If an alarm PW0000, “POWER MUST BE OFF” occurs in the NC, turn it off before continuing operation.

3 INPUTTING AND OUTPUTTING PARAMETERS

This section explains the parameter input/output procedures for input/output devices connected to the RS-232C interface.
The following description assumes the input/output devices are ready for input/output. It also assumes parameters peculiar to the input/output devices, such as the baud rate and the number of stop bits, have been set in advance. (See Section 4.6, “PARAMETERS OF RS-232C INTERFACE.”)

3.1 OUTPUTTING PARAMETERS THROUGH THE RS-232C INTERFACE

1 Select the EDIT mode or set to Emergency stop.

2 To select the parameter screen, press the function key [SYSTEM] as many times as required, or alternatively press the function key [SYSTEM] once, then the chapter selection soft key [PARAM].

3 Press the soft key [(OPRT)] to display operation selection soft keys, then press the continuous menu key located at the right-hand side of the soft keys to display another set of operation selection keys including [F OUTPUT].

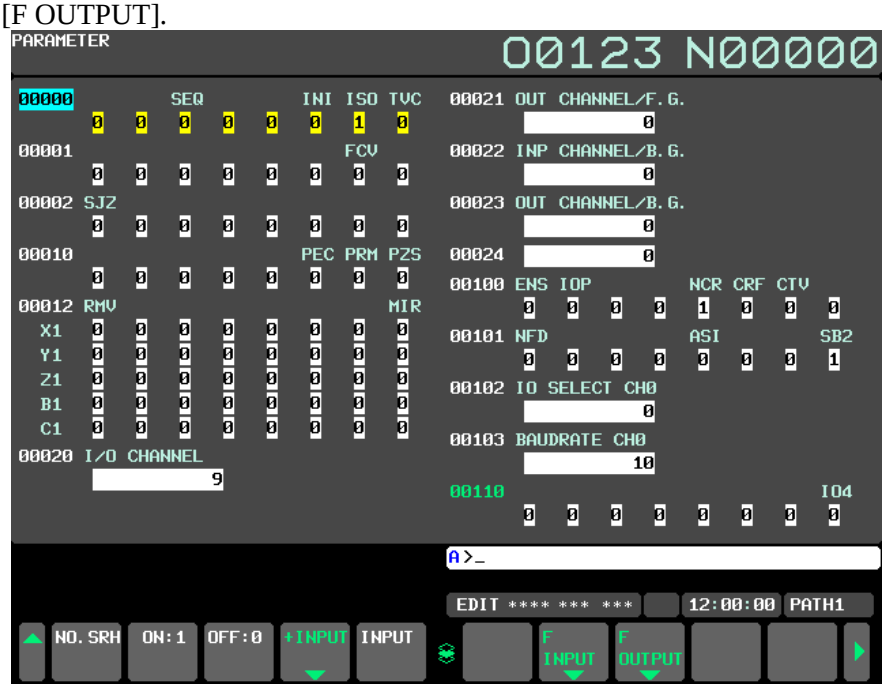

4 Pressing the soft key [F OUTPUT] changes the soft key display as shown below:

5 Press the soft key [EXEC] to start parameter output. When parameters are being output, "OUTPUT" blinks in the state display field on the lower part of the screen.

6 When parameter output terminates, "OUTPUT" stops blinking. Press the [RESET] key to interrupt parameter output.

3.2 INPUTTING PARAMETERS THROUGH THE RS-232C INTERFACE

1 Place the NC in the emergency stop state.

2 Enable parameter writing.

2-1 To display the setting screen, press the function key [OFS/SET] as many times as required, or alternatively press the function key [OFS/SET] once, then the chapter selection soft key [SETTING]. The first page of the setting screen appears.

2-2 Position the cursor on "PARAMETER WRITE" using the cursor keys.

2-3 Press the soft key [(OPRT)] to display operation selection soft keys.

2-4 To set "PARAMETER WRITE=" to 1, press the soft key [ON:1], or alternatively enter 1, then press the soft key [INPUT]. From now on, parameters can be set.
At the same time an alarm SW0100, “PARAMETER WRITE ENABLE” occurs in the NC.

3 To select the parameter screen, press the function key [SYSTEM] as many times as required, or alternatively press the function key [SYSTEM] once, then soft key [PARAM].

4 Press the soft key [(OPRT)] to display operation selection keys, then press the continuous menu key located at the right-hand side of the soft keys to display another set of operation selection soft keys including [F INPUT].

5 Pressing the soft key [F INPUT] changes the soft key display as shown below:

6 Press the soft key [EXEC] to start inputting parameters from the input/output device. When parameters are being input, "INPUT" blinks in the state display field on the lower part of the screen. Press the [RESET] key to interrupt parameter input.

7 When parameter read terminates, "INPUT" stops blinking, and an alarm PW0000 occurs in the NC. Turn it off before continuing operation.

3.3 I/O FORMATS

This section describes the I/O formats of parameters.
Parameters are classified by data format as follows:

Data format	Remarks
Bit	Data of these formats is represented by an 8-digit binary number, with each digit corresponding to a bit.
Bit machine group	
Bit path	
Bit axis	
Bit spindle	
Byte	The setting range of data varies from one parameter to another. For details, refer to the description of each parameter.
Byte machine group	
Byte path	
Byte axis	
Byte spindle	
Word	
Word machine group	
Word path	
Word axis	
Word spindle	
2-word	
2-word machine group	
2-word path	
2-word axis	
2-word spindle	
Real	
Real machine group	
Real path	
Real axis	
Real spindle	

3.3.1 Keywords

The alphabetic characters listed below are used as keywords.
A numeric value after each keyword has the following meaning:

Keyword	Meaning of a numeric value that follows
N	Parameter number
Q	Data identifier (1: Parameter data, 0: Pitch error compensation data)
T	Machine group number (1 and up) of a machine group type parameter
L	Path number (1 and up) of a path type parameter
A	Controlled axis number (1 and up) of an axis type parameter
S	Spindle number (1 and up) of a spindle type parameter
P	Value of a parameter independent of inch/metric switching
M	Metric input value of a parameter dependent on inch/metric switching
I	Inch input value of a parameter dependent on inch/metric switching

3.3.2 Inch/Metric Switching

For parameters dependent on inch/metric switching such as those for length and feedrate, whether data is inch data or metric data is specified by the input mode in the case of input from the MDI panel, or by the keyword I or M prefixed to the data in the case of input from an external I/O device. The keyword I or M is added also when data is output to an external I/O device.
If the input mode or keyword differs from the actually used mode as in a case where data input in the inch mode is used in the metric mode, the CNC performs automatic data conversion. So, data need not be converted according to a mode change. Moreover, when parameter data is displayed, the data is converted according to the display mode. However, when data is output to an external I/O device, the original data is output according to the original keyword.

3.3.3 Bit Format

N	*****	Q1	P	********	;

A numeric value after N represents a parameter number.
Q1 indicates that the data is parameter data.
An 8-digit binary number after P represents the bit values (0/1) of a parameter, with the first digit corresponding to bit 0 and the eighth digit corresponding to bit 7.
Leading zeros may not be omitted.
A semicolon (;) marks the end of a block. (LF is used for the ISO code, and CR is used for the EIA code.)

Example

N00010Q1P00000001;
Parameter No. 10
Parameter value Bit 0 is set to 1, and the other bits are set to 0.

3.3.4 Bit Machine Group Format

N	*****	Q1	T	**	P	********	T	**	P	********	.	. .	;

A numeric value after N represents a parameter number.
Q1 indicates that the data is parameter data.
A numeric value after T represents a machine group number (1 and up).
An 8-digit binary number after P represents the bit values (0/1) of a parameter for each machine group, with the first digit corresponding to bit 0 and the eighth digit corresponding to bit 7.
Leading zeros may not be omitted.
A semicolon (;) marks the end of a block. (LF is used for the ISO code, and CR is used for the EIA code.)

Example

N01005Q1T1P10000001T2P10000001 ;
Parameter No. 1005
Parameter value
1st machine group: Bits 0 and 7 are set to 1, and the other bits are set to 0.
2nd machine group: Bits 0 and 7 are set to 1, and the other bits are set to 0.

3.3.5 Bit Path Format

N	*****	Q1	L	**	P	********	L	**	P	********	.	.	.	;

A numeric value after N represents a parameter number.
Q1 indicates that the data is parameter data.
A numeric value after L represents a path number (1 and up).
An 8-digit binary number after P represents the bit values (0/1) of a parameter for each path, with the first digit corresponding to bit 0 and the eighth digit corresponding to bit 7.
Leading zeros may not be omitted.
A semicolon (;) marks the end of a block. (LF is used for the ISO code, and CR is used for the EIA code.)

Example

N01005Q1L1P10000001L2P10000001.....;
Parameter No. 1005
Parameter value
Path 1: Bits 0 and 7 are set to 1, and the other bits are set to 0.
Path 2: Bits 0 and 7 are set to 1, and the other bits are set to 0.
▪

3.3.6 Bit Axis Format

N	*****	Q1	A	**	P	********	A	**	P	********	.	.	.	;

A numeric value after N represents a parameter number.
Q1 indicates that the data is parameter data.
A numeric value after A represents a controlled axis number (1 and up).
An 8-digit binary number after P represents the bit values (0/1) of a parameter for each controlled axis, with the first digit corresponding to bit 0 and the eighth digit corresponding to bit 7.
Leading zeros may not be omitted.
A semicolon (;) marks the end of a block. (LF is used for the ISO code, and CR is used for the EIA code.)

Example

N01005Q1A1P10000001A2P10000001A3P10000001.....;
Parameter No. 1005
Parameter value
1st axis: Bits 0 and 7 are set to 1, and the other bits are set to 0.
2nd axis: Bits 0 and 7 are set to 1, and the other bits are set to 0.
3rd axis: Bits 0 and 7 are set to 1, and the other bits are set to 0.
▪

3.3.7 Bit Spindle Format

N	*****	Q1	S	**	P	********	S	**	P	********	.	.	.	;

A numeric value after N represents a parameter number.
Q1 indicates that the data is parameter data.
A numeric value after S represents a spindle number (1 and up).
An 8-digit binary number after P represents the bit values (0/1) of a parameter for each spindle, with the first digit corresponding to bit 0 and the eighth digit corresponding to bit 7.
Leading zeros may not be omitted.
A semicolon (;) marks the end of a block. (LF is used for the ISO code, and CR is used for the EIA code.)

Example

N05603Q1S1P00001000S2P00001000S3P00000000;
Parameter No. 5603
Parameter value
1st spindle: Bit 3 is set to 1, and the other bits are set to 0.
2nd spindle: Bit 3 is set to 1, and the other bits are set to 0.
3rd spindle: All bits are set to 0.

3.3.8 Byte/Word/Two-Word Format

N	*****	Q1	P	********	;

A numeric value after N represents a parameter number.
Q1 indicates that the data is parameter data.
A numeric value after P represents a parameter value (integer).
A semicolon (;) marks the end of a block. (LF is used for the ISO code, and CR is used for the EIA code.)

Example

N00100Q1P31515;
Parameter No. 100
Parameter value 31515

3.3.9 Byte/Word/Two-Word Machine Group Format

N	*****	Q1	T	**	P	******	T	**	P	******	.	.	.	;

A numeric value after N represents a parameter number.
Q1 indicates that the data is parameter data.
A numeric value after T represents a machine group number (1 and up).
A numeric value after P represents the value (integer) of a parameter for each machine group.
A semicolon (;) marks the end of a block. (LF is used for the ISO code, and CR is used for the EIA code.)

Example

N01020Q1T1P88T2P89.....;
Parameter No. 1020
Parameter value 1st machine group: 88
2nd machine group: 89
▪

3.3.10 Byte/Word/Two-Word Path Format

N	*****	Q1	L	**	P	******	L	**	P	******	.	.	.	;

A numeric value after N represents a parameter number.
Q1 indicates that the data is parameter data.
A numeric value after L represents a path number (1 and up).
A numeric value after P represents the value (integer) of a parameter for each path.
A semicolon (;) marks the end of a block. (LF is used for the ISO code, and CR is used for the EIA code.)

Example

N01020Q1L1P88L2P89L3P90.....;

Parameter No.	1020
Parameter value	Path 1: 88
	Path 2: 89
	Path 3: 90
	.

3.3.11 Byte/Word/Two-Word Axis Format

N	*****	Q1	A	**	P	******	A	**	P	******	.	.	.	;

A numeric value after N represents a parameter number.
Q1 indicates that the data is parameter data.
A numeric value after A represents a controlled axis number (1 and up).
A numeric value after P represents the value (integer) of a parameter for each controlled axis.
A semicolon (;) marks the end of a block. (LF is used for the ISO code, and CR is used for the EIA code.)

Example

N01020Q1A1P88A2P89A3P90A4P66.....;

Parameter No.	1020
Parameter value	1st axis: 88
	2nd axis: 89
	3rd axis: 90
	4th axis: 66
	.

3.3.12 Byte/Word/Two-Word Spindle Format

N	*****	Q1	S	**	P	******	S	**	P	******	.	.	.	;

A numeric value after N represents a parameter number.
Q1 indicates that the data is parameter data.
A numeric value after S represents a spindle number (1 and up).
A numeric value after P represents the value (integer) of a parameter for each spindle.
A semicolon (;) marks the end of a block. (LF is used for the ISO code, and CR is used for the EIA code.)

Example
N05680Q1S1P19S2P19S3P0S4P0;

Parameter No.	5680
Parameter value	1st spindle: 19
	2nd spindle: 19
	3rd spindle: 0
	4th spindle: 0

3.3.13 Real Number Format

N	*****	Q1	P	******	;

N	*****	Q1	M	******	;

N	*****	Q1	I	******	;

A numeric value after N represents a parameter number.
Q1 indicates that the data is parameter data.
A numeric value after each of P, M, and I represents the value (real number) of a parameter.
A semicolon (;) marks the end of a block. (LF is used for the ISO code, and CR is used for the EIA code.)

Example
N01451Q1P5000.0;

Parameter No.	1451
Parameter value	5000.0

3.3.14 Real Number Machine Group Format

N	*****	Q1	T	**	P	******	T	**	P	******	·	·	·	;

N	*****	Q1	T	**	M	******	T	**	M	******	·	·	·	;

N	*****	Q1	T	**	I	******	T	**	I	******	·	·	·	;

A numeric value after N represents a parameter number.
Q1 indicates that the data is parameter data.
A numeric value after T represents a machine group number (1 and up).
A numeric value after each of P, M, and I represents the value (real number) of a parameter for each machine group.
A semicolon (;) marks the end of a block. (LF is used for the ISO code, and CR is used for the EIA code.)

Example

N01220Q1T1M50.0T2M60.0.....;

Parameter No.	1220
Parameter value	1st machine group: 50.0
	2nd machine group: 60.0
	▪

3.3.15 Real Number Path Format

N	*****	Q1	L	**	P	******	L	**	P	******	·	·	·	;

N	*****	Q1	L	**	M	******	L	**	M	******	·	·	·	;

N	*****	Q1	L	**	I	******	L	**	I	******	·	·	·	;

A numeric value after N represents a parameter number.
Q1 indicates that the data is parameter data.
A numeric value after L represents a path number (1 and up).
A numeric value after each of P, M, and I represents the value (real number) of a parameter for each path.
A semicolon (;) marks the end of a block. (LF is used for the ISO code, and CR is used for the EIA code.)

Example

N01220Q1L1M50.0L2M60.0L3M70.0 ;

Parameter No.	1220
Parameter value	Path 1: 50.0
	Path 2: 60.0
	Path 3: 70.0

3.3.16 Real Number Axis Format

N	*****	Q1	A	**	P	******	A	**	P	******	·	·	·	;

N	*****	Q1	A	**	M	******	A	**	M	******	·	·	·	;

N	*****	Q1	A	**	I	******	A	**	I	******	·	·	·	;

A numeric value after N represents a parameter number.
Q1 indicates that the data is parameter data.
A numeric value after A represents a controlled axis number (1 and up).
A numeric value after each of P, M, and I represents the value (real number) of a parameter for each controlled axis.
A semicolon (;) marks the end of a block. (LF is used for the ISO code, and CR is used for the EIA code.)

Example

N01220Q1A1M50.0A2M60.0A3M70.0A4M0.0A5M0.0 .....;

Parameter No.	1220
Parameter value	1st axis: 50.0
	2nd axis: 60.0
	3rd axis: 70.0
	4th axis: 0.0
	5th axis: 0.0
	▪

3.3.17 Real Number Spindle Format

N	*****	Q1	S	**	P	******	S	**	P	******	·	·	·	;

N	*****	Q1	S	**	M	******	S	**	M	******	·	·	·	;

N	*****	Q1	S	**	I	******	S	**	I	******	·	·	·	;

A numeric value after N represents a parameter number.
Q1 indicates that the data is parameter data.
A numeric value after S represents a spindle number (1 and up).
A numeric value after each of P, M, and I represents the value (real number) of a parameter for each spindle.
A semicolon (;) marks the end of a block. (LF is used for the ISO code, and CR is used for the EIA code.)

Example

N05898Q1S1P30.0S2P30.0S3P0.0S4P0.0;

Parameter No.	5898
Parameter value	1st spindle: 30.0
	2nd spindle: 30.0
	3rd spindle: 0.0
	4th spindle: 0.0

3.3.18 Start and End of a Record

A parameter record starts with "%" and ends with "%".

Example

```
%;              ........................................ Start of record
N00000Q1P00001100;
N00002Q1P00000000;
▪
▪
N09162Q1P00000000;
N09163Q1P00000000;
....%           ........................................ End of record
```

When parameters and pitch error compensation data are included in a single file, the file starts with "%" and ends with "%".

4 DESCRIPTION OF PARAMETERS

4.1 INPUT TYPE

There are two input types for parameters depending on their usage.

Setting input

These parameters are set depending on NC programs or machining usage.
When the memory protection signal KEY is “1”, they can be input on SETTING screen.
They can also be input on PARAMETER screen.

Parameter input

These parameters are adjusted and set depending on each machine.
They can be input on PARAMETER screen.

NOTE
To make input on PARAMETER screen enable, it is needed that PARAMETER WRITE on SETTING screen is 1 or that parameter PWE (No.8900#0) is 1.

4.2 DATA TYPE

Parameters are classified by data type as follows:

Data type	Valid data range	Remarks
Bit	0 or 1	
Bit machine group		
Bit path		
Bit axis		
Bit spindle		
Byte	-128 to 127 0 to 255	Some parameters handle these types of data as unsigned data.
Byte machine group		
Byte path		
Byte axis		
Byte spindle		
Word	-32768 to 32767 0 to 65535	Some parameters handle these types of data as unsigned data.
Word machine group		
Word path		
Word axis		
Word spindle		
2-word	0 to ±999999999	Some parameters handle these types of data as unsigned data.
2-word machine group		
2-word path		
2-word axis		
2-word spindle		
Real	See the Standard Parameter Setting Tables.	
Real machine group		
Real path		
Real axis		
Real spindle		

NOTE

1 Each of the parameters of the bit, bit machine group, bit path, bit axis, and bit spindle types consists of 8 bits for one data number (parameters with eight different meanings).
2 For machine group types, parameters corresponding to the maximum number of machine groups are present, so that independent data can be set for each machine group.
3 For path types, parameters corresponding to the maximum number of paths are present, so that independent data can be set for each path.
4 For axis types, parameters corresponding to the maximum number of control axes are present, so that independent data can be set for each control axis.
5 For spindle types, parameters corresponding to the maximum number of spindles are present, so that independent data can be set for each spindle axis.
6 The valid data range for each data type indicates a general range. The range varies according to the parameters. For the valid data range of a specific parameter, see the explanation of the parameter.

4.3 REPRESENTATION OF PARAMETERS

Parameters of the bit type, bit machine group type, bit path type, bit axis type, and bit spindle type

	#7	#6	#5	#4	#3	#2	#1	#0
0000				EIA	NCR	ISP	CTV	TVC
Data No.	Data (Data #0 to #7 are bit positions.)							

Parameters other than the bit-type parameters above

1023	Number of the servo axis for each axis
Data No.	Data

NOTE

1 The bits left blank in Chapter 4, “DESCRIPTION OF PARAMETERS” and parameter numbers that appear on the display but are not found in the parameter list are reserved for future expansion. They must always be 0.

2 A parameter usable with only one path control type, namely, the lathe system (T series) or the machining center system (M series), is indicated using two rows as shown below. When a row is blank, the parameter is not usable with the corresponding series.

[Example 1]

Parameter HTG is a parameter common to the M and T series, but Parameters RTV and ROC are parameters valid only for the T series.

	#7	#6	#5	#4	#3	#2	#1	#0	
1403	RTV		HTG	ROC					T series
			HTG						M series

[Example 2]

The following parameter is provided only for the M series.

1411		T series
	Cutting feedrate	M series

3 When "to" is inserted between two parameter numbers, there are parameters with successive numbers between the two starting and ending parameter numbers, but those intermediate parameter numbers are omitted for convenience.

4 The lower-case letter "x" or "s" following the name of a bit-type parameter indicates the following:

- ”□□□x” : Bit axis type parameters
- ”○○○s” : Bit spindle type parameters

4.4 STANDARD PARAMETER SETTING TABLES

Overview

This section defines the standard minimum data units and valid data ranges of the CNC parameters of the real type, real machine group type, real path type, real axis type, and real spindle type. The data type and unit of data of each parameter conform to the specifications of each function.

Explanation

(A) Length and angle parameters (type 1)

Unit of data	Increment system	Minimum data unit	Valid data range
mm deg.	IS-A	0.01	-999999.99 to +999999.99
	IS-B	0.001	-999999.999 to +999999.999
	IS-C	0.0001	-99999.9999 to +99999.9999
Inch	IS-A	0.001	-99999.999 to +99999.999
	IS-B	0.0001	-99999.9999 to +99999.9999
	IS-C	0.00001	-9999.99999 to +9999.99999

(B) Length and angle parameters (type 2)

Unit of data	Increment system	Minimum data unit	Valid data range
mm deg.	IS-A	0.01	0.00 to +999999.99
	IS-B	0.001	0.000 to +999999.999
	IS-C	0.0001	0.0000 to +99999.9999
Inch	IS-A	0.001	0.000 to +99999.999
	IS-B	0.0001	0.0000 to +99999.9999
	IS-C	0.00001	0.00000 to +9999.99999

(C) Velocity and angular velocity parameters

Unit of data	Increment system	Minimum data unit	Valid data range
mm/min degree/min	IS-A	0.01	0.00 to +999000.00
	IS-B	0.001	0.000 to +999000.000
	IS-C	0.0001	0.0000 to +99999.9999
inch/min	IS-A	0.001	0.000 to +96000.000
	IS-B	0.0001	0.0000 to +9600.0000
	IS-C	0.00001	0.00000 to +4000.00000

If bit 7 (IESP) of parameter No. 1013 is set to 1, the valid data range for IS-C is extended as follows:

Unit of data	Increment system	Minimum data unit	Valid data range
mm/min degree/min	IS-C	0.001	0.000 to +999000.000
inch/min	IS-C	0.0001	0.0000 to +9600.0000

(D)Acceleration and angular acceleration parameters

Unit of data	Increment system	Minimum data unit	Valid data range
mm/sec^2 deg./sec^2	IS-A	0.01	0.00 to +999999.99
	IS-B	0.001	0.000 to +999999.999
	IS-C	0.0001	0.0000 to +99999.9999
inch/sec^2	IS-A	0.001	0.000 to +99999.999
	IS-B	0.0001	0.0000 to +99999.9999
	IS-C	0.00001	0.00000 to +9999.99999

If bit 7 (IESP) of parameter No. 1013 is set to 1, the valid data range for IS-C is extended as follows:

Unit of data	Increment system	Minimum data unit	Valid data range
mm/sec^2 degree/sec^2	IS-C	0.001	0.000 to +999999.999
inch/sec^2	IS-C	0.0001	0.0000 to +99999.9999

Machine unit and Input unit

There are 2 unit types which are "machine unit" and "input unit" for "unit of data".

Machine unit

Machine unit is output unit by CNC. This unit has metric system and inch system which depending on ball screw or the like of machine. Machine unit is set by parameter INM(No.1001#0).
This unit is not affected by switching the input unit (metric input/inch input) by inch/metric conversion function.

Input unit

Input unit is programming unit. This unit has metric input and inch input. The input unit parameters are set according to metric/inch input.

When input unit (metric input/inch input) is switched by inch/metric conversion function, the set value of input unit parameters are converted automatically.

Notes

(1) Values are rounded up or down to the nearest multiples of the minimum data unit.
(2) A valid data range means data input limits, and may differ from values representing actual performance.
(3) For information on the ranges of commands to the CNC, refer to Appendix D, "RANGE OF COMMAND VALUE" in the "OPERATOR'S MANUAL (Common to Lathe System/Machining Center System)" (B-64694EN).

4.5 PARAMETERS OF SETTING

	#7	#6	#5	#4	#3	#2	#1	#0
0000			SEQ			INI	ISO	TVC

[Input type] Setting input
[Data type] Bit path

#0 TVC TV check
0: Not performed
1: Performed

#1 ISO Code used for data output
0: EIA code
1: ISO code

NOTE
1 The I/O setting of a memory card is made by bit 0 (ISO) of parameter No. 0139.
2 The I/O setting of an USB memory is made by bit 0 (ISU) of parameter No. 11505.
3 The I/O setting of a data server is made by bit 0 (ISO) of parameter No. 0908.
4 When EIA code is used for data output (ISO = 0), set bit 3 (ASI) of parameter No.0101 and 0111 and 0121 to 0.

#2 INI Unit of input
0: In metrics
1: In inches

#5 SEQ Automatic insertion of sequence numbers
0: Not performed
1: Performed

	#7	#6	#5	#4	#3	#2	#1	#0
0001							FCV	

[Input type] Setting input
[Data type] Bit path

#1 FCV Program format
0: Series 16 standard format

1: Series 15 format

NOTE
1 Programs created in the Series 15 program format can be used for operation on the following functions:
  1 Subprogram call M98
  2 Thread cutting G32 (T series)
  3 Canned cycle G90, G92, G94 (T series)
  4 Multiple repetitive canned cycle
    G71 to G76 (T series) / G71.7 to G71.6 (M series)
  5 Drilling canned cycle
    G83.1, G80 to G89 (T series) / G73, G74, G76, G80 to G89 (M series)
2 When the program format used in the Series 15 is used for this CNC, some limits may add. Refer to the Operator's Manual.

	#7	#6	#5	#4	#3	#2	#1	#0
0002	SJZ							

[Input type] Setting input
[Data type] Bit

#7 SJZ On an axis for which bit 3 (HJZx) of parameter No. 1005 is set:
0: If a reference position is not established yet, reference position return is performed with deceleration dogs.
If a reference position is already established, reference position return is performed at a parameter-set feedrate without using deceleration dogs.
1: Reference position return is performed with deceleration dogs at all times.

NOTE
SJZ is valid for an axis for which bit 3 (HJZx) of parameter No. 1005 is set to 1. When bit 1 (DLZx) of parameter No. 1005 is set to 1, however, manual reference position return after a reference position is set is performed at a parameter-set feedrate, regardless of the setting of SJZ.

	#7	#6	#5	#4	#3	#2	#1	#0
0010						PEC	PRM	PZS

[Input type] Setting input
[Data type] Bit path

#0 PZS When a part program is output, the O number is:
0: Not zero-suppressed.
1: Zero-suppressed.

#1 PRM When parameters are output, the parameters whose values are 0 are:
0: Output.
1: Not output.

#2 PEC When pitch error compensation data is output, the data whose value is 0 is:
0: Output.
1: Not output.

	#7	#6	#5	#4	#3	#2	#1	#0
0012	RMVx							MIRx

[Input type] Setting input
[Data type] Bit axis

#0 MIRx Mirror image for each axis
0: Mirror image is off. (Normal)
1: Mirror image is on. (Mirror)

#7 RMVx Releasing the assignment of the control axis for each axis
0: Not released
1: Released
(Equivalent to the control axis detachment signals DTCH1, DTCH2, and so forth <G0124>)

NOTE
1 RMVx is valid when bit 7 (RMBx) of parameter No. 1005 is set to 1.
2 Switch RMVx while the axis is stopping.
When switching while the axis is moving, the control axis is detached after the movement of the axis is completed.

4.6 PARAMETERS OF RS-232C INTERFACE

To transfer data (programs, parameters, and so forth) to and from an external input/output device through the I/O device interface (RS-232C serial interface), the parameters described below need to be set.
The input/output device connected to a channel (such as RS-232C serial port 1 and RS-232C serial port 2) can be selected by setting I/O CHANNEL (parameter No. 0020). The specifications (input/output specification number, baud rate, and the number of stop bits) of an input/output device connected to each channel must be set in the parameters corresponding to each channel beforehand.
For channel 1, two combinations of parameters to specify the input/output device data are provided.
The following shows the interrelation between the input/output device interface parameters for the channels.

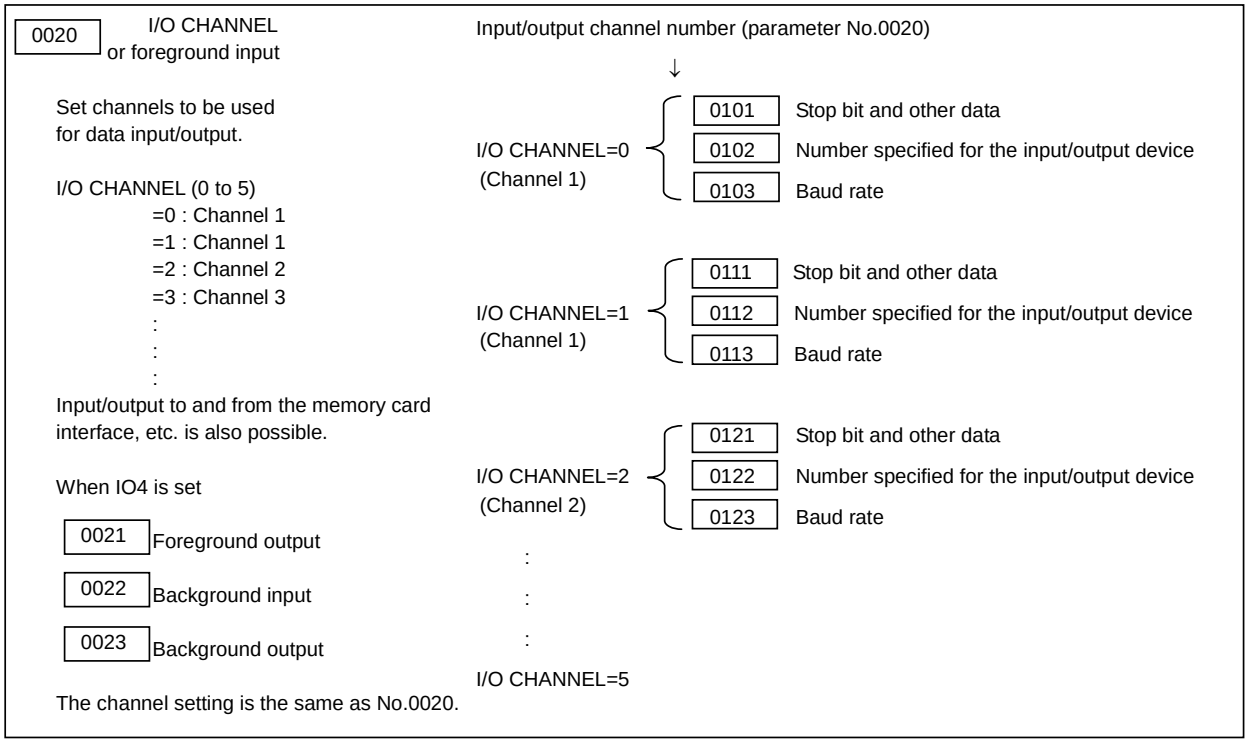

4.6.1 Parameters Common to All Channels

0020	**I/O CHANNEL : Input/output device selection, or interface number for a foreground input device**
0021	**Foreground output device setting**
0022	**Background input device setting**
0023	**Background output device setting**

[Input type] Setting input
[Data type] Byte
[Valid data range] 0 to 17

The CNC has the following interfaces for transferring data to and from an external input/output device and the host computer:

Input/output device interface (RS-232C serial ports 1 and 2)
Memory card interface
Data server interface
Embedded Ethernet interface
USB memory interface

By setting bit 0 (IO4) of parameter No. 0110, data input/output can be controlled separately. When IO4 is not set, data input/output is performed using the channel set in parameter No. 0020. When IO4 is set, a channel can be assigned to each of foreground input, foreground output, background input, and background output.

In these parameters, specify the interface connected to each input/output device to and from which data is to be transferred. See the table below for these settings.

Correspondence between settings and input/output devices	
Setting	**Description**
0,1	RS-232C serial port 1
2	RS-232C serial port 2

Correspondence between settings and input/output devices	
Setting	**Description**
4	Memory card interface of CNC Memory card/USB interface in the secondary display unit for Ethernet connection or the shared display unit for Ethernet connection
5	Data server interface
9	Embedded Ethernet interface
17	USB memory interface

0024	Setting of communication with the ladder development tool (FANUC LADDER-III, ladder editing package)

[Input type] Setting input
[Data type] Word
[Valid data range] 0 to 255

This parameter is used to enable or disable the PMC online connection function.
By specifying this parameter, the PMC online connection function can be enabled or disabled without displaying the PMC online setting screen.

Setting	RS-232C	High-speed interface
0	The setting on the PMC online setting screen is not altered.	
1	To be used (channel 1)	Not to be used
2	To be used (channel 2)	Not to be used
10	Not to be used	To be used
11	To be used (channel 1)	To be used
12	To be used (channel 2)	To be used
255	Communication is terminated forcibly (as with the [FORCED STOP] soft key).	

NOTE

1 The setting of this parameter becomes valid when the power is turned on or this parameter is modified. After this parameter is set, the power need not be turned off then back on.
2 A setting modification made on the PMC online setting screen is not reflected in this parameter.
3 The communication settings of a baud rate and so forth for using RS-232C made on the PMC online setting screen are valid. When no modification is ever made to the settings on the PMC online setting screen, the baud rate is 9600, parity is not used, and the number of stops bits is 2.
4 If you set this parameter to 1, 2, 11, or 12, the PMC online monitor occupies the specified RS-232C communications port. To use the communications port for the Handy File, for example, set the parameter to 255 to prevent the RS-232C port from being used by the PMC online monitor.

	#7	#6	#5	#4	#3	#2	#1	#0
0100	ENS	IOP			NCR	CRF	CTV	

[Input type] Setting input
[Data type] Bit

#1 CTV Character counting for TV check in the comment section of a program.
0: Performed
1: Not performed

#2 CRF Output of the end of block (EOB) in ISO code
0: Depends on the setting of bit 3 (NCR) of parameter No. 0100.
1: CR, LF are output.

#3 NCR Output of the end of block (EOB) in ISO code
0: LF, CR, CR are output.
1: Only LF is output.

#6 IOP Stopping a program output or input operation by a reset is:
0: Enabled
1: Disabled

#7 ENS Action taken when a NULL code is found during read of EIA code
0: An alarm is generated.
1: The NULL code is ignored.

	#7	#6	#5	#4	#3	#2	#1	#0
0110								IO4

[Input type] Parameter input
[Data type] Bit

> **NOTE**
> When this parameter is set, the power must be turned off before operation is continued.

#0 IO4 Separate control of I/O channel numbers is:
0: Not performed.
1: Performed.
If the I/O channels are not separately controlled, set the input/output device in parameter No. 0020.
If the I/O channels are separately controlled, set the input device and output device in the foreground and the input device and output device in the background in parameters No. 0020 to No. 0023 respectively.
Separate control of I/O channels makes it possible to perform background editing, program input/output, and the like during the DNC operation.

	#7	#6	#5	#4	#3	#2	#1	#0
0138	MNC							MDP

[Input type] Parameter input
[Data type] Bit

#0 MDP To the extensions of input/output files, a path number is:
0: Not added.
1: Added.

> **NOTE**
> If a file name is specified by setting F, this parameter is ignored, and a path number is not added to the extension.

#7 MNC DNC operation from the memory card and external device subprogram call from the memory card are:
0: Not performed.

1: Performed.

	#7	#6	#5	#4	#3	#2	#1	#0
0139								ISO

[Input type] Setting input
[Data type] Bit

#0 ISO When a memory card is selected as an I/O device, data input/output is performed using
0: ASCII codes.
1: ISO codes.

> **NOTE**
> See Appendix J, "ISO/ASCII code conversion tool" in the "OPERATOR'S MANUAL" (B-64694EN) for conversion between ISO and ASCII code.

> ⚠ **WARNING**
> 1 Unless data is input using ASCII codes, set this parameter to 1 to input or output data using ISO codes.
> 2 Data input/output with ASCII codes is dangerous because parity information is not included and a data error during the data input/output is not detected.
> 3 DNC operation from a memory card also must set the parameter to 1, and execute DNC operation by ISO code. ASCII code is dangerous because parity information is not included and a data error during the data input is not detected.

	#7	#6	#5	#4	#3	#2	#1	#0
0313							TFO	BOP

[Input type] Parameter input
[Data type] Bit

#0 BOP NC data output function is:
0: Disabled.
1: Enabled.

> **NOTE**
> If a file with the same name already exists in the external I/O device, the file is overwritten. It is recommended to clear the external I/O device before using this function.

#1 TFO On NC data output function, text data (such as parameter, program) is:
0: Output.
1: Not output.

4.6.2 Parameters of Channel 1 (I/O CHANNEL=0)

	#7	#6	#5	#4	#3	#2	#1	#0
0101	NFD				ASI			SB2

[Input type] Parameter input
[Data type] Bit

#0 SB2 The number of stop bits
0: 1
1: 2

> **NOTE**
> This parameter is Initial setting parameter. For details, refer to the appendix "Automatic setting / Initial setting parameter" in CONNECTION MANUAL (FUNCTION) (B-64693EN-1).

#3 ASI Code used at data input/output
0: EIA or ISO code (input: automatically distinguished/output: decided by the setting parameter of bit 1 (ISO) of parameter No.0000)
1: ASCII code

> **NOTE**
> When ASCII code is used for data input/output (ASI = 1), set bit 1 (ISO) of parameter No.0000 to 1.

#7 NFD Feed before and after the data at data output
0: Output
1: Not output
When input/output devices other than the FANUC PPR are used, set NFD to 1.

> **NOTE**
> This parameter is Initial setting parameter. For details, refer to the appendix "Automatic setting / Initial setting parameter" in CONNECTION MANUAL (FUNCTION) (B-64693EN-1).

0102	Number specified for the input/output device (when the I/O CHANNEL is set to 0)

[Input type] Parameter input
[Data type] Byte
[Valid data range] 0 to 6
Set the specification number of the input/output device corresponding to I/O CHANNEL=0.
The following table lists the specification numbers and corresponding input/output device specifications.

Specification numbers and corresponding input/output device specifications

Specification number	Input/output device specification
0	RS-232C (control codes DC1 to DC4 are used)
1	FANUC CASSETTE ADAPTOR 1(FANUC CASSETTE B1/B2)
2	FANUC CASSETTE ADAPTOR 3(FANUC CASSETTE F1)

Specification number	Input/output device specification
3	FANUC PROGRAM FILE Mate、FANUC FA Card Adaptor, FANUC FLOPPY CASSETTE ADAPTOR, FANUC Handy File FANUC SYSTEM P-MODEL H
4	RS-232C (control codes DC1 to DC4 are not used)
5	Portable tape reader
6	FANUC PPR FANUC SYSTEM P-MODEL G, FANUC SYSTEM P-MODEL H

0103	Baud rate (when I/O CHANNEL is set to 0)

[Input type] Parameter input
[Data type] Byte
[Valid data range] 1 to 12
Set the baud rate of the input/output device corresponding to I/O CHANNEL=0.
When setting this parameter, see the following table:

Baud rates and corresponding settings

Setting	Baud rate (bps)	Setting	Baud rate (bps)
1	50	8	1200
3	110	9	2400
4	150	10	4800
6	300	11	9600
7	600	12	19200

NOTE
This parameter is Initial setting parameter. For details, refer to the appendix "Automatic setting / Initial setting parameter" in CONNECTION MANUAL (FUNCTION) (B-64693EN-1).

4.6.3 Parameters of Channel 1 (I/O CHANNEL=1)

	#7	#6	#5	#4	#3	#2	#1	#0
0111	NFD				ASI			SB2

[Input type] Parameter input
[Data type] Bit

#0 SB2 The number of stop bits
0: 1
1: 2

#3 ASI Code used at data input/output
0: EIA or ISO code (input: automatically distinguished/output: decided by the setting parameter of bit 1 (ISO) of parameter No.0000)
1: ASCII code

NOTE
When ASCII code is used for data input/output (ASI = 1), set bit 1 (ISO) of parameter No.0000 to 1.

#7 NFD Feed before and after the data at data output
0: Output

1: Not output
When input/output devices other than the FANUC PPR are used, set NFD to 1.

0112	Number specified for the input/output device (when the I/O CHANNEL is set to 1)

[Input type] Parameter input
[Data type] Byte
[Valid data range] 0 to 6
Set the specification number of the input/output device corresponding to I/O CHANNEL=1.

0113	Baud rate (when I/O CHANNEL is set to 1)

[Input type] Parameter input
[Data type] Byte
[Valid data range] 1 to 12
Set the baud rate of the input/output device corresponding to I/O CHANNEL=1.

4.6.4 Parameters of Channel 2 (I/O CHANNEL=2)

	#7	#6	#5	#4	#3	#2	#1	#0
0121	NFD				ASI			SB2

[Input type] Parameter input
[Data type] Bit

#0 SB2 The number of stop bits
0: 1
1: 2

#3 ASI Code used at data input/output
0: EIA or ISO code (input: automatically distinguished/output: decided by the setting parameter of bit 1 (ISO) of parameter No.0000)
1: ASCII code

NOTE
When ASCII code is used for data input/output (ASI = 1), set bit 1 (ISO) of parameter No.0000 to 1.

#7 NFD Feed before and after the data at data output
0: Output
1: Not output

0122	Number specified for the input/output device (when the I/O CHANNEL is set to 2)

[Input type] Parameter input
[Data type] Byte
[Valid data range] 0 to 6
Set the specification number of the input/output device corresponding to I/O CHANNEL=2.

0123	Baud rate (when I/O CHANNEL is set to 2)

[Input type] Parameter input

[Data type] Byte
[Valid data range] 1 to 12
Set the baud rate of the input/output device corresponding to I/O CHANNEL=2.

4.7 PARAMETERS OF CNC SCREEN DISPLAY FUNCTIONS

	#7	#6	#5	#4	#3	#2	#1	#0
0300								PCM

[Input type] Setting input
[Data type] Bit

#0 PCM If the CNC main unit has a memory card interface or if the FS0*i* is in use and connected to a PC via the HSSB or Ethernet interface, when the CNC screen display function is started:
0: The memory card interface on the CNC side is used.
1: The memory card interface on the PC side is used.
When the CNC screen dual display function is active, the data input source and output destination are linked to a key entry choice.
If the CNC main unit has no memory card interface, the memory card interface on the PC side is used regardless of the setting of this parameter. This parameter is valid only while the CNC screen display function is active.

4.8 PARAMETERS OF ETHERNET/DATA SERVER FUNCTIONS

	#7	#6	#5	#4	#3	#2	#1	#0
0901							EFT	

[Input type] Parameter input
[Data type] Bit Path

#1 EFT The FTP file transfer function by the Ethernet function is:
0: Not used.
1: Used.

> **NOTE**
> In a multi-path system, the setting of the parameter for path 1 is used throughout the system.

	#7	#6	#5	#4	#3	#2	#1	#0
0904	LCH	DHC	DNS	UNM				BWT

[Input type] Parameter input
[Data type] Bit

#0 BWT If FTP communication is behind data supply during DNC operation in the buffer mode of the Data Server function:
0: An error is caused.
1: No error is caused and DNC operation continues after waiting the completion of FTP communication.

#4 UNM The CNC Unsolicited Messaging function is:
0: Not used.
1: Used.

#5 DNS The DNS client function is:
0: Not used.
1: Used.

#6 DHC The DHCP client function is:
0: Not used.
1: Used.

#7 LCH In the LIST-GET service of the Data Server function, when a list file specifies 1025 or more files:
0: A check for duplicated file names is performed.
1: A check for duplicated file names is not performed.

	#7	#6	#5	#4	#3	#2	#1	#0
0905				UNS	DSF		PCH	DNE

[Input type] Parameter input
[Data type] Bit

#0 DNE During DNC operation using the FOCAS2/Ethernet functions, the termination of DNC operation is:
0: Waited.
1: Not waited. (FOCAS2/HSSB compatible specification)

#1 PCH At the start of communication of the Data Server function, FTP file transfer function, or machine remote diagnosis function, checking for the presence of the server using PING is:
0: Performed.
1: Not performed.

> **NOTE**
> Usually, set 0.
> If 1 is set not to check the presence of the server by using PING, it may take several tens of seconds to recognize an error when the server is not present in the network.
> For mainly security reasons, a personal computer may be set so that it does not respond to the PING command. To communicate with such a personal computer, set 1.

#3 DSF When an NC program is stored on the memory card of the Data Server:
0: The file name takes priority.
1: The program name in the NC program takes priority.

> **NOTE**
> Only when the file of the personal computer side is registered to the memory card of the data server by operating the CNC side, this parameter becomes effective.

#4 UNS In the CNC Unsolicited Messaging function, when the end of the function is requested by other than the CNC Unsolicited Messaging server currently connected:
0: The request for the end of the function is rejected.
1: The request for the end of the function is accepted.

	#7	#6	#5	#4	#3	#2	#1	#0
0906	FSP	EXP	SCM		PSV	OVW		

[Input type] Parameter input
[Data type] Bit

#2 OVW When the Data Server is working as an FTP server, if it receives a file having the same name as for an existing file in it from an FTP client:
0: An error occurs.
1: No error occurs, and the existing file is overwritten with the received file.

> **NOTE**
> The data server Explorer connection function is necessary to use this parameter.

#3 PSV The FTP clients of the Data Server functions or FTP file transfer function operate in:
0: Active mode.
1: Passive mode.

> **NOTE**
> When this parameter is set, the power must be turned off before operation is continued.

#5 SCM Data Server function accesses its memory card with the forwarding mode:
0: A memory card-supported mode recognized by Data Server.
1: A traditional PIO mode2.

> **NOTE**
> When this parameter is set, the power must be turned off before operation is continued.

#6 EXP When Data Server function operates as FTP server and FTP client executes the GET operation of a text file in the binary mode, EOB (End Of Block) is changed to:
0: the value according to the settings of bit 2 (CRF) and bit 3 (NCR) of parameter No. 0100.
1: "LF".

NOTE
1 Usually set 0.
When 0 is set to this parameter and a text file is gotten from a specific FTP client such as Windows Explorer, the text file may not be able to be gotten correctly.
When using such an FTP client, set 1 to this parameter.
2 When 1 is set to this parameter and a text file is gotten from an FTP client, no blank for TV check is added.
Therefore, the file may not be able to be input into CNC that TV check is effective.

#7 FSP When Data Server function operates as FTP server and the NC programs are stored on the memory card on Data Server.
0: The file name takes priority.
1: The program name in the NC program takes priority.

NOTE
This parameter is valid only when files in a personal computer are registered as text files on the memory card on the Data Server by personal computer operation.
When 1 is set to this parameter, a file is registered with the program name in the NC program even if a request is made to rename and register the file on the personal computer.

	#7	#6	#5	#4	#3	#2	#1	#0
0907	CLR				TIP			

[Input type] Parameter input
[Data type] Bit

#3 TIP TCP/IP Communication function for C Language Executor is:
0: Not used.
1: Used.

#7 CLR When the memory card built into the Data Server is formatted, data erasure process that write a stream of zeros data onto all areas of the memory card is:
0: Not performed.
1: Performed.

	#7	#6	#5	#4	#3	#2	#1	#0
0908								ISO

[Input type] Setting input
[Data type] Bit

#0 ISO When a data server is selected as an I/O device, data input/output is performed using
0: ASCII codes.
1: ISO codes.

	#7	#6	#5	#4	#3	#2	#1	#0
0909								HDS

[Input type] Parameter input

[Data type] Bit

#0 HDS On the Data server host file list screen, high speed file search is:
0: Invalid.
1: Valid.

> **NOTE**
> When this parameter is set, the power must be turned off before operation is continued.
> This parameter is Automatic setting parameter. For details, refer to the appendix "Automatic setting / Initial setting parameter" in CONNECTION MANUAL (FUNCTION) (B-64693EN-1).

0921	Selects the host computer 1 OS.
0922	Selects the host computer 2 OS.
0923	Selects the host computer 3 OS.

[Input type] Parameter input
[Data type] Word
[Valid data range] 0 to 2
Set the OS type of the host computer that is connected by Data Server function or FTP File Transfer function.
0: Windows.
1: UNIX, VMS.
2: Linux.

> **NOTE**
> Some FTP server software products do not depend on the OS. So, even when the above parameters are set, it is sometimes impossible to display a list of files properly.

0924	FOCAS2/Ethernet waiting time setting

[Input type] Parameter input
[Data type] Word
[Unit of data] millisecond
[Valid data range] 0 to 32767
When the FOCAS2/Ethernet and Data Server functions are used simultaneously, this parameter sets the FOCAS2/Ethernet function waiting time in milliseconds.
When a value of 0 is set, the functions operate with assuming that 1 millisecond is specified.

0928	Cache validity period of Data Server Host File List information

[Input type] Parameter input
[Data type] Word
[Unit of data] min
[Valid data range] -1, 0 to 100

Specify the cache validity period of Data Server Host File List information in minutes. When the display operation is performed after the validity period expires, the file information is read again and updated.
When this parameter is set to 0, the cache is disabled.
When this parameter is set to -1, the cache is enabled and the validity period is unlimited. The cache will not be updated until display update operation is performed.
If less than -1 is specified, it assumed to be -1, and if more than 100 is specified, it assumed to be 100.

NOTE
1 When this parameter is set, the power must be turned off before operation is continued.
2 When this parameter is set to other than 0, information in the cache is displayed on the DATA SERVER HOST FILE LIST screen. For that reason, it may be different from the list information in the host computer.

0929	File attribute specification during FTP server operation

[Input type] Parameter input
[Data type] Word
[Valid data range] 0 to 2

This parameter sets whether to give priority to the file attribute specified in a TYPE command of FTP during operation as an FTP server.
0: Priority is given to the file attribute specified in a TYPE command from an FTP client.
1: Text files are always assumed.
2: Binary files are always assumed.

0930	Maximum number of files that can be registered to the memory card of the Data Server and maximum size per file that can be registered

[Input type] Parameter input
[Data type] Word
[Valid data range] 0, 10 to 15

No. 930	Maximum number of files	Maximum size per file
0	2047	512MB
10	511	2048MB
11	1023	1024MB
12	2047	512MB
13	4095	256MB
14	8191	128MB
15	16383	64MB

NOTE
1 When the memory card is formatted after this parameter is set, the maximum number of files and maximum size per file are changed.
2 Each folder is counted as one file.

4.9 PARAMETERS OF POWER MATE CNC

	#7	#6	#5	#4	#3	#2	#1	#0
0960				PPE	PMN	MD2	MD1	

[Input type] Parameter input
[Data type] Bit path

 # 1, 2 MD1,MD2 These parameters set a slave parameter input/output destination.

Parameter MD2	Parameter MD1	I/O destination
0	0	Program memory
0	1	Memory card

NOTE
The output destination depends on the setting for path 1.

#3 PMN The Power Mate CNC manager function is:
0: Enabled.
1: Disabled.
When priority is to be given to commands to slaves by a ladder (communication by the Power Mate CNC manager function is to be stopped) after necessary data setting and checking for each of the connected slaves are completed, set this bit to 1 for every path.

#4 PPE
0: The Power Mate CNC manager can set slave parameters at all times.
1: Slave parameter setting by the Power Mate CNC manager follows the setting of PWE for the host CNC. When PWE = 0, the setting of the I/O LINK β*i* parameter is prohibited.

	#7	#6	#5	#4	#3	#2	#1	#0
0961					PMO			

[Input type] Parameter input
[Data type] Bit

#3 PMO The O number of a program for saving and restoring the I/O LINK β*i* parameter is set based on:
0: Group number and channel number
1: Group number only

4.10 PARAMETERS OF ETHERNET/ INDUSTRIAL ETHERNET FUNCTIONS

0970	Select a Fast Ethernet board that operates the Ethernet function, Data Server function, or Modbus/TCP Server function
0971	Select a Fast Ethernet board that operates the first FL-net function
0973	Select a Fast Ethernet board that operates the PROFINET IO Device function
0974	Select a Fast Ethernet board that operates the PROFINET IO Controller function

NOTE
When these parameters are set, the power must be turned off before operation is continued.

[Input type] Parameter input
[Data type] Byte
[Valid data range] -1, 0, 3, 4
Fast Ethernet board that operates each function is selected.

Value	Fast Ethernet board
-1	Not Used
0	Unsetting (initial value)
3	Fast Ethernet board mounted in slot 1
4	Fast Ethernet board mounted in slot 2

NOTE
Refer to following manuals for details of these parameters.
- When FL-net function is used; "FL-net Board CONNECTION MANUAL" (B-64163EN)
- When other industrial ethernet function is used; "Industrial Ethernet CONNECTION MANUAL" (B-64013EN)
- When Ethernet function or Data Server function is used; "Fast Ethernet/Fast Data Server OPERATOR'S MANUAL" (B-64014EN)

0975	EtherNet/IP function operating condition selection 1

NOTE
When this parameter is set, the power must be turned off before operation is continued.

[Input type] Parameter input
[Data byte] Byte
[Valid data range] -1, 0, 10, 20, 30
Selects the operating condition for the EtherNet/IP function if operating the EtherNet/IP function on the same Fast Ethernet board together with the Ethernet function.

Value	Operating condition	
	Function to operate	Fast Ethernet board
-1	Not operated	
0	Unsetting (initial value)	
10	Scanner function only	Same Fast Ethernet board as that specified for parameter No. 970
20	Adapter function only	
30	Both Scanner function and Adapter function	

NOTE
Refer to "Industrial Ethernet CONNECTION MANUAL" (B-64013EN) to setup this parameter.

0976	EtherNet/IP function operating condition selection 2

NOTE
When this parameter is set, the power must be turned off before operation is continued.

[Input type] Parameter input
[Data byte] Byte
[Valid data range] -1, 0, 13, 14, 23, 24, 33, 34
Selects the operating condition for the EtherNet/IP function if operating the EtherNet/IP function on a Fast Ethernet board different from that of the Ethernet function.

Value	Operating condition	
	Function to operate	Fast Ethernet board
-1	Not operated	
0	Unsetting (initial value)	
13	Scanner function only	Fast Ethernet board mounted in slot 1
14		Fast Ethernet board mounted in slot 2
23	Adapter function only	Fast Ethernet board mounted in slot 1
24		Fast Ethernet board mounted in slot 2
33	Both Scanner function and Adapter function	Fast Ethernet board mounted in slot 1
34		Fast Ethernet board mounted in slot 2

NOTE
Refer to "Industrial Ethernet CONNECTION MANUAL" (B-64013EN) to setup this parameter.

4.11 PARAMETERS OF SYSTEM CONFIGURATION

0980	Machine group number to which each path belongs

NOTE
When this parameter is set, the power must be turned off before operation is continued.

[Input type] Parameter input
[Data type] Byte path
[Valid data range] 1 to maximum number of machine groups
Set the machine group number to which each path belongs.

NOTE
When 0 is set, each path is assumed to belong to machine group 1.

0981	Absolute path number to which each axis belongs

NOTE
When this parameter is set, the power must be turned off before operation is continued.

[Input type] Parameter input
[Data type] Byte axis

[Valid data range] 1 to maximum number of paths
Set the path to which each axis belongs.

NOTE
When 0 is set, each axis is assumed to belong to path 1.

0982	Absolute path number to which each spindle belongs

NOTE
When this parameter is set, the power must be turned off before operation is continued.

[Input type] Parameter input
[Data type] Byte spindle
[Valid data range] 1 to maximum number of paths
Set the path to which each spindle belongs.

NOTE
When 0 is set, each spindle is assumed to belong to path 1.

0983	Path control type of each path

NOTE
When this parameter is set, the power must be turned off before operation is continued.

[Input type] Parameter input
[Data type] Byte path
[Valid data range] 0 to 1
Set the path control type of each path.
The following two path control types are available:
T series (lathe system) : 0
M series (machining system) : 1

4.12 PARAMETERS OF AXIS CONTROL/INCREMENT SYSTEM (1 OF 3)

	#7	#6	#5	#4	#3	#2	#1	#0
1000								EEA

[Input type] Parameter input
[Data type] Bit

#0 EEA An extended axis name and extended spindle name are:
0: Invalid
1: Valid

	#7	#6	#5	#4	#3	#2	#1	#0
1001								INM

[Input type] Parameter input
[Data type] Bit path

> **NOTE**
> When this parameter is set, the power must be turned off before operation is continued.

#0 INM Least command increment on the linear axis
0: In mm (metric system machine)
1: In inches (inch system machine)

	#7	#6	#5	#4	#3	#2	#1	#0
1002	IDG			XIK	AZR			JAX

[Input type] Parameter input
[Data type] Bit path

#0 JAX Number of axes controlled simultaneously in jog feed, manual rapid traverse and manual reference position return
0: 1 axis
1: 3 axes

#3 AZR When no reference position is set, the G28 command causes:
0: Reference position return using deceleration dogs (as during manual reference position return) to be executed.
1: Alarm PS0304, "G28 IS COMMANDED WITHOUT ZERO RETURN" to be displayed.

> **NOTE**
> When reference position return without dogs is specified, (when bit 1 (DLZx) of parameter No. 1005 is set to 1) the G28 command specified before a reference position is set causes an alarm PS0304 to be issued, regardless of the setting of AZR.

#4 XIK When bit 1 (LRP) of parameter No. 1401 is set to 0, namely, when positioning is performed using non-linear type positioning, if an interlock is applied to the machine along one of axes in positioning,

0: The machine stops moving along the axis for which the interlock is applied and continues to move along the other axes.
1: The machine stops moving along all the axes.

#7 IDG When the reference position is set without dogs, automatic setting of the bit 0 (IDGx) of parameter No. 1012 to prevent the reference position from being set again is:

0: Not performed.
1: Performed.

> **NOTE**
> When this parameter is set to 0, bit 0 (IDGx) of parameter No. 1012 is invalid.

	#7	#6	#5	#4	#3	#2	#1	#0
1004	IPR							

[Input type] Parameter input
[Data type] Bit path

#7 IPR When a number with no decimal point is specified, the least input increment of each axis is:

0: Not 10 times greater than the least command increment
1: 10 times greater than the least command increment

When the increment system is IS-A, and bit 0 (DPI) of parameter No. 3401 is set to 1 (pocket calculator type decimal point programming), the least input increment cannot be 10 times greater than the least command increment.

	#7	#6	#5	#4	#3	#2	#1	#0
1005	RMBx	MCCx	EDMx	EDPx	HJZx		DLZx	ZRNx

[Input type] Parameter input
[Data type] Bit axis

#0 ZRNx If a move command other than G28 is specified by automatic operation when no reference position return is performed yet after the power is turned on:

0: The alarm PS0224, "ZERO RETURN NOT FINISHED." is issued.
1: Operation is performed without issuing an alarm.

> **NOTE**
> 1 The state in which a reference position has not been established refers to the following state:
> - When an absolute position detector is not used and reference position return has not been performed even once after power-up
> - When an absolute position detector is used and the association of the machine position with the position detected with the absolute position detector has not been completed (See the description of bit 4 (APZx) of parameter No. 1815.)
>
> 2 When the Cs axis coordinates are to be set up, set this parameter to 0.

NOTE
3 To use a function that establishes the reference point and makes a movement with a command other than G28, such as an axis of Cs contour control, set this parameter to 1.

#1 DLZx Function for setting the reference position without dogs
0: Disabled
1: Enabled

#3 HJZx When a reference position is already set:
0: Manual reference position return is performed with deceleration dogs.
1: Manual reference position return is performed using rapid traverse without deceleration dogs, or manual reference position return is performed with deceleration dogs, depending on the setting of bit 7 (SJZ) of parameter No.0002.

When the function for setting the reference position without dogs (see the description of bit 1 (DLZx) of parameter No. 1005) is used, manual reference position return after a reference position is set is always performed at a parameter-set feedrate, regardless of the setting of HJZx.

#4 EDPx In cutting feed, an external deceleration signal in the + direction for each axis is:
0: Invalid
1: Valid

#5 EDMx In cutting feed, an external deceleration signal in the - direction for each axis is:
0: Invalid
1: Valid

#6 MCCx If a multi-axis amplifier is used, and another axis of the same amplifier is placed in the control axis detach state, the MCC signal of the servo amplifier is:
0: Turned off.
1: Not turned off.

NOTE
This parameter can be set for a control axis.

#7 RMBx The control axis detachment signal for each axis and the setting input bit 7 (RMV) of parameter No. 0012 are:
0: Invalid
1: Valid

	#7	#6	#5	#4	#3	#2	#1	#0
1006			ZMIx		DIAx		ROSx	ROTx
			ZMIx	TCHx	DIAx		ROSx	ROTx

[Input type] Parameter input
[Data type] Bit axis

NOTE
When at least one of these parameters is set, the power must be turned off before operation is continued.

#0 ROTx
#1 ROSx Setting linear or rotary axis.

ROSx	ROTx	Meaning
0	0	Linear axis (1) Inch/metric conversion is done. (2) All coordinate values are linear axis type. (Is not rounded in 0 to 360°) (3) Stored pitch error compensation is linear axis type (Refer to parameter No. 3624)
0	1	Rotary axis (A type) (1) Inch/metric conversion is not done. (2) Machine coordinate values are rounded in 0 to 360°. Absolute coordinate values are rounded or not rounded by bits 0 (ROAx) and 2 (RRLx) of parameter No. 1008. (3) Stored pitch error compensation is the rotation type. (Refer to parameter No. 3624) (4) Automatic reference position return (G28, G30) is done in the reference position return direction and the move amount does not exceed one rotation.
1	1	Rotary axis (B type) (1) Inch/metric conversion is not done. (2) Machine coordinate values, absolute coordinate values and relative coordinate values are linear axis type. (Is not rounded in 0 to 360°). (3) Stored pitch error compensation is linear axis type (Refer to parameter No. 3624) (4) Cannot be used with the rotary axis roll-over function and the index table indexing function (M series)
Except for the above.		Setting is invalid (unused)

#3 DIAx The move command for each axis is based on:
0: Radius specification
1: Diameter specification

#4 TCHx Specify whether each axis is a torch swing control axis for gas cutting machine or not.:
0: Not the torch swing control axis for gas cutting machine.
1: The torch swing control axis for gas cutting machine.

#5 ZMIx The direction of manual reference position return is:
0: + direction
1: - direction

	#7	#6	#5	#4	#3	#2	#1	#0
1007	ZPAx			GRDx			ALZx	RTLx

[Input type] Parameter input
[Data type] Bit axis

#0 RTLx When manual reference position return is performed on a rotary axis (A type) with the deceleration dog pressed before a reference position is established:
0: A movement is made at the reference position return feedrate FL.
1: Until a servo motor grid is established, a movement is not made at the reference position return feedrate FL even if the deceleration dog is pressed, but a movement is made at the rapid traverse rate.

If the deceleration dog is released after a movement at the rapid traverse rate and the deceleration dog is then pressed again and released after the rotary axis makes one revolution, reference position return operation is completed.

When this parameter is set to 0, the alarm PS0090, "REFERENCE RETURN INCOMPLETE" is issued if the deceleration dog is released before a servo motor grid is established.
If this alarm is issued, start manual reference position return at a position sufficiently far away from the reference position.

#1 ALZx In automatic reference position return (G28):
0: Reference position return is performed by positioning (rapid traverse).
If no reference position return is performed after the power is turned on, however, reference position return is performed using the same sequence as for manual reference position return.
1: Reference position return is performed using the same sequence as for manual reference position return.

#4 GRDx When absolute position detection is performed for an axis and the correspondence between the machine position and the position on the absolute-position detector has not yet been established for the axis, reference position setting without dogs is:
0: Not performed more than once.
1: Performed more than once.

#7 ZPAx In automatic reference position return (G28), a coordinate system is:
0: Not preset.
1: Preset.

	#7	#6	#5	#4	#3	#2	#1	#0
1008		RRFx	RMCx	SFDx		RRLx	RABx	ROAx

[Input type] Parameter input
[Data type] Bit axis

> **NOTE**
> When at least one of these parameters is set, the power must be turned off before operation is continued.

#0 ROAx The rotary axis roll-over is
0: Invalid
1: Valid

> **NOTE**
> ROAx specifies the function only for a rotary axis (for which bit 0 (ROTx) of parameter No. 1006 is set to 1)

#1 RABx In the absolute programming, the axis rotates in the direction
0: In which the distance to the target is shorter.
1: Specified by the sign of command value.

> **NOTE**
> RABx is valid only when ROAx is 1.

#2 RRLx Relative coordinates are
0: Not rounded by the amount of the shift per one rotation
1: Rounded by the amount of the shift per one rotation

NOTE
1 RRLx is valid only when ROAx is 1.
2 Assign the amount of the shift per one rotation in parameter No. 1260.

#4 SFDx In reference position return based on the grid method, the reference position shift function is:
0: Disabled
1: Enabled

#5 RMCx When machine coordinate system selection (G53) is specified, bit 1 (RABx) of parameter No. 1008 for determining the rotation direction of an absolute programming for the rotary axis roll-over function is:
0: Invalid
1: Valid

#6 RRFx When a reference position return command (G28) is specified, the rotation direction of an absolute command for the rotary axis roll-over function follows:
0: Up to the middle point, it depends on the setting of bit 1 (RABx) of parameter No. 1008. From the middle point to the origin, it depends on the setting of bit 5 (ZMIx) of parameter No. 1006.
1: It depends on the setting of bit 1 (RABx) of parameter No. 1008.
When bit 1 (ALZx) of parameter No. 1007 is 1, reference position return is performed using the same sequence as for manual reference position return.

NOTE
The setting of bit 6 (RRFx) of parameter No. 1008 to 1 is valid when all of the following conditions are met:
- Rotary axis (A type) (Bit 0 (ROTx) of parameter No. 1006 = 1, bit 1 (ROSx) of parameter No. 1006 = 0)
- Roll-over is enabled (Bit 0 (ROAx) of parameter No. 1008 = 1)
- The reference position has been established.

	#7	#6	#5	#4	#3	#2	#1	#0
1012								IDGx

[Input type] Parameter input
[Data type] Bit axis

#0 IDGx The function for setting the reference position again, without dogs, is:
0: Not inhibited.
1: Inhibited.
(The alarm PS0301, “RESETTING OF REFERENCE RETURN IS INHIBITED” is issued.)

NOTE

IDGx is enabled when the bit 7 (IDG) of parameter No. 1002 is 1.
If the function for setting the reference position without dogs is used, and the reference position is lost in absolute position detection for a cause, the alarm DS0300, “APC ALARM: NEED REF RETURN” is issued when the power is turned on again.
If the operator performs reference position return, as a result of mistakenly identifying the alarm as that requesting the operator to perform a normal reference position return, an invalid reference position may be set. To prevent such an operator error, the IDGx parameter is provided to prevent the reference position from being set again without dogs.

(1) If the bit 7 (IDG) of parameter No. 1002 is set to 1, the bit 0 (IDGx) of parameter No. 1012 is automatically set to 1 when the reference position is set using the function for setting the reference position without dogs. This prevents the reference position from being set again without dogs.
(2) Once the reference position is prevented from being set for an axis again, without dogs, any attempt to set the reference position for the axis without dogs results in the output of an alarm PS0301.
(3) When the reference position must be set again without dogs, set bit 0 (IDGx) of parameter No. 1012 to 0 before setting the reference position.

	#7	#6	#5	#4	#3	#2	#1	#0
1013	IESPx						ISCx	ISAx

[Input type] Parameter input
[Data type] Bit axis

NOTE

When at least one of these parameters is set, the power must be turned off before operation is continued.

#0 ISAx
#1 ISCx

Increment system of each axis

Increment system	Bit 1 (ISC)	Bit 0 (ISA)
IS-A	0	1
IS-B	0	0
IS-C	1	0

#7 IESPx When the least input increment is C (IS-C), the function to allow to set the larger value to the parameter of the speed and the acceleration:
0: Not used.
1: Used.

As for the axis which set this parameter when the least input increment is C (IS-C), the larger value can be set to the parameter of the speed and the acceleration.

The valid data ranges of these parameters are indicated in the table of velocity and angular velocity parameters in (C) of the standard parameter setting tables and the table of acceleration and angular acceleration parameters in (D).
When this function is made effective, the digit number below the decimal point of the parameter on input screen is changed. The digit number below the decimal point decreases by one digit in case of the least input increment C (IS-C).

	#7	#6	#5	#4	#3	#2	#1	#0
1014	CDMx							

[Input type] Parameter input
[Data type] Bit axis

> **NOTE**
> When this parameter is set, the power must be turned off before operation is continued.

#7 CDMx The Cs contour control axis is:
0: Not a virtual Cs axis
1: Virtual Cs axis

	#7	#6	#5	#4	#3	#2	#1	#0
1015	DWT	WIC		ZRL				

[Input type] Parameter input
[Data type] Bit path

#4 ZRL Positioning from an intermediate point to reference position in automatic reference position return(G28) when the reference position has been established, positioning from an intermediate point to 2nd, 3rd, or 4th reference position in 2nd, 3rd, or 4th reference position return, and machine coordinate positioning (G53) are:
0: Positioning of nonlinear interpolation type
1: Positioning of linear interpolation type

> **NOTE**
> This parameter is valid when bit 1 (LRP) of parameter No. 1401 is set to 1.

#6 WIC Workpiece origin offset measurement value direct input is:
0: (M series) Performed without considering the external workpiece origin offset value.
(T series) Valid only in the currently selected workpiece coordinate system.
1: (M series) Performed considering the external workpiece origin offset value.
(T series) Valid in all coordinate systems.

> **NOTE**
> In the T series, if this parameter bit is set to 0, workpiece origin offset measurement value direct input is enabled only in the currently selected workpiece coordinate system or an external workpiece coordinate system. If an attempt is made to perform workpiece origin offset measurement value direct input in a workpiece coordinate system other than these workpiece coordinate systems, warning "WRITE PROTECTED" is displayed.

#7 DWT When time for dwell per second is specified by P, the increment system:
0: Depends on the increment system
1: Does not depend on the increment system (1 ms)

1020	Program axis name for each axis

[Input type] Parameter input
[Data type] Byte axis
[Valid data range] 65 to 67, 85 to 90

An axis name (axis name 1: parameter No. 1020) can be arbitrarily selected from A, B, C, U, V, W, X, Y, and Z. (When G code system A is used with the lathe system, however, U, V, and W are not selectable.) When bit 0 (EEA) of parameter No. 1000 is set to 1, the length of an axis name can be extended to three characters by setting axis name 2 (parameter No. 1025) and axis name 3 (parameter No. 1026) (extended axis name).
For axis names 2 and 3, a character from 0 to 9 and A to Z of ASCII code can be arbitrarily selected. However, the setting of axis name 3 for each axis is invalid if axis name 2 is not set. Moreover, if a character from 0 to 9 is set as axis name 2, do not use a character from A to Z as axis name 3.

(Tip) ASCII code

Axis name	X	Y	Z	A	B	C	U	V	W
Setting	88	89	90	65	66	67	85	86	87

When G code system A is used with the lathe system, and the character X, Y, Z, or C is used as axis name 1 of an axis, a command with U, V, W, or H specified for axis name 1 represents an incremental programming for the axis.

NOTE
1 When the setting value is out of range, it can not be recognized as an axis name.
2 When a multiple repetitive canned cycle for turning is used, no character other than X, Y, and Z can be used as the address of the axis.
3 When the custom macro function is enabled, the same extended axis name as a reserved word cannot be used. Such an extended axis name is regarded as a reserved word.
Because of reserved words of custom macros, extended axis names that start with the following two characters cannot be used:
AB, AC, AD, AN, AS, AT, AX, BC, BI, BP, CA, CL, CO, US, WH, WR, XO, ZD, ZE, ZO, ZW
4 In a macro call, no extended axis name can be used as an argument.

1022	Setting of each axis in the basic coordinate system

[Input type] Parameter input
[Data type] Byte axis
[Valid data range] 0 to 7

To determine a plane for circular interpolation, cutter compensation, and so forth (G17: Xp-Yp plane, G18: Zp-Xp plane, G19: Yp-Zp plane), specify which of the basic three axes (X, Y, and Z) is used for each control axis, or a parallel axis of which basic axis is used for each control axis.
A basic axis (X, Y, or Z) can be specified only for one control axis.

Two or more control axes can be set as parallel axes for the same basic axis.

Setting	Meaning
0	Rotary axis (Neither the basic three axes nor a parallel axis)
1	X axis of the basic three axes
2	Y axis of the basic three axes
3	Z axis of the basic three axes
5	Axis parallel to the X axis
6	Axis parallel to the Y axis
7	Axis parallel to the Z axis

In general, the increment system and diameter/radius specification of an axis set as a parallel axis are to be set in the same way as for the basic three axes.

1023	Number of the servo axis for each axis

NOTE
When this parameter is set, the power must be turned off before operation is continued.

[Input type] Parameter input
[Data type] Byte axis
[Valid data range] 0 to 80

This parameter associates each control axis with a specific servo axis. Specify values 1+8n, 2+8n, 3+8n, 4+8n, 5+8n, and 6+8n (n = 0, 1, 2, …, 9) like 1, 2, 3, 4, 5, …, 77, and 78.

The control axis number is the order number that is used for setting the axis-type parameters or axis-type machine signals

- With an axis for which Cs contour control/spindle positioning is to be performed, set -(spindle number) as the servo axis number.
  Example)
  When exercising Cs contour control on the fourth controlled axis by using the first spindle, set -1.
- For tandem controlled axes or electronic gear box (EGB) controlled axes, two axes need to be specified as one pair. So, make a setting as described below.
  Tandem axis: For a master axis, set an odd (1, 3, 5, 9, ...) servo axis number. For a slave axis to be paired, set a value obtained by adding 1 to the value set for the master axis.
  EGB axis: For a slave axis, set an odd (1, 3, 5, 9, ...) servo axis number. For a dummy axis to be paired, set a value obtained by adding 1 to the value set for the slave axis.

1024	Series name of servo control software

NOTE
When this parameter is set, the power must be turned off before operation is continued.

[Input type] Parameter input
[Data type] Byte axis
[Valid data range] 0 to 9

Specify the series name of servo control software. Set the final character of servo control software series. When the setting value is 0, the software with the smallest final character in FROM is used.
If the servo control software specified by this parameter does not exist, SV0455 alarm is generated.

Example) In case that 90x0 series and 90x3 series exist in FROM;
0 : 90x0 series is used.
1 to 2 : SV0455 alarm is generated.
3 : 90x3 series is used.
4 to 9 : SV0455 alarm is generated.

NOTE
Set the same value for all axes controlled by a same servo processor. (Servo processor can be specified by value ‘n’ at explanation of Parameter No.1023)

1025	Program axis name 2 for each axis

1026	Program axis name 3 for each axis

[Input type] Parameter input
[Data type] Byte axis
[Valid data range] 48 to 57, 65 to 90
When axis name extension is enabled (when bit 0 (EEA) of parameter No. 1000 is set to 1), the length of an axis name can be extended to a maximum of three characters by setting axis name 2 and axis name 3. For axis names 2 and 3, a character from '0' to '9' and 'A' to 'Z' of ASCII code can be arbitrarily selected. However, the setting of axis name 3 for each axis is invalid if axis name 2 is not set. Moreover, if a character from '0' to '9' is set as axis name 2, do not use a character from 'A' to 'Z' as axis name 3.

1031	Reference axis

[Input type] Parameter input
[Data type] Byte path
[Valid data range] 1 to Number of controlled axes
The unit of some parameters common to all axes such as those for dry run feedrate and single-digit F1 feedrate may vary according to the increment system. An increment system can be selected by a parameter on an axis-by-axis basis. So, the unit of those parameters is to match the increment system of a reference axis. Set which axis to use as a reference axis.
Among the basic three axes, the axis with the finest increment system is generally selected as a reference axis.

NOTE
When this parameter is set to 0, the reference axis is 1'st axis.

4.13 PARAMETERS OF COORDINATE SYSTEM (1 OF 2)

	#7	#6	#5	#4	#3	#2	#1	#0
1201	WZR	NWS			FPC	ZCL		ZPR
	WZR				FPC	ZCL		ZPR

[Input type] Parameter input
[Data type] Bit path

#0 ZPR Automatic setting of a coordinate system when the manual reference position return is performed
0: Not set automatically
1: Set automatically

> **NOTE**
> ZPR is valid while a workpiece coordinate system function is not used (when bit 0 (NWZ) of parameter No. 8136 is 1). If a workpiece coordinate system function is used (when bit 0 (NWZ) of parameter No. 8136 is 0), making a manual reference position return always causes the workpiece coordinate system to be established on the basis of the workpiece zero point offset (parameters Nos. 1220 to 1226), irrespective of this parameter setting.

#2 ZCL Local coordinate system when the manual reference position return is performed
0: The local coordinate system is not canceled.
1: The local coordinate system is canceled.

> **NOTE**
> ZCL is valid when the workpiece coordinate system is used (when bit 0 (NWZ) of parameter No. 8136 is 0). In order to use the local coordinate system (G52), set bit 0 (NWZ) of parameter No. 8136 to 0.

#3 FPC When a floating reference position is set with a soft key, the relative position indication is:
0: Not preset to 0 (The relative position indication remains unchanged.)
1: Preset to 0.

#6 NWS The workpiece coordinate system shift amount setting screen is:
0: Displayed
1: Not displayed

> **NOTE**
> When the workpiece coordinate system shift amount setting screen is not displayed, a workpiece coordinate system shift amount modification using G10P0 cannot be made. If G10P0 is commanded, alarm PS0010, "IMPROPER G-CODE" is issued.

#7 WZR If the CNC is reset by the RESET key on the MDI unit, external reset signal, reset and rewind signal, or emergency stop signal when bit 6 (CLR) of parameter No. 3402 is set to 0, the G code of group number 14 (workpiece coordinate system) is:
0: Placed in the reset state (not returned to G54).
1: Placed in the cleared state (returned to G54).

> **NOTE**
> 1 When the 3-dimensional conversion mode is set, and bit 2 (D3R) of parameter No. 5400 is set to 1, the G code is placed in the reset state, regardless of the setting of this parameter.
> 2 When bit 6 (CLR) of parameter No. 3402 is set to 1, whether to place the G code in the reset state depends on bit 6 (C14) of parameter No. 3407.

	#7	#6	#5	#4	#3	#2	#1	#0
1202					RLC	G92	EWS	EWD
					RLC	G92		EWD

[Input type] Parameter input
[Data type] Bit path

#0 EWD The shift direction of the workpiece coordinate system is:
0: The direction specified by the external workpiece zero point offset value
1: In the opposite direction to that specified by the external workpiece zero point offset value

#1 EWS The external workpiece zero point offset is made:
0: Valid
1: Invalid

#2 G92 When the CNC has commands G52 to G59 specifying workpiece coordinate systems (when bit 0 (NWZ) of parameter No. 8136 is 0), if the G command for setting a coordinate system (G92 for M series, G50 for T series (or the G92 command in G command system B or C)) is specified,
0: G command is executed and no alarm is issued.
1: G command is not executed and an alarm PS0010, “IMPROPER G-CODE” is issued.

#3 RLC Local coordinate system is
0: Not cancelled by reset
1: Cancelled by reset

> **NOTE**
> 1 When bit 6 (CLR) of parameter No. 3402 is set to 0, and bit 7 (WZR) of parameter No. 1201 is set to 1, the local coordinate system is cancelled, regardless of the setting of this parameter.
> 2 When bit 6 (CLR) of parameter No. 3402 is set to 1, and bit 6 (C14) of parameter No. 3407 is set to 0, the local coordinate system is cancelled, regardless of the setting of this parameter.
> 3 When the 3-dimensional coordinate system conversion mode is set, and bit 2 (D3R) of parameter No. 5400 is set to 1, the local coordinate system is not cancelled, regardless of the setting of this parameter.

	#7	#6	#5	#4	#3	#2	#1	#0
1203								EMS

[Input type] Parameter input
[Data type] Bit path

#0 EMS The extended external machine zero point shift function is:
0: Disabled.
1: Enabled.

NOTE
1 To use the extended external machine zero point shift function, the external machine zero point shift function or the external data input function is required.
2 When the extended external machine zero point shift function is enabled, the conventional external machine zero point shift function is disabled.

⚠ **WARNING**
Please set an appropriate value to parameter No.1280 beforehand when you set 1 to this parameter.
If an internal relay of the set address in parameter No.1280 is used by another usage, it may cause an unexpected machine behavior. Be careful enough that you must prevent the competition of the used internal relay.

	#7	#6	#5	#4	#3	#2	#1	#0
1205	WTC	3TW	R2O	R1O				

[Input type] Parameter input
[Data type] Bit path

#4 R1O The output of the signal for the reference position is:
0: Disabled.
1: Enabled.

#5 R2O The output of the signal for the second reference position is:
0: Disabled.
1: Enabled.

#6 3TW When workpiece coordinate system selection is specified with G code in tilted working plane indexing mode:
0: The alarm PS5462, "ILLEGAL COMMAND (G68.2/G69)" is issued.
1: Workpiece coordinate system selection is executed.

⚠ **CAUTION**
When this parameter is 1, only G54 to G59 or G54.1 can be specified. Specifying G52 or G92 causes alarm PS5462. Specifying G54 to G59 or G54.1 suppresses buffering.

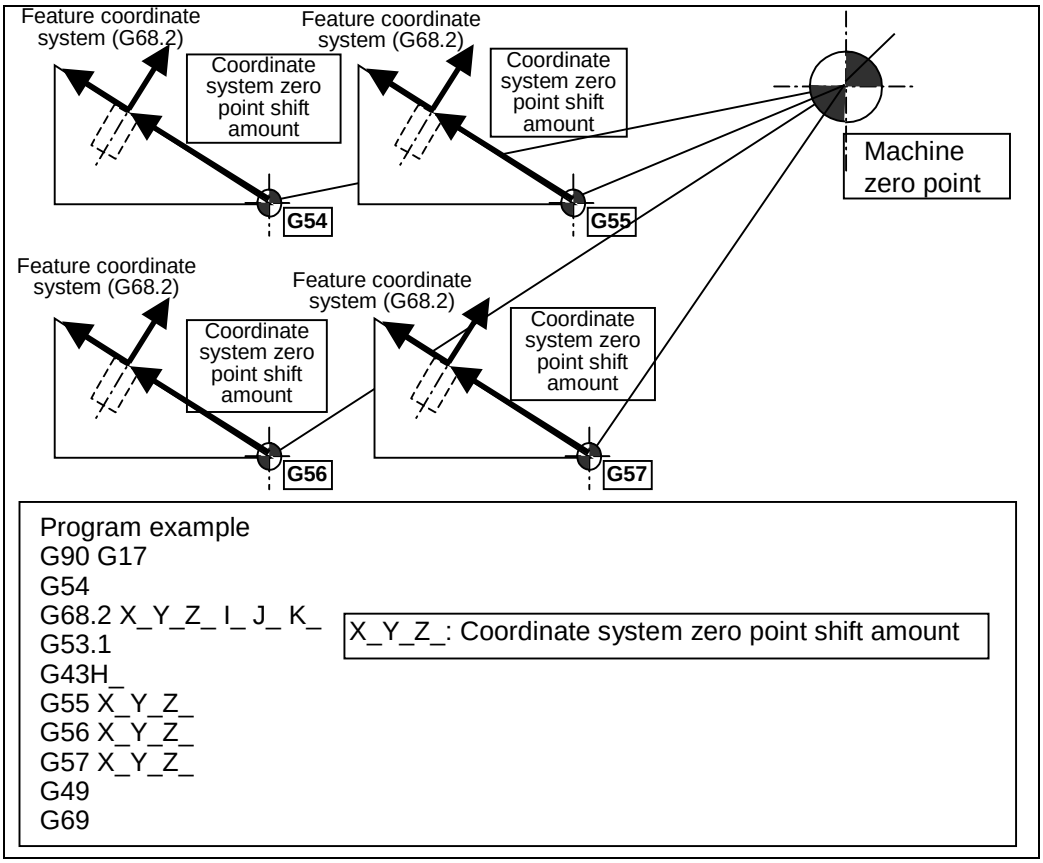

#7 WTC When workpiece coordinate system preset is done, actual tool length offset with tool movement (M series) or actual tool position offset with tool movement (T series) is:

0: Cleared.

1: Not cleared.

When this parameter is set 1, it is possible to preset the workpiece coordinate system by G-code, MDI operation or the each axis workpiece coordinate system preset signals WPRST1 to WPRST8 <Gn358> without canceling the tool length compensation modes.
The compensation vector is kept as the below figure when the workpiece coordinate system preset is done to the coordinate shifted by amount of movement during manual intervention.

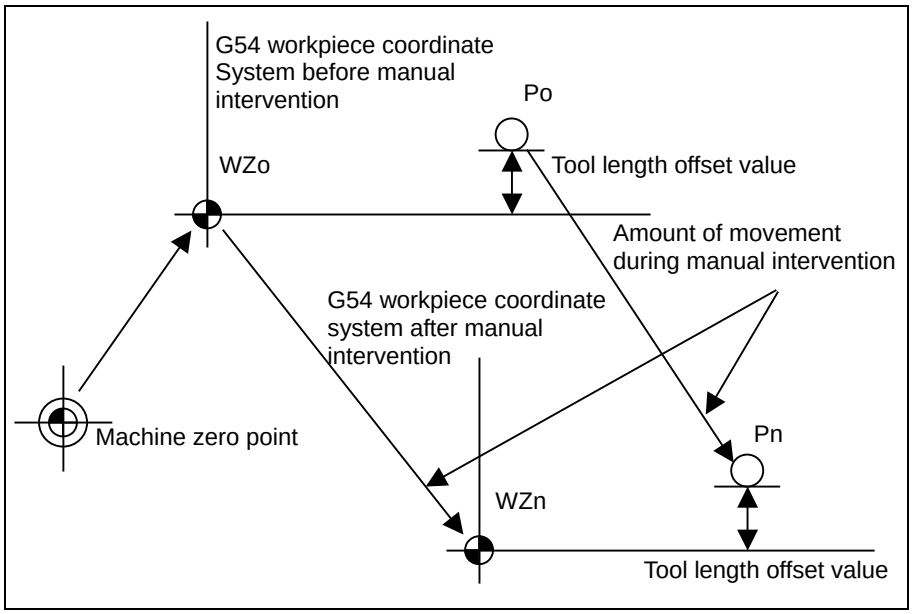

	#7	#6	#5	#4	#3	#2	#1	#0
1206							HZP	

[Input type] Parameter input
[Data type] Bit path

#1 HZP At high-speed manual reference position return, presetting the coordinate system is:
0: Performed.
1: Not performed.

> **NOTE**
> This parameter is valid when no workpiece coordinate system exists with bit 0 (ZPR) of parameter No. 1201 set to 0.

	#7	#6	#5	#4	#3	#2	#1	#0
1207								WOL

[Input type] Parameter input
[Data type] Bit path

#0 WOL The calculation method for workpiece origin offset measurement value direct input is as follows:
0: In a machine that requires that the difference from the reference tool be set as the tool length compensation amount, the workpiece origin offset is measured and set with the reference tool mounted on the machine.
(The tool length of the reference tool is assumed to be 0.)
1: In a machine that requires that the tool length itself be set as the tool length compensation amount, the workpiece origin offset is measured and set considering the tool length when the tool length compensation for the mounted tool is enabled.

> **NOTE**
> The setting of this parameter is valid only when the system used is the M series and bit 6 (DAL) of parameter No. 3104 is set to 1. If this parameter is set to 1 in other than the above conditions, the system operates as if this parameter bit were set to 0.

1220	External workpiece zero point offset value in each axis

[Input type] Setting input
[Data type] Real axis
[Unit of data] mm, inch, degree (input unit)
[Min. unit of data] Depend on the increment system of the applied axis
[Valid data range] 9 digit of minimum unit of data (refer to standard parameter setting table (A))
(When the increment system is IS-B, -999999.999 to +999999.999)
This is one of the parameters that give the position of the zero point of workpiece coordinate system (G54 to G59). It gives an offset of the workpiece zero point common to all workpiece coordinate systems. In general, the offset varies depending on the workpiece coordinate systems. The value can be set from the PMC using the external data input function.

1221	Workpiece zero point offset value in workpiece coordinate system 1 (G54)
1222	Workpiece zero point offset value in workpiece coordinate system 2(G55)
1223	Workpiece zero point offset value in workpiece coordinate system 3(G56)
1224	Workpiece zero point offset value in workpiece coordinate system 4 (G57)
1225	Workpiece zero point offset value in workpiece coordinate system 5 (G58)
1226	Workpiece zero point offset value in workpiece coordinate system 6 (G59)

[Input type] Setting input
[Data type] Real axis
[Unit of data] mm, inch, degree (input unit)
[Min. unit of data] Depend on the increment system of the applied axis
[Valid data range] 9 digit of minimum unit of data (refer to standard parameter setting table (A))
(When the increment system is IS-B, -999999.999 to +999999.999)
The workpiece zero point offset values in workpiece coordinate systems 1 to 6 (G54 to G59) are set.

1240	Coordinate value of the reference position in the machine coordinate system

NOTE
When this parameter is set, the power must be turned off before operation is continued.

[Input type] Parameter input
[Data type] Real axis
[Unit of data] mm, inch, degree (machine unit)
[Min. unit of data] Depend on the increment system of the applied axis
[Valid data range] 9 digit of minimum unit of data (refer to standard parameter setting table (A))
(When the increment system is IS-B, -999999.999 to +999999.999)
Set the coordinate values of the reference position in the machine coordinate system.

1241	Coordinate value of the second reference position in the machine coordinate system
1242	Coordinate value of the third reference position in the machine coordinate system
1243	Coordinate value of the fourth reference position in the machine coordinate system

[Input type] Parameter input

[Data type] Real axis
[Unit of data] mm, inch, degree (machine unit)
[Min. unit of data] Depend on the increment system of the applied axis
[Valid data range] 9 digit of minimum unit of data (refer to standard parameter setting table (A))
(When the increment system is IS-B, -999999.999 to +999999.999)
Set the coordinate values of the second to fourth reference positions in the machine coordinate system.

1244	Coordinate value of the floating reference position in the machine coordinate system

[Input type] Parameter input
[Data type] Real axis
[Unit of data] mm, inch, degree (machine unit)
[Min. unit of data] Depend on the increment system of the applied axis
[Valid data range] 9 digit of minimum unit of data (refer to standard parameter setting table (A))
(When the increment system is IS-B, -999999.999 to +999999.999)
Set the coordinate values of the floating reference position in the machine coordinate system.

1250	Coordinate system of the reference position used when automatic coordinate system setting is performed

[Input type] Parameter input
[Data type] Real axis
[Unit of data] mm, inch, degree (input unit)
[Min. unit of data] Depend on the increment system of the applied axis
[Valid data range] 9 digit of minimum unit of data (refer to standard parameter setting table (A))
(When the increment system is IS-B, -999999.999 to +999999.999)
Set the coordinate system of the reference position on each axis to be used for performing automatic coordinate system setting.

1260	The shift amount per one rotation of a rotary axis

NOTE
When this parameter is set, the power must be turned off before operation is continued.

[Input type] Parameter input
[Data type] Real axis
[Unit of data] Degree
[Min. unit of data] Depend on the increment system of the applied axis
[Valid data range] 0 or positive 9 digit of minimum unit of data (refer to the standard parameter setting table (B))
(When the increment system is IS-B, 0.0 to +999999.999)
Set the shift amount per one rotation of a rotary axis.
For the rotary axis used for cylindrical interpolation, set the standard value.

1280	Start address of signals used with the extended external machine zero point shift function

[Input type] Parameter input
[Data type] 2-word path
[Valid data range] Even number from 0 to 59999

Set the start address of signals used with the extended external machine zero point shift function. If a nonexistent address value is specified, this function is disabled.
If 100 is set, for example, this function uses R100 and up. The last R address to be used depends on the number of controlled axes. When eight controlled axes are used, R100 to R115 are used.

NOTE
1 If a nonexistent R address or an address in the system area is set, this function is disabled.
2 Set an even number in this parameter.
3 When this parameter is 0, an internal relay from address R0 is used.

⚠ **WARNING**
If an internal relay of the set address in this parameter is used by another usage, it may cause an unexpected machine behavior. Be careful enough that you must prevent the competition of the used internal relay.

1290	Distance between two opposite tool posts in mirror image

[Input type] Parameter input
[Data type] Real path
[Unit of data] mm, inch (input unit)
[Min. unit of data] Depend on the increment system of the reference axis
[Valid data range] 0 or positive 9 digit of minimum unit of data (refer to the standard parameter setting table (B))
(When the increment system is IS-B, 0.0 to +999999.999)
Set the distance between two opposite tool posts in mirror image.

4.14 PARAMETERS OF STORED STROKE CHECK

	#7	#6	#5	#4	#3	#2	#1	#0
1300	BFA	LZR	RL3			LMS	NAL	OUT

[Input type] Setting input
[Data type] Bit path

#0 OUT The area inside or outside of the stored stroke check 2 is set as an inhibition area
0: Inside
1: Outside

#1 NAL When the tool enters the inhibition area of stored stroke limit 1:
0: The overtravel alarm signals +OT1 to +OT8<Fn124>, -OT1 to -OT8<Fn126> are not output.
1: The overtravel alarm signals are output, and the tool is decelerated to a stop.
If manual operation is in progress at this time, the alarm is not output.

NOTE
Even if this parameter is set to 1, an alarm is displayed and the tool is decelerated to a stop when a move command issued during automatic operation causes the tool to get in a parameter-specified inhibition area. Also in this case, the overtravel alarm signals are output for the PMC.

#2 LMS The stored stroke check 1 select signal EXLM (EXLM3, EXLM2, or EXLM when stored stroke check 1 area expansion is used) for switching stored stroke check
0: Disabled
1: Enabled

NOTE
When bit 0 (DLM) of parameter No. 1301 is set to 1, the stored stroke check 1 select signal EXLM <Gn007.6> (EXLM3 <Gn531.7>, EXLM2 <Gn531.6>, or EXLM <Gn007.6> when stored stroke check 1 area expansion is used) is made invalid.

#5 RL3 Stroke check 3 release signal RLSOT3 <Gn007.4> is
0: Disabled
1: Enabled

#6 LZR When the stored stroke check immediately after power-on is enabled (bit 0 (DOT) of parameter No. 1311 is set to 1), the stored stroke check is:
0: Performed even before a manual reference position return is made.
1: Not performed until a manual reference position return is made.

#7 BFA When the stored stroke check 1, 2, or 3 alarm is issued, an interference alarm is issued with the inter-path interference check function (T series), or a chuck/tail stock barrier (T series) alarm is issued:
0: The tool stops after entering the prohibited area.
1: The tool stops before the prohibited area.

NOTE
1 This parameter is valid even in AI contour control.
2 This parameter is invalid for the slave axis under axis synchronous control.

	#7	#6	#5	#4	#3	#2	#1	#0
1301	PLC	OTS		OF1		NPC	LMA	DLM

[Input type] Setting input
[Data type] Bit path

#0 DLM The axis direction dependent stored stroke check 1 switch signals +EXLx <Gn104> and –EXLx <Gn105> are:
0: Disabled.
1: Enabled.
When this parameter is set to 1, the stored stroke check 1 select signal EXLM <Gn007.6> is made invalid.

#1 LMA When the stored stroke check 1 select signal EXLM <Gn007.6> is “1” with bit 2 (LMS) of parameter No. 1300 set to 1, the movable area for stored stroke check 1 is:

0: The inside area set for stored stroke check 1-II.
1: The inside area set for stored stroke check 1-I and the inside area set for stored stroke check 1-II as well.

#2 NPC As part of the stroke limit check performed before movement, the movement specified in G31 (skip) and G37 (automatic tool length measurement) blocks is:

0: Checked
1: Not checked

#4 OF1 If the tool is moved into the range allowed on the axis after an alarm is raised by stored stroke check 1,

0: The alarm is not canceled before a reset is made.
1: The OT alarm is immediately canceled.

> **NOTE**
> In the cases below, the automatic release function is disabled. To release an alarm, a reset operation is required.
> 1 When a setting is made to issue an alarm before a stored stroke limit is exceeded (bit 7 (BFA) of parameter No. 1300 is set to 1)
> 2 When an another overtravel alarm (such as stored stroke check 2, stored stroke check 3, and interference check) is already issued

#6 OTS When the overtravel alarm is issued:

0: The overtravel alarm signals +OT1 to +OT8<Fn124>, -OT1 to -OT8<Fn126> are not output to the PMC.
1: The overtravel alarm signals are output to the PMC.

#7 PLC Stroke check before movement is:

0: Not performed
1: Performed

	#7	#6	#5	#4	#3	#2	#1	#0
1302								SBA

[Input type] Parameter input
[Data type] Bit path

#0 SBA In Stroke limit check before move, check of the tool path between blocks for movement command is, :

0: Not executed.
1: Executed.

> **NOTE**
> 1 Check of the tool path between blocks is invalid for the functions to which Stroke limit check before move is invalid.
> 2 Limitation of Stroke limit check before move is valid for check of the tool path between blocks.

	#7	#6	#5	#4	#3	#2	#1	#0
1310							OT3x	OT2x

[Input type] Setting input
[Data type] Bit axis

#0 OT2x Stored stroke check 2 for each axis is :
0: Disabled
1: Enabled

#1 OT3x Stored stroke check 3 for each axis is :
0: Disabled
1: Enabled

	#7	#6	#5	#4	#3	#2	#1	#0
1311								DOTx

[Input type] Parameter input
[Data type] Bit axis

NOTE
When this parameter is set, the power must be turned off before operation is continued.

#0 DOTx Stored stroke limit check immediately after power-on is:
0: Disabled.
1: Enabled.

If the stored stroke check is enabled, the machine coordinate value present immediately before the power is turned off is stored.
The machine coordinate value is set immediately after the power is turned on.
Based on the machine coordinate value, absolute coordinate and relative coordinate values are set.

NOTE
Because this function uses software to store machine coordinates, the function puts an extra load on the system. So, this function should not be set for axes that do not require this function. The amount of a movement made while the power is off is not reflected in machine coordinates immediately after the power is turned on.

	#7	#6	#5	#4	#3	#2	#1	#0
1312								SLM

[Input type] Parameter input
[Data type] Bit

#0 SLM The stroke limit area changing function is:
0: Disabled.
1: Enabled.

1313	The first address of data table (D) that sets data that switches stored stroke limit

[Input type] Parameter input
[Data type] 2 word path
[Valid data range] 0 to 59996
The first address of data table (D) of PMC that sets data that switches stored stroke limit is set.

NOTE
1 When this parameter is set, the power must be turned off before operation is continued.
2 When this parameter is 0, a data table from address D0 is used.

⚠ **WARNING**
If a data table of the set address in this parameter is used by another usage, it may cause an unexpected machine behavior. Be careful enough that you must prevent the competition of the used data table.

1320	Coordinate value I of stored stroke check 1 in the positive direction on each axis
1321	Coordinate value I of stored stroke check 1 in the negative direction on each axis

[Input type] Parameter input
[Data type] Real axis
[Unit of data] mm, inch, degree (machine unit)
[Min. unit of data] Depend on the increment system of the applied axis
[Valid data range] 9 digit of minimum unit of data (refer to standard parameter setting table (A))
(When the increment system is IS-B, -999999.999 to +999999.999)
Set the coordinate value of stored stroke check 1 on each axis in the + or - direction in the machine coordinate system.

NOTE
1 Specify diameter values for any axes for which diameter programming is specified.
2 The area outside the area set by parameters Nos. 1320 and 1321 is a prohibited area.

1322	Coordinate value of stored stroke check 2 in the positive direction on each axis
1323	Coordinate value of stored stroke check 2 in the negative direction on each axis

[Input type] Setting input
[Data type] Real axis
[Unit of data] mm, inch, degree (machine unit)
[Min. unit of data] Depend on the increment system of the applied axis
[Valid data range] 9 digit of minimum unit of data (refer to standard parameter setting table (A))
(When the increment system is IS-B, -999999.999 to +999999.999)
Set the coordinate value of stored stroke check 2 on each axis in the + or - direction in the machine coordinate system.

NOTE
1 Specify diameter values for any axes for which diameter programming is specified.
2 Whether the inside area or outside area is a prohibited area is set using bit 0 (OUT) of parameter No. 1300.

1324	**Coordinate value of stored stroke check 3 in the positive direction on each axis**
1325	**Coordinate value of stored stroke check 3 in the negative direction on each axis**

[Input type] Setting input
[Data type] Real axis
[Unit of data] mm, inch, degree (machine unit)
[Min. unit of data] Depend on the increment system of the applied axis
[Valid data range] 9 digit of minimum unit of data (refer to standard parameter setting table (A))
(When the increment system is IS-B, -999999.999 to +999999.999)
Set the coordinate value of stored stroke check 3 on each axis in the + or - direction in the machine coordinate system.

NOTE
1 Specify diameter values for any axes for which diameter programming is specified.
2 The area inside the area set by parameters Nos. 1324 and 1325 is a prohibited area.

1326	**Coordinate value II of stored stroke check 1 in the positive direction on each axis**
1327	**Coordinate value II of stored stroke check 1 in the negative direction on each axis**
1350	**Coordinate value III of stored stroke check 1 in the positive direction on each axis**
1351	**Coordinate value III of stored stroke check 1 in the negative direction on each axis**
1352	**Coordinate value IV of stored stroke check 1 in the positive direction on each axis**
1353	**Coordinate value IV of stored stroke check 1 in the negative direction on each axis**
1354	**Coordinate value V of stored stroke check 1 in the positive direction on each axis**
1355	**Coordinate value V of stored stroke check 1 in the negative direction on each axis**
1356	**Coordinate value VI of stored stroke check 1 in the positive direction on each axis**
1357	**Coordinate value VI of stored stroke check 1 in the negative direction on each axis**
1358	**Coordinate value VII of stored stroke check 1 in the positive direction on each axis**
1359	**Coordinate value VII of stored stroke check 1 in the negative direction on each axis**
1360	**Coordinate value VIII of stored stroke check 1 in the positive direction on each axis**
1361	**Coordinate value VIII of stored stroke check 1 in the negative direction on each axis**

[Input type] Parameter input
[Data type] Real axis
[Unit of data] mm, inch, degree (machine unit)
[Min. unit of data] Depend on the increment system of the applied axis

[Valid data range] 9 digit of minimum unit of data (refer to standard parameter setting table (A))
(When the increment system is IS-B, -999999.999 to +999999.999)
Set the coordinate value of stored stroke check 1 on each axis in the + or - direction in the machine coordinate system.
The stored stroke check 1 select signals EXLM3<Gn531.7>, EXLM2<Gn531.6>, EXLM<Gn007.6> and the stroke parameter to be selected have the following relationships:

EXLM3	EXLM2	EXLM	Stroke parameter to be selected
0	0	0	Coordinate value I (No. 1320 / No. 1321)
0	0	1	Coordinate value II (No. 1326 / No. 1327)
0	1	0	Coordinate value III (No. 1350 / No. 1351)
0	1	1	Coordinate value IV (No. 1352 / No. 1353)
1	0	0	Coordinate value V (No. 1354 / No. 1355)
1	0	1	Coordinate value VI (No. 1356 / No. 1357)
1	1	0	Coordinate value VII (No. 1358 / No. 1359)
1	1	1	Coordinate value VIII (No. 1360 / No. 1361)

When the stored stroke check switch signals for each axis direction +EXLx and -EXLx are set to "1" (with bit 0 (DLM) of parameter No. 1301 set to 1), parameters Nos. 1326 and No. 1327 are used for stroke check.

NOTE
1 Specify diameter values for any axes for which diameter programming is specified.
2 The outside of the area set with each parameter is treated as the inhibition area.
3 The stored stroke check 1 select signal (EXLM3, EXLM2, EXLM) is valid only when bit 2 (LMS) of parameter No. 1300 is 1.
4 When axis direction dependent stored stroke check 1 switch signals (+EXL1 to +EXL8, -EXL1 to -EXL8) is enabled (with bit 0 (DLM) of parameter No. 1301 set to 1), stroke parameter switching by the stored stroke check 1 select signal (EXLM3, EXLM2, EXLM) is disabled.

⚠ CAUTION
1 If the two points for specifying a forbidden area are identical, all areas are handled as forbidden areas for stored stroke check 1.
2 The size of a forbidden area must be set carefully. If the size is set incorrectly, the stroke becomes infinite.

4.15 PARAMETERS OF CHUCK AND TAIL STOCK BARRIER

1330	Profile of a chuck

[Input type] Parameter input
[Data type] Byte path
[Valid data range] 0 to 1
Select a chuck figure.
0 : Chuck which holds a workpiece on the inner surface
1 : Chuck which holds a workpiece on the outer surface

1331	Dimensions of the claw of a chuck (L)

[Input type] Parameter input
[Data type] Real path
[Unit of data] mm, inch (input unit)
[Min. unit of data] Depend on the increment system of the applied axis
[Valid data range] 0 or positive 9 digit of minimum unit of data (refer to the standard parameter setting table (B))
(When the increment system is IS-B, 0.0 to +999999.999)
Set the length (L) of the claw of the chuck.

NOTE
Whether to specify this parameter by using a diameter value or radius value depends on whether the corresponding axis is based on diameter specification or radius specification.

1332	Dimensions of the claw of a chuck (W)

[Input type] Parameter input
[Data type] Real path
[Unit of data] mm, inch (input unit)
[Min. unit of data] Depend on the increment system of the applied axis
[Valid data range] 0 or positive 9 digit of minimum unit of data (refer to the standard parameter setting table (B))
(When the increment system is IS-B, 0.0 to +999999.999)
Set the width (W) of the claw of the chuck.

NOTE
Specify this parameter by using a radius value at all times.

1333	Dimensions of the claw of a chuck (L1)

[Input type] Parameter input
[Data type] Real path
[Unit of data] mm, inch (input unit)
[Min. unit of data] Depend on the increment system of the applied axis
[Valid data range] 0 or positive 9 digit of minimum unit of data (refer to the standard parameter setting table (B))
(When the increment system is IS-B, 0.0 to +999999.999)
Set the length (L1) of the claw of the chuck.

NOTE
Whether to specify this parameter by using a diameter value or radius value depends on whether the corresponding axis is based on diameter specification or radius specification.

1334	Dimensions of the claw of a chuck (W1)

[Input type] Parameter input
[Data type] Real path
[Unit of data] mm, inch (input unit)
[Min. unit of data] Depend on the increment system of the applied axis
[Valid data range] 0 or positive 9 digit of minimum unit of data (refer to the standard parameter setting table (B))
(When the increment system is IS-B, 0.0 to +999999.999)
Set the width (W1) of the claw of the chuck.

NOTE
Specify this parameter by using a radius value at all times.

1335	X coordinate of a chuck (CX)

[Input type] Parameter input
[Data type] Real path
[Unit of data] mm, inch (input unit)
[Min. unit of data] Depend on the increment system of the applied axis
[Valid data range] 9 digit of minimum unit of data (refer to standard parameter setting table (A))
(When the increment system is IS-B, -999999.999 to +999999.999)
Set the chuck position (X coordinate) in the workpiece coordinate system.

NOTE
Whether to specify this parameter by using a diameter value or radius value depends on whether the corresponding axis is based on diameter specification or radius specification.

1336	Z coordinate of a chuck (CZ)

[Input type] Parameter input
[Data type] Real path
[Unit of data] mm, inch (input unit)
[Min. unit of data] Depend on the increment system of the applied axis
[Valid data range] 9 digit of minimum unit of data (refer to standard parameter setting table (A))
(When the increment system is IS-B, -999999.999 to +999999.999)
Set the chuck position (Z coordinate) in the workpiece coordinate system.

NOTE
1 Whether to specify this parameter by using a diameter value or radius value depends on whether the corresponding axis is based on diameter specification or radius specification.
2 The direction of the chuck and of the tail stock is decided by a big and small relation between this parameter and parameter No.1348 (Z coordinate of a tail stock (TZ)). Even when you not use the chuck, set to this parameter.

1341	Length of a tail stock (L)

[Input type] Parameter input
[Data type] Real path
[Unit of data] mm, inch (input unit)
[Min. unit of data] Depend on the increment system of the applied axis
[Valid data range] 0 or positive 9 digit of minimum unit of data (refer to the standard parameter setting table (B))
(When the increment system is IS-B, 0.0 to +999999.999)
Set the length (L) of the tail stock.

NOTE
Whether to specify this parameter by using a diameter value or radius value depends on whether the corresponding axis is based on diameter specification or radius specification.

1342	Diameter of a tail stock (D)

[Input type] Parameter input
[Data type] Real path
[Unit of data] mm, inch (input unit)
[Min. unit of data] Depend on the increment system of the applied axis
[Valid data range] 0 or positive 9 digit of minimum unit of data (refer to the standard parameter setting table (B))
(When the increment system is IS-B, 0.0 to +999999.999)
Set the diameter (D) of the tail stock.

NOTE
Specify this parameter by using a diameter value at all times.

1343	Length of a tail stock (L1)

[Input type] Parameter input
[Data type] Real path
[Unit of data] mm, inch (input unit)
[Min. unit of data] Depend on the increment system of the applied axis
[Valid data range] 0 or positive 9 digit of minimum unit of data (refer to the standard parameter setting table (B))
(When the increment system is IS-B, 0.0 to +999999.999)
Set the length (L1) of the tail stock.

NOTE
Whether to specify this parameter by using a diameter value or radius value depends on whether the corresponding axis is based on diameter specification or radius specification.

1344	Diameter of a tail stock (D1)

[Input type] Parameter input
[Data type] Real path
[Unit of data] mm, inch (input unit)
[Min. unit of data] Depend on the increment system of the applied axis
[Valid data range] 0 or positive 9 digit of minimum unit of data (refer to the standard parameter setting table (B))
(When the increment system is IS-B, 0.0 to +999999.999)
Set the diameter (D1) of the tail stock.

NOTE
Specify this parameter by using a diameter value at all times.

1345	Length of a tail stock (L2)

[Input type] Parameter input
[Data type] Real path
[Unit of data] mm, inch (input unit)
[Min. unit of data] Depend on the increment system of the applied axis
[Valid data range] 0 or positive 9 digit of minimum unit of data (refer to the standard parameter setting table (B))
(When the increment system is IS-B, 0.0 to +999999.999)
Set the length (L2) of the tail stock.

NOTE
Whether to specify this parameter by using a diameter value or radius value depends on whether the corresponding axis is based on diameter specification or radius specification.

1346	Diameter of a tail stock (D2)

[Input type] Parameter input
[Data type] Real path
[Unit of data] mm, inch (input unit)
[Min. unit of data] Depend on the increment system of the applied axis
[Valid data range] 0 or positive 9 digit of minimum unit of data (refer to the standard parameter setting table (B))
(When the increment system is IS-B, 0.0 to +999999.999)
Set the diameter (D2) of the tail stock.

NOTE
Specify this parameter by using a diameter value at all times.

1347	Diameter of a tail stock (D3)

[Input type] Parameter input
[Data type] Real path
[Unit of data] mm, inch (input unit)

[Min. unit of data] Depend on the increment system of the applied axis
[Valid data range] 0 or positive 9 digit of minimum unit of data (refer to the standard parameter setting table (B))
(When the increment system is IS-B, 0.0 to +999999.999)
Set the diameter (D3) of the tail stock.

NOTE
Specify this parameter by using a diameter value at all times.

1348	Z coordinate of a tail stock (TZ)

[Input type] Parameter input
[Data type] Real path
[Unit of data] mm, inch (input unit)
[Min. unit of data] Depend on the increment system of the applied axis
[Valid data range] 9 digit of minimum unit of data (refer to standard parameter setting table (A))
(When the increment system is IS-B, -999999.999 to +999999.999)
Set the tail stock position (Z coordinate) in the workpiece coordinate system.

NOTE
1 Whether to specify this parameter by using a diameter value or radius value depends on whether the corresponding axis is based on diameter specification or radius specification.
2 The direction of the chuck and of the tail stock is decided by a big and small relation between this parameter and parameter No.1336 (Z coordinate of a chuck (CZ)). Even when you not use the tail stock, set to this parameter.

	#7	#6	#5	#4	#3	#2	#1	#0
1370								CTA

[Input type] Parameter input
[Data type] Bit path

NOTE
When this parameter is set, the power must be turned off before operation is continued.

#0 CTA The overtravel alarm of Chuck and Tail Stock Barrier is,
0: Conventional specification. (Alarm OT0502, OT0503)
1: New specification. (Alarm OT0520, OT0521)

4.16 PARAMETERS OF FEEDRATE

	#7	#6	#5	#4	#3	#2	#1	#0
1401		RDR	TDR	RF0		JZR	LRP	RPD

[Input type] Parameter input
[Data type] Bit path

#0 RPD Manual rapid traverse during the period from power-on time to the completion of the reference position return.
0: Disabled (Jog feed is performed.)
1: Enabled

#1 LRP Positioning (G00)
0: Positioning is performed with non-linear type positioning so that the tool moves along each axis independently at rapid traverse.
1: Positioning is performed with linear interpolation so that the tool moves in a straight line.
When using 3-dimensional coordinate system conversion, set this parameter to 1.

#2 JZR The manual reference position return at jog feedrate
0: Not performed
1: Performed

#4 RF0 When cutting feedrate override is 0% during rapid traverse,
0: The machine tool does not stop moving.
1: The machine tool stops moving.

#5 TDR Dry run during threading or tapping (tapping cycle G74 or G84, rigid tapping)
0: Enabled
1: Disabled

#6 RDR Dry run for rapid traverse command
0: Disabled
1: Enabled

	#7	#6	#5	#4	#3	#2	#1	#0
1402				JRV	OV2		JOV	NPC

[Input type] Parameter input
[Data type] Bit path

#0 NPC Feed per revolution without the position coder (function for converting feed per revolution F to feed per minute F in the feed per revolution mode (G95)) is:
0: Not used
1: Used

#1 JOV Jog override is:
0: Enabled
1: Disabled (tied to 100%)

#3 OV2 Signals used for 2nd feedrate override are
0: *AFV0 to AFV7 <Gn013> (specified every 1%)
1: *APF00 to *APF15 <Gn094, Gn095> (specified every 0.01%)

#4 JRV Jog feed or incremental feed is
0: Performed at feed per minute.
1: Performed at feed per rotation.

> **NOTE**
> Specify a feedrate in parameter No. 1423.

	#7	#6	#5	#4	#3	#2	#1	#0
1403	RTV			ROC				
				ROC				

[Input type] Parameter input
[Data type] Bit path

#4 ROC In the threading cycles G92 (T series), G76 (T series), and G76.7 (M series), rapid traverse override for retraction after threading is finished is:
0: Effective
1: Not effective (Override of 100%)

#7 RTV Rapid traverse override while the tool is retracting in threading
0: Rapid traverse override is effective.
1: Rapid traverse override is not effective.

	#7	#6	#5	#4	#3	#2	#1	#0
1404	FC0					FM3	DLF	
	FC0						DLF	

[Input type] Parameter input
[Data type] Bit path

#1 DLF After a reference position is set, manual reference position return performed at:
0: Rapid traverse rate (parameter No. 1420)
1: Manual rapid traverse rate (parameter No. 1424)

> **NOTE**
> This parameter selects a feedrate for reference position return performed without dogs. This parameter also selects a feedrate when manual reference position return is performed according to bit 7 (SJZ) of parameter No.0002 using rapid traverse without deceleration dogs after a reference position is set.

#2 FM3 The increment system of an F command without a decimal point in feed per minute is:
0: 1 mm/min (0.01 inch/min for inch input)
1: 0.001 mm/min (0.00001 inch/min for inch input)

#7 FC0 Specifies the behavior of the machine tool when a block (G01, G02, G03, etc.) containing a feedrate command (F command) that is 0 is issued during automatic operation, as follows:
0: An alarm PS0011, “FEED ZERO (COMMAND)” occurs.
1: An alarm PS0011 does not occur, and the block is executed.

NOTE
1 In inverse time feed (G93) mode, the alarm PS1202, "NO F COMMAND AT G93" is issued irrespective of the setting of this parameter.
2 This parameter is set from 1 to 0, if a bit 6 (CLR) of parameter No. 3402 is 1, reset the CNC. Or if CLR is 0, turn off and on the CNC.

	#7	#6	#5	#4	#3	#2	#1	#0
1405			EDR		HFR	PCL		
			EDR		HFR	PCL	FR3	

[Input type] Parameter input
[Data type] Bit path

#1 FR3 The increment system of an F command without a decimal point in feed per revolution is:
0: 0.01 mm/rev (0.0001 inch/rev for inch input)
1: 0.001 mm/rev (0.00001 inch/rev for inch input)

#2 PCL The function for constant surface speed control without the position coder is:
0: Not used.
1: Used.

NOTE
1 Enable constant surface speed control (bit 0 (SSC) of parameter No. 8133 is 1)
2 This function is not effective to spindle output control by the PMC.
3 When this parameter is set to 1, feed per revolution cannot be used to spindle output control by the PMC.

#3 HFR Feedrate command in rapid traverse is:
0: A value of set in parameter.
1: Synchronized with handle pulse by the handle-synchronous feed function.

NOTE
This parameter is available when the handle-synchronous feed function is available.

#5 EDR As the external deceleration rate for linear interpolation type positioning:
0: The external deceleration rate for cutting feed is used.
1: The external deceleration rate in rapid traverse for the 1st axis in the entire system is used.

[Example of external deceleration 1]
When this parameter is set to 0, the parameter No. 1426 is used as the external deceleration rate for external deceleration 1.
When this parameter is set to 1, the parameter No. 1427 for the 1st axis in the entire system is used as the external deceleration rate for external deceleration 1.

	#7	#6	#5	#4	#3	#2	#1	#0
1406							EX3	EX2
	F1O						EX3	EX2

[Input type] Parameter input
[Data type] Bit path

#0 EX2 External deceleration function setting 2 is:
0: Invalid
1: Valid

#1 EX3 External deceleration function setting 3 is:
0: Invalid
1: Valid

#7 F1O For the cutting feedrate specified by a single-digit F code (F1 to F9), feedrate override, second feedrate override, and override cancellation are:
0: Disabled.
1: Enabled.

> **NOTE**
> For the F0 feedrate, rapid traverse override is enabled regardless of the setting of this parameter.

	#7	#6	#5	#4	#3	#2	#1	#0
1408					IRCx			RFDx

[Input type] Parameter input
[Data type] Bit axis

#0 RFDx Feedrate control on a rotary axis is exercised using:
0: Conventional method
1: Method that specifies a feedrate on the virtual circle of the rotary axis

#3 IRCx The least input increment of the maximum cutting feedrates set in parameters Nos. 1430 and 1432 is:
0: Not multiplied by ten.
1: Multiplied by ten.
Set this parameter for the following axes, which are operated by the following functions:
- Spindle control axis by servo motor
- Tool rotary axis in the polygon turning function

The maximum cutting feedrates parameter (No.1430/No.1432) is not checked in the under mentioned function. When this parameter is set, only the least input increment of the servo motor maximum speed parameter (No.12255) is multiplied by ten.
- Arbitrary speed threading (Cs contour control axis)

If a rotation speed of 1000 (1/min) (=360000 (deg/min)) is to be used when this parameter is set to 1, set 36000.0 in parameter No. 1430/1432.

1410	Dry run rate

[Input type] Parameter input
[Data type] Real path
[Unit of data] mm/min, inch/min, degree/min (machine unit)
[Min. unit of data] Depend on the increment system of the reference axis
[Valid data range] Refer to the standard parameter setting table (C)
(When the increment system is IS-B, 0.0 to +999000.0)
Set the dry run rate at the 100% position on the jog feedrate specification dial. The unit of data depends on the increment system of the reference axis. Setting this parameter to 0 results in alarm PS5009, "PARAMETER ZERO (DRY RUN)", being issued.

1411	
	Cutting feedrate

NOTE
When this parameter is set, the power must be turned off before operation is continued.

[Input type] Setting input
[Data type] Real path
[Unit of data] mm/min, inch/min, degree/min (input unit)
[Min. unit of data] Depend on the increment system of the reference axis
[Valid data range] Refer to the standard parameter setting table (C)
(When the increment system is IS-B, 0.0 to +999000.0)
A cutting feedrate can be specified with this parameter for a machine which does not have to change the cutting feedrate frequently during machining. This eliminates the need to specify a cutting feedrate (F code) in the NC program.

1414	
	Feedrate for retrace

[Input type] Parameter input
[Data type] Real path
[Unit of data] mm/min, inch/min, degree/min (machine unit)
[Min. unit of data] Depend on the increment system of the reference axis
[Valid data range] Refer to the standard parameter setting table (C)
(When the increment system is IS-B, 0.0 to +999000.0)
Set a cutting feedrate for retrace operation. When 0 is set, a retrace operation is performed at a programmed feedrate.

1415	**Manual synchronous feedrate for manual linear/circular interpolation continuous feed at override 100%**

[Input type] Parameter input
[Data type] Real path
[Unit of data] mm/min, inch/min, degree/min (machine unit)
[Min. unit of data] Depend on the increment system of the reference axis
[Valid data range] Refer to the standard parameter setting table (C)
(When the increment system is IS-B, 0.0 to +999000.0)

NOTE
This parameter is valid only when bit 4 (JRV) of parameter No. 1402 is 1 (manual per revolution feed is enabled). If manual per revolution feed is disabled, the manual linear/circular interpolation continuous feedrate follows the dry run rate (parameter No. 1410). For a machining center system, the manual linear/circular interpolation continuous feedrate follows the dry run rate (parameter No. 1410) (feed per minute) even though bit 4 (JRV) of parameter No. 1402 is set to 1 when the threading/synchronous feed is not used.

1420	**Rapid traverse rate for each axis**

[Input type] Parameter input
[Data type] Real axis

[Unit of data] mm/min, inch/min, degree/min (machine unit)
[Min. unit of data] Depend on the increment system of the applied axis
[Valid data range] Refer to the standard parameter setting table (C)
(When the increment system is IS-B, 0.0 to +999000.0)
Set the rapid traverse rate when the rapid traverse override is 100% for each axis.

1421	F0 rate of rapid traverse override for each axis

[Input type] Parameter input
[Data type] Real axis
[Unit of data] mm/min, inch/min, degree/min (machine unit)
[Min. unit of data] Depend on the increment system of the applied axis
[Valid data range] Refer to the standard parameter setting table (C)
(When the increment system is IS-B, 0.0 to +999000.0)
Set the F0 rate of the rapid traverse override for each axis.

1423	Feedrate in manual continuous feed (jog feed) for each axis

[Input type] Parameter input
[Data type] Real axis
[Unit of data] mm/min, inch/min, degree/min (machine unit)
[Min. unit of data] Depend on the increment system of the applied axis
[Valid data range] Refer to the standard parameter setting table (C)
(When the increment system is IS-B, 0.0 to +999000.0)
(1) When bit 4 (JRV) of parameter No. 1402 is set to 0 (feed per minute), specify a jog feedrate (feed per minute) under an override of 100%.
(2) When bit 4 (JRV) of parameter No. 1402 is set to 1 (feed per revolution), specify a jog feedrate (feed per revolution) under an override of 100%.

NOTE
This parameter is clamped to the axis-by-axis manual rapid traverse rate (parameter No. 1424).

1424	Manual rapid traverse rate for each axis

[Input type] Parameter input
[Data type] Real axis
[Unit of data] mm/min, inch/min, degree/min (machine unit)
[Min. unit of data] Depend on the increment system of the applied axis
[Valid data range] Refer to the standard parameter setting table (C)
(When the increment system is IS-B, 0.0 to +999000.0)
Set the rate of manual rapid traverse when the rapid traverse override is 100% for each axis.

NOTE
1 If 0 is set, the rate set in parameter No. 1420 (rapid traverse rate for each axis) is assumed.
2 When manual rapid traverse is selected (bit 0 (RPD) of parameter No. 1401 is set to 1), manual feed is performed at the feedrate set in this parameter, regardless of the setting of bit 4 (JRV) of parameter No. 1402.

1425	FL rate of the reference position return for each axis

[Input type] Parameter input
[Data type] Real axis
[Unit of data] mm/min, inch/min, degree/min (machine unit)
[Min. unit of data] Depend on the increment system of the applied axis
[Valid data range] Refer to the standard parameter setting table (C)
(When the increment system is IS-B, 0.0 to +999000.0)
Set feedrate (FL rate) after deceleration when the reference position return is performed for each axis.

1426	External deceleration rate of cutting feed

[Input type] Parameter input
[Data type] Real path
[Unit of data] mm/min, inch/min, degree/min (machine unit)
[Min. unit of data] Depend on the increment system of the reference axis
[Valid data range] Refer to the standard parameter setting table (C)
(When the increment system is IS-B, 0.0 to +999000.0)
Set an external deceleration rate for cutting feed or positioning of linear interpolation type (G00).

1427	External deceleration rate of rapid traverse for each axis

[Input type] Parameter input
[Data type] Real axis
[Unit of data] mm/min, inch/min, degree/min (machine unit)
[Min. unit of data] Depend on the increment system of the applied axis
[Valid data range] Refer to the standard parameter setting table (C)
(When the increment system is IS-B, 0.0 to +999000.0)
Set the external deceleration rate of rapid traverse for each axis.

1428	Reference position return feedrate for each axis

[Input type] Parameter input
[Data type] Real axis
[Unit of data] mm/min, inch/min, degree/min (machine unit)
[Min. unit of data] Depend on the increment system of the applied axis
[Valid data range] Refer to the standard parameter setting table (C)
(When the increment system is IS-B, 0.0 to +999000.0)

This parameter sets a rapid traverse rate for reference position return operation using deceleration dogs, or for reference position return operation before a reference position is set.
This parameter is also used to set a feedrate for the rapid traverse command (G00) in automatic operation before a reference position is set.

NOTE

1 To this feedrate setting 100%, a rapid traverse override (F0, 25, 50, or 100%) is applicable.

2 For automatic return after completion of reference position return and machine reference position establishment, the normal rapid traverse rate is used.

3 As a manual rapid traverse rate before machine reference position establishment by reference position return, the jog feedrate or manual rapid traverse rate can be selected with bit 0 (RPD) of parameter No. 1401.

	Before reference position establishment	After reference position establishment
Automatic reference position return (G28)	No. 1428	No. 1420
Automatic rapid traverse (G00)	No. 1428	No. 1420
Manual reference position return *1	No. 1428	No. 1428 *3
Manual rapid traverse	No. 1423 *2	No. 1424

4 When parameter No. 1428 is set to 0, the following parameter-set feedrates are applied.

	Before reference position establishment	After reference position establishment
Automatic reference position return (G28)	No. 1420	No. 1420
Automatic rapid traverse (G00)	No. 1420	No. 1420
Manual reference position return *1	No. 1424	No. 1424 *3
Manual rapid traverse	No. 1423 *2	No. 1424

No. 1420: Rapid traverse rate
No. 1423: Jog feedrate
No. 1424: Manual rapid traverse rate

*1 : By using bit 2 (JZR) of parameter No. 1401, the jog feedrate can be used for manual reference position return at all times.

*2 : When bit 0 (RPD) of parameter No. 1401 is set to 1, the setting of parameter No. 1424 is used.

*3 : When rapid traverse is used for reference position return without dogs or manual reference position return after reference position establishment, regardless of the deceleration dog, the feedrate for manual reference position return based on these functions is used (the setting of bit 1 (DLF) of parameter No. 1404 is followed).

1430	Maximum cutting feedrate for each axis

[Input type] Parameter input
[Data type] Real axis
[Unit of data] mm/min, inch/min, degree/min (machine unit)
[Min. unit of data] Depend on the increment system of the applied axis
[Valid data range] Refer to the standard parameter setting table (C)
(When the increment system is IS-B, 0.0 to +999000.0)
Specify the maximum cutting feedrate for each axis.

1432	Maximum cutting feedrate for all axes in the acceleration/deceleration before interpolation

[Input type] Parameter input
[Data type] Real axis
[Unit of data] mm/min, inch/min, degree/min (machine unit)
[Min. unit of data] Depend on the increment system of the applied axis

[Valid data range] Refer to the standard parameter setting table (C)
(When the increment system is IS-B, 0.0 to +999000.0)
Set a maximum cutting feedrate for each axis in the look-ahead acceleration/deceleration before interpolation mode such as AI contour control. When this parameter is set to 0 or the look-ahead acceleration/deceleration before interpolation mode is not set, the maximum cutting feedrate set in parameter No. 1430 is used.

1434	Maximum manual handle feedrate for each axis

[Input type] Parameter input
[Data type] Real axis
[Unit of data] mm/min, inch/min, degree/min (machine unit)
[Min. unit of data] Depend on the increment system of the applied axis
[Valid data range] Refer to the standard parameter setting table (C)
(When the increment system is IS-B, 0.0 to +999000.0)
Set a maximum manual handle feedrate for each axis in case of maximum manual handle feedrate switch signal HNDLF<Gn023.3>=”1”.

1440	External deceleration rate setting 2 in cutting feed

[Input type] Parameter input
[Data type] Real path
[Unit of data] mm/min, inch/min, degree/min (machine unit)
[Min. unit of data] Depend on the increment system of the reference axis
[Valid data range] Refer to the standard parameter setting table (C)
(When the increment system is IS-B, 0.0 to +999000.0)
Set external deceleration rate 2 for cutting feed or positioning of linear interpolation type (G00).

1441	External deceleration rate setting 2 for each axis in rapid traverse

[Input type] Parameter input
[Data type] Real axis
[Unit of data] mm/min, inch/min, degree/min (machine unit)
[Min. unit of data] Depend on the increment system of the applied axis
[Valid data range] Refer to the standard parameter setting table (C)
(When the increment system is IS-B, 0.0 to +999000.0)
Set external deceleration rate 2 for each axis in rapid traverse.

1442	Maximum manual handle feedrate setting 2 for each axis

[Input type] Parameter input
[Data type] Real axis
[Unit of data] mm/min, inch/min, degree/min (machine unit)
[Min. unit of data] Depend on the increment system of the applied axis
[Valid data range] Refer to the standard parameter setting table (C)
(When the increment system is IS-B, 0.0 to +999000.0)
Set a maximum manual handle feedrate 2 for each axis.

1443	External deceleration rate setting 3 in cutting feed

[Input type] Parameter input
[Data type] Real path
[Unit of data] mm/min, inch/min, degree/min (machine unit)
[Min. unit of data] Depend on the increment system of the reference axis

[Valid data range] Refer to the standard parameter setting table (C)
(When the increment system is IS-B, 0.0 to +999000.0)
Set external deceleration rate 3 for cutting feed or positioning of linear interpolation type (G00).

1444	External deceleration rate setting 3 for each axis in rapid traverse

[Input type] Parameter input
[Data type] Real axis
[Unit of data] mm/min, inch/min, degree/min (machine unit)
[Min. unit of data] Depend on the increment system of the applied axis
[Valid data range] Refer to the standard parameter setting table (C)
(When the increment system is IS-B, 0.0 to +999000.0)
Set external deceleration rate 3 for each axis in rapid traverse.

1445	Maximum manual handle feedrate setting 3 for each axis

[Input type] Parameter input
[Data type] Real axis
[Unit of data] mm/min, inch/min (machine unit)
[Min. unit of data] Depend on the increment system of the applied axis
[Valid data range] Refer to the standard parameter setting table (C)
(When the increment system is IS-B, 0.0 to +999000.0)
Set a maximum manual handle feedrate 3 for each axis.

1450	
	Change of feedrate for one graduation on the manual pulse generator during one-digit F feed code

[Input type] Parameter input
[Data type] Byte path
[Valid data range] 1 to 127
Set the constant that determines the change in feedrate as the manual pulse generator is rotated one graduation during one-digit F feed code.

$$\Delta F = \frac{F\max i}{100n} \quad \text{(where, i=1 or 2)}$$

In the above equation, set n. That is, the number of revolutions
of the manual pulse generator, required to reach feedrate Fmaxi is obtained. Fmaxi refers to the upper limit of the feedrate for a one-digit F code feed command, and set it in parameter No. 1460 or 1461.
Fmax1: Upper limit of the feedrate for F1 to F4 (parameter No. 1460)
Fmax2: Upper limit of the feedrate for F5 to F9 (parameter No. 1461)

1451	
	Feedrate for F1
to	to
1459	
	Feedrate for F9

[Input type] Setting input
[Data type] Real path
[Unit of data] mm/min, inch/min, degree/min (machine unit)
[Min. unit of data] Depend on the increment system of the reference axis
[Valid data range] Refer to the standard parameter setting table (C)
(When the increment system is IS-B, 0.0 to +999000.0)

These parameters set the feedrates for one-digit F code feed commands F1 to F9. When a one-digit F code feed command is specified, and the feedrate is changed by turning the manual pulse generator, the parameter-set value also changes accordingly.

1460	Upper limit of feedrate for F1 to F4
1461	Upper limit of feedrate for F5 to F9

[Input type] Parameter input
[Data type] Real path
[Unit of data] mm/min, inch/min, degree/min (machine unit)
[Min. unit of data] Depend on the increment system of the reference axis
[Valid data range] Refer to the standard parameter setting table (C)
(When the increment system is IS-B, 0.0 to +999000.0)
Set the upper limit of feedrate for the one-digit F code feed command.
As the feedrate increases by turning the manual pulse generator, the feedrate is clamped when it reaches the upper limit set. If a one-digit F feed command F1 to F4 is executed, the upper limit is that set in parameter No. 1460. If a one-digit F code feed command F5 to F9 is executed, the upper limit is that set in parameter No. 1461.

1465	Radius of a virtual circle when a feedrate is specified on the virtual circle of a rotary axis

[Input type] Parameter input
[Data type] Real axis
[Unit of data] mm, inch (input unit)
[Min. unit of data] Depend on the increment system of the applied axis
[Valid data range] Refer to the standard parameter setting table (B)
Set the radius of a virtual circle when a feedrate on the virtual circle of a rotary axis is specified.
If 0 is set for a rotary axis, the axis is excluded from feedrate calculation.
If the input unit is the inch, enter a value in inches.
The data is then converted to a millimeter value and displayed.

1466	Feedrate for retraction in threading cycle G92 or G76 Feedrate for retraction in threading cycle G76.7

[Input type] Parameter input
[Data type] Real path
[Unit of data] mm/min, inch/min (machine unit)
[Min. unit of data] Depend on the increment system of the reference axis
[Valid data range] Refer to the standard parameter setting table (C)
(When the increment system is IS-B, 0.0 to +999000.0)
When threading cycle G92, G76 or G76.7 is specified, retraction is performed after threading. Set a feedrate for this retraction.

> ⚠ **WARNING**
> When the manual handle interruption is valid, set the same value as the parameter No.1430 to the parameter No.1466.

> **NOTE**
> When this parameter is set to 0 or bit 1 (CFR) of parameter No. 1611 is set to 1, the rapid traverse rate set in parameter No. 1420 is used.

	#7	#6	#5	#4	#3	#2	#1	#0
1490	PGF							

[Input type] Parameter input
[Data type] Bit path

#7 PGF The feedrate specified for circular interpolation in the high-speed program check mode is:
0: The dry run feedrate.
At this time, manual feedrate override signals *JV0 to *JV15 <Gn010 to Gn011> can be used.
1: The maximum feedrate specified by the CNC.

> ⚠ **CAUTION**
> If this parameter is set to 1, feedrate clamp, override, and dry run for circular interpolation are disabled. If a movement around a stroke limit is specified, therefore, a stroke limit check cannot sometimes be made correctly.

1495	
	Torch swing feedrate of the torch control axis for gas cutting machine

[Input type] Parameter input
[Data type] Real path
[Unit of data] mm/min, inch/min, degree/min (machine unit)
[Min. unit of data] Depend on the increment system of the reference axis
[Valid data range] Refer to the standard parameter setting table (C)
(When the increment system is IS-B, 0.0 to +999000.0)
Set the swing feedrate of the torch control axis for gas cutting machine.

4.17 PARAMETERS OF ACCELERATION/DECELERATION CONTROL (1 OF 2)

	#7	#6	#5	#4	#3	#2	#1	#0
1601			NCI	RTO				

[Input type] Parameter input
[Data type] Bit path

#4 RTO Block overlap in rapid traverse
0: Blocks are not overlapped in rapid traverse.
1: Blocks are overlapped in rapid traverse.

#5 NCI An in-position check:
0: Confirms that the specified feedrate becomes 0 (the acceleration/deceleration delay becomes 0) at deceleration time and that the machine position has reached a specified position (the servo positional deviation is within the in-position width set by parameter No. 1826).

1: Confirms only that the specified feedrate becomes 0 (the acceleration/deceleration delay becomes 0) at deceleration time.

	#7	#6	#5	#4	#3	#2	#1	#0
1602		LS2			BS2	CAF		

[Input type] Parameter input
[Data type] Bit path

#2 CAF In cutter compensation mode or tool nose radius compensation mode, the circular cutting feedrate change is;
0: Performed on the inner arc only.
1: Performed on the inner and outer arcs.

#3 BS2 Acceleration/deceleration after interpolation for cutting feed in a mode of look-ahead acceleration/deceleration before interpolation such as the AI contour control mode:
0: Exponential acceleration/deceleration or linear acceleration/ deceleration is used. (The setting of bit 6 (LS2) of parameter No. 1602 is followed.)
1: Bell-shaped acceleration/deceleration is used.

> **NOTE**
> This parameter is Initial setting parameter. For details, refer to the appendix "Automatic setting / Initial setting parameter" in CONNECTION MANUAL (FUNCTION) (B-64693EN-1).

#6 LS2 Acceleration/deceleration after interpolation for cutting feed in a mode of look-ahead acceleration/deceleration before interpolation such as the AI contour control mode:
0: Exponential acceleration/deceleration is used.
1: Linear acceleration/deceleration is used.

> **NOTE**
> This parameter is Initial setting parameter. For details, refer to the appendix "Automatic setting / Initial setting parameter" in CONNECTION MANUAL (FUNCTION) (B-64693EN-1).

	#7	#6	#5	#4	#3	#2	#1	#0
1603				PRT				

[Input type] Parameter input
[Data type] Bit path

#4 PRT For positioning of linear interpolation type:
0: Acceleration/deceleration of acceleration fixed type is used.
1: Acceleration/deceleration of time fixed type is used.

	#7	#6	#5	#4	#3	#2	#1	#0
1604								SHP

[Input type] Parameter input
[Data type] Bit path

#0 SHP When automatic operation is started, the state equivalent to the specification of G5.1Q1 for AI contour control is:
0: Not set

1: Set

NOTE
It is necessary to reset CNC once after this parameter is changed. This parameter is Initial setting parameter. For details, refer to the appendix "Automatic setting / Initial setting parameter" in CONNECTION MANUAL (FUNCTION) (B-64693EN-1).

	#7	#6	#5	#4	#3	#2	#1	#0
1605						EST		

[Input type] Parameter input
[Data type] Bit path

NOTE
When this parameter is set, the power must be turned off before operation is continued.

#2 EST Axis immediate stop function is:
0: Disabled.
1: Enabled.

	#7	#6	#5	#4	#3	#2	#1	#0
1606								MNJx

[Input type] Parameter input
[Data type] Bit axis

#0 MNJx In manual handle interrupt or automatic manual simultaneous operation (interrupt type):
0: Only cutting feed acceleration/deceleration is enabled, and jog feed acceleration/deceleration is disabled.
1: Both cutting feed acceleration/deceleration and jog feed acceleration/deceleration are applied.

	#7	#6	#5	#4	#3	#2	#1	#0
1607								PRTx

[Input type] Parameter input
[Data type] Bit axis

#0 PRTx For positioning of linear interpolation type:
0: Acceleration/deceleration of acceleration fixed type is used.
1: Acceleration/deceleration of time fixed type is used.

NOTE
Set bit 4 (PRT) of parameter No.1603 to 0 to make this parameter effective.
When PRT is set 1, all axes in the path become the acceleration/ deceleration of time fixed type.

	#7	#6	#5	#4	#3	#2	#1	#0
1610			THLx	JGLx			CTBx	CTLx

[Input type] Parameter input
[Data type] Bit axis

#0 CTLx Acceleration/deceleration in cutting feed or dry run during cutting feed
0: Exponential acceleration/deceleration is applied.
1: Linear acceleration/deceleration after interpolation is applied.

> **NOTE**
> This parameter is Initial setting parameter. For details, refer to the appendix "Automatic setting / Initial setting parameter" in CONNECTION MANUAL (FUNCTION) (B-64693EN-1).

#1 CTBx Acceleration/deceleration in cutting feed or dry run during cutting feed
0: Exponential acceleration/deceleration or linear acceleration/ deceleration is applied. (depending on the setting in bit 0 (CTLx) of parameter No. 1610)
1: Bell-shaped acceleration/deceleration is applied.

> **NOTE**
> This parameter is Initial setting parameter. For details, refer to the appendix "Automatic setting / Initial setting parameter" in CONNECTION MANUAL (FUNCTION) (B-64693EN-1).

#4 JGLx Acceleration/deceleration in jog feed
0: Exponential acceleration/deceleration is applied.
1: The same acceleration/deceleration as for cutting feedrate is applied. (Depending on the settings of bits 1 (CTBx) and 0 (CTLx) of parameter No. 1610)

> **NOTE**
> This parameter is Initial setting parameter. For details, refer to the appendix "Automatic setting / Initial setting parameter" in CONNECTION MANUAL (FUNCTION) (B-64693EN-1).

#5 THLx Acceleration/deceleration in threading cycles
0: Exponential acceleration/deceleration is applied.
1: The same acceleration/deceleration as for cutting feedrate is applied. (Depending on the settings of bits 1 (CTBx) and 0 (CTLx) of parameter No. 1610) As the time constant and FL rate, however, the settings of parameters Nos. 1626 and 1627 for threading cycles are used.

	#7	#6	#5	#4	#3	#2	#1	#0
1611					TCO	AOFF	THA	CFR

[Input type] Parameter input
[Data type] Bit path

#0 CFR For retraction after threading in the threading cycles G92 (T series), G76 (T series), and G76.7 (M series):
0: The type of acceleration/deceleration after interpolation for threading is used together with the threading time constant (parameter No. 1626) and FL rate (parameter No. 1627).

1: The type of acceleration/deceleration after interpolation for rapid traverse is used together with the rapid traverse time constant.

NOTE
If this parameter is set to 1, a check is made before a retraction to see that the specified feedrate has become 0 (the delay in acceleration/deceleration has become 0). For retraction, the rapid traverse rate (parameter No. 1420) is used, regardless of the setting of parameter No. 1466. When this parameter is set to 0, parameter No. 1466 is used as the feedrate for retraction. As acceleration/deceleration used for retraction, only acceleration/deceleration after interpolation is used. Rapid traverse acceleration/deceleration before interpolation and optimum torque acceleration/deceleration are disabled.

#1 THA When a threading command is specified in AI contour control mode:
0: An alarm is issued.
1: AI contour control mode is temporarily canceled and the command is executed.

NOTE
If look-ahead acceleration/deceleration before interpolation is enabled by the command following or followed by a threading command with this parameter set to 1, the tool is decelerated to a stop at the joint of the relevant block.
This parameter is Automatic setting parameter. For details, refer to the appendix "Automatic setting / Initial setting parameter" in CONNECTION MANUAL (FUNCTION) (B-64693EN-1).

#2 AOFF When AI contour control mode is off and the parameter of the advanced-preview feed forward function is valid, the advanced-preview feed forward function is:
0: Enabled.
1: Disabled.

NOTE
This parameter is valid when bit 0 (SHP) of parameter No. 1604 is 0 with none of G05.1Q1, G05P10000, and G08P1 specified.

#3 TCO Blocks in a threading cycle are:
0: Not overlapped in rapid traverse.
1: Overlapped in rapid traverse.
In a threading cycle that is a turning canned cycle, the rapid traverse overlap function can perform rapid traverse overlap between a retract operation and return operation and between a return operation and a positioning operation for the next threading cycle.
The rapid traverse deceleration ratio in an overlap between blocks is set in parameter No. 1726.

NOTE
When this function is used, threading cycle retraction is disabled.

	#7	#6	#5	#4	#3	#2	#1	#0
1612				MTA		TOD	AIR	PRO

[Input type] Parameter input
[Data type] Bit path

#0 PRO The feedrate reduction ratio for rapid traverse overlap is specified by :
0: The parameter No. 1722
1: The system variables #100851[#_ROVLP[1]]-#100874[#_ROVLP[24]]
This function is available in following conditions.
Rapid traverse block overlap disable signal ROVLP<Gn053.5>=”0” and bit 4 (RTO) of parameter No. 1601=1(Blocks are overlapped in rapid traverse).

#1 AIR The status display and mode signal in AI contour control mode is:
0: Enabled only when the conditions for executing AI contour control are satisfied.
1: Enabled always in AI contour control mode.
If this parameter is set to 1, in-mode blinking display and the AI contour control mode signal AICC <Fn062.0> remain enabled in the AI contour control mode.

> **NOTE**
> The parameter is invalid during a stop on feed hold or a single-block stop.

#2 TOD Rapid traverse overlap in threading cycle is:
0: Invalid.
1: Valid.
In threading cycle of canned cycle, rapid traverse overlap at the following corners.
- Between the retraction of X-axis and the return to the cycle start point of Z-axis
- Between the return to the cycle start of Z-axis and positioning to the threading start point of X-axis

Distances of overlap are specified with parameter No.1728 and No.1729.

#4 MTA When the maximum cutting feedrate is exceeded in threading, the alarm PS0530 is:
0: Issued.
1: Not issued.

	#7	#6	#5	#4	#3	#2	#1	#0
1614								RNO

[Input type] Parameter input
[Data type] Bit path

#0 RNO When Automatic reference position return include the Cs axis for which no reference position is established is specified,:
0: Nano interpolation of all axes is invalid.
1: Nano interpolation of all axes other than the Cs is valid.

1620	Time constant T or T1 used for linear acceleration/deceleration or bell-shaped acceleration/deceleration in rapid traverse for each axis

[Input type] Parameter input
[Data type] Word axis
[Unit of data] msec

[Valid data range] 0 to 4000

Specify a time constant used for acceleration/deceleration in rapid traverse.

[Example]

For linear acceleration/deceleration

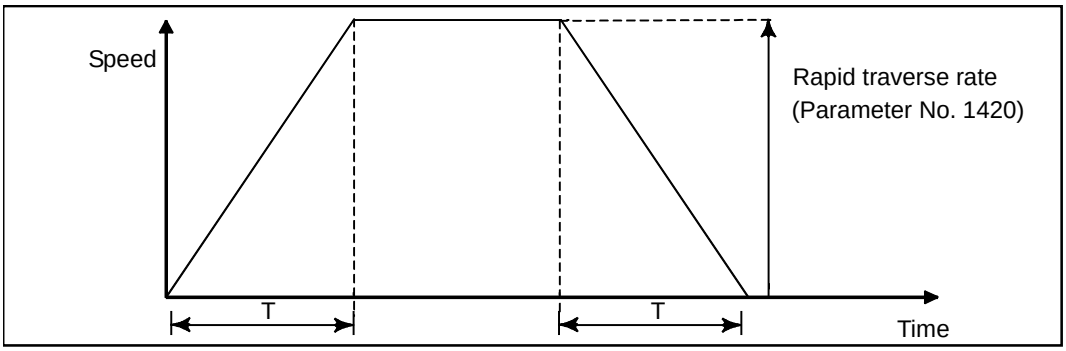

T : Setting of parameter No. 1620

For bell-shaped acceleration/deceleration

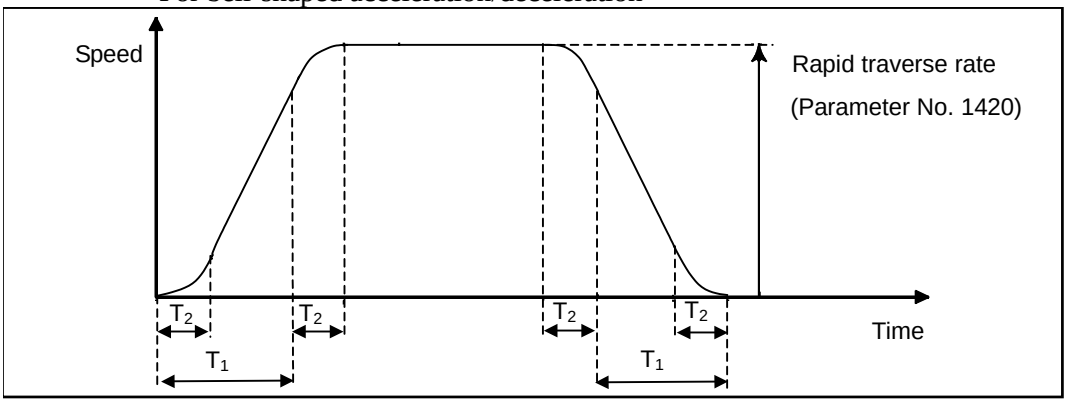

T_1 : Setting of parameter No. 1620

T_2 : Setting of parameter No. 1621

(However, $T_1 \geq T_2$ must be satisfied.)

Total acceleration (deceleration) time : $T_1 + T_2$

Time for linear portion : $T_1 - T_2$

Time for curve portion : $T_2 \times 2$

1621	Time constant T_2 used for bell-shaped acceleration/deceleration in rapid traverse for each axis

[Input type] Parameter input

[Data type] Word axis

[Unit of data] msec

[Valid data range] 0 to 512

Specify time constant T_2 used for bell-shaped acceleration/ deceleration in rapid traverse for each axis.

1622	Time constant of acceleration/deceleration in cutting feed for each axis

[Input type] Parameter input

[Data type] Word axis

[Unit of data] msec

[Valid data range] 0 to 4000
Set the time constant used for exponential acceleration/deceleration in cutting feed, bell-shaped acceleration/deceleration after interpolation or linear acceleration/deceleration after interpolation in cutting feed for each axis. Which type to use is selected with bits 1 (CTBx) and 0 (CTLx) of parameter No. 1610. Except for special applications, the same time constant must be set for all axes in this parameter. If the time constants set for the axes differ from each other, proper straight lines and arcs cannot be obtained.

1623	FL rate of exponential acceleration/deceleration in cutting feed for each axis

[Input type] Parameter input
[Data type] Real axis
[Unit of data] mm/min, inch/min, degree/min (machine unit)
[Min. unit of data] Depend on the increment system of the applied axis
[Valid data range] Refer to the standard parameter setting table (C)
(When the increment system is IS-B, 0.0 to +999000.0)
Set the lower limit (FL rate) of exponential acceleration/deceleration in cutting feed for each axis.

1624	Time constant of acceleration/deceleration in jog feed for each axis.

[Input type] Parameter input
[Data type] Word axis
[Unit of data] msec
[Valid data range] 0 to 4000
Set the time constant used for acceleration/deceleration in jog feed for each axis.

1625	FL rate of exponential acceleration/deceleration in jog feed for each axis

[Input type] Parameter input
[Data type] Real axis
[Unit of data] mm/min, inch/min, degree/min (machine unit)
[Min. unit of data] Depend on the increment system of the applied axis
[Valid data range] Refer to the standard parameter setting table (C)
(When the increment system is IS-B, 0.0 to +999000.0)
Set the FL rate of exponential acceleration/deceleration in jog feed for each axis.
This parameter allows only the exponential type.

1626	Acceleration/deceleration time constant in threading cycles for each axis

[Input type] Parameter input
[Data type] Word axis
[Unit of data] msec
[Valid data range] 0 to 4000
Set a time constant for acceleration/deceleration after interpolation in the threading cycles G92 (T series), G76 (T series), and G76.7 (M series) for each axis.

1627	FL rate for acceleration/deceleration in threading cycles for each axis

[Input type] Parameter input
[Data type] Real axis
[Unit of data] mm/min, inch/min, degree/min (machine unit)
[Min. unit of data] Depend on the increment system of the applied axis

[Valid data range] Refer to the standard parameter setting table (C)
(When the increment system is IS-B, 0.0 to +999000.0)
Set an FL rate for acceleration/deceleration after interpolation in the threading cycles G92 (T series), G76 (T series), and G76.7 (M series) for each axis. Set 0 at all times except in a special case.
The FL rate is valid only for exponential acceleration/deceleration after interpolation.

1660	Maximum allowable acceleration rate in acceleration/deceleration before interpolation for each axis

[Input type] Parameter input
[Data type] Real axis
[Unit of data] mm/sec^2, inch/sec^2, degree/sec^2 (machine unit)
[Min. unit of data] Depend on the increment system of the applied axis
[Valid data range] Refer to the standard parameter setting table (D)
(When the machine system is metric system, 0.0 to +100000.0. When the machine system is inch system, machine, 0.0 to +10000.0.)
Set a maximum allowable acceleration rate in look-ahead acceleration/ deceleration before interpolation for each axis.
If a value greater than 100000.0 is set, the value is clamped to 100000.0.
If 0 is set, the specification of 100000.0 is assumed. If 0 is set for all axes, however, look-ahead acceleration/deceleration before interpolation is not performed.

If a maximum allowable acceleration rate set for one axis is greater than a maximum allowable acceleration rate set for another axis by a factor or 2 or more, the feedrate at a corner where the direction of travel abruptly changes can decrease temporarily.

NOTE
This parameter is Initial setting parameter. For details, refer to the appendix "Automatic setting / Initial setting parameter" in CONNECTION MANUAL (FUNCTION) (B-64693EN-1).

1671	Maximum allowable acceleration rate in acceleration/deceleration before interpolation for linear rapid traverse for each axis, or maximum allowable reference acceleration rate in optimum torque acceleration/deceleration

[Input type] Parameter input
[Data type] Real axis
[Unit of data] mm/sec^2, inch/sec^2, degree/sec^2 (machine unit)
[Min. unit of data] Depend on the increment system of the applied axis
[Valid data range] Refer to the standard parameter setting table (D)
(When the machine system is metric system, 0.0 to +100000.0. When the machine system is inch system, machine, 0.0 to +10000.0.)

(1) Set a maximum allowable acceleration rate in look-ahead acceleration/ deceleration before interpolation for linear rapid traverse.
If a value greater than 100000.0, the value is clamped to 100000.0.
If 0 is set, the specification of the following is assumed:
1000.0 mm/sec^2
100.0 inch/sec^2
100.0 degrees/sec^2
If 0 is specified for all axes, however, look-ahead acceleration/deceleration before interpolation is not performed.

(2) Maximum allowable reference acceleration rate in optimum torque acceleration/deceleration

1672	Acceleration change time of bell-shaped acceleration/deceleration before interpolation for linear rapid traverse, or acceleration change time of bell-shaped acceleration/deceleration in optimum torque acceleration/deceleration

[Input type] Parameter input
[Data type] 2-word path
[Unit of data] msec
[Valid data range] 0 to 200

(1) Set an acceleration change time of bell-shaped acceleration/ deceleration for linear rapid traverse (time for changing from the state of constant feedrate (A) to the state of constant acceleration/deceleration (C) at the acceleration rate calculated from the acceleration rate set in parameter No. 1671: time of (B) in the figure below).

(2) Set an acceleration change time of bell-shaped acceleration/ deceleration in optimum torque acceleration/deceleration (time for changing from the state of constant feedrate (A) to the state of acceleration/deceleration (C) at the acceleration rate calculated from optimum torque acceleration/deceleration: time of (B) in the figure).

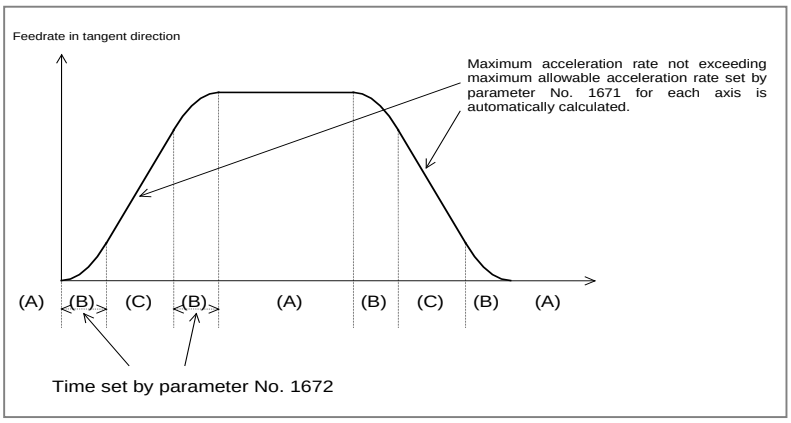

1673	Maximum allowable acceleration rate in tangent direction at axis immediate stop

[Input type] Parameter input
[Data type] Real path
[Unit of data] mm/sec/sec, inch/sec/sec, degree/sec/sec (machine unit)
[Min. unit of data] Depend on the increment system of the reference axis
[Valid data range] Refer to the standard parameter setting table (D)
(When the machine system is metric system, 0.0 to +100000.0. When the machine system is inch system, machine, 0.0 to +10000.0.)

This parameter sets the maximum allowable acceleration rate in the tangent direction for look-ahead acceleration/deceleration before interpolation at a feed axis immediate stop.

If the parameter is set to a value equal to or greater than 100000.0, the value is clamped to 100000.0.

If 0 or a value lower than the acceleration of look-ahead acceleration/deceleration before interpolation is set, the tool stops by using the current setting without making the following changes:

- Change to the acceleration of look-ahead acceleration/deceleration before interpolation.
- Change to the acceleration/deceleration type from look-ahead bell-shaped acceleration/deceleration before interpolation to look-ahead linear acceleration/deceleration before interpolation.

1674	The second time constant T or T1 of linear acceleration / deceleration or bell-shaped acceleration / deceleration for rapid traverse for each axis

[Input type] Parameter input

[Data type] Word axis
[Data unit] msec
[Data range] -1 to 4000
Specify the second time constant of acceleration / deceleration after interpolation for rapid traverse for each axis. As for the axis for which this parameter is set values of -1 or beyond the range, the second time constant for rapid traverse is invalid.

NOTE
If bit 6 (CTC) of parameter No. 11502 is 1, this parameter is written during moving axes.

1675	The second time constant T_2 of bell-shaped acceleration / deceleration for rapid traverse for each axis

[Input type] Parameter input
[Data type] Word axis
[Data unit] msec
[Data range] 0 to 512
Specify the second time constant T2 used for bell-shaped of acceleration / deceleration after interpolation for rapid traverse for each axis. When these parameters are set values beyond the range, the specification of 0 is assumed.

1676	The third time constant T or T1 of linear acceleration / deceleration or bell-shaped acceleration / deceleration for rapid traverse for each axis

[Input type] Parameter input
[Data type] Word axis
[Data unit] msec
[Data range] -1 to 4000
Specify the third time constant of acceleration / deceleration after interpolation for rapid traverse for each axis. As for the axis for which this parameter is set values of -1 or beyond the range, the third time constant for rapid traverse is invalid.

NOTE
If bit 6 (CTC) of parameter No. 11502 is 1, this parameter is written during moving axes.

1677	The third time constant T_2 of bell-shaped acceleration / deceleration in rapid traverse for each axis

[Input type] Parameter input
[Data type] Word axis
[Data unit] msec
[Data range] 0 to 512
Specify the third time constant T2 used for bell-shaped of acceleration / deceleration after interpolation for rapid traverse for each axis. When these parameters are set values beyond the range, the specification of 0 is assumed.

1678	The second time constant of acceleration / deceleration for cutting feed for each axis

1679	The third time constant of acceleration / deceleration for cutting feed for each axis

[Input type] Parameter input
[Data type] Word axis
[Data unit] msec
[Data range] -1 to 4000

Specify the second or the third time constant of acceleration / deceleration after interpolation for cutting feed for each axis. As for the axis for which these parameters are set values -1 or beyond the range, the second or the third time constant for cutting feed is invalid.

	#7	#6	#5	#4	#3	#2	#1	#0
1680								HDCx

[Input type] Parameter input
[Data type] Bit axis

> **NOTE**
> When this parameter is set, the power must be turned off before operation is continued.

#0 HDCx Canned cycle overlap for drilling is :
0: Invalid.
1: valid.

	#7	#6	#5	#4	#3	#2	#1	#0
1681			DZL	DQL	DFW	DRV	DRL	DPS

[Input type] Parameter input
[Data type] Bit path

#0 DPS In canned cycle overlap for drilling, for "between the rapid traverse block to the hole position and the rapid traverse block to point R level" and "between the return block to point R level / initial level and the rapid traverse block to the next hole position", the overlap is:
0: Valid.
1: Invalid.

#1 DRL In canned cycle overlap for drilling, for "between the rapid traverse block to point R level and the hole machining block" and "between the retraction block to point R level and the return block to initial level", overlap is:
0: Valid.
1: Invalid.

#2 DRV In canned cycle overlap for drilling, for "between the retraction block and the hole machining block for (high-speed) peck drilling cycle", overlap is:
0: Valid.
1: Invalid.

#3 DFW In canned cycle overlap for drilling, for "between the hole machining (rapid traverse) block and the hole machining (cutting feed) block for peck drilling cycle", overlap is:
0: Valid.
1: Invalid.

#4 DQL In canned cycle overlap for drilling, for "between the hole machining block and the retraction block for (high-speed) peck drilling cycle", overlap is:
0: Valid.
1: Invalid.

#5 DZL In canned cycle overlap for drilling, for the bottom of a hole, overlap is:
0: Valid.
1: Invalid.

1682	Time constant T2 used for acceleration/deceleration of rapid traverse for each axis in canned cycle for drilling

[Input type] Parameter input
[Data type] Word axis
[Unit of data] msec
[Valid data range] 0 to 512
In canned cycle overlap for drilling, set the time constant T2 used for acceleration/deceleration of rapid traverse for each axis in canned cycle for drilling.

1683	Time constant T1 used for acceleration/deceleration of cutting feed for each axis in canned cycle for drilling

[Input type] Parameter input
[Data type] Word axis
[Unit of data] msec
[Valid data range] 0 to 4000
In canned cycle overlap for drilling, set the time constant T1 used for acceleration/deceleration of cutting feed for each axis in canned cycle for drilling.

1684	Time constant used for acceleration/deceleration of rapid traverse for each axis in canned cycle for drilling (Time constant used for acceleration/deceleration after interpolation of rapid traverse in acceleration/deceleration before interpolation mode)

[Input type] Parameter input
[Data type] Word axis
[Unit of data] msec
[Valid data range] 0 to 4000
In canned cycle overlap for drilling, set the time constant used for acceleration/deceleration after interpolation of rapid traverse for each axis in acceleration/deceleration before interpolation mode (AI contour control I and AI contour control II) and canned cycle for drilling.

1685	Time constant used for acceleration/deceleration of cutting feed for each axis in canned cycle for drilling (Time constant used for acceleration/deceleration after interpolation of cutting feed in acceleration/deceleration before interpolation mode)

[Input type] Parameter input
[Data type] Word axis
[Unit of data] msec
[Valid data range] 0 to 4000
In canned cycle overlap for drilling, set the time constant used for acceleration/deceleration after interpolation of cutting feed for each axis in acceleration/deceleration before interpolation mode (AI contour control I and AI contour control II) and canned cycle for drilling.

1686	Time constant 1 of acceleration/deceleration after interpolation in Canned cycle overlap for drilling for each axis

[Input type] Parameter input
[Data type] word axis

[Unit of data] msec
[Valid data range] 0 to 64
Set the time constant 1 of acceleration/deceleration after interpolation in Canned cycle overlap for drilling for each axis.

NOTE
When both parameter No.1686 and No.1687 are set to 0, parameters No.11248 and No.11249 are valid for the time constant of acceleration/deceleration after interpolation in Canned cycle overlap for drilling.

1687	Time constant 2 of acceleration/deceleration after interpolation in Canned cycle overlap for drilling for each axis

[Input type] Parameter input
[Data type] word axis
[Unit of data] msec
[Valid data range] 0 to 64
Set the time constant 2 of acceleration/deceleration after interpolation in Canned cycle overlap for drilling for each axis.

NOTE
When both parameter No.1686 and No.1687 are set to 0, parameters No.11248 and No.11249 are valid for the time constant of acceleration/deceleration after interpolation in Canned cycle overlap for drilling.

1700	Maximum allowable acceleration rate in the axis immediate stop for each axis

[Input type] Parameter input
[Data type] Real axis
[Unit of data] mm/sec/sec, inch/sec/sec, degree/sec/sec (machine unit)
[Min. unit of data] Depend on the increment system of the applied axis
[Valid data range] Refer to the standard parameter setting table (D)
(When the machine system is metric system, 0.0 to +100000.0. When the machine system is inch system, machine, 0.0 to +10000.0.)
Set a maximum allowable acceleration rate of each axis in look-ahead acceleration/deceleration before interpolation on the axis immediate stop. The movement axis stops immediately by the lowest allowable acceleration rate in the movement axis. The following changes are executed by axis immediate stop.

- Change the acceleration rate in look-ahead acceleration/deceleration before interpolation.
- Change the look-ahead acceleration/deceleration type from bell-shaped acceleration/deceleration before interpolation to look-ahead linear acceleration/deceleration before interpolation.

If a value greater than 100000.0 is set, the value is clamped to 100000.0.
If a value lower than the acceleration of look-ahead acceleration/deceleration before interpolation is set, the tool stops by using the current setting of look-ahead acceleration/deceleration before interpolation.

NOTE

If set the value to one or more axis in the parameter No.1700, maximum allowable acceleration rate in the axis immediate stop for each axis becomes effective. And the setting of parameter No.1673 becomes invalid.
In condition the setting of parameter No.1700 is valid, it is considered that the acceleration of look-ahead acceleration/deceleration before interpolation is set for the axis to which the value is not set.

1710	Minimum deceleration ratio (MDR) for inner circular cutting feedrate change by automatic corner override

[Input type] Parameter input
[Data type] Byte path
[Unit of data] %
[Valid data range] 0 to 100

Set a minimum deceleration ratio (MDR) for an inner circular cutting feedrate change by automatic corner override.

In the case of circular cutting offset inward, the actual feedrate is determined by a specified feedrate (F) as follows:

$$F \times \frac{Rc}{Rp}$$

Rc: Radius of tool center path
Rp: Programmed radius

Thus, the feedrate along the programmed path satisfies the specified value of F.

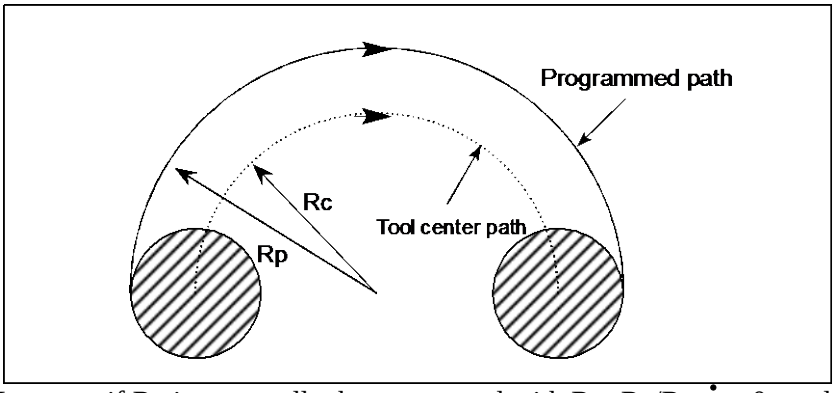

However, if Rc is too small when compared with Rp, Rc/Rp ≒ 0 results to stop the tool. So, a minimum deceleration ratio (MDR) is set, and the feedrate of the tool is set to F×(MDR) when Rc/Rp ≤ MDR.
When this parameter is 0, the minimum deceleration ratio (MDR) is 100%.

1711	Inner determination angle (θp) for inner corner override

[Input type] Parameter input
[Data type] Real path
[Unit of data] deg
[Min. unit of data] Depend on the increment system of the reference axis
[Valid data range] 2 to 178

Set an inner determination angle for inner corner override in automatic corner overriding.

1712	Override value for inner corner override

[Input type] Parameter input

[Data type] Byte path
[Unit of data] %
[Valid data range] 1 to 100
Set an inner corner override value in automatic corner overriding.

1713	Start distance (Le) for inner corner override

[Input type] Setting input
[Data type] Real path
[Unit of data] mm, inch (input unit)
[Min. unit of data] Depend on the increment system of the reference axis
[Valid data range] 9 digit of minimum unit of data (refer to standard parameter setting table (A))
(When the increment system is IS-B, -999999.999 to +999999.999)
Set a start distance for inner corner override in automatic corner overriding.

1714	End distance (Ls) for inner corner override

[Input type] Setting input
[Data type] Real path
[Unit of data] mm, inch (input unit)
[Min. unit of data] Depend on the increment system of the reference axis
[Valid data range] 9 digit of minimum unit of data (refer to standard parameter setting table (A))
(When the increment system is IS-B, -999999.999 to +999999.999)
Set an end distance for inner corner override in automatic corner overriding.

When $\theta \leq \theta p$, an inner corner is assumed. (Parameter No. 1711 is used to set θp.)
When a corner is determined to be an inner corner, an override is applied to the feedrate in the range of Le in the previous block from the intersection of the corner and in the range of Ls in the next block from the intersection of the corner.
Distances Le and Ls represent linear distances from the intersection of a corner to points on the tool center path.
Le and Ls are set in parameters Nos. 1713 and 1714.

1722	Rapid traverse feedrate reduction ratio for overlapping rapid traverse blocks

[Input type] Parameter input
[Data type] Byte axis
[Unit of data] %
[Valid data range] 0 to 100
This parameter is used when rapid traverse blocks are arranged successively, or when a rapid traverse block is followed by a block that does not cause, movement. When the feedrate for each axis of a block is reduced to the ratio set in this parameter, the execution of the next block is started.

NOTE
The parameter No. 1722 is effective when bit 4 (RTO) of parameter No. 1601 is set to 1.

1726	Rapid traverse rate reduction ratio for overlapping threading cycle blocks

[Input type] Parameter input
[Data type] Byte axis
[Unit of data] %
[Valid data range] 0 to 100

In a threading cycle that is a turning canned cycle, when the feedrate for each axis is reduced to the deceleration ratio set in this parameter between a retraction and a return to the cycle start point or between a return to the cycle start point and a movement to the threading start point, the execution of the next block is started.

NOTE
The parameter No. 1726 is valid when bit 3 (TCO) of parameter No. 1611 is set to 1.

1728	Distance of rapid traverse overlap between retraction and return in threading cycle

[Input type] Parameter input
[Data type] Real path
[Unit of data] mm, inch (input unit)
[Min. unit of data] Depend on the increment system of the applied axis
[Valid data range] 0 or positive 9 digit of minimum unit of data (refer to the standard parameter setting table (B))
(When the increment system is IS-B, 0.0 to +999999.999)
In threading cycle of canned cycle, return to the cycle start point of Z-axis starts when the delay of X-axis by acceleration/deceleration control is the distance of this parameter or below.

NOTE
1 Set radius value in this parameter.
2 This parameter is valid on condition that parameter TOD (bit 2 of No.1612) is 1.

1729	Distance of rapid traverse overlap between return and positioning of the next block in threading cycle

[Input type] Parameter input
[Data type] Real path
[Unit of data] mm, inch (input unit)
[Min. unit of data] Depend on the increment system of the applied axis
[Valid data range] 0 or positive 9 digit of minimum unit of data (refer to the standard parameter setting table (B))
(When the increment system is IS-B, 0.0 to +999999.999)
In threading cycle of canned cycle, positioning to the threading start point of X-axis starts when the delay of Z-axis by acceleration/deceleration control is the distance of this parameter or below.

NOTE
1 Set radius value in this parameter.
2 This parameter is valid on condition that parameter TOD (bit 2 of No.1612) is 1.

1732	Minimum allowable feedrate for the deceleration function based on acceleration in circular interpolation

[Input type] Parameter input
[Data type] Real path
[Unit of data] mm/min, inch/min, degree/min (machine unit)
[Min. unit of data] Depend on the increment system of the reference axis

[Valid data range] Refer to the standard parameter setting table (C)
(When the increment system is IS-B, 0.0 to +999000.0)
With the deceleration function based on acceleration in circular interpolation, an optimum feedrate is automatically calculated so that acceleration produced by changing the move direction in circular interpolation does not exceed the maximum allowable acceleration rate specified in parameter No. 1735.
If the radius of an arc is very small, a calculated feedrate may become too low.
In such a case, the feedrate is prevented from decreasing below the value specified in this parameter.

1735	Maximum allowable acceleration rate for the deceleration function based on acceleration in circular interpolation for each axis

[Input type] Parameter input
[Data type] Real axis
[Unit of data] mm/sec^2, inch/sec^2, degree/sec^2 (machine unit)
[Min. unit of data] Depend on the increment system of the applied axis
[Valid data range] Refer to the standard parameter setting table (D)
(When the machine system is metric system, 0.0 to +100000.0. When the machine system is inch system, machine, 0.0 to +10000.0.)
Set a maximum allowable acceleration rate for the deceleration function based on acceleration in circular interpolation.
Feedrate is controlled so that acceleration produced by changing the move direction in circular interpolation does not exceed the value specified in this parameter.
For an axis with 0 set in this parameter, the deceleration function based on acceleration is disabled.
If a different value is set in this parameter for each axis, a feedrate is determined from the smaller of the acceleration rates specified for the two circular axes.

1737	Maximum allowable acceleration rate for the deceleration function based on acceleration in AI contour control for each axis

[Input type] Parameter input
[Data type] Real axis
[Unit of data] mm/sec^2, inch/sec^2, degree/sec^2 (machine unit)
[Min. unit of data] Depend on the increment system of the applied axis
[Valid data range] Refer to the standard parameter setting table (D)
(When the machine system is metric system, 0.0 to +100000.0. When the machine system is inch system, machine, 0.0 to +10000.0.)
Set a maximum allowable acceleration rate produced by changing the tool move direction.
For an axis with 0 set in this parameter, the deceleration function based on acceleration is disabled. If 0 is set for all axes, the deceleration function based on acceleration is not performed.
In circular interpolation, however, the deceleration function based on feedrate control using acceleration in circular interpolation (parameter No. 1735) is enabled.

1738	Minimum allowable feedrate for the deceleration function based on acceleration in AI contour control

[Input type] Parameter input
[Data type] Real path
[Unit of data] mm/min, inch/min, degree/min (machine unit)
[Min. unit of data] Depend on the increment system of the reference axis
[Valid data range] Refer to the standard parameter setting table (C)
(When the increment system is IS-B, 0.0 to +999000.0)

With the deceleration function based on acceleration in AI contour control, a feedrate most suitable for a desired figure is automatically calculated.
Depending on the figure, however, the calculated feedrate may become too low.
In such a case, the feedrate is prevented from decreasing below the value specified in this parameter.
If overriding using the deceleration function based on cutting load is enabled, a feedrate lower than the minimum allowable feedrate may be used.

1763	FL rate for acceleration/deceleration after cutting feed interpolation for each axis in the acceleration/deceleration before interpolation mode

[Input type] Parameter input
[Data type] Real axis
[Unit of data] mm/min, inch/min, degree/min (machine unit)
[Min. unit of data] Depend on the increment system of the applied axis
[Valid data range] Refer to the standard parameter setting table (C)
(When the increment system is IS-B, 0.0 to +999000.0)
Set a minimum allowable feedrate (FL rate) for acceleration/ deceleration after cutting feed interpolation in look-ahead acceleration/deceleration before interpolation as in AI contour control.

1769	Time constant for acceleration/deceleration after cutting feed interpolation in the acceleration/deceleration before interpolation mode

[Input type] Parameter input
[Data type] Word axis
[Unit of data] msec
[Valid data range] 0 to 4000
In the look-ahead acceleration/deceleration before interpolation mode as in AI contour control, not the ordinary time constant (parameter No. 1622) but the value of this parameter is used.
Be sure to specify the same time constant value for all axes except for a special application. If different values are set, correct linear and circular figures cannot be obtained.

1772	Acceleration change time of bell-shaped acceleration/deceleration before interpolation

[Input type] Parameter input
[Data type] 2-word path
[Unit of data] msec
[Valid data range] 0 to 200
Set an acceleration change time of look-ahead bell-shaped acceleration/ deceleration before interpolation (time for changing from the state of constant feedrate (A) to the state of constant acceleration/deceleration (C) at the acceleration rate calculated from the acceleration rate set in parameter No. 1660: time of (B) in the figure).
If the setting is negative or 0, bell-shaped acceleration/deceleration before interpolation is invalid. If the setting is 200 or more, the setting is clamped by 200.

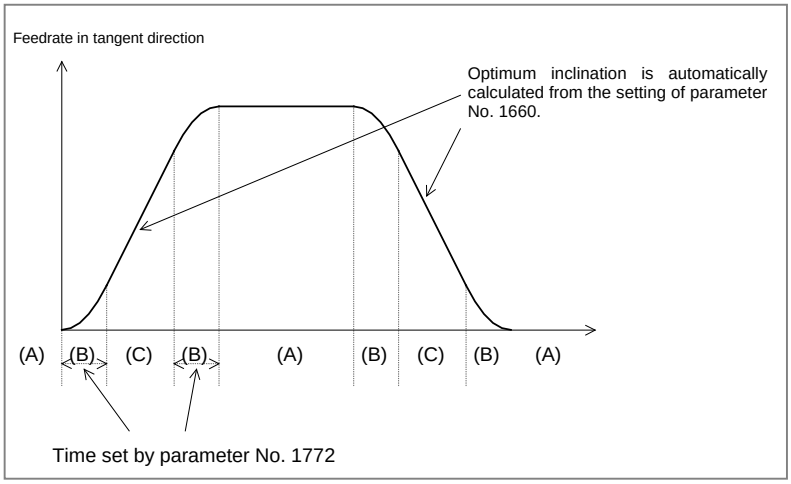

1783	Maximum allowable feedrate difference for feedrate determination based on corner feedrate difference

[Input type] Parameter input
[Data type] Real axis
[Unit of data] mm/min, inch/min, degree/min (machine unit)
[Min. unit of data] Depend on the increment system of the applied axis
[Valid data range] Refer to the standard parameter setting table (C)
(When the increment system is IS-B, 0.0 to +999000.0)

If a feedrate component change for each axis exceeding the value set in this parameter occurs at the joint of blocks, the feedrate determination function based on corner feedrate difference finds a feedrate not exceeding the set value and performs deceleration by using look-ahead acceleration/deceleration before interpolation. Thus, a shock to the machine and machining error at a corner can be reduced.

Corner deceleration based on the feedrate difference is disabled for an axis this parameter is zero.

1788	Maximum allowable acceleration change rate in feedrate determination based on acceleration change for each axis

[Input type] Parameter input
[Data type] Real axis
[Unit of data] mm/sec^2, inch/sec^2, degree/sec^2 (machine unit)
[Min. unit of data] Depend on the increment system of the applied axis
[Valid data range] Refer to the standard parameter setting table (D)
(When the machine system is metric system, 0.0 to +100000.0. When the machine system is inch system, machine, 0.0 to +10000.0.)

Set a maximum allowable acceleration change rate for each axis in feedrate control based on acceleration change under control on the rate of change of acceleration.

For an axis with 0 set in this parameter, feedrate control based on acceleration change is disabled.

If 0 is set for all axes, feedrate control based on acceleration change is not exercised.

1789	Maximum allowable acceleration change rate in feedrate determination based on acceleration change for each axis (linear interpolation)

[Input type] Parameter input
[Data type] Real axis
[Unit of data] mm/sec^2, inch/sec^2, degree/sec^2 (machine unit)
[Min. unit of data] Depend on the increment system of the applied axis

[Valid data range] Refer to the standard parameter setting table (D)
(When the machine system is metric system, 0.0 to +100000.0. When the machine system is inch system, machine, 0.0 to +10000.0.)
Set a maximum allowable acceleration change rate for each axis in feedrate control based on acceleration change under control on the rate of change of acceleration in successive linear interpolation operations.
In feedrate control based on acceleration change at a corner between linear interpolation operations, the maximum allowable acceleration change rate not set in parameter No. 1788 but set in this parameter is valid.
For an axis with 0 set in this parameter, the maximum allowable acceleration change rate set in parameter No. 1788 is valid.
Feedrate control based on acceleration change is disabled for an axis with 0 set in parameter No. 1788, so that the setting of this parameter for such an axis is ignored.

1790	Ratio of change time of the rate of change of acceleration in smooth bell-shaped acceleration/deceleration before interpolation

[Input type] Parameter input
[Data type] Byte path
[Unit of data] %
[Valid data range] 0 to 50
Set the ratio of the change time of the rate of change of acceleration to the change time of acceleration(*1) by percentage (%) in smooth bell-shaped acceleration/deceleration before look-ahead interpolation.
If 0 is set in this parameter or a value not within the valid data range is specified in this parameter, look-ahead smooth bell-shaped acceleration/ deceleration before interpolation is not performed.

(*1) Parameter No. 1772 for look-ahead acceleration/deceleration before look-ahead interpolation (cutting feed).
Parameter No. 1672 for look-ahead acceleration/deceleration before interpolation in linear rapid traverse, or for optimum torque acceleration/ deceleration.

1791	Acceleration rate on each axis for the outage-time deceleration stop function

[Input type] Parameter input
[Data type] Real axis
[Unit of data] mm/sec^2, inch/sec^2, degree/sec^2 (machine unit)
[Min. unit of data] Depend on the increment system of the applied axis
[Valid data range] Refer to the standard parameter setting table (D)
(0.0 to +100000.0 for the metric system, 0.0 to +10000.0 for the inch system)
Set an acceleration rate for deceleration on an axis on which the tool is decelerated to a stop at the time of power outage.
On an axis for which this parameter is set to 0, deceleration based on the outage-time deceleration signal is not performed.

In synchronization control or tandem control, set the same parameter for the master axis and slave axis.

4.18 PARAMETERS OF SERVO (1 OF 2)

	#7	#6	#5	#4	#3	#2	#1	#0
1800				RBK	FFR		CVR	

[Input type] Parameter input
[Data type] Bit path

#1 CVR When velocity control ready signal VRDY is set ON before position control ready signal PRDY comes ON
0: A servo alarm is generated.
1: A servo alarm is not generated.

#3 FFR Feed-forward control in rapid traverse is:
0: Disabled
1: Enabled
Feed-forward is enabled only in normal cutting feed. When this parameter is set to 1, feed-forward is enabled in rapid traverse as well. This capability reduces the servo positional deviation, thus reducing the time required to enter the in-position width at the time of positioning.

> **NOTE**
> 1 The parameter setting becomes valid after reference position return is completed.
> 2 This parameter is Initial setting parameter. For details, refer to the appendix "Automatic setting / Initial setting parameter" in CONNECTION MANUAL (FUNCTION) (B-64693EN-1).

#4 RBK Backlash compensation applied separately for cutting feed and rapid traverse
0: Not performed
1: Performed

	#7	#6	#5	#4	#3	#2	#1	#0
1801			CIN	CCI				

[Input type] Parameter input
[Data type] Bit path

#4 CCI As the in-position width for cutting feed:
0: The parameter No. 1826 applicable to rapid traverse as well is used.
1: The parameter No. 1827 dedicated to cutting feed is used.
This parameter enables the in-position width for cutting feed (parameter No. 1827) to be set instead of the in-position width for rapid traverse (parameter No. 1826).
By setting bit 4 (CCI) of parameter No. 1801, choose whether to use this function or the conventional in-position check function.
This function, when specified, is enabled for all axes. So, for an axis that does not require this function, set the same data in parameters Nos. 1826 and 1827.

#5 CIN When parameter CCI is set to 1, the dedicated parameter for specifying an in-position width for cutting feed is used:
0: Only when the next block specifies cutting feed.
1: Regardless of the next block.

The table indicates the relationships between the parameters for cutting feed and rapid traverse.

		Bit 5 (CIN) of parameter No. 1801			
		0		1	
Bit 4 (CCI) of parameter No. 1801	0	Rapid traverse → Rapid traverse	No. 1826	Rapid traverse → Rapid traverse	No. 1826
		Rapid traverse → Cutting feed	No. 1826	Rapid traverse → Cutting feed	No. 1826
		Cutting feed → Cutting feed	No. 1826	Cutting feed → Cutting feed	No. 1826
		Cutting feed → Rapid traverse	No. 1826	Cutting feed → Rapid traverse	No. 1826
	1	Rapid traverse → Rapid traverse	No. 1826	Rapid traverse → Rapid traverse	No. 1826
		Rapid traverse → Cutting feed	No. 1826	Rapid traverse → Cutting feed	No. 1826
		Cutting feed → Cutting feed	No. 1827	Cutting feed → Cutting feed	No. 1827
		Cutting feed → Rapid traverse	No. 1826	Cutting feed → Rapid traverse	No. 1827

The parameters CCI and CIN can also be applied to a Cs axis.

	#7	#6	#5	#4	#3	#2	#1	#0
1802				BKL15x		DC2x	DC4x	

[Input type] Parameter input
[Data type] Bit axis

#1 DC4x When the reference position is established on the linear scale with reference marks:
0: An absolute position is established by detecting three reference marks.
1: An absolute position is established by detecting four reference marks.

#2 DC2x Reference position establishment operation for a linear scale with reference marks is performed as follows:
0: The setting of bit 1 (DC4x) of parameter No. 1802 is followed.
1: An absolute position is established by detecting two reference marks.

NOTE
1 When this parameter is set to 1, specify the direction of the scale zero point by setting bit 4 (SCPx) of parameter No. 1817.
2 When a rotary encoder with absolute address reference marks is used, this parameter is invalid. Even when this parameter is set to 1, the setting of bit 1 (DC4x) of parameter No. 1802 is followed.

#4 BKL15x When the direction of a movement is determined in backlash compensation:
0: The compensation amount is not considered.
1: The compensation amount (pitch error, straightness, external machine coordinate system shift, etc.) is considered.

	#7	#6	#5	#4	#3	#2	#1	#0
1803	NFP			TQF			TQA	TQI

[Input type] Parameter input
[Data type] Bit path

#0 TQI Within a torque limit, an in-position check is:
0: Made.
1: Not made.

#1 TQA Within a torque limit, an excessive stop-time/move-time error is:
0: Checked.
1: Not checked.

#4 TQF When torque control is performed by the PMC axis control, follow-up operation is:
0: Not performed.
1: Performed.

#7 NFP If position matching between the machine position and absolute position detector is not performed even once, follow-up operation is:
0: Not performed.
1: Performed.

	#7	#6	#5	#4	#3	#2	#1	#0
1804		SAK	ANA	IVO				

[Input type] Parameter input
[Data type] Bit path

#4 IVO When an attempt is made to release an emergency stop while the VRDY OFF alarm ignore signal is 1:
0: The emergency stop state is not released until the VRDY OFF alarm ignore signal is set to 0.
1: The emergency stop state is released.

> **NOTE**
> When a reset is issued while the VRDY OFF alarm ignore signal is set to 1 and the motor activating current is low, the reset state can also be released, provided this parameter is set to 1.

#5 ANA When an unexpected disturbance torque is detected for an axis:
0: Movement along all axes is stopped, and a servo alarm is output.
1: No servo alarm is output, and movement along only the axes of the group containing the axis with the an unexpected disturbance torque is stopped in interlock mode. (The group number of each axis is set in parameter No. 1881.)

#6 SAK When the VRDY OFF alarm ignore signal IGNVRY is “1”, or when the VRDY OFF alarm ignore signals IGNVRYn are “1”:
0: Servo ready signal SA is set to “0”.
1: Servo ready signal SA remains set to “1”.

	#7	#6	#5	#4	#3	#2	#1	#0
1805				TSM	TSA		TRE	

[Input type] Parameter input
[Data type] Bit path

#1 TRE When bit 4 (TQF) of parameter No. 1803 is set to 0 (not to perform follow-up operation with a torque control command in PMC axis control), the servo error counter is:

0: Updated.
When the error count exceeds the maximum allowable cumulative travel value (parameter No. 1885), the alarm SV0423, “EXCESS ERROR IN TORQUE” is issued.

1: Not updated.
No errors are accumulated, so that the alarm SV0423 is not issued. When the maximum allowable feedrate is exceeded, however, the alarm SV0422, “EXCESS VELOCITY IN TORQUE” is issued.

To return to position control when this parameter bit is set to 1, a reference position return operation needs to be performed.

#3 TSA As the unexpected disturbance torque detection level during dwell, M code execution, and automatic operation halt state:

0: The threshold value for rapid traverse is used. (parameter No. 2142)
1: The threshold value for cutting feed is used. (parameter No. 2104)

If this parameter is set 1, the parameters ABGO (bit 3 of No.2200) and ABT (bit 7 of No.2215) need to be set 1.

#4 TSM As the unexpected disturbance torque detection level in the jog feed mode (excluding manual rapid traverse) and manual handle feed mode:

0: The threshold value for rapid traverse is used. (parameter No. 2142)
1: The threshold value for cutting feed is used. (parameter No. 2104)

This parameter is valid when bit 3 (ABGO) of parameter No. 2200 is set to 1.

	#7	#6	#5	#4	#3	#2	#1	#0
1807						SWP		

[Input type] Parameter input
[Data type] Bit path

#2 SWP This parameter specifies the operation of the α*i* series servo amplifier in its warning state (for example, with the fan stopped).

0: An alarm is issued when the amplifier is placed in the warning state. Automatic operation enters the feed hold state and the servo axis is decelerated to a stop.
1: An alarm is not issued even when the amplifier is placed in the warning state. Automatic operation is kept. The servo is deactivated if the amplifier shifts from the warning state to the alarm state.

⚠ CAUTION

If operation is continued with the external fan stopped while bit 2 (SWP) of parameter No. 1807 is set to 1, the servo amplifier may be overheated and "overheat alarm", "IPM alarm", or "VRDY off alarm" may be issued depending on the operating conditions. If such an alarm is issued, the amplifier is deactivated and the servo motor is stopped by the dynamic brake, involving a risk of breaking the workpiece or tool as the stop from high-speed rotation requires an extended distance. The user should therefore understand that the operation with bit 2 (SWP) of parameter No. 1807 set to 1 is a temporary step to take before fan replacement. Once the fan has stopped, be sure to replace the fan immediately and set bit 2 (SWP) of parameter No. 1807 back to 0.

If bit 2 (SWP) of parameter No. 1807 is set to 1, the warning text "FAN" blinks on the NC screen to show that the external fan has been stopped. Also on the machine side, monitor the warning signal output to the PMC and remind the operator of the operation with the fan stopped.

	#7	#6	#5	#4	#3	#2	#1	#0
1814	ALGx						EMFx	

[Input type] Parameter input
[Data type] Bit axis

#1 EMFx In case of the external machine zero point shift or the extended external machine zero point shift, the maximum shift value per one execution cycle is:
0: Conventional specification. (The positive side is 127. The negative side is -128.)
1: Multiplied by 10. (The positive side is 1270. The negative side is -1280.)
When all of following conditions are satisfied, this parameter is valid.
- Increment system is B or C.
- Bit 2 (HPEx) of parameter No.1816 is 1.

#7 ALGx The servo axis loop gain in the Cs contour control mode is:
0: Not matched with the Cs contour control loop gain.
1: Matched with the Cs contour control loop gain.

NOTE

1 For those axes that are used for EGB, spindle positioning, index table indexing, PMC axis control, rigid tapping, and so forth, set this parameter to 0 (Not matched with the Cs contouring control loop gain).
2 When specifying axes subject to interpolation with the Cs contouring control axis by using parameter No. 39n0 (n = 0 to 4), set this parameter to 0.
3 When making a setting so that a position gain is automatically set at the time of Cs contouring control switching by setting bit 7 (ALG) of parameter No. 1814 to 1, set all of parameter No. 39n0 (n = 0 to 4) to 0.

	#7	#6	#5	#4	#3	#2	#1	#0
1815		RONx	APCx	APZx	DCRx	DCLx	OPTx	RVSx

[Input type] Parameter input
[Data type] Bit axis

NOTE
When at least one of these parameters is set, the power must be turned off before operation is continued.

#0 RVSx When the scale without rotary data is used:
0: The CNC does not maintain the rotary data.
1: The CNC maintains the rotary data.
This parameter is effective in the axis that satisfies either of the following conditions.
- The axis is rotary axis B type and the movable range is more than one rotation.
- Bit 6 (RVLx) of parameter No.11802 is 1.

NOTE
1 In the case of a rotary axis B type whose movable range is over one rotation, a rotary scale with rotary data had better be used. Otherwise, a machine coordinate value may get out over a rotation, in the case of moving over 180 degree during turning off.
2 This parameter is available for the axis that is rotary axis B type or the axis whose bit 6 (RVLx) of parameter No.11802 is 1. This parameter is available for the axis with an absolute position detector (absolute Pulsecoder), a distance coded rotary scale interface (phase A/B) or a rotary scale with distance-coded reference marks (serial).
3 If this parameter is available, the machine coordinate value just before CNC turns off is saved. In the case of moving over the following amounts during turning off or before reference position return, a machine coordinate value may get out over a rotation because CNC saves a machine coordinate value just before CNC turns off and in following turning on get from the value.
In case of the rotary axis B type :
Over 180 degree
In case of the linear axis type :
Over 1/4 of values set to parameter No.11810.
4 If this parameter is changed, the correspondence between the machine position and the absolute position detector is lost. So, establish the reference position again. (Bit 4 (APZx) of parameter No.1815 is set to 0, and an alarm DS0300, “APC ALARM: NEED REF RETURN” is issued. The cause that sets bit 4 (APZx) of parameter No.1815 to 0 is indicated in bit 0 of diagnosis data No.0310).
5 Absolute coordinate value is set by machine coordinate value. However, after CNC turns on, the workpiece offset such as G92 and G52 executed before CNC turns off is not set.
6 This function cannot be used together with the bit 3 (SCRx) of parameter No. 1817 that convert scale data.

NOTE

7 In case of the rotary axis B type and the amount of one rotation of rotary axis is 360, set the parameter No.1869 to 0. Moreover, set the parameter No.1240 to 0 because the reference position must be 0 degree.

8 In case of the rotary axis B type and the amount of one rotation of rotary axis is not 360, set the parameter No.1869 to the amount of one rotation. Moreover, set the parameter No.1240 to 0 because the reference position must be 0 degree.

9 In case of the linear axis type, set the amount of the movement per one motor rotation to the parameter No.11810.

10 This parameter cannot be used together with the stored stroke limit check immediately after power-on (bit 0 (DOTx) of parameter No.1311 is 1).

#1 OPTx The separate position detector is:

0: Not to be used (semi-closed system)
1: To be used (full-closed system)

NOTE

1 In case of using the absolute position detector (bit 5 (APCx) of parameter No.1815 is set to 1), please set the following parameters that correspond to the absolute position detector which is actually used.
- Bit 6 and 0 of parameter No.1815, bit 3 of parameter No.1817, parameter No.1868, bit 1 of parameter No.2275, parameter No.2394

If these parameters are not set correctly, the machine coordinates are not correctly established at power-on.

2 Set this parameter to 1 when using a linear scale with reference marks or a linear scale with distance-coded reference marks (serial) (full-closed system).

#2 DCLx As a separate position detector, a linear scale with reference marks or a linear scale with an absolute address zero point is:

0: Not used.
1: Used.

#3 DCRx As a scale with absolute address reference marks:

0: A rotary encoder with absolute address reference marks is not used.
1: A rotary encoder with absolute address reference marks is used.

NOTE

When using a rotary encoder with absolute address reference marks, set also bit 2 (DCLx) of parameter No. 1815 to 1.

#4 APZx Machine position and position on absolute position detector when the absolute position detector is used

0: Not corresponding
1: Corresponding

When an absolute position detector is used, after primary adjustment is performed or after the absolute position detector is replaced, this parameter must be set to 0, power must be turned off and on, then manual reference position return must be performed. This completes the positional correspondence between the machine position and the position on the absolute position detector, and sets this parameter to 1 automatically.

#5 APCx Position detector

0: Other than absolute position detector
1: Absolute position detector (absolute Pulsecoder)

NOTE

1 In case of using FANUC absolute pulsecoder as absolute position detector for the rotary axis A type that machine coordinate values are rounded in 0 to 360°, set the bit 6 (RONx) of parameter No.1815 to 0. If the parameter is not set correctly, the machine coordinates are not correctly established at power-on.
2 In case of using a rotary scale without rotary data made by another company as absolute position detector, please refer to "CORRESPONDENCE OF ROTARY SCALE WITHOUT ROTARY DATA" in the “CONNECTION MANUAL (FUNCTION)” (B-64693EN-1) and set an appropriate value corresponding to the detector. If the parameter is not set correctly, the machine coordinates are not correctly established at power-on.
3 When the servo axis is disabled (bit 4 (KSVx) of parameter No. 11802 is set to 1), an absolute position detector cannot be used (bit 5 (APCx) of parameter No. 1815 cannot be set to 1). If an absolute position detector is used, alarm SV0301, "APC ALARM; COMMUNICATION ERROR" is issued.

#6 RONx With a rotary axis A type, an absolute position detector (absolute Pulsecoder) using a scale without rotary data is:

0: Not used.
1: Used.

NOTE

1 This parameter is available for only the rotary axis A type with an absolute position detector (absolute Pulsecoder). This function cannot be used for a rotary scale with distance-coded reference marks (serial) or for a distance coded rotary scale interface (phase A/B).
2 Set this parameter to 1 for the rotary axis A type using a rotary scale without rotary data such as HEIDENHAIN rotary scale RCN 223F, 727F, etc.
Set this parameter to 0 in any other case. If the parameter is not set correctly, the machine coordinates are not correctly established at power-on.

NOTE
3 When this parameter is set, machine position and position on absolute position detector become uncorresponding. So, establish the reference position again. (Consequently, the bit 4 (APZx) of parameter No. 1815 (indicating that the correspondence is established) is set to 0, alarm DS0300, "APC ALARM: NEED REF RETURN". Why the bit 4 (APZx) of parameter No. 1815 is set to 0 can be checked using bit 0 of diagnosis data No.0310).

	#7	#6	#5	#4	#3	#2	#1	#0
1816		DM3x	DM2x	DM1x		HPEx		

[Input type] Parameter input
[Data type] Bit axis

NOTE
When at least one of these parameters is set, the power must be turned off before operation is continued.

#2 HPEx The compensation amount by the error compensation can be output based on:
0: Detection unit
1: 1/1000 of the detection unit (same unit as for nano compensation)

NOTE
1 This parameter is valid in the following error compensation.
- Smooth backlash compensation
- Interpolation type straightness compensation
- Interpolation type straightness compensation 3072 points
- Interpolation type pitch error compensation

2 In error compensation, set compensation data such as pitch error data by the detection unit regardless of the setting of this parameter.
3 This parameter is valid on the following axes.
- Servo axis
- Axis for which Cs contour control or Spindle positioning is enabled

4 When this parameter is 1, the compensation amount by following error compensation can be output based on the detection unit.
- Backlash compensation
- Stored pitch error compensation
- Straightness compensation
- Inclination compensation
- Bi-directional pitch error compensation

5 To use this parameter, servo software supporting this parameter is required.

#4 DM1x
#5 DM2x
#6 DM3x By using DM1x, DM2x, and DM3x, a detection multiplication factor (DMR) is set.
This parameter is valid when a separate position detector (AB phase) is used and parameter No. 2084 and No. 2085 are not set.

DM3x	DM2x	DM1x	DMR
0	0	0	1/2
0	0	1	1
0	1	0	3/2
0	1	1	2
1	0	0	5/2
1	0	1	3
1	1	0	7/2
1	1	1	4

	#7	#6	#5	#4	#3	#2	#1	#0
1817		TANx		SCPx	SCRx	SBLx		

[Input type] Parameter input
[Data type] Bit axis

> **NOTE**
> When at least one of these parameters is set, the power must be turned off before operation is continued.

#2 SBLx Smooth backlash compensation is :
0: Disabled.
1: Enabled.

#3 SCRx Specifies whether to convert scale data by using threshold position (parameter No. 1868) so that rotary axis B type is available, in the case of the axis B type that use a rotary scale without data (the number of rotation), whose movable range is under one rotation:
0 : Not to convert.
1 : To convert.

> **NOTE**
> 1 This parameter is available for only the rotary axis B type with an absolute position detector (absolute Pulsecoder) or a rotary scale with distance-coded reference marks (serial). This function cannot be used for distance coded rotary scale interface (phase A/B).
> 2 Don't set this parameter in the case of no uncontinuous point within movable range of rotary axis even if the rotary axis B type.
> 3 When this parameter is set, machine position and position on absolute position detector become uncorresponding. So, establish the reference position again. (Consequently, the bit 4 (APZx) of parameter No. 1815 (indicating that the correspondence is established) is set to 0, and an alarm DS0300, "APC ALARM: NEED REF RETURN", occurs. Why the bit 4 (APZx) of parameter No. 1815 is set to 0 can be checked using bit 0 of diagnosis data No.310).
> 4 This function cannot be used together with the bit 0 (RVSx) of parameter No. 1815 that save rotary data by CNC.

NOTE
5 In this function, the amount of one rotation of rotary axis assumes 360, and the machine position 0 assumes the reference position. It is not possible to apply to a rotary axis other than the above-mentioned setting.
6 Set the parameter No. 1240 to 0.

#4 SCPx For two-point measurement (when bit 2 (DC2x) of parameter No. 1802 is set to 1), the scale zero point direction is:

0: On the minus side. (The reference position is located in the plus direction when viewed from the scale zero point.)
1: On the plus side. (The reference position is located in the minus direction when viewed from the scale zero point.)

NOTE
1 This parameter is valid when bit 2 (DC2x) of parameter No. 1802 is set to 1.
2 If this parameter is set to an incorrect value, an incorrect coordinate system is established. In such a case, reverse the setting then perform reference position establishment operation again.

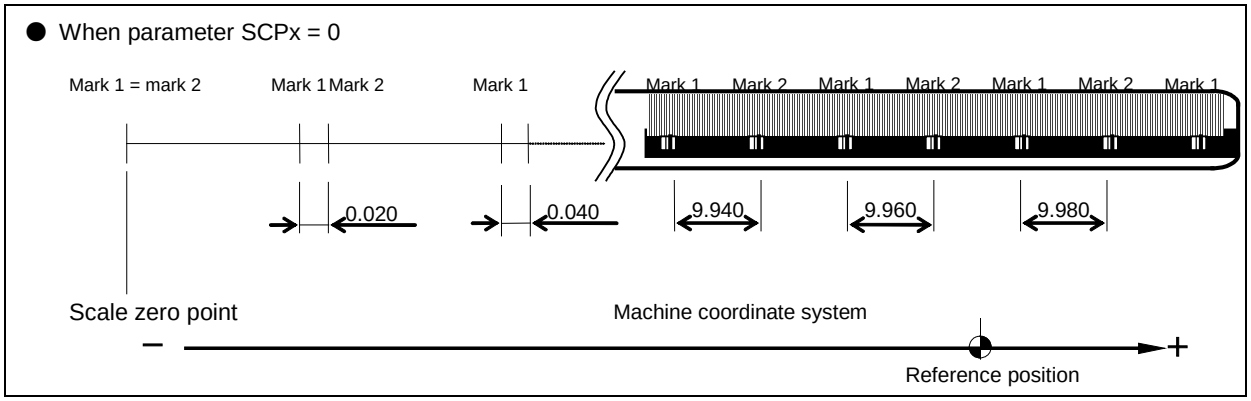

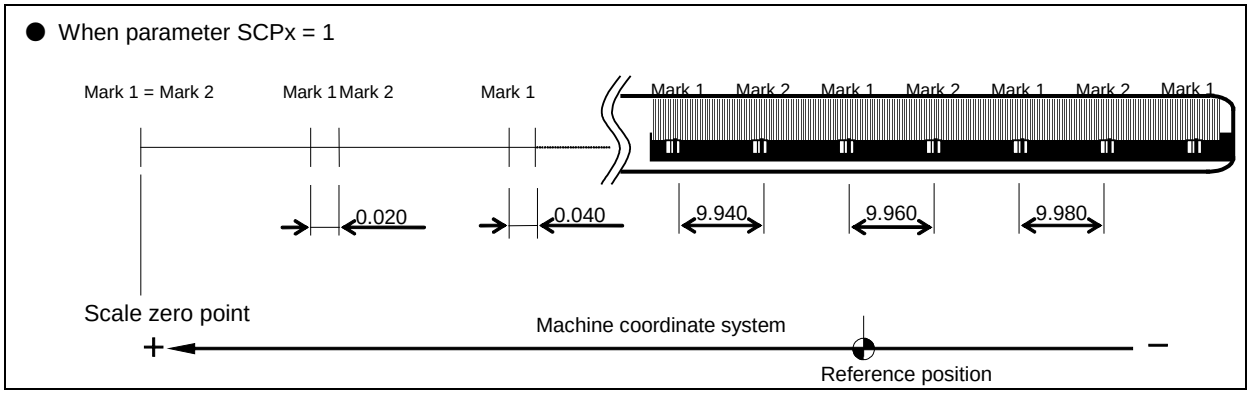

#6 TANx Tandem control

0: Not used
1: Used

NOTE
Set this parameter to both master axis and slave axis.

	#7	#6	#5	#4	#3	#2	#1	#0
1818			APDx		SDCx	DG0x	RF2x	RFSx

[Input type] Parameter input
[Data type] Bit axis

#0 RFSx If G28 is specified for an axis for which a reference position is not established (Reference position establishment signal ZRFx <Fn120.0 to 7> = “0”) when a linear scale with an absolute address zero point or a linear scale with absolute address reference marks is used:

0: A movement is made to the reference position after reference position establishment operation.
1: No movement is made after reference position establishment operation, but the operation is completed.

> **NOTE**
> This parameter disables movement based on the G28 command to a reference position. So, use this parameter only in special cases.

#1 RF2x If G28 is specified for an axis for which a reference position is already established (Reference position establishment signal ZRFx <Fn120.0 to 7> = “1”) when a linear scale with an absolute address zero point or a linear scale with absolute address reference marks is used:

0: A movement is made to the reference position.
1: No movement is made to the intermediate position and reference position, but the operation is completed.

> **NOTE**
> This parameter disables movement based on the G28 command to a reference position. So, use this parameter only in special cases.

#2 DG0x When the linear scale function with absolute address reference marks is used, reference position establishment operation based on the G00 command and jog feed is:

0: Disabled.
1: Enabled.

#3 SDCx A linear scale with an absolute address zero point is:

0: Not used.
1: Used.

> **NOTE**
> 1 When the parameter SDCx is set, the power must be turned off before operation is continued. Alarm PW0000, “POWER MUST BE OFF ” does not occur.
> 2 Please set bit 1 (OPTx) of parameter No. 1815 to 1 when the full closed system. But please set this parameter to 0 when the Linear motor system.

#5 APDx In the axis with absolute position detector (absolute pulse coder), when the axis is released from state of control axis detach:

0: The bit 4 (APZx) of parameter No. 1815 is changed to 0 automatically and the alarm DS0300 is generated.

1: The bit 4 (APZx) of parameter No. 1815 is not changed. After the release of control axis detach, the machine and workpiece coordinate systems are automatically set by using an absolute position detector (absolute pulse coder).

> ⚠ **WARNING**
> 1 It is necessary to detach and attach control axis on the same axis (and the same detector). Do not exchange the axis, etc.
> 2 Do not move an axis of rotary axis (A type) (machine coordinate values are rounded in 0 to 360°.) by more than 180°during control axis detach.
> 3 In case of using the control axis detach function during automatic operation, change controlled axis detach signals DTCH1 to DTCH8 <Gn124> while FIN wait state by using an M code without buffering (parameter No.3411 to No.3432).
> 4 If magnetic pole detection is used, magnetic pole detection is needed when the control axis is reconnected after control axis detach.

	#7	#6	#5	#4	#3	#2	#1	#0
1819						DATx	CRFx	FUPx

[Input type] Parameter input
[Data type] Bit axis

#0 FUPx To perform follow-up when the servo is off is set for each axis.
0: The follow-up signal, *FLWU<Gn007.5>, determines whether follow-up is performed or not.
When *FLWU<Gn007.5> is “0”, follow-up is performed.
When *FLWU<Gn007.5> is “1”, follow-up is not performed.
1: Follow-up is not performed.

> **NOTE**
> When using the index table indexing function, set FUPx to 1 for a control axis subject to index table indexing.

#1 CRFx When the servo alarm SV0445, “SOFT DISCONNECT ALARM”, SV0447, “HARD DISCONNECT(EXT)”, or SV0421, “EXCESS ERROR(SEMI-FULL)” is issued:
0: The reference position established state is not affected.
1: The reference position unestablished state is assumed. (Bit 4 (APZx) of parameter No. 1815 is set to 0.)

#2 DATx When a linear scale with an absolute address zero point or a linear scale with absolute address reference marks is used, the automatic setting of parameters Nos. 1883 and 1884 at manual reference position return time is:
0: Not performed.
1: Performed.

The automatic setting procedure is as follows:
<1> Set an appropriate value in parameters Nos. 1815, 1821, and 1882.
(In case of the linear scale with distance-coded reference marks (serial), it is not necessary to set the parameter No.1882.)
<2> Position the machine at the reference position by manual operation.

<3> Set this parameter to 1.
Alarm PS5220, “REFERENCE POINT ADJUSTMENT MODE”, occurs.

<4> Perform a manual reference position return operation. Upon completion of manual reference position return operation, parameters Nos. 1883 and 1884 are set, and this parameter is automatically set to 0.
Make a reset to release alarm PS5220.

1820	Command multiplier for each axis (CMR)

NOTE
When this parameter is set, the power must be turned off before operation is continued.

[Input type] Parameter input
[Data type] Byte axis
[Valid data range] See below :
Set a command multiplier indicating the ratio of the least command increment to the detection unit for each axis.
Least command increment = detection unit × command multiplier

Relationship between the increment system and the least command increment

Name of an increment system	Least input increment		Least command increment		Maximum stroke	
IS-A	0.01	mm	0.01	mm	±999999.99	mm
	0.001	inch	0.001	inch	±99999.999	inch
	0.01	deg	0.01	deg	±999999.99	deg
IS-B	0.001	mm	0.001	mm	±999999.999	mm
	0.0001	inch	0.0001	inch	±99999.9999	inch
	0.001	deg	0.001	deg	±999999.999	deg
IS-C	0.0001	mm	0.0001	mm	±99999.9999	mm
	0.00001	inch	0.00001	inch	±9999.99999	inch
	0.0001	deg	0.0001	deg	±99999.9999	deg

When bit 7 (IPR) of parameter No.1004, which multiplies the input increment by 10, is set to 1 and a value is specified with no decimal point, the specifications of each increment system are changed as follows.

Name of an increment system	Least input increment		Least command increment		Maximum stroke	
IS-B	0.01	mm	0.001	mm	±999999.999	mm
	0.001	inch	0.0001	inch	±99999.9999	inch
	0.01	deg	0.001	deg	±999999.999	deg
IS-C	0.001	mm	0.0001	mm	±99999.9999	mm
	0.0001	inch	0.00001	inch	±9999.99999	inch
	0.001	deg	0.0001	deg	±99999.9999	deg

NOTE
The unit (mm or inch) in the table is used for indicating a diameter value for diameter programming (when bit 3 (DIAx) of parameter No.1006 is set to 1) or a radius value for radius programming.

Setting command multiply (CMR), detection multiply (DMR), and the capacity of the reference counter

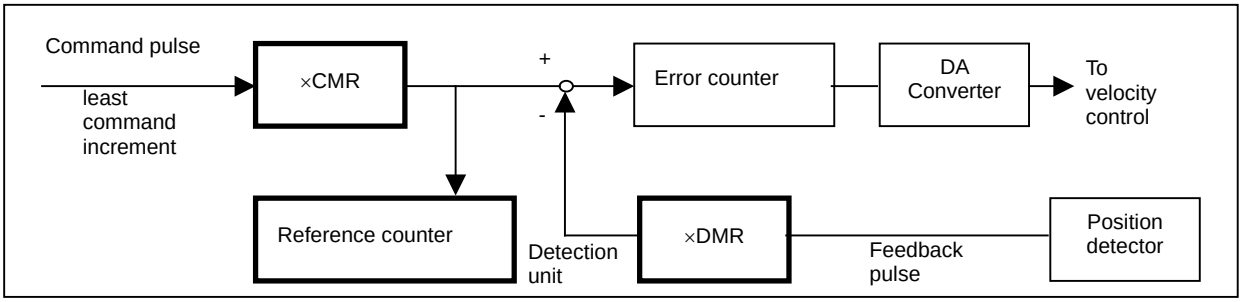

Set CMR and DMR so that the pulse weight of + input (command from the CNC) into the error counter matches the pulse weight of -input (feedback from the position detector).

[Least command increment]/CMR=[Detection unit]=
[Feedback pulse unit]/DMR

[Least command increment]
Minimum unit of commands issued from the CNC to the machine

[Detection unit]
Minimum unit for machine position detection

The unit of feedback pulses varies, depending on the type of detector.

[Feedback pulse unit]=
[Amount of travel per rotation of the Pulsecoder]/
[Number of pulses per rotation of the Pulsecoder]

As the size of the reference counter, specify the grid interval for the reference position return in the grid method.

[Size of the reference counter]=[Grid interval]/[Detection unit]
[Grid interval]=[Amount of travel per rotation of the Pulsecoder]

The setting of a command multiplier is as follows:

(1) When command multiplier is 1 to 1/27
Set value = 1 / command multiplier + 100
Valid data range : 101 to 127

(2) When command multiply is 0.5 to 48
Set value = 2 × command multiplier
Valid data range : 1 to 96

NOTE
If a feedrate exceeding the feedrate found by the expression below is used, an incorrect travel amount may result or a servo alarm may be issued. Be sure to use a feedrate not exceeding the feedrate found by the following expression:
Fmax[mm/min] = 196602 × 10^4 × least command increment / CMR

1821	Reference counter size for each axis

NOTE
When this parameter is set, the power must be turned off before operation is continued.

[Input type] Parameter input
[Data type] 2-word axis

[Unit of data] Detection unit
[Valid data range] 0 to 999999999
Set a reference counter size.
As a reference counter size, specify a grid interval for reference position return based on the grid method.
When a value less than 0 is set, the specification of 10000 is assumed.
When a linear scale with absolute address reference marks is used, set the interval of mark 1.

1825	Servo loop gain for each axis

[Input type] Parameter input
[Data type] Word axis
[Unit of data] 0.01/sec
[Valid data range] 1 to 32767
Set the loop gain for position control for each axis.
When the machine performs linear and circular interpolation (cutting), the same value must be set for all axes. When the machine requires positioning only, the values set for the axes may differ from one another. As the loop gain increases, the response by position control is improved. A too large loop gain, however, makes the servo system unstable.
The relationship between the positioning deviation (the number of pulses counted by the error counter) and the feedrate is expressed as follows:

Positioning deviation = Feedrate / (60 × Loop gain)
Unit : Positioning deviation mm, inch or deg
Feedrate mm/min, inch/min, or deg/min
Loop gain 1/sec

NOTE
This parameter is Initial setting parameter. For details, refer to the appendix "Automatic setting / Initial setting parameter" in CONNECTION MANUAL (FUNCTION) (B-64693EN-1).

1826	In-position width for each axis

[Input type] Parameter input
[Data type] 2-word axis
[Unit of data] Detection unit
[Valid data range] 0 to 99999999
The in-position width is set for each axis.
When the deviation of the machine position from the specified position (the absolute value of the positioning deviation) is smaller than the in-position width, the machine is assumed to have reached the specified position. (The machine is in the in-position state.)

1827	In-position width in cutting feed for each axis

[Input type] Parameter input
[Data type] 2-word axis
[Unit of data] Detection unit
[Valid data range] 0 to 99999999
Set an in-position width for each axis in cutting feed. This parameter is used when bit 4 (CCI) of parameter No. 1801=1.

1828	Positioning deviation limit for each axis in movement

[Input type] Parameter input
[Data type] 2-word axis
[Unit of data] Detection unit
[Valid data range] 0 to 99999999

Set the positioning deviation limit in movement for each axis.
If the positioning deviation exceeds the positioning deviation limit during movement, a servo alarm SV0411, "EXCESS ERROR (MOVING)" is generated, and operation is stopped immediately (as in emergency stop).
Generally, set the positioning deviation for rapid traverse plus some margin in this parameter. Refer to the following set value.

$$\textbf{Setting value} = \frac{\textbf{Rapid traverse rate}^{(\textbf{Note 1})}}{\textbf{60} \times \textbf{Servo loop gain}^{(\textbf{Note 2})}} \times \frac{1}{\textbf{Detection unit}} \times 1.2 \textbf{ to } 1.5$$

⚠ CAUTION
If this parameter is not set correctly, machine or workpiece can be damaged.

NOTE
1 Usually, this value is parameter No.1420. When the maximal feedrate of each axis exceeds parameter No.1420 according to the command and override, the value is the maximal feedrate of the each axis.
2 Usually, this value is parameter No.1825. When the servo loop gains other than parameter No.1825 is effective, the value is actual servo loop gains.

1829	Positioning deviation limit for each axis in the stopped state

[Input type] Parameter input
[Data type] 2-word axis
[Unit of data] Detection unit
[Valid data range] 0 to 99999999

Set the positioning deviation limit in the stopped state for each axis.
If, in the stopped state, the positioning deviation exceeds the positioning deviation limit set for stopped state, a servo alarm SV0410, "EXCESS ERROR (STOP)" is generated, and operation is stopped immediately (as in emergency stop).

1830	Axis-by-axis positional deviation limit at servo-off time

[Input type] Parameter input
[Data type] 2-word axis
[Unit of data] Detection unit
[Valid data range] 0 to 99999999

This parameter is used to set a positional deviation limit at servo-off time, on an axis-by-axis basis.
If the value specified with this parameter is exceeded at servo-off time, a servo alarm is issued to cause an immediate stop (same as an emergency stop). Usually, set the same value as a positional deviation at stop time.

NOTE
If this parameter is set to 0, the positioning deviation is not checked in servo-off state.

1836	Servo error amount where reference position return is possible

[Input type] Parameter input
[Data type] Word axis
[Unit of data] Detection unit
[Valid data range] 0 to 32767

This parameter sets a servo error used to enable reference position return.
In general, set this parameter to 0. (When 0 is set, 128 is assumed as the default.)
When the servo error amount never exceeds this parameter value before leaving the limit switch for the deceleration in reference position return, alarm (PS0090) "REFERENCE RETURN INCOMPLETE" occurs.

1838	
1842	

These parameters are related to Dual Check Safety.
See Dual Check Safety CONNECTION MANUAL (B-64483EN-2) for details.

1844	Distance to the first grid point when the reference position shift amount in the reference position shift function is 0 or when a reference position return is made by grid shift

NOTE
When this parameter is set, the power must be turned off before operation is continued.

[Input type] Parameter input
[Data type] 2-word axis
[Unit of data] Detection unit
[Valid data range] -999999999 to 999999999

(1) When the reference position shift function is enabled (when bit 4 (SFDx) of parameter No. 1008 is set to 1)
Set the distance (detection unit) to the first grid point from a point at which the deceleration dog is released when the reference position shift (parameter No. 1850) is set to 0.

(2) When a reference position return is made by grid shift with a setting not to use reference position setting without dogs (when bit 4 (SFDx) of parameter No. 1008 is set to 0, and bit 1 (DLZx) of parameter No. 1005 is set to 0)
Set the distance to the first grid point from a point at which the deceleration dog is released. (Detection unit)

(3) When a reference position return is made by grid shift with a setting to use reference position setting without dogs (when bit 4 (SFDx) of parameter No. 1008 is set to 0, and bit 1 (DLZx) of parameter No. 1005 is set to 1)
Set the distance from the start position for reference position setting without dogs to the first grid point. (Detection unit)

NOTE

1 When the reference position shift function is enabled (when bit 4 (SFDx) of parameter No. 1008 is set to 1)
When bit 4 (SFDx) of parameter No. 1008 is set to 1, the distance from a point at which the deceleration dog is released to the first grid point (parameter No. 1844) is set to 0, and reference position shift (parameter No. 1850) is set to 0, a manual reference position return allows this parameter to be set automatically. Do not change an automatically set value.

2 When a reference position return is made by grid shift with a setting not to use reference position setting without dogs (when bit 4 (SFDx) of parameter No. 1008 is set to 0, and bit 1 (DLZx) of parameter No. 1005 is set to 0)
When a manual reference position return using deceleration dogs is made, this parameter is set automatically.

3 When a reference position return is made by grid shift with a setting to use reference position setting without dogs (when bit 4 (SFDx) of parameter No. 1008 is set to 0, and bit 1 (DLZx) of parameter No. 1005 is set to 1)
When a reference position setting without dogs is made, this parameter is set automatically.

1846	Distance for starting the second stage of smooth backlash compensation

[Input type] Parameter input
[Data type] 2-word axis
[Unit of data] Detection unit
[Valid data range] 0 to 999999999

For each axis, set the distance from the point where the axis movement direction is reversed to the point where the second stage of smooth backlash compensation is started.

If the following condition is not satisfied, smooth backlash compensation is disabled:
Value of parameter No. 1846 ≥ 0
Value of parameter No. 1846 < value of parameter No. 1847

1847	Distance for ending the second stage of smooth backlash compensation

[Input type] Parameter input
[Data type] 2-word axis
[Unit of data] Detection unit
[Valid data range] 0 to 999999999

For each axis, set the distance from the point where the axis movement direction is reversed to the point where the second stage of smooth backlash compensation is ended.

If the following condition is not satisfied, smooth backlash compensation is disabled:
Value of parameter No. 1846 ≥ 0
Value of parameter No. 1846 < value of parameter No. 1847

1848	Value of the first stage of smooth backlash compensation

[Input type] Parameter input
[Data type] Word axis

[Unit of data] Detection unit
[Valid data range] -9999 to 9999
Set the value of the first stage of smooth backlash compensation for each axis.
If the setting of this parameter is larger than the total backlash compensation value, smooth backlash compensation is not performed.
When a negative value is set for the backlash compensating value for each axis (parameter No. 1851), set a negative value in this parameter. If the sign set in this parameter is different from that set for the backlash compensating value for each axis (parameter No. 1851), compensation is performed, assuming that the value of the first stage of smooth backlash compensation is 0.

1850	Grid shift and reference position shift for each axis

NOTE
When this parameter is set, the power must be turned off before operation is continued.

[Input type] Parameter input
[Data type] 2-word axis
[Unit of data] Detection unit
[Valid data range] -99999999 to 99999999
To shift the reference position, the grid can be shifted by the amount set in this parameter. Up to the maximum value counted by the reference counter can be specified as the grid shift.
In case of bit 4 (SFDx) of parameter No. 1008 is 0: Grid shift
In case of bit 4 (SFDx) of parameter No. 1008 is 1: Reference point shift

NOTE
For setting the reference position without dogs, only the grid shift function can be used.
(The reference position shift function cannot be used.)

1851	Backlash compensating value for each axis

[Input type] Parameter input
[Data type] Word axis
[Unit of data] Detection unit
[Valid data range] -9999 to 9999
Set the backlash compensating value for each axis.
When the machine moves in a direction opposite to the reference position return direction after the power is turned on, the first backlash compensation is performed.

1852	Backlash compensating value used for rapid traverse for each axis

[Input type] Parameter input
[Data type] Word axis
[Unit of data] Detection unit

[Valid data range] -9999 to 9999

Set the backlash compensating value used in rapid traverse for each axis. (This parameter is valid when bit 4 (RBK) of parameter No. 1800 is set to 1.) More precise machining can be performed by changing the backlash compensating value depending on the feedrate, the cutting feed or the rapid traverse positioning. Let the measured backlash at cutting feed be A and the measured backlash at rapid traverse be B. The backlash compensating value is shown below depending on the change of feedrate (cutting feed or rapid traverse) and the change of the direction of movement.

Change of feedrate / Change of direction of movement	Cutting feed to cutting feed	Rapid traverse to rapid traverse	Rapid traverse to cutting feed	Cutting feed to rapid traverse
Same direction	0	0	$\pm\alpha$	$\pm(-\alpha)$
Opposite direction	$\pm$A	$\pm$B	$\pm(B+\alpha)$	$\pm(B+\alpha)$

NOTE
1 α=(A-B)/2 (However, if α is not an integer, it is α= (A-(B-1)) / 2.)
2 The positive or negative direction of compensating values are the same as the direction of movement.

1853	Tolerance for reverse pulse of axis moving direction of backlash compensation

[Input type] Parameter input
[Data type] 2-word axis
[Unit of data] Detection unit
[Valid data range] 0 to 999999999

The tolerance value for reverse pulse of the axis moving direction of the backlash compensation is set.
After the value set in the parameter at the time when the direction of the movement is changed is moved by, the backlash compensation pulse is output.
When this parameter is set to 0, the function of invalid bandwidth is disabled, and the backlash compensation is done when the direction of the movement is changed.

1860	Value 1 for the zero point of the absolute position detector

1861	Value 2 for the zero point of the absolute position detector

1862	Value 3 for the zero point of the absolute position detector

NOTE
When this parameter is set, the power must be turned off before operation is continued.

[Input type] Locked parameter
[Data type] 2-word axis

Parameters Nos.1860 to 1862 are values for the zero point of the absolute position detector (association of reference position and the counter value of the absolute position detector).
The CNC automatically sets parameters Nos.1860 to 1862 by taking a correspondence between the reference position and the absolute position detector.
It is not available to set parameters Nos.1860 to 1862 by using the input of MDI operation, FOCAS2, PMC window or programmable parameter input(G10).

The zero point data of the absolute position detection can be restored and parameters Nos.1860 to 1862 can be set, by the parameter input from connected I/O unit or by restoring the SRAM area of boot system.
When the zero point data of the absolute position detection are restored, be careful about the followings.

- When the zero point data of absolute position detection are restored, back up them right before the restoring and use backup data.
- When the motor or the detector is exchanged, the zero point data of absolute position detection cannot be restored. After exchange, set the zero point of the absolute position detector again.
- When the zero point data of the absolute position detection are restored from those of the other machine, the zero point of the absolute position detector is set to wrong position. Don't restore the zero point data of absolute position detection from those of the other machine.
- When the zero point data of absolute position detection are backed up with reference position not yet established and restored from backup data, setting of the zero point of the absolute position detector is required after restoring.

> ⚠ **WARNING**
> If the zero point of the absolute position detector is not set properly, the machine coordinate system is not established correctly.

1868	Threshold position for converting scale data (each axis)

> **NOTE**
> When this parameter is set, the power must be turned off before operation is continued.

[Input type] Parameter input
[Data type] Real axis
[Unit of data] degree (machine unit)
[Min. unit of data] Depend on the increment system of the applied axis
[Valid data range] 0 or positive 9 digit of minimum unit of data (Refer to the standard parameter setting table (B))
(When the increment system is IS-B, 0.0 to +999999.999)

In the case that scale data of a rotary scale without rotary data is larger than the scale data of the threshold position (this parameter value), it is converted to be continuous data in movable range by subtracting data of one rotation. The machine coordinate value out of movable range (angle from an uncontinuous point) must be set as threshold position. As for the axis for which this parameter is set to 0, conversion of scale data is not performed.

> **NOTE**
> 1 This parameter is available for only the rotary axis B type with an absolute position detector (absolute Pulsecoder) or a rotary scale with distance-coded reference marks (serial), for which the bit 3 (SCRx) of parameter No. 1817 is set to 1.
> 2 This function cannot be used for distance coded rotary scale interface (phase A/B).
> 3 Don't set this parameter in the case of no uncontinuous point within movable range of rotary axis even if the rotary axis B type.

NOTE
4 When this parameter is set, machine position and position on absolute position detector become uncorresponding. So, establish the reference position again. (Consequently, the bit 4 (APZx) of parameter No. 1815 (indicating that the correspondence is established) is set to 0, and an alarm DS0300, “APC ALARM: NEED REF RETURN”, occurs. This uncorrespondence is reflected in bit 0 of diagnosis data No.310 as the cause for the bit 4 (APZx) of parameter No. 1815 being set to 0).

1869	The amount of one rotation of rotary axis B type (each axis)

NOTE
When this parameter is set, the power must be turned off before operation is continued.

[Input type] Parameter input
[Data type] Real axis
[Unit of data] degree (machine unit)
[Min. unit of data] Depend on the increment system of the applied axis
[Valid data range] 0 or positive 9 digit of minimum unit of data (Refer to the standard parameter setting table (B))
(When the increment system is IS-B, 0.0 to +999999.999)
Normally, the amount of one rotation of rotary axis is 360, and the machine position 0 is the reference position.
In this case, this parameter is set to 0.

For instance, when this parameter is set to 523.000, the amount of one rotation become 523.000 (in the case of IS-B), if it is necessary to set it arbitrarily.

NOTE
1 This parameter is available for only the rotary axis B type with an absolute position detector (absolute Pulsecoder) or a rotary scale with distance-coded reference marks (serial), as for the bit 3 (SCRx) of parameter No. 1817 is set to 1 or the bit 0 (RVSx) of parameter No. 1815 is set to 1.
2 In the case that the amount of one rotation of rotary axis is 360, this parameter is set to 0.If it is necessary to set an amount of one rotation of rotary axis arbitrarily, this parameter is set to the amount of one rotation.
3 When this parameter is set, machine position and position on absolute position detector become uncorresponding. So, establish the reference position again. (Consequently, the bit 4 (APZx) of parameter No. 1815 (indicating that the correspondence is established) is set to 0, and an alarm DS0300, “APC ALARM: NEED REF RETURN”, occurs. This uncorrespondence is reflected in bit 0 of diagnosis data No.0310 as the cause for the bit 4 (APZx) of parameter No. 1815 being set to 0).

NOTE
4 This parameter No. 1869 is common in movable range that is under one rotation (the bit 3 (SCRx) of parameter No. 1817 is set to 1) and movable range that is over one rotation (the bit 0 (RVSx) of parameter No. 1815 is set to 1).
5 Please set 0 to this parameter if the distance coded rotary scale interface (phase A/B) is used.

1874	Numerator of the flexible feed gear for the built-in position detector
1875	Denominator of the flexible feed gear for the built-in position detector

NOTE
When these parameters are set, the power must be turned off before operation is continued.

[Input type] Parameter input
[Data type] Word axis
[Valid data range] 1 to 32767

When using temporary absolute coordinate setting, set the flexible feed gear for the built-in position detector on each axis. The settings are as follows:

$$\frac{\text{No.1874}}{\text{No.1875}} = \frac{\text{Number of position feedback pulses per motor revolution}}{1{,}000{,}000}$$

NOTE
When parameter No. 1874 or 1875 is set to 0, both parameters are assumed to be 1.

1880	Abnormal load detection alarm timer

[Input type] Parameter input
[Data type] Word path
[Unit of data] msec
[Valid data range] 0 to 32767
This parameter sets the time from the detection of an unexpected disturbance torque until a servo alarm is issued.
When 0 is set, however, the specification of 200 msec is assumed.

1881	Group number when an unexpected disturbance torque is detected

[Input type] Parameter input
[Data type] Byte axis
[Valid data range] 0 to 32
Set the group number on each axis when an unexpected disturbance torque is detected.
When an unexpected disturbance torque is detected on an axis, only the movements on those axes that belong to the same group as the axis are stopped.
If 0 is set for an axis, the movement on the axis is stopped when an unexpected disturbance torque is detected on any other axis.
This parameter is valid when bit 5 (ANA) of parameter No. 1804 is set to 1.

[Example]

When the settings indicated below are made, and an unexpected disturbance torque is detected on the 6th axis, the movements on the 2nd axis, 4th axis, 6th axis, and 7th axis are stopped. When an unexpected disturbance torque is detected on the 4th axis, the movements on the 4th axis and the 7th axis are stopped.

Parameter No. 1881	Setting value
(1st axis)	1
(2nd axis)	2
(3rd axis)	1
(4th axis)	0
(5th axis)	3
(6th axis)	2
(7th axis)	0

1882	Interval of mark 2 of a linear scale with absolute address reference marks

NOTE
When this parameter is set, the power must be turned off before operation is continued.

[Input type] Parameter input
[Data type] 2-word axis
[Unit of data] Detection unit
[Valid data range] 0 to 999999999

Set the interval of mark 2 of a linear scale with absolute address reference marks.

1883	Distance 1 from the scale zero point to reference position (linear scale with absolute address reference marks) or distance 1 from the base point to reference position (linear scale with an absolute address zero point)

NOTE
When this parameter is set, the power must be turned off before operation is continued.

[Input type] Parameter input
[Data type] 2-word axis
[Unit of data] Detection unit
[Valid data range] -999999999 to 999999999

1884	Distance 2 from the scale zero point to reference position (linear scale with absolute address reference marks) or distance 2 from the base point to reference position (linear scale with an absolute address zero point)

NOTE
When this parameter is set, the power must be turned off before operation is continued.

[Input type] Parameter input
[Data type] 2-word axis
[Unit of data] Detection unit

[Valid data range] -999 to 999

When a linear scale with absolute address reference marks is used, set the distance from the scale zero point to reference position in parameter Nos. 1883 and 1884.

Distance from the zero point to the reference position of a linear scale
= No. 1884 × 1,000,000,000 + No. 1883

The scale zero point represents a point where mark 1 and mark 2 match. Usually, this point is a virtual point that does not physically exist on the scale. (See the Fig. 4.18 (a).)

If the reference position is placed in the + direction when viewed from the scale zero point, set a positive value. If the reference position is placed in the - direction when viewed from the scale zero point, set a negative value.

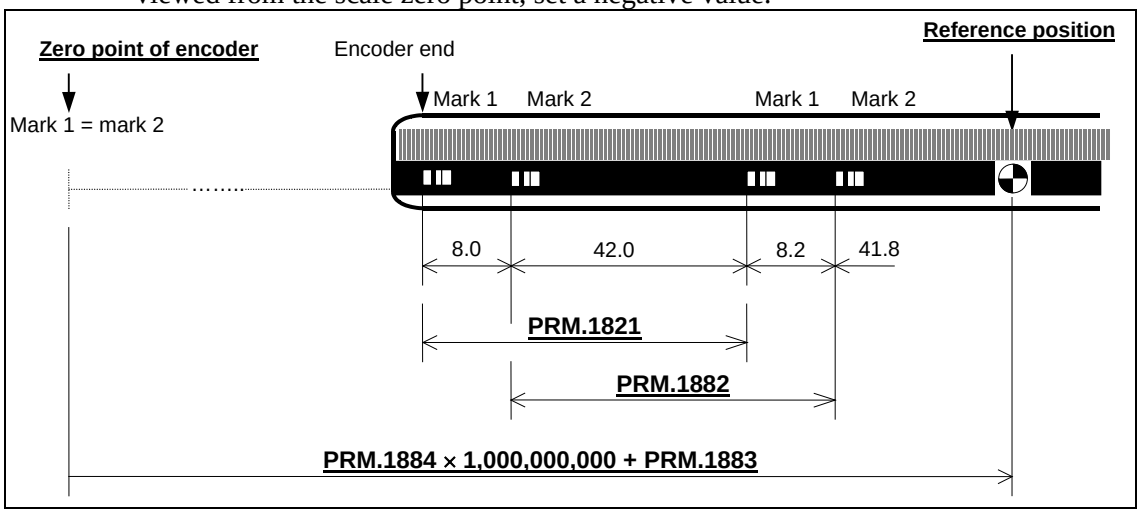

Fig. 4.18 (a)

[Example of parameter settings]

When an encoder as shown in Fig. 4.18 (b) is used with an IS-B, millimeter machine:

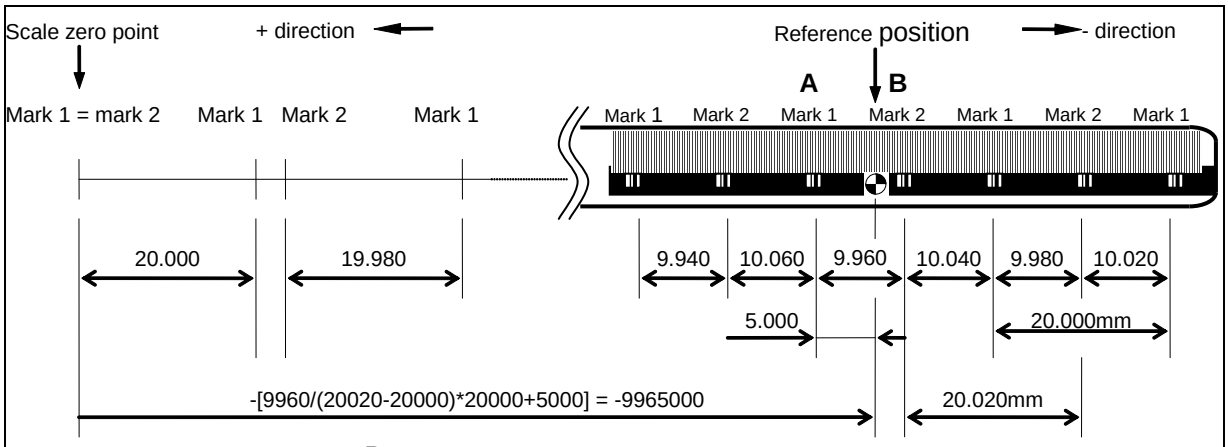

Parameters

No.1821 (interval of mark 1) = 20000
No.1882 (interval of mark 2) = 20020
No.1883 (reference position) = position of point A + 5.000
= distance between A and B/(mark 2 – mark 1) × mark 1 + 5000
= 9960/(20020-20000) × 20000 + 5000
= 9965000
= -9965000 (the reference position is on the negative side)

Fig. 4.18 (b)

[Setting parameter No. 1883]
When it is difficult to measure the distance from the scale zero point to the reference position (parameter No. 1883), the method described below can be used to find the distance.

<1> Set parameter No. 1815 to enable this function.
Set an appropriate value in parameter No. 1821 and No. 1882.
Set 0 in parameter No. 1240.
Set 0 in parameter No. 1883 and No. 1884.
<2> At an appropriate position, establish a reference position.
(As a result, the machine coordinate represents the distance from the scale zero point to the current position.)
<3> By using jog feed or handle feed, place the machine at the accurate reference position.
<4> In parameter No. 1883, set the machine coordinate value above converted to the detection unit (machine coordinate × CMR).
<5> If necessary, set parameter No. 1240.

When a linear scale with an absolute address zero point is used, set the distance from the base point to the reference position in parameter Nos. 1883 and 1884. The base point is a point at a scale end as shown in Fig. 4.18 (c).

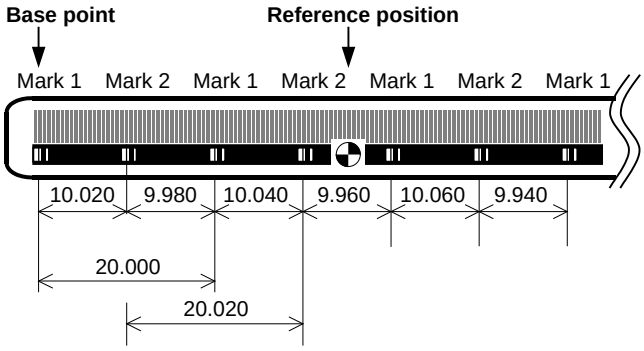

Fig. 4.18 (c)

If the reference position is located in the positive direction when viewed from the base point, set a positive value; if the reference position is located in the negative direction, set a negative value. Set the value by following steps explained below.
<1> Set bit 1 (OPTx) of parameter No. 1815 , bit 2 (DCLx) of parameter No. 1815, and bit 3 (SDCx) of parameter No. 1818 to enable this function.
Set 0 in parameter No. 1240.
Set 0 in parameter Nos. 1883 and 1884.
<2> At an appropriate position, establish a reference position.
(Consequently, the machine coordinate value indicates the distance from the base point to current position.)
<3> By using jog feed or handle feed, place the machine at the accurate reference position.
<4> In parameters Nos. 1883 and 1884, set the machine coordinate value above converted to the detection unit (machine coordinate × CMR).
If necessary, set parameter No. 1240.

NOTE
1 Set parameter Nos. 1883 and 1884 so that the distance from the scale zero point (for a linear scale with absolute address reference marks) or the base point (for a linear scale with an absolute address zero point) to the reference position is within the range from -999,999,999,999 to +999,999,999,999. If a value beyond this range is set, an alarm DS0016 or DS1448 is issued.
2 The scale area on the scale cannot be extended across the scale zero point or base point. Make parameter settings not to cause the scale area to extend beyond the scale zero point or base point.

1885	Maximum allowable value for total travel during torque control

[Input type] Parameter input
[Data type] Word axis
[Unit of data] Detection unit
[Valid data range] 0 to 32767
Set a maximum allowable cumulative travel value (error counter value) during torque control. If the cumulative travel value exceeds the set value, the servo alarm SV0423 is issued.

NOTE
This parameter is enabled when the bit 4 (TQF) of parameter No. 1803 is 0 (follow-up is not performed during torque control).

1886	Positional deviation when torque control is canceled

[Input type] Parameter input
[Data type] Word axis
[Unit of data] Detection unit
[Valid data range] 1 to 32767
Set a positional deviation value when torque control is canceled to return to positional control. After the positional deviation has fallen below the parameter-set value, switching to position control is performed.

NOTE
This parameter is enabled when the bit 4 (TQF) of parameter No. 1803 is 0 (follow-up is not performed during torque control).

1895	Servo motor axis number used for a milling tool

[Input type] Parameter input
[Data type] Byte path
[Valid data range] 1 to number of controlled axes
This parameter sets the servo motor axis number used for displaying the speed of a milling tool that incorporates a servo motor.

1898	Number of gear teeth on the servo motor axis side

[Input type] Parameter input
[Data type] Word axis

[Valid data range] 1 to 9999
This parameter sets the number of servo motor axis gear teeth used for displaying the speed of a milling tool that incorporates a servo motor.

> **NOTE**
> This parameter is valid when a non-zero value is set in parameter No. 1895.

1899	Number of gear teeth on the milling axis side

[Input type] Parameter input
[Data type] Word axis
[Valid data range] 1 to 9999
This parameter sets the number of milling axis gear teeth used for displaying the speed of a milling tool that incorporates a servo motor.

> **NOTE**
> This parameter is valid when a non-zero value is set in parameter No. 1895.

	#7	#6	#5	#4	#3	#2	#1	#0
1902							ASE	FMD

[Input type] Parameter input
[Data type] Bit

> **NOTE**
> When at least one of these parameters is set, the power must be turned off before operation is continued.

#0 FMD The FSSB setting mode is:
0: Automatic setting mode.
(When the relationship between an axis and amplifier is defined on the FSSB setting screen, parameter No.1023, bit 0 of parameter No.2013, bit 0 of parameter No.2014, parameter No.3717, bit 4 of parameter No.11802 and parameters 24000 to 24103 are automatically set.
1: Manual setting 2 mode.
(parameter No.1023, bit 0 of parameter No.2013, bit 0 of parameter No.2014, parameter No.3717, bit 4 of parameter No.11802 and parameters 24000 to 24103 are to be manually set.)

#1 ASE When automatic setting mode is selected for FSSB setting (when the bit 0 (FMD) parameter No. 1902 is set to 0), automatic setting is:
0: Not completed.
1: Completed.
This bit is automatically set to 1 upon the completion of automatic setting.

	#7	#6	#5	#4	#3	#2	#1	#0
1902		DCE						
1904		DCN						

These parameters are related to Dual Check Safety.
See Dual Check Safety CONNECTION MANUAL (B-64483EN-2) for details.

1945	
1946	
1948	
1950	

These parameters are related to Dual Check Safety.
See Dual Check Safety CONNECTION MANUAL (B-64483EN-2) for details.

Parameters Nos. 2000 to 2999 are for digital servo. The following parameters are not explained in this manual. Refer to FANUC AC SERVO MOTOR αi series PARAMETER MANUAL (B-65270EN)

No.	Data type	Contents							
2000	Bit axis				PGEX			DGP	PLC0
2001	Bit axis		AMR6	AMR5	AMR4	AMR3	AMR2	AMR1	AMR0
2002	Bit axis					PFSE			
2003	Bit axis		OVSC	BLEN	NPSP	PIEN	OBEN	TGAL	
2004	Bit axis					TRW1	TRW0	TIB0	TIA0
2005	Bit axis	SFCM	BRKC					FEED	
2006	Bit axis								FCBL
2007	Bit axis	TRQ						IGNV	ESP2
2008	Bit axis	LAXD					VFA	TDM	
2009	Bit axis	BLST	BLCU						DMY
2010	Bit axis	POLE		HBBL	HBPE	BLTE	LINE		
2011	Bit axis	XIA		RCCL				FFAL	SYN
2012	Bit axis	STNG		VCM2	VCMD1			MSFE	
2013	Bit axis	APTG							HRV3
2014	Bit axis		SPCTRF	SPF					
2015	Bit axis	BZNG	BLAT	TDOU				SSG1	PGTW
2016	Bit axis				SPS	PK2VDN			ABNT
2017	Bit axis	PK2V25			HTN	COMSRC			DBST
2018	Bit axis	PFBCPY					OVR8	MOVOBS	RVRSE
2019	Bit axis	DPFB	SLEN	INVSYS		LBUFEX		TANDMP	
2020	Word axis	Motor number							
2021	Word axis	Load inertia ratio							
2022	Word axis	Direction of motor rotation							
2023	Word axis	Number of velocity pulses							
2024	Word axis	Number of position pulses							
2028	Word axis	Position gain switching speed							
2029	Word axis	Effective speed for integral acceleration at low speed							
2030	Word axis	Effective speed for integral deceleration at low speed							
2031	Word axis	Torque command difference threshold of torque difference alarm							
2034	Word axis	Damping control gain							
2036	Word axis	Damping compensation gain (main axis) and damping compensation phase coefficient (sub-axis) for tandem control							
2039	Word axis	Second-stage acceleration for two-stage backlash acceleration							
2040	Word axis	Current loop integral gain (PK1)							
2041	Word axis	Current loop proportional gain (PK2)							
2042	Word axis	Current loop gain (PK3)							
2043	Word axis	Velocity loop integral gain (PK1V)							
2044	Word axis	Velocity loop proportional gain (PK2V)							
2045	Word axis	Velocity loop incomplete integral gain (PK3V)							

No.	Data type	Contents
2046	Word axis	Velocity loop gain (PK4V)
2047	Word axis	Observer parameter (POA1)
2048	Word axis	Backlash acceleration
2049	Word axis	Maximum amplitude for dual position feedback
2050	Word axis	Observer parameter (POK1)
2051	Word axis	Observer parameter (POK2)
2053	Word axis	Current dead-band compensation (PPMAX)
2054	Word axis	Current dead-band compensation (PDDP)
2055	Word axis	Current dead-band compensation (PHYST)
2056	Word axis	Variable current gain during deceleration
2057	Word axis	Phase-D current at high speed
2058	Word axis	Phase-D current limit at high speed
2060	Word axis	Torque limit
2062	Word axis	Overload protection coefficient (OVC1)
2063	Word axis	Overload protection coefficient (OVC2)
2064	Word axis	Soft disconnection alarm level
2065	Word axis	Overload protection coefficient (OVCLMT)
2066	Word axis	Acceleration feedback gain
2067	Word axis	Torque command filter
2068	Word axis	Feed forward coefficient
2069	Word axis	Velocity feed forward coefficient
2070	Word axis	Backlash acceleration timing
2071	Word axis	Backlash acceleration effective duration, number of times static friction compensation is performed
2072	Word axis	Static friction compensation
2073	Word axis	Parameter for determining stop of static friction compensation
2074	Word axis	Current-dependent current loop gain
2077	Word axis	Overshoot compensation counter
2078	Word axis	Conversion coefficient for dual position feedback (numerator)
2079	Word axis	Conversion coefficient for dual position feedback (denominator)
2080	Word axis	First-order lag time constant for dual position feedback
2081	Word axis	Zero width for dual position feedback
2082	Word axis	Backlash acceleration stop amount
2083	Word axis	Brake control timer (ms)
2084	Word axis	Flexible feed gear (numerator)
2085	Word axis	Flexible feed gear (denominator)
2086	Word axis	Rated current parameter
2087	Word axis	Torque offset
2088	Word axis	Machine velocity feedback coefficient gain
2089	Word axis	Second-stage end magnification for two-stage backlash acceleration
2090	Word axis	Torque characteristic for spindle use: coefficient A
2092	Word axis	Advanced preview feed forward coefficient
2093	Word axis	Torque characteristic for spindle use: coefficient B
2094	Word axis	Backlash acceleration amount in the negative direction
2095	Word axis	Feed-forward timing adjustment coefficient
2096	Word axis	Machining point control: Timing adjustment parameter
2097	Word axis	Static friction compensation stop parameter
2099	Word axis	N-pulse suppression level
2101	Word axis	Overshoot compensation effective level
2102	Word axis	Final clamp value for actual current limit
2103	Word axis	Amount of track back upon detection of unexpected disturbance torque
2104	Word axis	Unexpected disturbance torque detection alarm level (for cutting when switching is used)
2105	Word axis	Torque constant for torque control
2107	Word axis	Velocity loop gain override during cutting
2110	Word axis	Magnetic saturation compensation (base/coefficient)

No.	Data type	Contents							
2111	Word axis	Deceleration torque limit (base/coefficient)							
2112	Word axis	AMR conversion coefficient 1							
2113	Word axis	Resonance elimination filter 1 : Attenuation center frequency							
2114	Word axis	Acceleration amount override for backlash acceleration							
2116	Word axis	Unexpected disturbance torque detection, dynamic friction compensation value							
2118	Word axis	Excessive error level between semi-closed and closed loops for dual position feedback							
2119	Word axis	Stop level with variable proportional gain							
2126	Word axis	Tandem control, time constant for switching position feedback							
2127	Word axis	Non-interacting control coefficient							
2128	Word axis	Weak magnetic flux compensation (coefficient)							
2129	Word axis	Weak magnetic flux compensation (base/limit)							
2130	Word axis	Two smooth compensations per magnetic pole pair							
2131	Word axis	Four smooth compensations per magnetic pole pair							
2132	Word axis	Six smooth compensations per magnetic pole pair							
2133	Word axis	Deceleration phase delay compensation coefficient (PHDLY1)							
2134	Word axis	Deceleration phase delay compensation coefficient (PHDLY2)							
2137	Word axis	Stage 1 acceleration amount override for two-stage backlash acceleration							
2138	Word axis	AMR conversion coefficient 2							
2139	Word axis	AMR offset							
2142	Word axis	Alarm level for detecting unexpected disturbance torque during rapid traverse							
2144	Word axis	Position feed forward coefficient for cutting							
2145	Word axis	Velocity feed forward coefficient for cutting							
2146	Word axis	Two-stage backlash acceleration end timer							
2156	Word axis	Torque command filter (during rapid traverse)							
2161	Word axis	OVC magnification at stop time (OVCSTP)							
2162	Word axis	Second overload protection coefficient (POVC21)							
2163	Word axis	Second overload protection coefficient (POVC22)							
2164	Word axis	Second overload protection coefficient (POVCLMT2)							
2165	Word axis	Maximum amplifier current							
2167	Word axis	Stage 2 acceleration amount offset for two-stage backlash acceleration							
2173	Word axis	Distance to lift for the lifting function against gravity at emergency stop							
2177	Word axis	Resonance elimination filter 1 : Attenuation band width							
2179	Word axis	Reference counter capacity (denominator)							
2182	Word axis	Current A for pole detection							
2185	Word axis	Position pulse conversion coefficient							
2198	Word axis	Current B for pole detection							
2199	Word axis	Current C for pole detection							
2200	Bit axis		P2EX			ABGO	IQOB		OVSP
2201	Bit axis		CPEE					RNLV	CROF
2202	Bit axis				DUAL0W	OVS1	PIAL	VGCCR	
2203	Bit axis				FRC2AX2		CRPI		
2204	Bit axis	DBS2		PGTWN2				HSTP10	
2205	Bit axis				HDIS	HD2O	FULDMY		
2206	Bit axis				HBSF				
2207	Bit axis					PK2D50			
2209	Bit axis				HCNGL				
2210	Bit axis		ESPTM1	ESPTM0			PK12S2		
2211	Bit axis	PLW4	PLW2					PHCP	
2212	Bit axis	OVQK							
2213	Bit axis	OCM							
2214	Bit axis				FFCHG				
2215	Bit axis	ABT2						TCPCLR	
2220	Bit axis			P16					DECAMR
2221	Bit axis						VFFNCH	LNOTCH	

No.	Data type	Contents							
2223	Bit axis	BLCUT2							DISOBS
2226	Bit axis	MEMCLR	PRFCLR						QUCKST
2227	Bit axis			ANGLNG	ANGREF		GOKAN	ERRCHK	PARTLN
2229	Bit axis	TAWAMI	STPRED						ABSEN
2265	Word axis	Machining point control: gain 2							
2266	Word axis	Machining point control: gain 1							
2268	Word axis	Allowable travel distance magnification/stop speed decision value							
2270	Bit axis	DSTIN	DSTTAN	DSTWAV		ACREF			AMR60
2271	Bit axis		2NDTMG				RETR2		
2273	Bit axis	DBTLIM	EGBFFG	EGE	POA1NG			WSVCPY	
2274	Bit axis		DD2048						HP2048
2275	Bit axis							RCNCLR	800PLS
2277	Bit axis	ACC1ON	ACC2ON	ACC3ON	ACCNEG				
2278	Bit axis				PM2ACC	PM2SCB	PM1SCB	PM2TP	PM1TP
2279	Bit axis								DMCON
2281	Bit axis						RDPRR	PU2	PU1
2282	Bit axis			FSAQS		ISE64			
2283	Bit axis	BLSTP2							NOG54
2288	Bit axis	MCPEF							
2290	Bit axis						ACCMON	ACCHLD	ACCOUT
2292	Bit axis	MOVAXS	MV1IFC				IFC1ON	C1TYP1	C1TYP0
2293	Bit axis		MV2IFC				IFC2ON	C2TYP1	C2TYP0
2300	Bit axis	CKLNOH				THRMO	DD		HRVEN
2301	Bit axis	TQCT10							
2304	Word axis	Acceleration torque limit 1							
2305	Word axis	Acceleration torque limit 2							
2310	Word axis	Phase-D current at high-speed: voltage coefficient							
2315	Word axis	Servo check interface unit output signal setting							
2318	Word axis	Gain of disturbance elimination filter							
2319	Word axis	Inertia ratio of disturbance elimination filter							
2320	Word axis	Inverse function gain of disturbance elimination filter							
2321	Word axis	Filter time constant of disturbance elimination filter							
2322	Word axis	Acceleration feedback limit of disturbance elimination filter							
2323	Word axis	Variable current PI ratio							
2324	Word axis	Optional magnification at stop of cutting for stop-time variable proportional gain function							
2325	Word axis	Integral gain (main axis) and phase coefficient (sub-axis) for tandem damping control							
2326	Word axis	Disturbance input gain							
2327	Word axis	Start frequency of disturbance input							
2328	Word axis	End frequency of disturbance input							
2329	Word axis	Number of disturbance input measurement points							
2333	Word axis	Incomplete integral gain (main axis) for tandem camping control							
2334	Word axis	Current loop gain magnification (valid only during high-speed HRV current control)							
2335	Word axis	Velocity loop gain magnification (valid only during high-speed HRV current control)							
2338	Word axis	Limit of acceleration amount for backlash acceleration Second-stage acceleration limit for two-stage backlash acceleration							
2339	Word axis	Second-stage acceleration amount (negative direction) for two-stage backlash acceleration							
2340	Word axis	Acceleration amount override (negative direction) for backlash acceleration Second-stage acceleration override (negative direction) for two-stage backlash acceleration							
2341	Word axis	Limit of acceleration amount (negative direction) for backlash acceleration Second-stage acceleration limit (negative direction) for two-stage backlash acceleration							
2345	Word axis	Dynamic friction compensation amount at stop for disturbance estimation function							
2346	Word axis	Limit of dynamic friction compensation amount for disturbance estimation function							
2347	Word axis	Static friction compensation amount (negative direction)							
2352	Word axis	Adaptive damping filter detection level							
2355	Word axis	Machining point control: Center frequency of band-pass filter							

No.	Data type	Contents
2356	Word axis	Resonance elimination filter L: Feed-forward filter exclusion rate
2357	Word axis	Tandem speed difference alarm threshold
2358	Word axis	Unexpected disturbance torque detection: Post-acceleration timer
2359	Word axis	Resonance elimination filter 1 : Damping
2360	Word axis	Resonance elimination filter 2 : Attenuation center frequency
2361	Word axis	Resonance elimination filter 2 : Attenuation band width
2362	Word axis	Resonance elimination filter 2 : Damping
2363	Word axis	Resonance elimination filter 3 : Attenuation center frequency
2364	Word axis	Resonance elimination filter 3 : Attenuation band width
2365	Word axis	Resonance elimination filter 3 : Damping
2366	Word axis	Resonance elimination filter 4 : Attenuation center frequency
2367	Word axis	Resonance elimination filter 4 : Attenuation band width
2368	Word axis	Resonance elimination filter 4 : Damping
2369	Word axis	Two smooth compensations per magnetic pole pair (negative direction)
2370	Word axis	Four smooth compensations per magnetic pole pair (negative direction)
2371	Word axis	Six smooth compensations per magnetic pole pair (negative direction)
2373	Word axis	Pull-up amount for vertical axis pull-up function for emergency stop
2374	Word axis	Pull-up time for vertical axis pull-up function for emergency stop
2375	Word axis	Torque limit magnification during brake control
2377	Word axis	Smoothing compensation performed 1.5 times per pole pair
2378	Word axis	Smoothing compensation performed 1.5 times per pole pair (negative direction)
2380	Word axis	Smoothing compensation performed three times per pole pair
2381	Word axis	Smoothing compensation performed three times per pole pair (negative direction)
2382	Word axis	Torsion preview control: maximum compensation value
2383	Word axis	Torsion preview control: acceleration 1
2384	Word axis	Torsion preview control: acceleration 2
2385	Word axis	Torsion preview control: acceleration 3
2386	Word axis	Torsion preview control: acceleration torsion compensation value K1
2387	Word axis	Torsion preview control: acceleration torsion compensation value K2
2388	Word axis	Torsion preview control: acceleration torsion compensation value K3
2389	Word axis	Torsion preview control: torsion delay compensation value KD
2390	Word axis	Torsion preview control: torsion delay compensation value KDN
2391	Word axis	Torsion preview control: acceleration torsion compensation value K1N
2392	Word axis	Torsion preview control: acceleration torsion compensation value K2N
2393	Word axis	Torsion preview control: acceleration torsion compensation value K3N
2394	Word axis	Number of data mask digits
2402	Word axis	Torsion preview control: torsion torque compensation coefficient
2403	Word axis	Synchronous axes automatic compensation: coefficient
2404	Word axis	Synchronous axes automatic compensation: maximum compensation value (sub-axis), dead-band width (main-axis)
2405	Word axis	Synchronous axes automatic compensation : filter coefficient
2437	Bit axis	| | | | DCH | | | |
2455	Word axis	Integral part (α) of the number of pulses for one rotation
2456	Word axis	Exponential part (β) of the number of pulses for one rotation
2463	Word axis	Power consumption monitor: common power loss coefficient C
2468	Word axis	Power consumption monitor: motor winding resistance
2469	Word axis	Power consumption monitor: servo amplifier loss coefficient A
2478	Word axis	Interactive force compensation: Compensation gain (for the first moving axis)
2479	Word axis	Interactive force compensation: Angle data offset (for the first moving axis)
2480	Word axis	Interactive force compensation: Compensation gain (for the second moving axis)
2481	Word axis	Interactive force compensation: Angle data offset (for the second moving axis)
2482	Word axis	Speed arrival detection level
2483	Word axis	Speed zero detection level
2490	Word axis	Power consumption monitor: servo amplifier loss coefficient B
2491	Word axis	Power consumption monitor: common power loss coefficient D

No.	Data type	Contents							
2570	Bit axis					DCFULL			
2606	Word axis	Interactive force compensation: moving axis configuration							

	#7	#6	#5	#4	#3	#2	#1	#0
2008						VFAx	TDMx	

[Input type] Parameter input
[Data type] Bit axis

#1 TDMx This bit is automatically set to 1 when bit 6 (tandem axis) of parameter No. 1817 is set to 1.
This bit cannot be directly set.

#2 VFAx In tandem control, the feedrate feedback average function is:
0: Disabled.
1: Enabled.

	#7	#6	#5	#4	#3	#2	#1	#0
2011	XIAx							SYNx

[Input type] Parameter input
[Data type] Bit axis

#0 SYNx When the electronic gear box function (EGB) is used, this bit sets the axis to be synchronized.
0: Axis not synchronized by EGB
1: Axis synchronized by EGB
Set 1 for both of the slave and dummy axes of EGB.

> **NOTE**
> The setting of this parameter becomes valid after the power is turned off then back on.

#7 XIAx Temporary absolute coordinate setting is:
0: Not used.
1: Used.

> **NOTE**
> 1 When temporary absolute coordinate setting is used, bit 1 (OPTx) of parameter No. 1815, bit 5 (APCx) of parameter No. 1815, parameter No. 1874, and parameter No. 1875 must be set.
> 2 The setting of this parameter becomes effective after the power is turned off then back on.

2021	Load inertia ratio

[Input type] Parameter input
[Data type] Word axis
[Valid data range] 0 to 32767
(Load inertia)/(motor inertia) × 256

For tandem control:
(Load inertia)/(motor inertia) × 256/2
Set the same value for the master axis and slave axis.

2022	Direction of motor rotation

NOTE
When this parameter is set, the power must be turned off before operation is continued.

[Input type] Parameter input
[Data type] Word axis
[Valid data range] -111,111
Set the direction of motor rotation.
If the motor turns clockwise when viewed from the Pulsecoder side, set 111. If the motor turns counterclockwise when viewed from the Pulsecoder side, set -111.

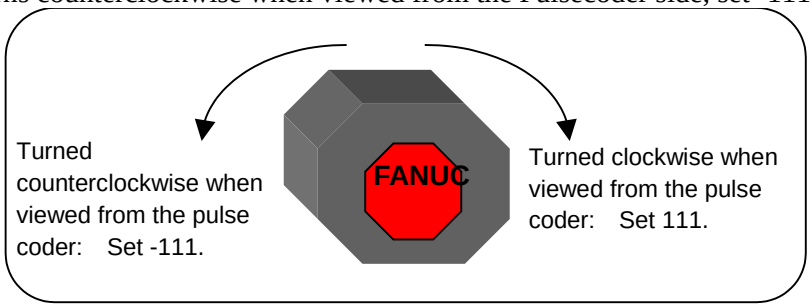

2031	Torque command difference threshold of torque difference alarm

[Input type] Parameter input
[Data type] Word axis
[Valid data range] 0 to 14564
If the absolute value of the torque command difference between two axes exceeds the value set in this parameter, an alarm is issued.
Set the same value for two axes that are placed under axis synchronous control.
The servo axis numbers of the synchronized master axis and slave axis must be assigned so that an odd number is assigned to the master axis and the next axis number is assigned to the slave axis. Examples are (1,2) and (3,4).

2087	Preload value for each axis (Tcmd offset)

[Input type] Parameter input
[Data type] Word axis
[Unit of data] (Ampere limit)/7282
[Valid data range] -1821 to 1821
An offset is applied to a torque command to suppress backlash.
Set a value slightly greater than the friction.
As a guideline, specify a value that is about one-third of the rated torque.

[Example]
To set a torque equivalent to 3 A in the opposite directions:
When the ampere limit is 40 A
3/(40/7282) = 546
Master side = 546
Slave side = -546

	#7	#6	#5	#4	#3	#2	#1	#0
2282					ISE64			

[Input type] Parameter input
[Data type] Bit axis

#3 ISE64 To feed forward (bit 1 (FEED) of parameter No. 2005 is set to 1):
0: Normal feedrate limits are applied.
1: Extended feedrate limits are applied.
When feed forward is enabled, bit 7 of parameter No. 1013 is set to 1, and this parameter is set for an axis, feedrate limits for the axis are extended as following table if the increment system is IS-C:

[Normal position control]

Functions used when Normal position control is used		Permissible feedrate	
High-speed, high-precision	**Feed forward**	**Detection unit: 1μm**	**Detection unit: 0.1μm**
None	Not used/used (advanced preview type)	IS-B:999m/min IS-C:999m/min	IS-B:196m/min IS-C:999m/min
AI contour control I AI contour control II	Not used/used (advanced preview type)		
Electronic gear box	Used (conventional type)	IS-B:240m/min IS-C:100m/min	24m/min

[When spindle control with servo motor is used]

Functions used when Normal position control is used		Permissible rotation speed	
Extended permissible feedrate	**Feedrate limit multiplied by 10**	**Detection unit: 1/1000deg**	**Detection unit: 1/10000deg**
Disabled (No.1013#7=0)	Disabled (No.1408#3=0)	IS-B:2777min^{-1} IS-C: 277min^{-1}	IS-B:2777min^{-1} IS-C: 277min^{-1}
	Enabled (No.1408#3=1)	IS-B:27777min^{-1} IS-C: 2777min^{-1}	IS-B:27777min^{-1} IS-C: 2777min^{-1}
Enabled (No.1013#7=1) (No.2282#3=1)	Disabled (No.1408#3=0)	IS-B:2777min^{-1} IS-C: 277min^{-1}	IS-B:2777min^{-1} IS-C: 277min^{-1}
	Enabled (No.1408#3=1)	IS-B:27777min^{-1} IS-C: 27777min^{-1}	IS-B:27777min^{-1} IS-C: 2777min^{-1}

- The values enclosed by a rectangle in the table are limits imposed by internal processing of the servo software. As CMR is increased to make the detection unit smaller, the permissible feedrate limited by the internal processing of the servo software lowers in proportion to the detection unit (when a detection unit of 0.1 μm is changed to 0.05μm, the permissible feedrate is halved).
- In a semi-closed loop system using a high-resolution detector (a rotary motor or linear motor), use of nano interpolation allows the maximum resolution of the detector to be used for position control without using a smaller detection unit.
- Even when a large detection unit is to be used because the feedrate is limited by detection unit as mentioned above, feedrate feedback data that significantly affects velocity loop control is controlled by using a maximum resolution of the detector.

4.19 PARAMETERS OF DI/DO (1 OF 2)

	#7	#6	#5	#4	#3	#2	#1	#0
3001	MHI	PGS				RWM	SON	

[Input type] Parameter input
[Data type] Bit path

#1 SON Automatic operation is started:
0: On the falling edge (“1” → “0”) of the automatic operation start signal ST <Gn007.2>
1: On the rising edge (“0” → “1”) of the of the automatic operation start signal ST <Gn007.2>

#2 RWM While a program in the program memory is being searched for, the rewind signal RWD <Fn000.0> is:
0: Not output.
1: Output.

#6 PGS In the high speed program check mode, M, S, T, and B codes are:
0: Not output.
1: Output.

> ⚠ **CAUTION**
> 1 If this parameter is set to 1, M, S, T, and B codes are neither saved nor restored at the start and end of the high speed program check mode.
> Accordingly, M, S, T, and B codes output in the high speed program check mode remain valid even after the high speed program check mode ends.
> 2 If this parameter is set to 1, M, S, T, and B codes are output to the PMC in the high speed program check mode.
> Therefore, when M, S, T, and B commands need not be executed in the high speed program check mode, create a ladder sequence that references the high speed program check mode signal <Fn290.5> and suppresses the execution of any of the M, S, T, and B codes.
> 3 If this parameter is set to 1, the operation of the M, S, T, and B codes depends on the status of auxiliary function lock signal AFL <Gn005.6>.
> 4 In the high speed program check mode, an attempt to rewrite this bit parameter by using G10 results in an alarm PS5364, “ILLEGAL COMMAND IN PROGRAM CHECK”.

#7 MHI Exchange of strobe and completion signals for the M, S, T, and B
0: Normal
1: High-speed

	#7	#6	#5	#4	#3	#2	#1	#0
3002				IOV		MFD		CHM

[Input type] Parameter input
[Data type] Bit path

#0 CHM For high-speed M/S/T/B, the distribution end signal DEN <Fn001.3> and an auxiliary function code signal M00 to M31 <Fn010 to Fn013> are:
0: Not turned off even upon completion of the execution of the auxiliary function.
1: Turned off upon completion of the execution of the auxiliary function.

#2 MFD When the high-speed M/S/T/B interface is used, if a block specifying an M, S, T, or B code does not contain a move command or dwell command, the distribution end signal DEN <Fn001.3> and the strobe signal (MF<Fn007.0>, SF<Fn007.2>, TF<Fn007.3>, or BF<Fn007.7>) for the function are:
0: Output conventionally (the output of the distribution end signal is delayed).
1: Output at the same time.

NOTE
This parameter is Automatic setting parameter. For details, refer to the appendix "Automatic setting / Initial setting parameter" in CONNECTION MANUAL (FUNCTION) (B-64693EN-1).

#4 IOV Override-related signal logic is:
0: Used without modification
(A signal of negative logic is used as a negative logic signal, and a signal of positive logic is used as a positive logic signal.)
1: Inverted
(A signal of negative logic is used as a positive logic signal, and a signal of positive logic is used as a negative logic signal.)

The signals indicated below are affected.
Signal of negative logic:
- Feedrate override signals *FV0 to *FV7<Gn012>
- Second feedrate override signals*AFV0 to *AFV7<Gn013>
- 0.01% step second feedrate override signals*APF00 to *APF15<Gn094, Gn095>
- Feedrate override signals (for PMC axis control)
  *EFOV0g to *EFOV7g<G0151/G0163/G0175/G0187>
- Software operator’s panel signals *FV0O to *FV7O<Fn078>

Signals of positive logic:
- Rapid traverse override signals ROV1,ROV2<Gn014.0, Gn014.1>
- Software operator’s panel signals ROV1O,ROV2O<Fn076.4, Fn076.5>
- Rapid traverse override signals (for PMC axis control)
  EROV1g,EROV2g<G0150.0, G0150.1/G0162.0, G0162.1/G0174.0, G0174.1/G0186.0, G0186.1>

The signals indicated below are not affected.
- 1% step rapid traverse override selection signal HROV <Gn096.7>
- 1% step rapid traverse override signals *HROV0 to *HROV6 <Gn096.0 to Gn096.6>
- 0.1% step rapid traverse override selection signal FHROV <Gn353.7>
- 0.1% step rapid traverse override signals *FHRO0 to *FHRO9 <Gn352.0 to Gn352.7, Gn353.0 to Gn353.1>

	#7	#6	#5	#4	#3	#2	#1	#0
3003			DEC	DAU	DIT	ITX		ITL
			DEC		DIT	ITX		ITL

[Input type] Parameter input
[Data type] Bit path

#0 ITL Interlock signal for all axes
0: Enabled
1: Disabled

#2 ITX Interlock signals for each axis
0: Enabled
1: Disabled

#3 DIT The interlock signal for each axis direction is:
0: Valid.
1: Invalid.

#4 DAU When bit 3 (DIT) of parameter No. 3003 is set to 0, the interlock signal for each axis direction is:
0: Valid only in manual operation, and invalid in automatic operation.
1: Valid in either manual operation or automatic operation.

#5 DEC Deceleration signal (*DEC1 to *DEC8 < X0009.0...X0009.7>) for reference position return
0: Deceleration is applied when the signal is “0”.
1: Deceleration is applied when the signal is “1”.

	#7	#6	#5	#4	#3	#2	#1	#0
3004			OTH				BCY	BSL

[Input type] Parameter input
[Data type] Bit path

#0 BSL The block start interlock signal *BSL <Gn008.3> and cutting block start interlock signal *CSL <Gn008.1> are:
0: Disabled.
1: Enabled.

#1 BCY When more than one operation is performed by one block command such as a canned cycle, the block start interlock signal *BSL <Gn008.3> is:
0: Checked only at the beginning of the first cycle.
1: Checked at the beginning of every cycle.

#5 OTH The overtravel limit signal is:
0: Checked
1: Not checked

> ⚠ **WARNING**
> For safety, usually set 0 to check the overtravel limit signal.

	#7	#6	#5	#4	#3	#2	#1	#0
3006		WPS				EPS	EPN	GDC

[Input type] Parameter input
[Data type] Bit

#0 GDC As the deceleration signal for reference position return *DEC:
0: <X0009> is used.
1: <Gn196> is used. (<X0009> is disabled.)

> ⚠ **WARNING**
> If the signal *DEC<X0009> is used by another usage when you set 0 to this parameter, it may cause an unexpected machine behavior. Be careful enough that you must prevent the competition of the used X address.

#1 EPN As signals for specifying workpiece numbers for external workpiece number search:
0: The external workpiece search signals (PN1 to PN16) are used. (A number from 1 to 31 can be specified.)
1: The extended external workpiece number search signals (EPN0 to EPN13) are used. (A number from 1 to 9999 can be specified.)

#2 EPS As the signal for starting external workpiece number search:
0: The automatic operation start signal ST is used. When automatic operation (memory operation) is started, a search is made.
1: The external workpiece number search start signal EPNS is used. ST does not start a search.

#6 WPS Each axis workpiece coordinate system preset signal:
0: Disabled.
1: Enabled.
When this parameter is set to 1, a workpiece coordinate system is preset after the end of the high speed program check mode.

	#7	#6	#5	#4	#3	#2	#1	#0
3008						XSG		

[Input type] Parameter input
[Data type] Bit path

> **NOTE**
> When this parameter is set, the power must be turned off before operation is continued.

#2 XSG A signal assigned to an X address is:
0: Fixed at the address.
1: Able to be reassigned to an arbitrary X address.

NOTE

When this parameter is set to 1, set parameter No. 3013, No. 3014, No. 3012, and No. 3019. If parameter No. 3013 and No. 3014 are not set, the deceleration signal for reference position return *DEC is assigned to bit 0 of <X0000>. If parameter No. 3012 and No. 3019 are not set, the skip signal, the PMC axis control skip signal, the measurement position arrival signal, the interlock signal for each axis direction, and the tool compensation value write signal are assigned to <X0000>.

⚠ **WARNING**

Please set an appropriate value to parameters (Nos. 3013, 3014, 3012, 3019) beforehand when you set 1 to this parameter.
If an input signal of the set address in parameters (Nos. 3013, 3014, 3012, 3019) is used by another usage, it may cause an unexpected machine behavior. Be careful enough that you must prevent the competition of the used X address.

3010	Time lag in strobe signals MF, SF, TF, and BF

[Input type] Parameter input
[Data type] Word path
[Unit of data] msec
[Valid data range] 0 to 32767

The time required to send strobe signals MF<Fn007.0>, SF<Fn007.2>, TF<Fn007.3>, and BF<Fn007.7> after the M, S, T, and B codes are sent, respectively.

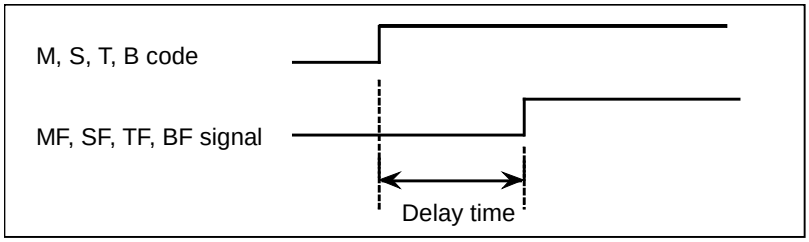

NOTE

The time is counted in units of 8 ms. If the set value is not a multiple of eight, it is raised to the next multiple of eight
Example
When 30 is set, 32 ms is assumed.
When 0 is set, 8 ms is assumed.

3011	Acceptable width of M, S, T, and B function completion signal (FIN)

[Input type] Parameter input
[Data type] Word path
[Unit of data] msec
[Valid data range] 0 to 32767

Set the minimum signal width of the valid M, S, T, and B function completion signal (FIN).

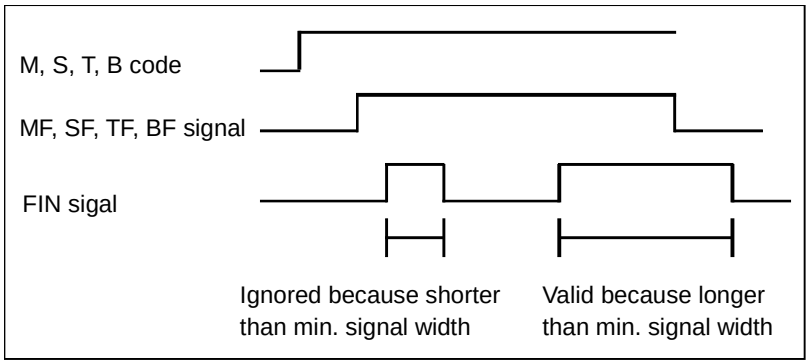

NOTE
The time is counted in units of 8 ms. If the set value is not a multiple of eight, it is raised to the next multiple of eight
Example
When 30 is set, 32 ms is assumed.
When 0 is set, 8 ms is assumed.

3012	Skip signal assignment address

NOTE
When this parameter is set, the power must be turned off before operation is continued.

[Input type] Parameter input
[Data type] Word path
[Valid data range] 0 to 727
Set an X address to which the skip signal SKIPn is to be assigned.

NOTE
This parameter is valid when bit 2 (XSG) of parameter No. 3008 is set to 1.
Depending on the configuration of the I/O Link, the actually usable X addresses are:
<X0000 to X0127>, <X0200 to X0327>, <X0400 to X0527>, <X0600 to X0727>

⚠ **WARNING**
If you used the set address in this parameter by another usage, it may cause an unexpected machine behavior.
Be careful enough that you must prevent the competition of the used X address.

3013	X address to which the deceleration signal for reference position return is assigned

NOTE
When this parameter is set, the power must be turned off before operation is continued.

[Input type] Parameter input
[Data type] Word axis

[Valid data range] 0 to 727
Set an address to which the deceleration signal *DECn for reference position return for each axis is to be assigned.

NOTE
This parameter is valid when bit 2 (XSG) of parameter No. 3008 is set to 1.
Depending on the configuration of the I/O Link, the actually usable X addresses are:
<X0000 to X0127>, <X0200 to X0327>, <X0400 to X0527>, <X0600 to X0727>

⚠ **WARNING**
If you used the set address in this parameter by another usage, it may cause an unexpected machine behavior.
Be careful enough that you must prevent the competition of the used X address.

3014	Bit position of an X address to which the deceleration signal for reference position return is assigned

NOTE
When this parameter is set, the power must be turned off before operation is continued.

[Input type] Parameter input
[Data type] Byte axis
[Valid data range] 0 to 7
Set a bit position to which the deceleration signal for reference position return *DECn for each axis is to be assigned.

NOTE
This parameter is valid when bit 2 (XSG) of parameter No. 3008 is set to 1.

3017	Output time of reset signal RST

[Input type] Parameter input
[Data type] Word path
[Unit of data] 16msec
[Valid data range] 0 to 255
When the output time of the reset signal RST is to be extended, set an extended time.
(RST signal output time) =
(Time required for reset processing) + (Parameter setting) × 16 msec

3019	Address to which the PMC axis control skip signal, measurement position arrival signal, and tool offset write signals are assigned

NOTE
When this parameter is set, the power must be turned off before operation is continued.

[Input type] Parameter input

[Data type] Word path
[Valid data range] 0 to 727
Set an X address to which the PMC axis control skip signal ESKIP, measurement position arrival signals (XAE, YAE, and ZAE (M series) or XAE and ZAE (T series)), and tool offset write signals (±MIT1 and ±MIT2 (T series)) are to be assigned.

Example 1. When parameter No. 3012 is set to 5 and parameter No. 3019 is set to 6

When bit 2 (XSG) of parameter No. 3008 is 1, the PMC axis control skip signal, and measurement position arrival signal are allocated to X0006 and the skip signal is allocated to X0005.

	#7	#6	#5	#4	#3	#2	#1	#0	
X0005	SKIP	SKIP6	SKIP5	SKIP4	SKIP3	SKIP2	SKIP8	SKIP7	(T series)
	SKIP	SKIP6	SKIP5	SKIP4	SKIP3	SKIP2	SKIP8	SKIP7	(M series)

	#7	#6	#5	#4	#3	#2	#1	#0	
X0006		ESKIP	-MIT2	+MIT2	-MIT1	+MIT1	ZAE	XAE	(T series)
		ESKIP				ZAE	YAE	XAE	(M series)

Example 2. When parameter No. 3012 is set to 5 and parameter No. 3019 is set to 5

When bit 2 (XSG) of parameter No. 3008 is 1, the PMC axis control skip signal, measurement position arrival signal, and skip signal are allocated to X0005.

	#7	#6	#5	#4	#3	#2	#1	#0	
X0005	SKIP	ESKIP	-MIT2	+MIT2	-MIT1	+MIT1	ZAE	XAE	(T series)
		SKIP6	SKIP5	SKIP4	SKIP3	SKIP2	SKIP8	SKIP7	
	SKIP	ESKIP	SKIP5	SKIP4	SKIP3	ZAE	YAE	XAE	(M series)
		SKIP6				SKIP2	SKIP8	SKIP7	

NOTE
1 This parameter is valid when bit 2 (XSG) of parameter No. 3008 is set to 1.
Depending on the configuration of the I/O Link, the actually usable X addresses are:
<X0000 to X0127>, <X0200 to X0327>, <X0400 to X0527>, <X0600 to X0727>
2 When this parameter is 0, an internal relay from address X0 is used.

⚠ WARNING
If you used the set address in this parameter by another usage, it may cause an unexpected machine behavior.
Be careful enough that you must prevent the competition of the used X address.

3020	Correspondence between workpiece numbers and program numbers in external workpiece number search (PN)

[Input type] Parameter input
[Data type] 2-word path
[Valid data range] -1 to 99
This parameter has the following meaning according to the value set.

- When a value from 0 to 99 is set
  (Program number) = (setting)*100+(workpiece number)
  This means that the setting specifies the higher 2 digits of a program number.
- When the value -1 is set
  The higher 2 digits of a program number represent the minimum of the existing program numbers.

Example

When workpiece number 21 is specified, program numbers such as O0021, O0121, and O0221 are searched for. If O0021 is not found, but O0121 and O0221 are found, O0121 is selected as the program number.

NOTE
This parameter is valid when a workpiece number is specified using the PN1 to PN16 signals (when bit 1 (EPN) of parameter No. 3006 is set to 0).

3021	Address to which an axis signal is assigned

NOTE
When this parameter is set, the power must be turned off before operation is continued.

[Input type] Parameter input
[Data type] Byte axis
[Valid data range] 0 to 7, 10 to 17, 20 to 27, ... , 90 to 97
For each axis of the CNC, set a PMC interface address.
Set a value according to the tables below.

Value of parameter No. 3021 (the second digit)

Setting value	Input signal address	Output signal address
0	G0000 to G0767	F0000 to F0767
1	G1000 to G1767	F1000 to F1767
:		
9	G9000 to G9767	F9000 to F9767

Value of parameter No. 3021 (the first digit)

Setting value	Input signal address	Output signal address
0	0	0
1	1	1
:		
7	7	7

[Example of setting]

Axis number	No. 3021	Signal allocation
1	0	+J1<G0100.0>, -J1<G0102.0>, ZP1<F0090.0>, ...
2	1	+J2<G0100.1>, -J2<G0102.1>, ZP2<F0090.1>, ...
3	2	+J3<G0100.2>, -J3<G0102.2>, ZP3<F0090.2>, ...
4	10	+J4<G1100.0>, -J4<G1102.0>, ZP4<F1090.0>, ...
5	11	+J5<G1100.1>, -J5<G1102.1>, ZP5<F1090.1>, ...

If eight or less axes are used per path, the following signal allocation results when 0 is set for all axes:

Axis 1 of path 1 = Setting equivalent to 0
Axis 2 of path 1 = Setting equivalent to 1

:
Axis 1 of path 2 = Setting equivalent to 10
:

NOTE
Set this parameter when more than eight axes are used per path.
The valid data range varies, depending on the system software.

3022	Address to which a spindle signal is assigned

NOTE
When this parameter is set, the power must be turned off before operation is continued.

[Input type] Parameter input
[Data type] Byte spindle
[Valid data range] 0 to 3, 10 to 13, 20 to 23, ... , 90 to 93
For each axis of the CNC, set a PMC interface address.
Set a value according to the tables below.

Value of parameter No. 3022 (the second digit)

Setting value	Input signal address	Output signal address
0	G0000 to G0767	F0000 to F0767
1	G1000 to G1767	F1000 to F1767
:		
9	G9000 to G9767	F9000 to F9767

Value of parameter No. 3022 (the first digit)

Setting value	Input signal address	Output signal address
0	Bit position A	Bit position A
1	Bit position B	Bit position B
2	Bit position C	Bit position C
3	Bit position D	Bit position D

(The bit positions A, B, C, and D vary, depending on the type of signal.)

[Example of setting]

Spindle number	No. 3022	Signal allocation
1	0	TLMLA<G0070.0>, TLMHA<G0070.1>, ALMA<F0045.0>, ...
2	1	TLMLB<G0074.0>, TLMHB<G0074.1>, ALMB<F0049.0>, ...
3	10	TLMLA<G1070.0>, TLMHA<G1070.1>, ALMA<F1045.0>, ...
4	11	TLMLB<G1074.0>, TLMHB<G1074.1>, ALMB<F1049.0>, ...

If four or less axes are used per path, the following signal allocation results when 0 is set for all axes:
Axis 1 of path 1 = Setting equivalent to 0
Axis 2 of path 1 = Setting equivalent to 1
:
Axis 1 of path 2 = Setting equivalent to 10
:

NOTE
The valid data range varies, depending on the system software.

3030	Allowable number of digits for the M code
3031	Allowable number of digits for the S code
3032	Allowable number of digits for the T code

[Input type] Parameter input
[Data type] Byte path
[Valid data range] 1 to 8
Set the allowable numbers of digits for the M, S, and T codes.
When 0 is set, the allowable number of digits is assumed to be 8.

3033	Allowable number of digits for the B code (second auxiliary function)

[Input type] Parameter input
[Data type] Byte path
[Valid data range] 1 to 8
Set the allowable number of digits for the second auxiliary function.
When 0 is set, the allowable number of digits is assumed to be 8.
To enable a decimal point to be specified, bit 0 (AUP) of parameter No. 3450 must be set to 1. In this case, the allowable number of digits set in this parameter includes the number of decimal places.
If a value exceeding the allowable number of digits is specified, the alarm PS0003, “TOO MANY DIGIT” is issued.

4.20 PARAMETERS OF DISPLAY AND EDIT (1 OF 6)

	#7	#6	#5	#4	#3	#2	#1	#0
3100							CEM	

[Input type] Parameter input
[Data type] Bit

#1 CEM On the help and operation history screens, CE-marked MDI keys are displayed with:
0: Key names.
1: Symbols.

	#7	#6	#5	#4	#3	#2	#1	#0
3101							KBF	

[Input type] Parameter input
[Data type] Bit

#1 KBF When the screen or mode is changed, the contents of the key-in buffer are:
0: Cleared.
1: Not cleared.

> **NOTE**
> When KBF is 1, the content of the key-in buffer can be deleted at a time by pushing <CAN> key following <SHIFT> key.

	#7	#6	#5	#4	#3	#2	#1	#0
3103						NMH		

[Input type] Parameter input

[Data type] Bit

#2 NMH System alarm history screen is:
0: Not displayed.
1: Displayed.

	#7	#6	#5	#4	#3	#2	#1	#0
3104	DAC		DRC		PPD			MCN
	DAC	DAL	DRC	DRL	PPD			MCN

[Input type] Parameter input
[Data type] Bit path

#0 MCN Machine position
0: Regardless of whether input is made in mm or inches, the machine position is displayed in mm for millimeter machines, or in inches for inch machines.
1: When input is made in mm, the machine position is displayed in mm, and when input is made in inches, the machine position is displayed in inches accordingly.

#3 PPD Relative position display when a coordinate system is set
0: Not preset
1: Preset

NOTE
If any of the following is executed when PPD is set to 1, the relative position display is preset to the same value as the absolute position display:
(1) Manual reference position return
(2) Coordinate system setting based on G92 (G50 for G code system A on the lathe system)
(3) Workpiece coordinate system presetting based on G92.1 (G50.3 for G code system A on the lathe system)
(4) When a T code for the lathe system is specified.

#4 DRL Relative position
0: The actual position displayed takes into account tool length offset.
1: The programmed position displayed does not take into account tool length offset.

#5 DRC When relative positions are displayed:
0: Values not excluding the amount of travel based on cutter compensation and tool nose radius compensation are displayed.
1: Values excluding the amount of travel based on cutter compensation and tool nose radius compensation (programmed positions) are displayed.

#6 DAL Absolute position
0: The actual position displayed takes into account tool length offset.
1: The programmed position displayed does not take into account tool length offset.

NOTE
In lathe systems, whether to exclude a tool offset when displaying the absolute position is determined by the setting of bit 1 (DAP) of parameter No. 3129.

#7 DAC When an absolute position are displayed:
0: Values not excluding the amount of travel based on cutter compensation and tool nose radius compensation are displayed.
1: Values excluding the amount of travel based on cutter compensation and tool nose radius compensation (programmed positions) are displayed.

> **NOTE**
> When the parameter DAC is set to 1, in the command like circle interpolation where the cutter compensation vector is changed constantly, an absolute position is not correctly displayed during its interpolation except its start point and its end point.

	#7	#6	#5	#4	#3	#2	#1	#0
3105						DPS	PCF	DPF

[Input type] Parameter input
[Data type] Bit path

#0 DPF The actual speed is:
0: Not displayed
1: Displayed

#1 PCF Addition of the movement of the PMC-controlled axes to the actual speed display
0: Added
1: Not added

#2 DPS The actual spindle speed is:
0: Not displayed
1: Displayed

	#7	#6	#5	#4	#3	#2	#1	#0
3106		DAK	SOV	OPH				DHD

[Input type] Setting input
[Data type] Bit

#0 DHD On the program screen:
0: Only a selected path can be edited and displayed.
1: Multiple paths can be edited and displayed at the same time.

#4 OPH The operation history screen is:
0: Not displayed.
1: Displayed.

#5 SOV A spindle override value is:
0: Not displayed.
1: Displayed.

> **NOTE**
> This parameter is valid only when bit 2 (DPS) of parameter No. 3105 is set to 1.

#6 DAK Specifies whether to display coordinates in the program coordinate system or workpiece coordinate system as absolute coordinates when the 3-dimensional coordinate conversion mode or the tilted working plane indexing command mode is set.
0: Display coordinates in the program coordinate system.
1: Display coordinates in the workpiece coordinate system.

	#7	#6	#5	#4	#3	#2	#1	#0
3107				SOR	GSC			

[Input type] Setting input
[Data type] Bit path

#3 GSC The feedrate to be displayed:
0: Is a feedrate per minute.
1: Follows the setting of bit 5 (FSS) of parameter No. 3191.

#4 SOR Display of the program directory
0: Programs are listed in the order of registration.
1: Programs are listed in the order of name.

> **NOTE**
> In the file list on the data server, the programs are displayed in the order of program number with zeros suppressed if the parameter is 0.

	#7	#6	#5	#4	#3	#2	#1	#0
3108	JSP	SLM		WCI		PCT		

[Input type] Parameter input
[Data type] Bit path

#2 PCT For modal T display on the program check screen:
0: A specified T value is displayed.
1: HD.T and NX.T are displayed.
Values displayed follow bit 1 (THN) of parameter No. 13200.

#4 WCI On the workpiece coordinate system screen, a counter input is:
0: Disabled.
1: Enabled.

#6 SLM On the current position display screen, if the spindle speed S is displayed (bit 2 (DSP) of parameter No. 3105 = 1), the spindle load meter is:
0: Not displayed.
1: Displayed.

> **NOTE**
> This parameter is valid only when bit 2 (DPS) of parameter No. 3105 is set to 1.

#7 JSP On the current position display screen and program check screen, jog feederate or dry run feedrate is:
0: Not displayed.
1: Displayed.

In manual operation mode, the jog feedrate of the 1st axis is displayed. In automatic operation mode, the dry run feedrate is displayed. In each case, the feedrate to which a manual feedrate override has been applied is displayed.

	#7	#6	#5	#4	#3	#2	#1	#0
3109						IKY	DWT	

[Input type] Parameter input
[Data type] Bit path

#1 DWT Characters G and W in the display of tool wear/geometry compensation amount
0: The characters are displayed at the left of each number.
1: The characters are not displayed.

#2 IKY On the tool offset screen and workpiece shift screen (T series), soft key [INPUT] is:
0: Displayed.
1: Not displayed.

	#7	#6	#5	#4	#3	#2	#1	#0
3110								OFA

[Input type] Parameter input
[Data type] Bit path

#0 OFA The axis names on the offset screen and fourth-axis/fifth-axis offset screen are:
0: Fixed to be "X", "Z", and "Y" ("E" and "5" on the fourth-axis/fifth-axis offset screen).
1: Parameter-set axis names.

	#7	#6	#5	#4	#3	#2	#1	#0
3111	NPA	OPS	OPM			SVP	SPS	SVS

[Input type] Setting input
[Data type] Bit path

#0 SVS Servo setting screen and servo tuning screen
0: Not displayed
1: Displayed

#1 SPS Spindle tuning screen
0: Not displayed
1: Displayed

#2 SVP Spindle synchronization errors displayed on the spindle tuning screen
0: Instantaneous values are displayed.
1: Peak-hold values are displayed.
Spindle synchronization errors are displayed on the side of the spindle that functions as a slave axis in spindle synchronization control.

#5 OPM Operating monitor
0: Not displayed
1: Displayed

#6 OPS The speedometer on the operating monitor screen indicates:
0: Spindle motor speed
1: Spindle speed

#7 NPA Action taken when an alarm is generated or when an operator message is entered
0: The display shifts to the alarm or message screen.
1: The display does not shift to the alarm or message screen.

> **NOTE**
> When MANUAL GUIDE *i* is provided, bit 7 (NPA) of parameter No. 3111 must be set to 0. (If this bit is set to 1, a warning message is issued at power-on.)

	#7	#6	#5	#4	#3	#2	#1	#0
3112					EAH	OMH		

[Input type] Parameter input
[Data type] Bit

#2 OMH The external operator message history screen is:
0: Not displayed.
1: Displayed.

#3 EAH Messages of the external alarm/macro alarm in alarm or operation history:
0: Not recorded
1: Recorded

> **NOTE**
> This parameter is valid when bit 7 (HAL) of parameter No. 3196 is set to 0.

	#7	#6	#5	#4	#3	#2	#1	#0
3113	MS1	MS0	DCL					HMC

[Input type] Parameter input
[Data type] Bit

#0 HMC The contents of the external operator message history:
0: Cannot be erased.
1: Can be erased.

> **NOTE**
> This parameter is valid when bit 3 (SOH) of parameter No. 11354 is set to 1.

#5 DCL The touch panel compensation screen is:
0: Disabled.
1: Enabled.
Set this parameter to 0 usually. Touch panel compensation becomes necessary only when the panel is replaced or memory all clear operation is performed. Set this parameter to 1 only when performing touch panel compensation. Upon completion of compensation, set this parameter to 0.

#6 MS0
#7 MS1 Set the combination of the number of characters and the number of messages to be preserved in the external operator message history.

Parameter		Maximum number of characters	Number of messages
MS0=0	MS1=0	255	8
MS0=1	MS1=0	200	10
MS0=0	MS1=1	100	18
MS0=1	MS1=1	50	32

NOTE

1 This parameter is valid when bit 3 (SOH) of parameter No. 11354 is set to 1.
2 Although up to 255 characters can be specified for each external operator message, you can use the combination of bits 6 (MS0) and 7 (MS1) of parameter No. 3113 to limit the number of characters and select the number of messages to be preserved in the external operator message history.
3 The settings of bits 6 (MS0) and 7 (MS1) of parameter No. 3113 take effect the next time the power is turned on. The external operator message history is erased at that time.
4 Even though you change the settings of bits 6 (MS0) and 7 (MS1) of parameter No. 3113, the alarm PW0000, "POWER MUST BE OFF" is not issued. You must however turn on the power again before the new settings can take effect.
5 If text (such as single-byte katakana or kanji characters) is entered in character code, the number of characters recorded in the external operator message history may be smaller than the maximum number of characters set by bits 6 (MS0) and 7 (MS1) of parameter No. 3113.

	#7	#6	#5	#4	#3	#2	#1	#0
3114		ICU	IGR	IMS	ISY	IOF	IPR	IPO

[Input type] Parameter input
[Data type] Bit

#0 IPO When the function key is pressed while the position display screen is being displayed:
0: The screen is changed.
1: The screen is not changed.

#1 IPR When the function key is pressed while the program screen is being displayed:
0: The screen is changed.
1: The screen is not changed.

#2 IOF When the function key is pressed while the offset/setting screen is being displayed:
0: The screen is changed.
1: The screen is not changed.

#3 ISY When the function key is pressed while the system screen is being displayed:
0: The screen is changed.

1: The screen is not changed.

#4 IMS When the MESSAGE function key is pressed while the message screen is being displayed:
0: The screen is changed.
1: The screen is not changed.

#5 IGR When the GRAPH function key is pressed while the custom or graphic screen is being displayed:
0: The screen is changed.
1: The screen is not changed.

#6 ICU When the CUSTOM1 function key is pressed while the custom screen is being displayed:
0: The screen is changed.
1: The screen is not changed.

	#7	#6	#5	#4	#3	#2	#1	#0
3115				PGA	NDFx		NDAx	NDPx

[Input type] Parameter input
[Data type] Bit axis

#0 NDPx The current position is:
0: Displayed.
1: Not displayed.

> **NOTE**
> When using the electronic gear box (EGB) function, set 1 for the EGB dummy axis to disable current position display.

#1 NDAx The current position and the amount of the movement to be made in absolute and relative coordinates are:
0: Displayed.
1: Not displayed. (The machine coordinates are displayed.)

#3 NDFx In calculation for actual cutting feedrate display, the feedrate of a selected axis is:
0: Considered.
1: Not considered.

#4 PGAx In the high speed program check mode, the machine position on each axis is:
0: Displayed according to the setting of bit 7 (PGM) of parameter No. 11320.
1: Displayed with machine coordinates used for program checking.

NOTE
1 When PMC axis select signal EAX*<Gn136> is set to “1” for an axis, the actual machine coordinate value on the axis is indicated regardless of the settings of bit 7 (PGM) of parameter No. 11320 and bit 4 (PGA) of parameter No. 3115.
2 In diagnostic data No. 301 (machine position), actual machine coordinates are always displayed regardless of the settings of bit 7 (PGM) of parameter No. 11320 and bit 4 (PGA) of parameter No. 3115.

	#7	#6	#5	#4	#3	#2	#1	#0
3116	MDC					PWR		

[Input type] Setting input
[Data type] Bit path

#2 PWR Alarm SW0100, “PARAMETER ENABLE SWITCH ON”, which is issued when bit 0 (PWE) of setting parameter No. 8900 is set to 1, is cleared by:

0: CAN + RESET.

1: RESET or turning on the external reset.

#7 MDC Maintenance information data:
0: Cannot be erased entirely.
1: Can be erased entirely.

	#7	#6	#5	#4	#3	#2	#1	#0
3117							SPP	

[Input type] Parameter input
[Data type] Bit path

#1 SPP When a serial spindle is used, the position coder signal pulse data and angle based on the one-rotation signal are:
0: Not displayed on diagnosis data No. 445, and No.449.
1: Displayed on diagnosis data No. 445, and No.449.

NOTE
1 For a spindle not connected, 0 is indicated.
2 To display this data, the following conditions must be met:
(1) Serial spindle is used.
(2) The parameter is valid when the one-rotation signal is detected.

To detect the one-rotation signal, perform spindle orientation.
To determine whether the one-rotation signal has been detected or not, check the serial spindle status signals (PC1DTA<F0047.0>, PC1DTB<F0051.0>, PC1DTC<F0170.0>, and PC1DTD<F0268.0>).

	#7	#6	#5	#4	#3	#2	#1	#0
3119					TPA	DDS		

[Input type] Parameter input
[Data type] Bit

NOTE
When at least one of these parameters is set, the power must be turned off before operation is continued.

#2 DDS The touch panel is:
0: Enabled.
1: Disabled.
Set this parameter to 1 when disabling the touch panel temporarily, for example, at start-up time.

#3 TPA When the external touch panel interface is effective, the external touch panel interface connection is:
0: Valid.
1: Invalid.
For an external touch panel (called ETP hereinafter), the RS-232C serial port 2 (JD36A or JD54) on the main board of the CNC is used.
When using ETP, set bit 3 (TPA) of parameter No. 3119 to 0.
By this setting, JD36A or JD54 is used for ETP, regardless of the setting of I/O CHANNEL（I/O device selection）of the existing parameters Nos. 0020 to 0023.
For other I/O devices, use JD56A and so forth.
By the setting above, the settings of the existing parameters Nos. 0100 and 0121 to 0123 become invalid for channel 2 (JD36A or JD54), and the following settings are applied at all times:
- Baud rate : 19200 bps
- Stop bit : 1 bit
- Parity check : Even parity

3122	Time interval used to record time data in operation history

[Input type] Parameter input
[Data type] Word path
[Unit of data] min
[Valid data range] 0 to 1440
When history data is recorded within a set time period, the time for each set time period is recorded in the history data.
When 0 is set, the specification of a time period of 10 minutes is assumed.

3123	Time required before a screen saver is activated

[Input type] Setting input
[Data type] Byte path
[Unit of data] min
[Valid data range] 0 to 127
After a time (in minutes) set in parameter No. 3123 passes without key operation, the NC screen is erased automatically. Pressing a key causes the NC screen to reappear.

NOTE
1 Setting 0 disables automatic screen erasure.
2 This function cannot be used together with manual screen erasure. If 1 or a larger value is set in this parameter, manual screen erasure is disabled.

	#7	#6	#5	#4	#3	#2	#1	#0
3124	D08	D07	D06	D05	D04	D03	D02	D01
3125	D16	D15	D14	D13	D12	D11	D10	D09
3126	D24	D23	D22	D21	D20	D19	D18	D17
3127	D32	D31	D30	D29	D28	D27	D26	D25

[Input type] Parameter input
[Data type] Bit path

D01 to D32 Set a group of G codes to be displayed on the program check screen.
The table below indicates the correspondence between bits and G code groups.
The setting of a bit has the following meaning:
0: Displays the G code group corresponding to a bit.
1: Does not display the G code group corresponding to a bit.

Parameter	G code group
D01	01
D02	02
D03	03
:	:
D32	32

3128	Retracement time for deleting alarm data from the alarm history

[Input type] Parameter input
[Data type] Word path
[Unit of data] sec
[Valid data range] 0 to 255
From the alarm history, the alarm data that occurred during a set period of time back from the power-off time is deleted.
When 0 is set, a retracement time of 1 second is assumed to be specified.

	#7	#6	#5	#4	#3	#2	#1	#0
3129				RPP		MRE	DAP	DRP
				RPP		MRE		

[Input type] Parameter input
[Data type] Bit path

#0 DRP For relative coordinate display:
0: The actual position considering a tool offset (tool movement) is displayed.
1: The programmed position excluding a tool offset (tool movement) is displayed.

#1 DAP For absolute coordinate display:
0: The actual position considering a tool offset (tool movement) is displayed.
1: The programmed position excluding a tool offset (tool movement) is displayed.

> **NOTE**
> In machining center systems, whether to exclude the tool length offset when displaying the absolute position is determined according to the setting of bit 6 (DAL) of parameter No. 3104.

#2 MRE When mirror image is used, relative coordinates are:
0: Updated with respect to the machine coordinates.
1: Updated with respect to the absolute coordinates.

Set this parameter to 1 when handling relative coordinates in the same way as for the lathe system of the FS16*i*/18*i*/21*i*.

#4 RPP To the value of the preset(or origin) of relative coordinates, the difference below the least input increment between absolute coordinate point and relative coordinate point is:
0: Not corrected.
1: Corrected.

3130	Axis display order for current position display screens

[Input type] Parameter input
[Data type] Byte axis
[Valid data range] 0 to 32
Set the order in which axes are displayed on current position display screens.

3131	Subscript of axis name

[Input type] Parameter input
[Data type] Byte axis
[Valid data range] 0 to 9, 65 to 90
In order to distinguish axes under synchronization control and tandem control, specify a subscript for each axis name.

Setting value	Meaning
0	Each axis is set as an axis other than a synchronization control axis and tandem control axis.
1 to 9	A set value is used as a subscript.
65 to 90	A set letter (ASCII code) is used as a subscript.

[Example] When the axis name is X, a subscript is added as indicated below.

Setting value	Axis name displayed on a screen such as the position display screen
0	X
1	X1
77	XM
83	XS

If a multi-path system is used, no extended axis name is used within a path, and no subscript is set for the axis names, then the path number is automatically used as the subscript for the axis names. To disable the display of axis name subscripts, set a blank (32) of ASCII code in the parameter for specifying an axis name subscript.

NOTE
If even one axis in a path uses an extended axis name when bit 2 (EAS) of parameter No. 11308 is set to 0, subscripts cannot be used for axis names in the path.

3132	Axis name (absolute coordinate) for current position display

[Input type] Parameter input
[Data type] Byte axis
[Valid data range] 0 to 255
These parameters set the axis name for current position display.
When G code system B or C is used, the axis name set in parameter No. 3132 is used for both absolute and relative coordinate axes.
The values set in these parameters are used only for display.
When 0 is set in this parameter, the setting of parameter No. 1020 is used.
When an extended axis name is used, only the first character displayed is replaced.

3133	Axis name (relative coordinate) for current position display

[Input type] Parameter input
[Data type] Byte axis
[Valid data range] 0 to 255
These parameters set the axis name for current position display.
When G code system B or C is used, the axis name set in parameter No. 3132 is used for both absolute and relative coordinate axes.
The values set in these parameters are used only for display.
When 0 is set in this parameter, the setting of parameter No. 1020 is used.
When an extended axis name is used, only the first character displayed is replaced.

3134	Data display order of each axis on the workpiece coordinate system setting screen and workpiece coordinate system shift amount setting screen

[Input type] Parameter input
[Data type] Byte axis
[Valid data range] 0 to Number of controlled axes
Set the data display order of each axis on the workpiece coordinate system setting screen (M series/T series) and workpiece coordinate system shift amount setting screen (T series).
No data is displayed for an axis with 0 set in this parameter.

3135	Number of decimal places in actual feedrate display

[Input type] Setting input
[Data type] Byte path
[Valid data range] 0 to 3
Set the number of decimal places in actual feedrate display.
In the case of inch input, the number of decimal places is a set value plus 2.

[Setting value]

0 :	Metric input	Displayed without a decimal point
	Inch input	Displayed using the second decimal place
1 :	Metric input	Displayed using the first decimal place
	Inch input	Displayed using the third decimal place
2 :	Metric input	Displayed using the second decimal place
	Inch input	Displayed using the fourth decimal place
3 :	Metric input	Displayed using the third decimal place

Inch input Displayed using the fifth decimal place

NOTE
This parameter is valid for feed per minute.

	#7	#6	#5	#4	#3	#2	#1	#0
3137	EAC							

[Input type] Parameter input
[Data type] Bit

#7 EAC The PMC axis status display screen is:
0: Not displayed.
1: Displayed.

NOTE
This parameter is valid if the PMC axis control is effective.

3141	Path name (1st character)
3142	Path name (2nd character)
3143	Path name (3rd character)
3144	Path name (4th character)
3145	Path name (5th character)
3146	Path name (6th character)
3147	Path name (7th character)

[Input type] Parameter input
[Data type] Word path
[Valid data range] See the character-code correspondence table.
Specify a path name with codes.
Any character string consisting of alphanumeric characters, katakana characters, and special characters with a maximum length of seven characters can be displayed as a series name.

NOTE
1 For characters and codes, see Appendix A, “CHARACTER CODE LIST”.
2 When 0 is set in parameter No. 3141, PATH1(,PATH2...) are displayed as path names.
3 When optional path name display is enlarged (with bit 2 (PNE) of parameter No. 11350 set to 1), only alphanumeric characters are displayed. If any other type of characters are set, spaces are displayed instead.

3160	Setting of MDI unit type

[Input type] Parameter input
[Data type] Byte
[Valid data range] 0 to 4

Set the type of an MDI unit when the type of an MDI unit is not automatically identified.

Setting value	Type
0	Depends on the system type and indicator type.
1	Standard MDI unit for the lathe system
2	Standard MDI unit for the machining center system
3	Small MDI unit for the lathe system
4	Small MDI unit for the machining center system

When 0 is set in this parameter, the type of a MDI unit is determined as follows:

Type of path control	Type of indicator	Type
When the type for the lathe system is used with path 1	Type of 12 horizontal soft keys	Standard MDI unit for the lathe system
	Type of 7 horizontal soft keys	Small MDI unit for the lathe system
When the type for the machining center system is used with path 1	Type of 12 horizontal soft keys	Standard MDI unit for the machining center system
	Type of 7 horizontal soft keys	Small MDI unit for the machining center system

	#7	#6	#5	#4	#3	#2	#1	#0
3191			FSS		SSF	WSI		

[Input type] Parameter input
[Data type] Bit path

#2 WSI On the workpiece zero point offset screen, the soft key [INPUT] is:
0: Displayed.
1: Not displayed.

#3 SSF On the setting screen, the soft key for confirming data input is:
0: Not displayed.
1: Displayed.

#5 FSS Feedrate display is:
0: When it meets the following all requirements, display is feedrate per revolution. Besides, display is feedrate per minute.
- Group 05 G-code is feedrate per revolution.
- Other than manual feed, rapid traverse, dry run.
- During axis movement.

1: Fixed to feedrate per revolution.

NOTE
This parameter is valid only when bit 3 (GSC) of parameter No.3107 is 1.

	#7	#6	#5	#4	#3	#2	#1	#0
3192	PLD					TRA	T2P	

[Input type] Parameter input
[Data type] Bit

#1 T2P When more than one point is pressed on the touch panel:
0: The position at the center of gravity is obtained.
1: The point pressed first is obtained.

NOTE
1 When two points are pressed in a row in a short time interval, the touch panel may react as if the center of the two points was pressed, even though parameter T2P (No. 3192#1) is set to 1.
2 If a C executer application or the like has a touch panel drag (move in pressed state) function, set parameter T2P to 0.

#2 TRA If a point on the touch panel is kept pressed for a time specified in parameter No. 3197 or longer,
0: An alarm is not raised.
1: An alarm SR5303, “TOUCH PANEL ERROR” is raised.

NOTE
1 If an C executer application or the like has a touch panel repeat (continue pressing) function, set parameter TRA to 0.
2 In PC functions, the parameter is valid just for the CNC screen display function.

#7 PLD When the current position is indicated for a path, and when the program check screen is displayed in a two- or three-path system, the function for displaying servo load meters and spindle load meters is :
0: Disabled.
1: Enabled.

	#7	#6	#5	#4	#3	#2	#1	#0
3194					DPM	DPA		

[Input type] Parameter input
[Data type] Bit path

#2 DPA The absolute coordinates, relative coordinates, and remaining move amount during diameter/radius specification switching are displayed:
0: According to the specification during switching.
1: According to the setting of bit 3 (DIAx) of parameter No. 1006.

#3 DPM The machine coordinates during diameter/radius specification switching are displayed:
0: According to the setting of bit 3 (DIAx) of parameter No. 1006.
1: According to the specification during switching.

	#7	#6	#5	#4	#3	#2	#1	#0
3195	EKE	HDE	HKE					

[Input type] Parameter input
[Data type] Bit

#5 HKE A key operation history is:
0: Recorded.
1: Not recorded.

#6 HDE A DI/DO history is:
0: Recorded.
1: Not recorded.

#7 EKE The [ALL CLEAR] soft key for clearing all history data is:
0: Not displayed.
1: Displayed.

	#7	#6	#5	#4	#3	#2	#1	#0
3196	HAL	HOM	HOA		HMV	HPM	HWO	HTO

[Input type] Parameter input
[Data type] Bit

#0 HTO A modification history of tool offset data is:
0: Not recorded.
1: Recorded.

#1 HWO A modification history of workpiece offset data/extended workpiece offset data/workpiece shift (T series) is:
0: Not recorded.
1: Recorded.

#2 HPM A modification history of parameters is:
0: Not recorded.
1: Recorded.

#3 HMV A modification history of custom macro common variables is:
0: Not recorded.
1: Recorded.

#5 HOA When an external operator message is issued, additional information (modal data, absolute coordinates, and machine coordinates present at the issuance of the external operator message) is:
0: Not recorded in the operation history and message history.
1: Recorded in the operation history and message history.

#6 HOM A history of external operator messages and macro messages (#3006) is:
0: Recorded.
1: Not recorded.

#7 HAL When an alarm is issued, additional information (modal data, absolute coordinates, and machine coordinates present at the issuance of the alarm) is:
0: Recorded in the operation history and alarm history.
1: Not recorded in the operation history and alarm history.
To record as many alarm history items as possible, rather than detailed alarm information, set 1.

3197	Detection time of continuous pressing on touch panel

[Input type] Parameter input
[Data type] Word
[Unit of data] sec
[Valid data range] 0 to 255
Set a period of continuous pressing on the touch panel which causes alarm to be raised. When 0 is set, it is equivalent to 20.

NOTE
This parameter is valid when bit 2 (TRA) of parameter No. 3192 is set to 1.

	#7	#6	#5	#4	#3	#2	#1	#0
3201		NPE	N99			REP		

[Input type] Parameter input
[Data type] Bit path

#2 REP Action in response to an attempt to register a program whose number is the same as that of an existing program
0: Warning is generated.
1: The existing program is deleted, then the new program is registered. Note that if the existing program is protected from being edited, it is not deleted, and an alarm is generated.

#5 N99 With an M99 block, when bit 6 (NPE) of parameter No. 3201 is set to 0, program registration is assumed to be:
0: Completed
1: Not completed

#6 NPE With an M02, M30, or M99 block, program registration is assumed to be:
0: Completed
1: Not completed

	#7	#6	#5	#4	#3	#2	#1	#0
3202		PSR		NE9		CND		NE8

[Input type] Parameter input
[Data type] Bit path

#0 NE8 Editing of subprograms with program numbers 8000 to 8999
0: Not inhibited
1: Inhibited
When this parameter is set to 1, the following editing operations are disabled:
(1) Program deletion (Even when deletion of all programs is specified, programs with program numbers 8000 to 8999 are not deleted.)
(2) Program output (Even when outputting all programs is specified, programs with program numbers 8000 to 8999 are not output.)
(3) Program number search
(4) Program editing of registered programs
(5) Program registration
(6) Program collation
(7) Displaying programs

NOTE
1 If parameter DMP (No.11375#0) is effective, this parameter is applied to the program in the data server. However, the prohibited content is different. Refer to NC parameter DMP (No.11375#0) for details.
2 This parameter setting does not affect the programs for running and editing memory card programs on a memory card.
3 This parameter is path type parameter. Please set the parameter in all paths to protect the program.

#2 CND By using the [PROGRM CNDENS] soft key on the program directory screen, the program condensing operation is:
0: Not performed. (The [PROGRM CNDENS] soft key is not displayed.)
1: Performed.

#4 NE9 Editing of subprograms with program numbers 09000 to 09999
0: Not inhibited
1: Inhibited
When this parameter is set to 1, the following editing operations are disabled:
(1) Program deletion (Even when deletion of all programs is specified, programs with program numbers 9000 to 9999 are not deleted.)
(2) Program output (Even when outputting all programs is specified, programs with program numbers 9000 to 9999 are not output.)
(3) Program number search
(4) Program editing of registered programs
(5) Program registration
(6) Program collation
(7) Displaying programs

NOTE
1 If parameter DMP (No.11375#0) is effective, this parameter is applied to the program in the data server. However, the prohibited content is different. Refer to NC parameter DMP (No.11375#0) for details.
2 This parameter setting does not affect the programs for running and editing memory card programs on a memory card.
3 This parameter is path type parameter. Please set the parameter in all paths to protect the program.

#6 PSR Search for the program number of a protected program
0: Disabled
1: Enabled

NOTE
If this parameter is set to 1, the protected programs are also displayed.

	#7	#6	#5	#4	#3	#2	#1	#0
3203	MCL	MER	MZE					

[Input type] Parameter input
[Data type] Bit path

#5 MZE After MDI operation is started, program editing during operation is:
0: Enabled
1: Disabled

#6 MER When the last block of a program has been executed at single block operation in the MDI mode, the executed block is:
0: Not deleted
1: Deleted

> **NOTE**
> When MER is set to 0, the program is deleted if the end-of-record mark (%) is read and executed. (The mark % is automatically inserted at the end of a program.)

#7 MCL Whether a program prepared in the MDI mode is cleared by reset
0: Not deleted
1: Deleted

	#7	#6	#5	#4	#3	#2	#1	#0
3204		MKP	SPR	P9E	P8E		OPC	PAR

[Input type] Parameter input
[Data type] Bit path

#0 PAR When a small MDI unit is used, characters "[" and "]" are:
0: Used as "[" and "]".
1: Used as "(" and ")".

> **NOTE**
> When a multi-path system is used, the setting for path 1 is followed.

#1 OPC In MEM/EDIT/RMT mode, a program search or cueing operation:
0: Causes a warning when automatic operation has been started (automatic operation start signal STL = “1”) or paused (feed hold signal SPL = “1”).
1: Causes a warning during automatic operation (automatic operation signal OP = “1”).

#3 P8E Editing of subprograms with program numbers 80000000 to 89999999
0: Not inhibited.
1: Inhibited.

#4 P9E Editing of subprograms with program numbers 90000000 to 99999999
0: Not inhibited.
1: Inhibited.

#5 SPR A particular program number in the nine thousands is
0: Not assumed to be a number obtained by adding 90000000.
1: Assumed to be a number obtained by adding 90000000.

#6 MKP When M02, M30, or EOR(%) is executed during MDI operation, the created MDI program is:
0: Erased automatically.
1: Not erased automatically.

NOTE
If the bit 6 (MER) of parameter No. 3203 is set to 1, executing the last block provides a choice of whether to automatically erase a created program.

	#7	#6	#5	#4	#3	#2	#1	#0
3205			BGC	OSC				

[Input type] Parameter input
[Data type] Bit

#4 OSC On the offset screen, offset value erasure by a soft key is:
0: Enabled.
1: Disabled.

#5 BGC When background editing are started without entering a program name:
0: Select a program by soft key[PROGRM SEARCH], [NEW PROGRAM] or Program folder screen.
1: The editing of the previously edited program is continued.

NOTE
1 Only when the program has not been changed after background editing is ended, it is possible to edit continuously in BGC=1 example) When the program is edited in foreground, it does not continue.
2 When multiple program were edited in background, background edited program in past can be continuously edited each pressing soft key [BG EDIT] ([EDIT EXEC], [REF EXEC]) in BGC=1
3 When background editing is started with entering a program name, cursor is displayed on the top in BGC=1
4 This parameter is Initial setting parameter. For details, refer to the appendix "Automatic setting / Initial setting parameter" in CONNECTION MANUAL (FUNCTION) (B-64693EN-1).

	#7	#6	#5	#4	#3	#2	#1	#0
3206	NS2		S2K	PHS			MIF	

[Input type] Parameter input
[Data type] Bit

#1 MIF Editing of the maintenance information screen is:
0: Not prohibited.
1: Prohibited.

#4 PHS Operation history signal selection:

0: Does not interact with parameters.
Operation history signal selection is added or deleted on the operation history signal selection screen.
Changing the settings of parameters Nos. 24901 to 24920, Nos. 12801 to 12820, Nos. 12841 to 12860, or Nos. 12881 to 12900 has no effect on operation history signal selection.
Changes to the signals of the addresses specified by parameters Nos. 24901 to 24920, Nos. 12801 to 12820, Nos. 12841 to 12860, or Nos. 12881 to 12900 are not recorded in the history.

1: Interacts with parameters.
Operation history signal selection can be performed either on the operation history signal selection screen or by setting parameters.

> **NOTE**
> Setting this parameter to 1 reflects the current operation history signal selection data on parameters Nos. 24901 to 24920 and Nos. 12801 to 12900.

#5 S2K In CNC screen dual display function,

0: Key control is selected by DI signal CNCKY <G0295.7>.
1: Key control is selected by pushing at left upper corner on the screen. (Touch panel only)

#7 NS2 CNC screen dual display function is:

0: Disabled.
1: Enabled.

	#7	#6	#5	#4	#3	#2	#1	#0
3207		TPP	VRN				EXS	

[Input type] Parameter input
[Data type] Bit

#1 EXS Soft key expansion of the machine menu function is:

0: Disabled.
1: Enabled.

#5 VRN On the custom macro variable screen, the variable names of common variables #500 to #549 are:

0: Not displayed.
1: Displayed.

#6 TPP When a virtual MDI key is pressed, signal TPPRS <F0006.0> is

0: Not output.
1: Output

	#7	#6	#5	#4	#3	#2	#1	#0
3208			PSC	OFY	NOS			SKY

[Input type] Setting input
[Data type] Bit

#0 SKY The function key

on the MDI unit is:

0: Enabled.
1: Disabled.

#3 NOS The one-touch menu is

0: Displayed.
1: Not displayed.

#4 OFY The offset screen can be used to display and enter:

0: Only conventional offset values.
1: Y-axis offset values as well.
The conventional Y-axis offset screen cannot be displayed.

Only the 10.4/15/19” screen is acceptable.
For T series and M series which Tool offset memory C is enabled(bit 6(NGW) of parameter No.8136 is 0), the parameter setting is valid.

#5 PSC When the path is switched based on the path switch signal:

0: The screen display is switched to the last selected screen of the path.
1: The same screen as for the path before switching is displayed.

3210	Program protection (PSW)

[Input type] Parameter input
[Data type] 2-word
[Valid data range] 0 to 99999999

This parameter sets a password for protecting program Nos. 9000 to 9999. When a value other than zero is set in this parameter and this value differs from the keyword set in parameter No. 3211, bit 4 (NE9) of parameter No. 3202 for protecting program Nos. 9000 to 9999 is automatically set to 1.
This disables the editing of program Nos. 9000 to 9999. Until the value set as the password is set as a keyword, NE9 cannot be set to 0 and the password cannot be modified.

NOTE

1 The state where password $\neq$ 0 and password $\neq$ keyword is referred to as the locked state. When an attempt is made to modify the password by MDI input operation in this state, the warning message "WRITE PROTECTED" is displayed to indicate that the password cannot be modified. When an attempt is made to modify the password with G10 (programmable parameter input), alarm PS0231, “ILLEGAL FORMAT IN G10 L52” is issued.
2 When the value of the password is not 0, the parameter screen does not display the password. Care must be taken in setting a password.

3211	Program protection key (KEY)

[Input type] Parameter input
[Data type] 2-word
[Valid data range] 0 to 99999999

When the value set as the password (set in parameter No. 3210) is set in this parameter, the locked state is released and the user can now modify the password and the value set in bit 4 (NE9) of parameter No. 3202.

NOTE
The value set in this parameter is not displayed. When the power is turned off, this parameter is set to 0.

3216	Increment in sequence numbers inserted automatically

[Input type] Setting input
[Data type] 2-word path
[Valid data range] 0 to 99999999
Set the increment for sequence numbers for automatic sequence number insertion (when bit 5 (SEQ) of parameter No. 0000 is set to 1.)

3220	Password (PSW)

[Input type] Parameter input
[Data type] 2-word
[Valid data range] 0 to 99999999
This parameter sets a password (PSW). When a value other than 0 is set, a password is set. When a password is set, a blank is displayed in this parameter, and the state (locked state) where an operation such as program editing is locked is set. When password (PSW) = 0, namely, in the normal state, or when password (PSW) = keyword (KEY), namely, in the unlock state, this parameter can be set.

3221	Keyword (KEY)

[Input type] Parameter input
[Data type] 2-word
[Valid data range] 0 to 99999999
When the same value as the password (PSW) is set in this parameter, the lock is released (unlock state). The value set in this parameter is not displayed.
The value of this parameter is initialized to 0 automatically when the power is turned on. So, if the power is turned off in the unlock state then is turned on again, the lock state is automatically set.

3222	Program protection range (minimum value) (PMIN)
3223	Program protection range (maximum value) (PMAX)

[Input type] Parameter input
[Data type] 2-word
[Valid data range] 0 to 9999
The programs in a range set here can be locked. Set the minimum program number and maximum program number of a desired range.
Set these parameters to satisfy PMAX > PMIN.
These parameters can be set when password (PSW) = 0, namely, in the normal state, or when password (PSW) = keyword (KEY), namely in the unlock state.
[Example] Parameter No. 3222 = 7000
Parameter No. 3223 = 8499
When the values above are set, the programs from O7000 to O8499 can be locked.
When PMIN = 0, the specification of PMIN = 9000 is assumed. When PMAX = 0, the specification of PMAX = 9999 is assumed. So, when these parameters are set to the defaults, the programs from O9000 to O9999 are locked.

NOTE
1 Parameters Nos. 3220 to 3223 are neither file output nor file input.
2 Parameters Nos. 3220 to 3223 are not cleared even when a parameter file clear operation is performed in the IPL state.
3 The values of a password (PSW) and keyword (KEY) are not displayed. When password (PSW) = 0, 0 is displayed in parameter No. 3220 to indicate that the normal state is set.
4 When a password (PSW) or keyword (KEY) is set, [+INPUT] has the same effect as [INPUT]. For example, if the input operation "1[+INPUT]" is performed when 99 is set in the keyword (KEY) parameter, 1 is set.
5 This parameter setting does not affect the following programs:
- Programs on the Data Server
- Programs saved in program storage files on a memory card

3225	
3226	

These parameters are related to Dual Check Safety.
See Dual Check Safety CONNECTION MANUAL (B-64483EN-2) for details.

3227	Selection of a block number of machine operation menu data (horizontal soft keys)
3228	Selection of a block number of machine operation menu data (vertical soft keys)

[Input type] Parameter input
[Data type] Byte
[Valid data range] 0 to 98

These parameters select a block number of machine operation menu data stored in the FROM for soft key expansion in the machine operation menu function.
When a 10.4-inch display is used, set a value in the parameter for the vertical or horizontal soft keys that are to be used for displaying a machine operation menu. In the parameter for the vertical or horizontal soft keys that are not to be displayed, set 0.
When values are input in both parameters, parameter No. 3227 takes priority, and the machine operation menu is displayed in the horizontal soft keys.
When a 15/19-inch display is used, set 0 in parameter No. 3227, and set the block number of a machine operation menu to be displayed in the vertical soft keys in parameter No. 3228.

	#7	#6	#5	#4	#3	#2	#1	#0
3233				CPD		RKB	PDM	PCE

[Input type] Parameter input
[Data type] Bit

#0 PCE Program editing is:
0: Performed in the word edit mode.
1: Performed in the character edit mode.

#1 PDM On the Data Server file list screen:
0: M198 operation folders and DNC operation files can be set.
1: Folders in the Data Server can be set as the foreground folder and background folder.

NOTE
When an M198 external subprogram call or DNC operation is performed on the Data Server, set this bit to 0.
For the foreground and background folders, refer to Chapter, "PROGRAM MANAGEMENT" in the OPERATOR'S MANUAL (B-64694EN).

#2 RKB By the reset operation, the content of the key-in buffer is:
0: Deleted.
1: Not deleted.

NOTE
When RKB is 1, the content of the key-in buffer can be deleted at a time by pushing <CAN> key following <SHIFT> key.

#4 CPD The program call in subprogram call or macro call
0: is searched in the search folder by the regulations of order.
1: is searched in the folder specified by path.

NOTE
1. When the parameter CPD is set to 0 and the command of path is specified, the code of path is invalid and only the file name becomes an effective description.
So, the called program by Subprogram call or Macro call changes by setting parameter CPD in the following case.
   - The same file name is searched in the folder by calling sequence as former, and the path name of the searched folder and specified path name are different.

Example)
For M98<./Folder2/O1> is executed from main program.
When CPD is set to 0, O1 in Folder1 is called, and when CPD is set to 1, O1 in Folder2 is called.

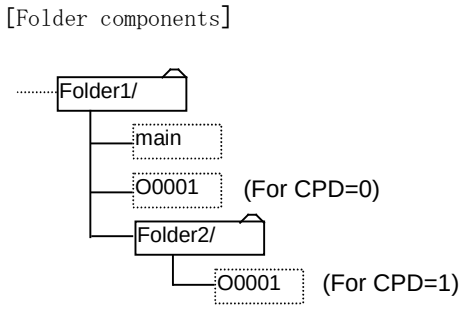

2. Please change this parameter in the reset state.
3. In Word editing mode,
   - when CPD is set to 0, ' /' cannot be used between ' <' and ' >'.
   - when CPD is set to 1, ' /' can be used between ' <' and ' >'.

3241	Character blinking in the AI contour control I mode (first character)
3242	Character blinking in the AI contour control I mode (second character)
3243	Character blinking in the AI contour control I mode (third character)
3244	Character blinking in the AI contour control I mode (fourth character)
3245	Character blinking in the AI contour control I mode (fifth character)
3246	Character blinking in the AI contour control I mode (sixth character)
3247	Character blinking in the AI contour control I mode (seventh character)

[Input type] Parameter input
[Data type] Word path
[Valid data range] 0 to 95
Set the first to seventh blinking characters in the AI contour control I mode by using ASCII codes represented as decimal numbers.
When 0 is set in all of these parameters, "AICC 1" blinks.
Code numbers 032 to 095 in the Appendix A, "CHARACTER CODE LIST" can be set.

3251	Character blinking in the AI contour control II mode (first character)
3252	Character blinking in the AI contour control II mode (second character)
3253	Character blinking in the AI contour control II mode (third character)
3254	Character blinking in the AI contour control II mode (fourth character)
3255	Character blinking in the AI contour control II mode (fifth character)
3256	Character blinking in the AI contour control II mode (sixth character)
3257	Character blinking in the AI contour control II mode (seventh character)

[Input type] Parameter input
[Data type] Word path
[Valid data range] 0 to 95
Set the first to seventh blinking characters in the AI contour control II mode by using ASCII codes represented as decimal numbers.
When 0 is set in all of these parameters, "AICC 2" blinks.
Code numbers 032 to 095 in the Appendix A, "CHARACTER CODE LIST" can be set.

	#7	#6	#5	#4	#3	#2	#1	#0
3280								NLC

[Input type] Parameter input
[Data type] Bit

#0 NLC Dynamic display language switching is:
0: Enabled.
1: Disabled.
When dynamic display language switching is disabled, the language setting screen is not displayed. In this case, change the setting of parameter No. 3281 on the parameter screen then turn on the power again to switch the display language.

3281	Display language

[Input type] Parameter input
[Data type] Byte
[Valid data range] 0 to 21,23 to 25
Select a display language from the following:
0 : English
1 : Japanese
2 : German
3 : French
4 : Chinese(traditional characters)
5 : Italian
6 : Korean
7 : Spanish
8 : Dutch
9 : Danish
10 : Portuguese
11 : Polish
12 : Hungarian
13 : Swedish
14 : Czech
15 : Chinese(simplified characters)
16 : Russian
17 : Turkish
18 : Bulgarian
19 : Rumanian
20 : Slovak
21 : Finnish
23 : Vietnamese
24 : Indonesian
25 : Slovenian
If a number not indicated above is set, English is selected.

	#7	#6	#5	#4	#3	#2	#1	#0
3290	KEY	MCM	GO2	IWZ	WZO	MCV	GOF	WOF
	KEY	MCM		IWZ	WZO	MCV	GOF	WOF

[Input type] Parameter input
[Data type] Bit path

#0 WOF Setting the tool offset value (tool wear offset) by MDI key input is:
0: Not disabled.
1: Disabled. (With parameters Nos. 3294 and 3295, set the offset number range in which updating the setting is to be disabled.)

NOTE
When tool offset memory A is selected with the M series, the tool offset set in the parameter WOF is followed even if geometric compensation and wear compensation are not specified with the T series.

#1 GOF Setting the tool geometry offset value by MDI key input is:
0: Not disabled.
1: Disabled. (With parameters Nos. 3294 and 3295, set the offset number range in which updating the setting is to be disabled.)

#2 MCV Setting a custom macro variable by MDI key input is:
0: Not disabled.
1: Disabled.

#3 WZO Setting a workpiece zero point offset value and workpiece shift value (T series) by MDI key input is:
0: Not disabled.
1: Disabled.

#4 IWZ Setting a workpiece zero point offset value or workpiece shift value (T series) by MDI key input in the automatic operation activation or halt state is:
0: Not disabled.
1: Disabled.

#5 GO2 Setting the second geometric tool offset value by MDI key input is:
0: Disabled.
1: Not disabled.

#6 MCM Setting a custom macro variable by MDI key input is:
0: Enabled in any mode.
1: Enabled only in the MDI mode.

#7 KEY For memory protection keys:
0: The memory protection signals KEY1 <Gn046.3>, KEY2 <Gn046.4>, KEY3 <Gn046.5>, and KEY4 <Gn046.6> are used.
1: Only the memory protection signal KEY1 <Gn046.3> is used.

NOTE
1 The functions of the signals depend on whether KEY=0 or KEY=1.
When KEY = 0:
- KEY1: Enables a tool offset value, workpiece zero point offset value, and workpiece shift value to be input.
- KEY2: Enables setting data, macro variables, and tool life management value to be input.
- KEY3: Enables program registration and editing.
- KEY4: Enables PMC data (counter and data table) to be input.

When KEY = 1:
- KEY1: Enables program registration and editing, and enables PMC parameter input.
- KEY2 to KEY4: Not used

2 When a multi-path system is used, the setting for path 1 is followed.

	#7	#6	#5	#4	#3	#2	#1	#0
3291								WPT

[Input type] Parameter input
[Data type] Bit path

#0 WPT The input of the tool wear compensation amount is:
0: Enabled according to memory protection signal KEY1 <Gn046.3>.
1: Enabled, regardless of the memory protection signal KEY1 <Gn046.3>.

3294	**Start number of tool offset values whose input by MDI is disabled**
3295	**Number of tool offset values (from the start number) whose input by MDI is disabled**

[Input type] Parameter input
[Data type] Word path
[Valid data range] 0 to 999

When the modification of tool offset values by MDI key input is to be disabled using bits 0 (WOF) and 1 (GOF) of parameter No. 3290, parameters Nos. 3294 and 3295 are used to set the range where such modification is disabled. In parameter No. 3294, set the offset number of the start of tool offset values whose modification is disabled. In parameter No. 3295, set the number of such values. In the following cases, however, none of the tool offset values may be modified:

- When 0 or a negative value is set in parameter No. 3294
- When 0 or a negative value is set in parameter No. 3295
- When a value greater than the maximum tool offset number is set in parameter No. 3294

In the following case, a modification to the values ranging from the value set in parameter No. 3294 to the maximum tool offset number is disabled:

- When the value of parameter No. 3294 added to the value of parameter No. 3295 exceeds the maximum tool offset number

When the offset value of a prohibited number is input through the MDI panel, the warning "WRITE PROTECT" is issued.

[Example] When the following parameter settings are made, modifications to both of the tool geometry offset values and tool wear offset values corresponding to offset numbers 51 to 60 are disabled:

- Bit 1 (GOF) of parameter No. 3290 = 1 (to disable tool geometry offset value modification)
- Bit 0 (WOF) of parameter No. 3290 = 1 (to disable tool wear offset value modification)
- Parameter No. 3294 = 51
- Parameter No. 3295 = 10

If the setting of bit 0 (WOF) of parameter No. 3290 is set to 0 without modifying the other parameter settings above, tool geometry offset value modification only is disabled, and tool wear offset value modification is enabled.

	#7	#6	#5	#4	#3	#2	#1	#0
3299								**PKY**

[Input type] Setting input
[Data type] Bit

#0 PKY "Parameter write enable" is:
0: Set on the setting screen (bit 0 (PWE) of setting parameter No. 8900).
1: Set by the memory protection signal KEYP<G046.0>.

	#7	#6	#5	#4	#3	#2	#1	#0
3301	**HDC**			**HCN**				**H16**

[Input type] Parameter input

[Data type] Bit path

#0 H16 Bit map data of screen hard copies uses:
0: 256 colors.
1: 16 colors.

#4 HCN Bit map file name of the screen hard copy is:
0: “HDCPYxxx.BMP”
(xxx(000~999) means the number of screen hard copy after power-on)
1: “YYMMDDxx.BMP”
(YY(00~99) means the year, MM(01~12) means the month, DD(01~31) means the day and xx(00~99) means the number of screen hard copy in that day)

#7 HDC A screen hard copy function is:
0: Disabled.
1: Enabled.

3321	**Screen number assigned to the 1st vertical soft key**
to	**to**
3336	**Screen number assigned to the 16th vertical soft key**

[Input type] Parameter input
[Data type] Word
[Valid data range] 1 to 10000
Assign a screen number to be displayed as a shortcut to a vertical soft key.

The 1st to 8th vertical soft keys are displayed on page 1, and the 9th to 16th vertical soft keys are displayed on page 2.
When specifying page 2, be sure to specify "Display of next page" on each page.
When not specifying page 2, set 0 for the 9th to 16th soft keys.
In this case, page 2 is not used, so that "Display of next page" need not be specified on page 1.

If all of these parameters are 0 when turning on the power supply, one-touch menu of the default table is displayed.

NOTE
1 When screen numbers are specified in at least one of CNC parameters Nos. 3321 to 3336, the setting is valid. In the case, nothing is displayed in the vertical soft-key where 0 is specified in the parameter.
2 In order to display the default one-touch menu again, it is needed to turn off power after all of parameters Nos. 3321 to 3336 are set to 0.

(1) CNC operation screens

Screen No.	Screen name
99	Display of next page(*1)
100	Absolute position display(*2)
101	Relative position display(*2)
102	Overall position display(*2)
103	Overall position display(*3)
104	Handle screen
105	Monitor screen
106	3-dimensional manual feed
107	Program
108	Program directory display
109	Next block
110	Program check
111	Time display
112	Manual value specification
113	Program restart
114	Offset display
115	Setting parameter
116	Coordinate system display
117	Software operator's panel
118	Y-axis offset
119	Workpiece coordinate system shift
120	Second geometry offset
121	Tool geometry data
122	Precision level
124	Chuck/tail
125	Language
126	Parameter
127	Diagnosis
128	System configuration
129	Memory contents display
130	Pitch error compensation
131	Machining adjustment
132	Color setting
133	Maintenance information
134	Touch panel calibration(*2)
135	Parameter adjustment
136	M code group
138	External operator message
139	Alarm history
140	External operator message history
141	Drawing parameter
142	Tool path drawing
143	Spindle setting

Screen No.	Screen name
144	Spindle adjustment
145	Spindle monitor
146	FSSB amplifier setting
147	FSSB axis setting
148	FSSB amplifier maintenance
149	Servo setting
150	Servo adjustment
151	Periodic maintenance: State
152	Periodic maintenance: Machine
153	Periodic maintenance: NC
154	8-level data protection: Operation level setting
155	8-level data protection: Password change
156	8-level data protection: Protection level setting
157	Protection against wrong operations
158	Protection against wrong operations Offset range setting screen
159	Protection against wrong operations External workpiece origin offset range setting screen
160	Protection against wrong operations Workpiece origin offset range setting screen
161	Protection against wrong operations Y-axis offset range setting screen
162	Protection against wrong operations Workpiece shift range setting screen
163	Servo guide: Y-TIME
164	Servo guide: XY
165	Servo guide: CIRCLE
166	Servo guide: FOURIER
167	Servo guide: BODE
168	Servo guide: Channel setting
169	Alarm: Details
170	Alarm: All paths
171	Waveform diagnosis: Graph
172	Waveform diagnosis: Parameter
173	Operation history
174	Operation history signal selection
175	Cartridge management
176	Tool management
177	Power Mate CNC manager: Absolute coordinates
178	Power Mate CNC manager: Machine coordinates
179	Power Mate CNC manager: Parameter
180	Power Mate CNC manager: Message
181	Power Mate CNC manager: Diagnosis
182	Power Mate CNC manager: System configuration
183	Macro: Custom
184	Macro: Execution
185	Macro: Conversation
186	Macro: Auxiliary

*1 Definition for feeding vertical soft key pages
*2 Specifiable with a 10.4-inch display unit only
*3 Specifiable with a 15/19-inch display unit only

(2) PMC operation screens

Screen No.	Screen name
200	PMC signal status
201	PMC IO link
202	PMC alarm
203	PMC input/output
204	PMC timer
205	PMC counter
206	PMC keep relay
207	PMC data table
208	PMC trace
209	PMC trace setting
210	PMC program directory display
211	PMC ladder diagram display
212	PMC title setting
213	PMC configuration parameter setting
214	PMC general setting
215	PMC status
216	PMC system parameter
217	PMC IO assignment
218	PMC symbol
219	PMC message
220	PMC online setting

(3) Communication operation screens

Screen No.	Screen name
Ethernet setting	
300	[Built-in port] Common
301	[Built-in port] FOCAS2/Ethernet
302	[Built-in port] FTP transfer
303	[Built-in port] PING
304	[Built-in port] Communication state
305	[Built-in port] Task state
306	[PCMCIA] Common
307	[PCMCIA] FOCAS2/Ethernet
308	[PCMCIA] FTP transfer
309	[PCMCIA] PING
310	[PCMCIA] Communication state
311	[PCMCIA] Task state
312	[Board] Common
313	[Board] FOCAS2/Ethernet
314	[Board] Data server
315	[Board] PING
316	[Board] Communication state
317	[Board] Task state
318	[Board] DS mode
319	[Board] DS format
Ethernet log	
320	[Built-in/PCMCIA] Overall
321	[Built-in/PCMCIA] Common
322	[Built-in/PCMCIA] FOCAS2/Ethernet
323	[Built-in/PCMCIA] FTP transfer
Profibus setting	
324	[MASTER] Overall
325	[MASTER] Bus parameter
326	[MASTER] Slave table
327	[MASTER] Communication state
328	[MASTER] Slave parameter
329	[MASTER] Module data
330	[MASTER] DI/DO address
331	[MASTER] Mode

(4) ALL I/O Screen

Screen No.	Screen name
400	ALLIO Program(*1)
401	ALLIO Parameter(*1)
402	ALLIO Offset(*1)
403	ALLIO Macro(*1)
404	ALLIO Pitch Error Compensation(*1)
405	ALLIO Workpiece Coordinate(*1)
406	ALLIO Y-axis Offset(*1)
407	ALLIO Second Geometry Offset(*1)
408	ALLIO Tool Management(*1)
409	ALLIO Tool Management (Magazine) (*1)
410	ALLIO Tool Management (Custom) (*1)
411	ALLIO Tool Management (Status) (*1)
412	ALLIO Operation History(*1)
413	ALLIO Tool Geometry(*1)

(5) CNC screens

Screen No.	Screen name
500	Dual Check Safety MCC Off Test
501	Dual Check Safety Cross Check
502	Dual Check Safety Flow Monitoring
503	Dual Check Safety Feed Limit
504	Dual Check Safety Machine Positioning
505	Dual Check Safety Position Error
506	Dual Check Safety Brake Test
507	Dual Check Safety FL-net
508	Tool Life Management
509	Robot Status
510	Robot Connect
511	Power Consumption
512	Offset Wear/Wear1/Offset-1
513	Offset Geometry/Geometry1/Offset-2

Screen No.	Screen name
416	ALLIO Maintenance Information(*1)

Screen No.	Screen name
514	Offset Wear2
515	Offset Geometry2
516	Fan monitor
517	Leakage detection monitor
518	Detector monitor

*1 The screen for RS-232C or memory card is displayed by setting I/O Devices.

4.21 PARAMETERS OF PROGRAMS (1 OF 5)

	#7	#6	#5	#4	#3	#2	#1	#0
3400		SMX					MGC	MGO

[Input type] Parameter input
[Data type] Bit path

#0 MGO If the program restart M/S/T/B code output function is used:
0: When bit 6 (MOA) of parameter No. 7300 is set to 0, the last M code only is output. When bit 6 (MOA) of parameter No. 7300 is set to 1, M codes are output in a specified order.
1: When bit 6 (MOA) of parameter No. 7300 is set to 0, the last M code of each M code group is output in the order of groups.
When bit 6 (MOA) of parameter No. 7300 is set to 1, M codes are output in the order of groups.

NOTE
This parameter is valid only when M code grouping function is used and bit 7 (MOU) of parameter No. 7300 is set to 1.
If this parameter is set to 1, M codes of group 0 are not output.
If this parameter is set to 1, M codes are output in the order of groups starting from the smallest group number.

#1 MGC When a single block specifies multiple M commands, an M code group check is:
0: Made.
1: Not made.

#6 SMX An S code specified in a block that specifies G92 (G50 with G code system A of the T series) is:
0: Regarded as a maximum spindle speed command.
1: Not regarded as a maximum spindle speed command (but regarded as a spindle speed command).

	#7	#6	#5	#4	#3	#2	#1	#0
3401	GSC	GSB	ABS	MAB				DPI
			ABS	MAB				DPI

[Input type] Parameter input
[Data type] Bit path

#0 DPI When a decimal point is omitted in an address that can include a decimal point
0: The least input increment is assumed. (Normal decimal point input)
1: The unit of mm, inches, degree, or second is assumed. (Pocket calculator type decimal point input)

#4 MAB Switching between the absolute and incremental programming in MDI operation
0: Performed by G90 or G91
1: Depending on the setting of bit 5 (ABS) of parameter No. 3401

> **NOTE**
> When G code system A of the lathe system is used, this parameter is invalid.

#5 ABS Program command in MDI operation
0: Assumed as an incremental programming
1: Assumed as an absolute programming

> **NOTE**
> ABS is valid when bit 4 (MAB) of parameter No. 3401 is set to 1.
> When G code system A of the lathe system is used, this parameter is invalid.

#6 GSB The G code system is set.
#7 GSC

GSC	GSB	G code
0	0	G code system A
0	1	G code system B
1	0	G code system C

> **NOTE**
> When G code system B and G code system C are invalid , G code system A is used, regardless of the setting of these parameters.

	#7	#6	#5	#4	#3	#2	#1	#0
3402	G23	CLR		FPM	G91	G19	G18	G01
	G23	CLR	G70		G91	G19	G18	G01

[Input type] Parameter input
[Data type] Bit path

#0 G01 G01 Mode entered when the power is turned on or when the control is cleared
0: G00 mode (positioning)
1: G01 mode (linear interpolation)

#1 G18 Plane selected when power is turned on or when the control is cleared
0: G17 mode (plane XY)
1: G18 mode (plane ZX)

#2 G19 Plane selected when power is turned on or when the control is cleared
0: The setting of bit 1 (G18) of parameter No. 3402 is followed.
1: G19 mode (plane YZ)
When this bit is set to 1, set bit 1 (G18) of parameter No. 3402 to 0.

#3 G91 When the power is turned on or when the control is cleared
0: G90 mode (absolute programming)
1: G91 mode (incremental programming)

#4 FPM At power-on time or in the cleared state:
0: G99 or G95 mode (feed per revolution) is set.
1: G98 or G94 mode (feed per minute) is set.

#5 G70 The commands for inch input and metric input are:
0: G20 (inch input) and G21 (metric input).
1: G70 (inch input) and G71 (metric input).

#6 CLR Reset button on the MDI unit, external reset signal ERS <Gn008.7>, reset and rewind signal RRW <Gn008.6>, and emergency stop signal *ESP
0: Cause reset state.
1: Cause clear state.
For the reset and clear states, refer to Appendix in the OPERATOR’S MANUAL.

#7 G23 When the power is turned on
0: G22 mode (stored stroke check 2 on)
1: G23 mode (stored stroke check 2 off)

	#7	#6	#5	#4	#3	#2	#1	#0
3403		ADB	CIR					

[Input type] Parameter input
[Data type] Bit path

#5 CIR When neither the distance (I, J, K) from a start point to the center nor an arc radius (R) is specified in circular interpolation (G02, G03) or helical interpolation (G02, G03):
0: The tool moves to an end point by linear interpolation.
1: An alarm PS0022, “R OR I,J,K COMMAND NOT FOUND” is issued.

#6 ADB When the same address two or more times are specified in one block:
0: The address specified last is valid.
1: It is treated as a program error and the alarm PS5074, "ADDRESS DUPLICATION ERROR" is issued.

NOTE

The following notes apply when this parameter is set to 1:

1 When two or more M codes are acceptable to one block, up to three M codes can be specified in the same block. Specifying more than three results in the alarm PS5074.
2 You can specify any number of G codes in the same block as long as they belong to different groups. Specifying G codes belonging to the same group causes the alarm PS5074. You can however specify any number of G90 and G91 codes in the same block as they cause no alarm.
3 The alarm is not caused by blocks which call a custom macro or execution macro.
4 When G code system A is used with the lathe system, specifying an absolute programming and incremental programming for the same axis causes the alarm PS5074.
5 This parameter is Initial setting parameter. For details, refer to the appendix "Automatic setting / Initial setting parameter" in CONNECTION MANUAL (FUNCTION) (B-64693EN-1).

	#7	#6	#5	#4	#3	#2	#1	#0
3404	M3B		M02	M30		SBP	POL	NOB

[Input type] Parameter input
[Data type] Bit path

#0 NOB When a program is executed, a block consisting of an O, N, EOB, or LBL[label] is:
0: Not ignored.
1: Ignored.

#1 POL When a command is specified with a decimal point omitted in an address that can include a decimal point:
0: The command is assumed to be valid as it is.
1: A program error is assumed and the alarm PS5073, "NO DECIMAL POINT" is issued.

NOTE

The following notes apply when this parameter is set to 1:

1 G codes with a decimal point omitted do not cause the alarm PS5073.
2 Commands using a macro variable or numerical expression are treated as commands with a decimal point. Accordingly, they do not cause the alarm PS5073.
3 Argument specification I/II of a custom macro/execution macro does not cause the alarm PS5073.
4 Omitting a decimal point from a command of an extended axis name causes the alarm PS5073.
5 Omitting a decimal point from a command in an execution macro also causes the alarm PS5073.
6 Address R indicating setting data for programmable parameter input (G10L52) does not cause the alarm PS5073.

#2 SBP In an external device subprogram call, the address P format is based on:
0: File number specification
1: Program number specification

> **NOTE**
> In memory card operation, the program number specification format is used, regardless of the setting of this parameter.

#4 M30 When M30 is specified in a memory operation:
0: M30 is sent to the machine, and the head of the program is automatically searched for. So, when the ready signal FIN <Gn004.3> is returned and a reset or reset and rewind operation is not performed, the program is executed, starting from the beginning.
1: M30 is sent to the machine, but the head of the program is not searched for. (The head of the program is searched for by the reset and rewind signal RRW <Gn008.6>.)

#5 M02 When M02 is specified in memory operation
0: M02 is sent to the machine, and the head of the program is automatically searched for. So, when the end signal FIN <Gn004.3> is returned and a reset or reset and rewind operation is not performed, the program is executed, starting from the beginning.
1: M02 is sent to the machine, but the head of the program is not searched for. (The head of the program is searched for by the reset and rewind signal RRW <Gn008.6>.)

#7 M3B The number of M codes that can be specified in one block
0: One
1: Up to three

	#7	#6	#5	#4	#3	#2	#1	#0
3405			DDP	CCR	G36		DWL	AUX
							DWL	AUX

[Input type] Parameter input
[Data type] Bit path

#0 AUX When the second auxiliary function is specified in the calculator-type decimal point input format or with a decimal point, the multiplication factor for a value output (onto the code signal) relative to a specified value is such that:
0: The same multiplication factor is used for both of metric input and inch input.
1: A multiplication factor used for inch input is 10 times greater than that used for metric input.

When the second auxiliary function is specified in the calculator-type decimal point input format or with a decimal point, the value output onto the code signal is a specified value multiplied by a value indicated below.

Increment system		Parameter AUX=0	Parameter AUX=1
Metric input system	IS-A for reference axis	100 times	100 times
	IS-B for reference axis	1000 times	1000 times
	IS-C for reference axis	10000 times	10000 times
Inch input system	IS-A for reference axis	100 times	1000 times
	IS-B for reference axis	1000 times	10000 times
	IS-C for reference axis	10000 times	100000 times

#1 DWL The dwell time (G04) is:

0: Always dwell per second.

1: Dwell per second in the feed per minute mode (G94), or dwell per rotation in the feed per rotation mode (G95).

#3 G36 As a G code to be used with the automatic tool length measurement function (M series)/automatic tool offset function (T series) is:

0: G36 (T series only)/G37 is used.

1: G37.1/G37.2/G37.3 is used.

> **NOTE**
> To use G36 (counterclockwise) to perform circular threading (available with T series only), set this parameter to 1.

#4 CCR Addresses used for chamfering

0: Address is “I”, “J”, or “K”.
In direct drawing dimension programming, addresses ",C", ",R", and ",A" (with comma) are used in stead of "C", "R", and "A".

1: Address is “C”.
Addresses used for direct drawing dimension programming are "C", "R", and "A" without comma.

> **NOTE**
> If this bit (CCR) is set to 0, the function for changing the compensation direction by specifying I, J, or K in a G01 block in the cutter compensation/ tool nose radius compensation mode cannot be used.
> If this bit (CCR) is set to 1 when address C is used as an axis name, the chamfer function cannot be used.

#5 DDP Angle commands by direct drawing dimension programming

0: Normal specification

1: A supplementary angle is given.

	#7	#6	#5	#4	#3	#2	#1	#0
3406	C07	C06	C05	C04	C03	C02	C01	
	#7	#6	#5	#4	#3	#2	#1	#0
3407	C15	C14	C13	C12	C11	C10	C09	C08
	#7	#6	#5	#4	#3	#2	#1	#0
3408	C23	C22		C20	C19	C18	C17	C16
	#7	#6	#5	#4	#3	#2	#1	#0
3409	CFH	C30	C29	C28	C27	C26	C25	C24

[Input type] Parameter input
[Data type] Bit

C01 to C30 If bit 6 (CLR) of parameter No. 3402 is set to 1, set a group of G codes to be placed in the cleared state when the CNC is reset by the RESET key of the MDI unit, the external reset signal ERS <Gn008.7>, the reset and rewind signal RRW <Gn008.6>, or the emergency stop signal *ESP.
The table below indicates the correspondence between bits and G code groups

The setting of a bit has the following meaning:
0: Places the G code group in the cleared state.
1: Does not place G code group in the cleared state.

Parameter	G code group
C01	01
C02	02
C03	03
:	:
C30	30

#7 CFH When bit 6 (CLR) of parameter No. 3402 is 1, the RESET key on the MDI unit, the external reset signal ERS <Gn008.7>, the reset and rewind signal RRW <Gn008.6>, or emergency stop signal *ESP will,
0: Clear F codes, H codes (for the M series), D codes (for the M series), and T codes (for the T series).
1: Not clear F codes, H codes (for the M series), D codes (for the M series), and T codes (for the T series).

3410	Tolerance of arc radius

[Input type] Setting input
[Data type] Real path
[Unit of data] mm, inch (input unit)
[Min. unit of data] Depend on the increment system of the reference axis
[Valid data range] 0 or positive 9 digit of minimum unit of data (refer to the standard parameter setting table (B))
(When the increment system is IS-B, 0.0 to +999999.999)
When a circular interpolation command is executed, the tolerance for the radius between the start point and the end point is set.

3411	M code preventing buffering 1
3412	M code preventing buffering 2
to	to
3420	M code preventing buffering 10

[Input type] Parameter input
[Data type] 2-word path
[Valid data range] 3 to 99999999
Set M codes that prevent buffering the following blocks. If processing directed by an M code must be performed by the machine without buffering the following block, specify the M code.
M00, M01, M02, and M30 always prevent buffering even when they are not specified in these parameters.

3421	Range specification 1 of M codes that do not perform buffering (lower limit)
3422	Range specification 1 of M codes that do not perform buffering (upper limit)
3423	Range specification 2 of M codes that do not perform buffering (lower limit)
3424	Range specification 2 of M codes that do not perform buffering (upper limit)
3425	Range specification 3 of M codes that do not perform buffering (lower limit)

3426	Range specification 3 of M codes that do not perform buffering (upper limit)
3427	Range specification 4 of M codes that do not perform buffering (lower limit)
3428	Range specification 4 of M codes that do not perform buffering (upper limit)
3429	Range specification 5 of M codes that do not perform buffering (lower limit)
3430	Range specification 5 of M codes that do not perform buffering (upper limit)
3431	Range specification 6 of M codes that do not perform buffering (lower limit)
3432	Range specification 6 of M codes that do not perform buffering (upper limit)

[Input type] Parameter input
[Data type] 2-word path
[Valid data range] 3 to 99999999

When a specified M code is within the range specified with parameters Nos. 3421 and 3422, 3423 and 3424, 3425 and 3426, 3427 and 3428, 3429 and 3430, or 3431 and 3432, buffering for the next block is not performed until the execution of the block is completed.

NOTE

M00, M01, M02, and M30 are M codes that do not perform buffering, regardless of parameter setting.
M98, M99, M codes for calling subprograms, and M codes for calling custom macros are M codes that performs buffering, regardless of parameter setting.

3436	Range specification 1 of second auxiliary function codes that do not perform buffering (lower limit)
3437	Range specification 1 of second auxiliary function codes that do not perform buffering (upper limit)
3438	Range specification 2 of second auxiliary function codes that do not perform buffering (lower limit)
3439	Range specification 2 of second auxiliary function codes that do not perform buffering (upper limit)

[Input type] Parameter input
[Data type] 2-word path
[Valid data range] 1 to 99999999

Set the upper limit and lower limit of a series of second auxiliary function codes that do not perform buffering.
These parameters are invalid if the setting of an upper limit conflicts with the setting of a lower limit.

3441	Start number of M codes for which an M code group can be set (1)
3442	Start number of M codes for which an M code group can be set (2)
3443	Start number of M codes for which an M code group can be set (3)
3444	Start number of M codes for which an M code group can be set (4)

[Input type] Parameter input
[Data type] 2-word path
[Valid data range] 0, 100 to 99999999

Code numbers 0 to 99 on the M code group setting screen correspond to M00 to M99. When adding M codes after the first 100 M codes, specify a start M code number in these parameters. Thus, up to 400 M codes can be added to the M code group setting screen in groups of 100 M codes starting with the set value. When 0 is set, no M codes are added to the M code group setting screen.
When setting these parameters, follow the setting condition described below. If the condition is not satisfied, no M codes are added to the M code group setting screen as in the case where 0 is set.
(Setting condition)
The settings of parameters (1) to (4) (excluding the setting of 0) must satisfy:
99 < (1), (1)+99 < (2), (2)+99 < (3), (3) +99 < (4)

	#7	#6	#5	#4	#3	#2	#1	#0
3450	BDX					FGT		AUP

[Input type] Parameter input
[Data type] Bit path

#0 AUP The second auxiliary function specified in the calculator-type decimal point input format, with a decimal point, or with a negative value is:
0: Disabled.
1: Enabled.
If the second auxiliary function is specified after setting this bit to 0, the following operation results:
1. When a value is specified without a decimal point
   A specified value is output onto the code signal without modification, regardless of the setting of the calculator-type decimal point input format (with bit 0 (DPI) of parameter No. 3401).
2. When a value is specified with a decimal point
   The alarm PS0007, “ILLEGAL USE OF DECIMAL POINT” is issued.
3. When a negative value is specified
   The alarm PS0006, “ILLEGAL USE OF MINUS SIGN” is issued.

#2 FGT The GOTO statement in the forward direction during DNC operation is:
0: Disabled.
   (The alarm PS0123, "ILLEGAL MODE FOR GOTO/WHILE/DO" is issued.)
1: Enabled.

#7 BDX When ASCII code is called using the same address as the address for the second auxiliary function (specified by parameter No. 3460), this parameter prevents the argument unit used when the second auxiliary function is enabled (bit 6 (BCD) of parameter No.8132#2 is 1) from differing from the argument unit used when the second auxiliary function is disabled.
0: When bit 0 (AUP) of parameter No. 3450 is set to 1, the argument unit differs, depending on whether the second auxiliary function is enabled or not.
1: The same argument unit is used. (The unit applied when the second auxiliary function is enabled is used.)

[Example] A setting is made so that address B is used to call O9004, and the program O1 below is executed with parameter No. 3460 = 66.

```
O1      O9004
B2      #500 = #146
M30     M99
```

When the increment system is IS-B, and metric input is used, #500 assumes a value indicated in the table below.

Bit 0 (DPI) of parameter No. 3401	Bit 0 (AUP) of parameter No. 3450	BDX=0		BDX=1
		The second auxiliary function is disabled	The second auxiliary function is enabled	
0	0	2.000	2.000	2.000
	1	2.000	0.002	0.002
1	0	2.000	2.000	2.000
	1	2.000	2.000	2.000

	#7	#6	#5	#4	#3	#2	#1	#0
3451				NBN				
				NBN				GQS

[Input type] Parameter input
[Data type] Bit path

#0 GQS When threading is specified, the threading start angle shift function (Q) is:
0: Disabled.
1: Enabled.

#4 NBN If bit 0 (NOB) of parameter No. 3404 is set to 1, a block including just N or LBL[label] is:
0: Ignored.
1: Not ignored but handled as a single block.
(For a block containing only N or LBL[label], bit 0 (NOB) of parameter No. 3404 is ignored.)

	#7	#6	#5	#4	#3	#2	#1	#0
3452	EAP							
	EAP							

[Input type] Parameter input
[Data type] Bit path

#7 EAP When bit 0 (ADX) of parameter No. 3455 is set to 1, calculator-type decimal point input at a macro calling argument address is:
0: Enabled.
1: Disabled.

NOTE
This parameter is valid when bit 0 (DPI) of parameter No. 3401 is set to 0.

	#7	#6	#5	#4	#3	#2	#1	#0
3453								CRD

[Input type] Setting input
[Data type] Bit path

#0 CRD If the functions of chamfering and corner R and direct drawing dimension programming are both enabled (bit 2 (CCR) of parameter No.8134 is 1 and bit 2 (NDD) of parameter No.8137 is 0),
0: Chamfering or corner R is enabled.
1: Direct drawing dimension programming is enabled.

	#7	#6	#5	#4	#3	#2	#1	#0
3454				G1B	PGR	DTO		

[Input type] Parameter input
[Data type] Bit path

#2 DTO The method of specifying a rotation axis in cylindrical interpolation mode is set.
0: In cylindrical interpolation mode, the rotation axis is specified by angle.
1: In cylindrical interpolation mode, the rotation axis is specified by distance on an expanded plane.

#3 PGR In the high speed program check mode, data modified during automatic operation is:
0: Neither stored nor restored.
1: Stored and restored.

If this parameter is set to 1, when the high speed program check mode ends, data modified during automatic operation in the high speed program check mode can be restored to the state present before the start of the high speed program check mode.
After the high speed program check mode ends, therefore, it is possible to perform automatic operation in the state present before the start of the high speed program check mode.

⚠ WARNING
In a multi-path system, when one of the paths enters the high speed program check mode, data of all paths is stored. After there is no path left in the high speed program check mode, the data of all paths is restored at a time. This means that when the time to change the status of the high speed program check input signal PGCK<Gn290.5> differs among the paths, the end of the high speed program check mode in a path may affect the operation of other paths. For example, if the high speed program check mode of a path is turned off when machining is in progress on another path, data of the path on which machining is in progress is also restored, which poses serious danger. Therefore, when bit 3 (PGR) of parameter No. 3454 is set to 1 in a multi-path system, the status of the high speed program check mode must be made consistent throughout the paths. Make sure that paths placed in the high speed program check mode and paths placed in the normal mode are not present at the same time.

⚠ CAUTION
1 When this parameter is set to 1, the workpiece coordinate system preset is executed at the end of high-speed program check mode regardless of the setting of the bit 6 (WPS) of parameter No. 3006.
2 The absolute coordinate and relative coordinate of the axis, whose the signal EAX* <G0136> for control axis select (PMC axis control) is 1 at the start/end of high-speed program check mode are not saved/restored.
3 The data of the periodic maintenance screen are not saved/restored.

> ⚠ **CAUTION**
> 4 During the high-speed program check mode, if G10 command is specified to this parameter bit, the alarm PS5364 occurs.
> 5 During the high-speed program check mode, if the EAX* <G0136> is changed from 0 to 1 or from 1 to 0, the alarm PS5364 occurs.

#4 G1B In programmable parameter input, specifying a change to a specific bit parameter is:
0: Disabled.
1: Enabled. (A bit number is specified with Q_.)

	#7	#6	#5	#4	#3	#2	#1	#0
3455								AXDx

[Input type] Parameter input
[Data type] Bit axis

#0 AXDx If a decimal point is omitted for an axis address with which a decimal point can be used, the value is determined:
0: In accordance with the least input increment. (Normal decimal point input)
1: In millimeters, inches, degrees, or seconds. (calculator-type decimal point input)

> **NOTE**
> This parameter specifies the calculator-type decimal point input function for each axis.
> For the same axis name, be sure to make the same setting.

	#7	#6	#5	#4	#3	#2	#1	#0
3457	SCF	SCC			SYS	MC1	MC2	LIB

[Input type] Parameter input
[Data type] Bit path

> **NOTE**
> 1 The parameters LIB, MC2, MC1, and SYS are used to set a search folder for the following subprogram/macro calls:
> - Subprogram call based on an M code
> - Subprogram call based on a particular address
> - Subprogram call based on a second auxiliary function code
> - Macro call based on a G code
> - Macro call based on an M code
> - Macro call based on a T code
> - One-touch macro call
>
> 2 The parameter SCF is used to set whether to add a search folder for the following subprogram/macro calls:
> - Subprogram call based on M98
> - Figure copy based on G72.1/G72.2
> - Macro call based on G65/G66/G66.1
> - Macro interrupt based on M96

#0 LIB The common program directory "//CNC_MEM/USER/LIBRARY/" of the initial directories is:
0: Set as a search directory.

1: Not set as a search directory.

#1 MC2 MTB dedicated directory 2 "//CNC_MEM/MTB2/" of the initial directories is:
0: Set as a search directory.
1: Not set as a search directory.

#2 MC1 MTB dedicated directory 1 "//CNC_MEM/MTB1/" of the initial directories is:
0: Set as a search directory.
1: Not set as a search directory.

#3 SYS The system directory "//CNC_MEM/SYSTEM/" of the initial directories is:
0: Set as a search directory.
1: Not set as a search directory.

#6 SCC The same folder as the main program is added to the top of the search order as a search folder for the following each subprogram call and macro call.
- Subprogram call by M code
- Subprogram call by ASCII code
- Subprogram call by the second auxiliary function code
- Macro call by S code
- Macro call by T code
- Macro call by G code
- Macro call by M code
- One-touch macro call

The same folder as the main program is:
0: Not added in the search order.
1: Added in the search order.
When a search folder is added, a search is made in the following order:
0) Folder only for embedded macro (With the embedded macro-function.)
1) Folder where the main program is stored
2) Common program folder, which is an initial folder (LIBRARY)
3) MTB-dedicated folder 2, which is an initial folder (MTB2)
4) MTB-dedicated folder 1, which is an initial folder (MTB1)
5) System folder, which is an initial folder (SYSTEM)
The folders of 2) through 5) can be excluded from search target folders by setting the bits 0 (LIB), 1 (MC2), 2 (MC1), and 3 (SYS) of parameter No. 3457.

#7 SCF A search folder is:
0: Not added.
1: Added.

When a search folder is added, a search is made in the following order:
0) Folder only for embedded macro (With the embedded macro-function.)
1) Folder where the main program is stored
2) Common program folder, which is an initial folder (LIBRARY)
3) MTB-dedicated folder 2, which is an initial folder (MTB2)
4) MTB-dedicated folder 1, which is an initial folder (MTB1)
5) System folder, which is an initial folder (SYSTEM)

The folders of 3) through 5) can be excluded from search target folders by setting the bits 1 (MC2), 2 (MC1), and 3 (SYS) of parameter No. 3457.

	#7	#6	#5	#4	#3	#2	#1	#0
3458	CRC							TPS
							ARP	

[Input type] Parameter input
[Data type] Bit path

#0 TPS When a plane is selected on the lathe system in the power-on state or cleared state:
0: G18 mode (Z-X plane) is selected.
1: Bits 1 (G18) and 2 (G19) of parameter No. 3402 are followed.

#1 ARP In retrace function, when reverse execution is done during auxiliary function execution and then forward reexecution is done, the output of auxiliary function is:
0: Twice.
1: Once.

> **NOTE**
> This parameter is Automatic setting parameter. For details, refer to the appendix "Automatic setting / Initial setting parameter" in CONNECTION MANUAL (FUNCTION) (B-64693EN-1).

#7 CRC In Direct drawing dimension programming function, when a minus value is commanded as a chamfering value / corner R value:
0: Alarm PS0055 “MISSING MOVE VALUE IN CHF/CNR” is issued.
1: Alarm is not issued. A minus value is converted to a plus value.

	#7	#6	#5	#4	#3	#2	#1	#0
3459								ESL

[Input type] Parameter input
[Data type] Bit path

> **NOTE**
> When this parameter is set, the power must be turned off before operation is continued.

#0 ESL When an NC program contains lowercase alphabetic characters:
0: An alarm is issued.
1: The lowercase characters are converted into their uppercase equivalents.

This parameter specifies how to handle lowercase alphabetic characters included in an NC program, except in its comment part, program name, and folder name, when the program is registered from an external device into CNC built-in memory or compared. The parameter setting is also applied to M198 operation or DNC operation as automatic operation.

[Example] G90G01X100y50;
When ESL is 1, the program is assumed to be G90G01X100Y50;.
When ESL is 0, the alarm SR1090, "PROGRAM FORMAT ERROR" is displayed upon registration or comparison. During operation, the alarm PS1090, "PROGRAM FORMAT ERROR" is issued.

NOTE
1 Program transfer by the program batch input/output function is excluded.
2 Program transfer by the FTP file transfer function is excluded.

3460	Second auxiliary function specification address

[Input type] Parameter input
[Data type] Byte path
[Valid data range] 65 to 67, 85 to 87

Set which of A, B, C, U, V, and W is to be used as the address to specify the second auxiliary function. If an address used as an axis name is set, the second auxiliary function is disabled.

Name	A	B	C	U	V	W
Setting value	65	66	67	85	86	87

Address B is assumed when a value other than the above is set.
However, the name U, V, or W can be used with T system only when G code system B or C is used. When a value from 85 to 87 is set with G code system A, the specification address for the second auxiliary function is B.

3467	Selection of the target folder among initial folders

[Input type] Parameter input
[Data type] Byte path
[Valid data range] 0 to 7, 11 to 20

This parameter selects a folder to be used for the external workpiece number search function, external program number search function, and macro executor program reference and write function among the following initial folders:

0: No specification
1: Root folder (//CNC_MEM)
2: System folder (//CNC_MEM/SYSTEM)
3: MTB-dedicated folder 1 (//CNC_MEM/MTB1)
4: MTB-dedicated folder 2 (//CNC_MEM/MTB2)
5: User folder (//CNC_MEM/USER)
6: Path folder (//CNC_MEM/USER/PATHn) (Note)
(NOTE) PATHn: n is the selected path number (1 to the maximum number of paths).
7: Common program folder (//CNC_MEM/USER/LIBRARY)
8 to 10: Not specified.
11: Path 1 folder (//CNC_MEM/USER/PATH1)
12: Path 2 folder (//CNC_MEM/USER/PATH2)
13: Path 3 folder (//CNC_MEM/USER/PATH3)
14: Path 4 folder (//CNC_MEM/USER/PATH4)

When “0: No specification” is selected, the following folder is used for each function:

- External program number search function
- External workpiece number search function
  (Default foreground folder)
- Macro executor program reference and write function
  (Default background folder)

NOTE
Any user-created folder cannot be specified.
For example, assume that a user folder named PATH3 is created in //CNC_MEM/USER in a 2-path system. User-created folder //CNC_MEM/USER/PATH3 cannot be specified by specifying 13 in this parameter.

	#7	#6	#5	#4	#3	#2	#1	#0
3470								HNU

[Input type] Parameter input
[Data type] Bit path

#0 HNU In helical interpolation, when the circular interpolation axes don't move and other specified axes don't move:
0: Alarm PS0021,"ILLEGAL PLANE SELECT" is issued.
1: Alarm is not issued.

NOTE
This parameter is Automatic setting parameter. For details, refer to the appendix "Automatic setting / Initial setting parameter" in CONNECTION MANUAL (FUNCTION) (B-64693EN-1).

4.22 PARAMETERS OF PITCH ERROR COMPENSATION

	#7	#6	#5	#4	#3	#2	#1	#0
3601							EPC	

[Input type] Parameter input
[Data type] Bit path

NOTE
When this parameter is set, the power must be turned off before operation is continued.

#1 EPC The pitch error compensation on an axis of Cs contour control on the slave spindle side during simple synchronous spindle control is:
0: The same as that on the master spindle.
1: Just for the slave spindle.

	#7	#6	#5	#4	#3	#2	#1	#0
3602								APE

[Input type] Parameter input
[Data type] Bit

NOTE
When this parameter is set, the power must be turned off before operation is continued.

#0 APE The input type of Stored Pitch Error Compensation data is
0: An incremental value.
1: An absolute value.

This function is effective to the following functions.
- Stored Pitch Error Compensation
- Bi-directional Pitch Error Compensation
- Interpolation Type Pitch Error Compensation
- Interpolation Type Straightness Compensation
- Spindle Command Synchronous Control Independent Pitch Error Compensation

> **NOTE**
> If this parameter is changed, the data of stored pitch error compensation is cleared automatically at next power on.

	#7	#6	#5	#4	#3	#2	#1	#0
3605						IPCx	IPPx	BDPx

[Input type] Parameter input
[Data type] Bit axis

> **NOTE**
> When at least one of these parameters is set, the power must be turned off before operation is continued.

#0 BDPx Both-direction pitch error compensation is:
0: Not used.
1: Used.

#1 IPPx Interpolation type pitch error compensation is:
0: Not used.
1: Used.
In interpolation type pitch error compensation, a compensation value at each point in each error completion point interval is divided for output of one pulse at equally spaced intervals.
If feedrate is large, multiple compensation pulse may be output at a time.
A minimum interval where multiple compensation pulses are not output at a time is determined by the following expression:
Minimum pitch error compensation point interval(mm) = (Fmax/7500) × (Pmax+1)
Fmax: Maximum feedrate(mm/min)
Pmax: Maximum pitch error compensation value((Maximum value of set amount of pitch error compensation of each compensation point)×(Pitch error compensation magnification))(Detection unit)
[Example]
When the maximum feedrate is 15000 mm/min, and the maximum pitch error compensation value is 7 pulses, the minimum compensation point interval is 16mm.

> **NOTE**
> Interpolation type pitch error compensation cannot be used with spindle positioning.

#2 IPCx Interpolated straightness compensation function is:
0: Not used.

1: Used.
Specify the value of this parameter for the moving axis.

3620	Number of the pitch error compensation position for the reference position for each axis

NOTE
When this parameter is set, the power must be turned off before operation is continued.

[Input type] Parameter input
[Data type] Word axis
[Valid data range] 0 to 1535
Set the number of the pitch error compensation position for the reference position for each axis.

3621	Number of the pitch error compensation position at extremely negative position for each axis

NOTE
When this parameter is set, the power must be turned off before operation is continued.

[Input type] Parameter input
[Data type] Word axis
[Valid data range] 0 to 1535
Set the number of the pitch error compensation position at the extremely negative position for each axis.

3622	Number of the pitch error compensation position at extremely positive position for each axis

NOTE
When this parameter is set, the power must be turned off before operation is continued.

[Input type] Parameter input
[Data type] Word axis
[Valid data range] 0 to 1535
Set the number of the pitch error compensation position at the extremely positive position for each axis.
The setting value must be larger than that of parameter No. 3620.

3623	Magnification for pitch error compensation for each axis

NOTE
When this parameter is set, the power must be turned off before operation is continued.

[Input type] Parameter input
[Data type] Byte axis
[Valid data range] 0 to 100
Set the magnification for pitch error compensation for each axis.
If the magnification is set to 1, the same unit as the detection unit is used for the compensation data.
If 0 is set, compensation is not performed.

3624	Interval between pitch error compensation positions for each axis

NOTE
When this parameter is set, the power must be turned off before operation is continued.

[Input type] Parameter input
[Data type] Real axis
[Unit of data] mm, inch, degree (machine unit)
[Min. unit of data] Depend on the increment system of the applied axis
[Valid data range] See the description below.
The pitch error compensation positions are arranged with equal spacing. The space between two adjacent positions is set for each axis. The minimum interval between pitch error compensation positions is limited and obtained from the following equation:
Minimum interval between pitch error compensation positions = maximum feedrate/7500
Unit : mm, inch, deg or mm/min, inch/min, deg/min
[Example] When the maximum feedrate is 15000 mm/min, the minimum interval between pitch error compensation positions is 2 mm.

3625	Travel distance per revolution in pitch error compensation of rotation axis type

NOTE
When this parameter is set, the power must be turned off before operation is continued.

[Input type] Parameter input
[Data type] Real axis
[Unit of data] mm, inch, degree (machine unit)
[Min. unit of data] Depend on the increment system of the applied axis
[Valid data range] See the description below.
If the pitch error compensation of rotation axis type is performed (bit 1 (ROSx) of parameter No. 1006 is set to 0 and bit 0 (ROTx) of parameter No. 1006 is set to 1), set the travel distance per revolution. The travel distance per revolution does not have to be 360 degrees, and a cycle of pitch error compensation of rotation axis type can be set.
However, the travel distance per revolution, compensation interval, and number of compensation points must satisfy the following condition:
(Travel distance per revolution)
= (Compensation interval) × (Number of compensation points)
The compensation at each compensation point must be set so that the total compensation per revolution equals 0.

NOTE
When this parameter is set to 0, the travel distance per revolution becomes 360 degrees.

3626	Number of the both-direction pitch error compensation position at extremely negative position (for movement in the negative direction)

NOTE
When this parameter is set, the power must be turned off before operation is continued.

[Input type] Parameter input
[Data type] Word axis
[Valid data range] 0 to 1023, 3000 to 4023
When using both-direction pitch error compensation, set the number of compensation point at the farthest end in the negative direction for a movement in the negative direction.

NOTE
1 For a movement in the positive direction, set the compensation point number at the farthest end in the negative direction in parameter No. 3621.
2 A set of compensation data items for a single axis should not be set to lie astride 1023 to 3000.

3627	Pitch error compensation at reference position when a movement to the reference position is made from the direction opposite to the direction of reference position return

NOTE
When this parameter is set, the power must be turned off before operation is continued.

[Input type] Parameter input
[Data type] Word axis
[Unit of data] Detection unit
[Valid data range] -32768 to 32767
Set the absolute value of pitch error compensation at reference position when a movement to the reference position is made from the negative direction if the direction of reference position return (bit 5 (ZMI) of parameter No. 1006) is positive or from the positive direction if the direction of reference position return is negative.

3661	Number of a pitch error compensation position for the reference position for each slave axis when independent pitch error compensation is performed under spindle command synchronous control

NOTE
When this parameter is set, the power must be turned off before operation is continued.

[Input type] Parameter input
[Data type] Word spindle
[Valid data range] 0 to 1535
Set the number of a pitch error compensation position for the reference position.

NOTE
1 This parameter is valid if pitch error compensation on an axis of Cs contour control on the salve side during simple synchronous spindle control is carried out just for the slave axis (bit 1 (EPC) of parameter No. 3601 is set to 1).
2 The usable number of pitch error compensation positions and their range depend on the option configuration.

3666	Number of the pitch error compensation position at extremely negative position for each slave axis when independent pitch error compensation is performed under spindle command synchronous control

NOTE
When this parameter is set, the power must be turned off before operation is continued.

[Input type] Parameter input
[Data type] Word spindle
[Valid data range] 0 to 1535
Set the compensation position number at the farthest end in the negative direction.

NOTE
1 This parameter is valid if pitch error compensation on an axis of Cs contour control on the salve side during simple synchronous spindle control is carried out just for the slave axis (bit 1 (EPC) of parameter No. 3601 is set to 1).
2 When using the both-direction pitch error compensation function, set a compensation position number for a movement in the positive direction.
3 The usable number of pitch error compensation positions and their range depend on the option configuration.

3671	Number of the pitch error compensation position at extremely positive position for each slave axis when independent pitch error compensation is performed under spindle command synchronous control

NOTE
When this parameter is set, the power must be turned off before operation is continued.

[Input type] Parameter input
[Data type] Word spindle
[Valid data range] 0 to 1535
Set the compensation position number at the farthest end in the positive direction.

NOTE
1 This parameter is valid if pitch error compensation on an axis of Cs contour control on the salve side during simple synchronous spindle control is carried out just for the slave axis (bit 1 (EPC) of parameter No. 3601 is set to 1).
2 When using the both-direction pitch error compensation function, set a compensation position number for a movement in the positive direction.
3 The usable number of pitch error compensation positions and their range depend on the option configuration.

3676	Number of the pitch error compensation position at extremely negative position for each slave axis when independent both-direction pitch error compensation is performed under spindle command synchronous control

NOTE
When this parameter is set, the power must be turned off before operation is continued.

[Input type] Parameter input
[Data type] Word spindle
[Valid data range] 0 to 1535

When using both-direction pitch error compensation, set the compensation position number at the farthest end in the negative direction for a movement in the negative direction.

NOTE
1 This parameter is valid if pitch error compensation on an axis of Cs contour control on the salve side during simple synchronous spindle control is carried out just for the slave axis (bit 1 (EPC) of parameter No. 3601 is set to 1).
2 The usable number of pitch error compensation positions and their range depend on the option configuration.

3681	Pitch error compensation value at the reference position when a movement is made to the reference position in the direction opposite to the reference position return direction for each slave axis in the case where independent both-direction pitch error compensation is performed under spindle command synchronous control

NOTE
When this parameter is set, the power must be turned off before operation is continued.

[Input type] Parameter input
[Data type] Word spindle
[Valid data range] -32767 to 32767

By using an absolute value, set a pitch error compensation value at the reference position when a movement is made in the negative direction if the reference position return direction (bit 5 (ZMI) of parameter No. 1006) is positive or when a movement is made in the positive direction if the reference position return direction (bit 5 (ZMI) of parameter No. 1006) is negative.

NOTE
This parameter is valid if pitch error compensation on an axis of Cs contour control on the salve side during simple synchronous spindle control is carried out just for the slave axis (bit 1 (EPC) of parameter No. 3601 is set to 1).

4.23 PARAMETERS OF SPINDLE CONTROL

	#7	#6	#5	#4	#3	#2	#1	#0
3700						CNM	NRF	CRF

[Input type] Parameter input
[Data type] Bit path

#0 CRF Reference position setting at an arbitrary position under Cs contour control is:
0: Not used.
1: Used.

> **NOTE**
> When this function is used, an attempt to specify G00 for a Cs contour control axis without performing a reference position return operation even once after switching the serial spindle to the Cs contour control mode results in the alarm PS0303, “REFERENCE POSITION RETURN IS NOT PERFORMED” even if bit 1 (NRF) of parameter No. 3700 is set to 0. Be sure to perform a reference position return operation by specifying G28.

#1 NRF With the first move command (G00) after switching the serial spindle to Cs contour control mode:
0: A reference position return operation is once performed then positioning is performed.
1: A normal positioning operation is performed.

#2 CNM When an axis command of travel distance 0 is specified for the Cs axis in the origin unestablished state:
0: The alarm PS0224, "ZERO RETURN NOT FINISHED" is issued.
1: The alarm PS0224 is not issued.

	#7	#6	#5	#4	#3	#2	#1	#0
3702							EMS	

[Input type] Parameter input
[Data type] Bit path

#1 EMS The multi-spindle control function is:
0: Used.
1: Not used.

	#7	#6	#5	#4	#3	#2	#1	#0
3703				SPR	MPP	MPM		2P2

[Input type] Parameter input
[Data type] Bit

> **NOTE**
> When at least one of these parameters is set, the power must be turned off before operation is continued.

#0 2P2 When a multi-path system is used, inter-path spindle control allows:
0: Configuration where the spindle that belongs to one path only is shared between path 1 and path 2.
1: Configuration where the spindles that belong to path 1 and 2 are shared between the two paths.
When the spindle that belongs to an arbitrary path is shared between arbitrary paths, set bit 2 (MPM) of parameter No. 3703. (The meanings of signals used vary, so that ladder program needs to be modified.)

#2 MPM When a multi-path system is used, the configuration allowed by inter-path spindle control:
0: Follows the setting of bit 0 (2P2) of parameter No. 3703.
1: Allows the sharing of the spindle that belongs to a path between arbitrary paths.

#3 MPP In multi-spindle control, a spindle selection using a programmed command instead of using the signals (SWS1 to SWS4<Gn027.0 to Gn027.2, Gn026.3>) is:
0: Not made.
1: Made.

> **NOTE**
> When this parameter is set to 1, set parameter No. 3781 at the same time.

#4 SPR Rigid tapping with spindle of another path function is:
0: Not available.
1: Available.

	#7	#6	#5	#4	#3	#2	#1	#0
3704	CSS		SSY	SSS				

[Input type] Parameter input
[Data type] Bit path

> **NOTE**
> When at least one of these parameters is set, the power must be turned off before operation is continued.

#4 SSS Synchronous spindle control by each spindle is:
0: Not performed.
1: Performed.
The master axis and slave axis of synchronous spindle control can be selected from the arbitrary spindles.
The target spindle of synchronous spindle control is specified in parameter No. 4831.
In addition, the following signals affect the control.
- Synchronous spindle signals of each spindle SPSYC1-SPSYC4<Gn288.0-Gn288.3>
- Signals of synchronous control of the spindle phase for each spindle SPPHS1-SPPHS4<Gn289.0-Gn289.3>

#5 SSY Simple synchronous spindle control by each spindle is:
0: Not performed.
1: Performed.
The master and slave axis of simple synchronous spindle control can be selected from the arbitrary spindles.
The target spindle of simple synchronous spindle control is set in parameter No. 4821.

In addition, the following signals affect the control.

- Signals of simple synchronous control of each spindle
  ESSYC1-ESSYC4<Gn264.0-Gn264.3>
- Parking signals of simple synchronous control of each spindle
  PKESE1-PKESE4<Gn265.0-Gn265.3>

#7 CSS On each spindle, Cs contour control is:

0: Not performed.
1: Performed.

	#7	#6	#5	#4	#3	#2	#1	#0
3705				EVS				ESF
		SFA	NSF		SGT	SGB	GST	ESF

[Input type] Parameter input
[Data type] Bit path

#0 ESF When the spindle control function (Spindle analog output or Spindle serial output) is used, and the constant surface speed control function is used or bit 4 (GTT) of parameter No. 3706 is set to 1:

0: S codes and spindle function strobe signal SF<Fn007.2> are output for all S commands.
1: For T system:
   S codes and spindle function strobe signal SF are not output for an S command in the constant surface speed control (G96) mode and a command for maximum spindle speed clamping (G92 S_; (G50 for G code system A)).
   For M system:
   S codes and SF are not output for an S command in the constant surface speed control (G96) mode.

NOTE
The operation of this parameter varies between T system and M system.
For T system:
This parameter is valid when bit 4 (EVS) of parameter No. 3705 is set to 1.
For M system:
For an S command for maximum spindle speed clamping (G92 S_;), SF is not output, regardless of the setting of this parameter.

#1 GST The spindle orientation signal SOR<Gn029.5> is used for:

0: Spindle orientation
1: Gear shift

#2 SGB Gear switching method is:

0: Method A (Parameters Nos. 3741 to 3743 for the maximum spindle speed at each gear are used for gear selection.)
1: Method B (When bit 2 (MCH) of parameter No. 3790 is set to 0, parameters Nos. 3751 to 3752 are used for gear selection. When bit 2 (MCH) of parameter No. 3790 is set to 1, parameters Nos. 3753 to 3754 are used for gear selection).

#3 SGT Gear switching method during tapping cycle (G84, G74) is:
0: Method A (Same as the normal gear switching method)
1: Method B (Gears are switched during tapping cycle (G84, G74) according to the spindle speed set in parameters Nos. 3761 and 3762).

#4 EVS When the spindle control function (Spindle analog output or Spindle serial output) is used, S codes and spindle function strobe signal SF<Fn007.2> are:
0: Not output for an S command.
1: Output for an S command.
The output of S codes and spindle function strobe signal SF for an S command in constant surface speed control mode (G96), or for an S command used to specify maximum spindle speed clamping (G92 S_; (G50 for G code system A)) depends on the setting of bit 0 (ESF) of parameter No. 3705.

#5 NSF For M system, when a T type gear is selected (with bit 4 (GTT) of parameter No. 3706 set to 1 or with the constant surface speed control (bit 0 (SSC) of parameter No.8133 is 1)), and an S code is specified:
0: Spindle function strobe signal SF is output.
1: Spindle function strobe signal SF is not output.

> **NOTE**
> This parameter does not affect S code output. For an S command for maximum spindle speed clamping (G92 S_;), spindle function strobe signal SF is not output, regardless of the setting of this parameter.

#6 SFA The spindle function strobe signal SF is output:
0: When gears are switched.
1: Irrespective of whether gears are switched.

	#7	#6	#5	#4	#3	#2	#1	#0
3706	TCW	CWM	ORM		PCS	MPA		
	TCW	CWM	ORM	GTT	PCS	MPA		

[Input type] Parameter input
[Data type] Bit path

#2 MPA If a spindle is to be selected using a P command (with bit 3 (MPP) of parameter No. 3703 set to 1) in multi-spindle control, and a P command is not specified together with an S command:
0: The alarm PS5305, “ILLEGAL SPINDLE NUMBER” is issued.
1: The last P specified by S_ P_; (by S_ P_; specified for the path in case of a multi-path system) is used. If P is not specified even once after power-on, the value of parameter No. 3775 is used.

> **NOTE**
> This parameter is valid only when bit 3 (MPP) of parameter No. 3703 is set to 1.

#3 PCS When a multi-path system is used, and multi-spindle control is enabled with each path, as the position coder signals (PC2SLC<Gn028.7>, PC3SLC<Gn026.0>, PC4SLC<Gn026.1>) for selecting the position coder of a spindle among the multiple spindles that belong to a path selected by the inter-path spindle feedback selection signals:

0: The signals of the path selected by the inter-path spindle feedback selection signal are used.

1: The signals of the local path are used.

Suppose that path x is selected by the inter-path spindle feedback selection signals (SLPCA<Gn064.2>, SLPCB<Gn064.3>, SLPCC<Gn403.4>, SLPCD<Gn403.5>). Then, the following position coder is selected in path x by the position coder selection signals:
n = m(path number)-1
y = x(path number selected by the spindle feedback selection signals)-1

When bit 3 (PCS) of parameter No. 3706 is set to 0

Position coder selected in path m	Selected path Position coder selection signals (path x)			Selecting path Position coder selection signals (path m)		
	PC2SLC <Gy028.7>	PC3SLC <Gy026.0>	PC4SLC <Gy026.1>	PC2SLC <Gn028.7>	PC3SLC <Gn026.0>	PC4SLC <Gn026.1>
PC1 of path x	0	0	0	-	-	-
PC2 of path x	1	0	0	-	-	-
PC3 of path x	0	1	0	-	-	-
PC4 of path x	0	0	1	-	-	-

When bit 3 (PCS) of parameter No. 3706 is set to 1

Position coder selected in path m	Selected path Position coder selection signals (path x)			Selecting path Position coder selection signals (path m)		
	PC2SLC <Gy028.7>	PC3SLC <Gy026.0>	PC4SLC <Gy026.1>	PC2SLC <Gn028.7>	PC3SLC <Gn026.0>	PC4SLC <Gn026.1>
PC1 of path x	-	-	-	0	0	0
PC2 of path x	-	-	-	1	0	0
PC3 of path x	-	-	-	0	1	0
PC4 of path x	-	-	-	0	0	1

#4 GTT Spindle gear selection method is:

0: Type M.

1: Type T.

NOTE

1 This parameter is effective in M system.

2 M type
The gear selection signal is not input. The CNC selects a gear based on the speed range of each gear set by a parameter beforehand according to S codes, and the selected gear is posted by outputting the gear selection signal. Moreover, the spindle speed matching the gear selected by the output gear selection signal is output.
T type
The gear selection signal is input. The spindle speed matching the gear selected by this signal is output.

3 When the constant surface speed control is enabled (bit 0 (SSC) of parameter No.8133 is 1), type T is selected, regardless of whether this parameter is specified.

NOTE
4 When type T spindle gear switching is selected, the following parameters have no effect:
No.3705#2(SGB), No.3751, No.3752,
No.3705#1(GST), No.3705#3(SGT), No.3761, No.3762,
No.3705#6(SFA), No.3735, No.3736
On the other hand, parameter No. 3744 becomes usable.
5 When multi spindle control is used, select T type.

#5 ORM Voltage polarity during spindle orientation
0: Positive
1: Negative

#6 CWM
#7 TCW Voltage polarity when the spindle speed voltage is output

TCW	CWM	Voltage polarity
0	0	Both M03 and M04 positive
0	1	Both M03 and M04 negative
1	0	M03 positive, M04 negative
1	1	M03 negative, M04 positive

	#7	#6	#5	#4	#3	#2	#1	#0
3708		TSO	SOC				SAT	SAR
		TSO	SOC					SAR

[Input type] Parameter input
[Data type] Bit path

#0 SAR The spindle speed arrival signal SAR<Gn029.4> is:
0: Not checked
1: Checked

#1 SAT Check of the spindle speed arrival signal at the start of executing the thread cutting block
0: The signal is checked only when bit 0 (SAR) of parameter No. 3708 is set to 1.
1: The signal is always checked irrespective of the setting of SAR.

NOTE
When thread cutting blocks are consecutive, the spindle speed arrival signal is not checked for the second and subsequent thread cutting blocks.

#5 SOC During constant surface speed control (G96 mode), the speed clamp by the maximum spindle speed clamp command (G92 S_; (G50 for G code system A of lathe system)) is carried out:
0: Before spindle speed override.
1: After spindle speed override.
When this parameter is set to 0, the spindle speed may exceed the maximum spindle speed (numeric value following S in G92 S_; (G50 for G code system A of lathe system)).
If this parameter is set to 1, the spindle speed is limited to the maximum spindle speed.
The spindle speed is limited to the upper limit of spindle speed specified in parameter No. 3772, irrespective of the setting of this parameter.

#6 TSO During a threading or tapping cycle, the spindle override is:
0: Disabled (tied to 100%).
1: Enabled.

> **NOTE**
> During rigid tapping, the override is tied to 100%, irrespective of the setting of this parameter.

	#7	#6	#5	#4	#3	#2	#1	#0
3709					MRS	MSI	RSC	SAM

[Input type] Parameter input
[Data type] Bit path

#0 SAM The sampling frequency to obtain the average spindle speed
0: 4 (Normally, set to 0.)
1: 1

#1 RSC In the constant surface speed control mode, the surface speed of a rapid traverse block is calculated:
0: In accordance with the coordinates of the end point.
1: In accordance with the current value, as in cutting feed.

#2 MSI In multi-spindle control, the SIND signal is valid
0: Only when the first spindle is valid (SIND signal for the 2nd, 3rd spindle becomes ineffective) (TYPE-A)
1: For each spindle irrespective of whether the spindle is selected (Each spindle has its own SIND signal). (TYPE-B)

#3 MRS When the actual spindle speed signals and S 12-bit code signals are output in multi-spindle control:
0: The signals common to the first spindle and second spindle are used, and the signals for the spindle selected by the spindle selection signal are output.
1: The signals for the first spindle and the signals for the second spindle are output separately.

	#7	#6	#5	#4	#3	#2	#1	#0
3712		GMB		CSA		CSF		

[Input type] Parameter input
[Data type] Bit

#2 CSF In the Cs contour control mode, the function for setting machine coordinates and absolute coordinates based on the machine position of the spindle if the origin is already set up is:
0: Disabled.
1: Enabled.

#4 CSA When the constant surface speed control command (G96S_) is specified, if the max spindle speed clamp command (G92S_; in system M or G50S_; in system T) is not specified even once after power-up:
0 : Alarm does not occur (conventional specification).
1 : Alarm PS5557 “NO MAX SP SPEED CLAMP COMMAND” occurs.

#6 GMB With type-M gear switching method B, the speed of each gear is clamped to:

0 : The maximum rotation speed (No. 3741 to No. 3743) of each gear or the maximum clamping speed (No. 3736) of the spindle motor.

1 : Each gear switching point by parameters Nos. 3751 to 3752 in case of bit 2 (MCH) of parameter No. 3790 is set to 0. Each gear switching point by parameters Nos. 3753 to 3754 in case of bit 2 (MCH) of parameter No. 3790 is set to 1.

	#7	#6	#5	#4	#3	#2	#1	#0
3713		MPC		EOV	MSC			

[Input type] Parameter input
[Data type] Bit

> **NOTE**
> When at least one of these parameters is set, the power must be turned off before operation is continued.

#3 MSC Multi-spindle control TYPE-C is:

0: Not used.
1: Used.

> **NOTE**
> If parameter MSC and bit 2 (MSI) of parameter No. 3709 for multi-spindle control TYPE-B are set to 1 at the same time, multi-spindle control TYPE-C is enabled.

#4 EOV Each spindle speed override is:

0: Not used.
1: Used.

> **NOTE**
> Multi-spindle control TYPE-C (bit 3 (MSC) of parameter No. 3713=1) is necessary to use this function.

#6 MPC When a spindle is selected with address P in a program during multi-spindle control (bit 3 (MPP) of parameter No. 3703 is set to 1), position coder feedback used for thread cutting, feed per revolution, and so forth is:

0: Not changed automatically according to the selected spindle.
1: Changed automatically according to the selected spindle.

> **NOTE**
> Setting this parameter produces the same effects as when position coder select signals PC2SLC<Gn028.7>, PC3SLC<Gn026.0>, and PC4SLC<Gn026.1>, inter-path spindle feedback signals SLPCA<Gn064.2>, SLPCB<Gn064.3>, SLPCC<Gn403.4>, and SLPCD<Gn403.5> are set.
> At this time, even when an attempt to set these signals is made by a PMC ladder, these signal operations are ignored.

	#7	#6	#5	#4	#3	#2	#1	#0
3715								NSAx

[Input type] Parameter input
[Data type] Bit axis

#0 NSAx When a move command is executed for an axis, the spindle speed arrival signal SAR is:
0: Checked.
1: Not checked.
Set an axis for which the spindle speed arrival signal SAR need not be checked when a move command is executed for the axis. When a move command is specified only for an axis with this parameter set to 1, the spindle speed arrival signal SAR is not checked.

	#7	#6	#5	#4	#3	#2	#1	#0
3716	FBPs							A/Ss

[Input type] Parameter input
[Data type] Bit spindle

> **NOTE**
> When this parameter is set, the power must be turned off before operation is continued.

#0 A/Ss Spindle motor type is :
0: Analog spindle.
1: Serial spindle.

> **NOTE**
> 1 To use a serial spindle, set 0 to bit 5 (SSN) of parameter No.8133.
> 2 The 1 analog spindle at the maximum can be controlled in a system.
> 3 When using an analog spindle, assign it at the end of the spindle configuration.

#7 FBPs Changing the number of spindle position coder pulses is :
0: Not executed.
1: Executed.

3717	Spindle amplifier number of each spindle

> **NOTE**
> When this parameter is set, the power must be turned off before operation is continued.

[Input type] Parameter input
[Data type] Byte spindle
[Valid data range] 0 to Maximum number of controlled axes
Set a spindle amplifier number to be assigned to each spindle.
0: No spindle amplifier is connected.
1: Spindle motor connected to amplifier number 1 is used.
2: Spindle motor connected to amplifier number 2 is used.
to
n: Spindle motor connected to amplifier number n is used.

NOTE

1 In addition, it is necessary to set FSSB when a serial spindle is used. Refer to Parameter Nos.24000 to 24095 for details.
2 If value of this parameter is larger than the maximum value, the alarm SP1996, "ILLEGAL SPINDLE PARAMETER SETTING" occurs.
3 If the spindle motor is treated as hypothetical Cs axis control or spindle control with servo motor, set this parameter to “0”.
4 In the display order of the parameter No.982, the spindle axes since the spindle axis that 0 is set to this parameter become invalid, too. However, the case that the spindle motor is treated as hypothetical Cs axis control or spindle control with servo motor is excepted.

Example) On the following setting, S3 and S4 spindle axes are invalid when the spindle motor of S3 is not treated as hypothetical Cs axis control or spindle control with servo motor.

Display order of No.982	Setting value of No.982	Setting value of No.3717
S1	1	1
S2	2	2
S3	1	0
S4	2	3

3718 **Subscript for display of a serial spindle (main spindle) or analog spindle**

[Input type] Parameter input
[Data type] Byte spindle
[Valid data range] 0 to 122

Set a subscript to be added to spindle speed display on a screen such as the position display screen.
Used when the spindle switching function is not used, or used for the main spindle when the spindle switching function is used.

NOTE

This parameter is invalid when an extended spindle name is used.

3719 **Subscript for display of a serial spindle (sub-spindle)**

[Input type] Parameter input
[Data type] Byte spindle
[Valid data range] 0 to 122

Set a subscript to be added to spindle speed display on a screen such as the position display screen.
Used for the sub-spindle when the spindle switching function is used.

NOTE

This parameter is invalid when an extended spindle name is used.

3720	Number of position coder pulses

NOTE
When this parameter is set, the power must be turned off before operation is continued.

[Input type] Parameter input
[Data type] 2-word spindle
[Unit of data] Number of pulses
[Valid data range] Serial spindle
: 0, 4096 When bit 7 (FBP) of parameter No.3716 is set to 1: 4096×2^{14}
Spindle control with servo motor
: 0, 4096 When bit 7 (FBP) of parameter No.3716 is set to 1: 4096×2^{14}
Analog spindle
: 0, 4096 When bit 7 (FBP) of parameter No.3716 is set to 1: from 0 to 400000

Set the number of position coder pulses.
In analog spindle, 4096 is set to parameter automatically if parameter No.3720 is set to 0 or less.
In serial spindle or spindle control with servo motor, the setting method is changed by setting of the bit 7 (FBP) of parameter No.3716.
- When the bit 7 (FBP) of parameter No.3716 is set to 0:
  4096 is set to parameter automatically if parameter No.3720 is set to 0 or less.
- When the bit 7 (FBP) of parameter No.3716 is set to 1:
  4096×2^{14} is set to parameter automatically.

3721	Number of gear teeth on the position coder side

[Input type] Parameter input
[Data type] Word spindle
[Valid data range] 0 to 9999
Set the number of gear teeth on the position coder side in speed control (such as feed per revolution).

3722	Number of gear teeth on the spindle side

[Input type] Parameter input
[Data type] Word spindle
[Valid data range] 0 to 9999
Set the number of gear teeth on the spindle side in speed control (such as feed per revolution).

⚠ CAUTION
1 Parameter No.3721 and No.3722 cannot be used for thread cutting. If thread cutting was done by setting the any value on these parameters, the correct screw can't be cut.
In the machine to do thread cutting, please mechanically connected to between the spindle and position coder by the gear ratio=1:1. And these parameters set the No.3721=0, No.3722=0.
(It is the setting for the gear ratio 1:1.)

> ⚠ **CAUTION**
> 2 Parameter No.3721 and No.3722 cannot be used for Cs contour control. If Cs contour control was done by setting the any value on these parameters, spindle can't move as commanded. In the machine to do Cs contour control, connect mechanically between the spindle and position coder by the gear ratio = 1:1. And these parameters set the No.3721=0, No.3722=0. (It is the setting for the gear ratio 1:1.)

	#7	#6	#5	#4	#3	#2	#1	#0
3729	CSCs	CHMs			NCSs	CSNs	FPRs	ORTs

[Input type] Parameter input
[Data type] Bit spindle

#0 ORTs When a serial spindle is used, the spindle orientation function of stop position external setting type based on the position coder is:
0: Not performed.
1: Performed.

> **NOTE**
> When bit 0 (ORPUNT) of No.4542 is set to 1, if bit 0 (ORTs) of parameter No.3729 is changed, the power must be turned off before operation is continued.

#1 FPRs Feed per revolution (without a position coder) is:
0: Not used for a spindle.
1: Used for a spindle.
In a machine that does not use a position coder, when FPRs is set to 1 for each axis, feed per revolution can be performed with a spindle command. A feed per revolution is specified with G95 (G99 for lathe systems) in the same way as for normal operation.
When multi-spindle control is performed, the target spindle for feed per revolution is selected with a position coder select signal (PC2SLC<Gn028.7>, PC3SLC<Gn026.0>, PC4SLC <Gn026.1>).

> **NOTE**
> 1 Enable the constant surface speed control (bit 0 (SSC) of parameter No.8133 is 1).
> 2 This function is not effective to spindle output control by the PMC.
> 3 When this parameter is set to 1, feed per revolution cannot be used to spindle output control by the PMC.

#2 CSNs When the Cs contour control mode is turned off, an in-position check is:
0: Performed.
1: Not performed.

> **NOTE**
> This parameter is Automatic setting parameter. For details, refer to the appendix "Automatic setting / Initial setting parameter" in CONNECTION MANUAL (FUNCTION) (B-64693EN-1).

#3 NCSs When the Cs contour control mode is set:

0: Switching to Cs contour control is completed when the spindle activating current is on (the spindle amplifier is ready for operation in the Cs contour control mode).

1: Switching to Cs contour control is completed even when the spindle activating current is off (the spindle amplifier is not ready for operation in the Cs contour control mode).

If this parameter is set to 1, the Cs contour control switch end signal is output without waiting for the spindle to decelerate to a stop.

#6 CHMs Manual reference position return after the reference position for the Cs contour control axis is established is performed as:

0: Spindle orientation operation.

1: High-speed type of reference position return operation.

#7 CSCs The increment system of the Cs contour control axis is:

0: IS-B.

1: IS-C.

3730	Data used for adjusting the gain of the analog output of spindle speed

[Input type] Parameter input
[Data type] Word spindle
[Unit of data] 0.1%
[Valid data range] 700 to 1250

Set data used for adjusting the gain of the analog output of spindle speed.

[Adjustment method]

<1> Assign standard value 1000 to the parameter.

<2> Specify the spindle speed so that the analog output of the spindle speed is the maximum voltage (10 V).

<3> Measure the output voltage.

<4> Assign the value obtained by the following equation to parameter No. 3730.
Setting value = (10 (V) / Measured data (V)) × 1000

<5> After setting the parameter, specify the spindle speed so that the analog output of the spindle speed is the maximum voltage. Confirm that the output voltage is 10V.

NOTE
This parameter needs not to be set for serial spindles.

3731	Compensation value for the offset voltage of spindle speed analog output

[Input type] Parameter input
[Data type] Word spindle
[Unit of data] Velo
[Valid data range] -1024 to 1024

Set a compensation value for the offset voltage of spindle speed analog output.
Setting = -8191 × offset voltage (V)/12.5

[Adjustment method]

<1> Assign standard value 0 to the parameter.

<2> Specify the spindle speed so that the analog output of the spindle speed is 0.

<3> Measure the output voltage.

<4> Assign the value obtained by the following equation to parameter No. 3731.

$$\text{Setting value} = \frac{-8191 \times \text{Offset voltage (V)}}{12.5}$$

<5> After setting the parameter, specify the spindle speed so that the analog output of the spindle speed is 0. Confirm that the output voltage is 0V.

NOTE
This parameter needs not to be set for serial spindles.

3732	The spindle speed during spindle orientation or the spindle motor speed during spindle gear shift

[Input type] Parameter input
[Data type] 2-word path
[Valid data range] 0 to 20000

Set the spindle speed during spindle orientation or the spindle motor speed during gear shift.
When bit 1 (GST) of parameter No. 3705 is set to 0, set the spindle speed during spindle orientation in min^{-1}.
When bit 1 (GST) of parameter No. 3705 is set to 1, set the spindle motor speed during spindle gear shift calculated from the following formula.
For a serial spindle

$$\text{Setting value} = \frac{\text{Spindle motor speed during spindle gear shift}}{\text{Maximum spindle motor speed}} \times 16383$$

For an analog spindle

$$\text{Setting value} = \frac{\text{Spindle motor speed during spindle gear shift}}{\text{Maximum spindle motor speed}} \times 4095$$

3735	
	Minimum clamp speed of the spindle motor

[Input type] Parameter input
[Data type] Word path
[Valid data range] 0 to 4095

Set the minimum clamp speed of the spindle motor.

$$\text{Setting value} = \frac{\text{Minimum clamp speed of the spindle motor}}{\text{Maximum spindle motor speed}} \times 4095$$

3736	
	Maximum clamp speed of the spindle motor

[Input type] Parameter input
[Data type] Word path
[Valid data range] 0 to 4095

Set the maximum clamp speed of the spindle motor.

$$\text{Setting value} = \frac{\text{Maximum clamp speed of the spindle motor}}{\text{Maximum spindle motor speed}} \times 4095$$

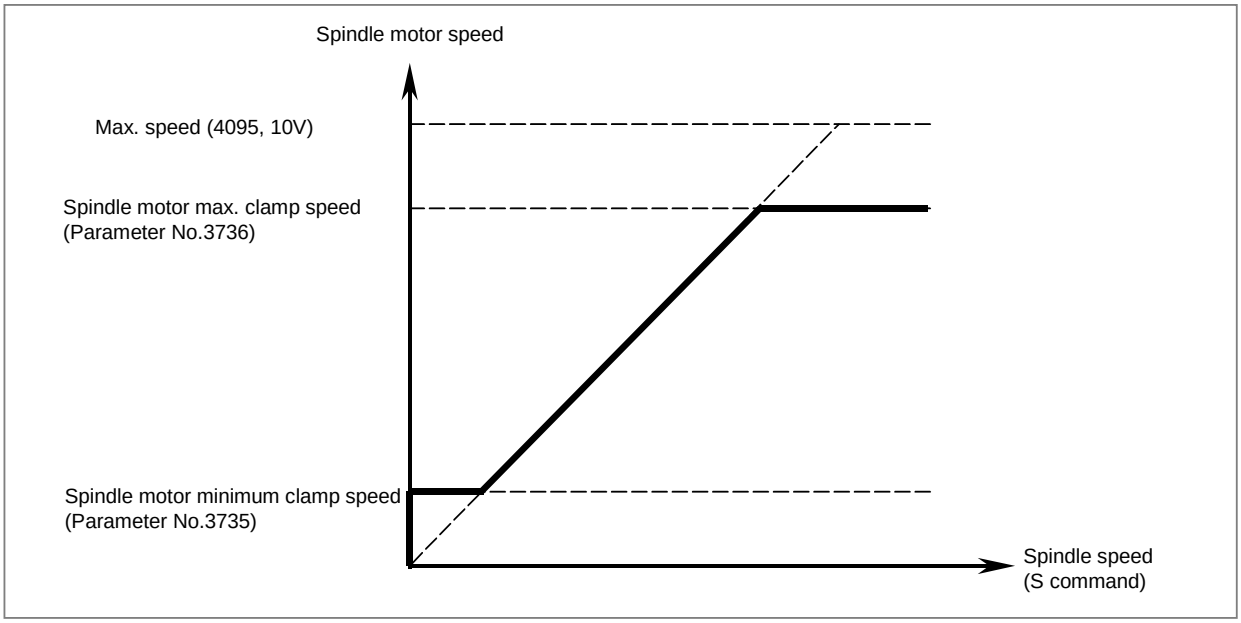

3738	Spindle name 2 of each spindle
3739	Spindle name 3 of each spindle

[Input type] Parameter input
[Data type] Byte spindle
[Valid data range] 48 to 57, 65 to 90

The command for a spindle is basically "S".
When all conditions below are satisfied, however, an extended spindle name can be used. An extended spindle name consists of up to three characters starting with "S" as the first spindle name. Thus, a command for a spindle can be specified.

- The serial (analog) spindle function is enabled.
- The multi-spindle function is enabled.
- Bit 0 (EEA) of parameter No. 1000 is set to 1.
- Bit 3 (MPP) of parameter No. 3703 is set to 1.
- Bit 1 (ESN) of parameter No. 3798 is set to 1.
- Bit 4 (GTT) of parameter No. 3706 is set to 1. (M series only)

As spindle name 2 (parameter No. 3738) and spindle name 3 (parameter No. 3739), ASCII codes from 0 to 9 and A to Z can be arbitrary set. However, before spindle name 3 for a spindle can be valid, spindle name 2 must be set for the spindle. Moreover, when a character from 0 to 9 is set as spindle name 2, do not set a character from A to Z as spindle name 3.

NOTE

1 When an extended spindle name is used, a subscript (for a main spindle (parameter No. 3718)) and a subscript (for a sub-spindle (parameter No. 3719)) are unusable.
2 When the custom macro function is enabled, the same extended spindle name as a reserved word must not be used. Such an extended spindle name is regarded as a reserved word.

3740	Time elapsed prior to checking the spindle speed arrival signal

[Input type] Parameter input
[Data type] Word path
[Unit of data] msec
[Valid data range] 0 to 32767
Set the time elapsed from the execution of the S function up to the checking of the spindle speed arrival signal SAR<Gn029.4>.

3741	Maximum spindle speed for gear 1
3742	Maximum spindle speed for gear 2
3743	Maximum spindle speed for gear 3
3744	Maximum spindle speed for gear 4

[Input type] Parameter input
[Data type] 2-word spindle
[Unit of data] min^{-1}
[Valid data range] 0 to 99999999
Set the maximum spindle speed corresponding to each gear.

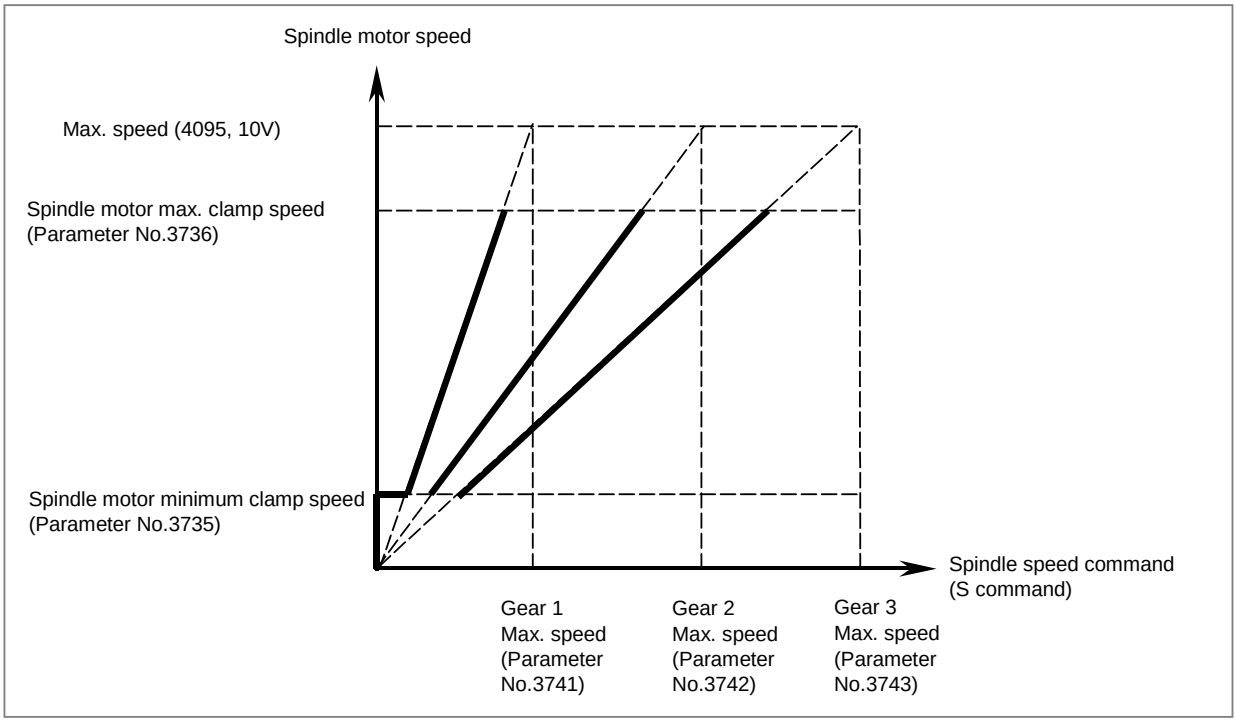

3751	Spindle motor speed when switching from gear 1 to gear 2
3752	Spindle motor speed when switching from gear 2 to gear 3

[Input type] Parameter input
[Data type] Word path

[Valid data range] 0 to 4095
For gear switching method B, set the spindle motor speed when the gears are switched.
Setting value =
(Spindle motor speed when the gears are switched / Maximum spindle motor speed) × 4095

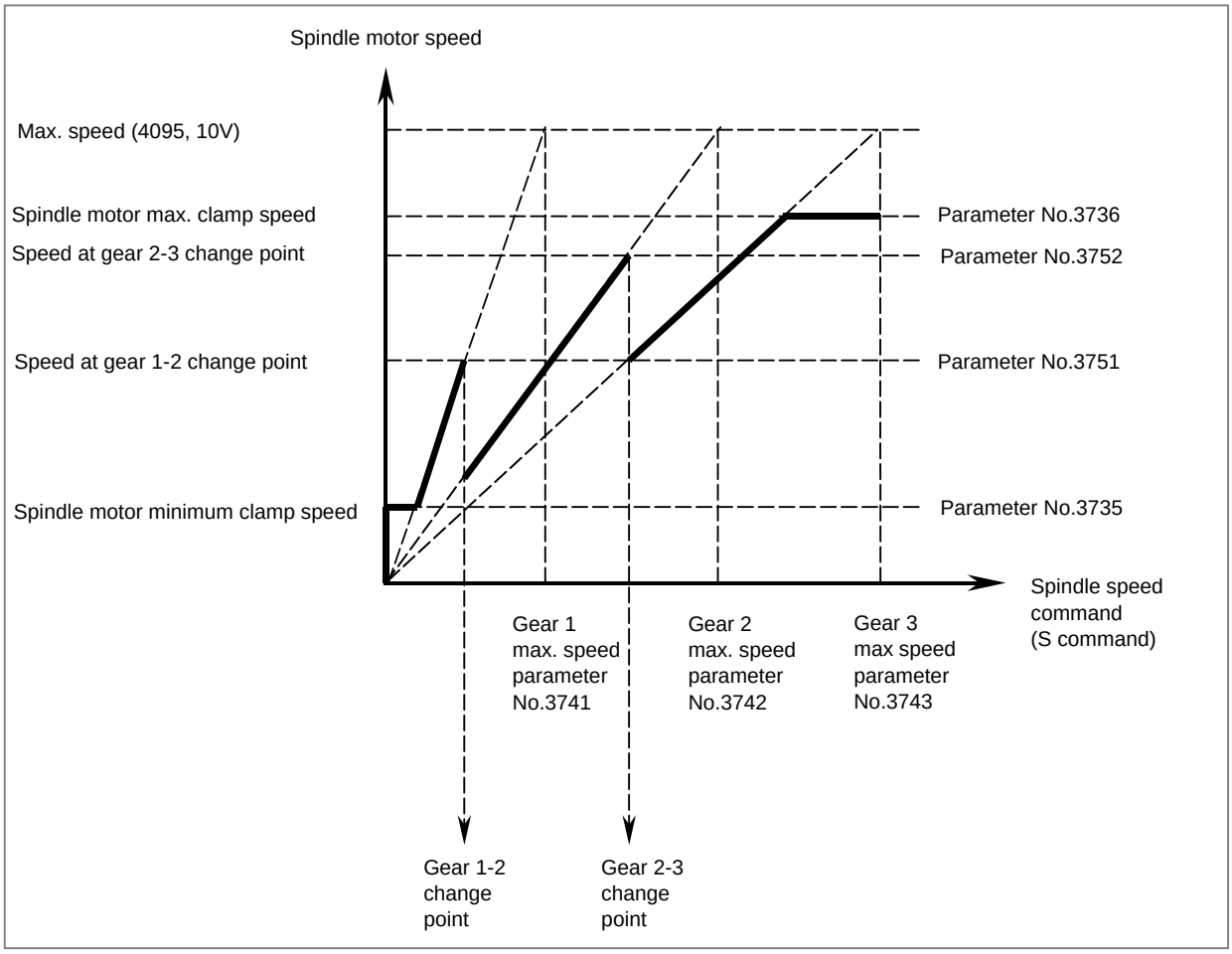

3753	**Spindle speed when switching from gear 1 to gear 2**
3754	**Spindle speed when switching from gear 2 to gear 3**

[Input type] Parameter input
[Data type] 2-word path
[Unit of data] min^{-1}
[Valid data range] 0 to 99999999
When method B is selected as the gear change method (when bit 2 (SGB) of parameter No. 3705 is set to 1) and bit 2 (MCH) of parameter No. 3790 is set to 1, each gear switching point can be set by the spindle speed.

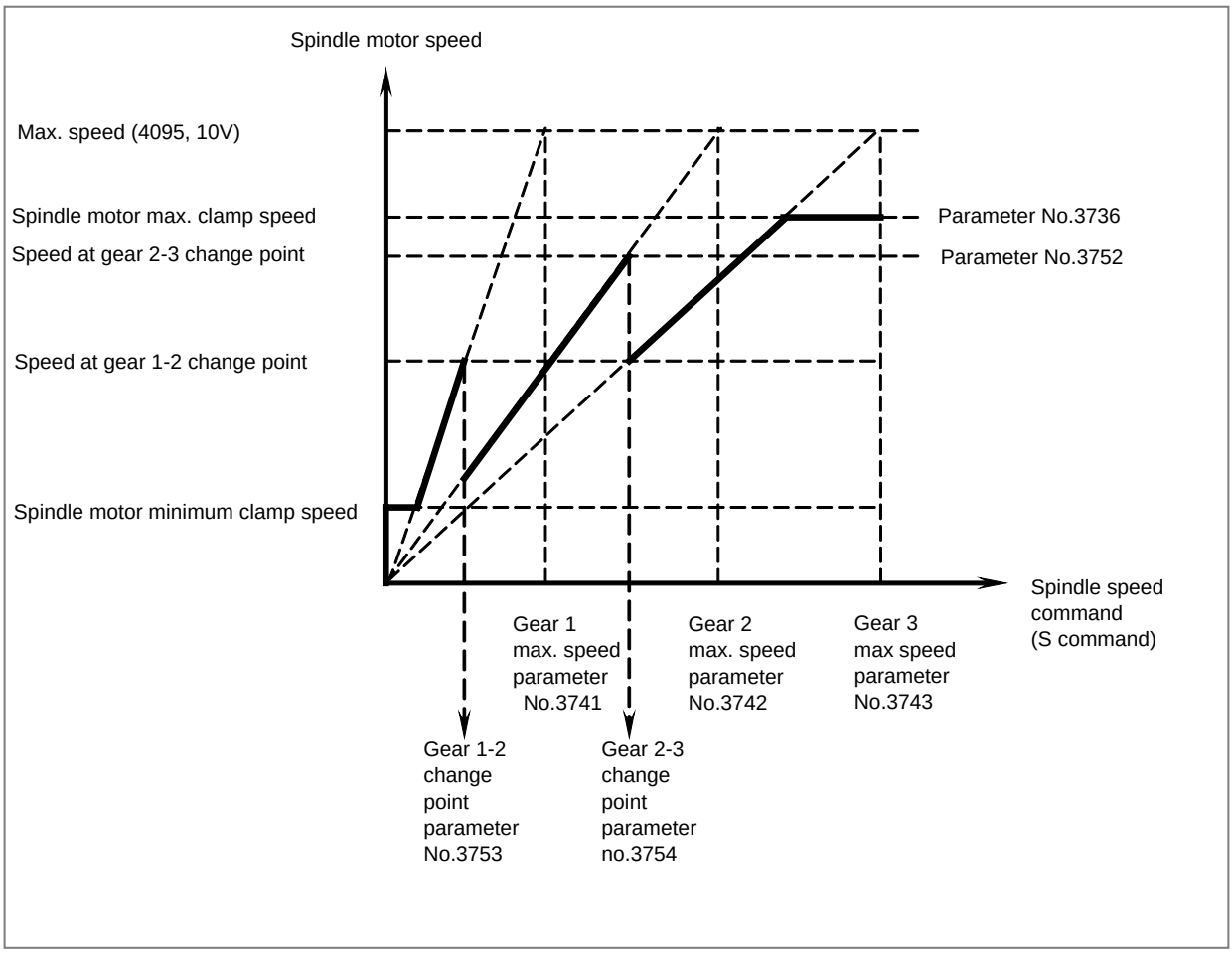

3761	
	Spindle speed when switching from gear 1 to gear 2 during tapping

3762	
	Spindle speed when switching from gear 2 to gear 3 during tapping

[Input type] Parameter input
[Data type] 2-word path
[Unit of data] min^{-1}
[Valid data range] 0 to 99999999

When method B is selected as the gear change method in the tapping cycle (when bit 3 (SGT) of parameter No. 3705 is set to 1), set the spindle speed at a change point of each gear.

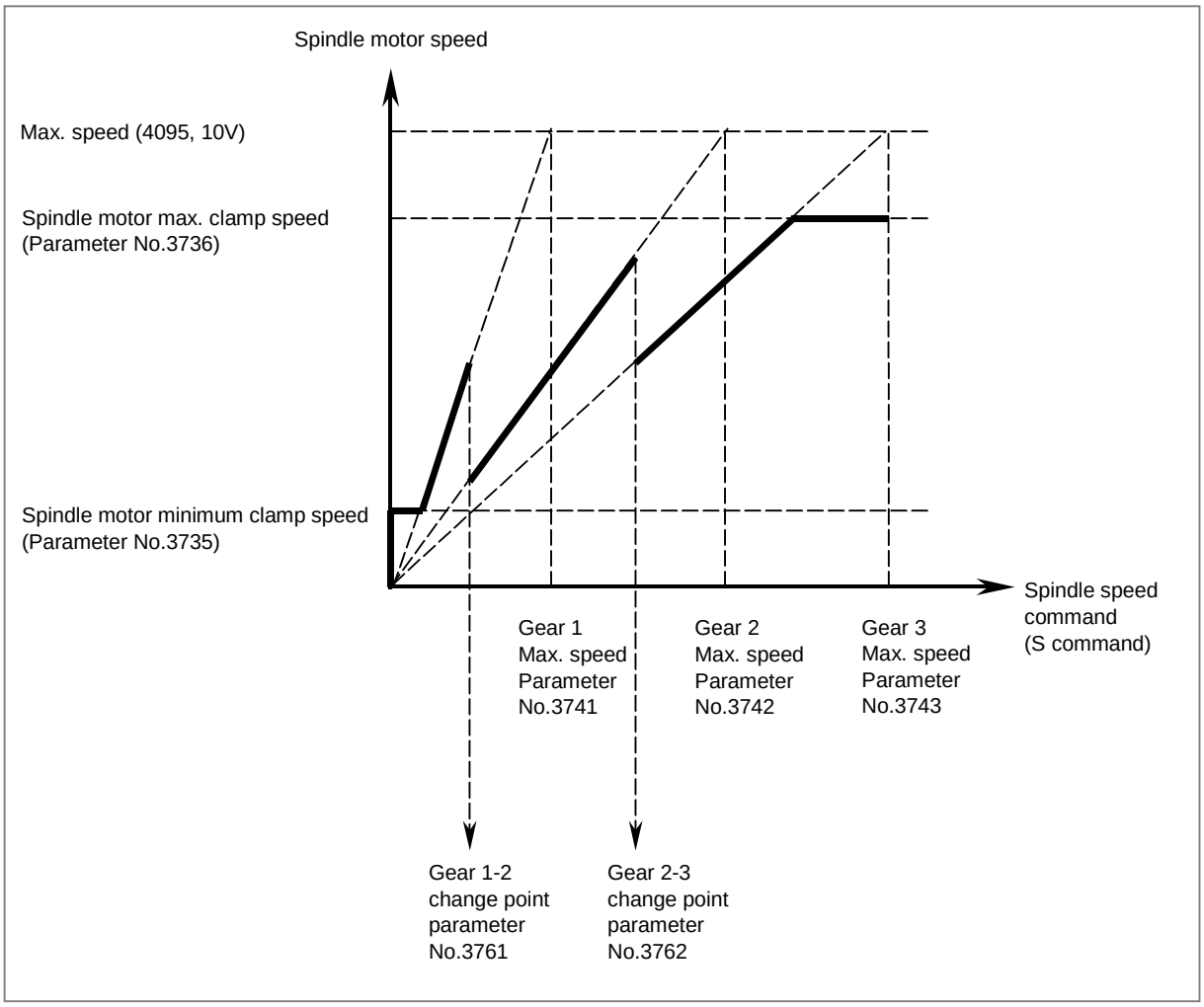

3770	Axis as the calculation reference in constant surface speed control

[Input type] Parameter input
[Data type] Byte path
[Valid data range] 0 to Number of controlled axes
Set the axis as the calculation reference in constant surface speed control.

NOTE
When 0 is set, constant surface speed control is always applied to the X-axis. In this case, specifying P in a G96 block has no effect on the constant surface speed control.

3771	Minimum spindle speed in constant surface speed control mode (G96)

[Input type] Parameter input
[Data type] 2-word path
[Unit of data] min^{-1}
[Valid data range] 0 to 99999999
Set the minimum spindle speed in the constant surface speed control mode (G96).
The spindle speed in constant surface speed control is clamped to the speed given by parameter 3771.

3772	Maximum spindle speed

[Input type] Parameter input
[Data type] 2-word spindle
[Unit of data] min^{-1}
[Valid data range] 0 to 99999999

This parameter sets the maximum spindle speed.
When a command specifying a speed exceeding the maximum speed of the spindle is specified , or the speed of the spindle exceeds the maximum speed because of the spindle speed override function, the spindle speed is clamped at the maximum speed set in the parameter.

⚠ CAUTION
1 When 0 is set in this parameter, the speed of the spindle is not clamped.
2 When spindle speed command control is applied using the PMC, this parameter has no effect, and the spindle speed is not clamped.

NOTE
1 For M series, this parameter is valid, when the constant surface speed control is enabled (bit 0 (SSC) of parameter No.8133 is 1).
2 When the constant surface speed control is enabled (bit 0 (SSC) of parameter No.8133 is 1), the spindle speed is clamped at the maximum speed, regardless of whether the G96 mode or G97 mode is specified.

3773	Start address of the R signal specifying maximum speed

NOTE
When this parameter is set, the power must be turned off before operation is continued.

[Input type] Parameter input
[Data type] 2-word spindle
[Valid data range] 0 to maximum address (multiple of 4. 0, 4, 8, ...)

This parameter sets the start address of the R signal specifying maximum speed.
Four bytes starting at the setting are used for each spindle.

NOTE
1 As for the setting of parameter
<1> Set a value that is a multiple of 4 (0, 4, 8, etc.).
<2> The range of the R address differs depending on the PMC kind and the memory size. Check the specifications of the PMC, and set a value within the valid range. (Example: R addresses in the range from R0 to R7999 if memory B of the first PMC is used. Thus, values which can be set are 4, 8, 12, 16, …7992, 7996 in this case)
If any setting other than the above items (<1>, <2>) is made, alarm PW5390"R-ADDRESS SETTING IS ILLEGAL" is issued.

NOTE
2 When value of parameter No. 3773 is zero, this function has no effect.

⚠ **WARNING**
If an internal relay of the set address in this parameter is used by another usage, it may cause an unexpected machine behavior. Be careful enough that you must prevent the competition of the used internal relay.

3775	Default P command value for spindle selection in multi-spindle control

NOTE
When this parameter is set, the power must be turned off before operation is continued.

[Input type] Parameter input
[Data type] Word path
[Valid data range] 0 to 32767
When bit 3 (MPP) of parameter No. 3703 is set to 1 and bit 2 (MPA) of parameter No. 3706 is set to 1 in multi-spindle control, set a default P command value applicable if S_P_ is not specified even once after power-up.

3781	P code for selecting the spindle in multi-spindle control

[Input type] Parameter input
[Data type] Word spindle
[Valid data range] 0 to 32767
If bit 3 (MPP) of parameter No. 3703 is set to 1, set the P code to select each spindle under multi-spindle control. Specify the P code in a block containing the S command.

[Example] If the P code value for selecting the second spindle is set to 2,
S1000 P2;
causes the second spindle to rotate at S1000.

NOTE
1 This parameter is valid if bit 3 (MPP) of parameter No. 3703 is set to 1.
2 If this parameter is set to 0, the corresponding spindle cannot be selected by a P code.
3 Under multi-path control, the P code specified here is valid for each path.
For instance, if the P code to select the first spindle of path 2 is set to 21, specifying S1000 P21; in path 1 causes the first spindle of path 2 to be rotated at S1000.
4 Identical P code values cannot be used for different spindles. (Identical P code values cannot be used even if the paths are different.)
5 When this parameter is used (when bit 3 (MPP) of parameter No. 3703 is set to 1), the spindle command selection signal is invalid.

NOTE
6 To use this parameter, enable the multi-spindle control function (bit 3 (MSP) of parameter No.8133 is 1).

	#7	#6	#5	#4	#3	#2	#1	#0
3785						IWS	G96	CLM

[Input type] Parameter input
[Data type] Bit

#0 CLM When spindle selection by address P or extended spindle name of multi-spindle control is enabled, constant surface speed control command is:
0: The following specifications.
- If extended spindle name is commanded in clamp command of maximum spindle speed, alarm PS0539 “MAX SP SPEED CLAMP COMMAND ERROR” is issued.
- If address P is commanded at selection of axis as the calculation reference in constant surface speed control, alarm PS0190 “ILLEGAL AXIS SELECTED (G96)” is issued.

1: Conventional specifications.

#1 G96 When spindle selection by address P in multi-spindle control, or extended spindle name is enabled, if G96 is commanded without surface speed:
0: Alarm PS5355 “S CODE IS NOT COMMANDED AT G96” is not issued.
1: Alarm PS5355 “S CODE IS NOT COMMANDED AT G96” is issued.

#2 IWS At the start of cutting feed, :
0: Always wait until the time elapsed prior to checking the spindle speed arrival signal of parameter No. 3740.
1: If the time longer than the parameter No. 3740 has elapsed since the spindle speed was changed, it does not wait for the passage of the parameter No.3740.

NOTE
1 This parameter is valid when the bit 0 (SAR) of parameter No.3708 is 1 and a value other than 0 is set in parameter No. 3740.
2 This parameter is Automatic setting parameter. For details, refer to the appendix "Automatic setting / Initial setting parameter" in CONNECTION MANUAL (FUNCTION) (B-64693EN-1).

	#7	#6	#5	#4	#3	#2	#1	#0
3786						MPF		

NOTE
When this parameter is set, the power must be turned off before operation is continued.

[Input type] Parameter input
[Data type] Bit

#2 MPF When M03/M04/M05 is commanded by "M_P_" format in multi-spindle control, multi-spindle address P signal <Fn160-Fn161> is:
0: Not output.
1: Output.

NOTE
This parameter is valid when bit 3 (MPP) of parameter No.3703 is set to 1.

	#7	#6	#5	#4	#3	#2	#1	#0
3787							SLGs	USGs

[Input type] Parameter input
[Data type] Bit spindle

#0 USGs When spindle speed calculated from spindle motor speed is displayed (bit 2 (ASD) of parameter No.3799):
0: Parameter Nos.4056 to 4059 is used for spindle speed calculation.
1: Parameter Nos.3741 to 3744 is used for spindle speed calculation.

#1 SLGs In spindle speed calculation, gear selection status is judged from:
0: Clutch/gear signals.
1: Gear selection signals.

NOTE
1 Address of clutch/gear signals is as follows.
CTH1A, CTH2A<Gn070.3, Gn070.2> (First spindle)
CTH1B, CTH2B<Gn074.3, Gn074.2> (Second spindle)
CTH1C, CTH2C<Gn204.3, Gn204.2> (Third spindle)
CTH1D, CTH2D<Gn266.3, Gn266.2> (Fourth spindle)
2 Address of gear selection signals is as follows.
M type gear selection method
GR1O, GR2O, GR3O<Fn034.0, Fn034.1, Fn034.2>
T type gear selection method
GR1, GR2 <Gn028.1, Gn028.2>(First spindle)
GR21, GR22<Gn029.0, Gn029.1>(Second spindle)
GR31, GR32<Gn029.2, Gn029.3>(Third spindle)
GR41, GR42<Gn031.4, Gn031.5>(Fourth spindle)

	#7	#6	#5	#4	#3	#2	#1	#0
3790						MCH		KSA

[Input type] Parameter input
[Data type] Bit path

#0 KSA In the thread cutting (G33(M), G32,G34,G35,G36,G76,G92(T)) and polygon turning (G51.2) using the analog spindle, the value of the speed indication of the spindle until the one rotation signal is detected at the start of thread cutting,
0: It may be temporarily low, possibly 0.
1: It does not change at the speed just before the start.

#2 MCH In spindle gear selection method type M,
0: It can be set from 0 to 4095 by parameter Nos. 3751 to 3752 with the maximum motor speed at the gear switching point as 4095.
1: The switching point of the gear can be set by spindle speed with parameter Nos. 3753 to 3754.

	#7	#6	#5	#4	#3	#2	#1	#0
3791								SSEs

[Input type] Parameter input
[Data type] Bit spindle

NOTE
When this parameter is set, the power must be turned off before operation is continued.

#0 SSEs The resolution enabled for the spindle speed command:
0: depend to the bit 4(SSI) of parameter No.3798.
1: is a maximum spindle speed/1048575 [min^{-1}].

NOTE
When bit 0 (SSE) of parameter No.3791 is set to 1, bit 4 (SSI) of No.3798 is not effective.

3792	The sampling frequency to obtain the average spindle speed

[Data type] Byte spindle
[Unit of data] No unit
[Valid data range] 0 to 4
The sampling frequency is 2^(parameter data).

NOTE
1 If this parameter is 0 or out of range, the sampling frequency to obtain the average spindle speed obeys SAM (parameter No.3709#0). If you would like to set sampling frequency to 1, please set this parameter to 0, and SAM (parameter No.3709#0) to 1.
2 If you change this parameter, please operate on the condition that spindle rotation is stop state and the function to use spindle feedback such as feed per revolution is not executed.

3795	M code for high-speed switching of Cs contour control

[Input type] Parameter input
[Data type] 2-word spindle
[Unit of data] None
[Valid data range] 0 to 99999999
This parameter sets an M code command value for high-speed switching of Cs contour control.

NOTE
1 The parameter setting must not be the same as the M code used for any other function.
2 The parameter set to 0 becomes invalid.
3 If the same value is set for two or more Cs contour control axes within the system, the alarm PS0513, "CS HI-SPEED SWITCHING SETTINGERROR" is issued.
4 The M code set here is buffering-inhibited.

	#7	#6	#5	#4	#3	#2	#1	#0
3797								DCN

This parameter is related to Dual Check Safety.
See Dual Check Safety CONNECTION MANUAL (B-64483EN-2) for details.

	#7	#6	#5	#4	#3	#2	#1	#0
3798				SSI	SDP		ESN	ALM

[Input type] Parameter input
[Data type] Bit

#0 ALM The spindle alarm SP**** for all spindles is:
0: Enabled.
1: Ignored.
When this parameter is set to 1, the spindle-related alarms are ignored. So, be sure to set this parameter to 0 at all times except for special cases such as maintenance.

#1 ESN When the multi-spindle function is enabled and bit 3 (MPP) of parameter No. 3703 is set to 1, a spindle is specified in a program by using:
0: P command.
1: Extended spindle name.

A spindle to be specified is selected as follows:

Bit 1 (ESN) of parameter No. 3798	Bit 3 (MPP) of parameter No. 3703	Selection method
0	0	Signal selection
0	1	P command (S_P_)
1	0	Signal selection
1	1	Extended spindle name or P command (S_P_)

NOTE
This parameter is valid when bit 0 (EEA) of parameter No. 1000 is set to 1.
When setting this parameter to 1, set also parameter No. 3738 and No. 3739 properly.

#3 SDP High-precision spindle speed control is:
0: Not used.
1: Used.

NOTE
When this parameter is set, the power must be turned off before operation is continued.

#4 SSI The resolution enabled for the spindle speed command is:
0: Maximum spindle speed/4095 [min^{-1}].
1: Maximum spindle speed/16383 [min^{-1}].

NOTE
When this parameter is set, the power must be turned off before operation is continued.

	#7	#6	#5	#4	#3	#2	#1	#0
3799		SPCs	SSHs		SVPs	ASDs	NDPs	NALs

[Input type] Parameter input
[Data type] Bit spindle

#0 NALs An alarm detected on the spindle amplifier side is:
0: Displayed.
1: Not displayed.
(This parameter is valid when bit 0 (ALM) of parameter No. 3798 is set to 0.)
When this parameter is set to 1, an alarm detected on the spindle amplifier side is ignored. So, be sure to set this parameter to 0 at all times except for special cases such as maintenance.

#1 NDPs When an analog spindle is used, a position coder disconnection check is:
0: Made.
1: Not made.
(This parameter is valid when bit 0 (NAL) of parameter No. 3799 is set to 0.)
When no position coder is used with an analog spindle, set this parameter to 1.

#2 ASDs When a serial spindle is used, a spindle speed is calculated based on:
0: Feedback pulses from the position coder.
1: Speed monitor.

#3 SVPs As synchronization errors displayed on the spindle tuning screen:
0: Monitor values are displayed.
1: Peak-hold values are displayed,
Spindle synchronization errors are displayed on the side of the spindle that functions as a slave axis in spindle synchronization control.

#5 SSHs On the diagnosis screen, total spindle speed data is:
0: Not displayed.
1: Displayed.

#6 SPCs The position coder pulse to obtain the average spindle speed is:
0 : Sampled without sign data.
1 : Sampled with sign data.

3841	Servo motor spindle control axis number

[Data type] Word
[Valid data range] 1 to 24
This parameter sets the axis number of an axis to be subject to servo motor spindle control or servo motor spindle synchronization.
Setting the parameter to 0 disables servo motor spindle control and servo motor spindle synchronization.
For servo motor spindle synchronization, you have to set bit 4 (SPSx) of parameter No. 2016.

3842	Maximum speed for servo motor spindle control

[Data type] 2-word
[Unit of data] min^{-1}
[Valid data range] 0 to 9999
This parameter sets the maximum speed of the spindle to be subject to servo motor spindle control.

3843	Time constant for acceleration/deceleration under servo motor spindle control

[Data type] Word
[Unit of data] msec
[Valid data range] 0 to 4000
This parameter sets the time constant for acceleration/deceleration under servo motor spindle control and servo motor spindle synchronization.
The type of acceleration/deceleration is linear acceleration/deceleration.
Set the parameter to the time to be taken for the spindle speed to reach 1000 (min^{-1}).

3844	Master spindle number

[Data type] Word
[Valid data range] 0 to 104
Set the number of the spindle (position coder) to be subject to servo motor spindle synchronization.
The hundreds and tens digits represent a path; the units digit represents the number of the position coder in the path.
To synchronize the servo axis in the second path and the second position coder in the first path under dual-path control, for example, set this parameter for the second path to 12.
When the hundreds and tens digits are both 0, the local path is assumed.
When a value of 0 is specified, the first position coder in the local path is assumed.

⚠ WARNING

1. The combination of the position coder and servo motor to be synchronized with each other is determined by wire connection. Even though you change the setting of this parameter, therefore, you cannot change the combination of the position coder and servo motor to be synchronized with each other.
2. This parameter is used for acceleration or deceleration to be performed when the synchronization mode is turned on/off.
3. It is dangerous to set a value not matching the actually wire-connected combination as it prevents correct acceleration/deceleration. Be sure to set a value matching the actual wire connection.

3845	Shift value of phase synchronization for Servo/Spindle synchronous control

[Input type] Parameter input
[Data type] Word path
[Unit of data] Detection unit
[Valid data range] 0 to 4095
Set a shift value of phase synchronization for Servo/Spindle synchronous control to this parameter.
One rotation of spindle is 4096 pulses.

Example) If the sub-spindle should be at a quarter rotation position from main-spindle, set 1024 to this parameter.

3846	Feedrate during phase synchronization for Servo/Spindle synchronous control

[Input type] Parameter input
[Data type] Real path
[Unit of data] deg/min
[Valid data range] Refer to standard parameter setting table (C)
(When the increment system is IS-B, 0.0 to +999000.0)

Set a feedrate during phase synchronization for Servo/Spindle synchronous control to this parameter.
It accelerates or decelerates from the current spindle motor speed for this parameter by Linear acceleration/deceleration with the acceleration rate based on parameter No.3843.

Example) When the increment system is IS-B and CMR (parameter No.1820=2) is 1, the amount of movement will be 4.096[deg] per rotation of the spindle. Therefore, if speed during phase synchronization will be 10[min^{-1}], set 40.96[deg/min] to this parameter.

NOTE
Set this parameter when Phase synchronization start signal SYPST is "0".
This parameter setting is reflected when Phase synchronization start signal SYPST become "1" from "0".

3847	Allowable error pulse value on phase synchronization for Servo/Spindle synchronous control

[Input type] Parameter input
[Data type] Word path
[Unit of data] Detection unit
[Valid data range] 0 to 4095
On phase synchronization for Servo/Spindle synchronous control, when the synchronization error pulse value between main-spindle and sub-spindle become small value more than this parameter, Phase synchronization finished signal SYPFN become "1".

NOTE
Depending on the mechanical rigidity or the servo response, the synchronization error might occur in high-speed rotation or acceleration/deceleration. Therefore, set big value more than the synchronization error to this parameter.

Parameters for Control of Serial Interface Spindle Cs Contouring Control Axis

Number	Data format	Description	
3900	Byte path	First group	Number of the servo axis whose loop gain is to be changed according to the set values of parameters 3901 to 3904 when the Cs contouring axis is controlled
3901	Word path		Loop gain for the servo axis when the Cs contouring axis is controlled for spindle gear 1 selection
3902	Word path		Loop gain for the servo axis when the Cs contouring axis is controlled for spindle gear 2 selection
3903	Word path		Loop gain for the servo axis when the Cs contouring axis is controlled for spindle gear 3 selection
3904	Word path		Loop gain for the servo axis when the Cs contouring axis is controlled for spindle gear 4 selection
3910	Byte path	Second group	Number of the servo axis whose loop gain is to be changed according to the set values of parameters 3911 to 3914 when the Cs contouring axis is controlled
3911	Word path		Loop gain for the servo axis when the Cs contouring axis is controlled for spindle gear 1 selection
3912	Word path		Loop gain for the servo axis when the Cs contouring axis is controlled for spindle gear 2 selection
3913	Word path		Loop gain for the servo axis when the Cs contouring axis is controlled for spindle gear 3 selection
3914	Word path		Loop gain for the servo axis when the Cs contouring axis is controlled for spindle gear 4 selection
3920	Byte path	Third group	Number of the servo axis whose loop gain is to be changed according to the set values of parameters 3921 to 3924 when the Cs contouring axis is controlled
3921	Word path		Loop gain for the servo axis when the Cs contouring axis is controlled for spindle gear 1 selection
3922	Word path		Loop gain for the servo axis when the Cs contouring axis is controlled for spindle gear 2 selection
3923	Word path		Loop gain for the servo axis when the Cs contouring axis is controlled for spindle gear 3 selection
3924	Word path		Loop gain for the servo axis when the Cs contouring axis is controlled for spindle gear 4 selection
3930	Byte path	Fourth group	Number of the servo axis whose loop gain is to be changed according to the set values of parameters 3931 to 3934 when the Cs contouring axis is controlled
3931	Word path		Loop gain for the servo axis when the Cs contouring axis is controlled for spindle gear 1 selection
3932	Word path		Loop gain for the servo axis when the Cs contouring axis is controlled for spindle gear 2 selection
3933	Word path		Loop gain for the servo axis when the Cs contouring axis is controlled for spindle gear 3 selection
3934	Word path		Loop gain for the servo axis when the Cs contouring axis is controlled for spindle gear 4 selection

Number	Data format	Description	
3940	Byte path	Fifth group	Number of the servo axis whose loop gain is to be changed according to the set values of parameters 3941 to 3944 when the Cs contouring axis is controlled
3941	Word path		Loop gain for the servo axis when the Cs contouring axis is controlled for spindle gear 1 selection
3942	Word path		Loop gain for the servo axis when the Cs contouring axis is controlled for spindle gear 2 selection
3943	Word path		Loop gain for the servo axis when the Cs contouring axis is controlled for spindle gear 3 selection
3944	Word path		Loop gain for the servo axis when the Cs contouring axis is controlled for spindle gear 4 selection

<Setting method>
First, select servo axes which perform interpolation with the Cs contouring axis. (Up to five axes can be selected.)
When there is no servo axis for interpolation with the Cs contouring axis, set the parameters 3900, 3910, 3920, 3930, and 3940 to 0 to terminate parameter setting.
When there are servo axes for interpolation with the Cs contouring axis, the parameters must be set according to the procedure below for each axis.

(1) Set the number of a servo axis (1 to maximum number of controlled axes) for interpolation with the Cs contouring axis in parameters 39n0 (n = 0, 1, 2, 3, and 4).
(2) Set loop gain values of the servo axis specified in (1) above which is used when the Cs contouring axis is controlled in parameters 39n1, 39n2, 39n3, and 39n4. (There are four stages for main gears used.)
(3) When the number of specified servo axes is less than 5, set the remaining parameters (39n0) to 0 to terminate parameter setting.

When the number of a Cs contouring axis is set to parameter 39n0, the parameter is assumed to be set to 0.

NOTE

1 In general, it is difficult to set a high loop gain for a spindle motor axis when compared with a servo axis. These parameters are provided so that, by changing the loop gain of a servo axis that requires interpolation with the Cs contour axis, interpolation control can be exercised correctly between the Cs axis and servo axis while the spindle exercises Cs contour control.
2 The loop gain of the servo axis is changed using the parameter settings made for a spindle gear selected at the time of conversion from the spindle mode to the Cs contour control mode.
In normal use, it is unlikely that the gear of the spindle is switched during Cs contour control. However, note that if the gear of the spindle is changed during Cs contour control, the loop gain of the servo axis is not changed.
3 Even when multiple Cs axes are used with one path (bit 7 (CSS) of parameter No. 3704 = 1), these parameters are shared.

Parameters for Serial interface spindle or spindle

Parameters Nos. 4000 to 4799 below are basically used with the serial spindle amplifier. For details of these parameters, refer to either of the following manuals and other related documents, depending on the spindle that is actually connected.

- FANUC AC SPINDLE MOTOR αi series Parameter Manual (B-65280EN)

	#7	#6	#5	#4	#3	#2	#1	#0
4000								
to	to							
4015	(No user setting allowed = Note 1)							
to	to							
4019	(Note 2)							

[Input type] Parameter input
[Data type] Bit spindle

4020	
to	to
4133	

[Input type] Parameter input
[Data type] Word spindle

4134	
4135	

[Input type] Parameter input
[Data type] 2-word spindle

4136	
to	to
4175	

[Input type] Parameter input
[Data type] Word spindle

	#7	#6	#5	#4	#3	#2	#1	#0
4176								
to	to							
4191	(No user setting allowed = Note 1)							
to	to							
4195	(Note 2)							

[Input type] Parameter input
[Data type] Bit spindle

4196	
to	to
4309	

[Input type] Parameter input
[Data type] Word spindle

4310	
4311	

[Input type] Parameter input
[Data type] 2-word spindle

4312	
to	to
4351	

[Input type] Parameter input
[Data type] Word spindle

	#7	#6	#5	#4	#3	#2	#1	#0
4352								
4353								

[Input type] Parameter input
[Data type] Bit spindle

4354	
to	to
4371	(No user setting allowed = Note 1)
4372	

[Input type] Parameter input
[Data type] Word spindle

	#7	#6	#5	#4	#3	#2	#1	#0
4373								
4374								

[Input type] Parameter input
[Data type] Bit spindle

4375	
to	to
4393	

[Input type] Parameter input
[Data type] Word spindle

	#7	#6	#5	#4	#3	#2	#1	#0
4394								
to	to							
4403	(No user setting allowed = Note 1)							

[Input type] Parameter input
[Data type] Bit spindle

4404	
to	to
4437	(No user setting allowed = Note 1)
to	to
4439	(No user setting allowed = Note 1)
to	to
4441	(No user setting allowed = Note 1)
to	to
4447	(No user setting allowed = Note 1)
to	to
4459	(No user setting allowed = Note 1)
to	to
4461	(No user setting allowed = Note 1)
to	to
4466	

[Input type] Parameter input
[Data type] Word spindle

	#7	#6	#5	#4	#3	#2	#1	#0
4467								
to	to							
4476	(No user setting allowed = Note 1)							

[Input type] Parameter input
[Data type] Bit spindle

4477	
to	to
4539	

[Input type] Parameter input
[Data type] Word spindle

	#7	#6	#5	#4	#3	#2	#1	#0
4540								
to	to							
4544	(No user setting allowed = Note 1)							
to	to							
4549								

[Input type] Parameter input
[Data type] Bit spindle

4550	
to	to
4669	

[Input type] Parameter input
[Data type] Word spindle

	#7	#6	#5	#4	#3	#2	#1	#0
4670								
to					to			
4679								

[Input type] Parameter input
[Data type] Bit spindle

4680	
to	to
4799	

[Input type] Parameter input
[Data type] Word spindle

NOTE

1 Among the parameters of the spindle amplifier with the serial interface, parameters Nos. 4015, 4191, 4403, and 4476 cannot be changed by the users.
These parameters require to assign optional software to the CNC and are automatically set depending on the type of the software.
The setting of parameters Nos. 4371, 4437, 4439, 4441, 4447, 4459, 4461, and 4544 are also unchangeable by the user.

2 To set the parameters of the spindle amplifier with the serial interface automatically, set bit 7 of parameter No. 4019 (if the sub spindle is set in the CNC with the spindle switching function, use parameter No. 4195) to 1, assign the model code of the motor to be used to parameter No. 4133 (if the sub spindle is set in the CNC with the spindle switching function, use parameter No. 4309), turn off the power of the CNC and spindle amplifier, and restart the CNC and spindle amplifier.

3 Parameters Nos. 4000 to 4799 are used in the processing on the spindle amplifier. For details of these parameters, refer to either of the following manuals, depending on the serial spindle that is actually used.
- FANUC AC SPINDLE MOTOR αi series Parameter Manual (B-65280EN)

NOTE

4 The CNC can control up to eight spindle amplifiers with the serial interface. When the spindle amplifier provides the spindle switching function, one spindle amplifier can control two spindle motors using the switching function. The output switching function can be used in spindle motors to be connected. Up to sixteen spindles, or thirty two types, can be used by switching the spindle motors. (The number of spindles that can controlled simultaneously is the same as the number of spindle amplifiers, that is eight spindles.)
Parameters of the spindle amplifier with the serial interface correspond to the above functions as follows:

(1) Serial spindle parameters for the first to eighth spindles: Nos. 4000 to 4799 ”S1”to“S8”

(2) Parameters Nos. 4000 to 4175 "S1" to "S8":
When the spindle switching function is not provided, or for the main spindle in the spindle amplifier when the function is provided.
Parameter Nos. 4176 to 4351 "S1" to "S8":
For the sub spindle in the spindle amplifier when the spindle switching function is provided.

(3) Parameters for low-speed winding when the output switching function is provided.
Parameters Nos. 4136 to 4175 "S1" to "S8":
When the spindle switching function is not provided, or for the main spindle when the function is provided.
Parameters Nos. 4284 to 4351 "S1" to "S8":
For the sub spindle when the spindle switching function is provided.

NOTE

5 The CNC stores the parameters of the spindle amplifier with the serial interface. The CNC sends them to the spindle amplifier at the system power on and they are used in the unit.
These parameters are sent from the CNC to the spindle amplifier in a batch when:
- The CNC is switched on.

If these parameters are rewritten, they are sent from the CNC to the spindle amplifier sequentially when:
- The parameters have been entered from the MDI.
- The parameters have been entered as programmable (G10).
- The parameters have been entered via the RS-232C interface.

To set parameters automatically, upload parameters corresponding to the motor model from the spindle amplifier to the CNC prior to the procedure specified above.
The parameters of the spindle amplifier with serial interface can be changed after the system starts. Changing the parameters Nos. 4000 to 4799 "S1" to "S8") in the CNC sends them to the spindle amplifier at an appropriate time and the parameters in the unit are updated.
(Be careful not to change parameters incorrectly.)
When changing serial spindle parameter from application program such as PMC window functions, make sure that ALL-spindle operation ready signal SRSRDY <Fn034.7> is on.

	#7	#6	#5	#4	#3	#2	#1	#0
4800	SPK	EPZ	SCB					

[Input type] Parameter input
[Data type] Bit

NOTE

When at least one of these parameters is set, the power must be turned off before operation is continued.

#5 SCB The combination of a master spindle and slave spindle for spindle synchronization depends on:

0: Setting of bit 4 (SSS) of parameter No. 3704.
When bit 4 (SSS) of parameter No. 3704 is set to 0
The first spindle and second spindle of each path can be selected as the master spindle and slave spindle, respectively, for spindle synchronization.
When bit 4 (SSS) of parameter No. 3704 is set to 1
A combination of arbitrary spindles of each path can be selected for spindle synchronization.
Set a master spindle for each slave spindle in parameter No. 4831. Set a spindle number of each path.
By setting a spindle number common to the system in parameter No. 4832, an arbitrary spindle that belongs to a different path can be selected as a master spindle for spindle synchronization. Set a spindle number common to the system. Set parameter No. 4831 to 0. Spindle synchronization based on arbitrary spindles must be enabled for the path to which a slave spindle belongs and for the path to which a master spindle belongs.

1: Conventional 16TT system compatible specifications.
The first spindle of path 1 and the first spindle of path 2 can be selected as the master spindle and slave spindle, respectively, for spindle synchronization.
As control signals, the signal interface of the 16TT system compatible specifications can be used.

#6 EPZ When the parking signal is switched in the reference position established state during Cs contour control exercised using spindle command synchronous control:

0: Reference position established state is continued.
1: Reference position established state is canceled.

If this parameter is set, the same reference position return operation as manual reference position return is performed with the G28 command immediately after the parking signal is switched.
The G00 command performs a positioning operation including reference position return (when bit 1 (NRF) of parameter No. 3700 is set to 0).

#7 SPK As the parking signals for spindle command synchronous control:

0: PKESS1<Gn122.6> (first spindle) and PKESS2<Gn122.7> (second spindle) are used.
1: PKESS1<Gn031.6> (first spindle) and PKESS2<Gn031.7> (second spindle) are used.

NOTE
1 This parameter is valid only when bit 5 (SSY) of parameter No. 3704 is set to 0.
2 If the parking signals PK7 and PK8 for synchronization control are used when spindle command synchronous control and synchronization control are used at the same time, set bit 7 (SPK) of parameter No. 4800 to 1 to use the parking signals PKESS1 and PKESS2 for spindle command synchronous control as <Gn031.6,Gn031.7>.

	#7	#6	#5	#4	#3	#2	#1	#0
4801								SNDs

[Input type] Parameter input
[Data type] Bit spindle

NOTE
When this parameter is set, the power must be turned off before operation is continued.

#0 SNDs During spindle synchronization control, the rotation direction of each spindle motor is:
0: Same as the specified sign.
1: Opposite to the specified sign.

	#7	#6	#5	#4	#3	#2	#1	#0
4803					SM4s	SM3s	SM2s	SM1s

[Input type] Parameter input
[Data type] Bit spindle

#0 SM1s Spindle position save to parameter No.4840 is:
0: Not completed.
1: Completed.

#1 SM2s Spindle position save to parameter No.4841 is:
0: Not completed.
1: Completed.

#2 SM3s Spindle position save to parameter No.4842 is:
0: Not completed.
1: Completed.

#3 SM4s Spindle position save to parameter No.4843 is:
0: Not completed.
1: Completed.

NOTE
Bit 0 to 3 (SM1 to SM4) of parameter No.4803 to are set to 0 if spindle position has to be saved again, for example, motor or detector is exchanged, parameter file of other machine is inputted, and so on.

	#7	#6	#5	#4	#3	#2	#1	#0
4809								NSY

[Input type] Parameter input
[Data type] Bit

NOTE
When this parameter is set, the power must be turned off before operation is continued.

#0 NSY When the spindle speed changes during spindle synchronization control, resolution improvement is:
0: Disabled. (Speed change in units of about 3.7 [min^{-1}])
1: Enabled. (Speed change in units of about 0.03 [min^{-1}] at minimum but not higher than maximum spindle speed/4095 [min^{-1}])

This parameter is valid when spindle synchronization control or spindle-spindle polygon turning is used.
Using high-precision spindle speed control and spindle synchronization control simultaneously requires setting the parameter to 1.

NOTE
Using this function requires the serial spindle software that supports it.

4810	Error pulse between two spindles when synchronizing phases in the spindle synchronization control mode

[Input type] Parameter input
[Data type] Word spindle
[Unit of data] Detection unit
[Valid data range] 0 to 255
Set an allowable error pulse value between two spindles at phase synchronization time in the spindle synchronization control mode.
This parameter is used to check the completion of phase synchronization performed in the spindle synchronization control mode and to check the phase difference during spindle synchronization control.
When the error pulse value between two spindles become equal to or less than the value set in this parameter, the spindle phase synchronization control completion signals FSPPH<Fn044.3> and FSPPH1 to 4<Fn289.0 to 3> are set to “1”.

4811	Allowable error count for the error pulses between two spindles in the spindle synchronization control mode

[Input type] Parameter input
[Data type] Word spindle
[Unit of data] Detection unit
[Valid data range] 0 to 32767
Set the allowable error count for the error pulses between two spindles in the spindle synchronization control mode.
This parameter is used to check a spindle synchronization error phase difference.
When a spindle synchronization error equal to or greater than the value set in this parameter is detected, the phase error monitor signals SYCAL<Fn044.4> and SYCAL1 to 4<Fn043.0 to 3> are set to “1”.

4821	Master axis of each slave spindle under simple synchronous spindle control

NOTE
When this parameter is set, the power must be turned off before operation is continued.

[Input type] Parameter input
[Data type] Byte spindle
[Valid data range] 0 to Maximum number of controlled spindle axes (within a path)
When a spindle is set as a slave spindle in spindle command synchronous control on each spindle, set which spindle (master spindle) the slave spindle is to be synchronized with.
[Examples of parameter setting]
- When spindle command synchronous control is exercised with the first spindle selected as a master spindle and the second spindle selected as a slave spindle:
  No. 4821(1)=0

No. 4821(2)=1
No. 4821(3)=0
No. 4821(4)=0

- When spindle command synchronous control is exercised with four spindles under the following combinations:
  (Two combinations, namely, first spindle (master spindle)/ second spindle (slave spindle), and third spindle (master spindle)/fourth spindle (slave spindle))
  No. 4821(1)=0
  No. 4821(2)=1
  No. 4821(3)=0
  No. 4821(4)=3

NOTE
1 This parameter is valid if bit 5 (SSY) of parameter No. 3704 is set to 1.
2 The setting of a slave spindle as a master spindle is invalid. Be sure to set 0 for a spindle that is to function as a master spindle.
3 In this parameter, set a spindle number within the same path.

4826	Allowable error count for the error pulses between two spindles in the simple synchronization spindle control mode

[Input type] Parameter input
[Data type] Word spindle
[Unit of data] Detection unit
[Valid data range] 0 to 32767

Set the allowable error count for the error pulses between two spindles in the simple synchronization spindle control mode.
This parameter is used to check a spindle synchronization error phase difference.
When a spindle synchronization error equal to or greater than the value set in this parameter is detected, the spindle phase error monitor signals SYCAL<Fn044.4> and SYCALs are set to “1”.

NOTE
1 The detection unit per pulse depends on the spindle control mode (Cs contour control, rigid tapping, or spindle positioning).
2 Set this parameter for a spindle that is to function as a slave spindle. Set 0 for the master spindle.
3 In the spindle rotation control mode, synchronization error detection is not performed.

4831	Master axis of each slave spindle under spindle synchronous control

NOTE
When this parameter is set, the power must be turned off before operation is continued.

[Input type] Parameter input
[Data type] Byte spindle
[Valid data range] 0 to Maximum number of controlled spindle axes (within a path)

When a spindle is set as a slave spindle in spindle synchronization control on each spindle, set which spindle (master spindle) the slave spindle is to be synchronized with.
[Examples of parameter setting]

- When spindle synchronization control is exercised with the first spindle selected as a master spindle and the second spindle selected as a slave spindle:
  No. 4831(1)=0
  No. 4831(2)=1
  No. 4831(3)=0
  No. 4831(4)=0
- When spindle synchronization control is exercised with four spindles under the following combinations:
  (Two combinations, namely, first spindle (master spindle)/second spindle (slave spindle), and third spindle (master spindle)/fourth spindle (slave spindle))
  No. 4831(1)=0
  No. 4831(2)=1
  No. 4831(3)=0
  No. 4831(4)=3
- When spindle synchronization control is exercised with one master spindle and multiple slave spindles:
  (First spindle (master spindle)/second spindle (slave spindle)/third spindle (slave spindle)/fourth spindle (slave spindle))
  No. 4831(1)=0
  No. 4831(2)=1
  No. 4831(3)=1
  No. 4831(4)=1

NOTE
1 This parameter is valid if bit 4 (SSS) of parameter No. 3704 is set to 1.
2 The setting of a slave spindle as a master spindle is invalid.
3 In this parameter, set a spindle number within the same path. When a spindle not belonging to the local path is to be selected as a master spindle for spindle synchronization, set a spindle number common to the system in parameter No. 4832. In such a case, set 0 in this parameter.

4832	Master spindle of each slave spindle under spindle synchronization control (spindle number common to the system)

NOTE
When this parameter is set, the power must be turned off before operation is continued.

[Input type] Parameter input
[Data type] Byte spindle
[Valid data range] 0 to Maximum number of controlled spindle axes (common to the system)
When a spindle is set as a slave spindle in spindle synchronization control on each spindle, set which spindle (master spindle) the slave spindle is to be synchronized with.

NOTE
1 This parameter is valid if bit 4 (SSS) of parameter No. 3704 is set to 1.
Bit 4 (SSS) of parameter No. 3704 must be set to 1 (to enable spindle synchronization based on arbitrary spindles) for the path to which a slave spindle belongs and for the path to which a master spindle belongs.
2 The setting of a slave spindle as a master spindle is invalid.
3 In this parameter, set a spindle number common to the system.
4 When this parameter is used, parameter No. 4831 is set to 0.

4840	Spindle position 1 used as phase shift amount
4841	Spindle position 2 used as phase shift amount
4842	Spindle position 3 used as phase shift amount
4843	Spindle position 4 used as phase shift amount

[Input type] Parameter input
[Data type] Word spindle
[Unit of data] Detection unit
[Valid data range] 0 to 4095
Spindle position is saved by CNC. Spindle phase synchronous control whose shift amount is spindle position saved to this parameter can be executed.

	#7	#6	#5	#4	#3	#2	#1	#0
4900	FDTs	UDPs		FDEs				FLRs

[Input type] Parameter input
[Data type] Bit spindle

#0 FLRs When the spindle speed fluctuation detection function is used, the unit of parameters No. 4911(q), No. 4912(r), No. 4921(dq), No. 4922(dr) and diagnoses No. 1591, No. 1592 (allowable ratio and fluctuation ratio) is:
0: 1%
1: 0.1%

#4 FDEs Spindle speed fluctuation detection function is:
0: Enabled.
1: Disabled.
If the position coder selection signals PC2SLC<Gn028.7>, PC3SLC<Gn026.0>, PC4SLC<Gn026.1> are selected for a spindle for which this parameter is 1, the target spindle of spindle speed fluctuation detection remains unchanged. Spindle speed fluctuation detection stays enabled for the spindle for which spindle speed fluctuation detection was enabled before the selection of the position coder selection signal.
An example is given below.
[Example]
Bit 4 (FDE) of parameter No. 4900 (Workpiece spindle) = 0
Bit 4 (FDE) of parameter No. 4900 (Tool spindle) = 1
Even when the position coder selection signal is switched from the workpiece spindle to the tool spindle, the target spindle of spindle speed fluctuation detection remains unchanged, that is, the function stays enabled for the workpiece spindle.

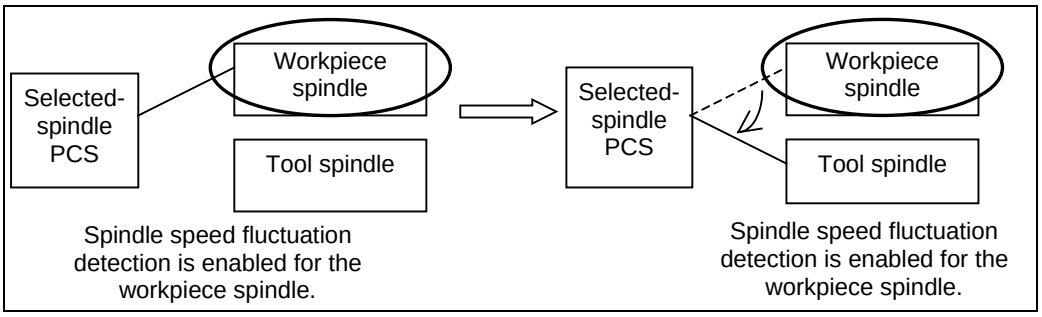

Note) The selected spindle varies depending on the state of the position coder selection signal.

NOTE

1 If bit 4 (FDE) of parameter No. 4900 is 0 for all spindles, spindle speed fluctuation detection is enabled for the spindle selected with the position coder selection signal as is conventionally. If the parameter FDE is 1 for all spindles, spindle speed fluctuation detection is enabled for the spindle selected with the position coder selection signal.

2 When the parameter FDE is 0 for all spindles, setting the parameter FDE for the spindle selected with the position coder selection signal to 1 does not cause an immediate change to the target spindle, which stays as the target until the next position coder selection signal is issued.

3 If the parameter FDE for the first spindle is 1 and the first spindle is the tool spindle when the power is turned on, spindle speed fluctuation detection remains enabled for the first spindle until a spindle for which the parameter FDE is 0 is selected.

#6 UDPs About parameters of spindle speed fluctuation detection at power-on:

0: Parameters Nos. 4911 to 4914 (p, q, r, i) are valid.

1: Parameters Nos. 4921 to 4924 (dp, dq, dr, di) are valid.

NOTE

This parameter (UDPs) is referenced at only power-on. So, even when this parameter (UDPs) is changed after power-on, valid parameters about spindle speed fluctuation detection are not changed.

#7 FDTs Spindle speed fluctuation detection is started:

0: When the actual spindle speed reaches a specified range or when the time specified with valid parameter No. 4914 or No.4924 elapses.

1: When the time specified with valid parameter No. 4914 or No.4924 elapses.

	#7	#6	#5	#4	#3	#2	#1	#0
4902								G26

[Input type] Parameter input

[Data type] Bit path

#0 G26 When power is turned on or when the control is cleared:
0: G25 mode (spindle speed fluctuation detection is disabled) is selected.
1: G26 mode (spindle speed fluctuation detection is enabled) is selected.

4911	Allowable speed ratio (q) used to assume that the spindle has reached a specified speed

[Input type] Parameter input
[Data type] Word spindle
[Unit of data] 1%, 0.1%
[Valid data range] 1 to 100, 1 to 1000
When the spindle speed fluctuation detection function is used, set an allowable speed ratio (q) used to assume that the spindle has reached a specified speed.

NOTE
The unit of data is determined by bit 0 (FLR) of parameter No. 4900.

4912	Spindle speed fluctuation ratio (r) for not issuing a spindle speed fluctuation detection alarm

[Input type] Parameter input
[Data type] Word spindle
[Unit of data] 1%, 0.1%
[Valid data range] 1 to 100, 1 to 1000
When the spindle speed fluctuation detection function is used, set a spindle speed fluctuation ratio (r) for not issuing an alarm.

NOTE
The unit of data is determined by bit 0 (FLR) of parameter No. 4900.

4913	Spindle speed fluctuation width (i) for not issuing a spindle speed fluctuation detection alarm

[Input type] Parameter input
[Data type] 2-word spindle
[Unit of data] min^{-1}
[Valid data range] 0 to 99999
When the spindle speed fluctuation detection function is used, set an allowable fluctuation width (i) for not issuing an alarm.

4914	Time (p) from the change of a specified speed until spindle speed fluctuation detection is started

[Input type] Parameter input
[Data type] 2-word spindle
[Unit of data] msec
[Valid data range] 0 to 999999
When the spindle speed fluctuation detection function is used, set a time (p) from the change of a specified speed until spindle speed fluctuation detection is started. In other words, spindle speed fluctuation detection is not performed until a set time has elapsed after a specified speed is changed. However, when the actual spindle speed is assumed to have reached a specified value within a set time (p), spindle speed fluctuation detection is started.

4921	Allowable speed ratio (dq) used to assume that the spindle has reached a specified speed (at power-on)

[Input type] Parameter input
[Data type] Word spindle
[Unit of data] 1%, 0.1%
[Valid data range] 1 to 100, 1 to 1000

When the spindle speed fluctuation detection function is used, set an allowable speed ratio (dq) used to assume that the spindle has reached a specified speed. To validate this parameter, it is necessary to set bit 6 (UDPs) of parameter No.4900 to 1. Then, at power-on, parameter No.4911 (q) is invalid, and parameter No.4921 (dq) is valid.

NOTE
1 If address Q is specified in the G26 block after power-on, parameter No.4921 (dq) becomes invalid, and parameter No.4911 (q) becomes valid. If address Q is not specified in the G26 block after power-on, parameter No.4921 (dq) is still valid. Also, When alarm PS1305 is issued because specified address Q value is out of valid data range, parameter No.4921 (dq) is still valid.
2 The unit of data is determined by bit 0 (FLR) of parameter No.4900.

4922	Spindle speed fluctuation ratio (dr) for not issuing a spindle speed fluctuation detection alarm (at power-on)

[Input type] Parameter input
[Data type] Word spindle
[Unit of data] 1%, 0.1%
[Valid data range] 1 to 100, 1 to 1000

When the spindle speed fluctuation detection function is used, set a spindle speed fluctuation ratio (dr) for not issuing an alarm. To validate this parameter, it is necessary to set bit 6 (UDPs) of parameter No.4900 to 1. Then, at power-on, parameter No.4912 (r) is invalid, and parameter No.4922 (dr) is valid.

NOTE
1 If address R is specified in the G26 block after power-on, parameter No.4922 (dr) becomes invalid, and parameter No.4912 (r) becomes valid. If address R is not specified in the G26 block after power-on, parameter No.4922 (dr) is still valid. Also, When alarm PS1305 is issued because specified address R value is out of valid data range, parameter No.4922 (dr) is still valid.
2 The unit of data is determined by bit 0 (FLR) of parameter No.4900.

4923	Spindle speed fluctuation width (di) for not issuing a spindle speed fluctuation detection alarm (at power-on)

[Input type] Parameter input
[Data type] 2-word spindle
[Unit of data] min^{-1}
[Valid data range] 0 to 99999

When the spindle speed fluctuation detection function is used, set an allowable fluctuation width (di) for not issuing an alarm. To validate this parameter, it is necessary to set bit 6 (UDPs) of parameter No.4900 to 1. Then, at power-on, parameter No.4913 (i) is invalid, and parameter No.4923 (di) is valid.

NOTE
If address I is specified in the G26 block after power-on, parameter No.4923 (di) becomes invalid, and parameter No.4913 (i) becomes valid. If address I is not specified in the G26 block after power-on, parameter No.4923 (di) is still valid. Also, When alarm PS1305 is issued because specified address I value is out of valid data range, parameter No.4923 (di) is still valid.

4924	Time (dp) from the change of a specified speed until spindle speed fluctuation detection is started (at power-on)

[Input type] Parameter input
[Data type] 2-word spindle
[Unit of data] msec
[Valid data range] 0 to 999999

When the spindle speed fluctuation detection function is used, set a time (dp) from the change of a specified speed until spindle speed fluctuation detection is started. In other words, spindle speed fluctuation detection is not performed until a set time has elapsed after a specified speed is changed. However, when the actual spindle speed is assumed to have reached a specified value within a set time (dp), spindle speed fluctuation detection is started. To validate this parameter, it is necessary to set bit 6 (UDPs) of parameter No.4900 to 1. Then, at power-on, parameter No.4914 (p) is invalid, and parameter No.4924 (dp) is valid.

NOTE
If address P is specified in the G26 block after power-on, parameter No.4924 (dp) becomes invalid, and parameter No.4914 (p) becomes valid. If address P is not specified in the G26 block after power-on, parameter No.4924 (dp) is still valid. Also, When alarm PS1305 is issued because specified address P value is out of valid data range, parameter No.4924 (dp) is still valid.

	#7	#6	#5	#4	#3	#2	#1	#0
4950	IMBs	ESIs	TRVs			ISZs	IDMs	IORs

[Input type] Parameter input
[Data type] Bit spindle

#0 IORs Resetting the system in the spindle positioning mode
0: Does not release the mode.
1: Releases the mode

#1 IDMs The direction of spindle positioning (half-fixed angle positioning based on M codes) is:
0: Plus direction.
1: Minus direction.

#2 ISZs When an M code for switching to the spindle positioning mode is specified for spindle positioning:
0: The spindle is switched to the spindle positioning mode, and spindle orientation operation is performed.
1: Only the switching of the spindle to the spindle positioning mode is performed. (Spindle orientation operation is not performed.)

#5 TRVs The rotation direction for spindle positioning is:
0: Same as the specified sign.
1: Opposite to the specified sign.

> **NOTE**
> When a serial spindle is used, this parameter is invalid for the specification of a rotation direction for the orientation command.

#6 ESIs The unit of rapid traverse rate on the spindle positioning axis is:
0: Not increased by a factor of 10.
1: Increased by a factor of 10.

#7 IMBs When the spindle positioning function is used, half-fixed angle positioning based on M codes uses:
0: Specification A
1: Specification B

In the case of half-fixed angle positioning based on M codes, three types of spindle positioning operations can occur:
(1) The spindle rotation mode is cleared, and then the mode is switched to the spindle positioning mode. (After switching to the spindle positioning mode, spindle orientation operation is also performed.)
(2) Spindle positioning is performed in the spindle positioning mode.
(3) The spindle positioning mode is cleared, and then the mode is switched to the spindle rotation mode.

- In the case of specification A:
  Operations (1) to (3) are specified using separate M codes.
  (1) Specified using an M code for switching to the spindle positioning mode. (See parameter No. 4960)
  (2) Specified using M codes for specifying a spindle positioning angle. (See parameter No. 4962)
  (3) Specified using M codes for clearing spindle positioning operation. (See parameter No. 4961.)
- In the case of specification B:
  When M codes for specifying a spindle positioning angle are specified, operations (1) to (3) are performed successively. (See parameter No. 4962.) (However, spindle orientation operation of (1) is not performed.)

	#7	#6	#5	#4	#3	#2	#1	#0
4959								DMDx

[Input type] Parameter input
[Data type] Bit axis

> **NOTE**
> When this parameter is set, the power must be turned off before operation is continued.

#0 DMDx A machine coordinate on the spindle positioning axis is displayed in:
0: Degrees.
1: Pulses.

4960	M code specifying the spindle orientation

[Input type] Parameter input

[Data type] 2-word spindle
[Valid data range] 6 to 97
Set an M code for switching to the spindle positioning mode.

NOTE
1 Do not set an M code that duplicates other M codes used for spindle positioning.
2 Do not set an M code used with other functions (such as M00-05, 30, 98, and 99, and M codes for calling subprograms).

4961	M code releasing the spindle positioning mode

[Input type] Parameter input
[Data type] 2-word spindle
[Valid data range] 6 to 97
Set an M code for canceling the spindle positioning mode on the spindle positioning axis.

NOTE
1 Do not set an M code that duplicates other M codes used for spindle positioning.
2 Do not set an M code used with other functions (such as M00-05, 30, 98, and 99, and M codes for calling subprograms).

4962	M code for specifying a spindle positioning angle

[Input type] Parameter input
[Data type] 2-word spindle
[Valid data range] 6 to 9999999
Two methods are available for specifying spindle positioning. One method uses axis address for arbitrary-angle positioning. The other uses an M code for half-fixed angle positioning. This parameter sets an M code for the latter method.
In this parameter, set an M code to be used for half-fixed angle positioning based on M codes.
Six M code from Mα to M(α+5) are used for half-fixed angle positioning, when α is the value of this parameter.

- When the number of M codes is set in parameter No. 4964, let α be the value set in parameter No. 4962, and let β be the value set in parameter No. 4964. Then, β M codes from Mα to M(α+β-1) are used as M codes for half-fixed angle positioning based on M codes.

The table below indicates the relationship between the M codes and positioning angles.

M code	Positioning angle	Example: Positioning angle when θ = 30°
Mα	θ	30°
M(α+1)	2θ	60°
M(α+2)	3θ	90°
M(α+3)	4θ	120°
M(α+4)	5θ	150°
M(α+5)	6θ	180°
:	:	:
M(α+β-1)	$\beta\times\theta$	$\beta\times$30°

β represents the number of M codes set in parameter No. 4964.
(When parameter No. 4964 is set to 0, β = 6.)
θ represents the basic angular displacement set in parameter No. 4963.

NOTE
1 Do not set an M code that duplicates other M codes used for spindle positioning.
2 Do not set an M code used with other functions (such as M00-05, 30, 98, and 99, and M codes for calling subprograms).

4963	Basic angle for half-fixed angle positioning

[Input type] Parameter input
[Data type] Real spindle
[Unit of data] Degree
[Min. unit of data] Depend on the increment system of the applied axis
[Valid data range] 0 to 60
This parameter sets a basic angular displacement used for half-fixed angle positioning using M codes.

4964	Number of M codes for specifying a spindle positioning angle

[Input type] Parameter input
[Data type] 2-word spindle
[Valid data range] 0 to 255
This parameter sets the number of M codes used for Half-fixed angle positioning using M codes.
As many M codes as the number specified in this parameter, starting with the M code specified in parameter No. 4962, are used to specify half-fixed angle positioning.
Let α be the value of parameter No. 4962, and let β be the value of parameter No. 4964. That is, M codes from Mα to M(α+β-1) are used for half-fixed angle positioning.
Setting this parameter to 0 has the same effect as setting 6. That is, M codes from Mα to M(α+5) are used for half-fixed angle positioning.

NOTE
1 Make sure that M codes from Mα to M (α+β-1) do not duplicate other M codes.
2 Do not set an M code that duplicates other M codes used for spindle positioning.
3 Do not set an M code used with other functions (such as M00-05, 30, 98, and 99, and M codes for calling subprograms).

4970	Position gain

[Input type] Parameter input
[Data type] Word spindle
[Unit of data] 0.01/sec
[Valid data range] 1 to 9999
Set the position gain of the analog spindle in the spindle positioning mode.

4971	Position gain multiplier (first stage)
4972	Position gain multiplier (second stage)
4973	Position gain multiplier (third stage)

4974	Position gain multiplier (fourth stage)

[Input type] Parameter input
[Data type] Word spindle
[Valid data range] 1 to 32767

Set a position gain multiplier for an analog spindle in spindle positioning.
Position gain multiplier GC is obtained from the following equation:

$$GC = \frac{2048000 \times 360 \times PC \times E}{PLS \times SP \times L}$$

PLS Number of pulses output from the position coder (pulses/rev)
SP Number of gear teeth on the spindle side
PC Number of gear teeth on the position coder side
E Specified voltage (V) for turning the spindle motor at 1000 min^{-1}
L Angular displacement of the spindle (degrees) per spindle motor rotation

[Example] For the spindle motor and gear ratio given below, GC is calculated as follows:

PLS = 4096 pulse/rev
SP = 1
PC = 1
E = 2.2 V
L = 360 deg

$$GC = \frac{2048000 \times 360 \times 1 \times 2.2}{4096 \times 1 \times 360} = 1100$$

NOTE
On the assumption that the spindle motor used turns at 4500 min^{-1} at 10 V, 2.2 V is required to turn the spindle motor at 1000 min^{-1}

4.24 PARAMETERS OF TOOL COMPENSATION (1 OF 3)

	#7	#6	#5	#4	#3	#2	#1	#0
5000							MOF	SBK

[Input type] Setting input
[Data type] Bit path

#0 SBK With a block created internally for Tool radius - tool nose radius compensation:
0: A single block stop is not performed.
1: A single block stop is performed.
This parameter is used to check a program including Tool radius - tool nose radius compensation.

#1 MOF When the tool length compensation shift type (bit 6 (TOS) of parameter No. 5006 or bit 2 (TOP) of parameter No. 11400 is set to 1) is used, if the tool length compensation amount is changed(NOTE 3) in the tool length compensation mode (NOTE 1) when look-ahead blocks are present(NOTE 2):
0: Compensation is performed for the change in compensation amount as the movement type.
1: Compensation is not performed for the change until a tool length compensation command (offset number) and an absolute programming for the compensation axis are specified.

NOTE
1 The tool length compensation mode refers to the following state:
- Tool length offset (G43/G44)

2 "When look-ahead blocks are present" means as follows:
- The modal G code of the G codes (such as tool radius - tool nose radius compensation) of group 07 is other than G40.

One look-ahead block during automatic operation and multiple look-ahead blocks in the AI contour control mode are not included in the state "when look-ahead blocks are present".

3 Changes in tool length compensation amount are as follows:
- When the tool length compensation number is changed by H code (or D code for the extended tool selection function for lathe systems)
- When G43 or G44 is specified to change the direction of tool length compensation
- When the tool length compensation amount is changed using the offset screen, G10 command, system variable, PMC window, and so forth during automatic operation if bit 6 (EVO) of parameter No. 5001 is set to 1.
- When the tool length compensation vector is restored after being temporarily canceled by G53, G28, G30 during tool length compensation.

	#7	#6	#5	#4	#3	#2	#1	#0
5001		EVO						
		EVO		EVR	TAL		TLB	TLC

[Input type] Parameter input
[Data type] Bit path

#0 TLC
#1 TLB These bits are used to select a tool length compensation type.

Type	TLB	TLC
Tool length compensation A	0	0
Tool length compensation B	1	0
Tool length compensation C	-	1

The axis to which cutter compensation is applied varies from type to type as described below.
Tool length compensation A: Z-axis at all times
Tool length compensation B: Axis perpendicular to a specified plane (G17/G18/G19)
Tool length compensation C: Axis specified in a block that specifies G43/G44

#3 TAL Tool length compensation C
0: Generates an alarm when two or more axes are offset
1: Not generate an alarm even if two or more axes are offset

#4 EVR When a tool compensation value is changed in tool radius - tool nose radius compensation mode:
0: Enables the change, starting from that block where the next D or H code is specified.
1: Enables the change, starting from that block where buffering is next performed.

#6 EVO If tool compensation value modification is made for tool length compensation A or tool length compensation B in the offset mode (G43 or G44):
0: The new value becomes valid in a block where G43, G44, or an H code is specified next.
1: The new value becomes valid in a block where buffering is performed next.

	#7	#6	#5	#4	#3	#2	#1	#0
5002	WNP	LWM	LGC	LGT	ETC	LWT	LGN	

[Input type] Parameter input
[Data type] Bit path

#1 LGN Geometry offset number of tool offset
0: Is the same as wear offset number
1: Specifies the geometry offset number by the tool selection number

> **NOTE**
> This parameter is valid when tool geometry/wear compensation is enabled (bit 6 (NGW) of parameter No.8136 is 0).

#2 LWT Tool wear compensation is performed by:
0: Moving the tool.
1: Shifting the coordinate system.

NOTE
This parameter is valid when tool geometry/wear compensation is enabled (bit 6 (NGW) of parameter No.8136 is 0).

#3 ETC When a T-code command is two digits or shorter, the T code is:
0: Not extended.
1: Extended.
When this parameter is 1, two-digit or shorter T-code commands are extended. (Three-digit or longer T-code commands are not extended.) The value after extension is determined by the setting of the number of digits in the offset number in T-code commands (parameter No. 5028).

Parameter No. 5028	Number of digits after extension	Sample extension
1	Extended to two digits	Before extension: T1 → After extension: T11
2	Extended to four digits	Before extension: T1 → After extension: T0101
3 or greater	Not extended	

[Example]
- Parameter No. 5028: 2
- Parameter No. 3032: 4 (Allowable number of digits in T code)

Before extension	→	After extension
T1	→	T0101 (1-digit command is extended to 4 digits.)
T12	→	T1212 (2-digit command is extended to 4 digits.)
T112	→	T112 (Not extended)
T1122	→	T1122 (Not extended)

NOTE
1 The setting of the allowable number of digits in T code (parameter No. 3032) indicates the number of digits in a specified command (before being extended). If the number of digits in the command exceeds the allowable number of digits in T code, the alarm PS0003, "TOO MANY DIGIT" is issued.
2 This parameter is dedicated to the lathe system. Tool change is available with the turret type setting (bit 3 (TCT) of parameter No. 5040 = 0).
3 If the number of digits in the offset number in a T-code command (parameter No. 5028) is set to 0, the value after extension is determined by the number of digits in the number of tool compensation values (parameter No. 5024).
4 Common variable #149 for calling a T-code macro is set to the pre-extension value.

#4 LGT Tool geometry compensation is
0: Compensated by the shift of the coordinate system
1: Compensated by the tool movement

NOTE
This parameter is valid when tool geometry/wear compensation is enabled (bit 6 (NGW) of parameter No.8136 is 0).

#5 LGC When tool geometry compensation is based on coordinate shifting, the tool geometry offset is:
0: Not canceled by a command with offset number 0.
1: Canceled by a command with offset number 0.

> **NOTE**
> This parameter is valid when tool geometry/wear compensation is enabled (bit 6 (NGW) of parameter No.8136 is 0).

#6 LWM Tool offset operation based on tool movement is performed:
0: In a block where a T code is specified.
1: Together with a command for movement along an axis.

#7 WNP Imaginary tool tip number used for tool nose radius compensation, when the tool geometry/wear compensation function is equipped, is the number specified by:
0: Geometry offset number
1: Wear offset number

	#7	#6	#5	#4	#3	#2	#1	#0
5003	TGC						SUV	SUP
		LVK					SUV	SUP

[Input type] Parameter input
[Data type] Bit path

#0 SUP
#1 SUV These bits are used to specify the type of startup/cancellation of tool radius - tool nose radius compensation.

SUV	SUP	Type	Operation
0	0	Type A	A compensation vector perpendicular to the block next to the startup block or the block preceding the cancellation block is output. 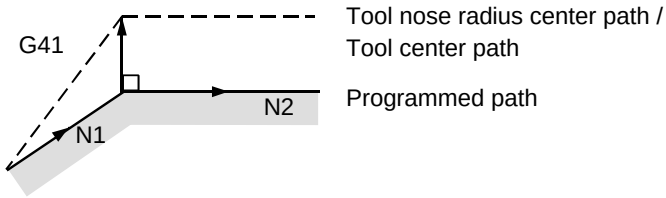
0	1	Type B	A compensation vector perpendicular to the startup block or cancellation block and an intersection vector are output. 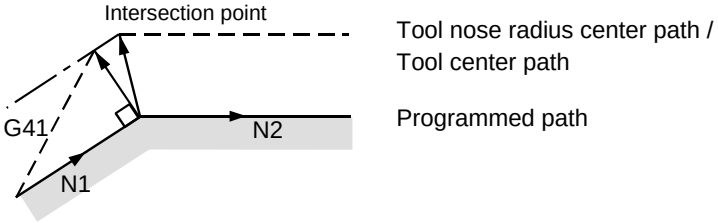

SUV	SUP	Type	Operation
1	0 1	Type C	When the startup block or cancellation block specifies no movement operation, the tool is shifted by the cutter compensation amount in a direction perpendicular to the block next to the startup or the block before cancellation block. 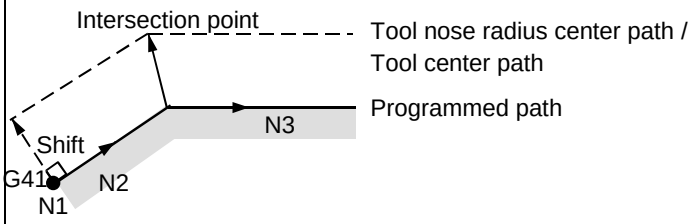 When the block specifies movement operation, the type is set according to the SUP setting; if SUP is 0, type A is set, and if SUP is 1, type B is set.

NOTE
When SUV, SUP = 0, 1 (type B), an operation equivalent to that of FS16*i*-T is performed.

#6 LVK Tool length compensation vector is
0: Cleared by reset
1: Not cleared, but held by reset

#7 TGC A tool geometry offset based on a coordinate shift is:
0: Not canceled by reset.
1: Canceled by reset.

NOTE
This parameter is valid when tool geometry/wear compensation is enabled (bit 6 (NGW) of parameter No.8136 is 0).

	#7	#6	#5	#4	#3	#2	#1	#0
5004					TS1		ORC	
						ODI		

[Input type] Parameter input
[Data type] Bit path

#1 ORC The setting of a tool offset value is corrected as:
0: Diameter value
1: Radius value

NOTE
This parameter is valid only for an axis based on diameter specification. For an axis based on radius specification, please specify a radius value, regardless of the setting of this parameter.

#2 ODI The setting of a tool radius - tool nose radius compensation value is corrected as:
0: Radius value
1: Diameter value

#3 TS1 For touch sensor contact detection with the function for direct input of offset value measured B:
0: Four-contact input is used.

1: One-contact input is used.

	#7	#6	#5	#4	#3	#2	#1	#0
5005		TLE	QNI			PRC		CNI

[Input type] Parameter input
[Data type] Bit path

#0 CNI On the offset screen, Y-axis offset screen, and macro screen, the [INP.C] soft key is:
0: Used.
1: Not used. (The [INP.C] soft key is not displayed.)

#2 PRC For direct input of a tool offset value or workpiece coordinate system shift amount:
0: The position record signal PRC <Gn040.6> is not used.
1: The position record signal PRC <Gn040.6> is used.

#5 QNI With the function for direct input of offset value measured B, a tool compensation number is selected by:
0: Operation through the MDI unit by the operator (selection based on cursor operation).
1: Signal input from the PMC.

#6 TLE The "direct input of tool offset value measured B" function updates the offset value in offset write mode:
0: Constantly.
1: During axis movement.
Axis movement assumes a positional deviation other than 0.

	#7	#6	#5	#4	#3	#2	#1	#0
5006		TOS			LVC		TGC	
		TOS						

[Input type] Parameter input
[Data type] Bit

#1 TGC If a T code is specified in a block where G50, G04, or G10 is specified:
0: No alarm is issued.
1: The alarm PS0245, “T-CODE NOT ALLOWED IN THIS BLOCK” is issued.

#3 LVC A tool offset (geometry/wear) based on a tool movement and wear offset based on a coordinate shift are:
0: Not canceled by reset.
1: Canceled by reset.

#6 TOS This bit sets a tool length compensation or tool offset operation.
0: Tool length compensation or tool offset operation is performed by an axis movement.
1: Tool length compensation or tool offset operation is performed by shifting the coordinate system.

	#7	#6	#5	#4	#3	#2	#1	#0
5007	3OF	3OC						
	3OF	3OC						

[Input type] Parameter input

[Data type] Bit path

#6 3OC If tool length compensation is not cancelled before 3-dimensional coordinate conversion is specified, an alarm is:
0: Not raised.
1: Raised. (Alarm (PS0049) “ILLEGAL COMMAND(G68,G69)”)

#7 3OF If 3-dimensional coordinate conversion is not nested with a command for tool length compensation, or if 3-dimensional coordinate conversion is specified during tool length compensation and another command for tool length compensation is specified:
0: No alarm is issued.
1: The alarm (PS0049) “ILLEGAL COMMAND(G68,G69)” is issued.

Example 1) An alarm is raised in the following cases:

```
1) G68 X_ Y_ Z_ I_ J_ K_ R_ ;
     :
   G43 H1 ;
     :
   G69 ;                      ← PS0049 raised
     :
   G49 ;
2) G43 H1 ;
     :
   G68 X_ Y_ Z_ I_ J_ K_ R_ ;
     :
   G49(G43H2,H2 etc.) ;       ← PS0049 raised
     :
   G69 ;
```

Example 2) No alarm is raised in the following cases:

```
3) G68 X_ Y_ Z_ I_ J_ K_ R_ ;
     :
   G43 H1 ;
     :
   G49 ;
     :
   G69 ;
4) G43 H1 ;
     :
   G68 X_ Y_ Z_ I_ J_ K_ R_ ;
     :
   G69 ;
     :
   G49 ;
```

NOTE

A command to cancel tool length compensation (G28, etc.) will not cause an alarm to be raised. If a command like this is specified in the G68 mode, please program as indicated in 3) above.

```
G43 H1 ;
 :
G68 X_ Y_ Z_ I_ J_ K_ R_ ;
 :
G28 X_ Y_ Z_ ;
 :
G69 ;
```

← Offset is cancelled.
No alarm is raised.

	#7	#6	#5	#4	#3	#2	#1	#0
5008				MCR	CNV		CNC	

[Input type] Parameter input
[Data type] Bit path

#1 CNC

#3 CNV These bits are used to select an interference check method in the tool radius - tool nose radius compensation mode.

CNV	CNC	Operation
0	0	Interference check is enabled. The direction and the angle of an arc are checked.
0	1	Interference check is enabled. Only the angle of an arc is checked.
1	-	Interference check is disabled.

For the operation taken when the interference check shows the occurrence of an interference (overcutting), please see the description of bit 5 (CAV) of parameter No. 19607.

NOTE

Checking of only the direction cannot be set.

#4 MCR If G41/G42 (tool radius - tool nose radius compensation) is specified in the MDI mode, an alarm is:

0: Not raised.
1: Raised. (Alarm (PS5257) “G41/G42 NOT ALLOWED IN MDI MODE”)

	#7	#6	#5	#4	#3	#2	#1	#0
5009				TSD				GSC
			TIP					

[Input type] Parameter input
[Data type] Bit path

NOTE

When at least one of these parameters is set, the power must be turned off before operation is continued.

#0 GSC When the function for direct input of offset value measured B is used, an offset write input signal is input from:

0: Machine side
1: PMC side

NOTE
When the interlock function for each axis direction is enabled (when bit 3 (DIT) of parameter No. 3003 is set to 0), switching can also be made between input from the machine side and input from PMC side for the interlock function for each axis direction.

#4 TSD In the function for direct input of offset value measured B, the movement direction determination specifications:
0: Do not apply.
1: Apply.
This parameter is valid when four-contact input is used (bit 3 (TS1) of parameter No. 5004 is set to 0).

#5 TIP In tool radius - tool nose radius compensation, the virtual tool tip direction is:
0: Not used.
1: Used.

5010	Limit for ignoring the small movement resulting from tool radius - tool nose radius compensation

[Input type] Setting input
[Data type] Real path
[Unit of data] mm, inch (input unit)
[Min. unit of data] Depend on the increment system of the reference axis
[Valid data range] 9 digit of minimum unit of data (please refer to standard parameter setting table (A))
(When the increment system is IS-B, -999999.999 to +999999.999)
When the tool moves around a corner in cutter compensation or tool nose radius compensation mode, the limit for ignoring the small travel amount resulting from compensation is set. This limit eliminates the interruption of buffering caused by the small travel amount generated at the corner and any change in feedrate due to the interruption.

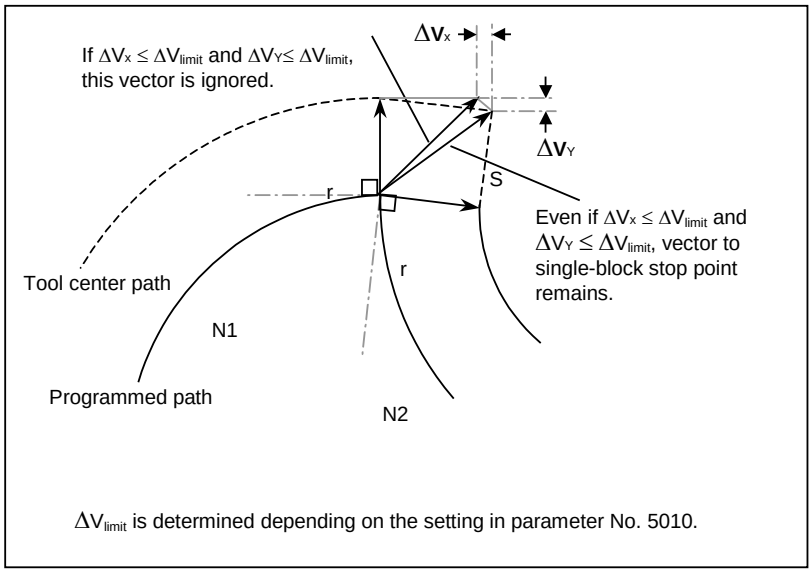

5013	Maximum value of tool wear compensation

[Input type] Parameter input
[Data type] Real path
[Unit of data] mm, inch (offset unit)
[Min. unit of data] The increment system of a tool offset value is followed.

[Valid data range] The settings of bits 3 to 0 (OFE, OFD, OFC, and OFA) of parameter No. 5042 are followed.

For metric input

OFE	OFD	OFC	OFA	Valid data range
0	0	0	1	0 to 9999.99mm
0	0	0	0	0 to 9999.999mm
0	0	1	0	0 to 9999.9999mm
0	1	0	0	0 to 9999.99999mm
1	0	0	0	0 to 999.999999mm

For inch input

OFE	OFD	OFC	OFA	Valid data range
0	0	0	1	0 to 999.999inch
0	0	0	0	0 to 999.9999inch
0	0	1	0	0 to 999.99999inch
0	1	0	0	0 to 999.999999inch
1	0	0	0	0 to 99.9999999inch

This parameter sets the maximum allowable tool wear compensation value. If an attempt is made to set a tool wear compensation value, the absolute value of which exceeds the value set in this parameter, the following alarm or warning is output:

Input from MDI	Warning: DATA IS OUT OF RANGE
Input by G10	Alarm (PS0032) “ILLEGAL OFFSET VALUE IN G10”

When 0 or a negative value is set, no maximum allowable value is applied.

[Example] When 30.000 are set
As a tool offset value, a value from -30.000 to +30.000 can be input.

5014	Maximum value of incremental input for tool wear compensation

[Input type] Parameter input
[Data type] Real path
[Unit of data] mm, inch (offset unit)
[Min. unit of data] The increment system of a tool offset value is followed.
[Valid data range] The settings of bits 3 to 0 (OFE, OFD, OFC, and OFA) of parameter No. 5042 are followed.

For metric input

OFE	OFD	OFC	OFA	Valid data range
0	0	0	1	0 to 9999.99mm
0	0	0	0	0 to 9999.999mm
0	0	1	0	0 to 9999.9999mm
0	1	0	0	0 to 9999.99999mm
1	0	0	0	0 to 999.999999mm

For inch input

OFE	OFD	OFC	OFA	Valid data range
0	0	0	1	0 to 999.999inch
0	0	0	0	0 to 999.9999inch
0	0	1	0	0 to 999.99999inch
0	1	0	0	0 to 999.999999inch
1	0	0	0	0 to 99.9999999inch

This parameter sets the maximum allowable value for the tool wear compensation value, input as an incremental value. If the incremental input value (absolute value) exceeds the set value, the following alarm or warning message is output:

Input from MDI	Warning: DATA IS OUT OF RANGE
Input by G10	Alarm (PS0032) “ILLEGAL OFFSET VALUE IN G10.”

When 0 or a negative value is set, no maximum allowable value is applied.

5015	Distance to X-axis + contact surface of touch sensor 1 (X1P)
5016	Distance to X-axis - contact surface of touch sensor 1 (X1M)
5017	Distance to Z-axis + contact surface of touch sensor 1 (Z1P)
5018	Distance to Z-axis - contact surface of touch sensor 1 (Z1M)
5056	Distance to X-axis + contact surface of touch sensor 2 (X2P)
5057	Distance to X-axis - contact surface of touch sensor 2 (X2M)
5058	Distance to Z-axis + contact surface of touch sensor 2 (Z2P)
5059	Distance to Z-axis - contact surface of touch sensor 2 (Z2M)

[Input type] Parameter input
[Data type] Real path
[Unit of data] mm, inch (machine unit)
[Min. unit of data] Depend on the increment system of the applied axis
[Valid data range] 9 digit of minimum unit of data (refer to standard parameter setting table (A))

This parameter is related to the function for direct input of offset value measured B.
This parameter sets the distance (signed) from a measurement reference position to each contact surface of a sensor. For a diameter specification axis, please set a diameter value. When arbitrary angular axis control is performed, please set the distance in the Cartesian coordinate system.

NOTE
Parameters Nos. 5056 to 5059 are valid when bit 0 (2NR) of parameter No. 5051 is set to 1.

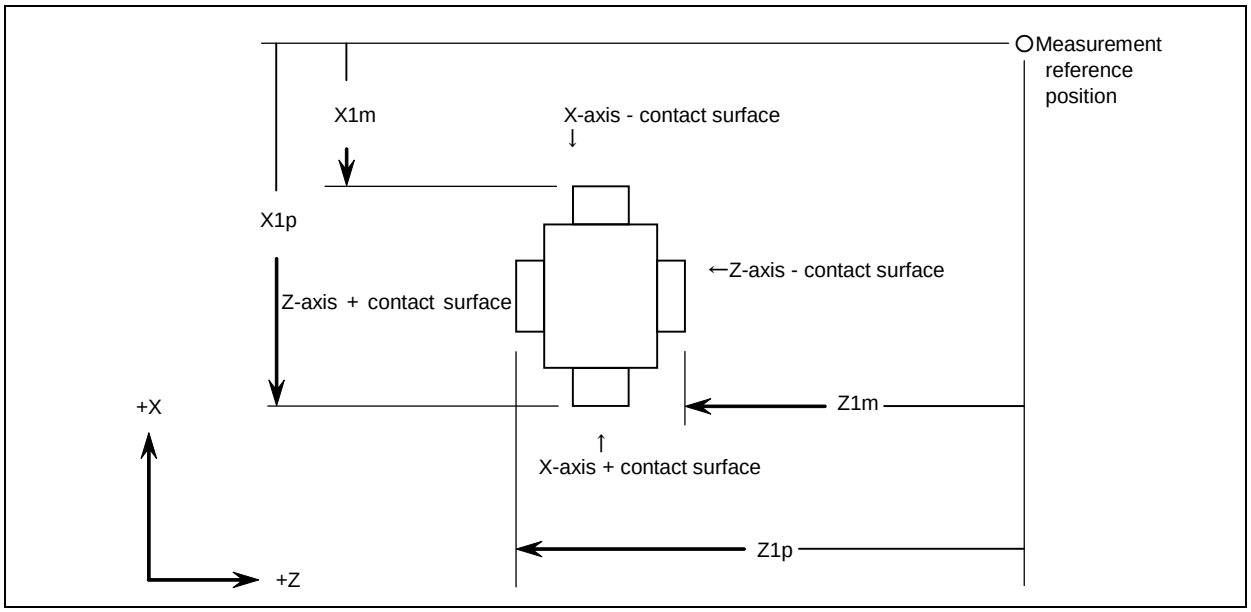

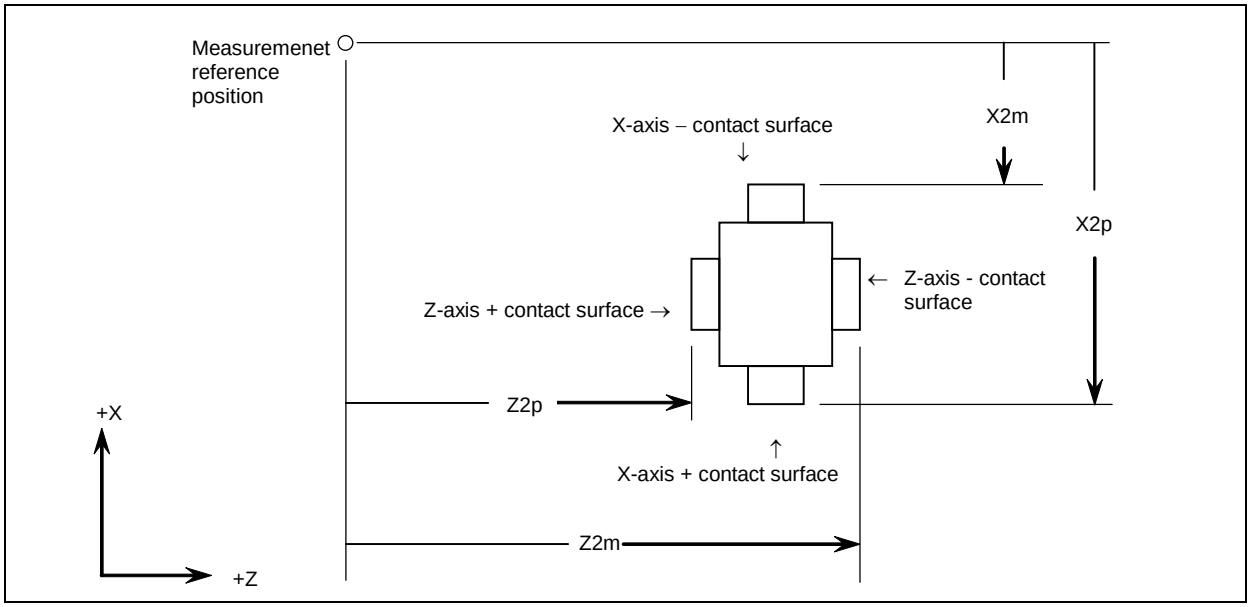

5019	Chattering prevention distance for direct input of offset value measured B

[Input type] Parameter input
[Data type] 2-word path
[Unit of data] Detection unit
[Valid data range] 0 to 999999999

Once a signal is input from the touch sensor, any subsequent signal input from the touch sensor is ignored until a command for movement through a distance longer than or equal to one specified with this parameter is issued. If the parameter setting is 0, this function is disabled. So, signals input from the touch sensor are always acceptable. Re-setting the parameter releases input signals from ignorance.

5020	Tool offset number used with the function for direct input of offset value measured B

[Input type] Parameter input

[Data type] Word path
[Valid data range] 0 to number of tool compensation values
This parameter sets a tool offset number used with the function for direct input of offset value measured B (when a workpiece coordinate system shift amount is set). (Please set the tool offset number corresponding to a tool under measurement beforehand.) This parameter is valid when automatic tool offset number selection is not performed (when bit 5 (QNI) of parameter No. 5005 is set to 0).

5021	Number of interpolation cycles of pulses stored until the tool is about to touch the touch sensor

[Input type] Parameter input
[Data type] Byte path
[Valid data range] 0 to 8
When a touch sensor with one contact signal input is used for the "direct input of tool offset value measured B" function or when the movement direction determination specification is enabled, this parameter sets the number of interpolation cycles of pulses stored until the tool is about to touch the touch sensor by manual operation. When 0 is set, the specification of the maximum value 8 is assumed.

NOTE
This parameter is valid when bit 3 (TS1) of parameter No. 5004 or bit 4 (TSD) of parameter No. 5009 is set to 1.

5022	
	Distance (L) from reference tool tip position to the reference measurement surface

[Input type] Parameter input
[Data type] Real axis
[Unit of data] mm, inch (machine unit)
[Min. unit of data] Depend on the increment system of the applied axis
[Valid data range] 9 digit of minimum unit of data (please refer to standard parameter setting table (A))
(When the increment system is IS-B, -999999.999 to +999999.999)
For each axis, this parameter sets the distance from the reference tool tip position to the reference measurement surface when the machine is at the machine zero point.

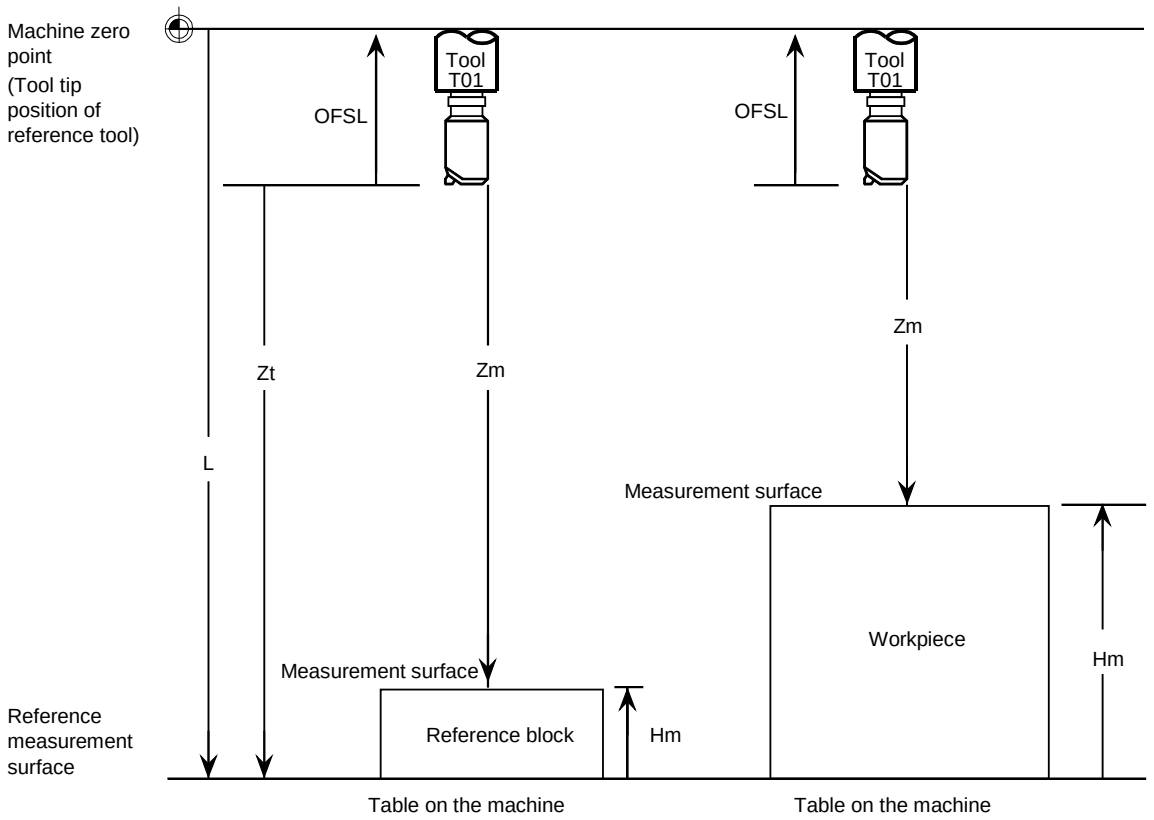

L: Distance from the reference tool tip to the reference measurement surface (machine coordinates of the reference measurement surface)
Hm: Distance from the reference measurement surface to actual measurement surface
Zm: Distance from the tool tip of the measured tool at the machine zero point to the measurement surface
Zt: Distance from the tool tip of the measured tool at the machine zero point to the reference measurement surface
OFSL: Tool length compensation (OFSL = Zm-Hm-L)

5024	Number of tool compensation values

NOTE
When this parameter is set, the power must be turned off before operation is continued.

[Input type] Parameter input
[Data type] Word path
[Valid data range] 0 to 999

This parameter sets the maximum allowable number of tool compensation values used for each path. Please ensure that the total number of values set in parameter No. 5024 for the individual paths is within the number of compensation values usable in the entire system. The number of compensation values usable in the entire system depends on the option configuration. If the total number of values set in parameter No. 5024 for the individual paths exceeds the number of compensation values usable in the entire system, or 0 is set in parameter No. 5024 for all paths, the number of compensation values usable for each path is a value obtained by dividing the number of compensation values usable in the entire system by the number of paths.

Tool compensation values as many as the number of compensation values used for each path are displayed on the screen. If tool compensation numbers more than the numbers of compensation values usable for each path are specified, alarm PS0115 “VARIABLE NO. OUT OF RANGE” is issued.

For example, 64 tool compensation sets are used, 20 sets may be allocated to path 1, 30 sets to path 2, and 14 sets to path 3. All of 64 sets need not be used.

5028	Number of digits of an offset number used with a T code command

[Input type] Parameter input
[Data type] Byte path
[Valid data range] 0 to 4
Specify the number of digits of a T code portion that is used for a tool offset number (wear offset number when the tool geometry/wear compensation function is used).
When 0 is set, the number of digits is determined by the number of tool compensation values.
When the number of tool compensation values is 1 to 9: Lower 1 digit
When the number of tool compensation values is 10 to 99: Lower 2 digits
When the number of tool compensation values is 100 to 999: Lower 3 digits
[Example] When an offset number is specified using the lower 2 digits of a T code, set 2 in parameter No. 5028.
Txxxxxx yy
xxxxxx : Tool selection
yy : Tool offset number

In tool management function, set 4 in this parameter to set 4-digit number in parameter No.13265.

NOTE
A value longer than the setting of parameter No. 3032 (allowable number of digits of a T code) cannot be set.

5029	Number of tool compensation value memories common to paths

NOTE
When this parameter is set, the power must be turned off before operation is continued.

[Input type] Parameter input
[Data type] Word
[Valid data range] 0 to 999
When using memories common to paths, this parameter sets the number of common tool compensation values.
Please ensure that the setting of this parameter does not exceed the number of tool compensation values set for each path (parameter No. 5024).
[Example 1] When parameter No. 5029 = 10, parameter No. 5024 (path 1) = 15, and parameter No. 5024 (path 2) = 30 in a 2-path system, tool compensation numbers 1 to 10 of all paths are made common.
[Example 2] When parameter No. 5029 = 20 and the other conditions are the same as for Example 1, tool compensation numbers 1 to 15 are made common.

NOTE
1 When a multi-path system involving the machining center system and lathe system is used, memories are made common in each system.
2 In each of the machining center system and lathe system, the same unit of tool compensation values needs to be used.

NOTE
3 Please ensure that the setting of parameter No. 5029 does not exceed the number of tool compensation values for each path (parameter No. 5024). If the setting of parameter No. 5029 exceeds the number of compensation values of a path, the least of the numbers of compensation values in all paths is made common.
4 When 0 or a negative value is set, memories common to paths are not used.

	#7	#6	#5	#4	#3	#2	#1	#0
5040	NO4			TLG	TCT			OWD

[Input type] Parameter input
[Data type] Bit path

#0 OWD In radius programming (bit 1 (ORC) of parameter No. 5004 is set to 1),
0: Tool offset values of both geometry compensation and wear compensation is specified by radius.
1: Tool offset value of geometry compensation is specified by radius and tool offset value of wear compensation is specified by diameter, for an axis of diameter programming.

NOTE
This parameter is valid when tool geometry/wear compensation is enabled (bit 6 (NGW) of parameter No.8136 is 0).

#3 TCT The tool change method is based on:
0: Turret rotation. (Tool change operation is performed with a T command only.)
With a T command, an auxiliary function and tool offset operation are performed.
1: Automatic tool changer (ATC).
(Tool change operation is performed with an M command (such as M06)).
With a T command, an auxiliary function only is performed.
This parameter is valid with a lathe system only.

⚠ **WARNING**
Before changing the setting of this parameter, cancel the offset. If the setting is changed while the offset is applied, the subsequent offset operation may not be performed correctly or an alarm PS0368,”OFFSET REMAIN AT OFFSET COMMAND” occurs.

#4 TLG When tool change operation is performed with the automatic tool changer (when bit 3 (TCT) of parameter No. 5040 is set to 1), tool offset operation is specified by:
0: G43.7.
At this time, G43 and G44 function as G codes for tool length compensation.
1: G43.
At this time, G43.7 and G44.7 function as G codes for tool length compensation.

#7 NO4 4th axis offset function is:
0: Used.
1: Not used.

	#7	#6	#5	#4	#3	#2	#1	#0
5041	NM2							
	NM2							

[Input type] Parameter input
[Data type] Bit path

#7 NM2 When a “block not involving movement” is specified in the tool radius compensation offset mode, leading to a possible overcut because of no offset vector being normally created:
0: No alarm is issued.
1: Alarm PS0041, "INTERFERENCE IN CUTTER COMPENSATION", is issued.

	#7	#6	#5	#4	#3	#2	#1	#0
5042							OFC	OFA

[Input type] Parameter input
[Data type] Bit path

> **NOTE**
> When at least one of these parameters is set, the power must be turned off before operation is continued.

#0 OFA
#1 OFC These bits are used to specify the increment system and valid data range of a tool offset value.

For metric input

OFC	OFA	Unit	Valid data range
0	1	0.01mm	±9999.99mm
0	0	0.001mm	±9999.999mm
1	0	0.0001mm	±9999.9999mm

For inch input

OFC	OFA	Unit	Valid data range
0	1	0.001inch	±999.999inch
0	0	0.0001inch	±999.9999inch
1	0	0.00001inch	±999.99999inch

	Axis number for which Y-axis offset is used
5043	

[Input type] Parameter input
[Data type] Byte path
[Valid data range] 0 to 24
This parameter sets the number of an axis for which Y-axis offset is used.
If 0 or a value beyond the valid data range is set, the Y-axis offset is applied to the Y-axis of the basic three axes. If setting is made for the X- or Z-axis of the basic three axes, the standard tool offset for the X- or Z-axis is not used, and only the Y-axis offset is used.

5044	Axis number for which 4th-axis offset is used

NOTE
When this parameter is set, the power must be turned off before operation is continued.

[Input type] Parameter input
[Data type] Byte path
[Valid data range] 0, 1 to number of controlled axes
Set the number of an axis for which the 4th-axis offset is used.
When a value ranging from 1 to the number of controlled axes is set in this parameter, the 4th-axis offset is applied to the set axis number. If 0 or a value beyond the valid data range is set, the 4th-axis offset is not used. For the basic two axes X and Z, the standard tool offsets are used, so the 4th-axis offset cannot be used. When the axis set for the Y-axis offset function is set in this parameter, the Y-axis offset is used for the axis, and the 4th-axis offset is not used.

5045	Axis number for which 5th-axis offset is used

NOTE
When this parameter is set, the power must be turned off before operation is continued.

[Input type] Parameter input
[Data type] Byte path
[Valid data range] 0, 1 to number of controlled axes
Set the number of an axis for which the 5th-axis offset is used.
When a value ranging from 1 to the number of controlled axes is set in this parameter, the 5th-axis offset is applied to the set axis number. If 0 or a value beyond the valid data range is set, the 5th-axis offset is not used. For the basic two axes X and Z, the standard tool offsets are used, so the 5th-axis offset cannot be used. When the axis set for the Y-axis offset function is set in this parameter, the Y-axis offset is used for the axis, and the 4th-axis offset is not used.
When settings are made so that both the 5th-axis offset and 4th-axis offset apply to the same axis, only the 4th-axis offset is used, and the 5th-axis offset is not used.

	#7	#6	#5	#4	#3	#2	#1	#0
5051							2AT	2NR

[Input type] Parameter input
[Data type] Bit path

#0 2NR When the direct input of offset value measured B for 2 spindle lathe is used:
0: One touch sensor is used.
1: Two touch sensors are used.

#1 2AT When a workpiece coordinate system shift amount is set in the workpiece coordinate system memory with the direct input of offset value measured B for 2 spindle lathe:
0: A setting is made at the current cursor position.
1: An automatic selection is made.

5053	Tool compensation number shift amount for the direct input of offset value measured B for 2 spindle lathe

[Input type] Parameter input
[Data type] Word path
[Valid data range] 0 to number of tool compensation values
When the direct input of offset value measured B for 2 spindle lathe is used, tool compensation numbers used to set measured tool compensation values are divided into two groups, one for spindle 1 and the other for spindle 2.

[Example] When there are 32 tool offset pairs

	Setting	
	8	10
Spindle 1	1 to 8	1 to 10
Spindle 2	9 to 32	11 to 32

When this parameter is set to 0 or a value greater than the maximum number of tool offset pairs, the table below is applied.

Number of tool offset pairs	32 pairs	64 pairs	99 pairs	200 pairs	400 pairs	499 pairs	999 pairs
Spindle 1	1 to 16	1 to 32	1 to 49	1 to 100	1 to 200	1 to 249	1 to 499
Spindle 2	17 to 32	33 to 64	50 to 98	101 to 200	201 to 400	250 to 498	500 to 998

5054	Workpiece coordinate system memory for spindle 1

5055	Workpiece coordinate system memory for spindle 2

[Input type] Parameter input
[Data type] Byte path
[Valid data range] 54 to 59
Specify a workpiece coordinate system from G54 to G59 for which a workpiece coordinate system shift amount is set. When parameter No. 5054 or No. 5055 is set to 0 or a value beyond the valid data range, the specification of 54 is assumed for the workpiece coordinate system memory for spindle 1, or the specification of 57 is assumed for the workpiece coordinate system memory for spindle 2.

NOTE
These parameters are valid when bit 1 (2AT) of parameter No. 5051 is set to 1.

4.25 PARAMETERS OF CANNED CYCLES

4.25.1 Parameters of Canned Cycle for Drilling (1 of 2)

	#7	#6	#5	#4	#3	#2	#1	#0
5101						RTR	EXC	FXY
	M5B						EXC	FXY

[Input type] Parameter input
[Data type] Bit path

#0 FXY The drilling axis in the drilling canned cycle, or cutting axis in the grinding canned cycle is:

0: In case of the Drilling canned cycle:
Z-axis at all times.
In case of the Grinding canned cycle:
- For the Lathe system
X-axis at all times.
- For the Machining Center system
G75, G77 command: Y-axis
G78, G79 command: Z-axis

1: Axis perpendicular to a specified plane (G17/G18/G19)

> **NOTE**
> In the case of the T series, this parameter is valid only for the drilling canned cycle in the FANUC Series 15 program format.

#1 EXC G81

0: Specifies a drilling canned cycle
1: Specifies an external operation command

#2 RTR G83 and G87

0: Specify a high-speed peck drilling cycle
1: Specify a peck drilling cycle

#7 M5B In drilling canned cycles G76 and G87:

0: Outputs M05 before an oriented spindle stops
1: Not output M05 before an oriented spindle stops

	#7	#6	#5	#4	#3	#2	#1	#0
5102	RDI	RAB			F16	QSR		

[Input type] Parameter input
[Data type] Bit path

#2 QSR Before a multiple repetitive canned cycle (G70 to G73) is started, a check to see if the program contains a block that has the sequence number specified in address Q is:

0: Not made.
1: Made.

When 1 is set in this parameter and the sequence number specified in address Q is not found, the alarm PS0063, “THE BLOCK OF A SPECIFIED SEQUENCE NUMBER IS NOT FOUND” is issued and the canned cycle is not executed.

#3 F16 When the FANUC Series 15 program format is used (with bit 1 (FCV) of parameter No.0001 set to 1), a canned drilling cycle is specified using :

0: FANUC Series 15 program format.
1: FANUC Series 16 program format. However, the number of repetitions is specified using address L.

#6 RAB When a canned drilling cycle using the FANUC Series 15 program format is specified (with bit 1 (FCV) of parameter No. 0001 set to 1 and bit 3 (F16) of parameter No. 5102 set to 0), address R specifies:

0: Increment command.

1: Absolute command with G code system A. With G code system B or C, G90 and G91 are followed. (Refer following table)

FANUC Series 15 program format or bit 2 (RCF) of parameter No.5161=1				FANUC Series 16 program format and bit 2 (RCF) of parameter No.5161=0
Bit 6 (RAB) of parameter No.5102=1			RAB=0	Incremental
G code system A	G code system B or C		Incremental	
Absolute	G90	G91		
	Absolute	Incremental		

#7 RDI When a canned drilling cycle using the FANUC Series 15 program format is specified (with bit 1 (FCV) of parameter No. 0001 set to 1 and bit 3 (F16) of parameter No. 5102 set to 0), address R is based on:

0: Radius specification.

1: Diameter/radius specification of the drilling axis. (Refer following table)

FANUC Series 15 program format or bit 2 (RCF) of parameter No.5161=1		FANUC Series 16 program format and bit 2 (RCF) of parameter No.5161=0
Bit 7 (RDI) of parameter No.5102=1	RDI=0	Radius
Diameter/radius specification of the drilling axis	Radius	

	#7	#6	#5	#4	#3	#2	#1	#0
5103		TCZ			PNA	DCY		
		TCZ				DCY		SIJ

[Input type] Parameter input
[Data type] Bit path

#0 SIJ When the FANUC Series 15 program format is used (with bit 1 (FCV) of parameter No.0001 set to 1), a tool shift value for the drilling canned cycle G76 or G87 is specified by:

0: Address Q. Set a tool retraction direction in parameter No. 5148.

1: Address I, J, or K.

#2 DCY When an axis (to be used as a drilling axis) perpendicular to the positioning plane is specified in a drilling canned cycle:

0: The specified axis is used as a drilling axis.

1: The axis specified in the block where the G code for the drilling canned cycle is specified is used as a drilling axis. The specified axis is used as a positioning axis.

> **NOTE**
> This parameter is valid when bit 0 (FXY) of parameter No. 5101 is set to 1.

#3 PNA In a drilling canned cycle using the FANUC Series 15 format (with bit 1 (FCV) of parameter No. 0001 set to 1 and bit 3 (F16) of parameter No. 5102 set to 0), when a plane where no axis is present is specified in the drilling canned cycle mode:

0: An alarm is issued.

1: No alarm is issued.

#6 TCZ In a tapping cycle (excluding rigid tapping), an accumulated zero check in the tapping step (forward, backward) is:
0: Not performed.
1: Performed.

Execute a tapping cycle (excluding rigid tapping) with the servo feed forward (bit 1 (FEED) of parameter No. 2005). If an impact is detected, set this parameter to 1.

	#7	#6	#5	#4	#3	#2	#1	#0
5104		PCT				FCK		
		PCT						

[Input type] Parameter input
[Data type] Bit path

#2 FCK In a multiple repetitive canned cycle (G71, G72), the machining profile is:
0: Not checked.
1: Checked.
The target figure specified by G71, G72 is checked for the following before machining operation:

- If the start point of the canned cycle is less than the maximum value of the machining profile even when the plus sign is specified for a finishing allowance, the alarm PS0322, “FINISHING SHAPE WHICH OVER OF STARTING POINT” is issued.
- If the start point of the canned cycle is greater than the minimum value of the machining profile even when the minus sign is specified for a finishing allowance, the alarm PS0322 is issued.
- If an unmonotonous command of type I is specified for the axis in the cutting direction, the alarm PS0064, “THE FINISHING SHAPE IS NOT A MONOTONOUS CHANGE(FIRST AXES)” or PS0329, “THE FINISHING SHAPE IS NOTA MONOTONOUS CHANGE(SECOND AXES)” is issued.
- If an unmonotonous command is specified for the axis in the roughing direction, the alarm PS0064 or PS0329 is issued.
- If the program does not include a block that has a sequence number specified by address Q, the alarm PS0063, “THE BLOCK OF A SPECIFIED SEQUENCE NUMBER IS NOT FOUND” is issued. This check is made, regardless of bit 2 (QSR) of parameter No. 5102.
- If a command (G41/G42) on the blank side in tool nose radius compensation is inadequate, the alarm PS0328, “ILLEGAL WORK POSITION IS IN THE TOOL NOSE RADIUS COMPENSATION” is issued.

#6 PCT A Q command in a tapping cycle is:
0: Disabled.
1: Enabled.((High-speed) peck tapping cycle is assumed.)

When this parameter is set and the depth of cut for each time is specified with address Q in a tapping cycle command, a peck tapping cycle is assumed.
In a peck tapping cycle, either a high-speed peck tapping cycle or a peck tapping cycle can be selected by bit 5 (PCP) of parameter No. 5200.
Even when this parameter is set to 1, if Q is not specified or Q0 is specified, normal tapping is performed.

NOTE
1 Set also parameter No. 5213.
2 In rigid tapping, the Q command is valid regardless of the setting of this parameter.

	#7	#6	#5	#4	#3	#2	#1	#0
5105				K0D	M5T	RF2	RF1	SBC
		GIJ			M5T			SBC

[Input type] Parameter input
[Data type] Bit path

#0 SBC In a drilling canned cycle, chamfer cycle, or corner rounding cycle:
0: A single block stop is not performed.
1: A single block stop is performed.

#1 RF1 In a multiple repetitive canned cycle (G71, G72) of type I, roughing is:
0: Performed.
1: Not performed.

NOTE
When a roughing allowance (Δi/Δk) is specified using the FANUC Series 15 program format, roughing is performed, regardless of the setting of this parameter.

#2 RF2 In a multiple repetitive canned cycle (G71, G72) of type II, roughing is:
0: Performed.
1: Not performed.

NOTE
When a roughing allowance (Δi/Δk) is specified using the FANUC Series 15 program format, roughing is performed, regardless of the setting of this parameter.

#3 M5T When the rotation direction of the spindle is changed from forward rotation to reverse rotation or from reserve rotation to forward rotation in a tapping cycle (G84/G88 with the T series, or G84/G74 with the M series):
0: M05 is output before output of M04 or M03.
1: M05 is not output before output of M04 or M03.

#4 K0D When K0 is specified in a drilling canned cycle (G80 to G89):
0: Drilling operation is not performed, but drilling data only is stored.
1: One drilling operation is performed.

#6 GIJ When a grinding canned cycle in the machining center system is executed, if the signs of I, J, and K are different:
0: An alarm is issued.
1: An operation compatible with the FS16i is performed.

	#7	#6	#5	#4	#3	#2	#1	#0
5106					NT2	NT1		

[Input type] Parameter input
[Data type] Bit path

> **NOTE**
> When this parameter is set, the power must be turned off before operation is continued.

#2 NT1 In the multiple repetitive cycle G71/G72/G73 (G-code system A), when the tool nose radius compensation G40/G41/G42 is commanded in the target figure program:
0: The alarm PS0325 is occurred.
1: No alarm is occurred. However, the tool nose radius compensation command in the target figure program is ignored.

#3 NT2 In the multiple repetitive cycle G70 (G-code system A), when the tool nose radius compensation G40/G41/G42 is commanded in the target figure program:
0: The alarm PS0325 is occurred.
1: No alarm is occurred. The tool nose radius compensation command is valid.

> **NOTE**
> Make the program by following ways to enable the tool nose radius compensation in the finishing cycle G70 by commanded the tool nose radius compensation in the target figure program.
> - The tool nose radius compensation cancel G40 is selected as the modal when the finishing cycle G70 is commanded.
> - It is necessary to specify G41 or G42 excluding the end block in the target figure program (the block specified with address Q).
> - Command G40 at the last block of the target figure program (commanded by Q address).

	#7	#6	#5	#4	#3	#2	#1	#0
5107			GMC			OCM	ASC	ASU

[Input type] Parameter input
[Data type] Bit path

#0 ASU For G71, G72, movement to the last turning start position is performed by:
0: Cutting feed.
1: Rapid traverse.

For two-cycle operation to move toward the current turning start position, this parameter selects the feed in the first cycle (movement to the last turning start position). The feed in the second cycle (movement from the last turning start position to the current turning start position) follows the feed in the first block of the shape program.
This parameter is valid to both of type-I and type-II commands.

NOTE
This parameter is Automatic setting parameter. For details, refer to the appendix "Automatic setting / Initial setting parameter" in CONNECTION MANUAL (FUNCTION) (B-64693EN-1).

#1 ASC The G71/G72 TYPE1 commands execute the movement toward the current turning start position in:
0: Two cycles.
1: One cycle.

You can change the two-cycle operation to move to the current turning start position from two cycles to one cycle. The feed mode follows the mode (G00, G01) in the first block of the shape program. This parameter is valid only to type-I commands.

NOTE
This parameter is Automatic setting parameter. For details, refer to the appendix "Automatic setting / Initial setting parameter" in CONNECTION MANUAL (FUNCTION) (B-64693EN-1).

#2 OCM In G70-G73 (G-code system A), the cycle operation is executed by :
0: Conventional method.
1: Improved method.

NOTE
This parameter is Automatic setting parameter. For details, refer to the appendix "Automatic setting / Initial setting parameter" in CONNECTION MANUAL (FUNCTION) (B-64693EN-1).

#5 GMC If Multiple repetitive canned cycle (G70 to G76) is specified in Coordinate system rotation, Programmable mirror image or Scaling mode:
0: Alarm is not issued.
1: Alarm (PS0327) "MODAL THAT MULTIPLE REPETIVE CYCLES CANNOT BE DONE" is issued.

NOTE
This parameter is Automatic setting parameter. For details, refer to the appendix "Automatic setting / Initial setting parameter" in CONNECTION MANUAL (FUNCTION) (B-64693EN-1).

	#7	#6	#5	#4	#3	#2	#1	#0
5108			NIC		NSP		DTP	R16
		SPH						

[Input type] Parameter input
[Data type] Bit path

#0 R16 In the cutting up movement of the multiple repetitive cycle G71/G72 (G-code system A) of type Ⅱ, if there is the block that commands just the movement of the first axis on the plane in the finishing shape:
0: The cutting up movement is executed before the cutting of the first axis on the plane.
1: The cutting up movement is not executed and the cutting is continued along the finishing shape of the first axis on the plane.

#1 DTP In the multiple repetitive cycle G71/G72 (G-code system A) of type I, after rough cutting of the finishing shape program is finished, the tool return to the cycle start point:
0: After the tool moves to (cycle start point + distance of the finishing allowance) in order X-axis, Z-axis.
1: Directly from the end point of the finishing program.

#3 NSP In the multiple repetitive cycle G71/G72 (G-code system A) of type II, the cutting is executed:
0: By conventional path. (The same cutting path might be executed.)
1: Not to repeat the same cutting path.

> **NOTE**
> This parameter is Automatic setting parameter. For details, refer to the appendix "Automatic setting / Initial setting parameter" in CONNECTION MANUAL (FUNCTION) (B-64693EN-1).

#5 NIC In Multiple repetitive cycle G71/G72 (G-code system A), in-position check between cutting blocks is:
0: Executed.
1: Not executed.

> **NOTE**
> This parameter is Automatic setting parameter. For details, refer to the appendix "Automatic setting / Initial setting parameter" in CONNECTION MANUAL (FUNCTION) (B-64693EN-1).

#6 SPH When positioning the axes to hole position in Small-hole peck drilling cycle, the spindle is:
0: Stopped.
1: Not stopped.

	#7	#6	#5	#4	#3	#2	#1	#0
5109					TFH	TAE	CCI	DSA
					TFH	TAE		

[Input type] Parameter input
[Data type] Bit path

#0 DSA When an axis, which is not included in the specified plane, is commanded in the multiple repetitive cycle(G70-G76) :
0: An alarm does not occur.
1: An alarm PS0021,"ILLEGAL PLANE SELECT" occurs.

> **NOTE**
> This parameter is Automatic setting parameter. For details, refer to the appendix "Automatic setting / Initial setting parameter" in CONNECTION MANUAL (FUNCTION) (B-64693EN-1).

#1 CCI In the canned cycle for turning(G90,G92,G94)(T series), the address of the taper amount :
0: Is dependent on the setting of bit 1 (FCV) of parameter No.0001.
1: Can be specified with I,J,K and R.

The address for the taper amount is dependent on the setting of the parameter of the table below.

Bit 1 (FCV) of parameter No.0001	Bit 1 (CCI) of parameter No.5109	Address for the taper amount
0	0	R
1	0	I,J,K
0	1	I,J,K and R
1	1	I,J,K and R

#2 TAE When the FANUC Series 15 format is used (with bit 1 (FCV) of parameter No.0001 set to 1),
address E of threading is :
0: Inch threading (The number of threads per inch).
1: Thread lead.

NOTE
1 This parameter setting is valid when bit 1 (FCV) of parameter No.0001 is set to 1.
2 This parameter setting is available for the following G codes.

G code in the Machining system	G code In the lathe system			Function
	A	B	C	
G33	G32	G33	G33	Threading
G34	G34	G34	G34	Variable lead threading
G35	G35	G35	G35	Circular threading CW
G36	G36	G36	G36	Circular threading CCW
G76.7	G76	G76	G78	Multiple-thread cutting cycle
-	G92	G78	G21	Threading cycle

#3 TFH Behavior of feed hold in the threading cycles and multiple threading cycle is:
0: Conventional specification.
1: FS16*i* compatible specification.

5110	M code for C-axis clamping in canned cycles for drilling

[Input type] Parameter input
[Data type] 2-word path
[Valid data range] 0 to 99999998
This parameter sets the M code for C-axis clamping in canned cycles for drilling.

NOTE
When bit 4 (CME) of parameter No. 5161 is 1, the M code for C-axis clamping for the first pair is assumed.

5111	Dwell time when C-axis unclamping is specified in drilling canned cycle

[Input type] Parameter input
[Data type] 2-word path
[Valid data range] 0 to 32767

[Unit of data]

Increment system	IS-A	IS-B	IS-C	Unit
	10	1	0.1	msec

(The increment system does not depend on whether inch input or metric input is used.)

This parameter sets the dwell time when C-axis unclamping is specified in a drilling canned cycle.

5112	Spindle forward-rotation M code in drilling canned cycle

[Input type] Parameter input
[Data type] 2-word path
[Valid data range] 0 to 99999999
This parameter sets the spindle forward-rotation M code in a drilling canned cycle.

NOTE
M03 is output when 0 is set.

5113	Spindle reverse-rotation M code in drilling canned cycle

[Input type] Parameter input
[Data type] 2-word path
[Valid data range] 0 to 99999999
This parameter sets the spindle reverse-rotation M code in a drilling canned cycle.

NOTE
M04 is output when 0 is set.

5114	Return value of high-speed peck drilling cycle

[Input type] Parameter input
[Data type] Real path
[Unit of data] mm, inch (input unit)
[Min. unit of data] Depend on the increment system of the reference axis
[Valid data range] 9 digit of minimum unit of data (refer to standard parameter setting table (A))
(When the increment system is IS-B, -999999.999 to +999999.999)
This parameter sets the return value in high-speed peck drilling cycle.

G73 (M series)
G83 (T series, when the bit 2 (RTR) of parameter No. 5101 is set to 0)

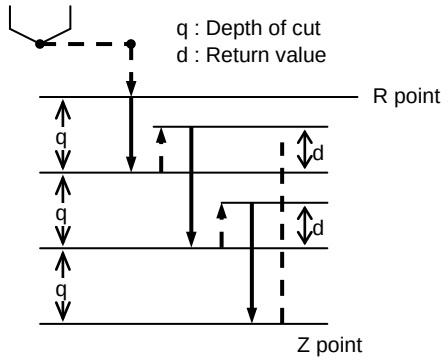

5115	Clearance value in a peck drilling cycle

[Input type] Parameter input
[Data type] Real path
[Unit of data] mm, inch (input unit)
[Min. unit of data] Depend on the increment system of the reference axis
[Valid data range] 9 digit of minimum unit of data (refer to standard parameter setting table (A))
(When the increment system is IS-B, -999999.999 to +999999.999)
This parameter sets a clearance value in a peck drilling cycle.

G83 (M series)
G83 (T series, when the bit 2 (RTR) of parameter No. 5101 is set to 1)

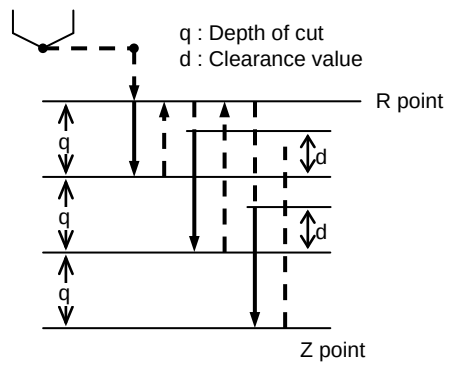

	#7	#6	#5	#4	#3	#2	#1	#0
5124								CBR

[Input type] Parameter input
[Data type] Bit path

#0 CBR In a TYPE-1 of multiple repetitive canned cycle (G71, G72), escape after rough cutting is performed by
0: Cutting feed.
1: Rapid traverse.(The tool path follows the setting in bit 1 (LRP) of parameter No. 1401.)

NOTE
This parameter is Automatic setting parameter. For details, refer to the appendix "Automatic setting / Initial setting parameter" in CONNECTION MANUAL (FUNCTION) (B-64693EN-1).

	#7	#6	#5	#4	#3	#2	#1	#0
5125		RPA	FXX			PRS		

[Input type] Parameter input
[Data type] Bit path

#2 PRS In Pattern repeating cycle G73 (G-code system A), the stop position of single block operation are:
0: The end point of each cycles and the end point of each blocks in the finishing shape.
1: The end point of each cycles and the end point of escape from the cycle start point. (FS16i compatible specification)

#5 FXX For the lathe system, the drilling axis in the canned cycle for drilling is:
0: Always assumed to be the Z-axis for G83/G84/G85 or X-axis for G87/G88/G89.
1: Selected by a plane selection command(G17/G18/G19).

> **NOTE**
> - This parameter becomes invalid when the FANUC Series 15 program format is used (Bit 1 (FCV) of parameter No.0001 is set to 1 and bit 3 (F16) of parameter No.5102 is set to 0).
> - When bit 5 (FXX) of parameter No.5125 is set to 1, tapping axis in rigid tapping is also selected by a plane selection command. (bit 0 (RTX) of parameter No.5209 is regarded as 0.)

#6 RPA In type I of G71, G72 of multiple repetitive canned cycle, the axes :
0: Don’t move directly from retraction end point to the last turning start point.
1: Move directly from retraction end point to the last turning start point.

> **NOTE**
> 1 It changes from rapid traverse to cutting feed when the distance to the last turning start position becomes the parameter No. 5126.
> 2 This parameter is Automatic setting parameter. For details, refer to the appendix "Automatic setting / Initial setting parameter" in CONNECTION MANUAL (FUNCTION) (B-64693EN-1).

5126	Distance in which cutting to the last turning start point in multiple repetitive canned cycles G71 and G72

[Input type] Parameter input
[Data type] Real path
[Unit of data] mm, inch (input unit)
[Min. unit of data] Depend on the increment system of the reference axis
[Valid data range] 0 to retraction distance
In type I of G71, G72 of multiple repetitive canned cycle, the distance in which cutting to the last turning start point is set to this parameter. When this parameter is set to 0, this parameter is the distance in which cutting to the last turning start point is the same distance as retraction distance.

> **NOTE**
> This parameter is valid when bit 6 (RPA) of parameter No. 5125 is set to 1 and start block in the program for a target figure is G01.

4.25.2 Parameters of Thread Cutting Cycle

5130	Cutting value (chamfering value) in thread cutting cycles G92 and G76

[Input type] Parameter input
[Data type] Byte path
[Unit of data] 0.1
[Valid data range] 0 to 127

This parameter sets a cutting value (chamfering value) in the thread cutting cycle (G76) of a multiple repetitive canned cycle and in the thread cutting cycle (G92) of a canned cycle.
Let L b a lead. Then, a cutting value range from 0.1L to 12.7L is allowed.
To specify a cutting value of 10.0L, for example, specify 100 in this parameter.

5131	Cutting angle in thread cutting cycles G92 and G76

[Input type] Parameter input
[Data type] Byte path
[Unit of data] Degree
[Valid data range] 1 to 89
This parameter sets a thread cutting angle in a thread cutting cycle (G92/G76).
When 0 is set, an angle of 45 degrees is specified.

4.25.3 Parameters of Multiple Repetitive Canned Cycle

5132	Depth of cut in multiple repetitive canned cycles G71 and G72

[Input type] Parameter input
[Data type] Real path
[Unit of data] mm, inch (input unit)
[Min. unit of data] Depend on the increment system of the reference axis
[Valid data range] 0 or positive 9 digit of minimum unit of data (refer to the standard parameter setting table (B))
(When the increment system is IS-B, 0.0 to +999999.999)
This parameter sets the depth of cut in multiple repetitive canned cycles G71 and G72.
This parameter is not used with the FANUC Series 15 program format.

NOTE
Specify a radius value at all times.

5133	Escape in multiple repetitive canned cycles G71 and G72

[Input type] Parameter input
[Data type] Real path
[Unit of data] mm, inch (input unit)
[Min. unit of data] Depend on the increment system of the reference axis
[Valid data range] 0 or positive 9 digit of minimum unit of data (refer to the standard parameter setting table (B))
(When the increment system is IS-B, 0.0 to +999999.999)
This parameter sets the escape in multiple repetitive canned cycles G71 and G72.

NOTE
Specify a radius value at all times.

5134	Clearance value in multiple repetitive canned cycles G71 and G72

[Input type] Parameter input
[Data type] Real path

[Unit of data] mm, inch (input unit)
[Min. unit of data] Depend on the increment system of the reference axis
[Valid data range] 0 or positive 9 digit of minimum unit of data (refer to the standard parameter setting table (B))
(When the increment system is IS-B, 0.0 to +999999.999)
This parameter sets a clearance value up to the cutting feed start point in multiple repetitive canned cycles (G71/G72).

NOTE
Specify a radius value at all times.

5135	Retraction distance in the multiple repetitive canned cycle G73 (second axis on the plane)

[Input type] Parameter input
[Data type] Real path
[Unit of data] mm, inch (input unit)
[Min. unit of data] Depend on the increment system of the reference axis
[Valid data range] 9 digit of minimum unit of data (refer to standard parameter setting table (A))
(When the increment system is IS-B, -999999.999 to +999999.999)
This parameter sets a retraction distance along the second axis on the plane in the multiple repetitive canned cycle G73. This parameter is not used with the FANUC Series 15 program format.

NOTE
Specify a radius value at all times.

5136	Retraction distance in the multiple repetitive canned cycle G73 (first axis on the plane)

[Input type] Parameter input
[Data type] Real path
[Unit of data] mm, inch (input unit)
[Min. unit of data] Depend on the increment system of the reference axis
[Valid data range] 9 digit of minimum unit of data (refer to standard parameter setting table (A))
(When the increment system is IS-B, -999999.999 to +999999.999)
This parameter sets a retraction distance along the first axis on the plane in the multiple repetitive canned cycle G73. This parameter is not used with the FANUC Series 15 program format.

NOTE
Specify a radius value at all times.

5137	Number of divisions in the multiple repetitive canned cycle G73

[Input type] Parameter input
[Data type] 2-word path
[Unit of data] Cycle
[Valid data range] 1 to 99999999
This parameter sets the number of divisions in the multiple repetitive canned cycle G73.
This parameter is not used with the FANUC Series 15 program format.

5139	Return in multiple repetitive canned cycles G74 and G75

[Input type] Parameter input
[Data type] Real path
[Unit of data] mm, inch (input unit)
[Min. unit of data] Depend on the increment system of the reference axis
[Valid data range] 0 or positive 9 digit of minimum unit of data (refer to the standard parameter setting table (B))
(When the increment system is IS-B, 0.0 to +999999.999)
This parameter sets the return in multiple repetitive canned cycles G74 and G75.

NOTE
Specify a radius value at all times.

5140	Minimum depth of cut in the multiple repetitive canned cycle G76

[Input type] Parameter input
[Data type] Real path
[Unit of data] mm, inch (input unit)
[Min. unit of data] Depend on the increment system of the reference axis
[Valid data range] 0 or positive 9 digit of minimum unit of data (refer to the standard parameter setting table (B))
(When the increment system is IS-B, 0.0 to +999999.999)
This parameter sets a minimum depth of cut in the multiple repetitive canned cycle G76 so that the depth of cut does not become too small when the depth of cut is constant.

NOTE
Specify a radius value at all times.

5141	Finishing allowance in the multiple repetitive canned cycle G76

[Input type] Parameter input
[Data type] Real path
[Unit of data] mm, inch (input unit)
[Min. unit of data] Depend on the increment system of the reference axis
[Valid data range] 0 or positive 9 digit of minimum unit of data (refer to the standard parameter setting table (B))
(When the increment system is IS-B, 0.0 to +999999.999)
This parameter sets the finishing allowance in multiple repetitive canned cycle G76.

NOTE
Specify a radius value at all times.

5142	Repetition count of final finishing in multiple repetitive canned cycle G76

[Input type] Parameter input
[Data type] 2-word path
[Unit of data] Cycle
[Valid data range] 1 to 99999999

This parameter sets the number of final finishing cycle repeats in the multiple repetitive canned cycle G76.
When 0 is set, only one final finishing cycle is executed.

5143	Tool nose angle in multiple repetitive canned cycle G76

[Input type] Parameter input
[Data type] Byte path
[Unit of data] Degree
[Valid data range] 0, 29, 30, 55, 60, 80
This parameter sets the tool nose angle in multiple repetitive canned cycle G76.
This parameter is not used with the FANUC Series 15 program format.

5145	Allowable value 1 in multiple repetitive canned cycles G71 and G72

[Input type] Parameter input
[Data type] Real path
[Unit of data] mm, inch (input unit)
[Min. unit of data] Depend on the increment system of the reference axis
[Valid data range] 0 or positive 9 digit of minimum unit of data (refer to the standard parameter setting table (B))
(When the increment system is IS-B, 0.0 to +999999.999)
If a monotonous command of type I or II is not specified for the axis in the roughing direction, the alarm PS0064, “THE FINISHING SHAPE IS NOT A MONOTONOUS CHANGE(FIRST AXES)” or PS0329, “THE FINISHING SHAPE IS NOTA MONOTONOUS CHANGE(SECOND AXES)” is issued. When a program is created automatically, a very small unmonotonous figure may be produced. Set an unsigned allowable value for such an unmonotonous figure. By doing so, G71 and G72 cycles can be executed even in a program including an unmonotonous figure.
[Example] Suppose that a G71 command where the direction of the cutting axis (X-axis) is minus and the direction of the roughing axis (Z-axis) is minus is specified. In such a case, when an unmonotonous command for moving 0.001 mm in the plus direction along the Z-axis is specified in a target figure program, roughing can be performed according to the programmed figure without an alarm by setting 0.001 mm in this parameter.

NOTE
A check for a monotonous figure is made at all times during G71 and G72 cycles. A figure (programmed path) is checked. When tool nose radius compensation is performed, a path after compensation is checked. When bit 2 (FCK) of parameter No. 5104 is set to 1, a check is made before G71, G72 cycle operation. In this case, not a path after tool nose radius compensation but a programmed path is checked.
Note that no alarm is issued when an allowable value is set.
Use a radius value to set this parameter at all times.

5146	Allowable value 2 in multiple repetitive canned cycles G71 and G72

[Input type] Parameter input
[Data type] Real path
[Unit of data] mm, inch (input unit)

[Min. unit of data] Depend on the increment system of the reference axis
[Valid data range] 0 to cut of depth
If a monotonous command of type I is not specified for the axis in the cutting direction, the alarm PS0064, “THE FINISHING SHAPE IS NOT A MONOTONOUS CHANGE(FIRST AXES)” or PS0329, “THE FINISHING SHAPE IS NOTA MONOTONOUS CHANGE(SECOND AXES)” is issued. When a program is created automatically, a very small unmonotonous figure may be produced. Set an unsigned allowable value for such an unmonotonous figure. By doing so, G71 and G72 cycles can be executed even in a program including an unmonotonous figure.
The allowable value is clamped to the depth of cut specified by a multiple repetitive canned cycle.
[Example] Suppose that a G71 command where the direction of the cutting axis (X-axis) is minus and the direction of the roughing axis (Z-axis) is minus is specified. In such a case, when an unmonotonous command for moving 0.001 mm in the minus direction along the X-axis is specified in a target figure program for moving from the bottom of cutting to the end point, roughing can be performed according to the programmed figure without an alarm by setting 0.001 mm in this parameter.

NOTE
A check for a monotonous figure is made at all times during G71 and G72 cycles. A figure (programmed path) is checked. When tool nose radius compensation is performed, a path after compensation is checked. When bit 2 (FCK) of parameter No. 5104 is set to 1, a check is made before G71, G72 cycle operation. In this case, not a path after tool nose radius compensation but a programmed path is checked.
Note that no alarm is issued when an allowable value is set.
Use a radius value to set this parameter at all times.

4.25.4 Parameters of Canned Cycle for Drilling (2 of 2)

5148	
	Tool retraction direction after orientation in a fine boring cycle or back boring cycle

[Input type] Parameter input
[Data type] Byte axis
[Valid data range] -24 to 24
This parameter sets an axis and direction for tool retraction after spindle orientation in a fine boring cycle or back boring cycle. For each boring axis, an axis and direction for tool retraction after orientation can be set. Set a signed axis number. To use a fine boring cycle or back boring cycle in the tilted working plane indexing, set the retract direction when the absolute coordinate value of the rotation axis is 0.

[Example] Suppose that:
When the boring axis is the X-axis, the tool retraction direction after orientation is -Y.
When the boring axis is the Y-axis, the tool retraction direction after orientation is +Z.
When the boring axis is the Z-axis, the tool retraction direction after orientation is -X.
Then, set the following (assuming that the first, second, and third axes are the X-axis, Y-axis, and Z-axis, respectively):
Set -2 in the parameter for the first axis. (The tool retraction direction is -Y.)
Set 3 in the parameter for the second axis. (The tool retraction direction is +Z.)
Set -1 in the parameter for the third axis. (The tool retraction direction is -X.)
Set 0 for other axes.

5149	Override for retraction in a boring cycle (G85/G89)

[Input type] Parameter input
[Data type] Word path
[Unit of data] %
[Valid data range] 0 to 2000

This parameter sets an override value for the feedrate of retraction in a boring cycle. The cutting feedrate override signal and the second feedrate override signal are valid, regardless of the setting of this parameter. The setting of this parameter is valid even when the override cancel signal is set to 1.

When 0 is set in this parameter, the following operation is performed:

For the T series

Operation performed when 200 is set in this parameter (The retraction feedrate is two times greater than the cutting feedrate.)

For the M series

Operation performed when 100 is set in this parameter (The retraction feedrate is the cutting feedrate.)

	#7	#6	#5	#4	#3	#2	#1	#0
5160		DNC			CYM			
				TSG	CYM	NOL	OLS	

[Input type] Parameter input
[Data type] Bit path

#1 OLS When an overload torque detection signal is received in a small-hole peck drilling cycle, the feedrate and spindle speed are:
0: Not changed.
1: Changed.

#2 NOL When the depth of cut per action is satisfied although no overload torque detection signal is received in a small-hole peck drilling cycle, the feedrate and spindle speed are:
0: Not changed.
1: Changed.

#3 CYM When a subprogram call is specified in a block specifying other commands in the canned cycle mode:
0: No alarm is issued. (When a command of address P is specified, the command is handled as both a command specifying a dwell time and a command specifying a subprogram number in a canned cycle.)
1: An alarm is issued.

#4 TSG The overload torque detection signal for a small-hole peck drilling cycle:
0: Depends on the parameter settings for the skip function.
1: Does not depend on the parameter settings for the skip function.

When this parameter is set to 1, the X address can be used for the overload torque signal even with the skip signal setting disabled. Even when the overload torque detection signal does not depend on the skip function parameter settings, parameter No. 3012 and bit 1 (SK0) of parameter No. 6200 remain valid.

#6 DNC When drilling axis is not commanded in the canned cycle command block for lathe system:
0: An alarm PS0566 "DRILLING AXIS IS NOT COMMANDED" is not issued.

1: An alarm PS0566 "DRILLING AXIS IS NOT COMMANDED" is issued.

> **NOTE**
> The alarm PS0566 isn't issued when drilling axis isn't commanded except for the canned cycle command block for lathe system.

	#7	#6	#5	#4	#3	#2	#1	#0
5161				CME		RCF		

[Input type] Parameter input
[Data type] Bit path

#2 RCF For drilling canned cycles or rigid tapping in FANUC Series 16 program format, the R address is based on:
0: Incremental and radius specification.
1: Settings of parameter RAB and RDI (No.5102#6,7).

#4 CME For drilling canned cycles, the M code for C-axis clamping/unclamping is set to:
0: Value set by parameter No. 5110/value set by parameter No. 5110 + 1.
1: Value set by parameter No. 5110/value set by parameter No. 13543 (first pair), or the value set by parameter No. 13544/value set by parameter No. 13545 (second pair).

	#7	#6	#5	#4	#3	#2	#1	#0
5162						RED		
								RCK

[Input type] Parameter input
[Data type] Bit

#0 RCK When the command which relates to the reference position return such as G28 is commanded during the canned cycle for drilling:
0: Alarm PS0044 is not detected, and execute the program command.
1: Alarm PS0044 is detected.

#2 RED When selecting the drilling axis by the plane selection command in the canned cycle for drilling of the lathe system, the rotation axis (the axis on which the parameter ROTx (No.1006 # 0) = 1 is set) is
0: the target of the drilling axis.
1: excluded from the target of the drilling axis.

> **NOTE**
> When using cylindrical interpolation, parallel axes of the basic three axes may be set in the parameter (No. 1022) of the rotation axis. In this case, if the rotation axis is excluded from the target of the drilling axis, set this parameter.

5163	
	M code that specifies the small-hole peck drilling cycle mode

[Input type] Parameter input
[Data type] 2-word path
[Valid data range] 1 to 99999999

This parameter sets an M code that specifies the small-hole peck drilling cycle mode.

5164	
	Percentage of the spindle speed to be changed at the start of the next advancing after an overload torque detection signal is received

[Input type] Parameter input
[Data type] Word path
[Unit of data] %
[Valid data range] 1 to 255

This parameter sets the percentage of the spindle speed to be changed at the start of the next advancing after the tool is retracted because the overload torque detection signal is received.

$S2 = S1 \times d1 \div 100$

S1: Spindle speed to be changed
S2: Spindle speed changed

Set d1 as a percentage.

NOTE
When 0 is set, the spindle speed is not changed.

5165	
	Percentage of the spindle speed to be changed at the start of the next advancing when no overload torque detection signal is received

[Input type] Parameter input
[Data type] Word path
[Unit of data] %
[Valid data range] 1 to 255

This parameter sets the percentage of the spindle speed to be changed at the start of the next advancing after the tool is retracted without the overload torque detection signal received.

$S2 = S1 \times d2 \div 100$

S1: Spindle speed to be changed
S2: Spindle speed changed

Set d2 as a percentage.

NOTE
When 0 is set, the spindle speed is not changed.

5166	
	Percentage of the cutting feedrate to be changed at the start of the next cutting after an overload torque detection signal is received

[Input type] Parameter input
[Data type] Word path
[Unit of data] %
[Valid data range] 1 to 255

This parameter sets the percentage of the cutting feedrate to be changed at the start of cutting after the tool is retracted and advances because the overload torque detection signal is received.

$F2 = F1 \times b1 \div 100$

F1: Cutting feedrate to be changed
F2: Cutting feedrate changed

Set b1 as a percentage.

NOTE
When 0 is set, the cutting feedrate is not changed.

5167	
	Percentage of the cutting feedrate to be changed at the start of the next cutting when no overload torque detection signal is received

[Input type] Parameter input
[Data type] Word path
[Unit of data] %
[Valid data range] 1 to 255

This parameter sets the percentage of the cutting feedrate to be changed at the start of cutting after the tool is retracted and advances without the overload torque detection signal received.

$F2 = F1 \times b2 \div 100$

F1: Cutting feedrate to be changed
F2: Cutting feedrate changed

Set b2 as a percentage.

NOTE
When 0 is set, the cutting feedrate is not changed.

5168	
	Lower limit of the percentage of the cutting feedrate in a small-hole peck drilling cycle

[Input type] Parameter input
[Data type] Byte path
[Unit of data] %
[Valid data range] 1 to 255

This parameter sets the lower limit of the percentage of the cutting feedrate changed repeatedly to the specified cutting feedrate.

$FL = F \times b3 \div 100$

F: Specified cutting feedrate
FL: Changed cutting feedrate

Set b3 as a percentage.

5170	
	Number of the macro variable to which to output the total number of retractions during cutting

[Input type] Parameter input
[Data type] Word path
[Valid data range] 100 to 149

This parameter sets the number of the custom macro common variable to which to output the total number of times the tool is retracted during cutting. The total number cannot be output to common variables #500 to #599.

5171	
	Number of the macro variable to which to output the total number of retractions because of the reception of an overload torque detection signal

[Input type] Parameter input
[Data type] Word path

[Valid data range] 100 to 149
This parameter sets the number of the custom macro common variable to which to output the total number of times the tool is retracted after the overload torque detection signal is received during cutting. The total number cannot be output to common variables #500 to #599.

5172	
	Feedrate of retraction to point R when no address I is specified

[Input type] Parameter input
[Data type] Real path
[Unit of data] mm/min, inch/min (input unit)
[Min. unit of data] Depend on the increment system of the reference axis
[Valid data range] Refer to the standard parameter setting table (C)
(When the increment system is IS-B, 0.0 to +999000.0)
This parameter sets the feedrate of retraction to point R when no address I is specified.

5173	
	Feedrate of advancing to the position just before the bottom of a hole when no address I is specified

[Input type] Parameter input
[Data type] Real path
[Unit of data] mm/min, inch/min (input unit)
[Min. unit of data] Depend on the increment system of the reference axis
[Valid data range] Refer to the standard parameter setting table (C)
(When the increment system is IS-B, 0.0 to +999000.0)
This parameter sets the feedrate of advancing to the position just before the bottom of a previously machined hole when no address I is specified.

5174	
	Clearance in a small-hole peck drilling cycle

[Input type] Parameter input
[Data type] Real path
[Unit of data] mm, inch (input unit)
[Min. unit of data] Depend on the increment system of the reference axis
[Valid data range] 9 digit of minimum unit of data (refer to standard parameter setting table (A))
(When the increment system is IS-B, -999999.999 to +999999.999)
This parameter sets the clearance in a small-hole peck drilling cycle.

4.25.5 Parameters of Canned Cycle for Grinding (for Grinding Machine) (1 of 2)

5176	Grinding axis number in Traverse Grinding Cycle(G71)
	Grinding axis number in Plunge Grinding Cycle(G75)

[Input type] Parameter input
[Data type] Byte path
[Valid data range] 0 to Number of controlled axes
For the Lathe system:
Set the Grinding axis number of Traverse Grinding Cycle(G71).
For the Machining Center system:
Set the Grinding axis number of Plunge Grinding Cycle(G75).

NOTE
The axis number except for the cutting axis can be specified. When the axis number which is same to cutting axis is specified, an alarm PS0456, “ILLEGAL PARAMETER IN GRINDING” is issued at the time of execution. The Grinding Cycle is executed when this parameter value is 0, the alarm PS0456 is also issued.

5177	Grinding axis number of Traverse direct constant-size Grinding cycle(G72)
	Grinding axis number of Direct Constant Dimension Plunge Grinding Cycle(G77)

[Input type] Parameter input
[Data type] Byte path
[Valid data range] 0 to Number of controlled axes
For the Lathe system:
Set the Grinding axis number of Traverse direct constant-size Grinding cycle(G72).
For the Machining Center system:
Set the Grinding axis number of Direct Constant Dimension Plunge Grinding Cycle (G77).

NOTE
The axis number except for the cutting axis can be specified. When the axis number which is same to cutting axis is specified, an alarm PS0456, “ILLEGAL PARAMETER IN GRINDING” is issued at the time of execution. The Grinding Cycle is executed when this parameter value is 0, the alarm PS0456 is also issued.

5178	Grinding axis number of Oscillation Grinding Cycle(G73)
	Grinding axis number of Continuous feed surface grinding cycle(G78)

[Input type] Parameter input
[Data type] Byte path
[Valid data range] 0 to Number of controlled axes
For the Lathe system:
Set the Grinding axis number of Oscillation Grinding Cycle(G73).
For the Machining Center system:
Set the Grinding axis number of Continuous feed surface grinding cycle(G78).

NOTE
The axis number except for the cutting axis can be specified. When the axis number which is same to cutting axis is specified, an alarm PS0456, “ILLEGAL PARAMETER IN GRINDING” is issued at the time of execution. The Grinding Cycle is executed when this parameter value is 0, the alarm PS0456 is also issued.

5179	Grinding axis number of Oscillation Direct Fixed Dimension Grinding Cycle(G74)
	Grinding axis number of Intermittent feed surface grinding cycle(G79)

[Input type] Parameter input
[Data type] Byte path

[Valid data range] 0 to Number of controlled axes
For the Lathe system:
Set the Grinding axis number of Oscillation Direct Fixed Dimension Grinding Cycle(G74).
For the Machining Center system:
Set the Grinding axis number of Intermittent feed surface grinding cycle(G79).

NOTE
The axis number except for the cutting axis can be specified. When the axis number which is same to cutting axis is specified, an alarm PS0456, “ILLEGAL PARAMETER IN GRINDING” is issued at the time of execution. The Grinding Cycle is executed when this parameter value is 0, the alarm PS0456 is also issued.

5180	
	Axis number of dressing axis in Plunge grinding cycle(G75)

[Input type] Parameter input
[Data type] Byte path
[Valid data range] 0 to Number of controlled axes
Set the axis number of dressing axis in Plunge grinding cycle(G75).

NOTE
The axis number except for the cutting axis or grinding axis can be specified. When the axis number which is same to cutting axis or grinding axis is specified, an alarm PS0456, “ILLEGAL PARAMETER IN GRINDING” is issued at the time of execution. The Grinding Cycle is executed when this parameter value is 0 and address "L" is specified in NC program, the alarm PS0456 is also issued.

5181	
	Axis number of dressing axis in Direct constant dimension plunge grinding cycle(G77)

[Input type] Parameter input
[Data type] Byte path
[Valid data range] 0 to Number of controlled axes
Set the axis number of dressing axis in Direct constant dimension plunge grinding cycle(G77).

NOTE
The axis number except for the cutting axis or grinding axis can be specified. When the axis number which is same to cutting axis or grinding axis is specified, an alarm PS0456, “ILLEGAL PARAMETER IN GRINDING” is issued at the time of execution. The Grinding Cycle is executed when this parameter value is 0 and address "L" is specified in NC program, the alarm PS0456 is also issued.

5182	
	Axis number of dressing axis in Continuous feed surface grinding cycle(G78)

[Input type] Parameter input
[Data type] Byte path
[Valid data range] 0 to Number of controlled axes
Set the axis number of dressing axis in Continuous feed surface grinding cycle(G78).

NOTE
The axis number except for the cutting axis or grinding axis can be specified. When the axis number which is same to cutting axis or grinding axis is specified, an alarm PS0456, “ILLEGAL PARAMETER IN GRINDING” is issued at the time of execution. The Grinding Cycle is executed when this parameter value is 0 and address "L" is specified in NC program, the alarm PS0456 is also issued.

5183	
	Axis number of dressing axis in Intermittent feed surface grinding cycle(G79)

[Input type] Parameter input
[Data type] Byte path
[Valid data range] 0 to Number of controlled axes
Set the axis number of dressing axis in Intermittent feed surface grinding cycle(G79).

NOTE
The axis number except for the cutting axis or grinding axis can be specified. When the axis number which is same to cutting axis or grinding axis is specified, an alarm PS0456, “ILLEGAL PARAMETER IN GRINDING” is issued at the time of execution. The Grinding Cycle is executed when this parameter value is 0 and address "L" is specified in NC program, the alarm PS0456 is also issued.

5184	In-position width for other than hole bottoms (regular)
5185	In-position width for other than hole bottoms (for retraction in peck drilling cycle)
5186	In-position width for other than hole bottoms (for shift in boring cycles (G76 and G87)
5187	In-position width for hole bottoms

[Input type] Parameter input
[Data type] 2-word axis
[Unit of data] Detection unit
[Valid data range] 0 to 99999999
Set an in-position width for drilling canned cycles for individual axes separately.

NOTE
A value must be set for all axes.

4.26 PARAMETERS OF RIGID TAPPING

	#7	#6	#5	#4	#3	#2	#1	#0
5200	SRS	FHD	PCP	DOV	SIG	CRG		G84
		FHD	PCP	DOV	SIG	CRG		G84

[Input type] Parameter input
[Data type] Bit path

#0 G84 Method for specifying rigid tapping:
0: An M code specifying the rigid tapping mode is specified prior to the issue of the G84 (or G74) command. (See parameter No. 5210).
1: An M code specifying the rigid tapping mode is not used. (G84 cannot be used as a G code for the tapping cycle; G74 cannot be used for the reverse tapping cycle.)

#2 CRG Rigid mode when a rigid mode cancel command is specified (G80, 01 group G code, reset, etc.) :
0: Canceled after rigid tapping signal RGTAP <Gn061.0> is set to “0”.
1: Canceled before rigid tapping signal RGTAP <Gn061.0> is set to “0”.

#3 SIG When gears are changed for rigid tapping, the use of SINDs <Gn033.7,Gn035.7,Gn037.7, and Gn273.7> is:
0: Not permitted.
1: Permitted.

#4 DOV Override during extraction in rigid tapping:
0: Invalidated
1: Validated (The override value is set in parameter No. 5211. However, set an override value for rigid tapping return in parameter No. 5381.)

#5 PCP Rigid tapping:
0: Used as a high-speed peck tapping cycle
1: Not used as a high-speed peck tapping cycle

#6 FHD Feed hold and single block in rigid tapping:
0: Invalidated
1: Validated

#7 SRS To select a spindle used for rigid tapping in multi-spindle control:
0: The spindle selection signals SWS1, SWS2, SWS3, and SWS4 <Gn027.0,Gn027.1,Gn027.2, and Gn026.3 > are used. (These signals are used also for multi-spindle control.)
1: The rigid tapping spindle selection signals RGTSP1, RGTSP2, RGTSP3, and RGTSP4 <Gn061.4 to Gn061.7> are used. (These signals are provided expressly for rigid tapping.)

	#7	#6	#5	#4	#3	#2	#1	#0
5201				OV3	OVU	TDR		

[Input type] Parameter input
[Data type] Bit path

#2 TDR Cutting time constant in rigid tapping:
0: Uses a same parameter during cutting and extraction (Parameters Nos. 5261 to 5264)
1: Not use a same parameter during cutting and extraction
Parameters Nos. 5261 to 5264: Time constant during cutting
Parameters Nos. 5271 to 5274: Time constant during extraction

#3 OVU The increment unit of the override parameter No. 5211 for tool rigid tapping extraction and No. 5381 for tool rigid tapping return is:
0: 1%
1: 10%

#4 OV3 A spindle speed for extraction is programmed, so override for extraction operation is:
0: Disabled.
1: Enabled.

	#7	#6	#5	#4	#3	#2	#1	#0
5202				IRR			RG3	ORI

[Input type] Parameter input
[Data type] Bit path

> **NOTE**
> When at least one of these parameters is set, the power must be turned off before operation is continued.

#0 ORI When rigid tapping is started:
0: Spindle orientation is not performed.
1: Spindle orientation is performed.
This parameter can be used only for a serial spindle.
This spindle orientation performs reference position return in the serial spindle/servo mode. The stop position can be changed using the serial spindle parameter No. 4073.

#1 RG3 Retraction for rigid tapping is performed by:
0: Rigid tapping retraction start signal RTNT <Gn062.6>.
1: One-shot G code G30 command.

> **NOTE**
> 1 When this parameter is 1, retraction for rigid tapping using the rigid tapping retraction start signal RTNT <Gn062.6> cannot be performed.
> 2 When this parameter is 1, use the method to use the M code of rigid tapping mode. (Parameter G84(bit 0 of No.5200)=0)

#4 IRR As the in-position width at point R after movement from point I to point R in rigid tapping:
0: The in-position widths dedicated to rigid tapping (parameters Nos. 5300, 5302, 5304, and 5306) are selected.
1: The normal in-position width (parameter No. 1826) is selected.

	#7	#6	#5	#4	#3	#2	#1	#0
5203			RBL	OVS		RFF	HRM	HRG

[Input type] Parameter input

[Data type] Bit path

#0 HRG Rigid tapping by the manual handle is:
0: Disabled.
1: Enabled.

#1 HRM When the tapping axis moves in the negative direction during rigid tapping controlled by the manual handle, the direction in which the spindle rotates is determined as follows:
0: In G84 mode, the spindle rotates in a normal direction. In G74 mode, the spindle rotates in reverse.
1: In G84 mode, the spindle rotates in reverse. In G74 mode, the spindle rotates in a normal direction.

#2 RFF In rigid tapping, feed forward is:
0: Disabled.
1: Enabled. (Recommended)

As the standard setting, set 1.
At the same time, set the parameter for the advanced preview feed forward coefficient for the tapping axis and the parameter for the advance preview feed forward coefficient for the spindle so that these values match.
- Advanced preview feed forward coefficient for the tapping axis: Parameter No. 2092 (or parameter No. 2144 if the cutting/rapid traverse feed forward function is enabled (bit 4 of parameter No. 2214 is set to 1))
- Advanced preview feed forward coefficient for the spindle: Parameter No. 4344

NOTE
1 This parameter is valid when a serial spindle is used.
2 This parameter is Automatic setting parameter. For details, refer to the appendix "Automatic setting / Initial setting parameter" in CONNECTION MANUAL (FUNCTION) (B-64693EN-1).

#4 OVS In rigid tapping, override by the feedrate override signals *FV0 to *FV7<Gn012> and the second feedrate override signals *AFV0 to *AFV7 <Gn013> (or 0.01% step second feedrate override signals *APF00 to *APF15 <Gn094, Gn095>), and cancellation of override by the override cancel signal OVC<Gn006.4> is:
0: Disabled.
1: Enabled.
When feedrate override is enabled, extraction override is disabled.
The spindle override is clamped to 100% during rigid tapping, regardless of the setting of this parameter.

#5 RBL As acceleration/deceleration for rigid tapping cutting feed:
0: Linear acceleration/deceleration is used.
1: Bell-shaped acceleration/deceleration is used.

NOTE
This parameter is Initial setting parameter. For details, refer to the appendix "Automatic setting / Initial setting parameter" in CONNECTION MANUAL (FUNCTION) (B-64693EN-1).

	#7	#6	#5	#4	#3	#2	#1	#0
5206	RSP					NSD	SRT	

[Input type] Parameter input
[Data type] Bit

#1 SRT Smart rigid tapping function is:
0: Disabled.
1: Enabled.

#2 NSD Rigid tapping during dry run is:
0: Smart rigid tapping (Change of manual feedrate override signal *JV0 to *JV15<Gn010, Gn011> or manual rapid traverse selection signal RT<Gn019.7> is not effective.).
1: FSSB high-speed rigid tapping (Change of manual feedrate override signal *JV0 to *JV15<Gn010, Gn011> or manual rapid traverse selection signal RT<Gn019.7> is effective.).

#7 RSP Rigid tapping synchronization error range is:
0: After reaching point R and the changing of the loop gain and parameter of position control being completed, the calculation of rigid tapping synchronization error starts with the movement of tapping axis.
1: After reaching point R and the changing of the loop gain and parameter of position control being completed, the calculation of rigid tapping synchronization error starts immediately.

	#7	#6	#5	#4	#3	#2	#1	#0
5208			HRC				RHZ	RCT

[Input type] Parameter input
[Data type] Bit path

#0 RCT High-speed rigid tapping is:
0: Invalid.
1: Valid.

> **NOTE**
> This parameter is Automatic setting parameter. For details, refer to the appendix "Automatic setting / Initial setting parameter" in CONNECTION MANUAL (FUNCTION) (B-64693EN-1).

#1 RHZ Speed-up of the motion at the hole bottom in rigid tapping is
0: Disabled.
1: Enabled.

> **NOTE**
> This parameter is Automatic setting parameter. For details, refer to the appendix "Automatic setting / Initial setting parameter" in CONNECTION MANUAL (FUNCTION) (B-64693EN-1).

#5 HRC Speed-up of cycle operation in rigid tapping is
0: Disabled.
1: Enabled.

NOTE
This parameter is Automatic setting parameter. For details, refer to the appendix "Automatic setting / Initial setting parameter" in CONNECTION MANUAL (FUNCTION) (B-64693EN-1).

	#7	#6	#5	#4	#3	#2	#1	#0
5209	PRA	CSA				DWP	RIP	RTX
	PRA	CSA					RIP	

[Input type] Parameter input
[Data type] Bit path

#0 RTX In rigid tapping in a lathe system, the tapping axis is:
0: Selected by selecting a plane.
1: Always assumed to be the Z-axis for G84 or the X-axis for G88.

NOTE
This parameter becomes invalid when bit 1 (FCV) of parameter No.0001 is set to 1, and rigid tapping is specified using the Series15 format.

#1 RIP When a movement from the initial point to point R is made, the in-position check is:
0: Dependent on the setting of bit 5 (NCI) of parameter No. 1601.
1: Performed.

NOTE
This parameter is valid when bit 5 (NCI) of parameter No. 1601 is set to 1 and bit 4 (IRR) of parameter No. 5202 is set to 0.
If bit 5 (NCI) of parameter No. 1601 is set to 0, the in-position check is performed regardless of the setting of this parameter.

#2 DWP When a dwell (address P) command is not included in a block for lathe-system rigid tapping:
0: Dwelling at the bottom of a hole is not performed.
1: The dwell (address P) command specified in the block for drilling is valid.

NOTE
This parameter becomes invalid if rigid tapping is specified in the Series 15 format with bit 1 (FCV) of parameter No. 0001 set to 1.

#6 CSA If Constant surface speed control is commanded in Rigid tapping mode:
0: Alarm is not issued.
1: Alarm (PS0200) "ILLEGAL S CODE COMMAND" is issued.

NOTE
This parameter is Automatic setting parameter. For details, refer to the appendix "Automatic setting / Initial setting parameter" in CONNECTION MANUAL (FUNCTION) (B-64693EN-1).

#7 PRA On the peck rigid tapping, if the depth of cut (Q) is smaller than the cutting start distance (d):
0: Alarm is not issued.

1: Alarm (PS5560) "ILLEGAL DEPTH OF CUT" is issued.

NOTE
1 When High-speed peck rigid tapping cycle is not used (the parameter PCP (bit 5 of No.5200) is 1), this parameter is effective.
2 When FSSB high-speed rigid tapping is used, set 1 to this parameter.
3 This parameter is Automatic setting parameter. For details, refer to the appendix "Automatic setting / Initial setting parameter" in CONNECTION MANUAL (FUNCTION) (B-64693EN-1).

5210	Rigid tapping mode specification M code

[Input type] Parameter input
[Data type] 2-word path
[Valid data range] 0 to 65535
This parameter sets an M code that specifies the rigid tapping mode.
The M code is judged to be 29 (M29) when 0 is set.

5211	Override value during rigid tapping extraction

[Input type] Parameter input
[Data type] Word path
[Unit of data] 1% or 10%
[Valid data range] 0 to 200
The parameter sets the override value during rigid tapping extraction.

NOTE
1 The override value is valid when bit 4 (DOV) of parameter No. 5200 is set to 1. When bit 3 (OVU) of parameter No. 5201 is set to 1, the unit of set data is 10%. An override of up to 2000% can be applied to extraction.
2 If the setting value is less than or equal to 0, it is treated as 100%. Also, if the setting value is greater than 200, it is treated as 2000% or 200%.

5213	Return in peck rigid tapping cycle

[Input type] Setting input
[Data type] Real path
[Unit of data] mm, inch (input unit)
[Min. unit of data] Depend on the increment system of the drilling axis
[Valid data range] 0 or positive 9 digit of minimum unit of data (refer to the standard parameter setting table (B))
(When the increment system is IS-B, 0.0 to +999999.999)
This parameter sets the return or clearance in the peck tapping cycle.
If the setting value is negative value, it is treated as absolute value.

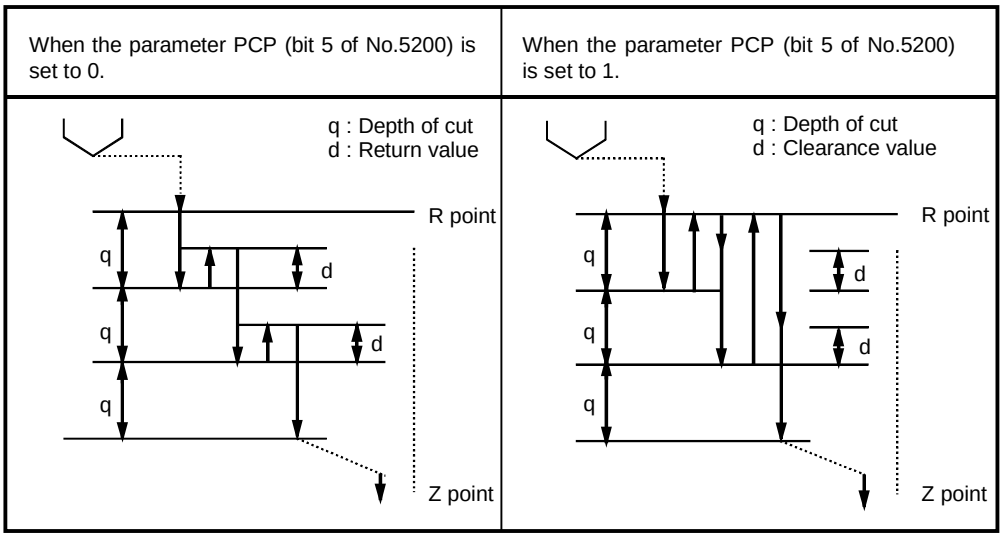

NOTE

CNC reads a setting value of parameter No.5213 when a block of peck rigid tapping cycle is read (buffered). If a setting value of parameter No.5213 is changed during automatic operation, a setting value has to be changed when buffering is prevented by M code preventing buffering and so forth.

5214	Setting of an allowable rigid tapping synchronization error range

[Input type] Parameter input
[Data type] 2-word spindle
[Unit of data] Detection unit
[Valid data range] 0 to 99999999

This parameter sets an allowable synchronization error range in rigid tapping.
If a synchronous error range exceeding the setting of this parameter is detected, the alarm SP0741, “RIGID TAP ALARM : EXCESS ERROR” is issued. When 0 is set in this parameter, no synchronization error check is made.

For Smart rigid tapping
Synchronization error check is always executed in Smart rigid tapping. In regard to spindle using Smart rigid tapping, the setting value 0 is treated as 400. The standard setting value is 0, but change it if you need.

5221	Number of gear teeth on the spindle side in rigid tapping (first gear)
5222	Number of gear teeth on the spindle side in rigid tapping (second gear)
5223	Number of gear teeth on the spindle side in rigid tapping (third gear)
5224	Number of gear teeth on the spindle side in rigid tapping (fourth gear)

[Input type] Parameter input
[Data type] Word spindle
[Valid data range] 1 to 32767

Each of these parameters is used to set the number of gear teeth on the spindle side for each gear in rigid tapping.

NOTE
When a position coder is attached to the spindle, set the same value for all of parameters Nos. 5221 to 5224.

5231	Number of gear teeth on the position coder side in rigid tapping (first gear)
5232	Number of gear teeth on the position coder side in rigid tapping (second gear)
5233	Number of gear teeth on the position coder side in rigid tapping (third gear)
5234	Number of gear teeth on the position coder side in rigid tapping (fourth gear)

[Input type] Parameter input
[Data type] Word spindle
[Valid data range] 1 to 32767
Each of these parameters is used to set the number of gear teeth on the position coder side for each gear in rigid tapping.

NOTE
When a position coder is attached to the spindle, set the same value for all of parameters Nos. 5231 to 5234.

5241	Maximum spindle speed in rigid tapping (first gear)
5242	Maximum spindle speed in rigid tapping (second gear)
5243	Maximum spindle speed in rigid tapping (third gear)
5244	Maximum spindle speed in rigid tapping (fourth gear)

[Input type] Parameter input
[Data type] 2-word spindle
[Unit of data] min^{-1}
[Valid data range] 0 to 9999
Spindle position coder gear ratio
1 : 1 0 to 7400
1 : 2 0 to 9999
1 : 4 0 to 9999
1 : 8 0 to 9999
Each of these parameters is used to set a maximum spindle speed for each gear in rigid tapping.
Set the same value for both parameter No. 5241 and parameter No. 5243 for a one-stage gear system. For a two-stage gear system, set the same value as set in parameter No. 5242 in parameter No. 5243. Otherwise, alarm PS0200, “ILLEGAL S CODE COMMAND” will be issued. This applies to the M series.

5260	Minimum torque overrides at acceleration/deceleration in rigid tapping

[Input type] Parameter input
[Data type] Byte spindle
[Unit of data] %
[Valid data range] 0 to 100
Set minimum torque override at acceleration/deceleration in rigid tapping.

This value corresponds to Eco level 3 (when bit 0 (ELV) of the parameter No.24303 is set to 0) or Eco level 7 (when bit 0 (ELV) of the parameter No.24303 is set to 1).

When torque override is set to 50%, for example, time constant for acceleration/deceleration gets twice.
Note that 0% is considered as 100%.
If eco-machining is not necessary, please set 0 or 100 in this parameter.

When bit 0 (PWE) of the parameter No.8900 is set to 1, this value can be changed on Eco setting screen.

NOTE
This parameter requires Energy saving level selecting function.

5261	Time constant for acceleration/deceleration in rigid tapping for each gear (first gear)
5262	Time constant for acceleration/deceleration in rigid tapping for each gear (second gear)
5263	Time constant for acceleration/deceleration in rigid tapping for each gear (third gear)
5264	Time constant for acceleration/deceleration in rigid tapping for each gear (fourth gear)

[Input type] Parameter input
[Data type] Word spindle
[Unit of data] msec
[Valid data range] 0 to 4000

Each of these parameters is used to set a linear acceleration/ deceleration time constant for the spindle of each gear and the tapping axis in rigid tapping.
Set the period required to reach each maximum spindle speed (parameters Nos. 5241 to 5244).
The set time constant, multiplied by the ratio of a specified S value to a maximum spindle speed, is actually used as a time constant.
For bell-shaped acceleration/deceleration, set a time constant for a linear portion.

5271	Time constant for acceleration/deceleration in rigid tapping extraction (first gear)
5272	Time constant for acceleration/deceleration in rigid tapping extraction (second gear)
5273	Time constant for acceleration/deceleration in rigid tapping extraction (third gear)
5274	Time constant for acceleration/deceleration in rigid tapping extraction (fourth gear)

[Input type] Parameter input
[Data type] Word spindle
[Unit of data] msec
[Valid data range] 0 to 4000

Each of these parameters is used to set a linear acceleration/ deceleration time constant for the spindle of each gear and tapping axis in extraction operation during rigid tapping.
For bell-shaped acceleration/deceleration, set a time constant for a linear portion.

NOTE
These parameters are enabled when the parameter TDR (bit 2 of parameter No. 5201) is set to 1.

5280	Position control loop gain for the spindle and tapping axis in rigid tapping (common to gears)
5281	Position control loop gain for the spindle and tapping axis in rigid tapping (first gear)
5282	Position control loop gain for the spindle and tapping axis in rigid tapping (second gear)
5283	Position control loop gain for the spindle and tapping axis in rigid tapping (third gear)
5284	Position control loop gain for the spindle and tapping axis in rigid tapping (fourth gear)

[Input type] Parameter input
[Data type] Word spindle
[Unit of data] 0.01/sec
[Valid data range] 1 to 9999

Each of these parameters is used to set a position control loop gain for the spindle and tapping axis in rigid tapping. These parameters significantly affect the precision of threading. Optimize these parameters as well as the loop gain multipliers by conducting a cutting test.

NOTE

To use a varied loop gain on a gear-by-gear basis, set parameter No. 5280 to 0, and set a loop gain for each gear in parameters Nos. 5281 to 5284. The specification of a loop gain on a gear-by-gear basis is disabled if parameter No. 5280 is set to a value other than 0. In such a case, the value set in parameter No. 5280 is used as a loop gain that is common to all the gears.

5291	Loop gain multiplier for the spindle in rigid tapping (first gear)
5292	Loop gain multiplier for the spindle in rigid tapping (second gear)
5293	Loop gain multiplier for the spindle in rigid tapping (third gear)
5294	Loop gain multiplier for the spindle in rigid tapping (fourth gear)

[Input type] Parameter input
[Data type] Word spindle
[Valid data range] 1 to 32767

Each of these parameters is used to set a loop gain multiplier for the spindle in rigid tapping each gear.

These parameters significantly affect the precision of threading. Optimize these parameters as well as the loop gains by conducting a cutting test.

Loop gain multiplier GC is obtained from the following equation:

$$GC = \frac{2048000 \times 360 \times PC \times E}{PLS \times SP \times L}$$

PLS Number of pulses output from the position coder (pulses/rev)
SP Number of gear teeth on the spindle side
PC Number of gear teeth on the position coder side
E Specified voltage (V) for turning the spindle motor at 1000 min^{-1}
L Angular displacement of the spindle (degrees) per spindle motor rotation

[Example] For the spindle motor and gear ratio given below, GC is calculated as follows:

$$GC = \frac{2048000 \times 360 \times 1 \times 2.2}{4096 \times 1 \times 360} = 1100$$

PLS = 4096 pulse/rev

SP = 1
PC = 1
E = 2.2 V
L = 360 deg
(Note) On the assumption that the spindle motor used turns at 4500 min^{-1} at 10 V, 2.2 V is required to turn the spindle motor at 1000 min^{-1}.

NOTE
These parameters are used for analog spindles.

5300	Tapping axis in-position width in rigid tapping (first spindle)

[Input type] Parameter input
[Data type] Word axis
[Unit of data] Detection unit
[Valid data range] 0 to 32767
This parameter sets a tapping axis in-position width when rigid tapping is performed using the first spindle.
If the setting value is negative value, in-position check is not completed.

NOTE
Set the following parameter for each spindle:

First spindle	No. 5300
Second spindle	No. 5302
Third spindle	No. 5304
Fourth spindle	No. 5306

5301	Spindle in-position width in rigid tapping

[Input type] Parameter input
[Data type] Word spindle
[Unit of data] Detection unit
[Valid data range] 0 to 32767
These parameters are used to set spindle in-position widths in rigid tapping.
If the setting value is negative value, in-position check is not completed.

NOTE
If an excessively large value is specified, the threading precision will deteriorate.

5302	Tapping axis in-position width in rigid tapping (second spindle)

[Input type] Parameter input
[Data type] Word axis
[Unit of data] Detection unit
[Valid data range] 0 to 32767
This parameter sets a tapping axis in-position width when rigid tapping is performed using the second spindle.
If the setting value is negative value, in-position check is not completed.

5304	Tapping axis in-position width in rigid tapping (third spindle)

[Input type] Parameter input

[Data type] Word axis
[Unit of data] Detection unit
[Valid data range] 0 to 32767
This parameter sets a tapping axis in-position width when rigid tapping is performed using the third spindle.
If the setting value is negative value, in-position check is not completed.

5306	Tapping axis in-position width in rigid tapping (fourth spindle)

[Input type] Parameter input
[Data type] Word axis
[Unit of data] Detection unit
[Valid data range] 0 to 32767
This parameter sets a tapping axis in-position width when rigid tapping is performed using the fourth spindle.
If the setting value is negative value, in-position check is not completed.

5310	Positional deviation limit imposed during tapping axis movement in rigid tapping (first spindle)

[Input type] Parameter input
[Data type] 2-word axis
[Unit of data] Detection unit
[Valid data range] 0 to 99999999
This parameter sets a positional deviation limit imposed during tapping axis movement in rigid tapping using the first spindle.

NOTE
Set the following parameter for each spindle:

First spindle	No. 5310
Second spindle	No. 5350
Third spindle	No. 5354
Fourth spindle	No. 5358

5311	Limit value of spindle positioning deviation during movement in rigid tapping

[Input type] Parameter input
[Data type] 2-word spindle
[Unit of data] Detection unit
[Valid data range] 0 to 99999999
This parameter sets the limit value of a spindle positioning deviation during movement in rigid tapping.
Find a value to be set from the following expression:

$$Setting\ value = \frac{S \times PLS \times 100 \times SP \times C}{60 \times G \times PC}$$

S Maximum spindle speed in rigid tapping (min^{-1})
(Setting value of parameter Nos. 5241 and greater)
PLS Number of pulses output from the position coder (pulses/rev)
SP Number of gear teeth on the spindle side
PC Number of gear teeth on the position coder side
G Loop gain in the rigid tapping ($0.01sec^{-1}$)
(Setting value of parameter Nos. 5281 and greater)
C Coefficient 1.5

[Calculation example]

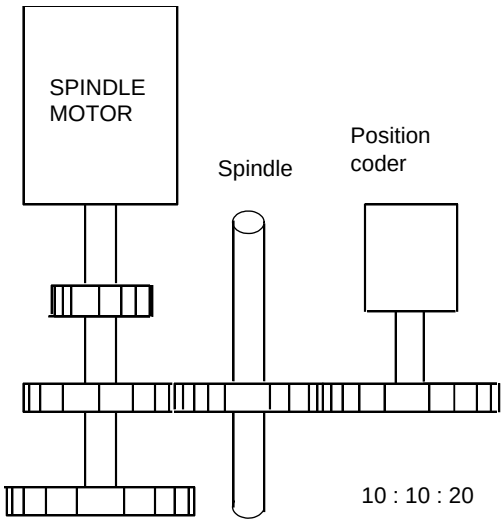

S = 3600
PLS = 4096
SP = 10
PC = 20
G = 3000
C = 1.5

$$Setting\ value = \frac{3600 \times 4096 \times 100 \times 10 \times 1.5}{60 \times 3000 \times 20} = 6144$$

5312	Positional deviation limit imposed while the tapping axis is stopped in rigid tapping (first spindle)

[Input type] Parameter input
[Data type] Word axis
[Unit of data] Detection unit
[Valid data range] 0 to 32767

This parameter sets a positional deviation limit imposed while the tapping axis is stopped in rigid tapping using the first spindle.

NOTE

Set the following parameter for each spindle:

First spindle	No. 5312
Second spindle	No. 5352
Third spindle	No. 5356
Fourth spindle	No. 5360

5313	Positional deviation limit imposed while the spindle is stopped in rigid tapping

[Input type] Parameter input
[Data type] 2-word spindle
[Unit of data] Detection unit
[Valid data range] 0 to 99999999

This parameter is used to set a positional deviation limit imposed while the spindle is stopped in rigid tapping.

5321	Spindle backlash in rigid tapping (first-stage gear)
5322	Spindle backlash in rigid tapping (second-stage gear)
5323	Spindle backlash in rigid tapping (third-stage gear)
5324	Spindle backlash in rigid tapping (fourth-stage gear)

[Input type] Parameter input
[Data type] Word spindle

[Unit of data] Detection unit ([detection unit]=[spindle rotation angle per one rotation of position coder]/4096 for α*i* position coder)
[Valid data range] -9999 to 9999
Each of these parameters is used to set a spindle backlash.

5350 **Positional deviation limit imposed during tapping axis movement in rigid tapping (second spindle)**

[Input type] Parameter input
[Data type] 2-word axis
[Unit of data] Detection unit
[Valid data range] 0 to 99999999
This parameter sets a positional deviation limit imposed during tapping axis movement in rigid tapping using the second spindle.

5352 **Positional deviation limit imposed while the tapping axis is stopped in rigid tapping (second spindle)**

[Input type] Parameter input
[Data type] Word axis
[Unit of data] Detection unit
[Valid data range] 0 to 32767
This parameter is used to set a positional deviation limit imposed while the tapping axis is stopped in rigid tapping using the second spindle.

5354 **Positional deviation limit imposed during tapping axis movement in rigid tapping (third spindle)**

[Input type] Parameter input
[Data type] 2-word axis
[Unit of data] Detection unit
[Valid data range] 0 to 99999999
This parameter sets a positional deviation limit imposed during tapping axis movement in rigid tapping using the third spindle.

5356 **Positional deviation limit imposed while the tapping axis is stopped in rigid tapping (third spindle)**

[Input type] Parameter input
[Data type] Word axis
[Unit of data] Detection unit
[Valid data range] 0 to 32767
This parameter is used to set a positional deviation limit imposed while the tapping axis is stopped in rigid tapping using the third spindle.

5358 **Positional deviation limit imposed during tapping axis movement in rigid tapping (fourth spindle)**

[Input type] Parameter input
[Data type] 2-word axis
[Unit of data] Detection unit
[Valid data range] 0 to 99999999
This parameter sets a positional deviation limit imposed during tapping axis movement in rigid tapping using the fourth spindle.

5360 **Positional deviation limit imposed while the tapping axis is stopped in rigid tapping (fourth spindle)**

[Input type] Parameter input
[Data type] Word axis

[Unit of data] Detection unit
[Valid data range] 0 to 32767
This parameter is used to set a positional deviation limit imposed while the tapping axis is stopped in rigid tapping using the fourth spindle.

5365	Bell-shaped acceleration/deceleration time constant in rigid tapping (first-stage gear)
5366	Bell-shaped acceleration/deceleration time constant in rigid tapping (second-stage gear)
5367	Bell-shaped acceleration/deceleration time constant in rigid tapping (third-stage gear)
5368	Bell-shaped acceleration/deceleration time constant in rigid tapping (fourth-stage gear)

[Input type] Parameter input
[Data type] Word spindle
[Unit of data] msec
[Valid data range] 0 to 512
Each of these parameters is used to set a time constant for a curved portion when bell-shaped acceleration/deceleration is selected in rigid tapping. When 0 is set in this parameter, linear acceleration/ deceleration is performed.

NOTE
This parameter is enabled when the parameter RBL (bit 5 of parameter No. 5203) is set to 1.

5381	Override value during rigid tapping return

[Input type] Parameter input
[Data type] Word path
[Unit of data] % or 10% (The unit of this parameter depends on the parameters OVU (bit 3 of parameter No.5201))
[Valid data range] 0 to 200
This parameter is used to set the override value during rigid tapping return.
If the setting is 0, no override is applied.

NOTE
1 This parameter is valid when bit 4 (DOV) of parameter No. 5200 for enabling override at normal extraction time is set to 1.
2 When the parameter OVU (bit 3 of No.5201) is set to 1, the data unit of this parameter is 10%.
3 If the setting value is less than or equal to 0, it is treated as 100%. Also, if the setting value is greater than 200, it is treated as 2000% or 200%.

5382	Amount of return for rigid tapping return

[Input type] Parameter input
[Data type] Real path
[Unit of data] mm, inch (input unit)
[Min. unit of data] Depend on the increment system of the drilling axis
[Valid data range] 0 or positive 9 digit of minimum unit of data (refer to the standard parameter setting table (B))
(When the increment system is IS-B, 0.0 to +999999.999)

This parameter is used to set an extra amount of rigid tapping return. The tool is retracted additionally near point R by the distance set in this parameter. If the tool has already been retracted from rigid tapping, it will be retracted further only by the distance specified in this parameter.

> **NOTE**
> If a negative value is set in this parameter, it is treated as a positive value.

4.27 PARAMETERS OF SCALING/COORDINATE ROTATION

	#7	#6	#5	#4	#3	#2	#1	#0
5400			LV3			D3R		RIN
	SCR	XSC	LV3			D3R		RIN

[Input type] Parameter input
[Data type] Bit path

#0 RIN Rotation angle command (R) of coordinate rotation (G68) :
0: Specified by an absolute method
1: Specified by an absolute method (G90) or incremental method (G91)

> **NOTE**
> When G code system A of the lathe system is used, it is specified by an absolute method regardless of the setting of this parameter.

#2 D3R When Reset is done by reset operation or reset signal from PMC, 3-dimensional coordinate system conversion mode and tilted working plane indexing mode is:
0: Canceled.
1: Not canceled.

#5 LV3 When system variables #100101 to #100132 (current position coordinates) and #100151 to #100182 (skip coordinates) are read in the 3-dimensional coordinate conversion mode or tilted working plane indexing mode:
0: Coordinates of the workpiece coordinate system can be read.
1: Coordinates of the program coordinate system after 3-dimensional coordinate conversion or tilted working plane indexing can be read.
This parameter applies also to system variables #5041 to #5060 (current position coordinates) and #5061 to #5080 (skip coordinates).

#6 XSC The setting of a scaling magnification (axis-by-axis scaling) is:
0: Disabled.
1: Enabled.

#7 SCR Scaling (G51) magnification unit:
0: 0.00001 times (1/100,000)
1: 0.001 times

	#7	#6	#5	#4	#3	#2	#1	#0
5401								
								SCLx

[Input type] Parameter input
[Data type] Bit axis

#0 SCLx Scaling on this axis:
0: Invalidated
1: Validated

	#7	#6	#5	#4	#3	#2	#1	#0
5402		RCI			DMK			

[Input type] Parameter input
[Data type] Bit path

#3 DMK The manual handle interruption screen is displayed:
0: Using the program coordinate system (post-conversion coordinate system).
1: Using the workpiece coordinate system (pre-conversion coordinate system).
This parameter is valid only in 3-dimensional coordinate conversion mode and Tilted working plane indexing mode.

NOTE
In Tilted working plane indexing mode, the setting of this parameter is used only when bit 4 (MDT) of parameter No.12319 is set to 1.

#6 RCI In case that Positioning has not been done after Coordinate system rotation, if Circular interpolation with R is specified:
0: A center angle might change by over 180 degrees.
1: A center angle does not change by over 180 degrees.

NOTE
This parameter is Automatic setting parameter. For details, refer to the appendix "Automatic setting / Initial setting parameter" in CONNECTION MANUAL (FUNCTION) (B-64693EN-1).

5410	Angular displacement used when no angular displacement is specified for coordinate system rotation

[Input type] Setting input
[Data type] 2-word path
[Unit of data] 0.001 degree
[Valid data range] -360000 to 360000
This parameter sets the angular displacement for coordinate system rotation. When the angular displacement for coordinate system rotation is not specified with address R in the block where G68 is specified, the setting of this parameter is used as the angular displacement for coordinate system rotation.

NOTE
Write this parameter in the rotation cancel (G69) state when it is written by using the applications (such as PMC window, FOCAS2, and C language executor) or the programmable parameter input (G10).
Even if this parameter is written in the rotation mode, it is not immediately enabled.
When the rotation start (G68) that doesn't include the rotation angle (R_) is specified again, it is enabled.

5411	
	Scaling (G51) magnification

[Input type] Setting input
[Data type] 2-word path
[Unit of data] 0.001 or 0.00001 times (Selected using bit 7 (SCR) of parameter No. 5400)
[Valid data range] 1 to 999999999
This parameter sets a scaling magnification when axis-by-axis scaling is disabled (with bit 6 (XSC) of parameter No. 5400 set to 0). If no scaling magnification (P) is specified in the program, the setting of this parameter is used as a scaling magnification.

NOTE
When bit 7 (SCR) of parameter No. 5400 is set to 1, the valid data range is 1 to 9999999.

5412	Rapid traverse rate for canned cycle for drilling in 3-dimensional coordinate conversion mode

[Input type] Parameter input
[Data type] Real path
[Unit of data] mm/min, inch/min, degree/min (machine unit)
[Min. unit of data] Depend on the increment system of the reference axis
[Valid data range] Refer to the standard parameter setting table (C)
(When the increment system is IS-B, 0.0 to +999000.0)
This parameter sets a rapid traverse rate for canned cycle for drilling in the 3-dimensional coordinate conversion mode or the tilted working plane indexing mode.

5421	
	Scaling magnification for each axis

[Input type] Setting input
[Data type] 2-word axis
[Unit of data] 0.001 or 0.00001 times (Selected using bit 7 (SCR) of parameter No. 5400)
[Valid data range] -999999999 to -1, 1 to 999999999
This parameter sets a scaling magnification for each axis when axis-by-axis scaling is enabled (with bit 6 (XSC) of parameter No. 5400 set to 1). For the first spindle to the third spindle (X-axis to Z-axis), the setting of this parameter is used as a scaling magnification if scaling magnifications (I, J, K) are not specified in the program.

NOTE
When bit 7 (SCR) of parameter No. 5400 is set to 1, the valid data ranges are -9999999 to -1 and 1 to 9999999.

4.28 PARAMETERS OF SINGLE DIRECTION POSITIONING

	#7	#6	#5	#4	#3	#2	#1	#0
5431								
							PDI	MDL

[Input type] Parameter input
[Data type] Bit path

#0 MDL The G60 code (single direction positioning) is:
0: One-shot G code (group 00).

1: Modal G code (group 01).

#1 PDI In the G60 mode, an in-position check at a stop position is:
0: Not made. (Waiting for only the end of acceleration/deceleration)
1: Made.

5440	
	Positioning direction and overrun distance in single direction positioning (G60)

[Input type] Parameter input
[Data type] Real axis
[Unit of data] mm, inch, degree (machine unit)
[Min. unit of data] Depend on the increment system of the applied axis
[Valid data range] Refer to the standard parameter setting table (A)
(When the increment system is IS-B, -999999.999 to +999999.999)
This parameter sets the positioning direction and overrun distance in single direction positioning (G60) for each axis. The positioning direction is specified using a setting data sign, and the overrun distance using a value set here.
Overrun distance>0: The positioning direction is positive (+).
Overrun distance<0: The positioning direction is negative (-).
Overrun distance=0: Single direction positioning is not performed.

4.29 PARAMETERS OF POLAR COORDINATE INTERPOLATION

	#7	#6	#5	#4	#3	#2	#1	#0
5450		PRD	PIC			PLS		PDI

[Input type] Parameter input
[Data type] Bit path

#0 PDI When the second axis on the plane in the polar coordinate interpolation mode is based on radius specification:
0: Radius specification is used.
1: Diameter specification is used.

#2 PLS The polar coordinate interpolation shift function is:
0: Not used.
1: Used.
This enables machining using the workpiece coordinate system with a desired point which is not the center of the rotation axis set as the origin of the coordinate system in polar coordinate interpolation.

#5 PIC The initial display type of the absolute position of the linear and rotary axes to be used in the polar coordinate interpolation is:
0: Actual position.
1: Cartesian coordinates in the polar coordinate interpolation plane.

NOTE
1 The display type can be switched via the soft key [CARTES ON] / [CARTES OFF] in the absolute position display screen.
2 This parameter does not change if switching the display type via the soft key.

#6 PRD When the first axis on the plane in the polar coordinate interpolation mode is based on diameter specification:
0: Diameter specification is used.
1: Radius specification is used.

5460	Axis (linear axis) specification for polar coordinate interpolation

[Input type] Parameter input
[Data type] Byte path
[Valid data range] 1 to number of controlled axes
This parameter sets control axis numbers of linear axis to execute polar interpolation.

5461	Axis (rotation axis) specification for polar coordinate interpolation

[Input type] Parameter input
[Data type] Byte path
[Valid data range] 1 to number of controlled axes
This parameter sets control axis numbers of rotation axis to execute polar interpolation.

5463	Automatic override tolerance ratio for polar coordinate interpolation

[Input type] Parameter input
[Data type] Byte path
[Unit of data] %
[Valid data range] 0 to 100
Typical setting: 90% (treated as 90% when set to 0)
Set the tolerance ratio of the fastest cutting feedrate to the speed of the rotation axis during automatic override of polar coordinate interpolation.

5464	Compensation for error on hypothetical axis of polar coordinate interpolation

[Input type] Parameter input
[Data type] Real path
[Unit of data] mm, inch (input unit)
[Min. unit of data] Depend on the increment system of the reference axis
[Valid data range] 9 digit of minimum unit of data (refer to standard parameter setting table (A))
(For IS-B, -999999.999 to +999999.999)
This parameter is used to set the error if the center of the rotation axis on which polar coordinate interpolation is performed is not on the X-axis.
If the setting of the parameter is 0, regular polar coordinate interpolation is performed.

4.30 PARAMETERS OF NORMAL DIRECTION CONTROL

5480	Number of the axis for controlling the normal direction

[Input type] Parameter input
[Data type] Byte path
[Valid data range] 1 to the maximum controlled axis number
This parameter sets the controlled axis number of the axis for controlling the normal direction.

5481	Feedrate of rotation of the normal direction controlled axis

[Input type] Parameter input
[Data type] Real axis
[Unit of data] deg/min
[Min. unit of data] Depend on the increment system of the applied axis
[Valid data range] Refer to the standard parameter setting table (C)
This parameter sets the feedrate of the movement along the normal direction controlled axis that is inserted at the start point of a block during normal direction control.

5482	Limit value used to determine whether to ignore the rotation insertion of the normal direction controlled axis

[Input type] Parameter input
[Data type] Real path
[Unit of data] Degree
[Min. unit of data] Depend on the increment system of the reference axis
[Valid data range] 0 or positive 9 digit of minimum unit of data (refer to the standard parameter setting table (B))
The rotation block of the normal direction controlled axis is not inserted when the rotation insertion angle calculated during normal direction control does not exceed this setting.
The ignored rotation angle is added to the next rotation insertion angle, and the block insertion is then judged.

NOTE
1 No rotation block is inserted when 360 or more degrees are set.
2 If 180 or more degrees are set, a rotation block is inserted only when the circular interpolation setting is 180 or more degrees.

5483	Limit value of movement that is executed at the normal direction angle of a preceding block

[Input type] Parameter input
[Data type] Real path
[Unit of data] mm, inch (input unit)
[Min. unit of data] Depend on the increment system of the reference axis
[Valid data range] 0 or positive 9 digit of minimum unit of data (refer to standard parameter setting table (B)

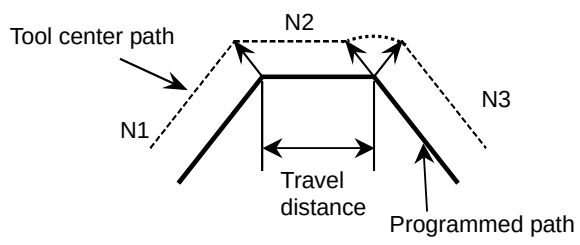

For straight line
When the travel distance of N2 in the figure on the left does not exceed the setting, block N2 is machined with the tool being normal to block N1.

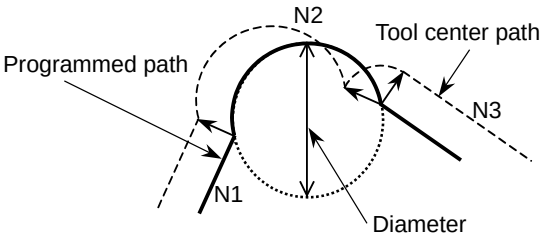

For arc
When the arc diameter of N2 in the figure on the left does not exceed the setting, arc N2 is machined with the tool being normal to block N1. A normal direction axis is not controlled to move in the normal direction according to the arc movement.

5486	Block distance to move until the end of rotation of the normal direction control axis

[Input type] Parameter input
[Data type] Real path
[Unit of data] mm, inch (input unit)
[Min. unit of data] Depend on the increment system of the reference axis
[Valid data range] 0 or positive 9 digit of minimum unit of data (refer to the standard parameter setting table (B))
(When the increment system is IS-B, 0.0 to +999999.999)
This parameter sets the command block distance to move until the rotation of the normal direction control axis is completed. When 0 is specified, this function is disabled.

4.31 PARAMETERS OF INDEX TABLE INDEXING

	#7	#6	#5	#4	#3	#2	#1	#0
5500	IDX	SIM		G90	INC	ABS	REL	DDP

[Input type] Parameter input
[Data type] Bit path

#0 DDP As the method for inputting a decimal point in a command for the index table indexing axis:
0: The conventional method is used.
1: The pocket calculator method is used.

#1 REL The position display of the index table indexing axis in the relative coordinate system is:
0: Not rounded by one rotation.
1: Rounded by one rotation.

#2 ABS The position display of the index table indexing axis in the absolute coordinate system is:
0: Not rounded by one rotation.
1: Rounded by one rotation.

NOTE

Be sure to set this parameter to 1.
If an absolute programming is commanded to the index table indexing axis when this parameter is set to 0, the position display of the absolute coordinate system may be not corresponding to the absolute programming value like the following example.

Example) When indexing by rotating in a positive direction :
N10 G90 B20.;
N20 B10.; ← It rotates in a positive direction by 350 degree. At this time, 370.0 is displayed to the position display of the absolute coordinate system.

#3 INC When the M code that specifies rotation in the negative direction (parameter No. 5511) is not set, rotation in the G90 mode is:
0: Not set to the shorter way around the circumference.
1: Set to the shorter way around the circumference.

#4 G90 A command for the index table indexing axis is:
0: Assumed to be an absolute or incremental programming according to the mode.
1: Always assumed to be an absolute programming.

#6 SIM When the same block includes a command for the index table indexing axis and a command for another controlled axis:
0: The setting of bit 0 (IXS) of parameter No. 5502 is followed.
1: The commands are executed.

NOTE

Even when this parameter is set to 1, an alarm PS1564, “INDEX TABLE AXIS - OTHER AXIS SAME TIME” is issued if the block is neither G00, G28, nor G30 (or the G00 mode).

#7 IDX Operation sequence of the index table indexing axis:
0: Type A
1: Type B

	#7	#6	#5	#4	#3	#2	#1	#0
5501							ISP	ITI

[Input type] Parameter input
[Data type] Bit path

#0 ITI The index table indexing function is:
0: Enabled.
1: Disabled.

#1 ISP Servo-off for an index table indexing axis at the completion of clamping is:
0: Processed by the CNC.
1: Not processed by the CNC. (The CNC follows the status of the servo-off signals, SVF1 to SVF8 <Gn0126> input from the PMC.)

	#7	#6	#5	#4	#3	#2	#1	#0
5502								IXS

[Input type] Parameter input
[Data type] Bit axis

#0 IXSx When a command is specified in a block that contains a command for the index table indexing axis:
0 : An alarm PS1564, “INDEX TABLE AXIS - OTHER AXIS SAME TIME” is issued.
1 : The command is executed.

If bit 6 (SIM) of parameter No. 5500 is set to 1, a simultaneous operation with all axes except the index table indexing axis can be performed regardless of the setting of this parameter.
To set an axis that allows simultaneous operation for each axis, set SIM to 0, and set this parameter.

NOTE
Even when this parameter is set to 1, an alarm PS1564, “INDEX TABLE AXIS - OTHER AXIS SAME TIME” is issued if the block is neither G00, G28, nor G30 (or the G00 mode).

	#7	#6	#5	#4	#3	#2	#1	#0
5503								RPA

[Input type] Parameter input
[Data type] Bit path

#0 RPA In the index table indexing function, when the parameter ABS(No.5500#2) is set to 1, internal coordinate system is:
0 : Not rounded by one rotation.
1 : Rounded by one rotation.

NOTE
This parameter is Initial setting parameter. For details, refer to the appendix "Automatic setting / Initial setting parameter" in CONNECTION MANUAL (FUNCTION) (B-64693EN-1).

5510	Controlled axis number of the index table indexing axis

NOTE
When this parameter is set, the power must be turned off before operation is continued.

[Input type] Parameter input
[Data type] Byte path
[Valid data range] 0 to Number of controlled axes
This parameter sets the number of a controlled axis to be used as the index table indexing axis.
When 0 is set, the fourth axis is assumed.
If the system does not have the fourth axis or the index table indexing function is not used, set bit 0 (ITI) of parameter No. 5501 to 1 to disable the function.

5511	M code that specifies rotation in the negative direction for index table indexing

[Input type] Parameter input
[Data type] 2-word path
[Valid data range] 0 to 99999999
0: The rotation direction for the index table indexing axis is determined according to the setting of bit 3 (INC) of parameter No. 5500 and a command.
1 to 99999999:
The rotation for the index table indexing axis is always performed in the positive direction. It is performed in the negative direction only when a move command is specified together with the M code set in this parameter.

NOTE
Be sure to set bit 2 (ABS) of parameter No. 5500 to 1.

5512	Minimum positioning angle for the index table indexing axis

[Input type] Parameter input
[Data type] Real path
[Unit of data] deg
[Min. unit of data] Depend on the increment system of the reference axis
[Valid data range] 9 digit of minimum unit of data (refer to standard parameter setting table (A))
(When the increment system is IS-B, -999999.999 to +999999.999)
This parameter sets the minimum positioning angle (travel distance) for the index table indexing axis. The travel distance specified in the positioning command must always be an integer multiple of this setting. When 0 is set, the travel distance is not checked.
The minimum positioning angle is checked not only for the command, but also for the coordinate system setting and workpiece origin offset.

4.32 PARAMETERS OF FLEXIBLE SYNCHRONIZATION CONTROL (1 OF 2)

5660	Master axis number (group A)
5661	Slave axis number (group A)
5662	Master axis number (group B)
5663	Slave axis number (group B)
5664	Master axis number (group C)
5665	Slave axis number (group C)
5666	Master axis number (group D)
5667	Slave axis number (group D)

[Input type] Parameter input
[Data Input type] Word path
[Valid data range] 0 to Number of controlled axes or m × 100+n
(m: 1 to Number of paths, n: 1 to Number of controlled axes)
Specify both master and slave axis numbers.

[Example of setting]

1 to 24: Controlled axes on own path (for single-path systems only)
101 to 124: Controlled axes on path 1
201 to 224: Controlled axes on path 2

In inter-path flexible synchronization control, an axis of a path can be specified as the master axis of another path.

NOTE
In inter-path flexible synchronization control, an axis of any path cannot be specified as the slave axis of another path.

	#7	#6	#5	#4	#3	#2	#1	#0
5668					ACD	ACC	ACB	ACA

[Input type] Parameter input
[Data Input type] Bit path

#0 ACA Update of the machine coordinates of flexible synchronization control group A is:
0 : Executed.
1 : Not executed.

#1 ACB Update of the machine coordinates of flexible synchronization control group B is:
0 : Executed.
1 : Not executed.

#2 ACC Update of the machine coordinates of flexible synchronization control group C is:
0 : Executed.
1 : Not executed.

#3 ACD Update of the machine coordinates of flexible synchronization control group D is:
0 : Executed.
1 : Not executed.

NOTE
The machine coordinates update is not done though the slave axis operates on the motor.
In this case, if an automatic reference position return to origin is done after the synchronization mode is canceled, the alarm of DS0405, “ZERO RETURN END NOT ON REF” is issued.
Please use a manual reference position return to origin to do the return to origin.

	#7	#6	#5	#4	#3	#2	#1	#0
5669					PHD	PHC	PHB	PHA

[Input type] Parameter input
[Data Input type] Bit path

#0 PHA The automatic phase synchronization for flexible synchronization control of group A is:
0: Disabled.
1: Enabled.

#1 PHB The automatic phase synchronization for flexible synchronization control of group B is:
0: Disabled.
1: Enabled.

#2 PHC The automatic phase synchronization for flexible synchronization control of group C is:
0: Disabled.
1: Enabled.

#3 PHD The automatic phase synchronization for flexible synchronization control of group D is:
0: Disabled.
1: Enabled.

> **NOTE**
> When this parameter is set, acceleration/deceleration upon a synchronization start or synchronization cancellation is enabled. For automatic positioning, set the automatic phase synchronization signal for each group to 1.

5670	M code number for turning on the flexible synchronization control mode(group A)
5671	M code number for turning off the flexible synchronization control mode(group A)
5672	M code number for turning on the flexible synchronization control mode(group B)
5673	M code number for turning off the flexible synchronization control mode(group B)
5674	M code number for turning on the flexible synchronization control mode(group C)
5675	M code number for turning off the flexible synchronization control mode(group C)
5676	M code number for turning on the flexible synchronization control mode(group D)
5677	M code number for turning off the flexible synchronization control mode(group D)

[Input type] Parameter input
[Data Input type] Word path
[Valid data range] 1 to 999
Specify an M code for turning on or off the flexible synchronization control mode for an automatic operation.

5680	Numerator determining gear ratio for flexible synchronization(group A)
5681	Denominator determining gear ratio for flexible synchronization(group A)
5682	Numerator determining gear ratio for flexible synchronization(group B)
5683	Denominator determining gear ratio for flexible synchronization(group B)
5684	Numerator determining gear ratio for flexible synchronization(group C)
5685	Denominator determining gear ratio for flexible synchronization(group C)
5686	Numerator determining gear ratio for flexible synchronization(group D)
5687	Denominator determining gear ratio for flexible synchronization(group D)

[Input type] Parameter input
[Data Input type] 2 word path
[Valid data range] -99999999 to 99999999

Specify a gear ratio between the master and slave axes.

5690	Index to gear ratio denominator for flexible synchronization(group A)
5691	Index to gear ratio denominator for flexible synchronization(group B)
5692	Index to gear ratio denominator for flexible synchronization(group C)
5693	Index to gear ratio denominator for flexible synchronization(group D)

[Input type] Parameter input
[Data Input type] Byte path
[Valid data range] 0 to 8

Specify an index to the denominator of a gear ratio between the master and slave axes.
Let p, q, and k be, respectively, a denominator determining gear ratio for flexible synchronization, numerator determining gear ratio for flexible synchronization, and index to the gear ratio denominator for flexible synchronization:

The gear ratio is $\frac{q}{p \times 10^k}$

	#7	#6	#5	#4	#3	#2	#1	#0
5694						PAV	PHS	HOB

[Input type] Parameter input
[Data type] Bit path

NOTE
When this parameter is set, the power must be turned off before operation is continued.

#0 HOB The command of G80 and G81 or G80.4 and G81.4 is:
0: Used with "Electronic gear box".
1: Used with "Hob command by flexible synchronization control".

NOTE
1 It is selected whether to use G80 and G81 or G80.4 and G81.4 by bit 0 (EFX) of parameter No.7731.
2 If Hob machining package is enabled and the bit 0 (HBS) of parameter No.5698 is 1, the different function from the function selected by this parameter is used.

#1 PHS Speed-up of automatic phase synchronization for flexible synchronization control is:
0: Disabled.
1: Enabled.

#2 PAV Variable acceleration function in automatic phase synchronization for flexible synchronization control is:
0: Disabled.
1: Enabled.

5695	Group number to which feed per revolution can be performed based on the rotation compensated with a synchronization coefficient of a slave axis of flexible synchronization control

[Input type] Parameter input

[Data type] Byte path
[Valid data range] 0 to 4
The group number of flexible synchronization control which slave axis used with feed per revolution belongs is set.
Feed per revolution can be performed based on the rotation compensated with a synchronization coefficient of a slave axis of flexible synchronization control .
Set the group number of flexible synchronization control as follows.
Group A = 1, Group B = 2, Group C = 3, Group D = 4
If this parameter is set to 0, feed per revolution is performed based on the feedback pulse.

5696	M code for beginning deceleration for canceling synchronization

[Input type] Parameter input
[Data type] 2 Word path
[Valid data range] 0 to 99999999
This parameter set M code for beginning deceleration for canceling synchronization.
The M code of group A : Number set to this parameter
The M code of group B : Number set to this parameter + 1
The M code of group C : Number set to this parameter + 2
The M code of group D : Number set to this parameter + 3
When this parameter is set to 0, the M code is disabled.

NOTE
1 If the bit 1 (PHS) of parameter No.5694 is set to 1, this parameter is enabled.
2 Do not set an M code used with other functions (such as M00-05, 30, 98, and 99, and M codes for calling subprograms).

5697	Acceleration switch speed of slave axis in synchronization start/cancellation

[Input type] Parameter input
[Data type] 2-word axis
[Unit of data] min^{-1}
[Valid data range] 0 to 99999999
This parameter set the acceleration switch speed of slave axis in synchronization start/cancellation. If 0 or less is set to this parameter, constant acceleration (specified by parameter No.7778) is applied in all speed area.

NOTE
This parameter is valid If 1 is set to the parameter PAV(No.5694#2).

	#7	#6	#5	#4	#3	#2	#1	#0
5698								HBS

[Input type] Parameter input
[Data type] Bit path

#0 HBS The command of G80 and G81 or G80.4 and G81.4 is:
0: Used with the function selected by the bit 0 (HOB) of parameter No.5694.
1: Used with the different function from the function selected by the bit 0 (HOB) of parameter No.5694.

NOTE
1 This parameter is enabled only when Hob machining package is enabled.
2 When this parameter is changed, the both of the following conditions need to be met.
- EGB synchronous control in the path is cancelled.
(If Electronic gear box 2 pair is used, all pairs need to be cancelled.)
- Flexible synchronization control in the path is cancelled.
(All groups need to be cancelled.)
3 If this parameter is changed when the upper conditions are not met, switching hob command is executed after the conditions are met.
4 Whether switching hob command is finished or not can be confirmed with the bit 0 (HOB) of diagnosis data No.5040.

4.33 PARAMETERS OF STRAIGHTNESS COMPENSATION (1 OF 2)

	#7	#6	#5	#4	#3	#2	#1	#0
5700						SM2		RSR

[Input type] Parameter input
[Data type] Bit path

#0 RSR When the compensation value data (parameter No.5761 to 5784, No.13351 to 13374) of the straightness compensation is set, the power off/on is :
0: Required.
1: Not required.

NOTE
1 When this parameter is set, the power must be turned off before operation is continued.
2 When this function is enabled and the compensation value of straightness compensation on each compensation point (parameter No. 5761 to 5784, No.13351 to 13374) is changed, the alarm of turning off the power is not generated.

#2 SM2 In the straightness compensation function, magnification parameters (parameters Nos. 13391 to 13396) are treated as follows:
0: When more than one moving axis is set with the same number, the setting of the magnification parameter for the moving axis set first is used.
1: When more than one moving axis is set with the same number, the setting of the magnification parameter for each axis is used.

5711	Straightness compensation : Axis number of moving axis 1
5712	Straightness compensation : Axis number of moving axis 2
5713	Straightness compensation : Axis number of moving axis 3
5714	Straightness compensation : Axis number of moving axis 4
5715	Straightness compensation : Axis number of moving axis 5
5716	Straightness compensation : Axis number of moving axis 6

NOTE
When these parameters are set, the power must be turned off before operation is continued.

[Input type] Parameter input
[Data type] Byte path
[Valid data range] 1 to number of controlled axes
Set the axis number of a moving axis in straight compensation.
When 0 is set, compensation is not performed.

5721	Straightness compensation : Axis number of compensation axis 1 for moving axis 1
5722	Straightness compensation : Axis number of compensation axis 2 for moving axis 2
5723	Straightness compensation : Axis number of compensation axis 3 for moving axis 3
5724	Straightness compensation : Axis number of compensation axis 4 for moving axis 4
5725	Straightness compensation : Axis number of compensation axis 5 for moving axis 5
5726	Straightness compensation : Axis number of compensation axis 6 for moving axis 6

NOTE
When these parameters are set, the power must be turned off before operation is continued.

[Input type] Parameter input
[Data type] Byte path
[Valid data range] 1 to number of controlled axes

5731	Straightness compensation : Compensation point number a of moving axis 1
5732	Straightness compensation : Compensation point number b of moving axis 1
5733	Straightness compensation : Compensation point number c of moving axis 1
5734	Straightness compensation : Compensation point number d of moving axis 1

NOTE
When these parameters are set, the power must be turned off before operation is continued.

[Input type] Parameter input
[Data type] Word path
[Valid data range] 0 to 1023
These parameters set compensation point numbers in stored pitch error compensation.

Set four compensation points for each moving axis.

5741	Straightness compensation : Compensation point number a of moving axis 2
5742	Straightness compensation : Compensation point number b of moving axis 2
5743	Straightness compensation : Compensation point number c of moving axis 2
5744	Straightness compensation : Compensation point number d of moving axis 2

NOTE
When these parameters are set, the power must be turned off before operation is continued.

[Input type] Parameter input
[Data type] Word path
[Valid data range] 0 to 1023
These parameters set compensation point numbers in stored pitch error compensation.
Set four compensation points for each moving axis.

5751	Straightness compensation : Compensation point number a of moving axis 3
5752	Straightness compensation : Compensation point number b of moving axis 3
5753	Straightness compensation : Compensation point number c of moving axis 3
5754	Straightness compensation : Compensation point number d of moving axis 3

NOTE
When these parameters are set, the power must be turned off before operation is continued.

[Input type] Parameter input
[Data type] Word path
[Valid data range] 0 to 1023
These parameters set compensation point numbers in stored pitch error compensation.
Set four compensation points for each moving axis.

5761	Compensation corresponding compensation point number a of moving axis 1
5762	Compensation corresponding compensation point number b of moving axis 1
5763	Compensation corresponding compensation point number c of moving axis 1
5764	Compensation corresponding compensation point number d of moving axis 1

NOTE
When these parameters are set, the power must be turned off before operation is continued.

[Input type] Parameter input
[Data type] Word path
[Unit of data] Detection unit
[Valid data range] -32767 to 32767
Each of these parameters sets a compensation value for each moving axis compensation point.

5771	Compensation corresponding compensation point number a of moving axis 2
5772	Compensation corresponding compensation point number b of moving axis 2
5773	Compensation corresponding compensation point number c of moving axis 2
5774	Compensation corresponding compensation point number d of moving axis 2

NOTE
When these parameters are set, the power must be turned off before operation is continued.

[Input type] Parameter input
[Data type] Word path
[Unit of data] Detection unit
[Valid data range] -32767 to 32767
Each of these parameters sets a compensation value for each moving axis compensation point.

5781	Compensation corresponding compensation point number a of moving axis 3
5782	Compensation corresponding compensation point number b of moving axis 3
5783	Compensation corresponding compensation point number c of moving axis 3
5784	Compensation corresponding compensation point number d of moving axis 3

NOTE
When these parameters are set, the power must be turned off before operation is continued.

[Input type] Parameter input
[Data type] Word path
[Unit of data] Detection unit
[Valid data range] -32767 to 32767
Each of these parameters sets a compensation value for each moving axis compensation point.

4.34 PARAMETERS OF INCLINATION COMPENSATION

5861	Inclination compensation : Compensation point number a for each axis
5862	Inclination compensation : Compensation point number b for each axis
5863	Inclination compensation : Compensation point number c for each axis
5864	Inclination compensation : Compensation point number d for each axis

NOTE
When these parameters are set, the power must be turned off before operation is continued.

[Input type] Parameter input
[Data type] Word axis

[Valid data range] 0 to 1535
These parameters set the compensation points for inclination compensation. The points are set for the compensation point numbers for stored pitch error compensation.

5871	**Inclination compensation : Compensation α at compensation point number a for each axis**
5872	**Inclination compensation : Compensation β at compensation point number b for each axis**
5873	**Inclination compensation : Compensation γ at compensation point number c for each axis**
5874	**Inclination compensation : Compensation δ at compensation point number d for each axis**

[Input type] Parameter input
[Data type] Word axis
[Unit of data] Detection unit
[Valid data range] -32767 to 32767
Each of these parameters sets a compensation value for each axis compensation point.

4.35 PARAMETERS OF CUSTOM MACROS

	#7	#6	#5	#4	#3	#2	#1	#0
6000	SBV		SBM	HGO		HMC	MGO	G67
	SBV		SBM	HGO	V15	HMC	MGO	G67

[Input type] Parameter input
[Data type] Bit path

#0 G67 If the macro modal call cancel command (G67) is specified when the macro modal call mode (G66/G66.1) is not set:
0: Alarm PS1100, “CANCEL WITHOUT MODAL CALL” is issued.
1: The specification of G67 is ignored.

#1 MGO When a GOTO/LGOTO statement for specifying custom macro control is executed, a high-speed branch to 20 sequence numbers/LBL[label] executed from the start of the program is:
0: A high-speed branch is not caused to n sequence numbers/LBL[label] from the start of the executed program.
1: A high-speed branch is caused to n sequence numbers/LBL[label] from the start of the program.

#2 HMC A custom macro is executed:
0: At a normal speed.
1: At a high-speed.

> **NOTE**
> This parameter is Automatic setting parameter. For details, refer to the appendix "Automatic setting / Initial setting parameter" in CONNECTION MANUAL (FUNCTION) (B-64693EN-1).

#3 V15 As system variable numbers for tool offset:
0 : The standard system variable numbers for the Series 16 are used.
1 : The same system variable numbers as those used for the Series 15 are used.
The tables indicate the system variables for tool offset numbers 1 to 999. The values for tool offset numbers 1 to 200 can be read from or assigned to the system variables in parentheses.

		System variable number	
		V15 = 0	V15 = 1
Tool length offset	Geometry offset value	#11001 to #11999 (#2201 to #2400)	#10001 to #10999 (#2001 to #2200)
	Wear offset value	#10001 to #10999 (#2001 to #2200)	#11001 to #11999 (#2201 to #2400)
Tool radius offset	Geometry offset value	#13001 to #13999	#12001 to #12999
	Wear offset value	#12001 to #12999	#13001 to #13999

#4 HGO When a GOTO/LGOTO statement for specifying custom macro control is executed, a branch to 30 sequence numbers/LBL[label] just before the GOTO/LGOTO statement or to up to 10 sequence numbers/LBL[label] saved by a sequence number search/a label search previously made with a GOTO/LGOTO statement is:
0: Not made at high speed.
1: Made at high speed.

#5 SBM Custom macro statement
0: Not stop the single block
1: Stops the single block
If you want to disable the single blocks in custom macro statements using system variable #3003, set this parameter to 0. If this parameter is set to 1, the single blocks in custom macro statements cannot be disabled using system variable #3003. To control single blocks in custom macro statements using system variable #3003, use bit 7 (SBV) of parameter No. 6000.

#7 SBV Custom macro statement
0: Not stop the single block
1: Enable/disable single block stop with system variable #3003

		Bit 5 (SBM) of parameter No. 6000	
		0	1
Bit 7 (SBV) of parameter No. 6000	0	Disables single block stop.	Enables single block stop. (With variable #3003, single block stop cannot be enabled/disabled. Single block stop is enabled at all times.)
	1	Enables single block stop. (With variable #3003, single block stop can be enabled/disabled.)	

NOTE
1 In the cutter or tool nose radius compensation mode, the block look-ahead operation is performed even in single-block operation to calculate a path intersection after offsetting. So, a macro statement is also executed when read in advance. Therefore, turn off the cutter or tool nose radius compensation mode, when the single block operation is enabled for custom macro statements by SBM=1 or SBV=1.
2 When the single block operation is enabled for custom macro statements by SBM=1 or SBV=1, a custom macro statement block is assumed to be an NC statement block that does not involve movement. Therefore, the motion may differ between the normal operation and the single block operation.

	#7	#6	#5	#4	#3	#2	#1	#0
6001		CCV	TCS	CRO	PV5		PRT	MIF

[Input type] Parameter input
[Data type] Bit path

#0 MIF The custom macro interface signals are based on:
0: Standard specification.
(Custom macro input signals UI000 to UI015<Gn054,Gn055>, custom macro output signals UO000 to UO015<Fn054,Fn055>, and UO100 to UO131<Fn056 to Fn059> are used.)
1: Extended specification.
(Custom macro input signals UI000 to UI031<Gn054 to Gn057>, UI100 to UI131<Gn276 to Gn279>, UI200 to UI231<Gn280 to Gn283>, UI300 to UI331<Gn284 to Gn287>, custom macro output signals UO000 to UO031<Fn054,Fn055,Fn276,Fn277>, UO100 to UO131<Fn056 to Fn059>, UO200 to UO231<Fn280 to Fn283>, and UO300 to UO331<Fn284 to Fn287> are used.)

#1 PRT Reading zero when data is output using a DPRINT command
0: Outputs a space
1: Outputs no data

#3 PV5 Custom macro common variables:
0: #500 to #549 are output. (Note)
1: #100 to #149 and #500 to 549 are output. (Note)

> **NOTE**
> Output variables are as the table according to the combination of added options.

When the parameter PV5=0

		Addition of custom macro common variables	
		Disable (bit 6 (NCV) of parameter No.8135 is 1)	**Enable (bit 6 (NCV) of parameter No.8135 is 0)**
Option "Embedded macro"	**Non**	#500 to #549	#500 to #999
	Yes	#500 to #549	#500 to #999

When the parameter PV5=1

		Addition of custom macro common variables	
		Disable (bit 6 (NCV) of parameter No.8135 is 1)	**Enable (bit 6 (NCV) of parameter No.8135 is 0)**
Option "Embedded macro"	**Non**	#100 to #149 and #500 to #549	#100 to #199 and #500 to #999
	Yes	#100 to #149, #200 to #499 and #500 to #549	#100 to #199, #200 to #499 and #500 to #999

#4 CRO ISO code in BPRWT or DPRNT command
0: Outputs only "LF" after data is output
1: Outputs "LF" and "CR" after data is output

#5 TCS Custom macro (subprogram)
0: Not called using a T code
1: Called using a T code

#6 CCV Common variables #100 to #149(NOTE) cleared by power-off are:
0: Cleared to <null> by reset
1: Not cleared by reset

> **NOTE**
> Cleared variables are as the table according to the combination of added options.

		Addition of custom macro common variables	
		Disable (bit 6 (NCV) of parameter No.8135 is 1)	**Enable (bit 6 (NCV) of parameter No.8135 is 0)**
Option "Embedded macro"	**Non**	#100 to #149	#100 to #199
	Yes	#100 to #149 and #200 to #499	#100 to #199 and #200 to #499

	#7	#6	#5	#4	#3	#2	#1	#0
6003	MUS		MSB	MPR	TSE	MIN	MSK	

[Input type] Parameter input
[Data type] Bit path

> **NOTE**
> When at least one of these parameters is set, the power must be turned off before operation is continued.

#1 MSK Absolute coordinates at that time during custom macro interrupt
0: Not set to the skip coordinates (system variables #5061 and later)
1: Set to the skip coordinates (system variables #5061 and later)

#2 MIN Custom macro interrupt
0: Performed by interrupting an in-execution block (Custom macro interrupt type I)
1: Performed after an in-execution block is completed (Custom macro interrupt type II)

#3 TSE Custom macro interrupt signal UINT<Gn053.3>
0: Edge trigger method (Rising edge)
1: Status trigger method

#4 MPR Custom macro interrupt valid/invalid M code
0: M96/M97
1: M code set using parameters Nos. 6033 and 6034

#5 MSB Interrupt program
0: Uses a dedicated local variable (Macro-type interrupt)
1: Uses the same local variable as in the main program (Subprogram- type interrupt)

#7 MUS Interrupt-type custom macro
0: Not used
1: Used

	#7	#6	#5	#4	#3	#2	#1	#0
6004						VHD		NAT
			D15					NAT

[Input type] Parameter input
[Data type] Bit path

#0 NAT The results of the custom macro functions ATAN (with 2 arguments) and ASIN are specified as follows:
0: The result of ATAN is 0 to 360.0.
The result of ASIN is 270.0 to 0 to 90.0.
1: The result of ATAN is -180.0 to 0 to 180.0.
The result of ASIN is -90.0 to 0 to 90.0.

#2 VHD With system variables #5121 to #5140:
0: The tool offset value (geometry offset value) in the block currently being executed is read. (This parameter is valid only when tool geometry/tool wear compensation memories are available.)
1: An interrupt travel distance based on manual handle interrupt is read.

#5 D15 When tool compensation memory C is used, for reading or writing tool offset values (for up to offset number 200) for D code (tool radius), the same system variables, #2401 through #2800, as Series 15 are:
0: Not used.
1: Used.
When bit 3 (V15) of parameter No. 6000 is set to 1

D code				
Compensation number	Geometry		Wear	
	Variable number	Variable name	Variable number	Variable name
1	#2401	[#_OFSDG[1]]	#2601	[#_OFSDW[1]]
2	#2402	[#_OFSDG[2]]	#2602	[#_OFSDW[2]]
3	#2403	[#_OFSDG[3]]	#2603	[#_OFSDW[3]]
:	:	:	:	:
199	#2599	[#_OFSDG[199]]	#2799	[#_OFSDW[199]]
200	#2600	[#_OFSDG[200]]	#2800	[#_OFSDW[200]]

	#7	#6	#5	#4	#3	#2	#1	#0
6005				AXM				SQC

[Input type] Parameter input
[Data type] Bit path

#0 SQC In the subprogram call function, a subprogram sequence number call is:
0: Not used.
1: Used.

#4 AXM Bit 4 (MSV) of parameter No.6019 and bit 4 (TSV) of parameter No.6021 are :
0: valid only during coordinate system shift type compensation.
1: valid both during coordinate system shift type compensation and axis movement type compensation.

	#7	#6	#5	#4	#3	#2	#1	#0
6007	SKM			CVA	MGE	BCS	SCS	DPG

[Input type] Parameter input
[Data type] Bit path

#0 DPG Specifies whether to allow G codes with a decimal point to be called.
0: Do not allow.
1: Allow.

#1 SCS Specifies whether to call subprograms with S codes.
0: Do not call with S codes.
1: Call with S codes.

#2 BCS Specifies whether to call subprograms with the second auxiliary function codes.
0: Do not call with the second auxiliary function codes.
1: Call with the second auxiliary function codes.

#3 MGE Specifies whether a G code modal call is made after movement or for each block.
0: Make a call for each block (equivalent to G66.1).
1: Make a call after movement (equivalent to G66).

#4 CVA The format for macro call arguments is specified as follows:

0: Arguments are passed in NC format without modifications.

1: Arguments are converted to macro format then passed.

[Example]

When G65 P_ X10 ; is specified, the value in local variable #24 in the calling program is set as follows:

Command	CVA=0	CVA=1
#24	0.01	0.01
ADP[#24]	10.0	0.01

NOTE
External operations are the same unless the ADP function is used.

#7 SKM After skip operation, with the workpiece coordinate system setting command (G92 for the M series or G50 for the T series) or select command (G54 to G59), the values of macro variables #100151 to #100200 (#5061 to #5080) holding the skip position:

0: Change. (The workpiece coordinate system at the time of reading is reflected.)

1: Do not change.

	#7	#6	#5	#4	#3	#2	#1	#0
6008	IJK	GMP	ADD	ISO	KOP		MCA	F16

[Input type] Parameter input
[Data type] Bit path

#0 F16 The precision of operation is based on:

0: New specification.

1: FS16*i* compatible specification.

#1 MCA A macro alarm specification based on system variable #3000 is selected as follows:

0: An alarm number obtained by adding 3000 to a value assigned to variable #3000 and the corresponding message are displayed. (A value from 0 to 200 can be assigned to variable #3000.)

1: A value assigned to variable #3000 and the corresponding message are displayed. (A value from 0 to 4095 can be assigned to variable #3000.)

[Example]

Execution of #3000=1 (ALARM MESSAGE);
When bit 1 (MCA) of parameter No. 6008 is set to 0:
The alarm screen displays "MC 3001 ALARM MESSAGE".
When bit 1 (MCA) of parameter No. 6008 is set to 1:
The alarm screen displays "MC0001 ALARM MESSAGE".

#3 KOP When the NC is reset in the state where the line is made open by POPEN:

0: Communication continues, and the line is left open.

1: Communication stops, and the line is closed.

#4 ISO 0: When the EIA code is used, the bit patterns of codes specified instead of [,], #, *, =, ?, @, &, and _ are set in parameter No. 6010 to No. 6018.

1: When the ISO/ASCII code is used, the bit patters of codes specified instead of [,], #, *, =, ?, @, &, and _ are set in parameter No. 6010 to No. 6018.

#5 ADD When the number of digits in the integer part, a, in the format specification [a,b] of the DPRNT statement is less than the number of digits in the integer part of an output variable value:

0: The specified number of digits only are output, with the unspecified digits discarded.
1: An alarm for excessive digits is issued.

#6 GMP The calling of M, S, T, a second auxiliary function code, or a particular code during the calling of a G code, and the calling of a G code during the calling of M, S, T, a second auxiliary function code, or particular code are:

0: Not allowed. (They are executed as an ordinary G, M, S, T, second auxiliary function code, and NC address.)
1: Allowed.

#7 IJK For addresses I, J, and K specified as arguments:

0: Argument specification I or II is automatically determined.
1: Argument specification I is always used.

Example

When K_J_I_ is specified:

- When this parameter is set to 0:
  Argument specification II is used and K=#6, J=#8, and I=#10 are specified.
- When this parameter is set to1:
  Argument specification I is used and I=#4, J=#5, and K=#6 are specified regardless of the specification order.
  (Argument specification II cannot be used.)

	#7	#6	#5	#4	#3	#2	#1	#0
6009						MAA		MSM

[Input type] Parameter input
[Data type] Bit path

#0 MSM When a Macro Call using M code or a Macro Call using M code (Specification of 3 Sets) are not at the beginning of the block:

0: Alarm PS0127, “DUPLICATE NC,MACRO STATEMENT” is issued.
1: The Macro Call using M code is executed. All addresses specified in the same block are used as arguments. (Special Macro Call using M code)

NOTE

1 When MSM is set to 1 and an M code specified for a macro call is not at the beginning of the block, argument specification II cannot be used.
2 When MSM is set to 1 and an M code specified for a macro call is not at the beginning of the block, the number of repetitions (L) cannot be used.

#2 MAA When a Macro Call using M code or Special Macro Call using M code are executed:

0: Address G does not become an argument.
The addresses that can be used as arguments are as shown in the tables below.

- Usual Macro Call

Address	Variable number
A	#1
B	#2
C	#3
D	#7
E	#8
F	#9
G	*1
H	#11
I	#4

Address	Variable number
J	#5
K	#6
L	*2
M	#13 *3
M(Call code)	*4
N	#14 *5
P	#16
Q	#17
R	#18

Address	Variable number
S	#19
T	#20
U	#21
V	#22
W	#23
X	#24
Y	#25
Z	#26

*1: Address G can not command. If address G is commanded, alarm PS0129 occurs.
*2: Address L is a number of times in which the macro call is repeated.
*3: Address M other than call code is passed to variable #13.
*4: Address M for call code does not become an argument.
*5: Address N is passed to variable #14.

- Special Macro Call

Address	Variable number
A	#1
B	#2
C	#3
D	#7
E	#8
F	#9
G	*1
H	#11
I	#4

Address	Variable number
J	#5
K	#6
L	*2
M	#13 *3
M(Call code)	*4
N	#14 *5
P	#16
Q	#17
R	#18

Address	Variable number
S	#19
T	#20
U	#21
V	#22
W	#23
X	#24
Y	#25
Z	#26

*1: Even if address G is commanded, PS alarm does not occur. And address G does not become an argument.
*2: Address L does not become a number of times in which the macro call is repeated, and does not become an argument.
*3: Address M other than call code is passed to variable #13.
*4: Address M for call code does not become an argument.
*5: Address N is passed to variable #14, and becomes a sequence number.

1: Address G becomes an argument.
The addresses that can be used as arguments are as shown in the tables below.

- Usual Macro Call

Address	Variable number
A	#1
B	#2
C	#3
D	#7
E	#8
F	#9
G	#28 to #32 *1
H	#11
I	#4

Address	Variable number
J	#5
K	#6
L	*2
M	#13 *3
M(Call code)	*4
N	#14 *5
P	#16
Q	#17
R	#18

Address	Variable number
S	#19
T	#20
U	#21
V	#22
W	#23
X	#24
Y	#25
Z	#26

*1: The first five addresses G in ascending order of G code groups are used as arguments and passed to variables #28 to #32.
*2: Address L is a number of times in which the macro call is repeated.
*3: Address M other than call code is passed to variable #13.
*4: Address M for call code does not become an argument.
*5: Address N is passed to variable #14.

- Special Macro Call

Address	Variable number
A	#1
B	#2
C	#3
D	#7
E	#8
F	#9
G	#28 to #32 *1
H	#11
I	#4

Address	Variable number
J	#5
K	#6
L	#12 *2
M	#13 *3
M(Call code)	#27 *4
N	#14 *5
P	#16
Q	#17
R	#18

Address	Variable number
S	#19
T	#20
U	#21
V	#22
W	#23
X	#24
Y	#25
Z	#26

*1: The first five addresses G in ascending order of G code groups are used as arguments and passed to variables #28 to #32.
*2: Address L is passed to variable #12, and does not become a number of times in which the macro call is repeated.
*3: Address M other than call code is passed to variable #13.
*4: Address M for call code is passed to variable #27.
*5: Address N is passed to variable #14, and becomes a sequence number.

	#7	#6	#5	#4	#3	#2	#1	#0
6010	*7	*6	*5	*4	*3	*2	*1	*0
	#7	#6	#5	#4	#3	#2	#1	#0
6011	=7	=6	=5	=4	=3	=2	=1	=0
	#7	#6	#5	#4	#3	#2	#1	#0
6012	#7	#6	#5	#4	#3	#2	#1	#0
	#7	#6	#5	#4	#3	#2	#1	#0
6013	[7	[6	[5	[4	[3	[2	[1	[0
	#7	#6	#5	#4	#3	#2	#1	#0
6014	]7	]6	]5	]4	]3	]2	]1	]0
	#7	#6	#5	#4	#3	#2	#1	#0
6015	?7	?6	?5	?4	?3	?2	?1	?0
	#7	#6	#5	#4	#3	#2	#1	#0
6016	@7	@6	@5	@4	@3	@2	@1	@0
	#7	#6	#5	#4	#3	#2	#1	#0
6017	&7	&6	&5	&4	&3	&2	&1	&0
	#7	#6	#5	#4	#3	#2	#1	#0
6018	_7	_6	_5	_4	_3	_2	_1	_0

[Input type] Parameter input
[Data type] Bit path

*0 to *7 : The bit pattern of the EIA or ISO/ASCII code indicating * is set.
=0 to =7 : The bit pattern of the EIA or ISO/ASCII code indicating = is set.
#0 to #7 : The bit pattern of the EIA or ISO/ASCII code indicating # is set.
[0 to [7 : The bit pattern of the EIA or ISO/ASCII code indicating [is set.
]0 to]7 : The bit pattern of the EIA or ISO/ASCII code indicating] is set.
?0 to ?7 : The bit pattern of the EIA or ISO/ASCII code indicating ? is set.

@0 to @7 : The bit pattern of the EIA or ISO/ASCII code indicating @ is set.
&0 to &7 : The bit pattern of the EIA or ISO/ASCII code indicating & is set.
_0 to _7 : The bit pattern of the EIA or ISO/ASCII code indicating _ is set.
0: A corresponding bit is 0.
1: A corresponding bit is 1.

	#7	#6	#5	#4	#3	#2	#1	#0
6019	SFN		EDP		OFN	DPD		MCO
	SFN		EDP	MSV	OFN			MCO

[Input type] Parameter input
[Data type] Bit

#0 MCO When data is output, the decimal number value of the macro variable data is
0: Not output as a comment.
1: Output at the same time as a comment.

After the number, data, and the variable name of the macro variable are output when data output operation is performed the variable number and the value of the macro variable data in decimal number are output as a comment.

NOTE
1 Output data by this parameter is "Comment", and this is ignored at the time of reading.
2 The output data range is nine digits before the decimal point and eight digits after the decimal point. If there are ten or more digits before the decimal point, "±OVER FLOW" is output. If there are nine or more digits after the decimal point, the decimal part is rounded off at the ninth digit when output. Also, since the maximum total output length is 15 digits, if the output data is 16 digits or longer, it is rounded off at the 16th digit. Note that, because the maximum output length before the decimal point is nine digits, if there are ten or more digits before the decimal point, "±OVER FLOW" is output.
3 The output becomes "EMPTY" when displayed, the macro variable data is "DATA EMPTY".

#2 DPD When argument D is specified for a macro call without a decimal point, the number of decimal places:
0: Is assumed to be 0.
[Example]
When G65PppppD1 is specified, #7=1.0000 is passed as the argument.
1: Depends on the increment system of the reference axis.
[Example]
When the increment system of the reference axis is IS-B and G65PppppD1 is specified, #7=0.0010 is passed as the argument.

#3 OFN The format of the name of a file output by the external output command (DPRNT or BPRNT) is:
0: PRNTxxxx.DAT (xxxx: 0000 to 9999).
1: MCR_PRNT.TXT (fixed).

#4 MSV When Tool length compensation shift type is used, the value in which Tool offset value, Tool length offset and Tool holder offset are :
#5041 - #5060, #100101 - #100150 (Current position)
#5061 - #5080, #100151 - #100200 (Skip position):
0: It is included in above-mentioned system value.
1: It is not included in above-mentioned system value.
Only in the machining center system, this parameter becomes effective. In the lathe system, bit 4 (TSV) of parameter No.6021 is valid. This parameter is valid both during coordinate system shift type compensation and axis movement type compensation if bit 4 (AXM) of parameter No.6005 is set to 1.

#5 EDP Precision setting for macro relational operators is:
0: Disabled.
1: Enabled.

> **NOTE**
> Parameter No. 6100 is used to set the number of significant digits after the decimal point.

#7 SFN The format of the name of a file output by the external output command (DPRNT or BPRNT) is:
0: PRNTxxxx.DAT (xxxx: 0000 to 9999).
If the power is off and on, xxxx is reset to 0000.
1: PRNTxxxx.DAT (xxxx: 0000 to 9999).
If the power is off and on, xxxx is continued and the next number is applied.

> **NOTE**
> The setting value of bit 7 (SFN) of parameter No.6019 is effective in case of that bit 3 (OFN) of parameter No.6019 equals 0.

	#7	#6	#5	#4	#3	#2	#1	#0
6020					NCM	IFR	NC2	NC1

[Input type] Parameter input
[Data type] Bit path

> **NOTE**
> When at least one of these parameters is set, the power must be turned off before operation is continued.

#0 NC1 The setting of the number of custom macro variables common to paths for #100 to #199 (#499) (parameter No. 6036) is:
0: Valid.
As many custom macro variables #100 to #199 (or #100 to #499) set for this path as the number set in parameter No. 6036 are used as custom macro variables common to tool paths.
1: Invalid.
Custom macro variables #100 to #199 (or #100 to #499) set for this path are all used as variables for the path.

> **NOTE**
> For path 1, be sure to set this parameter to 0.

Example

In a 4-path system, when parameters are set as listed below, custom macro variables for paths 1 to 3 are used as variables common to these paths, but for path 4, custom macro variables for the path are used.

Path number	No. 6036	NC1	Used custom macro variables
1	20	0	Custom macro variables #100 to #119 are used as variables common to these paths, and other custom macro variables are used independently for the relevant path.
2		0	
3		0	
4		1	Custom macro variables for path 4 are all used independently.

#1 NC2 The setting of the number of custom macro variables common to paths for #500 to #999 (parameter No. 6037) is:

0: Valid.
As many custom macro variables #500 to #999 set for this path as the number set in parameter No. 6037 are used as custom macro variables common to tool paths.

1: Invalid.
Custom macro variables #500 to #999 set for this path are all used as variables for the path.

NOTE

For path 1, be sure to set this parameter to 0.

Example

In a 4-path system, when parameters are set as listed below, custom macro variables for paths 1 to 3 are used as variables common to these paths, but for path 4, custom macro variables for the path are used.

Path number	No. 6037	NC2	Used custom macro variables
1	50	0	Custom macro variables #500 to #549 are used as variables common to these paths, and other custom macro variables are used independently for the relevant path.
2		0	
3		0	
4		1	Custom macro variables for path 4 are all used independently.

#2 IFR The custom macro interface signal R address is:

0: Disabled.
1: Enabled.

NOTE

Set the start address of each R area in parameter No. 6093 or 6094.

⚠ **WARNING**

To set the parameter IFR=1, please set an appropriate value to parameter No.6094 beforehand.
When the parameter No.6094 is 0, R0 of an internal relay is set. If the internal relay R0 is used to another area, the operation not intended might be done.

#3 NCM The position in which comment section can be inserted in macro statements changes places by setting value of this parameter.
When #3000(Alarm) or #3006(Stop with a message) are commanded with the comment section, the order of message and the comment section changes places by setting value of this parameter.

0: The position in which comment section can be inserted in macro statements is as follows.

(ABC) #100 =1; Head of the block
#100 =1 (ABC); End of the block
N01 (ABC) #100 =1; Just behind of the sequence number
*It is not possible to describe it just behind variable/constant value/variable identifier.

When you describe the annotation part in the block of #3000(macro alarm)/#3006(macro message), The order of the character string assumed to be a message and the character string assumed to be an annotation part is as follows.
It is assumed that it message first, and assumes since the second to be comment section.

#3000 =1 (ALARM MESSAGE) (COMMENT 1) (COMMENT 2);

1: The position in which comment section can be inserted in macro statements is as follows.

(ABC) #100 =1; Head of the block
#100 =1 (ABC); End of the block
N01 (ABC) #100 =1; Just behind of the sequence number
#100(ABC) =1; Just behind of variable number
#100 =#101 +1.(ABC) *#102; Just behind of numeric values
#100 =[#_UIL[1]](ABC) *100.; Just behind of the name of variable

When you describe the annotation part in the block of #3000(macro alarm)/#3006(macro message), The order of the character string assumed to be a message and the character string assumed to be an annotation part is as follows.
The end is assumed to be message, and it assumes to be comment section from it ahead.

#3000 =1 (COMMENT 1) (COMMENT 2) (ALARM MESSAGE);

	#7	#6	#5	#4	#3	#2	#1	#0
6021				TSV	AXN		ARE	
					AXN		ARE	

[Input type] Parameter input
[Data type] Bit

#1 ARE For rotation axes for which rollover function is enabled, the reading of block end point position by system variables #5001 to #5020 or #100001 to #100050 is:

0: Not available.
1: Available.

> **NOTE**
> This parameter is Automatic setting parameter. For details, refer to the appendix "Automatic setting / Initial setting parameter" in CONNECTION MANUAL (FUNCTION) (B-64693EN-1).

#3 AXN If the axis name that does not exist in the CNC in AXNUM function of custom macro is commanded,

0: An alarm PS0332, “ILLEGAL AXIS ADDRESS IN AXNUM[]” occurs.

1: <null> is obtained.

#4 TSV When Tool length compensation shift type is used, the value in which Tool offset value, Tool length offset and Tool holder offset are :
#5041 - #5060, #100101 - #100150 (Current position)
#5061 - #5080, #100151 - #100200 (Skip position):
0: It is included in above-mentioned system value.
1: It is not included in above-mentioned system value.
Only in the lathe system, this parameter becomes effective. In the machining center system, bit 4 (MSV) of parameter No.6019 is valid. This parameter is valid both during coordinate system shift type compensation and axis movement type compensation if bit 4 (AXM) of parameter No.6005 is set to 1.

NOTE
1 If bit 2 (LWT) of parameter No.5002 is set to 1 (coordinate system shift type wear compensation) and tool compensation is executed, the wear compensation value is not included in the system variables independently of bit 4 (TSV) of parameter No.6021.
2 If bit 4 (LGT) of parameter No.5002 is set to 0 (coordinate system shift type geometry compensation) and tool compensation is executed, the geometry compensation value is not included in the system variables independently of bit 4 (TSV) of parameter No.6021.

	#7	#6	#5	#4	#3	#2	#1	#0
6022								SPR

[Input type] Parameter input
[Data type] Bit

#0 SPR Priority of exclusion control system variables(#182001-#182010) by the reset input:
0: To hold the priority.
1: To abandon the priority.

6030	M code to execute external device subprogram calls

[Input type] Setting input
[Data type] 2-word path
[Valid data range] 0 to 99999999
Set the M code to execute external device subprogram calls. When 0 is set, M198 is used. M01, M02, M30, M98, and M99 cannot be used to execute external device subprogram calls. When a negative number, 1, 2, 30, 98, or 99 is set for this parameter, M198 is used to execute external device subprogram calls.

6031	Start number of common variables to be protected among the common variables (#500 to #999)
6032	End number of common variables to be protected among the common variables (#500 to #999)

[Input type] Parameter input
[Data type] Word path
[Valid data range] 500 to 999
Among the common variables #500 to #999, the range of common variables specified by this parameter can be protected (by setting their attributes to read-only). If a write attempt (on the left side) is made, an alarm is issued.

NOTE
Set 0 in both parameter No. 6031 and No. 6032 not to protect common variables.

6033	M code that validates a custom macro interrupt
6034	M code that invalidates a custom macro interrupt

[Input type] Parameter input
[Data type] 2-word path
[Valid data range] 03 to 99999999 (excluding 30, 98 and 99)
These parameters can be used when bit 4 (MPR) of parameter No. 6003 is 1. M96 is used as a valid M code and M97 is used as an invalid M code when MPR is 0, irrespective of the state of this parameter.

6036	Number of custom macro variables common to tool path (for #100 to #199 (#499))

NOTE
When this parameter is set, the power must be turned off before operation is continued.

[Input type] Parameter input
[Data type] Word
[Valid data range] 0 to 400
When the memory common to paths is used, this parameter sets the number of custom macro common variables to be shared (custom macro variables common to paths). Common variables #100 to #199 (up to #499 in a system with the embedded macro option) may be shared. Ensure that the maximum number of usable macro common variables is not exceeded.

Example
When 20 is set in parameter No. 6036
#100 to #119: Shared by all paths
#120 to #149: Used by each path independently

NOTE
1 When the adding custom macro common variables is enabled (bit 6(NCV) of parameter No.8135 is 0), up to #199 is available.
2 To use up to #499, the embedded macro option is required.
3 When 0 or a negative value is set, the memory common to paths is not used.
4 When the option for embedded macro is effective and the addition of custom macro common variables is disabled (bit 6 (NCV) of parameter No.8135 is 1), #150 to #199 can not be used but this parameter should be set the number which includes #150 to #199.

6037	Number of custom macro variables common to tool path (for #500 to #999)

NOTE
When this parameter is set, the power must be turned off before operation is continued.

[Input type] Parameter input
[Data type] Word
[Valid data range] 0 to 500

When the memory common to paths is used, this parameter sets the number of custom macro common variables to be shared (custom macro variables common to paths). Common variables #500 to #999 may be shared. Ensure that the maximum number of usable macro common variables is not exceeded.

Example
When 50 is set in parameter No. 6037
#500 to #549: Shared by all paths
#550 to #599: Used by each path independently

NOTE
1 When the adding custom macro common variables is enabled (bit 6(NCV) of parameter No.8135 is 0), up to #999 is available.
2 When 0 or a negative value is set, the memory common to paths is not used.

6038	Start G code used to call a custom macro

[Input type] Parameter input
[Data type] Word path
[Valid data range] -9999 to 9999

6039	Start program number of a custom macro called by G code

[Input type] Parameter input
[Data type] 2-word path
[Valid data range] 1 to 9999

6040	Number of G codes used to call custom macros

[Input type] Parameter input
[Data type] Word path
[Valid data range] 0 to 255

Set this parameter to define multiple custom macro calls using G codes at a time. With G codes as many as the value set in parameter No. 6040 starting with the G code set in parameter No. 6038, the custom macros of program numbers as many as the value set in parameter No. 6040 starting with the program number set in parameter No. 6039 can be called. Set 0 in parameter No. 6040 to disable this mode of calling.
If a negative value is set in parameter No. 6038, the modal call mode is entered. Whether the modal call is equivalent to G66 or G66.1 depends on bit 3 (MGE) of parameter No. 6007.

[Example] When parameter No. 6038 = 900, parameter No. 6039 = 1000, and parameter No. 6040 = 100 are set, a set of 100 custom macro calls (simple calls) is defined as follows:
G900 → O1000
G901 → O1001
G902 → O1002
:
G999 → O1099
When the setting of parameter No. 6038 is changed to -900, the same set of custom macro calls (modal calls) is defined.

NOTE

1 When the following conditions are satisfied, all calls using these parameters are disabled:
   1) When a value not within the specifiable range is set in each parameter
   2) (Value of parameter No. 6039 + value of parameter No. 6040 - 1) > 9999
2 The specification of a mixture of simple calls and modal calls is not allowed.
3 If a range of G codes set by these parameters duplicate G codes specified in parameters Nos. 6050 to 6059, the calls specified by parameters Nos. 6050 to 6059 are made preferentially.

6041	Start G code with a decimal point used to call a custom macro

[Input type] Parameter input
[Data type] Word path
[Valid data range] -999 to 999

6042	Start program number of a custom macro called by G code with a decimal point

[Input type] Parameter input
[Data type] 2-word path
[Valid data range] 1 to 9999

6043	Number of G codes with a decimal point used to call custom macros

[Input type] Parameter input
[Data type] Word path
[Valid data range] 0 to 255

Set this parameter to define multiple custom macro calls using G codes with a decimal point at a time. With G codes with a decimal point as many as the value set in parameter No. 6043 starting with the G code with a decimal point set in parameter No. 6041, the custom macros of program numbers as many as the value set in parameter No. 6043 starting with the program number set in parameter No. 6042 can be called. Set 0 in parameter No. 6043 to disable this mode of calling.

If a negative value is set in parameter No. 6041, the modal call mode is entered. Whether the modal call is equivalent to G66 or G66.1 depends on bit 3 (MGE) of parameter No. 6007.

[Example] When parameter No. 6041 = 900, parameter No. 6042 = 2000, and parameter No. 6043 = 100 are set, a set of 100 custom macro calls (simple calls) is defined as follows:

G90.0 → O2000
G90.1 → O2001
G90.2 → O2002
:
G99.9 → O2099

When the setting of parameter No. 6041 is changed to -900, the same set of custom macro calls (modal calls) is defined.

NOTE
1 When the following conditions are satisfied, all calls using these parameters are disabled:
  1) When a value not within the specifiable range is set in each parameter
  2) (Value of parameter No. 6042 + value of parameter No. 6043 - 1) > 9999
  3) When bit 0 (DPG) of parameter No. 6007 = 0 (to disable calls using G codes with a decimal point)
2 The specification of a mixture of simple calls and modal calls is not allowed.
3 If a range of G codes set by these parameters duplicate G codes specified in parameters Nos. 6060 to 6069, the calls specified by parameters Nos. 6060 to 6069 are made preferentially.

6044	Start M code used to call a subprogram

[Input type] Parameter input
[Data type] 2-word path
[Valid data range] 3 to 99999999

6045	Start program number of a subprogram called by M code

[Input type] Parameter input
[Data type] 2-word path
[Valid data range] 1 to 9999

6046	Number of M codes used to call subprograms (number of subprograms called by M codes)

[Input type] Parameter input
[Data type] 2-word path
[Valid data range] 0 to 32767

Set this parameter to define multiple subprogram calls using M codes at a time. With M codes as many as the value set in parameter No. 6046 starting with the M code set in parameter No. 6044, the subprograms of program numbers as many as the value set in parameter No. 6046 starting with the program number set in No. 6045 can be called. Set 0 in parameter No. 6046 to disable this mode of calling.

[Example] When parameter No. 6044 = 80000000, parameter No. 6045 = 3000, and parameter No. 6046 = 100 are set, a set of 100 subprogram calls is defined as follows:

M80000000 → O3000
M80000001 → O3001
M80000002 → O3002
:
M80000099 → O3099

NOTE
1 When the following conditions are satisfied, all calls using these parameters are disabled:
  1) When a value not within the specifiable range is set in each parameter
  2) (Value of parameter No. 6045 + value of parameter No. 6046 - 1) > 9999

NOTE
2 If a range of M codes set by these parameters duplicate M codes specified in parameter Nos. 6071 to 6079, the calls specified by parameter Nos. 6071 to 6079 are made preferentially.

6047	Start M code used to call a custom macro

[Input type] Parameter input
[Data type] 2-word path
[Valid data range] 3 to 99999999

6048	Start program number of a custom macro called by M code

[Input type] Parameter input
[Data type] 2-word path
[Valid data range] 1 to 9999

6049	Number of M codes used to call custom macros (number of custom macros called by M codes)

[Input type] Parameter input
[Data type] 2-word path
[Valid data range] 0 to 32767
Set this parameter to define multiple custom macro calls using M codes at a time. With M codes as many as the value set in parameter No. 6049 starting with the M code set in parameter No. 6047, the custom macros of program numbers as many as the value set in parameter No. 6049 starting with the program number set in parameter No. 6048 can be called. Set 0 in parameter No. 6049 to disable this mode of calling.
[Example] When parameter No. 6047 = 90000000, parameter No. 6048 = 4000, and parameter No. 6049 = 100 are set, a set of 100 custom macro calls (simple calls) is defined as follows:
M90000000 → O4000
M90000001 → O4001
M90000002 → O4002
:
M90000099 → O4099

NOTE
1 When the following conditions are satisfied, all calls using these parameters are disabled:
  1) When a value not within the specifiable range is set in each parameter
  2) (Value of parameter No. 6048 + value of parameter No. 6049 - 1) > 9999
2 If a range of M codes set by these parameters duplicate M codes specified in parameter Nos. 6080 to 6089, the calls specified by parameter Nos. 6080 to 6089 are made preferentially.

6050	G code that calls the custom macro of program number 9010
6051	G code that calls the custom macro of program number 9011
6052	G code that calls the custom macro of program number 9012
6053	G code that calls the custom macro of program number 9013

6054	G code that calls the custom macro of program number 9014
6055	G code that calls the custom macro of program number 9015
6056	G code that calls the custom macro of program number 9016
6057	G code that calls the custom macro of program number 9017
6058	G code that calls the custom macro of program number 9018
6059	G code that calls the custom macro of program number 9019

[Input type] Parameter input
[Data type] Word path
[Valid data range] (-9999 to 9999 : excluding 0, 5, 65, 66 and 67)

Set the G codes used to call the custom macros of program numbers 9010 to 9019. However, note that when a negative value is set in this parameter, it becomes a modal call. For example, if this parameter is set to -11, the modal call mode is entered by G11.
Whether the modal call is equivalent to G66 or G66.1 depends on bit 3 (MGE) of parameter No. 6007.

6060	G code with a decimal point used to call the custom macro of program number 9040
6061	G code with a decimal point used to call the custom macro of program number 9041
6062	G code with a decimal point used to call the custom macro of program number 9042
6063	G code with a decimal point used to call the custom macro of program number 9043
6064	G code with a decimal point used to call the custom macro of program number 9044
6065	G code with a decimal point used to call the custom macro of program number 9045
6066	G code with a decimal point used to call the custom macro of program number 9046
6067	G code with a decimal point used to call the custom macro of program number 9047
6068	G code with a decimal point used to call the custom macro of program number 9048
6069	G code with a decimal point used to call the custom macro of program number 9049

[Input type] Parameter input
[Data type] Word path
[Valid data range] -999 to 999

Set the G codes used to call the custom macros of program numbers 9040 to 9049. However, note that when a negative value is set in this parameter, it becomes a modal call. For example, if this parameter is set to -11, the modal call mode is entered by G1.1.
Whether the modal call is equivalent to G66 or G66.1 depends on bit 3 (MGE) of parameter No. 6007. Set G codes in the format Gm.n. The value expressed by (m×10+n) is set in the parameter. The values m and n must satisfy the following relationships: $0 \leq m \leq 99$, $0 \leq n \leq 9$.

NOTE
Parameter Nos. 6060 to 6069 are valid when bit 0 (DPG) of parameter No. 6007 is set to 1.

6071	M code used to call the subprogram of program number 9001
6072	M code used to call the subprogram of program number 9002

6073	M code used to call the subprogram of program number 9003
6074	M code used to call the subprogram of program number 9004
6075	M code used to call the subprogram of program number 9005
6076	M code used to call the subprogram of program number 9006
6077	M code used to call the subprogram of program number 9007
6078	M code used to call the subprogram of program number 9008
6079	M code used to call the subprogram of program number 9009

[Input type] Parameter input
[Data type] 2-word path
[Valid data range] 3 to 99999999 (excluding 30, 98 and 99)
These parameters set the M codes that call the subprograms of program numbers 9001 to 9009.

NOTE
If the same M code is set in these parameters, the younger number is called preferentially. For example, if 100 is set in parameter Nos. 6071 and 6072, and programs O9001 and O9002 both exist, O9001 is called when M100 is specified.

6080	M code used to call the custom macro of program number 9020
6081	M code used to call the custom macro of program number 9021
6082	M code used to call the custom macro of program number 9022
6083	M code used to call the custom macro of program number 9023
6084	M code used to call the custom macro of program number 9024
6085	M code used to call the custom macro of program number 9025
6086	M code used to call the custom macro of program number 9026
6087	M code used to call the custom macro of program number 9027
6088	M code used to call the custom macro of program number 9028
6089	M code used to call the custom macro of program number 9029

[Input type] Parameter input
[Data type] 2-word path
[Valid data range] 3 to 99999999 (excluding 30, 98 and 99)
Set the M codes used to call the custom macros of program numbers 9020 to 9029. The simple call mode is set.

NOTE
1 If the same M code is set in these parameters, the younger number is called preferentially. For example, if 200 is set in parameter No. 6081 and No. 6082, and programs O9021 and O9022 both exist, O9021 is called when M200 is specified.
2 If the same M code is set in a parameters Nos. 6071 to 6079 used to call subprograms and in a parameters Nos. 6080 to 6089 used to call custom macros, a custom macro is called preferentially. For example, if 300 is set in parameters Nos. 6071 and 6081, and programs O9001 and O9021 both exist, O9021 is called when M300 is specified.

6090	**ASCII code that calls the subprogram of program number 9004**
6091	**ASCII code that calls the subprogram of program number 9005**

[Input type] Parameter input
[Data type] Byte path
[Valid data range] 65(A:41H) to 90(Z:5AH)
These parameters set the ASCII codes that call subprograms in decimal.
The settable addresses are indicated below.

Address	Parameter setting value	T series	M series
A	65	O	O
B	66	O	O
D	68	X	O
F	70	O	O
H	72	O	O
I	73	O	O
J	74	O	O
K	75	O	O
L	76	O	O
M	77	O	O
P	80	O	O
Q	81	O	O
R	82	O	O
S	83	O	O
T	84	O	O
V	86	X	O
X	88	X	O
Y	89	X	O
Z	90	X	O

NOTE
1 When address L is set, the number of repeats cannot be specified.
2 Set 0 when no subprogram is called.

6093	Top address of custom macro interface signal R address (input signal)

6094	Top address of custom macro interface signal R address (output signal)

NOTE
When these parameters are set, the power must be turned off before operation is continued.

[Input type] Parameter input
[Data type] 2-word path
[Valid data range] 0 to maximum address (multiple of 4. 0, 4, 8, ...)
Set the top address of custom macro interface signal R address. 128 signals starting at the top address are allocated.

[Example]

Parameter	System variable number	Signal to use	Attribute
No.6093=1000	#1068 #1069 #1070 #1071	R1000 to R1003 R1004 to R1007 R1008 to R1011 R1012 to R1015	R
No.6094=1100	#1168 #1169 #1170 #1171	R1100 to R1103 R1104 to R1107 R1108 to R1111 R1112 to R1115	R/W

*) The R and R/W attributes of variables represent, respectively, read-only and read/write enabled.

NOTE
1 Each value specified with this parameter must be a multiple of 4 (0, 4, 8, · · ·). Otherwise, this function is disabled.
2 If a non-existent R address or system relay address is set, the corresponding system variable becomes invalid. The effective R address area varies depending on the PMC used and its memory. Be sure to specify a usable range by checking the specification of the PMC in use.
3 When setting the parameter, make sure that the input signal addresses do not overlap with the output signal addresses.

6095	The number of programs used by the one touch macro call function

[Input type] Parameter input
[Data type] Byte path
[Valid data range] 0 to 16
Specify the number of programs used by the one touch macro call function.
For instance, when three is set, macro call start signals MCST1, MCST2, and MCST3<Gn512.0-Gn512.2> are valid.
When 0 is specified, this function is invalid.

6096	The first O number of the program used by the one touch macro call function

[Input type] Parameter input
[Data type] 2-word path
[Valid data range] 1 to 9999

Specify the first O number of the program used by the one touch macro call function.
When 9000 is set, for example, the relationship between macro call start signal MSCTx and the program number of a program started by the signal is as follows:
MCST1 signal : Starts O9000 (when 1 or a greater value is set in parameter No. 6095).
MCST2 signal : Starts O9001 (when 2 or a greater value is set in parameter No. 6095).
MCST3 signal : Starts O9002 (when 3 or a greater value is set in parameter No. 6095).
: : :
MCST15 signal: Starts O9014 (when 15 or a greater value is set in parameter No. 6095).
MCST16 signal: Starts O9015 (when 16 or a greater value is set in parameter No. 6095).

6100	Precision setting for relational operators

[Input type] Parameter input
[Data type] Byte
[Valid data range] 0 to 15
This parameter sets the number of digits after the decimal point in two values to be compared using the custom macro relational operator. The two values are rounded off to the specified number of digits before comparison.

NOTE
1 This function is enabled by setting bit 5 (EDP) of parameter No. 6019 to 1.
2 This function is disabled if parameter No. 6100 is set to a value out of the valid data range.

4.36 PARAMETERS OF PATTERN DATA INPUT

6101	Macro variable number selected first when pattern menu 1 is selected
6102	Macro variable number selected first when pattern menu 2 is selected
6103	Macro variable number selected first when pattern menu 3 is selected
6104	Macro variable number selected first when pattern menu 4 is selected
6105	Macro variable number selected first when pattern menu 5 is selected
6106	Macro variable number selected first when pattern menu 6 is selected
6107	Macro variable number selected first when pattern menu 7 is selected
6108	Macro variable number selected first when pattern menu 8 is selected
6109	Macro variable number selected first when pattern menu 9 is selected
6110	Macro variable number selected first when pattern menu 10 is selected

[Input type] Parameter input
[Data type] Word path
[Valid data range] 0,100 to 199,500 to 999
Set the macro variable number to be selected first when a pattern menu is selected on the custom macro screen.
If 0 is specified, 500 is assumed.
If a value beyond the above range is entered, 100 is assumed.

4.37 PARAMETERS OF POSITIONING BY OPTIMUM ACCELERATION

	#7	#6	#5	#4	#3	#2	#1	#0
6131								OADx

[Input type] Parameter input
[Data type] Bit axis

NOTE
When this parameter is set, the power must be turned off before operation is continued.

#0 OADx The function for positioning by optimum acceleration (seven step switch of the rapid traverse rate, time constant, and loop gain by the positioning distance to rapid traverse by automatic operation) is
0: Disabled.
1: Enabled.

	#7	#6	#5	#4	#3	#2	#1	#0
6132								ILG

[Input type] Parameter input
[Data type] Bit path

#0 ILG In the function for positioning by optimum acceleration, the switch of the loop gain is
0: Enabled. (Parameters Nos. 6181 to 6187 is used.)
1: Disabled. (Parameter No. 1825 is used.)

6136	Distance D1 for level 1 of positioning by optimum acceleration for each axis
6137	Distance D2 for level 2 of positioning by optimum acceleration for each axis
6138	Distance D3 for level 3 of positioning by optimum acceleration for each axis

[Input type] Parameter input
[Data type] Real axis
[Unit of data] mm, inch, degree(machine unit)
[Valid data range] Refer to the standard parameter setting table(B)
When a function for changing the rapid traverse rate, time constant, and loop gain according to the positioning distance is used, set the positioning distance for each axis.

NOTE
1 When this parameter is enabled, bit 0 (OADx) of parameter No. 6131 must be set to 1.
2 When 0 is set to all parameters Nos. 6136 to 6138 and Nos. 11230 to 11232, this function is invalid.
3 The setting must satisfy the relationship D1 < D2 < D3 < D4 < D5 < D6.
4 Up to seven levels can be used for adjustment. When using four levels, for example, set to become D1<D2<D3 and set D4, D5, D6 to maximum setting value (When the increment system is IS-B, 999999.999).

NOTE

5 For diameter programming axes, set a diameter. For example, assume that 10.000mm is set in a parameter for diameter programming axes. Then, when the travel distance has reached 10.000 mm, adjustment is performed.

6 The distance of each axis is set to each parameter Nos. 6136 to 6138 and Nos. 11230 to 11232. The length of the block cannot be specified.

6161	**Level 1 rapid traverse rate**
6162	**Level 2 rapid traverse rate**
6163	**Level 3 rapid traverse rate**
6164	**Level 4 rapid traverse rate**
6165	**Level 5 rapid traverse rate**
6166	**Level 6 rapid traverse rate**
6167	**Level 7 rapid traverse rate**

[Input type] Parameter input
[Data type] Real axis
[Unit of data] mm/min, inch/min, degree/min (machine unit)
[Valid data range] Refer to the standard parameter setting table(C)
The rapid traverse rate for each axis is set.

6171	**Level 1 rapid traverse time constant**
6172	**Level 2 rapid traverse time constant**
6173	**Level 3 rapid traverse time constant**
6174	**Level 4 rapid traverse time constant**
6175	**Level 5 rapid traverse time constant**
6176	**Level 6 rapid traverse time constant**
6177	**Level 7 rapid traverse time constant**

[Input type] Parameter input
[Data type] Word axis
[Unit of data] msec
[Valid data range] 0 to 4000
The rapid traverse time constant for each axis is set.

6181	**Level 1 servo loop gain**
6182	**Level 2 servo loop gain**
6183	**Level 3 servo loop gain**
6184	**Level 4 servo loop gain**
6185	**Level 5 servo loop gain**

6186	Level 6 servo loop gain
6187	Level 7 servo loop gain

[Input type] Parameter input
[Data type] Word axis
[Unit of data] 0.01/sec
[Valid data range] 1 to 9999
The servo loop gain for each axis is set.
If 0 is set, parameter No. 1825 is used.

6191	Time constant T2 of level 1 bell-shaped acceleration/deceleration in rapid traverse T2
6192	Time constant T2 of level 2 bell-shaped acceleration/deceleration in rapid traverse T2
6193	Time constant T2 of level 3 bell-shaped acceleration/deceleration in rapid traverse T2
6194	Time constant T2 of level 4 bell-shaped acceleration/deceleration in rapid traverse T2
6195	Time constant T2 of level 5 bell-shaped acceleration/deceleration in rapid traverse T2
6196	Time constant T2 of level 6 bell-shaped acceleration/deceleration in rapid traverse T2
6197	Time constant T2 of level 7 bell-shaped acceleration/deceleration in rapid traverse T2

[Input type] Parameter input
[Data type] Word axis
[Unit of data] msec
[Valid data range] 0 to 512
Time constant T2 of bell-shaped acceleration/deceleration in rapid traverse for each axis is set.

4.38 PARAMETERS OF SKIP FUNCTION

	#7	#6	#5	#4	#3	#2	#1	#0
6200	SKF	SRE	SLS	HSS			SK0	GSK

[Input type] Parameter input
[Data type] Bit path

#0 GSK As a skip signal, the skip signal SKIPP<Gn006.6> is:
0: Invalid.
1: Valid.

#1 SK0 This parameter specifies whether the skip signal is made valid under the state of the skip signal SKIP<X0004.7> and the multistage skip signals SKIP2 to SKIP8<X0004.2> to <X0004.1>.
0: Skip signal is valid when these signals are “1”.
1: Skip signal is valid when these signals are “0”.

#4 HSS 0: The skip function does not use high-speed skip signals while skip signals are input. (The conventional skip signal is used.)
1: The step skip function uses high-speed skip signals while skip signals are input.

#5 SLS 0: The multi-step skip function does not use high-speed skip signals while skip signals are input. (The conventional skip signal is used.)
1: The multi-step skip function uses high-speed skip signals while skip signals are input.

> **NOTE**
> The skip signals SKIP<X0004.7> and SKIP2 to SKIP8<X0004.2> to <X0004.1> are valid regardless of the setting of this parameter. They can also be disabled using bit 4 (IGX) of parameter No. 6201. If you want to use high-speed skip signals when the multi-step skip function is used, set this parameter to 1.

#6 SRE When a high-speed skip signal is used:
0: The signal is assumed to be input on the rising edge (contact open → close).
1: The signal is assumed to be input on the falling edge (contact close → open).

#7 SKF Dry run, override, and automatic acceleration/deceleration for G31 skip command
0: Disabled
1: Enabled

> ⚠ **CAUTION**
> 1 When bit 7 (SKF) of parameter No.6200 is set to 0, feedrate override, dry run, and automatic acceleration/deceleration are disabled in moving by the skip function(G31) regardless of the feedrate which is specified as a feed per minute or a feed per rotation.
> 2 Even if bit 7 (SKF) of parameter No.6200 is set to 1, dry run and automatic acceleration/deceleration are disabled when bit 1 (SFP) of parameter No.6207 is set to 1. When the multi-step skip is used and bit 2 (SFN) of parameter No.6207 is set to 1, dry run and automatic acceleration/deceleration are similarly disabled.

	#7	#6	#5	#4	#3	#2	#1	#0
6201	SKPXE		CSE	IGX		TSE	SEB	

[Input type] Parameter input
[Data type] Bit path

#1 SEB When a skip signal, high-speed skip signal or measurement position arrival signal goes on while the skip function, the continuous high-speed skip function or the automatic tool length measurement (M series) or automatic tool compensation (T series) is used, the accumulated pulses and positional deviation due to acceleration/deceleration are:
0: Ignored.
1: Considered and compensated.
The accumulated pulses and positional deviation due to actual acceleration/deceleration when the skip signal, high-speed skip signal or measurement position arrival signal goes on are considered to obtain the position at which the signal is input.

#2 TSE When the torque limit skip function (G31 P98/P99) is used, the skip position held in a system variable (#5061 to #5080) is:
0: Position that is offset considering the delay (positional deviation) incurred by the servo system.
1: Position that does not reflect the delay incurred by the servo system.

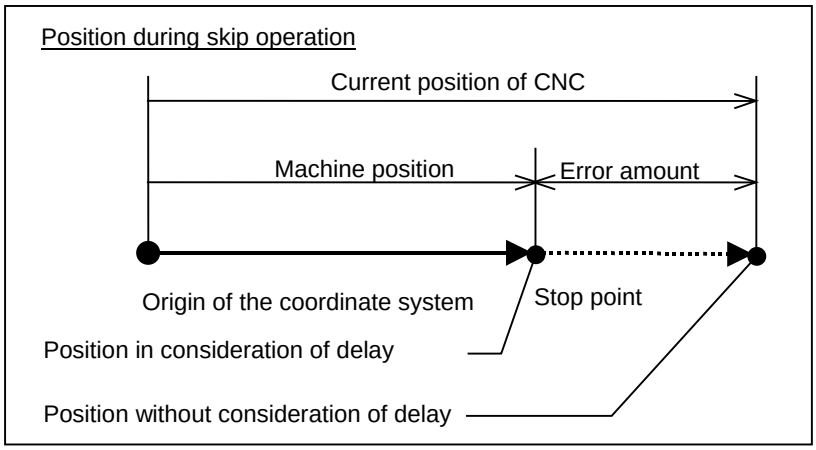

#4 IGX When the high-speed skip function is used, SKIP<X0004.7>, SKIPP<Gn006.6>, and SKIP2 to SKIP8<X0004.2> to <X0004.1> are:
0: Enabled as skip signals.
1: Disabled as skip signals.

#5 CSE For the continuous high-speed skip command, high-speed skip signals are:
0: Effective at either a rising or falling edge (depending on the setting of bit 6 (SRE) of parameter No. 6200).
1: Effective at both the rising and falling edges.

#7 SKPXE For the skip function (G31), the skip signal SKIP is:
0: Enabled.
1: Disabled.

Whether the skip signals are enabled or disabled

Parameter	Bit 4 (IGX) of parameter No. 6201	Bit 0 (GSK) of parameter No. 6200	Bit 7 (SKPXE) of parameter No .6201	Skip signal SKIPP	Skip signal SKIP	Multistage skip signals SKIP2-SKIP8
Setting	0	0	0	Disabled	Enabled	Enabled
	0	1	0	Enabled	Enabled	Enabled
	0	0	1	Disabled	Disabled	Enabled
	0	1	1	Enabled	Disabled	Enabled
	1	0	0	Disabled	Disabled	Disabled
	1	1	0	Disabled	Disabled	Disabled
	1	0	1	Disabled	Disabled	Disabled
	1	1	1	Disabled	Disabled	Disabled

Bit 4 (IGX) of parameter No. 6201 is valid for the skip function using high-speed skip signals (when bit 4 (HSS) of parameter No. 6200 is set to 1) or for the multistage skip function using high-speed skip signals (when bit 5 (SLS) of parameter No. 6200 is set to 1).
To use multistage skip signals, the multistage skip function is required.

	#7	#6	#5	#4	#3	#2	#1	#0
6202	1S8	1S7	1S6	1S5	1S4	1S3	1S2	1S1

[Input type] Parameter input
[Data type] Bit path

1S1 to 1S8 These parameters specify whether to enable or disable each high-speed skip signal when the G31 skip command is issued.
The following table shows the correspondence between the bits, input signals, and commands.
The settings of the bits have the following meaning :
0: The high-speed skip signal corresponding to a bit is disabled.
1: The high-speed skip signal corresponding to a bit is enabled.

Parameter	High-speed skip signals	Parameter	High-speed skip signals
1S1	HDI0	1S5	HDI4
1S2	HDI1	1S6	HDI5
1S3	HDI2	1S7	HDI6
1S4	HDI3	1S8	HDI7

NOTE
1 Do not specify the same signal simultaneously for different paths.
2 At all of the following conditions, the bit 0 (1S1) of parameter No.6202 must be set to 1.
- The Multi-step skip function is effective.
- The High-speed skip signals are not used.
- Skip Signals SKIP<X0004.7>, SKIPP<Gn006.6> are used.

	#7	#6	#5	#4	#3	#2	#1	#0
6203	2S8	2S7	2S6	2S5	2S4	2S3	2S2	2S1
	#7	#6	#5	#4	#3	#2	#1	#0
6204	3S8	3S7	3S6	3S5	3S4	3S3	3S2	3S1
	#7	#6	#5	#4	#3	#2	#1	#0
6205	4S8	4S7	4S6	4S5	4S4	4S3	4S2	4S1
	#7	#6	#5	#4	#3	#2	#1	#0
6206	DS8	DS7	DS6	DS5	DS4	DS3	DS2	DS1

[Input type] Parameter input
[Data type] Bit path

1S1to1S8, 2S1to2S8, 3S1to3S8, 4S1to4S8, DS1toDS8
Specify which skip signal is enabled when the skip command (G31, or G31P1 to G31P4) and the dwell command (G04, G04Q1 to G04Q4) are issued with the multi-step skip function.
The following table shows the correspondence between the bits, input signals, and commands.
The setting of the bits have the following meaning :
0: The skip signal corresponding to a bit is invalid.
1: The skip signal corresponding to a bit is enabled.

Multi-step skip function

Command / Input signal	G31 G31P1 G04Q1	G31P2 G04Q2	G31P3 G04Q3	G31P4 G04Q4	G04
SKIP/HDI0	1S1	2S1	3S1	4S1	DS1
SKIP2/HDI1	1S2	2S2	3S2	4S2	DS2
SKIP3/HDI2	1S3	2S3	3S3	4S3	DS3
SKIP4/HDI3	1S4	2S4	3S4	4S4	DS4
SKIP5/HDI4	1S5	2S5	3S5	4S5	DS5
SKIP6/HDI5	1S6	2S6	3S6	4S6	DS6
SKIP7/HDI6	1S7	2S7	3S7	4S7	DS7

Command / Input signal	G31 G31P1 G04Q1	G31P2 G04Q2	G31P3 G04Q3	G31P4 G04Q4	G04
SKIP8/HDI7	1S8	2S8	3S8	4S8	DS8

NOTE
HDI0 to HDI7 are high-speed skip signals. Do not specify the same signal simultaneously for different paths.

When bit 0 (GSK) of parameter No. 6200 is set to 1, commands to be skipped can be selected by setting the following parameter:

Commands skipped by skip signal SKIPP <Gn006.6>

Parameter	Command skipped
When bit 0 (1S1) of parameter No. 6202 is set to 1	G31P1,G04Q1
When bit 0 (2S1) of parameter No. 6203 is set to 1	G31P2,G04Q2
When bit 0 (3S1) of parameter No. 6204 is set to 1	G31P3,G04Q3
When bit 0 (4S1) of parameter No. 6205 is set to 1	G31P4,G04Q4
When bit 0 (DS1) of parameter No. 6206 is set to 1	G04,G04Q1,G04Q2,G04Q3,G04Q4

	#7	#6	#5	#4	#3	#2	#1	#0
6207						SFN	SFP	

[Input type] Parameter input
[Data type] Bit path

#1 SFP The feedrate used when the skip function (G31) is being executed is:
0: Feedrate of a programmed F code.
1: Feedrate set in parameter No. 6281.

NOTE
For the multi-stage skip function and high-speed skip, see the description of bit 2 (SFN) of parameter No. 6207.

#2 SFN The feedrate used when the skip function based on high-speed skip signals (with bit 4 (HSS) of parameter No. 6200 set to 1) or the multi-skip function is being executed is:
0: Feedrate of a programmed F code.
1: Feedrate set in a parameter from parameter Nos. 6282 to 6285.

NOTE
For not the multistage skip function, but the skip function using no high-speed skip signals (when bit 4 (HSS) of parameter No. 6200 is set to 0), see the description of bit 1 (SFP) of parameter No. 6207.

	#7	#6	#5	#4	#3	#2	#1	#0
6208	9S8	9S7	9S6	9S5	9S4	9S3	9S2	9S1

[Input type] Parameter input
[Data type] Bit path

9S1 to 9S8 Specify which high-speed skip signal is enabled for the continuous high-speed skip command G31P90 or the EGB skip and the skip function for flexible synchronization control command G31.8.
The settings of each bit have the following meaning:

0: The high-speed skip signal corresponding to the bit is disabled.
1: The high-speed skip signal corresponding to the bit is enabled.
The bits correspond to signals as follows:

Parameter	High-speed skip signal	Parameter	High-speed skip signal
9S1	HDI0	9S5	HDI4
9S2	HDI1	9S6	HDI5
9S3	HDI2	9S7	HDI6
9S4	HDI3	9S8	HDI7

	#7	#6	#5	#4	#3	#2	#1	#0
6210		MDC		ASB	ASL	DSK		
	CCM	MDC		ASB	ASL	DSK		

[Input type] Parameter input
[Data type] Bit path

#2 DSK Skip position reading (system variables #5421 to #5440, #100701 to #100750) by the detection unit is:
0: Disabled.
1: Enabled.

#3 ASL
#4 ASB The ASB and ASL bits set the type and time constant of acceleration/deceleration after interpolation in the skip function as follows:

ASB	ASL	Type of acceleration/ deceleration	Parameter No. for time constant
0	1	Linear type	Parameter No. 6280
1	–	Bell-shaped	
0	0	This function is disabled(NOTE).	

When bell-shaped acceleration/deceleration is specified, T1=T/2 and T2=T/2 are obtained as with normal acceleration/deceleration after cutting feed interpolation, where T is the time constant. Therefore, the acceleration/deceleration type includes no linear part.

NOTE
In this case, the acceleration/deceleration type is set in bits 0 and 1 of parameter No. 1610, and the time constant is set in parameter No. 1622.

#6 MDC The measurement result of automatic tool length measurement (M series) or automatic tool compensation (T series) is:
0: Added to the current offset.
1: Subtracted from the current offset.

#7 CCM The current offset amount of automatic tool length measurement (M series) is:
0: The offset amount set to the offset screen.
In case of tool offset memory C, the value for tool wear offset is selected.
1: The offset amount actually effected.

	#7	#6	#5	#4	#3	#2	#1	#0
6215								CSTx

[Input type] Parameter input
[Data type] Bit axis

#0 CSTx On a Cs contour control axis, torque limit skip operation is:
0: Not performed.
1: Performed.
Torque limit skip operation is performed using the torque limit command signal TLMH and the load detection signal LDT1 of the serial spindle.

	#7	#6	#5	#4	#3	#2	#1	#0
6216			ESE					

[Input type] Parameter input
[Data type] Bit path

#5 ESE In the EGB axis skip function, positional deviation when the skip signal and the high-speed skip signal are input:
0: is not considered.
1: is considered.

6220	**Period during which skip signal input is ignored for the continuous high-speed skip function and EGB axis skip function and the skip function for flexible synchronization control**

[Input type] Parameter input
[Data type] Byte path
[Unit of data] 8msec
[Valid data range] 3 to 127(× 8msec)

This parameter specifies the period from when a skip signal is input to when the next skip signal can be input for the continuous high-speed skip function and EGB axis skip function and the skip function for flexible synchronization control. This parameter is used to ignore chattering in skip signals.
If a value that falls outside the valid range is specified, the setting is assumed to be 24 msec.

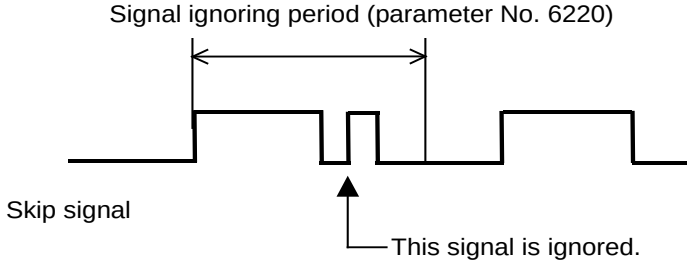

When high-speed skip signals are used and bit 5 (CSE) of parameter No. 6201 is set to 1, signals are handled as follows:

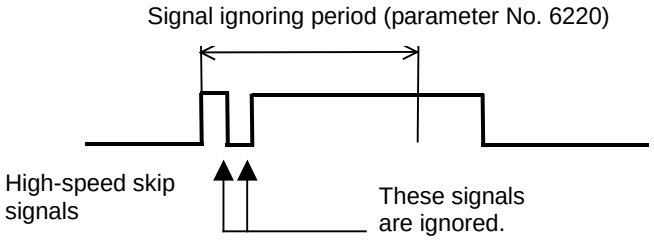

6221	**Torque limit dead zone time for a torque limit skip command**

[Input type] Parameter input
[Data type] 2-word axis
[Unit of data] 2msec

[Valid data range] 0 to 65535
The torque limit skip arrival signal is ignored for a set period of time.
If G31P98 is specified, skip operation is not performed for a set period of time after the torque limit skip arrival signal is set to “1”.
If G31P99 is specified, skip operation is not performed for a set period of time after the torque limit skip arrival signal is set to “1”.
However, if a skip signal is input, skip operation is performed, regardless of the period of time set in this parameter.

	#7	#6	#5	#4	#3	#2	#1	#0
6240								AE0

[Input type] Parameter input
[Data type] Bit path

#0 AE0 Measurement position arrival is assumed when the measuring position reached signals XAE1, XAE2, GAE1<Gn517.0>, and GAE2<Gn517.1> (T series) or the measuring position reached signals XAE1, XAE2, XAE3, GAE1<Gn517.0>, GAE2<Gn517.1>, and GAE3<Gn517.2> (M series) are:
0: “1”.
1: “0”.

NOTE
Setting this parameter to 1, input measuring position reached signals to both XAE1, XAE2, XAE3 and GAE1, GAE2, GAE3<Gn517.0, Gn517.1, Gn517.2>. If the other measuring position reached signals are not input, the CNC issues the PS0080 alarm to the movement to the position of the distance γ.

6241	Feedrate during measurement of automatic tool compensation (T series) (for the XAE1 and GAE1 signals)
	Feedrate during measurement of automatic tool length measurement (M series) (for the XAE1 and GAE1 signals)
6242	Feedrate during measurement of automatic tool compensation (T series) (for the XAE2 and GAE2 signals)
	Feedrate during measurement of automatic tool length measurement (M series) (for the XAE2 and GAE2 signals)
6243	
	Feedrate during measurement of automatic tool length measurement (M series) (for the XAE3 and GAE3 signals)

[Input type] Parameter input
[Data type] Real path
[Unit of data] mm/min, inch/min, deg/min (machine unit)
[Min. unit of data] Depend on the increment system of the applied axis
[Valid data range] Refer to the standard parameter setting table (C)
(When the increment system is IS-B, 0.0 to +999000.0)
These parameters set the relevant feedrate during measurement of automatic tool compensation (T series) or automatic tool length measurement (M series).

NOTE
When the setting of parameter No. 6242 or No. 6243 is 0, the setting of parameter No. 6241 is used.

6251	γ value on the X axis during automatic tool compensation (T series) γ value during automatic tool length measurement (M series) (for the XAE1 and GAE1 signals)
6252	γ value on the Z axis during automatic tool compensation (T series) γ value during automatic tool length measurement (M series) (for the XAE2 and GAE2 signals)
6253	γ value during automatic tool length measurement (M series) (for the XAE3 and GAE3 signals)

[Input type] Parameter input
[Data type] 2-word path
[Unit of data] mm, inch, deg (machine unit)
[Min. unit of data] Depend on the increment system of the applied axis
[Valid data range] 9 digit of minimum unit of data (refer to standard parameter setting table (A))
(When the increment system is IS-B, -999999.999 to +999999.999)
These parameters set the relevant γ value during automatic tool compensation (T series) or automatic tool length measurement (M series).

NOTE
When the Reference axis (parameter No.1031) is Diameter specification, specify the diameter value. When the Reference axis (parameter No.1031) is Radius specification, specify the radius value.

6254	ε value on the X axis during automatic tool compensation (T series) ε value during automatic tool length measurement (M series) (for the XAE1 and GAE1 signals)
6255	ε value on the Z axis during automatic tool compensation (T series) ε value during automatic tool length measurement (M series) (for the XAE2 and GAE2 signals)
6256	ε value during automatic tool length measurement (M series) (for the XAE3 and GAE3 signals)

[Input type] Parameter input
[Data type] 2-word path
[Unit of data] mm, inch, deg (machine unit)
[Min. unit of data] Depend on the increment system of the applied axis
[Valid data range] 9 digit of minimum unit of data (refer to standard parameter setting table (A))
(When the increment system is IS-B, -999999.999 to +999999.999)
These parameters set the relevant ε value during automatic tool compensation (T series) or automatic tool length measurement (M series).

NOTE
When the Reference axis (parameter No.1031) is Diameter specification, specify the diameter value. When the Reference axis (parameter No.1031) is Radius specification, specify the radius value.

6280	Time constant for acceleration/deceleration after interpolation for the skip function for each axis

[Input type] Parameter input
[Data type] Word axis
[Unit of data] msec
[Valid data range] 0 to 512
This parameter sets a time constant for acceleration/deceleration after interpolation for the skip function for each axis.
This parameter is valid when bit 3 (ASB) of parameter No. 6210 or bit 4 (ASL) of parameter No. 6210 is set to 1.

6281	Feedrate for the skip function (G31)

[Input type] Parameter input
[Data type] Real path
[Unit of data] mm/min, inch/min, degree/min (machine unit)
[Min. unit of data] Depend on the increment system of the reference axis
[Valid data range] Refer to the standard parameter setting table (C)
(When the increment system is IS-B, 0.0 to +999000.0)
This parameter sets a feedrate for the skip function (G31). This parameter is valid when bit 1 (SFP) of parameter No. 6207 is set to 1.

NOTE
For the multi-stage skip function and high-speed skip, see the description of parameter Nos. 6282 to 6285.

6282	Feedrate for the skip function (G31, G31 P1)
6283	Feedrate for the skip function (G31 P2)
6284	Feedrate for the skip function (G31 P3)
6285	Feedrate for the skip function (G31 P4)

[Input type] Parameter input
[Data type] Real path
[Unit of data] mm/min, inch/min, degree/min (machine unit)
[Min. unit of data] Depend on the increment system of the reference axis
[Valid data range] Refer to the standard parameter setting table (C)
(When the increment system is IS-B, 0.0 to +999000.0)
Each of these parameters sets a feedrate for each skip function G code. These parameters are valid when bit 2 (SFN) of parameter No. 6207 is set to 1.

	#7	#6	#5	#4	#3	#2	#1	#0
6286								TQOx

[Input type] Parameter input
[Data type] Bit axis

#0 TQOx The torque limit override function is:
0: Disabled. (Override of 100%)
1: Enabled.

NOTE
Before the torque limit skip function can be used, this parameter must be set to 1.

6287	Positional deviation limit in torque limit skip

[Input type] Parameter input
[Data type] 2-word axis
[Unit of data] Detection unit
[Valid data range] 0 to 327670

This parameter sets a positional deviation limit for each axis imposed when torque limit skip is specified. When the actual positional deviation exceeds the positional deviation limit, the alarm SV0004, “EXCESS ERROR (G31)” is issued and an immediate stop takes place.

4.39 PARAMETERS OF EXTERNAL DATA INPUT/OUTPUT

	#7	#6	#5	#4	#3	#2	#1	#0
6300	EEX			ESR	ESC			

[Input type] Parameter input
[Data type] Bit path

#3 ESC When a reset is input between the input of the external data input read signal ESTB and the execution of a search, the external program number search function:
0: Performs a search.
1: Does not perform a search.

#4 ESR The external program number search function is:
0: Disabled.
1: Enabled.

#7 EEX PMC EXIN function
0: Conventional specifications
1: Extended specifications

If you want to use external machine coordinate system shift which handles ±10.000 or more shift unavailable with the PMC/EXIN command in the conventional specifications, set 1.
When this function is used for a multi-path system, the setting for path 1 is used.
For details of EXIN and how to change ladder software, refer to the PMC manuals.

	#7	#6	#5	#4	#3	#2	#1	#0
6301					EED	NNO	EXM	EXA

[Input type] Parameter input
[Data type] Bit machine group

#0 EXA This bit selects an external alarm message specification.
0: A message number from 0 to 999 can be sent. When displaying an alarm number, the CNC prefixes the character string "EX" to the alarm number obtained by adding 1000 to the message number.
1: A message number from 0 to 4095 can be sent. The CNC prefixes the character string "EX" to a alarm number for display.

#1 EXM This bit selects an external operator message specification.

0: A message number from 0 to 999 can be sent. The message of a message number from 0 to 99 is displayed together with its number. The CNC adds 2000 to a number for distinction. A message number from 100 to 999 is not displayed on the screen, but only the corresponding message is displayed on the screen.

1: A message number from 0 to 4095 can be sent. The message of a message number from 0 to 99 is displayed together with its number. The CNC prefixes the character string "EX" to a message number for display. A message number from 100 to 4095 is not displayed on the screen, but only the corresponding message is displayed on the screen.

#2 NNO When operator messages are set by external data input, a new line operation between one message set with a number and another message set with a different number is:

0: Performed.

1: Not performed.

#3 EED To specify data for external tool compensation and external workpiece coordinate system shift, use:

0: Signals ED15 to ED0.
(The value which can be specified for tool compensation and workpiece coordinate system shift is from 0 to ±7999.)

1: Signals ED31 to ED0.
(The value which can be specified for tool compensation and workpiece coordinate system shift is from 0 to ±79999999.)

6310	Setting for number addition to external operator messages

NOTE
When this parameter is set, the power must be turned off before operation is continued.

[Input type] Parameter input
[Data type] Word machine group
[Valid data range] 0 to 4096
This parameter sets the number of messages to which message numbers are to be prefixed in external operator message display.
When 0 is set, the same operation as when 100 is set is performed.
[Example] When 500 is set in this parameter, the messages of message numbers 0 to 499 are displayed together with their numbers on the screen. A message number of 500 and up is not displayed on the screen, but only the corresponding message is displayed on the screen.

4.40 PARAMETERS OF MANUAL HANDLE RETRACE (1 OF 2)

	#7	#6	#5	#4	#3	#2	#1	#0
6400	MG4	MGO	RVN	HMP	MC8	MC5	FWD	RPO

[Input type] Parameter input
[Data type] Bit path

#0 RPO With the manual handle retrace function, the rapid traverse rate is clamped, assuming that:
0: An override of 10% is used.
1: An override of 100% is used.

#1 FWD With the manual handle retrace function, program execution can be performed:
0: In both forward and backward directions.
1: In the forward direction only. Execution in the backward direction is not permitted.

#2 MC5
#3 MC8 These parameters set the number of M code groups and the number of M codes per group. (See explanations of parameters Nos. 6411 to 6490.)

MC5	MC8	M code group setting
0	0	Standard (20 groups of four)
1	0	16 groups of five
0	1	10 groups of eight

When 16 groups of five are used, the meanings of parameters are changed as follows:
Group A No. 6411(1) to No. 6415(5)
Group B No. 6416(1) to No. 6420(5)
:
Group P No. 6486(1) to No. 6490(5)
When 10 groups of eight are used, they are changed as follows:
Group A No. 6411(1) to No. 6418(8)
Group B No. 6419(1) to No. 6426(8)
:
Group J No. 6483(1) to No. 6490(8)

#4 HMP When inversion or backward movement is inhibited in other paths:
0: Inversion or backward movement is not inhibited for the currently executed path.
1: Inversion or backward movement is inhibited also for the currently executed path.

#5 RVN When the manual handle retrace function is used, M codes other than grouped M codes:
0: Do not disable backward movement.
1: Disable backward movement.

When this parameter is set to 1, M codes other than grouped M codes disable backward movement in general. Exceptionally, however, the following M codes allow backward movement:
1. Subprogram call based on M98/M99
2. Subprogram call based on an M code
3. Macro call based on an M code
4. Waiting M code
5. M0

#6 MGO When the manual handle retrace function is used, handle pulses during execution of a G code related to measurement are:
0: Valid.
1: Invalid. A speed with an override of 100% is used for execution at all times.

#7 MG4 In the manual handle retrace function, for blocks for which multi-step skip G04 is enabled (when the multi-step skip is used, and the settings of parameters Nos. 6202 to 6206 are valid):
0: Backward movement is not prohibited.
1: Backward movement is prohibited.

	#7	#6	#5	#4	#3	#2	#1	#0
6401	STO	HST				CHS		ADC

[Input type] Parameter input
[Data type] Bit path

#0 ADC If a move command and an auxiliary function (M/S/T/B code) are specified in the same block when the manual handle retrace function is used, the block:
0: Disables reverse movement.
1: Does not disable reverse movement.

> **NOTE**
> To use this parameter, the function for the direction change movement in auxiliary function output block is required.

#2 CHS In manual handle retrace:
0: The status is displayed if the following conditions are all satisfied:
(1) The manual handle retrace is used.
(2) Bit 6 (HST) of parameter No. 6401, which specifies whether to enable or disable status display, is set to 1.
(3) Check mode output signal MMMOD<Fn091.3> is set to “1”.
1: The status is displayed if the following conditions are all satisfied:
(1) The manual handle retrace is used.
(2) Bit 6 (HST) of parameter No. 6401, which specifies whether to enable or disable status display, is set to 1.
(3) Cycle start lamp signal STL<Fn000.5> is set to “1”.
(4) Check mode input signal MMOD<Gn067.2> is set to “1”.
(5) Handle input signal MCHK<Gn067.3> is set to “1” in the check mode.

#6 HST When the manual handle retrace function is used, the time display field on the status display line of the CNC screen:
0: Does not display status.
1: Displays status.

#7 STO In the manual handle retrace function, the timing for outputting an S code and T code during backward movement is:
0: Different from the timing during forward movement:
1: The same as during forward movement.

	#7	#6	#5	#4	#3	#2	#1	#0
6402			MWR					

[Input type] Parameter input
[Data type] Bit path

#5 MWR When the manual handle retrace function is used, for a handle operation placed in the wait state by a wait M code during backward movement:
0: Inversion is prohibited.
1: Inversion is permitted.

	#7	#6	#5	#4	#3	#2	#1	#0
6403	HAI	HRG	HRF	HRE	HRD	HRC	HRB	HRA
	HAI	HRG	HRF	HRE		HRC	HRB	HRA

[Input type] Parameter input
[Data type] Bit path

#0 HRA In rigid tapping and thread cutting, with the manual handle retrace function, program execution in the forward direction:
0: Cannot be performed.
1: Can be performed.

#1 HRB In PMC axis control, with the manual handle retrace, program execution in the forward direction:
0: Cannot be performed.
1: Can be performed.

#2 HRC During orientation operation according to G00 for a Cs contour control axis, with the manual handle retrace function, program execution in the backward direction:
0: Cannot be performed.
1: Can be performed.

#3 HRD In polygon machining with two spindles, with the manual handle retrace function, program execution in the backward direction:
0: Cannot be performed.
1: Can be performed.

#4 HRE In balanced cutting, with the manual handle retrace function, program execution in the backward direction:
0: Cannot be performed.
1: Can be performed.

#5 HRF In skip function, multi-step skip function, high-speed skip function and torque limit skip function, with the manual handle retrace function, program execution in the backward and re-forward direction :
0: Cannot be performed.
1: Can be performed.

NOTE
1 Any skip signal and torque limit are ignored and it moves backward or re-forward on the path that moved first time forward movement during the backward movement or the re-forward movement.
2 The system variables #100151 to #100182 and #5061 to #5080 of custom macro are not updated during the backward movement and the re-forward movement.

#6 HRG In rigid tapping (lathe system) and threading, with the manual handle retrace function, program execution in the backward and re-forward direction :
0: Cannot be performed.

1: Can be performed.

> ⚠ **WARNING**
> 1 When the parameter HRG is set to 1, detach the work if you execute the program including the rigid tapping. The machining of work is not possible.
> 2 When the parameter HRG is set to 1, detach the work if you execute the program including the threading because the synchronization of the spindle and the feed axis is not maintained. The machining of work is not possible.

#7 HAI In manual handle retrace mode, AI contour control is:
0: Disabled.
1: Enabled.

> **NOTE**
> This parameter is enabled when bit 1 (FWD) of parameter No.6400 is set to 1.

	#7	#6	#5	#4	#3	#2	#1	#0
6404								HMD

[Input type] Parameter input
[Data type] Bit

#0 HMD In manual handle retrace, when inversion or backward movement is inhibited:
0: Cause is not displayed.
1: Cause is displayed.

6405	Override value (equivalence) for clamping the rapid traverse rate used with the manual handle retrace function

[Input type] Parameter input
[Data type] Word path
[Unit of data] %
[Valid data range] 0 to 100

This parameter sets an override value (equivalence) for clamping the rapid traverse rate used with the manual handle retrace function. If a value greater than 100 is set in parameter No. 6405, the rapid traverse rate is clamped to an override of 100%. This function is invalid if 0 is set in parameter No. 6405. In this case, the setting of bit 0 (RPO) of parameter No. 6400 is used.

6410	Travel distance per pulse generated from the manual pulse generator

[Input type] Parameter input
[Data type] Word path
[Unit of data] %
[Valid data range] 0 to 100

Set the travel distance per pulse generated from the manual pulse generator in terms of the override value.
The distance traveled by the machine when the manual handle is actually turned can be found by the following expression:

[Specified speed] × [Handle magnification] × ([Setting of this parameter]/100) × (8/60000) (mm or inch)

[Example] When a specified feedrate is 30mm/min, the manual handle magnification is 100, and parameter No. 6410 is set to 1, the travel distance per pulse generated from the manual pulse generator is calculated as follows:

[Travel distance per pulse]=30[mm/min] × 100 × (1/100) × (8/60000)[min]= 0.004mm

When this parameter is set to 0, the amount of the movement becomes 0. Moreover, it is equivalent to 100 in case of 100 or more.

6411	**M code of group A in manual handle retrace (1)**
to	**to**
6414	**M code of group A in manual handle retrace (4)**
6415	**M code of group B in manual handle retrace (1)**
to	**to**
6418	**M code of group B in manual handle retrace (4)**
6419	**M code of group C in manual handle retrace (1)**
to	**to**
6422	**M code of group C in manual handle retrace (4)**
6423	**M code of group D in manual handle retrace (1)**
to	**to**
6426	**M code of group D in manual handle retrace (4)**
6427	**M code of group E in manual handle retrace (1)**
to	**to**
6430	**M code of group E in manual handle retrace (4)**
6431	**M code of group F in manual handle retrace (1)**
to	**to**
6434	**M code of group F in manual handle retrace (4)**
6435	**M code of group G in manual handle retrace (1)**
to	**to**
6438	**M code of group G in manual handle retrace (4)**
6439	**M code of group H in manual handle retrace (1)**
to	**to**
6442	**M code of group H in manual handle retrace (4)**
6443	**M code of group I in manual handle retrace (1)**
to	**to**
6446	**M code of group I in manual handle retrace (4)**
6447	**M code of group J in manual handle retrace (1)**
to	**to**
6450	**M code of group J in manual handle retrace (4)**
6451	**M code of group K in manual handle retrace (1)**
to	**to**
6454	**M code of group K in manual handle retrace (4)**
6455	**M code of group L in manual handle retrace (1)**
to	**to**
6458	**M code of group L in manual handle retrace (4)**

6459	M code of group M in manual handle retrace (1)
to	to
6462	M code of group M in manual handle retrace (4)
6463	M code of group N in manual handle retrace (1)
to	to
6466	M code of group N in manual handle retrace (4)
6467	M code of group O in manual handle retrace (1)
to	to
6470	M code of group O in manual handle retrace (4)
6471	M code of group P in manual handle retrace (1)
to	to
6474	M code of group P in manual handle retrace (4)
6475	M code of group Q in manual handle retrace (1)
to	to
6478	M code of group Q in manual handle retrace (4)
6479	M code of group R in manual handle retrace (1)
to	to
6482	M code of group R in manual handle retrace (4)
6483	M code of group S in manual handle retrace (1)
to	to
6486	M code of group S in manual handle retrace (4)
6487	M code of group T in manual handle retrace (1)
to	to
6490	M code of group T in manual handle retrace (4)

[Input type] Parameter input
[Data type] 2-word path
[Valid data range] 0 to 9999

Set a group of M codes output during backward movement.
For backward movement for an M code, the modal M code in the same group set by the parameter is output.
The first M code in each group is set as the default.
When the number of M codes in a group is 3 or less, set the parameter corresponding to an unused M code to 0.
For backward movement for "M0", "M0" is output regardless of which M code is set for the parameter. 0 set in the parameter is ignored.
For an M code which is not set in any group by any of the above parameters, the M code for forward movement is output.
With these parameters, an M code in the same group can be output in backward movement only when the M code is the first M code in each block. When a block contains two or more M codes, the same M codes as output in forward movement are output as a second M code and up.

NOTE
The above explanation of M code groups applies to the standard settings. The number of M codes in each group and the number of M code groups vary depending on the settings of bits 2 (MC5) and 3 (MC8) of parameter No. 6400.

6495	Time constant T or T1 used for linear acceleration/deceleration or bell-shaped acceleration/deceleration in rapid traverse for each axis for manual handle retrace

[Input type] Parameter input
[Data type] Word axis
[Unit of data] msec
[Valid data range] 0 to 4000
Specify a time constant used for acceleration/deceleration in rapid traverse for manual handle retrace. For an axis with 0 set in this parameter, a time constant for acceleration/deceleration of parameter (No.1620) is enabled.

6496	Time constant T_2 used for bell-shaped acceleration/deceleration in rapid traverse for each axis for manual handle retrace

[Input type] Parameter input
[Data type] Word axis
[Unit of data] msec
[Valid data range] 0 to 1000
Specify time constant T_2 used for bell-shaped acceleration/ deceleration in rapid traverse for each axis for manual handle retrace. For an axis with 0 set in this parameter, a time constant for acceleration/deceleration of parameter (No.1621) is enabled.

6497	Time constant of acceleration/deceleration in cutting feed for each axis for manual handle retrace

[Input type] Parameter input
[Data type] Word axis
[Unit of data] msec
[Valid data range] 0 to 4000
Set the time constant used for exponential acceleration/deceleration in cutting feed, bell-shaped acceleration/deceleration after interpolation or linear
acceleration/deceleration after interpolation in cutting feed for each axis for manual handle retrace. Which type to use is selected with bits 1 (CTBx) and 0 (CTLx) of parameter No. 1610. Except for special applications, the same time constant must be set for all axes in this parameter. If the time constants set for the axes differ from each other, proper straight lines and arcs cannot be obtained. For an axis with 0 set in this parameter, a time constant for acceleration/deceleration of parameter (No.1622) is enabled.

4.41 PARAMETERS OF GRAPHIC DISPLAY (1 OF 4)

	#7	#6	#5	#4	#3	#2	#1	#0
6501			CSR					

[Input type] Parameter input
[Data type] Bit path

#5 CSR On the PATH GRAPHIC (TOOL POSITION) screen, the shape of the cursor indicating the tool position is:
0: A square (■).
1: An x (×).

	#7	#6	#5	#4	#3	#2	#1	#0
6502				MPD				

[Input type] Parameter input

[Data type] Bit

#4 MPD On tool path graphic screen, operation of starting, ending, and erasing is effective to
0: all paths.
1: selected path.

6510	Specifying the graphic coordinate system

[Input type] Parameter input
[Data type] Byte path
[Valid data range] 0 to 15 (When the dynamic graphic display function is used, set a value from 0 to 7.)

Specify the graphic coordinate system in tool path drawing.
For lathe systems:

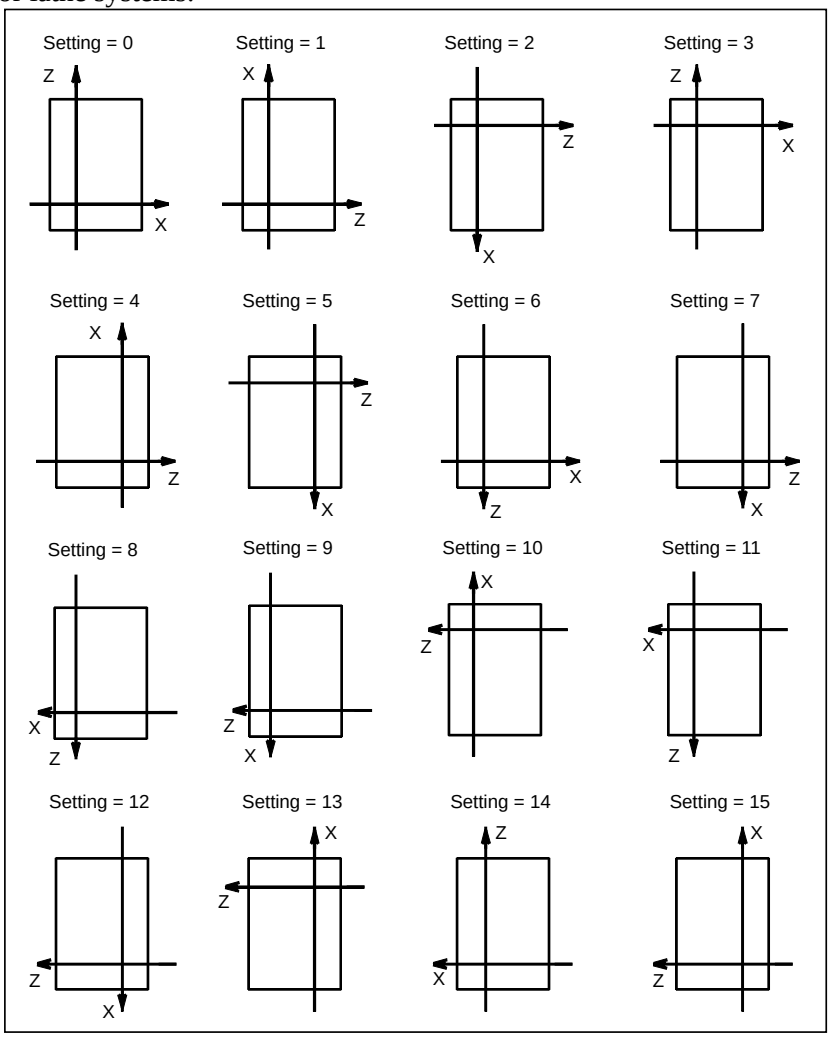

For machining center systems:

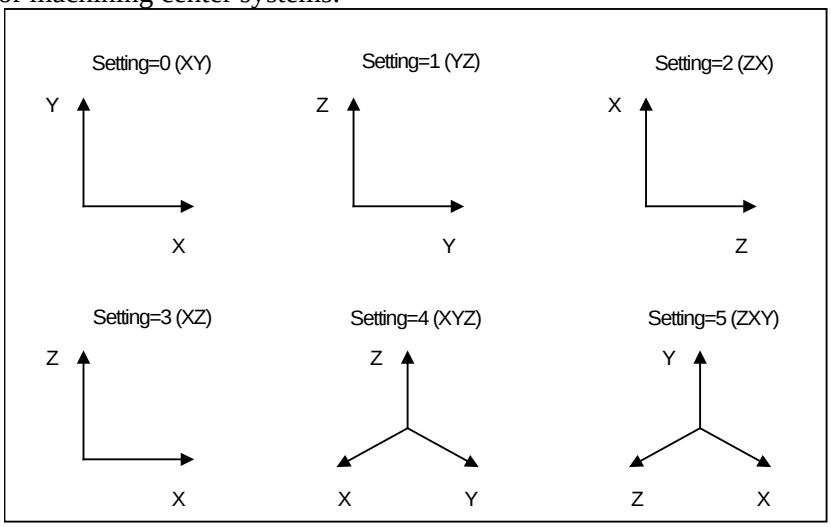

When the dynamic graphic display function is used, the relationship between the setting and the drawing coordinate system is as follows:

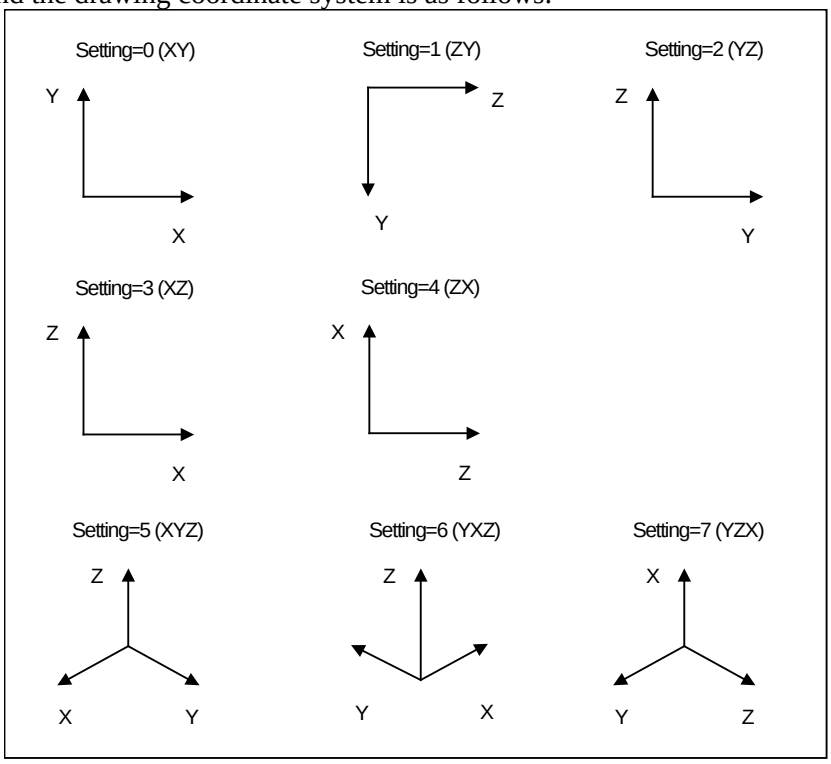

4.42 PARAMETERS OF SCREEN DISPLAY COLORS (1 OF 2)

6581	**RGB value of color palette 1**
6582	**RGB value of color palette 2**
6583	**RGB value of color palette 3**
6584	**RGB value of color palette 4**
6585	**RGB value of color palette 5**
6586	**RGB value of color palette 6**

6587	RGB value of color palette 7
6588	RGB value of color palette 8
6589	RGB value of color palette 9
6590	RGB value of color palette 10
6591	RGB value of color palette 11
6592	RGB value of color palette 12
6593	RGB value of color palette 13
6594	RGB value of color palette 14
6595	RGB value of color palette 15

[Input type] Parameter input
[Data type] 2-word
[Valid data range] 0 to 151515
Each of these parameters sets the RGB value of each color palette by specifying a 6-digit number as described below.
rrggbb: 6-digit number (rr: red data, gg: green data, bb: blue data)
The valid data range of each color is 0 to 15 (same as the tone levels on the color setting screen). When a number equal to or greater than 16 is specified, the specification of 15 is assumed.
[Example] When the tone level of a color is: red:1 green:2, blue:3, set 10203 in the parameter.

4.43 PARAMETERS OF RUN HOUR AND PARTS COUNT DISPLAY

	#7	#6	#5	#4	#3	#2	#1	#0
6700							PRT	PCM

[Input type] Parameter input
[Data type] Bit path

#0 PCM M code that counts the total number of machined parts and the number of machined parts
0: M02, or M30, or an M code specified by parameter No. 6710
1: Only M code specified by parameter No. 6710

#1 PRT Upon reset, the required parts count arrival signal PRTSF <Fn062.7> is:
0: Set to “0”.
1: Not set to ”0”.

6710	M code that counts the number of machined parts

[Input type] Parameter input
[Data type] 2-word path
[Valid data range] 0 to 999999999
The total number of machined parts and the number of machined parts are counted (+1) when the M code set is executed.

NOTE
The setting of 0 is invalid (no count operation is performed with M00.) Moreover, M98, M99, M198 (external device subprogram calling), and M codes used for subprogram calling and macro calling cannot be set as M codes for count-up operation. (Even when such an M code is set, count-up operation is not performed, ignoring the M code.)

6711	Number of machined parts

[Input type] Setting input
[Data type] 2-word path
[Valid data range] 0 to 999999999
The number of machined parts is counted (+1) together with the total number of machined parts when the M02, M30, or a M code specified by parameter No. 6710 is executed.

NOTE
The number of parts is not counted for M02, M30 when bit 0 (PCM) of parameter No. 6700 is set to 1.

6712	Total number of machined parts

[Input type] Setting input
[Data type] 2-word path
[Valid data range] 0 to 999999999
This parameter sets the total number of machined parts.
The total number of machined parts is counted (+1) when M02, M30, or an M code specified by parameter No. 6710 is executed.

NOTE
The number of parts is not counted for M02, M30, when bit 0 (PCM) of parameter No. 6700 is set to 1.

6713	Number of required parts

[Input type] Setting input
[Data type] 2-word path
[Valid data range] 0 to 999999999
This parameter sets the number of required machined parts.
Required parts finish signal PRTSF <F0062.7> is output to PMC when the number of machined parts reaches the number of required parts. The number of parts is regarded as infinity when the number of required parts is zero. The PRTSF signal is then not output.

6750	Integrated value of power-on period

[Input type] Parameter input
[Data type] 2-word path
[Unit of data] min
[Valid data range] 0 to 999999999
This parameter displays the integrated value of power-on period.

6751	Operation time (integrated value of time during automatic operation) 1

[Input type] Setting input
[Data type] 2-word path
[Unit of data] msec
[Valid data range] 0 to 59999
For details, see the description of parameter No. 6752.

6752	Operation time (integrated value of time during automatic operation) 2

[Input type] Setting input
[Data type] 2-word path
[Unit of data] min
[Valid data range] 0 to 999999999
This parameter displays the integrated value of time during automatic operation (neither stop nor hold time included).
The actual time accumulated during operation is the sum of this parameters Nos. 6751 and 6752.

6753	Integrated value of cutting time 1

[Input type] Setting input
[Data type] 2-word path
[Unit of data] msec
[Valid data range] 0 to 59999
For details, see the description of parameter No. 6754.

6754	Integrated value of cutting time 2

[Input type] Setting input
[Data type] 2-word path
[Unit of data] min
[Valid data range] 0 to 999999999
This parameter displays the integrated value of a cutting time that is performed in cutting feed such as linear interpolation (G01) and circular interpolation (G02 or G03).
The actual time accumulated during cutting is the sum of this parameters Nos. 6753 and 6754.

6755	Integrated value of general-purpose integrating meter drive signal (TMRON) ON time 1

[Input type] Setting input
[Data type] 2-word path
[Unit of data] msec
[Valid data range] 0 to 59999
For details, see the description of parameter No. 6756.

6756	Integrated value of general-purpose integrating meter drive signal (TMRON) ON time 2

[Input type] Setting input
[Data type] 2-word path
[Unit of data] min
[Valid data range] 0 to 999999999
This parameter displays the integrated value of a general-purpose integrating meter start signal TMRON <Gn053.0> from PMC is on.
The actual integrated time is the sum of this parameters Nos. 6755 and 6756.

6757	Operation time (integrated value of one automatic operation time) 1

[Input type] Setting input
[Data type] 2-word path
[Unit of data] msec
[Valid data range] 0 to 59999
For details, see the description of parameter No. 6758.

6758	Operation time (integrated value of one automatic operation time) 2

[Input type] Setting input
[Data type] 2-word path
[Unit of data] min
[Valid data range] 0 to 999999999
This parameter displays the one automatic operation drive time (neither stop nor hold state included). The actual time accumulated during operating is the sum of this parameters Nos. 6757 and 6758. The operation time is automatically preset to 0 during the power-on sequence and the cycle start from the reset state.

4.44 PARAMETERS OF TOOL MANAGEMENT FUNCTIONS (1 OF 2)

	#7	#6	#5	#4	#3	#2	#1	#0
6801						LVF		

NOTE
The use of this parameter varies depending on whether the tool management function or tool life management function is used.

[Input type] Parameter input
[Data type] Bit path

#2 LVF When the life of a tool is counted in terms of time with the tool management function, the tool life count override signals *TLV0 to *TLV9 <Gn049.0 to Gn050.1> are:
0: Invalid.
1: Valid.

6811	Tool life count restart M code

[Input type] Parameter input
[Data type] Byte path
[Valid data range] 0 to 127 (not including 01, 02, 30, 98, and 99)
When 0 is set, this parameter is ignored.
When an M code for tool life count restart is specified, the counting of the life of the tool attached at the spindle position is started.
When the type for counting the number of use times is selected, the target of life counting is switched to the tool attached at the spindle position, and the life count is incremented by 1.
When the type for counting time is selected, the target of life counting is switched to the tool attached at the spindle position, with no other operations performed.
If the tool attached at the spindle position is not a tool under tool life management, no operation is performed.

NOTE
The use of this parameter varies depending on whether the tool management function or tool life management function is used.

4.45 PARAMETERS OF TOOL LIFE MANAGEMENT (1 OF 2)

	#7	#6	#5	#4	#3	#2	#1	#0
6800	M6T	IGI	SNG	GRS	SIG	LTM	GS2	GS1

[Input type] Parameter input
[Data type] Bit path

#0 GS1
#1 GS2 For the maximum number of groups set in parameter No. 6813, up to four tools can be registered per group. The combination of the number of registrable groups and the number of tools per group can be changed by setting GS1 and GS2.

GS2	GS1	Number of groups	Number of tools
0	0	1/8 of maximum number of groups (No. 6813)	32
0	1	1/4 of maximum number of groups (No. 6813)	16
1	0	1/2 of maximum number of groups (No. 6813)	8
1	1	Maximum number of groups (No. 6813)	4

NOTE
After changing these parameters, set data again by using G10 L3 ;(registration after deletion of data of all groups).

#2 LTM The tool life count is specified by:
0: Count.
1: Duration.

NOTE
After changing this parameter, set data again by using G10 L3 ;(registration after deletion of data of all groups).

#3 SIG When a tool is skipped by a signals TL01 to TL512 <Gn047.0 to Gn048.1>, the group number is:
0: Not input by the tool group number selection signals.
1: Input by the tool group number selection signals.

NOTE
When this parameter is set to 0, a tool of the currently used group is skipped.

#4 GRS When the tool change reset signal TLRST <Gn048.7> is input:
0: If the life of the group specified by the tool group number selection signals TL01 to TL512 <Gn047.0 to Gn048.1> has expired, the execution data of the group is cleared.
1: The execution data of all registered groups is cleared.

If this parameter is set to 1, the execution data of all registered groups is cleared also when the clear operation to clear execution data is performed on the tool life management list screen.

#5 SNG When the tool skip signal TLSKP <Gn048.5> is input while a tool not controlled by the tool life management function is being used:
0: A tool of the most recently used group or a specified group (bit 3 (SIG) of parameter No. 6800) is skipped.
1: The tool skip signal is ignored.

#6 IGI Tool back numbers are:
0: Not ignored.
1: Ignored.

#7 M6T A T code specified in the same block as M06 is:
0: Assumed to be a back number.
1: Assumed to be a command specifying the next tool group.

	#7	#6	#5	#4	#3	#2	#1	#0
6801	M6E				EMD	LVF	TSM	
	M6E				EMD	LVF		

NOTE
The use of this parameter varies depending on whether the tool management function or tool life management function is used.

[Input type] Parameter input
[Data type] Bit path

#1 TSM In the tool life management function, life counting is performed as follows when more than one offset is specified:
0: Counting is performed for each tool number.
1: Counting is performed for each tool.

#2 LVF When the life value is counted by duration in the tool management function or tool life management function, tool life count override signals *TLV0 to *TLV9 <Gn049.0 to Gn050.1> are:
0: Not used.
1: Used.

#3 EMD In the tool life management function, the mark "*" indicating that the life has expired is displayed when:
0: The next tool is used.
1: The life has just expired.

NOTE

If this parameter is set to 0, the "@" mark (indicating that the tool is in use) is kept displayed unless the next tool whose life has not expired is used. If this parameter is set to 1, marks are displayed in different ways depending on the life count type.
If the life count type is the duration specification type, the "*" mark (indicating that the life has expired) appears when the life has expired. If the life count type is the count specification type, one count is not assumed until the end of the program (M02, M30, and so on). Therefore, even when the life value and the tool life counter value match, the "*" mark (life has expired) does not appear. The "*" mark (life has expired) appears when the tool is used again by a tool group command (T code) or tool change command (M06) issued after the CNC is reset.

#7 M6E When a T code is specified in the same block as M06:

0: The T code is treated as a back number or the group number to be selected next. Which number is assumed depends on the setting of bit 7 (M6T) of parameter No. 6800.

1: Life counting for the tool group starts immediately.

	#7	#6	#5	#4	#3	#2	#1	#0
6802	RMT	TSK	TGN	ARL	GRP	E17	TCO	T99

[Input type] Parameter input
[Data type] Bit path

#0 T99 When M99 of the main program is executed, and there is a the life was expired tool group:

0: The tool change signal TLCH <Fn064.0> is not output.

1: TLCH is output, and the automatic operation becomes a stopped state..

If the life count is specified by use count and this parameter 1, TLCH is output and the automatic operation becomes a stopped state if the life of at least one tool group has expired when the M99 command is specified.
If the life count type is the duration specification type, the automatic operation becomes a stopped state if the life of at least one tool group has expired when the M99 command is specified.

M

If the life count is specified by use count, after the M99 command is specified, a tool group command (T code) selects, from a specified group, a tool whose life has not expired, and the next tool change command (M06) increments the tool life counter by one.

T

If the life count is specified by use count, when a tool group command (T code) is specified after the M99 command is specified, a tool whose life has not expired is selected from a specified group, and the tool life counter is incremented by one.
When the tool change type is the ATC type (bit 3 (TCT) of parameter No. 5040 = 1), the same specifications as for the M series apply.

#1 TCO

#2 E17 Specifies whether to allow the FOCAS2 or PMC window function to write tool information of a group being used or a group to be used next during automatic operation (the automatic operation signal OP <Fn000.7> is set to 1).

Condition			Bit 1 (TCO) of parameter No. 6802		
			0	1	
				Bit 2 (E17) of parameter No. 6802	
				1	0
During automatic operation	Group being used or to be used next	Tool being used	×	△	○
		Tool not being used	×	○	○
	Group neither being used nor to be used next		○	○	○
Not during automatic operation			○	○	○

○: Tool information can be written from FOCAS2 and PMC window.
×: Tool information cannot be written from FOCAS2 and PMC window.
When an attempt is made to write tool information from PMC window, completion code 13 (REJECT ALARM) is returned.
△: Tool information cannot be cleared.

NOTE
When tool information of a tool being used (marked with "@") in the group being used or to be used next or tool information of the most recently used tool (marked with "@") in a group that is neither the group being used nor the group to be used next is cleared, the life counter is reset to 0.
It is possible to modify tool information of a tool in the group to be used next. However, because tool selection is already completed, the selected tool does not change even when the tool information is modified.
This parameter has no influence on modifications to tool information by edit operations from the tool life management screen.

#3 GRP Management data of tool life arrival notice signal TLCHB <Fn064.3> is:
0: Managed using the remaining life value set in parameter No. 6844 and 6845.
1: Managed using the remaining life value set in tool life management data.

NOTE
When the tool life arrival notice signal function is used, bit 4 (LFB) of parameter No. 6805 must be set to 1 to enable the tool life management B function.

#4 ARL Tool life arrival notice signal TLCHB <Fn064.3> of tool life management is:
0: Output for each tool.
1: Output for the last tool of a group.
This parameter is valid only when bit 3 (GRP) of parameter No. 6802 is set to 1.

#5 TGN In the tool life management function, the optional group number function is:
0: Not used.
1: Used.

NOTE
When the optional group number function is used, bit 4 (LFB) of parameter No. 6805 must be set to 1 to enable the tool life management B function.
In lathe systems, the optional group number function can be used if the tool change type is the ATC type (bit 3 (TCT) of parameter No. 5040 = 1).

#6 TSK If the count type in tool life management is the duration type, then when the last tool of a group is skipped by a signal:
0: The count value for the last tool equals the life value.
1: The count value for the last tool remains unchanged.

#7 RMT Tool life arrival notice signal TLCHB <Fn064.3> is turned ”1” and ”0” as follows:
0: The signal is turned ”1” if the remaining life value (the life value minus the life counter value) is smaller than or equal to the remaining life setting. The signal is turned ”0” if the remaining life value (the life value minus the life counter value) is greater than the remaining life setting.
1: The signal is turned ”1” if the remaining life value (the life value minus the life counter value) is equal to the remaining life setting. The signal is turned ”0” if the remaining life value (the life value minus the life counter value) is not equal to the remaining life setting.

NOTE
When using the life count override feature, set bit 7 (RMT) of parameter No. 6802 to 0. When the life count is specified by duration, the unit used for determining the result of comparison between the remaining life and the remaining life setting varies depending on the life count interval (bit 0 (FCO) of parameter No. 6805). If the life is counted every second, the comparison is made in units of 1 minute; if the life is counted every 0.1 second, the comparison is made in units of 0.1 minute.

	#7	#6	#5	#4	#3	#2	#1	#0
6803	CTB							

[Input type] Parameter input
[Data type] Bit path

NOTE
When this parameter is set, the power must be turned off before operation is continued.

 # 7 CTB Whether to turn the tool life arrival notice signal TLCHB <Fn064.3> of tool life management off is determined when life counting starts. An additional turn-off condition is:
0: Not added.
1: Added.
The tool life arrival notice signal is turned off when one of the following operations is performed for the currently used group:
Clears the execution data on the tool life management list screen.

Deletes all tool group data at a time, adds a tool number, or deletes tool data on the tool life management edit screen.
Clears the execution data by the tool change reset signal TLRST <Gn048.7>.
Registers, changes, or deletes all tool life management group data by the G10 command.
Executes the FOCAS2 cnc_clrcntinfo function (which clears the tool life counter or tool information).
Replaces a tool with a tool of which life is not managed by the M06 command.

	#7	#6	#5	#4	#3	#2	#1	#0
6804		LFI				ETE	TCI	

[Input type] Parameter input
[Data type] Bit path

#1 TCI During automatic operation (the automatic operation signal OP<Fn000.7> is ”1”), editing of tool life data is:
0: Disabled.
1: Enabled.

> **NOTE**
> When this parameter is set to 1, tool life data can be edited even during automatic operation (the OP is 1). If the target group for editing is the group being used or the group to be used next, however, only presetting of the life counter is permitted, and other data cannot be modified.

#2 ETE In the tool life management screen, the mark of the tool at the life was expired of the final tool in the group :
0: depends on setting bit 3 (EMD) of parameter No. 6801.
1: is "*" mark.
If bit 2 (ETE) of parameter No. 6804 is set to 1, when the life counter of the final tool in the group becomes equal to the life value, display mark "*" in the final tool of the tool life management screen.
When tool change signal TLCH <Fn064.0> is ”1”, the state of the life was expired of the tool can be read by reading tool information on the final tool in FOCAS2 or the PMC window.

#6 LFI In tool life management, counting of the life of a selected tool is:
0: Enabled.
1: Enabled or disabled according to the status of tool life counting disable signal LFCIV <Gn048.2>.

	#7	#6	#5	#4	#3	#2	#1	#0
6805	TAD	TRU	TRS	LFB			FGL	FCO

[Input type] Parameter input
[Data type] Bit path

#0 FCO If the life count type is the duration specification type, the life is counted as follows:
0: Every second.
1: Every 0.1 second.
According to the setting of this parameter, the increment system of life values and tool life counter values displayed on the tool life management screen is set as follows:

Parameter FCO	0	1
Increment system for display and setting of life values and life counter values	1-minute increments	0.1-minute increments

NOTE
After changing the setting of this parameter, set data again by using G10L3;(registration after deletion of data of all groups).

#1 FGL If the life count type is the duration specification type, life data registered by G10 is:
0: In minute increments.
1: In 0.1-second increments.

#4 LFB The tool life management B function is:
0: Disabled.
1: Enabled.
When the tool life management B function is enabled, the following functions can be used:
(1) Tool life value extension (count specification: 99999999 times, duration specification: 100000 minutes)
(2) Optional group number function
(3) Tool life arrival notice function
In lathe systems, if the tool change type is the ATC type (bit 3 (TCT) of parameter No. 5040 = 1), the optional group number function can be used.

#5 TRS Tool change reset signal TLRST <Gn048.7> is valid when reset signal RST <Fn001.1> is not ”1” and:
0: The reset state (automatic operation signal OP <Fn000.7> is ”0”) is observed.
1: The reset state (automatic operation signal OP <Fn000.7> is ”0”), automatic operation stop state (cycle start lamp signal STL <Fn000.5> and feed hold lamp signal SPL <Fn000.4> are ”0” and OP is ”1”), or the automatic operation pause state (STL is ”0” and SPL is ”1”) is observed. The TLRST signal, however, is invalid when the automatic operation stop state, automatic operation pause state, and automatic operation start state (STL is ”1”) is observed during execution of a data setting command (G10L3).

#6 TRU When the life count type is the duration specification type, and the life is counted every second (bit 0 (FCO) of parameter No. 6805 is set to 0):
0: Cutting time less than one second is discarded and is not counted.
1: Cutting time less than one second is rounded up and is counted as one second.

NOTE
If the life is counted every 0.1 second (bit 0 (FCO) of parameter No. 6805 is set to 1), cutting time less than 0.1 second is always rounded up and is counted as 0.1 second.

#7 TAD With tool change type D (bit 7 (M6E) of parameter No. 6801 is set to 1), when a block specifying M06 contains no T command:
0: An alarm PS0153, “T-CODE NOT FOUND” is issued.
1: No alarm is issued.

6810	Tool life management ignore number

[Input type] Parameter input
[Data type] 2-word path
[Valid data range] 0 to 99999999
This parameter sets the tool life management ignore number.
When the value specified in a T code exceeds the value set in this parameter, the value obtained by subtracting the parameter-set value from the T code value is assumed to be the tool group number for tool life management.

6811	Tool life count restart M code

[Input type] Parameter input
[Data type] Byte path
[Valid data range] 0 to 127 (except 01, 02, 30, 98, and 99)
When 0 is specified, it is ignored.
When the life is specified by count, the tool change signal TLCH <Fn064.0> is output if the life of at least one tool group has expired when the tool life count restart M code is issued.
The T code (tool life management group command) specified after the tool life count restart M code selects a tool whose life has not expired from a specified group, and the next M06 command increments the tool life counter by one.
When the life is specified by duration, specifying the tool life count restart M code causes nothing. When 0 is set in this parameter, the tool life count restart M code is invalid. When the data of M code exceeds 127 values, set 0 in parameter No. 6811, and set the value of M code in parameter No. 13221. The data range of parameter No. 13221 is from 0 to 255.

NOTE
The use of this parameter varies depending on whether the tool management function or tool life management function is used.

6813	Maximum number of groups in tool life management

NOTE
After this parameter has been set, the power must be turned off then back on for the setting to become effective.

[Input type] Parameter input
[Data type] Word path
[Unit of data] Group
[Valid data range] 0, 8, 16 to 256
This parameter sets the maximum number of groups to be used for each path. As the maximum number of groups, set a multiple of eight. When the tool life management function is not used, 0 must be set. Set this parameter so that the total number of groups in all paths does not exceed the total number of groups in the entire system (256 groups).

NOTE
When the power is turned on, all tool life management file data is initialized. So, tool life management data must be set for all paths that use tool life management.

6844	Remaining tool life (use count)

[Input type] Parameter input
[Data type] Word path
[Valid data range] 0 to 9999
This parameter sets a remaining tool life (use count) used to output the tool life notice signal TLCHB <Fn064.3> when the tool life is specified by use count. If a value greater than the tool life value or 0 is set in this parameter, the tool life notice signal is not output.

6845	Remaining tool life (use duration)

[Input type] Parameter input
[Data type] 2-word path
[Unit of data] min
[Valid data range] Not greater than the tool life value
This parameter sets the remaining tool life (use duration) used to output the tool life notice signal TLCHB <Fn064.3> when the tool life is specified by use duration. If a value greater than the tool life value or 0 is specified in this parameter, the tool life notice signal is not output.

NOTE
When the life is counted every 0.1 second (bit 0 (FCO) of parameter No. 6805 = 1), the parameter value is in 0.1-minute increments.

6846	
	Remaining tool number in a group

[Input type] Parameter input
[Data type] Byte path
[Valid data range] 0 to 127
This parameter sets the remaining tool number in a group.
When the remaining tool number in the group selected by the T code is smaller than or equal to the value set in this parameter, the remaining tool number notice signal TLAL <Fn154.0> is output. When this parameter is set to 0, the remaining tool number notice signal is not output.

4.46 PARAMETERS OF POSITION SWITCH FUNCTIONS

	#7	#6	#5	#4	#3	#2	#1	#0
6901						PSA	EPW	

[Input type] Parameter input
[Data type] Bit path

#1 EPW The number of position switches is:
0: Not extended.
1: Extended.

#2 PSA In determination of a position switch function operation range, a servo delay amount (positional deviation) and a delay amount in acceleration/deceleration control are:
0: Not considered.
1: Considered.

6910	Controlled axis for which the 1st position switch function is performed (PSWA01)
6911	Controlled axis for which the 2nd position switch function is performed (PSWA02)
:	:
6925	Controlled axis for which the 16th position switch function is performed (PSWA16)

[Input type] Parameter input
[Data type] Byte path
[Valid data range] 0 to Number of controlled axes
Set the controlled axis number (intra-path relative axis number) corresponding to one of the first to sixteenth position switch functions. When the machine coordinate of the corresponding axis is within a parameter-set range, the corresponding position switch signals PSW01 to PSW16 <Fn070 and Fn071> are output to the PMC.

NOTE
The setting of 0 means that the position switch function is not used.

6930	Maximum value of the operating range of the 1st position switch (PSW101)
6931	Maximum value of the operating range of the 2nd position switch (PSW102)
:	:
6945	Maximum value of the operating range of the 16th position switch (PSW116)

[Input type] Parameter input
[Data type] Real path
[Unit of data] mm, inch, degree (machine unit)
[Min. unit of data] Depend on the increment system of the reference axis
[Valid data range] 9 digit of minimum unit of data (refer to standard parameter setting table (A))
(When the increment system is IS-B, -999999.999 to +999999.999)
Set the maximum value of the operating range of the first to sixteenth position switches.

NOTE
1 For a diameter-specified axis, use diameter values to specify the parameters used to set the maximum and minimum values of an operating range.
2 The position switch function is enabled upon completion of reference position return.
3 Please do not specify the range that steps over 360° for the rotation axis.

6950	Minimum value of the operating range of the 1st position switch (PSW201)
6951	Minimum value of the operating range of the 2nd position switch (PSW202)
:	:
6965	Minimum value of the operating range of the 16th position switch (PSW216)

[Input type] Parameter input
[Data type] Real path
[Unit of data] mm, inch, degree (machine unit)
[Min. unit of data] Depend on the increment system of the reference axis
[Valid data range] 9 digit of minimum unit of data (refer to standard parameter setting table (A))
(When the increment system is IS-B, -999999.999 to +999999.999)
Set the minimum value of the operating range of the first to sixteenth position switches.

NOTE
1 For a diameter-specified axis, use diameter values to specify the parameters used to set the maximum and minimum values of an operating range.
2 The position switch function is enabled upon completion of reference position return.
3 Please do not specify the range that steps over 360° for the rotation axis.

6966	**Controlled axis for which the 17th position switch function is performed**
to	**to**
6973	**Controlled axis for which the 24th position switch function is performed**

[Input type] Parameter input
[Data type] Byte path
[Valid data range] 0 to Number of controlled axes
Set the controlled axis number (intra-path relative axis number) corresponding to one of the seventeenth to twenty-fourth position switch functions. When the machine coordinate of the corresponding axis is within a parameter-set range, the corresponding position switch signal is output to the PMC.

NOTE
1 The 17th to 24th position switch function is available only for the loader path.
2 The setting of 0 means that the position switch function is not used.

6974	**Maximum value of the operating range of the 17th position switch**
to	**to**
6981	**Maximum value of the operating range of the 24th position switch**

[Input type] Parameter input
[Data type] Real path
[Unit of data] mm, inch, degree (machine unit)
[Min. unit of data] Depend on the increment system of the reference axis
[Valid data range] 9 digit of minimum unit of data (refer to standard parameter setting table (A))
(When the increment system is IS-B, -999999.999 to +999999.999)
Set the maximum value of the operating range of the seventeenth to twenty-fourth position switches.

NOTE
1 The 17th to 24th position switch function is available only for the loader path.
2 For a diameter-specified axis, use diameter values to specify the parameters used to set the maximum and minimum values of an operating range.
3 The position switch function is enabled upon completion of reference position return.
4 Please do not specify the range that steps over 360° for the rotation axis.

6982	**Minimum value of the operating range of the 17th position switch**
to	**to**
6989	**Minimum value of the operating range of the 24th position switch**

[Input type] Parameter input
[Data type] Real path
[Unit of data] mm, inch, degree (machine unit)
[Min. unit of data] Depend on the increment system of the reference axis
[Valid data range] 9 digit of minimum unit of data (refer to standard parameter setting table (A))
(When the increment system is IS-B, -999999.999 to +999999.999)
Set the minimum value of the operating range of the seventeenth to twenty-fourth position switches.

NOTE
1 The 17th to 24th position switch function is available only for the loader path.
2 For a diameter-specified axis, use diameter values to specify the parameters used to set the maximum and minimum values of an operating range.
3 The position switch function is enabled upon completion of reference position return.
4 Please do not specify the range that steps over 360° for the rotation axis.

4.47 PARAMETERS OF MANUAL OPERATION AND AUTOMATIC OPERATION (1 OF 2)

	#7	#6	#5	#4	#3	#2	#1	#0
7001	MFM	JEX					ABS	MIT

[Input type] Parameter input
[Data type] Bit path

#0 MIT Manual intervention and return function is:
0: Disabled.
1: Enabled.

#1 ABS For the move command after manual intervention in the manual absolute on state:
0: Different paths are used in the absolute (G90) and incremental (G91) modes.
1: The same path (path in the absolute mode) is used in the absolute (G90) and incremental (G91) modes.

#6 JEX The number of axes controlled simultaneously in jog feed, manual rapid traverse, and manual reference position return is:
0: Set by bit 0 (JAX) of parameter No. 1002.
1: The maximum number of simultaneously controlled axes.

#7 MFM For the manual linear/circular interpolation function, modifying a value specified with a command during jog feed in the guidance direction (approach direction):
0: Immediately starts moving according to the new value.
1: Stops moving.

	#7	#6	#5	#4	#3	#2	#1	#0
7002	TRO	TNR						

[Input type] Parameter input
[Data type] Bit path

#6 TNR When the updated compensation value in the tool retract and recover function is effective (the bit 7 (TRO) of parameter No.7002 is set to 1),
0: The updated compensation value is effective in the recovery operation.
1: The updated compensation value is effective in the re-positioning operation.

#7 TRO When the compensation value is updated while the tool retract and recover function is executing,
0: The updated compensation value is invalid.
1: The updated compensation value is effective

	#7	#6	#5	#4	#3	#2	#1	#0
7040					TRC	RPS	TRS	TRI

[Input type] Parameter input
[Data type] Bit path

#0 TRI The G10.6 command for tool retract and return is:
0: Assumed to be an absolute or incremental programming according to the absolute or incremental programming mode.
1: Always assumed to be an incremental programming.

#1 TRS After the completion of repositioning in tool retract and return:
0: Automatic operation is restarted.
1: Operation stops when the single block switch is on. When a cycle start is executed again, automatic operation is started.

#2 RPS When the tool retract signal TRESC <Gn059.0> is set to "1" after G10.6 is specified alone:
0: The tool is not retracted.
1: The tool is retracted with the value set for parameter No. 7041 or 11261 used as the incremental retraction distance.

#3 TRC When automatic operation is restarted after the tool retract and return is executed during the execution of a drilling canned cycle:
0: Machining of the same cycle is performed again (the same drilling is performed).
1: Machining of the next drilling cycle is performed (the next drilling is performed).

7041	Retraction distance in tool retract and return

[Input type] Setting input
[Data type] Real axis
[Unit of data] mm, inch, deg (input unit)
[Min. unit of data] Depend on the increment system of the applied axis
[Valid data range] 9 digit of minimum unit of data (refer to standard parameter setting table (A))
(When the increment system is IS-B, -999999.999 to +999999.999)
This parameter sets the retraction distance used when G10.6 is specified alone for the tool retract and return. The tool is retracted by the distance set for this parameter in the incremental mode. This data is valid only when bit 2 (RPS) of parameter No. 7040 is set to 1.

7042	Feedrate for each axis in tool retract and recover

[Input type] Parameter input
[Data type] Real axis
[Unit of data] mm/min, inch/min, degree/min (machine unit)
[Min. unit of data] Depend on the increment system of the applied axis
[Valid data range] Refer to the standard parameter setting table (C)
Set the feedrate for each axis in tool retract and recover. The recovery is performed at the feedrate specified by this parameter. The retract and repositioning are performed at the minimum feedrate among the parameter values of moving axes. Furthermore, if maximum number of record point in manual retract is exceeded, the tool move to last record point by linear interpolation at the minimum feedrate among the parameter values of moving axes. Manual feedrate override signal is effective for the feedrate of this parameter.

	#7	#6	#5	#4	#3	#2	#1	#0
7055					BCG			

[Input type] Parameter input
[Data type] Bit path

#3 BCG The time constant change function of bell-shaped acceleration/deceleration before interpolation is:
0: Disabled.
1: Enabled.

NOTE
When function for changing time constant of bell-shaped acceleration/deceleration before interpolation is enabled (bit 3 (BCG) of parameter No. 7055 is set to 1), be sure to specify acceleration rate of the reference axis (parameter No. 1660).
If acceleration rate of the reference axis is not specified, optimum acceleration rate is not obtained.

7066	Acceleration/deceleration reference speed for the time constant change function of bell-shaped acceleration/deceleration before interpolation

[Input type] Setting input
[Data type] Real path
[Unit of data] mm/min, inch/min, degree/min (input unit)
[Min. unit of data] Depend on the increment system of the reference axis
[Valid data range] Refer to the standard parameter setting table (C)
(When the increment system is IS-B, 0.0 to +999000.0)
This parameter is used when the time constant change function of bell-shaped acceleration/deceleration before interpolation is used.
If the setting is 0, bell-shaped acceleration/deceleration before interpolation is invalid.

4.48 PARAMETERS OF MANUAL HANDLE (1 OF 2)

	#7	#6	#5	#4	#3	#2	#1	#0
7100			MPX		HCL		THD	JHD

[Input type] Parameter input
[Data type] Bit path

#0 JHD Manual handle feed in JOG feed mode or incremental feed in the manual handle feed is:
0: Invalid.
1: Valid.

#1 THD In the TEACH IN JOG mode, the manual pulse generator is:
0: Disabled.
1: Enabled.

#3 HCL The clearing of handle interruption amount display by soft key [INTRPT CANCEL] operation is:
0: Disabled.
1: Enabled.

#5 MPX In Manual handle feed mode:
0 : Manual handle feed amount selection signals MP1 and MP2 <Gn019.4 and Gn019.5> for the 1st manual pulse generator are used as signals common to all manual pulse generators.
1 : Manual handle feed amount selection signals differ depending on the manual pulse generator as follow:
1st. Manual Pulse Generator : MP1, MP2 <Gn019.4, Gn019.5>
2nd. Manual Pulse Generator : MP21, MP22 <Gn087.0, Gn087.1>
3rd. Manual Pulse Generator : MP31, MP32 <Gn087.3, Gn087.4>
4th. Manual Pulse Generator : MP41, MP42 <Gn087.6, Gn087.7>

5th. Manual Pulse Generator : MP51, MP52 <Gn380.0, Gn380.1>

	#7	#6	#5	#4	#3	#2	#1	#0
7102							HNAx	HNGx

[Input type] Parameter input
[Data type] Bit axis

#0 HNGx Axis movement direction for rotation direction of manual pulse generator
0: Same in direction
1: Reverse in direction

#1 HNAx When manual handle feed direction inversion signal HDN <Gn0347.1> is set to "1", the direction of movement is set for each axis with respect to the rotation direction of the manual pulse generator.
0: The axis movement direction is the same as the direction in which the manual pulse generator rotates.
1: The axis movement direction is opposite to the direction in which the manual pulse generator rotates.
When the rotation direction is reversed by manual handle feed direction inversion signal HDN <Gn0347.1>, the rotation axis direction obtained by the setting of bit 0 (HNGx) of parameter No. 7102 is reversed.

	#7	#6	#5	#4	#3	#2	#1	#0
7103					HIT	HNT	RTH	

[Input type] Parameter input
[Data type] Bit path

#1 RTH By a reset or emergency stop, the amount of manual handle interruption is:
0: Not canceled.
1: Canceled.

#2 HNT When compared with the travel distance magnification selected by the manual handle feed travel distance selection signals (incremental feed signals) (MP1, MP2 <Gn019.4, Gn019.5>), the travel distance magnification for incremental feed/manual handle feed is:
0: Same.
1: 10 times greater.

#3 HIT When compared with the travel distance magnification selected by the manual handle feed travel distance selection signals (incremental feed signals (MP1, MP2 <Gn019.4, Gn019.5>), the travel distance magnification for manual handle interrupt is:
0: Same.
1: 10 times greater.

	#7	#6	#5	#4	#3	#2	#1	#0
7105		BHS	LBH				HDX	

[Input type] Parameter input
[Data type] Bit

NOTE
When at least one of these parameters is set, the power must be turned off before operation is continued.

#1 HDX Manual handle for I/O Link connection is:
0: Automatically set.
1: Manually set.

> **NOTE**
> In manual setting, parameters Nos. 12300 to 12304 and 12340 to 12344 must be set by manual to connect Manual Pulse Generator with I/O Link.

#5 LBH Manual handle feed for the I/O Link β*i* using the I/O link manual pulse generator is:
0: Disabled.
1: Enabled.

 # 6 BHS When the I/O Link β*i* is operated using the manual pulse generator on the host, whether to perform manual handle feed is:
0: Not automatically determined. (Whether to perform manual handle feed is set using parameters Nos. 12330 to 12337.)
1: Automatically performed.

	#7	#6	#5	#4	#3	#2	#1	#0
7106			HSR	MRO	MRI			

[Input type] Parameter input
[Data type] Bit path

#3 MRI Internal relay (the R signal) of PMC that uses it with input data in manual linear/circular interpolation:
0: R960 to R979 are used.
1: The address that bound it with the parameter No. 13541 is used.

> ⚠ **WARNING**
> Set an appropriate value to parameter No.13541 beforehand when you set 1 to this parameter.
> If an internal relay of the set address in parameter No.13541 is used by another usage, it may cause an unexpected machine behavior. Be careful enough that you must prevent the competition of the used internal relay.

#4 MRO Internal relay (the R signal) of PMC that uses it with output data in manual linear/circular interpolation:
0: R980 to R989 are used.
1: The address that bound it with the parameter No. 13542 is used

> ⚠ **WARNING**
> Set an appropriate value to parameter No.13542 beforehand when you set 1 to this parameter.
> If an internal relay of the set address in parameter No.13542 is used by another usage, it may cause an unexpected machine behavior. Be careful enough that you must prevent the competition of the used internal relay.

#5 HSR The direction of manual pulse generator rotation in the handle-synchronous feed function is:

0: Effective in both.

1: Effective in one direction. The effective direction is selected by selecting direction of manual handle rotation signal HDSR <Gn193.3>.

	#7	#6	#5	#4	#3	#2	#1	#0
7107							FJH	

[Input type] Parameter input
[Data type] Bit

#1 FJH When bit 0 (JHD) of parameter No. 7100 is 1, jog feed and manual handle feed in jog feed mode, or incremental feed and manual handle feed in manual handle feed are:

0: Superimposed. Acceleration type of manual handle feed is the type of feed (jog feed or manual rapid traverse) that operates immediately before.

1: Not superimposed. Priority can be placed on jog feed or incremental feed if they and manual handle feed are executed at the same time. Manual handle feed is disabled to all axes in the path while jog feed or incremental feed is being executed.
Acceleration type of manual handle feed is the type of jog feed.

NOTE
This parameter is effective for bit 1 (THD) of parameter No. 7100.

7113	Manual handle feed magnification m

[Input type] Parameter input
[Data type] Word path
[Valid data range] 1 to 2000
This parameter sets the magnification m when manual handle feed movement selection signals MP1 <Gn019.4> and MP2 <Gn019.5> are set to "0" and "1".

7114	Manual handle feed magnification n

[Input type] Parameter input
[Data type] Word path
[Valid data range] 1 to 2000
This parameter sets the magnification when manual handle feed movement selection signals MP1 <Gn019.4> and MP2 <Gn019.5> are set to "1".

7117	Allowable number of pulses that can be accumulated during manual handle feed

[Input type] Parameter input
[Data type] 2-word path
[Unit of data] Pulse
[Valid data range] 0 to 999999999
This parameter sets the number of pulses from the manual pulse generator that exceed the rapid traverse rate and can be accumulated without being discarded if manual handle feed faster than the rapid traverse rate is specified.

The amount of pulses exceeding the rapid traverse rate can be saved by CNC as B. And amount of pulses B will be exported as pulses C.

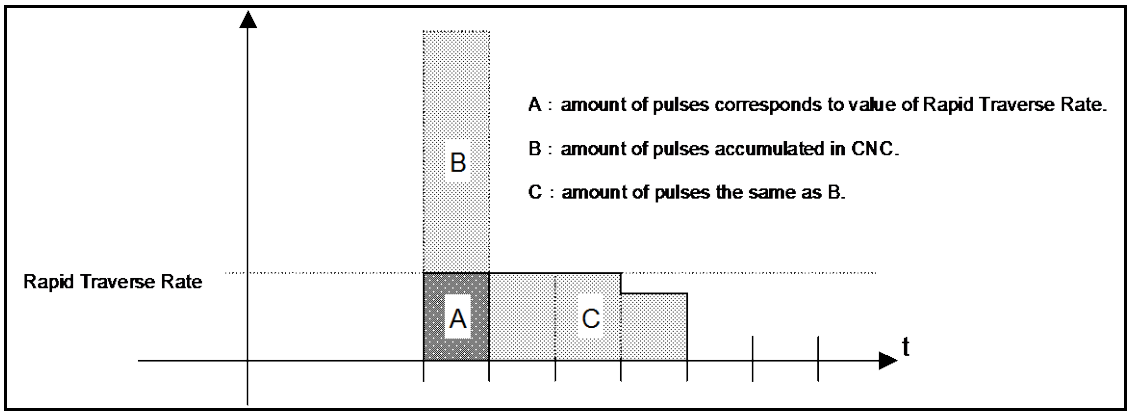

Fig. 4.48 (a) Amount of pulses exported by CNC in Manual Handle Feed

Amount of pulses B is calculated in 2 cases as following:

In case of
1) Parameter No.7117 = 0
The feedrate is clamped at the Rapid Traverse Rate and generated pulses exceeding the Rapid Traverse Rate are ignored (B=0)

In case of
2) Parameter No.7117 > 0
The feedrate is clamped as the Rapid Traverse Rate, but the pulses exceeding the Rapid Traverse Rate is not ignored. Amount of pulses accumulated in CNC is calculated as following. (Although stopping the rotation of manual pulse generator, if there is pulses accumulated in CNC, it will be exported and the tool will move as long as amount of it.)

Magnification set by manual handle feed amount selection signals MP1, MP2 <Gn019.4, Gn019.5> is m, value of parameter No.7117 is n.

n < m: Clamping is set performed at value of parameter No.7117.
n ≥ m: Amount A+B, showed in figure, which's value is multiple of m and small than n. As a result, clamping is performed as an integral multiple of the selected magnification.

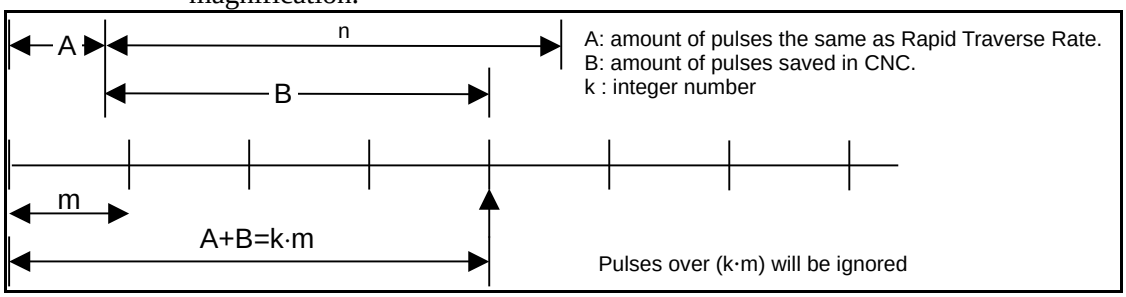

Fig. 4.48 (b) Amount of pulses exceeding the Rapid Traverse Rate (n ≥ m)

NOTE
Due to change of mode, clamping can be performed not as an integral multiple of the selected magnification.
The distance the tool moves may not match the graduations on the manual pulse generator.

7131	Manual handle feed magnification m2 / 2nd. manual pulse generator
7132	Manual handle feed magnification n2 / 2nd. manual pulse generator
7133	Manual handle feed magnification m3 / 3rd. manual pulse generator
7134	Manual handle feed magnification n3 / 3rd. manual pulse generator
7135	Manual handle feed magnification m4 / 4th. manual pulse generator
7136	Manual handle feed magnification n4 / 4th. manual pulse generator
7137	Manual handle feed magnification m5 / 5th. manual pulse generator
7138	Manual handle feed magnification n5 / 5th. manual pulse generator

[Input type] Parameter input
[Data type] Word path
[Valid data range] 1 to 2000
The ‘mx’ is selected when manual handle feed amount selection signals MPx1 = "0", MPx2 = "1". The ‘nx’ is selected when manual handle feed amount selection signals MPx1 ="1", MPx2 = "1".

7160	Approach handle clamp feedrate

[Input type] Parameter input
[Data type] Real path
[Unit of data] mm/min, inch/min, degree/min (machine unit)
[Min. unit of data] Depend on the increment system of the reference axis。
[Valid data range] Refer to standard parameter setting table (C)
Approach handle clamp feedrate is set.

7161	Guidance handle clamp feedrate

[Input type] Parameter input
[Data type] Real path
[Unit of data] mm/min, inch/min, degree/min (machine unit)
[Min. unit of data] Depend on the increment system of the reference axis。
[Valid data range] Refer to standard parameter setting table (C)
Guidance handle clamp feedrate is set.

4.49 PARAMETERS OF REFERENCE POINT WITH MECHANICAL STOPPER

	#7	#6	#5	#4	#3	#2	#1	#0
7180		NPO			AGR			

[Input type] Parameter input
[Data type] Bit path

#3 AGR Reference point setting with mechanical stopper and Angular axis control,
0: Can not be used in combination.
1: Can be used in combination.

#6 NPO In case of all following conditions are satisfied, when Reference point setting with mechanical stopper of Angular axis is completed,

0: an alarm PW0000,"POWER MUST BE OFF" occurs.
1: an alarm does not occurs.

Conditions

- Reference point setting with mechanical stopper and Angular axis control can be used in combination. (Bit 3 (AGR) of parameter No. 7180 is set to 1)
- angular axis control is valid. (Bit 1 (AAC) of parameter No. 8200 is set to 1)
- Absolute position detector is used in angular axis and perpendicular axis. (Bit 5 (APCx) of parameter No. 1815 is set to 1)
- Machine position and position on absolute position detector is Corresponding. (Bit 4 (APZx) of parameter No. 1815 is set to1)
- The manual reference position return is performed in the Cartesian coordinate. (Bit 2 (AZR) of parameter No. 8200 is set to 0)

7181	First withdrawal distance in reference point setting with mechanical stopper
7182	Second withdrawal distance in reference point setting with mechanical stopper

[Input type] Parameter input
[Data type] Real axis
[Unit of data] mm, inch, degree (machine unit)
[Min. unit of data] Depend on the increment system of the applied axis
[Valid data range] 9 digit of minimum unit of data (refer to standard parameter setting table (A))
(When the increment system is IS-B, -999999.999 to +999999.999)
This parameter sets the distance, by which an axis is withdrawn after the axis butts against the mechanical stopper in each cycle operation, (the distance from the mechanical stopper to the withdrawal point).

NOTE
Set the same direction as that set in bit 5 (ZMIx) of parameter No. 1006. Cycle operation cannot be started if the opposite direction is set.

7183	First butting feedrate in reference point setting with mechanical stopper
7184	Second butting feedrate in reference point setting with mechanical stopper or butting feedrate in reference point setting with mechanical stopper by Grid Method
7185	Withdrawal feedrate (common to the first and second butting operations) in reference point setting with mechanical stopper

[Input type] Parameter input
[Data type] Real axis
[Unit of data] mm/min, inch/min, degree/min (machine unit)
[Min. unit of data] Depend on the increment system of the applied axis
[Valid data range] Refer to the standard parameter setting table (C)
(When the increment system is IS-B, 0.0 to +999000.0)
This parameter sets a feedrate used to butt against the stopper along an axis in each cycle.

7186	Torque limit value in reference point setting with mechanical stopper

[Input type] Parameter input
[Data type] Byte axis

[Valid data range] 0 to 100
This parameter sets a torque limit value. A value from 0 to 100 corresponds to 0% to 39%. The torque limit value is obtained by multiplying the setting by 1/255. If more than 39% is to be set, use parameter No. 7187.

NOTE
When 0 is set in both this parameter and parameter No.7187, 100% is assumed.

7187	Torque limit value in reference point setting with mechanical stopper or reference point setting with mechanical stopper by Grid Method

[Input type] Parameter input
[Data type] Word axis
[Valid data range] 0 to 255
This parameter sets a torque limit value. A value from 0 to 255 corresponds to 0% to 100%.
If this parameter is set up in reference point setting with mechanical stopper, parameter No. 7186 is ignored. If this parameter is set to 0, the setting of parameter No. 7186 is valid.
However, in case of reference point setting with mechanical stopper by Grid Method, only this parameter is valid. If this parameter is set to 0, 100% of the rated torque is assumed even if parameter No.7186 is set up.

NOTE
In the case of reference point setting with mechanical stopper :
When 0 is set in this parameter, parameter No.7186 is used.
In the case of reference point setting with mechanical stopper by Grid Method :
When 0 is set in this parameter, 100% is assumed.

	#7	#6	#5	#4	#3	#2	#1	#0
7188	RNWx							GRSx

[Input type] Parameter input
[Data type] Bit axis

#0 GRSx Reference point setting with mechanical stopper by Grid Method is:
0: Not performed.
1: Performed.

#7 RNWx During reference point setting with mechanical stopper by Grid Method, until the sign of servo position deviation is inverted, the grid is
0: Not ignored.
1: Ignored.

4.50 PARAMETERS OF SOFTWARE OPERATOR'S PANEL

	#7	#6	#5	#4	#3	#2	#1	#0
7200		OP7	OP6	OP5	OP4	OP3	OP2	OP1

[Input type] Parameter input
[Data type] Bit path

NOTE
When at least one of these parameters is set, the power must be turned off before operation is continued.

#0 OP1 Mode selection on software operator's panel
0: Not performed
1: Performed

#1 OP2 JOG feed axis select and manual rapid traverse select on software operator's panel
0: Not performed
1: Performed

#2 OP3 Manual pulse generator's axis select and manual pulse generator's magnification select on software operator's panel
0: Not performed
1: Performed

#3 OP4 JOG feedrate override select, feedrate override select, and rapid traverse override select on software operator's panel
0: Not performed
1: Performed

#4 OP5 Optional block skip select, single block select, machine lock select, and dry run select on software operator's panel
0: Not performed
1: Performed

#5 OP6 Protect key on software operator's panel
0: Not performed
1: Performed

#6 OP7 Feed hold on software operator's panel
0: Not performed
1: Performed

	#7	#6	#5	#4	#3	#2	#1	#0
7201					CHS			JPC

[Input type] Parameter input
[Data type] Bit path

#0 JPC To the name of a general-purpose switch on the software operator's panel , the full-size character such as Chinese character
0: can not be set.
1: can be set.

#3 CHS To the name of a general-purpose switch on the software operator's panel , Simplified Chinese
0: can not be set.
1: can be set.

NOTE
When full-size character is valid(JPC=1) and also Simplified Chinese is valid(CHS=1), both full-size character and Simplified Chinese can be used at the same time.
Half-size katakana and some half-size letters are unavailable when Simplified Chinese is valid.

7210	**Jog-movement axis and its direction on software operator's panel "↑"**
7211	**Jog-movement axis and its direction on software operator's panel "↓"**
7212	**Jog-movement axis and its direction on software operator's panel "→"**
7213	**Jog-movement axis and its direction on software operator's panel "←"**
7214	**Jog-movement axis and its direction on software operator's panel "↙"**
7215	**Jog-movement axis and its direction on software operator's panel "↗"**
7216	**Jog-movement axis and its direction on software operator's panel "⤴"**
7217	**Jog-movement axis and its direction on software operator's panel "↱"**

[Input type] Parameter input
[Data type] Byte path
[Valid data range] 0 to 8
On software operator's panel, set a feed axis corresponding to an arrow key on the MDI panel when jog feed is performed.

Setting value	Feed axis and direction
0	Not moved
1	First axis, positive direction
2	First axis, negative direction
3	Second axis, positive direction
4	Second axis, negative direction
5	Third axis, positive direction
6	Third axis, negative direction
7	Fourth axis, positive direction
8	Fourth axis, negative direction

Arrow keys on MDI panel

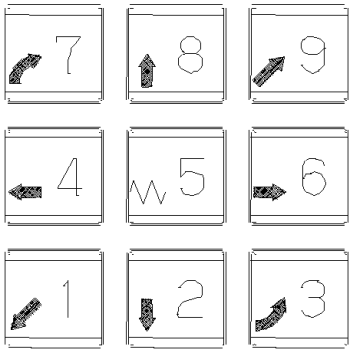

[Example] Under X, Y, and Z axis configuration, to set arrow keys to feed the axes in the direction specified as follows, set the parameters to the values given below. <8↑> to the positive direction of the Z axis, <2↓> to the negative direction of the Z axis, <6→> to the positive direction of the X axis <4←> to the negative direction of the X axis, <1↙> to the positive direction of the Y axis, <9↗> to the negative direction of the Y axis
Parameter No.7210 = 5 (Z axis, positive direction)
Parameter No.7211 = 6 (Z axis, negative direction)
Parameter No.7212 = 1 (X axis, positive direction)
Parameter No.7213 = 2 (X axis, negative direction)
Parameter No.7214 = 3 (Y axis, positive direction)
Parameter No.7215 = 4 (Y axis, negative direction)
Parameter No.7216 = 0 (Not used)
Parameter No.7217 = 0 (Not used)

7220	**Name of general-purpose switch 1 on software operator's panel (first character)**
to	**to**
7283	**Name of general-purpose switch 8 on software operator's panel (eighth character)**
7284	**Name of general-purpose switch 9 on software operator's panel (first character)**
to	**to**
7299	**Name of general-purpose switch 10 on software operator's panel (eighth character)**
7352	**Name of general-purpose switch 11 on software operator's panel (first character)**
to	**to**
7399	**Name of general-purpose switch 16 on software operator's panel (eighth character)**

[Input type] Parameter input
[Data type] Byte path
[Valid data range] -128 to 127

Each of these parameters sets the name of a general-purpose switch on the software operator's panel with character codes indicated in the character-code correspondence table. A switch name consists of up to eight characters.

Parameters Nos. 7220 to 7227 : Name of general-purpose switch 1
Parameters Nos. 7228 to 7235 : Name of general-purpose switch 2
Parameters Nos. 7236 to 7243 : Name of general-purpose switch 3
Parameters Nos. 7244 to 7251 : Name of general-purpose switch 4
Parameters Nos. 7252 to 7259 : Name of general-purpose switch 5
Parameters Nos. 7260 to 7267 : Name of general-purpose switch 6
Parameters Nos. 7268 to 7275 : Name of general-purpose switch 7
Parameters Nos. 7276 to 7283 : Name of general-purpose switch 8
Parameters Nos. 7284 to 7291 : Name of general-purpose switch 9
Parameters Nos. 7292 to 7299 : Name of general-purpose switch 10
Parameters Nos. 7352 to 7359 : Name of general-purpose switch 11
Parameters Nos. 7360 to 7367 : Name of general-purpose switch 12
Parameters Nos. 7368 to 7375 : Name of general-purpose switch 13
Parameters Nos. 7376 to 7383 : Name of general-purpose switch 14
Parameters Nos. 7384 to 7391 : Name of general-purpose switch 15
Parameters Nos. 7392 to 7399 : Name of general-purpose switch 16

Character code list

Character	Code	Character	Code	Character	Code
A	65	Q	81	6	54
B	66	R	82	7	55
C	67	S	83	8	56
D	68	T	84	9	57
E	69	U	85		32
F	70	V	86	!	33
G	71	W	87	“	34
H	72	X	88	#	35
I	73	Y	89	$	36
J	74	Z	90	%	37
K	75	0	48	&	38
L	76	1	49	‘	39
M	77	2	50	(	40
N	78	3	51	)	41
O	79	4	52	*	42
P	80	5	53	+	43

4.51 PARAMETERS OF PROGRAM RESTART (1 OF 2)

	#7	#6	#5	#4	#3	#2	#1	#0
7300	MOU	MOA	CCS					

[Input type] Parameter input
[Data type] Bit path

#5 CCS When the Cs contour control axis is used in the spindle mode or when the origin of the Cs contour control axis is not established, program restart is:
0: Disabled.
1: Enabled.

#6 MOA In program restart operation, before movement to a machining restart point:
0: The last M, S, T, and B codes are output.
1: All M codes and the last S, T, and B codes are output.
This parameter is enabled when the bit 7 (MOU) of parameter No.7300 is set to 1.

#7 MOU In program restart operation, before movement to a machining restart point after restart block search:
0: The M, S, T, and B codes are not output.
1: The last M, S, T, and B codes are output.

	#7	#6	#5	#4	#3	#2	#1	#0
7301					RPR		3DD	ROF

[Input type] Parameter input
[Data type] Bit path

#0 ROF When the coordinates for restarting are displayed on the program restart screen:
0: Tool length compensation (M series), tool position compensation (T series), cutter compensation (M series), and tool-nose radius compensation (T series) are considered.
1: Whether these compensation values are considered depends on the settings of bit 6 (DAL) of parameter No. 3104, bit 7 (DAC) of parameter No. 3104, and bit 1 (DAP) of parameter No. 3129 (parameters for specifying whether to consider each compensation value).

#1 3DD In program restart operation, when the restart block is in 3-dimensional coordinate conversion mode G68 (machining center system) or G68.1 (lathe system), the tool moves to the restart point along each axis:
0: According to the program coordinate system in dry run.
1: According to the workpiece coordinate system in dry run.
The restart coordinates and restart travel distance are also displayed in the coordinate system set in this parameter.

NOTE
The change made to this parameter in program restart operation is ignored.

#3 RPR When the search is completed in program restart or quick program restart, relative coordinate values are:
0: Not preset.
1: Preset by absolute coordinate values.

> **NOTE**
> This parameter is invalid in direct jump method of quick program restart.

7310	Ordinal number of an axis along which a movement is made in dry run after program restart

[Input type] Setting input
[Data type] Byte axis
[Valid data range] 1 to (Number of controlled axes)
This parameter sets the ordinal number of an axis along which a movement is made in dry run after the program is restarted.

> ⚠ **WARNING**
> 1 When there is two or more axes which has the same setting value in this parameter, the movement to the restart point is not executed in the second or more axis.
> 2 When the quick program restart is effective and bit 6 (SAV) of parameter No.11250 is set to 1, the movement to the restart point is not done in the axis which this parameter is set negative value(-1 to -(Number of controlled axes)).

> **NOTE**
> When this parameter is 0, alarm SR5020, "PARAMETER OF RESTART ERROR" or the warning "ORDINAL NUMBER ERROR (RESTART)" is displayed.

	#7	#6	#5	#4	#3	#2	#1	#0
7330								OMC

[Input type] Parameter input
[Data type] Bit path

#0 OMC While executing One-touch macro, restart block information on Quick program restart is :
0: Memorized.
1: Not memorized.

	#7	#6	#5	#4	#3	#2	#1	#0
7331							RPS	MPD

[Input type] Setting input
[Data type] Bit

#0 MPD In the multi path quick program restart function, the target path for a dry run movement after restart search is :
0: Specified by parameter No.7338.
1: Specified by path select signal HEAD<G0063.0> and HEAD2<G0062.7>.

NOTE
When MPD is set 1, please do the cycle start further after the axes moves to the machining restart position to make each path stand-by in the STRT state. In the multi path quick program restart, all paths in the same group should be these stand-by states for an automatic operation to be executed.

#1 RPS In moving to the restart point of quick program restart, when the single block operation is invalid, the axes
0: do not stop by the restart point.
1: stop in state of the single block by the restart point.

NOTE
When this parameter is set to 1, the axes stop once in state of the single block in starting after restart operation even if these don't move to the restart point.

	#7	#6	#5	#4	#3	#2	#1	#0
7333						QDS		

[Input type] Parameter input
[Data type] Bit

#2 QDS The quick program restart is :
0: Effective.
1: Not effective.

7335	The first O number of program not memorized in program restart memory

[Input type] Parameter input
[Data type] 2-word path
[Valid data range] 1 to 99999999
Set the first number of the program that is not memorized as restart block information in quick program restart function.

7336	The number of programs not memorized in program restart memory

[Input type] Parameter input
[Data type] 2-word path
[Valid data range] 1 to 32767
Set the number of the programs that is not memorized as restart block information in quick program restart function.

Example)
When parameter No.7335=7900 and No.7336=20 are set, the program of O7900-O7919 (20 programs) is treated as a program not memorized in the program restart memory. When these programs are executed as the main program, restart block information is not memorized.

7337	Group number of multi path quick program restart

[Input type] Setting input
[Data type] Byte path

[Valid data range] 0 to (Number of controlled paths)
Please set the group number to this parameter in the path which the multi path quick program restart is effective.

Example) In the four paths system, when path1-3 and path4 are made each group, please set this parameter as follows.

Path	Setting value of parameter No.7337
1	1
2	1
3	1
4	2 (or 0)

In this setting, the program restart is automatically executed in path2 and path3 set to the same group when the program restart is executed in path1.
Similarly, when the program restart is executed in path2 or path3, the program restart is automatically executed in two remaining paths.
When the program restart is executed in path4, the program restart is executed only in path4.

NOTE
If a value that is bigger than the number of controlled paths is set, warning "CAN NOT RESTART IN MULTI PATH MODE" is displayed at the search.

7338	Ordinal number of a path when moving by dry run in multi path quick program restart

[Input type] Setting input
[Data type] Byte path
[Valid data range] 0 to (Number of controlled paths)
Set the order of the path when moving to the restart point by a dry run after it begins to restart. When the same number is set, it moves at the same time. The path to which 0 is set does not wait for other paths, and the movement of a dry run and the machining program are executed.

Example) In the four paths system, to move a dry run in order in the first path2, in the second path1 and path3, at the end path4, set this parameter as follows.

Path	Setting value of parameter No.7338
1	2
2	1
3	2
4	3

NOTE
This parameter is effective at parameter MPD (No.7331#0) is set 0.

4.52 PARAMETERS OF POLYGON TURNING

	#7	#6	#5	#4	#3	#2	#1	#0
7600	PLZ							PFF

[Input type] Parameter input
[Data type] Bit path

#0 PFF In spindle-servo polygon turning, feed forward for the tool rotation axis (servo axis) during polygon turning is always:
0: Disabled.
1: Enabled.

#7 PLZ Reference position return based on a G28 command on the tool rotation axis for polygon turning is:
0: Performed in the same sequence as manual reference position return.
1: Performed by positioning using the rapid traverse rate.
The synchronous axis returns to the reference position in the same sequence as the manual reference position return when no return-to-reference position is performed after the power is turned on.

	#7	#6	#5	#4	#3	#2	#1	#0
7602			COF	HST	HSL	HDR	SNG	MNG

[Input type] Parameter input
[Data type] Bit path

#0 MNG The rotational direction of the master axis in the spindle-spindle polygon turning mode is:
0: Not reversed.
1: Reversed.

#1 SNG The rotational direction of the polygon synchronization axis in the spindle-spindle polygon turning mode is:
0: Not reversed.
1: Reversed.

#2 HDR When phase control is exercised in spindle-spindle polygon turning mode (bit 5 (COF) of parameter No. 7602 is set to 0), the phase shift direction is:
0: Not reversed for phase synchronization.
1: Reversed for phase synchronization.

> **NOTE**
> The rotation directions and phase shift directions of the master axis and polygon synchronization axis in the spindle-spindle polygon turning mode can be reversed with a programmed command. MNG, SNG, and HDR are used to reverse an actual direction relative to the programmed command.

#3 HSL When phase control is exercised in spindle-spindle polygon turning mode (bit 5 (COF) of parameter No. 7602 is set to 0), this parameter selects the spindle that is subject to a phase shift operation for phase synchronization:
0: The polygon synchronization axis is selected.
1: The master axis is selected.

> **NOTE**
> 1 Select an axis to which a phase shift command is applied.
> 2 Spindle operation for phase synchronization is performed with both spindles.

#4 HST When phase control is applied in spindle-spindle polygon turning mode (bit 5 (COF) of parameter No. 7602 is set to 0), and spindle-spindle polygon turning mode is specified:

0: Spindle-spindle polygon turning mode is entered with the current spindle speed maintained.

1: Spindle-spindle polygon turning mode is entered after the spindle is stopped.

> **NOTE**
> This parameter can be used, for example, when single-rotation signal detection cannot be guaranteed at an arbitrary feedrate because a separate detector is installed to detect the spindle single-rotation signal, as when a built-in spindle is used. (When bit 7 (RFCHK3) of parameter No. 4016 for the serial spindle is set to 1, together with this parameter, a single-rotation signal detection position in spindle-spindle polygon turning mode is guaranteed.)

#5 COF In spindle-spindle polygon turning mode, phase control is:

0: Enabled.

1: Disabled.

> **NOTE**
> When the use of phase control is not selected, the steady state is reached in a shorter time because phase synchronization control is not applied. Once steady rotation is achieved, however, polygon turning must be completed without changing the steady state. (If a spindle speed change including a spindle stop is made, a phase shift occurs, so that polygon turning is not performed normally.) Even when this parameter is set to 1, an R command (phase position command) in a block containing G51.2 is ignored ; no alarm is issued.

	#7	#6	#5	#4	#3	#2	#1	#0
7603	PST		RDG		PLROT	SBR	QDR	RPL

[Input type] Parameter input
[Data type] Bit path

#0 RPL Upon reset, polygon turning mode or spindle-spindle polygon turning mode is:

0: Released.

1: Not released.

NOTE
Notes on the polygon turning function
1 When an emergency stop occurs, the polygon turning mode is released regardless of whether this parameter is set to 0 or 1.
2 When any of the following PS alarms is issued, the polygon turning mode is released regardless of whether this parameter is set to 0 or 1:
- PS0217, "DUPLICATE G51.2(COMMANDS)"
- PS0219, "COMMAND G51.2/G50.2 INDEPENDENTLY"
- PS0220, "ILLEGAL COMMAND IN SYNCHR-MODE"
- PS0221, "ILLEGAL COMMAND IN SYNCHR-MODE"
- PS5018, "POLYGON SPINDLE SPEED ERROR"

3 If an SV alarm is issued, the polygon turning mode is released regardless of whether this parameter is set to 0 or 1.
4 When this parameter is set to 1, polygon turning modal information is kept regardless of whether bit 6 (CLR) of parameter No. 3402 is set to 0 or 1.
5 Set bit 4 (C20) of parameter No. 3408 to 0.

#1 QDR The rotational direction of the polygon synchronization axis:
0: Depends on the sign (+/-) of a specified value for Q.
1: Depends on the rotational direction of the first spindle.
If a negative value is specified for Q when QDR = 1, the alarm PS0218, “NOT FOUND P/Q COMMAND” is issued.

#2 SBR For spindle synchronization, speed ratio control is:
0: Not used.
1: Used.

#3 PLROT The machine coordinates of a tool rotation axis for polygon turning are:
0: Rounded by the setting in parameter No.7620.
1: Rounded by 360° (or the setting in parameter No. 1260 when bit 0 (ROA) of parameter No. 1008 is set to 1).

#5 RDG On the diagnosis screen No. 476, for spindle-spindle polygon phase command value (R), displays:
0: The specified value (in the increment system for the rotation axis).
1: The actual number of shift pulses.

NOTE
A phase command is specified in address R, in units of degrees. For control, the actual shift amount is converted to a number of pulses according to the conversion formula: 360 degrees = 4096 pulses. This parameter switches the display of a specified value to that of a converted value.

#7 PST The polygon spindle stop signal *PLSST <Gn038.0> is:
0: Not used.
1: Used.

	#7	#6	#5	#4	#3	#2	#1	#0
7604	PCG							

[Input type] Parameter input
[Data type] Bit path

NOTE
When this parameter is set, the power must be turned off before operation is continued.

#7 PCG If both the spindle-spindle polygon turning option and the polygon turning option are specified:
0: Spindle-spindle polygon turning is performed.
1: Either of the options is enabled depending on the setting of parameter No. 7605.

7605	Polygon turning type selection

[Input type] Parameter input
[Data type] Byte path
[Valid data range] 0, 1
If both the spindle-spindle polygon turning option and the polygon turning option are specified, this parameter can be used to select one of the options for use. A type of polygon turning is selected according to the setting as follows:
0: Polygon machining with two spindles
1: Polygon turning
If a value other than 0 or 1 is specified, 0 is assumed.

NOTE
Before re-setting this parameter, using the PMC window function or the G10 command, cancel polygon turning (G50.2). In addition, when re-setting this parameter, using the PMC window function, use the M code not involving buffering.

7610	Control axis number of tool rotation axis for polygon turning

NOTE
When this parameter is set, the power must be turned off before operation is continued.

[Input type] Parameter input
[Data type] Byte path
[Valid data range] 1 to number of controlled axes
This parameter sets the control axis number of a rotation tool axis used for polygon turning.
However, when a G51.2 command is executed by setting 0 in this parameter, operation stops with the alarm PS0314, “ILLEGAL SETTING OF POLYGONAL AXIS”.

7620	Movement of tool rotation axis per revolution for polygon turning

NOTE
When this parameter is set, the power must be turned off before operation is continued.

[Input type] Parameter input
[Data type] Real path
[Unit of data] Degree
[Min. unit of data] Depend on the increment system of the applied axis
[Valid data range] 0 or positive 9 digit of minimum unit of data (refer to the standard parameter setting table (B))
(When the increment system is IS-B, 0.0 to +999999.999)
This parameter sets the movement of a tool rotation axis per revolution.

7621	Maximum allowable speed for the tool rotation axis for polygon turning

[Input type] Parameter input
[Data type] 2-word path
[Unit of data] min^{-1}
[Valid data range] 0 or positive 9 digit of minimum unit of data (refer to the standard parameter setting table (B))
(When the increment system is IS-B, 0.0 to +999999.999)
This parameter sets the maximum allowable speed of the tool rotation axis.

NOTE
If the speed of the tool rotation axis exceeds the set maximum allowable speed during polygon turning, the synchronization between the spindle and tool rotation axis is lost, and operation stops with alarm PS5018, “POLYGON SPINDLE SPEED ERROR”.

7631	Allowable spindle speed deviation level in spindle-spindle polygon turning

[Input type] Parameter input
[Data type] Word path
[Unit of data] min^{-1}
[Valid data range] 0 to 32767
This parameter sets the allowable level of deviation between the actual speed and specified speed of each spindle in spindle-spindle polygon turning. The value set with this parameter is used for both the master axis and polygon synchronization axis.
When 0 is set in this parameter, the specification of 8 [min^{-1}] is assumed.

7632	Steady state confirmation time duration in spindle polygon turning

[Input type] Parameter input
[Data type] Word path
[Unit of data] msec
[Valid data range] 0 to 32767
This parameter sets the duration required to confirm that both spindles have reached their specified speeds in spindle-spindle polygon turning.

If the state where the speed of each spindle is within the range set with parameter No.7631, and has lasted at least for the duration specified with parameter No.7632, the spindle polygon speed arrival signal PSAR <Fn063.2> is set to “1”.
When 0 is set in this parameter, the specification of 64 [msec] is assumed.

7635	Ratio of slave spindle speed in spindle synchronization control

[Input type] Parameter input
[Data type] Byte spindle
[Valid data range] 0 to 9
This parameter sets the ratio of master spindle speed: slave spindle speed (1:n) in spindle synchronization control.

NOTE
This parameter is valid only when bit 2 (SBR) of parameter No. 7603 is set to 1.

7636	Maximum allowable slave spindle speed in spindle synchronization control

[Input type] Parameter input
[Data type] Word spindle
[Unit of data] min^{-1}
[Valid data range] 0 to 19999
The speed of the slave spindle under speed ratio control in spindle synchronization control is clamped so that the speed does not exceed the value set in this parameter.

NOTE
1 This parameter is valid only when bit 2 (SBR) of parameter No. 7603 is set to 1.
2 When speed ratio control in spindle synchronization control is used, be sure to set this parameter.
3 When 0 is set, the speed is clamped to 0, disabling rotation under spindle synchronization.

7640	Master axis in spindle-spindle polygon turning

[Input type] Parameter input
[Data type] Byte path
[Valid data range] 0 to Maximum number of controlled axes (Within a path)
This parameter sets the master axis in spindle-spindle polygon turning.

NOTE
1 Spindle-spindle polygon turning is enabled only for serial spindles.
2 When any one of parameters No. 7642 and 7643 is set to 0 and any one of parameters No. 7640 and 7641 is set to 0, polygon turning is performed using the first spindle (master axis) and the second spindle (polygon synchronous axis) in the path to which the parameter belongs.

NOTE
3 When a spindle other than the first serial spindle is used as a master axis, Enable the multi-spindle control (bit 3 (MSP) of parameter No.8133 is 1)to specify an S command for the master axis.
4 When the PMC window function or G10 command is used to rewrite this parameter, rewrite this parameter before the block specifying the spindle-spindle polygon command G51.2. When the PMC window function is used to rewrite this parameter in the block immediately before G51.2, specify the rewriting of this parameter by using an M code (parameter No. 3411 and up) without buffering.
5 When this parameter is used, set the parameters No.7642 and No.7643 to 0.

7641	Polygon synchronous axis in spindle-spindle polygon turning

[Input type] Parameter input
[Data type] Byte path
[Valid data range] 0 to Maximum number of controlled axes (Within a path)
This parameter sets the polygon synchronous (slave) axis in spindle-spindle polygon turning.

NOTE
1 Spindle-spindle polygon turning is enabled only for serial spindles.
2 When any one of parameters No. 7642 and No. 7643 is set to 0 and any one of parameter No. 7640 and No. 7641 is set to 0, polygon turning is performed using the first spindle (master axis) and the second spindle (polygon synchronous axis) in the path to which the parameter belongs.
3 When a spindle other than the first serial spindle is used as a master axis, Enable the multi-spindle control (bit 3 (MSP) of parameter No.8133 is 1)to specify an S command for the master axis.
4 When the PMC window function or G10 command is used to rewrite this parameter, rewrite this parameter before the block specifying the spindle-spindle polygon command G51.2. When the PMC window function is used to rewrite this parameter in the block immediately before G51.2, specify the rewriting of this parameter by using an M code (parameter No. 3411 and up) without buffering.
5 When this parameter is used, set the parameters No.7642 and No.7643 to 0.

7642	Master axis in spindle-spindle polygon turning (spindle number common to the system)

[Input type] Parameter input
[Data type] Byte path
[Valid data range] 0 to Maximum number of controlled axes (Common to the system)
This parameter sets the master axis in spindle-spindle polygon turning.

NOTE
1 Spindle-spindle polygon turning is enabled only for serial spindles.
2 This parameter is invalid if either parameter No. 7642 or No.7643 is set to 0. In this case, the settings of parameter No. 7640 and No.7641 are valid.
3 When a spindle other than the first serial spindle is used as a master axis, Enable the multi-spindle control (bit 3 (MSP) of parameter No.8133 is 1)to specify an S command for the master axis.
4 When the PMC window function or G10 command is used to rewrite this parameter, rewrite this parameter before the block specifying the spindle-spindle polygon command G51.2. When the PMC window function is used to rewrite this parameter in the block immediately before G51.2, specify the rewriting of this parameter by using an M code (parameter No. 3411 and up) without buffering.
5 A spindle number common to the system is to be set in this parameter. When using this parameter, set 0 in parameter No. 7640 and No. 7641.

7643	Polygon synchronous axis in spindle-spindle polygon turning (spindle number common to the system)

[Input type] Parameter input
[Data type] Byte path
[Valid data range] 0 to Maximum number of controlled axes (Common to the system)
This parameter sets the polygon synchronous (slave) axis in spindle-spindle polygon turning.

NOTE
1 Spindle-spindle polygon turning is enabled only for serial spindles.
2 This parameter is invalid if either parameter No. 7642 or No.7643 is set to 0. In this case, the settings of parameter No. 7640 and No.7641 are valid.
3 When a spindle other than the first serial spindle is used as a master axis, Enable the multi-spindle control (bit 3 (MSP) of parameter No.8133 is 1)to specify an S command for the master axis.
4 When the PMC window function or G10 command is used to rewrite this parameter, rewrite this parameter before the block specifying the spindle-spindle polygon command G51.2. When the PMC window function is used to rewrite this parameter in the block immediately before G51.2, specify the rewriting of this parameter by using an M code (parameter No. 3411 and up) without buffering.
5 A spindle number common to the system is to be set in this parameter. When using this parameter, set 0 in parameter No. 7640 and No. 7641.

4.53 PARAMETERS OF ELECTRONIC GEAR BOX (EGB)

	#7	#6	#5	#4	#3	#2	#1	#0
7700						HDR		HBR

[Input type] Parameter input
[Data type] Bit path

#0 HBR When the electronic gear box (EGB) function is used, performing a reset:
0: Cancels the synchronization mode (G81 or G81.5).
1: Does not cancel the synchronization mode. The mode is canceled only by the G80 or G80.5 command.

> **NOTE**
> To perform U-axis control, set this parameter to 1 so that performing a reset does not cancel the synchronization mode.

#2 HDR Direction of helical gear compensation (usually, set 1.)
[Example]
To cut a left-twisted helical gear when the direction of rotation about the C-axis is the negative (-) direction:
0: Set a negative (-) value in P.
1: Set a positive (+) value in P.

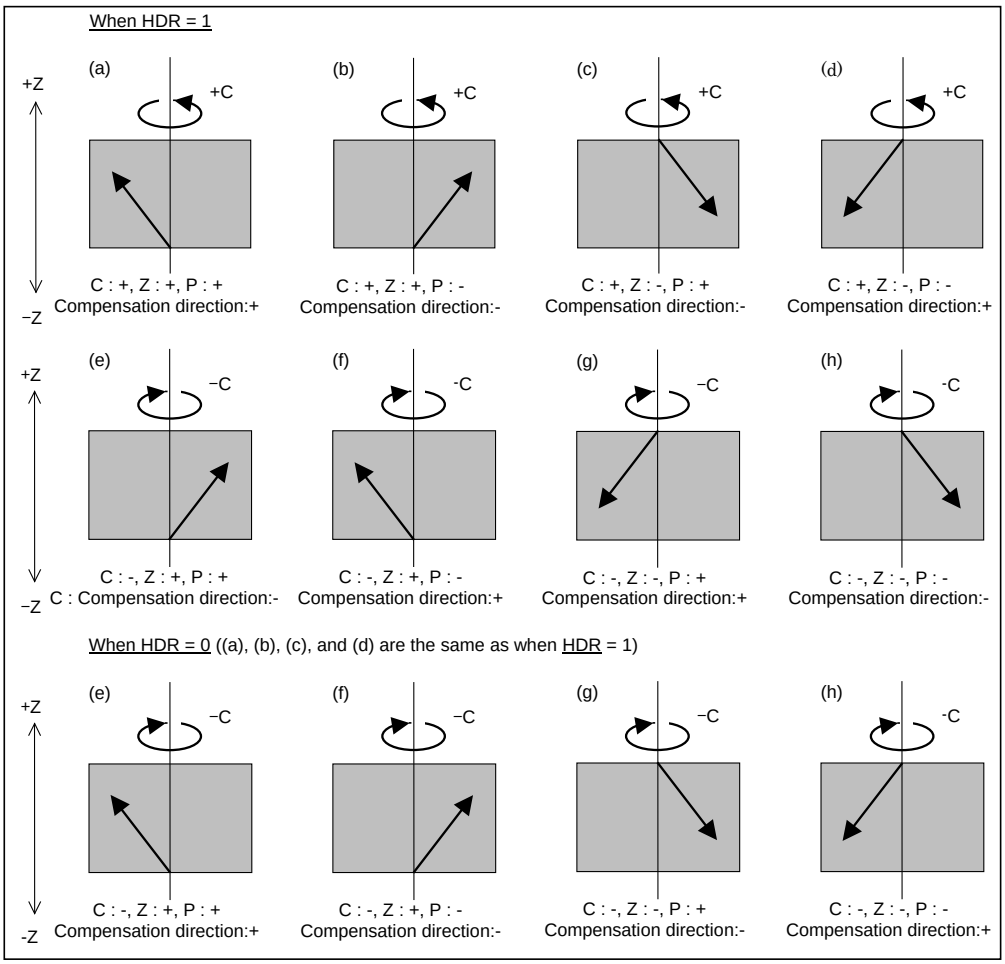

	#7	#6	#5	#4	#3	#2	#1	#0
7701					LZR			

[Input type] Parameter input
[Data type] Bit path

#3 LZR When L (number of hob threads) = 0 is specified at the start of EGB synchronization (G81) or flexible synchronization control (G81):
0: Synchronization is started, assuming that L = 1 is specified.
1: Synchronization is not started, assuming that L = 0 is specified. However, helical gear compensation is performed.

	#7	#6	#5	#4	#3	#2	#1	#0
7702	PHD	PHS			ART		UAX	TDP

[Input type] Parameter input
[Data type] Bit path

#0 TDP The specifiable number of teeth, T, of the electronic gear box (G81) or flexible synchronization control (G81) is:
0: 1 to 5000
1: 0.1 to 500.0 (1/10 of a specified value)

> **NOTE**
> In either case, a value from 1 to 5000 can be specified.

#1 UAX U-axis control is:
0: Not performed.
1: Performed.

#3 ART The retract function executed when an alarm is issued is:
0: Disabled.
1: Enabled.
When an alarm is issued, a retract operation is performed with a set feedrate and travel distance (parameters Nos. 7740 and 7741).

> **NOTE**
> If a servo alarm is issued for other than the axis along which a retract operation is performed, the servo activating current is maintained until the retract operation is completed.

#6 PHS When the G81/G80 block contains no R command:
0: Acceleration/deceleration is not performed at the start or cancellation of EGB synchronization.
1: Acceleration/deceleration is performed at the start or cancellation of EGB synchronization. After acceleration at the start of synchronization, phase synchronization is automatically performed.

#7 PHD The direction of movement for automatic phase synchronization is:
0: Positive (+).
1: Negative (-).

	#7	#6	#5	#4	#3	#2	#1	#0
7703						ARO	ARE	ERV

[Input type] Parameter input
[Data type] Bit path

#0 ERV During EGB synchronization (G81), feed per revolution is performed for:
0: Feedback pulses.
1: Pulses converted to the speed for the workpiece axis.

#1 ARE In the retract function by an alarm, the tool retracts:
0: During the function mode (refer to Note.2) or automatic operation (automatic operation signal OP <Fn000.7> = “1”).
1: During the function mode (refer to Note.2).

#2 ARO In the retract function by an alarm, the tool retracts :
0: During the function mode (refer to Note.2).
1: During the function mode (refer to Note.2) and automatic operation (automatic operation signal OP = “1”).

NOTE
This parameter is valid when bit 1 (ARE) of parameter No. 7703 is set to 1.

The following table lists the parameter settings and corresponding operation.

ARE	ARO	Operation
1	0	During function mode
1	1	During function mode and automatic operation
0	0	During function mode or automatic operation
0	1	

NOTE
1 Parameters ARE and ARO are valid when bit 3 (ART) of parameter No. 7702 is set to 1 (when the retract function executed when an alarm is issued).
2 The function mode described in the parameter ARE and ARO shows that the following functions are activated.
- Electronic gear box(EGB)
- Flexible synchronous control

	#7	#6	#5	#4	#3	#2	#1	#0
7704					UOC			ACR

[Input type] Parameter input
[Data type] Bit path

#0 ACR In the AI contour control mode, general purpose retract operation is:
0: Not Used.
1: Used.

#3 UOC When the U-axis control mode is released, the tool is:
0: Not moved along the U-axis to the position where the reference counter is 0.
1: Moved along the U-axis to the position where the reference counter is 0.

Use this parameter to change the U-axis mode.

NOTE
Before changing the mode, be sure to perform reference position return along the U-axis and spindle orientation to change the mode at the same position (origin along the U-axis).

	#7	#6	#5	#4	#3	#2	#1	#0
7705								SEGs

[Input type] Parameter input
[Data type] Bit spindle

#0 SEGs Simple spindle EGB function is:
0: Not used.
1: Used.
Set 1 for a serial spindle used as the slave axis for the simple spindle EGB function,.

7709	Axial feed axis number for helical gear compensation

[Input type] Parameter input
[Data type] 2-word path
[Valid data range] 0 to Number of controlled axes
Specify which helical gear axial feed axis to use.

NOTE
If this parameter is 0 or a value out of the valid setting range, the Z-axis is assumed to be the axial feed axis.
If there are two or more Z-axes used in parallel, specify which axis is to be used as the axial feed axis, using this parameter.

7710	Axis number of an axis to be synchronized using the method of command specification for a hobbing machine

[Input type] Parameter input
[Data type] 2-word path
[Valid data range] 0 to Number of controlled axes
When there are several groups of axes to be synchronized (the axes for which bit 0 (SYNMOD) of parameter No. 2011 is set to 1), an axis for which to start synchronization is specified using the following command (for a hobbing machine):
G81 T t L ± *l* ;
t: Spindle speed ($1 \le t \le 5000$)
l: Number of synchronized axis rotations ($-250 \le l \le 250$)
Synchronization between the spindle and a specified axis is established with the ratio of ±*l* rotations about the synchronized axis to t spindle rotations.
t and *l* correspond to the number of teeth and the number of threads on the hobbing machine, respectively.
Above command is issued without setting this parameter when there are several groups of axes to be synchronized, the alarm PS1593, “EGB PARAMETER SETTING ERROR” is issued.

NOTE
1 Set this parameter when there are two or more groups of servo and spindle EGBs in the same path. Set 0 when there is one group of EGBs in the same path.
2 When there are two or more groups of servo and spindle EGBs in the same path, setting a value outside the valid data range in this parameter causes alarm PS1593 to be issued.
3 For Series 16*i*, when a value outside the valid data range is set in this parameter, the fourth axis is assumed according to the specifications.
4 The setting of this parameter becomes valid after the power is turned off then back on.

	#7	#6	#5	#4	#3	#2	#1	#0
7731	HAD	EPA	HBR		ECN			EFX

[Input type] Parameter input
[Data type] Bit path

#0 EFX As the EGB command or hob command by flexible synchronization control:
0: G80 and G81 are used.
1: G80.4 and G81.4 are used.

NOTE
When this parameter is set to 0, no canned cycle for drilling can be used.

#3 ECN When the automatic phase synchronization function for the electronic gear box is disabled, during EGB synchronization, the G81 or G81.5 command:
0: Cannot be issued again. (The alarm PS1595, “ILL-COMMAND IN EGB MODE” is issued.)
1: Can be issued again.

#5 HBR In EGB synchronization start command G81.4 or flexible synchronization control start command G81.4, the number of teeth is:
0: Specified in T.
1: Specified in R.

NOTE
This parameter is valid when bit 0 (EFX) of parameter No. 7731 is set to 1.

#6 EPA Automatic phase synchronization for the electronic gear box or automatic phase synchronization for flexible synchronization control by hob command is performed in such a way that:
0: The machine coordinate 0 of the slave axis is aligned to the position of the master axis one-rotation signal.
1: The position of the slave axis at synchronization start is aligned to the position of the master axis one-rotation signal. (Specification of Series 16*i*)

#7 HAD In electronic gear box, the timing for reflecting helical gear compensation and travel distance of automatic phase synchronization to absolute coordinates is:
0: When synchronization is canceled.
1: During helical gear compensation and automatic phase synchronization.

7740	Feedrate during retraction

[Input type] Parameter input
[Data type] Real axis
[Unit of data] mm/min, inch/min, degree/min (machine unit)
[Min. unit of data] Depend on the increment system of the applied axis
[Valid data range] Refer to the standard parameter setting table (C)
(When the increment system is IS-B, 0.0 to +999000.0)
This parameter sets the feedrate during retraction for each axis.

7741	Retract amount

[Input type] Parameter input
[Data type] Real axis
[Unit of data] mm, inch, degree (machine unit)
[Min. unit of data] Depend on the increment system of the applied axis
[Valid data range] 9 digit of minimum unit of data (refer to standard parameter setting table (A))
(When the increment system is IS-B, -999999.999 to +999999.999)
This parameter sets the retract amount for each axis.

NOTE
The tool moves (is retracted) by the specified amount regardless of whether diameter or radius programming is specified.

7745	Time constant for linear acceleration/deceleration in retract operation for each axis

[Input type] Parameter input
[Data type] word axis
[Unit of data] msec
[Valid data range] 0 to 1000
This parameter sets an acceleration rate for linear acceleration/deceleration in retract operation based on the general-purpose retract function. Set a time (Time constant) used to reach the federate set in parameter No.7740 for each axis.

NOTE
This parameter is valid when bit 0 (ACR) of parameter No. 7704 is set to 1 to perform a retract operation in the AI contour control mode.

7772	Number of position detector pulses per rotation about the tool axis (EGB) Number of position detector pulses per rotation about the spindle (U-axis Control)

[Input type] Parameter input
[Data type] 2-word path
[Unit of data] Detection unit
[Valid data range] 1 to 999999999
EGB:
This parameter sets the number of pulses per rotation about the tool axis (on the spindle side), for the position detector.

For an A/B phase detector, set this parameter with four pulses equaling one A/B phase cycle.

U-axis Control:
This parameter sets the number of pulses per rotation about the spindle (master axis), for the position detector.
For an A/B phase detector, set this parameter with four pulses equaling one A/B phase cycle.

7773	Number of position detector pulses per rotation about the workpiece axis (EGB) Amount of travel by the U-axis motor per rotation about the spindle (U-axis Control)

[Input type] Parameter input
[Data type] 2-word path
[Unit of data] Detection unit
[Valid data range] 1 to 999999999
EGB:
This parameter sets the number of pulses per rotation about the workpiece axis (on the slave side), for the position detector.
Set the number of pulses output by the detection unit.
Set parameters Nos. 7772 and 7773 when using the G81 EGB synchronization command.

[Example 1] When the EGB master axis is the spindle and the EGB slave axis is the C-axis

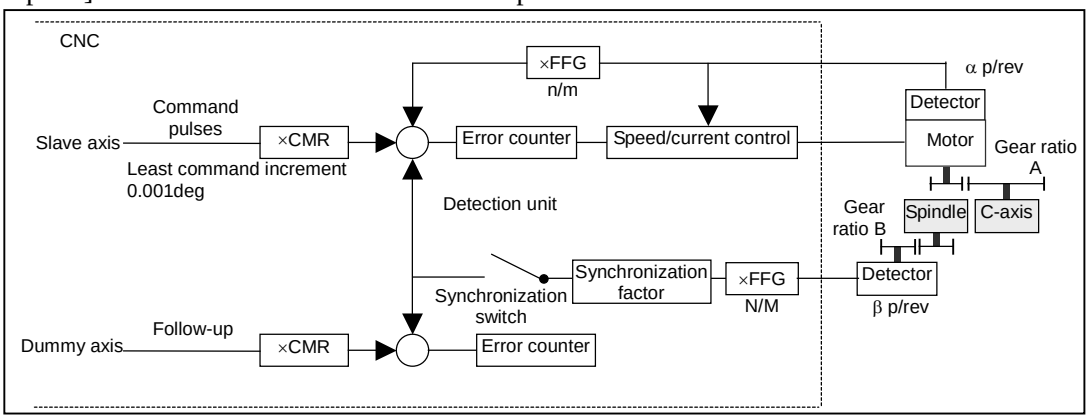

Gear ratio of the spindle to the detector B:
1/1 (The spindle and detector are directly connected to each other.)
Number of detector pulses per spindle rotation β: 80,000 pulses/rev
(Calculated for four pulses for one A/B phase cycle)
FFG N/M of the EGB dummy axis: 1/1
Gear ratio of the C-axis A: 1/36 (One rotation about the C-axis to 36 motor rotations)
Number of detector pulses per C-axis rotation α: 1,000,000 pulses/rev
C-axis CMR: 1
C-axis FFG n/m: 1/100

In this case, the number of pulses per spindle rotation is:
$80000 \times 1/1 = 80000$
Therefore, set 80000 for parameter No. 7772.
The number of pulses per C-axis rotation in the detection unit is:
$1000000 \div 1/36 \times 1/100 = 360000$
Therefore, set 360000 for parameter No. 7773.

[Example 2] When the gear ratio of the spindle to the detector B is 2/3 for the above example (When the detector rotates twice for three spindle rotations)
In this case, the number of pulses per spindle rotation is:

$$80000 \times \frac{2}{3} = \frac{160000}{3}$$

160000 cannot be divided by 3 without a remainder. In this case, change the setting of parameter No. 7773 so that the ratio of the settings of parameters Nos. 7772 and 7773 indicates the value you want to set.

$$\frac{\text{No.7772}}{\text{No.7773}} = \frac{160000/3}{360000} = \frac{160000}{360000 \times 3} = \frac{160000}{1080000}$$

Therefore, set 160000 for parameter No. 7772 and 1080000 for parameter No. 7773.
As described above, all the settings of parameters Nos. 7772 and 7773 have to do is to indicate the ratio correctly. So, you can reduce the fraction indicated by the settings. For example, you may set 16 for parameter No. 7772 and 108 for parameter No. 7773 for this case.

U-axis Control:
This parameter sets the amount of travel by the U-axis motor per rotation about the spindle in detection units.
When the EGB synchronization mode selection signal becomes 1, synchronization between the spindle and U-axis starts with the synchronization coefficient specified by parameters Nos. 7772 and 7773.

7776	Feedrate during automatic phase synchronization for the workpiece axis

[Input type] Parameter input
[Data type] Real path
[Unit of data] deg/min
[Min. unit of data] Depend on the increment system of the applied axis
[Valid data range] Refer to the standard parameter setting table (C)
(When the increment system is IS-B, 0.0 to +999000.0)
This parameter sets the feedrate during automatic phase synchronization for the workpiece axis.
When this parameter is set to 0, the rapid traverse rate (parameter No. 1420) is used as the feedrate during automatic phase synchronization.

7777	Angle shifted from the spindle position (one-rotation signal position) which the workpiece axis uses as the reference of phase synchronization

[Input type] Parameter input
[Data type] Real path
[Unit of data] deg
[Min. unit of data] Depend on the increment system of the applied axis
[Valid data range] 0.000 to 360.000 (when the increment system is IS-B)
This parameter sets the angle shifted from the spindle position (one-rotation signal position) which the workpiece axis uses as the reference of phase synchronization.

7778	Acceleration for acceleration/deceleration for the workpiece axis in EGB or acceleration of slave axis in synchronization start/cancellation

[Input type] Parameter input
[Data type] Real axis
[Unit of data] deg/sec^2
[Min. unit of data] Depend on the increment system of the applied axis

[Valid data range] Refer to the standard parameter setting table (D)
(For a millimeter machine, 0.0 to +100000.0, for an inch machine, 0.0 to +10000.0)
This parameter sets an acceleration for acceleration/deceleration for the workpiece axis in EGB.
When variable acceleration function in automatic phase synchronization for flexible synchronization control is valid (PAV(No.5694#2)=1), this parameter sets acceleration of slave axis in synchronization start/cancellation. If 0 or less is set to this parameter, variable acceleration function in automatic phase synchronization for flexible synchronization control is disabled.

NOTE
1 In the Series 16*i*, acceleration/deceleration for automatic phase matching of EGB is set by specifying a feedrate and a time constant in parameters Nos. 2135 and 2136 (Nos. 4384 and 4385 in the case of spindle EGB) separately; in the Series 30*i*, acceleration/deceleration is directly set in parameter No. 7778.
2 If this parameter is set to 0, specifying G81 results in an alarm PS1598, “EGB AUTO PHASE PARAMETER SETTING ERROR”.

7782	Number of pulses from the position detector per EGB or flexible synchronization control master axis rotation

[Input type] Parameter input
[Data type] 2-word axis
[Unit of data] Detection unit
[Valid data range] 1 to 999999999
For a slave axis, set the number of pulses generated from the position detector per EGB or flexible synchronization control master axis rotation.
For an A/B phase detector, set this parameter with four pulses equaling one A/B phase cycle.

NOTE
In flexible synchronization control, this parameter is enabled when hob command is specified.

7783	Number of pulses from the position detector per EGB or flexible synchronization control slave axis rotation

[Input type] Parameter input
[Data type] 2-word axis
[Unit of data] Detection unit
[Valid data range] 1 to 999999999
For a slave axis, set the number of pulses generated from the position detector per EGB or flexible synchronization control slave axis rotation.
Set the number of pulses output by the detection unit.
Set this parameter when using the G81.5 EGB synchronization command.
The method for setting parameters Nos. 7782 and 7783 is the same as for parameters Nos. 7772 and 7773. For the method, see the description of parameters Nos. 7772 and 7773.

The ratio of the number of pulses for the master slave to that of pulses for the slave axis may be valid, but the settings of the parameters may not indicate the actual number of pulses. For example, the number of pulses may not be able to be divided without a remainder for the reason of the master and slave axis gear ratios as described in example 2. In this case, the following methods cannot be used for the G81.5 command:

G81.5 T_ C_ ; When the speed is specified for the master axis and the travel distance is specified for the slave axis

G81.5 P_ C0 L_ ; When the number of pulses is specified for the master axis and the speed is specified for the slave axis

NOTE
In flexible synchronization control, this parameter is enabled when hob command is specified.

7784	Numerator of a signal-based servo EGB synchronization ratio

[Input type] Parameter input
[Data type] 2-word axis
[Valid data range] -999999999 to 999999999
Set the numerator of a synchronization ratio for signal-based servo EGB synchronization.

The sign of this parameter specifies the direction in which the slave axis rotates.
When the sign is plus, the slave axis rotates in the positive direction (+ direction).
When the sign is minus, the slave axis rotates in the negative direction (- direction).

7785	Denominator of a signal-based servo EGB synchronization ratio

[Input type] Parameter input
[Data type] 2-word axis
[Valid data range] -999999999 to 999999999
Set the denominator of a synchronization ratio for signal-based servo EGB synchronization.

	#7	#6	#5	#4	#3	#2	#1	#0
7786							UFF	SVE

[Input type] Parameter input
[Data type] Bit

NOTE
When this parameter is set, the power must be turned off before operation is continued.

#0 SVE Signal-based servo EGB synchronization is:
0: Disabled (servo and spindle synchronization is enabled).
1: Enabled (servo and spindle synchronization is disabled).

#1 UFF During U-axis synchronization, a interpolation command to between the U-axis and the other axes is
0: not available.
1: available.

NOTE
Set this parameter to 1, when a command like this is specified.
Example) Axis Configuration: U(U-axis) Z(not U-axis)
G01 U_ Z_ F_;

7787	M code for waiting for completion of EGB automatic phase synchronization

[Input type] Parameter input
[Data type] 2-word path
[Valid data range] 0 to 99999999
Set M code for waiting for completion of EGB automatic phase synchronization.
When 0 is set in this parameter, this parameter is invalid.

7788	M code for starting deceleration of EGB automatic phase synchronization

[Input type] Parameter input
[Data type] 2-word path
[Valid data range] 0 to 99999999
Set M code for starting deceleration of EGB automatic phase synchronization.
When 0 is set in this parameter, this parameter is invalid.

4.54 PARAMETERS OF PMC AXIS CONTROL (1 OF 4)

	#7	#6	#5	#4	#3	#2	#1	#0
8001	SKE	AUX	NCC		RDE	OVE		MLE

[Input type] Parameter input
[Data type] Bit path

#0 MLE Whether all axis machine lock signal MLK <Gn044.1> is valid for PMC-controlled axes
0: Valid
1: Invalid
The axis-by-axis machine lock signal MLKx <Gn108> depends on the setting of bit 1 (MLS) of parameter No. 8006.

#2 OVE Signals related to dry run and override used in PMC axis control
0: Same signals as those used for the CNC
1: Signals specific to the PMC
The signals used depend on the settings of these parameter bits as indicated below.

Signals	Bit 2 (OVE) of parameter No. 8001 = 0 (same signals as those used for the CNC)		Bit 2 (OVE) of parameter No. 8001 = 1 (signals specific to the PMC)	
Feedrate override signals	*FV0 to *FV7	<G012>	*EFOV0 to *EFOV7	<G151>
Override cancellation signal	OVC	<G006.4>	EOVC	<G150.5>
Rapid traverse override signals	ROV1,2	<G014.0,1>	EROV1,2 or *EROV0 to *EROV7	<G150.0,1> <G151>
Dry run signal	DRN	<G046.7>	EDRN	<G150.7>
Manual rapid traverse selection signal	RT	<G019.7>	ERT	<G150.6>

(The listed signal addresses when PMC signals are selected are for the 1st group. Actual addresses differs depending on the used group.)

#3 RDE Whether dry run is valid for rapid traverse in PMC axis control
0: Invalid
1: Valid

#5 NCC When the program specifies a move command for a PMC-controlled axis (with the controlled axis selection signal *EAX <Gn136> set to 1) not placed under PMC axis control:
0: CNC command is valid.
1: The alarm PS0130 is issued.

#6 AUX In PMC axis control, the auxiliary function command (12H) output size is:
0: 1 byte (0 to 255)
1: 2 bytes (0 to 65535)

#7 SKE Skip signal during axis control by the PMC
0: Uses the same signal SKIP <X004.7, X013.7, or X011.7> as CNC.
1: Uses dedicated axis control signal ESKIP <X004.6, X013.6, or X011.6> used by the PMC.

> ⚠ **WARNING**
> If signal ESKIP<X004.6, X013.6, or X011.6> is used by another usage when you set 1 to this parameter, it may cause an unexpected machine behavior. Be careful enough that you must prevent the competition of the used X address.

	#7	#6	#5	#4	#3	#2	#1	#0
8002	FR2	FR1	PF2	PF1	F10		DWE	RPD

[Input type] Parameter input
[Data type] Bit path

#0 RPD Rapid traverse rate for PMC-controlled axes
0: Feedrate specified with parameter No. 1420
1: Feedrate specified with the feedrate data in an axis control command by PMC

#1 DWE Minimum time which can be specified in a dwell command in PMC axis control when the increment system is IS-C
0: 1ms
1: 0.1ms

#3 F10 Least increment for the feedrate for cutting feed (per minute) in PMC axis control
The following settings are applied when bit 4 (PF1) of parameter No. 8002 is set to 0 and bit 5 (PF2) of parameter No. 8002 is set to 0.

	F10	IS-A	IS-B	IS-C
Millimeter input (mm/min)	0	10	1	0.1
	1	100	10	1
Inch input (inch/min)	0	0.1	0.01	0.001
	1	1	0.1	0.01

#4 PF1
#5 PF2 Set the feedrate unit of cutting feedrate (feed per minute) for an axis controlled by the PMC.

Bit 5 (PF2) of parameter No. 8002	Bit 4 (PF1) of parameter No. 8002	Feedrate unit
0	0	1 / 1
0	1	1 / 10
1	0	1 / 100
1	1	1 / 1000

#6 FR1
#7 FR2 Set the feedrate unit for cutting feedrate (feed per rotation) for an axis controlled by the PMC.
(1)T series
[Unit of data]
Unit of data depending on the setting of bits 6 (FR1) and 7 (FR2) of parameter No. 8002.

Parameter		Metric input (mm/rev)	Inch input (inch/rev)	Rotation axis (deg/rev)
FR2	FR1			
1	1	0.0001	0.000001	0.0001
0	0			
0	1	0.001	0.00001	0.001
1	0	0.01	0.0001	0.01

[Valid data range] 1 to 65535 (However, data within the ranges indicated following table must be specified.)

		Valid data range IS-A to IS-C	Unit
Linear axis	Metric input	0.0001 to 500.0000	mm/rev
	Inch input	0.000001 to 9.999999	inch/rev
Rotation axis		0.0001 to 500.0000	deg/rev

(2)M series
[Unit of data]
Unit of data depending on the setting of bits 6 (FR1) and 7 (FR2) of parameter No. 8002.

Parameter FR2	Parameter FR1	Metric input (mm/rev)	Inch input (inch/rev)	Rotation axis (deg/rev)
1	1	0.01	0.0001	0.01
0	0			
0	1	0.1	0.001	0.1
1	0	1	0.01	1

[Valid data range] 1 to 65535 (However, data within the ranges indicated following table must be specified.)

		Valid data range IS-A to IS-C	Unit
Linear axis	Metric input	0.01 to 500.00	mm/rev
	Inch input	0.0001 to 9.9999	inch/rev
Rotation axis		0.01 to 500.00	deg/rev

	#7	#6	#5	#4	#3	#2	#1	#0
8003					FEX			

[Input type] Parameter input
[Data type] Bit axis

NOTE
When this parameter bit is set, the power must be turned off before operation is continued.

#3 FEX The maximum feedrate that can be achieved by the machine during cutting feed or continuous feed in PMC axis control, or spindle control with servo motor is:
0: Not extended.
1: Extended.
Restrictions
- Parameters for setting the time constants for linear acceleration/deceleration after interpolation and bell-shaped acceleration/deceleration after interpolation
  When as the acceleration/deceleration type, linear acceleration/ deceleration after interpolation or bell-shaped acceleration/ deceleration after interpolation is used for each of rapid traverse, cutting feed, and manual feed, the maximum allowable time constant is a half of the maximum value that can be set conventionally.
  The time constant parameters used are as follows:

Parameter No.	Meaning
1620	Time constant (T) used for linear acceleration/deceleration in rapid traverse for each axis, or time constant (T1) used for bell-shaped acceleration/deceleration in rapid traverse for each axis
1621	Time constant (T2) used for bell-shaped acceleration/deceleration in rapid traverse for each axis

Parameter No.	Meaning
1622	Time constant for acceleration/deceleration in cutting feed for each axis
1624	Time constant for acceleration/deceleration in jog feed for each axis
1626	Time constant for acceleration/deceleration in threading cycles for each axis
1769	Time constant for acceleration/deceleration after cutting feed interpolation in the mode of look-ahead acceleration/deceleration before interpolation
5271 to 5274	Time constant for acceleration/deceleration in rigid tapping extraction (first to fourth gears)
5365 to 5368	Time constant for bell-shaped acceleration/deceleration in rigid tapping (first to fourth gears)

- VCMD waveform display function
  As the feedrate increases, more data is acquired for VCMD waveform display, which can prevent waveforms from being displayed correctly.

> ⚠ **CAUTION**
> 1 When this function is enabled, the feedrate is extended to the maximum value that can be specified for cutting feed or continuous feed in PMC axis control if CMR is 1. If CMR is greater than 1, the feedrate is limited to a value smaller than the maximum value that can be specified.
> 2 Note that the maximum motor speed may be exceeded depending on the feedrate specified.

	#7	#6	#5	#4	#3	#2	#1	#0
8004		NCI	DSL	G8R	G8C	JFM		

[Input type] Parameter input
[Data type] Bit path

#2 JFM This parameter sets the units used to specify feedrate data when continuous feed is specified in axis control by the PMC.

Increment system	Bit 2 (JFM) of No. 8004	Millimeter input (mm/min)	Inch input (inch/min)	Rotation axis (degree/min)
IS-B	0	1	0.01	1
	1	200	2.00	200
IS-C	0	0.1	0.001	0.1
	1	20	0.200	20

#3 G8C In PMC axis control, advanced preview feed forward is :
0: Disabled.
1: Enabled.

#4 G8R In PMC axis control, advanced preview feed forward is :
0: Enabled for cutting feed. (Disabled for rapid traverse.)
1: Enabled for cutting feed and rapid traverse.

#5 DSL If the selection of an axis is changed when PMC axis selection is disabled:
0: An alarm PS0139, “CANNOT CHANGE PMC CONTROL AXIS” is issued.
1: The change is valid, and no alarm is issued for an unspecified group.

#6 NCI In axis control by the PMC, a position check at the time of deceleration is:
0: Performed.
1: Not performed.

	#7	#6	#5	#4	#3	#2	#1	#0
8005			IFV	EVP	DRR	R10	CDI	EDC

[Input type] Setting input
[Data type] Bit path

#0 EDC In axis control by the PMC, an external deceleration function is:
0: Disabled.
1: Enabled.

#1 CDI In axis control by the PMC, when diameter programming is specified for a PMC-controlled axis:
0: The amount of travel and feedrate are each specified with a radius.
1: The amount of travel is specified with a diameter while the feedrate is specified with a radius.
This parameter is valid when bit 3 (DIA) of parameter No. 1006 is set to 1 (A move command for each axis is based on diameter specification.)

#2 R10 When the bit 0 (RPD) of parameter No. 8002 is set to 1, the unit for specifying a rapid traverse rate for the PMC axis is:
0: 1 mm/min.
1: 10mm/min.

#3 DRR For cutting feed per rotation in PMC axis control, the dry run function is:
0: Disabled.
1: Enabled.

#4 EVP Speed command in PMC axis control is executed by:
0: Velocity control.
1: Position control.
This bit is available when speed command in PMC axis control is FS16 type (bit 2 (VCP) of parameter No. 8007 is 1).

#5 IFV When bit 2 (OVE) of parameter No. 8001 is set to 1 in PMC axis control, the feedrate override signal *EFOVx and the override cancel signal OVC are:
0: Used on a path-by-path basis. (The start groups (1st group, 5th group, ... 33rd group, 37th group) of each path are used.)
1: Used on a group-by-group basis.

	#7	#6	#5	#4	#3	#2	#1	#0
8006		EZR		EFD			MLS	

[Input type] Parameter input
[Data type] Bit path

#1 MLS When bit 0 (MLE) of parameter No. 8001 is set to 1 (to disable the all axis machine lock signal) in PMC axis control, axis-by-axis machine lock is:
0: Disabled.
1: Enabled.

#4 EFD When cutting feed (feed per minute) is used in PMC axis control, the specification unit of feedrate data is:
0: Unchanged (1 times).
1: 100 times greater.

> **NOTE**
> When this parameter is set to 1, bit 3 (F10) of parameter No. 8002 is invalid.

#6 EZR In PMC axis control, bit 0 (ZRNx) of parameter No. 1005 is:
0: Invalid.
With a PMC controlled axis, the alarm PS0224, "ZERO RETURN NOT FINISHED" is not issued.
1: Valid.
A reference position return state check is made on a PMC controlled axis as with an NC axis according to the setting of bit 0 (ZRNx) of parameter No. 1005.

	#7	#6	#5	#4	#3	#2	#1	#0
8007			PSA		ESY	VCP		

[Input type] Parameter input
[Data type] Bit path

#2 VCP Speed command in PMC axis control is:
0: FS15 type.
1: FS16 type.

#3 ESY In PMC axis control, external pulse synchronization (serial spindle synchronization) is:
0: Disabled.
1: Enabled.

#5 PSA Acceleration/deceleration after interpolation for skip command of PMC axis control is
0: Invalid
1: Valid

> **NOTE**
> Skip position of system variables (#5061 to #5080, #100151 to #100182) are behavior such as the following.
> - In case of parameter PSA = 0, coordinate value of bit 1 (SEB) of parameter No.6201= 0 equivalent is stored.
> - In case of parameter PSA = 1, coordinate value in accordance with the setting of parameter SEB is stored.

	#7	#6	#5	#4	#3	#2	#1	#0
8008							PFE	EMRx

[Input type] Parameter input
[Data type] Bit axis

#0 EMRx When a PMC axis control command is issued in mirror image state, the mirror image is:
0: Not considered.
1: Considered.

This parameter is valid in the mirror image mode set with the mirror image signals MI1 to MI8 <G106.0 to G106.7> set to 1 or bit 0 (MIRx) of parameter No. 0012 set to 1.
If a movement is made along the same axis by doubly specifying a command with the CNC and PMC axis control when this parameter is set to 0, and the mirror image mode is set, a coordinate shift can occur afterwards. So, do not attempt to make such a movement.

#1 PFE If an AI contour control permission signal (such as the advanced superimposition signal or the inter-path flexible synchronous mode select signal) OVLN <Gn531.4> is set to "1", advanced preview feed forward for PMC axis control rapid traverse (00h), cutting feed - feed per minute (01h), cutting feed - feed per revolution (02h), and cutting feed - sec/block specification (21h) is:
0: Disabled.
1: Enabled.

NOTE
1 This parameter is valid for rapid traverse (00h) when bit 3 (FFR) of parameter No. 1800 is 1 (advanced preview feed forward is enabled for rapid traverse).
2 This parameter is a parameter of the old specification. It is recommended not to use this parameter, but to use bit3 (G8C) and bit 4 (G8R) of parameter No.8004. If both this parameter and G8C are set to 1, G8C has priority.

8010	Selection of the DI/DO group for each axis controlled by the PMC

[Input type] Parameter input
[Data type] Byte axis
[Valid data range] 1 to 40
Specify the DI/DO group to be used to specify a command for each PMC-controlled axis.

For addresses of the fifth group and up, 1000 is added in steps of 4 groups.
For example:
The start address of the 10th group is <G2154>.
The start address of the 25th axis is <G6142>.

Parameter No.8010	Description
1	DI/DO 1st group <G142 to G153> is used.
2	DI/DO 2nd group <G154 to G165> is used.
3	DI/DO 3rd group <G166 to G177> is used.
4	DI/DO 4th group <G178 to G189> is used.
5	DI/DO 5th group <G1142 to G1153> is used.
6	DI/DO 6th group <G1154 to G1165> is used.
:	:
13	DI/DO 13th group <G3142 to G3153> is used.
:	:
20	DI/DO 20th group <G4178 to G4189> is used.
21	DI/DO 21st group <G5142 to G5153> is used.
:	:
29	DI/DO 29th group <G7142 to G7153> is used.
:	:
35	DI/DO 35th group <G8166 to G8177> is used.
36	DI/DO 36th group <G8178 to G8189> is used.
37	DI/DO 37th group <G9142 to G9153> is used.

Parameter No.8010	Description
38	DI/DO 38th group <G9154 to G9165> is used.
39	DI/DO 39th group <G9166 to G9177> is used.
40	DI/DO 40th group <G9178 to G9189> is used.

NOTE
When a value other than the above is set, the axis is not controlled by the PMC.

	#7	#6	#5	#4	#3	#2	#1	#0
8011								XRT

[Input type] Parameter input
[Data type] Bit axis

#0 XRT The axis that uses the group specified by parameter No. 8010 is:
0: Not controlled by the real time custom macro.
1: Controlled by the real time custom macro.

NOTE
1 This parameter is invalid for the axis for which 0 or a value outside the range is set by parameter No. 8010
2 When multiple axes are assigned to the same group by parameter No. 8010, these axes cannot be controlled by the real time custom macro. When multiple axes are assigned to the same group, be sure to set this bit to 0.
3 When this parameter No. 8011 is all 0s, the axis is used for PMC axis control.

	#7	#6	#5	#4	#3	#2	#1	#0
8013			RMMx	R20x	ROP		OVR	

[Input type] Parameter input
[Data type] Bit axis

#1 OVR When bit 2 (OVE) of parameter No. 8001 is set to 1, for rapid traverse override in PMC axis control:
0: Rapid traverse override signals EROV2 and EROV1 <G150.1 and G150.0> for PMC axis control are used.
1: 1% step rapid traverse override signals *EROV7 to *EROV0 <G151> for PMC axis control are used.
(The listed signal addresses when PMC signals are selected are for the 1st group. Actual addresses differs depending on the used group.)

#3 ROP When rotation axis rollover is enabled for an axis controlled in PMC axis control, the direction in which a movement (rotation) is performed to reach an end point by a reference position return command 07H to 0AH (equivalent to G28, G30P2/P3/P4) is:
0: Determined by the sign of the specified value.
1: The direction in the shortest path.

NOTE
ROPx is valid only when bit 0 (ROAx) of parameter No. 1008 is set to 1 and bit 1 (RABx) of parameter No. 1008 is set to 0.

#4 R20x When the machine coordinate system selection (20h) is commanded with the PMC axis control for the rotary axis to which the roll-over function is valid (bit 0 (ROAx) of parameter No.1008 is set to 1), setting the bit 1 (RABx) of parameter No.1008 which specifies the direction of the rotation for an absolute command is:
0: Invalid.
1: Valid.
The above direction of the rotation is as follows by setting the bit 1 (RABx) of parameter No.1008 and the bit 4 (R20x) of parameter No.8013.

		Bit 4 (R20x) of parameter No.8013	
		0	1
Bit 1 (RABx) of parameter No.1008	0	Direction of the shortest path	Direction of the shortest path
	1	Direction of sign of the amount of the movement to be made	Direction of sign of the command value

#5 RMMx In the real-time custom macro, in composite control, machine coordinates (#5021 to #5040, #100051 to #100100) to be read are:
0: Machine coordinates of the local path.
1: Machine coordinates of the other path in composite control.

	#7	#6	#5	#4	#3	#2	#1	#0
8019				**DTP**		**EZC**	**PIA**	**EOS**

[Input type] Parameter input
[Data type] Bit

#0 EOS In external pulse synchronization (serial spindle synchronization) in PMC axis control, the serial spindle to be synchronized is:
0: The first spindle of path 1.
1: Any spindle.

NOTE
If EOS is set to 0, only the servo axis of path 1 can be specified.

#1 PIA After the move command of PMC axis control is interrupted by reset signal ECLRg, If different acceleration/deceleration type command without waiting for a deceleration stop generates:
0: Not alarm.
1: Alarm DS1451 "IMPROPER PMC AXIS COMMAND".

NOTE
This parameter is Automatic setting parameter. For details, refer to the appendix "Automatic setting / Initial setting parameter" in CONNECTION MANUAL (FUNCTION) (B-64693EN-1).

#2 EZC If the controlled axis selection signals EAX1 to EAX8<Gn136> are "0" or PMC controlled-axis selection variable (#8700) is 0, the PMC axis control command generates:
0: Not alarm.
1: Alarm DS1451 "IMPROPER PMC AXIS COMMAND".

NOTE
This parameter is Automatic setting parameter. For details, refer to the appendix "Automatic setting / Initial setting parameter" in CONNECTION MANUAL (FUNCTION) (B-64693EN-1).

#4 DTP When PMC axis control and dwell command are executed at the same time, information on FOCAS2, PMC window, system variable, distance to go of position screen are:
0: Prioritize the distance to go of PMC axis control.
1: Prioritize the remaining time or revolution of dwell.

8020	FL rate for reference position return along each axis in PMC axis control

[Input type] Parameter input
[Data type] Real axis
[Unit of data] mm/min, inch/min, degree/min (machine unit)
[Min. unit of data] Depend on the increment system of the applied axis
[Valid data range] Refer to the standard parameter setting table (C)
(When the increment system is IS-B, 0.0 to +999000.0)
For each axis, this parameter sets a feedrate (FL rate) after deceleration for reference position return in PMC axis control.

NOTE
If 0 is specified, the value of parameter No. 1425 is used.

8022	Upper limit rate of feed per revolution during PMC axis control

[Input type] Parameter input
[Data type] Real axis
[Unit of data] mm/min, inch/min, degree/min (machine unit)
[Min. unit of data] Depend on the increment system of the applied axis
[Valid data range] Refer to the standard parameter setting table (C)
(When the increment system is IS-B, 0.0 to +999000.0)
This parameter sets the upper limit rate of feed per revolution during PMC axis control.

8028	Time for acceleration/deceleration calculation when a feedrate is specified under PMC axis control

[Input type] Parameter input
[Data type] Word axis
[Unit of data] msec
[Valid data range] 0 to 32767
When a feedrate is specified under PMC axis control, acceleration/deceleration can be set for parameter No. 8032 or this parameter. When 0 is set in parameter No. 8032, the specification of 1000 min^{-1} is assumed. When 0 is set in this parameter, the acceleration/deceleration function for feedrate specification is disabled.

8029	Acceleration change time of bell-shaped acceleration/deceleration for the speed command under PMC axis control

[Input type] Parameter input
[Data type] Word axis
[Unit of data] msec
[Valid data range] 0 to 512

Set an acceleration change time of bell-shaped acceleration/deceleration for the speed command under PMC axis control for each axis.
To enable bell-shaped acceleration/deceleration, acceleration/deceleration function for the speed command must be valid (Parameter (No.8028) is set to other than 0). When the acceleration/deceleration is enabled, set the acceleration change time corresponding to the acceleration in this parameter.

If this parameter is set to 0 or less of the value, bell-shaped acceleration/deceleration is disabled.
If this parameter is set to more than 512 value, the value is clamped to 512.

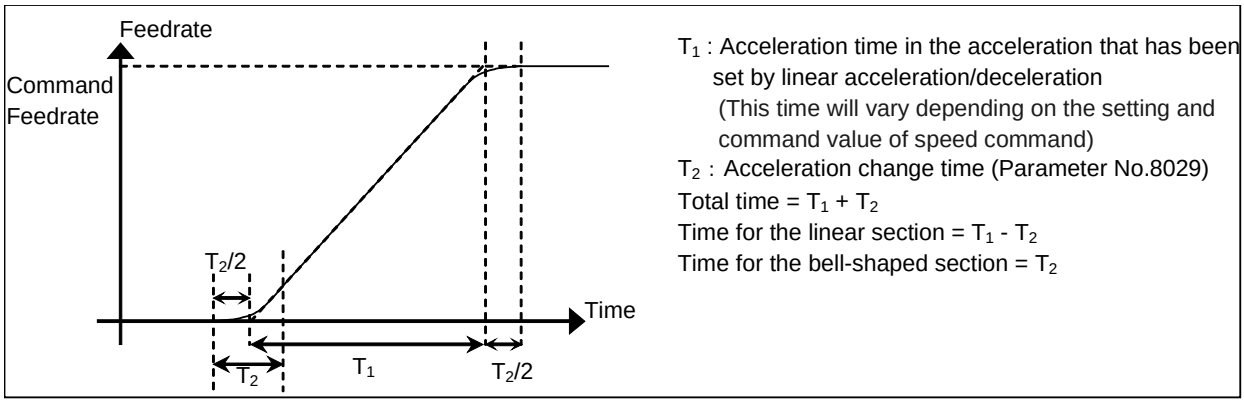

8030	Time constant for exponential acceleration/deceleration in cutting feed or continuous feed under PMC axis control

[Input type] Parameter input
[Data type] 2-word axis
[Unit of data] msec
[Valid data range] 0 to 4000
For each axis, this parameter sets a time constant for exponential acceleration/deceleration in cutting feed or continuous feed under PMC axis control.

NOTE
When either of the following conditions is satisfied, the value set in parameter No.1622 is used.
- 0 is set in this parameter.
- Acceleration/deceleration after cutting interpolation is linear type.
- Advanced preview feed forward is enabled.

8031	FL rate for exponential acceleration/deceleration in cutting feed or continuous feed under PMC axis control

[Input type] Parameter input
[Data type] Real axis
[Unit of data] mm/min, inch/min, degree/min (machine unit)
[Min. unit of data] Depend on the increment system of the applied axis
[Valid data range] Refer to the standard parameter setting table (C)
(When the increment system is IS-B, 0.0 to +999000.0)
For each axis, this parameters sets a lower feedrate limit (FL rate) for exponential acceleration/deceleration in cutting feed or continuous feed under PMC axis control.

NOTE
1 When either of the following conditions is satisfied, the value set in parameter No.1623 is used.
  - 0 is set in this parameter.
  - Advanced preview feed forward is enabled.
2 Be sure to set 0 in this parameter and parameter No. 1623 for all axes at all times except for special purposes. If a value other than 0 is specified, correct linear or circular figures cannot be obtained.

8032	Feedrate for acceleration/deceleration calculation when a feedrate is specified under PMC axis control

[Input type] Parameter input
[Data type] Word axis
[Unit of data] min^{-1}
[Valid data range] 0 to 32767
When a feedrate is specified under PMC axis control, acceleration/deceleration can be set for this parameter or parameter No. 8028. When 0 is set in this parameter, the specification of 1000 min^{-1} is assumed. When 0 is set in parameter No. 8028, the acceleration/deceleration function for feedrate specification is disabled.

8040	Amount of a shift per one rotation of a servo motor of least input increment when speed command in PMC axis control is velocity control

[Input type] Parameter input
[Data type] 2-word axis
[Unit of data] mm, inch, degree (machine unit)
[Valid data range] 1 to 99999999
Set the amount of a shift per one rotation of a servo motor of least input increment when speed command in PMC axis control is velocity control.
This parameter is available when speed command in PMC axis control is FS16 type (bit 2 (VCP) of parameter No. 8007 is 1) and is executed by position control (bit 4 (EVP) of parameter No. 8005 is 1).

4.55 PARAMETERS OF MULTI-PATH CONTROL

	#7	#6	#5	#4	#3	#2	#1	#0
8100	NWP	DSB					IAL	RST

[Input type] Parameter input
[Data type] Bit machine group

#0 RST The pressing of the RESET key on the MDI panel is:
0: Valid for all paths.
1: Valid only for the path selected by the path selection signal.
The reset key on the MDI panel functions for all machine groups. So, in machine groups for which this parameter is set to 0, a reset can be performed for all paths. In machine groups for which this parameter is set to 1, a reset can be performed only for the path that is selected by the path select signal.

NOTE
The path by which reset becomes actually effective depends on the combination with bit 0 (MGR) of parameter No.8106 setting and this parameter.

#1 IAL Choice of an option concerning operation continuation when an alarm is issued, and choice of an option concerning the start of automatic operation in alarm state:

0: - When an alarm is issued, the operation is stopped with the other path(s) in same group placed in hold state.
- When the other path or paths in same group are placed in alarm state, automatic operation cannot be started.

1: - Even when an alarm is issued, the operation is continued without stopping the other path(s).
- Even when the other path or paths in same group are placed in alarm state, automatic operation can be started.

#6 DSB The inter-path single block check function is:

0: Disabled.
When a single block stop occurs with a path, no single block stop occurs with the other path(s).

1: Enabled.
When a single block stop occurs with a path, a feed hold stop occurs with all paths in the same machine group.

#7 NWP Servo activation is turned on:

0: Together with other machine groups. (Servo activation is not turned on until other machine groups are ready to turn on servo activation.)

1: Independently of other machine groups. (Each machine group turns on servo activation even if other machine groups are not ready to turn on servo activation.)

	#7	#6	#5	#4	#3	#2	#1	#0
8101							STW	

[Input type] Parameter input
[Data type] Bit path

#1 **STW** Waiting function by specifying start point is

0: not effective.

1: effective.

	#7	#6	#5	#4	#3	#2	#1	#0
8103							MWP	MWT

[Input type] Parameter input
[Data type] Bit

NOTE
When at least one of these parameters is set, the power must be turned off before operation is continued.

#0 MWT As the signal interface for the waiting M code:

0: The path individual signal interface is used.

1: The path common signal interface is used.

This parameter can be selected only when 2-path control is used.

#1 MWP To specify a P command for the waiting M code/balance cut:
0: A binary value is used as conventionally done.
1: A path number combination is used.

	#7	#6	#5	#4	#3	#2	#1	#0
8106					SCD	CVP		MGR

[Input type] Parameter input
[Data type] Bit

#0 MGR When the RESET key on the MDI panel is pressed,
0: All machine groups are reset.
1: Only the machine groups to which the path selected by the path selection signal belongs are reset.

> **NOTE**
> The path by which reset becomes actually effective depends on the combination with bit 0 (RST) of parameter No.8100 setting and this parameter.

#2 CVP By a reset in path other than path 1, the custom macro variables common to paths set to the common variables #100 to #499 cleared by power-off is
0: not cleared to <null>.
1: cleared to <null>. (it depend to the bit 6(CCV) of parameter No.6001.)

> **NOTE**
> 1 When a reset is made in path 1, it is cleared regardless of the setting of this parameter. (it depend to the parameter CCV)
> 2 This parameter is invalid for the path that the bit 0(NC1) of parameter No.6020 is 1.

> **NOTE**
> This parameter is Automatic setting parameter. For details, refer to the appendix "Automatic setting / Initial setting parameter" in CONNECTION MANUAL (FUNCTION) (B-64693EN-1).

#3 SCD When the function for loader control is valid, path selection by pressing MDI keys [SHIFT] and [HELP] at the same time is:
0: Enabled.
1: Disabled.

	#7	#6	#5	#4	#3	#2	#1	#0
8107								ESB

[Input type] Parameter input
[Data type] Bit

> **NOTE**
> When this parameter is set, the power must be turned off before operation is continued.

#0 ESB External subprogram calls on the data server:
0: Do not support multipath operations.
1: Support multipath operations.

> **NOTE**
> To use multipath operations with external subprogram calls on the data server, set parameter No. 20 to 5.

8110	Waiting M code range (minimum value)
8111	Waiting M code range (maximum value)

[Input type] Parameter input
[Data type] 2-word
[Valid data range] 0, 100 to 99999999
A range of M code values can be set by specifying a minimum waiting M code value (parameter No. 8110) and a maximum waiting M code value (parameter No. 8111).
(parameter No. 8110) ≤ (waiting M code) ≤ (parameter No. 8111)
Set 0 in these parameters when the waiting M code is not used.

8114	Top number of waiting M codes of high-speed type

[Input type] Parameter input
[Data type] 2-word
[Valid data range] 0, 100 to 99999999
Set the top number of waiting M codes of high-speed type.
Waiting M codes of high-speed type cannot be used when the setting value is 0 or out of range.

8115	Number of waiting M codes of high-speed type

[Input type] Parameter input
[Data type] word
[Valid data range] 0 to 32767
Set the number of waiting M codes of high-speed type.
Waiting M codes of high-speed type cannot be used when the setting value is 0 or out of range.

> **NOTE**
> Set the range of waiting M codes of high-speed type not to overlap with the range of other waiting M codes. The M codes are regarded as waiting M codes of high-speed type if overlapping.

4.56 PARAMETERS OF 0*i*-F Plus BASIC FUNCTIONS

	#7	#6	#5	#4	#3	#2	#1	#0
8131						EDC		HPG
					AOV	EDC	F1D	HPG

NOTE
When at least one of these parameters is set, the power must be turned off before operation is continued.

[Input type] Parameter input
[Data type] Bit

#0 HPG Manual handle feed is:
0: Not Used.
1: Used.

#1 F1D One-digit F code feed is:
0: Not Used.
1: Used.

#2 EDC External deceleration is:
0: Not Used.
1: Used.

#3 AOV Automatic corner override is:
0: Not Used.
1: Used.

	#7	#6	#5	#4	#3	#2	#1	#0
8132						BCD	YOF	TLF
			SCL	SPK	IXC	BCD		TLF

NOTE
When at least one of these parameters is set, the power must be turned off before operation is continued.

[Input type] Parameter input
[Data type] Bit

#0 TLF Tool life management is:
0: Not Used.
1: Used.

#1 YOF Y-axis offset is:
0: Not Used.
1: Used.

#2 BCD Second auxiliary function is:
0: Not Used.
1: Used.

#3 IXC Index table indexing is:
0: Not Used.
1: Used.

> **NOTE**
> When enabling the index table indexing function, set bit 0 (ITI) of parameter No. 5501 to 0 in addition to this parameter. The index table indexing function is enabled only when both ITI and IXC are enabled.

#4 SPK Small diameter peck drilling cycle is:
0: Not Used.
1: Used.

#5 SCL Scaling is:
0: Not Used.
1: Used.

	#7	#6	#5	#4	#3	#2	#1	#0
8133		SPG	SSN	SYC	MSP	SCS	AXC	SSC
			SSN	SYC	MSP	SCS		SSC

> **NOTE**
> When at least one of these parameters is set, the power must be turned off before operation is continued.

[Input type] Parameter input
[Data type] Bit

#0 SSC Constant surface speed control is:
0: Not Used.
1: Used.

#1 AXC Spindle positioning is:
0: Not Used.
1: Used.

> **NOTE**
> 1 Be sure to set 1 in bit 1 (AXC) of parameter No.8133 and 0 in bit 2 (SCS) of parameter No.8133 to use the spindle positioning function.
> 2 Both serial spindle Cs contour control function and spindle positioning function cannot be made effective at the same time.
> If both are specified as AXC=1 and SCS=1, both functions become invalid.
> Therefore, when a negative value is set in parameter No.1023 with above specification, alarm (SV1026) is generated.
> 3 Be sure to set 0 in bit 1 (AXC) of parameter No.8133 and 1 in bit 2 (SCS) of parameter No.8133 to use the serial spindle Cs contour control function.

#2 SCS Cs contour control is:
0: Not Used.
1: Used.

NOTE
1 Be sure to set 0 in bit 1 (AXC) of parameter No.8133 and 1 in bit 2 (SCS) of parameter No.8133 to use the serial spindle Cs contour control function.
2 Both serial spindle Cs contour control function and spindle positioning function cannot be made effective at the same time.
If both are specified as AXC=1 and SCS=1, both functions become invalid.
Therefore, when a negative value is set in parameter No.1023 with above specification, alarm (SV1026) is generated.
3 Be sure to set 1 in bit 1 (AXC) of parameter No.8133 and 0 in bit 2 (SCS) of parameter No.8133 to use the spindle positioning function.

#3 MSP Multi-spindle is:
0: Not Used.
1: Used.

#4 SYC Spindle synchronization is:
0: Not Used.
1: Used.

#5 SSN Spindle serial output is:
0: Used.
1: Not Used.

Set this parameter as shown below depending on the spindle configuration.

Spindle configuration	Parameter SSN
When all spindles in the entire system are serial spindles	0
When serial spindles and analog spindles are mixed in the entire system	0
When all spindles in the entire system are analog spindles	1

#6 SPG Polygon turning with two spindles is:
0: Not Used.
1: Used.

NOTE
Be sure to invalidate the polygon turning with two spindles by this parameter when polygon turning is used. If the polygon turning is performed when 1 is set in this parameter, the alarm is issued.

	#7	#6	#5	#4	#3	#2	#1	#0
8134	NCT	NBG			NGR	CCR	BAR	IAP
	NCT	NBG			NGR		BAR	IAP

NOTE
When at least one of these parameters is set, the power must be turned off before operation is continued.

[Input type] Parameter input
[Data type] Bit

#0 IAP Conversational programming with graphic function is:
0: Not Used.
1: Used.

#1 BAR Chuck and tail stock barrier function (T series) is:
0: Not Used.
1: Used.

NOTE
1 The chuck and tail stock barrier function is provided only for the T series.
2 When the chuck and tail stock barrier function is selected, stored stroke limits 2 and 3 cannot be used.

That is, this parameter also specifies whether to use stored stroke limits 2 and 3 as shown below.

BAR Stored stroke limits 2 and 3 are:
0: Used.
1: Not Used.

#2 CCR Chamfering / corner R is:
0: Not Used.
1: Used.

#3 NGR Graphic display is:
0: Used.
1: Not Used.

#6 NBG Background editing is:
0: Used.
1: Not Used.

#7 NCT Run hour and parts count display is:
0: Used.
1: Not Used.

	#7	#6	#5	#4	#3	#2	#1	#0
8135	NPD	NCV	NMC	NOR	NRG	NSQ	NHI	

NOTE
When at least one of these parameters is set, the power must be turned off before operation is continued.

[Input type] Parameter input
[Data type] Bit

#1 NHI Manual handle interruption is:
0: Used.
1: Not Used.

#2 NSQ Program restart is:
0: Used.
1: Not Used.

NOTE
This parameter is inactive when quick program restart is active, and then program restart is always disabled.

#3 NRG Rigid tapping is:
0: Used.
1: Not Used.

#4 NOR Spindle orientation is:
0: Used.
1: Not Used.

NOTE
This parameter is valid only when spindle serial output can be used.

#5 NMC Custom macro is:
0: Used.
1: Not Used.

#6 NCV Addition of custom macro common variables is:
0: Used.
1: Not Used.

NOTE
Set bit 5 (NMC) of parameter No.8135 to 0, and bit 6 (NCV) of parameter No.8135 to 0, when you use addition of custom macro common variables.

#7 NPD Pattern data input is:
0: Used.
1: Not Used.

	#7	#6	#5	#4	#3	#2	#1	#0
8136	NCR	NGW		NOW	NOP		NWC	NWZ
		NGW		NOW	NOP	NWN	NWC	NWZ

NOTE
When at least one of these parameters is set, the power must be turned off before operation is continued.

[Input type] Parameter input
[Data type] Bit

#0 NWZ Workpiece coordinate system is:
0: Used.
1: Not Used.

#1 NWC Workpiece coordinate system preset is:
0: Used.
1: Not Used.

#2 NWN Addition of workpiece coordinate system pair (48 pairs) is:
0: Used.
1: Not Used.

NOTE
To use the addition of workpiece coordinate system pair (48 pairs), set 0 to bit 0 (NWZ) and bit 2 (NWN) of parameter No.8136.

#3 NOP Software operator's panel is:
0: Used.
1: Not Used.

#4 NOW Software operator's panel general purpose switch is:
0: Used.
1: Not Used.

NOTE
To use the software operator's panel general purpose switch, set 0 to bit 3 (NOP) and bit 4 (NOW) of parameter No.8136.

#6 NGW Tool offset memory C (M series) or tool geometry/wear compensation (T series) is:
0: Used.
1: Not Used.

#7 NCR Tool nose radius compensation is:
0: Used.
1: Not Used.

	#7	#6	#5	#4	#3	#2	#1	#0
8137		NCL	NPI	NCD	NMR	NDD	NVL	NVC
		NCL		NCD				

NOTE
When this parameter is set, the power must be turned off before operation is continued.

[Input type] Parameter input
[Data type] Bit

#0 NVC Balance cutting is:
0: Used.
1: Not Used.

NOTE
When balance cutting is used (this parameter is 0), the mirror image for double turret cannot be used. To use the mirror image for double turret, set this parameter to 1.

#1 NVL Variable lead thread cutting is:
0: Used.
1: Not Used.

#2 NDD Direct drawing dimension programming is:
0: Used.
1: Not Used.

#3 NMR Multiple repetitive cycle is:
0: Used.
1: Not Used.

#4 NCD Canned cycles for drilling is:
0: Used.
1: Not Used.

#5 NPI Polar coordinate interpolation is:
0: Used.
1: Not Used.

#6 NCL Cylindrical interpolation is:
0: Used.
1: Not Used.
Not Used.

	#7	#6	#5	#4	#3	#2	#1	#0
8138						ISG		
				DGR	MSK	ISG	MHR	

NOTE
When this parameter is set, the power must be turned off before operation is continued.

[Input type] Parameter input
[Data type] Bit

#1 MHR Manual handle retrace is:
0: Not Used.
1: Used.

#2 ISG *i*HMI set-up guidance is:
0: Not Used.
1: Used.

#3 MSK Multi-step skip is:
0: Not Used.
1: Used.

#4 DGR Dynamic graphic display function is:
0: Not Used.
1: Used.

4.57 PARAMETERS OF INTERFERENCE CHECK BETWEEN PATHS

	#7	#6	#5	#4	#3	#2	#1	#0
8140	IPF		ZCL	IFE	IFM	IT0	TY1	TY0

[Input type] Parameter input
[Data type] Bit

#0 TY0 This parameter sets the coordinate system relationship between two tool posts based on the tool post of path 1.

#1 TY1 This parameter is used for checking the interference between two paths when bit 7 (IPF) of parameter No. 8140 is set to 0.

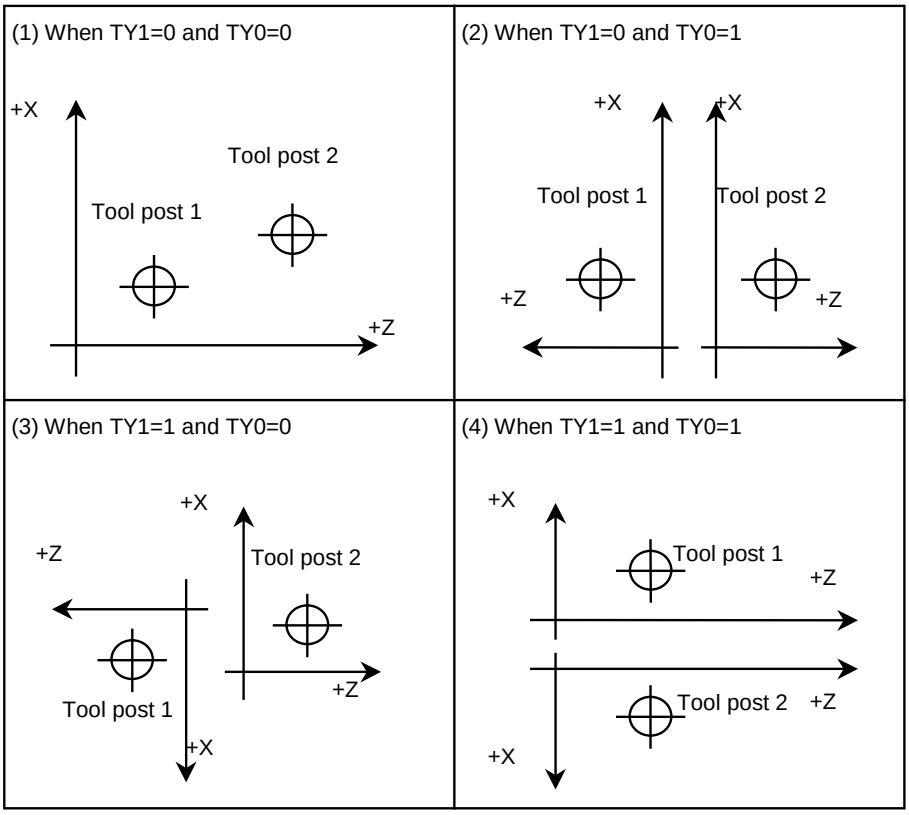

#2 IT0 When offset number 0 is specified by the T code,

0: Checking interference between paths is stopped until an offset number other than 0 is specified by the next T code.

1: Checking interference between paths is continued according to the previously specified offset number.

#3 IFM In manual mode, a interference check between paths is:

0: Not performed.

1: Performed.

#4 IFE Interference check between paths is:

0: Performed.

1: Not performed.

#5 ZCL Specifies whether interference along the Z axis is checked while checking interference between paths.

0: Checked.

1: Not checked (Only interference along the X axis is checked.)

#7 IPF In inter-path interference checking:

0: The interference between two paths is checked.

1: The interference among multiple paths is checked.

Even in two-path control, the specification of a multi-path interference check can be applied.

If this parameter is set to 0 when three or more paths are controlled, a two-path interference check is made only with path 1 and path 2.

8141	Distance along the X axis between the reference positions of tool post 1 and tool post n in the same machine group
8143	Distance along the Z axis between the reference positions of tool post 1 and tool post n in the same machine group

[Input type] Parameter input
[Data type] Real path
[Unit of data] mm, inch (machine unit)
[Min. unit of data] Depend on the increment system of the applied axis
[Valid data range] 9 digit of minimum unit of data (refer to standard parameter setting table (A))
(When the increment system is IS-B, -999999.999 to +999999.999)
Each of these parameters sets the distance between the reference positions of the tool post of path 1 and tool post of each path in the same machine group.
Set 0 in parameter No. 8141 and No. 8143 for tool post 1 of each machine group.
For the lathe system, only a Z-X coordinate system based on parameter No. 8141 and No. 8143 is used for setting.

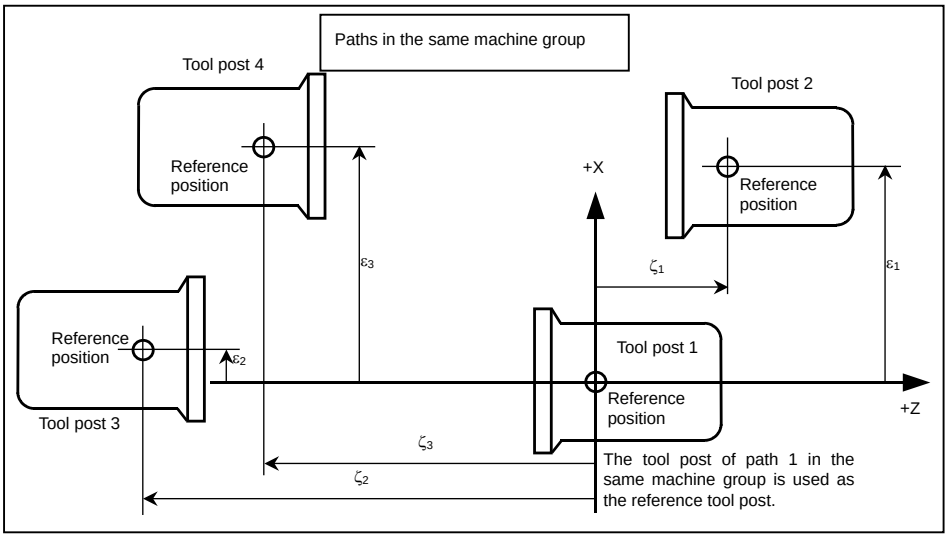

In the example above, the same machine group contains tool posts for four paths. In the ZX plane coordinate system with its origin placed at the reference position of tool post 1 of path 1 in the same machine group, the position of the reference position of tool post 2 of path 2 is specified by setting the value ε_1 of the X component in parameter No. 8141 for path 2 and by setting the value ζ_1 of the Z component in parameter No. 8143 for path 2.
Similarly, In the ZX plane coordinate system with its origin placed at the reference position of tool post 1, the position of the reference position of tool post 3 of path 3 is specified by setting the value ε_2 of the X component in parameter No. 8141 for path 3 and by setting the value ζ_2 of the Z component in parameter No. 8143 for path 3. In the ZX plane coordinate system with its origin placed at the reference position of tool post 1, the position of the reference position of tool post 4 of path 4 is specified by setting the value ε_3 of the X component in parameter No. 8141 for path 4 and by setting the value ζ_3 of the Z component in parameter No. 8143 for path 4.
The unit of setting is the least input increment. For an axis based on diameter specification, make a setting using a diameter value.

> ⚠ **WARNING**
> Measure (ε_1, ζ_1), (ε_2, ζ_2), and (ε_3, ζ_3) in the state where reference position return operation is completed for all axes (the tool is at the reference position.)
> After modifying parameter No. 8141 and No. 8143 for each path, be sure to perform a reference position return operation along all axes in all paths. Otherwise, the internally stored positional relationships of the tool posts are not updated to the newly set parameter values.

8151	**Distance along the X axis between the reference positions of tool posts 1 and 2**
8152	**Distance along the Z axis between the reference positions of tool posts 1 and 2**

[Input type] Parameter input
[Data type] Real
[Unit of data] mm, inch (machine unit)
[Min. unit of data] Depend on the increment system of the applied axis
[Valid data range] 9 digit of minimum unit of data (refer to standard parameter setting table (A))
(When the increment system is IS-B, -999999.999 to +999999.999)

These parameters are used for checking the interference between two paths when bit 7 (IPF) of parameter No. 8140 is set to 0.
Each of these parameters sets the distance between the tool posts of two paths.

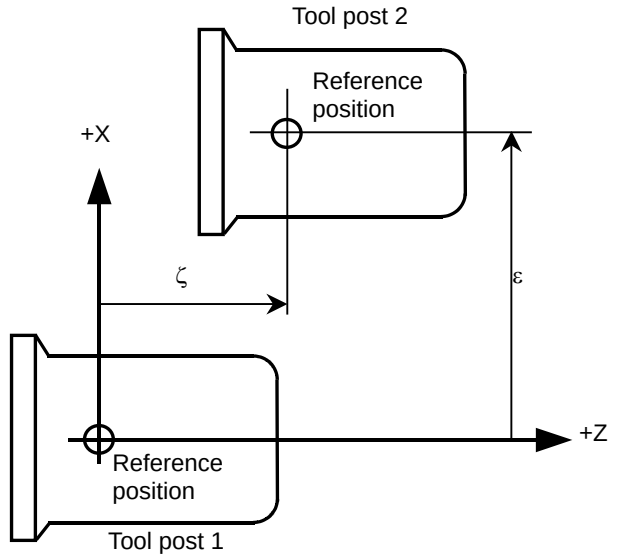

In the Z-X plane coordinate system with its origin at the represent position of tool post 1, set the X component value ε of the reference position of tool post 2 in parameter No. 8151 and set the Z component value ζ in parameter No. 8152.

> ⚠ **WARNING**
> After modifying the parameter values, perform a manual reference position return operation for both tool posts. Otherwise, the internally stored positional relationships of the two tool posts are not updated to the newly set parameter values.

8158	Coordinate system pattern with the reference position based on the tool post of path 1 in the same machine group

[Input type] Parameter input
[Data type] Byte path
[Valid data range] 0 to 3

This parameter is used for checking the interference among multiple paths when bit 7 (IPF) of parameter No. 8140 is set to 1.
This parameter sets a coordinate system pattern with the reference position based on the tool post of path 1 in the same machine group.

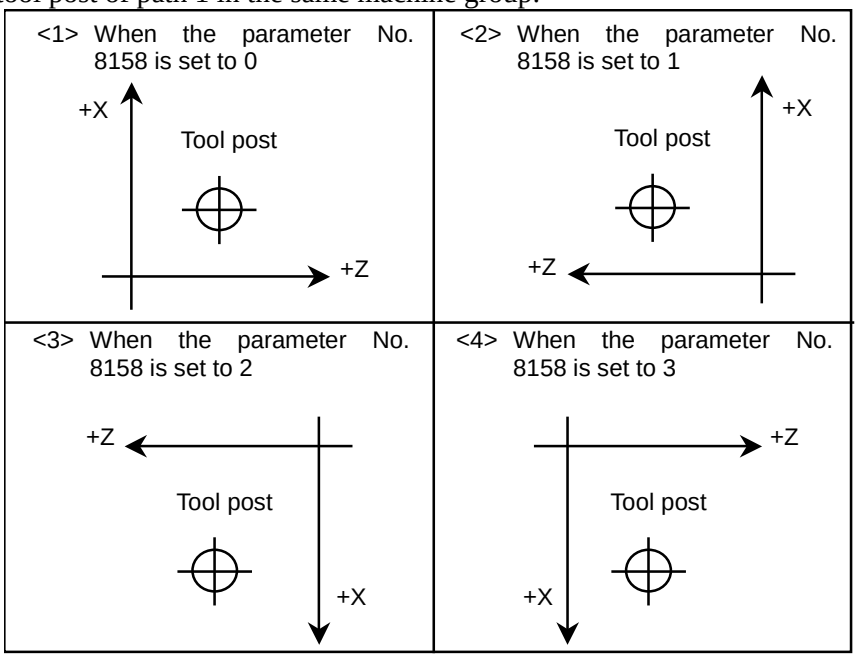

4.58 PARAMETERS OF SYNCHRONOUS/COMPOSITE CONTROL AND SUPERIMPOSED CONTROL (1 OF 3)

	#7	#6	#5	#4	#3	#2	#1	#0
8160	NRS	SPE	NCS	AXS				

[Input type] Parameter input
[Data type] Bit path

#4 AXS When the axis moving signals MV1 to MV8<Fn102> or the axis moving direction signals MVD1 to MVD8<Fn106> of the slave axis in superimposed control is output:
0: State output is performed according to the result of adding superimposed move pulses.
1: State output is performed according to the result of movement along each axis instead of superimposed move pulses.

#5 NCS If an overtravel alarm is issued for an axis under synchronous, composite, or superimposed control, synchronous, composite, or superimposed control is:
0: Released.
1: Not released.

> **NOTE**
> If this parameter is 1 for any one of the paths in a machine group, it is assumed to be 1 for all the paths.

#6 SPE The synchronization deviation is:
0: The difference between the positioning deviation of the master axis and that of the slave axis.
1: The difference between the positioning deviation of the master axis and that of the slave axis plus the acceleration/deceleration delay.

> **NOTE**
> 1 When the master and slave axes have different acceleration/deceleration time constants, set 1.
> 2 SPE is valid when bit 1 (SERx) of parameter No. 8162 is set to 1. SPE is used to find a synchronization deviation for comparison with parameter No. 8181.

#7 NRS When the system is reset, synchronous, composite, or superimposed control is:
0: Released.
1: Not released.

	#7	#6	#5	#4	#3	#2	#1	#0
8161	NSR		CRZ					NMR

[Input type] Parameter input
[Data type] Bit

#0 NMR When an axis subject to composite control is placed in servo-off state:
0: Composite control is stopped
1: Composite control is not stopped, provided bit 0 (FUPx) of parameter No. 1819 is set to 1 to disable follow-up for the axis.

#5 CRZ If the state of the composite control signal is switched in composite control on two axes under Cs contour control, the reference position establishment state of the two axes in composite control is:
0: Maintained. (The unestablished state is not assumed.)
1: Assumed to be unestablished.

#7 NSR When servo-off occurs with an axis in synchronous control:
0: Synchronous control is canceled.
1: Synchronous control is not canceled if follow-up operation is disabled for the axis (with bit 0 (FUPx) of parameter No. 1819 set to 1).

	#7	#6	#5	#4	#3	#2	#1	#0
8162	MUMx	MCDx	MPSx	MPMx	OMRx	PKUx	SERx	SMRx

[Input type] Parameter input
[Data type] Bit axis

#0 SMRx Synchronous mirror-image control is:
0: Not applied. (The master and slave axes move in the same direction.)
1: Applied. (The master and slave axes move in opposite directions.)

#1 SERx The synchronization deviation is:

0: Not detected.
1: Detected.

> **NOTE**
> When both master and slave axes move in synchronization, the positioning deviations of the corresponding axes are compared with each other. If the difference is greater than or equal to the value specified in parameter No. 8181, an alarm occurs. When either axis is in the parking or machine-locked state, however, the synchronization deviation is not detected.

#2 PKUx In the parking state,

0: The absolute, relative, and machine coordinates are not updated.
1: The absolute and relative coordinates are updated. The machine coordinates are not updated.

> **NOTE**
> 1 With an axis for which polar coordinate interpolation is specified, set this parameter to 1. If this parameter is set to 0, a coordinate shift can occur when a single block stop or feed hold is performed in the polar coordinate interpolation mode.
> 2 With an axis that is set to function as a synchronous master axis and synchronous slave axis at the same time (with bit 1 (SYWx) of parameter No. 8167), set this parameter to 1.
> 3 With an axis specified in the 3-dimensional coordinate conversion mode, set this parameter to 1. If this parameter is set to 0, the alarm PS0367, “3-D CONV. WAS COMMANDED IN SYNC MODE AS THE PARAMETER PKUx(NO.8162#2) IS 0.” is issued.
> 4 When specify the G53 command during master parking, set this parameter to 1.

#3 OMRx Superimposed mirror-image control is:

0: Not applied. (The superimposed pulse is simply added.)
1: Applied. (The inverted superimposed pulse is added.)

#4 MPMx When composite control is started, the workpiece coordinate system is:

0: Not set automatically.
1: Set automatically.

NOTE

When the workpiece coordinate system is automatically set at the start of composite control, it is calculated from the following: Current machine coordinates and the workpiece coordinates at the reference point of each axis (parameter No. 8184).
When a workpiece coordinate system (G54 to G59, including additional workpiece coordinate systems) is used, however, instead of the coordinate value obtained by the above calculation, the workpiece coordinate value obtained by workpiece coordinate system presetting (equivalent to G92.1 IP 0) in the machine coordinate system of the other axis in composite control is set.

#5 MPSx When composite control is terminated, the workpiece coordinate system is:

0: Not set automatically.
1: Set automatically.

NOTE

When the workpiece coordinate system is automatically set at the end of composite control, it is calculated from the following: Current machine coordinates and the workpiece coordinates at the reference point of each axis under composite control (parameter No. 1250)
When a workpiece coordinate system (G54 to G59, including additional workpiece coordinate systems) is used, however, instead of the coordinate value obtained by the above calculation, the workpiece coordinate value obtained by workpiece coordinate system presetting (equivalent to G92.1 IP 0) in the machine coordinate system of the local axis is set.

#6 MCDx The axes to be replaced with each other under composite control have the coordinate systems placed:

0: In the same direction. Simple composite control is applied. (A movement is made in the same direction along the corresponding axis.)
1: In opposite directions. Mirror-image composite control is applied. (A movement is made in the reverse direction along the corresponding axis.)

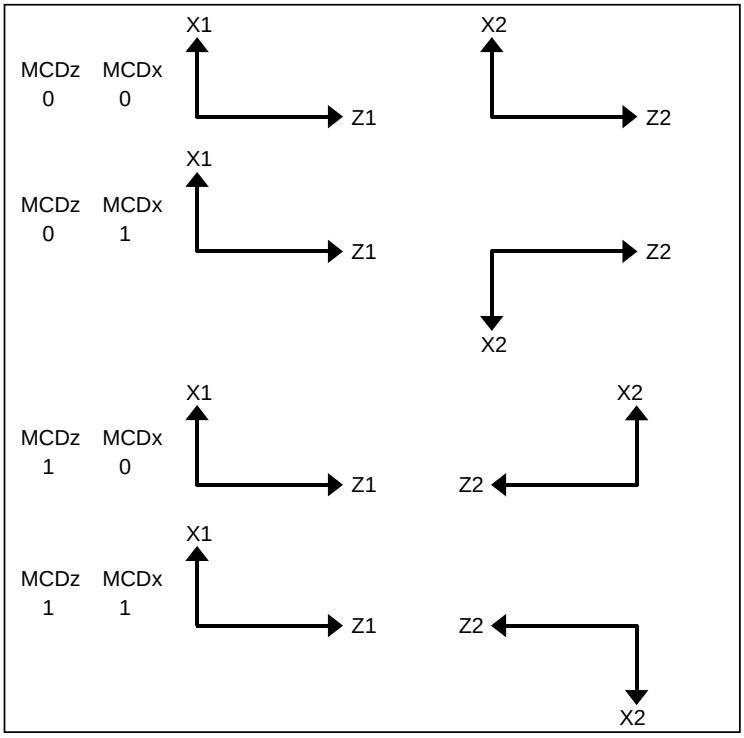

#7 MUMx In composite control, a move command for the axis:
0: Can be specified.
1: Cannot be specified.

> **NOTE**
> Upon the execution of a move command along an axis for which MUMx is set to 1 during mixed control, alarm PS0353, "THE INSTRUCTION WAS DONE FOR THE AXIS WHICH WAS NOT ABLE TO MOVE.", is issued. For example, when axis X1 and axis X2 are placed under composite control, and a command for axis X2 (motor for axis X1) is to be disabled, set MUMx for path 2 to 1.

	#7	#6	#5	#4	#3	#2	#1	#0
8163	NUMx	MMIx	SMIx	SCDx	SCMx	SPSx	SPMx	

[Input type] Parameter input
[Data type] Bit axis

#1 SPMx When synchronous control is started, automatic workpiece coordinate system setting for the master axis is:
0: Not Performed.
1: Performed.

> **NOTE**
> When a workpiece coordinate system is automatically set at the start of synchronous control, the workpiece coordinate system is calculated from the current machine coordinates and the workpiece coordinates of each axis at the reference position set in parameter No. 8185.

#2 SPSx When synchronous control terminates, automatic workpiece coordinate system setting for the master axis is:

0: Not performed.
1: Performed.

> **NOTE**
> When a workpiece coordinate system is automatically set at the end of synchronous control, the workpiece coordinate system is calculated from the current machine coordinates and the workpiece coordinates for each axis at the reference position set in parameter No. 1250.

#3 SCMx When workpiece coordinates are calculated in synchronous control:

0: The workpiece coordinates are calculated from the machine coordinates of the slave axis.
1: The workpiece coordinates are calculated from the machine coordinates of the master axis and slave axis.

#4 SCDx The positive (+) directions of the master axis and slave axis in the coordinate system in synchronous control are:

0: Identical.
1: Opposite.

Set the parameters SPMx, SPSx, SCMx, and SCDx for the master axis. These settings are referenced during automatic workpiece coordinate setting for the master axis at the start of synchronous control.

#5 SMIx In synchronous control, the manual handle interruption amount for the master axis or the mirror image mode is:

0: Reflected in the slave axis.
1: Not reflected in the slave axis.

When this bit (SMIx) is set to 0

Manual handle interruption :

To the travel distance along the slave axis, the interruption amount of the master axis is also added.

Mirror image :

When mirror image is applied to the master axis, mirror image is also applied to the slave axis.

When this bit (SMIx) is set to 1

Manual handle interruption :

To the travel distance along the slave axis, the interruption amount of the master axis is not added.

Mirror image :

Even when mirror image is applied to the master axis, mirror image is not applied to the slave axis.

#6 MMIx For a composite control axis, manual handle interruption under composite control is:

0: Enabled.
1: Disabled.

#7 NUMx When neither synchronous control nor composite control is applied, a move command for the axis is:
0: Not disabled.
1: Disabled.

> **NOTE**
> If a move command is specified for an axis with NUMx set to 1 when neither synchronous control nor composite control is applied, alarm PS0353, “THE INSTRUCTION WAS DONE FOR THE AXIS WHICH WAS NOT ABLE TO MOVE.”, is issued.

	#7	#6	#5	#4	#3	#2	#1	#0
8164		SOKx	OPSx		MCEx	MCSx	MWEx	MWSx
		SOKx	OPSx		MCEx	MCSx		

[Input type] Parameter input
[Data type] Bit axis

#0 MWSx In automatic workpiece coordinate system setting, performed when composite control is started, a workpiece shift and position offset are:
0: Not considered.
1: Considered.

> **NOTE**
> When bit 4 (MPMx) of parameter No. 8162 is set to 1 and workpiece coordinate system (G54 to G59, including additional workpiece coordinate system) is not used, MWSx is enabled.

#1 MWEx In automatic workpiece coordinate system setting, performed when composite control is canceled, a workpiece shift and position offset are:
0: Not considered.
1: Considered.

> **NOTE**
> When bit 5 (MPSx) of parameter No. 8162 is set to 1 and workpiece coordinate system (G54 to G59, including additional workpiece coordinate system) is not used, MWEx is enabled.

#2 MCSx A workpiece coordinate system automatically selected when composite control is started is:
0: The machine coordinate system of the other path under composite control as specified with parameter No. 8184.
1: The absolute coordinate system of the other path under composite control.

> **NOTE**
> When bit 4 (MPMx) of parameter No. 8162 is set to 1 and workpiece coordinate system (G54 to G59, including additional workpiece coordinate system) is not used, MCSx is enabled.

#3 MCEx A workpiece coordinate system automatically selected when composite control is stopped is:

0: The machine coordinate system of the other path under composite control as specified with parameter No. 1250.

1: The absolute coordinate system of the other path under composite control.

> **NOTE**
> When bit 5 (MPSx) of parameter No. 8162 is set to 1 and workpiece coordinate system (G54 to G59, including additional workpiece coordinate system) is not used, MCEx is enabled.

#5 OPSx When superimposed control is canceled, control in which an amount of movement along a master axis subject to superimposed control is added to the workpiece coordinate of a slave axis is:

0: Not applied.

1: Applied.

> **NOTE**
> When bit 0 (NWZ) of parameter No. 8136 is set to 0, workpiece coordinate system presetting (equivalent to G92.1IP0) is performed to set up a coordinate system.

#6 SOKx If a master axis subject to superimposed control is also subject to synchronous control:

0: An alarm is issued when superimposed control is started during synchronous control.

1: No alarm is issued when superimposed control is started during synchronous control.

	#7	#6	#5	#4	#3	#2	#1	#0
8165				SMT				

[Input type] Parameter input
[Data type] Bit

#4 SMT In composite control between Cs contour control axes, torque limit skip is:

0: Disabled

1: Enabled

	#7	#6	#5	#4	#3	#2	#1	#0
8166							MIX	

[Input type] Parameter input
[Data type] Bit

> **NOTE**
> When this parameter is set, the power must be turned off before operation is continued.

#1 MIX For composite control:

0: An interface for three paths or more is used. In this case, set the composite control axis selection signals MIX1 to MIX8 <Gn128.0 to Gn128.7> for the axis that is placed under composite control by parameter No. 8183, from 0 to 1 or from 1 to 0.

1: The conventional 2-path interface is used. (Composite control on three paths or more is disabled.) In this case, set parameter No. 8183 for path 2, and use the composite control axis selection signals MIX1 to MIX8 of path 1.

	#7	#6	#5	#4	#3	#2	#1	#0
8167		SPVx	SWSx	SWMx	SGSx	SGMx	SYWx	
		SPVx					SYWx	

[Input type] Parameter input
[Data type] Bit axis

#1 SYWx The axis is:

0: Not used as a master axis and slave axis at the same time.

1: Used as a master axis and slave axis at the same time.

#2 SGMx In automatic workpiece coordinate system setting at the start of synchronous control, a tool offset is:

0: Considered.

1: Not considered.

> **NOTE**
> SGMx is enabled when bit 1 (SPMx) of parameter No. 8163 is set to 1.

#3 SGSx In automatic workpiece coordinate system setting at the end of synchronous control, a tool offset is:

0: Considered.

1: Not considered.

> **NOTE**
> SGSx is enabled when bit 2 (SPSx) of parameter No. 8163 or bit 6 (SPVx) of parameter No. 8167 is set to 1.

#4 SWMx In automatic workpiece coordinate system setting at the start of synchronous control, a workpiece shift is:

0: Not considered.

1: Considered.

> **NOTE**
> SWMx is enabled when bit 1 (SPMx) of parameter No. 8163 is set to 1.

#5 SWSx In automatic workpiece coordinate system setting at the end of synchronous control, a workpiece shift is:

0: Not considered.

1: Considered.

> **NOTE**
> SWSx is enabled when bit 2 (SPSx) of parameter No. 8163 or bit 6 (SPVx) of parameter No. 8167 is set to 1.

#6 SPVx At the end of synchronous control, automatic workpiece coordinate system setting for the slave axis is:
0: Not performed.
1: Performed.

> **NOTE**
> When a workpiece coordinate system is automatically set at the end of synchronous control, the workpiece coordinate system is calculated from the current machine coordinates and the workpiece coordinates for each axis at the reference position set in parameter No. 1250.

	#7	#6	#5	#4	#3	#2	#1	#0
8168		WST		MWR		SVF	MSO	MPA

[Input type] Parameter input
[Data type] Bit

#0 MPA If an alarm concerning synchronous control, composite control, or superimposed control is issued:
0: All paths of the machine group to which the alarm occurrence path belongs are placed in feed hold state.
1: Only the path including the axis placed under synchronous control, composite control, or superimposed control is placed in the feed hold state.

#1 MSO When one of the following events occurs in synchronous control, composite control or superimposed control:
- The emergency stop signal *ESP <Gn008.4> is turned off.
- The servo-off signals SVF1 to SVF8 <Gn126.0 to Gn126.7> are turned on.
- A servo alarm is issued.

0: The synchronous, composite control or superimposed control mode is canceled and follow-up operation is not performed.
For the operation to be performed when the servo-off signal is turned on, however, the setting of bit 7 (NSR) of parameter No. 8161 is used in synchronous control or the setting of bit 0 (NMR) of parameter No. 8161 is used in composite control.
1: The synchronous, composite control or superimposed control mode is not canceled. The following operation is performed to perform follow-up operation:
When the emergency stop signal *ESP is turned off, the relevant path is determined and operation is performed so that the emergency stop signal *ESP is virtually turned off for the determined path.
When the servo-off signals SVF1 to SVF8 are turned on, the relevant axis is determined and operation is performed so that the servo-off signals SVF1 to SVF8 are virtually turned on for the determined axis.
When a servo alarm is issued, the relevant axis is determined and the alarm SV0003, "SYNCHRONOUS/COMPOSITE/SUPERIMPOSED CONTROL MODE CAN'T BE CONTINUED", is issued for the determined axis to stop moving the tool along the axis. When bit 2 (SVF) of parameter No. 8168 is set to 1, this servo-off specification follows the SVF setting.

NOTE
1 This setting is valid also during operation. For all axes placed under synchronous, composite control or superimposed control, the emergency stop signal is turned off, the servo-off signal is turned on, or a servo alarm is issued.
2 If the servo-off signal is turned on, the alarm DS1933, "NEED REF RETURN (SYNC:MIX:OVL)", will be generated in superimposed control.
After canceling alarm, perform a manual reference position return.

#2 SVF When an axis under composite control is placed in the servo-off state:
0: Composite control is canceled.
1: Composite control is not canceled.

Follow-up specification follows the setting of bit 0 (FUPx) of parameter No. 1819.
When bit 2 (SVF) of parameter No. 8168 is set to 1, bit 0 (NMR) of parameter No. 8161 is invalid. Bit 1 (MSO) of parameter No. 8168, specification for servo-off, is also invalid.

NOTE
If a composite control axis is placed in the servo-off state when stopped, set this parameter to 1.

#4 MWR When the synchronous control, composite control, or superimposed control is started or ended and the automatic setting of a workpiece coordinate system is executed, the tool offset number is:
0: Canceled.
1: Not canceled.

NOTE
This parameter is valid when bit 0 (NWZ) of parameter No. 8136 is set to 0.

#6 WST When a workpiece coordinate system is automatically set up for a slave axis at the end of synchronous control, workpiece coordinate system presetting is:
0: Not performed.
1: Performed.

NOTE
This parameter is valid when bit 0 (NWZ) of parameter No. 8136 is set to 0, and bit 6 (SPV) of parameter No. 8167 is set to 1.

	#7	#6	#5	#4	#3	#2	#1	#0
8169		SESx				MRFx	MVMx	MDMx

[Input type] Parameter input
[Data type] Bit axis

#0 MDMx As machine coordinates in composite control:
0: Coordinates for the local path are displayed.
1: Coordinates for the other path in composite control are displayed.

#1 MVMx In composite control, machine coordinates (#5021 and above) to be read are:
0: Machine coordinates of the local path.
1: Machine coordinates of the other path in composite control.

#2 MRFx In composite control, the rapid traverse rate is:
0: The rapid traverse rate for the specified axis.
1: The rapid traverse rate for the axis along which a movement is made.

#6 SESx If a synchronization error is out of the tolerable range (specified with parameter No. 8181):
0: Alarm SV0407, "EXCESS ERROR", is issued.
1: No alarm is issued. Instead, the excess synchronization error signal SEO<Fn559> is output.

SESx is valid when bit 1 (SERx) of parameter No. 8162 is 1. Specify the value of this parameter for the slave axis.

8180	Master axis with which an axis is synchronized under synchronous control

[Input type] Parameter input
[Data type] Word axis
[Valid data range] 101, 102, 103, . . . , (path number)*100+(intra-path relative axis number) (101, 102, 103, . . . , 201, 202, 203, . . . , 1001, 1002, 1003, . . .)
This parameter sets the path number and intra-path relative axis number of the master axis with which each axis is synchronized. When zero is specified, the axis does not become a slave axis and is not synchronized with another axis. When an identical number is specified in two or more parameters, one master axis has two or more slave axes.

8181	Synchronization error limit of each axis

[Input type] Parameter input
[Data type] 2-word axis
[Unit of data] Detection unit
[Valid data range] 0 to 99999999
When the synchronization deviation detected (bit 1 (SERx) of parameter No. 8162 is set to 1), this parameter specifies the limit of the difference between the positioning deviation of the slave axis and that of the master axis. Set this parameter to the slave axis.

8183	Composite control axis of the other path in composite control for each axis

[Input type] Parameter input
[Data type] Word axis
[Valid data range] 101, 102, 103, . . . , (path number)*100+(intra-path relative axis number) (101, 102, 103, . . . , 201, 202, 203, . . . , 1001, 1002, 1003, . . .)
This parameter sets with which axis each axis is to be placed under composite control. When zero is specified, control of the axis is not replaced under composite control. An identical number can be specified in two or more parameters, but composite control cannot be exercised for all of them at a time.

NOTE
When the two-path interface is used (bit 1 (MIX) of parameter No. 8166 is set to 1), set this parameter for path 2.

8184	Coordinates of the reference point of an axis on the coordinate system of another axis under composite control

[Input type] Parameter input
[Data type] Real axis
[Unit of data] mm, inch, degree (input unit)
[Min. unit of data] Depend on the increment system of the applied axis
[Valid data range] 9 digit of minimum unit of data (refer to standard parameter setting table (A))
(When the increment system is IS-B, -999999.999 to +999999.999)
This parameter specifies the coordinates of the reference point of an axis on the coordinate system of another axis under composite control.
[Example] Exercising composite control to replace the X1-axis with the X2-axis

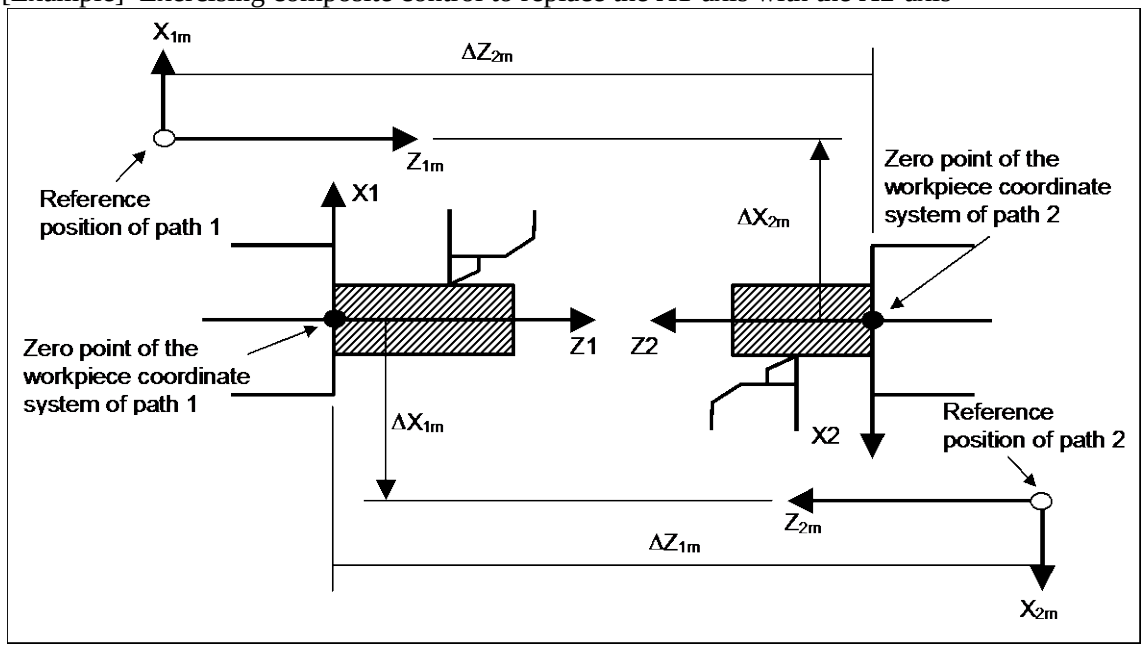

(ΔX1m, ΔZ1m) are the coordinates of the reference point of path 2 on the workpiece coordinate system of path 1. (ΔX2m, ΔZ2m) are the coordinates of the reference point of path 1 on the workpiece coordinate system of path 2.
ΔX1m is specified for the parameter No. 8184x of path 1 and ΔX2m for the parameter No. 8184x of path 2.
If bit 4 (MPMx) of parameter No. 8162 is set to 1 when composite control is started, the workpiece coordinate system satisfying the following conditions is specified:
X1 = (Value specified for the X-axis of path 1) ± (Machine coordinate of X2)
Plus when bit 6 (MCDx) of parameter No. 8162 of path 1 is set to 0
Minus when bit 6 (MCDx) of parameter No. 8162 of path 1 is set to 1
X2 = (Value specified for the X-axis of path 2) ± (Machine coordinate of X1)
Plus when bit 6 (MCDx) of parameter No. 8162 of path 2 is set to 0
Minus when bit 6 (MCDx) of parameter No. 8162 of path 2 is set to 1
If bit 5 (MPSx) of parameter No. 8162 is set to 1 when composite control is terminated, the workpiece coordinate system satisfying the following conditions is specified:
X1 = (Parameter No. 1250 of path 1) + (Machine coordinate of X1)
X2 = (Parameter No. 1250 of path 2) + (Machine coordinate of X2)

NOTE
This parameter is valid when bit 4 (MPMx) of parameter No. 8162 is set to 1, and workpiece coordinate systems (G54 to G59, including additional workpiece coordinate systems) are not used.

8185	Workpiece coordinates on each axis at the reference position

[Input type] Parameter input
[Data type] Real axis
[Unit of data] mm, inch, degree (input unit)
[Min. unit of data] Depend on the increment system of the applied axis
[Valid data range] 9 digit of minimum unit of data (refer to standard parameter setting table (A))
(When the increment system is IS-B, -999999.999 to +999999.999)
This parameter sets the workpiece coordinates on each master axis, subject to synchronous control, when the master and slave axes are at the reference position. This parameter is enabled when bit 1 (SPMx) of parameter No. 8163 is set to 1. Set this parameter for the master axis.

8186	Master axis under superimposed control

[Input type] Parameter input
[Data type] Word axis
[Valid data range] 101, 102, 103, . . . , (path number)*100+(intra-path relative axis number) (101, 102, 103, . . . , 201, 202, 203, . . . , 1001, 1002, 1003, . . .)
This parameter sets the path number and intra-path relative axis number of a superimposed master axis for each axis when superimposed control is exercised. When zero is specified, the axis does not become a slave axis under superimposed control and the move pulse of another axis is not superimposed.
An identical number can be specified in two or more parameters to exercise superimposed control simultaneously. This means that superimposed control with one master axis and multiple slave axes is possible.
A slave axis may function as the master axis of another axis to allow three-generation superimposed control: parent (master axis) - child (slave axis/master axis) - grandchild (slave axis).

In this case, a movement along the child is made by its travel distance plus the travel distance of the parent, and a movement along the grandchild is made by its travel distance plus the travel distance of the child plus the travel distance of the parent.

Example of the relationship of parent (X1 of path 1) - child (X2 of path 2) - grandchild (X3 of path 3):
The travel distance of X1 is superimposed on X2, and the travel distances of X1 and X2 are further superimposed on X3.
Parameter No. 8186 (X axis) of path 2 = 101
Parameter No. 8186 (X axis) of path 3 = 201

8190	Rapid traverse rate of an axis under superimposed control

[Input type] Parameter input
[Data type] Real axis
[Unit of data] mm/min, inch/min, degree/min (machine unit)
[Min. unit of data] Depend on the increment system of the applied axis
[Valid data range] Refer to standard parameter setting table (C)
(When the increment system is IS-B, 0 to +999000.0)
Set a rapid traverse rate for each of the axes when the rapid traverse override of the axes (master and slave axes) under superimposed control is 100%. The manual rapid traverse rate set in this parameter or the manual rapid traverse rate set in parameter No. 1424, whichever smaller, is used.
If this parameter is set to 0, the normal rapid traverse rate (parameter No. 1420) is used.

8191	F0 velocity of rapid traverse override of an axis under superimposed control

[Input type] Parameter input
[Data type] Real axis
[Unit of data] mm/min, inch/min, degree/min (machine unit)
[Min. unit of data] Depend on the increment system of the applied axis
[Valid data range] Refer to standard parameter setting table (C)
(When the increment system is IS-B, 0 to +999000.0)
Set the F0 velocity of rapid traverse override of an axis under superimposed control (each of the master and slave axes).
If this parameter is set to 0, the F0 velocity of rapid traverse override in normal operation (parameter No. 1421) is used.

8192	Linear acceleration/deceleration time constant in rapid traverse of an axis under superimposed control

[Input type] Parameter input
[Data type] Word axis
[Unit of data] msec
[Valid data range] 0 to 4000
This parameter specifies the linear acceleration/deceleration time constant in rapid traverse for each of the axes (master and slave axes) under superimposed control.

8194	Maximum cutting feedrate in superimposed control

[Input type] Parameter input
[Data type] Real axis
[Unit of data] mm/min, inch/min, degree/min (machine unit)
[Min. unit of data] Depend on the increment system of the applied axis
[Valid data range] Refer to standard parameter setting table (C)
(When the increment system is IS-B, 0 to +999000.0)
Set the maximum cutting feedrate that can be applied under superimposed control.
If this parameter is set to 0, the maximum cutting feedrate in normal operation (parameter No. 1430) is used.

4.59 PARAMETERS OF ANGULAR AXIS CONTROL

	#7	#6	#5	#4	#3	#2	#1	#0
8200					AZP	AZR		AAC

[Input type] Parameter input
[Data type] Bit path

> **NOTE**
> When at least one of these parameters is set, the power must be turned off before operation is continued.

#0 AAC 0: Does not perform angular axis control.
1: Performs inclined axis control.

#2 AZR 0: The machine tool is moved along the Cartesian axis during manual reference position return along the slanted axis under angular axis control.

1: The machine tool is not moved along the Cartesian axis during manual reference position return along the slanted axis under angular axis control.

#3 AZP When a movement is made along the Cartesian axis due to a movement along the slanted axis, reference position return end signals for the Cartesian axis ZP1 to ZP8 <Fn094.0 to Fn094.7> are:
0: Not cleared.
1: Cleared.

	#7	#6	#5	#4	#3	#2	#1	#0
8201	ADG	A53				AO3	AO2	AOT

[Input type] Parameter input
[Data type] Bit path

> **NOTE**
> When at least one of these parameters is set, the power must be turned off before operation is continued.

#0 AOT Stored stroke limit 1 under angular axis control is handled as:
0: Value in the slanted coordinate system.
1: Value in the Cartesian coordinate system.

#1 AO2 Stored stroke limit 2 under angular axis control is handled as:
0: Value in the slanted coordinate system.
1: Value in the Cartesian coordinate system.

#2 AO3 Stored stroke limit 3 under angular axis control is handled as:
0: Value in the slanted coordinate system.
1: Value in the Cartesian coordinate system.

#6 A53 So far, if a slanted axis is singly specified by a machine coordinate command (G53) in angular axis control, this parameter set to 0 specifies that "compensation is applied to the Cartesian axis", and this parameter set to 1 specifies that "a movement is made along the slanted axis only". However, the specification has been changed so that "a movement is made along the slanted axis only", regardless of whether this parameter is set to 0 or 1.

#7 ADG The contents of diagnosis data Nos. 306 and 307 are:
0: Not swapped. The slanted axis and Cartesian axis are displayed in this order.
1: Swapped. The Cartesian axis and slanted axis are displayed in this order.

	#7	#6	#5	#4	#3	#2	#1	#0
8209								ARF

[Input type] Parameter input
[Data type] Bit path

> **NOTE**
> When this parameter bit is set, the power must be turned off before operation is continued.

#0 ARF In angular axis control, a movement from an intermediate point to the reference position in the G28/G30 command is:
0: Made in the angular coordinate system.

1: Made in the Cartesian coordinate system.

8210	Slant angle of a slanted axis in angular axis control

[Input type] Parameter input
[Data type] Real path
[Unit of data] Degree
[Min. unit of data] Depend on the increment system of the applied axis
[Valid data range] -180.000 to 180.000. However, angular axis control is disabled in the ranges -95.000 to -85.000 and 85.000 to 95.000 (in the case of IS-B).

8211	Axis number of a slanted axis subject to angular axis control
8212	Axis number of a Cartesian axis subject to slanted axis control

NOTE
When these parameters are set, the power must be turned off before operation is continued.

[Input type] Parameter input
[Data type] Word path
[Valid data range] 1 to number of controlled axes
When angular axis control is to be applied to an arbitrary axis, these parameters set the axis numbers of a slanted axis and Cartesian axis. If 0 is set in either of the two parameters, the same number is set in the two parameters, or a number other than the controlled axis numbers is set in either of the two parameters, a slanted axis and Cartesian axis are selected as indicated in the following table:

	Slanted axis	Cartesian axis
M series	Y-axis (axis with 2 set in parameter No. 1022) of the basic three axes	Z-axis (axis with 3 set in parameter No. 1022) of the basic three axes
T series	X-axis (axis with 1 set in parameter No. 1022) of the basic three axes	Z-axis (axis with 3 set in parameter No. 1022) of the basic three axes

4.60 PARAMETERS OF AXIS SYNCHRONOUS CONTROL

	#7	#6	#5	#4	#3	#2	#1	#0
8301				SYA				

[Input type] Parameter input
[Data type] Bit path

#4 SYA In the servo-off state in axis synchronous control, the limit of the difference between the positioning deviation of the master axis and that of the slave axis is:
0: Checked.
1: Not checked.

	#7	#6	#5	#4	#3	#2	#1	#0
8302	SMA							

[Input type] Parameter input
[Data type] Bit path

NOTE
When this parameter is set, the power must be turned off before operation is continued.

#7 SMA When an absolute position detector is attached, and bit 4 (APZx) of parameter No. 1815 for an axis in synchronous operation is set to 0, APZx of the pairing axis in synchronous operation is:
0: Not set to 0.
1: Set to 0.

	#7	#6	#5	#4	#3	#2	#1	#0
8303	SOFx			SYPx		SAFx	ATSx	ATEx

[Input type] Parameter input
[Data type] Bit axis

NOTE
When at least one of these parameters is set, the power must be turned off before operation is continued.

#0 ATEx In axis synchronous control, automatic setting for grid positioning is:
0: Disabled
1: Enabled
The setting for the slave axis is available.

#1 ATSx In axis synchronous control, automatic setting for grid positioning is:
0: Not started
1: Started
The setting for the slave axis is available.

NOTE
When starting automatic setting for grid positioning, set ATSx to 1. Upon the completion of setting, ATSx is automatically set to 0.

#2 SAFx In axis synchronous control, a movement along a slave axis is:
0: Not added to actual feedrate display.
1: Added to actual feedrate display.
The setting for the slave axis is available.

#4 SYPx In axis synchronous control, some parameters must be set to the same value for the master and slave axes. When a value is set in such a parameter for the master axis:
0: The same value is not automatically set in the parameter for the slave axis.
1: The same value is automatically set in the parameter for the slave axis.

NOTE
1 For the parameters that can be set automatically, refer to Subsection "Automatic Setting of Parameters for Slave Axes", in Connection Manual (Function) (B-64693EN-1).
2 Set this parameter to the same value for both the master and slave axes.

#7 SOFx In axis synchronous control, the synchronization establishment function based on machine coordinates is:
0: Disabled.
1: Enabled.
The setting for the slave axis is available.
When using synchronization error compensation, set this parameter to 0.

	#7	#6	#5	#4	#3	#2	#1	#0
8304	SYEx	SMSx	SCAx	MVBx	CLPx	ADJx		SSAx

[Input type] Parameter input
[Data type] Bit axis

#0 SSAx When the one-direction synchronization establishment function under axis synchronous control is used:
0: The axis with a larger machine coordinate is used as the reference.
1: The axis with a smaller machine coordinate is used as the reference.

NOTE
1 When this parameter is set, the power must be turned off before operation is continued.
2 Set this parameter to the same value for both the master and slave axes.

#2 ADJx In axis synchronous control, this parameter specifies an axis along which a movement is made in the correction mode.
0: A movement is not made in the correction mode along the axis.
1: A movement is made in the correction mode along the axis.
When this parameter is set to 1, the correction mode is set.
Along an axis with this parameter set to 1, a movement is made by a move command for the master axis.
Set this parameter for one of the master and slave axes.
When there are multiple slave axes for one master axis, set this parameter to 1 for an axis with which a synchronization error excessive alarm is issued for recovery. If an alarm is issued with multiple axes, modify this parameter after recovery of one axis to recover another axis.

#3 CLPx In axis feed synchronous control, synchronization error compensation is:
0: Disabled.
1: Enabled.
The setting for the slave axis is available.

#4 MVBx In the correction mode, a move command in a direction that increases a synchronization error is:
0: Ignored.
1: Valid.
When there are multiple slave axes for one master axis, an attempt to reduce the synchronous error of a slave axis by a movement along the master axis can increase the synchronization error of another slave axis. If this parameter is set to 0 in such a case, a movement can be made in neither direction along the master axis. In this case, set bit 2 (ADJx) of parameter No. 8304 to make a movement along a slave axis to perform a corrective operation.

#5 SCAx In axis synchronous control:
0: Synchronous operation is performed when the axis synchronous control manual feed selection signal SYNCJ <Gn140> or the axis synchronous control selection signal SYNC <Gn138> for slave axes is set to “1”.
1: Synchronous operation is performed at all times.
The setting for the slave axis is available.

#6 SMSx The synchronization error smooth suppress function is:
0: Disabled.
1: Enabled.
The setting for the slave axis is available.

#7 SYEx When external machine coordinate system shift is specified by external data input/output for the master axis in synchronous control, the slave axis is:
0: Not shifted.
1: Shifted by the same amount as specified for the master axis.
The setting for the slave axis is available.
This function is disabled during normal operation.

	#7	#6	#5	#4	#3	#2	#1	#0
8305				SLR		SRF	SSE	SSO

[Input type] Parameter input
[Data type] Bit path

#0 SSO The uni-directional synchronization function in axis synchronous control is:
0: Disabled.
1: Enabled.

#1 SSE After emergency stop, the uni-directional synchronization function in axis synchronous control is:
0: Enabled.
1: Disabled.

#2 SRF In axis synchronous control, G28, G30, and G53:
0: Make the same movement along the slave axis as a movement along the master axis.
1: Make movements along the slave axis and master axis independently to specified positions.

#4 SLR When G28 is specified for an axis under axis synchronous control for which the reference position is not established:
0: Alarm PS0213, "ILLEGAL COMMAND IN SYNCHRO-MODE", is issued.
1: Reference position return operation of low-speed type is performed.

	#7	#6	#5	#4	#3	#2	#1	#0
8306								SJR

[Input type] Parameter input
[Data type] Bit path

#0 SJR In synchronization establishment,
0: A machine coordinate difference between the master axis and slave axis is output at a time as command pulses (axis movements are performed without acceleration/deceleration).

1: Axis movements are executed with the feedrate of manual rapid traverse and the acceleration/deceleration after interpolation in rapid traverse.

NOTE
When the one-direction synchronization establishment function under axis synchronous control is used (bit 0 (SSO) of parameter No.8305 is set to 1), the machine coordinate difference for synchronization establishment is output as command pulses at a time, regardless of the setting of this parameter. Acceleration/deceleration is not applied to the axis movements in the one-direction synchronization establishment.

NOTE
This parameter is Initial setting parameter. For details, refer to the appendix "Automatic setting / Initial setting parameter" in CONNECTION MANUAL (FUNCTION) (B-64693EN-1).

	#7	#6	#5	#4	#3	#2	#1	#0
8307								FSS

[Input type] Parameter input
[Data type] Bit type

NOTE
When this parameter is set, the power must be turned off before operation is continued.

#0 FSS The slave axis of flexible synchronization control or the slave axis of superimposed control is:
0: Not used as the master axis of axis synchronous control.
1: Used as the master axis of axis synchronous control.

8311	Axis number of master axis in axis synchronous control

NOTE
When this parameter is set, the power must be turned off before operation is continued.

[Input type] Parameter input
[Data type] Byte axis
[Valid data range] 0 to Number of controlled axes
Select a master axis in axis synchronous control. In the parameter for the slave axis, set the axis number of the master axis.

Example 1)
When one set of axis synchronous control is used:
When the master axis is the first axis (X-axis), and the slave axis is the third axis (Z-axis), set parameter No. 8311 as follows:
Parameter No. 8311 X (first axis) = 0
Parameter No. 8311 Y (second axis) = 0
Parameter No. 8311 Z (third axis) = 1
Parameter No. 8311 A (fourth axis) = 0

Example 2)

When three sets of axis synchronous control is used:

When the master axes are the first axis, second axis, and third axis, and the slave axes are the sixth axis, fifth axis, and fourth axis, set parameter No. 8311 as follows:

Parameter No. 8311	X (first axis)	= 0
Parameter No. 8311	Y (second axis)	= 0
Parameter No. 8311	Z (third axis)	= 0
Parameter No. 8311	A (fourth axis)	= 3
Parameter No. 8311	B (fifth axis)	= 2
Parameter No. 8311	C (sixth axis)	= 1

Example 3)

When the multiple slave axes of axis synchronous control are used in each path:

When the master axes are the first axis of the each path, and the slave axes are the fourth axis and fifth axis of the each path, set parameter No. 8311 as follows:

	Path-1		Path-2	
Parameter No.8311	X (first axis)	= 0	X (first axis)	= 0
Parameter No.8311	Y (second axis)	= 0	Y (second axis)	= 0
Parameter No.8311	Z (third axis)	= 0	Z (third axis)	= 0
Parameter No.8311	A (fourth axis)	= 1	A (fourth axis)	= 1
Parameter No.8311	B (fifth axis)	= 1	B (fifth axis)	= 1

8312 **Enabling/disabling slave axis mirror image**

[Input type] Parameter input
[Data type] Word axis
[Valid data range] 0, 100

When the slave axis mirror image is enabled on axis synchronous control, set this parameter to 100. If 0 is set in this parameter, the slave axis mirror image is disabled. The setting for the slave axis is available.

Example)

For reverse synchronization with the master axis being the third axis and the slave axis being the fourth axis, set parameter No. 8312 as follows:

Parameter No. 8312 X (first axis)	= 0
Parameter No. 8312 Y (second axis)	= 0
Parameter No. 8312 Z (third axis)	= 0
Parameter No. 8312 A (fourth axis)	= 100

NOTE

In synchronous operation with mirror image applied, synchronization error compensation, synchronization establishment, synchronization error checking, and correction mode cannot be used.

8314 **Maximum allowable error in synchronization error check based on machine coordinates**

[Input type] Parameter input
[Data type] Real axis
[Unit of data] mm, inch, degree (machine unit)
[Min. unit of data] Depend on the increment system of the applied axis
[Valid data range] 0 or positive 9 digit of minimum unit of data (refer to the standard parameter setting table (B))
(When the increment system is IS-B, 0.0 to +999999.999)

This parameter sets a maximum allowable error in a synchronization error check based on machine coordinates. When the error between the master and slave axes in machine coordinates exceeds the value set in this parameter, the machine stops with the servo alarm SV0005, "SYNC EXCESS ERROR (MCN) ".
The setting for the slave axis is available.

NOTE
Set 0 in this parameter when a synchronization error check is not made.

8323	Limit in positional deviation check in axis synchronous control

[Input type] Parameter input
[Data type] 2-word axis
[Unit of data] Detection unit
[Valid data range] 0 to 999999999
This parameter sets the maximum allowable difference between the master axis and slave axis position deviations. When the absolute value of a positional deviation difference exceeds the value set in this parameter in axis synchronous control, the alarm DS0001, “SYNC EXCESS ERROR (POS DEV)”, is issued.
The setting for the slave axis is available. If 0 is specified in this parameter, no position deviation difference check is made.

8325	Maximum compensation value in synchronization establishment based on machine coordinates

[Input type] Parameter input
[Data type] Real axis
[Unit of data] mm, inch, degree (machine unit)
[Min. unit of data] Depend on the increment system of the applied axis
[Valid data range] 0 or positive 9 digit of minimum unit of data (refer to the standard parameter setting table (B))
(When the increment system is IS-B, 0.0 to +999999.999)
This parameter sets the maximum compensation value for synchronization. When a compensation value exceeding the value set in this parameter is detected, the servo alarm SV0001, "SYNC ALIGNMENT ERROR", is issued, and the synchronization establishment is not performed.
The setting for the slave axis is available. To enable this parameter, set the bit 7 (SOF) of parameter No.8303 to 1. When 0 is set in this parameter, synchronization establishment is not performed.

8326	Difference between master axis and slave axis reference counters

[Input type] Parameter input
[Data type] 2-word axis
[Unit of data] Detection unit
[Valid data range] 0 to 999999999
The difference between the master axis reference counter and slave axis reference counter (master axis and slave axis grid shift) is automatically set when automatic setting for grid positioning is performed. Then, the difference is transferred together with an ordinary grid shift value to the servo system when the power is turned on. This parameter is set with a slave axis.

8327	Torque difference alarm detection timer

[Input type] Parameter input
[Data type] 2-word axis
[Unit of data] msec
[Valid data range] 0 to 4000

This parameter sets a time from the servo preparation completion signal, SA <Fn000.6>, being set to “1” until torque difference alarm detection is started in axis synchronous control.
When 0 is set in this parameter, the specification of 512 msec is assumed.
The setting for the slave axis is available.

8330	Multiplier for a maximum allowable synchronization error immediately after power-up

NOTE
When this parameter is set, the power must be turned off before operation is continued.

[Input type] Parameter input
[Data type] Word path
[Valid data range] 1 to 100

Until synchronization establishment is completed immediately after power-up, synchronization error excessive alarm 2 is checked using the maximum allowable error (parameter No. 8332) multiplied by the value set in this parameter.
If the result produced by multiplying the value of parameter No. 8332 by the value of this parameter exceeds 32767, the value is clamped to 32767.

8331	Maximum allowable synchronization error for synchronization error excessive alarm 1

[Input type] Parameter input
[Data type] 2-word axis
[Unit of data] Detection unit
[Valid data range] 1 to 32767

This parameter sets a maximum allowable synchronization error for synchronization error excessive alarm 1.
The setting for the slave axis is available.

8332	Maximum allowable synchronization error for synchronization error excessive alarm 2

NOTE
When this parameter is set, the power must be turned off before operation is continued.

[Input type] Parameter input
[Data type] 2-word axis
[Unit of data] Detection unit
[Valid data range] 1 to 32767

This parameter sets a maximum allowable synchronization error for synchronization error excessive alarm 2.
The setting for the slave axis is available.

8333	Synchronization error zero width for each axis

[Input type] Parameter input

[Data type] 2-word axis
[Unit of data] Detection unit
[Valid data range] 1 to 32767
When a synchronization error below the value set in this parameter is detected, synchronization error compensation is not performed.
The setting for the slave axis is available.

8334	Synchronization error compensation gain for each axis

[Input type] Parameter input
[Data type] Word axis
[Valid data range] 1 to 1024
This parameter sets a synchronization error compensation gain.
Compensation pulses found by the following expression are output for the slave axis:
Compensation pulses = Synchronization error × (Ci/1024)
Ci: Compensation gain
The setting for the slave axis is available.

8335	Synchronization error zero width 2 for each axis

[Input type] Parameter input
[Data type] 2-word axis
[Unit of data] Detection unit
[Valid data range] 0 to 32767
This parameter sets synchronization error zero width 2 for synchronization error smooth suppression.
The setting for the slave axis is available.

NOTE
Set a value less than the value set in parameter No. 8333.

8336	Synchronization error compensation gain 2 for each axis

[Input type] Parameter input
[Data type] Word axis
[Valid data range] 0 to 1024
This parameter sets synchronization error compensation gain 2 for synchronization error smooth suppression.
The setting for the slave axis is available.

NOTE
Set a value less than the value set in parameter No. 8334.

8337	M code for turning off synchronization in axis synchronous control
8338	M code for turning on synchronization in axis synchronous control

[Input type] Parameter input
[Data type] 2-word path
[Valid data range] 1 to 999999999
This parameter specifies an M code for switching between synchronous operation and normal operation.
The M code set in this parameter is not buffered.

> ⚠ **CAUTION**
> To switch between synchronous operation and normal operation, specify the M code set in parameter No. 8337 or 8338.

4.61 PARAMETERS OF SEQUENCE NUMBER COMPARISON AND STOP

8341	Program number subject to comparison and stop

[Input type] Setting input
[Data type] 2-word path
[Valid data range] 1 to 99999999
This parameter sets the program number, including a sequence number, subject to sequence number comparison and stop. Parameter No. 8342 is used to set a sequence number subject to check termination.

8342	Sequence number subject to comparison and stop

[Input type] Setting input
[Data type] 2-word path
[Valid data range] 0 to 99999999
This parameter sets the sequence number subject to sequence number comparison and stop.
If the block containing the sequence number set with this parameter is executed while the program set with parameter No. 8341 is being executed, a single block stop occurs after the block is executed. At this time, the setting is automatically set to -1.

> **NOTE**
> 1 When -1 is set in parameter No. 8342, comparison and stop is disabled.
> 2 Comparison and stop cannot be performed using a sequence number contained in a block (such as a macro statement, M98, and M99) that is processed only inside the CNC.
> 3 When a match is found with the sequence number of a block (such as an L specification of a canned cycle) that specifies the number of repeats, operation stops after executing as many times as the number of repeats.
> 4 If the sequence number set in parameter No. 8342 appears more than once in the program, operation stops at the block where the first match is found in the order of execution.

4.62 PARAMETERS OF HIGH PRECISION OSCILLATION FUNCTION (1 OF 2)

	#7	#6	#5	#4	#3	#2	#1	#0
8360						CVC		ROV

[Input type] Setting input
[Data type] Bit path

#0 ROV As rapid traverse override for a section from the oscillation start point to point R:
0: oscillation override is used.
1: Rapid traverse override is used.

#2 CVC The feedrate along the oscillation axis is changed:
0: At the upper or lower dead point immediately after the feedrate change command is issued.
1: At the upper dead point immediately after the feedrate change command is issued.

8370	Oscillation axis

[Input type] Parameter input
[Data type] Byte path
[Valid data range] 1 to Number of controlled axes
This parameter sets which servo axis the oscillation axis corresponds to.

8371	Oscillation reference point (point R)

[Input type] Parameter input
[Data type] Real path
[Unit of data] mm, inch, deg (input unit)
[Min. unit of data] Depend on the increment system of the oscillation axis
[Valid data range] 9 digit of minimum unit of data (refer to standard parameter setting table (A))
(When the increment system is IS-B, -999999.999 to +999999.999)
The data set in this parameter is absolute coordinates.

8372	Oscillation upper dead point

[Input type] Parameter input
[Data type] Real path
[Unit of data] mm, inch, deg (input unit)
[Min. unit of data] Depend on the increment system of the oscillation axis
[Valid data range] 9 digit of minimum unit of data (refer to standard parameter setting table (A))
(When the increment system is IS-B, -999999.999 to +999999.999)
The data set in this parameter is absolute coordinates.

8373	Oscillation lower dead point

[Input type] Parameter input
[Data type] Real path
[Unit of data] mm, inch, deg (input unit)
[Min. unit of data] Depend on the increment system of the oscillation axis
[Valid data range] 9 digit of minimum unit of data (refer to standard parameter setting table (A))
(When the increment system is IS-B, -999999.999 to +999999.999)
The data set in this parameter is absolute coordinates.

8374	Oscillation base feedrate

[Input type] Parameter input
[Data type] Real path
[Unit of data] mm/min, inch/min, deg/min (input unit)
[Min. unit of data] Depend on the increment system of the oscillation axis
[Valid data range] Refer to the standard parameter setting table (C)
(When the increment system is IS-B, 0.0 to +999000.0)
This parameter sets the oscillation base feedrate.

8375	Maximum oscillation feedrate

[Input type] Parameter input
[Data type] Real axis
[Unit of data] mm/min, inch/min, deg/min (machine unit)
[Min. unit of data] Depend on the increment system of the applied axis
[Valid data range] Refer to the standard parameter setting table (C)
(When the increment system is IS-B, 0.0 to +999000.0)
The oscillation feedrate is clamped at this parameter setting. The maximum feedrate must be set for the oscillation axis. If this parameter is set to 0, no movement is made for oscillation.

> **NOTE**
> Set a value that is smaller than the rapid traverse rate (parameter No. 1420) to Maximum oscillation feedrate.

4.63 PARAMETERS OF AI CONTOUR CONTROL (1 OF 2)

	#7	#6	#5	#4	#3	#2	#1	#0
8451	NOF			ZAG				

[Input type] Setting input
[Data type] Bit path

#4 ZAG The deceleration function based on cutting load in AI contour control II (deceleration based on Z-axis fall angle) is:
0: Not performed.
1: Performed.
When this parameter is set to 1, be sure to set parameter Nos. 8456, 8457, and 8458.

#7 NOF In AI contour control II, an F command is:
0: Not ignored.
1: Ignored.
When this parameter is set to 1, the specification of the maximum allowable feedrate set in parameter No. 8465 is assumed.

8456	Override for range 2 that is applied during deceleration according to the cutting load in AI contour control II
8457	Override for range 3 that is applied during deceleration according to the cutting load in AI contour control II
8458	Override for range 4 that is applied during deceleration according to the cutting load in AI contour control II

[Input type] Setting input
[Data type] Word path
[Unit of data] %
[Valid data range] 1 to 100
For the function of decelerating according to the cutting load in AI contour control II, the override set in a parameter can be applied according to the angle at which the tool moves downward along the Z-axis. The feedrate obtained according to other conditions is multiplied by the override for the range containing angle θ at which the tool moves downward.

However, when bit 1 (ZG2) of parameter No. 19515 is set to 0, no parameter is available to range 1, and 100% is applied at all times. When bit 1 (ZG2) of parameter No. 19515 is set to 1, set an override value for range 1 in parameter No. 19516.

Range 1 $0° \leq \theta < 30°$
Range 2 $30° \leq \theta < 45°$
Range 3 $45° \leq \theta < 60°$
Range 4 $60° \leq \theta \leq 90°$

	#7	#6	#5	#4	#3	#2	#1	#0
8459					OVRB			

[Input type] Parameter input
[Data type] Bit path

#3 OVRB For deceleration based on a feedrate difference or acceleration rate in AI contour control, override is:
0: Disabled.
1: Enabled.
Usually, override is enabled for a specified feedrate, and AI contour control is applied to the specified feedrate. When this parameter is set to 1, override is applied to a feedrate placed under AI contour control.

8465	Maximum allowable feedrate for AI contour control

[Input type] Setting input
[Data type] Real path
[Unit of data] mm/min, inch/min, degree/min (input unit)
[Min. unit of data] Depend on the increment system of the reference axis
[Valid data range] Refer to the standard parameter setting table (C)
(When the increment system is IS-B, 0.0 to +999000.0)
This parameter sets the maximum allowable feedrate for contour control.
If a feedrate higher than the setting of this parameter is specified in the AI contour control mode, the feedrate is clamped to that set in this parameter.
If this parameter is set to 0, no clamping is performed.
When bit 7 (NOF) of parameter No. 8451 is set to 1, the tool moves, assuming that the feedrate set in this parameter is specified. If 0 is set in this parameter at this time, a movement is made at the specified feedrate.

8466	Maximum allowable feedrate for AI contour control (when a rotation axis is singly specified)

[Input type] Setting input
[Data type] Real path
[Unit of data] mm/min, inch/min, degree/min (machine unit)
[Min. unit of data] Depend on the increment system of the reference axis
[Valid data range] Refer to the standard parameter setting table (C)
(When the increment system is IS-B, 0.0 to +999000.0)
This parameter sets the maximum allowable feedrate for AI contour control when a rotation axis is singly specified.
If a feedrate higher than the setting of this parameter is specified in the AI contour control mode, the feedrate is clamped to that set in this parameter.
If this parameter is set to 0, the feedrate is clamped to that set in parameter No. 8465.
When bit 7 (NOF) of parameter No. 8451 is set to 1 and a rotation axis is singly specified, the tool moves, assuming that the feedrate set in this parameter is specified. If 0 is set in this parameter at this time, the tool moves at the feedrate specified in parameter No. 8465.

4.64 PARAMETERS OF HIGH-SPEED POSITION SWITCH (1 OF 2)

	#7	#6	#5	#4	#3	#2	#1	#0
8500	HPE							

[Input type] Parameter input
[Data type] Bit path

#7 HPE The maximum number of high-speed position switches is:
0: 6.
1: 16.

	#7	#6	#5	#4	#3	#2	#1	#0
8501							HPS	HPF

[Input type] Parameter input
[Data type] Bit path

> **NOTE**
> When at least one of these parameters is set, the power must be turned off before operation is continued.

#0 HPF The output signal of a high-speed position switch is output to:
0: Address Y.
1: Address F.

#1 HPS The current position used with the high-speed position switch:
0: Considers a servo error.
1: Does not consider a servo error.

	#7	#6	#5	#4	#3	#2	#1	#0
8504	E08	E07	E06	E05	E04	E03	E02	E01
	#7	#6	#5	#4	#3	#2	#1	#0
8505	E16	E15	E14	E13	E12	E11	E10	E09

[Input type] Parameter input
[Data type] Bit path

E01 to E16 These parameters specify whether to enable or disable each corresponding high-speed position switch.
The following table shows the correspondence between the bits and switches.
The settings of each bit have the following meaning:
0: The switch corresponding to the bit is enabled.
1: The switch corresponding to the bit is disabled (always outputs 0).

Parameter	Switch
E01	1st high-speed position switch
E02	2nd high-speed position switch
E03	3rd high-speed position switch
:	:
E16	16th high-speed position switch

	#7	#6	#5	#4	#3	#2	#1	#0
8512	A08	A07	A06	A05	A04	A03	A02	A01

	#7	#6	#5	#4	#3	#2	#1	#0
8513	A16	A15	A14	A13	A12	A11	A10	A09

[Input type] Parameter input
[Data type] Bit path

A01 to A16 These parameters set the passing direction in which each corresponding high-speed position switch is turned on.
The following table shows the correspondence between the bits and switches.
The settings of each bit have the following meaning:
0: The high-speed position switch is turned on when the tool passes through the coordinates for turning the switch on in the negative (-) direction.
1: The high-speed position switch is turned on when the tool passes through the coordinates for turning the switch on in the positive (+) direction.

Parameter	Switch
A01	1st high-speed position switch
A02	2nd high-speed position switch
A03	3rd high-speed position switch
:	:
A16	16th high-speed position switch

	#7	#6	#5	#4	#3	#2	#1	#0
8516	B08	B07	B06	B05	B04	B03	B02	B01

	#7	#6	#5	#4	#3	#2	#1	#0
8517	B16	B15	B14	B13	B12	B11	B10	B09

[Input type] Parameter input
[Data type] Bit path

B01 to B16 These parameters set the passing direction in which each corresponding high-speed position switch is turned off.
The following table shows the correspondence between the bits and switches.
The settings of each bit have the following meaning:
0: The high-speed position switch is turned off when the tool passes through the coordinates for turning the switch off in the negative (-) direction.
1: The high-speed position switch is turned off when the tool passes through the coordinates for turning the switch off in the positive (+) direction.

Parameter	Switch
B01	1st high-speed position switch
B02	2nd high-speed position switch
B03	3rd high-speed position switch
:	:
B16	16th high-speed position switch

8565	**Output address of the high-speed position switch signal**

NOTE
When this parameter is set, the power must be turned off before operation is continued.

[Input type] Parameter input
[Data type] Word path
[Valid data range] 0 to 126

This parameter sets a Y signal address to which the high-speed position switch signal is output. The Y signal addresses consisting of the value set in this parameter and the set value plus 1 are used.
If a nonexistent address is set, the high-speed position switch function is disabled. When bit 0 (HPF) of parameter No. 8501 is set to 1, however, this parameter has no effect.

8570	**Controlled axis for which the first high-speed position switch function is performed**
8571	**Controlled axis for which the second high-speed position switch function is performed**
to	**to**
8579	**Controlled axis for which the tenth high-speed position switch function is performed**

[Input type] Parameter input
[Data type] Byte path
[Valid data range] 1 to number of controlled axes

Each of these parameters sets a controlled axis number for which each of the first to tenth high-speed position switch functions is performed.
Set 0 for the number corresponding to a high-speed position switch which is not to be used.

NOTE
For the 11th to 16th, see parameters Nos. 12201 to 12206.

8580	**Maximum value of the operation range of the first high-speed position switch**
8581	**Maximum value of the operation range of the second high-speed position switch**
to	**to**
8589	**Maximum value of the operation range of the tenth high-speed position switch**

[Input type] Parameter input
[Data type] Real path
[Unit of data] mm, inch, degree (machine unit)
[Min. unit of data] Depend on the increment system of the reference axis
[Valid data range] 9 digit of minimum unit of data (refer to standard parameter setting table (A))
(When the increment system is IS-B, -999999.999 to +999999.999)

Each of these parameters sets the maximum value of the operation range of each of the first to tenth high-speed position switches. If such a setting that maximum value < minimum value is made, no operation range exists, so that the high-speed position switch does not operate.

NOTE
For the 11th to 16th, see parameters Nos. 12221 to 12226.

8590	**Minimum value of the operation range of the first high-speed position switch**
8591	**Minimum value of the operation range of the second high-speed position switch**
to	**to**
8599	**Minimum value of the operation range of the tenth high-speed position switch**

[Input type] Parameter input
[Data type] Real path
[Unit of data] mm, inch, degree (machine unit)

[Min. unit of data] Depend on the increment system of the reference axis
[Valid data range] 9 digit of minimum unit of data (refer to standard parameter setting table (A))
(When the increment system is IS-B, -999999.999 to +999999.999)
Each of these parameters sets the minimum value of the operation range of each of the first to tenth high-speed position switches. If such a setting that maximum value < minimum value is made, no operation range exists, so that the high-speed position switch does not operate.

> **NOTE**
> For the 11th to 16th, see parameter Nos. 12241 to 12246.

4.65 OTHER PARAMETERS

	#7	#6	#5	#4	#3	#2	#1	#0
8650						EKY	CNA	RSK

[Input type] Parameter input
[Data type] Bit path

> **NOTE**
> When at least one of these parameters is set, the power must be turned off before operation is continued.

#0 RSK After the RESET key is pressed, the key code is:
0: Not passed to the application program.
1: Passed to the application program.

#1 CNA When a CNC alarm is issued while the user screen of C Language Executor is being displayed, automatic switching to the alarm screen is:
0: Determined by the setting of bit 7 (NPA) of parameter No. 3111.
1: Not performed, regardless of the setting of bit 7 (NPA) of parameter No. 3111.

#2 EKY The MDI key extension portion is:
0: Not read.
1: Read.

	#7	#6	#5	#4	#3	#2	#1	#0
8654	WGS		DCC	CRS	CTM	CGC	CXW	NVS

[Input type] Parameter input
[Data type] Bit

> **NOTE**
> When at least one of these parameters is set, the power must be turned off before operation is continued.

#0 NVS When an MDI unit with a 10.4-inch LCD unit is used, the vertical soft keys on the CNC screen:
0: Can be used.
1: Cannot be used.

#1 CXW If no display unit is used, C Language Executor is started:
0: Simultaneously when the CNC screen display function is started.
1: Simultaneously when the CNC is started.

#2 CGC When the crt_setmode function is called, the graphic plane is:
0: Cleared.
1: Not cleared.

#3 CTM The task execution status monitor screen is:
0: Not displayed.
1: Displayed.

#4 CRS When C Language Executor is used, communication is:
0: Performed at lower than the specified baud rate of RS-232C (conventional specification).
1: Performed at the specified baud rate of RS-232C.

#5 DCC With the rs_status function of C Language Executor, the transmission stop status and reception stop status are:
0: Posted.
1: Not posted.

#7 WGS When C Language Executor is used, the win_getstat function for acquiring the status of multiwindow display is based on:
0: Series 30*i*/31*i*/32*i* specification.
1: Series 16*i*/18*i*/21*i* specification.

When the current status of window display is acquired using the win_getstat function with the Series 30*i*/31*i*/32*i* specification, the value of the window handle decremented by 1 is set in "winstack[ ]" for storing the stacking order of open windows, in "active" for storing the window handle of the currently active window, and in "selected" for storing the window handle of the currently selected window.
With the Series 16*i*/18*i*/21*i* specification, the value of the window handle is set.
With the Series 30*i*/31*i*/32*i* specification, the value of the window handle starts with 0 as 0, 1, 2, 3, 4, 5, 6, then 7.
With the 16*i*/18*i*/21*i* specification, the value of the window handle starts with 1 as 1, 2, 3, 4, 5, 6, 7, then 8.

	#7	#6	#5	#4	#3	#2	#1	#0
8655	RCC		HM2	HM1	CTS			

[Input type] Parameter input
[Data type] Bit

> **NOTE**
> When at least one of these parameters is set, the power must be turned off before operation is continued.

#3 CTS When the crt_cncscrn function is executed from the main task of C Language Executor, the main task is:
0: Not stopped at the end of the function (is stopped after processing is performed for a very short time).
1: Stopped at the end of the function.

NOTE
This parameter is Automatic setting parameter. For details, refer to the appendix "Automatic setting / Initial setting parameter" in CONNECTION MANUAL (FUNCTION) (B-64693EN-1).

#4 HM1
#5 HM2 These parameters set time allocation between the High-Level task

HM1	HM2	High-level task
0	0	3
0	1	5
1	0	1
1	1	3

#7 RCC When the rs_close function is executed in RS-232C communication of C Language Executor with DC control exercised in the transmission/reception mode:
0: Communication is ended after checking the DC code of the communication destination device.
1: Communication is ended without checking the DC code of the communication destination device.

8661	Size of variable area

NOTE
1 When this parameter is set, the power must be turned off before operation is continued.
2 When the setting of this parameter is modified, the variable area and SRAM disk are initialized.

[Input type] Parameter input
[Data type] Word path
[Unit of data] KByte
[Valid data range] 0 to 59(251)
This parameter sets the size of the static variable area that can share among each task for using in C Language Executor application. Set a size in steps of 1KB. The maximum specifiable size if 59KB (or 251KB when the C Language Executor additional SRAM option is selected). However, the total size of the variable area and the SRAM disk area should not exceed [Usable SRAM Size - 1]KB (namely, 63KB or 255KB). When the total size exceeds [Usable SRAM Size - 1]KB or the set value is illegal data range, C Language Executor application is not executed.

8662	Size of SRAM disk

NOTE
1 When this parameter is set, the power must be turned off before operation is continued.
2 When the setting of this parameter is modified, the SRAM disk is initialized.

[Input type] Parameter input
[Data type] Word path
[Unit of data] KByte

[Valid data range] 0 to 63(255)
This parameter sets the size of the SRAM disk for using in C Language Executor application. Set a size in steps of 1KB. The minimum size of the SRAM disk is 4KB. When this parameter set 0 to 3, the size of the SRAM disk becomes 4KB. The maximum specifiable size if 63KB (or 255KB when the C Language Executor additional SRAM option is selected). When the total size exceeds [Usable SRAM Size - 1]KB or the set value is illegal data range, C Language Executor application is not executed.

8663	Setting of time zone

NOTE
When this parameter is set, the power must be turned off before operation is continued.

[Input type] Parameter input
[Data type] 2-word path
[Unit of data] sec
[Valid data range] -12×3600 to 12×3600
This parameter sets the time difference from the Greenwich time in seconds.
The time difference of Japan is -9 hours. So, set -32400 (= -9×3600) seconds.

	#7	#6	#5	#4	#3	#2	#1	#0
8706		MRD						

[Input type] Parameter input
[Data type] Bit

#6 MRD Type of communication device to be used by Machine Remote Diagnosis function:
0: Embedded Ethernet is used.
1: Fast Ethernet or Fast Data server is used.

NOTE
1 When this parameter is set, the power must be turned off before operation is continued.
2 When using embedded Ethernet, set No.14882#0=1.

8760	Program number of data input/output (Power Mate CNC manager)

[Input type] Setting input
[Data type] 2-word path
[Valid data range] 0 to 99999999
This parameter sets the program numbers of programs to be used for inputting and outputting slave data (parameters) when the Power Mate CNC manager function is used.
For a slave specified with I/O LINK channel m and group n, the following program number is used:
Setting + (m - 1) × 100 + n × 10

8781	Size of DRAM used with C Language Executor

NOTE
When this parameter is set, the power must be turned off before operation is continued.

[Input type] Parameter input
[Data type] Byte path
[Unit of data] 64KByte
[Valid data range] 12 to 96

This parameter sets the size of the DRAM used with C Language Executor. Set a value not smaller than 768KB in steps of 64KB. If a value not within the valid data range is set, the specification of 0 is assumed.
When the specified value is 0, C Language Executor is not started.

> **NOTE**
> The actually usable size is limited by the RAM capacity and selected option(s).

8783	Size of DRAM used with C Language Executor (for application program with "EXP_DRAMSIZE = ON" enabled in MAKEFILE setting)

[Input type] Parameter input
[Data type] Word
[Unit of data] 64KByte
[Valid data range] 16 to 128

This parameter sets the size of the DRAM used with C Language Executor to operate a C Language Executor application program created with "EXP_DRAMSIZE = ON" enabled in MAKEFILE setting. Set a size not smaller than 1MB (a value not less than 16) in steps of 64KB. If a value not within the valid data range is set, the specification of 0 is assumed.
When the specified value is 0, C Language Executor is not started.
If an application program created with "EXP_DRAMSIZE = OFF" enabled is loaded to the CNC, the setting of this parameter is not used. Instead, the setting of parameter No. 8781 for specifying the DRAM size used with C Language Executor is used.

	#7	#6	#5	#4	#3	#2	#1	#0
8801								
	#7	#6	#5	#4	#3	#2	#1	#0
8802								
	#7	#6	#5	#4	#3	#2	#1	#0
8803								
	#7	#6	#5	#4	#3	#2	#1	#0
8804								
	#7	#6	#5	#4	#3	#2	#1	#0
8805								

[Input type] Parameter input
[Data type] Bit path

8811	
to	
8813	

[Input type] Parameter input
[Data type] 2-word

8814	
to	
8816	

[Input type] Parameter input

[Data type] 2-word path

8820	
to	
8829	

[Input type] Parameter input
[Data type] Byte path

Parameters Nos. 8801 to 8805, 8811 to 8813, 8814 to 8816 and 8820 to 8829 are designed specifically for use by the machine tool builder, and the usage of these parameters varies from machine to machine. For details, refer to the manual issued by the machine tool builder.

4.66 PARAMETERS OF MAINTENANCE

	#7	#6	#5	#4	#3	#2	#1	#0
8850								MDG

[Input type] Parameter input
[Data type] Bit

#0 MDG Trouble diagnosis function is:
0: Available.
1: Not available.

> **NOTE**
> When this parameter is set, the power must be turned off before operation is continued.

8852	Target distance of each axis

[Input type] Parameter input
[Data type] 2-word axis
[Unit of data] m, 100 inch, 360 degree
[Valid data range] 1 to 999999999
When diagnosis data No. 365 exceeds the value set in this parameter, target distance attainment status signal TDAx<Fn730> become "1".

> **NOTE**
> 1 In case of rotation axis, unit of data is 360 degree. In case of linear axis, unit of data is m or 100 inch according to the least command increment.
> 2 If the value set in this parameter is outside the data range or bit 3 (ETD) of parameter No. 8906 is 0, target distance attainment status signal TDAx<Fn730> always becomes 0.
> 3 This parameter is specified as radius specification. Diameter/radius specification does not affect this parameter.

	#7	#6	#5	#4	#3	#2	#1	#0
8855							TRFx	TRSx

[Input type] Parameter input

[Data type] Bit axis

#0 TRSx Trouble forecast of thermal simulation of servo axis is:
0: Not available.
1: Available. (Be sure to set the trouble forecast level to parameter No.8860.)

#1 TRFx Trouble forecast of disturbance level of servo axis is:
0: Not available.
1: Available. (Be sure to set the trouble forecast level to parameter No.8861.)

8860	Trouble forecast level for thermal simulation

[Input type] Parameter input
[Data type] Word axis
[Unit of data] %
[Valid data range] 0 to 100
Trouble forecast level for thermal simulation is set.

8861	Trouble forecast level for disturbance level

[Input type] Parameter input
[Data type] Word axis
[Unit of data] %
[Valid data range] 0 to 100
Trouble forecast level for disturbance level is set.

	#7	#6	#5	#4	#3	#2	#1	#0
8900					PLC			PWE

[Input type] Setting input
[Data type] Bit

#0 PWE The setting, from an external device and MDI panel, of those parameters that cannot be set by setting input is:
0: Disabled.
1: Enabled.

#3 PLC When the remaining time of an item falls to a value less than the percentage of the life specified in parameter No.8911, the life warning status is displayed at
0: Timer area on CNC status display area.
1: Alarm area on CNC status display area.

> **NOTE**
> When bit 0 (PDM) of parameter No.8903 is set to 1, this parameter is valid.

	#7	#6	#5	#4	#3	#2	#1	#0
8901	MEN							FAN

[Input type] Setting input
[Data type] Bit path

#0 FAN A fan motor error is:
0: Detected.

1: Not detected.

> **NOTE**
> Be sure to set this parameter to 0.

#7 MEN The periodic maintenance screen and the maintenance information screen is:
0: Displayed.
1: Not displayed.

	#7	#6	#5	#4	#3	#2	#1	#0
8903								PDM

[Input type] Parameter input
[Data type] Bit path

#0 PDM When the remaining time of an item falls to a value less than the percentage of the life specified in parameter No.8911, the life warning status on CNC status display area is
0: Not displayed.
1: Displayed.

	#7	#6	#5	#4	#3	#2	#1	#0
8906		MPM			ETD			LNG

[Input type] Parameter input
[Data type] Bit

> **NOTE**
> When this parameter is set, the power must be turned off before operation is continued.

#0 LNG When multiple alarms without NC alarm are issued,
0: highest priority alarm is displayed on CNC status display area.
1: all alarms are displayed by turns on CNC status display area.

#3 ETD Axis total travel distance display is:
0: Invalid.
1: Valid.

#6 MPM On the periodic maintenance screen,
0: the life time is counted in each path.
1: the life time is not counted in each path.

8911	Percentage for life warning display on the periodic maintenance screen

[Input type] Parameter input
[Data type] Byte path
[Unit of data] %
[Valid data range] 0 to 99
On the periodic maintenance screen, if the remaining time of an item falls to a value less than the percentage of the life specified in this parameter, the item name and remaining time is displayed in red as a warning.

8940	Initial screen title character code 1
8941	Initial screen title character code 2
to	to
8949	Initial screen title character code 10

[Input type] Parameter input
[Data type] Byte
[Valid data range] 0,32,45,46,48 to 57,65 to 90

These parameters set the character codes of the character string to be displayed on the initial screen immediately after power-on. If the number of characters to be displayed is less than 10, the parameters corresponding to the space exceeding the character length are set to 0.
The set character code is as follows.

A: 65	N: 78	0: 48	
B: 66	O: 79	1: 49	
C: 67	P: 80	2: 50	
D: 68	Q: 81	3: 51	
E: 69	R: 82	4: 52	
F: 70	S: 83	5: 53	
G: 71	T: 84	6: 54	
H: 72	U: 85	7: 55	
I: 73	V: 86	8: 56	
J: 74	W: 87	9: 57	
K: 75	X: 88	: 32	(Space)
L: 76	Y: 89	-: 45	(Negative sign)
M: 77	Z: 90	.: 46	(Period)
		: 0	(Null character)

When the codes other than the character that can be used are set, space is displayed.
When 10 parameters are all 0, this function is not executed.

	#7	#6	#5	#4	#3	#2	#1	#0
8950								MEM

[Input type] Parameter input
[Data type] Bit

#0 MEM The memory contents display screen is:
0: Not displayed.
1: Displayed.

4.67 PARAMETERS OF INCORRECT OPERATION PREVENTION FUNCTION

10000	**Lower limit 1 of tool offsets No. 01**
to	**to**
10019	**Lower limit 1 of tool offsets No. 20**

[Input type] Parameter input
[Data type] Real path
[Unit of data] mm, inch, degree (input unit)
[Min. unit of data] Depend on the increment system of the applied axis
[Valid data range] 9 digit of minimum unit of data (refer to standard parameter setting table (A))
(When the increment system is IS-B, -999999.999 to +999999.999)
These parameters set the lower limits of the following offset values:
- T series, without tool geometry/wear offsets, X-axis offset
- T series, with tool geometry/wear offsets, X-axis and geometry offsets
- M series, tool offset memory A offset
- M series, tool offset memory C, geometry, and length offsets

10020	**Upper limit 1 of tool offsets No. 01**
to	**to**
10039	**Upper limit 1 of tool offsets No. 20**

[Input type] Parameter input
[Data type] Real path
[Unit of data] mm, inch, degree (input unit)
[Min. unit of data] Depend on the increment system of the applied axis
[Valid data range] 9 digit of minimum unit of data (refer to standard parameter setting table (A))
(When the increment system is IS-B, -999999.999 to +999999.999)
These parameters set the upper limits of the following offset values:
- T series, without tool geometry/wear offsets, X-axis offset
- T series, with tool geometry/wear offsets, X-axis and geometry offsets
- M series, tool offset memory A offset
- M series, tool offset memory C, geometry, and length offsets

10040	**Lower limit 2 of tool offsets No. 01**
to	**to**
10059	**Lower limit 2 of tool offsets No. 20**

[Input type] Parameter input
[Data type] Real path
[Unit of data] mm, inch, degree (input unit)
[Min. unit of data] Depend on the increment system of the applied axis
[Valid data range] 9 digit of minimum unit of data (refer to standard parameter setting table (A))
(When the increment system is IS-B, -999999.999 to +999999.999)
These parameters set the lower limits of the following offset values:
- T series, without tool geometry/wear offsets, Z-axis offset
- T series, with tool geometry/wear offsets, Z-axis and geometry offsets
- M series, tool offset memory C, geometry, and radius offsets

10060	**Upper limit 2 of tool offsets No. 01**
to	**to**
10079	**Upper limit 2 of tool offsets No. 20**

[Input type] Parameter input
[Data type] Real path
[Unit of data] mm, inch, degree (input unit)
[Min. unit of data] Depend on the increment system of the applied axis
[Valid data range] 9 digit of minimum unit of data (refer to standard parameter setting table (A))
(When the increment system is IS-B, -999999.999 to +999999.999)
These parameters set the upper limits of the following offset values:
- T series, without tool geometry/wear offsets, Z-axis offset
- T series, with tool geometry/wear offsets, Z-axis and geometry offsets
- M series, tool offset memory C, geometry, and radius offsets

10080	**Lower limit 3 of tool offsets No. 01**
to	**to**
10099	**Lower limit 3 of tool offsets No. 20**

[Input type] Parameter input
[Data type] Real path
[Unit of data] mm, inch, degree (input unit)
[Min. unit of data] Depend on the increment system of the applied axis
[Valid data range] 9 digit of minimum unit of data (refer to standard parameter setting table (A))
(When the increment system is IS-B, -999999.999 to +999999.999)
These parameters set the lower limits of the following offset values:
- T series, without tool geometry/wear offsets, tool nose radius offset
- T series, with tool geometry/wear offsets, tool nose radius and geometry offsets

10100	**Upper limit 3 of tool offsets No. 01**
to	**to**
10119	**Upper limit 3 of tool offsets No. 20**

[Input type] Parameter input
[Data type] Real path
[Unit of data] mm, inch, degree (input unit)
[Min. unit of data] Depend on the increment system of the applied axis
[Valid data range] 9 digit of minimum unit of data (refer to standard parameter setting table (A))
(When the increment system is IS-B, -999999.999 to +999999.999)
These parameters set the upper limits of the following offset values:
- T series, without tool geometry/wear offsets, tool nose radius offset
- T series, with tool geometry/wear offsets, tool nose radius and geometry offsets

10120	**Lower limit 4 of tool offsets No. 01**
to	**to**
10139	**Lower limit 4 of tool offsets No. 20**

[Input type] Parameter input
[Data type] Real path
[Unit of data] mm, inch, degree (input unit)
[Min. unit of data] Depend on the increment system of the applied axis

[Valid data range] 9 digit of minimum unit of data (refer to standard parameter setting table (A))
(When the increment system is IS-B, -999999.999 to +999999.999)
These parameters set the lower limits of the following offset values:
- T series, with tool geometry/wear offsets, X-axis and wear offsets
- M series, tool offset memory C, wear, and length offsets

10140	**Upper limit 4 of tool offsets No. 01**
to	**to**
10159	**Upper limit 4 of tool offsets No. 20**

[Input type] Parameter input
[Data type] Real path
[Unit of data] mm, inch, degree (input unit)
[Min. unit of data] Depend on the increment system of the applied axis
[Valid data range] 9 digit of minimum unit of data (refer to standard parameter setting table (A))
(When the increment system is IS-B, -999999.999 to +999999.999)
These parameters set the upper limits of the following offset values:
- T series, with tool geometry/wear offsets, X-axis and wear offsets
- M series, tool offset memory C, wear, and length offsets

10160	**Lower limit 5 of tool offsets No. 01**
to	**to**
10179	**Lower limit 5 of tool offsets No. 20**

[Input type] Parameter input
[Data type] Real path
[Unit of data] mm, inch, degree (input unit)
[Min. unit of data] Depend on the increment system of the applied axis
[Valid data range] 9 digit of minimum unit of data (refer to standard parameter setting table (A))
(When the increment system is IS-B, -999999.999 to +999999.999)
These parameters set the lower limits of the following offset values:
- T series, with tool geometry/wear offsets, Z-axis and wear offsets
- M series, tool offset memory C, wear, and radius offsets

10180	**Upper limit 5 of tool offsets No. 01**
to	**to**
10199	**Upper limit 5 of tool offsets No. 20**

[Input type] Parameter input
[Data type] Real path
[Unit of data] mm, inch, degree (input unit)
[Min. unit of data] Depend on the increment system of the applied axis
[Valid data range] 9 digit of minimum unit of data (refer to standard parameter setting table (A))
(When the increment system is IS-B, -999999.999 to +999999.999)
These parameters set the upper limits of the following offset values:
- T series, with tool geometry/wear offsets, Z-axis and wear offsets
- M series, tool offset memory C, wear, and radius offsets

10200	**Lower limit 6 of tool offsets No. 01**
to	**to**
10219	**Lower limit 6 of tool offsets No. 20**

[Input type] Parameter input
[Data type] Real path
[Unit of data] mm, inch, degree (input unit)
[Min. unit of data] Depend on the increment system of the applied axis
[Valid data range] 9 digit of minimum unit of data (refer to standard parameter setting table (A))
(When the increment system is IS-B, -999999.999 to +999999.999)
These parameters set the lower limits of the following offset values:
- T series, with tool geometry/wear offsets, tool nose radius and wear offsets

10220	**Upper limit 6 of tool offsets No. 01**
to	**to**
10239	**Upper limit 6 of tool offsets No. 20**

[Input type] Parameter input
[Data type] Real path
[Unit of data] mm, inch, degree (input unit)
[Min. unit of data] Depend on the increment system of the applied axis
[Valid data range] 9 digit of minimum unit of data (refer to standard parameter setting table (A))
(When the increment system is IS-B, -999999.999 to +999999.999)
These parameters set the upper limits of the following offset values:
- T series, with tool geometry/wear offsets, tool nose radius and wear offsets

10240	**Lower limit 1 of a tool offset number range No. 01**
to	**to**
10259	**Lower limit 1 of a tool offset number range No. 20**

[Input type] Parameter input
[Data type] Word path
[Valid data range] 0 to maximum number of offset sets
Each of these parameters sets the lower limit of a tool offset number range.
These parameters correspond to the tool offset lower/upper limits set in parameters Nos. 10000 to 10239.

10260	**Upper limit 1 of a tool offset number range No. 01**
to	**to**
10279	**Upper limit 1 of a tool offset number range No. 20**

[Input type] Parameter input
[Data type] Word path
[Valid data range] 0 to maximum number of offset sets
Each of these parameters sets the upper limit of a tool offset number range.
These parameters correspond to the tool offset lower/upper limits set in parameters Nos. 10000 to 10239.

10280	**Lower limit 7 of tool offsets No. 01**
to	**to**
10283	**Lower limit 7 of tool offsets No. 04**

[Input type] Parameter input
[Data type] Real path
[Unit of data] mm, inch, degree (input unit)

[Min. unit of data] Depend on the increment system of the applied axis
[Valid data range] 9 digit of minimum unit of data (refer to standard parameter setting table (A))
(When the increment system is IS-B, -999999.999 to +999999.999)
These parameters set the lower limits of the following offset values:
- T series, without tool geometry/wear offsets, Y-axis offset
- T series, with tool geometry/wear offsets, Y-axis and geometry offsets

10284	**Upper limit 7 of tool offsets No. 01**
to	**to**
10287	**Upper limit 7 of tool offsets No. 04**

[Input type] Parameter input
[Data type] Real path
[Unit of data] mm, inch, degree (input unit)
[Min. unit of data] Depend on the increment system of the applied axis
[Valid data range] 9 digit of minimum unit of data (refer to standard parameter setting table (A))
(When the increment system is IS-B, -999999.999 to +999999.999)
These parameters set the upper limits of the following offset values:
- T series, without tool geometry/wear offsets, Y-axis offset
- T series, with tool geometry/wear offsets, Y-axis and geometry offsets

10288	**Lower limit 8 of tool offsets No. 01**
to	**to**
10291	**Lower limit 8 of tool offsets No. 04**

[Input type] Parameter input
[Data type] Real path
[Unit of data] mm, inch, degree (input unit)
[Min. unit of data] Depend on the increment system of the applied axis
[Valid data range] 9 digit of minimum unit of data (refer to standard parameter setting table (A))
(When the increment system is IS-B, -999999.999 to +999999.999)
These parameters set the lower limits of the following offset values:
- T series, with tool geometry/wear offsets, Y-axis and wear offsets

10292	**Upper limit 8 of tool offsets No. 01**
to	**to**
10295	**Upper limit 8 of tool offsets No. 04**

[Input type] Parameter input
[Data type] Real path
[Unit of data] mm, inch, degree (input unit)
[Min. unit of data] Depend on the increment system of the applied axis
[Valid data range] 9 digit of minimum unit of data (refer to standard parameter setting table (A))
(When the increment system is IS-B, -999999.999 to +999999.999)
These parameters set the upper limits of the following offset values:
- T series, with tool geometry/wear offsets, Y-axis and wear offsets

10296	**Lower limit 2 of a tool offset number range No. 01**
to	**to**
10299	**Lower limit 2 of a tool offset number range No. 04**

[Input type] Parameter input
[Data type] Word path

[Valid data range] 0 to maximum number of offset sets
Each of these parameters sets the lower limit of a tool offset number range.
These parameters correspond to the tool offset lower/upper limits set in parameters Nos. 10280 to 10295.

10300	**Upper limit 2 of a tool offset number range No. 01**
to	**to**
10303	**Upper limit 2 of a tool offset number range No. 04**

[Input type] Parameter input
[Data type] Word path
[Valid data range] 0 to maximum number of offset sets
Each of these parameters sets the upper limit of a tool offset number range.
These parameters correspond to the tool offset lower/upper limits set in parameters Nos. 10280 to 10295.

10304	**Lower limit of workpiece zero point offsets No. 01**
to	**to**
10309	**Lower limit of workpiece zero point offsets No. 06**

[Input type] Parameter input
[Data type] Real axis
[Unit of data] mm, inch, degree (input unit)
[Min. unit of data] Depend on the increment system of the applied axis
[Valid data range] 9 digit of minimum unit of data (refer to standard parameter setting table (A))
(When the increment system is IS-B, -999999.999 to +999999.999)
Each of these parameters sets the lower limit of workpiece zero point offset values.

10310	**Upper limit of workpiece zero point offsets No. 01**
to	**to**
10315	**Upper limit of workpiece zero point offsets No. 06**

[Input type] Parameter input
[Data type] Real axis
[Unit of data] mm, inch, degree (input unit)
[Min. unit of data] Depend on the increment system of the applied axis
[Valid data range] 9 digit of minimum unit of data (refer to standard parameter setting table (A))
(When the increment system is IS-B, -999999.999 to +999999.999)
Each of these parameters sets the upper limit of workpiece zero point offset values.

10316	**Lower limit of a workpiece zero point offset range No. 01**
to	**to**
10321	**Lower limit of a workpiece zero point offset range No. 06**

[Input type] Parameter input
[Data type] Word path
[Valid data range] 0 to maximum number of offset sets
Each of these parameters sets the lower limit of a workpiece zero point offset range. For an additional workpiece coordinate system, set a value after adding 1000.
These parameters correspond to the workpiece zero point offset lower/upper limits set in parameters Nos. 10304 to 10315.

10322	Upper limit of a workpiece zero point offset range No. 01
to	to
10327	Upper limit of a workpiece zero point offset range No. 06

[Input type] Parameter input
[Data type] Word path
[Valid data range] 0 to maximum number of offset sets
Each of these parameters sets the upper limit of a workpiece zero point offset range. For an additional workpiece coordinate system, set a value after adding 1000.
These parameters correspond to the workpiece zero point offset lower/upper limits set in parameters Nos. 10304 to 10315.

10328	Lower limit of workpiece shifts

[Input type] Parameter input
[Data type] Real axis
[Unit of data] mm, inch, degree (input unit)
[Min. unit of data] Depend on the increment system of the applied axis
[Valid data range] 9 digit of minimum unit of data (refer to standard parameter setting table (A))
(When the increment system is IS-B, -999999.999 to +999999.999)
This parameter sets a workpiece shift lower limit.

10329	Upper limit of workpiece shifts

[Input type] Parameter input
[Data type] Real axis
[Unit of data] mm, inch, degree (input unit)
[Min. unit of data] Depend on the increment system of the applied axis
[Valid data range] 9 digit of minimum unit of data (refer to standard parameter setting table (A))
(When the increment system is IS-B, -999999.999 to +999999.999)
This parameter sets a workpiece shift upper limit.

	#7	#6	#5	#4	#3	#2	#1	#0
10330		ASD		MID	HSC	ADC	PDC	IIC

[Input type] Parameter input
[Data type] Bit

#0 IIC At the time of incremental input, a confirmation message is:
0: Displayed.
1: Not displayed.

#1 PDC At the time of program deletion, a confirmation message is:
0: Displayed.
1: Not displayed.

#2 ADC At the time of deletion of all data, a confirmation message is:
0: Displayed.
1: Not displayed.

#3 HSC When a cycle start is executed halfway in the program, a confirmation message is:
0: Displayed.
1: Not displayed.

#4 MID Updated modal information is:
0: Highlighted.
1: Not highlighted.

#6 ASD Axis state display is:
0: Enabled.
1: Disabled.

10331	Lower limit of external workpiece zero point offsets

[Input type] Parameter input
[Data type] Real axis
[Unit of data] mm, inch (input unit)
[Min. unit of data] Depend on the increment system of the applied axis
[Valid data range] 9 digit of minimum unit of data (refer to standard parameter setting table (A))
(When the increment system is IS-B, -999999.999 to +999999.999)
This parameter sets the lower limit of external workpiece zero point offsets.

10332	Upper limit of external workpiece zero point offsets

[Input type] Parameter input
[Data type] Real axis
[Unit of data] mm, inch (input unit)
[Min. unit of data] Depend on the increment system of the applied axis
[Valid data range] 9 digit of minimum unit of data (refer to standard parameter setting table (A))
(When the increment system is IS-B, -999999.999 to +999999.999)
This parameter sets the upper limit of external workpiece zero point offsets.

	#7	#6	#5	#4	#3	#2	#1	#0
10334							WMD	

[Input type] Parameter input
[Data type] Bit

#1 WMD When a reset occurs during program operation, the warning "MODAL DATA IS CHANGED BY BLOCK STOP" is:
0: Not displayed.
1: Displayed.

	#7	#6	#5	#4	#3	#2	#1	#0
10335								MSC

[Input type] Parameter input
[Data type] Bit path

#0 MSC A recheck on the intermediate block start of the incorrect operation prevention function is:
0: Enabled independently for each path.
1: Enabled for the local path and those paths for this parameter is set to 1.

	#7	#6	#5	#4	#3	#2	#1	#0
10336								MBO

[Input type] Parameter input
[Data type] Bit

> **NOTE**
> When this parameter is set, the power must be turned off before operation is continued.

#0 MBO Middle block start signal MBSO<Fn534.4> is:
0: Disabled.
1: Enabled.

	#7	#6	#5	#4	#3	#2	#1	#0
10337								MRW

[Input type] Parameter input
[Data type] Bit

#0 MRW In manual mode, the rewind of a program by reset & rewind signal RRW <Gn008.6> is
0: Disabled.
1: Enabled.

4.68 PARAMETERS OF AUTOMATIC DATA BACKUP

	#7	#6	#5	#4	#3	#2	#1	#0
10340	EEB	EIB				AAP	ABI	ABP

[Input type] Parameter input
[Data type] Bit

#0 ABP Automatic data backup at power-on is:
0: Disabled.
1: Enabled.

#1 ABI Overwrite-protected backup data is:
0: Regarded as invalid.
1: Regarded as valid.

#2 AAP Backup of NC programs and directory information in FROM is:
0: Disabled.
1: Enabled.

#6 EIB When the CNC is turned on next, overwrite-protected backup data is:
0: Not updated.
1: Updated.

> **NOTE**
> This parameter is valid when 2 or a greater value is set in parameter No. 10342, and bit 1 (ABI) of parameter No. 10340 is set to 1.

#7 EEB When an emergency stop occurs, a backup operation is:
0: Not performed.
1: Performed.

NOTE
This parameter is valid when 1 or a greater value is set in parameter No. 10342.

10341	Interval at which automatic data backup is performed periodically

[Input type] Parameter input
[Data type] Word
[Unit of data] No unit
[Valid data range] 0 to 365
When automatic data backup is performed periodically, this parameter sets the interval as the number of days. When the power is turned on after a set number of days has passed from the date of the previous backup, a backup operation is performed. If 0 is set in this parameter, this function is disabled.

10342	Number of backup data items

NOTE
When this parameter is set, the power must be turned off before operation is continued.

[Input type] Parameter input
[Data type] Byte
[Unit of data] No unit
[Valid data range] 0 to 3
This parameter sets the number of backup data items. If 0 is specified, backup is not performed.

4.69 PARAMETERS OF AXIS CONTROL

	#7	#6	#5	#4	#3	#2	#1	#0
10345							L2D	

[Input type] Parameter input
[Data type] Bit

NOTE
When this parameter is set, the power must be turned off before operation is continued.

#1 L2D When the forbidden area of the stored stroke check 2 (Parameter No.1322, 1323) is set or it is changed by G22 command, the setting value for axes with diameter specification is:
0: Half of command value
1: Command value

NOTE
This parameter is Automatic setting parameter. For details, refer to the appendix "Automatic setting / Initial setting parameter" in CONNECTION MANUAL (FUNCTION) (B-64693EN-1).

	#7	#6	#5	#4	#3	#2	#1	#0
10350							PWR	

[Input type] Parameter input
[Data type] Bit

#1 PWR The servo loop gain for each axis (parameter No. 1825) and the In-position width for each axis (parameter No. 1826) are:
0: Write-disabled during axis moving.
1: Write-enabled if the corresponding axis is stopped.

> **NOTE**
> This parameter is Automatic setting parameter. For details, refer to the appendix "Automatic setting / Initial setting parameter" in CONNECTION MANUAL (FUNCTION) (B-64693EN-1).

	#7	#6	#5	#4	#3	#2	#1	#0
10351			PCC			DWS		

[Input type] Parameter input
[Data type] Bit

> **NOTE**
> When at least one of these parameters is set, the power must be turned off before operation is continued.

#2 DWS Dwell status signal DWL <Fn526.5> is:
0: Disabled.
1: Enabled.

#5 PCC In Polar coordinate command, the specification of which the address in the selected plane 1st axis (radius) or 2nd axis (angle) is omitted
0: is FS0*i* specification.
1: is FS16*i* compatible specification.

	#7	#6	#5	#4	#3	#2	#1	#0
10359								
					KVD	KVC	KVB	KVA

[Input type] Parameter input
[Data type] Bit path

#0 KVA The gear ratio override signal of flexible synchronization group A is:
0: Disabled (fixed at 100%).
1: Enabled.

#1 KVB The gear ratio override signal of flexible synchronization group B is:
0: Disabled (fixed at 100%).
1: Enabled.

#2 KVC The gear ratio override signal of flexible synchronization group C is:
0: Disabled (fixed at 100%).
1: Enabled.

#3 KVD The gear ratio override signal of flexible synchronization group D is:
0: Disabled (fixed at 100%).
1: Enabled.

4.70 PARAMETERS OF AXIS SWITCHING

	#7	#6	#5	#4	#3	#2	#1	#0
10370								RPC

[Input type] Setting input
[Data type] Bit path

#0 RPC When a return from the reference position (G29) is made, axis switching is:
0: Disabled.
1: Enabled.

10371	Axis switching number

[Input type] Setting input
[Data type] Byte path
[Valid data range] 0 to 5
One of six types of axis switching can be selected by setting its axis switching number in this parameter. Programmed addresses X, Y, and Z correspond to machine axes x, y, and z as follows:

Axis switching No.	Programmed address		
	X	Y	Z
0	x	y	z
1	x	z	y
2	y	x	z
3	y	z	x
4	z	x	y
5	z	y	x

Axis switching number 0 indicates that axis switching is not performed.

4.71 PARAMETERS OF PMC AXIS CONTROL (2 OF 4)

	#7	#6	#5	#4	#3	#2	#1	#0
10410							EAX	NRT

[Input type] Parameter input
[Data type] Bit axis

#0 NRT In tool retract and recover or manual intervention and return, the axis is:
0: Subject to tool retract and recover or manual intervention and return.
1: Not subject to tool retract and recover or manual intervention and return.

#1 EAX When other axis is preset with the workpiece coordinate system preset signal while this axis is moving under the PMC axis control:
0: The alarm (PS1820), “ILLEGAL DI SIGNAL STATE” occurs.
1: An alarm doesn’t occur.

4.72 PARAMETERS OF SCREEN DISPLAY COLORS (2 OF 2)

10421	RGB value of color palette 1 for text for color set 2
10422	RGB value of color palette 2 for text for color set 2
to	to
10435	RGB value of color palette 15 for text for color set 2

[Input type] Parameter input
[Data type] 2-word
[Valid data range] 0 to 151515
Each of these parameters sets the RGB value of each color palette for text by specifying a 6-digit number as described below.
rrggbb: 6-digit number (rr: red data, gg: green data, bb: blue data)
The valid data range of each color is 0 to 15 (same as the tone levels on the color setting screen). When a number equal to or greater than 16 is specified, the specification of 15 is assumed.
[Example] When the tone level of a color is: red:1 green:2, blue:3, set 10203 in the parameter.

10461	RGB value of color palette 1 for text for color set 3
10462	RGB value of color palette 2 for text for color set 3
to	to
10475	RGB value of color palette 15 for text for color set 3

[Input type] Parameter input
[Data type] 2-word
[Valid data range] 0 to 151515
Each of these parameters sets the RGB value of each color palette for text by specifying a 6-digit number as described below.
rrggbb: 6-digit number (rr: red data, gg: green data, bb: blue data)
The valid data range of each color is 0 to 15 (same as the tone levels on the color setting screen). When a number equal to or greater than 16 is specified, the specification of 15 is assumed.
[Example] When the tone level of a color is: red:1 green:2, blue:3, set 10203 in the parameter.

4.73 PARAMETERS OF MANUAL OPERATION AND AUTOMATIC OPERATION (2 OF 2)

	#7	#6	#5	#4	#3	#2	#1	#0
10478								HPC

[Input type] Parameter input
[Data type] Bit path

#0 HPC High precision program command function is :
0: Disabled.
1: Enabled.

	#7	#6	#5	#4	#3	#2	#1	#0
10480							RMI	NIR

[Input type] Parameter input
[Data type] Bit path

#0 NIR Three-dimension handle interrupt in the positioning mode is :
0: possible for the axis which is not commanded.
1: not accepted. The amount of three-dimension handle interrupt is ignored.

#1 RMI Manual handle interrupt for an axis specified in rapid traverse (G00) mode is:
0: Disabled.
1: Enabled.

NOTE
1 Travel distance of manual handle interrupt depends on the setting of allowable number of pulses that can be accumulated during manual handle feed (parameter No.7117)
2 Axis moving by manual handle interrupt during axis moving by rapid traverse rate is output in deceleration in case feedrate exceeds rapid traverse rate.

4.74 PARAMETERS OF DUAL CHECK SAFETY (1 OF 2)

	#7	#6	#5	#4	#3	#2	#1	#0
10500					STP		APM	AVM
10501								
to					to			
10596								

	#7	#6	#5	#4	#3	#2	#1	#0
10597					EDD	SDS	DPN	IDD

NOTE
IDD(No.10597#0) is Automatic setting parameter. For details, refer to the appendix "Automatic setting / Initial setting parameter" in CONNECTION MANUAL (FUNCTION) (B-64693EN-1).

These parameters are related to Dual Check Safety.
See Dual Check Safety CONNECTION MANUAL (B-64483EN-2) for details.

4.75 PARAMETERS OF WAVEFORM DIAGNOSIS

Parameters Nos. 10600 to 10719 shown below hold initial values and values set through screen manipulations during waveform diagnosis.
These parameters are set by the CNC. So, never input values from the parameter screen.

	#7	#6	#5	#4	#3	#2	#1	#0
10600								

[Input type] Parameter input
[Data type] Bit

10601	
to	to
10719	

[Input type] Parameter input
[Data type] Byte / 2-word

4.76 PARAMETERS OF TROUBLE DIAGNOSIS FUNCTION

Parameters Nos. 10720 to 10727 shown below hold initial values and values set by screen operations in Trouble diagnosis function.
These parameters are set by the CNC. So, never input values from the parameter screen.

10720	
to	to
10727	

[Input type] Parameter input
[Data type] Byte path

4.77 PARAMETERS OF FEEDRATE CONTROL AND ACCELERATION/DECELERATION CONTROL (1 OF 2)

	#7	#6	#5	#4	#3	#2	#1	#0
10735	SOD		SRI	SIE				ARF

[Input type] Parameter input
[Data type] Bit path

#0 ARF In Smart overlap, between movement block of reference position return (G28/G29/G30) to the middle point and previous block overlap is :
0: Enabled.
1: Disabled.

#4 SIE In the axis that Smart overlap is effective, the in-position check signal is:
0: Disabled.
1: Enabled.

NOTE
Smart overlap is effective between the following blocks, but the in-position check signal is not effective.
- Rapid traverse - Rapid traverse
- Rapid traverse - Cutting feed
- Rapid traverse - No movement
- Cutting feed - Rapid traverse
- Cutting feed - No movement
- No movement - Rapid traverse
- No movement - Cutting feed
- No movement - No movement

#5 SRI In cutting and extraction in the rigid tap, Smart overlap is:
0: Depending on the setting in bit 1 (SOVx) of parameter No.11236
1: Disabled.

NOTE
This parameter is effective for the next rigid tap.
- Rigid tap
- Rigid tapping by manual handle
- 3-dimensional rigid tapping
- Retraction for rigid tapping
- Retraction for 3-dimensional rigid tapping

#7 SOD In Smart overlap, between dwell block and previous block overlap is :
0: Enabled.
1: Disabled.

10740	Maximum overlap value of Smart overlap for each axis (Rapid traverse - Rapid traverse)

[Input type] Parameter input
[Data type] 2-word axis
[Unit of data] Detection unit
[Valid data range] 0 to 99999999

The maximum clamp value of Smart overlap between the rapid traverse block and the rapid traverse block is set.
The overlap value is clamped by the value set to this parameter. So, the tool path error in the corner can be suppressed.

NOTE
When a value less than 0 are set, the specification of 0 is assumed.
In this case, the overlap by Smart overlap is not clamped.
When you clamp overlap value, set the value of in-position width or more.

10741	Maximum overlap value of Smart overlap for each axis (Rapid traverse – Cutting feed)

[Input type] Parameter input
[Data type] 2-word axis
[Unit of data] Detection unit
[Valid data range] 0 to 99999999

The maximum clamp value of Smart overlap between the rapid traverse block and the cutting feed block is set.
The overlap value is clamped by the value set to this parameter. So, the tool path error in the corner can be suppressed.

NOTE
When a value less than 0 are set, the specification of 0 is assumed.
In this case, the overlap by Smart overlap is not clamped.
When you clamp overlap value, set the value of in-position width or more.

10742	Maximum overlap value of Smart overlap for each axis (Cutting feed - Rapid traverse)

[Input type] Parameter input
[Data type] 2-word axis
[Unit of data] Detection unit
[Valid data range] 0 to 99999999
The maximum clamp value of Smart overlap between the cutting feed block and the rapid traverse block is set.
The overlap value is clamped by the value set to this parameter. So, the tool path error in the corner can be suppressed.

NOTE
When a value less than 0 are set, the specification of 0 is assumed.
In this case, the overlap by Smart overlap is not clamped.
When you clamp overlap value, set the value of in-position width or more.

4.78 PARAMETERS OF SPINDLE CONTROL WITH SERVO MOTOR (1 OF 2)

	#7	#6	#5	#4	#3	#2	#1	#0
11000	SRVx						FSRx	SPCx

[Input type] Parameter input
[Data type] Bit axis

> **NOTE**
> When at least one of these parameters is set, the power must be turned off before operation is continued.

#0 SPCx SV speed control mode of spindle control with servo motor is:
0: Position control type.
1: Velocity control type.

#1 FSRx The axis to be subjected to servo motor-based spindle control is of a:
0: Semi-closed system.
1: Full-closed system.

#7 SRVx Spindle control with servo motor are:
0: Not performed.
1: Performed

> **NOTE**
> When spindle control with servo motor are used for an axis, parameter No. 11010 must also be set for the axis.

	#7	#6	#5	#4	#3	#2	#1	#0
11001		DCSx				DDMx	TCRx	SRBx

[Input type] Parameter input
[Data type] Bit axis

#0 SRBx Acceleration/deceleration after interpolation in cutting feed during rigid tapping with servo motor is:
0: Linear acceleration/deceleration.
1: Bell-shaped acceleration/deceleration.

#1 TCRx In SV speed control mode, time constant of acceleration/deceleration after interpolation for spindle control with servo motor is:
0: The parameter No. 1622.
(Time constant of acceleration/deceleration in cutting feed for each axis)
1: The parameter No. 11016.
(Time constant of acceleration/deceleration in SV speed control mode for each axis)
Set this parameter for the axis to be placed under spindle control with servo motor.

#2 DDMx The motor used for spindle control with servo motor is:
0: Not a DD motor.
1: A DD motor.

#6 DCSx Acceleration/deceleration for deceleration is:
0: Disabled.

1: Enabled.

	#7	#6	#5	#4	#3	#2	#1	#0
11002							HSPx	NSPx

[Input type] Parameter input
[Data type] Bit axis

#0 NSPx When SV speed control mode is canceled, spindle indexing is:
0: Executed.
1: Not executed.

#1 HSPx Speed-up of Spindle indexing is:
0: Disabled.
1: Enabled.

> **NOTE**
> This parameter is Automatic setting parameter. For details, refer to the appendix "Automatic setting / Initial setting parameter" in CONNECTION MANUAL (FUNCTION) (B-64693EN-1).

	#7	#6	#5	#4	#3	#2	#1	#0
11003							FEN	NCL

[Input type] Parameter input
[Data type] Bit path

#0 NCL In AI contour control, feedrate of rigid tapping with servo motor is:
0: limited by maximum allowable feedrate of parameter No.8465.
1: not limited by maximum allowable feedrate of parameter No.8465.
Maximum allowable feedrate of parameter No.1432 is enabled regardless of this parameter.

#1 FEN When ignoring feedrate commands is enabled (bit 7 (NOF) of parameter No.8451 is 1), feedrate of rigid tapping with servo motor is specified by:
0: parameter No.8465.
1: machining program.
Maximum allowable feedrate of parameter No.1432 is enabled regardless of this parameter.

	#7	#6	#5	#4	#3	#2	#1	#0
11004							VCSx	

[Input type] Parameter input
[Data type] Bit axis

#1 VCSx When SV rotation control mode of spindle control with servo motor is speed control (bit 0 (SPCx) of parameter No.11000 is 1), improvement of status output signals is:
0: Disabled.
1: Enabled.

Specifications of status output signals are as follows.

Status output signals	Bit 1 (VCSx) of parameter No.11004 is 0	Bit 1 (VCSx) of parameter No.11004 is 1
Axis moving signals MV1 to MV8<Fn102>	“0” at all times	Velocity command 0: “0” Velocity command except for 0: “1”
Axis moving direction signals MVD1 to MVD8<Fn106>	The status when servo rotation control mode is changed is maintained.	Positive velocity command: “0” Negative velocity command: “1”
In-position signals INP1 to INP8<Fn104>	“1” at all times	“0” at all times

	#7	#6	#5	#4	#3	#2	#1	#0
11005		**CSA**			**SSY**		**CSC**	**SIC**

[Input type] Parameter input
[Data type] Bit

#0 SIC Spindle indexing is:
0: Performed based on absolute coordinates.
1: Performed based on machine coordinates.

#1 CSC The coordinate of spindle phase synchronization control servo motor is:
0: Absolute coordinate.
1: Machine coordinate.

#3 SSY Spindle synchronous control with servo motor is:
0: Disabled.
1: Enabled.

#6 CSA Acceleration/deceleration for spindle synchronous control with servo motor is:
0: Acceleration/deceleration for speed control.
1: Acceleration/deceleration for spindle synchronous control.

11010	**Spindle number used by spindle control with servo motor**

NOTE
When this parameter is set, the power must be turned off before operation is continued.

[Input type] Parameter input
[Data type] Byte axis
[Valid data range] 0 to maximum number of controlled spindles
This parameter sets a spindle number for a servo axis for which spindle control with servo motor is performed.

NOTE
Set a spindle number for the axes set in bits 6 (CRVx) and 7 (SRVx) of parameter No. 11000. For axes for which spindle control with servo motor is not performed, set 0.

11011	Movement of spindle control with servo motor axis per revolution

NOTE
When this parameter is set, the power must be turned off before operation is continued.

[Input type] Parameter input
[Data type] Real axis
[Unit of data] degree
[Min. unit of data] Depend on the increment system of the applied axis
[Valid data range] 0 or positive 9 digit of minimum unit of data (refer to the standard parameter setting table (B))
(When the increment system is IS-B, 0.0 to +999999.999)
This parameter sets a movement of axis per revolution for which spindle control with servo motor is performed.

11012	Spindle indexing speed for each axis

[Input type] Parameter input
[Data type] Word axis
[Unit of data] min^{-1}
[Valid data range] 0 to 99999999
In spindle control with servo motor, set the spindle indexing speed for each axis.
If 0 is set, the spindle indexing speed is assumed to be the setting of parameter No. 11020 (speed (S_0) for switching acceleration/ deceleration for each axis).

11013	Positioning deviation limit for each axis in movement

[Input type] Parameter input
[Data type] 2-word axis
[Unit of data] Detection unit
[Valid data range] 0 to 99999999
This parameter sets the limit of positional deviation for each axis during movement in spindle control with servo motor.

11014	Positioning deviation limit for each axis in the stopped state

[Input type] Parameter input
[Data type] 2-word axis
[Unit of data] Detection unit
[Valid data range] 0 to 99999999
This parameter sets the limit of positional deviation at stop for each axis in spindle control with servo motor.

11015	Maximum motor speed

[Input type] Parameter input
[Data type] 2-word axis
[Unit of data] min^{-1}
[Valid data range] 0 to 99999999
This parameter sets the maximum motor speed applicable when spindle control with servo motor is performed.

11016	Time constant of acceleration/deceleration in SV speed control mode for each axis

[Input type] Parameter input
[Data type] Word axis
[Unit of data] msec
[Valid data range] 0 to 4000

In spindle control with servo motor , set the time constant of acceleration/deceleration after interpolation in cutting feed for SV speed control mode. Set the time constant used for exponential acceleration/deceleration in cutting feed, bell-shaped acceleration/deceleration after interpolation or linear acceleration/deceleration after interpolation in cutting feed for each axis. Type of acceleration/deceleration is applied by bits 0 (CTLx) and 1 (CTBx) of parameter No. 1610.

11017	FL rate of exponential acceleration/deceleration in SV speed control mode for each axis

[Input type] Parameter input
[Data type] Real axis
[Unit of data] mm/min, inch/min, degree/min (machine unit)
[Min. unit of data] Depend on the increment system of the applied axis
[Valid data range] Refer to the standard parameter setting table (C)
(When the increment system is IS-B, 0.0 to +999000.0)

In spindle control with servo motor, this parameter sets the lowest feedrate (FL rate) in exponential acceleration/deceleration for velocity control.
Set this parameter for the target axis for spindle control with servo motor.

11019	Allowable spindle speed of spindle indexing

[Input type] Parameter input
[Data type] Word axis
[Unit of data] min^{-1}
[Valid data range] 0 to 99999999

When bit 1 (HSPx) of parameter No. 11002 is 1, allowable spindle speed of speed-up spindle indexing is set.
When the SV speed control mode is canceled, the spindle speed is lower than the this parameter setting value, the spindle accelerates to this parameter setting value
The spindle doesn't accelerate when this parameter is 0. The spindle decelerates from the spindle speed when the SV speed control mode is canceled, and the spindle indexing is executed to the specified position.

11020	Acceleration/deceleration switching speed (S_0) for each axis

[Input type] Parameter input
[Data type] 2-word axis
[Unit of data] min^{-1}
[Valid data range] 0 to 99999999

In spindle control with servo motor, this parameter sets the speed at which acceleration/ deceleration is changed to perform rotation control. (First step)

11021	Acceleration/deceleration switching speed (S_1) for each axis

[Input type] Parameter input
[Data type] 2-word axis
[Unit of data] min^{-1}
[Valid data range] 0 to 99999999

In spindle control with servo motor, this parameter sets the speed at which acceleration/ deceleration is changed to perform rotation control. (Second step)

11030	Individual acceleration / deceleration 1 (Leg 1)

[Input type] Parameter input
[Data type] 2-word axis
[Unit of data] min^{-1}/s
[Valid data range] 0 to 100000

In spindle control with servo motor, this parameter sets acceleration/deceleration to be applied to perform rotation control. When the speed ranges from 0 to acceleration switching speed 1, acceleration/deceleration 1 is applied. Acceleration switching speed 1 is the speed set in parameter No. 11020.

11031	Individual acceleration / deceleration 2 (Leg 2)

[Input type] Parameter input
[Data type] 2-word axis
[Unit of data] min^{-1}/s
[Valid data range] 0 to 100000

In spindle control with servo motor, this parameter sets acceleration/deceleration to be applied to perform rotation control. When the speed ranges from acceleration switching speed 1 to acceleration switching speed 2, acceleration/ deceleration 2 is applied. Acceleration switching speed 1 and acceleration switching speed 2 are the speeds set in parameter Nos. 11020 and 11021, respectively.

11032	Individual acceleration / deceleration 3 (Leg 3)

[Input type] Parameter input
[Data type] 2-word axis
[Unit of data] min^{-1}/s
[Valid data range] 0 to 100000

In spindle control with servo motor, this parameter sets acceleration/deceleration to be applied to perform rotation control. When the speed ranges from acceleration switching speed 2 to the maximum speed, acceleration/deceleration 3 is applied. Acceleration switching speed 2 is the speed set in parameter No. 11021.

11040	Spindle phase synchronization with servo motor compensation data

[Input type] Parameter input
[Data type] 2-word spindle
[Unit of data] pulse
[Valid data range] 0 to 359999

This parameter reduces speed fluctuations in case of aligning phase of spindle in spindle phase synchronization control.
When this parameter is 0, since the phase alignment amount is output at a time, the position deviation quickly becomes large, and there are large speed fluctuation on phase alignment.
It is possible to perform smooth phase alignments as phase alignment amounts is separated by the number of 4 msec pulses set in this parameter.

11041	Shift amount for spindle phase synchronization control with servo motor

[Input type] Parameter input
[Data type] Real spindle

[Unit of data] degree
[Min. unit of data] Depend on the increment system of the applied axis
[Valid data range] 0 to 359.999
Sets the shift amount of slave spindle from master spindle at spindle phase synchronization control with servo motor.

11042	Detection level for spindle synchronization with servo motor completion signal

[Input type] Parameter input
[Data type] Word spindle
[Unit of data] min^{-1}
[Valid data range] 0 to 32767
For the synchronization speed command at synchronization control with servo motor, if the deviations of the respective spindle motor speeds are within the setting level, the spindle synchronization control complete signal FSPSYs becomes 1.

11050	Maximum allowable acceleration rate in acceleration/deceleration before interpolation for each axis in rigid tapping

[Input type] Parameter input
[Data type] Real axis
[Unit of data] mm/sec^2, $inch/sec^2$, $degree/sec^2$ (machine unit)
[Min. unit of data] Depend on the increment system of the applied axis
[Valid data range] Refer to the standard parameter setting table (D)
(When the machine system is metric system, 0.0 to +100000.0. When the machine system is inch system, 0.0 to +10000.0)
Set a maximum allowable acceleration rate in look-ahead acceleration/ deceleration before interpolation for each axis.
If a value greater than 100000.0 is set, the value is clamped to 100000.0. If 0 is set, the specification of 100000.0 is assumed. If 0 is set for all axes, however, look-ahead acceleration/deceleration before interpolation is not performed.

11051	Acceleration change time of bell-shaped acceleration/deceleration before interpolation in rigid tapping

[Input type] Parameter input
[Data type] 2-word path
[Unit of data] msec
[Valid data range] 0 to 200
Set an acceleration change time of look-ahead bell-shaped acceleration/ deceleration before interpolation (time for changing from the state of constant federate (A) to the state of constant acceleration/deceleration (C) at the acceleration rate calculated from the acceleration rate set in parameter No. 11050: time of (B) in the figure below).

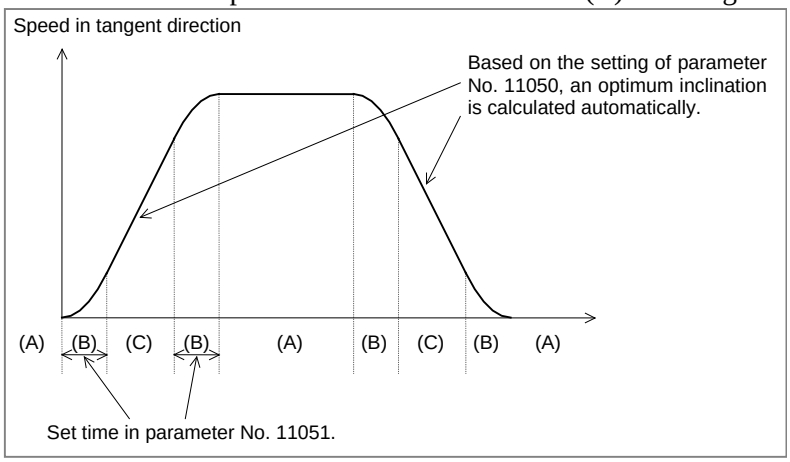

11052	Time constant for acceleration/deceleration after cutting feed interpolation in the acceleration/deceleration before interpolation mode in rigid tapping

[Input type] Parameter input
[Data type] Word axis
[Unit of data] msec
[Valid data range] 0 to 4000

In the look-ahead acceleration/deceleration before interpolation mode as in AI contour control, not the ordinary time constant (parameter No. 1622) but the value of this parameter is used.
Be sure to specify the same time constant value for all axes except for a special application.
If different values are set, correct linear and circular figures cannot be obtained.

11060	Time constant for acceleration/deceleration after cutting feed interpolation in rigid tapping (first gear)
11061	Time constant for acceleration/deceleration after cutting feed interpolation in rigid tapping (second gear)
11062	Time constant for acceleration/deceleration after cutting feed interpolation in rigid tapping (third gear)
11063	Time constant for acceleration/deceleration after cutting feed interpolation in rigid tapping (fourth gear)

[Input type] Parameter input
[Data type] Word axis
[Unit of data] msec
[Valid data range] 0 to 4000

For the time constants in rigid tapping with servo motors, parameters Nos. 11060 to 11063 are used, not parameters Nos. 5261 to 5264.
Set these parameters with a live tool axis in rigid tapping.

11065	Time constant for acceleration/deceleration after cutting feed interpolation in rigid tapping extraction (first gear)
11066	Time constant for acceleration/deceleration after cutting feed interpolation in rigid tapping extraction (second gear)
11067	Time constant for acceleration/deceleration after cutting feed interpolation in rigid tapping extraction (third gear)
11068	Time constant for acceleration/deceleration after cutting feed interpolation in rigid tapping extraction (fourth gear)

[Input type] Parameter input
[Data type] Word axis
[Unit of data] msec
[Valid data range] 0 to 4000

If bit 2 (TDR) of parameter No. 5201 is set to 1, for the time constants in rigid tapping extraction with servo motors, parameters Nos. 11065 to 11068 are used, not parameters Nos. 5271 to 5274.
Set these parameters with a live tool axis in rigid tapping.

11070	Acceleration/deceleration switching speed (S_0) of spindle synchronous

[Input type] Parameter input

[Data type] 2-word axis
[Unit of data] min^{-1}
[Valid data range] 0 to 999999999
Set the acceleration/deceleration switching points S_0 for spindle synchronous control with servo motor.

11071	Acceleration/deceleration switching speed (S_1) of spindle synchronous

[Input type] Parameter input
[Data type] 2-word axis
[Unit of data] min^{-1}
[Valid data range] 0 to 999999999
Set the acceleration/deceleration switching points S_1 for spindle synchronous control with servo motor.

11080	Individual acceleration / deceleration 1 of spindle synchronous (Leg 1)

[Input type] Parameter input
[Data type] 2-word axis
[Unit of data] min^{-1}/s
[Valid data range] 0 to 100000
In spindle control with servo motor, this parameter sets acceleration/deceleration to be applied to perform spindle synchronous control. When the speed ranges from 0 to acceleration switching speed 1, acceleration/deceleration 1 is applied. Acceleration switching speed 1 is the speed set in parameter No. 11070.

11081	Individual acceleration / deceleration 2 of spindle synchronous (Leg 2)

[Input type] Parameter input
[Data type] 2-word axis
[Unit of data] min^{-1}/s
[Valid data range] 0 to 100000
In spindle control with servo motor, this parameter sets acceleration/deceleration to be applied to perform spindle synchronous control. When the speed ranges from acceleration switching speed 1 to acceleration switching speed 2, acceleration/ deceleration 2 is applied. Acceleration switching speed 1 and acceleration switching speed 2 are the speeds set in parameter Nos. 11070 and 11071, respectively.

11082	Individual acceleration / deceleration 3 of spindle synchronous (Leg 3)

[Input type] Parameter input
[Data type] 2-word axis
[Unit of data] min^{-1}/s
[Valid data range] 0 to 100000
In spindle control with servo motor, this parameter sets acceleration/deceleration to be applied to perform spindle synchronous control. When the speed ranges from acceleration switching speed 2 to the maximum speed, Acceleration/deceleration 3 is applied. Acceleration switching speed 2 is the speed set in parameter No. 11071.

11090	Path number with which the rotation of each spindle is specified

[Input type] Parameter input
[Data type] Byte spindle

[Valid data range] 0 to 10

When a path is specified for spindle commands, this parameter sets a path number with which the rotation of a spindle can be specified.

0: Spindle commands can be issued from all paths.

1 to 10: Spindle commands can be issued from a set path.

NOTE

1 This parameter is valid when spindle command path specification signal SPSP<Gn536.7> is set to “1”.

2 If the setting is illegal, an alarm PS5305, “ILLEGAL SPINDLE NUMBER” is issued when a spindle command is issued from any one of the paths.

3 This setting does not apply to spindle commands using the spindle select signals SWS1 to SWS4<Gn027.0 to Gn027.2, Gn026.3>.

4.79 PARAMETERS OF TILTED WORKING PLANE INDEXING COMMAND

	#7	#6	#5	#4	#3	#2	#1	#0
11216						TPM		D3O

[Input type] Parameter input

[Data type] Bit path

#0 D3O When the bit 1 (D3MV) of parameter No.11600 set to “1” and Override is 0%, during Tilted working plane indexing or 3-dimensional coordinate system conversion mode, the axis moving signals “MV1 to MV8<Fn102>” :

- 3-dimensional coordinate system conversion
- Tilted working plane indexing

0: becomes 0.

1: maintains the state of “1”.

NOTE

When the manual operation (Jog feed / Incremental feed / Manual handle interrupt)is being executed, the bit 0 (D3O) of parameter No.11216 become invalid. It becomes operation of corresponding D3O=0.

#2 TPM In PMC axis control and 3-dimensional coordinate system conversion / Tilted working plane command, NC command not involving a movement :

0: Disable to command (Alarm (PS5131) "NC COMMAND IS NOT COMPATIBLE" occurs).

1: Enabled to command.

NOTE
1 When this parameter bit is set, the power must be turned off before operation is continued.
2 When the coordinate conversion axis (X,Y,Z) is PMC axis control mode, this function is disabled in following program command block.
- Tilted working plane command start block (G68.2)
- 3-dimensional coordinate start block (G68)
- Tilted working plane command / 3-dimensional coordinate cancel block (G69)

11220	Minimum distance used for determining a plane when a tilted working plane indexing command with three points is specified

[Input type] Parameter input
[Data type] Real path
[Unit of data] mm, inch (input unit)
[Min. unit of data] Depend on the increment system of the applied axis
[Valid data range] 0 or positive 9 digit of minimum unit of data (refer to the standard parameter setting table (B))
(When the increment system is IS-B, 0.0 to +999999.999)
When a tilted working plane indexing command with three points is specified, if the distance (used for determining a place) between a straight line passing two points and the remaining one point is short, the plane is unstable. In this parameter, set the minimum distance used for determining a plane. If the distance is shorter than the value set in this parameter, an alarm PS5457, “G68.2/G68.3 FORMAT ERROR” is issued.

	#7	#6	#5	#4	#3	#2	#1	#0
11221	AIR	3CS		CFW	TLC	3DW	D3R	MTW

[Input type] Parameter input
[Data type] Bit path

#0 MTW Multiple tilted working plane indexing commands are:
0: Not used.
1: Used.

#1 D3R In the 3-dimensional coordinate system conversion mode, tilted working plane indexing command mode, or workpiece setting error compensation mode, rapid traverse in canned cycle for drilling is:
0: Performed in the cutting feed mode.
1: Performed in the rapid traverse mode.

#2 3DW If, in the 3-dimensional coordinate system conversion mode, workpiece coordinate system selection using a G code is specified, the selection:
0: Operates in accordance with conventional specifications. (The workpiece coordinate system difference is reflected in the program coordinate system direction.)
1: Operates in accordance with the same specifications as those of workpiece coordinate system selection (bit 6 (3TW) of parameter No. 1205 = 1) during the tilted working plane indexing command. (The workpiece coordinate system difference is reflected in the workpiece coordinate system direction.)

> ⚠ **CAUTION**
> If this parameter is set to 1, only G54 to G59 and G54.1 can be specified. If G52 and G92 are specified, alarm PS5462, "ILLEGAL COMMAND (G68.2/G69)" is issued.
> If G54 to G59 and G54.1 are specified, buffering is suppressed.

#3 TLC During tool length compensation, 3-dimensional coordinate conversion:
0: Cannot be used.
1: Can be used.

#4 CFW If the end point of tool axis direction control (G53.1/G53.6) directed using the tilted working plane indexing command is a singular point:
0: The second rotation axis does not operate.
1: The second rotation axis is controlled in such a way that the second feature coordinate system and workpiece coordinate system match with each other in direction.

#6 3CS The spindle speed calculation of constant surface speed control during the 3-dimensional coordinate system conversion / the tilted working plane indexing is :
0: Based on the workpiece coordinate system.
1: Based on the program coordinate system (3-dimensional coordinate system conversion) / the feature coordinate system (Tilted working plane indexing).

#7 AIR If the movement range of rotation axis (parameter No.19741, 19742, 19743, 19744) is set to the roll-over axis, or roll-over function is set to rotary axis (B type), when tool axis direction control (G53.1) is executed :
0: The alarm PS5459, "MACHINE PARAMETER INCORRECT" is not issued.
1: The alarm PS5459, "MACHINE PARAMETER INCORRECT" is issued.

4.80 PARAMETERS OF AXIS CONTROL/INCREMENT SYSTEM (2 OF 3)

	#7	#6	#5	#4	#3	#2	#1	#0
11222						IMG	CIM	NIM

[Input type] Parameter input
[Data type] Bit path

#0 NIM Automatic conversion of a coordinate system by an inch/metric conversion command (G20 or G21) is:
0: Not performed.
1: Performed.

#1 CIM When an inch/metric conversion command (G20 or G21) is specified, if the workpiece coordinate system is shifted by the shift amount as described below:
0: An alarm PS1298, “ILLEGAL INCH/METRIC CONVERSION” is issued.
1: Clearing of the shift amount is performed.

If bit 0 (NIM) of parameter No. 11222 is set to 1, or if bit 2 (IRF) of parameter No. 14000 is set to 1, this parameter clears the following:
- Manual intervention made when the manual absolute signal*ABSM<Gn006.2> is off
- Issuance of a move command with the machine locked

- Movement by handle interrupt
- Operation with a mirror image
- Shifting of a workpiece coordinate system when a local coordinate system or workpiece coordinate system is set up

#2 IMG Inch/metric conversion is:
0: Performed with the G20/G21 (G70/G71).
1: Not performed with the G20/G21 (G70/G71).

> **NOTE**
> If bit 2 of parameter No. 11222 is 1 (inch/metric conversion with G20/G21 is disabled), only bit 2 of parameter No. 0 can be used to perform inch/metric conversion. If bit 2 of parameter No.0 = 0, the metric system is used. If bit 2 of parameter No.0 = 1, the inch system is used.

4.81 PARAMETERS OF DI/DO (2 OF 2)

	#7	#6	#5	#4	#3	#2	#1	#0
11223			ITM	CML		OPS	TRS	

[Input type] Parameter input
[Data type] Bit path

#1 TRS In threading cycle retraction, when a block that specifies return to the start point of the threading cycle is executed, threading signal THRD <Fn002.3> is:
0: Set to “0”.
1: Set to “1”.

#2 OPS In the MEM mode, when a sequence number search operation ([N SEARCH]) is performed, automatic operation signal OP <Fn000.7> is:
0: Kept “0”.
1: Set to “1”.

#4 CML When AI contour control is effective and machine lock is applied:
0: Operates in accordance with conventional specifications.
1: Operates at almost the same speed and cycle time as machine lock is invalid.

#5 ITM When bit 2 (D3IT) of parameter No.11600 = 1, during 3-dimensional coordinate conversion, the following signals are:
0: Enabled for axis of programming coordinate system.
1: Enabled for axis of machine coordinate system.
(Intended signals)
- Interlock signal for each axis direction +MIT1 to +MIT8<Gn132>,-MIT1 to -MIT8 <Gn134> etc. during manual intervention / manual handle interrupt in 3-dimensional coordinate system conversion mode
- Interlock signal for each axis *IT1 to *IT8 <Gn130> during manual intervention / manual handle interrupt in 3-dimensional coordinate system conversion mode
- External deceleration signal *+ED1 to *+ED8 <Gn118>,*-ED1 to *-ED8 <Gn120> etc. during manual intervention / manual handle interrupt in 3-dimensional coordinate system conversion mode
- External deceleration signal during 3-dimensional coordinate conversion

4.82 PARAMETERS OF PROGRAMS (2 OF 5)

	#7	#6	#5	#4	#3	#2	#1	#0
11224						SC		

[Input type] Parameter input
[Data type] Bit path

#4 SC When the system variable # 3003 of the macro is 1 or 3, a block composed only of comments :
0: Not skipped.
1: Skipped.

NOTE
1 This function is valid when parameter NOB (No. 3404 # 0) is 0.
2 When this function is enabled, the tool route may change.
Please verify thoroughly when applying.

4.83 PARAMETERS OF FEEDRATE CONTROL AND ACCELERATION/DECELERATION CONTROL (2 OF 2)

11230	Distance to the 4th step in positioning by optimum acceleration for each axis D4
11231	Distance to the 5th step in positioning by optimum acceleration for each axis D5
11232	Distance to the 6th step in positioning by optimum acceleration for each axis D6

[Input type] Parameter input
[Data type] Real axis
[Unit of data] mm, inch, degree (machine unit)
[Valid data range] Refer to the standard parameter setting table (B)
When using the function for switching the rapid traverse rate, time constant, and loop gain according to the positioning distance, this parameter sets the positioning distance for each axis.

NOTE
1 To use this parameter, set bit 0 (OADx) of parameter No. 6131 to 1.
2 If 0 is set in all of parameters Nos. 6136 to 6138 and 11230 to 11232, this function is disabled.
3 The settings must satisfy the following: D1<D2<D3<D4<D5<D6.
4 Switching in up to seven steps is possible. When up to four steps are used, for example, set parameters so that expression D1<D2<D3 is satisfied, and set a maximum value (such as +999999.999 mm) for D4, D5, and D6.
5 For axes with diameter specification, set a diameter value. If 10.000 mm is set for an axis with diameter specification, for example, switching is made when a movement takes place over a distance of 10.000 mm in diameter.

NOTE
6 In parameters Nos. 6136 to 6138 and 11230 to 11232, set a distance for each axis. Block lengths must not be specified in these parameters.

	#7	#6	#5	#4	#3	#2	#1	#0
11236							SOVx	

[Input type] Parameter input
[Data type] Bit axis

NOTE
When this parameter is set, the power must be turned off before operation is continued.

#1 SOVx Smart overlap is
0: Disabled.
1: Enabled.

	#7	#6	#5	#4	#3	#2	#1	#0
11240			RRB	ARB			AMP	FAE

[Input type] Parameter input
[Data type] Bit path

#0 FAE During positioning when the AI contour control mode is canceled, the optimum torque acceleration/deceleration is:
0: Disabled.
1: Enabled.

#1 AMP Movement with G53 command, and movement from middle point to reference position with G28 or G30 command are done with:
0: Acceleration/deceleration after interpolation.
1: Acceleration/deceleration before interpolation.

NOTE
This parameter is enabled when the following conditions.
- In AI contour control mode
- Parameter ZRL(No.1015#4)=1
- Parameter LRP(No.1401#1)=1
- Parameter No.1671 of at least one of axes is set to value except 0.
- Parameter FRP(No.19501#5)=1

#4 ARB Look-ahead acceleration/deceleration before interpolation for rapid traverse in AICC mode off is:
0: Disabled.
1: Enabled.

NOTE
This parameter is enabled when the parameters for which look-ahead acceleration/deceleration before interpolation for rapid traverse is enabled are set. (Refer to bit 5 (FRP) of parameter No.19501.)

#5 RRB Look-ahead acceleration/deceleration before interpolation for rapid traverse in rigid tap is:
0: Disabled.
1: Enabled.

NOTE
This parameter is enabled when look-ahead acceleration/deceleration before interpolation for rapid traverse is valid. (Refer to bit 5 (FRP) of parameter No.19501.)

11242	Time constant of acceleration/deceleration after interpolation of acceleration/deceleration before interpolation in rapid traverse

[Input type] Parameter input
[Data type] Word axis
[Unit of data] msec
[Valid data range] 0 to 4000
This parameter is used for the time constant of look-ahead acceleration/deceleration before interpolation in rapid traverse.
Be sure to specify the same time constant value for all axes except for a special application. If different time constants are set, a correct linear line cannot be obtained.

	#7	#6	#5	#4	#3	#2	#1	#0
11247	SNN	SNC	SNR	SCN	SCR	SRN	SRC	SRR

[Input type] Parameter input
[Data type] Bit path

#0 SRR In Smart overlap, between rapid traverse block and rapid traverse block overlap is :
0: Enabled.
1: Disabled.

#1 SRC In Smart overlap, between rapid traverse block and cutting feed block overlap is :
0: Enabled.
1: Disabled.

#2 SRN In Smart overlap, between rapid traverse block and non-movement block overlap is :
0: Enabled.
1: Disabled.

#3 SCR In Smart overlap, between cutting feed block and rapid traverse block overlap is :
0: Enabled.
1: Disabled.

#4 SCN In Smart overlap, between cutting feed block and non-movement block overlap is :
0: Enabled.
1: Disabled.

#5 SNR In Smart overlap, between non-movement block and rapid traverse block overlap is :
0: Enabled.
1: Disabled.

#6 SNC In Smart overlap, between non-movement block and cutting feed block overlap is :
0: Enabled.
1: Disabled.

#7 SNN In Smart overlap, between non-movement block and non-movement overlap is :
0: Enabled.
1: Disabled.

11248	Time constant 1 of acceleration/deceleration after interpolation in Smart overlap / Canned cycle overlap for drilling for each axis

[Input type] Parameter input
[Data type] Word axis
[Unit of data] msec
[Valid data range] 0 to 64
Set the time constant 1 of acceleration/deceleration after interpolation in Smart overlap / Canned cycle overlap for drilling for each axis.

NOTE
When either parameter No.1686 or No.1687 is set to other than 0, parameters No.1686 and No.1687 are valid for the time constant of acceleration/deceleration after interpolation in Canned cycle overlap for drilling.

11249	Time constant 2 of acceleration/deceleration after interpolation in Smart overlap / Canned cycle overlap for drilling for each axis

[Input type] Parameter input
[Data type] Word axis
[Unit of data] msec
[Valid data range] 0 to 64
Set the time constant 2 of acceleration/deceleration after interpolation in Smart overlap / Canned cycle overlap for drilling for each axis for each axis.

NOTE
When either parameter No.1686 or No.1687 is set to other than 0, parameters No.1686 and No.1687 are valid for the time constant of acceleration/deceleration after interpolation in Canned cycle overlap for drilling.

4.84 PARAMETERS OF PROGRAM RESTART (2 OF 2)

	#7	#6	#5	#4	#3	#2	#1	#0
11250	OAA	SAV	SPR	MTO	MCO	BOU	TOU	

[Input type] Parameter input
[Data type] Bit path

#1 TOU When the program restart auxiliary function output function is applied in a lathe system, T codes are:
0: Not output to the MDI program.
1: Output to the MDI program.

> **NOTE**
> In a machining center system, they are output regardless of the parameter setting.

#2 BOU When the program restart auxiliary function output function is applied in a lathe system, B codes (second auxiliary function) are:
0: Not output to the MDI program.
1: Output to the MDI program.

> **NOTE**
> In a machining center system, they are output regardless of the parameter setting.

#3 MCO If, in the program restart auxiliary function output function, multiple MSTB codes are specified in the program to restart (or multiple M codes are specified), the output to the MDI program is as follows:
0: Each code is output to a single block.
1: All specified codes are output to a single block.
In either case, the output is in MSTB order.

#4 MTO In the program restart auxiliary function output function, modal T codes are:
0: Not output to the MDI program.
1: Output to the MDI program.

#5 SPR Suppress motion is:
0: Disabled.
1: Enabled.

#6 SAV The suppress motion state is:
0: Not saved to a parameter.
1: Saved to a parameter.

 # 7 OAA In the program restart output function, the approach to the program restart position for each arbitrary axis is:
0: Not used.
1: Used.

	#7	#6	#5	#4	#3	#2	#1	#0
11251			RMI	NPN				

[Input type] Parameter input
[Data type] Bit

#4 NPN In the quick program restart function, when restarting operations on the way of the subprogram, the subprogram name is :
0: specified.
1: not specified.

NOTE
When NPN is set to 1, automatic operation is restarted from the block of the specified sequence number that exists in the main program or the subprogram.

#5 RMI Manual intervention in Quick program restart function is :
0: Disabled.
1: Enabled.

4.85 PARAMETERS OF COORDINATE SYSTEM (2 OF 2)

11275	The top number of M code used to turn on each axis workpiece coordinate system preset signal

[Input type] Parameter input
[Data type] 2-word path
[Valid data range] 1 to 999999999
Specify the top number of M code for turning 1 each axis workpiece coordinate system preset signal <Gn358> during automatic operation.
When the specified M codes are within the range specified with this parameter and parameter No. 11276, each axis workpiece coordinate system preset signal is checked and preset workpiece coordinate system for axis that the signal is turned “1”.
The specified M codes prevent buffering.

NOTE
When each axis workpiece coordinate system preset signals are turned 1 more than two signals by an M code, please turn 1 the signals of all axis at the same timing. If the timing is different, only the axis of the first signal turned 1 is preset.
If you want to turn 1 the signals at the different timing, please specify M code separately.

11276	The number of M code used to turn on each axis workpiece coordinate system preset signal

[Input type] Parameter input
[Data type] Word path
[Valid data range] 1 to 999
Specify the number of M code for turning 1 each axis workpiece coordinate system preset signal <Gn358> during automatic operation.
For example, when parameter No. 11275 = 100 and parameter No. 11276 = 10 are set, From M100 to M109 are used for turning 1 each axis workpiece coordinate system preset signal.
When 0 is set, the number of M code is assumed to be 1.

NOTE
Set only M code that is not used for another function.
(M00 to 05, 30, 98, 99, M code used to call the subprogram, etc.)

	#7	#6	#5	#4	#3	#2	#1	#0
11277		WMR	PWR					WPA

[Input type] Parameter input
[Data type] Bit path

#0 WPA When an M code for turning on the workpiece coordinate system preset signal for an axis is specified, but the signal is not turned on, or an auxiliary function lock is provided:
0: An alarm PS1820, “ILLEGAL DI SIGNAL STATE” is issued.
1: An alarm is not issued.

When bit 6 (PGS) of parameter No. 3001 is set to 0 (M, S, T, and B codes are not output in the high speed program check mode), if an M code for turning on the workpiece coordinate system preset signal for an axis is specified, the system follows the setting of this parameter.

#5 PWR When bit 3 (PPD) of parameter No. 3104 is set to 0,
0: The axis is preset with 0.
1: The axis is preset with machine coordinates.

> **NOTE**
> This parameter is valid when bit 3 (PPD) of parameter No. 3104 is set to 0.

#6 WMR In Direct input of workpiece origin offset value measured, if measured axis is rotation axis and is roll-over axis, workpiece origin offset value is:
0: Not rounded.
1: Rounded.

> **NOTE**
> In case of this parameter is set to 1, don’t use the direct input of workpiece origin offset value measured function when roll-over function is temporarily invalid (Example: cylindrical interpolation mode). Setting offset value is rounded, even if roll-over function is invalid. Therefore, workpiece origin offset value might not be correctly set.

	#7	#6	#5	#4	#3	#2	#1	#0
11279	HMA	MSB	MRR			FCI		WAB
	HMA	MSB	MRR			FCI		

[Input type] Parameter input
[Data type] Bit

#0 WAB When the incremental mode (G91) is selected in the G-code system B/C of the lathe system, if the setting of the workpiece coordinate system (G92) is commanded, the setting of the workpiece coordinate system is executed with:
0: Incremental value.
1: Absolute value.

#2 FCI The starting point for the incremental command specified after figure copying is:
0: The end point of the figure made by the first copy (conventional specification).
1: The end point of the figure made by the last copy (FS16*i* compatible specification).

#5 MRR In G code preventing buffering (G04.1), specifying the position of releasing preventing buffering by the distance to go in the previous movement block is:
0: Disabled.
1: Enabled.

#6 MSB When single block signal SBK <Gn046.1> is set to “1”, single block stop in G code preventing buffering (G04.1) is:
0: Performed.
1: Not performed.

> **NOTE**
> Single block stop is not performed in G04.1 block regardless of the state of #3003 when bit 6 (MSB) of parameter No.11279 is set to 1.

#7 HMA When waiting M codes of high-speed are specified during Relation of cutter compensation, or when non-buffering command by G code is specified during Relation of cutter compensation, Multiple repetitive canned cycle G70 to G73, :
0: Alarm occurs.
1: Alarm not occurs.

> **NOTE**
> 1 Processing time of waiting M codes of high-speed type during Relation of cutter compensation is equal with waiting M codes setting by parameter No.8110 and 8111 when setting this parameter to 1.
> 2 Waiting M codes of high-speed type during Relation of cutter compensation are treated with non-buffering and non-movement block when setting this parameter to 1. Please note enough about the function which changes operation by the non-movement block (For example, Cutter compensation and tool nose radius compensation or etc.)
> 3 Processing time of non-buffering command by G code during Relation of cutter compensation, Multiple repetitive canned cycle G70 to G73 is equal with non-buffering commands of normal when setting this parameter to 1.
> 4 Non-buffering command by G code during " Relation of cutter compensation, Multiple repetitive canned cycle G70 to G73" is treated with non-buffering commands of normal when setting this parameter to 1. Please note enough about the function which changes operation by the non-movement block (For example, Cutter compensation and tool nose radius compensation or etc.)

4.86 PARAMETERS OF SYNCHRONOUS/COMPOSITE CONTROL AND SUPERIMPOSED CONTROL (2 OF 3)

	#7	#6	#5	#4	#3	#2	#1	#0
11284						NCA		SSH

[Input type] Parameter input
[Data type] Bit

#0 SSH During superimposed control, manual handle interruption to the slave axis is:
0: Disabled.
1: Enabled.

#2 NCA When the inside of the specified area on stored stroke check 2,3 is defined as the forbidden area, the combination of axes that composes the forbidden area on Composite control mode is:

0: Exchanged according to the exchanging of axes on Composite control. (Conventional specification)

1: Not exchanged. (Compatible specification with FS0*i*-TTC)

4.87 PARAMETERS OF PROGRAMS (3 OF 5)

11290	M code preventing buffering 11
11291	M code preventing buffering 12
11292	M code preventing buffering 13
11293	M code preventing buffering 14
11294	M code preventing buffering 15
11295	M code preventing buffering 16
11296	M code preventing buffering 17
11297	M code preventing buffering 18
11298	M code preventing buffering 19
11299	M code preventing buffering 20

[Input type] Parameter input
[Data type] 2-word path
[Valid data range] 0 to 99999999

Set M codes that prevent buffering the following blocks. If processing directed by an M code must be performed by the machine without buffering the following block, specify the M code.

M00, M01, M02, and M30 always prevent buffering even when they are not specified in these parameters.

4.88 PARAMETERS OF DISPLAY AND EDIT (2 OF 6)

	#7	#6	#5	#4	#3	#2	#1	#0
11300	MUC	ATH	MPH	FPI	ASH			

[Input type] Parameter input
[Data type] Bit

#3 ASH When the actual feedrate is read with FOCAS2 and the PMC window:

0: Data that has been updated at conventional intervals (approximately 32 msec) is read.

1: Data that has been updated at short intervals is read.

If this parameter is set to 1, the machine coordinates of the machine unit with the delay in acceleration/deceleration and the servo delay considered are read for all axes, regardless of the setting of bit 7 (EMP) of parameter No. 11313.

NOTE
When quick response is not required in particular for display operation and so on, normally set this parameter to 0 to reduce the load on the CNC.

#4 FPI In the number of registered programs, which is obtained by the cnc_rdproginfo() function:
0: The number of initial folders is included.
1: The number of initial folders is not included.

#5 MPH When the machine coordinates of the machine unit with the delay in acceleration/deceleration and the servo delay not considered are read with FOCAS2 and the PMC window:
0: Data that has been updated at conventional intervals (approximately 32 msec) is read.
1: Data that has been updated at short intervals is read.

NOTE
When quick response is not required in particular for display operation and so on, normally set this parameter to 0 to reduce the load on the CNC.

#6 ATH When the disturbance load torque data are read with FOCAS2 and the PMC window:
0: Data that has been updated at conventional intervals (approximately 32 msec) is read.
1: Data that has been updated at short intervals is read.

NOTE
When quick response is not required in particular for display operation and so on, normally set this parameter to 0 to reduce the load on the CNC.

#7 MUC When the modal data are read with FOCAS2 and the PMC window:
0: Data that has been updated at conventional intervals (approximately 32 msec) is read.
1: Data that has been updated at short intervals is read.

NOTE
When quick response is not required in particular for display operation and so on, normally set this parameter to 0 to reduce the load on the CNC.

	#7	#6	#5	#4	#3	#2	#1	#0
11302	CPG	FPF	PES	ADC	SMD	SDG	SPR	SPG

[Input type] Parameter input
[Data type] Bit

#0 SPG Initially, the program screen is:
0: Displayed full-screen.
1: Displayed in a window.

#1 SPR Initially, the parameter screen is:
0: Displayed full-screen.
1: Displayed in a window.

#2 SDG Initially, the diagnosis screen is:
0: Displayed full-screen.
1: Displayed in a window.

#3 SMD The MDI program screen is:
0: Displayed according to the setting of bit 0 (SPG) of parameter No. 11302.
1: Displayed in a window.

If this parameter is set to 0, the first display mode entered after the power is turned on is determined according to the setting of bit 0 (SPG) of parameter No. 11302. Depending on the display mode, the MDI program screen is displayed full-screen or in a window. Also, the screen display can be dynamically switched between the full-screen mode and the window mode by interacting with the program screen in another mode.

If this parameter is set to 1, the MDI program screen is always displayed in a window, and it is impossible to switch between the full-screen mode and the window mode by operations.

#4 ADC When all alarms have been eliminated, or the message key is pressed on the alarm screen:
0: The screen display does not change.
1: The screen display changes to the screen displayed before the alarm screen.

#5 PES After a program search operation is performed on the program list screen:
0: The cursor moves to a program on the list screen.
1: A specified program is selected as the main program, and the screen display changes to the edit screen.

#6 FPF Folders that can be used by program management are:
0: Not limited to other than the path folder corresponding to a selected path.
1: Limited to other than the path folder corresponding to a selected path.

#7 CPG PROG function screen selection is:
0: Not changed according to the CNC mode.
1: Changed according to the CNC mode.

	#7	#6	#5	#4	#3	#2	#1	#0
11303			ISQ	DPM	BDP	DVP	SRC	LDP

[Input type] Parameter input
[Data type] Bit

#0 LDP The servo load meter axis display:
0: Interacts with the axis display of coordinate values.
1: Does not interact with the axis display of coordinate values.

#1 SRC In program character editing, blocks not yet saved are:
0: Not saved at the time of reset.
1: Saved at the time of reset.

#2 DVP On the program list screen, path folders are displayed:
0: As many as the maximum number of paths that can be set in the system.

1: As many as the number of valid paths.

#3 BDP When a single-block stop occurs, on the program screen and program check screen:
0: The block next to the block that has been executed is displayed at the beginning.
1: The block that has been executed is displayed at the beginning.

> **NOTE**
> Only MEM operation is enabled.

#4 DPM During MDI program execution, blocks that call an execution macro are:
0: Not displayed.
1: Displayed.

> **NOTE**
> This parameter is Automatic setting parameter. For details, refer to the appendix "Automatic setting / Initial setting parameter" in CONNECTION MANUAL (FUNCTION) (B-64693EN-1).

#5 ISQ During MDI editing, automatic sequence number insertion is:
0: Disabled.
1: Enabled.

	#7	#6	#5	#4	#3	#2	#1	#0
11304	CFP				ON8		GGD	PGR

[Input type] Parameter input
[Data type] Bit

> **NOTE**
> When at least one of these parameters is set, the power must be turned off before operation is continued.

#0 PGR When the path select signal is changed, the screen of the multi path simultaneous display group:
0: Is not switched.
1: Is switched to the display group including the selected path.

> **NOTE**
> This parameter is Initial setting parameter. For details, refer to the appendix "Automatic setting / Initial setting parameter" in CONNECTION MANUAL (FUNCTION) (B-64693EN-1).

#1 GGD The G code guidance screen is:
0: Not displayed.
1: Displayed.

#3 ON8 Program numbers are:
0: Four digits long.
1: Eight digits long.

NOTE
If program numbers are changed from eight digits to four digits, all programs will be automatically deleted from program memory.
If this parameter is changed from 1 to 0 and the power is turned off and back on, the following message appears on the IPL screen.
For the CNC screen display function, the message appears on the IPL screen of NCBOOT32.exe. To delete them, enter 1. Otherwise, enter 0.
PARAMETER NO.11304#3 IS CHANGED.
ALL PROGRAM FILE MUST BE CLEARED.
CLEAR FILE OK ? (NO=0, YES=1)

#7 CFP Folders that can be used by program management are:
0: Not limited to the path folder corresponding to a selected path.
1: Limited to the path folder corresponding to a selected path.

Folders to be used are limited by bit 6 (FPF) of parameter No. 11302 and bit 7 (CFP) of parameter No. 11304 as follows:

Table 4.88 Folders that are made usable in a program list by parameter setting

		Bit 6 (FPF) of parameter No. 11302	
		0	**1**
Bit 7 (CFP) of parameter No. 11304	**0**	Unlimited	Under path folder
	1	Path folder only	Path folder only

11305	Maximum number of simultaneously displayed axes

NOTE
When this parameter is set, the power must be turned off before operation is continued.

[Input type] Parameter input
[Data type] Byte path
[Valid data range] 0 to 2
By setting this parameter, the maximum number of simultaneously displayed axes at the current position can be changed. A value set in this parameter corresponds to the maximum number of simultaneously displayed axis as follows:

Max. number of simultaneously displayed axes	5	10	20
Setting	0	1	2

A value other than 1 and 2 is assumed to be 0.

11307	Display sequence of the coordinates in current position display

NOTE
When this parameter is set, the power must be turned off before operation is continued.

[Input type] Parameter input
[Data type] Byte path
[Valid data range] 0 to 5

This parameter sets the display sequence of the coordinates of a position displayed on the following screens:
10.4", 15", and 19" display units
- Total position display screen
- Total position display on each screen

When the maximum number of simultaneously displayed axes is set to 20 (when 2 is set in parameter No. 11305), two sets of coordinates are displayed simultaneously as the current position display on each screen.

When the first set is displayed, switching to the second set can be made by pressing ⇧ SHIFT then pressing the chapter selection soft key being selected.

When the above operation is performed again, the displayed set changes to the first set.
The display sequence of coordinates corresponds to the parameter setting as follows:

<10.4", and 15" display units>

Display sequence of coordinates / Setting	1	2	3	4
0	Relative coordinates	Absolute coordinates	Machine coordinates	Remaining travel distance
1	Relative coordinates	Machine coordinates	Absolute coordinates	Remaining travel distance
2	Relative coordinates	Remaining travel distance	Absolute coordinates	Machine coordinates
3	Absolute coordinates	Machine coordinates	Relative coordinates	Remaining travel distance
4	Absolute coordinates	Remaining travel distance	Relative coordinates	Machine coordinates
5	Machine coordinates	Remaining travel distance	Relative coordinates	Absolute coordinates

<19" display unit>

Display sequence of coordinates / Setting	1	2	3	4
0	Absolute coordinates	Relative coordinates	Remaining travel distance	Machine coordinates
1	Absolute coordinates	Relative coordinates	Machine coordinates	Remaining travel distance
2	Relative coordinates	Absolute coordinates	Remaining travel distance	Machine coordinates
3	Relative coordinates	Absolute coordinates	Machine coordinates	Remaining travel distance
4	Relative coordinates	Machine coordinates	Remaining travel distance	Relative coordinates
5	Relative coordinates	Machine coordinates	Remaining travel distance	Absolute coordinates

If the setting is beyond the valid data range, 0 is assumed.
When the multipath simultaneous display function is enabled (parameter No. 13131 is set to a nonzero value, and parameter No. 13132 is set to 1 or a greater value), this parameter becomes invalid.

	#7	#6	#5	#4	#3	#2	#1	#0
11308	DGH	ABH	SPH	PGS	FPD	EAS	COW	DOP

[Input type] parameter input
[Data type] Bit

#0 DOP If an alarm is issued in a path not being displayed:
0: The screen display does not change to the alarm screen.
1: The screen display changes to the alarm screen.

#1 COW When the file of specified name already exists on memory card or USB memory,
0: It is not overwritten
Memory card : Alarm SR1973, “FILE ALREADY EXIST” is generated.
USB memory : Warning message, “FILEALREADYEXIST” is displayed.
1: It is overwritten.
Even when COW = 1, a confirmation message is displayed before overwriting.

NOTE
1 When the overwritten file is read only attribute, it is not possible to overwrite even if bit 1 (COW) of parameter No. 11308 = 1.
2 This parameter is Initial setting parameter. For details, refer to the appendix "Automatic setting / Initial setting parameter" in CONNECTION MANUAL (FUNCTION) (B-64693EN-1).

#2 EAS When an extended axis name or extended spindle name is used in a path, subscripts for axis names or spindle names in that path:
0: Cannot be used.
1: Can be used.

#3 FPD On the program screen and program check screen, blocks already executed are:
0: Not displayed.
1: Displayed.

NOTE
This parameter is effective at bit 1 (APD) of parameter No.11350=0.

#4 PGS In program search operation:
0: A specified program name is searched for.
1: An O number program is searched for with "O" omitted.

#5 SPH When the spindle speed data are read with FOCAS2 or the PMC window:
0: Data that has been updated at conventional intervals (approximately 32 msec) is read.
1: Data that has been updated at short intervals is read.

NOTE
When quick response is not required in particular for display operation and so on, normally set this parameter to 0 to reduce the load on the CNC.

#6 ABH When the absolute coordinates data are read with FOCAS2 or the PMC window:
0: Data that has been updated at conventional intervals (approximately 32 msec) is read.
1: Data that has been updated at short intervals is read.

NOTE
When quick response is not required in particular for display operation and so on, normally set this parameter to 0 to reduce the load on the CNC.

#7 DGH When the Remaining travel distance data are read with FOCAS2 or the PMC window:
0: Data that has been updated at conventional intervals (approximately 32 msec) is read.
1: Data that has been updated at short intervals is read.

NOTE
When quick response is not required in particular for display operation and so on, normally set this parameter to 0 to reduce the load on the CNC.

11310	Selection of a PMC that performs read and write operations with an external touch panel

[Input type] Parameter input
[Data type] Byte
[Valid data range] 0 to 3
This parameter selects an PMC for read and write operations among three PMCs, which are the first PMC, second PMC, and third PMC.
0, 1 : First PMC
2 : Second PMC
3 : Third PMC

NOTE
1 It is impossible to perform read and write operations with more than one PMC at the same time.
2 When this parameter is set, the power must be turned off before operation is continued.

4.89 PARAMETERS OF EMBEDDED MACRO (1 OF 2)

11311	Password for embedded macro

[Input type] Parameter input
[Data type] 2-word
[Valid date range] 0 to 99999999
The password to set the attribute of the folder for the embedded macro (MTB1 folder) is set. When the values other than 0 are set to this parameter and the value is different from the parameter No. 11312 of the key word, the attribute of the MTB1 folder is locked.
Thereafter, the attribute of the MTB1 folder is locked unless the same value as the password is set to the key word. Moreover, the value of the password cannot be changed.
- When the key is open,
  The attribute of the MTB1 folder can be changed.
- When it locks or the key is not set,
  The attribute of the MTB1 folder can not be changed.

11312	Key word for embedded macro

[Input type] Parameter input

[Data type] 2-word
[Valid date range] 0 to 99999999

The key word in order to set the attribute of the folder for the embedded macro (MTB1 folder) is set.

NOTE
The value is not displayed even if the parameter is set. Moreover, when the power is turned off, this parameter becomes 0.

4.90 PARAMETERS OF DISPLAY AND EDIT (3 OF 6)

	#7	#6	#5	#4	#3	#2	#1	#0
11313	EMPx							

[Input type] Parameter input
[Data type] Bit axis

#7 EMPx When the machine coordinates of the machine unit with the delay in acceleration/deceleration and the servo delay considered are:
0: Cannot be read.(0 is read as machine coordinates with the PMC window).
1: Can be read with the PMC window.

NOTE
When this data is not required set this parameter to 0 to reduce the load on the CNC.

	#7	#6	#5	#4	#3	#2	#1	#0
11317								PON

[Input type] Locked parameter
[Data type] Bit

#0 PON Program number O8-digit is:
0: Invalid.
1: Valid.

NOTE
This parameter is set by CNC automatically. Therefore, it is impossible to set by MDI operation.
To judge if program number O8-digit is valid by user application, refer to this parameter.

	#7	#6	#5	#4	#3	#2	#1	#0
11318		RTC	LSO		FIL	DFM	MLD	POC

[Input type] Parameter input
[Data type] Bit

#0 POC When the pattern data input function is used, on the custom macro screen a comment is:
0: Displayed in the lower part of the screen.
1: Displayed on the right side of the screen.

NOTE
This parameter is not used when a 15" or 19" display unit is used.

#1 MLD On the program list screen, division of the screen display is:
0: Disabled.
1: Enabled.

NOTE
This parameter is valid when a 10.4", 15", or 19" display unit is used.

#2 DFM On the program list screen, of the soft key character strings when devices are selected and selected device name character strings, the character strings related to the memory card are:
0: Not changed.
1: Changed.

Soft key character strings when devices are selected (10.4"/15"/19" display unit)

	DFM=0	DFM=1
Mode	**Name**	**Name**
EDIT	MEMCARD	M CARD EDIT
Other than EDIT		M CARD OPER.
EDIT	MEMORY CARD	M CARD I/O
Other than EDIT		M CARD DNC

Soft key character strings when devices are selected (8.4" display unit)

	DFM=0	DFM=1
Mode	**Name**	**Name**
EDIT	MEMCARD	MC-EDT
Other than EDIT		MC-OP.
EDIT	M-CARD	MC-I/O
Other than EDIT		MC-DNC

Selected device name character strings

DFM=0	DFM=1
MEMCARD	MC-PROG
M_CARD	MC-FILE

#3 FIL When you operate Get/Put of the data server:
0: The forwarded file name is specified at the cursor position of the list screen.
1: The file name specification is enabled from the key-in buffer.
(The same specification as FS16*i*)

#5 LSO When a level selected on the precision level selection screen:
0: Both a soft key and an MDI key can be used for acceptance.
1: Only a soft key can be used for acceptance.

#6 RTC On the program list screen, a file selected by a selection operation:
0: Can be copied repeatedly.
1: Cannot be copied repeatedly.

	#7	#6	#5	#4	#3	#2	#1	#0
11320	PGM	DTS					IDC	DHN

[Input type] Parameter input
[Data type] Bit path

#0 DHN On the program check screen, HD.T and NX.T, and a T number are:
0: Not displayed at the same time.
1: Displayed at the same time.
If DHN is set to 1, HD.T, NX.T, and T are displayed regardless of the setting of bit 2 (PCT) of parameter No. 3108.

#1 IDC The soft key [UPDATA ALL ID], which updates ID information on the servo or spindle information screen as a batch, is:
0: Not displayed.
1: Displayed.

> **NOTE**
> IDC is effective only if bit 0 (IDW) of parameter No. 13112 is set to 1.

#6 DTS The actual spindle speed and T code are:
0: Not displayed.
1: Always displayed.

#7 PGM In the high speed program check mode, the machine position is displayed with:
0: Actual machine coordinates. (Machine position relative to the reference position)
1: Machine coordinates for the program check.

11321	Spindle tool name (1st character)
11322	Spindle tool name (2nd character)
11323	Spindle tool name (3rd character)
11324	Spindle tool name (4th character)

[Input type] Parameter input
[Data type] Byte path
[Valid data range] See the character-code correspondence table.
The name of the spindle tool (HD.T) displayed on the program check screen can be changed.
Any character string consisting of numeric characters, alphabetical characters, katakana characters, and symbols with a maximum length of four characters can be displayed.

NOTE
For characters and codes, see Appendix A, "CHARACTER-CODE CORRESPONDENCE TABLE".
If the first character is 0 or an illegal character code, "HD.T" is displayed.

11325	Next machining tool name (1st character)
11326	Next machining tool name (2nd character)
11327	Next machining tool name (3rd character)
11328	Next machining tool name (4th character)

[Input type] Parameter input
[Data type] Byte path
[Valid data range] See the character-code correspondence table.
The name of the next machining tool (NX.T) displayed on the program check screen can be changed.
Any character string consisting of numeric characters, alphabetical characters, katakana characters, and symbols with a maximum length of four characters can be displayed.

NOTE
For characters and codes, see Appendix A, "CHARACTER-CODE CORRESPONDENCE TABLE".
If the first character is 0 or an illegal character code, "NX.T" is displayed.

4.91 PARAMETERS OF GRAPHIC DISPLAY (2 OF 4)

	#7	#6	#5	#4	#3	#2	#1	#0
11329	GST	ACT	AER	GTF	BGM	GTL	DPC	PTL

[Input type] Parameter input
[Data type] Bit path

#0 PTL When the tool path is drawn with the dynamic graphic display function, drawing at positions with tool length compensation considered is:
0: Performed.
1: Not performed.

NOTE
This parameter is available, when bit 4 (GTF) of parameter No.11329 is set to 0.

#1 DPC The coordinates displayed on each of the PATH GRAPHIC, ANIMATION GRAPHIC, and PATH GRAPHIC (TOOL POSITION) screens of the dynamic graphic display function are:
0: Absolute coordinates.
1: Machine coordinates.

#2 GTL When animated simulation is performed with the dynamic graphic display function, drawing at positions with tool length compensation considered is:
0: Not performed.
1: Performed.

#3 BGM Coordinates used by the dynamic graphic display function are:
0: Absolute coordinates.
1: Machine coordinates.

#4 GTF When the tool path is drawn with the dynamic graphic display function, drawing at positions with tool compensation (tool length compensation and tool radius/tool nose radius compensation) considered is:
0: Performed.
1: Not performed.

#5 AER When the tool path is drawn with the dynamic graphic display function, automatic erasure at the start of drawing is:
0: Not performed.
1: Performed.

#6 ACT In tool path drawing with the dynamic graphic display function, the drawing color of a tool path is:
0: Not changed automatically.
1: Changed automatically.

#7 GST When drawing cannot be performed for a command with the dynamic graphic display function:
0: The command is ignored, and drawing continues without stopping drawing.
1: Drawing stops.

11330	Magnification of drawing in dynamic graphic display

[Input type] Parameter input
[Data type] Word path
[Unit of data] 0.01
[Valid data range] 1 to 10000
This parameter sets the magnification of the drawing range in the dynamic graphic display function.

11331	Screen center coordinate value in the drawing range in dynamic graphic display

[Input type] Parameter input
[Data type] Real axis
[Unit of data] mm, inch (input unit)
[Min. unit of data] Depend on the increment system of the applied axis
[Valid data range] 9 digit of minimum unit of data (refer to standard parameter setting table (A))
(When the increment system is IS-B, -999999.999 to +999999.999)
This parameter sets the coordinate value of the center of the drawing range in the dynamic graphic display function.

NOTE
If bit 3 (BGM) of parameter No. 11329 is set to 1, set the coordinate value on each axis in the machine coordinate system.

11334	Rotation angle of the drawing coordinate system in dynamic graphic display (vertical direction)

[Input type] Parameter input
[Data type] Word path
[Unit of data] degree
[Valid data range] -360 to 360
This parameter sets the rotation angle (vertical direction) of the drawing coordinate system in the dynamic graphic display function.

11335	Rotation angle of the drawing coordinate system in dynamic graphic display (horizontal direction)

[Input type] Parameter input
[Data type] Word path
[Unit of data] degree
[Valid data range] -360 to 360
This parameter sets the rotation angle of the drawing coordinate system in the dynamic graphic display function (the angle of rotation about the vertical axis on the screen, that passes the center position of the blank).

11336	Drawing color of the tool path in tool path drawing in dynamic graphic display

[Input type] Parameter input
[Data type] Byte path
[Valid data range] 0 to 7
This parameter sets the color in which the tool path is drawn with the dynamic graphic display function.

11337	Color of the cursor indicating the tool position on the PATH GRAPHIC (TOOL POSITION) screen of dynamic graphic display

[Input type] Parameter input
[Data type] Byte path
[Valid data range] 0 to 7
This parameter sets the color of the cursor indicating the tool position on the PATH GRAPHIC (TOOL POSITION) screen of the dynamic graphic display function.

11341	Drawing color of a blank figure in dynamic graphic display

[Input type] Parameter input
[Data type] Byte path
[Valid data range] 0 to 7
This parameter sets the color in which a blank figure is drawn with the dynamic graphic display function.

11342	Rotation angle of the drawing coordinate system of dynamic graphic display (screen center)

[Input type] Parameter input
[Data type] Word path
[Unit of data] degree
[Valid data range] -360 to 360
This parameter sets the rotation angle of the drawing coordinate system in dynamic graphic display (the angle of rotation about the vertical axis on the screen plane, that passes the center position of the blank).

11343	Blank figure in dynamic graphic display

[Input type] Parameter input
[Data type] Byte path
[Valid data range] 0 to 1
This parameter sets the type of a blank figure in dynamic graphic display.

Setting	Figure
0	Cylinder or hollow cylinder (parallel to the Z-axis)
1	Rectangular parallelepiped

11344	Blank reference position in dynamic graphic display

[Input type] Parameter input
[Data type] Real axis
[Unit of data] mm, inch (input unit)
[Min. unit of data] Depend on the increment system of the applied axis
[Valid data range] 9 digit of minimum unit of data (refer to standard parameter setting table (A))
(When the increment system is IS-B, -999999.999 to +999999.999)
This parameter sets the reference position of a blank in the dynamic graphic display function by using coordinate values in the workpiece coordinate system.

NOTE
If bit 3 (BGM) of parameter No. 11329 is set to 1, set coordinate values in the machine coordinate system.

11345	Blank dimension I in dynamic graphic display
11346	Blank dimension J in dynamic graphic display
11347	Blank dimension K in dynamic graphic display

[Input type] Parameter input
[Data type] Real axis
[Unit of data] mm, inch (input unit)
[Min. unit of data] Depend on the increment system of the reference axis
[Valid data range] 0 or positive 9 digit of minimum unit of data (refer to the standard parameter setting table (B))
(When the increment system is IS-B, 0.000 to +999999.999)
These parameters set the dimensions of a blank in the dynamic graphic display function according to the blank figure as follows:

Blank type	Dimension I	Dimension J	Dimension K
Cylinder	Column diameter	0	Column length
Hollow cylinder	Diameter of outer circle of cylinder	Diameter of inner circle of cylinder	Cylinder length
Rectangular prism	Length in X-axis direction	Length in Y-axis direction	Length in Z-axis direction

11348	Drawing color of a tool in animated simulation in dynamic graphic display

[Input type] Parameter input
[Data type] Byte path
[Valid data range] 0 to 7

This parameter sets the color in which a tool is drawn during animated simulation in the dynamic graphic display function.

	#7	#6	#5	#4	#3	#2	#1	#0
11349	PDM		DAS	YGW	WNS	GSP	ABC	

[Input type] Parameter input
[Data type] Bit

#1 ABC In animated simulation in the dynamic graphic display function, when a fine boring cycle or back boring cycle, which is a hole machining canned cycle, is performed, the movement for a shift at the hole bottom is:
0: Not drawn.
1: Drawn.

#2 GSP In tool path drawing in the dynamic graphic display function, the drawing start position is:
0: The end position of a block that makes a movement for the first time.
1: The current position.

> **NOTE**
> When G92, G52, or G92.1 (for machining center systems) or G50, G52, or G50.3 (for lathe systems) is specified at the beginning of a program to be drawn, the position specified in this G code is assumed to be the drawing start position.

#3 WNS In the dynamic graphic display function, P-CODE workpiece number search is:
0: Disabled.
1: Enabled.

#4 YGW If Y-axis offset geometry and wear compensation is enabled, switching between the tool geometry and wear compensation screens is performed with
0: Soft key [SWITCH].
1: Soft key [WEAR]/[GEOMETRY].

#5 DAS When the multi path program edit screen is displayed first after power is turn on, the scroll mode is:
0: single scroll mode.
1: simultaneous scroll mode.

#7 PDM When the pattern data input function is enabled, variable name and comment are:
0: Displayed on the custom macro screen only if the menu is selecting.
1: Always displayed on the custom macro screen.

4.92 PARAMETERS OF DISPLAY AND EDIT (4 OF 6)

	#7	#6	#5	#4	#3	#2	#1	#0
11350			PAD			PNE	APD	

[Input type] Parameter input
[Data type] Bit

> **NOTE**
> When at least one of these parameters is set, the power must be turned off before operation is continued.

#1 APD The display of the program under execution is:
0: A display containing look-ahead blocks.
1: A text display.

#2 PNE Path name expansion display function is:
0: Disabled.
1: Enabled.

> **NOTE**
> This parameter is invalid if the number of paths is 1.
> It is effective to 10.4", 15", and 19" display units.

#5 PAD On the pitch error compensation screen, axis names are:
0: Not displayed.
1: Displayed.

	#7	#6	#5	#4	#3	#2	#1	#0
11351		GTD					COL	

[Input type] Parameter input
[Data type] Bit

#1 COL At the detail off screen of program list, the comment of program is:
0: Not displayed.
1: Displayed.

> **NOTE**
> It is effective to 10.4", 15", and 19" display units.

#6 GTD On the parameter screen, group names are:
0: Not displayed.
1: Displayed.

> **NOTE**
> If this parameter is changed, the change will take effect when a screen other than the parameter screen is displayed and the parameter screen is displayed again.

	#7	#6	#5	#4	#3	#2	#1	#0
11352								PNI

[Input type] Parameter input
[Data type] Bit path

#0 PNI The display by the path name enlarged display function is:
0: A normal display.
1: A reverse display.

NOTE
This parameter is effective to 10.4", 15", and 19" display units.

	#7	#6	#5	#4	#3	#2	#1	#0
11353							SDE	SEK

[Input type] Parameter input
[Data type] Bit

#0 SEK When the power is turned on, or when the clear state is present, sequence numbers are:
0: Not maintained.
1: Maintained.

NOTE
During a subprogram call, the sequence number of the subprogram is maintained.

#1 SDE Sequence numbers on the screen are displayed with:
0: 5 digits.
1: 8 digits.

	#7	#6	#5	#4	#3	#2	#1	#0
11354	HPM			DPC	SOH	SAH	CRS	

[Input type] Parameter input
[Data type] Bit

NOTE
When at least one of these parameters is set, the power must be turned off before operation is continued.

#1 CRS While data transmission is awaited using the DPRNT/BPRNT of the custom macro or macro executor, screen switching is:
0: Not possible.
1: Possible.

NOTE
This parameter is Automatic setting parameter. For details, refer to the appendix "Automatic setting / Initial setting parameter" in CONNECTION MANUAL (FUNCTION) (B-64693EN-1).

#2 SAH When the storage capacity for history data is exceeded due to non-alarm history, alarm history will be:
0: Erased.
1: Erased, except the most recent 50 items of history data.

NOTE
This parameter is Automatic setting parameter. For details, refer to the appendix "Automatic setting / Initial setting parameter" in CONNECTION MANUAL (FUNCTION) (B-64693EN-1).

#3 SOH When the storage capacity for history data is exceeded due to data other than external operator message history, external operator message history will be:

0: Erased.
1: Retained.

When this parameter is set to 1, the number of retained external operator message history is determined by the settings of bits 6 (MS0) and 7 (MS1) of parameter No. 3113.

NOTE

1 The settings of bit 2 (SAH) of parameter No. 11354 and bit 3 (SOH) of parameter No. 11354 will be effective the next time the power is turned on. At this time, all history data (operation history, alarm history, and external operator message history) will be erased.

2 With the settings of bit 2 (SAH) of parameter No. 11354 and bit 3 (SOH) of parameter No. 11354, the number of history data items that can be retained varies. The number of history data items that can be recorded as follows:

SAH=0, SOH=0 . . . Approx. 8000 items
SAH=1, SOH=0 . . . Approx. 7400 items
SAH=0, SOH=1 . . . Approx. 7500 items
SAH=1, SOH=1 . . . Approx. 6900 items

(*) The numbers of items above are those if only key operation history is recorded.

3 This parameter is Automatic setting parameter. For details, refer to the appendix "Automatic setting / Initial setting parameter" in CONNECTION MANUAL (FUNCTION) (B-64693EN-1).

#4 DPC In the screen title, program comments corresponding to O-numbers are:

0: Displayed.
1: Not displayed.

#7 HPM High-speed program management is:

0: Disabled.
1: Enabled.

NOTE

1 There are no changes about the display of programs and the editing operation method of programs.

2 In cases that this function is enabled, if the power supply is turned off without saving, the changed programs data is not saved.
The program selection by the following operation also is not saved.
- MDI operation
- External workpiece number search
- External program number search

Please perform saving operation by FOCAS2/ C Language Library, if it is necessary to preserve the changed programs data/ the program selection after the power supply is turned off.

3 Program saving can be executed by calling with the exclusive function on condition that all paths are EDIT mode.

NOTE
4 If the power supply is turned off during saving the programs, all programs are deleted. In this case, an alarm PS0519, "PROGRAM FILES ARE BROKEN AND CLEARED", occurs when the power supply is turned ON next.
5 Do not save all programs to nonvolatile memory too frequently.
6 In automatic data backup function, if this function is enabled, the setting of bit 2 (AAP) of parameter No.10340 should be 0.
7 When the embedded macro program is registered, the setting of bit 7 (HPM) of parameter No.11354 should be 0.
8 This function can be enabled only on CNC program storage memory (CNC_MEM device).
9 If this function is enabled, MANUAL GUIDE *i* cannot be used.

	#7	#6	#5	#4	#3	#2	#1	#0
11355				SCM	MTS		CDA	DSN

[Input type] Parameter input
[Data type] Bit

#0 DSN The spindle names displayed on the spindle setting screen, the spindle adjustment screen, and the spindle monitor screen are:
0: Spindle numbers in the path plus the numbers indicating types such as MAIN and SUB. (Conventional specifications)
1: Names set in parameters.

#1 CDA When a 15" or 19" display unit are used,
0: A normal screen display is employed.
1: A screen display specifically for CNC display units for automotive is employed.

#3 MTS The function for switching between simultaneous multi-path display and single-path display is:
0: Disabled.
1: Enabled.

#4 SCM In the initial state, the custom macro screen is:
0: A small screen display.
1: A full screen display.

	#7	#6	#5	#4	#3	#2	#1	#0
11356	DPD		EPC	SFS	DCT			TLD

[Input type] Parameter input
[Data type] Bit

NOTE
When at least one of these parameters is set, the power must be turned off before operation is continued.

#0 TLD When the protection signal is enabled, the deletion of the tool life management screen is:
0: Disabled.
1: Enabled.

NOTE
The 8-level data protection function cannot be disabled.

#3 DCT In the displaying the program being executed, the comment control statement display is:
0: Not available.
1: Available.

NOTE
This parameter is available, when the bit 1 (ADP) of parameter No. 11350 is set to 0.

#4 SFS The soft key of 8.4” screen is displayed:
0: Up to 6 characters.
1: Up to 12 characters. The display font of soft key becomes small.

NOTE
This function is not effective at following conditions.
- The soft key of conversational macro screen.
- When the virtual MDI key function is enabled.

 # 5 EPC Display prepared and original programs on the same screen is:
0: Not available.
1: Available.

#7 DPD When the external subprogram is executed, the display of look-ahead blocks are:
0: Analyzed blocks.
1: Input blocks.

11358	Power-On Checksum

[Input type] Locked parameter
[Data type] 2-word
When parameter checksum function is effective, checksum value which is calculated at power-on is set.

0 is set when the parameter checksum function is invalid.

11359	Standard Checksum

[Input type] Locked parameter
[Data type] 2-word
Checksum value which is calculated at when parameter checksum function is changed from invalid to effective is set. It is used as standard value, when checksum is executed at power-on.

0 or last parameter checksum value is set when the parameter checksum function is invalid.

11360	Calculation Data

[Input type] Locked parameter
[Data type] 2-word
The date when the parameter checksum function is changed to effective is set.

The number of 8 digits which show year, month and day is set.
First 4 digits show year. Second 2 digits show month. Last 2 digits show day.

0 or last day when parameter checksum function was changed to effective is set when the parameter checksum function is invalid.

11361	Calculation Time

[Input type] Locked parameter
[Data type] 2-word
The time when the parameter checksum function is changed to effective is set.
The number of 6 digits which show hour, minute and second is set.
First 2 digits show hour. Second 2 digits show minute. Last 2 digits show second.

0 or the last time when parameter checksum function has been changed to effective is set when the parameter checksum function is invalid.

	#7	#6	#5	#4	#3	#2	#1	#0
11362							LCI	

[Input type] Parameter input
[Data type] Bit path

> **NOTE**
> When at least one of these parameters is set, the power must be turned off before operation is continued.

#1 LCI When the function for loader control is valid, a path name at the lower right of the screen is displayed in:
0: Normal display.
1: Reverse display.

> **NOTE**
> This parameter is available only for the loader path.

	#7	#6	#5	#4	#3	#2	#1	#0
11364	FLI	FLC	NSM	FLD	FDR			

[Input type] Parameter input
[Data type] Bit

#3 FDR If a program or a folder exists in the target folder when the deletion operation is done specifying the folder:
0: The folder is not deleted.
1: The folder and programs/folders in the target folder are deleted.

> **NOTE**
> This parameter is Initial setting parameter. For details, refer to the appendix "Automatic setting / Initial setting parameter" in CONNECTION MANUAL (FUNCTION) (B-64693EN-1).

#4 FLD In input operation on the program editing screen and the program folder screen, the registration folder of the program is:
0: The folder that has been selected on each screen.
1: The folder shown by folder information in input file.

> **NOTE**
> This parameter is available, when bit 7 (FLI) of parameter No.11364 is set to 1.

#5 NSM When the program is read:
0: The main program is changed.
1: The main program is not changed..

#6 FLC On the program folder screen, when the program folder screen is displayed again after the screen switching, path switching and the device switching are done:
0: The cursor position moves to the head of the folder.
1: The cursor position stays at original position.

> **NOTE**
> This function is available from the cursor position in the program folder screen displayed after this parameter is set to 1.

#7 FLI On the program editing screen and the program folder screen, input/output operation of the program targets:
0: The foreground or background folder.
1: The folder that has been selected on each screen.

> **NOTE**
> 1 This parameter is valid only to the internal program memory of the CNC (The device name is “CNC_MEM”).
> 2 When this bit is set to 1, the input/Output all programs and folders function is available.
> When this bit is set to 0, the input/Output all programs and folders function is not available. Therefore, only usual I/O operation is possible.

	#7	#6	#5	#4	#3	#2	#1	#0
11365	D40	D39	D38	D37	D36	D35	D34	D33
	#7	#6	#5	#4	#3	#2	#1	#0
11366	D48	D47	D46	D45	D44	D43	D42	D41
	#7	#6	#5	#4	#3	#2	#1	#0
11367	D56	D55	D54	D53	D52	D51	D50	D49

[Input type] Parameter input
[Data type] Bit path

D33 to D56 These bits set the G code groups to be displayed on the program check screen.
The correspondence between the bits and G code groups is as given in the table below.
The settings of each bit have the meanings below.
0: The G code group corresponding to the bit is displayed.
1: The G code group corresponding to the bit is not displayed.

Parameter	G code group
D33	33
D34	34
D35	35
to	to
D56	56

	#7	#6	#5	#4	#3	#2	#1	#0
11368		APM	PWC		DAA			

[Input type] Parameter input
[Data type] Bit

#3 DAA The axis name used with axis type alarms is one set using parameter No.:
0: 1020.
1: 3132.

NOTE
1 Even when this parameter is 1, an axis name set in parameter No. 1020 is used if the value of parameter No. 3132 is 0.
2 If an extended axis name is in use, only the first letter in it is replaced.
3 Even if this parameter is 1, an axis name set in parameter No. 1020 is used on the operation history screen and alarm history screen.
4 When value of this parameter is set, the value will be available after the power is turned off.

#5 PWC Power consumption monitoring screen is:
0: Disabled.
1: Enabled

#6 APM Bar-graph display that shows the total of power consumption is:
0: Enabled.
1: Disabled

NOTE
This parameter is effective at bit 5 (PWC) of parameter No.11368 =1.

	#7	#6	#5	#4	#3	#2	#1	#0
11369				CSD		MDP	MDL	MDC

[Input type] Parameter input
[Data type] Bit

#0 MDC MODIFICATION WARNING SETTING screen for C Language Executor is
0: Not displayed.
1: Displayed.

#1 MDL MODIFICATION WARNING SETTING screen for PMC ladder is
0: Not displayed.
1: Displayed.

#2 MDP MODIFICATION WARNING SETTING screen for parameters and non-protected parameters is
0: Not displayed.
1: Displayed.

#4 CSD System variable (#1000-#8499, #10000-#89999, #100000-#199999) is:
0: Not displayed on the custom macro screen.
1: Displayed on the custom macro screen.

	#7	#6	#5	#4	#3	#2	#1	#0
11370	PKI	STT	DHS			RPD		

[Input type] Parameter input
[Data type] Bit

> **NOTE**
> When at least one of these parameters is set, the power must be turned off before operation is continued.

#2 RPD During executing the program backward by manual handle retrace, the block displayed at the start of the program is:
0: The block being executed.
1: The block just before the block being executed.

> **NOTE**
> This parameter is effective at bit 1 (APD) of parameter No.11350=0 and bit 3 (FPD) of parameter No.11308=1, or bit 1 (APD) of parameter No.11350=1.

#5 DHS When the program is not save in the high-speed program management function, warning is:
0: Not displayed in the status display.
1: Displayed in the status display.

#6 STT Display sequence of an external operator message is:
0: Not sorted in order of generation of the message.
1: Sorted in order of generation of the message.

> **NOTE**
> 1 The message displayed on the screen is displayed in order of message number regardless of the setting of this parameter in case of parameter SRM (bit 4 of parameter no.3207)=1.
> 2 This parameter is effective only an external operator message by the PMC signal, invalid to the message by the execution of system variable #3006 of macro executor, and the message is always displayed under an external operator message.

#7 PKI Cumulative value of power consumption is:
0: cleared by power-off.
1: not cleared by power-off.

11371	The scale of entire power consumption bar-graph in warning message area

[Input type] Parameter input
[Data type] Word
[Unit of data] kW
[Valid data range] 0 to 32767

Set the scale of entire power consumption bar-graph in warning message area by the absolute value.
When 0 is specified, bits 0 and 1 of parameter No.2281 (for servo) and bits 1 and 2 of parameter No.4541 (for spindle) are checked, and the maximum motor output value is used as the scale.
Example) If 3000 is set, the bar-graph shows the range from -3000 to 3000.

	#7	#6	#5	#4	#3	#2	#1	#0
11372	MSH				MSM			

[Input type] Parameter input
[Data type] Bit

#3 MSM The machine state monitoring screen
0: is not displayed.
1: is displayed.

#7 MSH The machine state history screen
0: is not displayed.
1: is displayed.

	#7	#6	#5	#4	#3	#2	#1	#0
11373	WSE							

[Input type] Parameter input
[Data type] Bit

NOTE
When this parameter is set, the power must be turned off before operation is continued.

#7 WSE CNC screen Web server function is:
0: Disabled.
1: Enabled.

	#7	#6	#5	#4	#3	#2	#1	#0
11374			CDE	PCB				AIC

[Input type] Parameter input
[Data type] Bit

#0 AIC If EOB code is included in comment block when program is read,
0: alarms are not generated.
1: the alarm PS0518, “CODE OF CONTROL-IN DOES NOT EXIST” is generated.

> **NOTE**
> This parameter is Automatic setting parameter. For details, refer to the appendix "Automatic setting / Initial setting parameter" in CONNECTION MANUAL (FUNCTION) (B-64693EN-1).

#4 PCB In the program folder screen, the programs are copied or moved
0: By the new method.
1: By the old method.

#5 CDE Call stack display is:
0: Available.
1: Not available.

	#7	#6	#5	#4	#3	#2	#1	#0
11375	AWM	ECD						DMP

[Input type] Parameter input
[Data type] Bit

#0 DMP The program protection function on the data server is:
0: Disabled
1: Enabled

When this parameter is set to 1, the following editing operations are disabled:
(1) Program deletion (Even when deletion of all programs is specified, programs with program numbers 8000 to 8999 are not deleted.)
(2) Program output (Even when outputting all programs is specified, programs with program numbers 8000 to 8999 are not output.)
(3) Program number search
(4) Program editing of registered programs
(5) Program registration
(6) Program copy
(7) Program move
(8) File input/output by GET/PUT/LIST-GET/LIST-PUT operation from PC
(9) Memory card format
(10) File input/output by FTP operation from PC
(11) File rename by FTP operation from PC
(12) File deletion by FTP operation from PC

> ⚠ **CAUTION**
> The CF card can be mounted on other CNC and PC by pulling out the CF card for the data server. Therefore, the content of the program cannot be protected. It is protection for the unauthorized operation prevention, and not protection for security.

NOTE
1 When this parameter is set, the power must be turned off before operation is continued.
2 When this parameter is set to 1, the following parameters become effective.
NE8(No.3202#0)、NE9(No.3202#4)、PSR(No.3202#6)
3 For the multi path system, the parameter NE8 and NE9 of path 1 are effective.
4 When parameter DMP (No.11375#0) is set to one, the format is impossible regardless of the target program number for protection.
5 When the parameter No. 3210 (PSW) set to a value other than 0 that is not the value set in parameter No. 3211 (KEY), parameter MDP(No.11375#0) cannot be changed.

#6 ECD FOCAS2 function cnc_condense and cnc_pdf_cond are:
0: Not effective. (EW_OK is returned without executing anything.)
1: Effective.

#7 AWM The accuracy of writing the custom macro or the P code macro variable with FOCAS2 function is
0: Not Improved
1: Improved
The FOCAS2 function to which accuracy can be improved by this parameter is as follows.
- cnc_wrmacro : Write custom macro variable
- cnc_wrmacror : Write custom macro variables(area specified)
- cnc_wrpmacro : Write P code macro variable
- cnc_wrpmacror : Write P code macro variable (area specified)

11376	Time-out period of USB memory

[Input type] Parameter input
[Data type] Word
[Unit of data] sec
[Valid data range] 0 to 32767
Set the time-out period of the USB memory. Please adjust this parameter according to the USB memory.

NOTE
When 0 is set in this parameter, it is assumed to 30.

11378	PMC path number of PMC signal No.1 for the machine state monitoring function
to	to
11381	PMC path number of PMC signal No.4 for the machine state monitoring function

[Input type] Parameter input
[Data type] Byte
[Data range] 0 to 5 and 9
The PMC path number of the PMC signal for the machine state monitoring function is set.
The value and the PMC path number that can be set are as follows.

No.11378 to 11381	PMC Path Number
0	Unsetting

No.11378 to 11381	PMC Path Number
1	1st PMC
2	2nd PMC
3	3rd PMC
9	Dual Check Safety

11382	**Address kind of PMC signal No.1 for the machine state monitoring function**
to	**to**
11385	**Address kind of PMC signal No.4 for the machine state monitoring function**

[Input type] Parameter input
[Data type] Byte
[Data range] 0 to 10
Address kind of PMC signal for the machine state monitoring function is set.
The value and the address kind that can be set are as follows.

No.11382 to 11385	Address Kind
0	Unsetting
1	X
2	Y
3	G
4	F
5	A
6	R
7	T
8	K
9	C
10	D

11386	**Address number of PMC signal No.1 for the machine state monitoring function**
to	**to**
11389	**Address number of PMC signal No.4 for the machine state monitoring function**

[Input type] Parameter input
[Data type] Byte
[Data range] Refer to PMC Programming Manual (B-64513EN) for detail.
Address number of PMC signal for the machine state monitoring function is set.

	#7	#6	#5	#4	#3	#2	#1	#0
11391	**2CF**	**RPW**				**ZSS**	**TRE**	

[Input type] Parameter input
[Data type] Bit

#1 TRE In the folder screen, the program folder tree is
0: Available.
1: Not available.

#2 ZSS In outputting CNC parameters, whether parameters which equal to zero are output or not is
0: Not decided by soft-keys. Whether or not is decided by bit 1 (PRM) of parameter No.0010.
1: Decided by soft-keys.

NOTE
Bit 1 (PRM) of parameter No.0010 does not work when this parameter equals to one. The following table shows the relation between parameters (bit 1 (PRM) of parameter No.0010 and bit 2 (ZSS) of parameter No.11391) and whether parameters which equal to zero are output or not.

		ZSS (No.11391#2)	
		0	1
PRM (No. 0010#1)	0	Output	Whether or not is decided by soft-keys [ALL]/[NON-0].
	1	Not output	

#6 RPW When changing a password on Parameter screen, confirmation message is
0: Displayed.
1: Not displayed.

NOTE
When this function is valid, a password need to be input twice.

#7 2CF In direct input of offset value measured B for 2 spindle lathe, when the setting that a workpiece coordinate system shift amount is set in the workpiece coordinate system memory is an automatic selection is made (parameter 2AT(No. 5051#1), and Workpiece coordinate system shift value write mode select signal WOQSM <Gn039.6> is 1, the cursor movement by the MDI operation is:
0: Not prohibited.
1: Prohibited.

NOTE
This parameter is Initial setting parameter. For details, refer to the appendix "Automatic setting / Initial setting parameter" in CONNECTION MANUAL (FUNCTION) (B-64693EN-1).

11392	Scale for PCM bar graph of servo axis

[Input type] Parameter input
[Data type] 2-word axis
[Unit of data] 0.001kW
[Valid data range] 0 to 9999999
Specify the absolute value of maximum/minimum scale for the bar graph of each servo axis in power consumption monitoring screen.
Specify integer from 1 to 9999999.
4 digits from the top are displayed in power consumption monitoring screen, though the value of bar graph is estimated by using this parameter itself.

e.g.) If 9999999 is specified, -9999kW/9999kW are displayed.
If 11100 is specified, -11.10kW/11.10kW are displayed.

If 0 is specified, the scale is decided by the parameter (bits 0 and 1 of parameter No.2281) automatically.

11393	Scale for PCM bar graph of spindle axis

[Input type] Parameter input
[Data type] 2-word spindle
[Unit of data] 0.001kW
[Valid data range] 0 to 9999999

Specify the absolute value of maximum/minimum scale for the bar graph of each spindle axis in power consumption monitoring screen.
Specify integer from 1 to 9999999.
4 digits from the top are displayed in power consumption monitoring screen, though the value of bar graph is estimated by using this parameter itself.

e.g.) If 9999999 is specified, -9999kW/9999kW are displayed.
If 11100 is specified, -11.10kW/11.10kW are displayed.

If 0 is specified, the scale is decided by the parameter (bits 1 and 2 of parameter No.4541) automatically.

	#7	#6	#5	#4	#3	#2	#1	#0
11394								ANDx

[Input type] Parameter input
[Data type] Bit axis

#0 ANDx Power consumption of each servo axis is
0: Displayed.
1: Not Displayed.

	#7	#6	#5	#4	#3	#2	#1	#0
11395								SNDs

[Input type] Parameter input
[Data type] Bit spindle

#0 SNDs Power consumption of each spindle axis is
0: Displayed.
1: Not Displayed.

11397	Minimum torque overrides at acceleration/deceleration in spindle speed control mode

[Input type] Parameter input
[Data type] Byte spindle
[Unit of data] %
[Valid data range] 0 to 100

Set minimum torque override at acceleration/deceleration in spindle speed control mode.
This value corresponds to Eco level 3 (when bit 0 (ELV) of the parameter No.24303 is set to 0) or Eco level 7 (when bit 0 (ELV) of the parameter No.24303 is set to 1).

When torque override is set to 50%, for example, time constant for acceleration/deceleration gets twice.
Note that 0% is considered as 100%.
If eco-machining is not necessary, please set 0 or 100 in this parameter.

When bit 0 (PWE) of the parameter No.8900 is set to 1, this value can be changed on Eco setting screen.

11398	Minimum torque overrides at acceleration/deceleration in spindle synchronization control mode

[Input type] Parameter input
[Data type] Byte spindle
[Unit of data] %
[Valid data range] 0 to 100

Set minimum torque override at acceleration/deceleration in spindle synchronization control mode.
This value corresponds to Eco level 3 (when bit 0 (ELV) of the parameter No.24303 is set to 0) or Eco level 7 (when bit 0 (ELV) of the parameter No.24303 is set to 1).

When torque override is set to 50%, for example, time constant for acceleration/deceleration gets twice.
Note that 0% is considered as 100%.
If eco-machining is not necessary, please set 0 or 100 in this parameter.

When bit 0 (PWE) of the parameter No.8900 is set to 1, this value can be changed on Eco setting screen.

> ⚠ **CAUTION**
> Machine or work can be damaged by out-of-synchronization when torque overrides of spindles in synchronization control mode differ from each other. This is because this function differs the time constant for acceleration/deceleration in spindle synchronization mode.
> Set a common value for spindles belonging to the same group of synchronization.

11399	Conversion factor from power consumption (kWh) to carbon-dioxide emission (kg)

[Input type] Parameter input
[Data type] Word
[Unit of data] 0.001kgCO2/kWh
[Valid data range] 0 to 1000

Specify conversion factor from power consumption (kWh) to carbon-dioxide emission (kg). Adjust the value to correspond to power supplying circumstances in the area where a machine is used.
If 0 or invalid value is specified, 0.555kgCO2/kWh is used as the conversion factor.

4.93 PARAMETERS OF TOOL COMPENSATION (2 OF 3)

	#7	#6	#5	#4	#3	#2	#1	#0
11400					CTO	TOP	NO5	
					CTO	TOP		

[Input type] Parameter input
[Data type] Bit path

#1 NO5 The fifth axis offset function is:
0: Not used.
1: Used.

#2 TOP Set a tool length compensation or tool offset operation.

0: Tool length compensation or tool offset operation is performed by an axis movement.

1: Tool length compensation or tool offset operation is performed by shifting the coordinate system.

> **NOTE**
> This parameter is an-individual path parameter having the same function as bit 6 (TOS) of parameter No. 5006.
> To use different compensation types for individual paths, set the parameter TOS with 0 and specify a compensation type for each path separately, using the parameter TOP. If the parameter TOS is 1, the parameter TOP is assumed to be 1 even if it is 0.

#3 CTO Select the behavior of following system variable related to tool length offset by reset operation.

#5081-#5100 in case of the parameters LVC(No.5006#3)=1,LWT(No.5002#2)=0.

#5121-#5140 in case of the parameters LVC(No.5006#3)=1,LGT(No.5002#4)=1.

0: Not clear the system variable.

1: Clear the system variable.

> **NOTE**
> This parameter is Automatic setting parameter. For details, refer to the appendix "Automatic setting / Initial setting parameter" in CONNECTION MANUAL (FUNCTION) (B-64693EN-1).

11401	**Distance to the + contact ace of the touch sensor**

11402	**Distance to the - contact ace of the touch sensor**

[Input type] Parameter input

[Data type] Real axis

[Unit of data] mm, inch (machine unit)

[Min. unit of data] Depend on the increment system of the applied axis

[Valid data range] 9 digit of minimum unit of data (refer to standard parameter setting table (A))

These parameters are for the function of direct input of offset value measured B.

These parameters set the distances (with signs) to the respective contact faces of the sensor from the measurement reference position.

For angular axis control, set the distances in the orthogonal coordinate system.

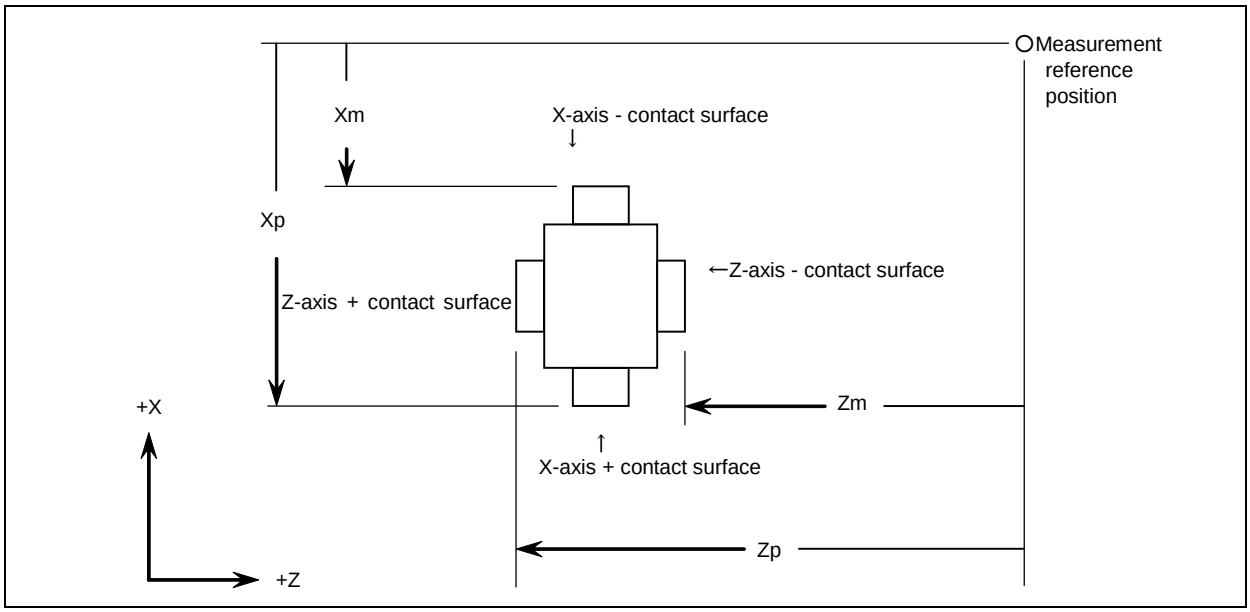

	#7	#6	#5	#4	#3	#2	#1	#0
11403						OFN		
						OFN		

[Input type] Parameter input
[Data type] Bit path

#2 OFN In Y-axis offset and 4th / 5th offset, the specification address of the data input/output and the programmable data input is
0: Default specification address ‘Y’,’E’ and ’F’.
1: Address of axis name (parameter No.1020).

NOTE
1 The axis name that can be used as a specification address is only 'A', and 'B'.
If specification address 'A'or'B' is used, the address 'V' (incremental command of Y-axis offset) cannot be used.
2 If the either of following is set, the default specification address 'Y','E'and'F' is used.
- Parameter No.1020 is set to axis name other than 'A(65)' or 'B(66)'.
- An extended axis name is used.
3 When bit 2 (OFN) of parameter No.11403 is set to 1, conventional offset data cannot be read.If conventional offset data is read, Please set 0 to bit 2 (OFN) of parameter No.11403.

	#7	#6	#5	#4	#3	#2	#1	#0
11405						CIM		

[Input type] Parameter input
[Data type] Bit

#2 CIM In tool offset screen, input of tool geometry offset based on machine coordinates is
0: Invalid.
1: Valid.

11411	Number of the workpiece coordinate system used as the reference for workpiece setting error amount No. 01
11412	Number of the workpiece coordinate system used as the reference for workpiece setting error amount No. 02
11413	Number of the workpiece coordinate system used as the reference for workpiece setting error amount No. 03
11414	Number of the workpiece coordinate system used as the reference for workpiece setting error amount No. 04
11415	Number of the workpiece coordinate system used as the reference for workpiece setting error amount No. 05
11416	Number of the workpiece coordinate system used as the reference for workpiece setting error amount No. 06
11417	Number of the workpiece coordinate system used as the reference for workpiece setting error amount No. 07

[Input type] Parameter input
[Data type] Word path
[Valid data range] 0 to 1300
These parameters set the numbers of the workpiece coordinate systems used as the reference for the respective workpiece setting errors.
For G54 to G59, set 54 to 59. For G54.1P1 to G54.1P300, set 1001 to 1300.
If 0 is set in one of these parameters, the workpiece setting error corresponding to that parameter cannot be used in multiple workpiece coordinate systems.

11419	The interval of the tool offset number with tool compensation memory A

[Input type] Parameter input
[Data type] Word path
[Valid data range] 0 to [(the maximum number of tool compensation values)-1]/2 (omit the figures after the decimal fractions)
This parameter sets the interval of the tool offset number with tool compensation memory A.

4.94 PARAMETERS OF OPTIMUM ACCELERATION/DECELERATION FOR RIGID TAPPING

	#7	#6	#5	#4	#3	#2	#1	#0
11420								RAU

[Input type] Parameter input
[Data type] Bit path

#0 RAU Optimum acceleration/deceleration function for rigid tapping is
0: Disabled.
1: Enabled.

11421	Maximum acceleration of the optimum acceleration/deceleration for rigid tapping (gear 1)
11422	Maximum acceleration of the optimum acceleration/deceleration for rigid tapping (gear 2)

11423	**Maximum acceleration of the optimum acceleration/deceleration for rigid tapping (gear 3)**
11424	**Maximum acceleration of the optimum acceleration/deceleration for rigid tapping (gear 4)**

[Input type] Parameter input
[Data type] 2-word spindle
[Unit of data] rev/sec^2
[Valid data range] 0 to 10000.0
These parameters set maximum accelerations.

11425	**Acceleration change time of bell-shaped acceleration/deceleration in optimum acceleration/deceleration for rigid tapping (gear 1)**
11426	**Acceleration change time of bell-shaped acceleration/deceleration in optimum acceleration/deceleration for rigid tapping (gear 2)**
11427	**Acceleration change time of bell-shaped acceleration/deceleration in optimum acceleration/deceleration for rigid tapping (gear 3)**
11428	**Acceleration change time of bell-shaped acceleration/deceleration in optimum acceleration/deceleration for rigid tapping (gear 4)**

[Input type] Parameter input
[Data type] Word spindle
[Unit of data] msec
[Valid data range] 0 to 200
These parameters set the acceleration change time of bell-shaped acceleration/deceleration in optimum acceleration/deceleration for rigid tapping (time taken for the change from the constant speed state (A) to the acceleration state (C) with the acceleration calculated from the optimum acceleration/deceleration for rigid tapping, i.e., the time indicated by (B) in the figure below).

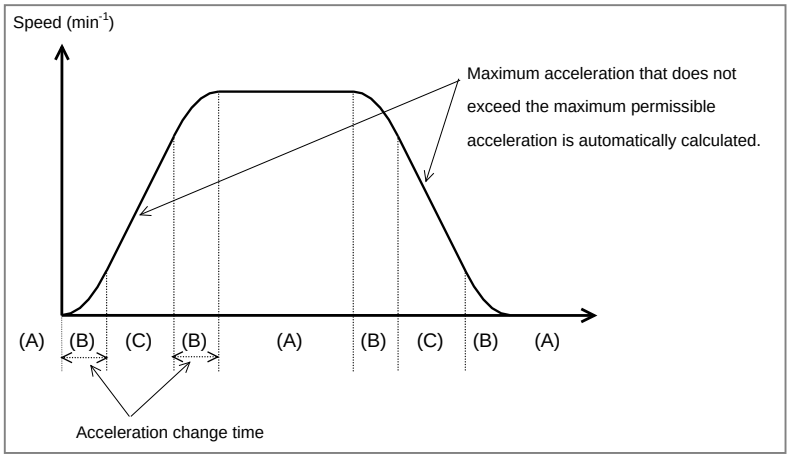

11429	**Spindle speed at P1 in optimum acceleration/deceleration for rigid taping (gear 1)**
11430	**Spindle speed at P2 in optimum acceleration/deceleration for rigid taping (gear 1)**
11431	**Spindle speed at P3 in optimum acceleration/deceleration for rigid taping (gear 1)**
11432	**Spindle speed at P1 in optimum acceleration/deceleration for rigid taping (gear 2)**
11433	**Spindle speed at P2 in optimum acceleration/deceleration for rigid taping (gear 2)**
11434	**Spindle speed at P3 in optimum acceleration/deceleration for rigid taping (gear 2)**

11435	Spindle speed at P1 in optimum acceleration/deceleration for rigid taping (gear 3)
11436	Spindle speed at P2 in optimum acceleration/deceleration for rigid taping (gear 3)
11437	Spindle speed at P3 in optimum acceleration/deceleration for rigid taping (gear 3)
11438	Spindle speed at P1 in optimum acceleration/deceleration for rigid taping (gear 4)
11439	Spindle speed at P2 in optimum acceleration/deceleration for rigid taping (gear 4)
11440	Spindle speed at P3 in optimum acceleration/deceleration for rigid taping (gear 4)

[Input type] Parameter input
[Data type] Byte spindle
[Unit of data] %
[Valid data range] 0 to 100

These parameters set the spindle speeds at P1 to P3 of acceleration points P0 to P4 as ratios to the maximum spindle speed (parameters Nos. 5241 to 5244). The spindle speed at P0 is 0, while the spindle speed at P4 is the maximum spindle speed. Any acceleration setting points where 0 is set will be skipped.

11441	Permissible acceleration at P0 in optimum acceleration/deceleration for rigid tapping (gear 1)
11442	Permissible acceleration at P1 in optimum acceleration/deceleration for rigid tapping (gear 1)
11443	Permissible acceleration at P2 in optimum acceleration/deceleration for rigid tapping (gear 1)
11444	Permissible acceleration at P3 in optimum acceleration/deceleration for rigid tapping (gear 1)
11445	Permissible acceleration at P4 in optimum acceleration/deceleration for rigid tapping (gear 1)
11446	Permissible acceleration at P0 in optimum acceleration/deceleration for rigid tapping (gear 2)
11447	Permissible acceleration at P1 in optimum acceleration/deceleration for rigid tapping (gear 2)
11448	Permissible acceleration at P2 in optimum acceleration/deceleration for rigid tapping (gear 2)
11449	Permissible acceleration at P3 in optimum acceleration/deceleration for rigid tapping (gear 2)
11450	Permissible acceleration at P4 in optimum acceleration/deceleration for rigid tapping (gear 2)
11451	Permissible acceleration at P0 in optimum acceleration/deceleration for rigid tapping (gear 3)
11452	Permissible acceleration at P1 in optimum acceleration/deceleration for rigid tapping (gear 3)
11453	Permissible acceleration at P2 in optimum acceleration/deceleration for rigid tapping (gear 3)
11454	Permissible acceleration at P3 in optimum acceleration/deceleration for rigid tapping (gear 3)
11455	Permissible acceleration at P4 in optimum acceleration/deceleration for rigid tapping (gear 3)
11456	Permissible acceleration at P0 in optimum acceleration/deceleration for rigid tapping (gear 4)
11457	Permissible acceleration at P1 in optimum acceleration/deceleration for rigid tapping (gear 4)
11458	Permissible acceleration at P2 in optimum acceleration/deceleration for rigid tapping (gear 4)
11459	Permissible acceleration at P3 in optimum acceleration/deceleration for rigid tapping (gear 4)
11460	Permissible acceleration at P4 in optimum acceleration/deceleration for rigid tapping (gear 4)

[Input type] Parameter input
[Data type] Byte spindle

[Unit of data] %
[Valid data range] 0 to 100
These parameters set the permissible accelerations at acceleration setting points P0 to P4 as ratios to the maximum acceleration (parameters Nos. 11421 to 11424). At any acceleration setting points where 0 is set, 100% is assumed.

11461	Permissible deceleration at P0 in optimum acceleration/deceleration for rigid tapping (gear 1)
11462	Permissible deceleration at P1 in optimum acceleration/deceleration for rigid tapping (gear 1)
11463	Permissible deceleration at P2 in optimum acceleration/deceleration for rigid tapping (gear 1)
11464	Permissible deceleration at P3 in optimum acceleration/deceleration for rigid tapping (gear 1)
11465	Permissible deceleration at P4 in optimum acceleration/deceleration for rigid tapping (gear 1)
11466	Permissible deceleration at P0 in optimum acceleration/deceleration for rigid tapping (gear 2)
11467	Permissible deceleration at P1 in optimum acceleration/deceleration for rigid tapping (gear 2)
11468	Permissible deceleration at P2 in optimum acceleration/deceleration for rigid tapping (gear 2)
11469	Permissible deceleration at P3 in optimum acceleration/deceleration for rigid tapping (gear 2)
11470	Permissible deceleration at P4 in optimum acceleration/deceleration for rigid tapping (gear 2)
11471	Permissible deceleration at P0 in optimum acceleration/deceleration for rigid tapping (gear 3)
11472	Permissible deceleration at P1 in optimum acceleration/deceleration for rigid tapping (gear 3)
11473	Permissible deceleration at P2 in optimum acceleration/deceleration for rigid tapping (gear 3)
11474	Permissible deceleration at P3 in optimum acceleration/deceleration for rigid tapping (gear 3)
11475	Permissible deceleration at P4 in optimum acceleration/deceleration for rigid tapping (gear 3)
11476	Permissible deceleration at P0 in optimum acceleration/deceleration for rigid tapping (gear 4)
11477	Permissible deceleration at P1 in optimum acceleration/deceleration for rigid tapping (gear 4)
11478	Permissible deceleration at P2 in optimum acceleration/deceleration for rigid tapping (gear 4)
11479	Permissible deceleration at P3 in optimum acceleration/deceleration for rigid tapping (gear 4)
11480	Permissible deceleration at P4 in optimum acceleration/deceleration for rigid tapping (gear 4)

[Input type] Parameter input
[Data type] Byte spindle
[Unit of data] %
[Valid data range] 0 to 100
These parameters set the permissible decelerations at acceleration setting points P0 to P4 as ratios to the maximum acceleration (parameters Nos. 11421 to 11424). At any acceleration setting points where 0 is set, 100% is assumed.

4.95 PARAMETERS OF ARBITRARY SPEED THREADING

	#7	#6	#5	#4	#3	#2	#1	#0
11485							RMT	AST

[Input type] Parameter input
[Data type] Bit path

NOTE
When this parameter is set, the power must be turned off before operation is continued.

#0 AST Arbitrary speed threading is:
0: Disabled.
1: Enabled.

#1 RMT Re-machining thread is:
0: Disabled.
1: Enabled.

	#7	#6	#5	#4	#3	#2	#1	#0
11486						AMM	ART	ADQ

[Input type] Parameter input
[Data type] Bit path

#0 ADQ Command for shifting the threading start angle by address Q in re-machining thread is:
0: Disabled.
1: Enabled.

#1 ART Arbitrary speed threading mode is:
0: Canceled by reset.
1: Not canceled by reset.

NOTE
1 In case of this parameter is 0, if reset operation is executed in arbitrary speed threading mode, Cs contour control change signal CON <Gn027.7> or Cs contour control change signals in each axis CONSs <Gn274.0 to 3> must be set to “0”.
2 In case of this parameter is 1, if reset operation is executed in arbitrary speed threading mode, Cs contour control change signal CON <Gn027.7> or Cs contour control change signals in each axis CONSs <Gn274.0 to 3> must be maintained to “1”. If it cancels the arbitrary speed threading mode, M code of cancel the arbitrary speed threading (No.11488) must be specified and Cs contour control change signal CON <Gn027.7> or Cs contour control change signals in each axis CONSs <Gn274.0 to 3> must be set to “0”.

#2 AMM In arbitrary speed threading mode, M code to start arbitrary speed threading mode is
0: Disable to command (Alarm (PS0529) "THREADING COMMAND IMPOSSIBLE" occurs).
1: Enabled to command.

NOTE
In case of this parameter is 1, M code to start arbitrary speed threading can be re-commanded in arbitrary speed threading mode. Arbitrary speed threading mode is already selected. So process to change to arbitrary speed threading is not performed, but M code is output. Please operate properly with PMC ladder.

11487	M code to start arbitrary speed threading mode

[Input type] Parameter input
[Data type] 2-word spindle
[Unit of data] None
[Valid data range] 0 to 99999999
This parameter sets the M code to start arbitrary speed threading mode.

NOTE
1 The parameter setting must not be the same as the M code used for any other function.
2 When this parameter is set to 0, this function is invalid.
3 If the same value is set for two or more Cs contour control axes, the alarm PS0531, “THREADING PARAMETER ERROR” is issued.
4 The M code set in this parameter prevents buffering.

11488	M code to cancel arbitrary speed threading mode

[Input type] Parameter input
[Data type] 2-word spindle
[Unit of data] None
[Valid data range] 0 to 99999999
This parameter sets the M code to cancel arbitrary speed threading mode.

NOTE
1 The parameter setting must not be the same as the M code used for any other function.
2 When this parameter is set to 0, this function is invalid.
3 If the same value is set for two or more Cs contour control axes, the alarm PS0531, “THREADING PARAMETER ERROR” is issued.
4 The M code set in this parameter prevents buffering.

11489	Acceleration in arbitrary speed threading

[Input type] Parameter input
[Data type] Real axes
[Unit of data] mm/sec^2, inch/sec^2, degree/sec^2 (machine unit)
[Min. unit of data] Depend on the increment system of the applied axis
[Valid data range] Refer to the standard parameter setting table (D)
(When the machine system is metric system, 0.0 to +100000.0.
When the machine system is inch system, 0.0 to +10000.0.)
This parameter sets acceleration of major axis in arbitrary speed threading.
If this parameter is set to 0, acceleration is assumed to 100000.0.

11490	Spindle speed arrival level in arbitrary speed threading

[Input type] Parameter input
[Data type] word path
[Unit of data] min^{-1}
[Valid data range] 0 to 32767
Threading is started if the spindle speed is arrived within the level set in this parameter.

NOTE
Threading is not started if the spindle speed is not arrived within the level set in this parameter.

11496	Measurement result of thread groove

[Input type] Parameter input
[Data type] Real axis

[Unit of data] mm, inch, degree (machine unit)
[Min. unit of data] Depend on the increment system of the applied axis
[Valid data range] 9 digit of minimum unit of data (refer to standard parameter setting table (A))
(When the increment system is IS-B, -999999.999 to +999999.999)
Measurement result of thread groove is stored.

⚠ CAUTION
This parameter stores measurement result of thread groove. Don't input this parameter.

11497	Chamfering value in thread cutting cycles G92 and G76 for arbitrary speed threading

[Input type] Parameter input
[Data type] Byte path
[Unit of data] 0.1
[Valid data range] 1 to 127
This parameter sets a chamfering value in the thread cutting cycle (G76) of a multiple repetitive canned cycle and in the thread cutting cycle (G92) of a canned cycle for arbitrary speed threading.
Let L be a lead. Then, a chamfering value range from 0.1L to 12.7L is allowed.
To specify a chamfering value of 10.0L, for example, specify 100 in this parameter.

11498	Chamfering angle in thread cutting cycles G92 and G76 for arbitrary speed threading

[Input type] Parameter input
[Data type] Byte path
[Unit of data] Degree
[Valid data range] 1 to 89
This parameter sets a thread chamfering angle in a thread cutting cycle (G92/G76) for arbitrary speed threading. When 0 is set, an angle of 45 degrees is specified.

4.96 PARAMETERS OF PROGRAMS (4 OF 5)

	#7	#6	#5	#4	#3	#2	#1	#0
11500							IPO	

[Input type] Parameter input
[Data type] Bit

#1 IPO Cutting feed-forward flag is:
0: Output immediately when it comes in-position state.
1: Output after waiting for 1 interpolation period after becoming in-position state.

> **NOTE**
> This parameter is Automatic setting parameter. For details, refer to the appendix "Automatic setting / Initial setting parameter" in CONNECTION MANUAL (FUNCTION) (B-64693EN-1).

	#7	#6	#5	#4	#3	#2	#1	#0
11501		SUM	SUR		NWT	MSC		

[Input type] Parameter input
[Data type] Bit path

#2 MSC The machine lock shift value check in automatic operation is :
0: Not applied.
1: Applied.

> **NOTE**
> 1 This function is invalid for the axis in the machine lock state.
> 2 The followings can be commanded with the machine lock shift value remained.
> - Automatic reference position return (The middle point is not specified)
> - Workpiece coordinate system preset
> - Local coordinate system setting
> - Machine coordinate system setting
> - Coordinate system setting
> - Workpiece coordinate system setting (Axis movement is not specified)
>
> 3 In other automatic operation, if there is no movement in the machine coordinate system, the alarm is not issued.
> 4 This function is invalid for the dummy axis. (Parameter KSV(No.11802#4)=1 or DMY(No.2009#0)=1)

#3 NWT At a start of the automatic operation, the time from a falling edge of the cycle start signal ST to a start of the automatic operation is:
0: Conventional.
1: Reduced.

NOTE
This parameter is Initial setting parameter. For details, refer to the appendix "Automatic setting / Initial setting parameter" in CONNECTION MANUAL (FUNCTION) (B-64693EN-1).

#5 SUR The timing of starting detection of a one-rotation signal in threading is:
0: Conventional.
1: High-speed execution.

NOTE
This parameter is Automatic setting parameter. For details, refer to the appendix "Automatic setting / Initial setting parameter" in CONNECTION MANUAL (FUNCTION) (B-64693EN-1).

#6 SUM Speed-up of G28, G30 and G53 commands is:
0: Disabled.
1: Enabled.

NOTE
This parameter is Automatic setting parameter. For details, refer to the appendix "Automatic setting / Initial setting parameter" in CONNECTION MANUAL (FUNCTION) (B-64693EN-1).

	#7	#6	#5	#4	#3	#2	#1	#0
11502	IPW	CTC		PSU	CMS	WPP		

[Input type] Parameter input
[Data type] Bit

#2 WPP Programmable parameter input (G10)-based parameter re-setting that requires power-off is:
0: Disabled.
1: Enabled.

NOTE
Setting bit 2 (WPP) of parameter No. 11502 to 1 enables programmable parameter input (G10)-based parameter re-setting that requires power-off even when "PARAMETER WRITE " is disabled.

#3 CMS If the cycle start of MEM/RMT mode is commanded without reset while executing subprogram/macro call of the MDI mode:
0: The alarm is not generated.
1: The alarm PS0525, "SUBPROGRAM/MACRO CALLING. " is generated.

NOTE
This parameter is Automatic setting parameter. For details, refer to the appendix "Automatic setting / Initial setting parameter" in CONNECTION MANUAL (FUNCTION) (B-64693EN-1).

#4 PSU Programmable parameter input(G10L50/52) is:
0: executed by normal speed.(conventional specification)
1: executed by high speed.

#5 CT2 During axis moving, the time constant of acceleration/deceleration in cutting feed for each axis (parameter No. 1622) is:
0: Write-disabled.
1: Write-enabled.

#6 CTC During axis moving, the time constant of rapid traverse linear acceleration/deceleration for each axis (parameter No. 1620) is:
0: Write-disabled.
1: Write-enabled.

#7 IPW The advanced preview feed-forward coefficient (parameter No. 2092) and bit 0 (SMR) of parameter No. 8162 for specifying whether to apply a mirror image during synchronization control are:
0: Write-disabled during axis moving.
1: Write-enabled if the corresponding axis is stopped.

	#7	#6	#5	#4	#3	#2	#1	#0
11503				HIC		ASE		

[Input type] Parameter input
[Data type] Bit

#2 ASE The precision improvement of the actual machine position by speed up of the timing that the servo position deviation is reflected is:
0: Invalid.
1: Valid.

> **NOTE**
> 1 This parameter is valid for the actual machine position read by PMC Window function (WINDR:SUB51), FOCAS2 and Position switch. When this parameter is set to 1, the actual machine position read by these functions is changed.
> 2 This parameter is Automatic setting parameter. For details, refer to the appendix "Automatic setting / Initial setting parameter" in CONNECTION MANUAL (FUNCTION) (B-64693EN-1).

#4 HIC When the axis controlled with a servo motor enters in-position check:
0: The next block is begun at the next interpolation cycle that entered in-position.
1: The next block is begun at the interpolation cycle when entering in-position.

> **NOTE**
> This parameter is Automatic setting parameter. For details, refer to the appendix "Automatic setting / Initial setting parameter" in CONNECTION MANUAL (FUNCTION) (B-64693EN-1).

	#7	#6	#5	#4	#3	#2	#1	#0
11504		BDA	BST					

[Input type] Parameter input

[Data type] Bit

#5 BST Operating time reduction of command of preventing buffering is
0: Disabled.
1: Enabled.

> **NOTE**
> This parameter is Automatic setting parameter. For details, refer to the appendix "Automatic setting / Initial setting parameter" in CONNECTION MANUAL (FUNCTION) (B-64693EN-1).

#6 BDA When Optional block skip is disabled and /2 to /9 is specified:
0: Alarm is not generated.
1: Alarm PS0004 "INVALID BREAK POINT OF WORDS" is generated.

> **NOTE**
> 1 This parameter is disabled to sequence number search operation.
> 2 This parameter is disabled to macro executor (conversational macro, auxiliary macro).

	#7	#6	#5	#4	#3	#2	#1	#0
11505								ISU

[Input type] Setting input
[Data type] Bit

#0 ISU When an USB memory card is selected as an I/O device, data input/output is performed using
0: ASCII codes.
1: ISO codes.

> ⚠ **WARNING**
> 1 Unless data is input using ASCII codes, set this parameter to 1 to input or output data using ISO codes.
> 2 Data input/output with ASCII codes is dangerous because parity information is not included and a data error during the data input/output is not detected.

	#7	#6	#5	#4	#3	#2	#1	#0
11506							SFU	PCU

[Input type] Parameter input
[Data type] Bit

#0 PCU If there is a USB memory interface on the CNC side, the USB memory interface used when the CNC screen display function is started via the HSSB interface is on the:
0: CNC side.
1: PC side.

NOTE
1 With the PC function, a USB memory interface on the PC side is used regardless of the setting of this parameter if there is no USB memory interface on the CNC main unit side.
2 This parameter is valid only when the CNC screen display function is active via the HSSB interface.
When setting 1 to this parameter, the CNC screen display function must always be executed via the HSSB interface.
3 When using the CNC screen display function via the Ethernet interface, set 0.
4 When this parameter is set, the power must be turned off before operation is continued.

#1 SFU In USB memory, file name is displayed in:
0: Conventional specification.
1: Short file name (8.3 format).

	#7	#6	#5	#4	#3	#2	#1	#0
11507	SAC	PNT			HSR			

[Input type] Parameter input
[Data type] Bit

NOTE
When at least one of these parameters is set, the power must be turned off before operation is continued.

#3 HSR Speed-up of processing related to RS-232C is
0: Disabled.
1: Enabled.

NOTE
1 When this parameter is set to 0, communication is performed at lower than the specified baud rate of RS-232C.
2 This parameter is Automatic setting parameter. For details, refer to the appendix "Automatic setting / Initial setting parameter" in CONNECTION MANUAL (FUNCTION) (B-64693EN-1).

#6 PNT If BPRNT/DPRNT of the custom macro is commanded continuously,
0: TV check is executed since the 2nd times.
1: TV check is not executed. (The same specification as FS16*i*)

#7 SAC When the spindle speed arrival SAR<Gn029.4> is checked in canned cycle for drilling,
0: It is waiting for elapsing time that is set parameter No.3740 at the starting of all drilling.
1: It is waiting for elapsing time that is set parameter No.3740 at the starting of only first drilling. It is available block overlap between rapid traverse to the initial lever and rapid traverse of positioning to a position of hole.

NOTE
- When this parameter is set, the power must be turned off before operation is continued.
- This parameter is available when bit 0 (SAR) of parameter No.3708 is set 1.
- Block overlap in rapid traverse is available when bit 4 (RTO) of parameter No.1601 is set 1.

	#7	#6	#5	#4	#3	#2	#1	#0
11525	FAXx							

[Input type] Parameter input
[Data type] Bit axis

#7 FAXx In Fast cycle-time setting, batch setting of recommended values (axis) is
0: disabled.
1: enabled.

	#7	#6	#5	#4	#3	#2	#1	#0
11527	FSPs							

[Input type] Parameter input
[Data type] Bit spindle

#7 FSPs In Fast cycle-time setting, batch setting of recommended values (spindle) is
0: disabled.
1: enabled.

11530	Warning value (common to ch1, ch2, and ch3) for I/O link retry counter

NOTE
When this parameter is set, the power must be turned off before operation is continued.

[Input type] Parameter input
[Data type] Byte
[Unit of data] Correction counter value/8 hours
[Valid data range] 0 to 127
Recommended setting = 0
Set a warning value for the I/O link communication retry counter.
When the value in the 8-hour error correction counter becomes higher than or equal to the setting, I/O Link 1,2,3 retry abnormality warning signals WIOCH1 to WIOCH3 <F0535.0 to F0535.2> are output.
If the setting is 0, monitoring is performed on a 5 occurrences/8 hours basis.

11531	Warning value for the ECC correction counter (SRAM)

NOTE
When this parameter is set, the power must be turned off before operation is continued.

[Input type] Parameter input
[Data type] Byte

[Unit of data] Correction counter value/8 hours
[Valid data range] 0 to 127
Recommended setting = 0
Set a warning value for the SRAM correction counter.
When the value in the 8-hour error correction counter becomes higher than or equal to the setting, SRAM ECC abnormality warning signal WECCS <F0535.3> is output.
If the setting is 0, monitoring is performed on a 5 occurrences/8 hours basis.

11532	Warning value for the number of embedded-Ethernet error detection occurrences

NOTE
When this parameter is set, the power must be turned off before operation is continued.

[Input type] Parameter input
[Data type] Byte
[Unit of data] Number of detection occurrences/minute
[Valid data range] 0 to 127
Recommended setting = 0
Set a warning value for the number of embedded Ethernet error detection occurrences.
When the number of 1- minute error detection occurrences becomes higher than or equal to the setting, Embedded Ethernet communication abnormality warning signal WETE <F0535.4> is output.
If the setting is 0, monitoring is performed on a 10 occurrences/minute basis.

11533	Warning value for the number of fast Ethernet error detection occurrences

NOTE
When this parameter is set, the power must be turned off before operation is continued.

[Input type] Parameter input
[Data type] Byte
[Unit of data] Number of detection occurrences/minute
[Valid data range] 0 to 127
Recommended setting = 0
Set a warning value for the number of fast Ethernet error detection occurrences.
When the number of 1-minute error detection occurrences becomes higher than or equal to the setting, Fast Ethernet communication abnormality warning signal WETF <F0535.5> is output.
If the setting is 0, monitoring is performed on a 10 occurrences/minute basis.

11534	Warning value (common to FL-net boards 1 and 2) for the number of FL-net error detection occurrences

NOTE
When this parameter is set, the power must be turned off before operation is continued.

[Input type] Parameter input
[Data type] Byte
[Unit of data] Number of detection occurrences/minute
[Valid data range] 0 to 127

Recommended setting = 0
Set a warning value for the number of FL-net error detection occurrences.
When the number of 1- minute error detection occurrences becomes higher than or equal to the setting, FL-net1,2 communication abnormality warning signals WFLN1, WFLN2 <F0535.6, F0535.7> are output.
If the setting is 0, monitoring is performed on a 3 occurrences/minute basis.

	#7	#6	#5	#4	#3	#2	#1	#0
11538		WT1						

[Input type] Parameter input
[Data type] Bit

NOTE
When this parameter is set, the power must be turned off before operation is continued.

#6 WT1 In automatic operation, the speed-up between blocks is:
0: Invalid.
1: Valid.

NOTE
This parameter is Automatic setting parameter. For details, refer to the appendix "Automatic setting / Initial setting parameter" in CONNECTION MANUAL (FUNCTION) (B-64693EN-1).

	#7	#6	#5	#4	#3	#2	#1	#0
11539					ICX			

[Input type] Parameter input
[Data type] Bit

#3 ICX Display of C language executor/FANUC PICTURE on iPendant is
0: Not possible.
1: Possible.

	#7	#6	#5	#4	#3	#2	#1	#0
11549		AP5						APS

[Input type] Parameter input
[Data type] Bit

NOTE
When this parameter is set, the power must be turned off before operation is continued.

#0 APS Automatic setting function of PS control axis, automatic setting of parameter is
0: Not performed.
1: Performed.

NOTE
After completing the automatic setting of PS control axis, this parameter becomes 0.

#6 AP5 In multi-path system, AI contour control is:

0: Not executed simultaneously by more than 5 paths. (Set to 0 necessarily if AI contour control is not executed simultaneously by more than 5 paths.)

1: Executed simultaneously by more than 5 paths. (Set to 1 necessarily if AI contour control is executed simultaneously by more than 5 paths.)

NOTE
If AI contour control is executed simultaneously by more than 5 paths without setting this parameter to 1, sufficient performance might not be obtained.

11550	M code of removal command for Flexible path axis assignment

NOTE
When this parameter is set, the power must be turned off before operation is continued.

[Input type] Parameter input
[Data type] Word path
[Valid data range] 0 to 32767
When the signal type of flexible path axis assignment is used, M code of the removal command is set in each path.

11551	M code of assignment command for Flexible path axis assignment

NOTE
When this parameter is set, the power must be turned off before operation is continued.

[Input type] Parameter input
[Data type] Word path
[Valid data range] 0 to 32767
When the signal type of flexible path axis assignment is used, M code of the assignment command is set in each path.

11552	M code of exchange command for Flexible path axis assignment

NOTE
When this parameter is set, the power must be turned off before operation is continued.

[Input type] Parameter input
[Data type] Word path
[Valid data range] 0 to 32767
When the signal type of flexible path axis assignment is used, M code of the exchange command is set in each path.

11553	The address of command in user area of internal relay(R)

NOTE
When this parameter is set, the power must be turned off before operation is continued.

[Input type] Parameter input
[Data type] 2-word axis
[Valid data range] 0 to 59999

When the signal type of flexible path axis assignment is used, the address of command in user area of internal relay (R) is set in each axis. 3 bytes are used from a set value with each axis.

NOTE
1 Set the value that becomes the multiple of 4. (0, 4, 8, ...)
2 The range of the R address differs depending on the PMC used and the memory size. Check the specifications of the PMC, and set a value within the valid range.
(Example: R addresses in the range from R0 to R7999 if memory B of the first PMC is used.)
3 Signal type of flexible path axis assignment is not available for the axis in case of this parameter is set to 0.
4 This parameter is valid for first PMC.

⚠WARNING
If an internal relay of the set address in this parameter is used by another usage, it may cause an unexpected machine behavior. Be careful enough that you must prevent the competition of the used internal relay.

11554	Internal relay user area (R) address for individual-axis information

NOTE
When this parameter is set, the power must be turned off before operation is continued.

[Input type] Parameter input
[Data type] 2-word axis
[Valid data range] 0 to 59999

Set an internal relay user area (R) address for information to be output about an individual axis. The information is output only about the axis specified with this parameter. Three bytes starting at the setting are used for each axis.

NOTE
1 The setting must be a multiple of 4 (4, 8, ...).
2 This function is disabled if the parameter is 0.
3 When performing multipath control, be careful to keep the data addresses of each path from overlapping with those of the other paths.

NOTE
4 The R address area varies depending on the PMC used and its memory. Be sure to select values within the usable range by checking the specifications of the PMC. (Example: R addresses in the range from R0 to R7999 if memory B of the first PMC is used.)
5 This parameter is valid for first PMC.

⚠WARNING
If an internal relay of the set address in this parameter is used by another usage, it may cause an unexpected machine behavior. Be careful enough that you must prevent the competition of the used internal relay.

11555	Flexible path axis assignment specified axis name

[Input type] Parameter input
[Data type] Byte path
[Valid data range] 0 to 256
When the axis selected by bit 0 (PAN) of parameter No.11564 is assigned, the specified axis name is used.

11556	Flexible path axis assignment specified axis name 2

[Input type] Parameter input
[Data type] Byte path
[Valid data range] 0 to 256
When the axis selected by bit 0 (PAN) of parameter No.11564 is assigned, the specified axis name is used. If the extended axis name is effective (bit 0 (EEA) of parameter No.1000=1), this value becomes the second character of the axis name. Otherwise, this value becomes the subscript of the axis name.

11557	Flexible path axis assignment specified axis name 3

[Input type] Parameter input
[Data type] Byte path
[Valid data range] 0 to 256
When the axis selected by bit 0 (PAN) of parameter No.11564 is assigned, the specified axis name is used. If the extended axis name is effective (bit 0 (EEA) of parameter No.1000=1), this value becomes the third character of the axis name. When the second axis name (parameter No.11556) is not set, the third axis name becomes invalid.

11560	Identification number for an axis to be subjected to flexible path axis assignment

NOTE
When this parameter is set, the power must be turned off before operation is continued.

[Input type] Parameter input
[Data type] Word axis
[Valid data range] 0 to 32767
Set an identification number for an axis to be subjected to flexible path axis assignment. The value specified corresponds to a program-specified address P(Q,R) value.

	#7	#6	#5	#4	#3	#2	#1	#0
11561				FAC	FAM	FAO	FAW	FAR

[Input type] Parameter input
[Data type] Bit

> **NOTE**
> When this parameter is set, the power must be turned off before operation is continued.

#0 FAR The flexible path axis assignment is:
0: Disabled.
1: Enabled.

> **NOTE**
> Setting the parameter FAR erases all history data (operation history, alarm history, and external operator message history) the next time the power is turned on.

#1 FAW If an axis acquisition command is issued for an axis yet to be freed in flexible path axis assignment:
0: The command waits for the axis to be freed.
1: Alarm PS0514 "ILLEGAL COMMAND IN FLEXIBLE PATH AXIS ASSIGNMENT" is issued.

#2 FAO If the power is turned off and on again with flexible path axis assignment in effect, the axis configuration is:
0: Returned to the initial state (specified with parameter No. 0981).
1: Kept in the most recent state.

#3 FAM The method of command specification used by programs in flexible path axis assignment is:
0: Identification number method.
1: Axis name method.

#4 FAC If the axis removal command is issued for an axis which already removed, or assigned to the another path in flexible path axis assignment:
0: Alarm PS0514 "ILLEGAL COMMAND IN FLEXIBLE PATH AXIS ASSIGNMENT" is issued..
1: The command is ignored.

	#7	#6	#5	#4	#3	#2	#1	#0
11562						FHEx	FANx	

[Input type] Parameter input
[Data type] Bit axis

#1 FANx In flexible path axis assignment, axis names used after exchange are:
0: Those previously set for each axis.
1: Those set for the other axes in exchange pairs.

NOTE
The parameter FANx is invalid when an axis acquisition command for flexible path axis assignment is issued. The name set for each axis is inherited.

#2 FHEx In flexible path axis assignment, when parameter FHM(bit 3 of parameter No.11565) is 1, this axis :
0: Does not assign to the path which has large number of read ahead blocks more than initial path which the axis belongs.
1: Assigns to the path which has large number of read ahead blocks more than initial path which the axis belongs.

	#7	#6	#5	#4	#3	#2	#1	#0
11563	PPW	RRS		FAX	WUA	NMF		CSG

[Input type] Parameter input
[Data type] Bit

NOTE
When this parameter is set, the power must be turned off before operation is continued.

 # 0 CSG Flexible path axis assignment is commanded:
0: By G code command.
1: By PMC signal setting.

⚠WARNING
Set an appropriate value to parameter No.11553 beforehand when you set 1 to this parameter.
If an internal relay of the set address in parameter No.11553 is used by another usage, it may cause an unexpected machine behavior. Be careful enough that you must prevent the competition of the used internal relay.

 # 2 NMF Direct assignment mode signal DASN<G0536.5> is:
0: Not used.
1: Used.

 # 3 WUA In direct assign mode of the flexible path axis assignment, if removal command could not execute,
0: The alarm DS0080 "ILLEGAL COMMAND IN FLEXIBLE PATH AXIS ASSIGNMENT" occurs.
1: Wait execution of the axis removal.

#4 FAX In flexible path axis assignment, if the target axis of the assignment command is already exists on the target path,
0: The alarm PS0514 "ILLEGAL COMMAND IN FLEXIBLE PATH AXIS ASSIGNMENT" occurs.
1: the command is ignored.

 # 6 RRS When reset is executed, the axis assignment changed by Flexible path axis assignment
0: Is not changed.
1: Is returned to its initial assignment.

#7 PPW PMC window function with execution of flexible path axis assignment behaves according to:

0: The path number and the axis number changed by flexible path axis assignment.
1: The path number and the axis number of the initial state (setting of the parameter No.981).

	#7	#6	#5	#4	#3	#2	#1	#0
11564								PANx

[Input type] Parameter input
[Data type] Bit axis

> **NOTE**
> When this parameter is set, the power must be turned off before operation is continued.

 # 0 PANx The name of the axis which assigned to each path is

0: Not changed.
1: Changed to the specific name selected in each path.
This setting is available on only one axis in a path.

	#7	#6	#5	#4	#3	#2	#1	#0
11565			FPS	FES	FHM		RTC	

[Input type] Parameter input
[Data type] Bit

 # 1 RTC In Flexible path axis assignment, tool geometry offset value and tool wear offset value and tool offset value are:

0: Not canceled and alarm PS0514 occurs when flexible path axis assignment command is issued.
1: Canceled only for the commanded axis when flesible path axis command is issued. In this case, the axis does not move regardless of the tool offset methods.

> **NOTE**
> This parameter is Automatic setting parameter. For details, refer to the appendix "Automatic setting / Initial setting parameter" in CONNECTION MANUAL (FUNCTION) (B-64693EN-1).

#3 FHM On Flexible Path Axis Assignment, the axis which assigned to the path which has large number of read ahead blocks compared to the initial path which the axis belongs is:

0: selected automatically.
1: selected by parameter FHE(bit 2 of parameter No.11562).

#4 FES For the axis which the order in the path is changed by Flexible path axis assignment, Extended external machine zero point shift is:

0: not used.
1: used. (R address of Extended external machine zero point shift is not changed by Flexible path axis assignment.)

#5 FPS When the axis order is changed by Flexible path axis assignment, axis selection of position switch and high-speed position switch is:

0: depends on axis order after the execution of Flexible path axis assignment.

1: always considered as initial axis order.

	#7	#6	#5	#4	#3	#2	#1	#0
11600			AX1	D3A		D3IT	D3MV	

[Input type] Parameter input
[Data type] Bit path

#1 D3MV In following modes, axis moving signals MV1 to MV8<Fn102> is:
- 3-dimensional coordinate system conversion
- Tilted working plane indexing

0: The signals for axes on programming coordinate system.
1: The signals for axes on workpiece coordinate system.

#2 D3IT In the 3-dimensional coordinate system conversion mode, the valid interlock signals (interlock signal for each axis *IT1 to *IT8 <Gn130> or interlock signal for each axis direction +MIT1 to +MIT8<Gn132>,-MIT1 to -MIT8 <Gn134> etc.) are:
0: The signals for all of the target axes for 3-dimensional coordinate system conversion.
1: The signals for axes along which a movement is made during 3-dimensional coordinate system conversion.

#4 D3A In 3-dimensional coordinate system conversion cancellation, if the compensation vector has not been canceled:
0: Alarm PS5462 "ILLEGAL COMMAND (G68.2/G69)" is issued.
1: No alarm is issued.

#5 AX1 If, in coordinate system rotation mode, a 1-axis command is issued in absolute mode,
0: First, the specified position is calculated in the coordinate system before rotation, and then the coordinate system is rotated.
1: First, the coordinate system is rotated, and then the tool moves to the specified position in the coordinate system.
(FS16*i*/18*i*/21*i* compatible specification)

[Example] G90 G0 X0 Y0
G01 X10. Y10. F6000
G68 X0 Y0 R45. .....Coordinate system rotation command
Y14.142 .....1-axis command (1)
G69
When the bit 5 (AX1) of parameter No. 11600 is set to 0:
In the coordinate system (XY) before rotation, the specified position is calculated, and then the coordinate system is rotated. Thus, for the command in (1), the position on the X-axis that is not specified is assumed to be X10, so that the specified position is (X10,Y14.142). Then, the tool moves to the movement position (X-2.929,Y17.071) resulting from 45-degree rotation.

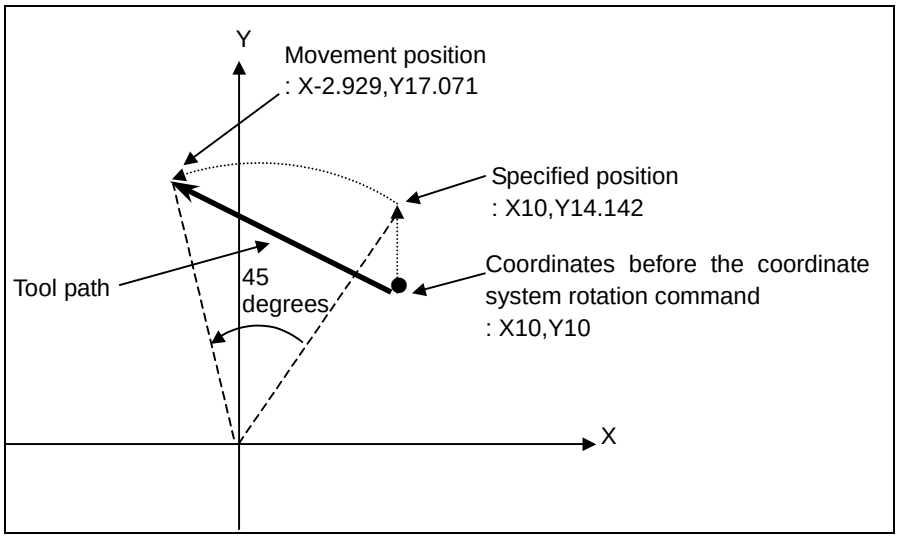

When the bit 5 (AX1) of parameter No. 11600 is set to 1:

The command in (1) converts the coordinates before the coordinate system rotation command, (X10,Y10), into the coordinates (X'14.142,Y'0) in the coordinate system rotated by 45 degrees (X'Y'). Then, the tool moves to the specified position (X'14.142,Y'14.142), i.e., the movement position (X0,Y20).

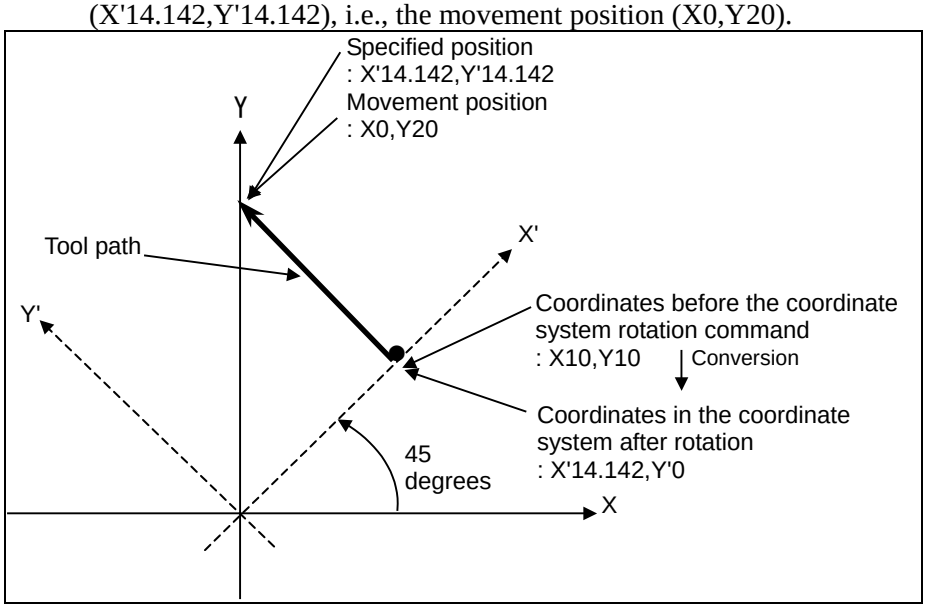

	#7	#6	#5	#4	#3	#2	#1	#0
11601		SBN						

[Input type] Parameter input
[Data type] Bit

#6 SBN When the dual position feedback and the monitoring semi-full error is used in servo function, the smooth backlash compensation is executed :

0: According to the setting of bit 4 of parameter No.2206 and bit 5 of parameter No.2010.

1: In the semi-closed loop side.

	#7	#6	#5	#4	#3	#2	#1	#0
11602			NCP	NDO	TFO	R53		

[Input type] Parameter input

[Data type] Bit path

#2 R53 In the continuous block of the high-speed G53, in the case of interpolation type rapid traverse or time fixed type, the rapid overlap is:
0: Invalid.
1: Valid.

> **NOTE**
> This parameter is Automatic setting parameter. For details, refer to the appendix "Automatic setting / Initial setting parameter" in CONNECTION MANUAL (FUNCTION) (B-64693EN-1).

#3 TFO When the rapid traverse is linear interpolation type and time constant acceleration/decerelation type, the rapid overlap is:
0: Invalid.
1: Valid.

> **NOTE**
> This parameter is Automatic setting parameter. For details, refer to the appendix "Automatic setting / Initial setting parameter" in CONNECTION MANUAL (FUNCTION) (B-64693EN-1).

#4 NDO If a normal direction control cancel command (G40.1) block contains a cutting feed command and the next block also contains a cutting feed command:
0: The next block performs movement after a deceleration stop.
1: The next block performs movement without waiting for a deceleration stop.

#5 NCP If there is a non-threading block between two threading blocks, the second threading block:
0: Waits until the spindle one-rotation signal and the spindle speed arrival signal SAR <Gn029.4> are detected.
1: Does not wait until the spindle one-rotation signal and the spindle speed arrival signal SAR <Gn029.4> are detected unless a G code in non-threading group 01 is issued. (FS16*i* compatible specification)

	#7	#6	#5	#4	#3	#2	#1	#0
11620								BNM

[Input type] Parameter input
[Data type] Bit path

#0 BNM In the program in which the cutting feed (G01) in AI contour control mode is continuous, when there is a block with the same position command in between,
0: It decelerates and stops.
1: Ignore the block of the same position command and do not decelerate and stop, overlapping with the next block.

> **NOTE**
> This parameter is Automatic setting parameter. For details, refer to the appendix "Automatic setting / Initial setting parameter" in CONNECTION MANUAL (FUNCTION) (B-64693EN-1).

	#7	#6	#5	#4	#3	#2	#1	#0
11630			M5B			TFR	MDE	FRD

[Input type] Parameter input
[Data type] Bit path

#0 FRD The minimum command unit of the rotation angles of coordinate rotation and 3-dimensional coordinate system conversion is:
0: 0.001 degree.
1: 0.00001 degree. (1/100,000)

#1 MDE In the MDI mode, the external device subprogram call (M198) is:
0: Disabled.
1: Enabled.

> **NOTE**
> If instructing M198 at the parameter MDE(No.11630#1)=0, the alarm PS1081"EXT DEVICE SUB PROGRAM CALL MODE ERROR" is generated.

#2 TFR The minimum command unit of the rotation angles of the tilted working plane indexing command is:
0: 0.001 degree.
1: 0.00001 degree.

#5 M5B The number of M codes that can be specified in one block
0: One (up to three when bit 7(M3B) of parameter No. 3404 is set to 1)
1: Up to five

11647	The local variable number corresponding to the axis address

[Input type] Parameter input
[Data type] Byte axis
[Unit of data] No unit
[Valid data range] 0 to 33
The address as an argument of the macro call is allocated to local variable number.
By this parameter, the address of axis name expansion can be the argument of the macro call.

	#7	#6	#5	#4	#3	#2	#1	#0
11648						ESE		M99

[Input type] Parameter input
[Data type] Bit

#0 M99 When the M99 is executed in the single block operation :
0: Operating stops after executing the previous return block.
1: Operating stops before executing the previous return block.

This function is effective only for M99 commanded in the following programs.
- Execution macro of macro executor
- Programs in "//CNC_MEM/SYSTEM" folder (*1)
- Programs in "//CNC_MEM/MTB1" folder (Embedded macro) (*1)
- Programs in "//CNC_MEM/MTB2" folder(*1)
- Programs of O number within the range specified by parameter 11656 and 11657.

(*1) It is effective only to the program put on the right under of each folder. When the subfolder is made and the program is put, parameter M99 is invalid to such a program.

#2 ESE ELSE statement of IF statement is:
0: Not used
1: Used. The following specifications are added.
- The following instruction format is added to IF statement.
  - IF[<conditional expression>] THEN; Multiple statements; ENDIF;
  - IF[<conditional expression>] THEN Macro statement1;
    ELSE Macro statement2;
  - IF[<conditional expression>] THEN; Multiple statements1;
    ELSE; Multiple statements2; ENDIF;
- Nesting of IF statement is enabled.
- "ELSE", and "ENDIF" are added to reserved words.

11649	Number of custom macro variables common to each path (for #98000 to #98499)

[Input type] Parameter input
[Data type] Word
[Valid data range] 0 to 500

NOTE
When this parameter is set, the power must be turned off before operation is continued.

When the custom macro variables common to each path is used, this parameter sets the number of custom macro common variables to be shared out of common variables #98000 to #98499. Be sure that the maximum number of available macro common variables is not exceeded.

Example
When 100 is set in parameter No.11649
#98000 to #98099: Variables are shared by all paths
#98100 to #98499: Variables are used by each path independently

NOTE
1. Addition of custom macro common variables 1000 is required.
2. When 0 or a negative value is set, the custom macro variables common to each path is not used.
3. By parameter NC4(No.11654#0), commonness/independence of variables can be set for each path.

	#7	#6	#5	#4	#3	#2	#1	#0
11651	DCO						SMI	

[Input type] Parameter input
[Data type] Bit path

#1 SMI When GOTO statement using stored sequence numbers/LGOTO statement using stored label is enabled and memory operation of a program on Data Server/Memory card is executed, sequence numbers/LBL[label] in the program are:
0: Stored.

1: Not stored.

NOTE
1 This parameter is effective when bit 4 (HGO) of parameter No.6000 is set to 1 or bit 1 (MGO) of parameter No.6000 is set to 1.
2 This parameter is Automatic setting parameter. For details, refer to the appendix "Automatic setting / Initial setting parameter" in CONNECTION MANUAL (FUNCTION) (B-64693EN-1).

#7 DCO During dry run, the cutting time is:
0: Not counted.
1: Counted.

11652	**Start number of common variables to be protected among the common variables (#98000 to #98499)**
11653	**End number of common variables to be protected among the common variables (#98000 to #98499)**

[Input type] Parameter input
[Data type] 2-Word path
[Valid data range] 0, 98000 to 98499

Among the common variables #98000 to #98499, the range of common variables specified by this parameter can be protected (by setting their attributes to read-only). If value is written to protected variable (on the left side), an alarm is issued.

NOTE
Set 0 in both parameter No.11652 and No.11653 not to protect common variables.

	#7	#6	#5	#4	#3	#2	#1	#0
11654								**NC4**

[Input type] Parameter input
[Data type] Bit path

NOTE
When this parameter is set, the power must be turned off before operation is continued.

 # 0 NC4 The parameter No.11649 (Number of custom macro variables common to each path for #98000 to #98499) is:
0: Effective.
Among custom macro variable #98000-#98499 in this path, the number set in parameter No.11649 becomes the number of variables shared between each path.
1: Not effective.
Custom macro variable #98000-#98499 in this path are independent of other path.

NOTE
Set 0 to this parameter of path 1.

Example

In a 4-path system, when parameters are set as listed below, custom macro variables for paths 1 to 3 are used as variables common to these paths, but for path 4, custom macro variables for the path 4 are used independently.

Path number	No.11649	NC4	Used custom macro variables
1	100	0	Custom macro variables #98000 to #98099 are used as variables common to these paths, and other custom macro variables are used independently.
2		0	
3		0	
4		1	All custom macro variables for path 4 are used independently.

11656	The first O number of the program for parameter M99(No.11648#0) make effective

[Input type] Parameter input
[Data type] 2-word path
[Valid data range] 1 to 99999999
Specify the first O number for parameter M99(No.11648#0) make effective.
When this parameter is 0, the specification of O number in which parameter M99 is made effective is invalid.

11657	The number of programs for parameter M99(No.11648#0) make effective

[Input type] Parameter input
[Data type] 2-word path
[Valid data range] 1 to 99999999
Specify the number of programs for parameter M99(No.11648#0) make effective.
When this parameter is 0, the specification of O number in which parameter M99 is made effective is invalid.

	#7	#6	#5	#4	#3	#2	#1	#0
11658								MMB

[Input type] Parameter input
[Data type] Bit path

#0 MMB In multiple M commands in a single block, if any of the second M command to the fifth M command is specified by any of parameters Nos. 3411 to 3420, parameters Nos. 3421 to 3432 or parameters Nos. 11290 to 11299, the M command is:
0: Not recognized as M code preventing buffering
1: Recognized as M code preventing buffering

⚠ CAUTION

1 Regardless of setting of bit 0 (MMB) of parameter No. 11658, the first command in multiple commands in a single block can be set as M code preventing buffering.

> ⚠ **CAUTION**
> 2 Though bit 0 (MMB) of parameter No. 11658 is set to 1, M00, M01, M02, M30 or M code preventing buffering specified by any of parameters other than the above must be specified alone in a single block.
> If any of these M codes is specified to any of the second command to the fifth command in multiple M commands in a single block, the M command is not recognized as M code preventing buffering.

11687	Standard value of precision level when AI contour control is used

[Input type] Parameter input
[Data type] Byte path
[Valid data range] 0 to 10
Set standard value of precision level when AI contour control is used.
When the power is turned on or the system is reset, the precision level
0 : keeps its value.
1 to 10 : becomes the level set to this parameter.

4.97 PARAMETERS OF SMOOTH TOLERANCE+ CONTROL (1 OF 2)

	#7	#6	#5	#4	#3	#2	#1	#0
11785								
								CATx

[Input type] Parameter input
[Data type] Bit axis

#0 CATx On start up of automatic operation, smooth tolerance+ control is:
0: Ineffective on an axis.
1: Effective on an axis.

11786	
	Smoothing tolerance for linear axis in smooth tolerance+ control mode

[Input type] Parameter input
[Data type] Real path
[Unit of data] mm, inch (input unit)
[Min. unit of data] Depend on the increment system of the reference axis
[Valid data range] 0 or positive 9 digit of minimum unit of data (refer to the standard parameter setting table (B))
(When the increment system is IS-B, 0.0 to +999999.999)
Set tolerance for linear axes for curves generated in smooth tolerance+ control mode. If tolerance is not specified in tolerance mode, machining path is controlled so that the machining accuracy on curves represented by small segment is within the tolerance set to this parameter.
When this parameter is set to 0 or less, it operates as 1μm is set.

11787	
	Smoothing tolerance for rotary axis in smooth tolerance+ control mode

[Input type] Parameter input
[Data type] Real path
[Unit of data] degree (machine unit)
[Min. unit of data] Depend on the increment system of the reference axis
[Valid data range] 0 or positive 9 digit of minimum unit of data (refer to the standard parameter setting table (B))
(When the increment system is IS-B, 0.0 to +999999.999)
Set tolerance for rotary axes for curves generated in smooth tolerance+ control mode. If tolerance is not specified in tolerance mode, machining path is controlled so that the machining accuracy on curves represented by small segment is within the tolerance set to this parameter.
When this parameter is set to 0 or less, it operates as 0.05° is set.

	#7	#6	#5	#4	#3	#2	#1	#0
11790								
				GCS	SMC			

[Input type] Parameter input
[Data type] Bit path

#3 SMC When smooth tolerance+ control is used with macro modal call, smooth tolerance+ control is,
0: Effective.
1: Disabled. (Temporary disabled while macro modal call is effective)

#4 GCS In case linear blocks are connected to both end of circular arc block with tangential continuity, generating curvature on tangent continuous corners is:
0: Enabled.
1: Disabled.

11791	
	Angle for breaking smoothing in smooth tolerance+ control mode

[Input type] Parameter input
[Data type] Real path
[Unit of data] Degree
[Min. unit of data] Depend on the increment system of the reference axis
[Valid data range] 0 to 90
Set the angle to judge if smoothing of smooth tolerance+ control is effective or not.
When this parameter is set to 0, it operates as 20° is set.

4.98 PARAMETERS OF SERVO (2 OF 2)

	#7	#6	#5	#4	#3	#2	#1	#0
11802		RVLx		KSVx		SWFx		CPYx

[Input type] Parameter input
[Data type] Bit axis

NOTE
When at least one of these parameters is set, the power must be turned off before operation is continued.

#0 CPYx When a change from a semi-closed loop to a closed loop is made by the SEMIx signal, and when the SEMIx signal indicates a closed loop at power-on, the absolute coordinate value in the semi-closed loop is:
0: Not replaced by the absolute coordinate value in the closed loop.
1: Replaced by the absolute coordinate value in the closed loop.

#2 SWFx When switching between the semi-closed loop and closed loop is performed by the SEMIx signal, re-creation of coordinate values on the detector on the loop side set after switching is:
0: Not performed.
1: Performed.

#4 KSVx Servo axis is:
0: Enabled.
1: Disabled.

NOTE
1 This setting is effective regardless of the value of parameter No. 1023.
2 If this setting is made for the axis subject to Cs axis contour/spindle positioning, Cs axis contour/spindle positioning will be disabled.
3 When the servo axis is disabled (bit 4 (KSVx) of parameter No. 11802 is set to 1), an absolute position detector cannot be used (bit 5 (APCx) of parameter No. 1815 cannot be set to 1). If an absolute position detector is used, alarm SV0301, "APC ALARM; COMMUNICATION ERROR" is issued.

#6 RVLx In case of using the rotary scale without rotary data to the linear axis type, an absolute position detector or a rotary scale with distance-coded reference marks (serial) is:
0: Not available.
1: Available.

NOTE
1 Please use this parameter with a linear axis.
2 This parameter is effective when the parameter RVSx(No.1815#0) is 1.
3 Set the parameter No.11810 to the amount of one rotation.

	#7	#6	#5	#4	#3	#2	#1	#0
11803						TSFx	CDPx	STHx

[Input type] Parameter input
[Data type] Bit axis

#0 STHx The dual position feedback turning mode is:
0: Disabled.
1: Enabled.

NOTE
Before the dual position feedback turning mode function can be used, a setting to enable dual position feedback is required in addition to the setting of this bit.

#1 CDPx Dual position feedback compensation clamping is:
0: Not performed.
1: Performed.

NOTE
Before the dual position feedback compensation clamp function can be used, a setting to enable dual position feedback is required in addition to the setting of this bit.

#2 TSFx Under tandem control, the servo of the slave axis is turned off:
0: Together with that of the master axis.
1: Independently of that of the master axis.

NOTE
1 Use this parameter for the slave axis under tandem control.
2 Specify this parameter when both the master and slave axes under tandem control are at a stop.
3 Setting this parameter to 1 requires consideration on the ladder side, because the servo of the slave axis is turned off independently of, rather than together with, that of the master axis.

	#7	#6	#5	#4	#3	#2	#1	#0
11805				IEM				

[Input type] Parameter input
[Data type] Bit

#4 IEM When the inertia estimation function is executed, in a positional deviation check:
0: No. 1829 (Positioning deviation limit for each axis in the stopped state) is used.
1: No. 1828 (Positioning deviation limit for each axis in movement) is used.

11807	VRDY-OFF alarm detection time when emergency stop is canceled

NOTE
When this parameter is set, the power must be turned off before operation is continued.

[Input type] Parameter input
[Data type] Byte
[Unit of data] sec
[Valid data range] 0 to 30
This parameter sets the VRDY-OFF alarm detection time when emergency stop is canceled. It is considered that 3sec is set when 0, 1, and 2 are set.

	#7	#6	#5	#4	#3	#2	#1	#0
11808						PFD		

[Input type] Parameter input
[Data type] Bit path

#2 PFD Improvement of stop distance reduction function at power failure is:
0: Immediately stop (alarm SV1094).
1: Deceleration stop (alarm DS0099).

	#7	#6	#5	#4	#3	#2	#1	#0
11809			ARE					

[Input type] Parameter input
[Data type] Bit

NOTE
When this parameter is set, the power must be turned off before operation is continued.

#5 ARE The change of the AMR offset is:
0: Disabled.
1: Enabled.

11810	The amount of the movement per one motor rotation of linear axis type (each axis)

NOTE
When this parameter is set, the power must be turned off before operation is continued.

[Input type] Parameter input
[Data type] Real axis
[Unit of data] mm, inch (machine unit)
[Min. unit of data] Depend on the increment system of the applied axis
[Valid data range] 0 or positive 9 digit of minimum unit of data (refer to the standard parameter setting table (B))
(When the increment system is IS-B, 0.0 to +999999.999)

In case of using the rotary scale without rotary data to the linear axis type, set the amount of the movement per one motor rotation. When 0 is set in this parameter, 360. is assumed.

NOTE
1 This parameter is effective in the axis that satisfies all the following conditions.
- Linear axis
- Parameter RVS(No.1815#0)=1
- Parameter RVL(No.11802#6)=1

2 This parameter is available for the axis with an absolute position detector (absolute Pulsecoder) or a rotary scale with distance-coded reference marks (serial).

NOTE

3 If this parameter is changed, the correspondence between the machine position and the absolute position detector is lost. So, establish the reference position again. (Bit 4 (APZ) of parameter No.1815 is set to 0, and an alarm DS0300, "APC ALARM: NEED REF RETURN" is issued. The cause that sets bit 4 (APZ) of parameter No.1815 to 0 is indicated in diagnostic data No.0310#0).

11814	The second servo loop gain for each axis

[Input type] Parameter input
[Data type] Word axis
[Data unit] 0.01/sec
[Data range] -1, 1 to 9999
Specify the second servo loop gain for each axis.
As for the axis for which this parameter is set values of -1 or beyond the range, the second servo loop gain is invalid.

11815	The second in-position width for each axis

[Input type] Parameter input
[Data type] 2-word axis
[Data unit] Detection unit
[Data range] -1 to 99999999
Specify the second in-position width for each axis.
As for the axis for which this parameter is set values of -1 or beyond the range, the second in-position width is invalid.

11816	The second in-position width in cutting for each axis

[Input type] Parameter input
[Data type] 2-word axis
[Data unit] Detection unit
[Data range] -1 to 99999999
Specify the second in-position width in cutting for each axis.
As for the axis for which this parameter is set values of -1 or beyond the range, the second in-position width in cutting is invalid.

	#7	#6	#5	#4	#3	#2	#1	#0
11820							PFSx	PGUx

[Input type] Parameter input
[Data type] Bit axis

#0 PGUx Data unit of position gain is:
0: 0.01/sec.
1: 0.1/sec.

#1 PFSx Improvement of stop distance reduction function at power failure is:
0: Disabled.
1: Enabled.

11821	Controlled axis number of moving axis

[Input type] Parameter input
[Data type] Byte axis
[Data range] 0, 1 to 24
Specify the controlled axis number.
When 0 is set, this function is invalid.

NOTE
1 When this parameter is set, the power must be turned off before operation is continued.
2 Set this parameter to the compensation axis.

4.99 PARAMETERS OF PMC AXIS CONTROL (3 OF 4)

	#7	#6	#5	#4	#3	#2	#1	#0
11850	IFH							CMI

[Input type] Parameter input
[Data type] Bit path

#0 CMI If, in PMC axis control, a rapid traverse rate is specified with the axis control block data signal, with bit 0 (RPD) of parameter No. 8002 being set to 1, the rapid traverse rate is:
0: Always treated as being in millimeters.
1: Dependent on the setting of bit 0 (INM) of parameter No. 1001.

NOTE
This parameter is Automatic setting parameter. For details, refer to the appendix "Automatic setting / Initial setting parameter" in CONNECTION MANUAL (FUNCTION) (B-64693EN-1).

#7 IFH When bit 2 (OVE) of parameter No. 8001 is set to 1 in PMC axis control, the 1% rapid traverse override signals *EROVs are:
0: On a path-by-path basis. (The first groups in the individual paths (first, fifth, ninth, ..., 33rd, and 37th groups) are used.)
1: On a group-by-group basis.

Depending on this parameter and bit 1 (OVR) of parameter No. 8013, selected signals are as given in the table below.
(The signal addresses are those in the first path, and the actual addresses differ depending on the group used.)

	Bit 7 (IFH) of No. 11850 = 0 (*EROVs are on a path-by-path basis.)	Bit 7 (IFH) of No. 11850 = 1 (*EROVs are on a group-by-group basis.)
Bit 1 (OVR) of No. 8013 = 0	EROV1, EROV2 <G150.0, G150.1>	EROV1, EROV2 <G150.0, G150.1>
Bit 1 (OVR) of No. 8013 = 1	*EROV<G151>	*EROVA<G151> *EROVB<G163> *EROVC<G175> *EROVD<G187>

NOTE
Overrides are clamped at up to 100%.

4.100 PARAMETERS OF PMC

11900	PMC of execution order 1 in the multi-path PMC function
11901	PMC of execution order 2 in the multi-path PMC function
11902	PMC of execution order 3 in the multi-path PMC function

NOTE
When these parameters are set, the power must be turned off before operation is continued.

[Input type] Parameter input
[Data type] Byte
[Valid data range] 0 to 3

Each of these parameters sets the execution order of each PMC when the multi-path PMC function is used.

Setting value	PMC system
0	Initial setting (see below)
1	First PMC
2	Second PMC
3	Third PMC

When 0 is set in all of these parameters, the initially set execution order shown below is used.

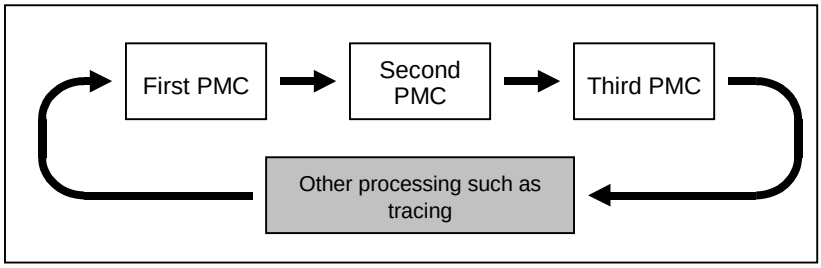

Initial setting of multi-path PMC execution order

⚠ CAUTION
If any of these parameters is nonzero, a duplicate or missing number results in the PMC alarm "ER50 PMC EXECUTION ORDER ERROR", thus disabling all the PMCs from starting.

11905	Execution time percentage (%) of PMC of execution order 1 in the multi-path PMC function
11906	Execution time percentage (%) of PMC of execution order 2 in the multi-path PMC function
11907	Execution time percentage (%) of PMC of execution order 3 in the multi-path PMC function

NOTE
When these parameters are set, the power must be turned off before operation is continued.

[Input type] Parameter input
[Data type] Byte
[Unit of data] %
[Valid data range] 0 to 100

Each of these parameters sets the execution time percentage (%) of each PMC when the multi-path PMC function is used.

When 0 is set in all of these parameters, the following initially set execution time percentage values are used:

Initial setting of execution time percentages in the multi-path PMC function

Quantity of PMCs	PMC of execution order 1	PMC of execution order 2	PMC of execution order 3
One path	100%		
Two paths	85%	15%	
Three paths	75%	15%	10%

NOTE
1 If a too small value is specified in these parameters, the first level may not be started for each scan.
2 Even if you input the same program in both second and third paths PMC, the scan time of both programs may not correspond because of changing of the waiting time by execution timing.
3 If the sum of these parameter settings exceeds 100, the PMC alarm "ER51 PMC EXECUTION PERCENTAGE ERROR" occurs, thus disabling all PMC from starting.
4 When the PMC memory sharing mode is used, the execution times of the shared PMC systems are totaled up, and sharing programs are executed successively in the total time.

11910	**I/O Link channel 1 input/output addresses**
11911	**I/O Link channel 2 input/output addresses**
11912	**I/O Link channel 3 input/output addresses**

NOTE
When these parameters are set, the power must be turned off before operation is continued.

[Input type] Parameter input
[Data type] Word
[Valid data range] 0, 100 to 103, 200 to 203, 300 to 303, 900

Each of these parameters sets I/O Link input/output addresses.
No I/O Link input/output address needs to be set for any channel using the I/O Link *i*.

Input/output addresses of I/O Link channels

Setting value	Input/output address
0	Initial setting (see below)
100	X0 to 127/Y0 to 127 of the first PMC
101	X200 to 327 / Y200 to 327 of the first PMC
102	X400 to 527 / Y400 to 527 of the first PMC
103	X600 to 727 / Y600 to 727 of the first PMC
200	X0 to 127 / Y0 to 127 of the second PMC

Setting value	Input/output address
201	X200 to 327 / Y200 to 327 of the second PMC
202	X400 to 527 / Y400 to 527 of the second PMC
203	X600 to 727 / Y600 to 727 of the second PMC
300	X0 to 127 / Y0 to 127 of the third PMC
301	X200 to 327 / Y200 to 327 of the third PMC
302	X400 to 527 / Y400 to 527 of the third PMC
303	X600 to 727 / Y600 to 727 of the third PMC
900	X0 to 127/Y0 to 127 of the dual check safety PMC

When all of these parameters are set to 0, all channels are assigned to the first PMC according to the initial setting as shown below.

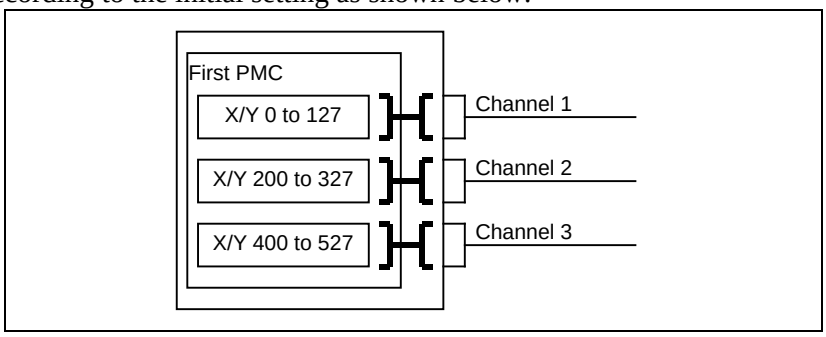

Initial input/output address setting for each I/O Link channel

> ⚠ **CAUTION**
> 1 If a duplicate number is set when a value other than 0 is set in any of these parameters, PMC alarm “ER52 I/O LINK CHANNEL ASSIGNMENT ERROR” is issued, and none of the PMCs can be started.
> 2 If a parameter is not set, the assignment of PMC addresses to the channel is disabled.

11915	**Input/output addresses of the second block of I/O Link channel 1**
11916	**Input/output addresses of the second block of I/O Link channel 2**
11917	**Input/output addresses of the second block of I/O Link channel 3**

> **NOTE**
> When these parameters are set, the power must be turned off before operation is continued.

[Input type] Parameter input
[Data type] Word
[Valid data range] 0, 100 to 103, 200 to 203, 300 to 303 Each of these parameters sets input/output addresses of dual assignment of an I/O Link channel.
No I/O Link input/output address needs to be set for any channel using the I/O Link *i*.

Input/output addresses of dual assignment of each I/O Link channel

Setting	Input/output address
0	Does not perform assignment of two blocks of an I/O Link channel.
100	X0 to 127/Y0 to 127 of the first PMC
101	X200 to 327/Y200 to 327 of the first PMC
102	X400 to 527/Y400 to 527 of the first PMC

Setting	Input/output address
103	X600 to 727/Y600 to 727 of the first PMC
200	X0 to 127/Y0 to 127 of the second PMC
201	X200 to 327/Y200 to 327 of the second PMC
202	X400 to 527/Y400 to 527 of the second PMC
203	X600 to 727/Y600 to 727 of the second PMC
300	X0 to 127/Y0 to 127 of the third PMC
301	X200 to 327/Y200 to 327 of the third PMC
302	X400 to 527/Y400 to 527 of the third PMC
303	X600 to 727/Y600 to 727 of the third PMC

When these parameters are set to 0, assignment of two blocks of an I/O Link channel is not performed.

⚠ CAUTION

1 If a duplicate number is set in these parameters and parameter Nos. 11910 to 11912, PMC alarm "ER52 I/O LINK CHANNEL ASSIGNMENT ERROR" is issued, and none of the PMCs can be started.

2 The dual check safety PMC (DCSPMC) uses the first block of channel 3. In this case, never assign the second block of that channel to safety signals in the first to PMCs.

11920	**Input/output addresses of NC-PMC interface 1**
11921	**Input/output addresses of NC-PMC interface 2**
11922	**Input/output addresses of NC-PMC interface 3**
11923	**Input/output addresses of NC-PMC interface 4**
11924	**Input/output addresses of NC-PMC interface 5**
11925	**Input/output addresses of NC-PMC interface 6**
11926	**Input/output addresses of NC-PMC interface 7**
11927	**Input/output addresses of NC-PMC interface 8**
11928	**Input/output addresses of NC-PMC interface 9**
11929	**Input/output addresses of NC-PMC interface 10**

NOTE

When these parameters are set, the power must be turned off before operation is continued.

[Input type] Parameter input
[Data type] Word
[Valid data range] 0, 100 to 109, 200 to 209, 300 to 309
Each of these parameters assigns PMC F/G addresses to CNC F/G addresses.

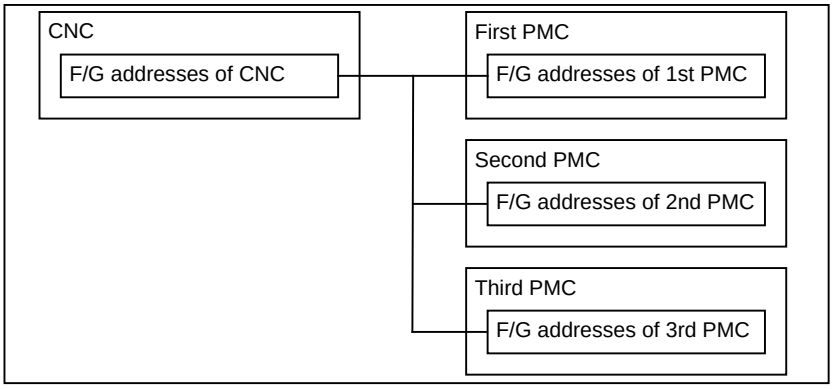

Concept of CNC-PMC interface assignment

Input/output addresses of CNC-PMC interfaces

Setting value	Input/output address
0	Initial setting (see below)
100	F0 to 767 / G0 to 767 of the first PMC
101	F1000 to 1767 / G1000 to 1767 of the first PMC
102	F2000 to 2767 / G2000 to 2767 of the first PMC
103	F3000 to 3767 / G3000 to 3767 of the first PMC
104	F4000 to 4767 / G4000 to 4767 of the first PMC
105	F5000 to 5767 / G5000 to 5767 of the first PMC
106	F6000 to 6767 / G6000 to 6767 of the first PMC
107	F7000 to 7767 / G7000 to 7767 of the first PMC
108	F8000 to 8767 / G8000 to 8767 of the first PMC
109	F9000 to 9767 / G9000 to 9767 of the first PMC
200	F0 to 767 / G0 to767 of the second PMC
201	F1000 to 1767 / G1000 to 1767 of the second PMC
202	F2000 to 2767 / G2000 to 2767 of the second PMC
203	F3000 to 3767 / G3000 to 3767 of the second PMC
204	F4000 to 4767 / G4000 to 4767 of the second PMC
205	F5000 to 5767 / G5000 to 5767 of the second PMC
206	F6000 to 6767 / G6000 to 6767 of the second PMC
207	F7000 to 7767 / G7000 to 7767 of the second PMC
208	F8000 to 8767 / G8000 to 8767 of the second PMC
209	F9000 to 9767 / G9000 to 9767 of the second PMC
300	F0 to 767 / G0 to 767 of the third PMC
301	F1000 to 1767 / G1000 to 1767 of the third PMC
302	F2000 to 2767 / G2000 to 2767 of the third PMC
303	F3000 to 3767 / G3000 to 3767 of the third PMC
304	F4000 to 4767 / G4000 to 4767 of the third PMC
305	F5000 to 5767 / G5000 to 5767 of the third PMC
306	F6000 to 6767 / G6000 to 6767 of the third PMC
307	F7000 to 7767 / G7000 to 7767 of the third PMC
308	F8000 to 8767 / G8000 to 8767 of the third PMC
309	F9000 to 9767 / G9000 to 9767 of the third PMC

When 0 is set in all of these parameters, "F/G addresses of the CNC = F/G addresses of the first PMC" results according to the initial setting as shown below.

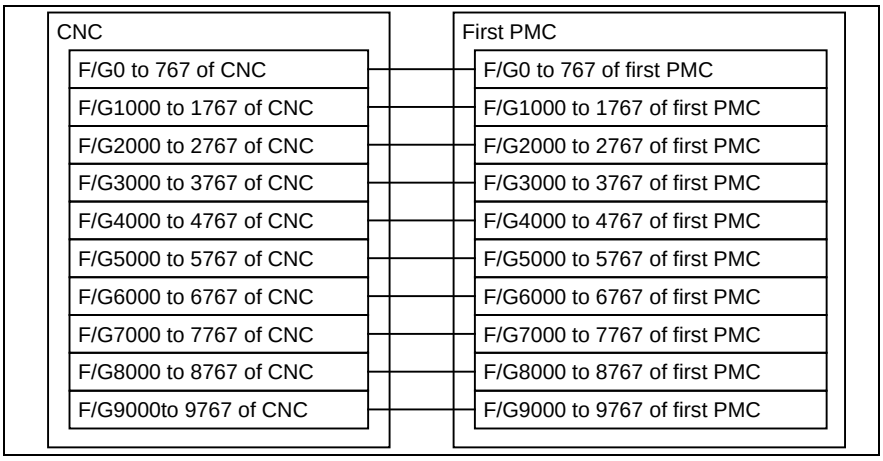

Initial setting of CNC-PMC interfaces

> ⚠ **CAUTION**
> 1 If any of these parameters is nonzero, a duplicate number results in the PMC alarm "ER54 NC-PMC I/F ASSIGNMENT ERROR", thus disabling all the PMCs from starting.
> 2 If these parameters are not set up in part, it is impossible to assign a PMC address to the related CNC F/G address.

11930	Execution interval of ladder level 1

> **NOTE**
> When this parameter is set, the power must be turned off before operation is continued.

[Input type] Parameter input
[Data type] Byte
[Valid data range] 0, 4 ,8
This parameter sets the execution interval of ladder level 1.

Setting	Description
4	Executed at intervals of 4 ms.
0, 8	Executed at intervals of 8 ms.

> ⚠ **CAUTION**
> If an invalid value is set to this parameter, the PMC alarm “ER55 LADDER EXECUTION CYCLE SETTING ERROR” is issued and all PMCs are not started.

	#7	#6	#5	#4	#3	#2	#1	#0
11931	NMC		LDV			DTM	M16	PCC

[Input type] Parameter input
[Data type] Bit

> **NOTE**
> When at least one of these parameters is set, the power must be turned off before operation is continued.

#0 PCC For a multipath PMC, ladder execution and stop are:
0: Controlled individually for each PMC path.
1: Controlled simultaneously for all PMC paths.

> **NOTE**
> When the PMC memory sharing mode is used, ladder execution and stop are controlled simultaneously for all PMC paths, regardless of the setting of this parameter.

#1 M16 For external data inputs and external messages, the maximum number of external alarm messages and external operator messages that can be displayed is:
0: 4.
1: 16.

#2 DTM Monitoring of the DeviceNet communication normal signal is:
0: Not available.
1: Available.

#5 LDV Ladder dividing management function is:
0: Not available
1: Available

> **NOTE**
> When setting to “0” in this parameter, the divided ladder programs in the flash ROM are ignored and only main ladder program is executed and displayed.

#7 NMC When the PMC alarm "ER09 PMC LABEL CHECK ERROR" occurs, the nonvolatile memory of PMC is cleared by:
0: Turning on power of CNC with pressing "O" and "Z" MDI keys.
1: Turning on power of CNC without any operation.

> **NOTE**
> Set NMC = 0 generally.
> If you change some PMC setting, such as number of PMC paths, PMC memory type, etc., the PMC alarm "ER09 PMC LABEL CHECK ERROR" occurs and nonvolatile memory of PMC have to be cleared. To clear the nonvolatile memory of PMC, you have to turn on power of CNC with pressing "O" and "Z" MDI keys generally.
> If NMC = 1, the nonvolatile memory of PMC is cleared automatically at the turning on power of CNC when the PMC alarm "ER09" occurs. Note that the setting NMC = 1 may cause undesirable clear of nonvolatile memory of PMC by unintended change of PMC setting.

11932	Interface between PMCs

> **NOTE**
> When this parameter is set, the power must be turned off before operation is continued.

[Input type] Parameter input

[Data type] Byte
[Valid data range] 0, 1, 2, 3
This parameter sets the PMCs that use the PMC-to-PMC interface.

Setting	Meaning
0	The PMC-to-PMC interface is not used.
1	The PMC-to-PMC interface is used between the 1st PMC and the 2nd PMC.
2	The PMC-to-PMC interface is used between the 1st PMC and the 3rd PMC.
3	The PMC-to-PMC interface is used between the 2nd PMC and the 3rd PMC.

⚠ CAUTION
If a value beyond the valid data range is set in this parameter, PMC alarm "ER57 MULT PATH PMC I/F ASSIGNMENT ERROR" is issued, and none of the PMCs can be started.
Similarly, when a PMC specified in this parameter is not present, PMC alarm "ER57 MULT PATH PMC I/F ASSIGNMENT ERROR" is issued, and none of the PMCs can be started.

NOTE
This function cannot be used for PMCs for which the PMC memory sharing mode is set.

	#7	#6	#5	#4	#3	#2	#1	#0
11933			SRL				C2T	C1T

[Input type] Parameter input
[Data type] Bit

NOTE
When at least one of these parameters is set, the power must be turned off before operation is continued.

#0 C1T Specifies the communication method of channel 1.
0: The I/O Link is used.
1: The I/O Link *i* is used.

#1 C2T Specifies the communication method of channel 2.
0: The I/O Link is used.
1: The I/O Link *i* is used.

NOTE
To use each channel with the I/O Link, set up also “I/O Link input/output address” (Nos. 11910 to 11912).

NOTE
This parameter is Initial setting parameter. For details, refer to the appendix "Automatic setting / Initial setting parameter" in CONNECTION MANUAL (FUNCTION) (B-64693EN-1).

#5 SRL When reading a ladder program in the I/O screen or by other operations:
0: The execution of the ladder program is stopped automatically.
1: The execution of the ladder program is not stopped. The ladder program is exchanged and running continuously the completion of reading of the ladder program.

11934	DeviceNet communication normal signal monitoring start time

[Input type] Parameter input
[Data type] Word
[Unit of data] sec
[Valid data range] 0 - 32767 (Recommended value = 0)
Monitoring of the DeviceNet normal signal DNTCM< F0290.2> starts when the time set in this parameter elapses after power-on.
When this setting is 0 or negative value, monitoring of the signal starts after 60 seconds from power-on.

11936	The number of PMC paths

NOTE
Once this parameters is re-set, it is necessary to turn the power off and on again.

[Data type] Byte
[Valid data range] 0, 1, 2, 3
This item specifies the number of PMC paths within the option of multi-path PMC function. When the value is 0 or out of valid data range, all of PMC paths which is specified by a multi-path PMC option is effective.

	#7	#6	#5	#4	#3	#2	#1	#0
11937	P24	P23	P22	P21	P14	P13	P12	P11

[Input type] Parameter input
[Data type] Bit
Input and output signals of network devices, such as Profibas, Profinet or iPendant etc., can be assigned to X/Y address area, such as X0-X127/Y0-Y127 or X200-X327/Y200-X327 etc. Network devices can be assigned to the X/Y address area to which any I/O Link and I/O Link *i* devices are not assigned.
When you assign network device to X/Y address area, you have to set 1 to this parameter for the corresponding area.

#0 P11 X/Y 0 to 127 of the 1st path PMC are:
0: Not used.
1: Used.

#1 P12 X/Y 200 to 327 of the 1st path PMC are:
0: Not used.
1: Used.

#2 P13 X/Y 400 to 527 of the 1st path PMC are:
0: Not used.
1: Used.

#3 P14 X/Y 600 to 727 of the 1st path PMC are:
0: Not used.
1: Used.

#4 P21 X/Y 0 to 127 of the 2nd path PMC are:
0: Not used.
1: Used.

#5 P22 X/Y 200 to 327 of the 2nd path PMC are:
0: Not used.
1: Used.

#6 P23 X/Y 400 to 527 of the 2nd path PMC are:
0: Not used.
1: Used.

#7 P24 X/Y 600 to 727 of the 2nd path PMC are:
0: Not used.
1: Used.

	#7	#6	#5	#4	#3	#2	#1	#0
11938					P34	P33	P32	P31

[Input type] Parameter input
[Data type] Bit

#0 P31 X/Y 0 to 127 of the 3rd path PMC are:
0: Not used.
1: Used.

#1 P32 X/Y 200 to 327 of the 3rd path PMC are:
0: Not used.
1: Used.

#2 P33 X/Y 400 to 527 of the 3rd path PMC are:
0: Not used.
1: Used.

#3 P34 X/Y 600 to 727 of the 3rd path PMC are:
0: Not used.
1: Used.

NOTE
1 Once these parameters is re-set, it is necessary to turn the power off and on again.
2 This parameter should be set only for the X /Y address area to which the network device is assigned, because this parameter may affect the ladder execution performance.
3 Network devices cannot be assigned to the X/Y address area to which any I/O Link and I/O Link *i* are assigned.

NOTE

4 In case of using I/O Link *i*, assign network devices to the X/Y address area to which any I/O Link *i* devices are not assigned, set this parameter for corresponding area.

5 In case of using I/O Link and the parameter Nos.11910 to 11912 are set to 0 (default setting), I/O Link devices are assigned to X0-X127/Y0-Y127, X200-X327/Y200-Y327 and X400-X527/Y400-Y527 area of 1st PMC path. In this case for 1st PMC path, network devices can only be assigned to X600-X727/Y600-Y727 area.
If parameters Nos.11910 to 11912 are not set to all 0, assign network devices accordingly to the X/Y address area to which any I/O Link channels are not assigned, set this parameter for corresponding area.

Example) Setting when I/O Link channel 1 is assigned to X0-X127/Y0-Y127 of 1st PMC path, and network device is assigned to X200-327/Y200-327

Parameter No.11910 = 100
No.11911 = 0
No.11912 = 0
No.11937#1 = 1

11940	**PMC memory type of the first PMC**
11941	**PMC memory type of the second PMC**
11942	**PMC memory type of the third PMC**

NOTE

When these parameters are set, the power must be turned off before operation is continued.

[Data type] Byte
[Valid data range] -1, 0, 1, 2, 3, 4

These parameters select the type of PMC memory. For the specifications of the PMC memory types, see Subsection 2.1.1, "Basic Specifications" in PMC Programming Manual (B-64513EN).

Setting	Meaning
0	The PMC memory set as the standard setting is used.
1	PMC memory A is used.
2	PMC memory B is used.
3	PMC memory C is used.
4	PMC memory D is used.
-1	The 2nd to 3rd PMCs share the PMC memory with the 1st PMC.

The following table lists the PMC memory types that can be selected for each PMC path:

1st path PMC	2nd to 3th path PMC
PMC-memory B (default) PMC-memory C (NOTE)	PMC-memory A (default) PMC-memory B PMC-memory C (NOTE) Shared with 1st path PMC
PMC-memory D (NOTE)	Shared with 1st path PMC

The following table lists the PMC memory types that can be selected for 0i-F Plus PMC/L:

Setting	Meaning
0	PMC memory A is used.
1	PMC memory A is used.
2	PMC memory B is used.

⚠ CAUTION

1 If the value set in any of these parameters is beyond the valid data range, PMC alarm "ER58 PMC MEMORY TYPE SETTING ERROR" is issued, and none of the PMCs can be started.

2 When the PMC memory type has been changed, the PMC battery-powered memory must be initialized. For this reason, before changing the PMC memory type, back up PMC parameters. For how to initialize the PMC battery-powered memory, refer to Section 2.7, "BATTERY-BACKED-UP DATA", in "PMC Programming Manual" (B-64513EN).

NOTE

To use all data table area as nonvolatile memory with PMC Memory-C/D/E, specify the option “Nonvolatile PMC data table area expansion (40KB)”. If this option does not be specified, the expanded data table area (D10000 or more) does not keep the memory after rebooting CNC.

11950	
to	**to**
11957	
11960	
to	**to**
11967	
11970	
to	**to**
11977	
11980	
to	**to**
11987	

These parameters are related to Dual Check Safety.
See Dual Check Safety CONNECTION MANUAL (B-64483EN-2) for details.

4.101 PARAMETERS OF EMBEDDED MACRO (2 OF 2)

12020	G code number for the embedded macro (first)
12023	G code number for the embedded macro (second)
12026	G code number for the embedded macro (third)
12029	G code number for the embedded macro (fourth)
12032	G code number for the embedded macro (fifth)
12035	G code number for the embedded macro (sixth)
12038	G code number for the embedded macro (seventh)
12041	G code number for the embedded macro (eighth)
12044	G code number for the embedded macro (ninth)
12047	G code number for the embedded macro (tenth)

[Input type] Parameter input
[Data type] Word path
[Valid date range] 1 to 999

12021	Macro program number for the embedded macro (first)
12024	Macro program number for the embedded macro (second)
12027	Macro program number for the embedded macro (third)
12030	Macro program number for the embedded macro (fourth)
12033	Macro program number for the embedded macro (fifth)
12036	Macro program number for the embedded macro (sixth)
12039	Macro program number for the embedded macro (seventh)
12042	Macro program number for the embedded macro (eighth)
12045	Macro program number for the embedded macro (ninth)
12048	Macro program number for the embedded macro (tenth)

[Input type] Parameter input
[Data type] 2-word path
[Valid date range] 1 to 9999

12022	Number of G code macro for embedded macro (first)
12025	Number of G code macro for embedded macro (second)
12028	Number of G code macro for embedded macro (third)
12031	Number of G code macro for embedded macro (fourth)
12034	Number of G code macro for embedded macro (fifth)
12037	Number of G code macro for embedded macro (sixth)

12040	Number of G code macro for embedded macro (seventh)
12043	Number of G code macro for embedded macro (eighth)
12046	Number of G code macro for embedded macro (ninth)
12049	Number of G code macro for embedded macro (tenth)

[Input type] Parameter input
[Data type] Word path
[Valid date range] 1 to 255

The data of the macro call by G code added by the embedded macro is set. G code number and the macro program number for it are set, and the number of G codes is set. These sets can be set up to ten. If G code number duplicates, it gives priority from former set. The set that the G code number or the macro program number or numbers is 0 is invalid.

[Example] In case that the range of macro program number is 7000 to 8999:

	First group	Second group	Third group
G code	No. 12020=100	No. 12023=150	No. 12026=900
Program number	No. 12021=8000	No. 12024=7500	No. 12027=8300
Number	No. 12022=10	No. 12025=5	No. 12028=30

The following program is called by each G code.

G code	Called program
G100 to G109	O8000 to O8009
G150 to G154	O7500 to O7504
G900 to G929	O8300 to O8329

NOTE
The parameter value is regarded as 0, when each parameter is set a out of range value.

4.102 PARAMETERS OF HIGH-SPEED POSITION SWITCH (2 OF 2)

12201	Controlled axis for which the eleventh high-speed position switch function is performed
12202	Controlled axis for which the twelfth high-speed position switch function is performed
12203	Controlled axis for which the thirteenth high-speed position switch function is performed
12204	Controlled axis for which the fourteenth high-speed position switch function is performed
12205	Controlled axis for which the fifteenth high-speed position switch function is performed
12206	Controlled axis for which the sixteenth high-speed position switch function is performed

[Input type] Parameter input
[Data type] Byte path

[Valid data range] 1 to number of controlled axes
Each of these parameters sets a controlled axis number for which each of the eleventh to sixteenth high-speed position switch functions is performed.
Set 0 for the number corresponding to a high-speed position switch which is not to be used.

12221	**Maximum value of the operation range of the eleventh high-speed position switch**
12222	**Maximum value of the operation range of the twelfth high-speed position switch**
12223	**Maximum value of the operation range of the thirteenth high-speed position switch**
12224	**Maximum value of the operation range of the fourteenth high-speed position switch**
12225	**Maximum value of the operation range of the fifteenth high-speed position switch**
12226	**Maximum value of the operation range of the sixteenth high-speed position switch**

[Input type] Parameter input
[Data type] Real path
[Unit of data] mm, inch, degree (machine unit)
[Min. unit of data] Depend on the increment system of the reference axis
[Valid data range] 9 digit of minimum unit of data (refer to standard parameter setting table (A))
(When the increment system is IS-B, -999999.999 to +999999.999)
Each of these parameters sets the maximum value of the operation range of each of the eleventh to sixteenth high-speed position switches. If such a setting that maximum value < minimum value is made, no operation range exists, so that the high-speed position switch does not operate.

12241	**Minimum value of the operation range of the eleventh high-speed position switch**
12242	**Minimum value of the operation range of the twelfth high-speed position switch**
12243	**Minimum value of the operation range of the thirteenth high-speed position switch**
12244	**Minimum value of the operation range of the fourteenth high-speed position switch**
12245	**Minimum value of the operation range of the fifteenth high-speed position switch**
12246	**Minimum value of the operation range of the sixteenth high-speed position switch**

[Input type] Parameter input
[Data type] Real path
[Unit of data] mm, inch, degree (machine unit)
[Min. unit of data] Depend on the increment system of the reference axis
[Valid data range] 9 digit of minimum unit of data (refer to standard parameter setting table (A))
(When the increment system is IS-B, -999999.999 to +999999.999)
Each of these parameters sets the minimum value of the operation range of each of the eleventh to sixteenth high-speed position switches. If such a setting that maximum value < minimum value is made, no operation range exists, so that the high-speed position switch does not operate.

4.103 PARAMETERS OF MALFUNCTION PROTECTION

12255	Maximum servo motor speed

[Input type] Parameter input
[Data type] Real axis
[Unit of data] mm/min, inch/min, degree/min (machine unit)
[Min. unit of data] Depend on the increment system of the applied axis
[Valid data range] Refer to the standard parameter setting table (C)
(When the increment system is IS-B, 0.0 to +999000.0)
This parameter sets a maximum servo motor speed. When the value set in this parameter is exceeded, the servo motor stops with the alarm DS0004, "EXCESS MAXIMUM FEEDRATE". When 0 is set in this parameter, the specification of a maximum allowable value (999000 for IS-B) is assumed.

12256	Maximum servo motor acceleration rate

[Input type] Parameter input
[Data type] Real axis
[Unit of data] mm/sec/sec, inch/sec/sec, degree/sec/sec (machine unit)
[Min. unit of data] Depend on the increment system of the applied axis
[Valid data range] Refer to the standard parameter setting table (D)
(When the machine system is metric system, 0.0 to +100000.0. When the machine system is inch system, machine, 0.0 to +10000.0)
This parameter sets a maximum servo motor acceleration rate. When the value set in this parameter is exceeded, the servo motor stops with the alarm DS0005, "EXCESS MAXIMUM ACCELERATION". When 0 is set in this parameter, alarm check is not performed.

4.104 PARAMETERS OF MANUAL HANDLE (2 OF 2)

12300	X address of the 1st. manual pulse generator
12301	X address of the 2nd. manual pulse generator
12302	X address of the 3rd. manual pulse generator
12303	X address of the 4th. manual pulse generator
12304	X address of the 5th. manual pulse generator

NOTE
When these parameters are set, the power must be turned off before operation is continued.

[Input type] Parameter input
[Data type] Word

[Valid data range] -1, 0 to 127, 200 to 327, 400 to 527, 600 to 727
To set X address of manual pulse generator connected with I/O Link in PMC.
When the manual pulse generator is not connected, set -1 to this parameter.

	PMC Path	X Address
1st. manual pulse generator	No. 12340	No. 12300
2nd. manual pulse generator	No. 12341	No. 12301
3rd. manual pulse generator	No. 12342	No. 12302
4th. manual pulse generator	No. 12343	No. 12303
5th. manual pulse generator	No. 12344	No. 12304

Parameters No. 12340 to 12344 must be set as value showed in next table.

Value	PMC Path
0	1st. PMC
1	
2	2nd. PMC
3	3rd. PMC

NOTE
Set these parameters when bit 1 (HDX) of parameter No. 7105 is set to 1. When HDX = 0, these parameters are automatically set. If a manual handle is not connected when HDX = 0, -1 is set automatically.

12310 **States of the manual handle feed axis selection signals when tool axis direction handle feed/interrupt and table-based vertical direction handle feed/interrupt are performed**

[Input type] Parameter input
[Data type] Byte path
[Valid data range] 1 to Number of controlled axes
This parameter sets the states of the manual handle feed axis selection signal (HS1A to HS1E for the first manual handle) or the manual handle interrupt axis selection signal (HS1IA to HS1IE for the first manual handle) to perform tool axis direction handle feed/interrupt and table-based vertical direction handle feed/interrupt.
The handle for which the signal states are set is determined by parameter No. 12323.

<Table of correspondence with the manual handle feed axis selection signals>
If parameter No. 12323 is set to 1, the states of the manual handle feed axis selection signals or manual handle interrupt axis selection signals for the first manual handle in the 3-dimensional manual feed (handle feed) mode and corresponding parameter settings are listed in the table below. When the first manual handle pulse generator is turned after setting the signals corresponding to the value set in the parameter, operation is performed in the specified mode.
If the value set in the parameter is larger than number of controlled axes, the movement is not generated.

HS1E (HS1IE)	HS1D (HS1ID)	HS1C (HS1IC)	HS1B (HS1IB)	HS1A (HS1IA)	Parameter (No. 12310)
0	0	0	0	1	1
0	0	0	1	0	2
0	0	0	1	1	3
0	0	1	0	0	4
0	0	1	0	1	5
0	0	1	1	0	6
0	0	1	1	1	7
0	1	0	0	0	8

HS1E (HS1IE)	HS1D (HS1ID)	HS1C (HS1IC)	HS1B (HS1IB)	HS1A (HS1IA)	Parameter (No. 12310)
0	1	0	0	1	9
0	1	0	1	0	10
0	1	0	1	1	11
0	1	1	0	0	12
0	1	1	0	1	13
0	1	1	1	0	14
0	1	1	1	1	15
1	0	0	0	0	16
1	0	0	0	1	17
1	0	0	1	0	18
1	0	0	1	1	19
1	0	1	0	0	20
1	0	1	0	1	21
1	0	1	1	0	22
1	0	1	1	1	23
1	1	0	0	0	24

If parameter No. 12323 is set to 2 to 5, replace 1 in HS1A to HS1E and HS1IA to HS1IE above with 2 to 5.

12311	States of the manual handle feed axis selection signals when a movement is made in the first axis direction in tool axis normal direction handle feed/interrupt and table-based horizontal direction handle feed/interrupt

[Input type] Parameter input
[Data type] Byte path
[Valid data range] 1 to Number of controlled axes

This parameter sets the states of the manual handle feed axis selection signals (HS1A to HS1E for the first manual handle) or the manual handle interrupt axis selection signal (HS1IA to HS1IE for the first manual handle) when a movement is made in the first axis direction. (For settings, see "Table of correspondence with the manual handle feed axis selection signals" in the description of parameter No. 12310.)
The handle for which the signal states are set is determined by parameter No. 12323.

The table below indicates the relationships of tool axis directions, first axis directions, and second axis directions.

Parameter No. 19697	Tool axis directions	First axis directions	Second axis directions
1	X	Y	Z
2	Y	Z	X
3	Z	X	Y

Note, however, that the table above indicates the directions applicable when the angles of all rotation axes are set to 0.
In tool axis direction/tool axis normal direction feed (not table-based), the directions indicated above assume that 0 is set in parameter No. 19698 and No. 19699. When a rotation axis has made a turn or a nonzero value is set in these parameters in tool axis direction/tool axis normal direction feed, the relevant directions are inclined accordingly.

12312	States of the manual handle feed axis selection signals when a movement is made in the second axis direction in tool axis normal direction handle feed/interrupt and table-based horizontal direction handle feed/interrupt

[Input type] Parameter input
[Data type] Byte path

[Valid data range] 1 to Number of controlled axes
This parameter sets the states of the manual handle feed axis selection signals (HS1A to HS1E for the first manual handle) or the manual handle interrupt axis selection signals (HS1IA to HS1IE for the first manual handle) when a movement is made in the second axis direction. (For settings, see "Table of correspondence with the manual handle feed axis selection signals" in the description of parameter No. 12310.)
The handle for which the signal states are set is determined by parameter No. 12323.

12313	States of the manual handle feed axis selection signals when the first rotation axis is turned in tool tip center rotation handle feed/interrupt

[Input type] Parameter input
[Data type] Byte path
[Valid data range] 1 to Number of controlled axes
This parameter sets the states of the manual handle feed axis selection signals (HS1A to HS1E for the first manual handle) or the manual handle interrupt axis selection signals (HS1IA to HS1IE for the first manual handle) when the first rotation axis is turned in tool tip center rotation handle feed or interrupt. (For settings, see "Table of correspondence with the manual handle feed axis selection signals" in the description of parameter No. 12310.)
The handle for which the signal states are set is determined by parameter No. 12323.

12314	States of the manual handle feed axis selection signals when the second rotation axis is turned in tool tip center rotation handle feed/interrupt

[Input type] Parameter input
[Data type] Byte path
[Valid data range] 1 to Number of controlled axes
This parameter sets the states of the manual handle feed axis selection signals (HS1A to HS1E for the first manual handle) or the manual handle interrupt axis selection signals (HS1IA to HS1IE for the first manual handle) when the second rotation axis is turned in tool tip center rotation handle feed or interrupt. (For settings, see "Table of correspondence with the manual handle feed axis selection signals" in the description of parameter No. 12310.)
The handle for which the signal states are set is determined by parameter No. 12323.

12318	
	Tool length in 3-dimensional machining manual feed

[Input type] Setting input
[Data type] Real path
[Unit of data] mm, inch (machine unit)
[Min. unit of data] Depend on the increment system of the reference axis
[Valid data range] 9 digit of minimum unit of data (refer to standard parameter setting table (A))
(When the increment system is IS-B, -999999.999 to +999999.999)
This parameter sets a tool length when tool tip center rotation feed is performed with the 3-dimensional machining manual feed function and when the 3-dimensional machining manual feed screen is displayed.

NOTE
1 Specify a radius value to set this parameter.
2 Don't change this parameter during 3-dimensional manual feed mode.

	#7	#6	#5	#4	#3	#2	#1	#0
12319					RCL	RCE		
	PRA			MDT	RCL	RCE		CAC

[Input type] Parameter input
[Data type] Bit path

#0 CAC If a workpiece coordinate system offset is set for the rotation axis, the coordinate system of the rotation axis used to calculate the 3-dimensional manual feed is:

0: Machine coordinate system.
For those parameters Nos. 19680 to 19714 used to configure the machine that depend on the coordinates of the rotation axis, set the values assumed when the machine coordinates of the rotation axis are 0.

1: Workpiece coordinate system.
For those parameters Nos. 19680 to 19714 used to configure the machine that depend on the coordinates of the rotation axis, set the values assumed when the workpiece coordinates of the rotation axis are 0.

#2 RCE Rotary axes position error compensation is:

0: not used.
1: used.

#3 RCL Valid data range of errors for rotary axes position error compensation is:

0: -32768 to 32767
1: -999999999 to 999999999

#4 MDT In Tilted working plane indexing mode, when 3-dimensional handle interrupt is executed in X,Y, and Z directions of the feature coordinate system, the travel distance displayed in the manual handle interruption screen is:

0: displayed in the workpiece coordinate system.
1: displayed according to the setting of bit 3 (DMK) of parameter No.5402.

This parameter is valid only when the directions of 3-dimensional machining manual feed are X, Y, and Z directions in the feature coordinate system (that is, only when the bit 0 (TWU) of parameter No.12320 is set to 1).

#7 PRA The feed direction of a 3-dimensional handle interrupt is:

0: updated when one of the following operation is executed.
- The mode of NC (ex, MEM or HANDLE) is changed.
- Reset is executed.
- The state of manual handle interrupt axis selection signals (HS1IA to HS1ID <Gn041.0 to 3>, HS1IE<Gn411.4> in case of manual pulse generator No.1) is changed.
- 3-dimensional manual feed turns enabled or disabled.

1: always updated.

	#7	#6	#5	#4	#3	#2	#1	#0
12320	EM4							
	EM4					JFR	FLL	TWD

[Input type] Setting input
[Data type] Bit path

#0 TWD The directions of 3-dimensional machining manual feed (other than tool tip center rotation feed) when the tilted working plane indexing is issued are:

0: Same as those not in the tilted working plane indexing. That is, the directions are:
Tool axis normal direction 1 (table-based horizontal direction 1)
Tool axis normal direction 2 (table-based horizontal direction 2)
Tool axis direction (table-based vertical direction)

1: X, Y, and Z directions in the feature coordinate system.

NOTE
Don't change this parameter during 3-dimensional manual feed mode.

#1 FLL The directions of tool axis normal direction feed or table-based horizontal direction feed in the 3-dimensional machining manual feed mode are:

0: Tool axis normal direction 1 (table-based horizontal direction 1) and tool axis normal direction 2 (table-based horizontal direction 2).

1: Longitude direction and latitude direction.

Bit 1 (FLL) of parameter No. 12320	Bit 0 (TWD) of parameter No. 12320	Directions of 3-dimensional machining manual feed
0	0	Conventional directions
0	1	When the tilted working plane indexing is issued: X, Y, and Z directions in the feature coordinate system When the command is not issued: Conventional directions
1	0	Longitude direction and latitude direction
1	1	When the tilted working plane indexing is issued: X, Y, and Z directions in the feature coordinate system When the command is not issued: Longitude direction and latitude direction

NOTE
Don't change this parameter during 3-dimensional manual feed mode.

#2 JFR As the feeedrate of 3-dimensional machining manual feed (jog feed or incremental feed) :

0: The dry run rate (parameter No. 1410) is used.

1: The jog feedrate (parameter No. 1423) is used.

NOTE
Don't change this parameter during 3-dimensional manual feed mode.

#7 EM4 Manual handle feed amount selection signal MP4 <Gn019.6> is:

0: Disabled.

1: Enabled.

12321	Normal axis direction

[Input type] Parameter input
[Data type] Byte path
[Valid data range] 0 to 3

When a tilted working plane indexing (G68.3) is issued to perform 3-dimensional machining manual feed in the latitude direction, longitude direction, and tool axis direction, this parameter sets an axis parallel to the normal direction.
1 : Positive (+) X-axis direction
2 : Positive (+) Y-axis direction
3 : Positive (+) Z-axis direction
0 : Reference tool axis direction (parameter No. 19697)

12322	Angle used to determine whether to assume the tool axis direction to be parallel to the normal direction (parameter No. 12321)

[Input type] Parameter input
[Data type] Real path
[Unit of data] deg
[Min. unit of data] Depend on the increment system of the reference axis
[Valid data range] 0 to 90

When a tilted working plane indexing (G68.3) is issued to perform 3-dimensional machining manual feed in the latitude direction, longitude direction, and tool axis direction, if the angle between the tool axis direction and normal direction (parameter No. 12321) is too small, the tool axis direction is assumed to be parallel to the normal direction (parameter No. 12321). This parameter sets the maximum angle at which the tool axis direction is assumed to be parallel to the normal direction.
When this parameter is set to 0 or a value outside the valid range, it is set to 1 degree.

12323	
	Number of a manual handle used for 3-dimensional machining manual feed

[Input type] Setting input
[Data type] Byte path
[Valid data range] 0 to 5

When 3-dimensional machining manual feed (handle feed) is performed, set the number of the manual handle to be used.
When the fourth or fifth manual handle is used for 3-dimensional machining manual feed, the manual handle feed with 4/5 handles is required.
If 0 or the number of an unavailable handle is set, the first handle is assumed.

NOTE
Don't change this parameter during 3-dimensional manual feed mode.

12324	Start address of R area used with rotary axes position error compensation

[Input type] Parameter input
[Data type] 2-word path
[Valid data range] 0 to 59999

Set the start address of R area in the PMC used with rotary axes position error compensation.
In case parameter RCL(No.12319#3) = 0, a 30-byte area from the set address is necessary.
In case parameter RCL(No.12319#3) = 1, a 60-byte area from the set address is necessary.

NOTE
If a nonexistent R address is set, this function is disabled. The range in R address is different depending on PMC used and the memory. Confirm the specification of PMC, and set the value within the range which can be used.

	#7	#6	#5	#4	#3	#2	#1	#0
12330	G17	G16	G15	G14	G13	G12	G11	G10
	#7	#6	#5	#4	#3	#2	#1	#0
12331	G1F	G1E	G1D	G1C	G1B	G1A	G19	G18
	#7	#6	#5	#4	#3	#2	#1	#0
12332	G27	G26	G25	G24	G23	G22	G21	G20
	#7	#6	#5	#4	#3	#2	#1	#0
12333	G2F	G2E	G2D	G2C	G2B	G2A	G29	G28
	#7	#6	#5	#4	#3	#2	#1	#0
12334	G37	G36	G35	G34	G33	G32	G31	G30
	#7	#6	#5	#4	#3	#2	#1	#0
12335	G3F	G3E	G3D	G3C	G3B	G3A	G39	G38
	#7	#6	#5	#4	#3	#2	#1	#0
12336	G47	G46	G45	G44	G43	G42	G41	G40
	#7	#6	#5	#4	#3	#2	#1	#0
12337	G4F	G4E	G4D	G4C	G4B	G4A	G49	G48

[Input type] Parameter input
[Data type] Bit

NOTE
When at least one of these parameters is set, the power must be turned off before operation is continued.

G10 to G4F When the Power Mate or I/O Link β*i* is connected to the I/O Link, these bits set whether to transfer pulses from manual pulse generators connected to the I/O Link to the Power Mate or I/O Link β*i*.

The setting of each bit has the following meaning:
0: Pulses are transferred.
1: Pulses are not transferred.

The bits and the corresponding I/O Link channel numbers and group numbers are listed below:

Parameter	Channel number	Group number
G10	1	0
G11	1	1
G12	1	2
:	:	:
G1F	1	15
:	:	:
G4F	4	15

12340	PMC path of the 1st. manual pulse generator connected with I/O Link
12341	PMC path of the 2nd. manual pulse generator connected with I/O Link
12342	PMC path of the 3rd. manual pulse generator connected with I/O Link

12343	PMC path of the 4th. manual pulse generator connected with I/O Link

12344	PMC path of the 5th. manual pulse generator connected with I/O Link

NOTE
When at least one of these parameters is set, the power must be turned off before operation is continued.

[Input type] Parameter input
[Data type] Byte
[Valid data range] 0 to 3
Referring to parameters Nos. 12300 to 12304.

12350	Manual handle feed magnification m in each axis

[Input type] Parameter input
[Data type] Word axis
[Valid data range] 0 to 2000
For each axis, this parameter sets the magnification m when manual handle feed movement selection signals MP1 = 0, MP2 = 1.

NOTE
When value is set to 0 for this parameter, the parameter No. 7113 is valid.

12351	Manual handle feed magnification n in each axis

[Input type] Parameter input
[Data type] Word axis
[Valid data range] 0 to 2000
For each axis, this parameter sets the magnification when manual handle feed movement selection signals MP1 = 1, MP2 = 1.

NOTE
When value is set to 0 for this parameter, the parameter No. 7114 is valid.

4.105 PARAMETERS OF SYNCHRONOUS/COMPOSITE CONTROL AND SUPERIMPOSED CONTROL (3 OF 3)

12600	Identification Number for synchronous, composite, and superimposed control by program command

[Input type] Parameter input
[Data type] Word axis
[Valid data range] 0,1 to 32767
Set identification numbers that can be specified with P,Q addresses.
The axis whose identification number is 0 cannot become under synchronous, composite, and superimposed control by program command.
The same identification number cannot be set to two or more axes through all paths.
When the same identification number is set, alarm PS5339, "ILLEGAL FORMAT COMMAND IS EXECUTED IN SYNC/MIX/OVL CONTROL" occurs at G50.4/G50.5/G50.6/G51.4/G51.5/G51.6 block.

4.106 PARAMETERS OF PMC AXIS CONTROL (4 OF 4)

	#7	#6	#5	#4	#3	#2	#1	#0
12730								PTC

[Input type] Parameter input
[Data type] Bit path

#0 PTC Linear acceleration/deceleration time constant of continuous feed operation based on a speed command in PMC axis control is:
0: Normal.
1: Extended.
This bit is available when speed command in PMC axis control is FS16 type (bit 2 (VCP) of parameter No. 8007 is 1).

12731	Time constant 2 of linear acceleration/deceleration in velocity command continuous feed under PMC axis control
12732	Time constant 3 of linear acceleration/deceleration in velocity command continuous feed under PMC axis control
12733	4th time constant of linear acceleration/deceleration of continuous feed operation based on a speed command in PMC axis control
12734	5th time constant of linear acceleration/deceleration of continuous feed operation based on a speed command in PMC axis control

[Input type] Parameter input
[Data type] Word axis
[Unit of data] msec/1000min^{-1}
[Valid data range] 0 to 32767
If 0 is specified, the time constant at a given feedrate becomes invalid, and acceleration/deceleration is not performed.
This parameter is available when speed command in PMC axis control is FS16 type (bit 2 (VCP) of parameter No. 8007 is 1) and linear acceleration/deceleration time constant of continuous feed operation based on a speed command in PMC axis control is extended (bit 0 (PTC) of parameter No. 12730 is 1).

12735	1st feedrate for changing time constant of continuous feed operation based on a speed command in PMC axis control
12736	2nd feedrate for changing time constant of continuous feed operation based on a speed command in PMC axis control
12737	3rd feedrate for changing time constant of continuous feed operation based on a speed command in PMC axis control
12738	4th feedrate for changing time constant of continuous feed operation based on a speed command in PMC axis control

[Input type] Parameter input
[Data type] Word axis
[Unit of data] min^{-1}
[Valid data range] 0 to 32767
Set feedrate parameters as following.

No. 12735 < No. 12736 < No. 12737 < No. 12738.
This parameter is available when speed command in PMC axis control is FS16 type (bit 2 (VCP) of parameter No. 8007) and linear acceleration/deceleration time constant of continuous feed operation based on a speed command in PMC axis control is extended (bit 0 (PTC) of parameter No. 12730 is 1).

12740	Use group number of modal RTM command ID1
12741	Use group number of modal RTM command ID2
to	to
12749	Use group number of modal RTM command ID10

[Input type] Parameter input
[Data type] Byte path
[Valid data range] 0 to (NC path × 4)
Set the group number to be used by the ID of the modal RTM command.
Auxiliary function completion signal EFINg, Auxiliary function strobe signal EMFg, Auxiliary function code signals EM11g to EM48g and Auxiliary function executing signal EDENg of the group set by the parameter is controlled to operate the auxiliary function. It can be set to duplicate with parameter No. 8010.

NOTE
1 When this parameter is set, the power must be turned off before operation is continued.
2 Set the group number is set to parameter No.8010.

4.107 PARAMETERS OF EXTERNAL DECELERATION POSITIONS EXPANSION

	#7	#6	#5	#4	#3	#2	#1	#0
12750							EX5	EX4

[Input type] Parameter input
[Data type] Bit path

#0 EX4 External deceleration function setting 4 is:
0: Disabled.
1: Enabled.

#1 EX5 External deceleration function setting 5 is:
0: Disabled.
1: Enabled.

12751	External deceleration rate setting 4 in cutting feed

[Input type] Parameter input
[Data type] Real path
[Unit of data] mm/min, inch/min, degree/min (machine unit)
[Min. unit of data] Depend on the increment system of the reference axis
[Valid data range] Refer to the standard parameter setting table (C)
(When the increment system is IS-B, 0.0 to +999000.0)
Set external deceleration rate 4 for cutting feed or positioning of linear interpolation type (G00).

12752	External deceleration rate setting 4 for each axis in rapid traverse

[Input type] Parameter input
[Data type] Real axis
[Unit of data] mm/min, inch/min, degree/min (machine unit)
[Min. unit of data] Depend on the increment system of the applied axis
[Valid data range] Refer to the standard parameter setting table (C)
(When the increment system is IS-B, 0.0 to +999000.0)
Set external deceleration rate 4 for each axis in rapid traverse.

12753	Maximum manual handle feedrate setting 4 for each axis

[Input type] Parameter input
[Data type] Real axis
[Unit of data] mm/min, inch/min, degree/min (machine unit)
[Min. unit of data] Depend on the increment system of the applied axis
[Valid data range] Refer to the standard parameter setting table (C)
(When the increment system is IS-B, 0.0 to +999000.0)
Set a maximum manual handle feedrate 4 for each axis.

12754	External deceleration rate setting 5 in cutting feed

[Input type] Parameter input
[Data type] Real path
[Unit of data] mm/min, inch/min, degree/min (machine unit)
[Min. unit of data] Depend on the increment system of the reference axis
[Valid data range] Refer to the standard parameter setting table (C)
(When the increment system is IS-B, 0.0 to +999000.0)
Set external deceleration rate 5 for cutting feed or positioning of linear interpolation type (G00).

12755	External deceleration rate setting 5 for each axis in rapid traverse

[Input type] Parameter input
[Data type] Real axis
[Unit of data] mm/min, inch/min, degree/min (machine unit)
[Min. unit of data] Depend on the increment system of the applied axis
[Valid data range] Refer to the standard parameter setting table (C)
(When the increment system is IS-B, 0.0 to +999000.0)
Set external deceleration rate 5 for each axis in rapid traverse.

12756	Maximum manual handle feedrate setting 5 for each axis

[Input type] Parameter input
[Data type] Real axis
[Unit of data] mm/min, inch/min, degree/min (machine unit)
[Min. unit of data] Depend on the increment system of the applied axis
[Valid data range] Refer to the standard parameter setting table (C)
(When the increment system is IS-B, 0.0 to +999000.0)
Set a maximum manual handle feedrate 5 for each axis.

	#7	#6	#5	#4	#3	#2	#1	#0
12780								ADE

[Input type] Parameter input
[Data type] Bit path

#0 ADE Deceleration area setting function is :
0: Disabled.
1: Enabled.

12781 **Coordinate value of deceleration area (+ direction)**

[Input type] Parameter input
[Data type] Real axis
[Unit of data] mm, inch, degree (machine unit)
[Min. unit of data] Depend on the increment system of the applied axis
[Valid data range] 9 digit of minimum unit of data (refer to standard parameter setting table (A))
(When the increment system is IS-B, -999999.999 to +999999.999)
Set the coordinate values of the plus direction in deceleration area boundary.
When the axis is moving in the plus direction for this parameter setting value, the deceleration is automatically performed as setting feedrate of parameter for the following auto operation.

	Parameter	
	Rapid traverse	Cutting feed
Deceleration rate	12783	12784

When the multiple axes are moving in deceleration area, the deceleration ratio is calculated for each axis, and the highest deceleration ratio is applied.

12782 **Coordinate value of deceleration area (- direction)**

[Input type] Parameter input
[Data type] Real axis
[Unit of data] mm, inch, degree (machine unit)
[Min. unit of data] Depend on the increment system of the applied axis
[Valid data range] 9 digit of minimum unit of data (refer to standard parameter setting table (A))
(When the increment system is IS-B, -999999.999 to +999999.999)
Set the coordinate values of the minus direction in deceleration area boundary.
When the axis is moving in the minus direction for this parameter setting value, the deceleration is automatically performed as setting feedrate of parameter for the following auto operation.

	Parameter	
	Rapid traverse	Cutting feed
Deceleration rate	12783	12784

When the multiple axes are moving in deceleration area, the deceleration ratio is calculated for each axis, and the highest deceleration ratio is applied.

12783 **Deceleration rate of in deceleration area (for rapid traverse)**

[Input type] Parameter input
[Data type] Real axis
[Unit of data] mm/min, inch/min, degree/min (machine unit)
[Min. unit of data] Depend on the increment system of the applied axis

[Valid data range] Refer to the standard parameter setting table (C)
(When the increment system is IS-B, 0.0 to +999000.0)
Set the rapid traverse rate of each axis in the deceleration area.
When this parameter is set to 0, this axis is not done the deceleration calculation for rapid traverse.

12784	Deceleration rate of in deceleration area (for cutting feed)

[Input type] Parameter input
[Data type] Real axis
[Unit of data] mm/min, inch/min, degree/min (machine unit)
[Min. unit of data] Depend on the increment system of the applied axis
[Valid data range] Refer to the standard parameter setting table (C)
(When the increment system is IS-B, 0.0 to +999000.0)
Set the cutting feed rate of each axis in the deceleration area.
When this parameter is set to 0, this axis is not done the deceleration calculation for cutting feed.

4.108 PARAMETERS OF DISPLAY AND EDIT (5 OF 6)

12801	**Operation history signal selection address type (No. 01)**
to	**to**
12820	**Operation history signal selection address type (No. 20)**

[Input type] Parameter input
[Data type] Byte
[Valid data range] 0 to 4

These parameters set operation history signal selection address types Nos. 1 to 20.
The correspondence between address types and settings is as given in the table below.

Address type	Parameter value
Not selected.	0
X	1
G	2
Y	3
F	4

Nos. 1 to 20 correspond to Nos. 1 to 20 on the operation history signal selection screen.
These parameters are paired with other parameters as given below.

No.	PMC path number	Address type	Address number	Bit number
01	No. 24901	No. 12801	No. 12841	No. 12881
02	No. 24902	No. 12802	No. 12842	No. 12882
03	No. 24903	No. 12803	No. 12843	No. 12883
…		…	…	…
20	No. 24920	No. 12820	No. 12860	No. 12900

NOTE

1 This parameter is valid when bit 4 (PHS) of parameter No.3206 is set to 1.
2 Operation history signals that can be selected and deselected with parameters are for the first 20 of 60 sets. If an operation history signal is specified from the operation history signal selection screen, the PMC path number is fixed at the first PMC.
3 To deselect a signal, set 0.
At this time, 0 is set as the initial value in the PMC path number (Nos. 24901 to 24920), address number (Nos. 12841 to 12860) and the bit number (Nos. 12881 to 12900) corresponding to that signal.
4 When an address type is set, 1 is set as the initial value in the PMC path number (Nos. 24901 to 24920) corresponding to that signal, and 0 is set as the initial value in the address number (Nos. 12841 to 12860) and the bit number (Nos. 12881 to 12900).
[Example]
If parameter No. 12801 is set to 2, the parameters are initialized as follows:
No. 24901=1 PMC path number
No. 12841=0 Address number
No. 12881=00000000 Bit number
If, however, the PMC path number (Nos. 24901 to 24920) corresponding to that signal is set, the PMC path number (Nos. 24901 to 24920) will not be initialized.

NOTE
5 If an attempt is made to set a value that cannot be set, a warning, "DATA IS OUT OF RANGE" appears; retry setting a value.

12841	**Operation history signal selection address number (No. 01)**
to	**to**
12860	**Operation history signal selection address number (No. 20)**

[Input type] Parameter input
[Data type] Word
[Valid data range] For an explanation of the address ranges of the G, F, X, and Y signals, refer to the PMC Programming Manual (B-64513EN).
These parameters set operation history signal selection address numbers Nos. 1 to 20.
Nos. 1 to 20 correspond to Nos. 1 to 20 on the operation history signal selection screen.
These parameters are paired with other parameters as given below.

No.	PMC path number	Address type	Address number	Bit number
01	No. 24901	No. 12801	No. 12841	No. 12881
02	No. 24902	No. 12802	No. 12842	No. 12882
03	No. 24903	No. 12803	No. 12843	No. 12883
…		…	…	…
20	No. 24920	No. 12820	No. 12860	No. 12900

NOTE
1 This parameter is valid when bit 4 (PHS) of parameter No.3206 is set to 1.
2 Operation history signals that can be selected and deselected with parameters are for the first 20 of 60 sets.
3 When an address number is set, 0 is set as the initial value in the bit number (Nos. 12881 to 12900) corresponding to that signal.
4 If an attempt is made to set a value that cannot be set or if the address type (Nos. 12801 to 12820) corresponding to that signal is 0, a warning, "DATA IS OUT OF RANGE" appears; retry setting a value.

	#7	#6	#5	#4	#3	#2	#1	#0
12881	**RB7**	**RB6**	**RB5**	**RB4**	**RB3**	**RB2**	**RB1**	**RB0**
to				**to**				
12900	**RB7**	**RB6**	**RB5**	**RB4**	**RB3**	**RB2**	**RB1**	**RB0**

[Input type] Parameter input
[Data type] Bit

RB7 - RB0 History of the respective operation history signal selection bits Nos. 1 to 20 (RB7 to RB0) corresponding to the operation history signal selection addresses set in parameters Nos. 12801 to 12860 is:
0 : Not retained. (History of the bit is not recorded.)
1 : Retained. (History of the bit is recorded.)

These parameters are paired with other parameters as given below.

No.	PMC path number	Address type	Address number	Bit number
01	No. 24901	No. 12801	No. 12841	No. 12881
02	No. 24902	No. 12802	No. 12842	No. 12882
03	No. 24903	No. 12803	No. 12843	No. 12883
…		…	…	…
20	No. 24920	No. 12820	No. 12860	No. 12900

NOTE
1 This parameter is valid when bit 4 (PHS) of parameter No.3206 is set to 1.
2 Operation history signals that can be selected and deselected with parameters are for the first 20 of 60 sets.
3 If the value of the address type (Nos. 12801 to 12820) corresponding to that signal is 0, a warning, "DATA IS OUT OF RANGE" appears; retry setting a value.

12990	**G code modal group (first one) to be recorded as history data when an alarm or an external operator message is issued**
to	**to**
12999	**G code modal group (tenth one) to be recorded as history data when an alarm or an external operator message is issued**

[Input type] Parameter input
[Data type] Byte path
[Valid data range] 1 to maximum G code group number
Set a G code modal group number to be recorded as alarm history, message history and operation history data when an alarm or an external operator message is issued.

NOTE
If a value out of the valid data range is set to the parameter, the state of the following G code group is recorded.
Group 1 is recorded when No.12990 is out of the range.
Group 2 is recorded when No.12991 is out of the range.
:
Group 10 is recorded when No.12999 is out of the range.

	#7	#6	#5	#4	#3	#2	#1	#0
13101				**PEX**		**15M**	**TPB**	

[Input type] Parameter input
[Data type] Bit

NOTE
When at least one of these parameters is set, the power must be turned off before operation is continued.

#1 TPB Baud rate used with the external touch panel
0: 19200 bps is always used.
1: The baud rate with the baud rate number set in parameter No. 0123 for channel 2 is used.

As mentioned in the description of bit 3 (TPA) of parameter No. 3119, when TPA is set to 0, the baud rate is always set to 19200 bps.
To allow the baud rate to be changed, set bit 1 (TPB) of parameter No. 13101 to 1.
This allows the baud rate number set in parameter No. 0123 for channel 2 to be used.

NOTE
Baud rates that can be set may vary depending on the external touch panel used.

#2 15M On a 15” display unit, the simultaneous multi-path display program check screen:
0: Does not display modal information.
1: Displays modal information.

#4 PEX With a 15" display unit, the mode for displaying the screen is:
0: The 15” mode.
1: The 10.4” mode.

NOTE
When a 15" display unit with personal computer for Windows CE, or CNC screen display function on PANEL i or PC connecting are used, this parameter is invalid.
In case of a 15" display unit with personal computer for WindowsCE, set bit 7 (P10) of parameter No.13115.
In case of CNC screen display function on PANEL i or PC connecting, set bit 0 (P15) of parameter No.13114.

	#7	#6	#5	#4	#3	#2	#1	#0
13102	EDT	BGI	BGD					TAD

[Input type] Parameter input
[Data type] Bit path

NOTE
When at least one of these parameters is set, the power must be turned off before operation is continued.

#0 TAD The current position display part of the setting not to display the current position (bit 0 (NDPx) of parameter No. 3115 is set to 1 or parameter No. 3130 is set to 0),
0: The set axis is displayed as blanks.
1: The axis is closed up and displayed.

#5 BGD When the background edit (bit 6 (NBG) of parameter No.8134 is 0) is enable, background editing on the CNC program edit screen is:
0: Enabled.
1: Disabled.

When MANUAL GUIDE *i* is used, set this parameter to 1 to disable background editing on the CNC program edit screen.

#6 BGI When the cursor is placed at a program, and the INPUT key is pressed on the program list screen:
0: Background editing starts.
1: Background editing does not start.

If this parameter is set to 0, pressing the INPUT key on the program list screen automatically changes the screen display to the background edit screen, allowing editing of a selected program. If the parameter is set to 1, the screen display does not change, and background editing does not start.

#7 EDT During memory operation, program editing is:
0: Enabled.
1: Disabled.

NOTE
1 When 0 is set, during memory operation, you can stop the program by a single block stop or feed hold, select the EDIT mode, and edit the program.
When the main program is running:
- The same edit functions as used for ordinary editing can be used.

When a subprogram is running:
- Only the word-unit edit function can be used.
- Any program called from DNC or MDI operation cannot be edited.
- Only the subprogram can be edited.

2 Before restarting memory operation, take extreme caution to return the cursor to the position before stopping the program. If you want to execute the program from other than the cursor position when stopped, be sure to reset the machine before executing the program.

	#7	#6	#5	#4	#3	#2	#1	#0
13112						SPI	SVI	IDW
	NTD	NTA				SPI	SVI	IDW

[Input type] Parameter input
[Data type] Bit path

#0 IDW Editing on the servo or spindle information screen is:
0: Prohibited.
1: Not prohibited.

#1 SVI The servo information screen is:
0: Displayed.
1: Not displayed.

#2 SPI The spindle information screen is:
0: Displayed.
1: Not displayed.

#6 NTA On the 3-dimensional machining manual feed screen, a table-based pulse amount is:
0: Displayed.
1: Not displayed.

#7 NTD On the 3-dimensional machining manual feed screen, a tool axis based pulse amount is:
0: Displayed.
1: Not displayed.

	#7	#6	#5	#4	#3	#2	#1	#0
13113				MDS				
				MDS	CFD			CLR

[Input type] Parameter input
[Data type] Bit path

#0 CLR Upon reset, the display of a travel distance by 3-dimensional machining manual feed is:
0: Not cleared.
1: Cleared.

#3 CFD As feedrate F, the 3-dimensional machining manual feed screen displays:
0: Composite feedrate at the linear axis/rotation axis control point.
1: Feedrate at the tool tip.

#4 MDS If a reset is made during execution of a block including the S code:
0: Modal information (S code) in an executing block is displayed.
1: Modal information (S code) in a previous block is displayed.

	#7	#6	#5	#4	#3	#2	#1	#0
13114					E19		P19	P15

[Input type] Parameter input
[Data type] Bit

#0 P15
#1 P19 The screen display mode used with the CNC screen display function is selected according to the following table.

P19	P15	Screen display mode
0	0	10.4” mode
0	1	15” mode
1	0	19” mode

NOTE
Each parameter is valid when the CNC screen display function is used for the stand-alone type 0*i* (with personal computer function with Windows XP).

#3 E19 If the display mode used with the CNC screen display function is the 15" mode:
0: Regular 15" designs are used in display.
1: 19" expansion designs are used in display.

NOTE
This parameter is valid when the CNC screen display function is used for the stand-alone type 0*i* (with personal computer function with Windows XP).

	#7	#6	#5	#4	#3	#2	#1	#0
13115	P10	KBC	SI2	SI1	IAU	ITB	IAT	ICT

[Input type] Parameter input
[Data type] Bit

#0 ICT For MDI key input, the CTRL key is:
0: Enabled.
1: Disabled.

#1 IAT For MDI key input, the ALT key is:
0: Enabled.
1: Disabled.

#2 ITB For MDI key input, the TAB key is:
0: Enabled.
1: Disabled.

#3 IAU For MDI key input, the AUX key is:
0: Enabled.
1: Disabled.

#4 SI1 Soft key input of the characters shown below is:
0: Disabled.
1: Enabled.
< > ¥ % $! ~ : " '

#5 SI2 Soft key input of the characters shown below and switching between the uppercase and lowercase input modes by a soft key are:
0: Disabled.
1: Enabled.
( ) ? * & @ _

#6 KBC With the standard ONGP-MDI unit, in the lowercase input mode, "[" and "]" are:
0: Not converted to "<" and ">", respectively.
1: Converted to "<" and ">", respectively.

When value of this parameter is set, the value will be available after the power is turned off.

#7 P10 With the 0*i* (with personal computer function with Windows CE) with a 15” display unit, when the CNC screen display function is used, the mode for displaying the screen is:
0: The 15” mode.
1: The 10.4” mode.

	#7	#6	#5	#4	#3	#2	#1	#0
13117	SQP	SQB	PMP	INT				

[Input type] Parameter input
[Data type] Bit path

#4 INT During a program restart, the interference check on cutter/tool nose radius compensation is:
0: Enabled.
1: Disabled.

#5 PMP To the MDI program that is output due to a program restart, the memory protection signals KEY1 and KEY3 are:
0: Not effective.
1: Effective.

> **NOTE**
> When 0 is set in bit 7 (KEY) of parameter No. 3290, KEY3 is used to protect the MDI program. When 1 is set in the parameter, KEY1 is used.

#6 SQB A program restart with a block number specification is:
0: Enabled.
1: Disabled.

#7 SQP A program restart with the P type is:
0: Enabled.
1: Disabled.

13125	Address type of PMC signal area which outputs the key hit status

[Input type] Parameter input
[Data type] Byte
[Valid data range] 1, 2, 11, 21
Set the address type of PMC signal area which outputs the key hit status.
The relation between the setting value and the address type is as follows.

Setting value	Address type
1	R address in 1st PMC
2	E address in 1st to 5th PMC
11	R address in 2nd PMC
21	R address in 3rd PMC

> **NOTE**
> 1 When this parameter is set, the power must be turned off before operation is continued.
> 2 The key hit status is not output if the setting value is out of range.

13126	Top address of PMC signal area which outputs the key hit status

[Input type] Parameter input
[Data type] 2-word
[Valid data range] 0 to Maximum address-7
Set the Top address of PMC signal area which outputs the key hit status.
A continuous area in 8 bytes is necessary to output the key hit status.
The maximum address in the PMC address is as follows.

	1st-3rd PMC			
	PMC memory A	PMC memory B	PMC memory C	PMC memory D
R address	R0 to R1499	R0 to R7999	R0 to R15999	R0 to R59999
E address	E0 to E9999	E0 to E9999	E0 to E9999	E0 to E9999

NOTE
1 When this parameter is set, the power must be turned off before operation is continued.
2 The key hit status is not output if the setting value is out of range.

13131	Group number for simultaneous display of multiple paths

[Input type] Parameter input
[Data type] Byte path
[Valid data range] 0 to 10

This parameter sets a group for simultaneous display on one screen in a multi-path system.
The paths set to belong to the same group are displayed on one screen.
If the values for all paths are set to 0, the simultaneous multi-path display function is disabled.

NOTE
When specifying groups, specify group numbers not less than 1 successively.
On 8.4” and 10.4” display units, up to three paths can be specified for simultaneous display.
On a 15” and 19” display units, up to four paths can be specified for simultaneous display.

13132	Simultaneous multi-path display order number

[Input type] Parameter input
[Data type] Byte path
[Valid data range] 1 to number of paths included in a simultaneous multi-path display group

This parameter sets the display order of a path defined to belong to a simultaneous multi-path display group.
Set the order, using numbers ranging from 1 to the number of paths included in the simultaneous multi-path display group.

[Example] Setting of simultaneous display group numbers and simultaneous display order numbers

Number of paths of CNC	Path	Display group number	Intra-group display order number	Screen display (Numbers represent displayed path numbers.)
One path	Path 1	1	1	1
Three path	Path 1	1	1	1 2 3
	Path 2	1	2	
	Path 3	1	3	
	Path 1	1	1	1 ⇨ 2 ⇨ 3
	Path 2	2	1	
	Path 3	3	1	
	Path 1	1	2	2 1 ⇨ 3
	Path 2	1	1	
	Path 3	2	1	

NOTE
Specify successive order numbers not less than 1 for the paths defined to belong to a group.

13140	First character in spindle load meter display
13141	Second character in spindle load meter display

[Input type] Setting input
[Data type] Byte spindle
[Valid data range] These parameters set character codes to set the name of each spindle that appears in spindle load meter display. Any character string consisting of numeric characters, alphabetical characters, katakana characters, and symbols with a maximum length of two characters can be displayed as a spindle name.
If 0 is set, the following is displayed:

1st spindle S1
2nd spindle S2
3rd spindle S3
4th spindle S4

13151	SERIAL NUMBER

[Input type] Parameter input
[Data type] Word path
[Valid data range] 0 to 9999
SERIAL NUMBER is the number for the files output to a memory card by external output command DPRNT/BPRNT. 1 is added to SERIAL NUMBER when POPEN is executed. SERIAL NUMBER becomes 0 if it exceeds 9999.

NOTE
Please do not change the value of parameter No. 13151 because it is automatically updated.

4.109 PARAMETERS OF TOOL MANAGEMENT FUNCTIONS (2 OF 2)

	#7	#6	#5	#4	#3	#2	#1	#0
13200	NFD	NAM	T0O	TP2	ETE	TRT	THN	TCF

[Input type] Parameter input
[Data type] Bit path

#0 TCF When a T code is specified with the tool management function:
0: A cartridge number and pot number found by the NC are output.
1: The specified T code is output without modification.

#1 THN When NX.T and HD.T are displayed with the tool management function:
0: The tool type numbers at the first spindle position and the first standby position are displayed.
1: The values specified from the PMC window are displayed.

#2 TRT As the remaining lifetime value for outputting the tool life arrival notice signal:
0: The remaining lifetime of the last tool is used.
1: The sum of the remaining lifetimes of the tools with the same type number is used.

> **NOTE**
> This parameter is valid when bit 3 (ETE) of parameter No. 13200 is set to 0 (arrival notice for each type number).

#3 ETE The tool life arrival notice signal is output:
0: For each tool type.
1: For each tool.

#4 TP2 The output format of cartridge management data is:
0: New registration format (G10L76P1 format).
1: Modification format (G10L76P2 format).

#5 T0O When T0 is specified:
0: A tool search is made assuming that the tool type number is 0.
1: The cartridge number and pot number are assumed to be 0.

#6 NAM When a T code is specified, but a valid tool with a remaining lifetime cannot be found:
0: The alarm PS5317, "LIVES OF ALL TOOLS EXPIRED" is issued.
1: The alarm is not issued. Instead, the tool with the maximum tool management number is selected from the tools of the specified tool type, and Life expiration signal TMFNFD<F315.6> is set to “1”.

#7 NFD When a T code is specified, but a valid tool with a remaining lifetime cannot be found in the cartridge:
0: The spindle position and standby position are also searched.
1: The spindle position and standby position are not searched.

	#7	#6	#5	#4	#3	#2	#1	#0
13201		TDS		TFT		TDB	TDN	TDC

[Input type] Parameter input
[Data type] Bit

> **NOTE**
> When at least one of these parameters is set, the power must be turned off before operation is continued.

#0 TDC The function of customizing the tool management data screen of the tool management function is:
0: Disabled.
1: Enabled.

#1 TDN On the tool management function screen, the character string for indicating the tool life status can contain:
0: Up to 6 characters.
1: Up to 12 characters.

#2 TDB The tool management function displays tool information in the:
0: Conventional mode.
1: 1/0 mode.

#4 TFT On the tool management data screen, data extraction for a specified item is:
0: Disabled.
1: Enabled.

#6 TDS A tool data search using a tool type number is:
0: Not performed.
1: Performed.

	#7	#6	#5	#4	#3	#2	#1	#0
13202	DOM	DOT		DO2		DOY	DCR	

[Input type] Parameter input
[Data type] Bit

#1 DCR On the tool management function screen, tool nose radius compensation data is:
0: Displayed.
1: Not displayed.

> **NOTE**
> This parameter is valid when the machine control type is the lathe system or compound system.

#2 DOY On the tool management function screen, Y-axis offset data is:
0: Displayed.
1: Not displayed.

> **NOTE**
> This parameter is valid when the machine control type is the lathe system or compound system.

#4 DO2 On the tool management function screen, the second geometry tool offset data is:
0: Displayed.
1: Not displayed.

> **NOTE**
> This parameter is valid when the machine control type is the lathe system or compound system.

#6 DOT On the tool management function screen, the tool offset data (X, Z) of the T series is:
0: Displayed.
1: Not displayed.

> **NOTE**
> This parameter is valid when the machine control type is the lathe system or compound system.

#7 DOM On the tool management function screen, the tool offset data of the M series is:
0: Displayed.
1: Not displayed.

NOTE
This parameter is valid when the machine control type is the machining center system or compound system.

	#7	#6	#5	#4	#3	#2	#1	#0
13203	TCN	SWC			NM4	NM3	NM2	NM1

[Input type] Parameter input
[Data type] Bit path

#0 NM1 The first cartridge is:
0: Searched.
1: Not searched.

#1 NM2 The second cartridge is:
0: Searched.
1: Not searched.

#2 NM3 The third cartridge is:
0: Searched.
1: Not searched.

#3 NM4 The fourth cartridge is:
0: Searched.
1: Not searched.

#6 SWC The tools with the same tool type number are searched for:
0: Tool with the shortest lifetime.
1: Tool with the small customization data number.
In this case, a customization data number is to be set in parameter No. 13260.

#7 TCN Tool life count operation is triggered by:
0: M06/restart M code. (A T code alone does not start counting.)
1: T code. (Count operation is not started by M06.)

	#7	#6	#5	#4	#3	#2	#1	#0
13204						DTA	ATA	TDL

[Input type] Parameter input
[Data type] Bit

#0 TDL The protection function for tool management data using a key is:
0: Disabled.
1: Enabled.

#1 ATA The tool attachment signal, magazine number signal, and pot number signal are:
0: Used. (Auto attachment)
1: Not used. (Manual attachment)

#2 DTA The tool detachment signal, magazine number signal, and pot number signal are:
0: Used. (Auto detachment)
1: Not used. (Manual detachment)

	#7	#6	#5	#4	#3	#2	#1	#0
13206				OVI			SSM	

[Input type] Parameter input
[Data type] Bit

#1 SSM As a chapter selection soft key of the tool management function, a soft key for changing the screen display to the MANUAL GUIDE i screen is:
0: Not displayed.
1: Displayed.

#4 OVI When tool management data is output, it includes:
0: No offset value.
1: Offset values.

	#7	#6	#5	#4	#3	#2	#1	#0
13210	FNS							

[Input type] Parameter input
[Data type] Bit

#7 FNS Acquisition of unused multi-edge group numbers and tool offset numbers and their display on the tool management screen are:
0: Not performed.
1: Performed.

NOTE
When this parameter is set, the power must be turned off before operation is continued.

13220	Number of valid tools in tool management data

NOTE
When this parameter is set, the power must be turned off before operation is continued.

[Input type] Parameter input
[Data type] Word
[Valid data range] 0 to 64 (Extended to 240 or 1000 by the addition of an option)
This parameter sets the number of valid tools in tool management data.

13221	M code for tool life count restart

[Input type] Parameter input
[Data type] Word path
[Valid data range] 0 to 65535
When 0 is set in this parameter, this parameter is ignored.
When an M code for tool life count restart is specified, the counting of the life of the tool attached at the spindle position is started. When the type for counting the number of use times is selected, the target of life counting is switched to the tool attached at the spindle position, and the life count is incremented by 1.

When the type for counting time is selected, the target of life counting is switched to the tool attached at the spindle position but no other operations are performed. If the tool attached at the spindle position is not a tool under tool life management, no operation is performed.
The M code set in parameter No. 6811 waits for FIN. However, the M code set in this parameter does not wait for FIN.
The M code set in parameter No. 13221 must not be specified in a block where another auxiliary function is specified.
The M code set in parameter No. 13221 does not wait for FIN. So, do not use the M code for other purposes.

NOTE
The use of this parameter varies depending on whether it is used by the tool management function or tool life management function.

13222	Number of data items in the first cartridge

NOTE
When this parameter is set, the power must be turned off before operation is continued.

[Input type] Parameter input
[Data type] Word
[Valid data range] 1 to 64 (Extended to 240 or 1000 by the addition of an option)
This parameter sets the number of data items used with the first cartridge.

13223	Start pot number of the first cartridge

NOTE
When this parameter is set, the power must be turned off before operation is continued.

[Input type] Parameter input
[Data type] Word
[Valid data range] 1 to 9999
This parameter sets the start pot number to be used with the first cartridge. Pot numbers starting with the value set in this parameter and sequentially incremented by 1 are assigned to all data items.

13227	Number of data items in the second cartridge

NOTE
When this parameter is set, the power must be turned off before operation is continued.

[Input type] Parameter input
[Data type] Word
[Valid data range] 1 to 64(Extended to 240 or 1000 by the addition of an option)
This parameter sets the number of data items used with the second cartridge.

13228	Start pot number of the second cartridge

NOTE
When this parameter is set, the power must be turned off before operation is continued.

[Input type] Parameter input
[Data type] Word
[Valid data range] 1 to 9999
This parameter sets the start pot number to be used with the second cartridge. Pot numbers starting with the value set in this parameter and sequentially incremented by 1 are assigned to all data items.

13232	Number of data items in the third cartridge

NOTE
When this parameter is set, the power must be turned off before operation is continued.

[Input type] Parameter input
[Data type] Word
[Valid data range] 1 to 64(Extended to 240 or 1000 by the addition of an option)
This parameter sets the number of data items used with the third cartridge.

13233	Start pot number of the third cartridge

NOTE
When this parameter is set, the power must be turned off before operation is continued.

[Input type] Parameter input
[Data type] Word
[Valid data range] 1 to 9999
This parameter sets the start pot number to be used with the third cartridge. Pot numbers starting with the value set in this parameter and sequentially incremented by 1 are assigned to all data items.

13237	Number of data items in the fourth cartridge

NOTE
When this parameter is set, the power must be turned off before operation is continued.

[Input type] Parameter input
[Data type] Word
[Valid data range] 1 to 64(Extended to 240 or 1000 by the addition of an option)
This parameter sets the number of data items used with the fourth cartridge.

13238	Start pot number of the fourth cartridge

NOTE
When this parameter is set, the power must be turned off before operation is continued.

[Input type] Parameter input
[Data type] Word
[Valid data range] 1 to 9999

This parameter sets the start pot number to be used with the fourth cartridge. Pot numbers starting with the value set in this parameter and sequentially incremented by 1 are assigned to all data items.

	#7	#6	#5	#4	#3	#2	#1	#0
13240					MT4	MT3	MT2	MT1

[Input type] Parameter input
[Data type] Bit

NOTE
When at least one of these parameters is set, the power must be turned off before operation is continued.

#0 MT1 The first cartridge is of the:
0: Chain type.
1: Matrix type.
When this parameter is set to 1, parameter No. 13222 is invalid.

#1 MT2 The second cartridge is of the:
0: Chain type.
1: Matrix type.
When this parameter is set to 1, parameter No. 13227 is invalid.

#2 MT3 The third cartridge is of the:
0: Chain type.
1: Matrix type.
When this parameter is set to 1, parameter No. 13232 is invalid.

#3 MT4 The fourth cartridge is of the:
0: Chain type.
1: Matrix type.
When this parameter is set to 1, parameter No. 13237 is invalid.

13241	Number of rows of the first cartridge (when the cartridge is of the matrix type)

NOTE
When this parameter is set, the power must be turned off before operation is continued.

[Input type] Parameter input
[Data type] Word
[Valid data range] 0 to 1000

When the first cartridge is of the matrix type (bit 0 (MT1) of parameter No. 13240 is set to 1), set the number of rows in the pot in this parameter. The setting must satisfy the following condition, however: The sum total of the value obtained by (setting of parameter No. 13241) × (setting of parameter No. 13242) and the number of pots of other cartridges should not exceed 64 (1000 at maximum). If this condition is not satisfied or this parameter is set to 0, the first cartridge is invalid.

13242	Number of columns of the first cartridge (when the cartridge is of the matrix type)

NOTE
When this parameter is set, the power must be turned off before operation is continued.

[Input type] Parameter input
[Data type] Word
[Valid data range] 0 to 1000

When the first cartridge is of the matrix type (bit 0 (MT1) of parameter No. 13240 is set to 1), set the number of columns in the pot in this parameter. The setting must satisfy the following condition, however: The sum total of the value obtained by (setting of parameter No. 13241) × (setting of parameter No. 13242) and the number of pots of other cartridges should not exceed 64 (1000 at maximum). If this condition is not satisfied or this parameter is set to 0, the first cartridge is invalid.

13243	Number of rows of the second cartridge (when the cartridge is of the matrix type)

NOTE
When this parameter is set, the power must be turned off before operation is continued.

[Input type] Parameter input
[Data type] Word
[Valid data range] 0 to 1000

When the second cartridge is of the matrix type (bit 1 (MT2) of parameter No. 13240 is set to 1), set the number of rows in the pot in this parameter. The setting must satisfy the following condition, however: The sum total of the value obtained by (setting of parameter No. 13243) × (setting of parameter No. 13244) and the number of pots of other cartridges should not exceed 64 (1000 at maximum). If this condition is not satisfied or this parameter is set to 0, the second cartridge is invalid.

13244	Number of columns of the second cartridge (when the cartridge is of the matrix type)

NOTE
When this parameter is set, the power must be turned off before operation is continued.

[Input type] Parameter input
[Data type] Word
[Valid data range] 0 to 1000

When the second cartridge is of the matrix type (bit 1 (MT2) of parameter No. 13240 is set to 1), set the number of columns in the pot in this parameter. The setting must satisfy the following condition, however: The sum total of the value obtained by (setting of parameter No. 13243) × (setting of parameter No. 13244) and the number of pots of other cartridges should not exceed 64 (1000 at maximum). If this condition is not satisfied or this parameter is set to 0, the second cartridge is invalid.

13245	Number of rows of the third cartridge (when the cartridge is of the matrix type)

NOTE
When this parameter is set, the power must be turned off before operation is continued.

[Input type] Parameter input
[Data type] Word
[Valid data range] 0 to 1000

When the third cartridge is of the matrix type (bit 2 (MT3) of parameter No. 13240 is set to 1), set the number of rows in the pot in this parameter. The setting must satisfy the following condition, however: The sum total of the value obtained by (setting of parameter No. 13245) × (setting of parameter No. 13246) and the number of pots of other cartridges should not exceed 64 (1000 at maximum). If this condition is not satisfied or this parameter is set to 0, the third cartridge is invalid.

13246	Number of columns of the third cartridge (when the cartridge is of the matrix type)

NOTE
When this parameter is set, the power must be turned off before operation is continued.

[Input type] Parameter input
[Data type] Word
[Valid data range] 0 to 1000

When the third cartridge is of the matrix type (bit 2 (MT3) of parameter No. 13240 is set to 1), set the number of columns in the pot in this parameter. The setting must satisfy the following condition, however: The sum total of the value obtained by (setting of parameter No. 13245) × (setting of parameter No. 13246) and the number of pots of other cartridges should not exceed 64 (1000 at maximum). If this condition is not satisfied or this parameter is set to 0, the third cartridge is invalid.

13247	Number of rows of the fourth cartridge (when the cartridge is of the matrix type)

NOTE
When this parameter is set, the power must be turned off before operation is continued.

[Input type] Parameter input
[Data type] Word
[Valid data range] 0 to 1000

When the fourth cartridge is of the matrix type (bit 3 (MT4) of parameter No. 13240 is set to 1), set the number of rows in the pot in this parameter. The setting must satisfy the following condition, however: The sum total of the value obtained by (setting of parameter No. 13247) × (setting of parameter No. 13248) and the number of pots of other cartridges should not exceed 64 (1000 at maximum). If this condition is not satisfied or this parameter is set to 0, the fourth cartridge is invalid.

13248	Number of columns of the fourth cartridge (when the cartridge is of the matrix type)

NOTE
When this parameter is set, the power must be turned off before operation is continued.

[Input type] Parameter input
[Data type] Word
[Valid data range] 0 to 1000

When the fourth cartridge is of the matrix type (bit 3 (MT4) of parameter No. 13240 is set to 1), set the number of columns in the pot in this parameter. The setting must satisfy the following condition, however: The sum total of the value obtained by (setting of parameter No. 13247) × (setting of parameter No. 13248) and the number of pots of other cartridges should not exceed 64 (1000 at maximum). If this condition is not satisfied or this parameter is set to 0, the fourth cartridge is invalid.

13250	Number of valid spindles

NOTE
When this parameter is set, the power must be turned off before operation is continued.

[Input type] Parameter input
[Data type] Byte path
[Valid data range] 0 to 4
This parameter sets the number of spindle positions usable with the tool management function.

13251	Number of valid standby positions

NOTE
When this parameter is set, the power must be turned off before operation is continued.

[Input type] Parameter input
[Data type] Byte path
[Valid data range] 0 to 4
This parameter sets the number of standby positions usable with the tool management function.

13252	M code for specifying a particular tool

[Input type] Parameter input
[Data type] Word path
[Valid data range] 0 to 65535

This parameter sets not a tool type number but an M code for directly specifying the T code of a particular tool.

13260	Customization data number to be searched for

[Input type] Parameter input
[Data type] Byte path
[Valid data range] 0 to 40

When bit 6 (SWC) of parameter No. 13203 is set to 1, this parameter sets a customization data number to be searched for.
The valid data range is 1 to 4 when customization data extension is not selected. When customization data extension (5 to 20) is selected, the valid data range is 1 to 20. When customization data extension (5 to 40) is selected, the valid data range is 1 to 40.
When bit 6 (SWC) of parameter No. 13203 is set to 0, or a value not within the valid data range is set, the search function based on customization data is disabled, and the tool with the shortest lifetime is searched for.

13265	Number for selecting a spindle position offset number

[Input type] Parameter input
[Data type] 2-word path
[Valid data range] 0 to 9999

This parameters sets an H/D code for selecting an offset number registered in the data of the tool attached at the spindle position.
When 0 is set, an ordinary used code such as H99/D99 is used. When a value other than 0 is set, H99/D99 no longer has a particular meaning. So, when H99/D99 is specified in this case, the specification of offset number 99 is assumed.
With the T series, address D only is used to specify a tool number and offset number, so that a restriction is imposed on the number of digits. So, the valid data range of this parameter varies according the number of digits of an offset number.
When the number of digits of an offset number is 1: to 9
When the number of digits of an offset number is 2: to 99
When the number of digits of an offset number is 3: to 999
When parameter No.5028 is set, the data range is as follows regardless of the number of digits of an offset number.
When parameter No.5028 is set to 1: to 9
When parameter No.5028 is set to 2: to 99
When parameter No.5028 is set to 3: to 999
When parameter No.5028 is set to 4: to 9999

NOTE
The use of this parameter varies depending on whether it is used by the tool management function or tool life management function.

4.110 PARAMETERS OF TOOL LIFE MANAGEMENT (2 OF 2)

13221	M code for tool life count restart

[Input type] Parameter input
[Data type] Word path
[Valid data range] 0 to 255 (not including 01, 02, 30, 98, and 99)

When 0 is set, this parameter is ignored.

For the operation of an M code for tool life count restart, see the description of parameter No. 6811.
This parameter is used when an M code for tool life count restart exceeds 127.
Set parameter No. 6811 to 0, and set the value of an M code in this parameter.

NOTE
The use of this parameter varies depending on whether it is used by the tool management function or tool life management function.

13265	H code for using the tool length offset in tool life management

[Input type] Parameter input
[Data type] 2-word path
[Valid data range] 0 to 9999
Usually, when H99 is specified, tool length offset is enabled by the H code of the tool being used. By setting any H code in this parameter, the H code instead of H99 can be used. If 0 is specified, H99 is assumed.
A value ranging from 0 to 9999 can be set.

NOTE
The use of this parameter varies depending on whether it is used by the tool management function or tool life management function.

13266	D code for enabling cutter compensation in tool life management

[Input type] Parameter input
[Data type] 2-word path
[Valid data range] 0 to 9999
Usually in tool life management, specifying D99 allows the D code of the tool being used to enable cutter compensation. By setting any D code in this parameter, the D code instead of D99 can be used. If 0 is set, D99 is assumed.
A value ranging from 0 to 9999 can be set.

4.111 PARAMETERS OF STRAIGHTNESS COMPENSATION (2 OF 2)

13301	Straightness compensation: Compensation point number a of moving axis 4
to	to
13304	Straightness compensation: Compensation point number d of moving axis 4
13311	Straightness compensation: Compensation point number a of moving axis 5
to	to
13314	Straightness compensation: Compensation point number d of moving axis 5
13321	Straightness compensation: Compensation point number a of moving axis 6
to	to
13324	Straightness compensation: Compensation point number d of moving axis 6

NOTE
When these parameters are set, the power must be turned off before operation is continued.

[Input type] Parameter input
[Data type] Word path
[Valid data range] 0 to 1535
These parameters set compensation point numbers in stored pitch error compensation.
Set four compensation points for each moving axis.

13351	Compensation value corresponding to compensation point number a of moving axis 4
to	to
13354	Compensation value corresponding to compensation point number d of moving axis 4
13361	Compensation value corresponding to compensation point number a of moving axis 5
to	to
13364	Compensation value corresponding to compensation point number d of moving axis 5
13371	Compensation value corresponding to compensation point number a of moving axis 6
to	to
13374	Compensation value corresponding to compensation point number d of moving axis 6

NOTE
When these parameters are set, the power must be turned off before operation is continued.

[Input type] Parameter input
[Data type] Word path
[Unit of data] Detection unit
[Valid data range] -32767 to 32767
These parameters set a compensation value for each moving axis compensation point.

13381	Number of a straightness compensation point located at the most negative position of moving axis 1
13382	Number of a straightness compensation point located at the most negative position of moving axis 2
13383	Number of a straightness compensation point located at the most negative position of moving axis 3
13384	Number of a straightness compensation point located at the most negative position of moving axis 4
13385	Number of a straightness compensation point located at the most negative position of moving axis 5
13386	Number of a straightness compensation point located at the most negative position of moving axis 6

NOTE
When these parameters are set, the power must be turned off before operation is continued.

[Input type] Parameter input
[Data type] Word path
[Valid data range] 6000 to 6767
These parameters set the number of a straightness compensation point located at the most negative position for each moving axis.
If a parameter setting exceeds the valid data range, an alarm is issued, and compensation cannot be performed.

13391	Compensation magnification for moving axis 1 in straightness compensation
13392	Compensation magnification for moving axis 2 in straightness compensation

13393	Compensation magnification for moving axis 3 in straightness compensation
13394	Compensation magnification for moving axis 4 in straightness compensation
13395	Compensation magnification for moving axis 5 in straightness compensation
13396	Compensation magnification for moving axis 6 in straightness compensation

NOTE
When these parameters are set, the power must be turned off before operation is continued.

[Input type] Parameter input
[Data type] Byte path
[Valid data range] 0 to 100
These parameters set the straightness compensation magnification for each moving axis. When 1 is set as the straightness compensation magnification, the unit of compensation data equals the detection unit. When 0 is set, straightness compensation is not performed.

4.112 PARAMETERS OF FLEXIBLE SYNCHRONIZATION CONTROL (2 OF 2)

	#7	#6	#5	#4	#3	#2	#1	#0
13420					DID	DIC	DIB	DIA

[Input type] Parameter input
[Data type] Bit path

#0 DIA The movement direction of the automatic phase synchronization of group A is:
0: + direction.
1: - direction.

#1 DIB The movement direction of the automatic phase synchronization of group B is:
0: + direction.
1: - direction.

#2 DIC The movement direction of the automatic phase synchronization of group C is:
0: + direction.
1: - direction.

#3 DID The movement direction of the automatic phase synchronization of group D is:
0: + direction.
1: - direction.

	#7	#6	#5	#4	#3	#2	#1	#0
13421				FPA	FSV	FRF	FCN	FRS

[Input type] Parameter input
[Data type] Bit path

> **NOTE**
> Set these parameters for the first path only. It will be effective to all paths.

#0 FRS In a program containing an M code for turning the flexible synchronization mode on/off, a program restart is:
0: Disabled.
1: Enabled.

#1 FCN In the emergency stop/servo off state, Inter-Path flexible synchronization control is:
0: Canceled.
1: Not canceled.

#2 FRF If G27/G28/G29/G30/G53 is specified during flexible synchronization control, alarm PS0010, “IMPROPER G-CODE” is:
0: Issued.
1: Is not issued. Commands to the master axis are possible.
Even if, however, parameter bit FRF is set to 1, and G28 is specified for the master axis in the state in which the reference position of the master axis subject to flexible synchronization control is not established, or if G27/G28/G29/G30/G53 is specified for the slave axis, alarm PS5381, “INVALID COMMAND IN FSC MODE” is issued.

> **NOTE**
> If inter-path flexible synchronization control is specified, even if 0 is set in the parameter bit FRF, the operation will be the same as that if 1 is set.

#3 FSV When the axis related to synchronization is servo off satate while flexible synchronization control or inter-path flexible synchronization control, an automatic operation is:
0: Stopped.
1: Stopped if the axis related to synchronization moves.

> **NOTE**
> In inter-path flexible synchronization control, this parameter becomes effective when parameter FCN (No.13421#1) is set to 1.

#4 FPA For a synchronization group for which a PMC axis is a master axis, when the controlled axis selection signal EAXn<Gn0136> for PMC axis control is set to "1" after starting flexible synchronization control mode, and the master axis is specified by PMC axis control, or for a synchronization group for which spindle control with servo motor is a master axis, when SV speed control mode of the master axis is turned on after starting flexible synchronization control mode:
0: Alarm is not generated.
1: Alarm PS5381 ”INVALID COMMAND IN FSC MODE” is generated.

This function generates the alarm when flexible synchronization control is operated by in the incorrect procedure.

> ⚠ **WARNING**
> When this parameter is set to 0, it operates without generating the alarm even if flexible synchronization control mode is started according to a procedure not correct. However, the position shift of a slave axis may occur.

13425	**Acceleration/deceleration time constant of the slave axis when synchronization is started/canceled (group A)**
13426	**Acceleration/deceleration time constant of the slave axis when synchronization is started/canceled (group B)**
13427	**Acceleration/deceleration time constant of the slave axis when synchronization is started/canceled (group C)**
13428	**Acceleration/deceleration time constant of the slave axis when synchronization is started/canceled (group D)**

[Input type] Parameter input
[Data type] Word path
[Unit of data] msec
[Valid data range] 0 to 4000
These parameters set the acceleration/deceleration time constants of the slave axis subject to automatic phase synchronization for flexible synchronization control.
The acceleration when synchronization is started/canceled will be as follows:
Acceleration = parameter No. 1420 / parameters Nos. 13425 to 13428

13429	**Automatic phase synchronization rate for the slave axis (group A)**
13430	**Automatic phase synchronization rate for the slave axis (group B)**
13431	**Automatic phase synchronization rate for the slave axis (group C)**
13432	**Automatic phase synchronization rate for the slave axis (group D)**

[Input type] Parameter input
[Data type] Real path
[Unit of data] mm/min, inch/min, deg/min (machine unit)
[Min. unit of data] Depend on the increment system of the applied axis
[Valid data range] Refer to the standard parameter setting table (C)
(When the increment system is IS-B, 0.0 to +999000.0)
These parameters set the automatic phase synchronization rates for the slave axis subject to automatic phase synchronization.
These rates are superimposed on the rate synchronized to the master axis.
If the setting of one of the parameters is 0, the automatic phase synchronization rate for the corresponding group will be 6 (mm/min).

13433	**Machine coordinates of the master axis used as the reference for phase synchronization (group A)**
13434	**Machine coordinates of the master axis used as the reference for phase synchronization (group B)**
13435	**Machine coordinates of the master axis used as the reference for phase synchronization (group C)**
13436	**Machine coordinates of the master axis used as the reference for phase synchronization (group D)**

[Input type] Parameter input
[Data type] Real path
[Unit of data] mm, inch, deg (machine unit)

[Min. unit of data] Depend on the increment system of the applied axis
[Valid data range] 9 digit of minimum unit of data (refer to standard parameter setting table (A))
(When the increment system is IS-B, -999999.999 to +999999.999)
These parameters set the machine coordinates of the master axis used as the reference for phase synchronization. If the setting of this parameter is 0, the origin position (coordinates: 0) of the machine coordinate system of the master axis will be the reference position for automatic phase synchronization.

13437	Threshold value for automatic phase synchronization error detection signal output (group A)
13438	Threshold value for automatic phase synchronization error detection signal output (group B)
13439	Threshold value for automatic phase synchronization error detection signal output (group C)
13440	Threshold value for automatic phase synchronization error detection signal output (group D)

[Input type] Parameter input
[Data type] Real path
[Unit of data] mm, inch, deg (machine unit)
[Min. unit of data] Depend on the increment system of the reference axis
[Valid data range] 0 or positive 9 digit of minimum unit of data (refer to the standard parameter setting table (B))
(When the increment system is IS-B, 0.000 to +999999.999)
If a difference between the master and slave axes after execution of automatic phase synchronization for flexible synchronization control exceeds the setting, the automatic phase synchronization error detection signals, PHERA, PHERB, PHERC, and PHERD <Fn553.0 to Fn553.3> become “1”.
For the inter-path flexible synchronization control, the parameter applies only to slave-axis paths.

4.113 PARAMETERS OF PROGRAMS (5 OF 5)

	#7	#6	#5	#4	#3	#2	#1	#0
13450				MFC	NRC	NRP		

[Input type] Parameter input
[Data type] Bit path

#2 NRP When the MDI reset key is pushed in the automatic operation
0: the CNC is reset.
1: the CNC is not reset.

> **NOTE**
> The parameter NRP (No.13450#2) and Reset key input invalid signal IRTKY <Gn299.7> must be set “1” for each path to enable this function.

#3 NRC When the parameter NRP (No.13450#2) is 1, and the MDI reset key is pushed in the automatic operation stop state,
0: the CNC is not reset.
1: the CNC is reset.

When the parameter NRP (No.13450#2) is 1, the table below indicates the relation between the CNC state and the MDI reset key valid / invalid.

Signal name / CNC state	Cycle start lamp STL	Feed hold lamp SPL	Automatic operation OP	MDI reset key valid / invalid
Cycle start state	1	0	1	invalid
Feed hold state	0	1	1	invalid
Automatic operation stop state	0	0	1	invalid / valid (note *)
Reset state	0	0	0	valid

(note *) When the parameter NRC (No.13450#3) is 1, the MDI reset key is valid in the automatic operation stop state.

#4 MFC When the cutting is executed without specifying a feedrate (F) after the modal G code of group 05 was changed by G93(inverse time feed(M series)) / G94(feed per minute) / G95(feed per revolution) command,

0: The feedrate (F) is inherited as a modal.

1: Alarm PS0011, “FEED ZERO (COMMAND)” is issued.

NOTE

1 In G93 mode, if the axis command and the feedrate (F) command are not in the same block, alarm PS1202, "NO F COMMAND AT G93" is issued regardless of the setting of this parameter.

2 If this parameter bit is set to 1, and if the G code of group 05 is cleared due to a reset, by setting bit 6 (CLR) of parameter No. 3402 to 1 and bit 5 (C05) of parameter No. 3406 to 0, so that the modal G code is switched, the feedrate (F) will be cleared even if bit 7 (CFH) of parameter No. 3409 is set to 1.

3 If this parameter bit is 1, and bit 7 (FC0) of parameter No. 1404 is set to 1, alarm PS0011 is not issued and the block is executed with a feedrate of 0 even if the feed selection command is used to switch the modal code of group 05 and the axis command is executed in cutting feed mode without specifying a feedrate (F). In G93 mode, alarm PS1202 is issued regardless of the setting of the parameter bit FC0.

4 If this parameter bit is 1, alarm PS0011 or PS1202 is not used even if the feed selection command is used to switch the modal code of group 05 and the axis command is executed in cutting feed mode without specifying a feedrate (F), provided that the travel distance is 0.

5 If this parameter bit is 1, alarms PS0011 and PS1202 are issued if the feed selection command is used to switch the modal code of group 05 and the axis command is executed in cutting feed mode without specifying a feedrate (F), even if cutting feedrate (parameter No. 1411) during automatic operation is set. (This is true of the M series.)

	#7	#6	#5	#4	#3	#2	#1	#0
13451							ATW	

[Input type] Parameter input

[Data type] Bit path

#1 ATW When I, J, and K are all set to 0 in a block that specifies a feature coordinate system setup command (G68.2), which is a tilted working plane indexing command:
0: An alarm PS5457, "G68.2 FORMAT ERROR" is issued.
1: A feature coordinate system with a tilted plane angle of 0 degrees is assumed for operation.

4.114 PARAMETERS OF MANUAL LINER/CIRCULAR INTERPOLATION

13541	The head address of the R signal used by the input data in the manual linear/circular interpolation

[Input type] Parameter input
[Data type] 2-word path
[Valid data range] 0 to 59999
The head address of the internal relay(R signal) of PMC used by the input data in the manual linear/circular interpolation is set. In input data, the data area in 20 bytes from the address which is set to this parameter is needed.

NOTE
1 When this parameter is set, the power must be turned off before operation is continued.
2 This parameter is valid when bit 3 (MRI) of parameter No.7106 is set to 1.
3 About setting parameters Nos. 13541 and 13542
(1) Set the value which becomes the multiple of four. (0, 4, 8, …)
(2) The address of output data and input data must not be duplicated.
(3) When the multi-path system is used, set the value which does not duplicate the data address used in other path systems.
(4) The range in R address is different depending on PMC used and the memory. Confirm the specification of PMC, and set the value within the range which can be used. (Example: R addresses in the range from R0 to R7999 if memory B of the first PMC is used.)
When the settings other than the above-mentioned ((1) to (4)) were done, the alarm PW5390, "R-ADDRESS SETTING IS ILLEGAL" is issued.
4 When this parameter is 0, an internal relay from address R0 is used.

⚠ **WARNING**
If an internal relay of the set address in this parameter is used by another usage, it may cause an unexpected machine behavior. Be careful enough that you must prevent the competition of the used internal relay.

13542	Head address of the R signal used by the output data in the manual linear/circular interpolation

[Input type] Parameter input

[Data type] 2-word path
[Valid data range] 0 to 59999
The head address of the internal relay(R signal) of PMC used by the output data in the manual linear/circular interpolation is set. In output data, the data area in 10 bytes from the address which is set to this parameter is needed.

NOTE
1 When this parameter is set, the power must be turned off before operation is continued.
2 This parameter is valid when bit 4 (MRO) of parameter No.7106 is set to 1.
3 About setting parameters Nos. 13541 and 13542
  (1) Set the value which becomes the multiple of four. (0, 4, 8, …)
  (2) The address of output data and input data must not be duplicated.
  (3) When the multi-path system is used, set the value which does not duplicate the data address used in other path systems.
  (4) The range in R address is different depending on PMC used and the memory. Confirm the specification of PMC, and set the value within the range which can be used. (Example: R addresses in the range from R0 to R7999 if memory B of the first PMC is used.)
  When the settings other than the above-mentioned ((1) to (4)) were done, the alarm PW5390, “R-ADDRESS SETTING IS ILLEGAL” is issued.
4 When this parameter is 0, an internal relay from address R0 is used.

⚠ **WARNING**
If an internal relay of the set address in this parameter is used by another usage, it may cause an unexpected machine behavior. Be careful enough that you must prevent the competition of the used internal relay.

4.115 PARAMETERS OF CANNED CYCLES FOR DRILLING M CODE OUTPUT IMPROVEMENT

13543	M code for C-axis unclamping in canned cycles for drilling (1st set)

[Input type] Parameter input
[Data type] 2-word path
[Valid data range] 0 to 99999999
This parameter sets the M code for C-axis unclamping in canned cycles for drilling (first set).

NOTE
This parameter is valid when bit 4 (CME) of parameter No. 5161 is set to 1.

13544	M code for C-axis clamping in canned cycles for drilling (2nd set)

[Input type] Parameter input
[Data type] 2-word path
[Valid data range] 0 to 99999999
This parameter sets the M code for C-axis clamping in canned cycles for drilling (second set).

NOTE
This parameter is valid when bit 4 (CME) of parameter No. 5161 is set to 1.

13545	M code for C-axis unclamping in canned cycles for drilling (2nd set)

[Input type] Parameter input
[Data type] 2-word path
[Valid data range] 0 to 99999999
This parameter sets the M code for C-axis unclamping in canned cycles for drilling (second set).

NOTE
This parameter is valid when bit 4 (CME) of parameter No. 5161 is set to 1.

4.116 PARAMETERS OF MACHINING CONDITION SELECTION FUNCTION

	#7	#6	#5	#4	#3	#2	#1	#0
13600	MSA							MCR

[Input type] Parameter input
[Data type] Bit path

#0 MCR When an allowable acceleration rate adjustment is made with the machining condition selection function, parameter No. 1735 for the deceleration function based on acceleration in circular interpolation is:
0: Modified.
1: Not modified.

#7 MSA When the machining condition selection function is used, the acceleration rate change time (bell-shaped) (LV1, LV10) is:
0: Set using parameter Nos. 13612 and 13613.
1: Set using parameter Nos. 13662 and 13663.

	#7	#6	#5	#4	#3	#2	#1	#0
13601								MPR

[Input type] Parameter input
[Data type] Bit

NOTE
When this parameter is set, the power must be turned off before operation is continued.

#0 MPR The machining parameter adjustment screen is:
0: Displayed.
1: Not displayed.
Even if 1 is set in this parameter bit, the precision level selection screen for the machining condition selecting function is displayed.

13610	**Acceleration rate for look-ahead acceleration/deceleration before interpolation in AI contour control (precision level 1)**
13611	**Acceleration rate for look-ahead acceleration/deceleration before interpolation in AI contour control (precision level 10)**

[Input type] Parameter input
[Data type] Real axis
[Unit of data] mm/sec/sec, inch/sec/sec, degree/sec/sec (machine unit)
[Min. unit of data] Depend on the increment system of the applied axis
[Valid data range] Refer to the standard parameter setting table (D)
(When the machine system is metric system, 0.0 to +100000.0. When the machine system is inch system, machine, 0.0 to +10000.0)
Each of these parameters sets an acceleration rate for look-ahead acceleration/deceleration before interpolation in AI contour control. Set a value (precision level 1) with emphasis placed on speed, and a value (precision level 10) with emphasis on precision.

13612	**Acceleration rate change time (bell-shaped) when AI contour control is used (precision level 1)**
13613	**Acceleration rate change time (bell-shaped) when AI contour control is used (precision level 10)**

[Input type] Parameter input
[Data type] Byte path
[Unit of data] msec
[Valid data range] 0 to 127
Each of these parameters sets an acceleration rate change time (bell-shaped) in AI contour control. Set a value (precision level 1) with emphasis placed on speed, and a value (precision level 10) with emphasis on precision.

13614	**Allowable acceleration rate change amount for each axis in speed control based on acceleration rate change under control on the rate of change of acceleration (precision level 1)**
13615	**Allowable acceleration rate change amount for each axis in speed control based on acceleration rate change under control on the rate of change of acceleration (precision level 10)**

[Input type] Parameter input
[Data type] Real axis
[Unit of data] mm/sec/sec, inch/sec/sec, degree/sec/sec (machine unit)
[Min. unit of data] Depend on the increment system of the applied axis
[Valid data range] Refer to the standard parameter setting table (D)
(When the machine system is metric system, 0.0 to +100000.0. When the machine system is inch system, machine, 0.0 to +10000.0)
Each of these parameters sets an allowable acceleration rate change amount per 1 ms for each axis in speed control based on acceleration rate change under control on the rate of change of acceleration during AI contour control.

Set a value (precision level 1) with emphasis placed on speed, and a value (precision level 10) with emphasis on precision.

13616	**Allowable acceleration rate change amount for each axis in speed control based on acceleration rate change under control on the rate of change of acceleration in successive linear interpolation operations (precision level 1)**
13617	**Allowable acceleration rate change amount for each axis in speed control based on acceleration rate change under control on the rate of change of acceleration in successive linear interpolation operations (precision level 10)**

[Input type] Parameter input
[Data type] Real axis
[Unit of data] mm/sec/sec, inch/sec/sec, degree/sec/sec (machine unit)
[Min. unit of data] Depend on the increment system of the applied axis
[Valid data range] Refer to the standard parameter setting table (D)
(When the machine system is metric system, 0.0 to +100000.0. When the machine system is inch system, machine, 0.0 to +10000.0)

Each of these parameters sets an allowable acceleration rate change amount per 1 ms for each axis in speed control based on acceleration rate change under control on the rate of change of acceleration in successive linear interpolation operations during AI contour control.

Set a value (precision level 1) with emphasis placed on speed, and a value (precision level 10) with emphasis on precision.

NOTE

1 For an axis with 0 set in this parameter, parameter No. 13614 and No. 13615 (allowable acceleration rate change amount in speed control based on acceleration rate change under control on the rate of change of acceleration) are valid.
2 For an axis with 0 set in parameter No. 13614 and No. 13615 (allowable acceleration rate change amount in speed control based on acceleration rate change under control on the rate of change of acceleration), speed control based on acceleration rate change is disabled, so that the specification of this parameter has no effect.

13618	**Rate of change time of the rate of change of acceleration in smooth bell-shaped acceleration/deceleration before interpolation when AI contour control is used (precision level 1)**
13619	**Rate of change time of the rate of change of acceleration in smooth bell-shaped acceleration/deceleration before interpolation when AI contour control is used (precision level 10)**

[Input type] Parameter input
[Data type] Byte path
[Unit of data] %
[Valid data range] 0 to 50

Each of these parameters sets the rate (percentage) of the change time of the rate of change of acceleration to the change time of acceleration rate change in look-ahead smooth bell-shaped acceleration/deceleration before interpolation during AI contour control.

Set a value (precision level 1) with emphasis placed on speed, and a value (precision level 10) with emphasis on precision.

NOTE
When 0 or a value not within the valid data range is set in this parameter, look-ahead smooth bell-shaped acceleration/deceleration before interpolation is not performed.

13620	Allowable acceleration rate when AI contour control is used (precision level 1)
13621	Allowable acceleration rate when AI contour control is used (precision level 10)

[Input type] Parameter input
[Data type] Real axis
[Unit of data] mm/sec/sec, inch/sec/sec, degree/sec/sec (machine unit)
[Min. unit of data] Depend on the increment system of the applied axis
[Valid data range] Refer to the standard parameter setting table (D)
(When the machine system is metric system, 0.0 to +100000.0. When the machine system is inch system, machine, 0.0 to +10000.0)
Each of these parameters sets an allowable acceleration rate in AI contour control. Set a value (precision level 1) with emphasis placed on speed, and a value (precision level 10) with emphasis on precision.

13622	Time constant for acceleration/deceleration after interpolation when AI contour control is used (precision level 1)
13623	Time constant for acceleration/deceleration after interpolation when AI contour control is used (precision level 10)

[Input type] Parameter input
[Data type] Word axis
[Unit of data] msec
[Valid data range] 1 to 512
Each of these parameters sets a time constant for acceleration/ deceleration after interpolation when AI contour control is used. Set a value (precision level 1) with emphasis placed on speed, and a value (precision level 10) with emphasis on precision.

13624	Corner speed difference when AI contour control is used (precision level 1)
13625	Corner speed difference when AI contour control is used (precision level 10)

[Input type] Parameter input
[Data type] Real axis
[Unit of data] mm/min, inch/min, degree/min (machine unit)
[Min. unit of data] Depend on the increment system of the applied axis
[Valid data range] Refer to the standard parameter setting table (C)
(When the increment system is IS-B, 0.0 to +999000.0)
Each of these parameters sets an allowable speed difference for speed determination based on corner speed difference in AI contour control. Set a value (precision level 1) with emphasis placed on speed, and a value (precision level 10) with emphasis on precision.

13626	Maximum cutting speed when AI contour control is used (precision level 1)
13627	Maximum cutting speed when AI contour control is used (precision level 10)

[Input type] Parameter input
[Data type] Real axis
[Unit of data] mm/min, inch/min, degree/min (machine unit)

[Min. unit of data] Depend on the increment system of the applied axis
[Valid data range] Refer to the standard parameter setting table (C)
(When the increment system is IS-B, 0.0 to +999000.0)
Each of these parameters sets a maximum cutting speed in AI contour control. Set a value (precision level 1) with emphasis placed on speed, and a value (precision level 10) with emphasis on precision.

13628	**Parameter number corresponding to arbitrary item 1 when AI contour control is used**
13629	**Parameter number corresponding to arbitrary item 2 when AI contour control is used**

[Input type] Parameter input
[Data type] 2-word path
[Valid data range] 1 to 65535
These parameters set the parameter numbers corresponding to arbitrary items 1 and 2.

NOTE
1 The parameter numbers corresponding to the following cannot be specified:
- Bit parameters
- Spindle parameters Nos. 4000 to 4799
- Parameters of real number type
- Parameters that require power-off (for which the alarm PW0000, “POWER MUST BE OFF” is issued)
- Nonexistent parameters

2 When these parameters are set, the power must be turned off before operation is continued.

13630	**Value with emphasis on speed (precision level 1) of the parameter corresponding to arbitrary item 1 when AI contour control is used**
13631	**Value with emphasis on speed (precision level 1) of the parameter corresponding to arbitrary item 2 when AI contour control is used**
13632	**Value with emphasis on speed (precision level 10) of the parameter corresponding to arbitrary item 1 when AI contour control is used**
13633	**Value with emphasis on speed (precision level 10) of the parameter corresponding to arbitrary item 2 when AI contour control is used**

[Input type] Parameter input
[Data type] 2-word axis
[Unit of data] Depend on the type of parameter for an arbitrary item
[Valid data range] Depend on the type of parameter for an arbitrary item
Each of these parameters sets a value with emphasis placed on speed or precision for a parameter.

13634	**Precision level currently selected when AI contour control is used**

[Input type] Parameter input
[Data type] Byte path
[Valid data range] 1 to 10
This parameter sets the level currently selected.

13662	Acceleration rate change time (bell-shaped) when AI contour control is used (precision level 1), range extended
13663	Acceleration rate change time (bell-shaped) when AI contour control is used (precision level 10), range extended

[Input type] Parameter input
[Data type] 2-word path
[Unit of data] msec
[Valid data range] 0 to 200

Each of these parameters sets an acceleration rate change time (bell-shaped) in AI contour control. Set a value (precision 1) with emphasis placed on speed, and a value (precision level 10) with emphasis on precision.

4.117 PARAMETERS OF PARAMETER CHECK SUM FUNCTION

	#7	#6	#5	#4	#3	#2	#1	#0
13730	CSR							CKS

[Input type] Parameter input
[Data type] Bit

#0 CKS A power-on, a parameter check sum check is:
0: Not performed.
1: Performed.

#7 CSR Alarm DS5340, "PARAMETER CHECK SUM ERROR" is cleared with:
0: RESET + CAN keys.
1: RESET key.

13731	Number to be excluded from the NC parameter check sum, 01
13732	Number to be excluded from the NC parameter check sum, 02
13733	Number to be excluded from the NC parameter check sum, 03
13734	Number to be excluded from the NC parameter check sum, 04
13735	Number to be excluded from the NC parameter check sum, 05
13736	Number to be excluded from the NC parameter check sum, 06
13737	Number to be excluded from the NC parameter check sum, 07
13738	Number to be excluded from the NC parameter check sum, 08
13739	Number to be excluded from the NC parameter check sum, 09
13740	Number to be excluded from the NC parameter check sum, 10
13741	Number to be excluded from the NC parameter check sum, 11
13742	Number to be excluded from the NC parameter check sum, 12
13743	Number to be excluded from the NC parameter check sum, 13
13744	Number to be excluded from the NC parameter check sum, 14

13745	Number to be excluded from the NC parameter check sum, 15
13746	Number to be excluded from the NC parameter check sum, 16
13747	Number to be excluded from the NC parameter check sum, 17
13748	Number to be excluded from the NC parameter check sum, 18
13749	Number to be excluded from the NC parameter check sum, 19
13750	Number to be excluded from the NC parameter check sum, 20

[Input type] Parameter input
[Data type] 2-word path
[Valid data range] 0 to maximum parameter number
These parameters set the numbers of the parameters to be excluded from the check sum in the parameter check sum function.

13751	Start number of the range to be excluded from the NC parameter check sum, 01
13752	Start number of the range to be excluded from the NC parameter check sum, 02
13753	Start number of the range to be excluded from the NC parameter check sum, 03
13754	Start number of the range to be excluded from the NC parameter check sum, 04
13755	Start number of the range to be excluded from the NC parameter check sum, 05
13756	Start number of the range to be excluded from the NC parameter check sum, 06
13757	Start number of the range to be excluded from the NC parameter check sum, 07
13758	Start number of the range to be excluded from the NC parameter check sum, 08
13759	Start number of the range to be excluded from the NC parameter check sum, 09
13760	Start number of the range to be excluded from the NC parameter check sum, 10
13761	Start number of the range to be excluded from the NC parameter check sum, 11
13762	Start number of the range to be excluded from the NC parameter check sum, 12
13763	Start number of the range to be excluded from the NC parameter check sum, 13
13764	Start number of the range to be excluded from the NC parameter check sum, 14
13765	Start number of the range to be excluded from the NC parameter check sum, 15
13766	Start number of the range to be excluded from the NC parameter check sum, 16
13767	Start number of the range to be excluded from the NC parameter check sum, 17
13768	Start number of the range to be excluded from the NC parameter check sum, 18
13769	Start number of the range to be excluded from the NC parameter check sum, 19
13770	Start number of the range to be excluded from the NC parameter check sum, 20

[Input type] Parameter input
[Data type] 2-word path
[Valid data range] 0 to maximum parameter number

These parameters specify the range of parameters to be excluded from the check sum in the parameter check sum function. The parameters ranging from the start number to the end number are excluded from the check sum.

NOTE
1 The parameters with the start and end numbers are also excluded.
2 In a combination of start and end numbers, if the start number is greater than the end number (start number > end number), the combination is invalid.
3 If the start and end numbers are the same (start number = end number), the single parameter with that number is excluded.

4.118 PARAMETERS OF PROFINET IO DEVICE SAFETY FUNCTION

13771	
to	to
13780	
13782	

These parameters are related to PROFINET IO Device Safety function.
For details, refer to the Industrial Ethernet CONNECTION MANUAL (B-64013EN).

4.119 PARAMETERS OF DUAL CHECK SAFETY (2 OF 2)

	#7	#6	#5	#4	#3	#2	#1	#0
13805		PDTR	NPDT					

[Input type] Parameter input
[Data type] Bit

NOTE
When at least one of these parameters is set, the power must be turned off before operation is continued.

#5 NPDT While the Dual Check Safety function is inactive (bit 6 (DCE) of parameter No. 1902=0), Data transfer between PMC and DCSPMC is:
0: Not available
1: Available

#6 PDTR Data transfer between PMC and DCSPMC is:
0: Not available
1: Available

13810	
13811	
13821	
to	to
13829	

13831	
to	to
13838	
13840	
to	to
13843	
13880	
to	to
13911	
13920	
to	to
13951	
13960	
to	to
13991	

These parameters are related to Dual Check Safety.
See Dual Check Safety CONNECTION MANUAL (B-64483EN-2) for details.

4.120 PARAMETERS OF SAFETY FUNCTION BY FL-net

13850	
to	to
13874	
13876	
to	to
13879	

These parameters are related to safety function by FL-net.
For details, refer to the FL-net Board CONNECTION MANUAL (B-64163EN).

4.121 PARAMETERS OF EtherNet/IP ADAPTER SAFETY FUNCTION

13952	
to	to
13957	
13992	
to	to
13994	

These parameters are related to EtherNet/IP Adapter Safety function.
For details, refer to the Industrial Ethernet CONNECTION MANUAL (B-64013EN).

4.122 PARAMETERS OF AXIS CONTROL/INCREMENT SYSTEM (3 OF 3)

	#7	#6	#5	#4	#3	#2	#1	#0
14000					IMRx	IRFx	INAx	

[Input type] Parameter input
[Data type] Bit axis

> **NOTE**
> When this parameter is set, the power must be turned off before operation is continued.

#1 INAx If an inch-metric switch command is executed at a position other than the reference position,
0: It is executed as usual.
1: Alarm PS5362, “CONVERT INCH/MM AT REF-POS” is issued.

> **NOTE**
> This parameter is Initial setting parameter. For details, refer to the appendix "Automatic setting / Initial setting parameter" in CONNECTION MANUAL (FUNCTION) (B-64693EN-1).

#2 IRFx An inch-metric switch command (G20, G21) at the reference position is:
0: Disabled.
1: Enabled.

> **NOTE**
> 1 When this function is enabled for an axis, if an attempt to switch between the inch and metric unit is made although the tool is not at the reference position on that axis, an alarm PS5362 is issued, and switching between the inch and metric unit is canceled.
> Be sure to move the tool to the reference position by, for example, specifying G28 before switching between the inch and metric unit.
> 2 This function enables the inch/metric switching commands (G20 and G21) at the reference position. It does not enable the switching of the setting input unit (bit 2 (INI) of parameter No.0000).
> 3 Switching between inch and metric by setting the setting input unit (bit 2 (INI) of parameter No. 0000) is enabled only when the machine coordinate of the first reference position is 0 (parameter No. 1240 is 0) and presence on the first reference position is assumed. For a system in which the machine coordinate of the first reference position is not 0, set this parameter to 1 and specify G20/G21 in the first reference position to switch between inch and metric.
> 4 When this function is disabled, the switching is enabled only when the machine coordinate of the first reference position is 0 (parameter No. 1240 is 0) and presence on the first reference position is assumed.

#3 IMRx When bit 0 (NIM) of parameter No.11222 is set to 1, the reference position return before commanding inch/metric conversion :
0: Not required.
1: Required.

> **NOTE**
> 1 Check the reference position return end signals ZP1 to ZP8 <Fn094> of the axes actually moving during Composite control.
> 2 When parking the master axis during synchronization control, check the reference position return end signals ZP1 to ZP8<Fn094> of the slave axis.
> 3 Bit 3 (IMRx) of parameter No.14000 is not set for the synchronous control on the slave axis. When IMRx = 1, the reference position return end signals ZP1 to ZP8<Fn094> of the slave axis must be "1".

4.123 PARAMETERS OF LINEAR SCALE WITH ABSOLUTE ADDRESS REFERENCE POSITION

14010	Maximum allowable travel distance when the reference position is established for a linear scale with an absolute address reference position

[Input type] Parameter input
[Data type] 2-word axis
[Unit of data] Detection unit
[Valid data range] 0 to 99999999

This parameter sets the maximum allowable travel distance at the FL rate when the reference position is established for a linear scale with an absolute address reference position. When the travel distance exceeds the setting of this parameter, the alarm DS0017, “SERIAL DCL:REF-POS ESTABLISH ERR” is issued. When this parameter is set to 0, the maximum allowable travel distance is not checked.

> **NOTE**
> 1 To establish the reference position with axis synchronous control, set the parameter for both master and slave axes.
> 2 In angular axis control, the setting of this parameter is invalid to the orthogonal axis where the reference position on the angular axis is being established.

4.124 PARAMETERS OF FSSB (1 OF 2)

	#7	#6	#5	#4	#3	#2	#1	#0
14476			SSC					

[Input type] Parameter input
[Data type] Bit

> **NOTE**
> When this parameter is set, the power must be turned off before operation is continued.

#5 SSC One connector of the separate detector interface unit is:
0: Not shared among two or more axes.
1: Shared among two or more axes.

4.125 PARAMETERS OF SERVO GUIDE Mate

Parameters Nos. 14500 to 14637 shown below hold initial values and values set by screen operations in SERVO GUIDE Mate.
These parameters are set by the CNC. So, never input values from the parameter screen.

	#7	#6	#5	#4	#3	#2	#1	#0
14500								

[Input type] Parameter input
[Data type] Bit

14501	
to	
14637	

[Input type] Parameter input
[Data type] Byte / 2-word / Real

4.126 PARAMETERS OF GRAPHIC DISPLAY (3 OF 4)

14706	Directions of the axes of the machine

[Input type] Parameter input
[Data type] Byte path
[Valid data range] 16 to 20
When the dynamic graphic display function is used, the directions of the axes of the machine (the orientations of the basic three axes of the workpiece coordinate system for the main spindle) are selected from the following and set in the parameter:
Setting 16: Right-handed coordinate system Right = +Z, up = +X
Setting 17: Right-handed coordinate system Right = -Z, up = +X
Setting 18: Right-handed coordinate system Right = -Z, up = -X
Setting 19: Right-handed coordinate system Right = +Z, up = -X
Setting 20: Right-handed coordinate system Right = +X, up = +Z

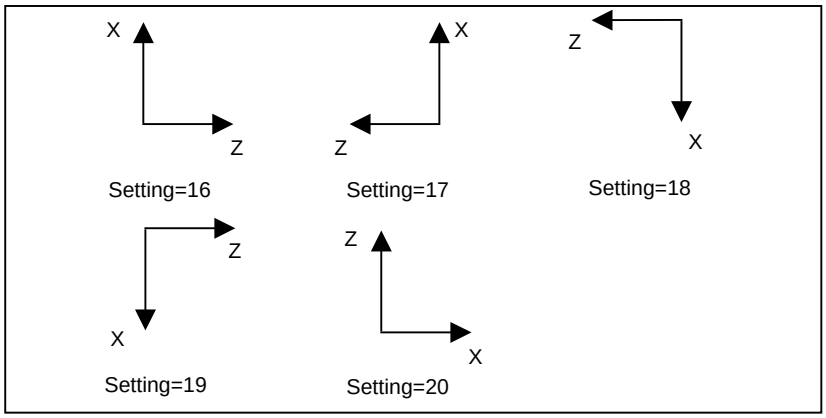

14713	Unit of magnification by which enlargement and reduction is performed with the dynamic graphic display function

[Input type] Parameter input
[Data type] Word
[Valid data range] 0 to 255
This parameter sets the unit of magnification by which enlargement and reduction is performed with the dynamic graphic display function.
Unit of magnification = 64 / setting
If 0 is set, 64 is assumed.

14714	Unit of horizontal movement when a movement is made with the dynamic graphic display function

[Input type] Parameter input
[Data type] Word
[Valid data range] 0 to 255
This parameter sets the unit of horizontal movement (in dots) applied when a movement is made with the dynamic graphic display function.
If 0 is set, 64 is assumed.

14715	Unit of vertical movement when a movement is made with the dynamic graphic display function

[Input type] Parameter input
[Data type] Word
[Valid data range] 0 to 255
This parameter sets the unit of vertical movement (in dots) applied when a movement is made with the dynamic graphic display function.
If 0 is set, 35 is assumed.

14716	Unit of rotation angle when rotation is performed with the dynamic graphic display function

[Input type] Parameter input
[Data type] Word
[Valid data range] 0 to 255
This parameter sets the unit (in degrees) of a rotation angle by which the drawing coordinate system is rotated with the dynamic graphic display function.
If 0 is set, 10 is assumed.

14717	Axis number of the rotation axis to be drawn with the dynamic graphic display function

[Input type] Parameter input
[Data type] Byte path
[Valid data range] 0 to Number of controlled axes
This parameter sets the axis number of the rotation axis to be drawn with the dynamic graphic display function.

NOTE
1 This parameter regards as objects of drawing the rotation axes to operate when the following interpolation command is executed.
  - Polar coordinate interpolation
2 Do not change the setting of this parameter while drawing is in progress.
3 Rotation axes other than those rotation axes (such as the C-axis) whose center of rotation is on the Z-axis of the three basic axes cannot be objects of drawing.

4.127 PARAMETERS OF EMBEDDED ETHERNET

	#7	#6	#5	#4	#3	#2	#1	#0
14880		DHC	DNS	UNM			PCH	ETH

[Input type] Parameter input
[Data type] Bit

#0 ETH The embedded Ethernet function (a built-in port or PCMCIA LAN card) is:
0: Used.
1: Not used.

NOTE
When this parameter is set, the power must be turned off before operation is continued.

#1 PCH At the start of communication of the FTP file transfer function for built-in port, checking for the presence of the server using PING is:
0: Performed.
1: Not performed.

NOTE
Usually, set 0.
If 1 is set not to check the presence of the server by using PING, it may take several tens of seconds to recognize an error when the server is not present in the network.
For mainly security reasons, a personal computer may be set so that it does not respond to the PING command. To communicate with such a personal computer, set 1.

#4 UNM With a built-in port, the CNC Unsolicited Messaging function is:
0: Not used.
1: Used.

NOTE
Re-setting this parameter requires turning the power off and on again or restarting the embedded Ethernet interface.

#5 DNS With a built-in port, the DNS client function is:
0: Not used.
1: Used.

> **NOTE**
> Re-setting this parameter requires turning the power off and on again or restarting the embedded Ethernet interface.

#6 DHC With a built-in port, the DHCP client function is:
0: Not used.
1: Used.

> **NOTE**
> Re-setting this parameter requires turning the power off and on again or restarting the embedded Ethernet interface.

	#7	#6	#5	#4	#3	#2	#1	#0
14882		WAL	KIE	UNS			MOD	ERD

[Input type] Parameter input
[Data type] Bit

#0 ERD Machine Remote Diagnosis function is:
0: Not used.
1: Used by embedded Ethernet.

> **NOTE**
> 1 When this parameter is set, power must be turned off before operation is continued.
> 2 When using embedded Ethernet, set No.8706#6=0.

#1 MOD The Modbus/TCP Server function is used
0: on a Fast Ethernet board.
1: on embedded Ethernet (embedded Ethernet port).

> **NOTE**
> When this parameter is set, the power must be turned off before operation is continued.

#4 UNS In the CNC Unsolicited Messaging function of a built-in port, when the end of the function is requested by other than the CNC Unsolicited Messaging server currently connected:
0: The request for the end of the function is rejected.
1: The request for the end of the function is accepted.

#5 KIE In CNC screen Web server function, key input is:
0: Disabled.
1: Enabled.

#6 WAL In CNC screen Web server function, when failing in login continuously five times, this function becomes:
0: Disabled.
1: Enabled.

NOTE
1 When this parameter is set, the power must be turned off before operation is continued.
2 When CNC screen Web server function has become disabled, restart the CNC.

	#7	#6	#5	#4	#3	#2	#1	#0
14883	PSV							

[Input type] Parameter input
[Data type] Bit

#7 PSV FTP client of FTP file transfer function:
0: Operates as the active mode.
1: Operates as the passive mode.

	#7	#6	#5	#4	#3	#2	#1	#0
14884	SNE	SNM	SNP	SNO				SNL

[Input type]Parameter input
[Data type] Bit

NOTE
When the following parameters are set, the power must be turned off before operation is continued.

#0 SNL When failing in login continuously five times from a portable terminal, CNC Status Notification function becomes:
0: Disabled.
1: Still enabled.

NOTE
When CNC Status Notification function has become disabled, please restart the CNC.

#4 SNO In CNC Status Notification function, the message mail is:
0: Not made.
1: Made.

#5 SNP The total number of machined parts, number of machined parts and number of parts required is:
0: Not included in the status mail.
1: Included in the status mail.

#6 SNM When the displayed language of CNC screen is Japanese, English or Simplified Chinese, the alarm message is:
0: Included in the alarm mail.
1: Not included in the alarm mail.

NOTE
When the displayed language of the CNC screen is neither Japanese, English nor Simplified Chinese, the alarm message is not included in the alarm mail regardless of this parameter. In this case, only the alarm number is reported.

#7 SNE CNC Status Notification function is:
0: Not used.
1: Used.

	#7	#6	#5	#4	#3	#2	#1	#0
14885							EDE	ISO

[Input type] Parameter input
[Data type] Bit

#0 ISO When the embedded Ethernet is selected as an I/O device, data input/output is performed using
0: ASCII codes.
1: ISO codes.

⚠ WARNING
1 Unless data is input using ASCII codes, set this parameter to 1 to input or output data using ISO codes.
2 Data input/output with ASCII codes is dangerous because parity information is not included and a data error during the data input/output is not detected.
3 DNC operation from the embedded Ethernet also must set the parameter to 1, and execute DNC operation by ISO code. Data input/output with ASCII codes is dangerous because parity information is not included and a data error during the data input is not detected.

#1 EDE DNC operation/M198 from the embedded Ethernet and external device subprogram call from the embedded Ethernet are:
0: Not performed.
1: Performed.

NOTE
1 When DNC operation, check that the valid device is the embedded Ethernet port.
2 When a DNC operation using the embedded Ethernet is being performed, the embedded Ethernet cannot be accessed to, for example, display the Embedded Ethernet host file list screen.
3 DNC operation cannot be performed concurrently on two paths. DNC operation can be performed on one path at a time.
4 Only one DNC operation file can be set as a system.

14890	Selects the host computer 1 OS.
14891	Selects the host computer 2 OS.
14892	Selects the host computer 3 OS.

[Input type] Parameter input
[Data type] Word
[Valid data range] 0 to 2
0: Windows95/98/Me/2000/XP/Vista/7.
1: UNIX, VMS.
2: Linux.

NOTE
Some FTP server software products do not depend on the OS. So, even when the above parameters are set, it is sometimes impossible to display a list of files properly.

4.128 PARAMETERS OF MANUAL HANDLE RETRACE (2 OF 2)

	#7	#6	#5	#4	#3	#2	#1	#0
18000							RTW	

[Input type] Parameter input
[Data type] Bit

#1 RTW At the start of a re-forward movement operation of the manual handle retrace function in a multi-path system,
0: The re-forward movement operation is performed immediately on each path.
1: Those paths for which reverse movement is prohibited are synchronized at the stop position.

	#7	#6	#5	#4	#3	#2	#1	#0
18050	OTW							

[Input type] Parameter input
[Data type] Bit path

#7 OTW If an axis move command is executed with PMC axis control during automatic operation, and the NC block under execution is stopped by a feed hold when the axis moving due to PMC axis control is completed, the amount of movement due to PMC axis control in that block is:
0: Not reflected in the NC coordinate system.
1: Reflected in the NC coordinate system.

NOTE
This parameter is Automatic setting parameter. For details, refer to the appendix "Automatic setting / Initial setting parameter" in CONNECTION MANUAL (FUNCTION) (B-64693EN-1).

18060	M code that prohibits backward movement

[Input type] Parameter input

[Data type] Word path
[Valid data range] 1 to 999
When an M code that prohibits backward movement is specified during backward movement, backward movement of blocks before the M code is prohibited. In this case, backward movement prohibition signal MRVSP<Fn091.2> is output.

The M code that prohibits backward movement is not output to the PMC as an M code. As the M code that prohibits backward movement, set an M code that is not used by auxiliary functions and macros.

18065	**M code 1 that prohibits backward movement and is output as an M code**
18066	**M code 2 that prohibits backward movement and is output as an M code**

[Input type] Parameter input
[Data type] Word path
[Valid data range] 1 to 999
When an M code that prohibits backward movement is specified during backward movement, backward movement of blocks before the M code is prohibited. In this case, backward movement prohibition signal MRVSP<Fn091.2> is output.

Such M codes that prohibits backward movement are output to the PMC as M codes. As the M codes that prohibit backward movement, set M codes that are not used by auxiliary functions and macros.

4.129 PARAMETERS OF AI CONTOUR CONTROL (2 OF 2)

	#7	#6	#5	#4	#3	#2	#1	#0
19500	FCC	FNW						

[Input type] Parameter input
[Data type] Bit path

#6 FNW When the feedrate is determined according to the feedrate difference and acceleration in AI contour control:
0: The maximum feedrate at which the allowable feedrate difference and acceleration for each axis are not exceeded is used.
1: A feedrate is determined to ensure that a constant deceleration rate is applied to the same figure regardless of the direction of movement.

#7 FCC When there is an axis that requires one or more seconds for acceleration in look-ahead acceleration/deceleration before interpolation:
0: Emphasis is placed on precision, so that the specified feedrate may not be reached.
1: Emphasis is placed on speed, so that the specified feedrate is produced.
When this parameter is set to 1, the precision of curved interpolation such as circular interpolation may decrease.

	#7	#6	#5	#4	#3	#2	#1	#0
19501			FRP					

[Input type] Parameter input
[Data type] Bit path

#5 FRP Linear rapid traverse is:
0: Acceleration/deceleration after interpolation
1: Look-ahead acceleration/deceleration before interpolation
Set a maximum allowable acceleration rate for each axis in parameter No. 1671.
When using look-ahead bell-shaped acceleration/deceleration before interpolation, set an acceleration rate change time in parameter No. 1672.

When this parameter is set to 1, look-ahead acceleration/deceleration before interpolation is also applied to rapid traverse if all conditions below are satisfied. At this time, acceleration/deceleration after interpolation is not applied.
- Bit 1 (LRP) of parameter No. 1401 is set to 1: Linear interpolation type positioning
- A value other than 0 is set in parameter No. 1671 for an axis.
- The AI contour control mode is set.

If all of these conditions are not satisfied, acceleration/deceleration after interpolation is applied.

	#7	#6	#5	#4	#3	#2	#1	#0
19503				ZOL				HPF

[Input type] Parameter input
[Data type] Bit path

#0 HPF When a feedrate is determined based on acceleration in AI contour control II, smooth feedrate control is:
0: Not used.
1: Used.

NOTE
This parameter is Initial setting parameter. For details, refer to the appendix "Automatic setting / Initial setting parameter" in CONNECTION MANUAL (FUNCTION) (B-64693EN-1).

#4 ZOL The deceleration function based on cutting load in AI contour control II (deceleration based on Z-axis fall angle) is:
0: Enabled for all commands.
1: Enabled for linear interpolation commands only.

	#7	#6	#5	#4	#3	#2	#1	#0
19515							ZG2	

[Input type] Parameter input
[Data type] Bit path

#1 ZG2 When the deceleration function based on cutting load in AI contour control II (deceleration based on Z-axis fall angle) is used:
0: Stepwise override values are applied.
1: Inclined override values are applied.
This parameter is valid only when bit 4 (ZAG) of parameter No. 8451 is set to 1.
When this parameter is set to 1, be sure to set parameter Nos. 19516, 8456, 8457, and 8458.

19516	Override for area 1 in deceleration based on cutting load in AI contour control II

[Input type] Parameter input
[Data type] Word path
[Unit of data] %
[Valid data range] 1 to 100
This parameter sets an override value for area 1 when the deceleration function based on cutting load in AI contour control II is used.
This parameter is valid only when bit 1 (ZG2) of parameter No. 19515 is set to 1.

	#7	#6	#5	#4	#3	#2	#1	#0
19517							HNG	SNG

[Input type] Parameter input
[Data type] Bit path

#0 SNG When smooth speed control is effective, by block length of the linear interpolation, smooth speed control and speed control with change of acceleration on each axis;
0: Are not invalidated.
1: Are invalidated.
When smooth speed control is effective, smooth speed control and speed control with change of acceleration on each axis are invalidated in the block longer than the block length set to parameter No. 19518 if this parameter is set to 1.

NOTE
This parameter is Initial setting parameter. For details, refer to the appendix "Automatic setting / Initial setting parameter" in CONNECTION MANUAL (FUNCTION) (B-64693EN-1).

#1 HNG By block length of the linear interpolation, speed control with acceleration on each axis and speed control with change of acceleration on each axis;
0: Are not invalidated.
1: Are invalidated.
Speed control with acceleration on each axis and speed control with change of acceleration on each axis are invalidated in the block longer than the block length set to parameter No. 19518 if this parameter is set to 1.

> **NOTE**
> This parameter is Initial setting parameter. For details, refer to the appendix "Automatic setting / Initial setting parameter" in CONNECTION MANUAL (FUNCTION) (B-64693EN-1).

19518	Block length in speed control with acceleration or smooth speed control and speed control with change of acceleration are invalidated

[Input type] Parameter input
[Data type] Real path
[Unit of data] mm, inch (input unit)
[Min. unit of data] Depend on the increment system of the reference axis
[Valid data range] 0 or positive 9 digit of minimum unit of data (refer to the standard parameter setting table (B))
(When the increment system is IS-B, 0.0 to +999999.999)
This parameter sets the block length to invalidate speed control with acceleration on each axis or smooth speed control and speed control with change of acceleration on each axis by block length of the linear interpolation.
This parameter is effective when bit 1 (HNG) of parameter No. 19517 is set to 1 or bit 0 (SNG) of parameter No. 19517 is set to 1 if smooth speed control is effective.
Speed control with acceleration on each axis of smooth speed control and speed control with change of acceleration on each axis are invalidated in the block longer than the block length set to this parameter.
If 0 is set, the specification of 10.0mm is assumed.

4.130 PARAMETERS OF CYLINDRICAL INTERPOLATION

	#7	#6	#5	#4	#3	#2	#1	#0
19530		CYS	CYA					

[Input type] Parameter input
[Data type] Bit path

#5 CYA Specifies whether to perform cylindrical interpolation cutting point compensation in the cylindrical interpolation command (G07.1).
0: Perform.
1: Do not perform.

#6 CYS Specifies whether when the cylindrical interpolation cutting point compensation function is used, cutting point compensation is performed between blocks or together with a block movement if the cutting point compensation value is less than the setting of parameter No. 19534.
0: Performed between blocks.
1: Performed together with a block movement if the cutting point compensation value is less than the setting of parameter No. 19534.

19531	Tool offset axis number for the XY plane
19532	Tool offset axis number for the ZX plane
19533	Tool offset axis number for the YZ plane

[Input type] Parameter input
[Data type] Byte path
[Valid data range] 1 to number of controlled axes
Specify a tool offset axis that intersects the cylindrical rotation axis at right angles.

19534	Limit for changing cylindrical interpolation cutting point compensation in a single block

[Input type] Parameter input
[Data type] Real path
[Unit of data] mm, inch (input unit)
[Min. unit of data] Depend on the increment system of the reference axis
[Valid data range] 1 to 999999999
The following operation is performed, depending on the setting of parameter No. 19530:

(1) Bit 6 (CYS) of parameter No. 19530 is set to 0
If the amount of cylindrical interpolation cutting point compensation is smaller than the value set in this parameter, cylindrical interpolation cutting point compensation is not performed. Instead, this ignored amount of cylindrical interpolation cutting point compensation is added to the next amount of cylindrical interpolation cutting point compensation to determine whether to perform cylindrical interpolation cutting point compensation.

(2) Bit 6 (CYS) of parameter No. 19530 is set to 1
If the amount of cylindrical interpolation cutting point compensation is smaller than the value set in this parameter, cylindrical interpolation cutting point compensation is performed together with the movement of the specified block.

NOTE
Set this parameter as follows:
Setting < (setting for a rotation axis in parameter No. 1430) × 4/3
where 4/3 is a constant for internal processing.

19535	Limit of travel distance moved with the cylindrical interpolation cutting point compensation in the previous block unchanged.

[Input type] Parameter input
[Data type] Real path
[Unit of data] mm, inch (input unit)
[Min. unit of data] Depend on the increment system of the reference axis
[Valid data range] 1 to 999999999
The following operation is performed, depending on the type of interpolation:
(1) For linear interpolation
If the travel distance in a specified block is smaller than the value set in this parameter, machining is performed without changing the cylindrical interpolation cutting point compensation in the previous block.
(2) For circular interpolation

If the diameter of a specified arc is smaller than the value set in this parameter, machining is performed without changing the cylindrical interpolation cutting point compensation in the previous block. Cylindrical interpolation cutting point compensation is not performed according to a circular movement.

4.131 PARAMETERS OF OPTIMAL TORQUE ACCELERATION/DECELERATION

	#7	#6	#5	#4	#3	#2	#1	#0
19540								FAP

[Input type] Parameter input
[Data type] Bit path

#0 FAP Optimal torque acceleration/deceleration is:
0: Disabled.
1: Enabled.
When the linear positioning parameters, namely bit 1 (LRP) of parameter No. 1401 and bit 0 (FAP) of parameter No. 19540, are set to 1, and a value other than 0 is set in reference acceleration parameter No. 1671 for an axis, the acceleration/deceleration for rapid traverse becomes optimal torque acceleration/deceleration in the mode for look-ahead acceleration/deceleration before interpolation (or the AI contour control mode). Optimal torque acceleration/ deceleration is controlled according to parameter-set restricted acceleration curve data.

Setting an acceleration pattern

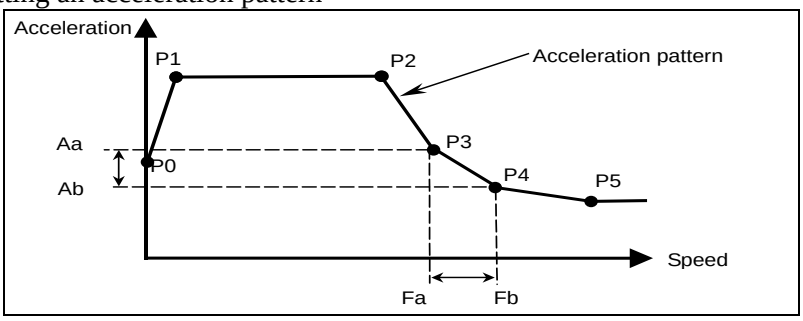

Set the speed at each of the acceleration setting points (P0 to P5) in a corresponding parameter, then in parameters for each axis, set acceleration rates applicable in the following four cases at these speeds: when a movement in the positive direction is accelerated, when a movement in the positive direction is decelerated, when a movement in the negative direction is accelerated, and when a movement in the negative direction is decelerated.
The line connecting the acceleration setting points is the acceleration pattern.
The acceleration rate for each axis is calculated. For example, between speeds Fa to Fb in the above figure, the acceleration rates corresponding to these speeds, Aa to Ab, are used for calculation.
The tangent acceleration is controlled so that it does not exceed the calculated acceleration rate for each axis.

> ⚠ **CAUTION**
> When an acceleration pattern is set, setting a high acceleration rate immediately after a speed of 0 can cause an impact on the machine, so it is not desirable. Therefore, **be sure to apply a relatively low acceleration rate at a speed of 0** as shown in the above figure.

19541	**Optimal torque acceleration/deceleration (speed at P1)**
19542	**Optimal torque acceleration/deceleration (speed at P2)**
19543	**Optimal torque acceleration/deceleration (speed at P3)**
19544	**Optimal torque acceleration/deceleration (speed at P4)**

[Input type] Parameter input
[Data type] Word axis
[Unit of data] 0.01%
[Valid data range] 0 to 10000

The speeds at acceleration setting points P1 to P4 are to be set with speed parameters Nos. 19541 to 19544 as ratios to the rapid traverse speed (parameter No. 1420). The speed at P0 is 0, and the speed at P5 is the rapid traverse rate specified with parameter No. 1420. Any acceleration setting point for which the speed parameter (one of Nos. 19541 to 19544) is set to 0 will be skipped.

19545	**Optimal torque acceleration/deceleration (acceleration at P0 during movement in + direction and acceleration)**
19546	**Optimal torque acceleration/deceleration (acceleration at P1 during movement in + direction and acceleration)**
19547	**Optimal torque acceleration/deceleration (acceleration at P2 during movement in + direction and acceleration)**
19548	**Optimal torque acceleration/deceleration (acceleration at P3 during movement in + direction and acceleration)**
19549	**Optimal torque acceleration/deceleration (acceleration at P4 during movement in + direction and acceleration)**
19550	**Optimal torque acceleration/deceleration (acceleration at P5 during movement in + direction and acceleration)**
19551	**Optimal torque acceleration/deceleration (acceleration at P0 during movement in - direction and acceleration)**
19552	**Optimal torque acceleration/deceleration (acceleration at P1 during movement in - direction and acceleration)**
19553	**Optimal torque acceleration/deceleration (acceleration at P2 during movement in - direction and acceleration)**
19554	**Optimal torque acceleration/deceleration (acceleration at P3 during movement in - direction and acceleration)**
19555	**Optimal torque acceleration/deceleration (acceleration at P4 during movement in - direction and acceleration)**
19556	**Optimal torque acceleration/deceleration (acceleration at P5 during movement in - direction and acceleration)**

19557	Optimal torque acceleration/deceleration (acceleration at P0 during movement in + direction and deceleration)
19558	Optimal torque acceleration/deceleration (acceleration at P1 during movement in + direction and deceleration)
19559	Optimal torque acceleration/deceleration (acceleration at P2 during movement in + direction and deceleration)
19560	Optimal torque acceleration/deceleration (acceleration at P3 during movement in + direction and deceleration)
19561	Optimal torque acceleration/deceleration (acceleration at P4 during movement in + direction and deceleration)
19562	Optimal torque acceleration/deceleration (acceleration at P5 during movement in + direction and deceleration)
19563	Optimal torque acceleration/deceleration (acceleration at P0 during movement in - direction and deceleration)
19564	Optimal torque acceleration/deceleration (acceleration at P1 during movement in - direction and deceleration)
19565	Optimal torque acceleration/deceleration (acceleration at P2 during movement in - direction and deceleration)
19566	Optimal torque acceleration/deceleration (acceleration at P3 during movement in - direction and deceleration)
19567	Optimal torque acceleration/deceleration (acceleration at P4 during movement in - direction and deceleration)
19568	Optimal torque acceleration/deceleration (acceleration at P5 during movement in - direction and deceleration)

[Input type] Parameter input
[Data type] Word axis
[Unit of data] 0.01%
[Valid data range] 0 to 32767
For each travel direction and each acceleration/deceleration operation, set the allowable acceleration rate at each of the acceleration setting points (P0 to P5). As an allowable acceleration rate, set a ratio to the value set in the reference acceleration parameter No. 1671. When 0 is set, the specification of 100% is assumed.

4.132 PARAMETERS OF SMOOTH TOLERANCE+ CONTROL (2 OF 2)

19595	Maximum block length for small line segments in smooth tolerance+ control mode

[Input type] Parameter input
[Data type] Real path
[Unit of data] mm, inch (input unit)
[Min. unit of data] Depend on the increment system of the reference axis
[Valid data range] Refer to the standard parameter setting table (B)
(When the increment system is IS-B, 0.0 to +999999.999)
Set maximum block length for regarding a linear block as a small line segment in smooth tolerance+ control mode. If the block length is less than the value of this parameter, smoothing of small line segments is applied to the block.

When this parameter is set to 0 or less, it operates as 5mm is set.

19596	
	Corner tolerance for linear axis in smooth tolerance+ control mode

[Input type] Parameter input
[Data type] Real path
[Unit of data] mm, inch (input unit)
[Min. unit of data] Depend on the increment system of the reference axis
[Valid data range] Refer to the standard parameter setting table (B)
(When the increment system is IS-B, 0.0 to +999999.999)
Set tolerance for linear axes in smooth tolerance+ control mode. If tolerance is not specified in tolerance mode, machining path is controlled so that the machining accuracy at corners is within the tolerance set to this parameter.
When this parameter is set to 0 or less, it operates as 10μm is set.

19597	
	Corner tolerance for rotary axis in smooth tolerance+ control mode

[Input type] Parameter input
[Data type] Real path
[Unit of data] degree (machine unit)
[Min. unit of data] Depend on the increment system of the reference axis
[Valid data range] Refer to the standard parameter setting table (B)
(When the increment system is IS-B, 0.0 to +999999.999)
Set tolerance for rotary axes in smooth tolerance+ control mode. If tolerance is not specified in tolerance mode, machining path is controlled so that the machining accuracy at corners is within the tolerance set to this parameter.
When this parameter is set to 0 or less, it operates as 0.05° is set.

19599	
	Maximum allowable acceleration rate for the deceleration function based on acceleration in smooth tolerance+ control mode for each axis

[Input type] Parameter input
[Data type] Real axis
[Unit of data] mm/sec^2, inch/sec^2, degree/sec^2 (machine unit)
[Min. unit of data] Depend on the increment system of the applied axis
[Valid data range] Refer to the standard parameter setting table (D)
(When the machine system is metric system, 0.0 to +100000.0. When the machine system is inch system, machine, 0.0 to +10000.0.)
Feedrate is controlled so that acceleration produced by changing the move direction does not exceed the value specified to this parameter in smooth tolerance+ control mode.
This parameter is valid for basic 3-axes (the axes that 1, 2, 3 are set in the parameter No.1022). This parameter of the other axes is invalid, and not necessary to be set.
For an axis with 0 set in this parameter, the deceleration function based on acceleration in smooth tolerance+ control mode is disabled.
If a different value is set to this parameter for each axis, a feedrate is determined from the smallest of the acceleration rates specified for the moving axes.

4.133 PARAMETERS OF TOOL COMPENSATION (3 OF 3)

	#7	#6	#5	#4	#3	#2	#1	#0
19602			D3D					

[Input type] Parameter input
[Data type] Bit path

#5 D3D Specifies whether to display the distance to go in the program coordinate system or workpiece coordinate system during the 3-dimensional coordinate system conversion or the tilted working plane indexing.
0: Display the distance to go in the program coordinate system.
1: Display the distance to go in the workpiece coordinate system.

	#7	#6	#5	#4	#3	#2	#1	#0
19605								NSC

[Input type] Parameter input
[Data type] Bit path

#0 NSC For the machine type that has no rotation axis for rotating the tool (when parameter No. 19680 is set to 12 to specify the table rotation type), control point shifting in the tilted working plane indexing is:
0: Enabled.
Set bit 4 (SPR) and bit 5 (SVC) of parameter No. 19665.
1: Disabled.

	#7	#6	#5	#4	#3	#2	#1	#0
19607	NAG	NAA	CAV			CCC		
	NAG	NAA	CAV			CCC		

[Input type] Parameter input
[Data type] Bit path

#2 CCC In the cutter compensation/tool nose radius compensation mode, the outer corner connection method is based on:
0: Linear connection type.
1: Circular connection type.

#5 CAV When an interference check for cutter compensation/tool nose radius compensation finds that interference (overcutting) occurred:
0: Machining stops with the alarm PS0041, “INTERFERENCE IN CUTTER COMPENSATION”.
(Interference check alarm function)
1: Machining is continued by changing the tool path to prevent interference (overcutting) from occurring. (Interference check avoidance function)
For the interference check method, see the descriptions of bits 1 (CNC) and 3 (CNV) of parameter No. 5008.

#6 NAA When the interference check avoidance function for cutter compensation/tool nose radius compensation considers that an avoidance operation is dangerous or that a further interference to the interference avoidance vector occurs:

0: An alarm is issued.
When an avoidance operation is considered to be dangerous, the alarm PS5447 is issued.
When a further interference to the interference avoidance vector is considered to occur, the alarm PS5448 is issued.

1: No alarm is issued, and the avoidance operation is continued.

> ⚠ **CAUTION**
> When this parameter is set to 1, the path may be shifted largely. Therefore, set this parameter to 0 unless special reasons are present.

#7 NAG If the gap vector length is 0 when the interference check avoidance function for cutter compensation/tool nose radius compensation is used:

0: Avoidance operation is performed.
1: Avoidance operation is not performed.

	#7	#6	#5	#4	#3	#2	#1	#0
19608			PRI					

[Input type] Parameter input
[Data type] Bit path

#5 PRI Among multiple end point candidates that exist when a movement is made on a rotation axis by a command such as I, J, and K when a is specified:

0: A combination in which the master (first rotation axis) makes a smaller angular movement is selected for a machine of tool rotation type or table rotation type. A combination in which the table (second rotation axis) makes a smaller angular movement is selected for a machine of composite type.
1: A combination in which the slave (second rotation axis) makes a smaller angular movement is selected for a machine of tool rotation type or table rotation type. A combination in which the tool (first rotation axis) makes a smaller angular movement is selected for a machine of composite type.

	#7	#6	#5	#4	#3	#2	#1	#0
19609							CCT	

[Input type] Parameter input
[Data type] Bit path

#1 CCT The cancellation of the G codes in group 08 is:

0: Specified by G49.
1: Able to be specified by G49.1 as well.

If G49 is specified when cancellation using G49.1 is set, the G codes of group 08 are canceled.

19625	Number of blocks to be read in the cutter compensation/tool nose radius compensation mode

[Input type] Setting input
[Data type] Byte path
[Valid data range] 3 to 8

This parameter sets the number of blocks to be read in the cutter compensation/tool nose radius compensation mode. When a value less than 3 is set, the specification of 3 is assumed. When a value greater than 8 is set, the specification of 8 is assumed. As a greater number of blocks are read, an overcutting (interference) forecast can be made with a command farther ahead. However, the number of blocks read and analyzed increases, so that a longer block processing time becomes necessary.

Even if the setting of this parameter is modified in the MDI mode by stopping in the cutter compensation/tool nose radius compensation mode, the setting does not become valid immediately. Before the new setting of this parameter can become valid, the cutter compensation/tool noise radius compensation mode must be canceled, then the mode must be entered again.

19631	Variation for determining an angle when the leading-edge offset function is performed

[Input type] Parameter input
[Data type] Real axis
[Unit of data] degree
[Min. unit of data] Depend on the increment system of the reference axis
[Valid data range] 9 digit of minimum unit of data (refer to standard parameter setting table (A))
(When the increment system is IS-B, -999999.999 to +999999.999)
In the leading-edge offset function is performed, this parameter sets the range of variations applicable when the included angle of the tool direction vector (VT) and the advancing direction vector (VM) is determined to be 0°, 180°, or 90°.
For example, let the included angle between VT and VM be θ ($0 \le \theta \le 180$) and the angle set in this parameter be $\Delta\theta$. θ is then determined as follows:

If $0 \le \theta \le \Delta\theta$ $\theta = 0°$
$(180-\Delta\theta) \le \theta \le 180$ $\theta = 180°$
$(90-\Delta\theta) \le \theta \le (90+\Delta\theta)$ $\theta = 90°$

Normally, set a value around 1.0.

	#7	#6	#5	#4	#3	#2	#1	#0
19640						RS3	RS2	RS1
						RS3	RS2	RS1

[Input type] Parameter input
[Data type] Bit path

 # 0 RS1
 # 1 RS2 The tool nose rotation axis and the swivel head axis is set by the setting of the rotation axis selected by bit 0 to 2 of the parameter No.19640.

Setting of 1st rotation axis :parameter No.19681, 19682
Setting of 2nd rotation axis :parameter No.19686, 19687

RS2	RS1	Tool nose rotation axis	Swivel head axis
0	0	1st axis	2nd axis
1	0	2nd axis	1st axis

	#7	#6	#5	#4	#3	#2	#1	#0
19641						INW	SRD	TRD
						INW	SRD	TRD

[Input type] Parameter input

[Data type] Bit path

 # 0 TRD Reference angle of the tool nose rotation axis is
0: 0 degree.
1: 180 degree.

 # 1 SRD Direction of rotation of the swivel head axis is
0: Counterclockwise.
1: Clockwise.

 # 2 INW Amount of wear is
0: Taken into account in the offset calculate.
1: Not taken into account in the offset calculate.

19642	Reference angle of the swivel head axis

[Input type] Parameter input
[Data type] Real path
[Unit of data] degree
[Valid data range] 0.0 to 360.0
Set the reference angle of the swivel head axis at tool measure position.

4.134 PARAMETERS OF TILTED WORKING PLANE INDEXING / 3-DIMENSIONAL MANUAL FEED (M SERIES)

19656	Tool axis direction

[Input type] Parameter input
[Data type] Byte path
[Valid data range] 1 to 3
Enter the tool axis direction when the two rotation axes are set at 0 degrees.

Data	Tool axis direction
1	X-axis
2	Y-axis
3	Z-axis

19657	Master rotation axis number

[Input type] Parameter input
[Data type] Byte path
[Valid data range] 0 to Number to controlled axes
When a machine does not have the rotation axis that rotates about the tool axis, this parameter sets the axis number of a rotation axis used as the master axis. For a machine not using the master-axis configuration, set 0.
When the tool axis direction is controlled by two rotation axes, neither of which rotates about the tool axis, one of the rotation axes is mounted on the other rotation axis as shown in the figure below. In this case, the rotation axis on which the other rotation axis is mounted is called the master axis.

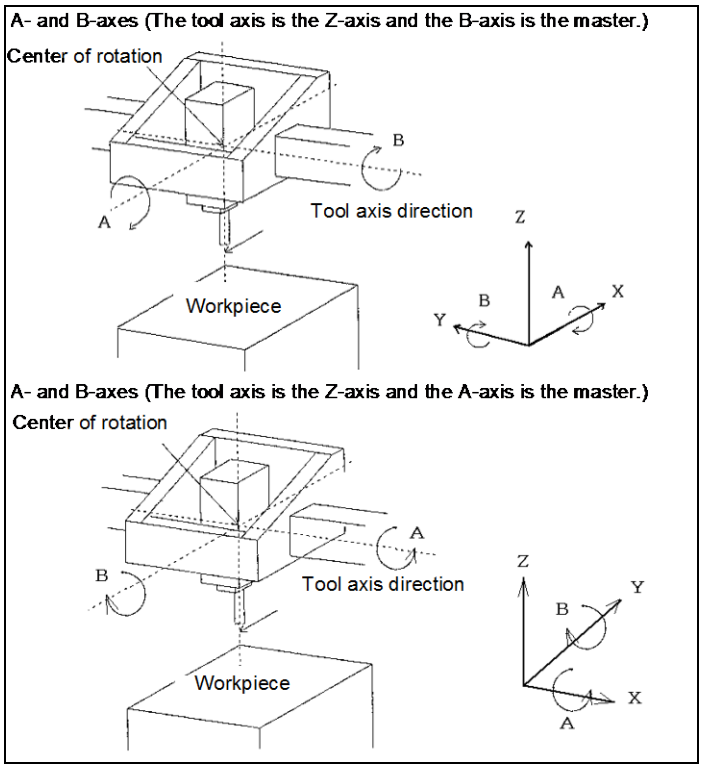

Example of setting parameters that determine the machine configuration
Tool axis direction: Z-axis
Axis configuration: W, X, Y, Z, A, and B
Rotation axes: A-axis (rotating about the X-axis) and B-axis (rotating about the Y-axis)
Master axis: A-axis

Parameter number	Data					
No. 19655	X	Y	Z	W	A	B
	0	0	0	0	1	2
No. 19656	3					
No. 19657	5					

	#7	#6	#5	#4	#3	#2	#1	#0
19665	ETH		SVC	SPR				

[Input type] Parameter input
[Data type] Bit path

#4 SPR The controlled point is shifted by:
0: Automatic calculation.
1: Using parameter No. 19667.

Bit 5 (SVC) of parameter No. 19665	Bit 4 (SPR) of parameter No. 19665	Shift of controlled point
0	-	Shift is not performed as not done conventionally.

Bit 5 (SVC) of parameter No. 19665	Bit 4 (SPR) of parameter No. 19665	Shift of controlled point
1	0	The controlled point is shifted according to the result of the following automatic calculation: - (Intersection offset vector between the tool axis and the first rotation axis of the tool + intersection offset vector between the second and first rotation axes of the tool + tool holder offset (parameter No. 19666)) (See the figure next.)
1	1	The controlled point is shifted. As the shift vector, the vector set in parameter No. 19667 is used.

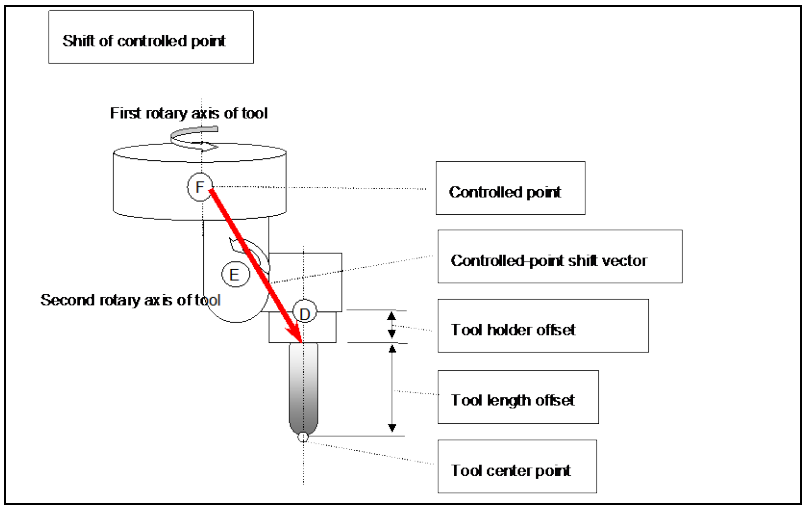

[Controlled-point shift vector when automatically calculated]

#5 SVC The controlled point is:
0: Not shifted.
1: Shifted.
The method of shifting is specified by bit 4 (SPR) of parameter No. 19665.

> **NOTE**
> When the machine has no rotation axis for rotating the tool (when parameter No. 19680 is set to 12 to specify the table rotation type), the controlled point is not shifted regardless of the setting of this parameter.

#7 ETH The tool holder offset function in tool length compensation is:
0: Disabled.
1: Enabled.

19666	Tool holder offset value

[Input type] Parameter input
[Data type] Real path
[Unit of data] mm, inch (machine unit)
[Min. unit of data] Depend on the increment system of the reference axis
[Valid data range] 9 digit of minimum unit of data (refer to standard parameter setting table (A))
(When the increment system is IS-B, -999999.999 to +999999.999)

Set an offset value (tool holder offset value) specific to the machine from the control point to the tool attachment position in tool length compensation (after specification of G53.1 in the tilted working plane indexing mode). In tool length compensation (not in the tilted working plane indexing mode), however, tool holder offset can be enabled or disabled with bit 7 (ETH) of parameter No. 19665.

NOTE
Set a radius value.

19667	Controlled-point shift vector

[Input type] Parameter input
[Data type] Real axis
[Unit of data] mm, inch (machine unit)
[Min. unit of data] Depend on the increment system of the applied axis
[Valid data range] 9 digit of minimum unit of data (refer to standard parameter setting table (A))
(When the increment system is IS-B, -999999.999 to +999999.999)
Set the shift vector for the controlled point. This value becomes valid when bit 5 (SVC) of parameter No. 19665 is set to 1, and bit 4 (SPR) of parameter No. 19665 is set to 1.

NOTE
Set a radius value.

19680	Mechanical unit type

[Input type] Parameter input
[Data type] Byte path
[Valid data range] 0 to 21
Specify the type of the mechanical unit.

Parameter No. 19680	Mechanical unit type	Controlled rotation axis	Master and slave
0		Mechanism having no rotation axis	
2	Tool rotation type	Two rotation axes of the tool	The first rotation axis is the master, and the second rotation axis is the slave.
12	Table rotation type	Two rotation axes of the table	The first rotation axis is the master, and the second rotation axis is the slave.
21	Mixed type	One rotation axis of the tool + one rotation axis of the table	The first rotation axis is the tool rotation axis, and the second rotation axis is the table rotation axis.

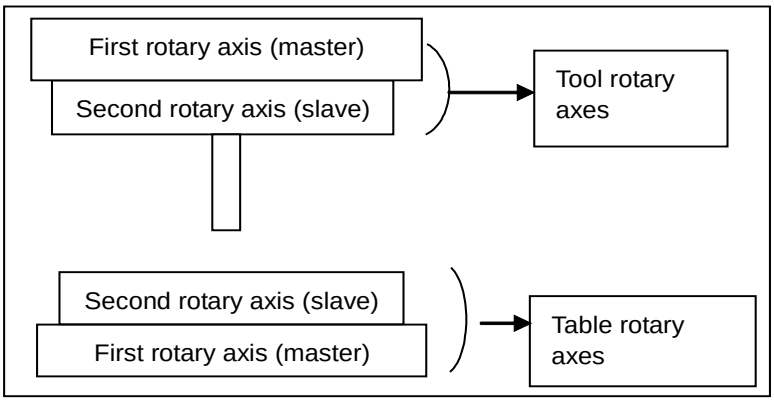

NOTE

A hypothetical axis is also counted as a controlled rotary axis.

<Hypothetical axis>

In some cases, it is convenient to use an imaginary rotary axis whose angle is fixed to a certain value. For example, suppose that a tool is mounted in a tilted manner through an attachment. In such a case, the rotary axis considered hypothetically is a hypothetical axis. Bits 0 (IA1) and 1 (IA2) of parameter No. 19696 determine whether each rotary axis is an ordinary rotary axis or a hypothetical axis.

19681	Controlled-axis number for the first rotation axis

[Input type] Parameter input
[Data type] Byte path
[Valid data range] 0 to Number of controlled axes
Set the controlled-axis number for the first rotation axis.
For a hypothetical axis (when bit 0 (IA1) of parameter No. 19696 is 1), set 0.
[Example] Assuming that the axis configuration in path 1 is X,Y,Z,B,C and the axis configuration in path 2 is X,Z,C,Y,B, set the parameter to 5 in path 1 and to 3 in path 2 if C is the first rotation axis in each path.

19682	Axis direction of the first rotation axis

[Input type] Parameter input
[Data type] Byte path
[Valid data range] 0 to 3
Specify the axis direction of the first rotation axis.
1: On X-axis
2: On Y-axis
3: On Z-axis

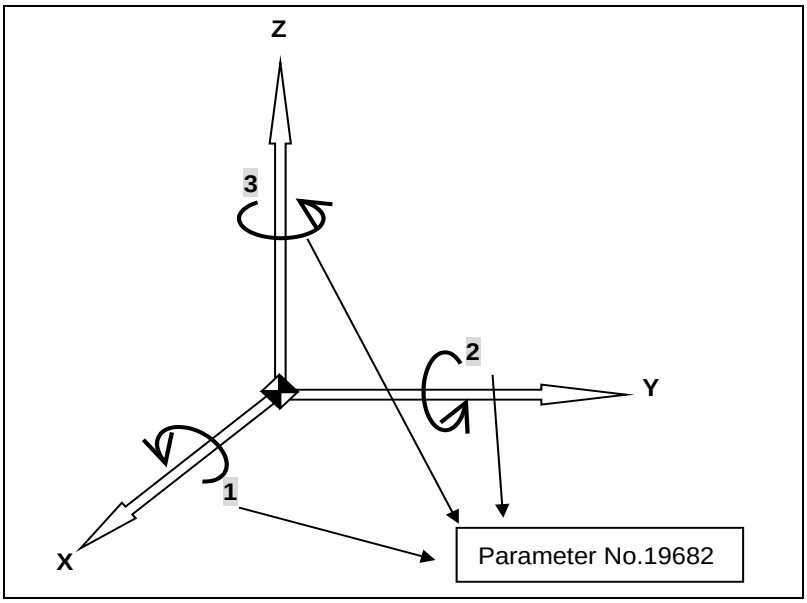

19684	Rotation direction of the first rotation axis

[Input type] Parameter input
[Data type] Byte path

[Valid data range] 0 to 1
Set the direction in which the first rotation axis rotates as a mechanical motion when a positive move command is issued.
0: Clockwise direction as viewed from the negative to positive direction of the axis specified in parameter No. 19682 (right-hand thread rotation)
1: Counterclockwise direction as viewed from the negative to positive direction of the axis specified in parameter No. 19682 (left-hand thread rotation)
Normally, 0 is set for a tool rotation axis, and 1 is set for a table rotation axis.

19685	Rotation angle when the first rotation axis is a hypothetical axis

[Input type] Parameter input
[Data type] Real path
[Unit of data] Degree
[Min. unit of data] Depend on the increment system of the reference axis
[Valid data range] 9 digit of minimum unit of data (refer to standard parameter setting table (A))
(When the increment system is IS-B, -999999.999 to +999999.999)
When the first rotation axis is a hypothetical axis (bit 0 (IA1) of parameter No. 19696 is 1), set the rotation angle.

19686	Controlled-axis number for the second rotation axis

[Input type] Parameter input
[Data type] Byte path
[Valid data range] 0 to Number of controlled axes
Set the controlled-axis number for the second rotation axis.
For a hypothetical axis (bit 1 (IA2) of parameter No. 19696 is 1), set 0.
[Example] Assuming that the axis configuration in path 1 is X,Y,Z,B,C and the axis configuration in path 2 is X,Z,C,Y,B, set the parameter to 4 in path 1 and to 5 in path 2 if B is the second rotation axis in each path.

19687	Axis direction of the second rotation axis

[Input type] Parameter input
[Data type] Byte path
[Valid data range] 0 to 3
Specify the axis direction of the second rotation axis.
1: On X-axis
2: On Y-axis
3: On Z-axis
When the second rotation axis is the slave axis, the direction when the master axis is at 0 degrees must be set.

19689	Rotation direction of the second rotation axis

[Input type] Parameter input
[Data type] Byte path
[Valid data range] 0 to 1
Set the direction in which the second rotation axis rotates as a mechanical motion when a positive move command is issued.
0: Clockwise direction as viewed from the negative to positive direction of the axis specified in parameter No. 19687 (right-hand thread rotation)
1: Counterclockwise direction as viewed from the negative to positive direction of the axis specified in parameter No. 19687 (left-hand thread rotation)
Normally, 0 is set for a tool rotation axis, and 1 is set for a table rotation axis.

19690	Rotation angle when the second rotation axis is a hypothetical axis

[Input type] Parameter input
[Data type] Real path
[Unit of data] Degree
[Min. unit of data] Depend on the increment system of the reference axis
[Valid data range] 9 digit of minimum unit of data (refer to standard parameter setting table (A))
(When the increment system is IS-B, -999999.999 to +999999.999)
When the second rotation axis is a hypothetical axis (bit 1 (IA2) of parameter No. 19696 is 1), set the rotation angle.

	#7	#6	#5	#4	#3	#2	#1	#0
19696							IA2	IA1

[Input type] Parameter input
[Data type] Bit path

#0 IA1 0: The first rotation axis is an ordinary rotation axis.
1: The first rotation axis is a hypothetical axis.
If IA1 is 1, set 0 as the controlled-axis number for the first rotation axis (parameter No. 19681).
Also, set parameter Nos. 19682 to 19685 on the assumption that there is a rotation axis.

#1 IA2 0: The second rotation axis is an ordinary rotation axis.
1: The second rotation axis is a hypothetical axis.
If IA2 is 1, set 0 as the controlled-axis number for the second rotation axis (parameter No. 19686).
Also, set parameter Nos. 19687 to 19690 on the assumption that there is a rotation axis.

19697	Reference tool axis direction

[Input type] Parameter input
[Data type] Byte path
[Valid data range] 0 to 3
Set the tool axis direction in the machine coordinate system when the rotation axes for controlling the tool are all at 0 degrees. Also, set the tool axis direction in the machine coordinate system in a mechanism in which only the rotation axes for controlling the table are present (there is no rotation axis for controlling the tool).
1: Positive X-axis direction
2: Positive Y-axis direction
3: Positive Z-axis direction
When the reference tool axis direction is neither the X-, Y-, nor Z-axis direction, set the reference direction in this parameter, then set appropriate angles as the reference angle RA and reference angle RB (parameter Nos. 19698 and 19699).

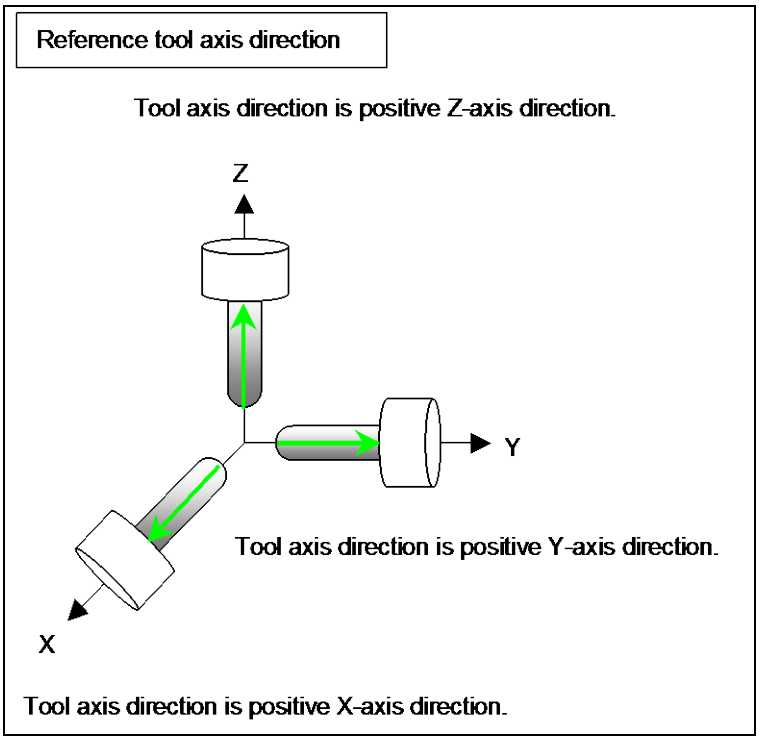

19698	Angle when the reference tool axis direction is tilted (reference angle RA)
19699	Angle when the reference tool axis direction is tilted (reference angle RB)

[Input type] Parameter input
[Data type] Real path
[Unit of data] Degree
[Min. unit of data] Depend on the increment system of the reference axis
[Valid data range] 9 digit of minimum unit of data (refer to standard parameter setting table (A))
(When the increment system is IS-B, -999999.999 to +999999.999)
When the reference tool axis direction (parameter No. 19697) is set to 1, the tool axis is tilted the RA degrees on the Z-axis from the positive X-axis direction to positive Y-axis direction, then the tool axis is tilted the RB degrees on the X-axis from the positive Y-axis direction to positive Z-axis direction.
When the reference tool axis direction (parameter No. 19697) is set to 2, the tool axis is tilted the RA degrees on the X-axis from the positive Y-axis direction to positive Z-axis direction, then the tool axis is tilted the RB degrees on the Y-axis from the positive Z-axis direction to positive X-axis direction.
When the reference tool axis direction (parameter No. 19697) is set to 3, the tool axis is tilted the RA degrees on the Y-axis from the positive Z-axis direction to positive X-axis direction, then the tool axis is tilted the RB degrees on the Z-axis from the positive X-axis direction to positive Y-axis direction.

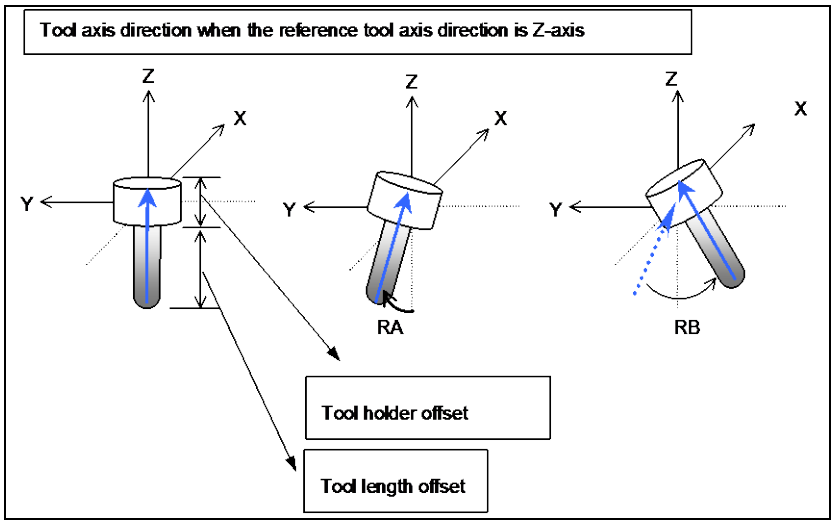

19700	**Rotary table position (X-axis of the basic three axes)**
19701	**Rotary table position (Y-axis of the basic three axes)**
19702	**Rotary table position (Z-axis of the basic three axes)**

[Input type] Parameter input
[Data type] Real path
[Unit of data] mm, inch (machine unit)
[Min. unit of data] Depend on the increment system of the applied axis
[Valid data range] 9 digit of minimum unit of data (refer to standard parameter setting table (A))
(When the increment system is IS-B, -999999.999 to +999999.999)
Set these parameters when parameter No. 19680 is set to 12 or 21. The vector from the origin of the machine coordinate system to point A on the first rotation axis of the table is set as the rotary table position in the machine coordinate system.

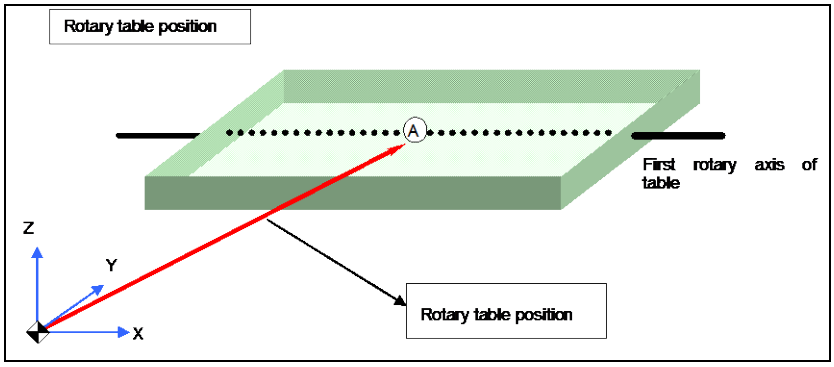

NOTE

As point A, set a position that is easy to measure on the first rotary axis of the table.
Set a radius value.
If the rotary table is moved along the X-, Y-, or Z-axis or all of these axes, set the position of the rotary table when the machine coordinates of the X-, Y-, and Z-axes are all set to 0.

19703	**Intersection offset vector between the first and second rotation axes of the table (X-axis of the basic three axes)**
19704	**Intersection offset vector between the first and second rotation axes of the table (Y-axis of the basic three axes)**
19705	**Intersection offset vector between the first and second rotation axes of the table (Z-axis of the basic three axes)**

[Input type] Parameter input
[Data type] Real path
[Unit of data] mm, inch (machine unit)
[Min. unit of data] Depend on the increment system of the applied axis
[Valid data range] 9 digit of minimum unit of data (refer to standard parameter setting table (A))
(When the increment system is IS-B, -999999.999 to +999999.999)
Set these parameters when the first rotation axis and second rotation axis of the table do not intersect. These parameters are valid when parameter No. 19680 is set to 12. When the rotation axes for controlling the table are all at 0 degrees, the vector from point A to point B on the second rotation axis of the table is set as the intersection offset vector in the machine coordinate system.

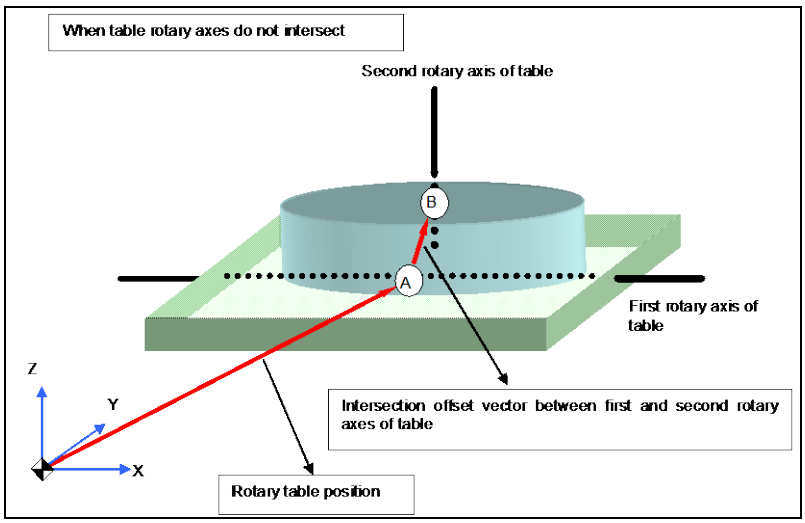

NOTE
As point B, set a position that is easy to measure on the second rotary axis of the table.
Set a radius value.

19709	**Intersection offset vector between the tool axis and tool rotation axis (X-axis of the basic three axes)**
19710	**Intersection offset vector between the tool axis and tool rotation axis (Y-axis of the basic three axes)**
19711	**Intersection offset vector between the tool axis and tool rotation axis (Z-axis of the basic three axes)**

[Input type] Parameter input
[Data type] Real path
[Unit of data] mm, inch (machine unit)
[Min. unit of data] Depend on the increment system of the applied axis
[Valid data range] 9 digit of minimum unit of data (refer to standard parameter setting table (A))
(When the increment system is IS-B, -999999.999 to +999999.999)
Set these parameters when the tool axis and tool rotation axis do not intersect.
These parameters are valid when parameter No. 19680 is set to 2 or 21.

If parameter No. 19680 is 21, set the vector from point D on the tool axis to point E determined on the tool rotation axis as the intersection offset vector in the machine coordinate system when the rotation axes for controlling the tool are all at 0 degrees.
If parameter No. 19680 is 2, set the vector from point D on the tool axis to point E determined on the second rotation axis of the tool as the intersection offset vector in the machine coordinate system when the rotation axes for controlling the tool are all at 0 degrees.

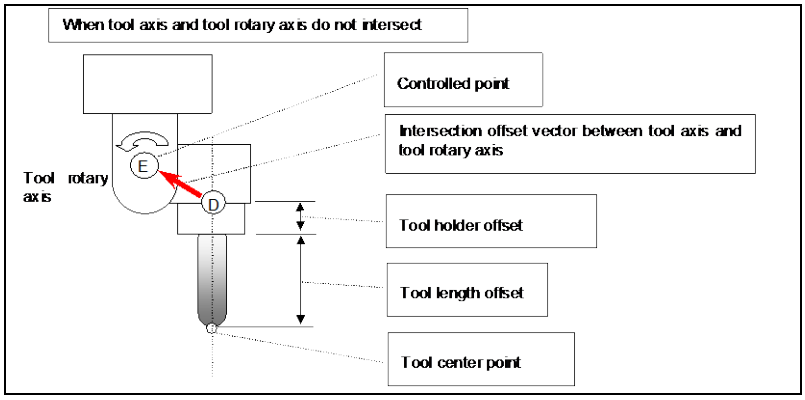

NOTE
Point D is determined by adding the tool length offset and tool holder offset (parameter No. 19666) to the tool tip. As point E, set a position that is easy to measure.
Set a radius value.

19712	**Intersection offset vector between the second and first rotation axes of the tool (X-axis of the basic three axes)**
19713	**Intersection offset vector between the second and first rotation axes of the tool (Y-axis of the basic three axes)**
19714	**Intersection offset vector between the second and first rotation axes of the tool (Z-axis of the basic three axes)**

[Input type] Parameter input
[Data type] Real path
[Unit of data] mm, inch (machine unit)
[Min. unit of data] Depend on the increment system of the applied axis
[Valid data range] 9 digit of minimum unit of data (refer to standard parameter setting table (A))
(When the increment system is IS-B, -999999.999 to +999999.999)
Set these parameters when the rotation axes of the tool do not intersect.
These parameters are valid when parameter No. 19680 is set to 2.
Set the vector from point E on the second rotation axis of the tool to point F on the first rotation axis of the tool as the intersection offset vector in the machine coordinate system when the rotation axes for controlling the tool are all at 0 degrees.

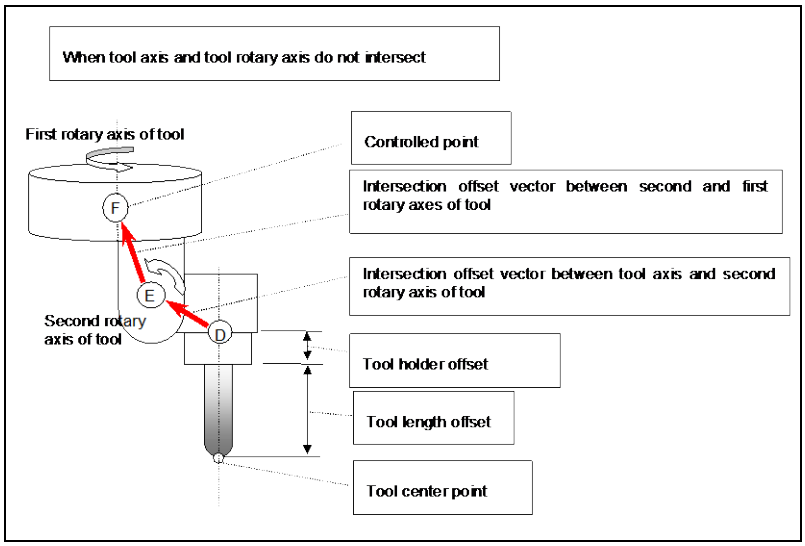

NOTE
As point F, set a position that is easy to measure.
Set a radius value.

19741	Upper limit of the movement range of the first rotation axis

[Input type] Parameter input
[Data type] Real path
[Unit of data] Degree
[Min. unit of data] Depend on the increment system of the reference axis
[Valid data range] 9 digit of minimum unit of data (refer to standard parameter setting table (A))
(When the increment system is IS-B, -999999.999 to +999999.999)
This parameter sets the upper limit of the movement range of the first rotation axis in tool axis direction control of the tilted working plane indexing (G53.1). When the movement range of the first rotation axis is not specified or the first rotation axis is the roll-over axis, this parameter and parameter No. 19742 must both be set to 0.

19742	Lower limit of the movement range of the first rotation axis

[Input type] Parameter input
[Data type] Real path
[Unit of data] Degree
[Min. unit of data] Depend on the increment system of the reference axis
[Valid data range] 9 digit of minimum unit of data (refer to standard parameter setting table (A))
(When the increment system is IS-B, -999999.999 to +999999.999)
This parameter sets the lower limit of the movement range of the first rotation axis in tool axis direction control of the tilted working plane indexing (G53.1). When the movement range of the first rotation axis is not specified or the first rotation axis is the roll-over axis, this parameter and parameter No. 19741 must both be set to 0.

19743	Upper limit of the movement range of the second rotation axis

[Input type] Parameter input
[Data type] Real path
[Unit of data] Degree
[Min. unit of data] Depend on the increment system of the reference axis

[Valid data range] 9 digit of minimum unit of data (refer to standard parameter setting table (A))
(When the increment system is IS-B, -999999.999 to +999999.999)
This parameter sets the upper limit of the movement range of the second rotation axis in tool axis direction control of the tilted working plane indexing (G53.1). When the movement range of the second rotation axis is not specified or the second rotation axis is the roll-over axis, this parameter and parameter No. 19744 must both be set to 0.

19744	Lower limit of the movement range of the second rotation axis

[Input type] Parameter input
[Data type] Real path
[Unit of data] Degree
[Min. unit of data] Depend on the increment system of the reference axis
[Valid data range] 9 digit of minimum unit of data (refer to standard parameter setting table (A))
(When the increment system is IS-B, -999999.999 to +999999.999)
This parameter sets the lower limit of the movement range of the second rotation axis in tool axis direction control of the tilted working plane indexing (G53.1). When the movement range of the second rotation axis is not specified or the second rotation axis is the roll-over axis, this parameter and parameter No. 19743 must both be set to 0.

	#7	#6	#5	#4	#3	#2	#1	#0
19746								
					LOZ	LOD		

[Input type] Parameter input
[Data type] Bit path

#2 LOD As the tool length for 3-dimensional machining manual feed:
0: The value of parameter No. 12318 is used.
1: The tool length currently used for tool length compensation is used.

#3 LOZ When bit 2 (LOD) of parameter No. 19746 is set to 1 and tool length compensation is not applied, as the tool length for 3-dimensional machining manual feed:
0: The value of parameter No. 12318 is used.
1: 0 is used.

	#7	#6	#5	#4	#3	#2	#1	#0
19754	SPM							

[Input type] Parameter input
[Data type] Bit axis

#7 SPM The rotation axis position used as the reference when the parameters related to the functions below, parameters Nos. 19681 to 19714, are set is:
0: Absolute coordinates.
1: Machine coordinates

This parameter is effective to the functions below.
- Tilted working plane indexing

4.135 PARAMETERS OF FSSB (2 OF 2)

24000	ATR value corresponding to slave 01 on first FSSB line
24001	ATR value corresponding to slave 02 on first FSSB line
to	to
24031	ATR value corresponding to slave 32 on first FSSB line

NOTE
When these parameters are set, the power must be turned off before operation is continued.

[Input type] Parameter input
[Data type] Word
[Valid data range] 1001 to 1046, 2001 to 2016, 3001 to 3004, 1000

Each of these parameters sets the value (ATR value) of the address translation table corresponding to each of slave 1 to slave 32 on first FSSB line (first optical connector).
The slave is a generic term for servo amplifiers, spindle amplifiers and separate detector interface units connected via an FSSB optical cable to the CNC. Numbers 1 to 32 are assigned to slaves, with younger numbers sequentially assigned to slaves closer to the CNC.
A 2-axis amplifier consists of two slaves, and a 3-axis amplifier consists of three slaves. In each of these parameters, set a value as described below, depending on whether the slave is an amplifier, separate detector interface unit, or nonexistent.

When the slave is a servo amplifier:
Set the axis number of a servo amplifier to allocate (value set with parameter No. 1023) plus 1000.
When the slave is a spindle amplifier:
Set the spindle number of a spindle to allocate (value set with parameter No. 3717) plus 2000.
When the slave is a separate detector interface unit:
Set 3001, 3002, 3003, and 3004, respectively, for the first (one connected nearest to the CNC), second, third, and fourth separate detector interface units.
When the slave is nonexistent:
Set 1000.

NOTE
1 When the electronic gear box (EGB) function is used
Although an amplifier is not actually required for an EGB dummy axis, set this parameter with assuming that a dummy amplifier is connected. To put it another way, specify this parameter with a value set in the EGB dummy axis parameter (No. 1023) plus 1000, instead of “1000”, as an address translation table value for one of non-existent slaves.
2 When the FSSB is set to the automatic setting mode (when the bit 0 (FMD) of parameter No. 1902 is set to 0), parameter Nos. 24000 to 24031 are automatically set as data is input on the FSSB setting screen. When the manual setting 2 mode is set (when the bit 0 (FMD) of parameter No. 1902 is set to 1), be sure to directly set values in parameter Nos. 24000 to 24031.

Example of axis configuration and parameter settings

- Example 1 Typical setting

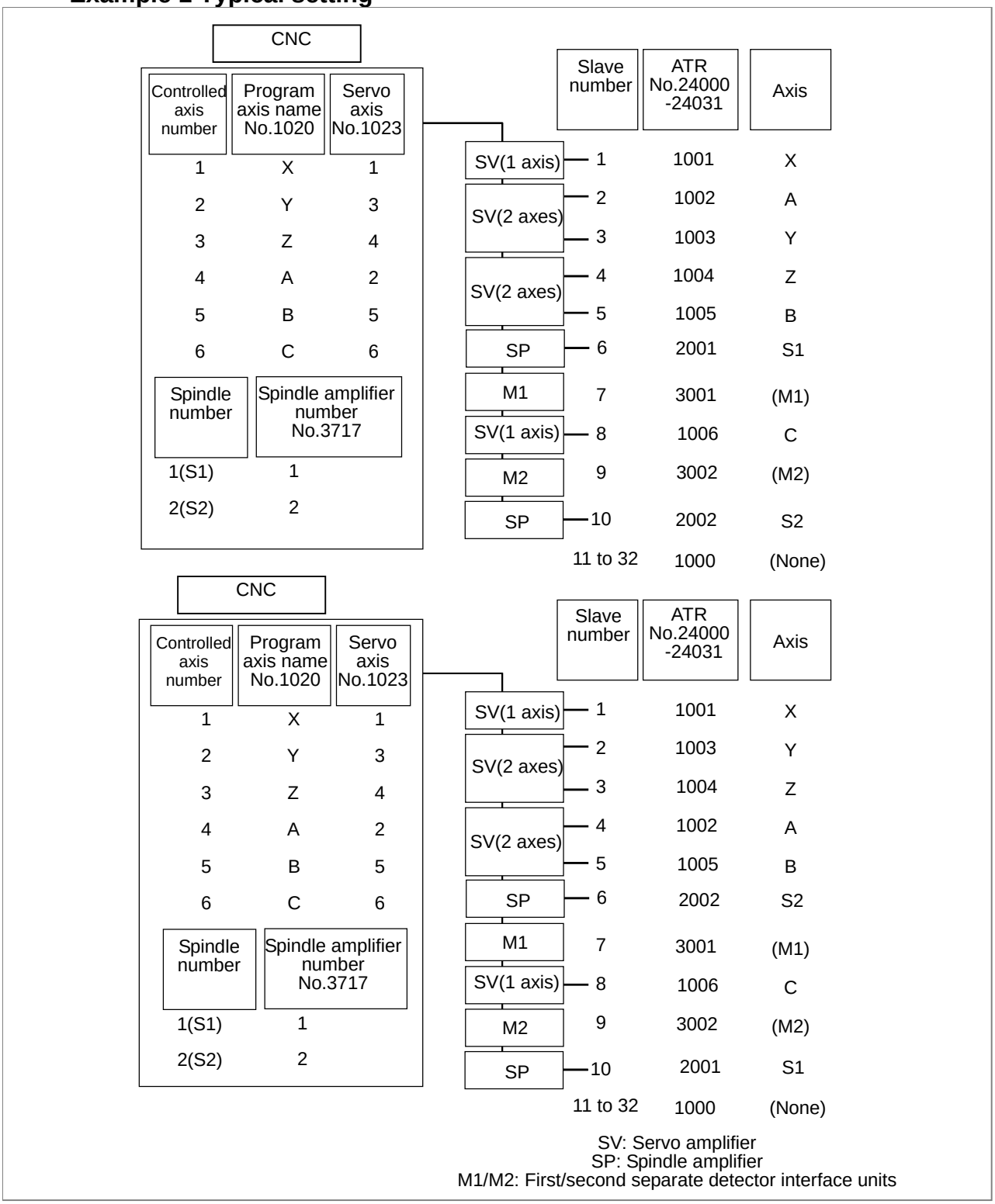

- Example 2 Setting with a dummy axis in use

Example of axis configuration and parameter settings when the electronic gear box (EGB) function is used
(EGB slave axis: A-axis, EGB dummy axis: B-axis)

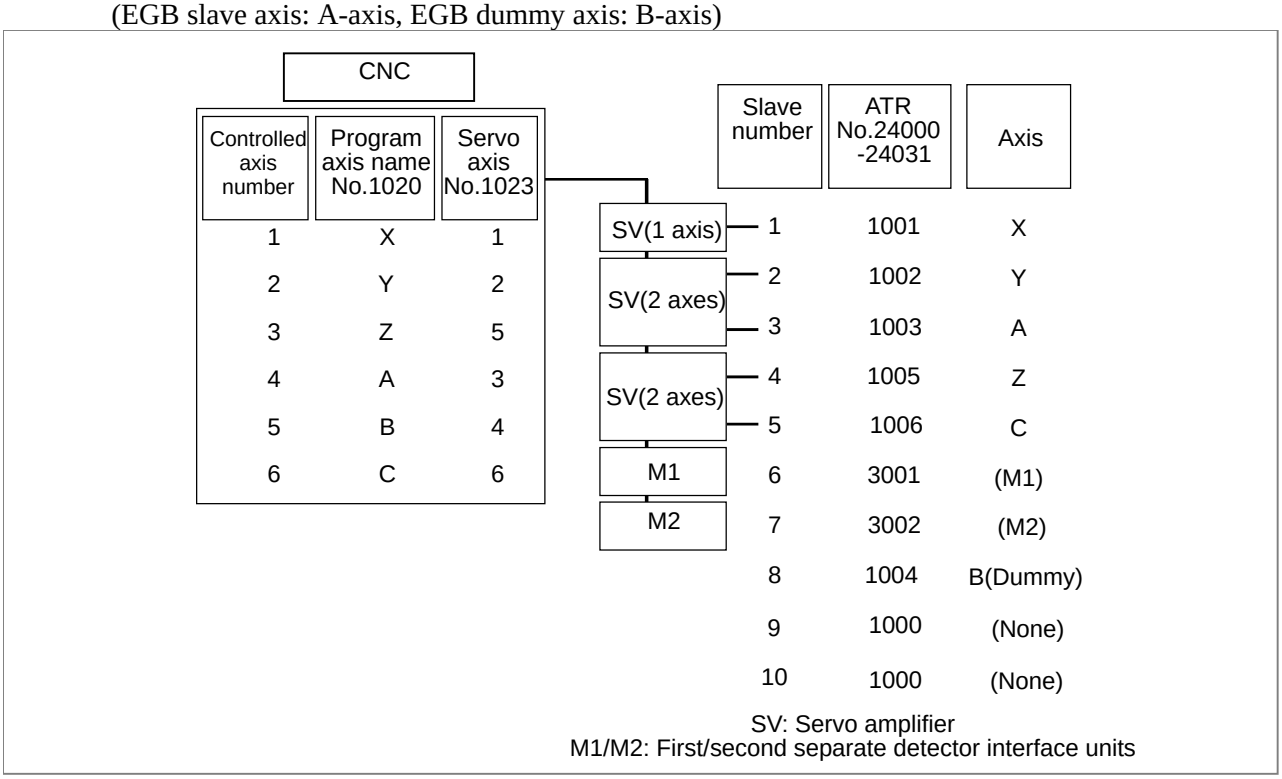

24032	**ATR value corresponding to slave 01 on second FSSB line**
24033	**ATR value corresponding to slave 02 on second FSSB line**
to	**to**
24063	**ATR value corresponding to slave 32 on second FSSB line**

> **NOTE**
> When these parameters are set, the power must be turned off before operation is continued.

[Input type] Parameter input
[Data type] Word
[Valid data range] 1001 to 1046, 2001 to 2016, 3005 to 3008, 1000

Each of these parameters sets the value (ATR value) of the address translation table corresponding to each of slave 1 to slave 32 on second FSSB line (second optical connector). Set these parameters only when a servo axis control card with two optical connectors (FSSB lines) is used.

To specify these parameters, follow the same procedure as for the first FSSB line (parameters Nos. 24000 to 24031). Note, however, that the valid data range varies depending on the separate detector interface unit used.

When the slave is a separate detector interface unit:
Set 3005, 3006, 3007, and 3008, respectively, for the first (one connected nearest to the CNC), second, third, and fourth separate detector interface units.

24096	Connector number for the first or ninth separate detector interface unit
24097	Connector number for the second or tenth separate detector interface unit
24098	Connector number for the third or eleventh separate detector interface unit
24099	Connector number for the fourth or twelfth separate detector interface unit
24100	Connector number for the fifth separate detector interface unit
24101	Connector number for the sixth separate detector interface unit
24102	Connector number for the seventh separate detector interface unit
24103	Connector number for the eighth separate detector interface unit

NOTE
When these parameters are set, the power must be turned off before operation is continued.

[Input type] Parameter input
[Data type] Byte axis
[Valid data range] 0 to 8

Set a connector number for the connector to which a separate detector interface unit is attached if the separate detector interface unit is to be used. The following table lists the necessary settings. Be sure to specify 0 for connectors not in use.

Correspondence between connectors and connector numbers	
Connector	**Connector number**
JF101	1
JF102	2
JF103	3
JF104	4
JF105	5
JF106	6
JF107	7
JF108	8

(Setting example)

Controlled axis	Connector to which each separate detector interface unit is attached				Parameter setting			
	1st connector	2nd connector	5th connector	6th connector	No. 24096	No. 24097	No. 24100	No. 24101
X1	JF101	–	–	–	1	0	0	0
Y1	–	JF102	–	–	0	2	0	0
Z1	–	–	JF102	–	0	0	2	0
X2	–	JF101	–	–	0	1	0	0
Y2	–	–	–	JF101	0	0	0	1
Z2	–	–	–	–	0	0	0	0
A1	–	–	JF101	–	0	0	1	0
B1	–	–	–	JF102	0	0	0	2
C1	–	JF104	–	–	0	4	0	0
A2	JF102	–	–	–	2	0	0	0
B2	–	JF103	–	–	0	3	0	0

Controlled axis	Connector to which each separate detector interface unit is attached				Parameter setting			
	1st connector	2nd connector	5th connector	6th connector	No. 24096	No. 24097	No. 24100	No. 24101
C2	–	–	–	JF103	0	0	0	3

NOTE

1 Specify these parameters when separate detector interface units are used.

2 Parameters Nos. 24096 to 24103 are specified automatically when data is entered on the FSSB setting screen if the FSSB setting mode in use is the automatic setting mode (bit 0 (FMD) of parameter No. 1902 = 0). If the manual setting 2 mode (bit 0 (FMD) of parameter No. 1902) = 1), specify the parameters directly.

24104	**ATR value corresponding to connector 1 on the first separate detector interface unit**
24105	**ATR value corresponding to connector 2 on the first separate detector interface unit**
to	**to**
24111	**ATR value corresponding to connector 8 on the first separate detector interface unit**
24112	**ATR value corresponding to connector 1 on the second separate detector interface unit**
to	**to**
24119	**ATR value corresponding to connector 8 on the second separate detector interface unit**
24120	**ATR value corresponding to connector 1 on the third separate detector interface unit**
to	**to**
24127	**ATR value corresponding to connector 8 on the third separate detector interface unit**
24128	**ATR value corresponding to connector 1 on the fourth separate detector interface unit**
to	**to**
24135	**ATR value corresponding to connector 8 on the fourth separate detector interface unit**
24136	**ATR value corresponding to connector 1 on the fifth separate detector interface unit**
to	**to**
24143	**ATR value corresponding to connector 8 on the fifth separate detector interface unit**
24144	**ATR value corresponding to connector 1 on the sixth separate detector interface unit**
to	**to**
24151	**ATR value corresponding to connector 8 on the sixth separate detector interface unit**
24152	**ATR value corresponding to connector 1 on the seventh separate detector interface unit**
to	**to**
24159	**ATR value corresponding to connector 8 on the seventh separate detector interface unit**
24160	**ATR value corresponding to connector 1 on the eighth separate detector interface unit**
to	**to**
24167	**ATR value corresponding to connector 8 on the eighth separate detector interface unit**

NOTE

When these parameters are set, the power must be turned off before operation is continued.

[Input type] Parameter input
[Data type] Word
[Valid data range] 1000 to 1046

Each of these parameters sets the value (ATR value) of the address translation table corresponding to each connector on a separate detector interface unit.
The first to fourth separate detector interface units are connected to first FSSB line, and the fifth and eighth separate detector interface units are connected to second FSSB line.
Specify each parameter with a value set in parameter No. 1023 (axis connected to a separate detector interface unit connector) plus 1000.
If a connector attached to a separate detector interface unit is not in use, set 1000 for the connector.

NOTE
1 Specify these parameters if one separate detector interface unit connector is shared among two or more axes. They need not be specified if one connector is used by one axis.
2 Using these parameters requires setting bit 5 (SSC) of parameter No. 14476 to 1.

	#7	#6	#5	#4	#3	#2	#1	#0
24203								FHR

NOTE
When the parameter is set, the power must be turned off before operation is continued.

[Input type] Parameter input
[Data type] Bit

#0 FHR Position data transmission by FSSB is:
0: Disabled.
1: Enabled.

NOTE
1 In addition, it is necessary to set parameter No.24204.
2 When the following function is used, set 1 to this parameter.
- FSSB high-speed rigid tapping
- Electronic gear box (FSSB type)
- Servo/Spindle synchronous control (FSSB type)

24204	The index number of spindle axis that synchronizes to each servo axis

NOTE
When the parameter is set, the power must be turned off before operation is continued.

[Input type] Parameter input
[Data type] Byte axis
[Valid data range] 0 to the maximum number of spindles
In FSSB high-speed rigid tapping, set the index number of spindle axis that synchronizes to servo axis.

NOTE
1 When bit 0 (FHR) of parameter No.24203 is 1, this parameter is enabled.
2 Eight or less index numbers of spindle axis can be set with the system. If nine or more index numbers of spindle axis are set, the alarm PW0037 "SV/SP COMBINATION ERROR" is issued.

24208	The index number of the spindle axis that synchronizes to each servo axis (2nd set)

[Input type] Parameter input
[Data type] Byte axis
[Valid data range] 0 to the maximum number of spindles
This parameter sets the index number of the spindle synchronizing with the servo axis used in FSSB high-speed rigid tapping. Whether to use parameter No.24204 or this parameter can be changed by Spindle/Servo axis combination change signal SPSVS<G0518.6>.

NOTE
1 This parameter is effective when bit 0 (FHR) of parameter No.24203 is 1.
2 Eight or less index numbers of the spindle axis can be set in the system. If nine or more are set, the alarm DS0092, "SV/SP COMBINATION ERROR" is issued.

4.136 PARAMETERS OF DISPLAY AND EDIT (6 OF 6)

24300	Time for One-touch menu to be closed (before switching screen)

[Input type] Parameter input
[Data type] Byte
[Unit of data] sec
[Valid data range] 0 to 127
The One-touch menu is automatically closed when the One-touch menu is not operated during the time set by this parameter before switching the screen with the One-touch menu.

24301	Time for One-touch menu to be closed (after switching screen)

[Input type] Parameter input
[Data type] Byte
[Unit of data] sec
[Valid data range] -1 to 127
The One-touch menu is automatically closed when the One-touch menu is not operated during the time set by this parameter after switching the screen with the One-touch menu.
If -1 is set, the one-touch menu closes at once after switching the screen.

Ex1)
In case that until switching the screen from One-touch menu is open, automatic close is invalid.
One-touch menu is closed automatically 5 second later after switching the screen.
No.24300 = 0, No.24301 = 5

Ex2)

In case that when One-touch menu is closed automatically with no operation of One-touch menu 10 second from open.
One-touch menu is closed automatically just after switching the screen.
No.24300 = 10, No.24301 = -1

NOTE
1 If 0 is set to parameter No.24300 and No.24301, One-touch menu is not closed automatically.
2 When the One-touch menu switched to the screen being displayed now is pressed, parameter No.24301 is applied though the screen doesn't switch.

24302	Delay time from trigger signal to storing operation history for the machine state monitoring function

[Input type] Parameter input
[Data type] Word
[Data range] -1 to 32767

This parameter sets delay time from turning on trigger signal to beginning preservation of the operation history in the machine state monitoring function.

Parameter No.24302	Delay Time from trigger signal to storing operation history
-1	0 msec
0	160 msec
1 to 32767	Parameter No.24302 × 16 msec

	#7	#6	#5	#4	#3	#2	#1	#0
24303		DMP	BGS	ODE	HD8		EEP	ELV

[Input type] Parameter input
[Data type] Bit

NOTE
When this parameter is set, the power must be turned off before operation is continued.

#0 ELV Divisions of Eco levels are
0: 4 levels.
1: 8 levels.

NOTE
If this parameter is changed, adjust the parameters Nos. 11397 and 11398 again.
If the current Eco level gets invalid because of change in this parameter, the current Eco level is set to Eco level 0.

#1 EEP An Eco level is
0: Not specified in each path.
The Eco level is common for all paths.
1: Specified in each path.

> ⚠ **CAUTION**
> Machine or work can be damaged by out-of-synchronization when Eco levels of spindles in synchronization control mode differ from each other. This is because this function differs the time constant for acceleration/deceleration in spindle synchronization mode.
> Set “0” without fail when using spindle synchronization control between paths.

> **NOTE**
> When this parameter is set to 0 from 1, the current Eco level is set to the Eco level of path 1 before changing this parameter.

#3 HD8 On tool compensation screen of Tool offset memory C of 8.4” display unit, tool length and tool radius compensation value is displayed
0: separately on two pages.
1: on one page (FS16*i* compatible).

When tool length and tool radius compensation value is displayed on one page, following conditions are necessary.
- Machining system(parameter No.983=1)
- Increment system of tool offset is OFA/OFB/OFC (bits 0 to 3 (OFA, OFC, OFD, and OFE) of parameter No. 5042)

In this case, input/display range of wear compensation value on tool compensation screen is as follows.

Increment system of tool offset No.5042#0 to #3	Wear compensation value	
	Metric input	Inch input
OFA	±9999.99	±999.999
OFB	±999.999	±99.9999
OFC	±99.9999	±9.99999

> **NOTE**
> 1 Input/display range of geometry compensation value is eight digits regardless of this function is enabled or disabled.
> 2 This parameter is effective other than 8.4” display unit.
> 3 When wear compensation value that has already been input over above-described input/display range, "OVER" is displayed on the screen.

#4 ODE In the operation history screen ,detailed information is
0: Not displayed.
1: Displayed.

#5 BGS Program screen of background editing is
0: Displayed full-screen.
1: Displayed in a window.

NOTE
1 In the 15”/19” display units, when bit 0 (SPG) of parameter No.11302 is 1, this parameter is enabled.
2 When this parameter is set to 1, background editing screen of 10.4" display is switched to full-screen / window by pressing the softkey [program].

#6 DMP On tool offset screen and Y-axis offset screen of 8.4” display unit, displayed coordinates are
0: Relative coordinate values.
1: Machine coordinate values (It is available to change to relative coordinate disyplay by soft key [COORD.]).

24305	Range of tool offset change

[Input type] Parameter input
[Data type] Real path
[Unit of data] mm, inch (offset unit)
[Min. unit of data] The increment system of a tool offset value is followed.
[Valid data range] The settings of bits 3 to 0 (OFE, OFD, OFC, and OFA) of parameter No. 5042 are followed.

For metric input

OFE	OFD	OFC	OFA	Valid data range
0	0	0	1	0 to 9999.99mm
0	0	0	0	0 to 9999.999mm
0	0	1	0	0 to 9999.9999mm
0	1	0	0	0 to 9999.99999mm
1	0	0	0	0 to 999.999999mm

For inch input

OFE	OFD	OFC	OFA	Valid data range
0	0	0	1	0 to 999.999inch
0	0	0	0	0 to 999.9999inch
0	0	1	0	0 to 999.99999inch
0	1	0	0	0 to 999.999999inch
1	0	0	0	0 to 99.9999999inch

Specify the valid range of tool offset changes.
The lower limit of specifiable offset value is given as the preset offset value subtracted by this parameter. On the same way, the upper limit is given as the present offset value added by this parameter.
If present offset value is equal to 100.000 with this parameter equal to 2.000, for example, value of 98.000 - 102.000 can be input.
When value of smaller than or equal to 0.000 is specified in this parameter, input range is not limited.

	#7	#6	#5	#4	#3	#2	#1	#0
24306			OAN		LVD	STP		

[Input type] Parameter input
[Data type] Bit

#2 STP When path is switched on Servo tuning screen, page and cursor are displayed at:
0: Same position.
1: Maintained position by each system.

NOTE
This parameter is Initial setting parameter. For details, refer to the appendix "Automatic setting / Initial setting parameter" in CONNECTION MANUAL (FUNCTION) (B-64693EN-1).

#3 LVD In the macro screen, display/setting of the variable is:
0: Conventional specification.
1: FS16*i* compatible specification.

NOTE
Please don't change this parameter while executing the program.

#5 OAN In offset screen and Y-axis offset screen, the axis name of measuring operation is :
0: Fixed to be "X", "Z", and "Y".
1: Depended on setting of bit 0 (OFA) of parameter No.3110.

	#7	#6	#5	#4	#3	#2	#1	#0
24308		CBD	M3D		SLS	CNE	SMH	MMP

[Input type] Parameter input
[Data type] Bit

#0 MMP The program displayed on the program screen in HNDL, INC, JOG or REF mode is:
0: A program which is the last displayed in MEM or RMT mode.
1: A program which is the last displayed in MEM mode.

#1 SMH The waiting M code for simultaneous multi path program editing is:
0: Not highlighted.
1: Highlighted.

#2 CNE On the outline screen of program list, the number of comments of programs is:
0: Not enhanced.
1: Enhanced.

#3 SLS On the program list screen, the soft key that moves the cursor to the top line and the bottom line is:
0: Not displayed.
1: Displayed.

#5 M3D When 8.4" display unit is used, G code modal on the program check screen are displayed in:
0: 2 columns.
1: 3 columns.

#6 CBD On 8.4" display unit, current block screen is:
0: Not displayed.
1: Displayed.

	#7	#6	#5	#4	#3	#2	#1	#0
24309				SPL				DSC

[Input type] Parameter input
[Data type] Bit

#0 DSC When the text data (program, parameter and offset etc.) which includes semicolon code (;) are input to the CNC:

0: Only the semicolon code(;) is not input.
1: The character string between semicolon(;) and EOB(LF)/CR/EOR(%) is not input as comments.

> **NOTE**
> 1 Because these comments are not input, it is not possible to display, edit and output on the CNC.
> 2 The function is invalid in the input of EIA code.
> 3 The function is invalid in the binary data and Maintenance information data.
> 4 Do not describe the comments in the line before the program code start (% at the file head).
> 5 The character string after semicolon in control out(), angle bracket<> or square bracket[] is not handled as comment.

#4 SPL On program folder screen, a state which displayed different device or folder at a same time by split display of program folder screen even if the power is turned off is:

0: Not saved.
1: Saved.

	#7	#6	#5	#4	#3	#2	#1	#0
24311	TPP							

[Input type] Parameter input
[Data type] Bit

#7 TPP When vitual MDI key function is used, the current position on program screen of TEACH IN mode is:

0: Not displayed.
1: Displayed.

> **NOTE**
> This parameter is Initial setting parameter. For details, refer to the appendix "Automatic setting / Initial setting parameter" in CONNECTION MANUAL (FUNCTION) (B-64693EN-1).

	#7	#6	#5	#4	#3	#2	#1	#0
24312	NDY	AXN						
		AXN						

[Input type] Parameter input
[Data type] Bit path

#6 AXN The axis names on offset screen, tool offset / 2nd geometry data screen, Y-axis offset screen, and tool offset range setting screen are:

0: Axis names of basic three axes.
1: Displayed according to the following order of priority.
- For X and Z axis of basic three axes
1 X and Z axis names of basic three axes (parameter No.1022=1, 3)
2 Axis names parallel to X and Z axes of basic three axes (parameter No.1022=4, 6)

3 ‘X’, ‘Z’
- For Y axis of basic three axes
1 Y axis name set in parameter No.5043
2 Y axis name of basic three axes (parameter No.1022=2)
3 Axis name parallel to Y axis of basic three axes (parameter No.1022=5)
4 ‘Y’

NOTE
This parameter is valid only when bit 0 (OFA) of parameter No.3110 is set to 1.

#7 NDY On the screen of tool offset for milling and turning, Y-axis offset is:
0: Displayed.
1: Not displayed.

	#7	#6	#5	#4	#3	#2	#1	#0
24314	CSS							

[Input type] Parameter input
[Data type] Bit path

#7 CSS In the modal display, SRPM, SSPM and SMAX are:
0: Not displayed.
1: Displayed.

24315	Use ratio of Data Folder (10% unit)

[Input type] Parameter input
[Data type] Byte
[Valid data range] 0 to 100

The ratio of capacity and the number of registration files used with Data Folder in whole capacity and the numbers of maximum registration files (it is possible to change by parameter No. 930) of CF card in Data Server is specified.
When specifying 0 in this parameter, parameter No. 24351, and parameter No. 24352, Data Folder is not created by the format operation.
When specifying 0 in either parameter No. 24351 or parameter No. 24352, this parameter is valid.
The ratio to capacity is specified with the one’s place of the parameter and the ratio to the number of registration files is specified with ten’s place.
When specifying 1 to 9 in this parameter, the ratio of capacity is same as the ratio of number of registration files.
Therefore, specifying 1, 2, 3, ..., 9 in this parameter is treated the same as specifying 11, 22, 33, ..., 99.
When specifying 100, the ratio to capacity and the ratio of number of registration files is 100%. Therefore, CF card in Data Server is used for Data Folder.
If less than 0 or larger than 100 is set, the specification of 55 is assumed.

Example 1
When setting 3 to this parameter and 0 to parameter No. 24351 and parameter No. 24352 and executing the format operation on 2 GB CF card, the capacity for Data Folder is about 0.6 GB corresponding to 30% of the whole capacity of CF card. The capacity that can be used in the area where NC program is stored is about 1.4 GB.

Moreover, if 2047 files can be registered in CF card, the number of maximum registration files in Data Folder is 614 files corresponding to 30% and the number of maximum registration files for NC program is 1433 files.

Example 2

When setting 52 to this parameter and 0 to parameter No. 24351 and parameter No. 24352 and executing the format operation on 2 GB CF card, the capacity for Data Folder is about 0.4 GB corresponding to 20% of the whole capacity of the CF card. The capacity that can be used in the area where NC program is stored is about 1.6 GB.

Moreover, if 2047 files can be registered in CF card, the number of maximum registration files in Data Folder is 1023 files corresponding to 50% and the number of maximum registration files for NC program is 1024 files.

NOTE

1 The use ratio is approximate.
2 When Data Folder is created, if the password protection is not released, the re-format operation cannot be executed.
3 This parameter is effective only when the format operation is executed.
4 It is possible to change the maximum number of registration files in CF card by the parameter No. 930. If necessary, set the suitable value to this parameter in consideration of the number of files in Data Folder.
5 When Data Folder is created, the area that the end user can use becomes smaller than the maximum capacity of CF card. Therefore, please select CF card of the best capacity according to the use of the end user.

24316	Protection of Data Folder in Data Server (Password)

[Input type] Parameter input
[Data type] 2-word
[Valid data range] 0 to 999999999

A password for protecting Data Folder in Data Server is set in this parameter. When a value other that zero is set in this parameter and the parameter No. 24317 differs from this parameter, Data Folder in Data Server is not displayed on Program list screen. Data Folder is also not displayed in a file list in Data Server, which is referred from PCs via FTP connection.

Unless the same value as the password (No. 24316) is set in the keyword (No. 24317), this password cannot be changed.

NOTE

1 The state where password $\neq$ 0 and password $\neq$ keyword is referred to as locked state. When an attempt is made to modify the password by MDI input operation in this state, the warning message "WRITE PROTECTED" is displayed to indicate that the password cannot be modified. When an attempt is made to modify the password with G10 (programmable parameter input), alarm PS0231, "ILLEGAL FORMAT IN G10 L52" is issued.
2 When the value of password is not 0, parameter screen does not display the password. Care must be taken in setting a password.

24317	Protection key for Data Folder in Data Server (Keyword)

[Input type] Parameter input
[Data type] 2-word
[Valid data range] 0 to 999999999
When the same value as the password (No. 24316) is set in this parameter, the locked state is released and user can change the password.
Moreover, when the locked state is released, Data Folder in Data Server is displayed on Program list screen.

NOTE
The value set in this parameter is not displayed. When the power is turned off, this parameter is set to 0.

	#7	#6	#5	#4	#3	#2	#1	#0
24318							SPT	WDT

[Input type] Parameter input
[Data type] Bit

NOTE
When this parameter is set, the power must be turned off before operation is continued.

#0 WDT Servo / spindle waveform data output function is
0: Effective.
1: Not effective.

#1 SPT In Trouble diagnosis function and Servo / spindle waveform data output function, Trouble diagnosis data monitoring signal and Trouble diagnosis data latching signal are
0: Not effective.
1: Effective.

24319	Sampling time of waveform data before trouble

[Input type] Parameter input
[Data type] Byte
[Unit of data] second
[Valid data range] 0 to 40

24320	Sampling time of waveform data after trouble

[Input type] Parameter input
[Data type] Byte
[Unit of data] second
[Valid data range] 0 to 40
Set sampling times before and after trouble in Servo / spindle waveform data output function.
Specify the sampling times so that the sum of them is within 40 seconds because room for the buffer is limited. Note that data is not sampled as specified by these parameters if the sum exceeds 40 seconds.
The following is an example when the sum exceeds 40 seconds:

When 30 seconds is specified for the sampling time before trouble and 20 seconds is specified for the sampling time after trouble, waveform data of 30 seconds before trouble and of 10 seconds after trouble is obtained.
When 50 seconds is specified for the sampling time before trouble and 10 seconds is specified for the sampling time after trouble, waveform data of only 40 seconds before trouble is obtained.

	#7	#6	#5	#4	#3	#2	#1	#0
24321	MCR	HTS	TCM	ASD	REF	PER	FBP	CMP

[Input type] Parameter input
[Data type] Bit axis

#0 CMP In Servo / spindle waveform data output function, accumulated command pulse of a servo axis is
0: Output.
1: Not output.

#1 FBP In Servo / spindle waveform data output function, accumulated feedback pulse of a servo axis is
0: Output.
1: Not output.

#2 PER In Servo / spindle waveform data output function, position error of a servo axis is
0: Output.
1: Not output.

#3 REF In Servo / spindle waveform data output function, reference counter of a servo axis is
0: Output.
1: Not output.

#4 ASD In Servo / spindle waveform data output function, actual speed of a servo axis is
0: Output.
1: Not output.

#5 TCM In Servo / spindle waveform data output function, torque command of a servo axis is
0: Output.
1: Not output.

#6 HTS In Servo / spindle waveform data output function, heat simulation of a servo axis is
0: Output.
1: Not output.

#7 MCR In Servo / spindle waveform data output function, motor current of a servo axis is
0: Output.
1: Not output.

	#7	#6	#5	#4	#3	#2	#1	#0
24322				AR2	AMR	EFC	AR1	DLV

[Input type] Parameter input
[Data type] Bit axis

#0 DLV In Servo / spindle waveform data output function, disturbance level of a servo axis is
0: Output.
1: Not output.

#1 AR1 In Servo / spindle waveform data output function, arbitrary data 1 of a servo axis is
0: Output.
1: Not output.

#2 EFC In Servo / spindle waveform data output function, effective current of a servo axis is
0: Output.
1: Not output.

#3 AMR In Servo / spindle waveform data output function, AMR data of a servo axis is
0: Output.
1: Not output.

#4 AR2 In Servo / spindle waveform data output function, arbitrary data 2 of a servo axis is
0: Output.
1: Not output.

	#7	#6	#5	#4	#3	#2	#1	#0
24323				MCR	TCM	PER	LDM	SPD

[Input type] Parameter input
[Data type] Bit spindle

#0 SPD In Servo / spindle waveform data output function, actual motor speed of a spindle axis is
0: Output.
1: Not output.

#1 LDM In Servo / spindle waveform data output function, load meter of a spindle axis is
0: Output.
1: Not output.

#2 PER In Servo / spindle waveform data output function, position error of a spindle axis is
0: Output.
1: Not output.

#3 TCM In Servo / spindle waveform data output function, torque command of a spindle axis is
0: Output.
1: Not output.

#4 MCR In Servo / spindle waveform data output function, motor current of a spindle axis is
0: Output.
1: Not output.

	#7	#6	#5	#4	#3	#2	#1	#0
24325								PIE

[Input type] Parameter input
[Data type] Bit

> **NOTE**
> When this parameter is set, the power must be turned off before operation is continued.

#0 PIE Unit of cumulative value of power consumption is :
0: 0.001kWh.
1: 0.01kWh.

> **NOTE**
> This parameter is available when the bit 7 (PKI) of parameter No. 11370 is set to 1.

	#7	#6	#5	#4	#3	#2	#1	#0
24326						CHS	NCO	MSG

[Input type] Parameter input
[Data type] Bit path

#0 MSG When an operator message is entered, the status “MSG” on CNC status display area is :
0: Not displayed.
1: Displayed.

#1 NCO When an operator message is entered, automatic switching to the message screen is :
0: Determined by the setting of bit 7 (NPA) of parameter No. 3111.
1: Determined by the setting of parameter No.24327.

> **NOTE**
> This parameter is available when the bit 7 (NPA) of parameter No. 3111 is set to 0.

#2 CHS In Pattern menu screen Simplified Chinese is :
0: can not be set.
1: can be set.

> **NOTE**
> When Simplified Chinese is valid(bit 2 (CHS) of parameter No. 24326 =1), half-size katakana and some half-size letters are unavailable.
> Full-size character and Simplified Chinese can be used at the same time.

24327	Operator message number that does not automatically switch to the message screen

[Input type] Parameter input
[Data type] Byte path
[Valid data range] 0 to 4095
If an operator message number is equal to or bigger than the number set to this parameter, the screen will not switch to message screen automatically.
If a value outside the range is set, it is same to be set to 0.

NOTE
1 This parameter is available when the bit 1 (NCO) of parameter No. 24326) is set to 1.
2 Regardless of this parameter setting, screen does not switch to message screen automatically when an operator message is entered by the macro variable #3006 or #3017, when the bit 1 (NCO) of parameter No. 24326 is set to 1.

	#7	#6	#5	#4	#3	#2	#1	#0
24328							RD9	

[Input type] Parameter input
[Data type] Bit

#1 RD9 On following screen of 8.4” display unit, relative coordinates are
- Workpiece coordinate system shift screen
- Y-axis offset screen
0: Not displayed.
1: displayed.

	#7	#6	#5	#4	#3	#2	#1	#0
24347								EDT

[Input type] Parameter input
[Data type] Bit

#0 EDT In dynamic graphic display, editing the drawing program on path graphic screen and animation graphic screen is:
0: Disabled.
1: Enabled.

24351	Use capacity of Data Folder in Data Server (MB unit)

[Input type] Parameter input
[Data type] Word
[Unit of data] MB
[Valid data range] -1 to 32767

The capacity that can be used with Data Folder in whole capacity of CF card in Data Server is specified by the unit of MB. The maximum number of files that can be registered with Data Folder is specified in parameter No. 24352.
When specifying 0 in this parameter, parameter No. 24352, and parameter No. 24315, Data Folder is not created by the format operation.
When specifying 0 in either this parameter or parameter No. 24352, the setting of parameter No. 24315 (specifying use ratio of 10% unit) is valid.
When specifying -1 in either this parameter or parameter No. 24352, CF card in Data Server is used only for Data Folder.
If less than -2 is set in either this parameter or parameter No. 24352, the setting of this parameter and parameter No. 24352 is assumed to 0.
When specifying positive number in this parameter and parameter No. 24352, the setting of parameter No. 24315 is invalid and this parameter and parameter No. 24352 are valid.
When specifying the value larger than the whole capacity of CF card in Data Server, CF card in Data Server is used only for Data Folder regardless of the value of parameter No. 24352.

Example

When setting 0 to parameter No. 24315 and 30 to this parameter and 10 to parameter No. 24352 and executing the format operation on 2 GB CF card, the capacity for Data Folder is about 30 MB of the whole capacity of CF card. The capacity that can be used in the area where NC program is stored is about 1.97 GB.

Moreover, if 2047 files can be registered in CF card, the number of maximum registration files in Data Folder is 10 files and the number of maximum registration files for NC program is 2037 files.

NOTE

1 The capacity is approximate.
2 When password protection is effective for the Data Folder, it is not possible to format the CF card.
3 This parameter is effective only when the format operation is executed.

24352	Maximum registration files of Data Folder in Data Server

[Input type] Parameter input
[Data type] Word
[Valid data range] -1 to 32767

The number of registration files used with Data Folder in the numbers of maximum registration files (it is possible to change by parameter No. 930) of CF card in Data Server is specified. The capacity that can be used with Data Folder is specified in parameter No. 24351.

When specifying 0 in this parameter, parameter No. 24351, and parameter No. 24315, Data Folder is not created by the format operation.

When specifying 0 in either this parameter or parameter No. 24351, the setting of parameter No. 24315 (specifying use ratio of 10% unit) is valid.

When specifying -1 in either this parameter or parameter No. 24351, CF card in Data Server is used only for Data Folder.

If less than -2 is set in either this parameter or parameter No. 24351, the setting of this parameter and parameter No. 24351 is assumed to 0.

When specifying positive number in this parameter and parameter No. 24351, the setting of parameter No. 24315 is invalid and this parameter and parameter No. 24351 are valid.

The minimum specified value of this parameter is 10. When specifying 1 to 9 in this parameter, the setting of this parameter is assumed to 10.

When specifying the value larger than the numbers of maximum registration files of CF card in Data Server, CF card in Data Server is used only for Data Folder regardless of the value of parameter No. 24351.

NOTE

1 When password protection is effective for the Data Folder, it is not possible to format the CF card.
2 This parameter is effective only when the format operation is executed.
3 The number of maximum registration files of Data Server can be changed by parameter No. 930. Please set parameter No. 930, considering of the number of registration files with Data Folder, if necessary.

	#7	#6	#5	#4	#3	#2	#1	#0
24353								MLP

[Input type] Parameter input
[Data type] Bit

#0 MLP Program folder screen is:
0: Not split display.
1: Split display.

24354	Device displayed in program folder screen or device displayed in upper side of split program folder screen for the first display after power-on
24355	Device displayed in lower side of split program folder screen for the first display after power-on

[Input type] Parameter input
[Data type] Byte
[Valid data range] 0 to 6
0 CNC MEM
1 MEM CARD
2 Data server
3 Data server host/FTP host
4 Embedded ethernet
5 Memory card/Floppy casette
6 USB memory

24356	Time-out period of communication between NC and CNC screen display function (sec)

[Input type] Parameter input
[Data type] Word
[Unit of data] sec
[Valid data range] 15 to 300
Set time-out period until NC will automatically terminate connection after communication between NC and CNC screen display function is disconnected.
If a value beyond the above range is entered, 15 is assumed.

NOTE
1 This parameter is valid when CNC screen display function is used and connected to a PC, PANEL *i*H, or PANEL *i*H Pro via HSSB.
2 When CNC screen display function via the Ethernet interface is used, this parameter is invalid.

24358	Drawing speed of Dynamic graphic dispay function

[Input type] Parameter input
[Data type] Byte
[Valid data range] 0 to 5

This parameter sets the drawing speed of PATH GRAPHIC screen and ANIMATION GRAPHIC screen in Dynamic graphic display function.

Setting Value	Draw Speed
0	Max Speed
1	Fast
2	↑
3	
4	↓
5	Slow

NOTE
1 When setting is out of range, the drawing speed becomes maximum speed.
2 The time of tool path drawing depends on path complexity.

	#7	#6	#5	#4	#3	#2	#1	#0
24361	SDT							FDC

[Input type] Parameter input
[Data type] Bit

NOTE
When this parameter is set, the power must be turned off before operation is continued.

#0 FDC System color setting of CNC screen is based on:
0: Dark gray.
1: Light gray (conventional).

NOTE
1 This parameter is valid when bit 7 (SDT) of parameter No.24361 is set to 0.
2 System color setting by parameter Nos.6580 to 6595 has priority.

#7 SDT Design of CNC screen is:
0: Flat design.
1: Conventional design (shaded frame design).

	#7	#6	#5	#4	#3	#2	#1	#0
24745								FCT
	FSS							FCT

[Input type] Parameter input
[Data type] Bit

#0 FCT The adjustment by Fast cycle-time setting is
0: not completed.
1: completed.

NOTE
When this parameter is 0, Fast cycle-time setting screen (FCTS screen) is displayed. More over, "ADJUST" is blinked in the status section. Be sure to set this parameter to 1 before shipment of machines and hide FCTS screen and "ADJUST" of status section.

#7 FSS The adjustment by Fine surface setting is
0: not completed.
1: completed.

NOTE
When this parameter is 0, Fine surface setting screen (FSS screen) is displayed. More over, "ADJUST" is blinked in the status section. Be sure to set this parameter to 1 before shipment of machines and hide FSS screen and "ADJUST" of status section.

24901	**Operation history signal selection PMC path number (No. 01)**
to	**To**
24920	**Operation history signal selection PMC path number (No. 20)**

[Input type] Parameter input
[Data type] Byte
[Valid data range] 0 to 3

These parameters set operation history signal selection PMC path numbers Nos. 1 to 20. The correspondence between PMC path numbers and settings is as given in the table below.

PMC path number	Parameter value
Not selected.	0
1st PMC	1
2nd PMC	2
3rd PMC	3

Nos. 1 to 20 correspond to Nos. 1 to 20 on the operation history signal selection screen. These parameters are paired with other parameters as given below.

No.	PMC path number	Address type	Address number	Bit number
01	No. 24901	No. 12801	No. 12841	No. 12881
02	No. 24902	No. 12802	No. 12842	No. 12882
03	No. 24903	No. 12803	No. 12843	No. 12883
…		…	…	…
20	No. 24920	No. 12820	No. 12860	No. 12900

NOTE
1 Operation history signals that can be selected and deselected with parameters are for the first 20 of 60 sets. If an operation history signal is specified from the operation history signal selection screen, the PMC path number is fixed at the first PMC.
2 To deselect a signal, set 0.
At this time, 0 is set as the initial value in the address type (Nos. 12801 to 12820), the address number (Nos. 12841 to 12860), and the bit number (Nos. 12881 to 12900) corresponding to that signal.

NOTE

3 When a PMC path number is set, 1 is set as the initial value in the address type (Nos. 12801 to 12820) corresponding to that signal, and 0 is set as the initial value in the address number (Nos. 12841 to 12860) and the bit number (Nos. 12881 to 12900).
[Example]
If parameter No. 24901 is set to 1, the parameters are initialized as follows:
No. 12801=1 Address type
No. 12841=0 Address number
No. 12881=00000000 Bit number
If, however, the address type (Nos. 12801 to 12820) corresponding to that signal is set, the address type (Nos. 12801 to 12820), the address number (Nos. 12841 to 12860), and the bit number (Nos. 12881 to 12900) will not be initialized.

4 If an attempt is made to set a value that cannot be set, a warning, "DATA IS OUT OF RANGE" appears; retry setting a value.

4.137 PARAMETERS OF FINE SURFACE SETTING

	#7	#6	#5	#4	#3	#2	#1	#0
25000								
	FSD							

[Input type] Parameter input
[Data type] Bit

NOTE

When this parameter is set, the power must be turned off before operation is continued.

#7 FSD Fine surface setting is
0: enabled.
1: disabled.

	#7	#6	#5	#4	#3	#2	#1	#0
25001								
				MPW	MPS		MPD	

[Input type] Parameter input
[Data type] Bit

#1 MPD In Fine surface setting, the setting data of each setting pattern is
0: not displayed on “PATTERN SELECT” screen.
1: displayed on “PATTERN SELECT” screen.

#3 MPS In Fine surface setting, “PATTERN SELECT” screen is
0: displayed.
1: not displayed.

#4 MPW In Fine surface setting, the effective setting pattern is
0: displayed on warning message area.
1: not displayed on warning message area.

	#7	#6	#5	#4	#3	#2	#1	#0
25002								
								MBE

[Input type] Parameter input
[Data type] Bit axis

> **NOTE**
> When this parameter is set, the power must be turned off before operation is continued.

#0 MBE In Fine surface setting, batch setting of recommended values is
0: disabled.
1: enabled.

> **NOTE**
> Batch setting of recommended values is done when the power is turned on again. Bit 0 (MBE) of parameter No. 25002 is set to 0 after the batch setting is completed.

25008	
	Accuracy level corresponding to pattern 1 in Fine surface setting

25009	
	Accuracy level corresponding to pattern 3 in Fine surface setting

[Input type] Parameter input
[Data type] Byte path
[Valid data range] 0 to 10
This parameter specifies the accuracy level of machining condition function corresponding to pattern 1 to 3 of Fine surface setting.
Example)
If the precision level 1 to 3, level 4 to 7, and level 8 to 10 correspond to pattern 1, 2, 3, respectively, set parameter No.25008 to 3 and parameter No.25009 to 8.

> **NOTE**
> Set a larger value to parameter No.25009 than to parameter No.25008. If parameter No.25009 is smaller than parameter No.25008, setting pattern cannot be selected in G05.1, G05, G08 commands.

25010	
	Setting pattern in Fine surface setting in power-off, reset operation

[Input type] Parameter input
[Data type] Byte path
[Valid data range] 0 to 3

This parameter specifies the setting pattern selected in power-off or reset operation during automatic operation.
If this parameter is set to 1 to 3, setting pattern 1 to 3 is selected.
The previously effective setting pattern is selected, otherwise.

4.138 PARAMETERS OF HIGH PRECISION OSCILLATION FUNCTION (1 OF 2)

	#7	#6	#5	#4	#3	#2	#1	#0
25650								SSO

[Input type] Parameter input
[Data type] Bit

> **NOTE**
> When this parameter is set, the power must be turned off before operation is continued.

#0 SSO High precision oscillation function is
0: Disabled.
1: Enabled.

	#7	#6	#5	#4	#3	#2	#1	#0
25651					HST	SGS	FFS	OST

[Input type] Parameter input
[Data type] Bit path

#0 OST During oscillation motion, if G80 command or reset is specified,
0: Oscillation axis moves to point R and stops. (Standard specification)
1: Oscillation axis decelerates and stops.

#1 FFS When oscillation motion is started by G81.1 command,
0: Oscillation motion is begun, after the oscillation axis passes point R and the center point between upper and lower dead points are passed. (Standard specification)
1: Movements to point R and to the center point between upper and lower dead points is omitted, and oscillation motion can be immediately started.
If this parameter is set to 1, the first dead point is as follows.

State before G81.1 command	The first dead point
First command of oscillation motion after the power is turned on or in the state of reset.	Lower dead point
In the state that command of cancel was specified on the way to lower dead point at last oscillation motion.	
In the state that command of cancel was specified on the way to upper dead point at last oscillation motion.	Upper dead point

> **NOTE**
> If this parameter is effective, bit 0 (OST) of parameter No. 25651 need be set to 1.

#2 SGS If oscillation motion is canceled by oscillation start signal CHPST <Gn051.6>,
0: Oscillation axis moves to point R and stops. (Standard specification)
1: Oscillation axis decelerates and stops.
If the oscillation axis decelerates and stops by oscillation start signal CHPST, use each axis workpiece coordinate system preset signal WPRST1-WPRST8<Gn358> together.
Refer to the following manual for details of the setting method and so on.
"FANUC Series 0*i*-MODEL F Plus CONNECTION MANUAL (FUNCTION)" (B-64693EN-1) "Each Axis Workpiece Coordinate System Preset Signal"

> **NOTE**
> If this parameter is effective, bit 0 (OST) of parameter No. 25651 need be set to 1.

#3 HST During oscillation motion, if oscillation hold signal *CHLD <Gn051.7> is set to"0" from "1",
0: Oscillation axis moves to point R and suspends. (Standard specification)
1: Oscillation axis decelerates and suspends.

> **NOTE**
> If this parameter is effective, bits 0 (OST) and 2 (SGS) of parameter No. 25651 need be set to 1.

25652	Maximum allowable acceleration rate of oscillation motion

[Input type] Parameter input
[Data type] Real axis
[Unit of data] mm/sec^2, inch/sec^2, deg/sec^2 (machine unit)
[Valid data range] Refer to standard parameter setting table (D). (Operating range: 0.0 to +100000.0)
Set a maximum allowable acceleration rate for oscillation axis during oscillation motion (with sine curve feedrate).

If a value greater than maximum value (100000.0) is set, the value is clamped to maximum value (100000.0).
If 0 is set, maximum value (100000.0) is assumed to be set.

25653	Acceleration rate of starting or cancellation oscillation motion

[Input type] Parameter input
[Data type] Real axis
[Unit of data] mm/sec^2, inch/sec^2, deg/sec^2 (machine unit)
[Valid data range] Refer to standard parameter setting table (D). (Operating range: 0.0 to +100000.0)
It is the acceleration rate of starting motion (from point R to center point between upper and lower dead points) or cancel motion.
Moreover, when override is changed during oscillation motion, the acceleration/deceleration is set by this parameter.
If a value greater than maximum value (100000.0) is set, the value is clamped to maximum value (100000.0).
If 0 is set, maximum value (100000.0) is assumed to be set.

	#7	#6	#5	#4	#3	#2	#1	#0
25655							CST	

[Input type] Parameter input

[Data type] Bit path

#1 CST When Oscillation start signal CHPST <Gn051.6> is changed to 0 or when the alarm (except BG and OH) is generated while moving to point R from the start of chopping/oscillation by Oscillation start signal CHPST:
0: Cancel of oscillation mode is executed after reaching point R.
1: Cancel of oscillation mode is executed immediately.

When reset operation is executed while moving to point R, cancel of oscillation mode is executed immediately regardless of the setting of this parameter.

> **NOTE**
> In the following case, this parameter is not effected.
> 1 Start of oscillation by G81.1 command
> 2 Oscillation motion after reaching point R

4.139 PARAMETERS OF SPINDLE CONTROL WITH SERVO MOTOR (2 OF 2)

25700	Acceleration/deceleration switching speed (S_{10}) for deceleration

25701	Acceleration/deceleration switching speed (S_{11}) for deceleration

[Input type] Parameter input
[Data type] 2-word axis
[Unit of data] min^{-1}
[Valid data range] 0 to 99999999
These parameter set the speed at which acceleration/deceleration is changed for each axis (S_0, S_1, S_{10}, S_{11}).

> **NOTE**
> If this parameter is set the following values, the subsequent acceleration/deceleration is disabled.
> - Over the maximum speed
> - 0
> - The value of upper step is smaller than that of lower step

25710	Special acceleration for deceleration (0 to S_{10})

25711	Special acceleration for deceleration (S_{10} to S_{11})

25712	Special acceleration for deceleration (S_{11} to maximum speed)

[Input type] Parameter input
[Data type] 2-word axis
[Unit of data] min^{-1}/s
[Valid data range] 0 to 99999999
This parameters set acceleration/deceleration of sections 0 to S_0, S_0 to S_1, S_1 to maximum speed, 0 to S_{10}, S_{10} to S_{11}, S_{11} to maximum speed for each axis.

25720	Acceleration/deceleration switching speed (S_{10}) of spindle synchronous for deceleration

[Input type] Parameter input

[Data type] 2-word axis
[Unit of data] min^{-1}
[Valid data range] 0 to 999999999
Set the acceleration/deceleration switching points of spindle synchronous control with servo motor for deceleration $S_{10.}$

NOTE
When bit 6 (DCSx) of parameter No.11001 and bit 6 (CSA) of parameter No.11005 are set to 1, this parameter becomes effective.

25721	Acceleration/deceleration switching speed (S_{11}) of spindle synchronous for deceleration

[Input type] Parameter input
[Data type] 2-word axis
[Unit of data] min^{-1}
[Valid data range] 0 to 999999999
Set the acceleration/deceleration switching points of spindle synchronous control with servo motor for deceleration $S_{11.}$

NOTE
When bit 6 (DCSx) of parameter No.11001 and bit 6 (CSA) of parameter No.11005 are set to 1, this parameter becomes effective.

25730	Individual acceleration / deceleration of spindle synchronous for deceleration (0 to S_{10})

[Input type] Parameter input
[Data type] 2-word axis
[Unit of data] min^{-1}/s
[Valid data range] 0 to 100000
Set the acceleration/deceleration of spindle synchronous control with servo motor for deceleration of Leg 1 (0 to S_{10}). Acceleration switching speed 1 is the speed set in parameter No. 25720.

NOTE
When bit 6 (DCSx) of parameter No.11001 and bit 6 (CSA) of parameter No.11005 are set to 1, this parameter becomes effective.

25731	Individual acceleration / deceleration of spindle synchronous for deceleration (S_{10} to S_{11})

[Input type] Parameter input
[Data type] 2-word axis
[Unit of data] min^{-1}/s
[Valid data range] 0 to 100000
Set the acceleration/deceleration of spindle synchronous control with servo motor for deceleration of Leg 2 (S_{10} to S_{11}). Acceleration switching speed 1 and acceleration switching speed 2 are the speeds set in parameter Nos. 25720 and 25721, respectively.

NOTE
When bit 6 (DCSx) of parameter No.11001 and bit 6 (CSA) of parameter No.11005 are set to 1, this parameter becomes effective.

25732	Individual acceleration / deceleration of spindle synchronous for deceleration (S_{11} to Maximum speed)

[Input type] Parameter input
[Data type] 2-word axis
[Unit of data] min^{-1}/s
[Valid data range] 0 to 100000

Set the acceleration/deceleration of spindle synchronous control with servo motor for deceleration of Leg 3 (S_{11} to Maximum speed). Acceleration switching speed 2 and acceleration switching speed 3 are the speeds set in parameter Nos. 25721 and 25722, respectively.

NOTE
When bit 6 (DCSx) of parameter No.11001 and bit 6 (CSA) of parameter No.11005 are set to 1, this parameter becomes effective.

4.140 PARAMETERS OF ACCELERATION/DECELERATION CONTROL (2 OF 2)

	#7	#6	#5	#4	#3	#2	#1	#0
25750							BCT	BRT

[Input type] Parameter input
[Data type] Bit path

#0 BRT By time constant of acceleration/deceleration after interpolation for rapid traverse switching signals RTC2, RTC3 <Gn599.6, Gn599.7>, time constant of acceleration/deceleration after interpolation of acceleration/deceleration before interpolation in rapid traverse is:
0: not switched.
1: switched.

#1 BCT By time constant of acceleration/deceleration after interpolation for cutting feed switching signals CTC2, CTC3 <Gn599.4, Gn599.5>, time constant of acceleration/deceleration after cutting feed interpolation in the acceleration/deceleration before interpolation mode is:
0: not switched.
1: switched.

25751	the second time constant of acceleration/deceleration after interpolation of acceleration/deceleration before interpolation in rapid traverse for each axis

25752	the third time constant of acceleration/deceleration after interpolation of acceleration/deceleration before interpolation in rapid traverse for each axis

[Input type] Parameter input
[Data type] Word axis
[Data unit] msec

[Data range] -1 to 4000
Set the second or third time constant of acceleration/deceleration after interpolation of acceleration/deceleration before interpolation in rapid traverse for each axis.
When the parameter is set to -1, the second or third time constant of acceleration/deceleration after interpolation of acceleration/deceleration before interpolation in rapid traverse is disabled.

25753	the second time constant of acceleration/deceleration after cutting feed interpolation in the acceleration/deceleration before interpolation mode for each axis

25754	the third time constant of acceleration/deceleration after cutting feed interpolation in the acceleration/deceleration before interpolation mode for each axis

[Input type] Parameter input
[Data type] Word axis
[Data unit] msec
[Data range] -1 to 4000
Set the second or third time constant of acceleration/deceleration after cutting feed interpolation in the acceleration/deceleration before interpolation mode for each axis.
When the parameter is set to -1, the second or third time constant of acceleration/deceleration after cutting feed interpolation in the acceleration/deceleration before interpolation mode is disabled.

4.141 PARAMETERS OF SPINDLE CONTROL MODE CHANGING BY PROGRAM COMMAND

25800	M code for spindle orientation ON

NOTE
1 When this parameter is set, the power must be turned off before operation is continued.
2 Don’t set M code used for any other function.
3 The M code set in this parameter prevents buffering.
4 Auxiliary function code signals M00 to M31<Fn010 to Fn013> and auxiliary function strobe signal MF<Fn007.0> are not output.
5 If this parameter is set to 0, the spindle cannot use spindle orientation by program command.

[Input type] Parameter input
[Data type] 2-word spindle
[Valid data range] 0 to 99999999
Set M code for spindle orientation ON.

25801	M code for spindle orientation OFF

NOTE
1 When this parameter is set, the power must be turned off before operation is continued.
2 Don’t set M code used for any other function.
3 Auxiliary function code signals M00 to M31<Fn010 to Fn013> and auxiliary function strobe signal MF<Fn007.0> are not output.
4 If this parameter is set to 0, the spindle cannot use spindle orientation by program command.

[Input type] Parameter input
[Data type] 2-word spindle
[Valid data range] 0 to 99999999
Set M code for spindle orientation OFF.

25802	M code for Cs contour control ON

NOTE
1 When this parameter is set, the power must be turned off before operation is continued.
2 Don’t set M code used for any other function.
3 The M code set in this parameter prevents buffering.
4 Auxiliary function code signals M00 to M31<Fn010 to Fn013> and auxiliary function strobe signal MF<Fn007.0> are not output.
5 If this parameter is set to 0, the spindle cannot use Cs contour control by program command.

[Input type] Parameter input
[Data type] 2-word spindle
[Valid data range] 0 to 99999999
Set M code for Cs contour control ON.

25803	M code for Cs contour control OFF

NOTE
1 When this parameter is set, the power must be turned off before operation is continued.
2 Don’t set M code used for any other function.
3 Auxiliary function code signals M00 to M31<Fn010 to Fn013> and auxiliary function strobe signal MF<Fn007.0> are not output.
4 If this parameter is set to 0, the spindle cannot use Cs contour control by program command.

[Input type] Parameter input
[Data type] 2-word spindle
[Valid data range] 0 to 99999999
Set M code for Cs contour control OFF.

25804	M code for spindle control mode OFF 1
25805	M code for spindle control mode OFF 2
25806	M code for spindle control mode OFF 3

NOTE
1 When this parameter is set, the power must be turned off before operation is continued.
2 Don't set M code used for any other function.
3 If this parameter is set to 0, the spindle cannot use M code for spindle control mode OFF.

[Input type] Parameter input
[Data type] 2-word spindle
[Valid data range] 0 to 99999999
Set M code for spindle control mode OFF.

	#7	#6	#5	#4	#3	#2	#1	#0
25807								ADP

[Input type] Parameter input
[Data type] Bit

NOTE
When this parameter is set, the power must be turned off before operation is continued.

#0 ADP In Spindle control mode changing by program command, when spindle selection by address P of Multi-spindle control is enabled, multi-spindle address P signals MSP00 to MSP15<Fn160.0 to Fn161.7> (the value is address P commanded with M code for spindle control mode changing) is:
0: Not output.
1: Output.

4.142 PARAMETERS OF GRAPHIC DISPLAY (4 OF 4)

	#7	#6	#5	#4	#3	#2	#1	#0
27350								GTP

[Input type] Parameter input
[Data type] Bit

#0 GTP When a general-purpose tool is drawn in animated simulation, the tip is:
0: Positioned on the front.
1: Positioned on the rear.

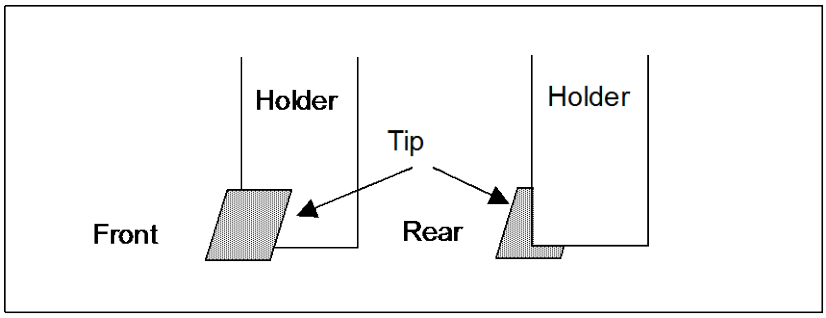

27351	Cutting edge length applied when a general-purpose tool is drawn in animated simulation

[Input type] Parameter input
[Data type] 2-word
[Unit of data] 0.001mm (metric input), 0.0001inch (inch input)
[Valid data range] 0 or larger

This parameter sets the cutting edge length applied when a general-purpose tool is drawn in animated simulation.

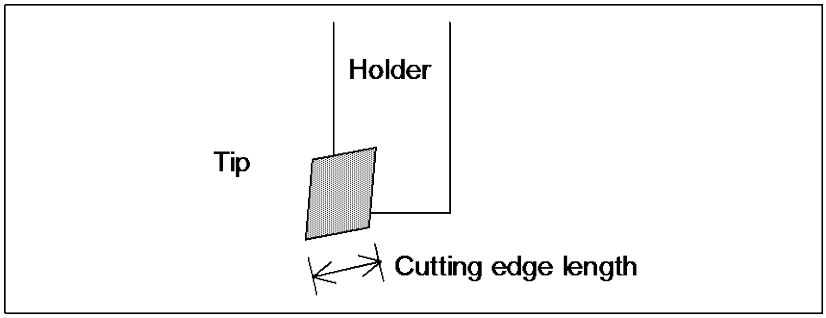

When 0 is set, 12 mm for metric input or 0.4724 inch for inch input is assumed.

27352	Holder length applied when a general-purpose tool is drawn in animated simulation

[Input type] Parameter input
[Data type] 2-word
[Unit of data] 0.001mm (metric input), 0.0001inch (inch input)
[Valid data range] 0 or larger

This parameter sets the holder length applied when a general-purpose tool is drawn in animated simulation.

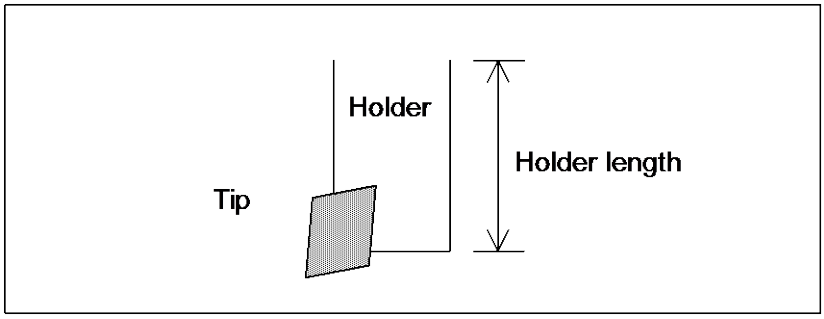

When 0 is set, 50 mm for metric input or 1.9685 inch for inch input is assumed.

27353	Holder width applied when a general-purpose tool is drawn in animated simulation

[Input type] Parameter input
[Data type] 2-word

[Unit of data] 0.001mm (metric input), 0.0001inch (inch input)
[Valid data range] 0 or larger
This parameter sets the holder width applied when a general-purpose tool is drawn in animated simulation.

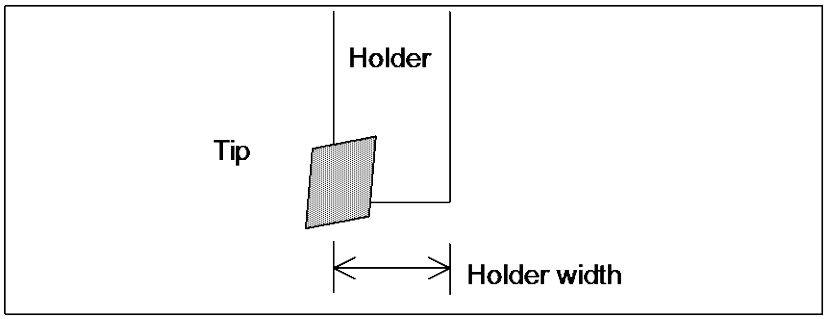

When 0 is set, 14 mm for metric input or 0.5512 inch for inch input is assumed.

27354	Holder length 2 applied when a general-purpose tool is drawn in animated simulation

[Input type] Parameter input
[Data type] 2-word
[Unit of data] 0.001mm (metric input), 0.0001inch (inch input)
[Valid data range] 0 or larger
This parameter sets the holder length 2 applied when a general-purpose tool is drawn in animated simulation.

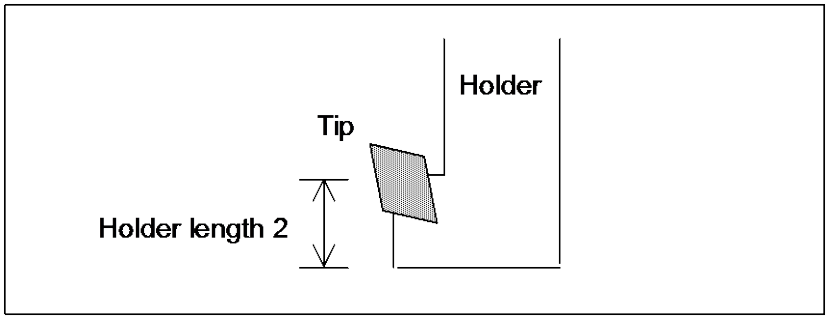

27355	Holder width 2 applied when a general-purpose tool is drawn in animated simulation

[Input type] Parameter input
[Data type] 2-word
[Unit of data] 0.001mm (metric input), 0.0001inch (inch input)
[Valid data range] 0 or larger
This parameter sets the holder width 2 applied when a general-purpose tool is drawn in animated simulation.

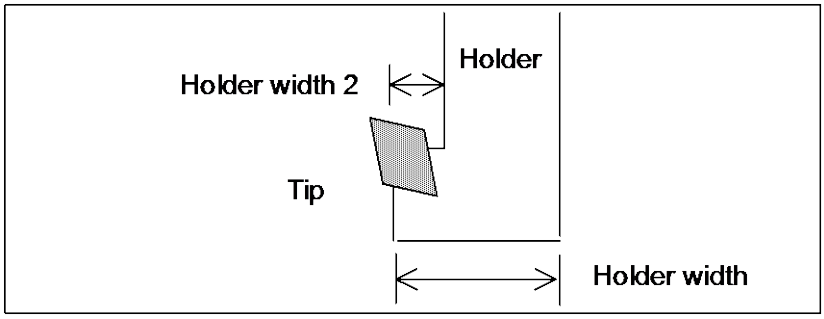

	#7	#6	#5	#4	#3	#2	#1	#0
27356								TTP

[Input type] Parameter input
[Data type] Bit

#0 TTP When a threading tool is drawn in animated simulation, the tip is:
0: Positioned on the front.
1: Positioned on the rear.

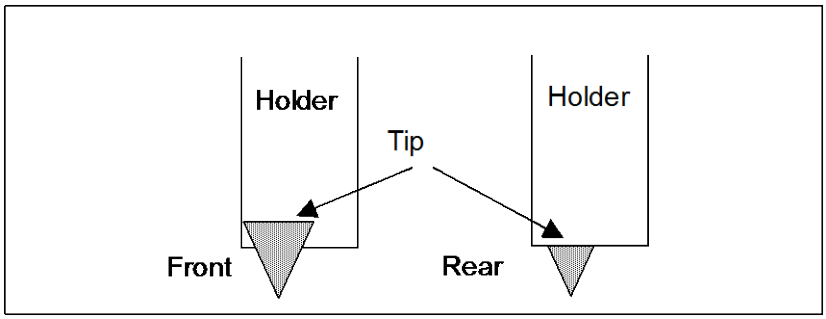

27357	Cutting edge width applied when a threading tool is drawn in animated simulation

[Input type] Parameter input
[Data type] 2-word
[Unit of data] 0.001mm (metric input), 0.0001inch (inch input)
[Valid data range] 0 or larger
This parameter sets the cutting edge width applied when a threading tool is drawn in animated simulation.

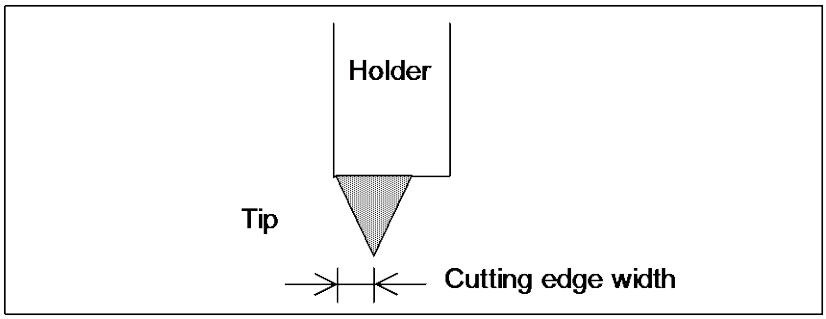

When 0 is set, 3 mm for metric input or 0.11811 inch for inch input is assumed.

27358	Holder length applied when a threading tool is drawn in animated simulation

[Input type] Parameter input
[Data type] 2-word
[Unit of data] 0.001mm (metric input), 0.0001inch (inch input)
[Valid data range] 0 or larger
This parameter sets the holder length applied when a threading tool is drawn in animated simulation.

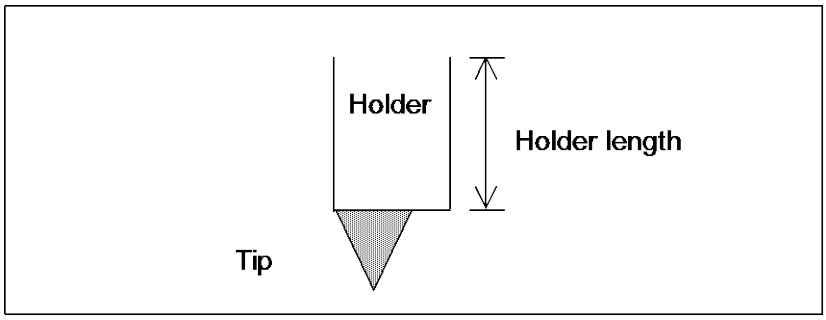

When 0 is set, 50 mm for metric input or 1.9685 inch for inch input is assumed.

27359	Holder width applied when a threading tool is drawn in animated simulation

[Input type] Parameter input
[Data type] 2-word
[Unit of data] 0.001mm (metric input), 0.0001inch (inch input)
[Valid data range] 0 or larger
This parameter sets the holder width applied when a threading tool is drawn in animated simulation.

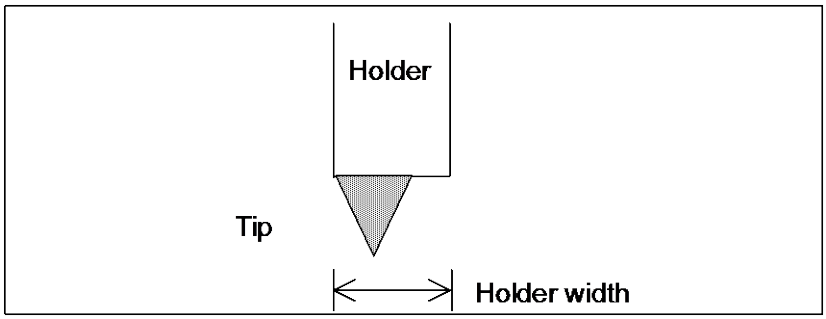

When 0 is set, 14 mm for metric input or 0.5512 inch for inch input is assumed.

	#7	#6	#5	#4	#3	#2	#1	#0
27360								GVP

[Input type] Parameter input
[Data type] Bit

#0 GVP When a groove cutting tool is drawn in animated simulation, the tip is:
0: Positioned on the front.
1: Positioned on the rear.

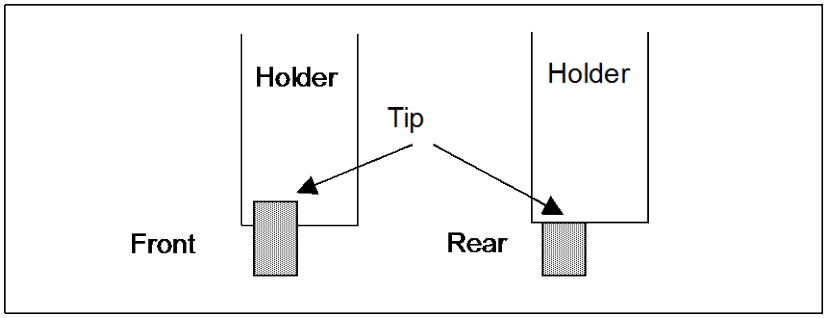

27361	Holder length applied when a groove cutting tool is drawn in animated simulation

[Input type] Parameter input
[Data type] 2-word
[Unit of data] 0.001mm (metric input), 0.0001inch (inch input)
[Valid data range] 0 or larger
This parameter sets the holder length applied when a groove cutting tool is drawn in animated simulation.

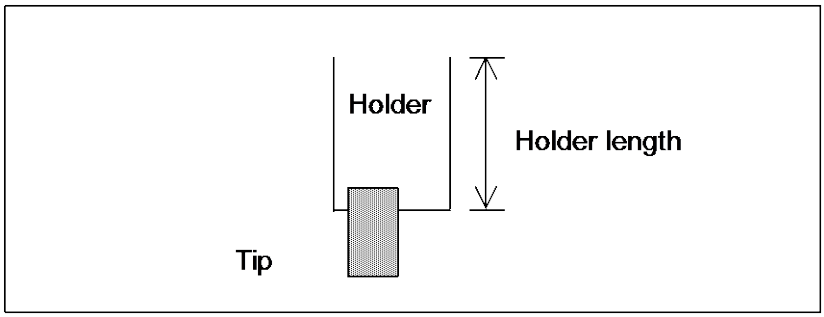

When 0 is set, 50 mm for metric input or 1.9685 inch for inch input is assumed.

27362	Holder width applied when a groove cutting tool is drawn in animated simulation

[Input type] Parameter input
[Data type] 2-word
[Unit of data] 0.001mm (metric input), 0.0001inch (inch input)
[Valid data range] 0 or larger
This parameter sets the holder width applied when a groove cutting tool is drawn in animated simulation.

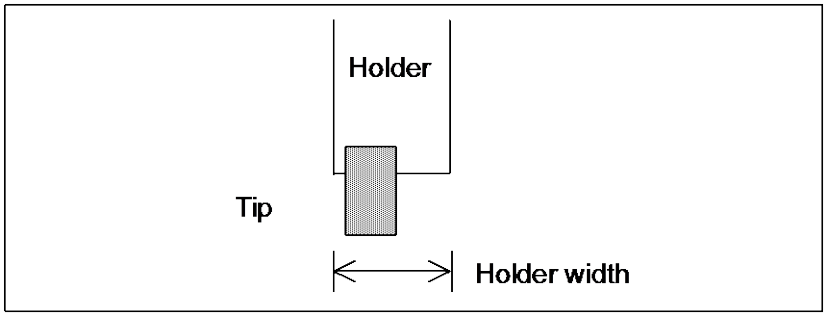

When 0 is set, 14 mm for metric input or 0.5512 inch for inch input is assumed.

	#7	#6	#5	#4	#3	#2	#1	#0
27363								BTP

[Input type] Parameter input
[Data type] Bit

#0 BTP When a round-nose tool is drawn in animated simulation, the tip is:
0: Positioned on the front.
1: Positioned on the rear.

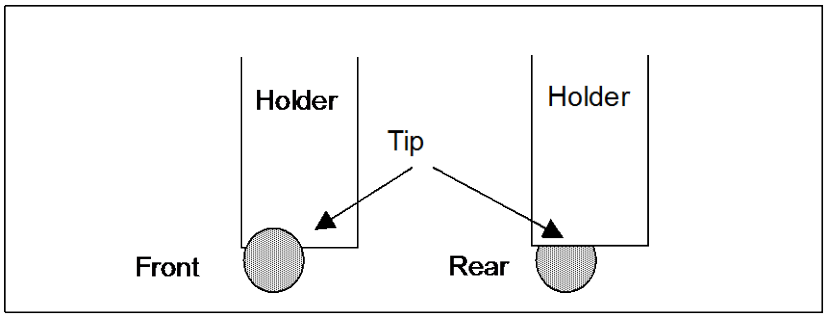

27364	Holder length applied when a round-nose tool is drawn in animated simulation

[Input type] Parameter input
[Data type] 2-word
[Unit of data] 0.001mm (metric input), 0.0001inch (inch input)
[Valid data range] 0 or larger
This parameter sets the holder length applied when a round-nose tool is drawn in animated simulation.

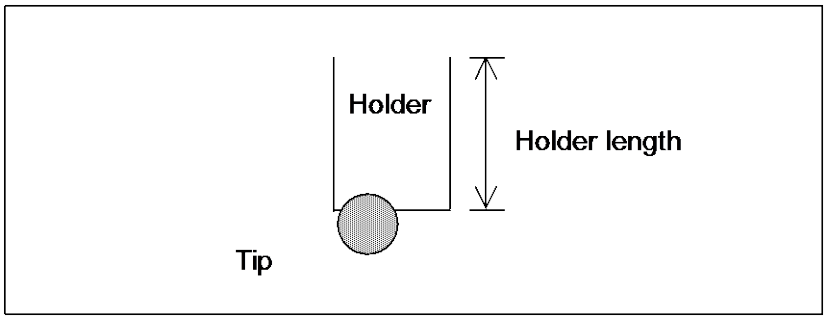

When 0 is set, 50 mm for metric input or 1.9685 inch for inch input is assumed.

27365	Holder width applied when a round-nose tool is drawn in animated simulation

[Input type] Parameter input
[Data type] 2-word
[Unit of data] 0.001mm (metric input), 0.0001inch (inch input)
[Valid data range] 0 or larger
This parameter sets the holder width applied when a round-nose tool is drawn in animated simulation.

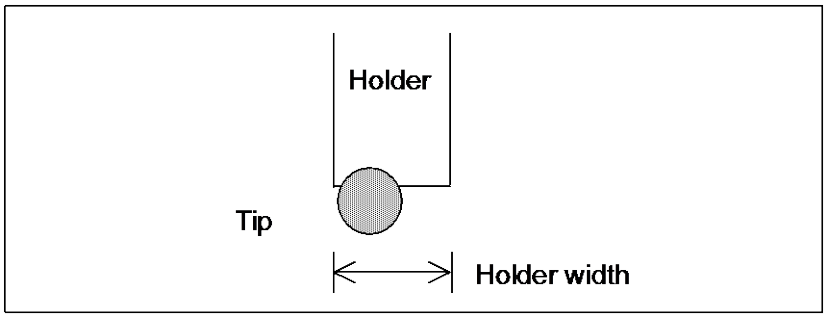

When 0 is set, 14 mm for metric input or 0.5512 inch for inch input is assumed.

	#7	#6	#5	#4	#3	#2	#1	#0
27366								STP

[Input type] Parameter input
[Data type] Bit

#0 STP When a point nose straight tool is drawn in animated simulation, the tip is:
0: Positioned on the front.
1: Positioned on the rear.

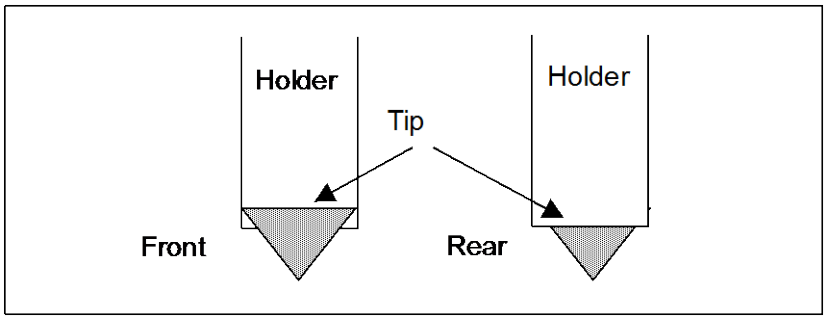

27367	Cutting edge length applied when a point nose straight tool is drawn in animated simulation

[Input type] Parameter input
[Data type] 2-word
[Unit of data] 0.001mm (metric input), 0.0001inch (inch input)
[Valid data range] 0 or larger
This parameter sets the cutting edge length applied when a point nose straight tool is drawn in animated simulation.

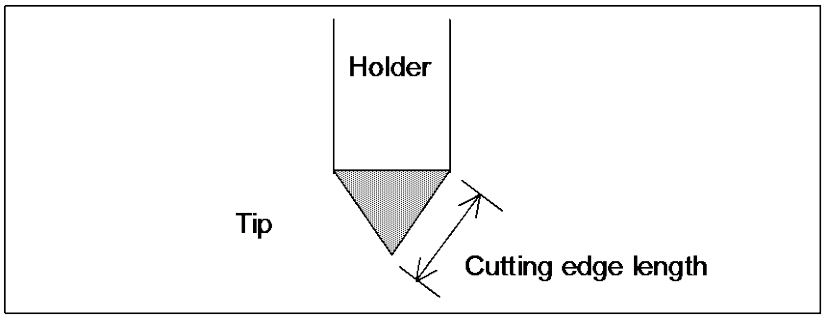

When 0 is set, 12 mm for metric input or 0.4724 inch for inch input is assumed.

27368	Holder length applied when a point nose straight tool is drawn in animated simulation

[Input type] Parameter input
[Data type] 2-word
[Unit of data] 0.001mm (metric input), 0.0001inch (inch input)
[Valid data range] 0 or larger
This parameter sets the holder length applied when a point nose straight tool is drawn in animated simulation.

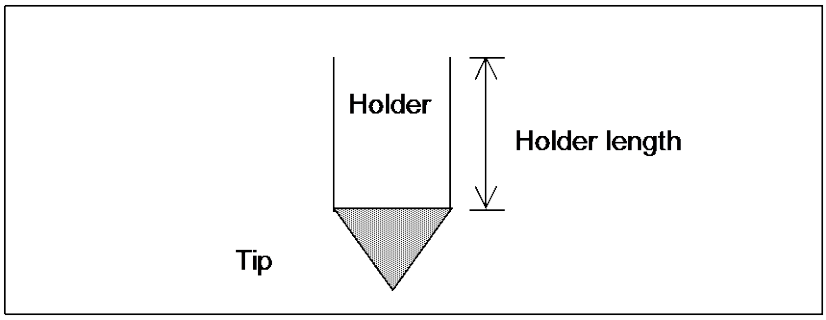

When 0 is set, 50 mm for metric input or 1.9685 inch for inch input is assumed.

27369	Holder width applied when a point nose straight tool is drawn in animated simulation

[Input type] Parameter input
[Data type] 2-word
[Unit of data] 0.001mm (metric input), 0.0001inch (inch input)
[Valid data range] 0 or larger
This parameter sets the holder width applied when a point nose straight tool is drawn in animated simulation.

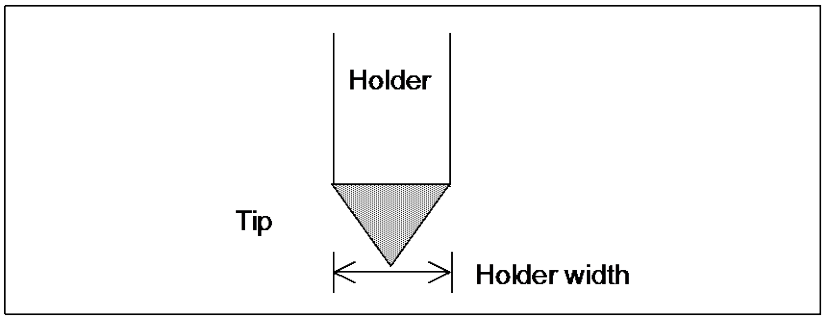

When 0 is set, 14 mm for metric input or 0.5512 inch for inch input is assumed.

27370	Holder length 2 applied when a point nose straight tool is drawn in animated simulation

[Input type] Parameter input
[Data type] 2-word
[Unit of data] 0.001mm (metric input), 0.0001inch (inch input)
[Valid data range] 0 or larger
This parameter sets the holder length 2 applied when a point nose straight tool is drawn in animated simulation.

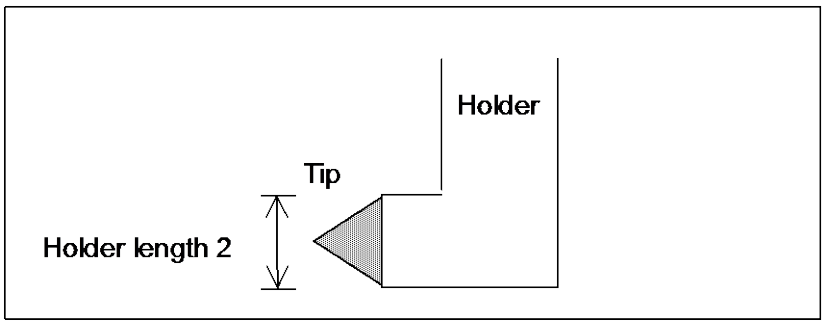

27371	Holder width 2 applied when a point nose straight tool is drawn in animated simulation

[Input type] Parameter input
[Data type] 2-word
[Unit of data] 0.001mm (metric input), 0.0001inch (inch input)
[Valid data range] 0 or larger
This parameter sets the holder width 2 applied when a point nose straight tool is drawn in animated simulation.

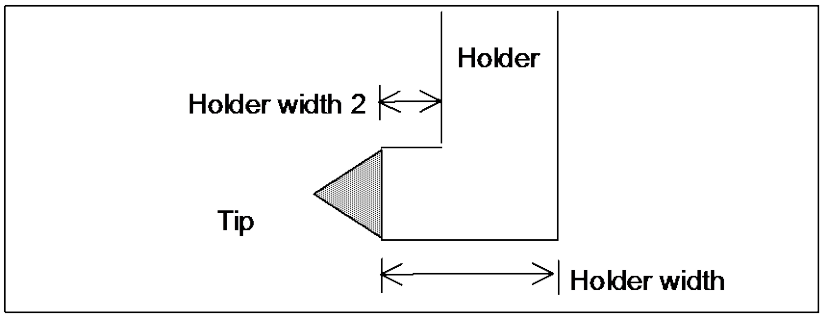

27372	Length of cut applied when a drill tool is drawn in animated simulation

[Input type] Parameter input
[Data type] 2-word
[Unit of data] 0.001mm (metric input), 0.0001inch (inch input)
[Valid data range] 0 or larger
This parameter sets the length of cut applied when a drill tool is drawn in animated simulation.

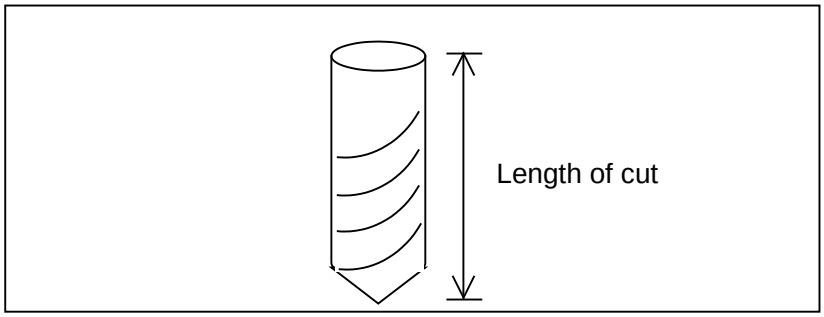

When 0 is set, 50 mm for metric input or 1.9685 inch for inch input is assumed.

27373	Length of cut applied when a flat end milling cutter is drawn in animated simulation

[Input type] Parameter input
[Data type] 2-word
[Unit of data] 0.001mm (metric input), 0.0001inch (inch input)
[Valid data range] 0 or larger
This parameter sets the length of cut applied when a flat end milling cutter is drawn in animated simulation.

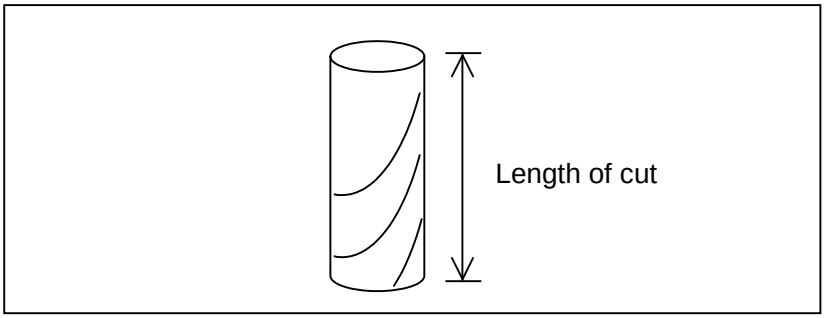

When 0 is set, 50 mm for metric input or 1.9685 inch for inch input is assumed.

27374	Length of cut applied when a tapping tool is drawn in animated simulation

[Input type] Parameter input
[Data type] 2-word
[Unit of data] 0.001mm (metric input), 0.0001inch (inch input)
[Valid data range] 0 or larger
This parameter sets the length of cut applied when a tapping tool is drawn in animated simulation.

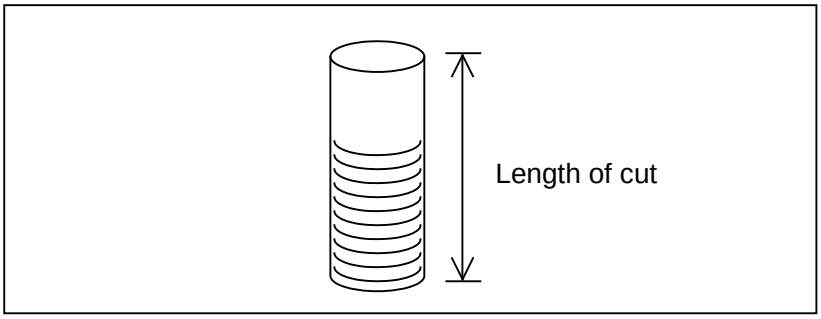

When 0 is set, 50 mm for metric input or 1.9685 inch for inch input is assumed.

27375	Included angle applied when a chamfering tool is drawn in animated simulation

[Input type] Parameter input
[Data type] 2-word
[Unit of data] degree
[Valid data range] 0 to 90
This parameter sets the included angle applied when a chamfering tool is drawn in animated simulation.

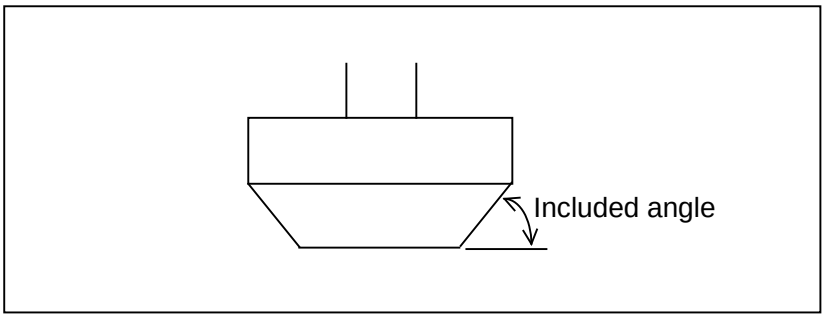

27376	Length of cut applied when a chamfering tool is drawn in animated simulation

[Input type] Parameter input
[Data type] 2-word
[Unit of data] 0.001mm (metric input), 0.0001inch (inch input)
[Valid data range] 0 or larger
This parameter sets the length of cut applied when a chamfering tool is drawn in animated simulation.

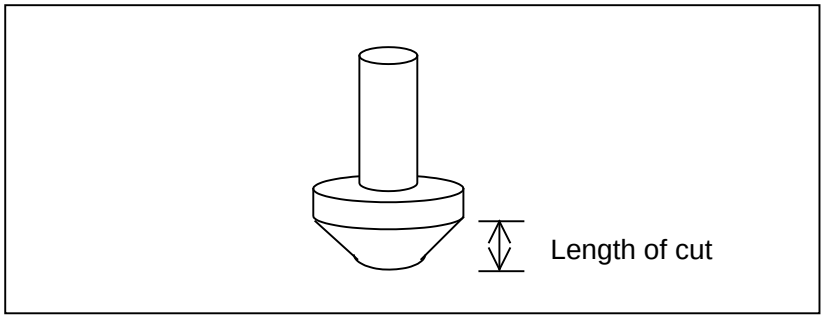

When 0 is set, 26 mm for metric input or 1.0236 inch for inch input is assumed.

27377	Cutter length applied when a chamfering tool is drawn in animated simulation

[Input type] Parameter input
[Data type] 2-word
[Unit of data] 0.001mm (metric input), 0.0001inch (inch input)
[Valid data range] 0 or larger
This parameter sets the cutter length applied when a chamfering tool is drawn in animated simulation.

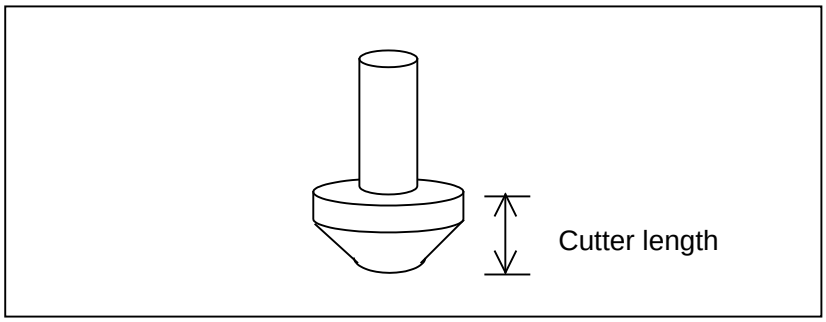

When 0 is set, 50 mm for metric input or 1.9685 inch for inch input is assumed.

27378	Shank length applied when a chamfering tool is drawn in animated simulation

[Input type] Parameter input
[Data type] 2-word
[Unit of data] 0.001mm (metric input), 0.0001inch (inch input)
[Valid data range] 0 or larger
This parameter sets the shank length applied when a chamfering tool is drawn in animated simulation.

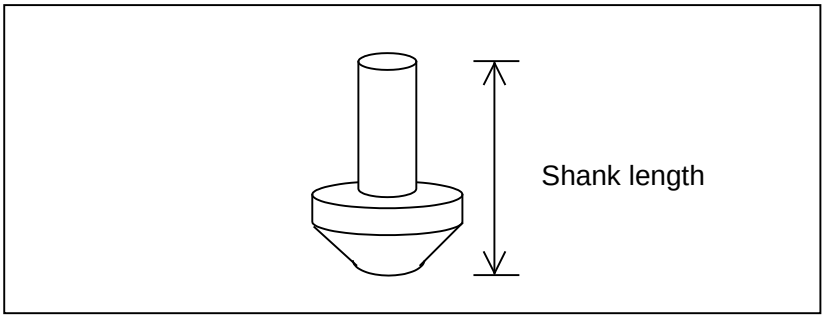

When 0 is set, 130 mm for metric input or 5.1181 inch for inch input is assumed.

27379	Shank diameter applied when a chamfering tool is drawn in animated simulation

[Input type] Parameter input
[Data type] 2-word
[Unit of data] 0.001mm (metric input), 0.0001inch (inch input)
[Valid data range] 0 or larger
This parameter sets the shank diameter applied when a chamfering tool is drawn in animated simulation.

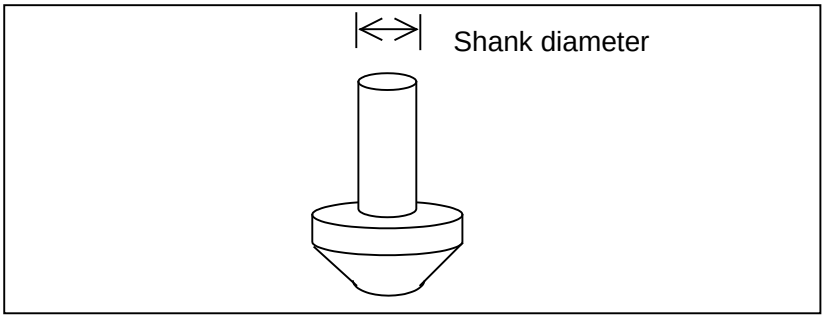

When 0 is set, 32 mm for metric input or 1.2598 inch for inch input is assumed.

27380	Length of cut applied when a ball end mill is drawn in animated simulation

[Input type] Parameter input
[Data type] 2-word
[Unit of data] 0.001mm (metric input), 0.0001inch (inch input)
[Valid data range] 0 or larger
This parameter sets the length of cut applied when a ball end mill is drawn in animated simulation.

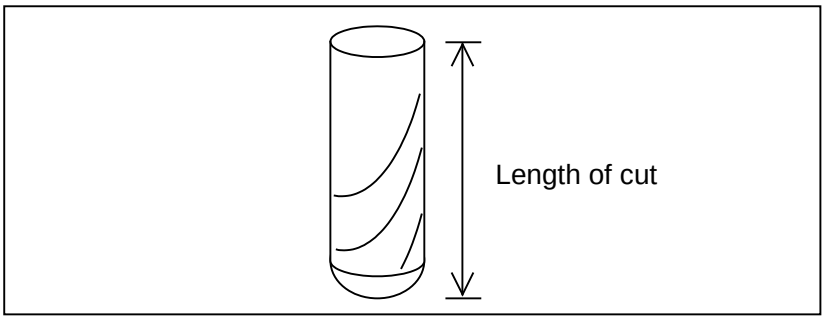

When 0 is set, 50 mm for metric input or 1.9685 inch for inch input is assumed.

27381	Length of cut applied when a reamer is drawn in animated simulation

[Input type] Parameter input
[Data type] 2-word
[Unit of data] 0.001mm (metric input), 0.0001inch (inch input)
[Valid data range] 0 or larger
This parameter sets the length of cut applied when a reamer is drawn in animated simulation.

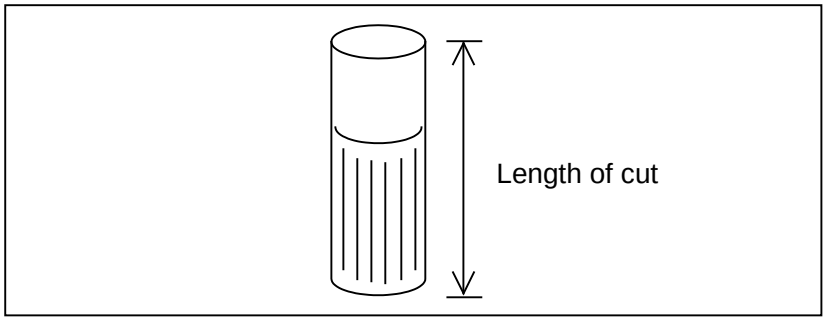

When 0 is set, 50 mm for metric input or 1.9685 inch for inch input is assumed.

27382	Length of cut applied when a boring tool is drawn in animated simulation

[Input type] Parameter input
[Data type] 2-word
[Unit of data] 0.001mm (metric input), 0.0001inch (inch input)
[Valid data range] 0 or larger
This parameter sets the length of cut applied when a boring tool is drawn in animated simulation.

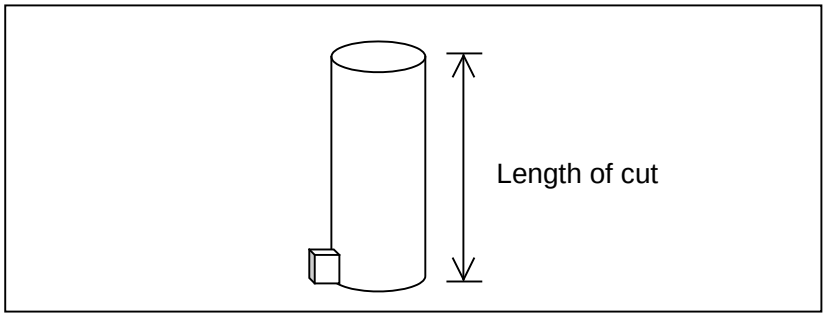

When 0 is set, 50 mm for metric input or 1.9685 inch for inch input is assumed.

27383	Length of cut applied when a face milling cutter is drawn in animated simulation

[Input type] Parameter input
[Data type] 2-word
[Unit of data] 0.001mm (metric input), 0.0001inch (inch input)
[Valid data range] 0 or larger
This parameter sets the length of cut applied when a face milling cutter is drawn in animated simulation.

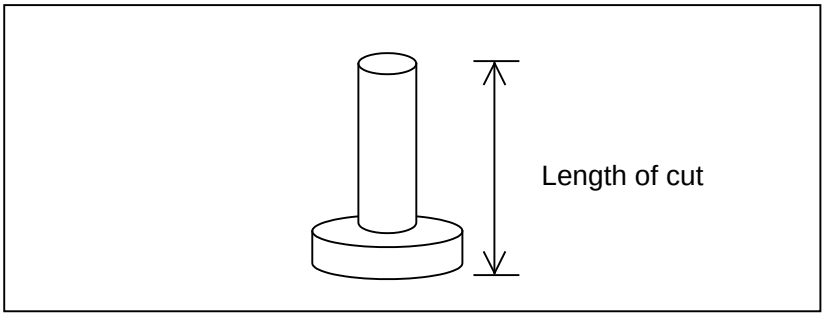

When 0 is set, 63 mm for metric input or 2.4803 inch for inch input is assumed.

	#7	#6	#5	#4	#3	#2	#1	#0
27384								VRP

[Input type] Parameter input
[Data type] Bit

#0 VRP When a multifunction tool is drawn in animated simulation, the tip is:
0: Positioned on the front.
1: Positioned on the rear.

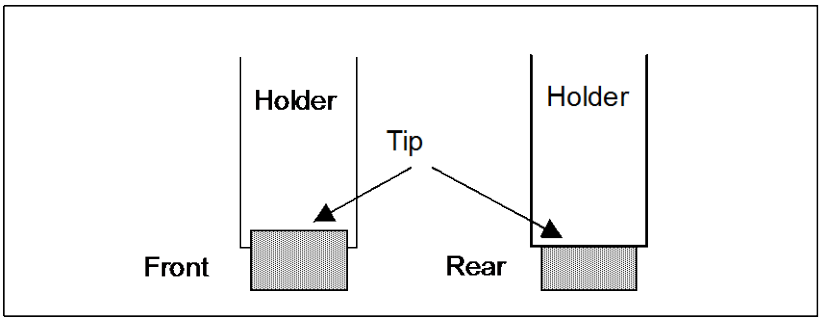

27385	Holder length applied when a multifunction tool is drawn in animated simulation

[Input type] Parameter input
[Data type] 2-word
[Unit of data] 0.001mm (metric input), 0.0001inch (inch input)
[Valid data range] 0 or larger
This parameter sets the holder length applied when a multifunction tool is drawn in animated simulation.

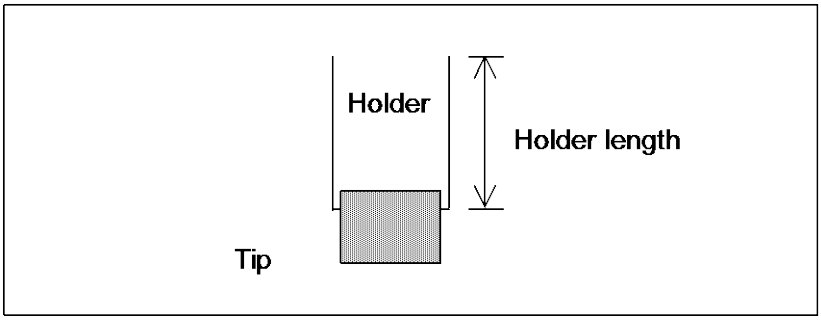

When 0 is set, 50 mm for metric input or 1.9685 inch for inch input is assumed.

27386	Holder width applied when a multifunction tool is drawn in animated simulation

[Input type] Parameter input
[Data type] 2-word
[Unit of data] 0.001mm (metric input), 0.0001inch (inch input)
[Valid data range] 0 or larger
This parameter sets the holder width applied when a multifunction tool is drawn in animated simulation.

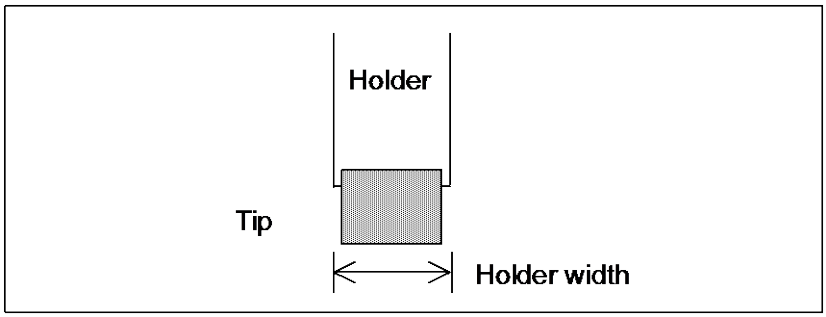

When 0 is set, 14 mm for metric input or 0.5512 inch for inch input is assumed.

4.143 PARAMETERS OF SET-UP GUIDANCE FUNCTION

	#7	#6	#5	#4	#3	#2	#1	#0
27485								
								SUG

[Input type] Parameter input
[Data type] Bit

#0 SUG Set-up guidance function is:
0: Not Used.
1: Used.

APPENDIX

A CHARACTER CODE LIST

Character	Code	Comment	Character	Code	Comment
A	065		6	054	
B	066		7	055	
C	067		8	056	
D	068		9	057	
E	069			032	Space
F	070		!	033	Exclamation mark
G	071		”	034	Quotation marks
H	072		#	035	Sharp
I	073		$	036	Dollar mark
J	074		%	037	Percent
K	075		&	038	Ampersand
L	076		’	039	Apostrophe
M	077		(	040	Left parenthesis
N	078		)	041	Right parenthesis
O	079		*	042	Asterisk
P	080		+	043	Positive sign
Q	081		,	044	Comma
R	082		-	045	Negative sign
S	083		.	046	Period
T	084		/	047	Slash
U	085		:	058	Colon
V	086		;	059	Semicolon
W	087		<	060	Left angle bracket
X	088		=	061	Equal sign
Y	089		>	062	Right angle bracket
Z	090		?	063	Question mark
0	048		@	064	Commercial at mark
1	049		[	091	Left square bracket
2	050		¥	092	Yen mark
3	051		]	093	Right square bracket
4	052		^	094	
5	053		_	095	Underline

INDEX

<B>

Bit Axis Format....8
Bit Format....7
Bit Machine Group Format....7
Bit Path Format....8
Bit Spindle Format....9
Byte/Word/Two-Word Axis Format....10
Byte/Word/Two-Word Format....9
Byte/Word/Two-Word Machine Group Format....9
Byte/Word/Two-Word Path Format....10
Byte/Word/Two-Word Spindle Format....11

<C>

CHARACTER CODE LIST....755

<D>

DATA TYPE....15
DEFINITION OF WARNING, CAUTION, AND NOTE....s-1
DESCRIPTION OF PARAMETERS....15
DISPLAYING PARAMETERS....1

<I>

I/O FORMATS....6
Inch/Metric Switching....7
INPUT TYPE....15
INPUTTING AND OUTPUTTING PARAMETERS....4
INPUTTING PARAMETERS THROUGH THE RS-232C INTERFACE....5

<K>

Keywords....6

<O>

OTHER PARAMETERS....487
OUTPUTTING PARAMETERS THROUGH THE RS-232C INTERFACE....4

<P>

Parameters Common to All Channels....22
PARAMETERS OF 0*i*-F Plus BASIC FUNCTIONS..444
PARAMETERS OF ACCELERATION/DECELERATION CONTROL (1 OF 2)....80
PARAMETERS OF ACCELERATION/DECELERATION CONTROL (2 OF 2)....734
PARAMETERS OF AI CONTOUR CONTROL (1 OF 2)....482
PARAMETERS OF AI CONTOUR CONTROL (2 OF 2)....681
PARAMETERS OF ANGULAR AXIS CONTROL...469
PARAMETERS OF ARBITRARY SPEED THREADING....571
PARAMETERS OF AUTOMATIC DATA BACKUP 504
PARAMETERS OF AXIS CONTROL....505
PARAMETERS OF AXIS CONTROL/INCREMENT SYSTEM (1 OF 3)....39
PARAMETERS OF AXIS CONTROL/INCREMENT SYSTEM (2 OF 3)....524
PARAMETERS OF AXIS CONTROL/INCREMENT SYSTEM (3 OF 3)....671
PARAMETERS OF AXIS SWITCHING....507
PARAMETERS OF AXIS SYNCHRONOUS CONTROL....471
Parameters of Canned Cycle for Drilling (1 of 2)....271
Parameters of Canned Cycle for Drilling (2 of 2)....287
Parameters of Canned Cycle for Grinding (for Grinding Machine) (1 of 2)....292
PARAMETERS OF CANNED CYCLES....271
PARAMETERS OF CANNED CYCLES FOR DRILLING M CODE OUTPUT IMPROVEMENT661
Parameters of Channel 1 (I/O CHANNEL=0)....26
Parameters of Channel 1 (I/O CHANNEL=1)....27
Parameters of Channel 2 (I/O CHANNEL=2)....28
PARAMETERS OF CHUCK AND TAIL STOCK BARRIER....63
PARAMETERS OF CNC SCREEN DISPLAY FUNCTIONS....29
PARAMETERS OF COORDINATE SYSTEM (1 OF 2)....50
PARAMETERS OF COORDINATE SYSTEM (2 OF 2)....531
PARAMETERS OF CUSTOM MACROS....330
PARAMETERS OF CYLINDRICAL INTERPOLATION....683
PARAMETERS OF DI/DO (1 OF 2)....138
PARAMETERS OF DI/DO (2 OF 2)....525
PARAMETERS OF DISPLAY AND EDIT (1 OF 6) .148
PARAMETERS OF DISPLAY AND EDIT (2 OF 6) .534
PARAMETERS OF DISPLAY AND EDIT (3 OF 6) .542
PARAMETERS OF DISPLAY AND EDIT (4 OF 6) .549
PARAMETERS OF DISPLAY AND EDIT (5 OF 6) .632
PARAMETERS OF DISPLAY AND EDIT (6 OF 6) .711
PARAMETERS OF DUAL CHECK SAFETY (1 OF 2)....509
PARAMETERS OF DUAL CHECK SAFETY (2 OF 2)....669
PARAMETERS OF ELECTRONIC GEAR BOX (EGB)....418
PARAMETERS OF EMBEDDED ETHERNET....675
PARAMETERS OF EMBEDDED MACRO (1 OF 2) 541
PARAMETERS OF EMBEDDED MACRO (2 OF 2) 615
PARAMETERS OF ETHERNET/ INDUSTRIAL ETHERNET FUNCTIONS....35
PARAMETERS OF ETHERNET/DATA SERVER FUNCTIONS....29
PARAMETERS OF EtherNet/IP ADAPTER SAFETY FUNCTION....670

PARAMETERS OF EXTERNAL DATA INPUT/OUTPUT 366
PARAMETERS OF EXTERNAL DECELERATION POSITIONS EXPANSION 628
PARAMETERS OF FEEDRATE 69
PARAMETERS OF FEEDRATE CONTROL AND ACCELERATION/DECELERATION CONTROL (1 OF 2) 510
PARAMETERS OF FEEDRATE CONTROL AND ACCELERATION/DECELERATION CONTROL (2 OF 2) 526
PARAMETERS OF FINE SURFACE SETTING 728
PARAMETERS OF FLEXIBLE SYNCHRONIZATION CONTROL (1 OF 2).....320
PARAMETERS OF FLEXIBLE SYNCHRONIZATION CONTROL (2 OF 2).....655
PARAMETERS OF FSSB (1 OF 2).....672
PARAMETERS OF FSSB (2 OF 2).....705
PARAMETERS OF GRAPHIC DISPLAY (1 OF 4)...374
PARAMETERS OF GRAPHIC DISPLAY (2 OF 4)...545
PARAMETERS OF GRAPHIC DISPLAY (3 OF 4)...673
PARAMETERS OF GRAPHIC DISPLAY (4 OF 4)...737
PARAMETERS OF HIGH PRECISION OSCILLATION FUNCTION (1 OF 2) 480,730
PARAMETERS OF HIGH-SPEED POSITION SWITCH (1 OF 2) 484
PARAMETERS OF HIGH-SPEED POSITION SWITCH (2 OF 2) 616
PARAMETERS OF INCLINATION COMPENSATION.....328
PARAMETERS OF INCORRECT OPERATION PREVENTION FUNCTION 496
PARAMETERS OF INDEX TABLE INDEXING.....317
PARAMETERS OF INTERFERENCE CHECK BETWEEN PATHS 451
PARAMETERS OF LINEAR SCALE WITH ABSOLUTE ADDRESS REFERENCE POSITION672
PARAMETERS OF MACHINING CONDITION SELECTION FUNCTION 662
PARAMETERS OF MAINTENANCE 492
PARAMETERS OF MALFUNCTION PROTECTION618
PARAMETERS OF MANUAL HANDLE (1 OF 2) ...395
PARAMETERS OF MANUAL HANDLE (2 OF 2) ...618
PARAMETERS OF MANUAL HANDLE RETRACE (1 OF 2) 367
PARAMETERS OF MANUAL HANDLE RETRACE (2 OF 2) 679
PARAMETERS OF MANUAL LINER/CIRCULAR INTERPOLATION 660
PARAMETERS OF MANUAL OPERATION AND AUTOMATIC OPERATION (1 OF 2) 393
PARAMETERS OF MANUAL OPERATION AND AUTOMATIC OPERATION (2 OF 2) 508
PARAMETERS OF MULTI-PATH CONTROL.....440
Parameters of Multiple Repetitive Canned Cycle 283
PARAMETERS OF NORMAL DIRECTION CONTROL 316
PARAMETERS OF OPTIMAL TORQUE ACCELERATION/ DECELERATION 685
PARAMETERS OF OPTIMUM ACCELERATION/DECELERATION FOR RIGID TAPPING.....568
PARAMETERS OF PARAMETER CHECK SUM FUNCTION.....667
PARAMETERS OF PATTERN DATA INPUT.....353
PARAMETERS OF PITCH ERROR COMPENSATION.....196
PARAMETERS OF PMC.....603
PARAMETERS OF PMC AXIS CONTROL (1 OF 4)429
PARAMETERS OF PMC AXIS CONTROL (2 OF 4)507
PARAMETERS OF PMC AXIS CONTROL (3 OF 4)602
PARAMETERS OF PMC AXIS CONTROL (4 OF 4)627
PARAMETERS OF POLAR COORDINATE INTERPOLATION 314
PARAMETERS OF POLYGON TURNING.....409
PARAMETERS OF POSITION SWITCH FUNCTIONS 389
PARAMETERS OF POSITIONING BY OPTIMUM ACCELERATION 354
PARAMETERS OF POWER MATE CNC 35
PARAMETERS OF PROFINET IO DEVICE SAFETY FUNCTION.....669
PARAMETERS OF PROGRAM RESTART (1 OF 2)406
PARAMETERS OF PROGRAM RESTART (2 OF 2)529
PARAMETERS OF PROGRAMS (1 OF 5).....181
PARAMETERS OF PROGRAMS (2 OF 5).....526
PARAMETERS OF PROGRAMS (3 OF 5).....534
PARAMETERS OF PROGRAMS (4 OF 5).....575
PARAMETERS OF PROGRAMS (5 OF 5).....658
PARAMETERS OF REFERENCE POINT WITH MECHANICAL STOPPER 400
PARAMETERS OF RIGID TAPPING.....296
PARAMETERS OF RS-232C INTERFACE.....21
PARAMETERS OF RUN HOUR AND PARTS COUNT DISPLAY 377
PARAMETERS OF SAFETY FUNCTION BY FL-net670
PARAMETERS OF SCALING/COORDINATE ROTATION 311
PARAMETERS OF SCREEN DISPLAY COLORS (1 OF 2) 376
PARAMETERS OF SCREEN DISPLAY COLORS (2 OF 2) 508
PARAMETERS OF SEQUENCE NUMBER COMPARISON AND STOP.....480
PARAMETERS OF SERVO (1 OF 2).....101
PARAMETERS OF SERVO (2 OF 2).....597
PARAMETERS OF SERVO GUIDE Mate.....673
PARAMETERS OF SETTING.....19
PARAMETERS OF SET-UP GUIDANCE FUNCTION 752
PARAMETERS OF SINGLE DIRECTION POSITIONING.....313
PARAMETERS OF SKIP FUNCTION.....356
PARAMETERS OF SMOOTH TOLERANCE+ CONTROL (1 OF 2) 596

PARAMETERS OF SMOOTH TOLERANCE+ CONTROL (2 OF 2) 687
PARAMETERS OF SOFTWARE OPERATOR'S PANEL 402
PARAMETERS OF SPINDLE CONTROL 203
PARAMETERS OF SPINDLE CONTROL MODE CHANGING BY PROGRAM COMMAND.....735
PARAMETERS OF SPINDLE CONTROL WITH SERVO MOTOR (1 OF 2).....513
PARAMETERS OF SPINDLE CONTROL WITH SERVO MOTOR (2 OF 2).....732
PARAMETERS OF STORED STROKE CHECK 57
PARAMETERS OF STRAIGHTNESS COMPENSATION (1 OF 2) 325
PARAMETERS OF STRAIGHTNESS COMPENSATION (2 OF 2) 653
PARAMETERS OF SYNCHRONOUS/COMPOSITE CONTROL AND SUPERIMPOSED CONTROL (1 OF 3) 455
PARAMETERS OF SYNCHRONOUS/COMPOSITE CONTROL AND SUPERIMPOSED CONTROL (2 OF 3) 533
PARAMETERS OF SYNCHRONOUS/COMPOSITE CONTROL AND SUPERIMPOSED CONTROL (3 OF 3) 626
PARAMETERS OF SYSTEM CONFIGURATION 37
Parameters of Thread Cutting Cycle 282
PARAMETERS OF TILTED WORKING PLANE INDEXING / 3-DIMENSIONAL MANUAL FEED (M SERIES) 692
PARAMETERS OF TILTED WORKING PLANE INDEXING COMMAND 522
PARAMETERS OF TOOL COMPENSATION (1 OF 3) 253
PARAMETERS OF TOOL COMPENSATION (2 OF 3) 565
PARAMETERS OF TOOL COMPENSATION (3 OF 3) 689
PARAMETERS OF TOOL LIFE MANAGEMENT (1 OF 2) 381
PARAMETERS OF TOOL LIFE MANAGEMENT (2 OF 2) 652
PARAMETERS OF TOOL MANAGEMENT FUNCTIONS (1 OF 2).....380
PARAMETERS OF TOOL MANAGEMENT FUNCTIONS (2 OF 2).....641
PARAMETERS OF TROUBLE DIAGNOSIS FUNCTION.....510
PARAMETERS OF WAVEFORM DIAGNOSIS 510
PREFACE p-1

<R>

Real Number Axis Format 13
Real Number Format.....11
Real Number Machine Group Format.....12
Real Number Path Format.....12
Real Number Spindle Format.....13
REPRESENTATION OF PARAMETERS.....16

<S>

SETTING PARAMETERS FROM MDI.....2
STANDARD PARAMETER SETTING TABLES.....17
Start and End of a Record 14

REVISION RECORD

Edition	Date	Contents
01	Dec., 2018	

B-64700EN/01

B-64700EN/01