FANUC AC SERVO MOTOR αi-B series
FANUC AC SERVO MOTOR αi series

DESCRIPTIONS

B-65262EN/10

© FANUC CORPORATION, 2001

© MyFANUC 2D51CC9CD8564E3B8C4DE377C2D11C41

- No part of this manual may be reproduced in any form.
- All specifications and designs are subject to change without notice.

The products described in this manual are controlled under Japan's "Foreign Exchange and Foreign Trade Act". The export of the products from Japan may be subject to an export license from the government of Japan. Also, their re-export to another country may be subject to a license of the government of the country from which the products are re-exported. Some products may also be controlled under the re-export regulations of the government of the United States of America. Before exporting the products described in this manual, contact FANUC for more information.

The products are manufactured under strict quality control. However, when using any of the products in a facility in which a serious accident or loss is predicted due to a failure of the product, install a safety device.

In this manual we have tried as much as possible to describe all the various matters.
However, we cannot describe all the matters which must not be done, or which cannot be done, because there are so many possibilities.
Therefore, matters which are not especially described as possible in this manual should be regarded as ”impossible”.

© MyFANUC 2D51CC9CD8564E3B8C4DE377C2D11C41

SAFETY PRECAUTIONS

This “Safety Precautions” section describes the precautions which must be observed to ensure safety when using FANUC AC servo motors.
Users of any servo motor model are requested to read this "Safety Precautions" carefully before using the servo motor.
The users are also requested to read this manual carefully and understand each function of the motor for correct use.
The users are basically forbidden to do any behavior or action not mentioned in the "Safety Precautions."
They are invited to ask FANUC previously about what behavior or action is prohibited.

This chapter is organized as follows:

DEFINITION OF WARNING, CAUTION, AND NOTE
WARNING
CAUTION
NOTE
CAUTION LABEL
SHIPPING THE SERVO MOTOR BY AIR

DEFINITION OF WARNING, CAUTION, AND NOTE

This manual includes safety precautions for protecting the user and preventing damage to the machine. Precautions are classified into Warning and Caution according to their bearing on safety. Also, supplementary information is described as a Note. Read the Warning, Caution, and Note thoroughly before attempting to use the machine.

⚠ **WARNING**
Applied when there is a danger of the user being injured or when there is a damage of both the user being injured and the equipment being damaged if the approved procedure is not observed.

⚠ **CAUTION**
Applied when there is a danger of the equipment being damaged, if the approved procedure is not observed.

NOTE
The Note is used to indicate supplementary information other than Warning and Caution.

Those items described in CAUTION, if not observed, may lead to a serious result, depending on the situation. Each description of CAUTION provides important information. So, be sure to observe CAUTION.

- Read this manual carefully, and store it in a safe place.

© MyFANUC 2D51CC9CD8564E3B8C4DE377C2D11C41

WARNING

⚠ WARNING

- **Be sure to ground a motor frame.**

To avoid electric shocks, be sure to connect the grounding terminal in the terminal box to the grounding terminal of the machine.

- **Before starting to connect a motor to electric wires, make sure they are isolated from an electric power source.**

A failure to observe this caution is very dangerous because you may get electric shocks.

- **Do not ground a motor power wire terminal or short-circuit it to another power wire terminal.**

A failure to observe this caution may cause electric shocks or a burned wiring.

* Some motors require a special connection such as a winding changeover. Refer to Subsection 1.3.3, "Outline Drawings" for details.

- **When connecting a cord such as a power line to the terminal block, use specified tightening torque to firmly connect the cord.**

If operation is performed with a loose terminal, the terminal block can overheat, resulting in a fire. Moreover, a terminal can be detached, resulting in a ground fault, short circuit, or electric shock.

- **Do not apply current when a terminal of the terminal block or the crimp terminal of a power line is exposed.**

If the hand or a conductive object touches a terminal of the terminal block or the crimp terminal of a power line, you may get electric shocks. Attach an insulation cover (accessory) onto the terminal block. Moreover, cover the crimp terminal at the tip of a power line with an insulation tube.

- **Assemble and install a power connector securely.**

If a power line is detached due to a failure in crimping or soldering, or a conductive area is exposed due to a failure in shell assembly, you may get electric shocks.

- **Do not touch a motor with a wet hand.**

A failure to observe this caution is very dangerous because you may get electric shocks.

- **Before touching a motor, shut off the power to it.**

Even if a motor is not rotating, there may be a voltage across the terminals of the motor.
Especially before touching a power supply connection, take sufficient precautions.
Otherwise you may get electric shocks.

- **Do not touch any terminal of a motor for a while (at least 20 minutes) after the power to the motor is shut off.**

High voltage remains across power line terminals of a motor for a while after the power to the motor is shut off. So, do not touch any terminal or connect it to any other equipment. Otherwise, you may get electric shocks or the motor and/or equipment may get damaged.

- **On the machine, install a stop device for securing safety.**

The brake built into the servo motor is not a stop device for securing safety. The machine may not be held if a failure occurs.

- **Do not enter the area under the vertical axis without securing safety.**

If a vertical axis drop occurs unexpectedly, you may be injured.

© MyFANUC 2D51CC9CD8564E3B8C4DE377C2D11C41

⚠ WARNING

- **Fasten a motor firmly before driving the motor.**

If a motor is driven when the motor is not fastened firmly or is fastened insufficiently, the motor can tumble or is removed, resulting in a danger. If the motor mounting section is not sufficiently strong, the machine may be damaged or the user may be injured.

- **Do not get close to a rotary section of a motor when it is rotating.**

When a motor is rotating, clothes or fingers can be caught, resulting in an injury.

- **Do not drive a motor with an object such as a key exposed.**

An object such as a key can be thrown away, resulting in an injury. Before rotating a motor, check that there is no object that is thrown away by motor rotation.

- **Do not apply a radial load exceeding the "allowable radial load".**

The shaft can break, and components can be thrown away. When the vertical axis is involved, a vertical axis drop can occur.

- **To drive a motor, use a specified amplifier and parameters.**

An incorrect combination of a motor, amplifier, and parameters may cause the motor to behave unexpectedly. This is dangerous, and the motor may get damaged.

- **Drive a motor at a load inertia moment ratio not higher than a prescribed level.**

If a dynamic brake is applied at a load inertia moment ratio higher than a prescribed level, abnormal heat generation may occur in a resistor element, resulting in an amplifier or dynamic brake module being burned or causing a fire.

- **Do not bring any dangerous stuff near a motor.**

Motors are connected to a power line, and may get hot. If a flammable is placed near a motor, it may be ignited, catch fire, or explode.

- **Be safely dressed when handling a motor.**

Wear safety shoes or gloves when handling a motor as you may get hurt on any edge or protrusion on it or electric shocks.

- **Use a crane or lift to move a motor from one place to another.**

A motor is heavy, so that if you lift a motor by hand, you may be exposed to various risks. For example, the waist can be damaged, and the motor can drop to injure you. Use equipment such as a crane as needed. (For the weight of a motor, see Chapter 1, "SPECIFICATIONS".)

CAUTION

⚠ CAUTION

- **Do not touch a motor when it is running or immediately after it stops.**

A motor may get hot when it is running. Do not touch the motor before it gets cool enough. Otherwise, you may get burned.

- **Be careful not get your hair or cloths caught in a fan.**

Be careful especially for a fan used to generate an inward air flow.
Be careful also for a fan even when the motor is stopped, because it continues to rotate while the amplifier is turned on.

© MyFANUC 2D51CC9CD8564E3B8C4DE377C2D11C41

⚠ CAUTION

- **Install the components around a motor securely.**

If a component is displaced or removed during motor rotation, a danger can result.

- **Use the eyebolt of a motor to move the motor only.**

When a motor is installed on a machine, do not move the machine by using the eyebolt of the motor. Otherwise, the eyebolt and motor can be damaged.

- **Do not disassemble a motor.**

Disassembling a motor may cause a failure or trouble in it.
If disassembly is in need because of maintenance or repair, please contact a service representative of FANUC.
For pulse coder replacement, refer to the maintenance manual (B-65285EN or B-65325EN).

- **Do not machine and modify a motor.**

Do not machine and modify a motor in any case except when motor machining or modification is specified by FANUC. Modifying a motor may cause a failure or trouble in it.

- **Do not conduct dielectric strength or insulation test for a sensor.**

Such a test can damage elements in the sensor.

- **Be sure to connect motor cables correctly.**

An incorrect connection of a cable cause abnormal heat generation, equipment malfunction, or failure. Always use a cable with an appropriate current carrying capacity (or thickness). For how to connect cables to motors, refer to Subsection 1.3.3, “Outline Drawings”.

- **Do not apply shocks to a motor or cause scratches to it.**

If a motor is subjected to shocks or is scratched, its components may be adversely affected, resulting in normal operation being impaired. Plastic components and sensors can be damaged easily. So, handle those components very carefully. In particular, do not lift a motor by using a plastic component, connector, terminal block, and so forth.

- **Do not step or sit on a motor, and do not put a heavy object on a motor.**

If you step or sit on a motor, it may get deformed or broken. Do not put a motor on another unless they are in packages.

- **When attaching a component having inertia, such as a pulley, to a motor, ensure that any imbalance between the motor and component is minimized.**

If there is a large imbalance, the motor may vibrates abnormally, resulting in the motor being broken.

- **Be sure to attach a key to a motor with a keyed shaft.**

If a motor with a keyed shaft runs with no key attached, it may impair torque transmission or cause imbalance, resulting in the motor being broken.

- **Use a motor under an appropriate environmental condition.**

Using a motor in an adverse environment may cause a failure or trouble in it. Refer to Chapter 3, “HANDLING, INSTALLATION, AND USE ENVIRONMENT OF THE MOTOR” for details of the operating and environmental conditions for motors.

- **Do not apply a commercial power source voltage directly to a motor.**

Applying a commercial power source voltage directly to a motor may result in its windings being burned. Be sure to use a specified amplifier for supplying voltage to the motor.

© MyFANUC 2D51CC9CD8564E3B8C4DE377C2D11C41

⚠ CAUTION

- **Do not use the brake built into a motor for braking.**

The brake built into a servo motor is designed for holding. If the brake is used for braking, a failure can occur.

- **Ensure that motors are cooled if they are those that require forcible cooling.**

If a motor that requires forcible cooling is not cooled normally, it may cause a failure or trouble. For a fan-cooled motor, ensure that it is not clogged or blocked with dust and dirt. For a liquid-cooled motor, ensure that the amount of the liquid is appropriate and that the liquid piping is not clogged. For both types, perform regular cleaning and inspection.

- **When storing a motor, put it in a dry (non-condensing) place at room temperature (0 to 40 °C).**

If a motor is stored in a humid or hot place, its components may get damaged or deteriorated. In addition, keep a motor in such a position that its shaft is held horizontal and its terminal box is at the top.

- **FANUC motors are designed for use with machines. Do not use them for any other purpose.**

If a FANUC motor is used for an unintended purpose, it may cause an unexpected symptom or trouble. If you want to use a motor for an unintended purpose, previously consult with FANUC.

NOTE

NOTE

- **Ensure that a base or frame on which a motor is mounted is strong enough.**

Motors are heavy. If a base or frame on which a motor is mounted is not strong enough, it is impossible to achieve the required precision.

- **Do not remove a nameplate from a motor.**

If a nameplate comes off, be careful not to lose it. If the nameplate is lost, the motor becomes unidentifiable, resulting in maintenance becoming impossible.

- **When testing the winding or insulation resistance of a motor, satisfy the conditions stipulated in IEC60034.**

Testing a motor under a condition severer than those specified in IEC60034 may damage the motor.

- **For a motor with a terminal box, make a conduit hole for the terminal box in a specified position.**

When making a conduit hole, be careful not to break or damage unspecified portions. Refer to Subsection 1.3.3, “Outline Drawings”.

- **Before using a motor, measure its winding and insulation resistances, and make sure they are normal.**

Especially for a motor that has been stored for a prolonged period of time, conduct these checks. A motor may deteriorate depending on the condition under which it is stored or the time during which it is stored. For the winding resistances of motors, refer to Chapter 1, “SPECIFICATIONS”, or ask FANUC. For insulation resistances, see the following table.

© MyFANUC 2D51CC9CD8564E3B8C4DE377C2D11C41

NOTE

- **To use a motor as long as possible, perform periodic maintenance and inspection for it, and check its winding and insulation resistances.**

Note that extremely severe inspections (such as dielectric strength tests) of a motor may damage its windings. For the winding resistances of motors, refer to Chapter 1, “SPECIFICATIONS”, or ask FANUC. For insulation resistances, see the following table.

MOTOR INSULATION RESISTANCE MEASUREMENT

Measure an insulation resistance between each winding and motor frame using an insulation resistance meter (500 VDC). Judge the measurements according to the following table. Make an insulation resistance measurement on a single motor unit after detaching cords such as a power line.

Insulation resistance	Judgment
100 MΩ or higher	Acceptable
10 to 100 MΩ	The winding has begun deteriorating. There is no problem with the performance at present. Be sure to perform periodic inspection.
1 to 10 MΩ	The winding has considerably deteriorated. Special care is in need. Be sure to perform periodic inspection.
Lower than 1 MΩ	Unacceptable. Replace the motor.

CAUTION LABEL

The following label is attached to the motor.
Attach this label to a prominent place on the motor to call attention to the user.

Heat caution label (compliance with the IEC standard)

Electric shock caution label (compliance with the IEC standard)

Heat caution label

Since the motor is heated to a high temperature during operation or immediately after a stop, touching the motor may cause a burn.
So, attach this label to a prominent place to call attention when the surface is exposed and may be touched.

Remark:

The mark of this label conforms to the IEC standard, which is a global standard.
The mark has the meaning of heat caution, so the description is omitted.

Electric shock caution label

This label indicates the risk of electric shock. Before installing the motor or performing maintenance work, turn off the power of the motor. Attach this label to a prominent place on the motor, such as on the upper lid of the terminal box.

© MyFANUC 2D51CC9CD8564E3B8C4DE377C2D11C41

Remark:

The mark of this label conforms to the IEC standard, which is a global standard.
The mark has the meaning of electric shock caution, so the description is omitted.

SHIPPING THE SERVO MOTOR BY AIR

Although the servo motors described in this manual contain magnets in their rotor, the magnetic circuit is closed between the rotor and stator, so they do not fall under "magnetized material" (which has a maximum magnetic field strength sufficient to cause a compass deflection of more than 2 degrees at a distance of 2.1 m from any point on the surface of the package) defined in the IATA Dangerous Goods Regulations. The assembled servo motor can be transported by air as general cargo.

© MyFANUC 2D51CC9CD8564E3B8C4DE377C2D11C41

© MyFANUC 2D51CC9CD8564E3B8C4DE377C2D11C41

PREFACE

This manual describes the specifications, outline drawings, detectors and other options, usage, and selection method of the FANUC AC Servo Motor αi-B/αi series (αiS-B/αiS, αiF series).

A servo motor can be used for machine tool feed axis applications as well as for many other types of machines such as machine tool peripheral axes, injection molding machines, press machines, and conveying devices. The main body of the manual discusses the usage of a servo motor and the general precautions to observe when using it. Make sure you understand the instructions provided herein before using a servo motor.
The points to note when using a servo motor for live tool applications of a machine tool are described in Appendix B, "NOTES ON USING THE SERVO MOTOR FOR LIVE TOOL APPLICATIONS OF A MACHINE TOOL".

For information about servo motors that can be used for spindle applications other than live tool applications of a machine tool, refer to FANUC AC SPINDLE MOTOR αi series Descriptions (B-65272EN).

This manual describes the layout of power pins and the output of detector signals but does not provide information about connection to a servo amplifier and a CNC. For the connection, refer to FANUC SERVO AMPLIFIER αi-B series (B-65412EN), FANUC SERVO AMPLIFIER αi series Descriptions (B-65282EN), Maintenance Manual (B-65285EN), FANUC SERVO AMPLIFIER βi–B series Descriptions (B-65422EN), Maintenance Manual (B-65425EN). FANUC SERVO AMPLIFIER βi series Descriptions (B-65322EN), and Maintenance Manual (B-65325EN).

In this manual, servo motor names are sometimes abbreviated as follows:
Example) αiS 30/4000-B →αiS 30-B

Related manuals

The following seven kinds of manuals are available for FANUC SERVO MOTOR αi-B/αi series. In the table, this manual is marked with an asterisk (*).

Document name	Document number	Major contents	Major usage	
FANUC AC SERVO MOTOR αi-B series FANUC AC SERVO MOTOR αi series DESCRIPTIONS	B-65262EN	• Specification • Characteristics • External dimensions	• Selection of motor • Connection of motor	*
FANUC SERVO AMPLIFIER αi-B series DESCRIPTIONS	B-65412EN	• Specifications and functions • Installation • External dimensions and maintenance area • Connections	• Selection of amplifier • Connection of amplifier	
FANUC SERVO AMPLIFIER αi series DESCRIPTIONS	B-65282EN			
FANUC SERVO AMPLIFIER βi–B series DESCRIPTIONS	B-65422EN			
FANUC SERVO AMPLIFIER βi series DESCRIPTIONS	B-65322EN			
FANUC AC SERVO MOTOR αi series FANUC AC SPINDLE MOTOR αi series FANUC SERVO AMPLIFIER αi series MAINTENANCE MANUAL	B-65285EN	• Start up procedure • Troubleshooting • Maintenance of motor	• Start up the system (Hardware) • Troubleshooting • Maintenance of motor	

© MyFANUC 2D51CC9CD8564E3B8C4DE377C2D11C41

Document name	Document number	Major contents	Major usage	
FANUC AC SERVO MOTOR βi series FANUC AC SPINDLE MOTOR βi series FANUC SERVO AMPLIFIER βi–B series MAINTENANCE MANUAL	B-65425EN	• Start up procedure • Troubleshooting • Maintenance of motor	• Start up the system (Hardware) • Troubleshooting • Maintenance of motor	
FANUC AC SERVO MOTOR βi series FANUC AC SPINDLE MOTOR βi series FANUC SERVO AMPLIFIER βi series MAINTENANCE MANUAL	B-65325EN			
FANUC AC SERVO MOTOR αi series FANUC AC SERVO MOTOR βi series FANUC LINEAR MOTOR LiS series FANUC SYNCHRONOUS BUILT-IN SERVO MOTOR DiS series PARAMETER MANUAL	B-65270EN	• Initial setting • Setting parameters • Description of parameters	• Start up the system (Software) • Tuning the system (Parameters)	

© MyFANUC 2D51CC9CD8564E3B8C4DE377C2D11C41

TABLE OF CONTENTS

SAFETY PRECAUTIONS S-1
DEFINITION OF WARNING, CAUTION, AND NOTE s-1
WARNING s-2
CAUTION s-3
NOTE s-5
CAUTION LABEL s-6
SHIPPING THE SERVO MOTOR BY AIR s-7

PREFACE p-1

1 SPECIFICATIONS 1
1.1 LINEUP OF THE SERIES 1
1.1.1 Motor Lineup 1
1.1.2 Feature 2
1.2 ORDERING SPECIFICATION NUMBER 4
1.3 MOTOR SPECIFICATIONS 10
1.3.1 Terms 10
1.3.2 Characteristic Curves and Data Sheet 11
1.3.2.1 About characteristic curves and data sheet 11
1.3.2.2 αiS-B/αiS SERIES (200V) 15
1.3.2.3 αiS-B/αiS SERIES (400V) 36
1.3.2.4 αiF-B SERIES (200V) 64
1.3.2.5 αiF-B SERIES (400V) 75
1.3.3 Outline Drawings 84
1.3.3.1 Models αiS 2-B, αiS 4-B, αiS 2HV-B, αiS 4HV-B, and αiF 1-B, αiF 2-B 85
1.3.3.2 Models αiS 8-B, αiS 12-B, αiS 8HV-B, αiS 12HV-B, αiF 4-B, αiF 8-B, αiF 4HV-B, and αiF 8HV-B 90
1.3.3.3 Models αiS 22-B to αiS 60-B FAN, αiS 22HV-B to αiS 60HV FAN-B, αiF 12-B to αiF 40 FAN-B, αiF 12HV-B to αiF 40HV FAN-B 98
1.3.3.4 Models αiS150-B, αiS 150HV-B 106
1.3.3.5 Models αiS 300-B, αiS 500-B, αiS 300HV-B, αiS 500HV-B 109
1.3.3.6 Model αiS 1000/2000HV-B 112
1.3.3.7 Model αiS 1000/3000HV-B 115
1.3.3.8 Model αiS 1500/3000HV-B 118
1.3.3.9 Models αiS 2000 HV, αiS 3000 HV 122
1.3.4 Built-In Brake 125
1.3.4.1 Brake specifications 125
1.3.4.2 Connecting a brake 126
1.3.4.3 Reduced backlash brake 130
1.3.4.4 Cautions on use 131
1.3.4.5 Reducing the amount of brake axis fall 132
1.3.5 Cooling Fan 133
1.3.5.1 Cooling fan specifications 133
1.3.5.2 Connecting a cooling fan 135
1.4 FEEDBACK SENSOR 140
1.4.1 Pulsecoder 140
1.4.1.1 Types of Pulsecoders and Designation 140

© MyFANUC 2D51CC9CD8564E3B8C4DE377C2D11C41

1.4.1.2 Connecting Pulsecoder 140
1.4.1.3 Absolute-type Pulsecoder 141
1.4.2 Separate Pulsecoder 142
1.4.2.1 Separate Pulsecoder type and designation 142
1.4.2.2 Separate Pulsecoder specifications 142
1.4.2.3 Connecting a separate type Pulsecoder 142
1.4.2.4 Outline drawings of separate Pulsecoder 143
1.4.2.5 Cautions when using a separate type Pulsecoder 144

2 CONFIGURATION AND SELECTION 145
2.1 SYSTEM CONFIGURATION 145
2.1.1 Connecting a Servo Motor 145
2.1.2 Applicable Amplifiers 146
2.1.2.1 Combinations with servo amplifiers αiSV-B, αiSVP-B, βiSV-B and βiSVSP-B 147
2.1.2.2 Combinations with servo amplifiers with αiSV, βiSV, and βiSVSP 155
2.1.3 Connectors on the Cable Side 161
2.1.3.1 Connectors for signals (for all αi-B/αi series models) 162
2.1.3.2 Connectors for power 167
2.1.3.3 Connectors for the brake 173
2.1.3.4 Connectors for the fan 175
2.1.3.5 Connection to a conduit hose 177
2.1.4 Conditions for Approval Related to the IEC60034 Standard 179
2.1.4.1 Types of motors to be approved 179
2.1.4.2 Approved specifications 181
2.1.4.3 Connectors required for approval 183
2.2 MOTOR SELECTION 184
2.2.1 Conditions for Selecting a Servo Motor 184
2.2.2 Selecting a Motor 187
2.2.2.1 Calculating the load torque 188
2.2.2.2 Calculating the motor speed 189
2.2.2.3 Calculating the load moment of inertia 189
2.2.2.4 Calculating the acceleration torque 192
2.2.2.5 Calculating the root-mean-square value of the torques 196
2.2.2.6 Calculating the Percentage duty cycle and ON time with the maximum cutting torque 198
2.2.2.7 Calculating the dynamic brake stop distance 200
2.2.3 About the Servo Motor Selection Data Table 207
2.2.3.1 Servo motor selection data table 207
2.2.3.2 Explanation of Items 210
2.2.4 Selecting the αiPS 214

3 HANDLING, INSTALLATION, AND USE ENVIRONMENT OF THE MOTOR 215
3.1 HANDLING OF THE SERVO MOTOR 216
3.1.1 Checking a Delivered Servo Motor and Storing a Servo Motor 216
3.1.2 Separating and Disposing of a Servo Motor 216
3.2 MOUNTING A SERVO MOTOR 216
3.2.1 Methods for coupling the shaft 216
3.2.2 Fastening the Shaft 218
3.2.3 Allowable Axis Load for a Servo Motor 219
3.2.4 Shaft Run-out Precision of a Servo Motor 220
3.2.5 Other Notes on Axis Design 220
3.2.6 Cautions in Mounting a Servo Motor 222
3.3 USE ENVIRONMENT FOR SERVO MOTORS 226

© MyFANUC 2D51CC9CD8564E3B8C4DE377C2D11C41

3.3.1 Ambient Temperature, Humidity, Installation Height, and Vibration.....226
3.3.2 Usage Considering Environmental Resistance.....226

APPENDIX

A DATA FOR SELECTING THE αiPS 235
A.1 αi-B SERIES (200V).....235
A.2 αi-B SERIES (400V).....236

B NOTES ON USING THE SERVO MOTOR FOR LIVE TOOL APPLICATIONS OF A MACHINE TOOL 237
B.1 OUTPUT GRAPHS AND TORQUE GRAPHS (6000 [min^{-1}] MODELS) 238
B.2 NOTES ON USING THE SERVO MOTOR FOR LIVE TOOL APPLICATIONS.....240
B.3 CNC FUNCTIONS FOR USING THE SERVO MOTOR FOR THE SPINDLE OR LIVE TOOL 240

C ABOUT αi SERIES SERVO MOTORS 241
C.1 ORDERING SPECIFICATION NUMBERS 243
C.2 CHARACTERISTIC CURVES AND DATA SHEET.....248
C.3 OUTLINE DRAWINGS 257
C.3.1 Models αiS 100 to αiS 200 FAN, αiS 100HV to αiS 200HV FAN.....258
C.4 POWER CONNECTORS.....264
C.4.1 Connectors for Power (Motor Side) (for Groups B and C).....265
C.4.1.1 Connectors for power (for Group B).....265
C.4.1.2 Connectors for power (for Group C).....265
C.4.2 Connectors for Power (Cable Side) (for Groups B and C).....266
C.4.3 Connection to a Conduit Hose.....270
C.5 COOLING FANS.....271
C.5.1 Cooling Fan Specifications 271
C.5.2 Connecting a Cooling Fan.....272
C.5.2.1 In case that other electronics devices are in parallel with fan.....272
C.5.2.2 Cooling Fan Circuit 273
C.5.2.3 Recommended Parts of Cooling Fan Circuit 275
C.5.2.4 Cooling fan protection circuit.....276
C.6 FEEDBACK SENSORS.....277
C.6.1 Types of Pulsecoders and Designation.....277
C.6.2 Connecting Pulsecoder.....277

ADDITIONAL INFORMATION

© MyFANUC 2D51CC9CD8564E3B8C4DE377C2D11C41

© MyFANUC 2D51CC9CD8564E3B8C4DE377C2D11C41

1 SPECIFICATIONS

Chapter 1, "SPECIFICATIONS", consists of the following sections:

1.1 LINEUP OF THE SERIES
1.2 ORDERING SPECIFICATION NUMBER
1.3 MOTOR SPECIFICATIONS
1.4 FEEDBACK SENSOR

1.1 LINEUP OF THE SERIES

1.1.1 Motor Lineup

The FANUC AC Servo Motor αi-B/αi series consist of the following series, each of which has the listed characteristics.

Series	Voltage	Continuous torque (at low speed)	Feature	Applications
αiS-B/αiS	200V	2 to 500 Nm	High acceleration models for feed axes of machine tools	Lathe Machining Center Grinding Machine
	400V	2 to 3000 Nm	αiS-B models applicable to 400VAC input	
αiF-B	200V	1 to 53 Nm	Medium Inertia models for Axis feed of machine tools	
	400V	4 to 53 Nm	αiF-B models applicable to 400VAC input	

Lineup

Continuous torque (at low speed) Nm		2	4	8	12	22	30	40	50	60	150	300	500	1000	1500	2000	3000
Flange size mm		90		130		174					265			380		500	
αiS-B/αiS	200V	αiS 2 /5000-B	αiS 4 /5000-B	αiS 8 /4000-B	αiS 12 /4000-B	αiS 22 /4000-B	αiS 30 /4000-B	αiS 40 /4000-B	αiS 50 /2000-B αiS 50 /3000-B	αiS 60 /2000-B αiS 60 /3000-B	αiS 150 /3000-B	αiS 300 /2000-B	αiS 500 /2000-B				
		αiS 2 /6000-B	αiS 4 /6000-B	αiS 8 /6000-B	αiS 12 /6000-B	αiS 22 /6000-B			αiS 50 /3000 FAN-B	αiS 60 /3000 FAN-B							
	400V	αiS 2 /5000 HV-B	αiS 4 /5000 HV-B	αiS 8 /4000 HV-B	αiS 12 /4000 HV-B	αiS 22 /4000 HV-B	αiS 30 /4000 HV-B	αiS 40 /4000 HV-B	αiS 50 /2000 HV-B	αiS 60 /2000 HV-B	αiS 150 /3000 HV-B	αiS 300 /2000 HV-B	αiS 500 /2000 HV-B	αiS 1000 /2000HV-B		αiS 2000 /2000HV	αiS 3000 /2000HV
		αiS 2 /6000 HV-B	αiS 4 /6000 HV-B	αiS 8 /6000 HV-B	αiS 12 /6000 HV-B	αiS 22 /6000 HV-B			αiS 50 /3000 HV FAN-B	αiS 60 /3000 HV FAN-B		αiS 300 /3000 HV-B	αiS 500 /3000 HV-B	αiS 1000 /3000HV-B	αiS 1500 /3000HV-B		

© MyFANUC 2D51CC9CD8564E3B8C4DE377C2D11C41

<table>
<tr><td colspan="2">Continuous torque (at low speed) Nm</td><td>1</td><td>2</td><td>4</td><td>8</td><td>12</td><td>22</td><td>30</td><td>40</td></tr>
<tr><td colspan="2">Flange size mm</td><td colspan="2">90</td><td colspan="2">130</td><td colspan="4">174</td></tr>
<tr><td rowspan="4">αiF-B</td><td rowspan="2">200 V</td><td rowspan="2">αiF 1 /5000-B</td><td rowspan="2">αiF 2 /5000-B</td><td rowspan="2">αiF 4 /5000-B</td><td>αiF 8 /3000-B</td><td rowspan="2">αiF 12 /4000-B</td><td>αiF 22 /3000-B</td><td rowspan="2">αiF 30 /4000-B</td><td>αiF 40 /3000-B</td></tr>
<tr><td>αiF 8 /4000-B</td><td>αiF 22 /4000-B</td><td>αiF 40 /3000 FAN-B</td></tr>
<tr><td rowspan="2">400 V</td><td rowspan="2"></td><td rowspan="2"></td><td rowspan="2">αiF 4 /5000 HV-B</td><td>αiF 8 /3000 HV-B</td><td rowspan="2">αiF 12 /4000 HV-B</td><td>αiF 22 /3000 HV-B</td><td rowspan="2">αiF 30 /4000 HV-B</td><td>αiF 40 /3000 HV-B</td></tr>
<tr><td>αiF 8 /4000 HV-B</td><td>αiF 22 /4000 HV-B</td><td>αiF 40 /3000HV FAN-B</td></tr>
</table>

1.1.2 Feature

The FANUC AC Servo Motor αi-B/αi series has been designed for machine tool feed axis applications. This servo motor αi series has the following features:

Compact

The use of a latest magnet and the optimized mechanical design reduce the total length and weight, therefore realizing light, compact motors.

Smooth rotation

The special magnetic pole shape which minimizes torque ripples which, when combined with precise current control and accurate Pulsecoder feedback, enables extremely smooth motor rotation.

Excellent acceleration

The use of a special rotor shape brings small and light motors, and a high level of torque. These motors, therefore, provide excellent acceleration characteristics.

Wide continuous-operating zone

High-density winding, low iron loss by the optimum core shape, and the use of the latest servo software reduce heat generation during high-speed rotation to a minimum and allow a wide continuous operating zone.

Controllability

The use of the latest servo software maintains controllability even when a disturbance occurs.

High reliability

A totally-enclosed, friction-free brushless design is used. This allows the servo motors to be used in demanding environments with no need for special checks or maintenance.

Excellent waterproofing

The use of waterproof connectors and FANUC's unique stator seal provide excellent waterproofing, which prevent ingress of liquid, such as coolant.

© MyFANUC 2D51CC9CD8564E3B8C4DE377C2D11C41

Built-in, high-precision encoder

A low-indexing-error optical encoder (Pulsecoder) is built into the motors. This Pulsecoder enables precise positioning.

Pulsecoders (Note) have the resolution of 4,000,000 or 32,000,000 per revolution. As such, the motors can be used for positioning applications ranging from simple positioning to those requiring a high degree of precision. (NOTE: In the αiS2000 motors and above, a resolution of 1,000,000 is supported.)

Powerful brake

A powerful brake with an increased holding torque is available as an option. The brake uses an asbestos-free design.

200-V and 400-V power supply specifications

A lineup of 400-V power supply specification motors is provided in addition to the 200-V power supply specification motors.

A suitable motor can be selected according to the local power supply specification.

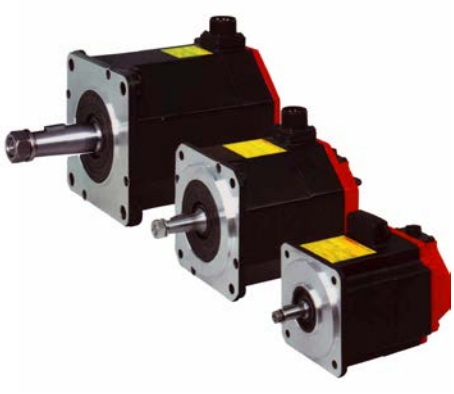

αi –B/ αi series

© MyFANUC 2D51CC9CD8564E3B8C4DE377C2D11C41

1.2 ORDERING SPECIFICATION NUMBER

The ordering specification numbers of the servo motors have the following format:

Models αiS 2-B to αiS 60-B (including HV), αiF 1-B to αiF 40-B (including HV)

A06B-2□□□-B△○▽#abcd

□□□ An ordering specification number are described on the tables after next page.
* Every combination doesn't exist.

△
0 : Taper shaft
1 : Straight shaft
2 : Straight shaft with a key groove
3 : Taper shaft with a 24VDC brake
4 : Straight shaft with a 24VDC brake
5 : Straight shaft with a key way and a 24VDC brake

* Do not select "Straight shaft with a key groove" when a large torque or abrupt acceleration rate is required.

○
0 : Standard
1 : With a fan
2 : With a high-torque reduced backlash brake
3 : With a high-torque reduced backlash brake and a fan

* When "With a high-torque reduced backlash brake" is selected (○ = 2 or 3), specify △ = 3 to 5.

▽
0 : Pulsecoder αiA 4000
2 : Pulsecoder αiA 32000

abcd
a 0 : Standard
b 0 : Standard
1 : IP67 specification
cd 00 : Standard
63 : ϕ14 taper/straight shaft (αiS2-B, αiF1-B to αiF2-B), ϕ24 taper shaft (αiS12-B)
70 : With a standard reduced backlash brake (αiS22-B to αiS40-B, αiF12-B to αiF40-B)
* When #abcd is #0000, omit the specification of #abcd.
* When #abcd is #ab70, specify △ = 3 to 5.
Only a Reduced backlash brake with the standard brake (35 Nm) is supported.

© MyFANUC 2D51CC9CD8564E3B8C4DE377C2D11C41

Models αiS 150-B (including HV), αiS 1000HV-B to αiS 1500HV-B, αiS 2000HV to αiS 3000HV

A06B-□□□□-B△○▽#abcd

□□□□ An ordering specification number are described on the tables after next page.
* Every combination doesn't exist.

△ 0 : Taper shaft

○ 1 : With a fan
4 : With a strong fan

▽ 0 : Pulsecoder αiA 4000
* For the αiS 2000HV to αiS 3000HV, pulsecoder αiA 1000 is used.

abcd
a 0 : Standard
b 0 : Standard
cd 00 : Standard

* When #abcd is #0000, omit the specification of #abcd.

© MyFANUC 2D51CC9CD8564E3B8C4DE377C2D11C41

Models αiS 300-B to αiS 500-B (including HV)

A06B-□□□□-B△○▽#abcd

□□□□ An ordering specification number are described on the tables after next page.
* Every combination doesn't exist.

△ 0 : Taper shaft

○ 1 : With a fan, cylindrical roller bearing
5 : With a fan, ball bearing

* When the maximum radial load on the motor is up to 600 kgf as the use condition, use the ball bearing type (○ = 5). (Example: Direct connection structure with a flexible coupling)
When the maximum radial load exceeds 600 kgf as the use condition, use the cylindrical roller bearing type (○ = 1).
For the αi series, only the cylindrical roller bearing type was available. When you want to replace the αi series, be careful of the bearing type to be specified.
For details of allowable radial load, see Subsection 1.3.3, "Outline Drawings".

▽ 0 : Pulsecoder αiA 4000

abcd
a 0 : Standard
b 0 : Standard
cd 00 : Standard

* When #abcd is #0000, omit the specification of #abcd.

© MyFANUC 2D51CC9CD8564E3B8C4DE377C2D11C41

The following table lists the allowable combinations of numbers represented by symbols in ordering specification numbers.

αiS-B/αiS series (200V)

A06B-□□□□-B△○▽#abcd

Symbol in specification No. / Servo motor name	□□□□	△						○				▽		a	b		cd		
		0	1	2	3	4	5	0	1	2	3	0	2	0	0	1	00	63	70
αiS 2/5000-B	2212	○	○	○	○	○	○	○	-	-	-	○	○	○	○	○	○	○	-
αiS 2/6000-B	2218	○	○	○	○	○	○	○	-	-	-	○	○	○	○	○	○	○	-
αiS 4/5000-B	2215	○	○	○	○	○	○	○	-	-	-	○	○	○	○	○	○	-	-
αiS 4/6000-B	2210	○	○	○	○	○	○	○	-	-	-	○	○	○	○	○	○	-	-
αiS 8/4000-B	2235	○	○	○	○	○	○	○	-	-	-	○	○	○	○	○	○	-	-
αiS 8/6000-B	2232	○	○	○	○	○	○	○	-	-	-	○	○	○	○	○	○	-	-
αiS 12/4000-B	2238	○	○	○	○	○	○	○	-	-	-	○	○	○	○	○	○	○	-
αiS 12/6000-B	2230	○	○	○	○	○	○	○	-	-	-	○	○	○	○	○	○	○	-
αiS 22/4000-B	2265	○	○	○	○	○	○	○	-	-	-	○	○	○	○	○	○	-	○
αiS 22/6000-B	2262	○	○	○	○	○	○	○	-	-	-	○	○	○	○	○	○	-	○
αiS 30/4000-B	2268	○	○	○	○	○	○	○	-	-	-	○	○	○	○	○	○	-	○
αiS 40/4000-B	2272	○	○	○	○	○	○	○	-	-	-	○	○	○	○	○	○	-	○
		-	-	-	○	○	○	-	-	○	-	○	○	○	○	○	○	-	-
αiS 50/2000-B	2042	○	○	-	-	-	-	○	-	-	-	○	○	○	○	○	○	-	-
		-	-	-	○	○	-	-	-	○	-	○	○	○	○	○	○	-	-
αiS 50/3000-B	2275	○	○	-	-	-	-	○	○	-	-	○	○	○	○	○	○	-	-
		-	-	-	○	○	-	-	-	○	○	○	○	○	○	○	○	-	-
αiS 60/2000-B	2044	○	○	-	-	-	-	○	-	-	-	○	○	○	○	○	○	-	-
		-	-	-	○	○	-	-	-	○	-	○	○	○	○	○	○	-	-
αiS 60/3000-B	2278	○	○	-	-	-	-	○	○	-	-	○	○	○	○	○	○	-	-
		-	-	-	○	○	-	-	-	○	○	○	○	○	○	○	○	-	-

* When #abcd is #0000, omit the specification of #abcd.

* Specify △ = 3 to 5 in the case of ○ = 2 or 3. Specify b = 0 in the case of ○ = 1 or 3.

* For the differences between the current models of αiS2-B to αiS60-B (with specification number 2xxx) and the former models (with specification number 0xxx), refer to Appendix C.

Symbol in specification No. / Servo motor name	□□□□	△	○		▽	a	b	cd
		0	1	5	0	0	0	00
αiS 150/3000-B	2026	○	○	-	○	○	○	○
αiS 300/2000-B	2292	○	○	○	○	○	○	○
αiS 500/2000-B	2295	○	○	○	○	○	○	○

* When #abcd is #0000, omit the specification of #abcd.

© MyFANUC 2D51CC9CD8564E3B8C4DE377C2D11C41

αiS-B/αi Series (400V) A06B-□□□□-B△○▽#abcd

Symbol in specification No. / Servo motor name	□□□□	△						○				▽		a	b		cd		
		0	1	2	3	4	5	0	1	2	3	0	2	0	0	1	00	63	70
αiS 2/5000HV-B	2213	○	○	○	○	○	○	○	-	-	-	○	○	○	○	○	○	○	-
αiS 2/6000HV-B	2219	○	○	○	○	○	○	○	-	-	-	○	○	○	○	○	○	○	-
αiS 4/5000HV-B	2216	○	○	○	○	○	○	○	-	-	-	○	○	○	○	○	○	-	-
αiS 4/6000HV-B	2214	○	○	○	○	○	○	○	-	-	-	○	○	○	○	○	○	-	-
αiS 8/4000HV-B	2236	○	○	○	○	○	○	○	-	-	-	○	○	○	○	○	○	-	-
αiS 8/6000HV-B	2233	○	○	○	○	○	○	○	-	-	-	○	○	○	○	○	○	-	-
αiS 12/4000HV-B	2239	○	○	○	○	○	○	○	-	-	-	○	○	○	○	○	○	○	-
αiS 12/6000HV-B	2237	○	○	○	○	○	○	○	-	-	-	○	○	○	○	○	○	○	-
αiS 22/4000HV-B	2266	○	○	○	○	○	○	○	-	-	-	○	○	○	○	○	○	-	○
αiS 22/6000HV-B	2263	○	○	○	○	○	○	○	-	-	-	○	○	○	○	○	○	-	○
αiS 30/4000HV-B	2269	○	○	○	○	○	○	○	-	-	-	○	○	○	○	○	○	-	○
αiS 40/4000HV-B	2273	○	○	○	○	○	○	○	-	-	-	○	○	○	○	○	○	-	○
		-	-	-	○	○	○	-	-	○	-	○	○	○	○	○	○	-	-
αiS 50/2000HV-B	2043	○	○	-	-	-	-	○	-	-	-	○	○	○	○	○	○	-	-
		-	-	-	○	○	-	-	-	○	-	○	○	○	○	○	○	-	-
αiS 50/3000HV-B	2276	○	○	-	-	-	-	○	○	-	-	○	○	○	○	○	○	-	-
		-	-	-	○	○	-	-	-	○	○	○	○	○	○	○	○	-	-
αiS 60/2000HV-B	2045	○	○	-	-	-	-	○	-	-	-	○	○	○	○	○	○	-	-
		-	-	-	○	○	-	-	-	○	-	○	○	○	○	○	○	-	-
αiS 60/3000HV-B	2279	○	○	-	-	-	-	○	○	-	-	○	○	○	○	○	○	-	-
		-	-	-	○	○	-	-	-	○	○	○	○	○	○	○	○	-	-

* When #abcd is #0000, omit the specification of #abcd.

* Specify △ = 3 to 5 in the case of ○ = 2 or 3. Specify b = 0 in the case of ○ = 1 or 3.

* For the differences between the current models of αiS2HV-B to αiS60HV-B (with specification number 2xxx) and the former models (with specification number 0xxx), refer to Appendix C.

Symbol in specification No. / Servo motor name	□□□□	△	○			▽	a	b	cd
		0	1	4	5	0	0	0	00
αiS 150/3000HV-B	2027	○	○	-	-	○	○	○	○
αiS 300/2000HV-B	2293	○	○	-	○	○	○	○	○
αiS 300/3000HV-B	2290	○	○	-	○	○	○	○	○
αiS 500/2000HV-B	2296	○	○	-	○	○	○	○	○
αiS 500/3000HV-B	2297	○	○	-	○	○	○	○	○
αiS 1000/2000HV-B	2098	○	○	-	-	○	○	○	○
αiS 1000/3000HV-B	2099	○	○	-	-	○	○	○	○
αiS 1500/3000HV-B	2097	○	○	-	-	○	○	○	○
αiS 2000/2000HV	0091	○	-	○	-	○	○	○	○
αiS 3000/2000HV	0092	○	-	○	-	○	○	○	○

* When #abcd is #0000, omit the specification of #abcd.

© MyFANUC 2D51CC9CD8564E3B8C4DE377C2D11C41

αiF–B series (200V)

A06B-□□□□-B△○▽#abcd

Symbol in specification No. / Servo motor name	□□□□	△						○				▽		a	b		cd		
		0	1	2	3	4	5	0	1	2	3	0	2	0	0	1	00	63	70
αiF 1/5000-B	2202	○	○	○	○	○	○	○	-	-	-	○	○	○	○	○	○	○	-
αiF 2/5000-B	2205	○	○	○	○	○	○	○	-	-	-	○	○	○	○	○	○	○	-
αiF 4/5000-B	2223	○	○	○	○	○	○	○	-	-	-	○	○	○	○	○	○	-	-
αiF 8/3000-B	2227	○	○	○	○	○	○	○	-	-	-	○	○	○	○	○	○	-	-
αiF 8/4000-B	2228	○	○	○	○	○	○	○	-	-	-	○	○	○	○	○	○	-	-
αiF 12/4000-B	2243	○	○	○	○	○	○	○	-	-	-	○	○	○	○	○	○	-	○
αiF 22/3000-B	2247	○	○	○	○	○	○	○	-	-	-	○	○	○	○	○	○	-	○
αiF 22/4000-B	2248	○	○	○	○	○	○	○	-	-	-	○	○	○	○	○	○	-	○
αiF 30/4000-B	2253	○	○	○	○	○	○	○	-	-	-	○	○	○	○	○	○	-	○
αiF 40/3000-B	2257	○	○	○	○	○	○	○	○	-	-	○	○	○	○	○	○	-	○
		-	-	-	○	○	○	-	-	○	○	○	○	○	○	○	○	-	-

* When #abcd is #0000, omit the specification of #abcd.
* Specify △ = 3 to 5 in the case of ○ = 2 or 3. Specify b = 0 in the case of ○ = 1 or 3. It is not possible to specify △ = 3 to 5 in the case of ○ = 1.
* For the differences between the current models of αiF1-B to αiF40-B (with specification number 2xxx) and the former models (with specification number 0xxx), refer to Appendix C.

αiF series (400V)

A06B-□□□□-B△○▽#abcd

Symbol in specification No. / Servo motor name	□□□□	△						○				▽		a	b		cd		
		0	1	2	3	4	5	0	1	2	3	0	2	0	0	1	00	63	70
αiF 4/5000HV-B	2225	○	○	○	○	○	○	○	-	-	-	○	○	○	○	○	○	-	-
αiF 8/3000HV-B	2229	○	○	○	○	○	○	○	-	-	-	○	○	○	○	○	○	-	-
αiF 8/4000HV-B	2220	○	○	○	○	○	○	○	-	-	-	○	○	○	○	○	○	-	-
αiF 12/4000HV-B	2245	○	○	○	○	○	○	○	-	-	-	○	○	○	○	○	○	-	○
αiF 22/3000HV-B	2249	○	○	○	○	○	○	○	-	-	-	○	○	○	○	○	○	-	○
αiF 22/4000HV-B	2240	○	○	○	○	○	○	○	-	-	-	○	○	○	○	○	○	-	○
αiF 30/4000HV-B	2255	○	○	○	○	○	○	○	-	-	-	○	○	○	○	○	○	-	○
αiF 40/3000HV-B	2259	○	○	○	○	○	○	○	○	-	-	○	○	○	○	○	○	-	○
		-	-	-	○	○	○	-	-	○	○	○	○	○	○	○	○	-	-

* When #abcd is #0000, omit the specification of #abcd.
* Specify △ = 3 to 5 in the case of ○ = 2 or 3. Specify b = 0 in the case of ○ = 1 or 3. It is not possible to specify △ = 3 to 5 in the case of ○ = 1.
* For the differences between the current models of αiF4HV-B to αiF40HV-B (with specification number 2xxx) and the former models (with specification number 0xxx), refer to Appendix C.

© MyFANUC 2D51CC9CD8564E3B8C4DE377C2D11C41

1.3 MOTOR SPECIFICATIONS

1.3.1 Terms

To ensure consistency with our other models (synchronous built-in servo motor D*i*S series, spindle motor α*i*I series, etc.), this manual uses some terms and symbols that are different from those used before.
The following table shows the correspondence between the key terms and symbols of the former version (Edition 07 or former) of the Descriptions (B-65262EN) and those of this version.

Correspondence table

This version (Edition 10)		Former version (Edition 07or former)		Unit (SI)	Description
Term	Symbol	Term	Symbol		
Continuous Torque (at low speed)	Tc	Stall torque	Ts	Nm	Torque that allows the motor to operate continuously at low speed (Note) (Note) Low speed = 0 to 200 [min^{-1}]
Continuous current (at low speed)	Ic	Stall current	Is	A(rms)	Value obtained by dividing continuous torque Tc (low-speed rotation) by torque constant Kt
Rated current	Ir	-	-	A(rms)	Current available when rated output Pr is given at rated rotation speed Nr
Moment of inertia	-	Inertia	-	$kg{\cdot}m^2$	Physical quantity expressing an object's resistance to changes in shape
Rotor moment of inertia or Moment of inertia of rotor	Jm	Rotor inertia	Jm	$kg{\cdot}m^2$	Moment of inertia of the rotor of the motor
Load moment of inertia	-	Load inertia	-	$kg{\cdot}m^2$	Moment of inertia coupled to the rotor
Load moment of inertia ratio	-	Load inertia ratio	-	-	Ratio of the load moment of inertia to the moment of inertia of the rotor
Winding resistance (between terminals)	Ra	Armature resistance (1 phase)	Ra	Ω	Winding resistance of the motor

© MyFANUC 2D51CC9CD8564E3B8C4DE377C2D11C41

1.3.2 Characteristic Curves and Data Sheet

1.3.2.1 About characteristic curves and data sheet

The specifications of each motor are described by the characteristic curves and data sheet given below.

(1) Characteristic curves

The characteristic curves representing the "speed-torque characteristics" and "overload duty characteristic" are given for each motor model.

Speed-torque characteristics

Speed-torque characteristics indicate the relationship between the output torque and speed of the motor.
In the continuous operating zone, the motor winding temperature and pulsecoder temperature do not exceed the following overheat temperatures when the ambient temperature is 20°C.

- Motor winding: 140°C
- Pulsecoder: 100°C

In the continuous operating zone, the motor can be used continuously with any combination of a speed and a torque. In the intermittent operating zone outside the continuous operating zone, the motor can be used intermittently within the range of the overload duty characteristic curve.

In the high-speed operating zone, to drive the motor stably, the current may increase even at no load, depending on the speed.
(In the intermittent operating zone, the actual current (%) displayed in the servo setting screen of the CNC may exceed 100% even at no load, depending on the model in use.)
In the high-speed operating zone, in addition, heat generated due to the current depending on the speed and heat caused by permanent magnets increase, so the motor becomes hot and overheated even at no load.

The torque decreases by 0.11% for the α*i*S-B/α*i*S series or by 0.19% for the α*i*F-B/α*i*F series according to the negative temperature coefficient of magnetic materials every time the internal temperature of the motor increases by 1°C after exceeding 20°C.

The intermittent operating zone may be limited by the motor input voltage.
The values in the data sheets are those observed when the input voltage is 200 V or 400 V.

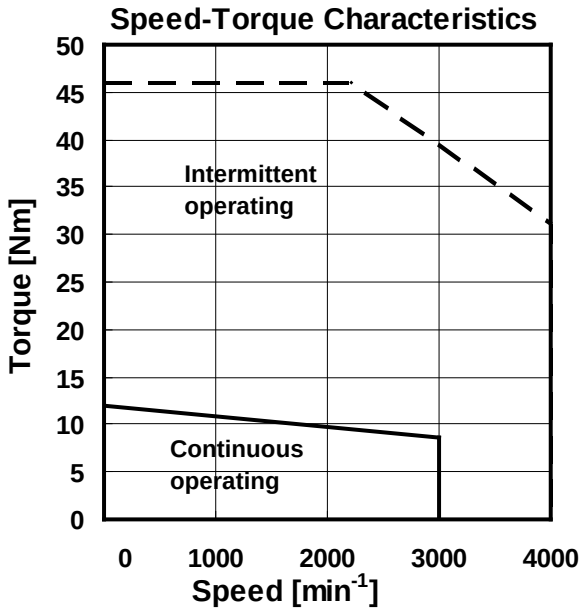

Example of α*i*S 12/4000-B

© MyFANUC 2D51CC9CD8564E3B8C4DE377C2D11C41

Overload duty characteristic

The overload duty characteristic represents the relationship between the time duty and the ON time (load time) where the motor can be operated with no temperature limit (limit by the overheat or overcurrent alarm) when the motor is used at low speed with a torque exceeding the continuous operating zone (overload toque).

There are two motor temperature limits that determine overload duty curves; one is based on the motor overheat and the other is based on the overcurrent alarm (OVC alarm) with which the soft thermal function of the servo software protects against a rapid increase in temperature.

The overload duty characteristic determined by the limit based on the overheat is represented by a curve in a relatively long time range where the load time is at least about 100 seconds. The one determined by the limit based on the overcurrent alarm is represented by a curve in a relatively short time range of up to about 100 seconds. The final overload duty characteristic is represented by the curve limited and described using either of these characteristic values, whichever is shorter.

The settings of the soft thermal function for monitoring overcurrent differ depending on each motor. If the motor is in the overload status at a motor speed of about 0, an overcurrent (OVC) alarm may be issued for a time shorter than described. Note that, since the driving device (such as an amplifier), pulsecoder, and other components also contain a thermal protection device, some other restrictions may be imposed depending on the use conditions.

The time duty indicates the ratio of the torque load time to the total time of a single cycle.

The ON time indicates the time during which the torque continues to be applied within a single cycle.

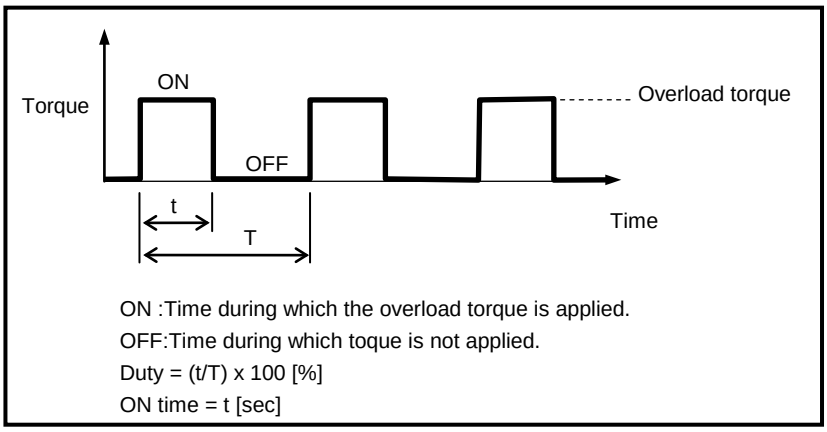

© MyFANUC 2D51CC9CD8564E3B8C4DE377C2D11C41

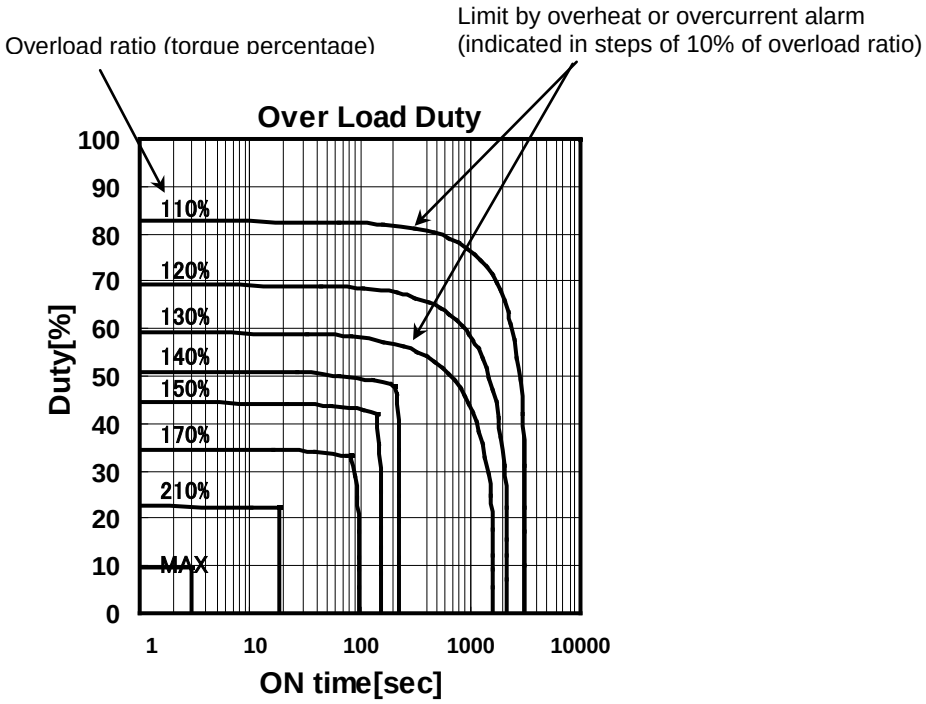

Example) Overload duty characteristic for αiS50/3000 FAN-B

The procedure for determining the time duty and ON time is as follows.

<1> Calculate the overload ratio (torque percent) using the formula below.
Overload ratio = overload torque ÷ continuous torque (during low-speed rotation)

<2> The motor can be operated with the time duty and ON time at any point on or inside the curve corresponding to the overload ratio obtained from <1> for the overload duty characteristic.

(2) Data Sheet

The data sheet gives the values of motor parameters relating to the performance.
The values of parameters are those under the following conditions.

- The ambient temperature for the motor is 20°C.
- The error is ±10%.

The following parameters are given on the data sheet:

Continuous torque (at low speed): T_c [Nm]

Torque that allows the motor to operate continuously at low speed (Note) (ambient temperature 20°C)
(Note) Low speed = 0 to 200 [min^{-1}]

Continuous current (at low speed): I_c [Arms]

Value obtained by dividing continuous torque (low-speed rotation) T_c by torque constant K_t

Rated output: P_r [kW]

Continuous output at rated rotation speed N_r [min^{-1}]

Rating rotation speed: N_r [min^{-1}]

Rotation speed for which the rated output is specified

Maximum rotation speed: N_{max} [min^{-1}]

Maximum speed at which the motor can operate

© MyFANUC 2D51CC9CD8564E3B8C4DE377C2D11C41

Maximum torque: T_{max} [Nm]

Maximum motor torque

More specifically, torque with which the motor can intermittently be operated within the current restricted range (from 0 [min^{-1}] to the beginning of dropping of the shoulder)

Note that this value varies according to fluctuations in the internal temperature of the motor, motor parameters, limits of the amplifier, etc. Also, the maximum torque may usually be lower than the calculated value (the product of individual motor torque constants and amplifier current limits) due to magnetic saturation and other factors.

Rotor moment of inertia: J_m [kg·m^2] [kgf·cm·sec^2]

Moment of inertia of the rotor of the motor

The values for the standard specification with no brake and for the specification with a brake are given.

Torque constant: K_t [N·m /Arms] [kgf·cm/Arms]

Torque developed per ampere of phase current [Arms] when the internal temperature of the motor is 20°C. (This is also known as torque sensitivity.)

This value is a motor-specific constant, and is calculated by the flux distribution and location of coils in the armature, and the dimensions of the motor.

The torque constant decreases by 0.11% for the α*i*S–B/α*i*S series or by 0.19% for the α*i*F–B/α*i*F series according to the temperature coefficient of the magnet every time the temperature of the magnet increases by 1°C after it exceeds 20°C.

Winding resistance: R_a [Ω]

Resistance between motor terminals

Thermal time constant: t_t [min]

This is a function of the initial rate of rise of winding temperature at rated current. It is defined as the time required to attain 63.2 percent of the final temperature rise.

Axis friction torque: T_f [N·m] [kgf·cm]

This is the no-load torque required just to rotate the rotor.

Mass: w [kg]

This is the mass of the motor.

The masses of the motor with brakes and that without brakes are indicated.

Maximum current of applicable servo amplifiers

Applicable servo amplifiers are briefly described.

© MyFANUC 2D51CC9CD8564E3B8C4DE377C2D11C41

1.3.2.2 αiS-B/αiS SERIES (200V)

Model αiS 2/5000-B Specification: A06B-2212-B□0□

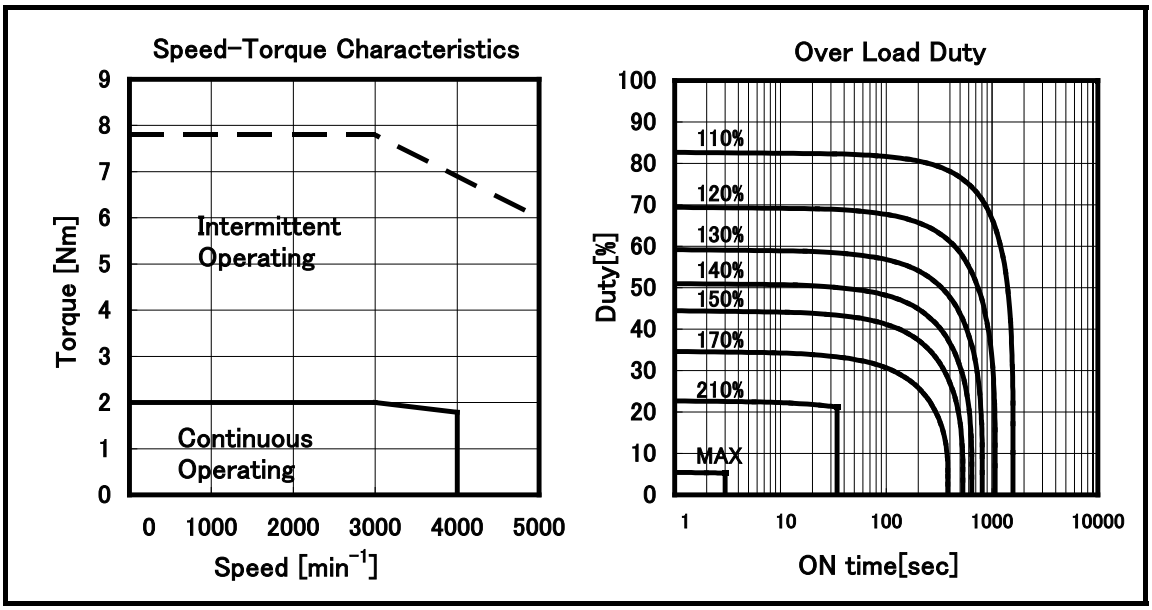

Data sheet

Parameter	Symbol	Value	Unit
Continuous Torque (at low speed) (*)	Tc	2.0 20	Nm kgfcm
Continuous Current (at low speed) (*)	Ic	3.3	A (rms)
Rated Output (*)	Pr	0.75 1.0	kW HP
Rated Speed	Nr	4000	min^{-1}
Maximum Speed	Nmax	5000	min^{-1}
Maximum Torque (*)	Tmax	7.8 80	Nm kgfcm
Moment of Inertia of Rotor	Jm	0.000291 0.00297	kgm^2 $kgfcms^2$
Moment of Inertia of Rotor(with Brake)	Jm	0.000311 0.00317	kgm^2 $kgfcms^2$
Torque Constant (*)	Kt	0.61 6.2	Nm/A(rms) kgfcm/A(rms)
Winding Resistance (between terminals) (*)	Ra	2.8	Ω
Thermal time constant	t_t	15	min
Static friction	Tf	0.1 1	Nm kgfcm
Weight	w	2.8	kg
Weight(with Brake)	w	3.8	kg
Max. Current of Servo Amp.	Imax	20	A (peak)

(*) The values are the standard values at 20℃ and the tolerance is ±10%.
The speed-torque characteristics very depending on the type of software,parametersetting,and input voltage of the digital servo software.(The above figures show average values.)

© MyFANUC 2D51CC9CD8564E3B8C4DE377C2D11C41

Model αiS 2/6000-B Specification: A06B-2218-B□0□

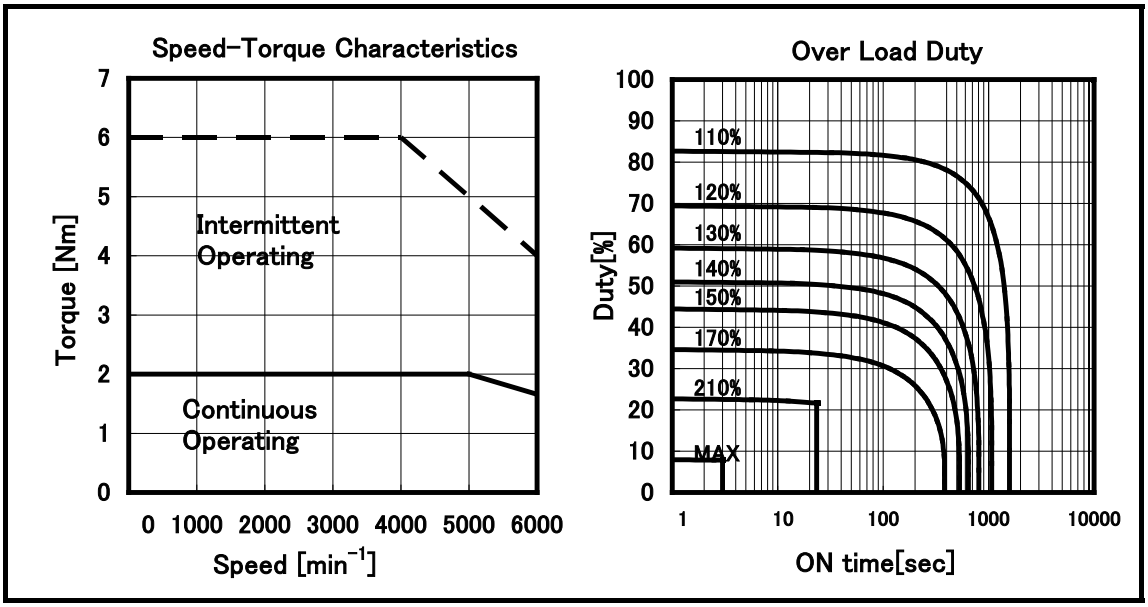

Data sheet

Parameter	Symbol	Value	Unit
Continuous Torque (at low speed) (*)	Tc	2.0 20	Nm kgfcm
Continuous Current (at low speed) (*)	Ic	4.0	A (rms)
Rated Output (*)	Pr	1.0 1.3	kW HP
Rated Speed	Nr	6000	min^{-1}
Maximum Speed	Nmax	6000	min^{-1}
Maximum Torque (*)	Tmax	6.0 61	Nm kgfcm
Moment of Inertia of Rotor	Jm	0.000291 0.00297	kgm^2 $kgfcms^2$
Moment of Inertia of Rotor(with Brake)	Jm	0.000311 0.00317	kgm^2 $kgfcms^2$
Torque Constant (*)	Kt	0.50 5.1	Nm/A(rms) kgfcm/A(rms)
Winding Resistance (between terminals) (*)	Ra	2.8	Ω
Thermal time constant	t_t	15	min
Static friction	Tf	0.1 1	Nm kgfcm
Weight	w	3.0	kg
Weight(with Brake)	w	4.0	kg
Max. Current of Servo Amp.	Imax	20	A (peak)

(*) The values are the standard values at 20℃ and the tolerance is ±10%.

The speed-torque characteristics very depending on the type of software,parametersetting,and input voltage of the digital servo software.(The above figures show average values.)

© MyFANUC 2D51CC9CD8564E3B8C4DE377C2D11C41

Model αiS 4/5000-B Specification: A06B-2215-B□0□

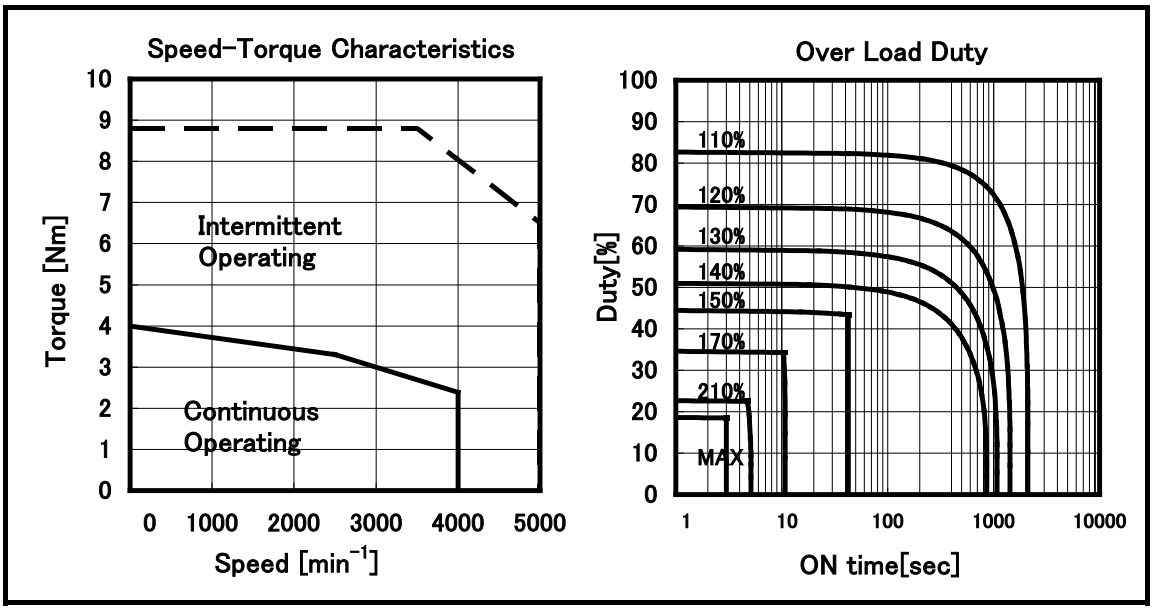

Data sheet

Parameter	Symbol	Value	Unit
Continuous Torque (at low speed) (*)	Tc	4.0 41	Nm kgfcm
Continuous Current (at low speed) (*)	Ic	6.1	A (rms)
Rated Output (*)	Pr	1.0 1.3	kW HP
Rated Speed	Nr	4000	min^{-1}
Maximum Speed	Nmax	5000	min^{-1}
Maximum Torque (*)	Tmax	8.8 90	Nm kgfcm
Moment of Inertia of Rotor	Jm	0.000515 0.00526	kgm^2 $kgfcms^2$
Moment of Inertia of Rotor(with Brake)	Jm	0.000535 0.00546	kgm^2 $kgfcms^2$
Torque Constant (*)	Kt	0.66 6.7	Nm/A(rms) kgfcm/A(rms)
Winding Resistance (between terminals) (*)	Ra	1.2	Ω
Thermal time constant	t_t	20	min
Static friction	Tf	0.2 2	Nm kgfcm
Weight	w	4.3	kg
Weight(with Brake)	w	5.3	kg
Max. Current of Servo Amp.	Imax	20	A (peak)

(*) The values are the standard values at 20℃ and the tolerance is ±10%.

The speed-torque characteristics very depending on the type of software,parametersetting,and input voltage of the digital servo software.(The above figures show average values.)

© MyFANUC 2D51CC9CD8564E3B8C4DE377C2D11C41

Model αiS 4/6000-B Specification: A06B-2210-B□0□

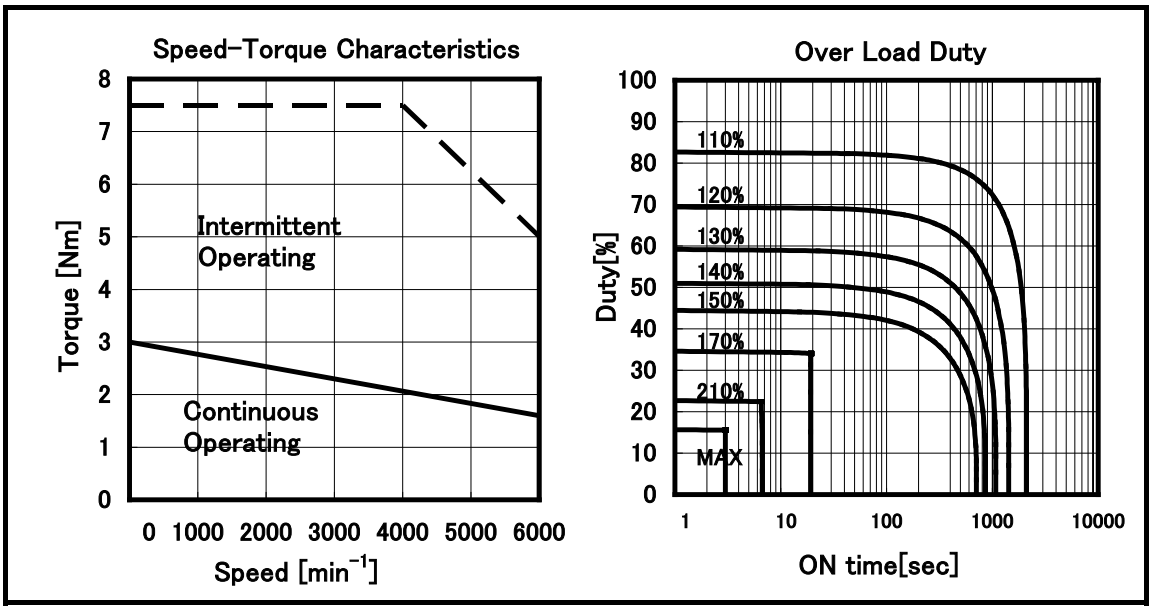

Data sheet

Parameter	Symbol	Value	Unit
Continuous Torque (at low speed) (*)	Tc	3.0 31	Nm kgfcm
Continuous Current (at low speed) (*)	Ic	5.6	A (rms)
Rated Output (*)	Pr	1.0 1.3	kW HP
Rated Speed	Nr	6000	min^{-1}
Maximum Speed	Nmax	6000	min^{-1}
Maximum Torque (*)	Tmax	7.5 77	Nm kgfcm
Moment of Inertia of Rotor	Jm	0.000515 0.00526	kgm^2 $kgfcms^2$
Moment of Inertia of Rotor(with Brake)	Jm	0.000535 0.00546	kgm^2 $kgfcms^2$
Torque Constant (*)	Kt	0.54 5.5	Nm/A(rms) kgfcm/A(rms)
Winding Resistance (between terminals) (*)	Ra	1.2	Ω
Thermal time constant	t_t	20	min
Static friction	Tf	0.2 2	Nm kgfcm
Weight	w	4.5	kg
Weight(with Brake)	w	5.5	kg
Max. Current of Servo Amp.	Imax	20	A (peak)

(*) The values are the standard values at 20℃ and the tolerance is ±10%.

The speed-torque characteristics very depending on the type of software,parametersetting,and input voltage of the digital servo software.(The above figures show average values.)

© MyFANUC 2D51CC9CD8564E3B8C4DE377C2D11C41

Model αiS 8/4000-B Specification: A06B-2235-B□0□

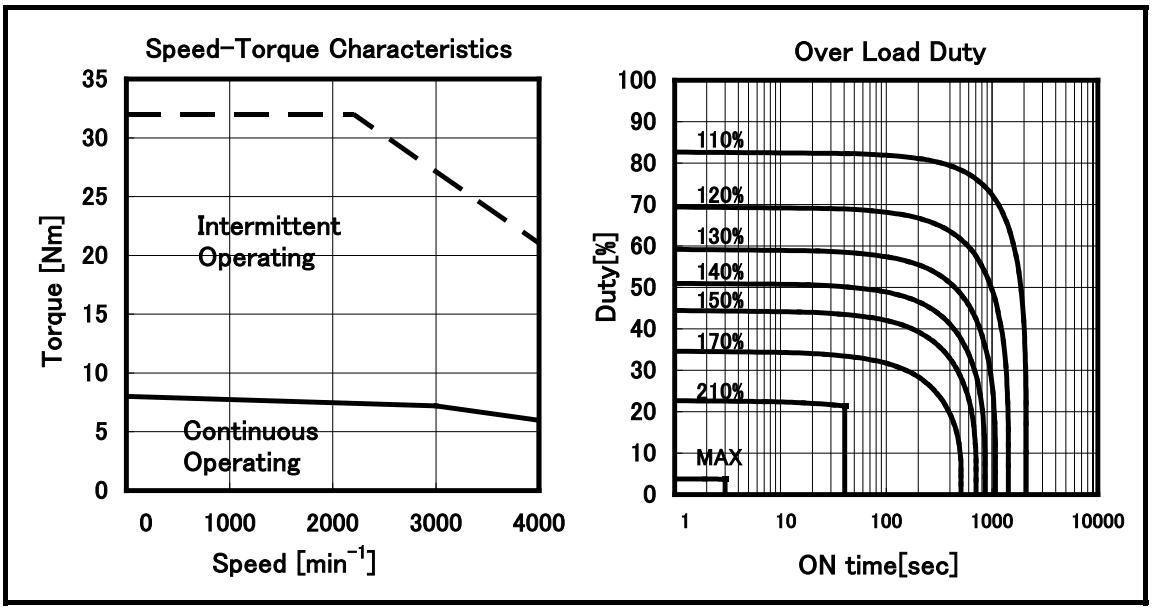

Data sheet

Parameter	Symbol	Value	Unit
Continuous Torque (at low speed) (*)	Tc	8.0 82	Nm kgfcm
Continuous Current (at low speed) (*)	Ic	11.1	A (rms)
Rated Output (*)	Pr	2.5 3.3	kW HP
Rated Speed	Nr	4000	min^{-1}
Maximum Speed	Nmax	4000	min^{-1}
Maximum Torque (*)	Tmax	32 327	Nm kgfcm
Moment of Inertia of Rotor	Jm	0.00117 0.0119	kgm^2 $kgfcms^2$
Moment of Inertia of Rotor(with Brake)	Jm	0.00124 0.0127	kgm^2 $kgfcms^2$
Torque Constant (*)	Kt	0.72 7.3	Nm/A(rms) kgfcm/A(rms)
Winding Resistance (between terminals) (*)	Ra	0.62	Ω
Thermal time constant	t_t	20	min
Static friction	Tf	0.3 3	Nm kgfcm
Weight	w	7.4	kg
Weight(with Brake)	w	9.6	kg
Max. Current of Servo Amp.	Imax	80	A (peak)

(*) The values are the standard values at 20℃ and the tolerance is ±10%.

The speed-torque characteristics very depending on the type of software,parametersetting,and input voltage of the digital servo software.(The above figures show average values.)

© MyFANUC 2D51CC9CD8564E3B8C4DE377C2D11C41

Model αiS 8/6000-B Specification: A06B-2232-B□0□

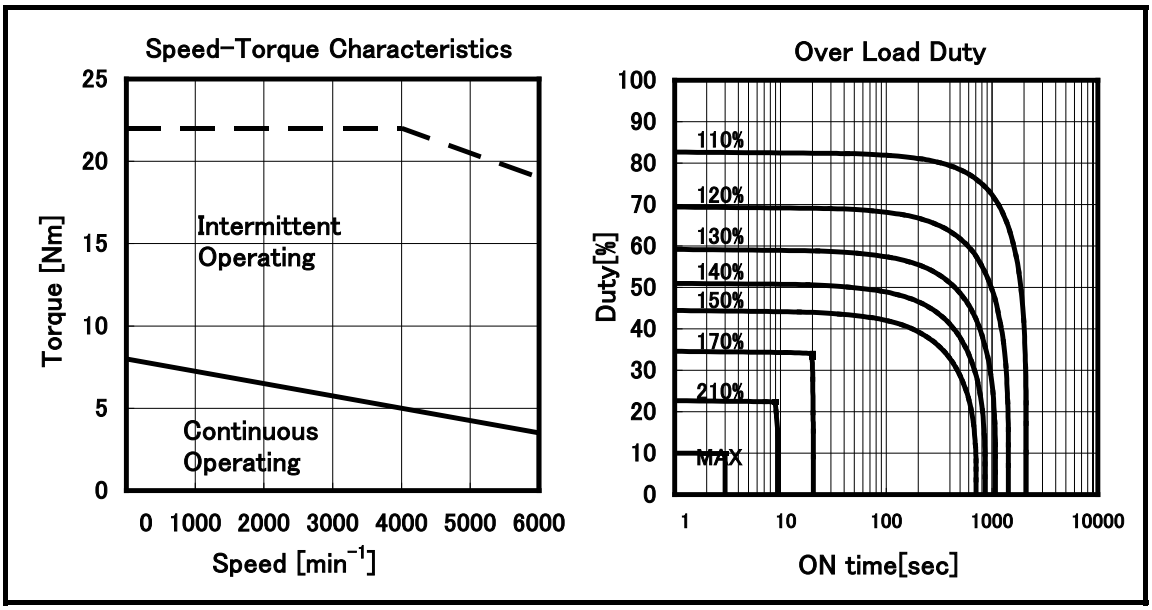

Data sheet

Parameter	Symbol	Value	Unit
Continuous Torque (at low speed) (*)	Tc	8.0 82	Nm kgfcm
Continuous Current (at low speed) (*)	Ic	17.9	A (rms)
Rated Output (*)	Pr	2.2 3.0	kW HP
Rated Speed	Nr	6000	min^{-1}
Maximum Speed	Nmax	6000	min^{-1}
Maximum Torque (*)	Tmax	22 224	Nm kgfcm
Moment of Inertia of Rotor	Jm	0.00117 0.0119	kgm^2 $kgfcms^2$
Moment of Inertia of Rotor(with Brake)	Jm	0.00124 0.0127	kgm^2 $kgfcms^2$
Torque Constant (*)	Kt	0.45 4.6	Nm/A(rms) kgfcm/A(rms)
Winding Resistance (between terminals) (*)	Ra	0.26	Ω
Thermal time constant	t_t	20	min
Static friction	Tf	0.3 3	Nm kgfcm
Weight	w	8.0	kg
Weight(with Brake)	w	10.0	kg
Max. Current of Servo Amp.	Imax	80	A (peak)

(*) The values are the standard values at 20℃ and the tolerance is ±10%.

The speed-torque characteristics very depending on the type of software,parametersetting,and input voltage of the digital servo software.(The above figures show average values.)

© MyFANUC 2D51CC9CD8564E3B8C4DE377C2D11C41

Model αiS 12/4000-B Specification: A06B-2238-B□0□

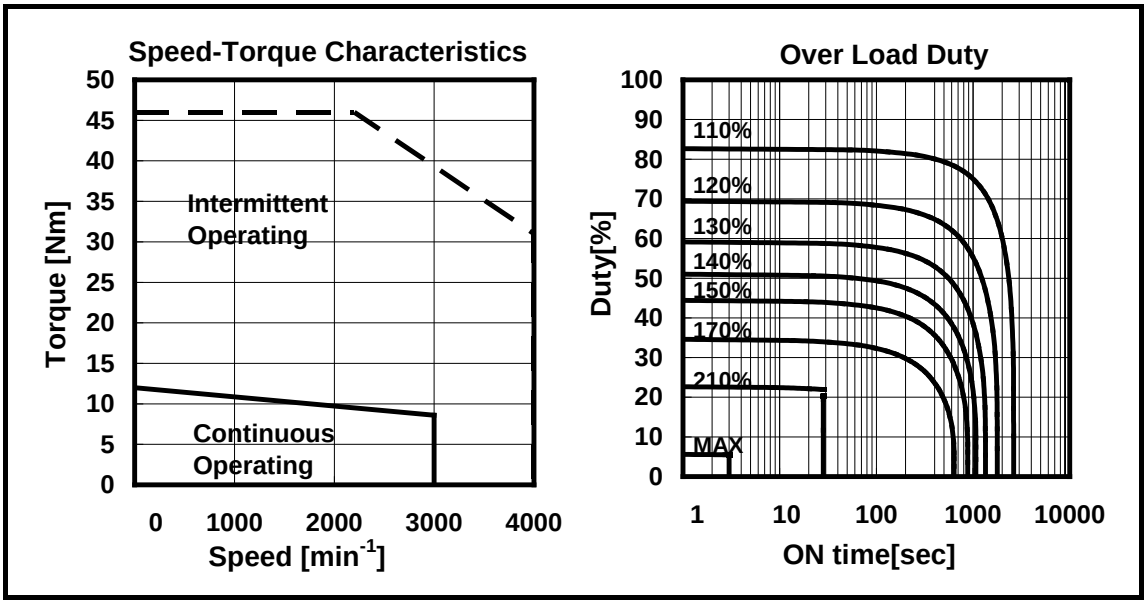

Data sheet

Parameter	Symbol	Value	Unit
Continuous Torque (at low speed) (*)	Tc	12 122	Nm kgfcm
Continuous Current (at low speed) (*)	Ic	13.4	A (rms)
Rated Output (*)	Pr	2.7 3.6	kW HP
Rated Speed	Nr	3000	min^{-1}
Maximum Speed	Nmax	4000	min^{-1}
Maximum Torque (*)	Tmax	46 469	Nm kgfcm
Moment of Inertia of Rotor	Jm	0.00228 0.0233	kgm^2 $kgfcms^2$
Moment of Inertia of Rotor(with Brake)	Jm	0.00235 0.0240	kgm^2 $kgfcms^2$
Torque Constant (*)	Kt	0.90 9.2	Nm/A(rms) kgfcm/A(rms)
Winding Resistance (between terminals) (*)	Ra	0.36	Ω
Thermal time constant	t_t	25	min
Static friction	Tf	0.4 4	Nm kgfcm
Weight	w	11.9	kg
Weight(with Brake)	w	14.1	kg
Max. Current of Servo Amp.	Imax	80	A (peak)

(*) The values are the standard values at 20℃ and the tolerance is ±10%.

The speed-torque characteristics very depending on the type of software,parametersetting,and input voltage of the digital servo software.(The above figures show average values.)

© MyFANUC 2D51CC9CD8564E3B8C4DE377C2D11C41

Model αiS 12/6000-B Specification: A06B-2230-B□0□

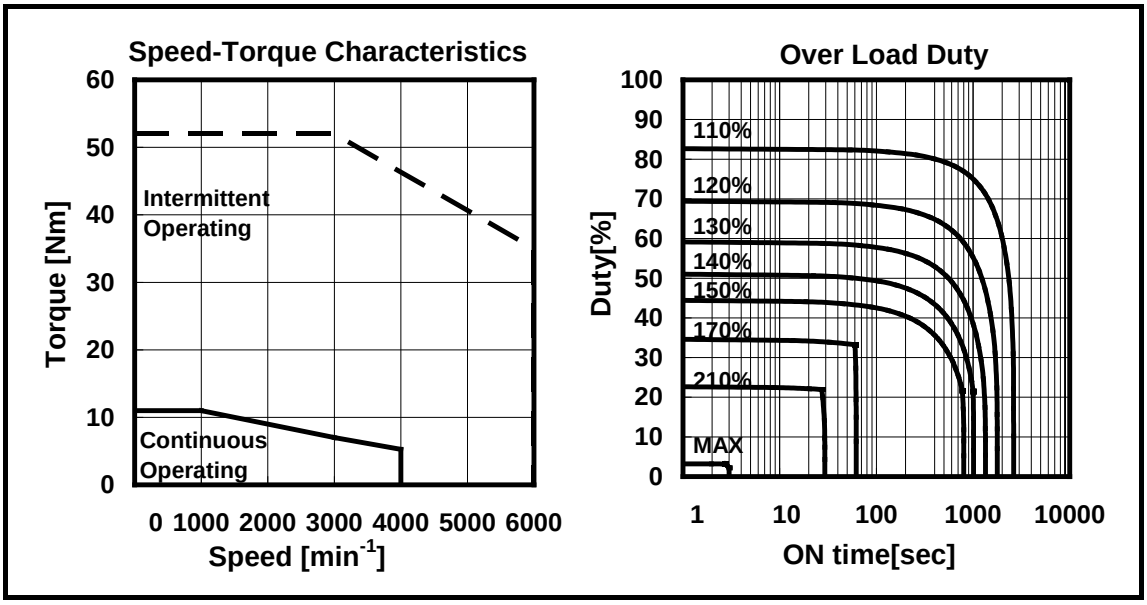

Data sheet

Parameter	Symbol	Value	Unit
Continuous Torque (at low speed) (*)	Tc	11 112	Nm kgfcm
Continuous Current (at low speed) (*)	Ic	20.4	A (rms)
Rated Output (*)	Pr	2.2 3.0	kW HP
Rated Speed	Nr	4000	min^{-1}
Maximum Speed	Nmax	6000	min^{-1}
Maximum Torque (*)	Tmax	52 531	Nm kgfcm
Moment of Inertia of Rotor	Jm	0.00228 0.0233	kgm^2 $kgfcms^2$
Moment of Inertia of Rotor(with Brake)	Jm	0.00235 0.0240	kgm^2 $kgfcms^2$
Torque Constant (*)	Kt	0.54 5.5	Nm/A(rms) kgfcm/A(rms)
Winding Resistance (between terminals) (*)	Ra	0.13	Ω
Thermal time constant	t_t	25	min
Static friction	Tf	0.4 4	Nm kgfcm
Weight	w	11.9	kg
Weight(with Brake)	w	14.1	kg
Max. Current of Servo Amp.	Imax	160	A (peak)

(*) The values are the standard values at 20℃ and the tolerance is ±10%.

The speed-torque characteristics very depending on the type of software,parametersetting,and input voltage of the digital servo software.(The above figures show average values.)

© MyFANUC 2D51CC9CD8564E3B8C4DE377C2D11C41

Model αiS 22/4000-B

Specification: A06B-2265-B□0□

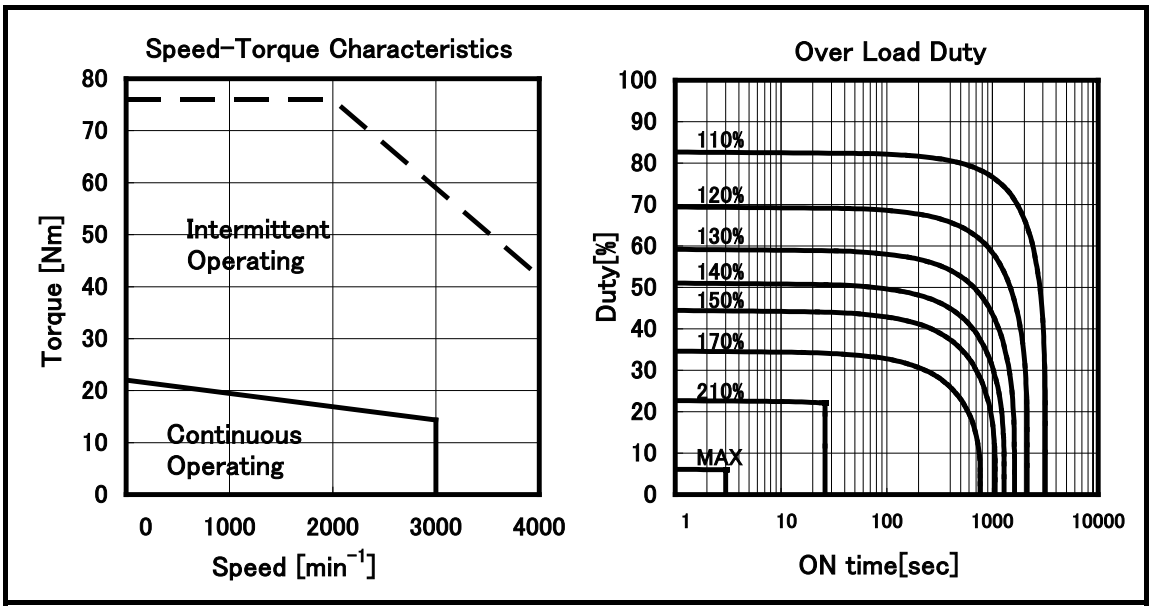

Data sheet

Parameter	Symbol	Value	Unit
Continuous Torque (at low speed) (*)	Tc	22 224	Nm kgfcm
Continuous Current (at low speed) (*)	Ic	27.9	A (rms)
Rated Output (*)	Pr	4.5 6.0	kW HP
Rated Speed	Nr	3000	min^{-1}
Maximum Speed	Nmax	4000	min^{-1}
Maximum Torque (*)	Tmax	76 776	Nm kgfcm
Moment of Inertia of Rotor	Jm	0.00527 0.0538	kgm^2 $kgfcms^2$
Moment of Inertia of Rotor(with 35Nm Brake)	Jm	0.00587 0.0599	kgm^2 $kgfcms^2$
Torque Constant (*)	Kt	0.79 8.0	Nm/A(rms) kgfcm/A(rms)
Winding Resistance (between terminals) (*)	Ra	0.15	Ω
Thermal time constant	t_t	30	min
Static friction	Tf	0.8 8	Nm kgfcm
Weight	w	17	kg
Weight(with 35Nm Brake)	w	23	kg
Max. Current of Servo Amp.	Imax	160	A (peak)

(*) The values are the standard values at 20℃ and the tolerance is ±10%.

The speed-torque characteristics very depending on the type of software,parametersetting,and input voltage of the digital servo software.(The above figures show average values.)

Overload Duty shows the specification for rotating, and if the motor is stopping, Soft Alarm will occur shorter time. When the motor speed is less than 1 rpm for over 10 sec., use under continuous torque (at low speed).

© MyFANUC 2D51CC9CD8564E3B8C4DE377C2D11C41

Model αiS 22/6000-B Specification: A06B-2262-B□0□

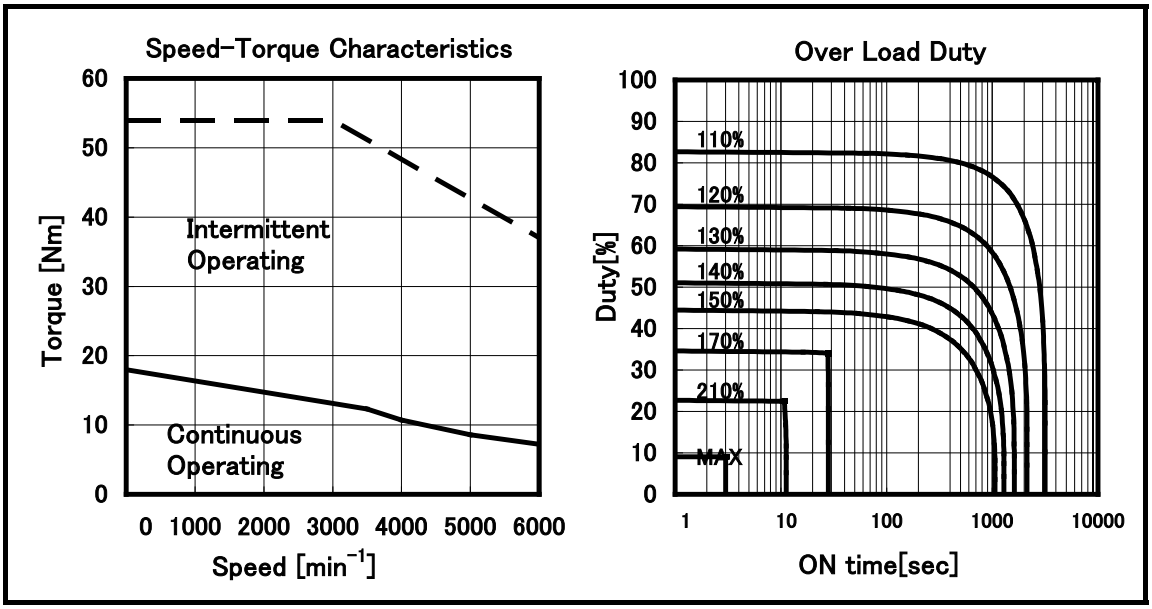

Data sheet

Parameter	Symbol	Value	Unit
Continuous Torque (at low speed) (*)	Tc	18 184	Nm kgfcm
Continuous Current (at low speed) (*)	Ic	34.1	A (rms)
Rated Output (*)	Pr	4.5 6.0	kW HP
Rated Speed	Nr	6000	min^{-1}
Maximum Speed	Nmax	6000	min^{-1}
Maximum Torque (*)	Tmax	54 551	Nm kgfcm
Moment of Inertia of Rotor	Jm	0.00527 0.0538	kgm^2 $kgfcms^2$
Moment of Inertia of Rotor(with 35Nm Brake)	Jm	0.00587 0.0599	kgm^2 $kgfcms^2$
Torque Constant (*)	Kt	0.53 5.4	Nm/A(rms) kgfcm/A(rms)
Winding Resistance (between terminals) (*)	Ra	0.078	Ω
Thermal time constant	t_t	30	min
Static friction	Tf	0.8 8	Nm kgfcm
Weight	w	17	kg
Weight(with 35Nm Brake)	w	23	kg
Max. Current of Servo Amp.	Imax	160	A (peak)

(*) The values are the standard values at 20℃ and the tolerance is ±10%.

The speed-torque characteristics very depending on the type of software,parametersetting,and input voltage of the digital servo software.(The above figures show average values.)

Overload Duty shows the specification for rotating, and if the motor is stopping, Soft Alarm will occur shorter time. When the motor speed is less than 1 rpm for over 10 sec., use under continuous torque (at low speed).

© MyFANUC 2D51CC9CD8564E3B8C4DE377C2D11C41

Model αiS 30/4000-B Specification: A06B-2268-B□0□

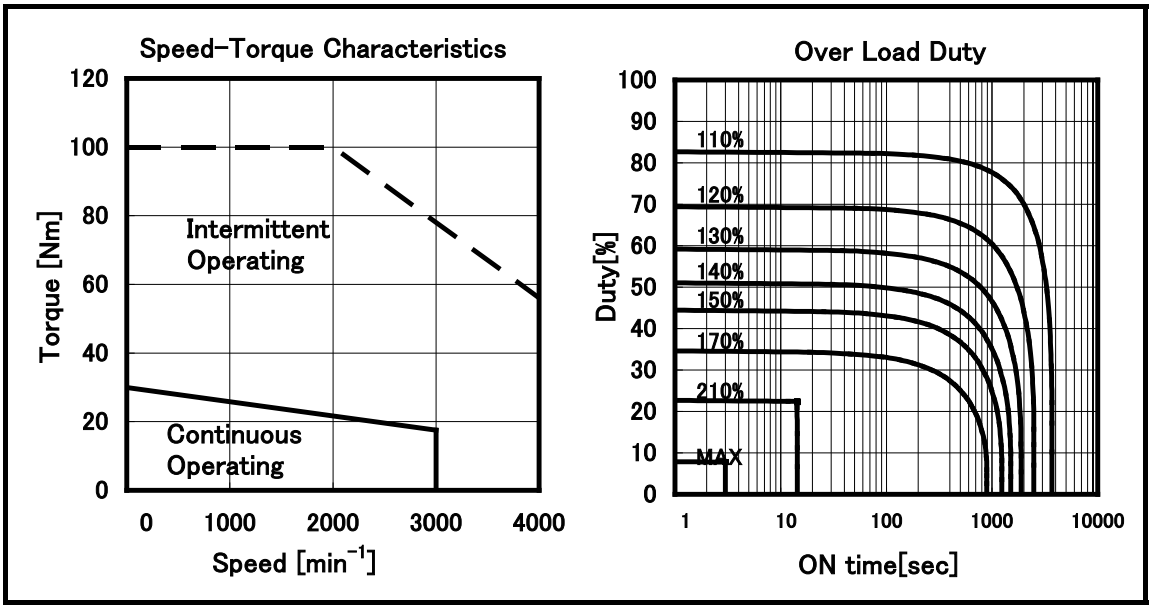

Data sheet

Parameter	Symbol	Value	Unit
Continuous Torque (at low speed) (*)	Tc	30 306	Nm kgfcm
Continuous Current (at low speed) (*)	Ic	31.7	A (rms)
Rated Output (*)	Pr	5.5 7.3	kW HP
Rated Speed	Nr	3000	min^{-1}
Maximum Speed	Nmax	4000	min^{-1}
Maximum Torque (*)	Tmax	100 1020	Nm kgfcm
Moment of Inertia of Rotor	Jm	0.00759 0.0774	kgm^2 $kgfcms^2$
Moment of Inertia of Rotor(with 35Nm Brake)	Jm	0.00819 0.0836	kgm^2 $kgfcms^2$
Torque Constant (*)	Kt	0.95 9.7	Nm/A(rms) kgfcm/A(rms)
Winding Resistance (between terminals) (*)	Ra	0.12	Ω
Thermal time constant	t_t	35	min
Static friction	Tf	0.8 8	Nm kgfcm
Weight	w	23	kg
Weight(with 35Nm Brake)	w	29	kg
Max. Current of Servo Amp.	Imax	160	A (peak)

(*) The values are the standard values at 20℃ and the tolerance is ±10%.

The speed-torque characteristics very depending on the type of software,parametersetting,and input voltage of the digital servo software.(The above figures show average values.)

Overload Duty shows the specification for rotating, and if the motor is stopping, Soft Alarm will occur shorter time. When the motor speed is less than 1 rpm for over 10 sec., use under continuous torque (at low speed).

© MyFANUC 2D51CC9CD8564E3B8C4DE377C2D11C41

Model αiS 40/4000-B Specification: A06B-2272-B□0□, -B□2□

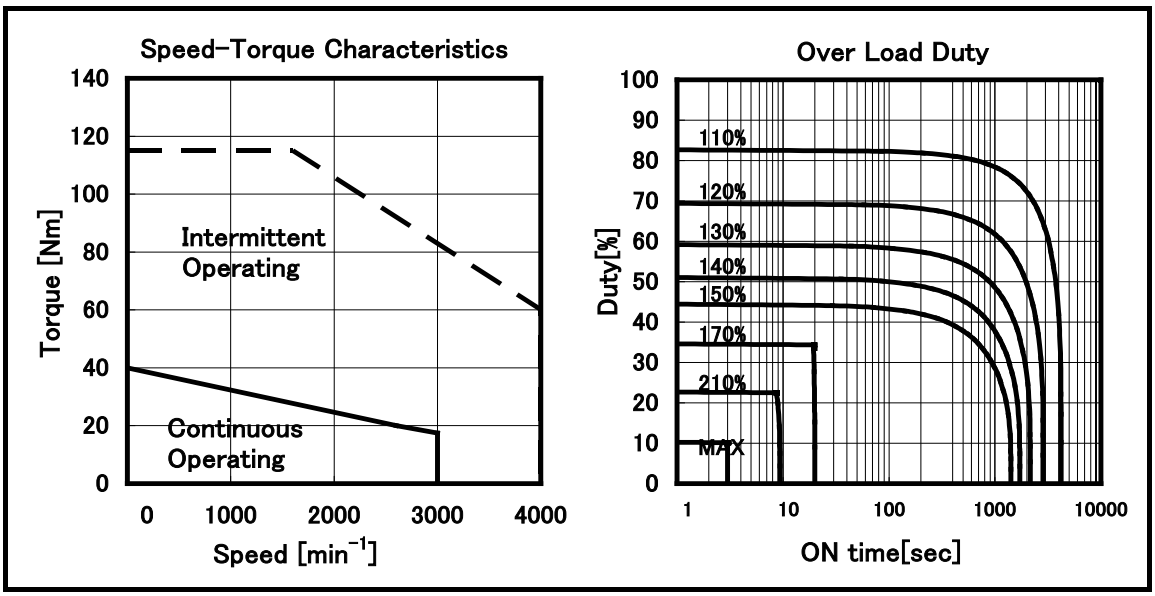

Data sheet

Parameter	Symbol	Value	Unit
Continuous Torque (at low speed) (*)	Tc	40 408	Nm kgfcm
Continuous Current (at low speed) (*)	Ic	36.2	A (rms)
Rated Output (*)	Pr	5.5 7.3	kW HP
Rated Speed	Nr	3000	min^{-1}
Maximum Speed	Nmax	4000	min^{-1}
Maximum Torque (*)	Tmax	115 1170	Nm kgfcm
Moment of Inertia of Rotor	Jm	0.00990 0.101	kgm^2 $kgfcms^2$
Moment of Inertia of Rotor(with 35Nm Brake)	Jm	0.0105 0.107	kgm^2 $kgfcms^2$
Moment of Inertia of Rotor(with 70Nm Brake)	Jm	0.0108 0.110	kgm^2 $kgfcms^2$
Torque Constant (*)	Kt	1.10 11.3	Nm/A(rms) kgfcm/A(rms)
Winding Resistance (between terminals) (*)	Ra	0.12	Ω
Thermal time constant	t_t	40	min
Static friction	Tf	1.2 12	Nm kgfcm
Weight	w	28	kg
Weight(with 35Nm Brake)	w	34	kg
Weight(with 70Nm Brake)	w	38	kg
Max. Current of Servo Amp.	Imax	160	A (peak)

(*) The values are the standard values at 20℃ and the tolerance is ±10%.

The speed-torque characteristics very depending on the type of software,parametersetting,and input voltage of the digital servo software.(The above figures show average values.)

Overload Duty shows the specification for rotating, and if the motor is stopping, Soft Alarm will occur shorter time. When the motor speed is less than 1 rpm for over 10 sec., use under continuous torque (at low speed).

© MyFANUC 2D51CC9CD8564E3B8C4DE377C2D11C41

Model αiS 50/2000-B Specification: A06B-2042-B□0□, -B□2□

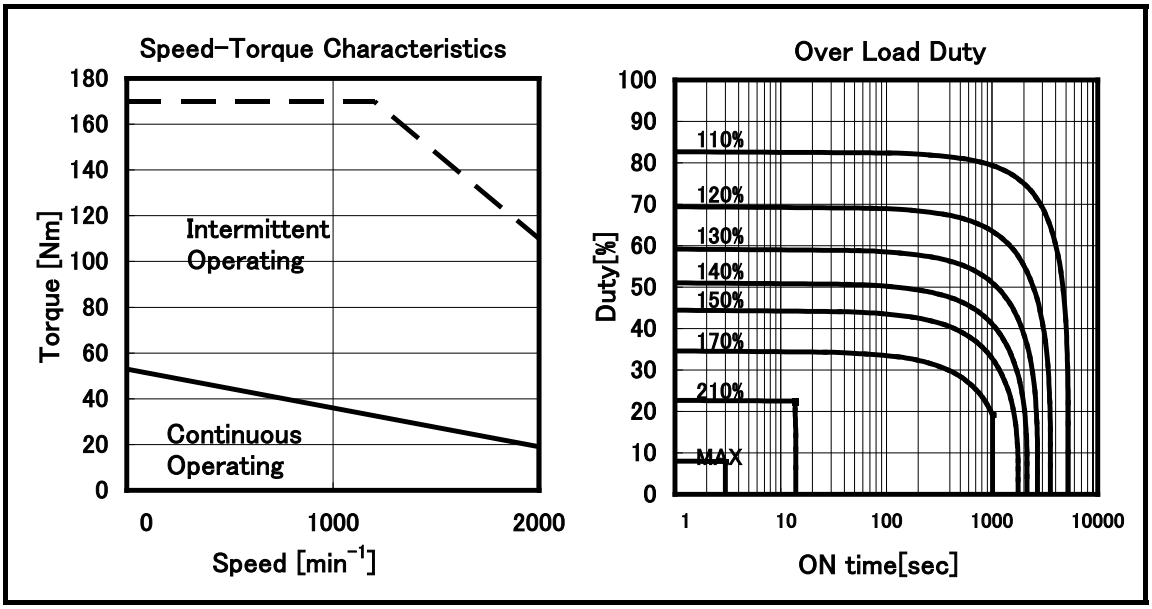

Data sheet

Parameter	Symbol	Value	Unit
Continuous Torque (at low speed) (*)	Tc	53 541	Nm kgfcm
Continuous Current (at low speed) (*)	Ic	32.0	A (rms)
Rated Output (*)	Pr	4.0 5.4	kW HP
Rated Speed	Nr	2000	min^{-1}
Maximum Speed	Nmax	2000	min^{-1}
Maximum Torque (*)	Tmax	170 1730	Nm kgfcm
Moment of Inertia of Rotor	Jm	0.0145 0.148	kgm^2 $kgfcms^2$
Moment of Inertia of Rotor(with 70Nm Brake)	Jm	0.0154 0.157	kgm^2 $kgfcms^2$
Torque Constant (*)	Kt	1.66 16.9	Nm/A(rms) kgfcm/A(rms)
Winding Resistance (between terminals) (*)	Ra	0.15	Ω
Thermal time constant	t_t	50	min
Static friction	Tf	1.8 18	Nm kgfcm
Weight	w	39	kg
Weight(with 70Nm Brake)	w	49	kg
Max. Current of Servo Amp.	Imax	160	A (peak)

(*) The values are the standard values at 20℃ and the tolerance is ±10%.

The speed-torque characteristics very depending on the type of software,parametersetting,and input voltage of the digital servo software.(The above figures show average values.)

Overload Duty shows the specification for rotating, and if the motor is stopping, Soft Alarm will occur shorter time. When the motor speed is less than 1 rpm for over 10 sec., use under continuous torque (at low speed).

© MyFANUC 2D51CC9CD8564E3B8C4DE377C2D11C41

Model αiS 50/3000-B Specification: A06B-2275-B□0□, -B□2□

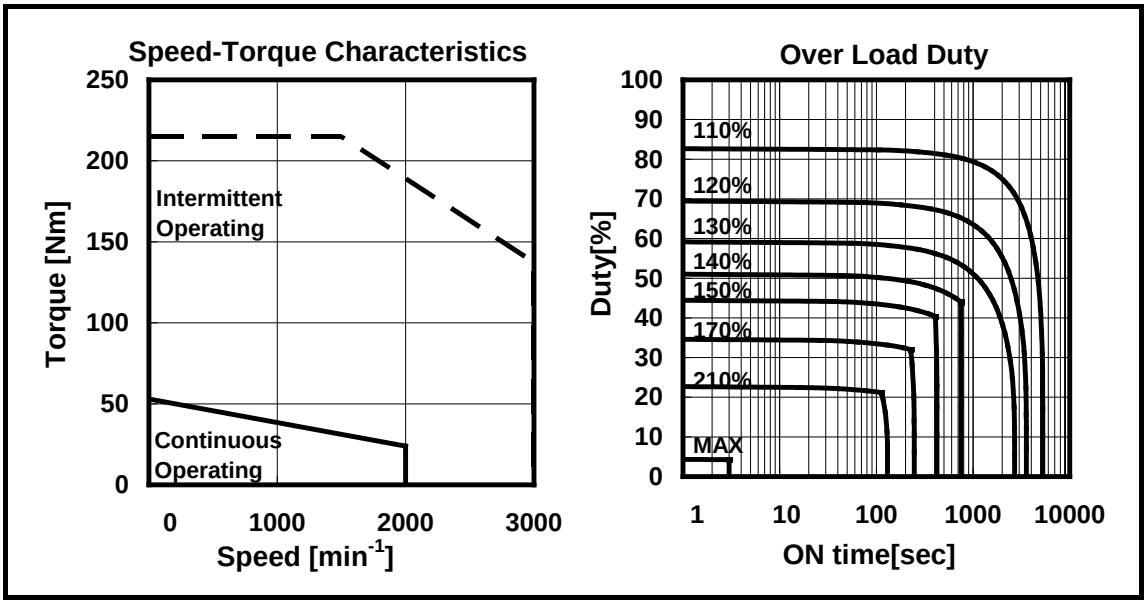

Data sheet

Parameter	Symbol	Value	Unit
Continuous Torque (at low speed) (*)	Tc	53 541	Nm kgfcm
Continuous Current (at low speed) (*)	Ic	53	A (rms)
Rated Output (*)	Pr	5.0 6.7	kW HP
Rated Speed	Nr	2000	min^{-1}
Maximum Speed	Nmax	3000	min^{-1}
Maximum Torque (*)	Tmax	215 2190	Nm kgfcm
Moment of Inertia of Rotor	Jm	0.0145 0.148	kgm^2 $kgfcms^2$
Moment of Inertia of Rotor(with 70Nm Brake)	Jm	0.0154 0.157	kgm^2 $kgfcms^2$
Torque Constant (*)	Kt	0.95 9.7	Nm/A(rms) kgfcm/A(rms)
Winding Resistance (between terminals) (*)	Ra	0.048	Ω
Thermal time constant	t_t	50	min
Static friction	Tf	1.8 18	Nm kgfcm
Weight	w	39	kg
Weight(with 70Nm Brake)	w	49	kg
Max. Current of Servo Amp.	Imax	360	A (peak)

(*) The values are the standard values at 20℃ and the tolerance is ±10%.

The speed-torque characteristics very depending on the type of software,parametersetting,and input voltage of the digital servo software.(The above figures show average values.)

© MyFANUC 2D51CC9CD8564E3B8C4DE377C2D11C41

Model αiS 60/2000-B Specification: A06B-2044-B□0□, -B□2□

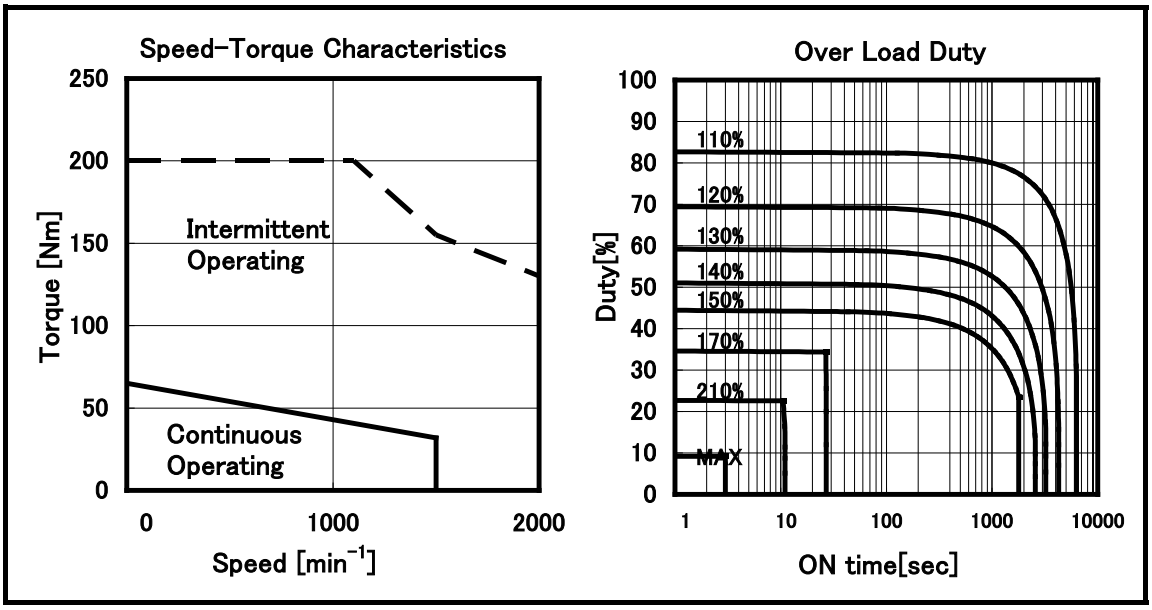

Data sheet

Parameter	Symbol	Value	Unit
Continuous Torque (at low speed) (*)	Tc	65 663	Nm kgfcm
Continuous Current (at low speed) (*)	Ic	34.3	A (rms)
Rated Output (*)	Pr	5.0 6.7	kW HP
Rated Speed	Nr	1500	min^{-1}
Maximum Speed	Nmax	2000	min^{-1}
Maximum Torque (*)	Tmax	200 2040	Nm kgfcm
Moment of Inertia of Rotor	Jm	0.0195 0.199	kgm^2 $kgfcms^2$
Moment of Inertia of Rotor(with 70Nm Brake)	Jm	0.0204 0.208	kgm^2 $kgfcms^2$
Torque Constant (*)	Kt	1.89 19.3	Nm/A(rms) kgfcm/A(rms)
Winding Resistance (between terminals) (*)	Ra	0.15	Ω
Thermal time constant	t_t	60	min
Static friction	Tf	1.8 18	Nm kgfcm
Weight	w	50	kg
Weight(with 70Nm Brake)	w	60	kg
Max. Current of Servo Amp.	Imax	160	A (peak)

(*) The values are the standard values at 20℃ and the tolerance is ±10%.

The speed-torque characteristics very depending on the type of software,parametersetting,and input voltage of the digital servo software.(The above figures show average values.)

Overload Duty shows the specification for rotating, and if the motor is stopping, Soft Alarm will occur shorter time. When the motor speed is less than 1 rpm for over 10 sec., use under continuous torque (at low speed).

© MyFANUC 2D51CC9CD8564E3B8C4DE377C2D11C41

Model αiS 60/3000-B Specification: A06B-2278-B□0□, -B□2□

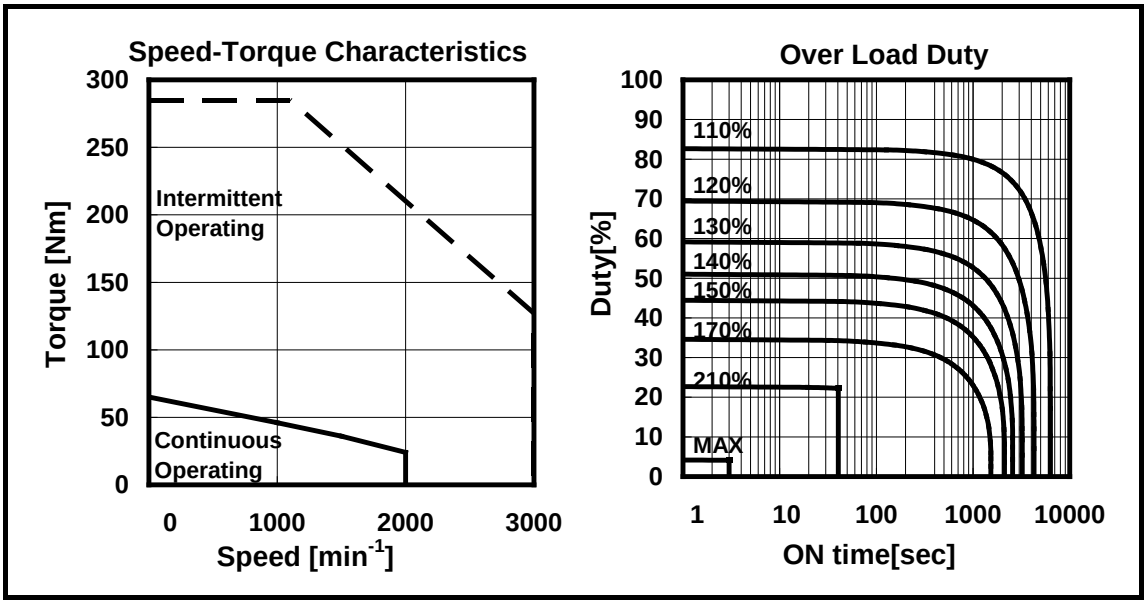

Data sheet

Parameter	Symbol	Value	Unit
Continuous Torque (at low speed) (*)	Tc	65 663	Nm kgfcm
Continuous Current (at low speed) (*)	Ic	52	A (rms)
Rated Output (*)	Pr	5.0 6.7	kW HP
Rated Speed	Nr	2000	min^{-1}
Maximum Speed	Nmax	3000	min^{-1}
Maximum Torque (*)	Tmax	285 2910	Nm kgfcm
Moment of Inertia of Rotor	Jm	0.0195 0.199	kgm^2 $kgfcms^2$
Moment of Inertia of Rotor(with 70Nm Brake)	Jm	0.0204 0.208	kgm^2 $kgfcms^2$
Torque Constant (*)	Kt	1.26 12.9	Nm/A(rms) kgfcm/A(rms)
Winding Resistance (between terminals) (*)	Ra	0.066	Ω
Thermal time constant	t_t	60	min
Static friction	Tf	1.8 18	Nm kgfcm
Weight	w	50	kg
Weight(with 70Nm Brake)	w	60	kg
Max. Current of Servo Amp.	Imax	360	A (peak)

(*) The values are the standard values at 20℃ and the tolerance is ±10%.

The speed-torque characteristics very depending on the type of software,parametersetting,and input voltage of the digital servo software.(The above figures show average values.)

© MyFANUC 2D51CC9CD8564E3B8C4DE377C2D11C41

Model αiS 50/3000 FAN-B Specification: A06B-2275-B□1□, -B□3□

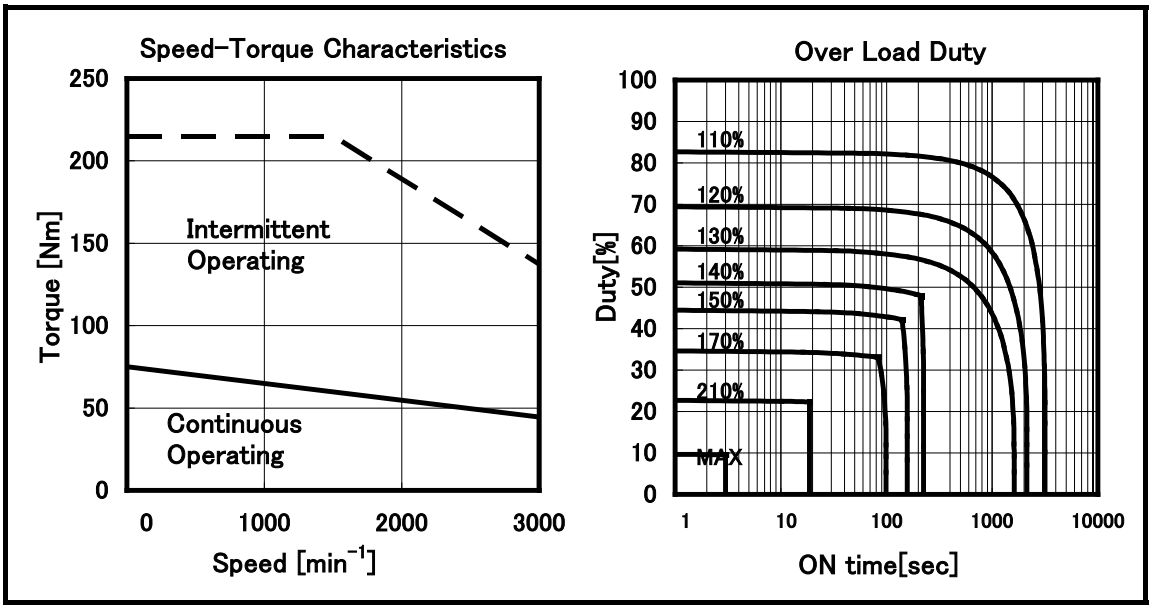

Data sheet

Parameter	Symbol	Value	Unit
Continuous Torque (at low speed) (*)	Tc	75 765	Nm kgfcm
Continuous Current (at low speed) (*)	Ic	79	A (rms)
Rated Output (*)	Pr	14 19	kW HP
Rated Speed	Nr	3000	min^{-1}
Maximum Speed	Nmax	3000	min^{-1}
Maximum Torque (*)	Tmax	215 2190	Nm kgfcm
Moment of Inertia of Rotor	Jm	0.0145 0.148	kgm^2 $kgfcms^2$
Moment of Inertia of Rotor(with 70Nm Brake)	Jm	0.0154 0.157	kgm^2 $kgfcms^2$
Torque Constant (*)	Kt	0.95 9.7	Nm/A(rms) kgfcm/A(rms)
Winding Resistance (between terminals) (*)	Ra	0.048	Ω
Thermal time constant	t_t	30	min
Static friction	Tf	1.8 18	Nm kgfcm
Weight	w	42	kg
Weight(with 70Nm Brake)	w	52	kg
Max. Current of Servo Amp.	Imax	360	A (peak)

(*) The values are the standard values at 20℃ and the tolerance is ±10%.

The speed-torque characteristics very depending on the type of software,parametersetting,and input voltage of the digital servo software.(The above figures show average values.)

© MyFANUC 2D51CC9CD8564E3B8C4DE377C2D11C41

Model αiS 60/3000 FAN-B

Specification: A06B-2278-B□1□, -B□3□

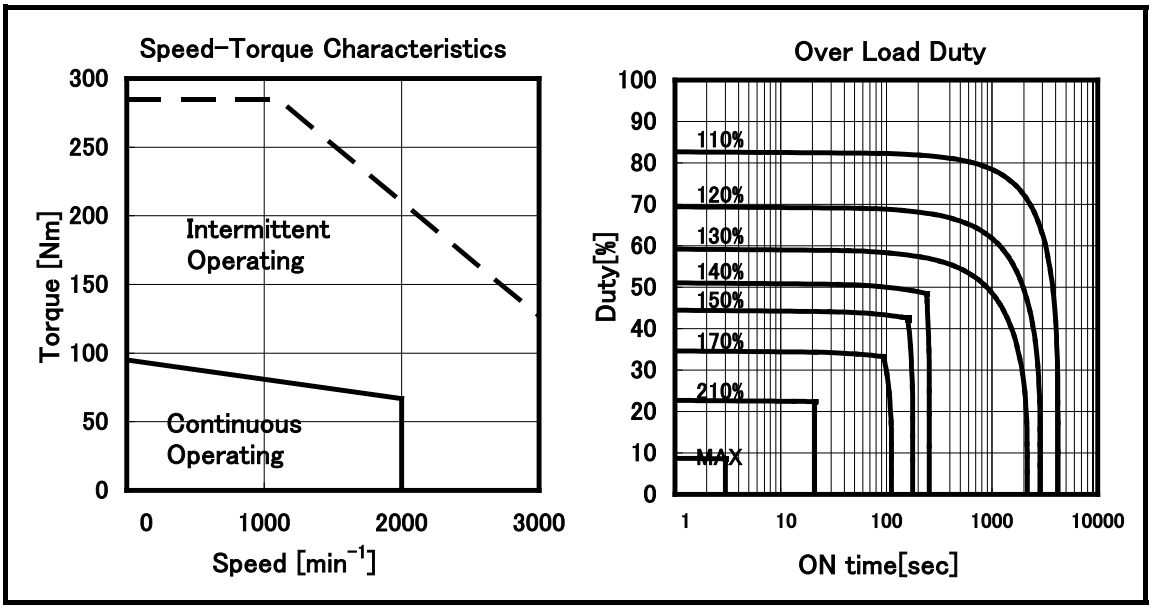

Data sheet

Parameter	Symbol	Value	Unit
Continuous Torque (at low speed) (*)	Tc	95 969	Nm kgfcm
Continuous Current (at low speed) (*)	Ic	75	A (rms)
Rated Output (*)	Pr	14 19	kW HP
Rated Speed	Nr	2000	min^{-1}
Maximum Speed	Nmax	3000	min^{-1}
Maximum Torque (*)	Tmax	285 2910	Nm kgfcm
Moment of Inertia of Rotor	Jm	0.0195 0.199	kgm^2 $kgfcms^2$
Moment of Inertia of Rotor(with 70Nm Brake)	Jm	0.0204 0.208	kgm^2 $kgfcms^2$
Torque Constant (*)	Kt	1.26 12.9	Nm/A(rms) kgfcm/A(rms)
Winding Resistance (between terminals) (*)	Ra	0.066	Ω
Thermal time constant	t_t	40	min
Static friction	Tf	1.8 18	Nm kgfcm
Weight	w	53	kg
Weight(with 70Nm Brake)	w	63	kg
Max. Current of Servo Amp.	Imax	360	A (peak)

(*) The values are the standard values at 20℃ and the tolerance is ±10%.

The speed-torque characteristics very depending on the type of software,parametersetting,and input voltage of the digital servo software.(The above figures show average values.)

© MyFANUC 2D51CC9CD8564E3B8C4DE377C2D11C41

Model αiS 150/3000-B Specification: A06B-2026-B010

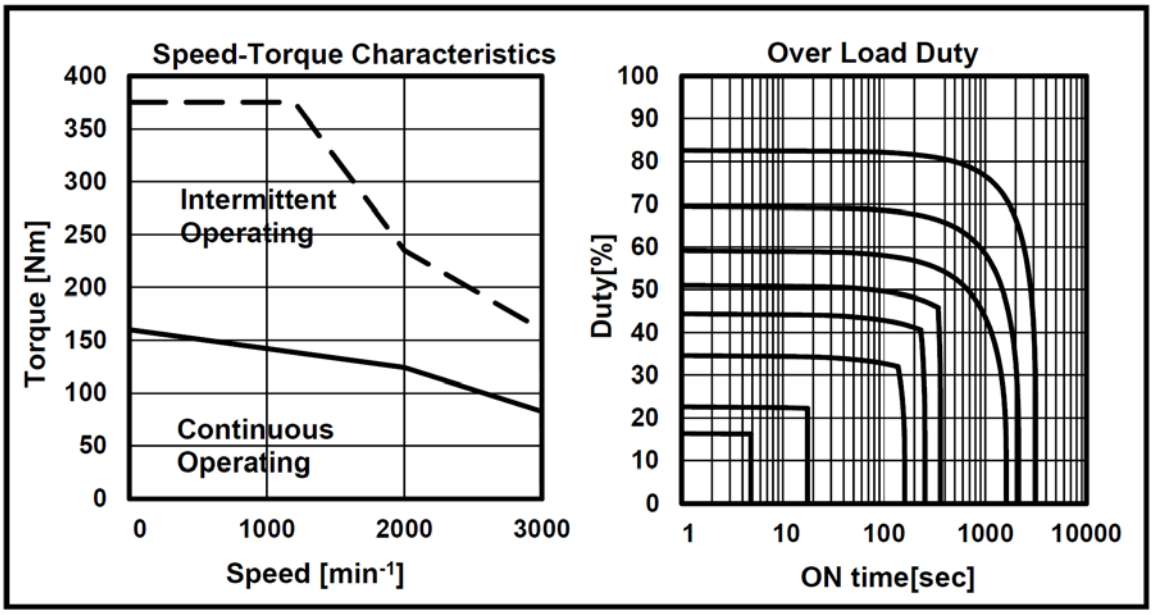

Data sheet

Parameter	Symbol	Value	Unit
Continuous Torque (at low speed) (*)	Tc	160 1630	Nm kgfcm
Continuous Current (at low speed) (*)	Ic	103	A (rms)
Rated Output (*)	Pr	26 35	kW HP
Rated Speed	Nr	3000	min^{-1}
Maximum Speed	Nmax	3000	min^{-1}
Maximum Torque (*)	Tmax	375 3830	Nm kgfcm
Moment of Inertia of Rotor	Jm	0.0425 0.434	kgm^2 $kgfcms^2$
Moment of Inertia of Rotor	Jm	- -	kgm^2 $kgfcms^2$
Torque Constant (*)	Kt	1.56 15.9	Nm/A(rms) kgfcm/A(rms)
Winding Resistance (between terminals) (*)	Ra	0.051	Ω
Thermal time constant	t_t	30	min
Static friction	Tf	2.4 24	Nm kgfcm
Weight	w	108	kg
Weight	w	-	kg
Max. Current of Servo Amp.	Imax	360	A (peak)

(*) The values are the standard values at 20℃ and the tolerance is ±10%.
The speed-torque characteristics very depending on the type of software,parametersetting,and input voltage of the digital servo software.(The above figures show average values.)

© MyFANUC 2D51CC9CD8564E3B8C4DE377C2D11C41

Model αiS 300/2000-B Specification: A06B-0̸2292-B0□0

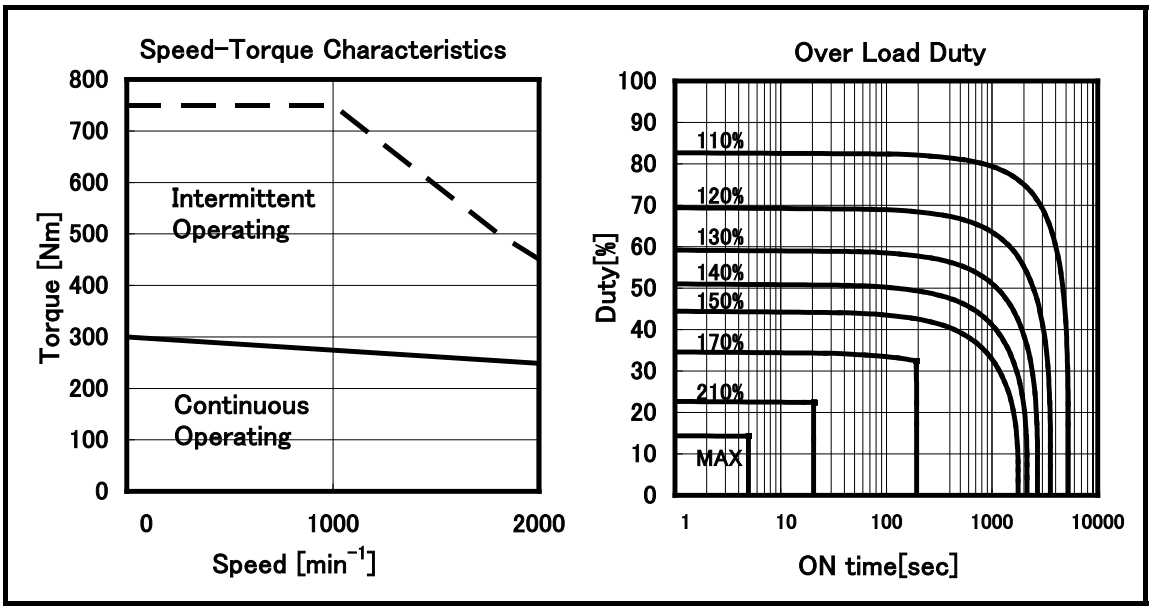

Data sheet

Parameter	Symbol	Value	Unit
Continuous Torque (at low speed) (*)	Tc	300 3060	Nm kgfcm
Continuous Current (at low speed) (*)	Ic	193	A (rms)
Rated Output (*)	Pr	52 70	kW HP
Rated Speed	Nr	2000	min^{-1}
Maximum Speed	Nmax	2000	min^{-1}
Maximum Torque (*)	Tmax	750 7650	Nm kgfcm
Moment of Inertia of Rotor	Jm	0.0787 0.803	kgm^2 $kgfcms^2$
Moment of Inertia of Rotor(with Brake)	Jm	- -	kgm^2 $kgfcms^2$
Torque Constant (*)	Kt	1.55 15.8	Nm/A(rms) kgfcm/A(rms)
Winding Resistance (between terminals) (*)	Ra	0.024	Ω
Thermal time constant	t_t	50	min
Static friction	Tf	4.0 41	Nm kgfcm
Weight	w	180	kg
Weight(with Brake)	w	-	kg
Max. Current of Servo Amp.	Imax	360 x 2	A (peak)

(*) The values are the standard values at 20℃ and the tolerance is ±10%.

The speed-torque characteristics very depending on the type of software,parametersetting,and input voltage of the digital servo software.(The above figures show average values.)

© MyFANUC 2D51CC9CD8564E3B8C4DE377C2D11C41

Model αiS 500/2000-B Specification: A06B-θ2295-B0□0

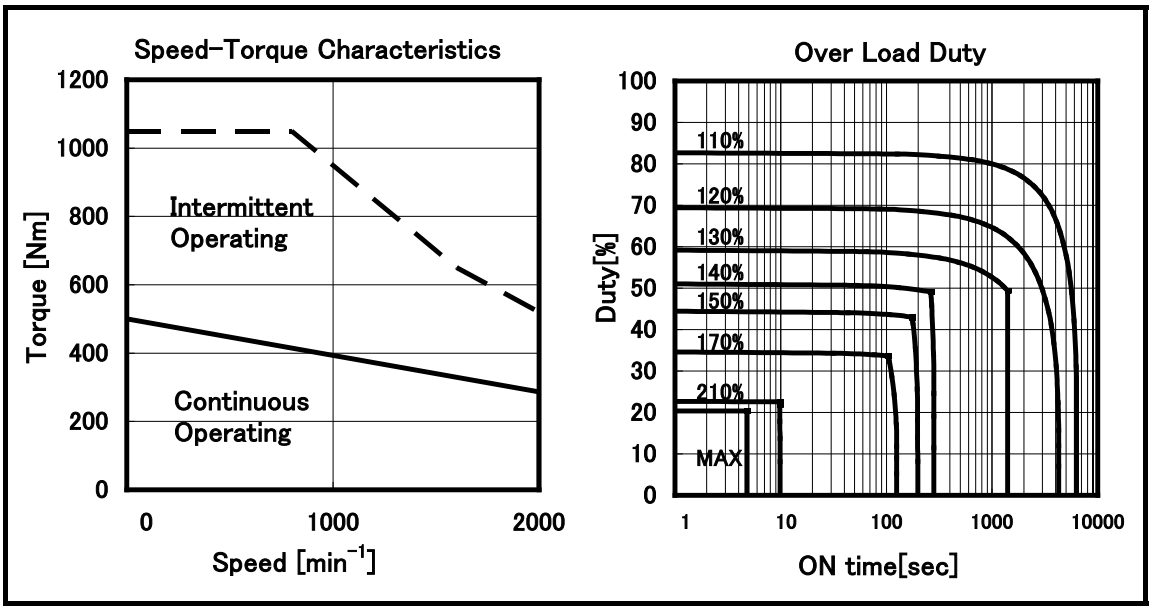

Data sheet

Parameter	Symbol	Value	Unit
Continuous Torque (at low speed) (*)	Tc	500 5100	Nm kgfcm
Continuous Current (at low speed) (*)	Ic	230	A (rms)
Rated Output (*)	Pr	60 80	kW HP
Rated Speed	Nr	2000	min^{-1}
Maximum Speed	Nmax	2000	min^{-1}
Maximum Torque (*)	Tmax	1050 10700	Nm kgfcm
Moment of Inertia of Rotor	Jm	0.127 1.30	kgm^2 $kgfcms^2$
Moment of Inertia of Rotor(with Brake)	Jm	- -	kgm^2 $kgfcms^2$
Torque Constant (*)	Kt	2.16 22.0	Nm/A(rms) kgfcm/A(rms)
Winding Resistance (between terminals) (*)	Ra	0.024	Ω
Thermal time constant	t_t	60	min
Static friction	Tf	4.0 41	Nm kgfcm
Weight	w	240	kg
Weight(with Brake)	w	-	kg
Max. Current of Servo Amp.	Imax	360 x 2	A (peak)

(*) The values are the standard values at 20℃ and the tolerance is ±10%.

The speed-torque characteristics very depending on the type of software,parametersetting,and input voltage of the digital servo software.(The above figures show average values.)

© MyFANUC 2D51CC9CD8564E3B8C4DE377C2D11C41

1.3.2.3 αiS-B/αiS SERIES (400V)

Model αiS 2/5000 HV-B Specification: A06B-2213-B□0□

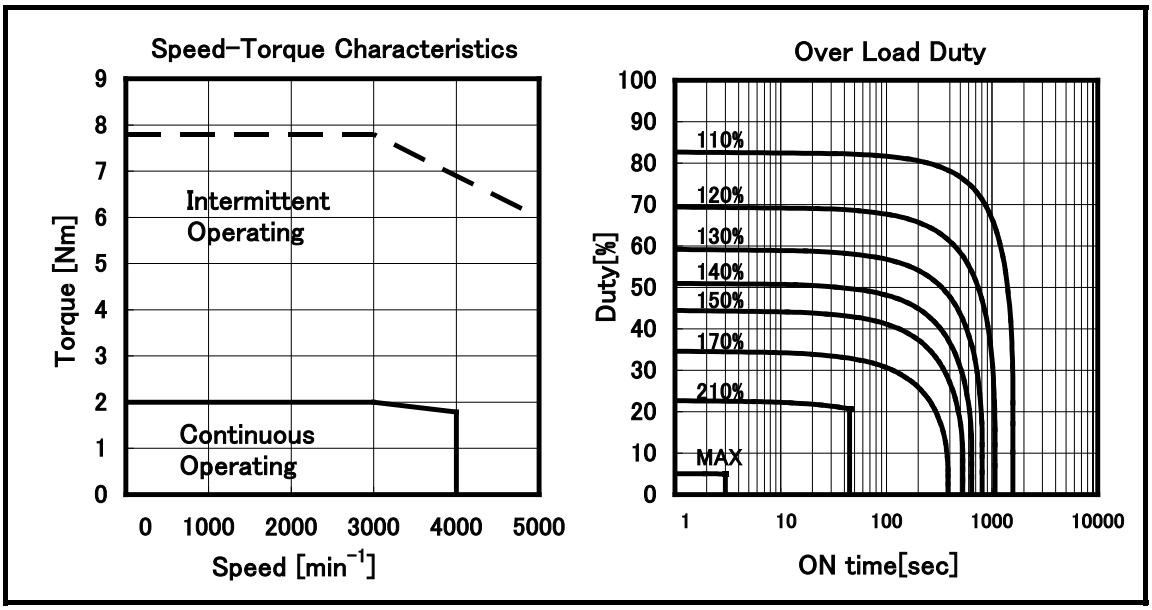

Data sheet

Parameter	Symbol	Value	Unit
Continuous Torque (at low speed) (*)	Tc	2.0 20	Nm kgfcm
Continuous Current (at low speed) (*)	Ic	1.6	A (rms)
Rated Output (*)	Pr	0.75 1.0	kW HP
Rated Speed	Nr	4000	min^{-1}
Maximum Speed	Nmax	5000	min^{-1}
Maximum Torque (*)	Tmax	7.8 80	Nm kgfcm
Moment of Inertia of Rotor	Jm	0.000291 0.00297	kgm^2 $kgfcms^2$
Moment of Inertia of Rotor(with Brake)	Jm	0.000311 0.00317	kgm^2 $kgfcms^2$
Torque Constant (*)	Kt	1.22 12.4	Nm/A(rms) kgfcm/A(rms)
Winding Resistance (between terminals) (*)	Ra	10.8	Ω
Thermal time constant	t_t	15	min
Static friction	Tf	0.1 1	Nm kgfcm
Weight	w	2.8	kg
Weight(with Brake)	w	3.8	kg
Max. Current of Servo Amp.	Imax	10	A (peak)

(*) The values are the standard values at 20℃ and the tolerance is ±10%.
The speed-torque characteristics very depending on the type of software,parametersetting,and input voltage of the digital servo software.(The above figures show average values.)

© MyFANUC 2D51CC9CD8564E3B8C4DE377C2D11C41

Model αiS 2/6000 HV-B Specification: A06B-2219-B□0□

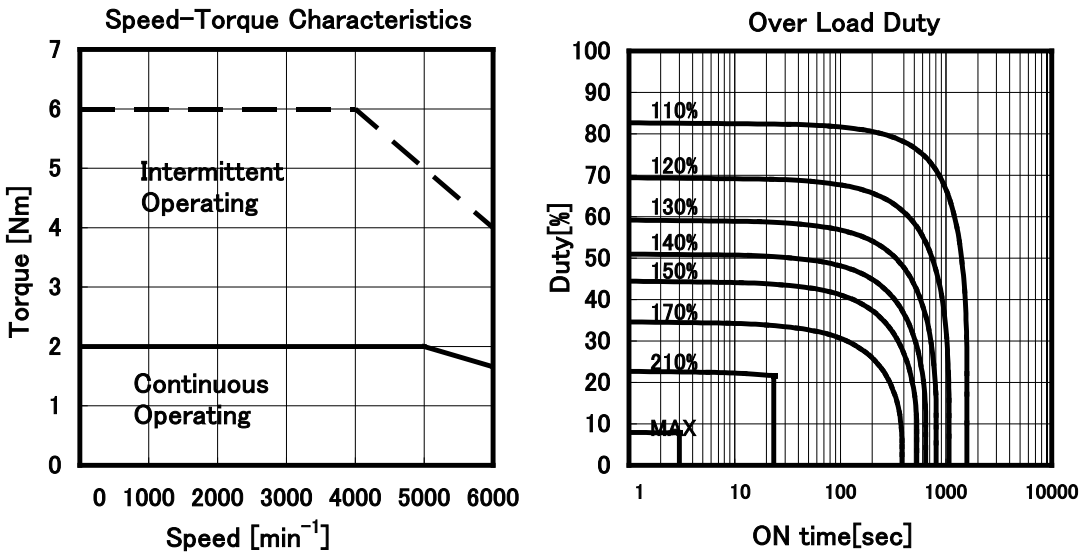

Data sheet

Parameter	Symbol	Value	Unit
Continuous Torque (at low speed) (*)	Tc	2.0 20	Nm kgfcm
Continuous Current (at low speed) (*)	Ic	2.0	A (rms)
Rated Output (*)	Pr	1.0 1.3	kW HP
Rated Speed	Nr	6000	min^{-1}
Maximum Speed	Nmax	6000	min^{-1}
Maximum Torque (*)	Tmax	6.0 61	Nm kgfcm
Moment of Inertia of Rotor	Jm	0.000291 0.00297	kgm^2 $kgfcms^2$
Moment of Inertia of Rotor(with Brake)	Jm	0.000311 0.00317	kgm^2 $kgfcms^2$
Torque Constant (*)	Kt	0.99 10.1	Nm/A(rms) kgfcm/A(rms)
Winding Resistance (between terminals) (*)	Ra	11.2	Ω
Thermal time constant	t_t	15	min
Static friction	Tf	0.1 1	Nm kgfcm
Weight	w	3.0	kg
Weight(with Brake)	w	4.0	kg
Max. Current of Servo Amp.	Imax	10	A (peak)

(*) The values are the standard values at 20℃ and the tolerance is ±10%.

The speed-torque characteristics very depending on the type of software,parametersetting,and input voltage of the digital servo software.(The above figures show average values.)

© MyFANUC 2D51CC9CD8564E3B8C4DE377C2D11C41

Model αiS 4/5000 HV-B Specification: A06B-2216-B□0□

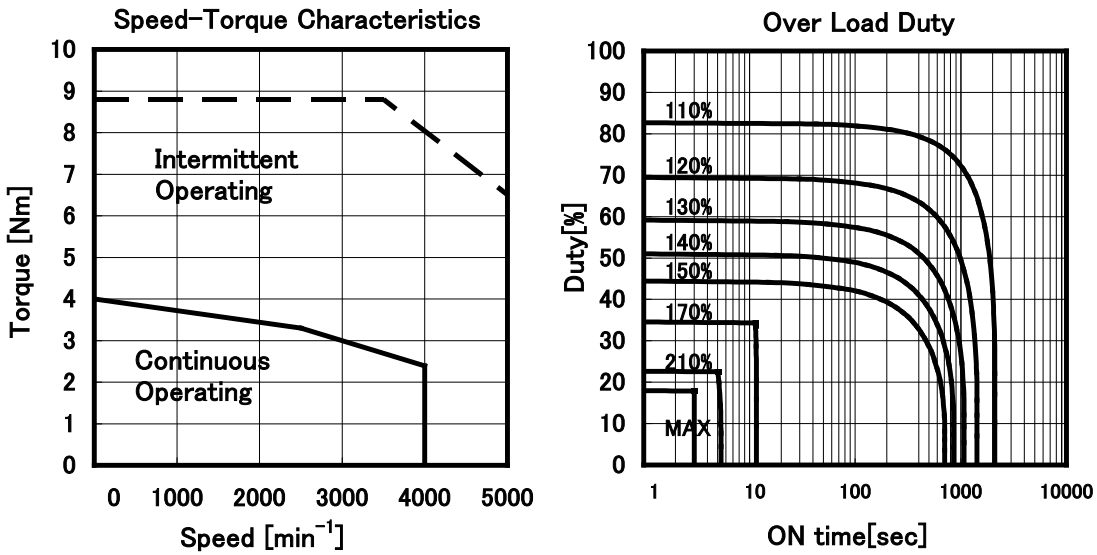

Data sheet

Parameter	Symbol	Value	Unit
Continuous Torque (at low speed) (*)	Tc	4.0 41	Nm kgfcm
Continuous Current (at low speed) (*)	Ic	3.0	A (rms)
Rated Output (*)	Pr	1.0 1.3	kW HP
Rated Speed	Nr	4000	min^{-1}
Maximum Speed	Nmax	5000	min^{-1}
Maximum Torque (*)	Tmax	8.8 90	Nm kgfcm
Moment of Inertia of Rotor	Jm	0.000515 0.00526	kgm^2 $kgfcms^2$
Moment of Inertia of Rotor(with Brake)	Jm	0.000535 0.00546	kgm^2 $kgfcms^2$
Torque Constant (*)	Kt	1.32 13.4	Nm/A(rms) kgfcm/A(rms)
Winding Resistance (between terminals) (*)	Ra	5.6	Ω
Thermal time constant	t_t	20	min
Static friction	Tf	0.2 2	Nm kgfcm
Weight	w	4.3	kg
Weight(with Brake)	w	5.3	kg
Max. Current of Servo Amp.	Imax	10	A (peak)

(*) The values are the standard values at 20℃ and the tolerance is ±10%.

The speed-torque characteristics very depending on the type of software,parametersetting,and input voltage of the digital servo software.(The above figures show average values.)

© MyFANUC 2D51CC9CD8564E3B8C4DE377C2D11C41

Model αiS 4/6000 HV-B Specification: A06B-2214-B□0□

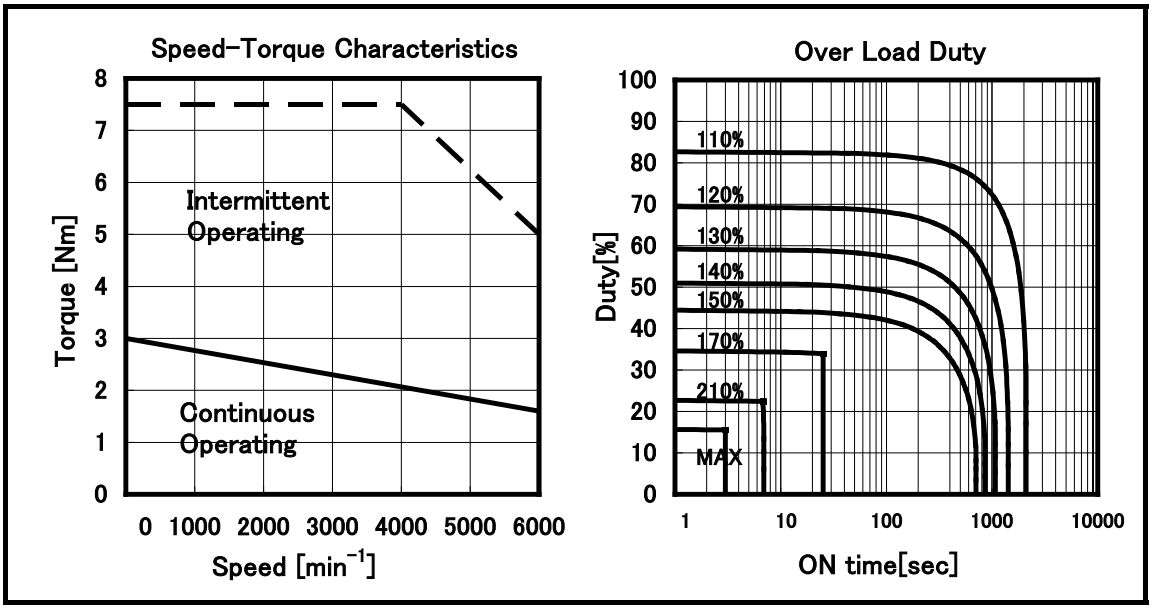

Data sheet

Parameter	Symbol	Value	Unit
Continuous Torque (at low speed) (*)	Tc	3.0 31	Nm kgfcm
Continuous Current (at low speed) (*)	Ic	2.8	A (rms)
Rated Output (*)	Pr	1.0 1.3	kW HP
Rated Speed	Nr	6000	min^{-1}
Maximum Speed	Nmax	6000	min^{-1}
Maximum Torque (*)	Tmax	7.5 77	Nm kgfcm
Moment of Inertia of Rotor	Jm	0.000515 0.00526	kgm^2 $kgfcms^2$
Moment of Inertia of Rotor(with Brake)	Jm	0.000535 0.00546	kgm^2 $kgfcms^2$
Torque Constant (*)	Kt	1.08 11.0	Nm/A(rms) kgfcm/A(rms)
Winding Resistance (between terminals) (*)	Ra	5.6	Ω
Thermal time constant	t_t	20	min
Static friction	Tf	0.2 2	Nm kgfcm
Weight	w	4.5	kg
Weight(with Brake)	w	5.5	kg
Max. Current of Servo Amp.	Imax	10	A (peak)

(*) The values are the standard values at 20℃ and the tolerance is ±10%.

The speed-torque characteristics very depending on the type of software,parametersetting,and input voltage of the digital servo software.(The above figures show average values.)

© MyFANUC 2D51CC9CD8564E3B8C4DE377C2D11C41

Model αiS 8/4000 HV-B Specification: A06B-2236-B□0□

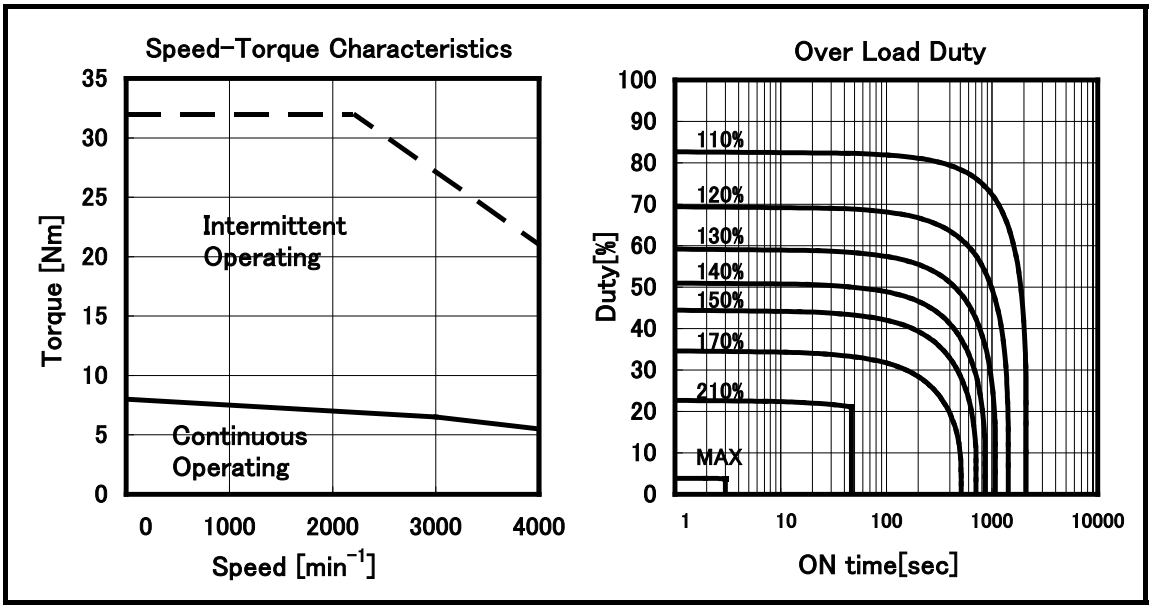

Data sheet

Parameter	Symbol	Value	Unit
Continuous Torque (at low speed) (*)	Tc	8.0 82	Nm kgfcm
Continuous Current (at low speed) (*)	Ic	5.6	A (rms)
Rated Output (*)	Pr	2.3 3.1	kW HP
Rated Speed	Nr	4000	min^{-1}
Maximum Speed	Nmax	4000	min^{-1}
Maximum Torque (*)	Tmax	32 327	Nm kgfcm
Moment of Inertia of Rotor	Jm	0.00117 0.0119	kgm^2 $kgfcms^2$
Moment of Inertia of Rotor(with Brake)	Jm	0.00124 0.0127	kgm^2 $kgfcms^2$
Torque Constant (*)	Kt	1.44 14.7	Nm/A(rms) kgfcm/A(rms)
Winding Resistance (between terminals) (*)	Ra	2.6	Ω
Thermal time constant	t_t	20	min
Static friction	Tf	0.3 3	Nm kgfcm
Weight	w	7.4	kg
Weight(with Brake)	w	9.6	kg
Max. Current of Servo Amp.	Imax	40	A (peak)

(*) The values are the standard values at 20℃ and the tolerance is ±10%.

The speed-torque characteristics very depending on the type of software,parametersetting,and input voltage of the digital servo software.(The above figures show average values.)

© MyFANUC 2D51CC9CD8564E3B8C4DE377C2D11C41

Model αiS 8/6000 HV-B Specification: A06B-2233-B□0□

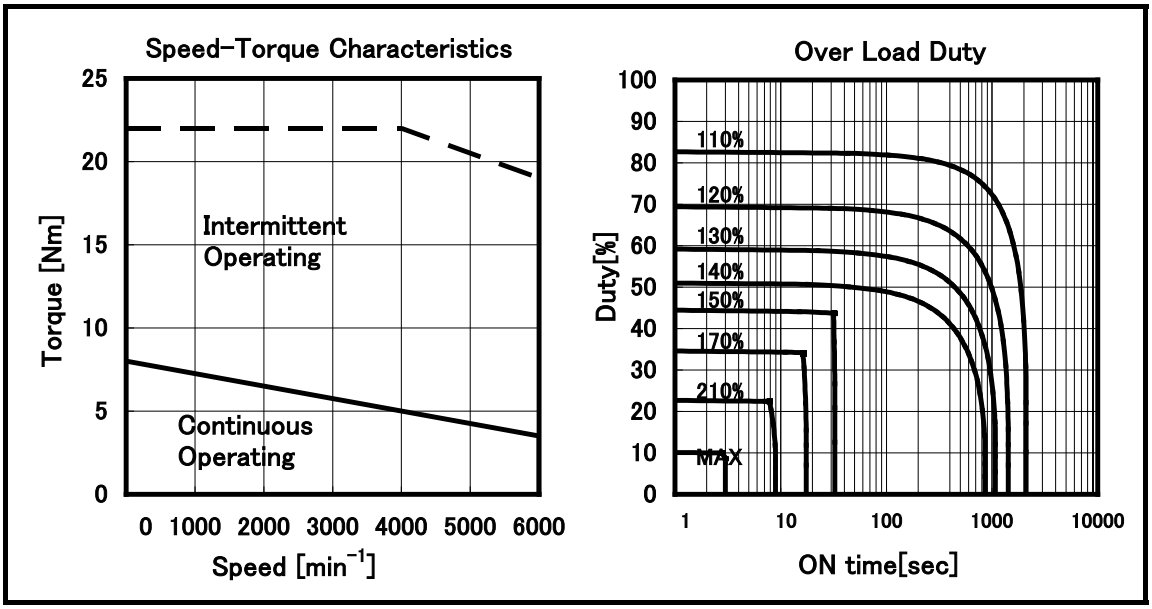

Data sheet

Parameter	Symbol	Value	Unit
Continuous Torque (at low speed) (*)	Tc	8.0 82	Nm kgfcm
Continuous Current (at low speed) (*)	Ic	9.0	A (rms)
Rated Output (*)	Pr	2.2 3.0	kW HP
Rated Speed	Nr	6000	min^{-1}
Maximum Speed	Nmax	6000	min^{-1}
Maximum Torque (*)	Tmax	22 224	Nm kgfcm
Moment of Inertia of Rotor	Jm	0.00117 0.0119	kgm^2 $kgfcms^2$
Moment of Inertia of Rotor(with Brake)	Jm	0.00124 0.0127	kgm^2 $kgfcms^2$
Torque Constant (*)	Kt	0.89 9.1	Nm/A(rms) kgfcm/A(rms)
Winding Resistance (between terminals) (*)	Ra	1.0	Ω
Thermal time constant	t_t	20	min
Static friction	Tf	0.3 3	Nm kgfcm
Weight	w	8.0	kg
Weight(with Brake)	w	10.0	kg
Max. Current of Servo Amp.	Imax	40	A (peak)

(*) The values are the standard values at 20℃ and the tolerance is ±10%.

The speed-torque characteristics very depending on the type of software,parametersetting,and input voltage of the digital servo software.(The above figures show average values.)

© MyFANUC 2D51CC9CD8564E3B8C4DE377C2D11C41

Model αiS 12/4000 HV-B Specification: A06B-2239-B□0□

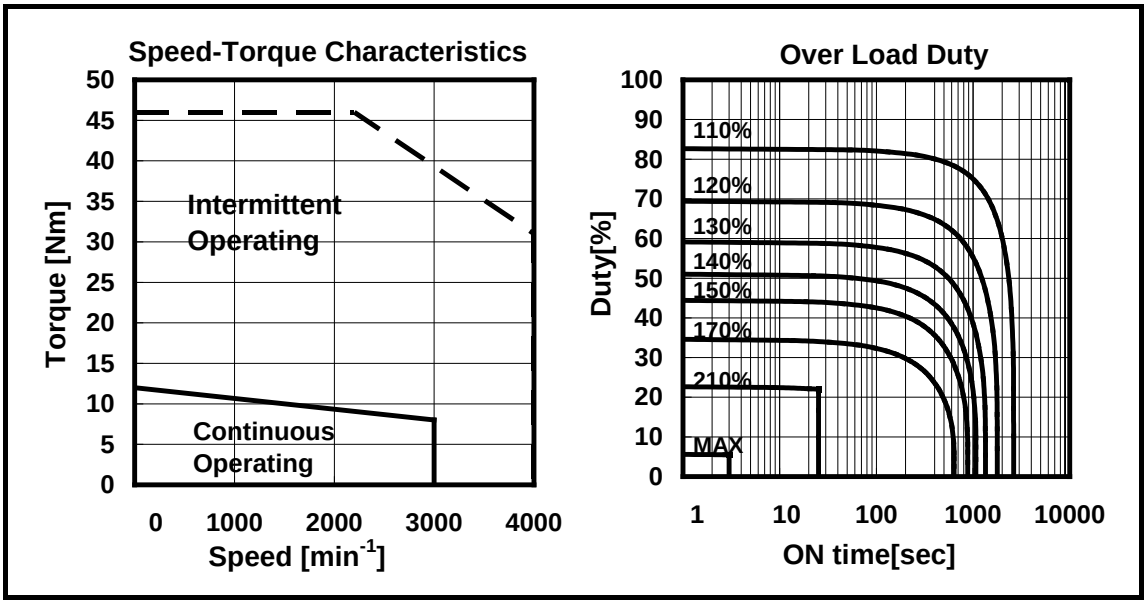

Data sheet

Parameter	Symbol	Value	Unit
Continuous Torque (at low speed) (*)	Tc	12 122	Nm kgfcm
Continuous Current (at low speed) (*)	Ic	6.7	A (rms)
Rated Output (*)	Pr	2.5 3.4	kW HP
Rated Speed	Nr	3000	min^{-1}
Maximum Speed	Nmax	4000	min^{-1}
Maximum Torque (*)	Tmax	46 469	Nm kgfcm
Moment of Inertia of Rotor	Jm	0.00228 0.0233	kgm^2 $kgfcms^2$
Moment of Inertia of Rotor(with Brake)	Jm	0.00235 0.0240	kgm^2 $kgfcms^2$
Torque Constant (*)	Kt	1.80 18.4	Nm/A(rms) kgfcm/A(rms)
Winding Resistance (between terminals) (*)	Ra	1.7	Ω
Thermal time constant	t_t	25	min
Static friction	Tf	0.4 4	Nm kgfcm
Weight	w	11.9	kg
Weight(with Brake)	w	14.1	kg
Max. Current of Servo Amp.	Imax	40	A (peak)

(*) The values are the standard values at 20℃ and the tolerance is ±10%.

The speed-torque characteristics very depending on the type of software,parametersetting,and input voltage of the digital servo software.(The above figures show average values.)

© MyFANUC 2D51CC9CD8564E3B8C4DE377C2D11C41

Model αiS 12/6000 HV-B Specification: A06B-2237-B□0□

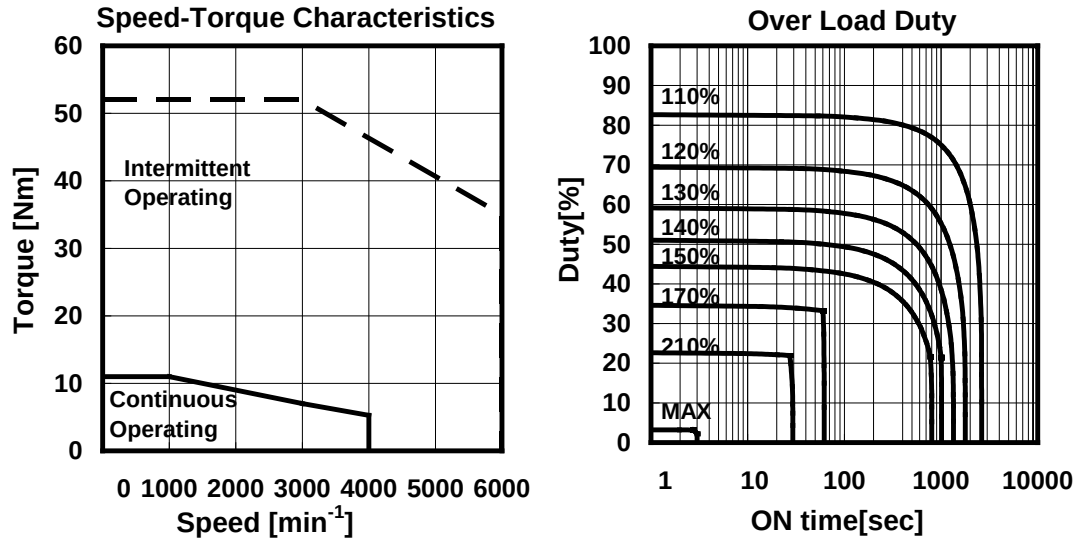

Data sheet

Parameter	Symbol	Value	Unit
Continuous Torque (at low speed) (*)	Tc	11 112	Nm kgfcm
Continuous Current (at low speed) (*)	Ic	10.2	A (rms)
Rated Output (*)	Pr	2.2 3.0	kW HP
Rated Speed	Nr	4000	min^{-1}
Maximum Speed	Nmax	6000	min^{-1}
Maximum Torque (*)	Tmax	52 531	Nm kgfcm
Moment of Inertia of Rotor	Jm	0.00228 0.0233	kgm^2 $kgfcms^2$
Moment of Inertia of Rotor(with Brake)	Jm	0.00235 0.0240	kgm^2 $kgfcms^2$
Torque Constant (*)	Kt	1.08 11.0	Nm/A(rms) kgfcm/A(rms)
Winding Resistance (between terminals) (*)	Ra	0.52	Ω
Thermal time constant	t_t	25	min
Static friction	Tf	0.4 4	Nm kgfcm
Weight	w	11.9	kg
Weight(with Brake)	w	14.1	kg
Max. Current of Servo Amp.	Imax	80	A (peak)

(*) The values are the standard values at 20℃ and the tolerance is ±10%.

The speed-torque characteristics very depending on the type of software,parametersetting,and input voltage of the digital servo software.(The above figures show average values.)

© MyFANUC 2D51CC9CD8564E3B8C4DE377C2D11C41

Model αiS 22/4000 HV-B Specification: A06B-2266-B□0□

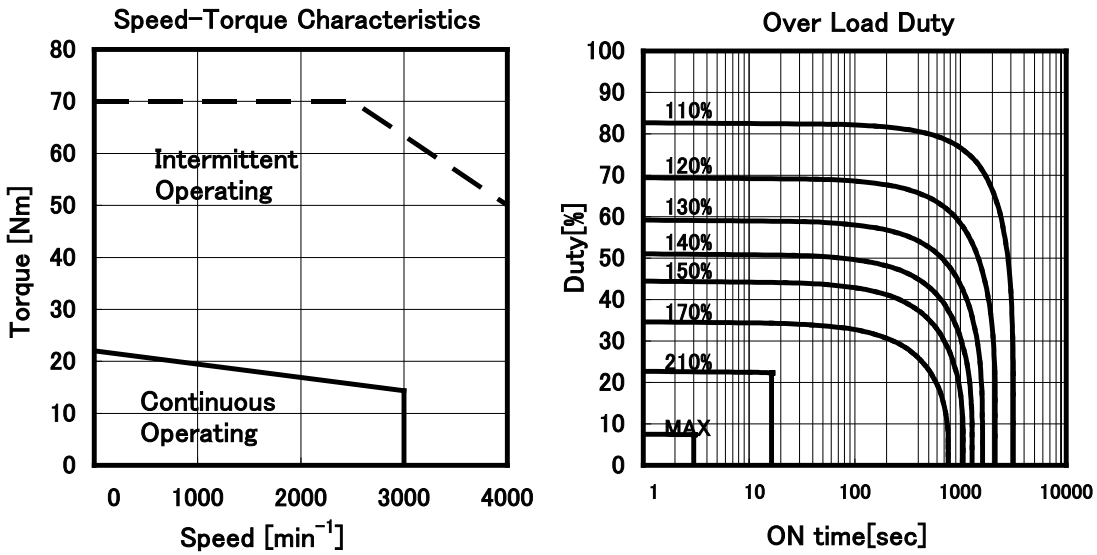

Data sheet

Parameter	Symbol	Value	Unit
Continuous Torque (at low speed) (*)	Tc	22 224	Nm kgfcm
Continuous Current (at low speed) (*)	Ic	15.5	A (rms)
Rated Output (*)	Pr	4.5 6.0	kW HP
Rated Speed	Nr	3000	min^{-1}
Maximum Speed	Nmax	4000	min^{-1}
Maximum Torque (*)	Tmax	70 714	Nm kgfcm
Moment of Inertia of Rotor	Jm	0.00527 0.0538	kgm^2 $kgfcms^2$
Moment of Inertia of Rotor(with 35Nm Brake)	Jm	0.00587 0.0599	kgm^2 $kgfcms^2$
Torque Constant (*)	Kt	1.42 14.5	Nm/A(rms) kgfcm/A(rms)
Winding Resistance (between terminals) (*)	Ra	0.50	Ω
Thermal time constant	t_t	30	min
Static friction	Tf	0.8 8	Nm kgfcm
Weight	w	17	kg
Weight(with 35Nm Brake)	w	23	kg
Max. Current of Servo Amp.	Imax	80	A (peak)

(*) The values are the standard values at 20℃ and the tolerance is ±10%.

The speed-torque characteristics very depending on the type of software,parametersetting,and input voltage of the digital servo software.(The above figures show average values.)

© MyFANUC 2D51CC9CD8564E3B8C4DE377C2D11C41

Model αiS 22/6000 HV-B Specification: A06B-2263-B□0□

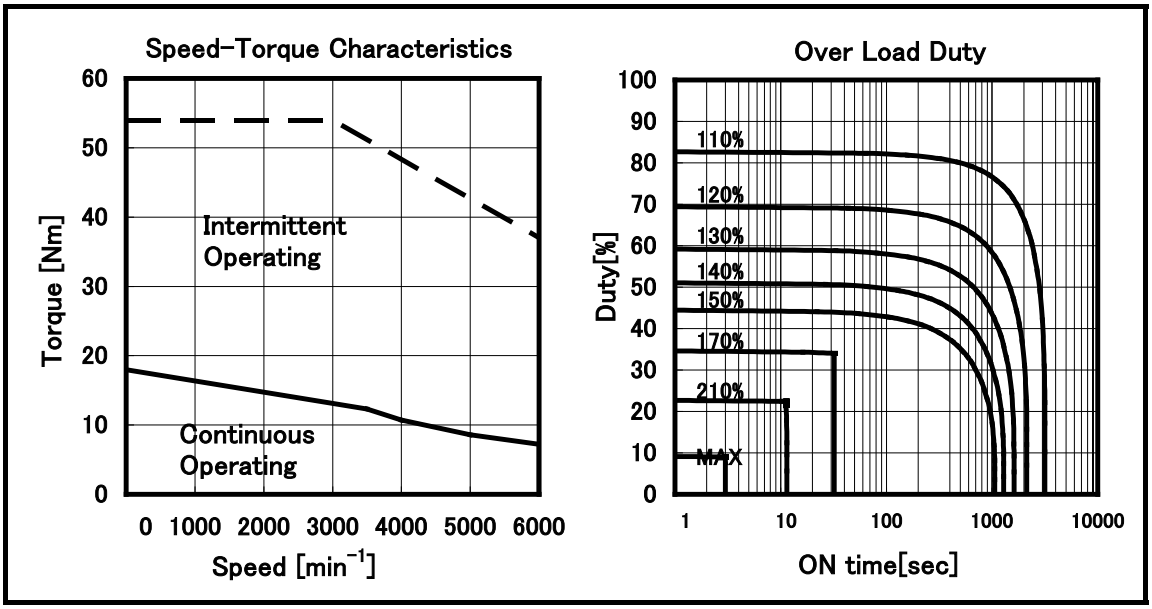

Data sheet

Parameter	Symbol	Value	Unit
Continuous Torque (at low speed) (*)	Tc	18 184	Nm kgfcm
Continuous Current (at low speed) (*)	Ic	17.1	A (rms)
Rated Output (*)	Pr	4.5 6.0	kW HP
Rated Speed	Nr	6000	min^{-1}
Maximum Speed	Nmax	6000	min^{-1}
Maximum Torque (*)	Tmax	54 551	Nm kgfcm
Moment of Inertia of Rotor	Jm	0.00527 0.0538	kgm^2 $kgfcms^2$
Moment of Inertia of Rotor(with 35Nm Brake)	Jm	0.00587 0.0599	kgm^2 $kgfcms^2$
Torque Constant (*)	Kt	1.06 10.8	Nm/A(rms) kgfcm/A(rms)
Winding Resistance (between terminals) (*)	Ra	0.32	Ω
Thermal time constant	t_t	30	min
Static friction	Tf	0.8 8	Nm kgfcm
Weight	w	17	kg
Weight(with 35Nm Brake)	w	23	kg
Max. Current of Servo Amp.	Imax	80	A (peak)

(*) The values are the standard values at 20℃ and the tolerance is ±10%.

The speed-torque characteristics very depending on the type of software,parametersetting,and input voltage of the digital servo software.(The above figures show average values.)

© MyFANUC 2D51CC9CD8564E3B8C4DE377C2D11C41

Model αiS 30/4000HV-B Specification: A06B-2269-B□0□

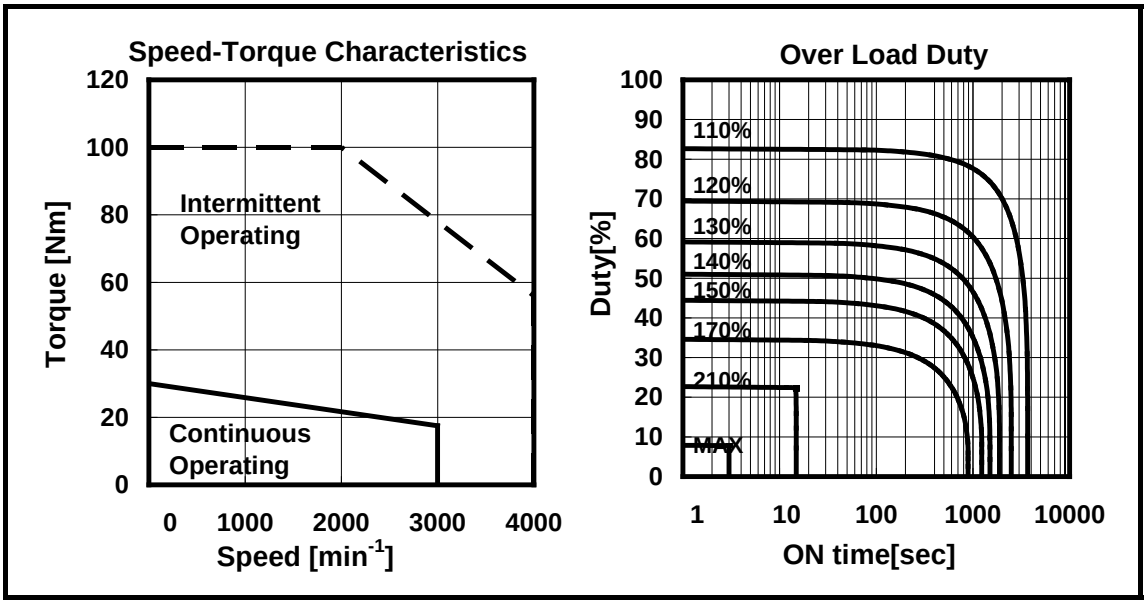

Data sheet

Parameter	Symbol	Value	Unit
Continuous Torque (at low speed) (*)	Tc	30 306	Nm kgfcm
Continuous Current (at low speed) (*)	Ic	15.9	A (rms)
Rated Output (*)	Pr	5.5 7.4	kW HP
Rated Speed	Nr	3000	min^{-1}
Maximum Speed	Nmax	4000	min^{-1}
Maximum Torque (*)	Tmax	100 1020	Nm kgfcm
Moment of Inertia of Rotor	Jm	0.00759 0.0774	kgm^2 $kgfcms^2$
Moment of Inertia of Rotor(with 35Nm Brake)	Jm	0.00819 0.0836	kgm^2 $kgfcms^2$
Torque Constant (*)	Kt	1.90 19.4	Nm/A(rms) kgfcm/A(rms)
Winding Resistance (between terminals) (*)	Ra	0.50	Ω
Thermal time constant	t_t	35	min
Static friction	Tf	0.8 8	Nm kgfcm
Weight	w	23	kg
Weight(with 35Nm Brake)	w	29	kg
Max. Current of Servo Amp.	Imax	80	A (peak)

(*) The values are the standard values at 20℃ and the tolerance is ±10%.

The speed-torque characteristics very depending on the type of software,parametersetting,and input voltage of the digital servo software.(The above figures show average values.)

© MyFANUC 2D51CC9CD8564E3B8C4DE377C2D11C41

Model αiS 40/4000HV-B Specification: A06B-2273-B□0□, -B□2□

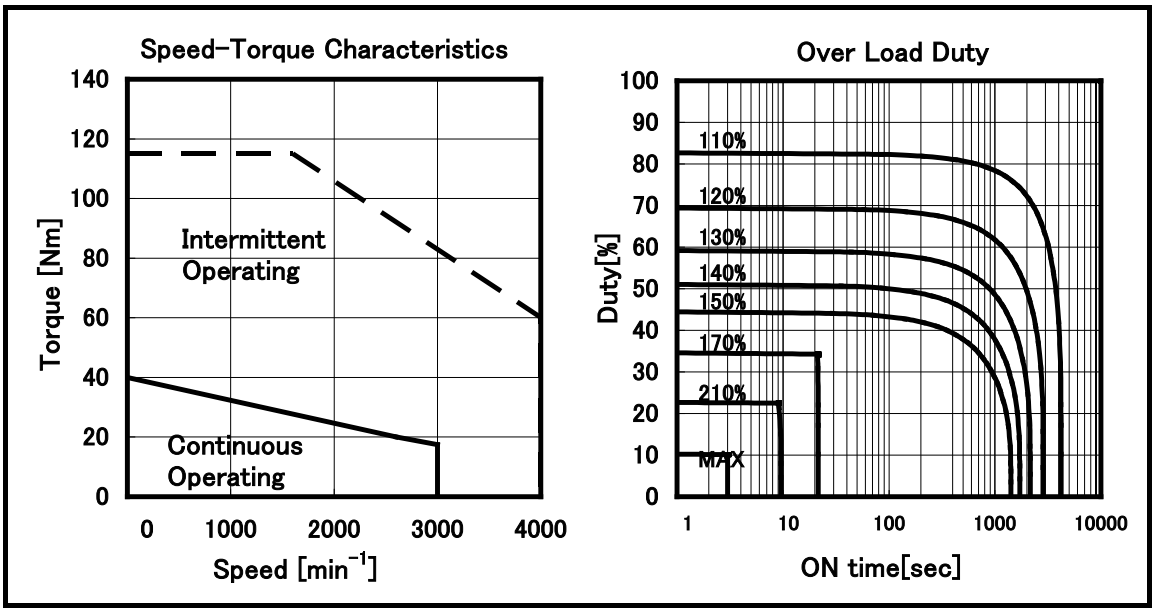

Data sheet

Parameter	Symbol	Value	Unit
Continuous Torque (at low speed) (*)	Tc	40 408	Nm kgfcm
Continuous Current (at low speed) (*)	Ic	18.1	A (rms)
Rated Output (*)	Pr	5.5 7.4	kW HP
Rated Speed	Nr	3000	min^{-1}
Maximum Speed	Nmax	4000	min^{-1}
Maximum Torque (*)	Tmax	115 1170	Nm kgfcm
Moment of Inertia of Rotor	Jm	0.00990 0.101	kgm^2 $kgfcms^2$
Moment of Inertia of Rotor(with 35Nm Brake)	Jm	0.0105 0.107	kgm^2 $kgfcms^2$
Moment of Inertia of Rotor(with 70Nm Brake)	Jm	0.0108 0.110	kgm^2 $kgfcms^2$
Torque Constant (*)	Kt	2.21 22.6	Nm/A(rms) kgfcm/A(rms)
Winding Resistance (between terminals) (*)	Ra	0.46	Ω
Thermal time constant	t_t	40	min
Static friction	Tf	1.2 12	Nm kgfcm
Weight	w	28	kg
Weight(with 35Nm Brake)	w	34	kg
		38	
Max. Current of Servo Amp.	Imax	80	A (peak)

(*) The values are the standard values at 20℃ and the tolerance is ±10%.

The speed-torque characteristics very depending on the type of software,parametersetting,and input voltage of the digital servo software.(The above figures show average values.)

© MyFANUC 2D51CC9CD8564E3B8C4DE377C2D11C41

Model αiS 50/2000HV-B Specification: A06B-2043-B□0□, -B□2□

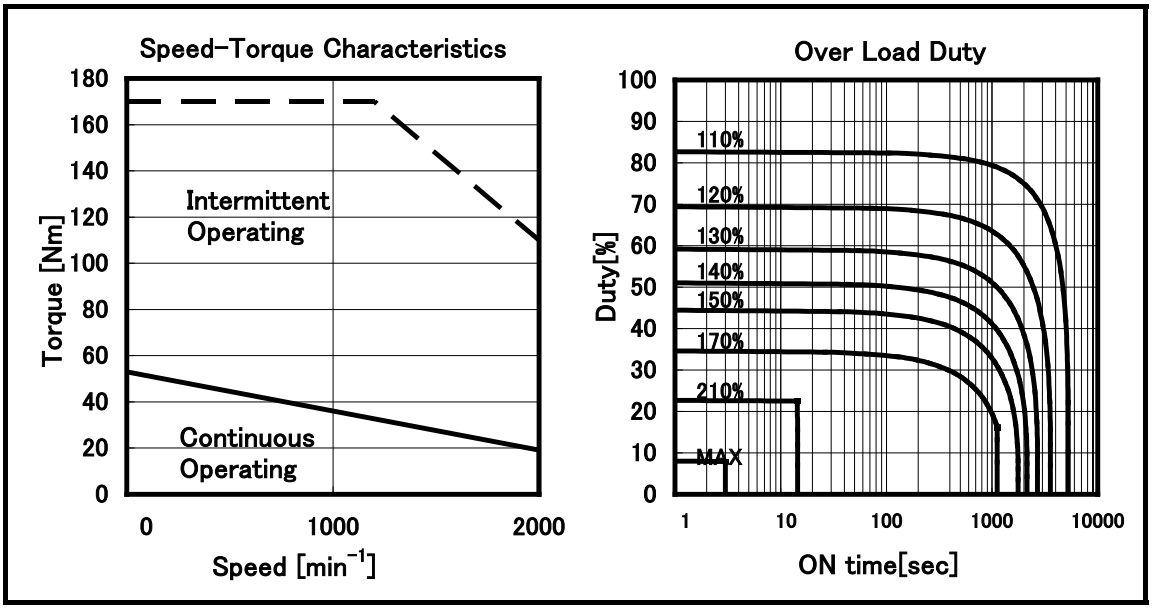

Data sheet

Parameter	Symbol	Value	Unit
Continuous Torque (at low speed) (*)	Tc	53 541	Nm kgfcm
Continuous Current (at low speed) (*)	Ic	16.0	A (rms)
Rated Output (*)	Pr	4.0 5.4	kW HP
Rated Speed	Nr	2000	min^{-1}
Maximum Speed	Nmax	2000	min^{-1}
Maximum Torque (*)	Tmax	170 1730	Nm kgfcm
Moment of Inertia of Rotor	Jm	0.0145 0.148	kgm^2 $kgfcms^2$
Moment of Inertia of Rotor(with 70Nm Brake)	Jm	0.0154 0.157	kgm^2 $kgfcms^2$
Torque Constant (*)	Kt	3.3 34	Nm/A(rms) kgfcm/A(rms)
Winding Resistance (between terminals) (*)	Ra	0.62	Ω
Thermal time constant	t_t	50	min
Static friction	Tf	1.8 18	Nm kgfcm
Weight	w	39	kg
Weight(with 70Nm Brake)	w	49	kg
Max. Current of Servo Amp.	Imax	80	A (peak)

(*) The values are the standard values at 20℃ and the tolerance is ±10%.

The speed-torque characteristics very depending on the type of software,parametersetting,and input voltage of the digital servo software.(The above figures show average values.)

© MyFANUC 2D51CC9CD8564E3B8C4DE377C2D11C41

Model αiS 50/3000HV-B Specification:A06B−2276−B□0□, −B□2□

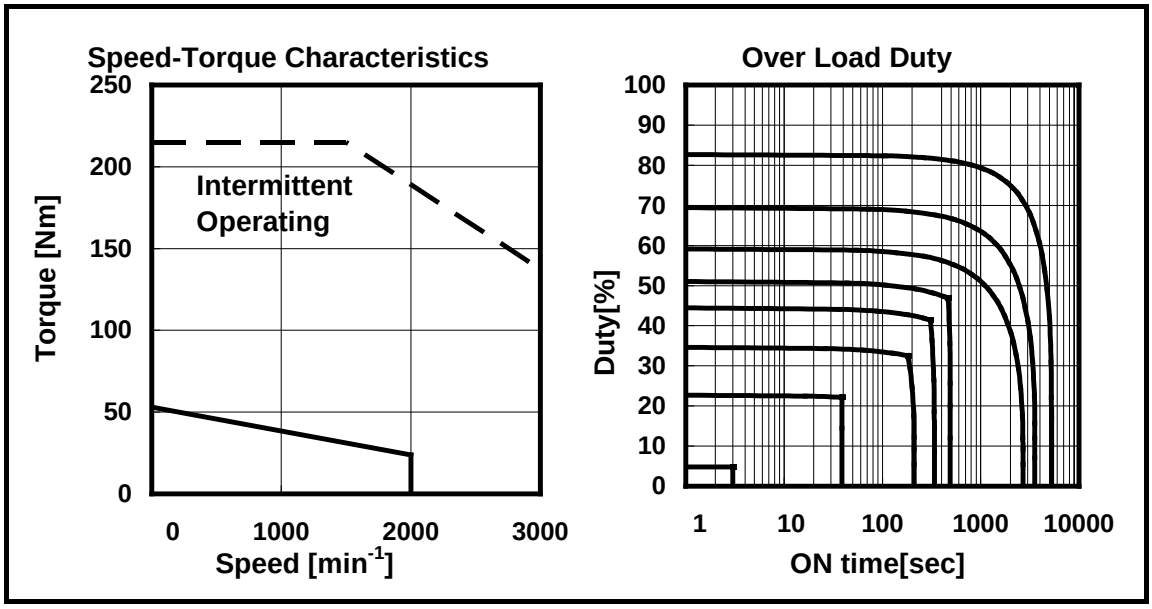

Data sheet

Parameter	Symbol	Value	Unit
Continuous Torque (at low speed) (*)	Tc	53 541	Nm kgfcm
Continuous Current (at low speed) (*)	Ic	28	A (rms)
Rated Output (*)	Pr	5.0 6.8	kW HP
Rated Speed	Nr	2000	min^{-1}
Maximum Speed	Nmax	3000	min^{-1}
Maximum Torque (*)	Tmax	215 2190	Nm kgfcm
Moment of Inertia of Rotor	Jm	0.0145 0.148	kgm^2 $kgfcms^2$
Moment of Inertia of Rotor(with 70Nm Brake)	Jm	0.0154 0.157	kgm^2 $kgfcms^2$
Torque Constant (*)	Kt	1.90 19.4	Nm/A(rms) kgfcm/A(rms)
Winding Resistance (between terminals) (*)	Ra	0.20	Ω
Thermal time constant	t_t	50	min
Static friction	Tf	1.8 18	Nm kgfcm
Weight	w	39	kg
Weight(with 70Nm Brake)	w	49	kg
Max. Current of Servo Amp.	Imax	180	A (peak)

(*) The values are the standard values at 20℃ and the tolerance is ±10%.

The speed-torque characteristics very depending on the type of software,parametersetting,and input voltage of the digital servo software.(The above figures show average values.)

© MyFANUC 2D51CC9CD8564E3B8C4DE377C2D11C41

Model αiS 60/2000HV-B Specification: A06B-2045-B□0□, -B□2□

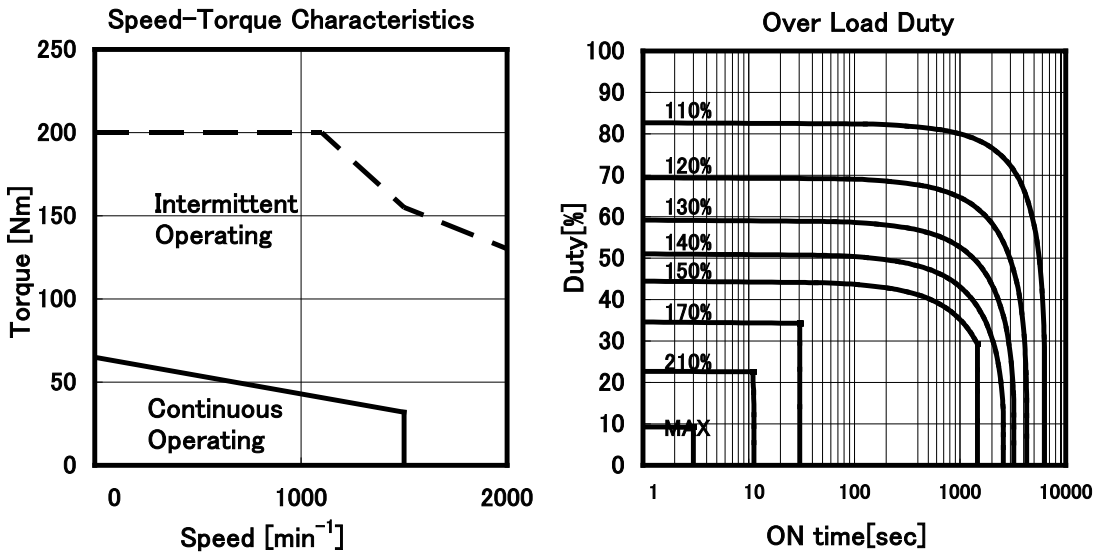

Data sheet

Parameter	Symbol	Value	Unit
Continuous Torque (at low speed) (*)	Tc	65 663	Nm kgfcm
Continuous Current (at low speed) (*)	Ic	17.2	A (rms)
Rated Output (*)	Pr	5.0 6.7	kW HP
Rated Speed	Nr	1500	min^{-1}
Maximum Speed	Nmax	2000	min^{-1}
Maximum Torque (*)	Tmax	200 2040	Nm kgfcm
Moment of Inertia of Rotor	Jm	0.0195 0.199	kgm^2 $kgfcms^2$
Moment of Inertia of Rotor(with 70Nm Brake)	Jm	0.0204 0.208	kgm^2 $kgfcms^2$
Torque Constant (*)	Kt	3.8 39	Nm/A(rms) kgfcm/A(rms)
Winding Resistance (between terminals) (*)	Ra	0.60	Ω
Thermal time constant	t_t	60	min
Static friction	Tf	1.8 18	Nm kgfcm
Weight	w	50	kg
Weight(with 70Nm Brake)	w	60	kg
Max. Current of Servo Amp.	Imax	80	A (peak)

(*) The values are the standard values at 20℃ and the tolerance is ±10%.

The speed-torque characteristics very depending on the type of software,parametersetting,and input voltage of the digital servo software.(The above figures show average values.)

© MyFANUC 2D51CC9CD8564E3B8C4DE377C2D11C41

Model αiS 60/3000HV-B Specification: A06B-2279-B□0□, -B□2□

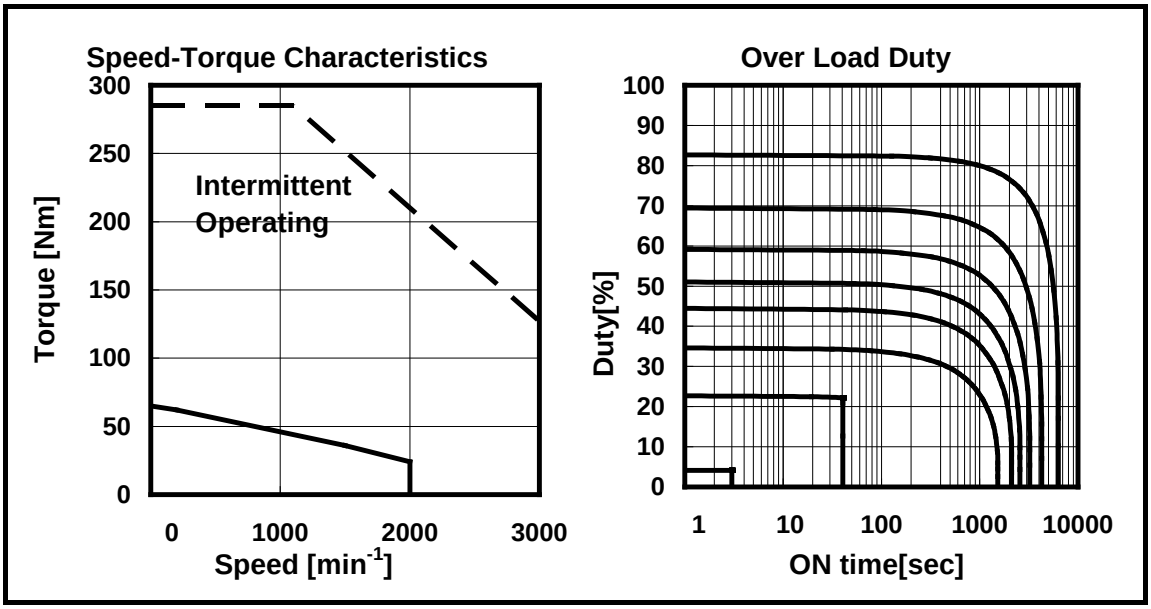

Data sheet

Parameter	Symbol	Value	Unit
Continuous Torque (at low speed) (*)	Tc	65 663	Nm kgfcm
Continuous Current (at low speed) (*)	Ic	26	A (rms)
Rated Output (*)	Pr	5.0 6.7	kW HP
Rated Speed	Nr	2000	min^{-1}
Maximum Speed	Nmax	3000	min^{-1}
Maximum Torque (*)	Tmax	285 2910	Nm kgfcm
Moment of Inertia of Rotor	Jm	0.0195 0.199	kgm^2 $kgfcms^2$
Moment of Inertia of Rotor(with 70Nm Brake)	Jm	0.0204 0.208	kgm^2 $kgfcms^2$
Torque Constant (*)	Kt	2.52 25.7	Nm/A(rms) kgfcm/A(rms)
Winding Resistance (between terminals) (*)	Ra	0.26	Ω
Thermal time constant	t_t	60	min
Static friction	Tf	1.8 18	Nm kgfcm
Weight	w	50	kg
Weight(with 70Nm Brake)	w	60	kg
Max. Current of Servo Amp.	Imax	180	A (peak)

(*) The values are the standard values at 20℃ and the tolerance is ±10%.

The speed-torque characteristics very depending on the type of software,parametersetting,and input voltage of the digital servo software.(The above figures show average values.)

© MyFANUC 2D51CC9CD8564E3B8C4DE377C2D11C41

Model αiS 50/3000HV FAN-B Specification: A06B-2276-B□1□, -B□3□

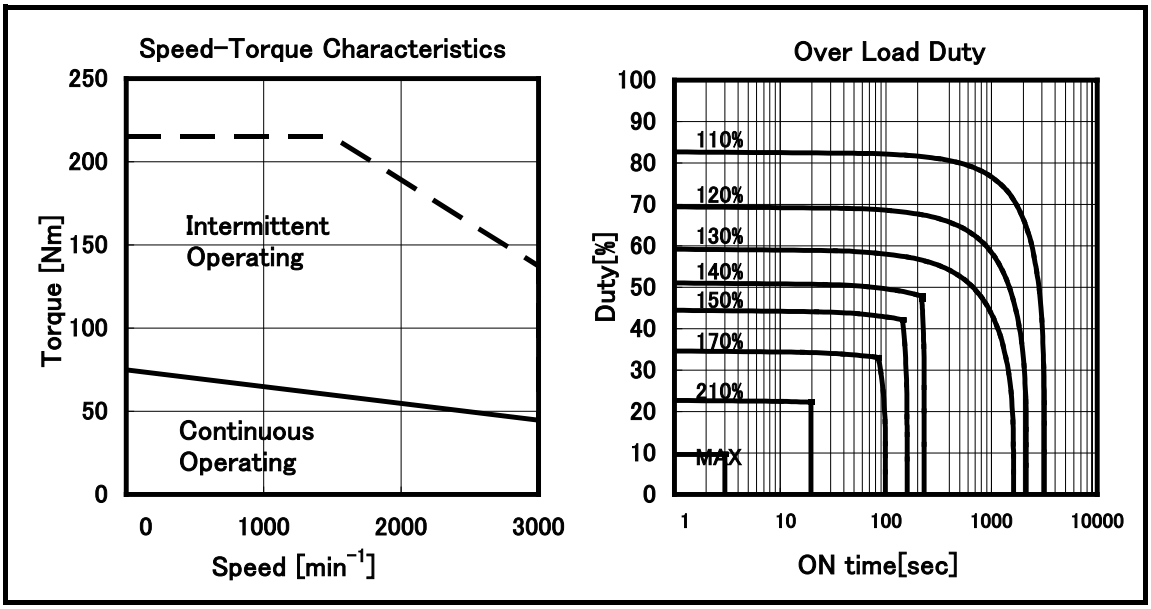

Data sheet

Parameter	Symbol	Value	Unit
Continuous Torque (at low speed) (*)	Tc	75 765	Nm kgfcm
Continuous Current (at low speed) (*)	Ic	40	A (rms)
Rated Output (*)	Pr	14 19	kW HP
Rated Speed	Nr	3000	min^{-1}
Maximum Speed	Nmax	3000	min^{-1}
Maximum Torque (*)	Tmax	215 2190	Nm kgfcm
Moment of Inertia of Rotor	Jm	0.0145 0.148	kgm^2 $kgfcms^2$
Moment of Inertia of Rotor(with 70Nm Brake)	Jm	0.0154 0.157	kgm^2 $kgfcms^2$
Torque Constant (*)	Kt	1.90 19.4	Nm/A(rms) kgfcm/A(rms)
Winding Resistance (between terminals) (*)	Ra	0.20	Ω
Thermal time constant	t_t	30	min
Static friction	Tf	1.8 18	Nm kgfcm
Weight	w	42	kg
Weight(with 70Nm Brake)	w	52	kg
Max. Current of Servo Amp.	Imax	180	A (peak)

(*) The values are the standard values at 20℃ and the tolerance is ±10%.

The speed-torque characteristics very depending on the type of software,parametersetting,and input voltage of the digital servo software.(The above figures show average values.)

© MyFANUC 2D51CC9CD8564E3B8C4DE377C2D11C41

Model αiS 60/3000HV FAN-B Specification: A06B-2279-B□1□, -B□3□

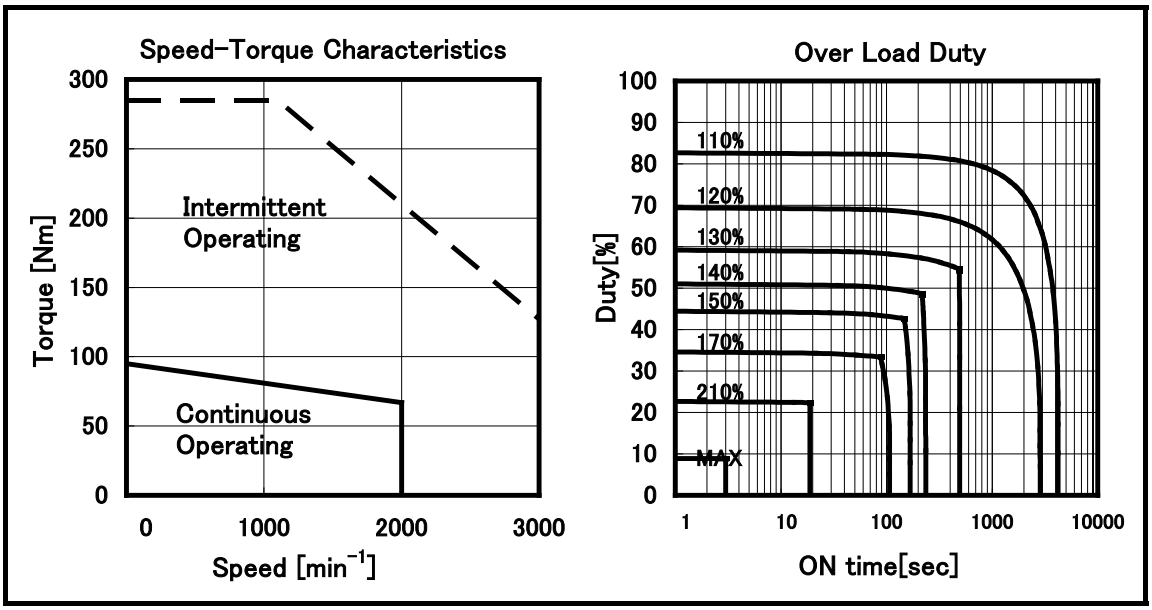

Data sheet

Parameter	Symbol	Value	Unit
Continuous Torque (at low speed) (*)	Tc	95 969	Nm kgfcm
Continuous Current (at low speed) (*)	Ic	38	A (rms)
Rated Output (*)	Pr	14 19	kW HP
Rated Speed	Nr	2000	min^{-1}
Maximum Speed	Nmax	3000	min^{-1}
Maximum Torque (*)	Tmax	285 2910	Nm kgfcm
Moment of Inertia of Rotor	Jm	0.0195 0.199	kgm^2 $kgfcms^2$
Moment of Inertia of Rotor(with 70Nm Brake)	Jm	0.0204 0.208	kgm^2 $kgfcms^2$
Torque Constant (*)	Kt	2.52 25.7	Nm/A(rms) kgfcm/A(rms)
Winding Resistance (between terminals) (*)	Ra	0.26	Ω
Thermal time constant	t_t	40	min
Static friction	Tf	1.8 18	Nm kgfcm
Weight	w	53	kg
Weight(with 70Nm Brake)	w	63	kg
Max. Current of Servo Amp.	Imax	180	A (peak)

(*) The values are the standard values at 20℃ and the tolerance is ±10%.

The speed-torque characteristics very depending on the type of software,parametersetting,and input voltage of the digital servo software.(The above figures show average values.)

© MyFANUC 2D51CC9CD8564E3B8C4DE377C2D11C41

Model αiS 150/3000HV-B Specfication: A06B-2027-B010

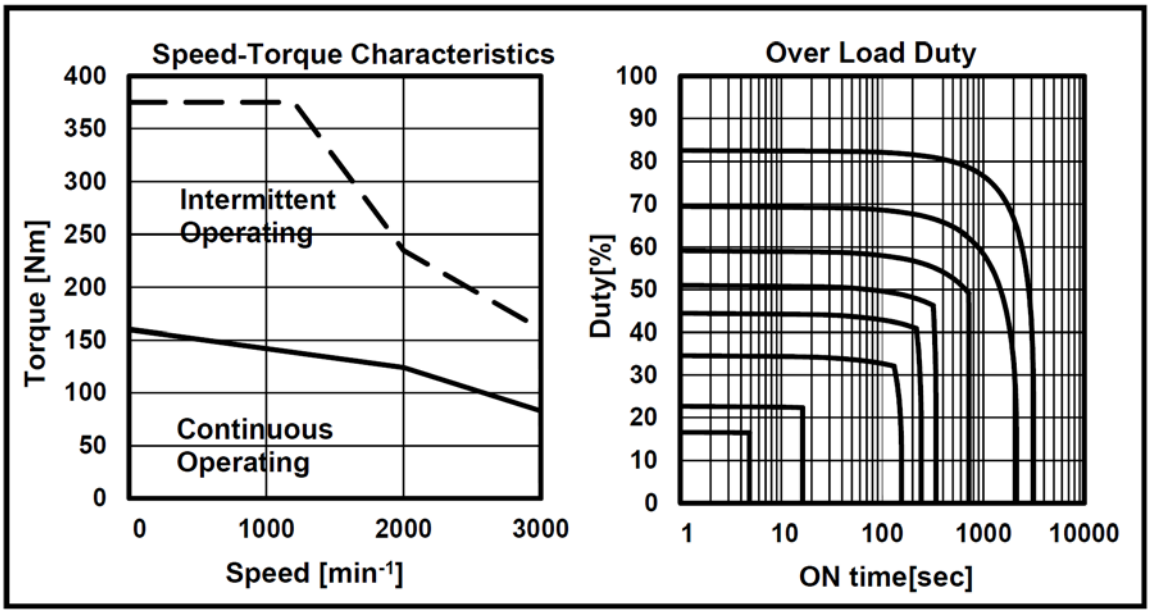

Data sheet

Parameter	Symbol	Value	Unit
Continuous Torque (at low speed) (*)	Tc	160 1630	Nm kgfcm
Continuous Current (at low speed) (*)	Ic	52	A (rms)
Rated Output (*)	Pr	26 35	kW HP
Rated Speed	Nr	3000	min^{-1}
Maximum Speed	Nmax	3000	min^{-1}
Maximum Torque (*)	Tmax	375 3830	Nm kgfcm
Moment of Inertia of Rotor	Jm	0.0425 0.434	kgm^2 $kgfcms^2$
Moment of Inertia of Rotor	Jm	- -	kgm^2 $kgfcms^2$
Torque Constant (*)	Kt	3.1 32	Nm/A(rms) kgfcm/A(rms)
Winding Resistance (between terminals) (*)	Ra	0.20	Ω
Thermal time constant	t_t	30	min
Static friction	Tf	2.4 24	Nm kgfcm
Weight	w	108	kg
Weight	w	-	kg
Max. Current of Servo Amp.	Imax	180	A (peak)

(*) The values are the standard values at 20℃ and the tolerance is ±10%.
The speed-torque characteristics very depending on the type of software,parametersetting,and input voltage of the digital servo software.(The above figures show average values.)

© MyFANUC 2D51CC9CD8564E3B8C4DE377C2D11C41

Model αiS 300/2000HV-B Specification: A06B-2293-B0□0

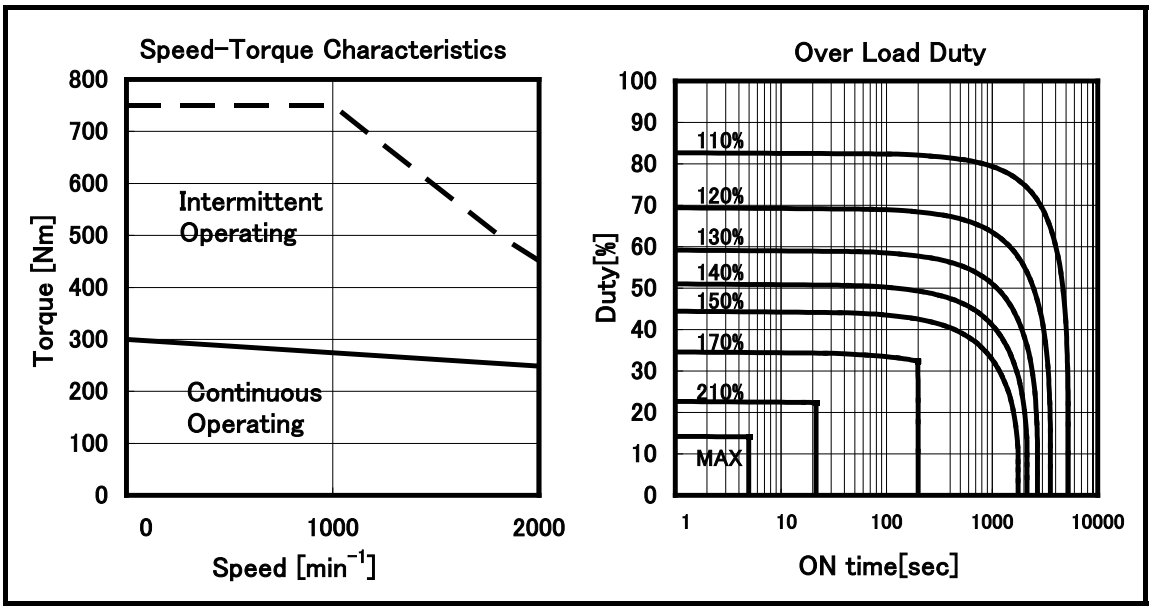

Data sheet

Parameter	Symbol	Value	Unit
Continuous Torque (at low speed) (*)	Tc	300 3060	Nm kgfcm
Continuous Current (at low speed) (*)	Ic	96	A (rms)
Rated Output (*)	Pr	52 70	kW HP
Rated Speed	Nr	2000	min^{-1}
Maximum Speed	Nmax	2000	min^{-1}
Maximum Torque (*)	Tmax	750 7650	Nm kgfcm
Moment of Inertia of Rotor	Jm	0.0787 0.803	kgm^2 $kgfcms^2$
Moment of Inertia of Rotor(with Brake)	Jm	- -	kgm^2 $kgfcms^2$
Torque Constant (*)	Kt	3.1 32	Nm/A(rms) kgfcm/A(rms)
Winding Resistance (between terminals) (*)	Ra	0.096	Ω
Thermal time constant	t_t	50	min
Static friction	Tf	4.0 41	Nm kgfcm
Weight	w	180	kg
Weight(with Brake)	w	-	kg
Max. Current of Servo Amp.	Imax	360	A (peak)

(*) The values are the standard values at 20℃ and the tolerance is ±10%.

The speed-torque characteristics very depending on the type of software,parametersetting,and input voltage of the digital servo software.(The above figures show average values.)

© MyFANUC 2D51CC9CD8564E3B8C4DE377C2D11C41

Model αiS 300/3000HV-B Specification: A06B-2290-B0□0

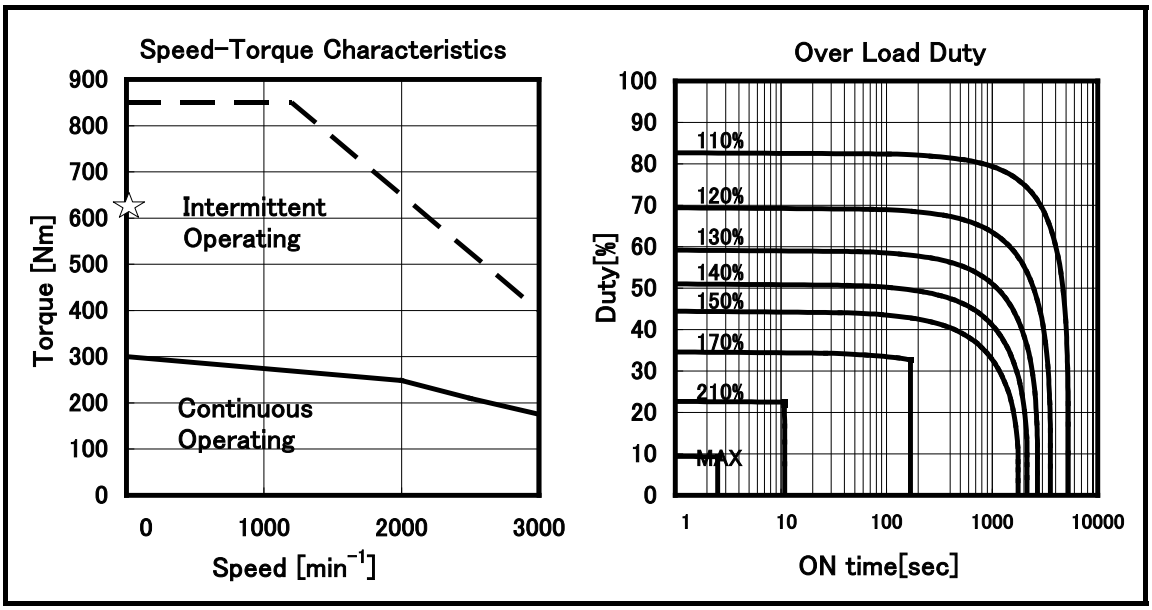

Data sheet

Parameter	Symbol	Value	Unit
Continuous Torque (at low speed) (*)	Tc	300 3060	Nm kgfcm
Continuous Current (at low speed) (*)	Ic	117	A (rms)
Rated Output (*)	Pr	55 74	kW HP
Rated Speed	Nr	2500	min^{-1}
Maximum Speed	Nmax	3000	min^{-1}
Maximum Torque (*)	Tmax	850 8670	Nm kgfcm
Moment of Inertia of Rotor	Jm	0.0787 0.803	kgm^2 $kgfcms^2$
Moment of Inertia of Rotor(with Brake)	Jm	- -	kgm^2 $kgfcms^2$
Torque Constant (*)	Kt	2.57 26.2	Nm/A(rms) kgfcm/A(rms)
Winding Resistance (between terminals) (*)	Ra	0.058	Ω
Thermal time constant	t_t	50	min
Static friction	Tf	4.0 41	Nm kgfcm
Weight	w	180	kg
Weight(with Brake)	w	-	kg
Max. Current of Servo Amp.	Imax	540	A (peak)

(*) The values are the standard values at 20℃ and the tolerance is ±10%.

The speed-torque characteristics very depending on the type of software,parametersetting,and input voltage of the digital servo software.(The above figures show average values.)

Max torque is limited by 630Nm at under 20rpm.

© MyFANUC 2D51CC9CD8564E3B8C4DE377C2D11C41

Model αiS 500/2000HV-B Specification: A06B-2296-B0□0

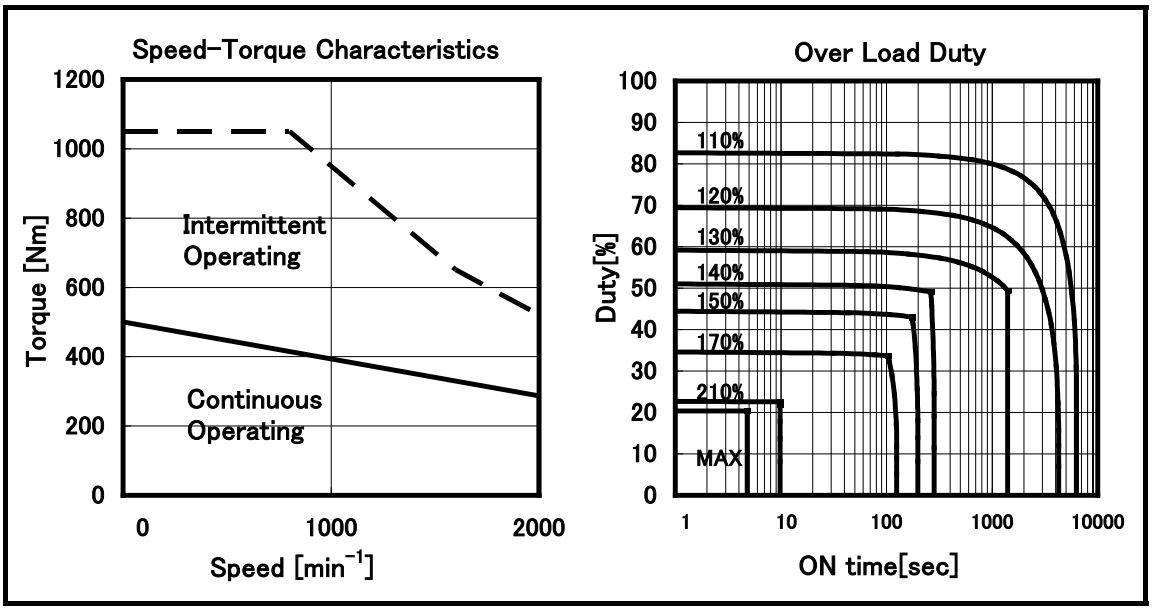

Data sheet

Parameter	Symbol	Value	Unit
Continuous Torque (at low speed) (*)	Tc	500 5100	Nm kgfcm
Continuous Current (at low speed) (*)	Ic	115	A (rms)
Rated Output (*)	Pr	60 80	kW HP
Rated Speed	Nr	2000	min^{-1}
Maximum Speed	Nmax	2000	min^{-1}
Maximum Torque (*)	Tmax	1050 10700	Nm kgfcm
Moment of Inertia of Rotor	Jm	0.127 1.30	kgm^2 $kgfcms^2$
Moment of Inertia of Rotor(with Brake)	Jm	- -	kgm^2 $kgfcms^2$
Torque Constant (*)	Kt	4.3 44	Nm/A(rms) kgfcm/A(rms)
Winding Resistance (between terminals) (*)	Ra	0.10	Ω
Thermal time constant	t_t	60	min
Static friction	Tf	4.0 41	Nm kgfcm
Weight	w	240	kg
Weight(with Brake)	w	-	kg
Max. Current of Servo Amp.	Imax	360	A (peak)

(*) The values are the standard values at 20℃ and the tolerance is ±10%.

The speed-torque characteristics very depending on the type of software,parametersetting,and input voltage of the digital servo software.(The above figures show average values.)

© MyFANUC 2D51CC9CD8564E3B8C4DE377C2D11C41

Model αiS 500/3000HV-B Specification: A06B-2297-B0□0

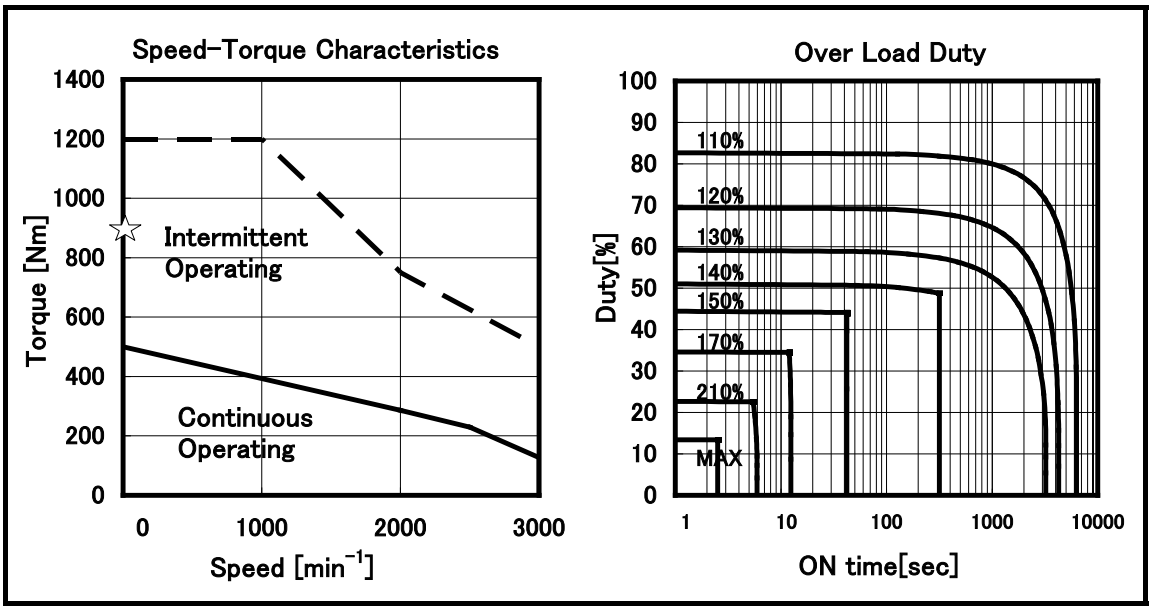

Data sheet

Parameter	Symbol	Value	Unit
Continuous Torque (at low speed) (*)	Tc	500 5100	Nm kgfcm
Continuous Current (at low speed) (*)	Ic	140	A (rms)
Rated Output (*)	Pr	60 80	kW HP
Rated Speed	Nr	2000	min^{-1}
Maximum Speed	Nmax	3000	min^{-1}
Maximum Torque (*)	Tmax	1200 12200	Nm kgfcm
Moment of Inertia of Rotor	Jm	0.127 1.30	kgm^2 $kgfcms^2$
Moment of Inertia of Rotor(with Brake)	Jm	- -	kgm^2 $kgfcms^2$
Torque Constant (*)	Kt	3.5 36	Nm/A(rms) kgfcm/A(rms)
Winding Resistance (between terminals) (*)	Ra	0.052	Ω
Thermal time constant	t_t	60	min
Static friction	Tf	4.0 41	Nm kgfcm
Weight	w	240	kg
Weight(with Brake)	w	-	kg
Max. Current of Servo Amp.	Imax	540	A (peak)

(*) The values are the standard values at 20℃ and the tolerance is ±10%.

The speed-torque characteristics very depending on the type of software,parametersetting,and input voltage of the digital servo software.(The above figures show average values.)

Max torque is limited by 900Nm at under 20rpm.

© MyFANUC 2D51CC9CD8564E3B8C4DE377C2D11C41

Model αiS 1000/2000HV-B Specification: A06B-2098-B010

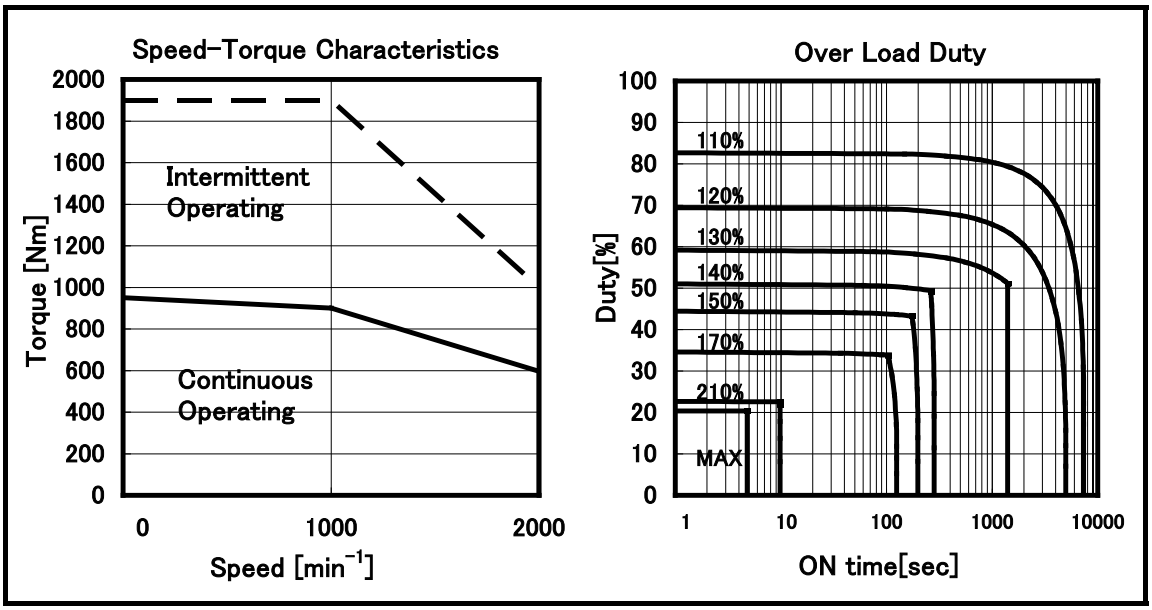

Data sheet

Parameter	Symbol	Value	Unit
Continuous Torque (at low speed) (*)	Tc	950 9690	Nm kgfcm
Continuous Current (at low speed) (*)	Ic	230	A (rms)
Rated Output (*)	Pr	125 160	kW HP
Rated Speed	Nr	2000	min^{-1}
Maximum Speed	Nmax	2000	min^{-1}
Maximum Torque (*)	Tmax	1900 19400	Nm kgfcm
Moment of Inertia of Rotor	Jm	0.420 4.29	kgm^2 $kgfcms^2$
Moment of Inertia of Rotor(with Brake)	Jm	- -	kgm^2 $kgfcms^2$
Torque Constant (*)	Kt	4.0 41	Nm/A(rms) kgfcm/A(rms)
Winding Resistance (between terminals) (*)	Ra	0.020	Ω
Thermal time constant	t_t	70	min
Static friction	Tf	6.0 61	Nm kgfcm
Weight	w	470	kg
Weight(with Brake)	w	-	kg
Max. Current of Servo Amp.	Imax	360 x 2	A (peak)

(*) The values are the standard values at 20℃ and the tolerance is ±10%.

The speed-torque characteristics very depending on the type of software,parametersetting,and input voltage of the digital servo software.(The above figures show average values.)

© MyFANUC 2D51CC9CD8564E3B8C4DE377C2D11C41

Model αiS 1000/3000HV-B Specification: A06B-2099-B□50

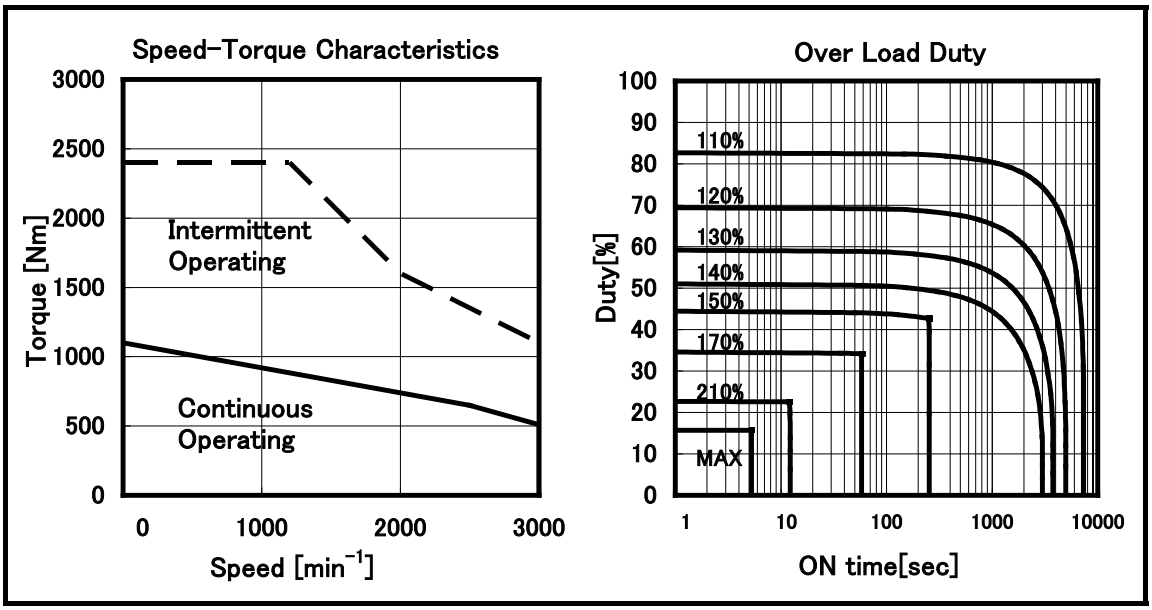

Data sheet

Parameter	Symbol	Value	Unit
Continuous Torque (at low speed) (*)	Tc	1100 11200	Nm kgfcm
Continuous Current (at low speed) (*)	Ic	404	A (rms)
Rated Output (*)	Pr	170 230	kW HP
Rated Speed	Nr	2500	min^{-1}
Maximum Speed	Nmax	3000	min^{-1}
Maximum Torque (*)	Tmax	2400 24500	Nm kgfcm
Moment of Inertia of Rotor	Jm	0.458 4.67	kgm^2 $kgfcms^2$
Moment of Inertia of Rotor(with Brake)	Jm	- -	kgm^2 $kgfcms^2$
Torque Constant (*)	Kt	2.72 27.8	Nm/A(rms) kgfcm/A(rms)
Winding Resistance (between terminals) (*)	Ra	0.010	Ω
Thermal time constant	t_t	70	min
Static friction	Tf	6.0 61	Nm kgfcm
Weight	w	500	kg
Weight(with Brake)	w	-	kg
Max. Current of Servo Amp.	Imax	360 x 4	A (peak)

(*) The values are the standard values at 20℃ and the tolerance is ±10%.

The speed-torque characteristics very depending on the type of software,parametersetting,and input voltage of the digital servo software.(The above figures show average values.)

© MyFANUC 2D51CC9CD8564E3B8C4DE377C2D11C41

Model αiS 1500/3000HV-B Specfication: A06B-2097-B010

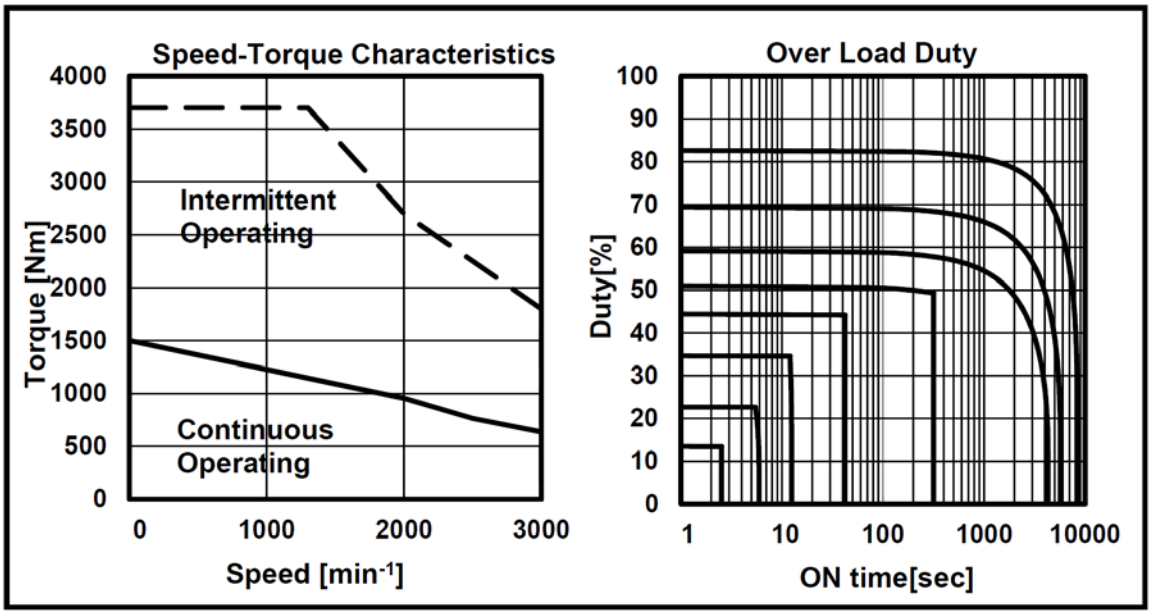

Data sheet

Parameter	Symbol	Value	Unit
Continuous Torque (at low speed) (*)	Tc	1500 15300	Nm kgfcm
Continuous Current (at low speed) (*)	Ic	560	A (rms)
Rated Output (*)	Pr	200 270	kW HP
Rated Speed	Nr	2500	min^{-1}
Maximum Speed	Nmax	3000	min^{-1}
Maximum Torque (*)	Tmax	3700 37800	Nm kgfcm
Moment of Inertia of Rotor	Jm	0.746 7.61	kgm^2 $kgfcms^2$
Moment of Inertia of Rotor(with Brake)	Jm	- -	kgm^2 $kgfcms^2$
Torque Constant (*)	Kt	2.68 27.3	Nm/A(rms) kgfcm/A(rms)
Winding Resistance (between terminals) (*)	Ra	0.0048	Ω
Thermal time constant	t_t	80	min
Static friction	Tf	6.0 61	Nm kgfcm
Weight	w	770	kg
Weight(with Brake)	w	-	kg
Max. Current of Servo Amp.	Imax	540 x 4	A (peak)

(*) The values are the standard values at 20℃ and the tolerance is ±10%.
The speed-torque characteristics very depending on the type of software,parametersetting,and input voltage of the digital servo software.(The above figures show average values.)
Max torque is limited by 2800Nm at under 20rpm.

© MyFANUC 2D51CC9CD8564E3B8C4DE377C2D11C41

Model αiS 2000/2000HV Specification: A06B-0091-B□40

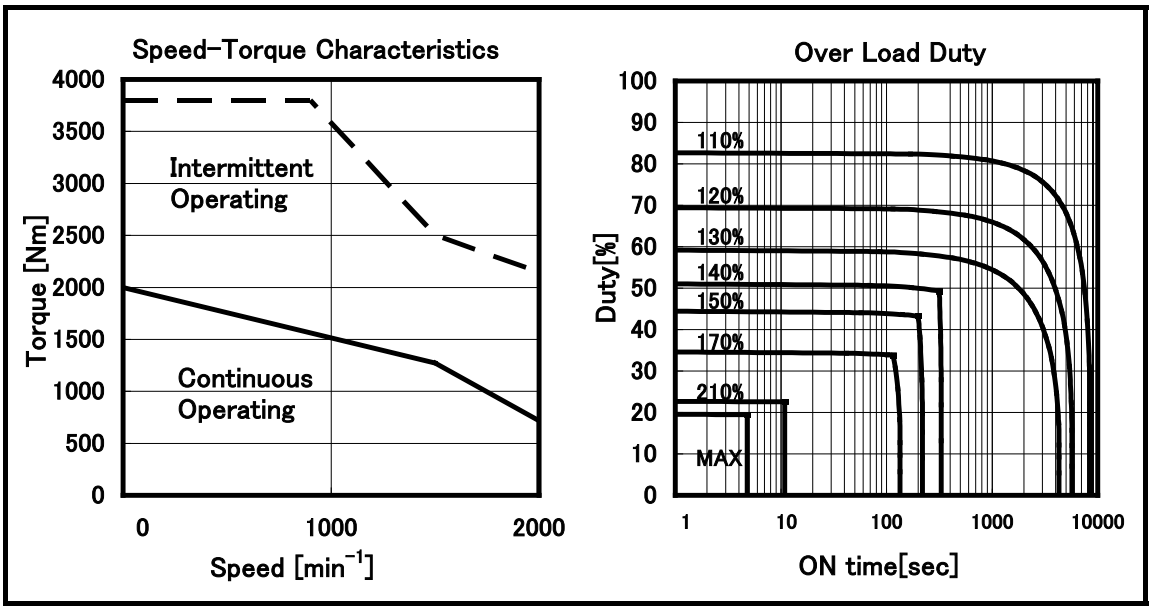

Data sheet

Parameter	Symbol	Value	Unit
Continuous Torque (at low speed) (*)	Tc	2000 20400	Nm kgfcm
Continuous Current (at low speed) (*)	Ic	450	A (rms)
Rated Output (*)	Pr	200 270	kW HP
Rated Speed	Nr	1500	min^{-1}
Maximum Speed	Nmax	2000	min^{-1}
Maximum Torque (*)	Tmax	3800 38800	Nm kgfcm
Moment of Inertia of Rotor	Jm	1.97 20.1	kgm^2 $kgfcms^2$
Moment of Inertia of Rotor(with Brake)	Jm	- -	kgm^2 $kgfcms^2$
Torque Constant (*)	Kt	4.4 45	Nm/A(rms) kgfcm/A(rms)
Winding Resistance (between terminals) (*)	Ra	0.0076	Ω
Thermal time constant	t_t	80	min
Static friction	Tf	32 330	Nm kgfcm
Weight	w	1000	kg
Weight(with Brake)	w	-	kg
Max. Current of Servo Amp.	Imax	360 x 4	A (peak)

(*) The values are the standard values at 20℃ and the tolerance is ±10%.

The speed-torque characteristics very depending on the type of software,parametersetting,and input voltage of the digital servo software.(The above figures show average values.)

© MyFANUC 2D51CC9CD8564E3B8C4DE377C2D11C41

Model αiS 3000/2000HV Specification: A06B-0092-B□40

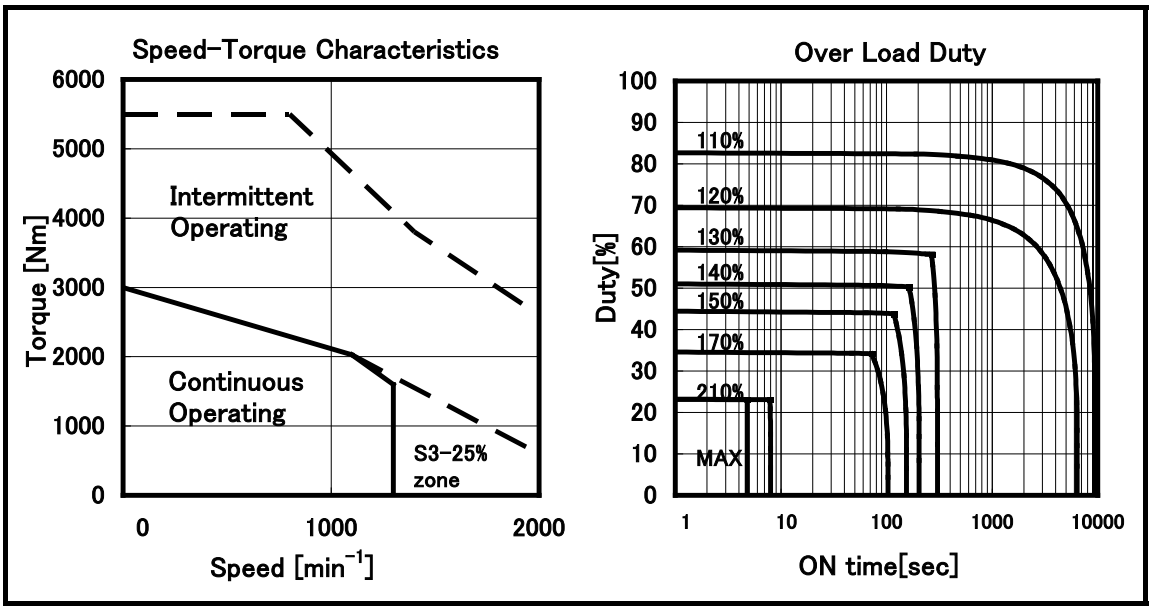

Data sheet

Parameter	Symbol	Value	Unit
Continuous Torque (at low speed) (*)	Tc	3000 30600	Nm kgfcm
Continuous Current (at low speed) (*)	Ic	490	A (rms)
Rated Output (*)	Pr	220 300	kW HP
Rated Speed	Nr	1300	min^{-1}
Maximum Speed	Nmax	2000	min^{-1}
Maximum Torque (*)	Tmax	5500 56100	Nm kgfcm
Moment of Inertia of Rotor	Jm	3.48 35.5	kgm^2 $kgfcms^2$
Moment of Inertia of Rotor(with Brake)	Jm	- -	kgm^2 $kgfcms^2$
Torque Constant (*)	Kt	6.1 62	Nm/A(rms) kgfcm/A(rms)
Winding Resistance (between terminals) (*)	Ra	0.0070	Ω
Thermal time constant	t_t	90	min
Static friction	Tf	32 330	Nm kgfcm
Weight	w	1500	kg
Weight(with Brake)	w	-	kg
Max. Current of Servo Amp.	Imax	360 x 4	A (peak)

(*) The values are the standard values at 20℃ and the tolerance is ±10%.

The speed-torque characteristics very depending on the type of software,parametersetting,and input voltage of the digital servo software.(The above figures show average values.)

© MyFANUC 2D51CC9CD8564E3B8C4DE377C2D11C41

1.3.2.4 αiF-B SERIES (200V)

Model αiF 1/5000-B Specification: A06B-2202-B□0□

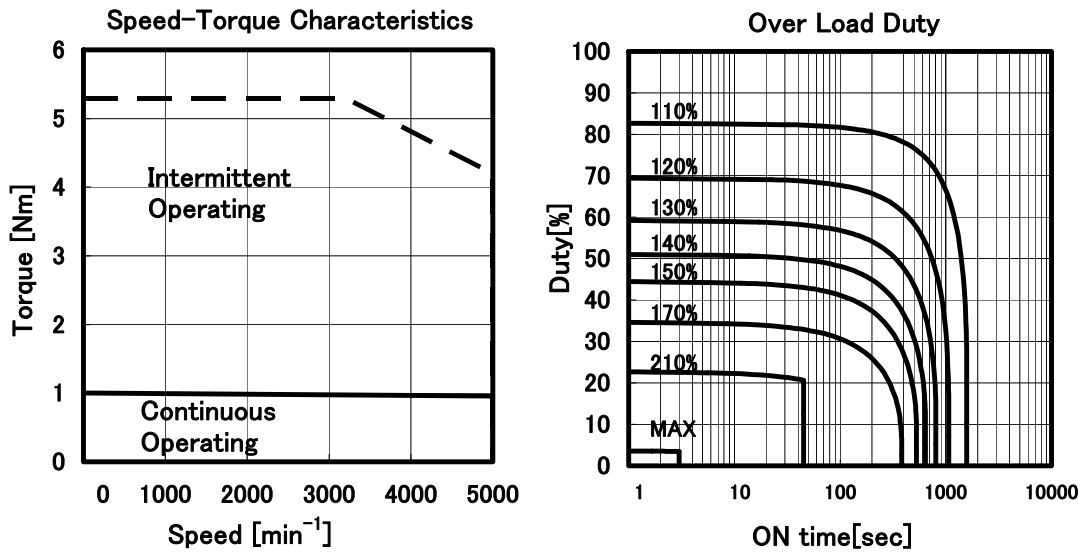

Data sheet

Parameter	Symbol	Value	Unit
Continuous Torque (at low speed) (*)	Tc	1.0 10	Nm kgfcm
Continuous Current (at low speed) (*)	Ic	2.7	A (rms)
Rated Output (*)	Pr	0.50 0.67	kW HP
Rated Speed	Nr	5000	min^{-1}
Maximum Speed	Nmax	5000	min^{-1}
Maximum Torque (*)	Tmax	5.3 54	Nm kgfcm
Moment of Inertia of Rotor	Jm	0.000305 0.00311	kgm^2 $kgfcms^2$
Moment of Inertia of Rotor(with Brake)	Jm	0.000325 0.00332	kgm^2 $kgfcms^2$
Torque Constant (*)	Kt	0.38 3.8	Nm/A(rms) kgfcm/A(rms)
Winding Resistance (between terminals) (*)	Ra	2.8	Ω
Thermal time constant	t_t	15	min
Static friction	Tf	0.1 1	Nm kgfcm
Weight	w	2.8	kg
Weight(with Brake)	w	3.8	kg
Max. Current of Servo Amp.	Imax	20	A (peak)

(*) The values are the standard values at 20℃ and the tolerance is ±10%.

The speed-torque characteristics very depending on the type of software,parametersetting,and input voltage of the digital servo software.(The above figures show average values.)

© MyFANUC 2D51CC9CD8564E3B8C4DE377C2D11C41

Model αiF 2/5000-B Specification: A06B-2205-B□0□

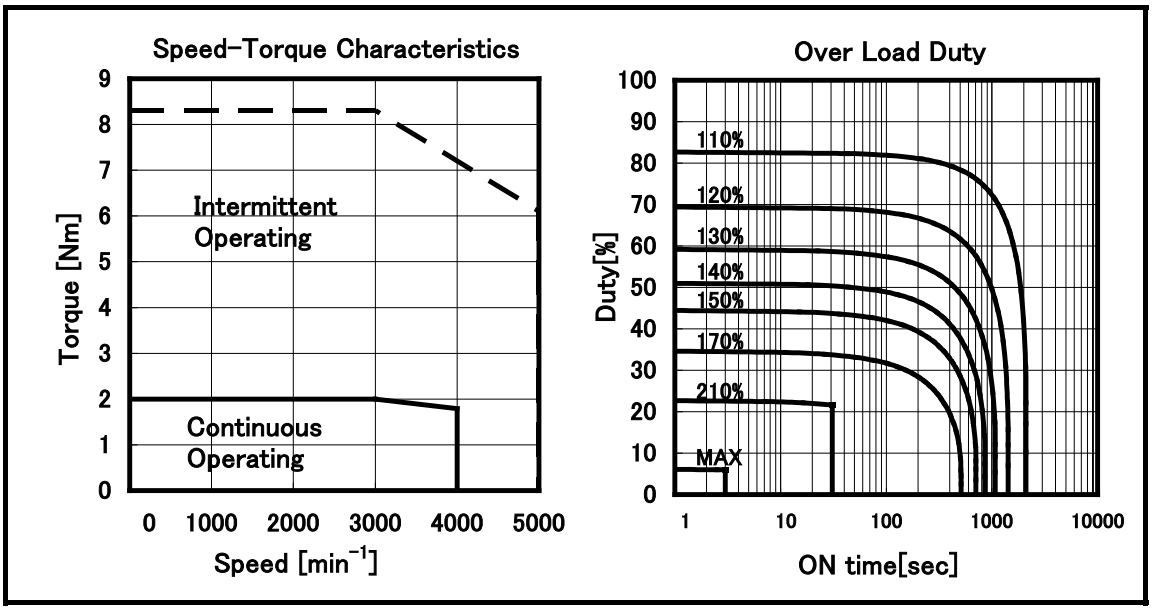

Data sheet

Parameter	Symbol	Value	Unit
Continuous Torque (at low speed) (*)	Tc	2.0 20	Nm kgfcm
Continuous Current (at low speed) (*)	Ic	3.5	A (rms)
Rated Output (*)	Pr	0.75 1.0	kW HP
Rated Speed	Nr	4000	min^{-1}
Maximum Speed	Nmax	5000	min^{-1}
Maximum Torque (*)	Tmax	8.3 85	Nm kgfcm
Moment of Inertia of Rotor	Jm	0.000526 0.00537	kgm^2 $kgfcms^2$
Moment of Inertia of Rotor(with Brake)	Jm	0.000546 0.00557	kgm^2 $kgfcms^2$
Torque Constant (*)	Kt	0.57 5.8	Nm/A(rms) kgfcm/A(rms)
Winding Resistance (between terminals) (*)	Ra	2.2	Ω
Thermal time constant	t_t	20	min
Static friction	Tf	0.2 2	Nm kgfcm
Weight	w	4.3	kg
Weight(with Brake)	w	5.3	kg
Max. Current of Servo Amp.	Imax	20	A (peak)

(*) The values are the standard values at 20℃ and the tolerance is ±10%.

The speed-torque characteristics very depending on the type of software,parametersetting,and input voltage of the digital servo software.(The above figures show average values.)

© MyFANUC 2D51CC9CD8564E3B8C4DE377C2D11C41

Model αiF 4/5000-B Specification: A06B-2223-B□0□

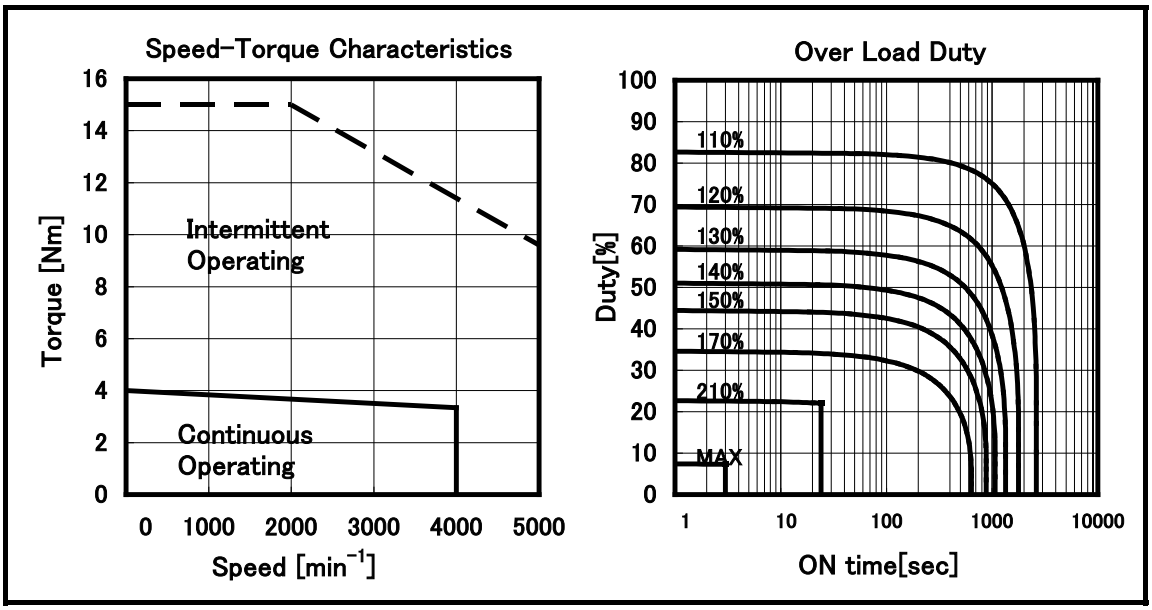

Data sheet

Parameter	Symbol	Value	Unit
Continuous Torque (at low speed) (*)	Tc	4.0 41	Nm kgfcm
Continuous Current (at low speed) (*)	Ic	7.7	A (rms)
Rated Output (*)	Pr	1.4 1.9	kW HP
Rated Speed	Nr	4000	min^{-1}
Maximum Speed	Nmax	5000	min^{-1}
Maximum Torque (*)	Tmax	15 153	Nm kgfcm
Moment of Inertia of Rotor	Jm	0.00135 0.0138	kgm^2 $kgfcms^2$
Moment of Inertia of Rotor(with Brake)	Jm	0.00142 0.0145	kgm^2 $kgfcms^2$
Torque Constant (*)	Kt	0.52 5.3	Nm/A(rms) kgfcm/A(rms)
Winding Resistance (between terminals) (*)	Ra	0.80	Ω
Thermal time constant	t_t	25	min
Static friction	Tf	0.3 3	Nm kgfcm
Weight	w	7.5	kg
Weight(with Brake)	w	9.7	kg
Max. Current of Servo Amp.	Imax	40	A (peak)

(*) The values are the standard values at 20℃ and the tolerance is ±10%.

The speed-torque characteristics very depending on the type of software,parametersetting,and input voltage of the digital servo software.(The above figures show average values.)

© MyFANUC 2D51CC9CD8564E3B8C4DE377C2D11C41

Model αiF 8/3000-B Specification: A06B-2227-B□0□

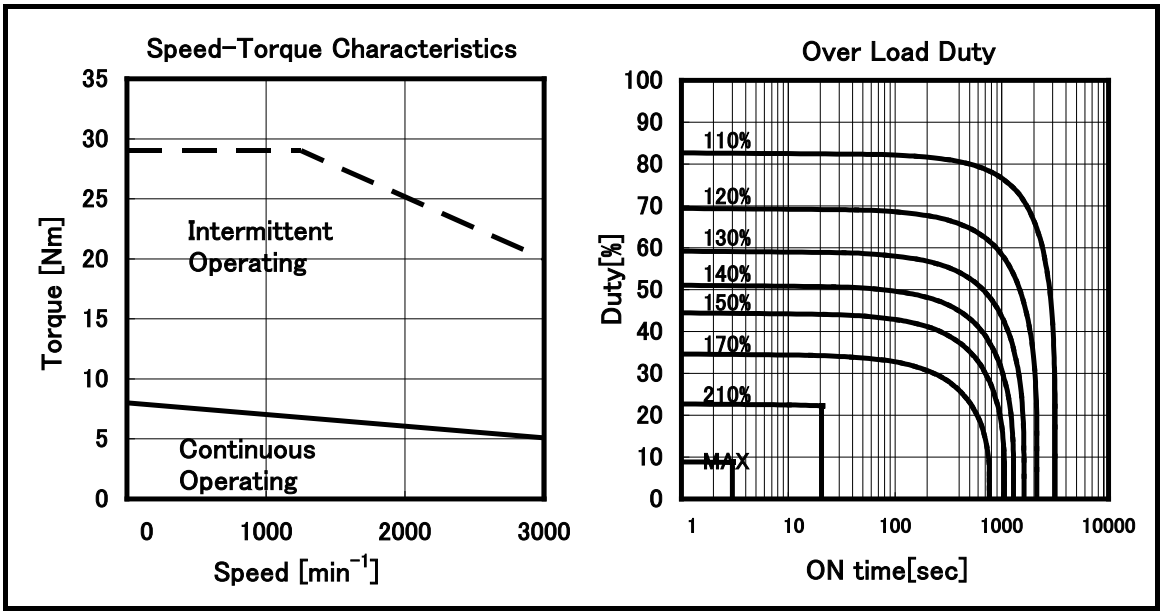

Data sheet

Parameter	Symbol	Value	Unit
Continuous Torque (at low speed) (*)	Tc	8.0 82	Nm kgfcm
Continuous Current (at low speed) (*)	Ic	8.4	A (rms)
Rated Output (*)	Pr	1.6 2.1	kW HP
Rated Speed	Nr	3000	min^{-1}
Maximum Speed	Nmax	3000	min^{-1}
Maximum Torque (*)	Tmax	29 296	Nm kgfcm
Moment of Inertia of Rotor	Jm	0.00257 0.0262	kgm^2 $kgfcms^2$
Moment of Inertia of Rotor(with Brake)	Jm	0.00264 0.0269	kgm^2 $kgfcms^2$
Torque Constant (*)	Kt	0.95 9.7	Nm/A(rms) kgfcm/A(rms)
Winding Resistance (between terminals) (*)	Ra	1.0	Ω
Thermal time constant	t_t	30	min
Static friction	Tf	0.3 3	Nm kgfcm
Weight	w	12.3	kg
Weight(with Brake)	w	14.5	kg
Max. Current of Servo Amp.	Imax	40	A (peak)

(*) The values are the standard values at 20℃ and the tolerance is ±10%.

The speed-torque characteristics very depending on the type of software,parametersetting,and input voltage of the digital servo software.(The above figures show average values.)

© MyFANUC 2D51CC9CD8564E3B8C4DE377C2D11C41

Model αiF 8/4000-B Specification: A06B-2228-B□0□

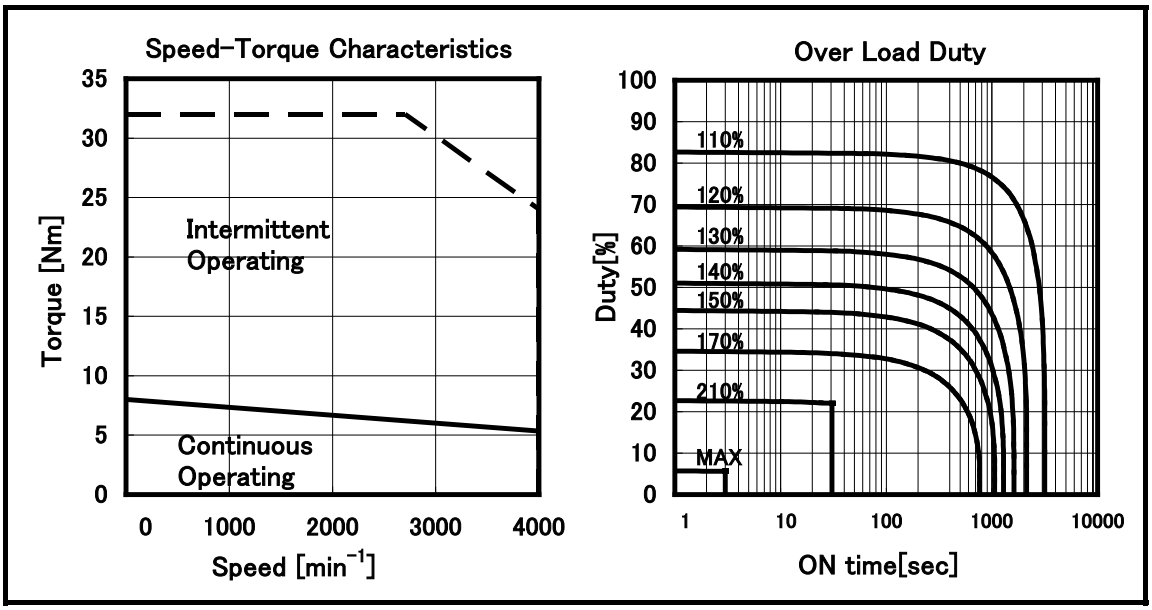

Data sheet

Parameter	Symbol	Value	Unit
Continuous Torque (at low speed) (*)	Tc	8.0 82	Nm kgfcm
Continuous Current (at low speed) (*)	Ic	13.5	A (rms)
Rated Output (*)	Pr	2.2 3.0	kW HP
Rated Speed	Nr	4000	min^{-1}
Maximum Speed	Nmax	4000	min^{-1}
Maximum Torque (*)	Tmax	32 327	Nm kgfcm
Moment of Inertia of Rotor	Jm	0.00257 0.0262	kgm^2 $kgfcms^2$
Moment of Inertia of Rotor(with Brake)	Jm	0.00264 0.0269	kgm^2 $kgfcms^2$
Torque Constant (*)	Kt	0.59 6.0	Nm/A(rms) kgfcm/A(rms)
Winding Resistance (between terminals) (*)	Ra	0.36	Ω
Thermal time constant	t_t	30	min
Static friction	Tf	0.3 3	Nm kgfcm
Weight	w	12.3	kg
Weight(with Brake)	w	14.5	kg
Max. Current of Servo Amp.	Imax	80	A (peak)

(*) The values are the standard values at 20℃ and the tolerance is ±10%.

The speed-torque characteristics very depending on the type of software,parametersetting,and input voltage of the digital servo software.(The above figures show average values.)

© MyFANUC 2D51CC9CD8564E3B8C4DE377C2D11C41

Model αiF 12/4000-B Specification: A06B-2243-B□0□

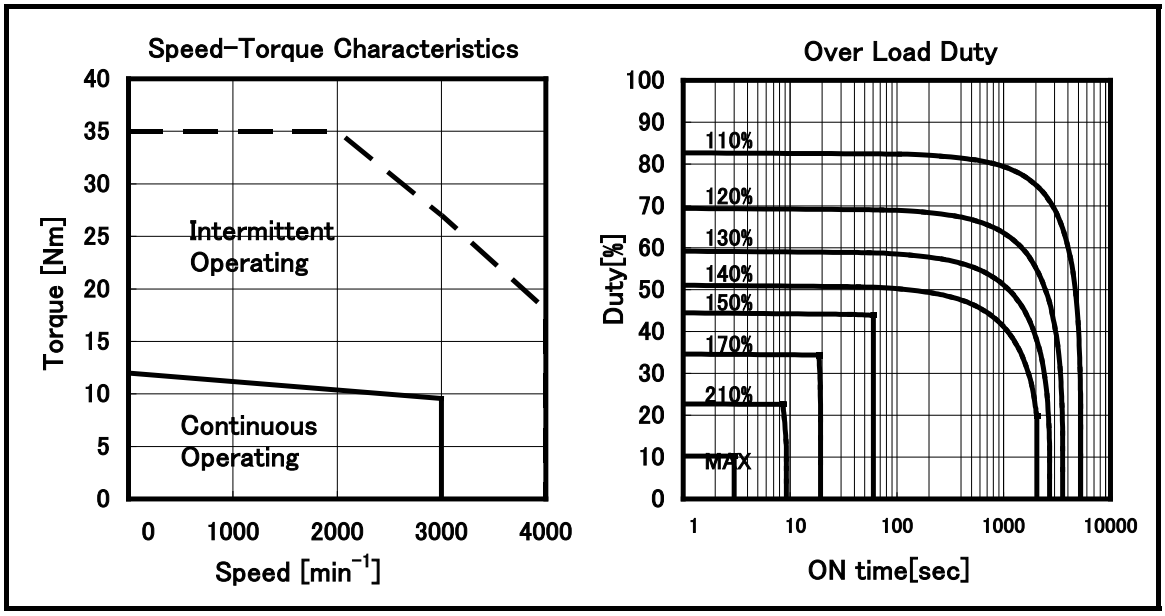

Data sheet

Parameter	Symbol	Value	Unit
Continuous Torque (at low speed) (*)	Tc	12	Nm
		122	kgfcm
Continuous Current (at low speed) (*)	Ic	18.1	A (rms)
Rated Output (*)	Pr	3.0	kW
		4.0	HP
Rated Speed	Nr	3000	min^{-1}
Maximum Speed	Nmax	4000	min^{-1}
Maximum Torque (*)	Tmax	35	Nm
		357	kgfcm
Moment of Inertia of Rotor	Jm	0.00620	kgm^2
		0.0633	$kgfcms^2$
Moment of Inertia of Rotor(with 35Nm Brake)	Jm	0.00680	kgm^2
		0.0694	$kgfcms^2$
Torque Constant (*)	Kt	0.66	Nm/A(rms)
		6.8	kgfcm/A(rms)
Winding Resistance (between terminals) (*)	Ra	0.32	Ω
Thermal time constant	t_t	50	min
Static friction	Tf	0.8	Nm
		8	kgfcm
Weight	w	18	kg
Weight(with 35Nm Brake)	w	24	kg
Max. Current of Servo Amp.	Imax	80	A (peak)

(*) The values are the standard values at 20℃ and the tolerance is ±10%.

The speed-torque characteristics very depending on the type of software,parametersetting,and input voltage of the digital servo software.(The above figures show average values.)

© MyFANUC 2D51CC9CD8564E3B8C4DE377C2D11C41

Model αiF 22/3000-B Specification: A06B-2247-B□0□

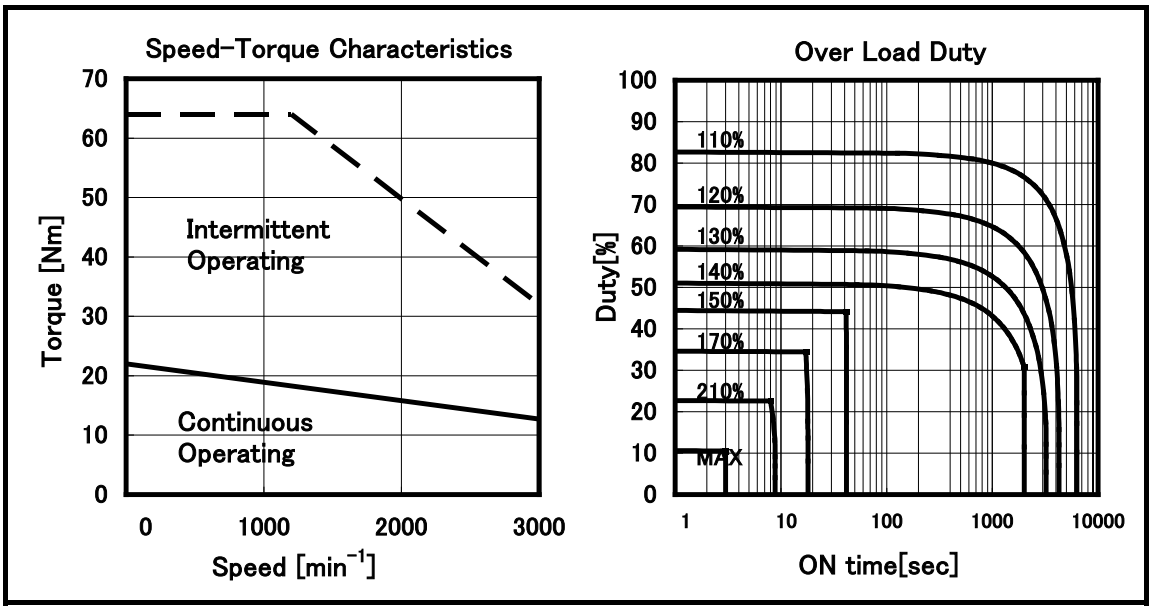

Data sheet

Parameter	Symbol	Value	Unit
Continuous Torque (at low speed) (*)	Tc	22 224	Nm kgfcm
Continuous Current (at low speed) (*)	Ic	18.4	A (rms)
Rated Output (*)	Pr	4.0 5.4	kW HP
Rated Speed	Nr	3000	min^{-1}
Maximum Speed	Nmax	3000	min^{-1}
Maximum Torque (*)	Tmax	64 653	Nm kgfcm
Moment of Inertia of Rotor	Jm	0.0120 0.122	kgm^2 $kgfcms^2$
Moment of Inertia of Rotor(with 35Nm Brake)	Jm	0.0126 0.129	kgm^2 $kgfcms^2$
Torque Constant (*)	Kt	1.20 12.2	Nm/A(rms) kgfcm/A(rms)
Winding Resistance (between terminals) (*)	Ra	0.32	Ω
Thermal time constant	t_t	60	min
Static friction	Tf	1.2 12	Nm kgfcm
Weight	w	29	kg
Weight(with 35Nm Brake)	w	35	kg
Max. Current of Servo Amp.	Imax	80	A (peak)

(*) The values are the standard values at 20℃ and the tolerance is ±10%.

The speed-torque characteristics very depending on the type of software,parametersetting,and input voltage of the digital servo software.(The above figures show average values.)

© MyFANUC 2D51CC9CD8564E3B8C4DE377C2D11C41

Model αiF 22/4000-B Specification: A06B-2248-B□0□

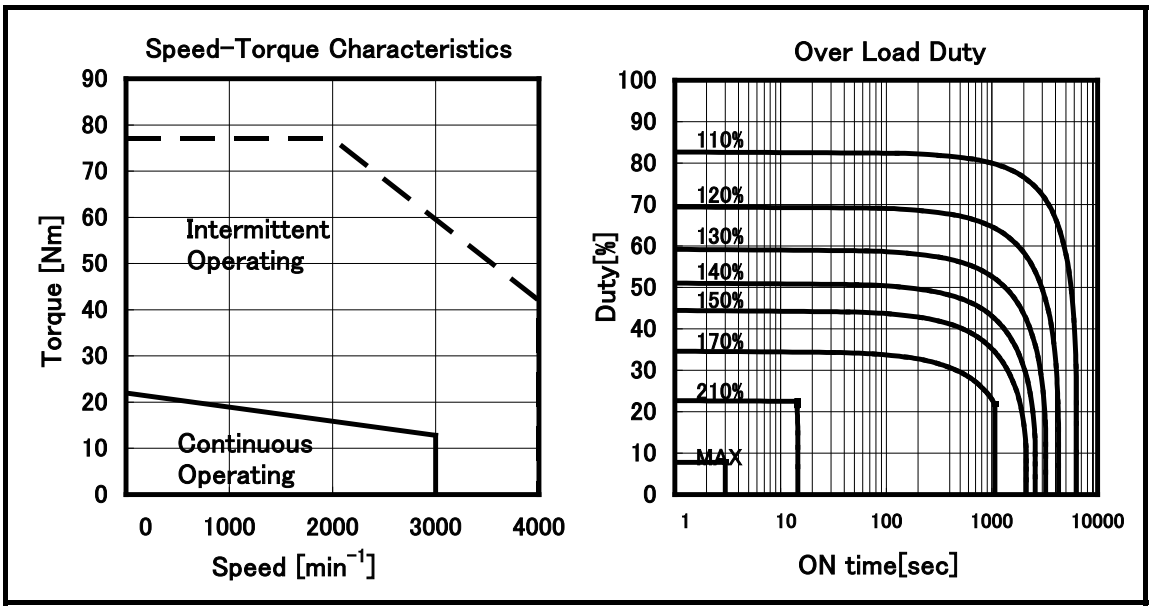

Data sheet

Parameter	Symbol	Value	Unit
Continuous Torque (at low speed) (*)	Tc	22 224	Nm kgfcm
Continuous Current (at low speed) (*)	Ic	31.6	A (rms)
Rated Output (*)	Pr	4.0 5.4	kW HP
Rated Speed	Nr	3000	min^{-1}
Maximum Speed	Nmax	4000	min^{-1}
Maximum Torque (*)	Tmax	77 786	Nm kgfcm
Moment of Inertia of Rotor	Jm	0.0120 0.122	kgm^2 $kgfcms^2$
Moment of Inertia of Rotor(with 35Nm Brake)	Jm	0.0126 0.129	kgm^2 $kgfcms^2$
Torque Constant (*)	Kt	0.70 7.1	Nm/A(rms) kgfcm/A(rms)
Winding Resistance (between terminals) (*)	Ra	0.11	Ω
Thermal time constant	t_t	60	min
Static friction	Tf	1.2 12	Nm kgfcm
Weight	w	29	kg
Weight(with 35Nm Brake)	w	35	kg
Max. Current of Servo Amp.	Imax	160	A (peak)

(*) The values are the standard values at 20℃ and the tolerance is ±10%.

The speed-torque characteristics very depending on the type of software,parametersetting,and input voltage of the digital servo software.(The above figures show average values.)

Overload Duty shows the specification for rotating, and if the motor is stopping, Soft Alarm will occur shorter time. When the motor speed is less than 1 rpm for over 10 sec., use under continuous torque (at low speed).

© MyFANUC 2D51CC9CD8564E3B8C4DE377C2D11C41

Model αiF 30/4000-B Specification: A06B-2253-B□0□

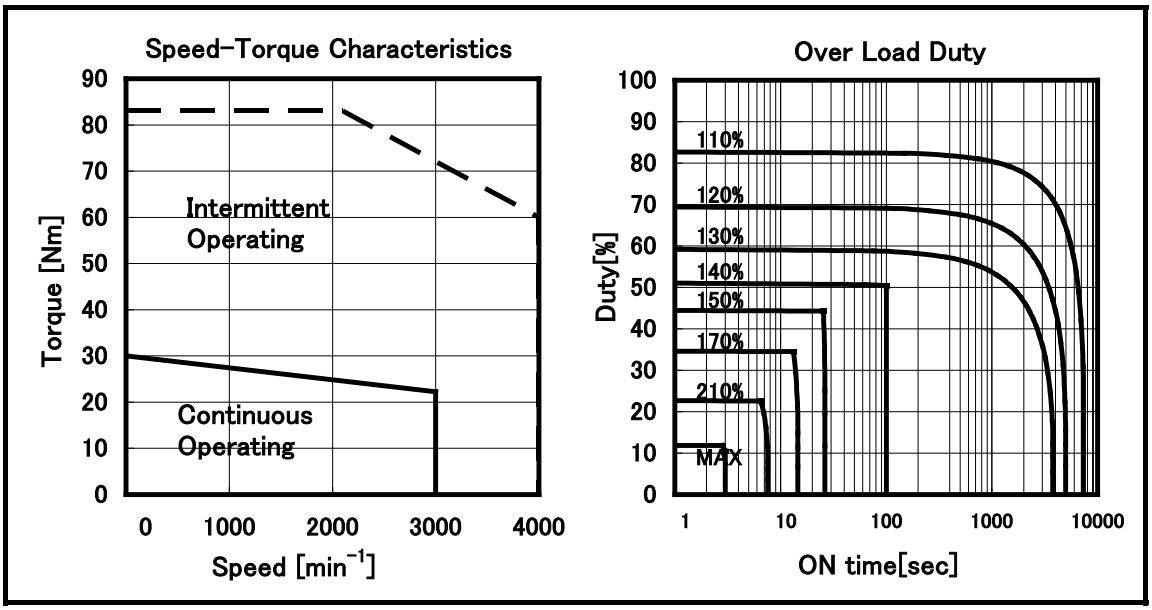

Data sheet

Parameter	Symbol	Value	Unit
Continuous Torque (at low speed) (*)	Tc	30 306	Nm kgfcm
Continuous Current (at low speed) (*)	Ic	39.0	A (rms)
Rated Output (*)	Pr	7.0 9.3	kW HP
Rated Speed	Nr	3000	min^{-1}
Maximum Speed	Nmax	4000	min^{-1}
Maximum Torque (*)	Tmax	83 847	Nm kgfcm
Moment of Inertia of Rotor	Jm	0.0170 0.173	kgm^2 $kgfcms^2$
Moment of Inertia of Rotor(with 35Nm Brake)	Jm	0.0176 0.180	kgm^2 $kgfcms^2$
Torque Constant (*)	Kt	0.77 7.8	Nm/A(rms) kgfcm/A(rms)
Winding Resistance (between terminals) (*)	Ra	0.080	Ω
Thermal time constant	t_t	70	min
Static friction	Tf	1.8 18	Nm kgfcm
Weight	w	40	kg
Weight(with 35Nm Brake)	w	46	kg
Max. Current of Servo Amp.	Imax	160	A (peak)

(*) The values are the standard values at 20℃ and the tolerance is ±10%.

The speed-torque characteristics very depending on the type of software,parametersetting,and input voltage of the digital servo software.(The above figures show average values.)

Overload Duty shows the specification for rotating, and if the motor is stopping, Soft Alarm will occur shorter time. When the motor speed is less than 1 rpm for over 10 sec., use under continuous torque (at low speed).

© MyFANUC 2D51CC9CD8564E3B8C4DE377C2D11C41

Model αiF 40/3000-B Specification: A06B-2257-B□0□, -B□2□

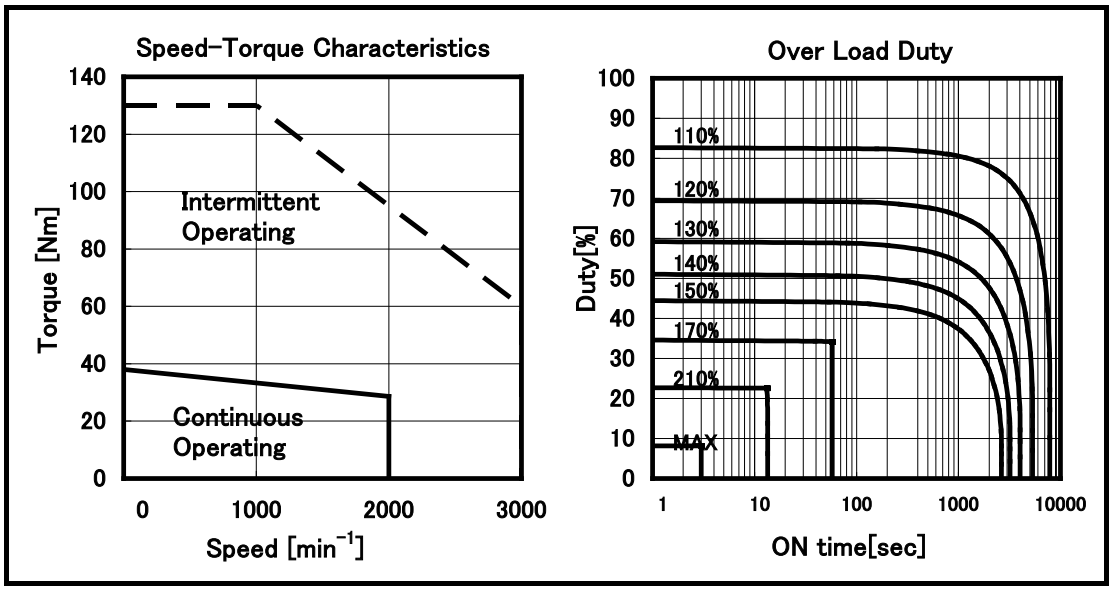

Data sheet

Parameter	Symbol	Value	Unit
Continuous Torque (at low speed) (*)	Tc	38 388	Nm kgfcm
Continuous Current (at low speed) (*)	Ic	32.3	A (rms)
Rated Output (*)	Pr	6.0 8.0	kW HP
Rated Speed	Nr	2000	min^{-1}
Maximum Speed	Nmax	3000	min^{-1}
Maximum Torque (*)	Tmax	130 1330	Nm kgfcm
Moment of Inertia of Rotor	Jm	0.0220 0.224	kgm^2 $kgfcms^2$
Moment of Inertia of Rotor(with 35Nm Brake)	Jm	0.0226 0.231	kgm^2 $kgfcms^2$
Moment of Inertia of Rotor(with 70Nm Brake)	Jm	0.0229 0.233	kgm^2 $kgfcms^2$
Torque Constant (*)	Kt	1.18 12.0	Nm/A(rms) kgfcm/A(rms)
Winding Resistance (between terminals) (*)	Ra	0.14	Ω
Thermal time constant	t_t	75	min
Static friction	Tf	1.8 18	Nm kgfcm
Weight	w	51	kg
Weight(with 35Nm Brake)	w	57	kg
Weight(with 70Nm Brake)	w	61	kg
Max. Current of Servo Amp.	Imax	160	A (peak)

(*) The values are the standard values at 20℃ and the tolerance is ±10%.

The speed-torque characteristics very depending on the type of software,parametersetting,and input voltage of the digital servo software.(The above figures show average values.)

Overload Duty shows the specification for rotating, and if the motor is stopping, Soft Alarm will occur shorter time. When the motor speed is less than 1 rpm for over 10 sec., use under continuous torque (at low speed).

© MyFANUC 2D51CC9CD8564E3B8C4DE377C2D11C41

Model αiF 40/3000 FAN-B Specification: A06B-2257-B□1□, -B□3□

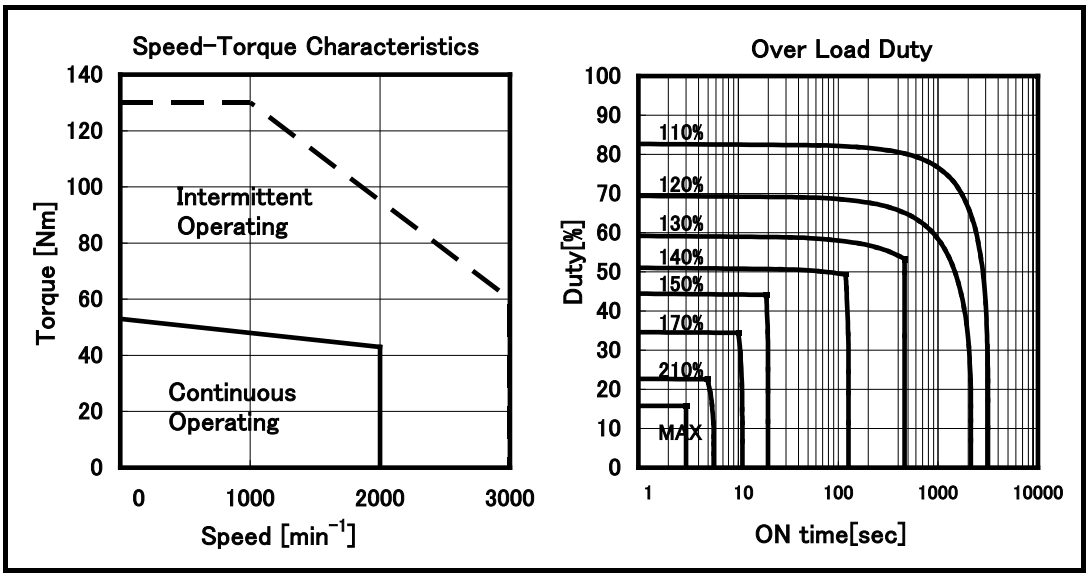

Data sheet

Parameter	Symbol	Value	Unit
Continuous Torque (at low speed) (*)	Tc	53	Nm
		541	kgfcm
Continuous Current (at low speed) (*)	Ic	45.0	A (rms)
Rated Output (*)	Pr	9.0	kW
		12	HP
Rated Speed	Nr	2000	min^{-1}
Maximum Speed	Nmax	3000	min^{-1}
Maximum Torque (*)	Tmax	130	Nm
		1330	kgfcm
Moment of Inertia of Rotor	Jm	0.0220	kgm^2
		0.224	$kgfcms^2$
Moment of Inertia of Rotor(with 70Nm Brake)	Jm	0.0229	kgm^2
		0.233	$kgfcms^2$
Torque Constant (*)	Kt	1.18	Nm/A(rms)
		12.0	kgfcm/A(rms)
Winding Resistance (between terminals) (*)	Ra	0.14	Ω
Thermal time constant	t_t	30	min
Static friction	Tf	1.8	Nm
		18	kgfcm
Weight	w	54	kg
Weight(with 70Nm Brake)	w	64	kg
Max. Current of Servo Amp.	Imax	160	A (peak)

(*) The values are the standard values at 20℃ and the tolerance is ±10%.

The speed-torque characteristics very depending on the type of software,parametersetting,and input voltage of the digital servo software.(The above figures show average values.)

Overload Duty shows the specification for rotating, and if the motor is stopping, Soft Alarm will occur shorter time. When the motor speed is less than 1 rpm for over 10 sec., use under continuous torque(at low speed).

© MyFANUC 2D51CC9CD8564E3B8C4DE377C2D11C41

1.3.2.5 αiF SERIES (400V)

Model αiF 4/5000HV-B Specification: A06B-2225-B□0□

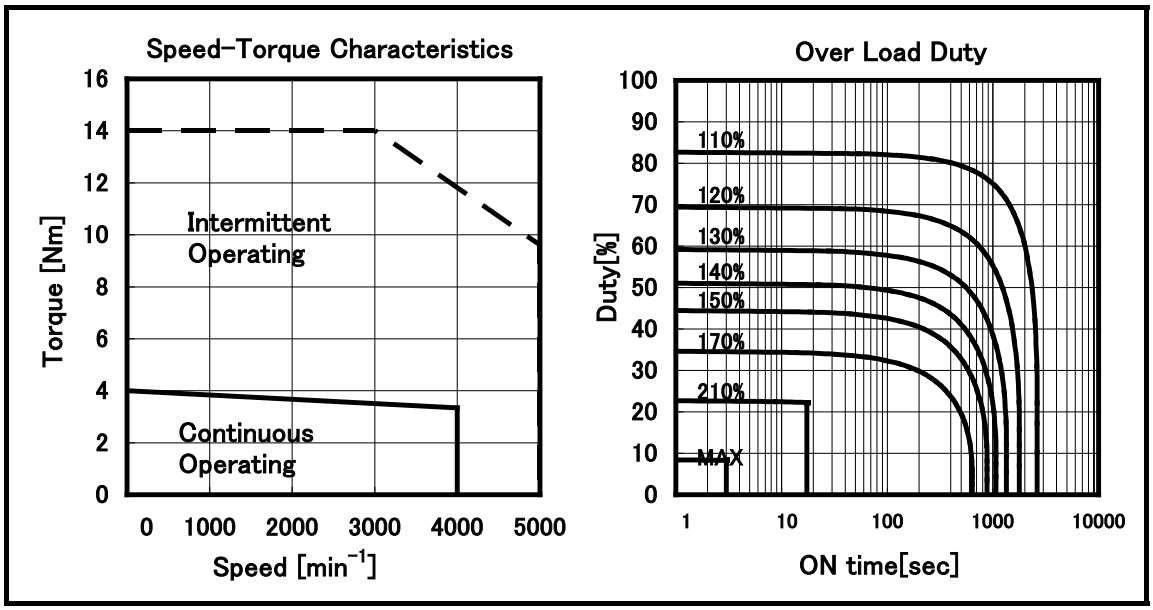

Data sheet

Parameter	Symbol	Value	Unit
Continuous Torque (at low speed) (*)	Tc	4.0 41	Nm kgfcm
Continuous Current (at low speed) (*)	Ic	4.1	A (rms)
Rated Output (*)	Pr	1.4 1.9	kW HP
Rated Speed	Nr	4000	min^{-1}
Maximum Speed	Nmax	5000	min^{-1}
Maximum Torque (*)	Tmax	14 143	Nm kgfcm
Moment of Inertia of Rotor	Jm	0.00135 0.0138	kgm^2 $kgfcms^2$
Moment of Inertia of Rotor(with Brake)	Jm	0.00142 0.0145	kgm^2 $kgfcms^2$
Torque Constant (*)	Kt	0.98 10.0	Nm/A(rms) kgfcm/A(rms)
Winding Resistance (between terminals) (*)	Ra	3.0	Ω
Thermal time constant	t_t	25	min
Static friction	Tf	0.3 3	Nm kgfcm
Weight	w	7.5	kg
Weight(with Brake)	w	9.7	kg
Max. Current of Servo Amp.	Imax	20	A (peak)

(*) The values are the standard values at 20℃ and the tolerance is ±10%.
The speed-torque characteristics very depending on the type of software,parametersetting,and input voltage of the digital servo software.(The above figures show average values.)

© MyFANUC 2D51CC9CD8564E3B8C4DE377C2D11C41

Model αiF 8/3000HV-B Specification: A06B-2229-B□0□

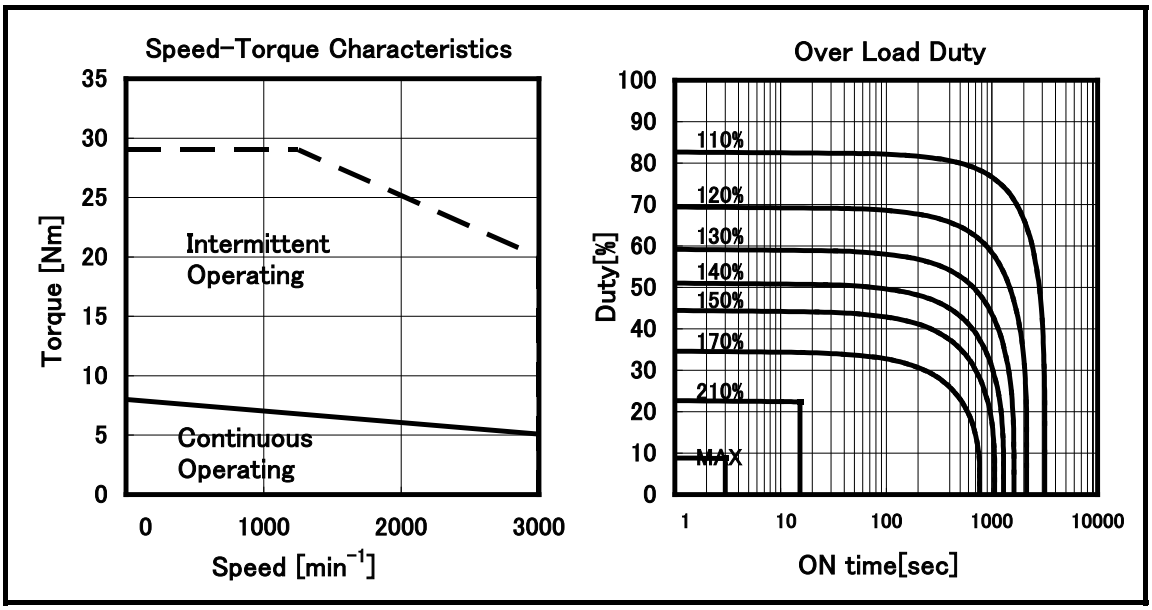

Data sheet

Parameter	Symbol	Value	Unit
Continuous Torque (at low speed) (*)	Tc	8.0 82	Nm kgfcm
Continuous Current (at low speed) (*)	Ic	4.2	A (rms)
Rated Output (*)	Pr	1.6 2.1	kW HP
Rated Speed	Nr	3000	min^{-1}
Maximum Speed	Nmax	3000	min^{-1}
Maximum Torque (*)	Tmax	29 296	Nm kgfcm
Moment of Inertia of Rotor	Jm	0.00257 0.0262	kgm^2 $kgfcms^2$
Moment of Inertia of Rotor(with Brake)	Jm	0.00264 0.0269	kgm^2 $kgfcms^2$
Torque Constant (*)	Kt	1.90 19.5	Nm/A(rms) kgfcm/A(rms)
Winding Resistance (between terminals) (*)	Ra	3.8	Ω
Thermal time constant	t_t	30	min
Static friction	Tf	0.3 3	Nm kgfcm
Weight	w	12.3	kg
Weight(with Brake)	w	14.5	kg
Max. Current of Servo Amp.	Imax	20	A (peak)

(*) The values are the standard values at 20℃ and the tolerance is ±10%.

The speed-torque characteristics very depending on the type of software,parametersetting,and input voltage of the digital servo software.(The above figures show average values.)

© MyFANUC 2D51CC9CD8564E3B8C4DE377C2D11C41

Model αiF 8/4000HV-B Specification: A06B-2220-B□0□

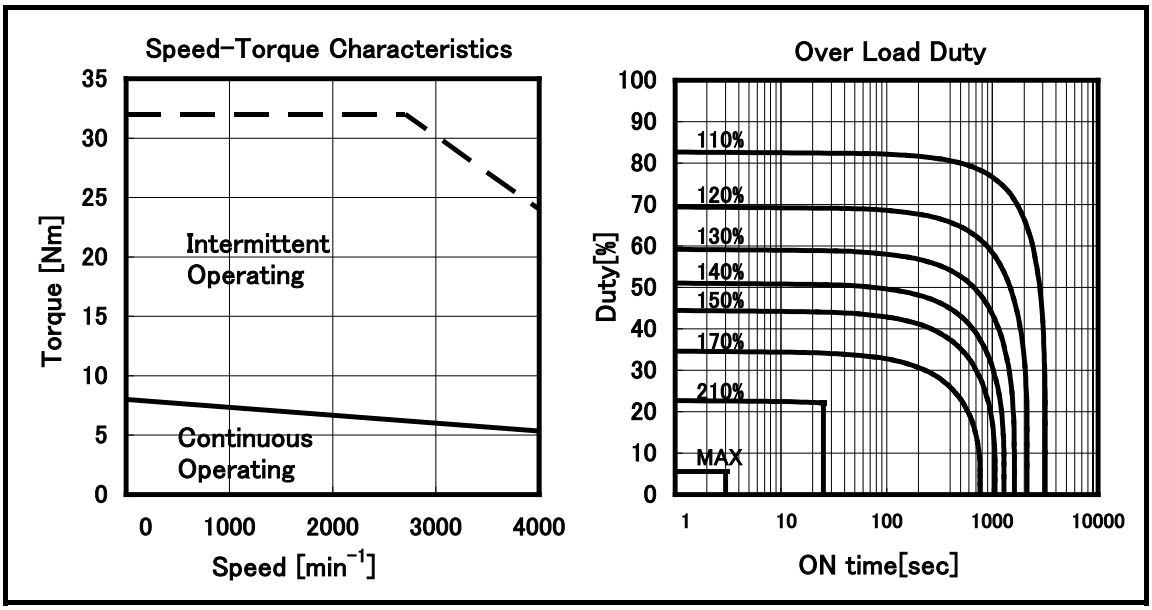

Data sheet

Parameter	Symbol	Value	Unit
Continuous Torque (at low speed) (*)	Tc	8.0 82	Nm kgfcm
Continuous Current (at low speed) (*)	Ic	6.7	A (rms)
Rated Output (*)	Pr	2.2 3.0	kW HP
Rated Speed	Nr	4000	min^{-1}
Maximum Speed	Nmax	4000	min^{-1}
Maximum Torque (*)	Tmax	32 327	Nm kgfcm
Moment of Inertia of Rotor	Jm	0.00257 0.0262	kgm^2 $kgfcms^2$
Moment of Inertia of Rotor(with Brake)	Jm	0.00264 0.0269	kgm^2 $kgfcms^2$
Torque Constant (*)	Kt	1.19 12.1	Nm/A(rms) kgfcm/A(rms)
Winding Resistance (between terminals) (*)	Ra	1.5	Ω
Thermal time constant	t_t	30	min
Static friction	Tf	0.3 3	Nm kgfcm
Weight	w	12.3	kg
Weight(with Brake)	w	14.5	kg
Max. Current of Servo Amp.	Imax	40	A (peak)

(*) The values are the standard values at 20℃ and the tolerance is ±10%.

The speed-torque characteristics very depending on the type of software,parametersetting,and input voltage of the digital servo software.(The above figures show average values.)

© MyFANUC 2D51CC9CD8564E3B8C4DE377C2D11C41

Model αiF 12/4000HV-B Specification: A06B-2245-B□0□

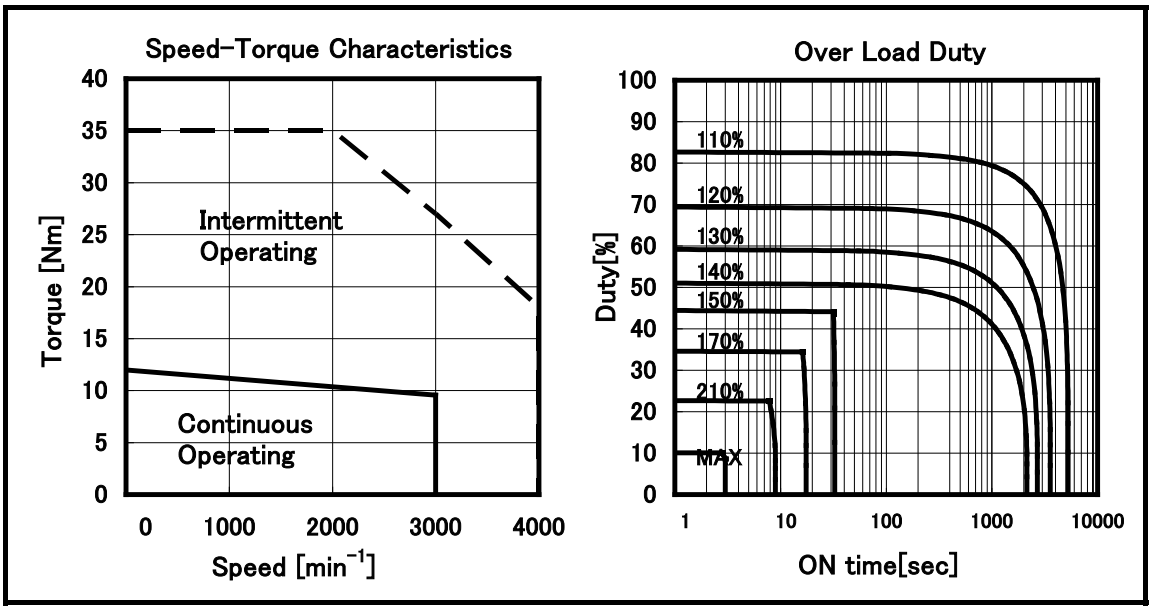

Data sheet

Parameter	Symbol	Value	Unit
Continuous Torque (at low speed) (*)	Tc	12 122	Nm kgfcm
Continuous Current (at low speed) (*)	Ic	9.0	A (rms)
Rated Output (*)	Pr	3.0 4.0	kW HP
Rated Speed	Nr	3000	min^{-1}
Maximum Speed	Nmax	4000	min^{-1}
Maximum Torque (*)	Tmax	35 357	Nm kgfcm
Moment of Inertia of Rotor	Jm	0.00620 0.0633	kgm^2 $kgfcms^2$
Moment of Inertia of Rotor(with 35Nm Brake)	Jm	0.00680 0.0694	kgm^2 $kgfcms^2$
Torque Constant (*)	Kt	1.33 13.6	Nm/A(rms) kgfcm/A(rms)
Winding Resistance (between terminals) (*)	Ra	1.3	Ω
Thermal time constant	t_t	50	min
Static friction	Tf	0.8 8	Nm kgfcm
Weight	w	18	kg
Weight(with 35Nm Brake)	w	24	kg
Max. Current of Servo Amp.	Imax	40	A (peak)

(*) The values are the standard values at 20℃ and the tolerance is ±10%.

The speed-torque characteristics very depending on the type of software,parametersetting,and input voltage of the digital servo software.(The above figures show average values.)

© MyFANUC 2D51CC9CD8564E3B8C4DE377C2D11C41

Model αiF 22/3000HV-B Specification: A06B-2249-B□0□

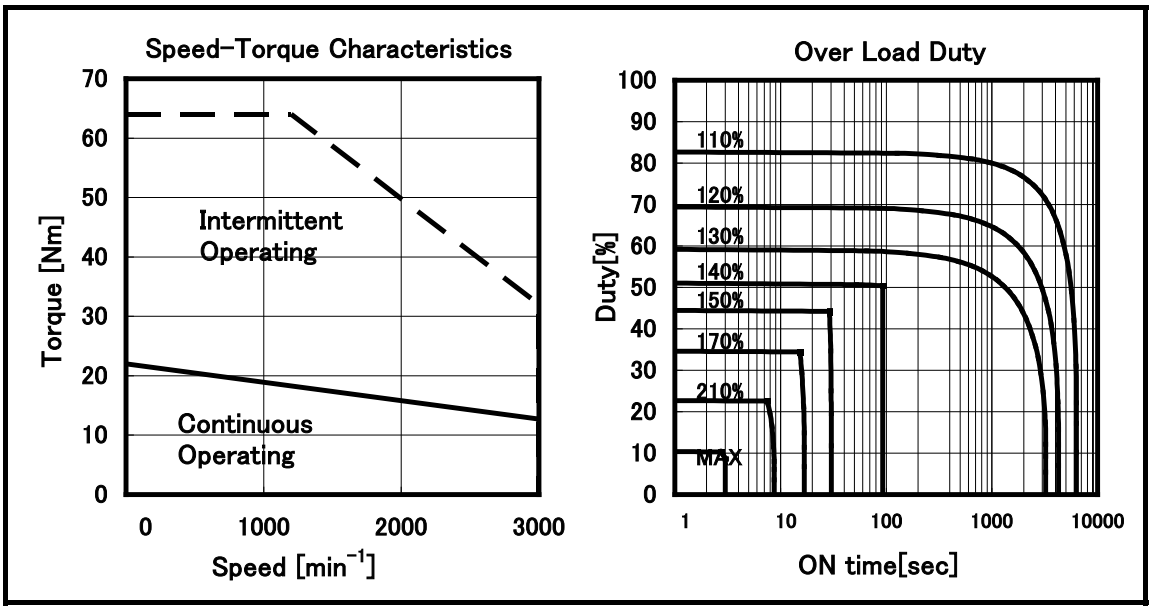

Data sheet

Parameter	Symbol	Value	Unit
Continuous Torque (at low speed) (*)	Tc	22 224	Nm kgfcm
Continuous Current (at low speed) (*)	Ic	9.1	A (rms)
Rated Output (*)	Pr	4.0 5.4	kW HP
Rated Speed	Nr	3000	min^{-1}
Maximum Speed	Nmax	3000	min^{-1}
Maximum Torque (*)	Tmax	64 653	Nm kgfcm
Moment of Inertia of Rotor	Jm	0.0120 0.122	kgm^2 $kgfcms^2$
Moment of Inertia of Rotor(with 35Nm Brake)	Jm	0.0126 0.129	kgm^2 $kgfcms^2$
Torque Constant (*)	Kt	2.41 24.6	Nm/A(rms) kgfcm/A(rms)
Winding Resistance (between terminals) (*)	Ra	1.3	Ω
Thermal time constant	t_t	60	min
Static friction	Tf	1.2 12	Nm kgfcm
Weight	w	29	kg
Weight(with 35Nm Brake)	w	35	kg
Max. Current of Servo Amp.	Imax	40	A (peak)

(*) The values are the standard values at 20℃ and the tolerance is ±10%.

The speed-torque characteristics very depending on the type of software,parametersetting,and input voltage of the digital servo software.(The above figures show average values.)

© MyFANUC 2D51CC9CD8564E3B8C4DE377C2D11C41

Model αiF 22/4000HV-B Specification: A06B-2240-B□0□

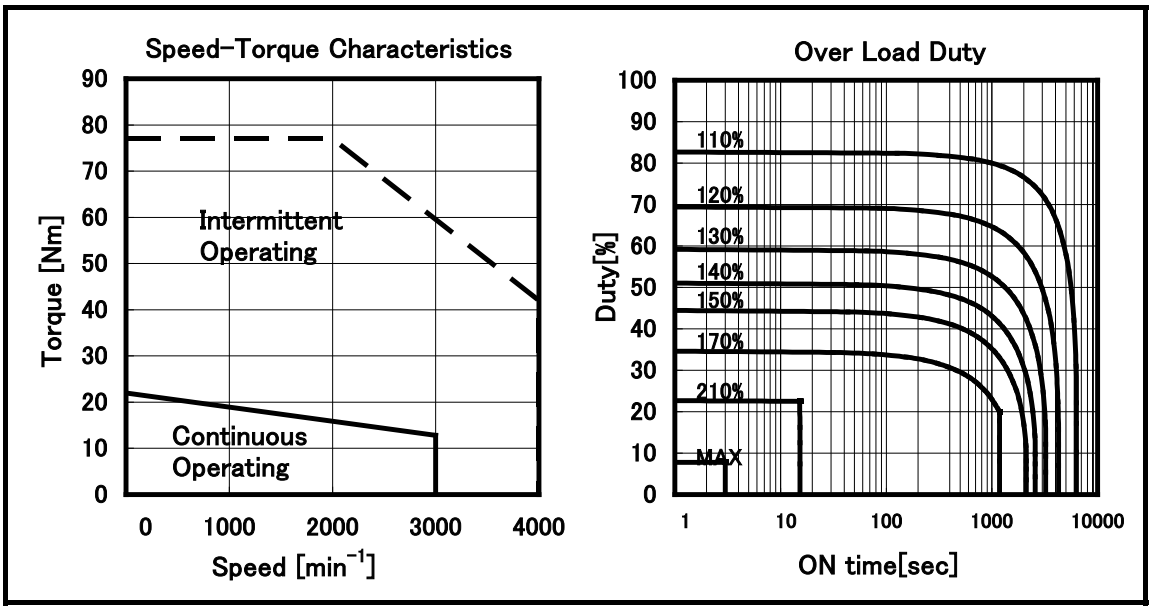

Data sheet

Parameter	Symbol	Value	Unit
Continuous Torque (at low speed) (*)	Tc	22 224	Nm kgfcm
Continuous Current (at low speed) (*)	Ic	15.8	A (rms)
Rated Output (*)	Pr	4.0 5.4	kW HP
Rated Speed	Nr	3000	min^{-1}
Maximum Speed	Nmax	4000	min^{-1}
Maximum Torque (*)	Tmax	77 786	Nm kgfcm
Moment of Inertia of Rotor	Jm	0.0120 0.122	kgm^2 $kgfcms^2$
Moment of Inertia of Rotor(with 35Nm Brake)	Jm	0.0126 0.129	kgm^2 $kgfcms^2$
Torque Constant (*)	Kt	1.39 14.2	Nm/A(rms) kgfcm/A(rms)
Winding Resistance (between terminals) (*)	Ra	0.46	Ω
Thermal time constant	t_t	60	min
Static friction	Tf	1.2 12	Nm kgfcm
Weight	w	29	kg
Weight(with 35Nm Brake)	w	35	kg
Max. Current of Servo Amp.	Imax	80	A (peak)

(*) The values are the standard values at 20℃ and the tolerance is ±10%.

The speed-torque characteristics very depending on the type of software,parametersetting,and input voltage of the digital servo software.(The above figures show average values.)

© MyFANUC 2D51CC9CD8564E3B8C4DE377C2D11C41

Model αiF 30/4000HV-B Specification: A06B-2255-B□0□

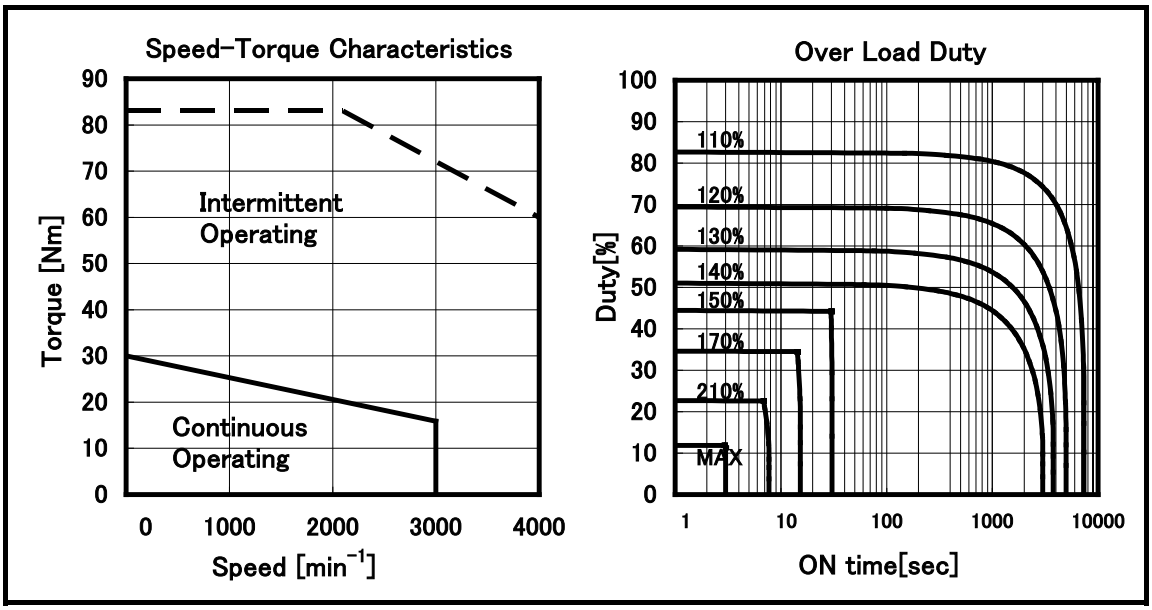

Data sheet

Parameter	Symbol	Value	Unit
Continuous Torque (at low speed) (*)	Tc	30 306	Nm kgfcm
Continuous Current (at low speed) (*)	Ic	19.5	A (rms)
Rated Output (*)	Pr	5.0 6.7	kW HP
Rated Speed	Nr	3000	min^{-1}
Maximum Speed	Nmax	4000	min^{-1}
Maximum Torque (*)	Tmax	83 847	Nm kgfcm
Moment of Inertia of Rotor	Jm	0.0170 0.173	kgm^2 $kgfcms^2$
Moment of Inertia of Rotor(with 35Nm Brake)	Jm	0.0176 0.180	kgm^2 $kgfcms^2$
Torque Constant (*)	Kt	1.54 15.7	Nm/A(rms) kgfcm/A(rms)
Winding Resistance (between terminals) (*)	Ra	0.32	Ω
Thermal time constant	t_t	70	min
Static friction	Tf	1.8 18	Nm kgfcm
Weight	w	40	kg
Weight(with 35Nm Brake)	w	46	kg
Max. Current of Servo Amp.	Imax	80	A (peak)

(*) The values are the standard values at 20℃ and the tolerance is ±10%.

The speed-torque characteristics very depending on the type of software,parametersetting,and input voltage of the digital servo software.(The above figures show average values.)

© MyFANUC 2D51CC9CD8564E3B8C4DE377C2D11C41

Model αiF 40/3000HV-B Specification: A06B-2259-B□0□, -B□2□

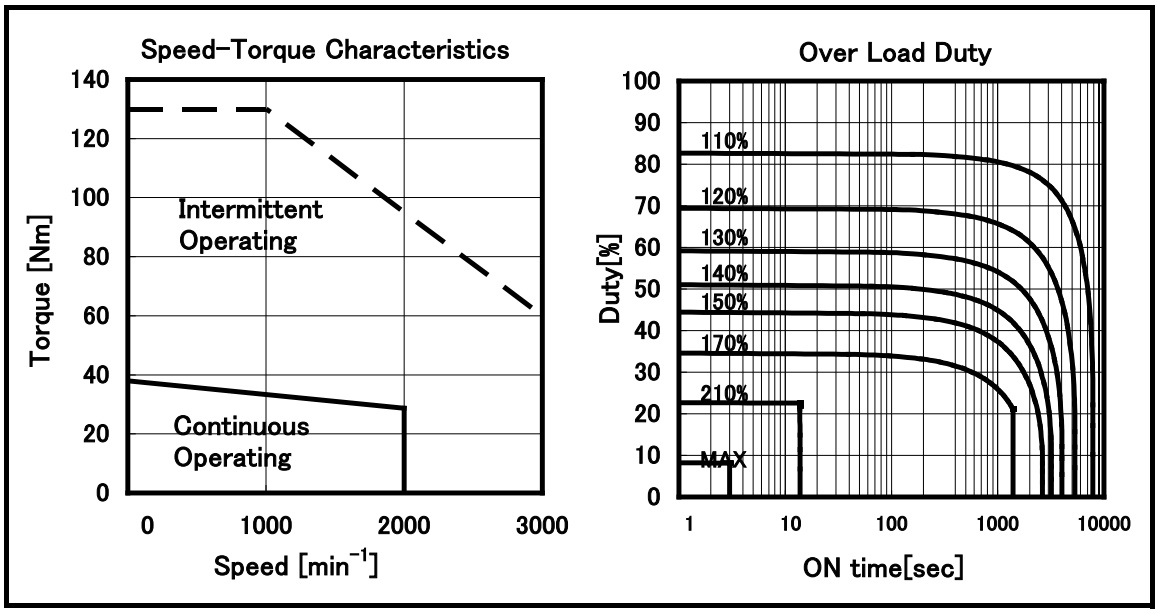

Data sheet

Parameter	Symbol	Value	Unit
Continuous Torque (at low speed) (*)	Tc	38 388	Nm kgfcm
Continuous Current (at low speed) (*)	Ic	16.2	A (rms)
Rated Output (*)	Pr	6.0 8.0	kW HP
Rated Speed	Nr	2000	min^{-1}
Maximum Speed	Nmax	3000	min^{-1}
Maximum Torque (*)	Tmax	130 1330	Nm kgfcm
Moment of Inertia of Rotor	Jm	0.0220 0.224	kgm^2 $kgfcms^2$
Moment of Inertia of Rotor(with 35Nm Brake)	Jm	0.0226 0.231	kgm^2 $kgfcms^2$
Moment of Inertia of Rotor(with 70Nm Brake)	Jm	0.0229 0.233	kgm^2 $kgfcms^2$
Torque Constant (*)	Kt	2.35 24.0	Nm/A(rms) kgfcm/A(rms)
Winding Resistance (between terminals) (*)	Ra	0.54	Ω
Thermal time constant	t_t	75	min
Static friction	Tf	1.8 18	Nm kgfcm
Weight	w	51	kg
Weight(with 35Nm Brake)	w	57	kg
Weight(with 70Nm Brake)	w	61	kg
Max. Current of Servo Amp.	Imax	80	A (peak)

(*) The values are the standard values at 20℃ and the tolerance is ±10%.

The speed-torque characteristics very depending on the type of software,parametersetting,and input voltage of the digital servo software.(The above figures show average values.)

© MyFANUC 2D51CC9CD8564E3B8C4DE377C2D11C41

Model αiF 40/3000HV FAN-B Specification: A06B-2259-B□1□, -B□3□

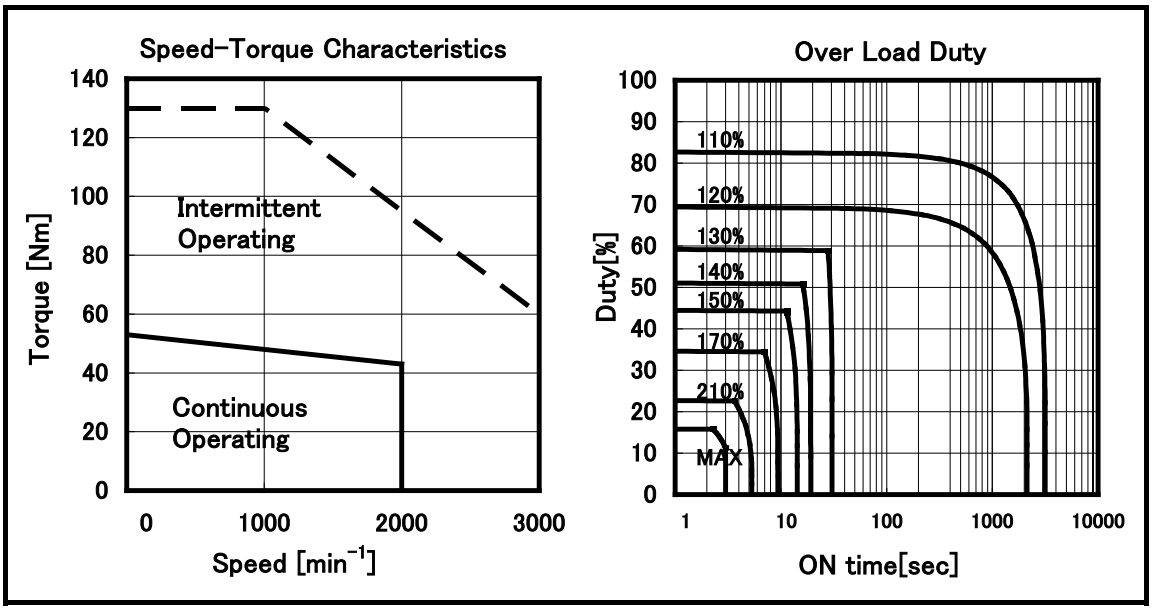

Data sheet

Parameter	Symbol	Value	Unit
Continuous Torque (at low speed) (*)	Tc	53 541	Nm kgfcm
Continuous Current (at low speed) (*)	Ic	22.5	A (rms)
Rated Output (*)	Pr	9.0 12	kW HP
Rated Speed	Nr	2000	min^{-1}
Maximum Speed	Nmax	3000	min^{-1}
Maximum Torque (*)	Tmax	130 1330	Nm kgfcm
Moment of Inertia of Rotor	Jm	0.0220 0.224	kgm^2 $kgfcms^2$
Moment of Inertia of Rotor(with 70Nm Brake)	Jm	0.0229 0.234	kgm^2 $kgfcms^2$
Torque Constant (*)	Kt	2.35 24.0	Nm/A(rms) kgfcm/A(rms)
Winding Resistance (between terminals) (*)	Ra	0.54	Ω
Thermal time constant	t_t	30	min
Static friction	Tf	1.8 18	Nm kgfcm
Weight	w	54	kg
Weight(with 70Nm Brake)	w	64	kg
Max. Current of Servo Amp.	Imax	80	A (peak)

(*) The values are the standard values at 20℃ and the tolerance is ±10%.

The speed-torque characteristics very depending on the type of software,parametersetting,and input voltage of the digital servo software.(The above figures show average values.)

© MyFANUC 2D51CC9CD8564E3B8C4DE377C2D11C41

1.3.3 Outline Drawings

This chapter presents outline drawings of the FANUC AC servo motors.
The shaft shape, allowable axis load, shaft run-out precision, power pin layout, and terminal box are also shown.

This subsection, "Outline Drawings", consists of the following sections:

1.3.3.1 Models αiS 2-B, αiS 4-B, αiS 2HV-B, αiS 4HV-B, and αiF 1-B, αiF 2-B
1.3.3.2 Models αiS 8-B, αiS 12-B, αiS 8HV-B, αiS 12HV-B, αiF 4-B, αiF 8-B, αiF 4HV-B, and αiF 8HV-B
1.3.3.3 Models αiS 22-B to αiS 60-B FAN, αiS 22HV-B to αiS 60HV FAN-B, αiF 12-B to αiF 40 FAN-B, αiF 12HV-B to αiF 40HV FAN-B
1.3.3.4 Models αiS 150-B, αiS 150HV-B
1.3.3.5 Models αiS 300-B, αiS 500-B, αiS 300HV-B, αiS 500HV-B
1.3.3.6 Model αiS 1000/2000HV-B
1.3.3.7 Model αiS 1000/3000HV-B
1.3.3.8 Model αiS 1500/3000HV-B
1.3.3.9 Models αiS 2000HV, αiS 3000HV

© MyFANUC 2D51CC9CD8564E3B8C4DE377C2D11C41

1.3.3.1 Models αiS 2-B, αiS 4-B, αiS 2HV-B, αiS 4HV-B, and αiF 1-B, αiF 2-B

(1) Outline drawing of the motors

(a) Standard

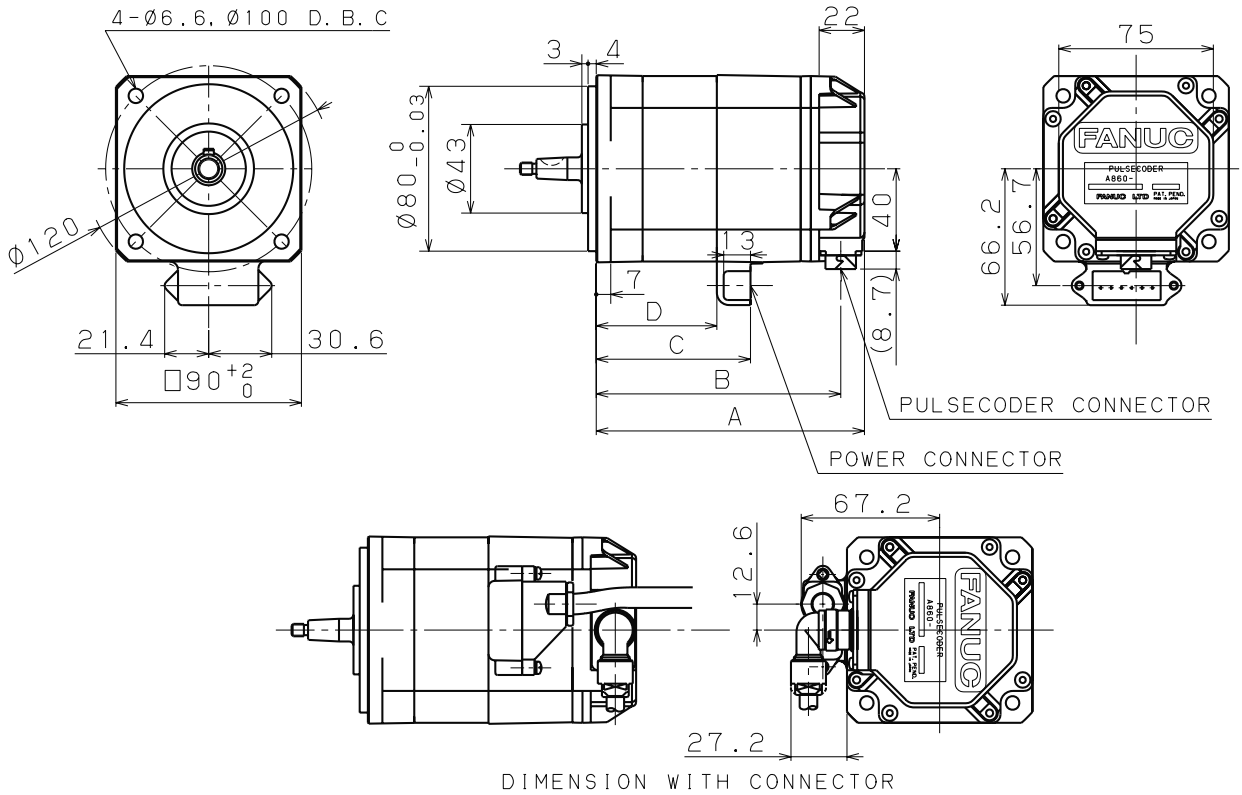

MODEL	A	B	C	D
αiS 2-B, αiS 2HV-B, αiF 1-B	130	119	75	59
αiS 4-B, αiS 4HV-B, αiF 2-B	166	155	111	95

© MyFANUC 2D51CC9CD8564E3B8C4DE377C2D11C41

(b) With a brake

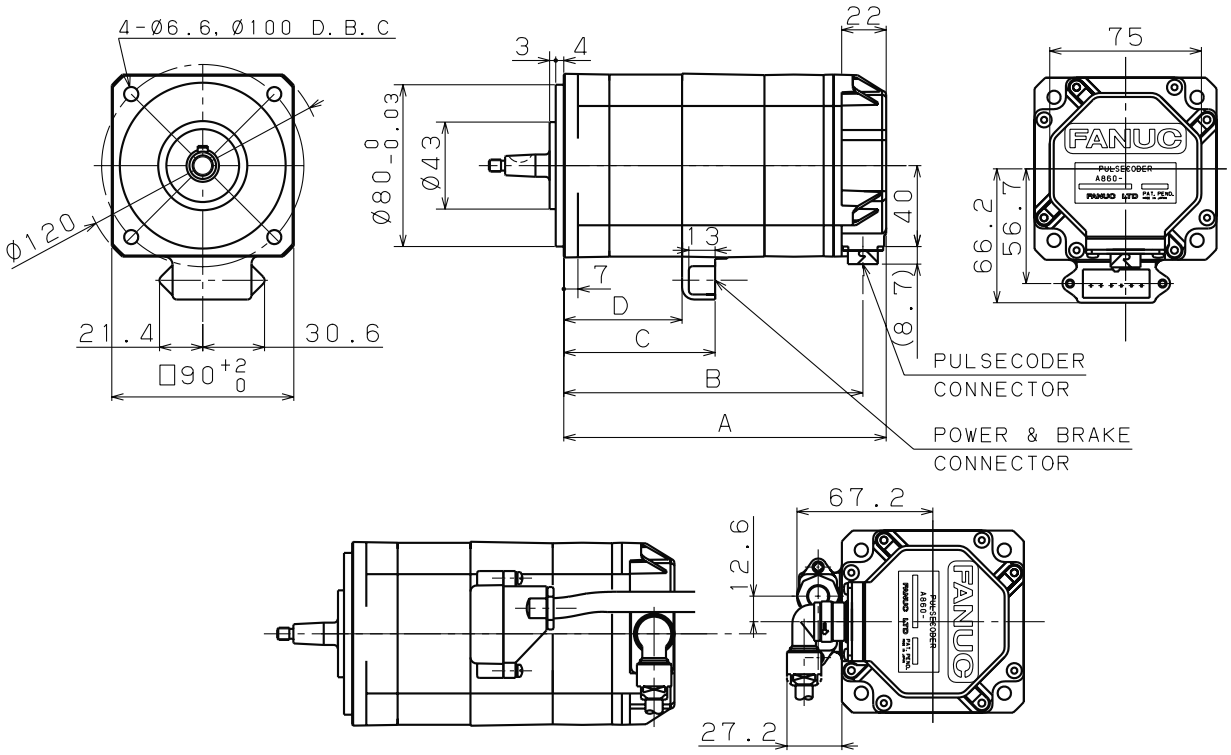

DIMENSION WITH CONNECTOR

MODEL	A	B	C	D
αiS 2-B, αiS 2HV-B, αiF 1-B	159	148	75	59
αiS 4-B, αiS 4HV-B, αiF 2-B	195	184	111	95

© MyFANUC 2D51CC9CD8564E3B8C4DE377C2D11C41

(2) Shaft shape

(a) Shaft shape types

The shafts of the motors have the following shapes:

	Taper shaft	Straight shaft	Straight shaft with key way
αiS 2-B, αiS 2HV-B	ϕ11	ϕ10	ϕ10
αiF 1-B, αiF 2-B	(ϕ14)	(ϕ14)	(ϕ14)
αiS 4-B, αiS 4HV-B	ϕ14	ϕ14	ϕ14

* Shown within parentheses is the option for modification.
It is applicable to A06B-□□□□-B△○▽#0063 or #0163.

(b) Shaft details

- **ϕ11 taper shaft**

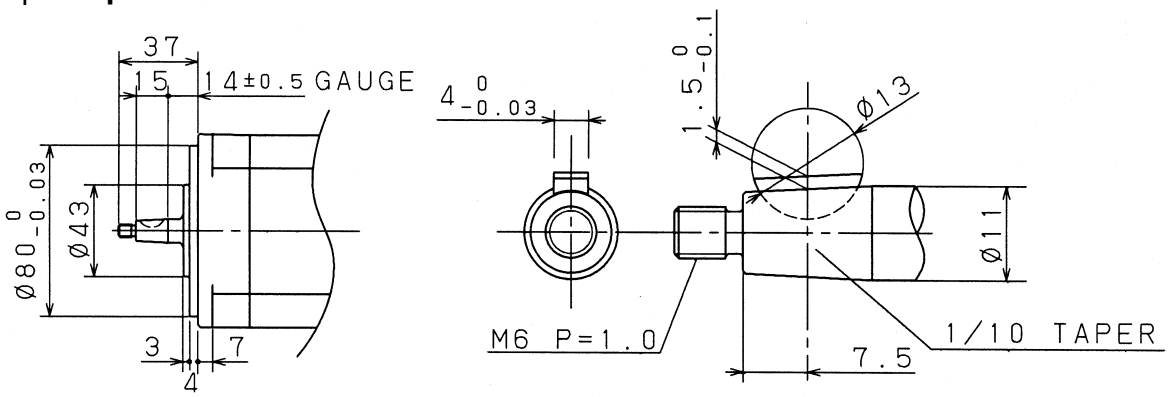

- **ϕ14 taper shaft**

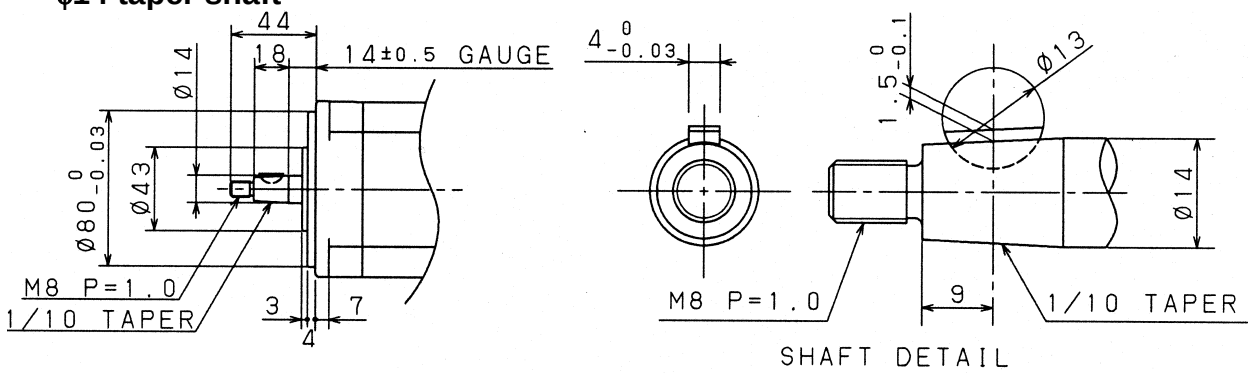

- **ϕ10 straight shaft**

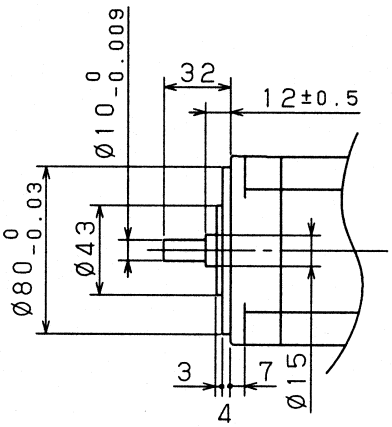

© MyFANUC 2D51CC9CD8564E3B8C4DE377C2D11C41

- **ϕ14 straight shaft**

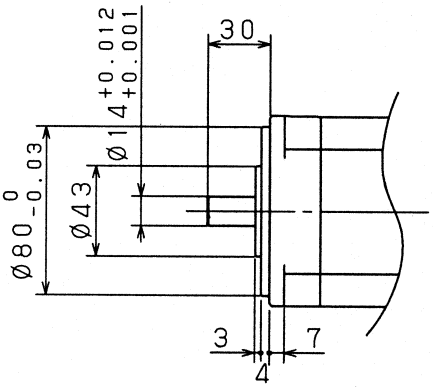

- **ϕ10 straight shaft with key way**

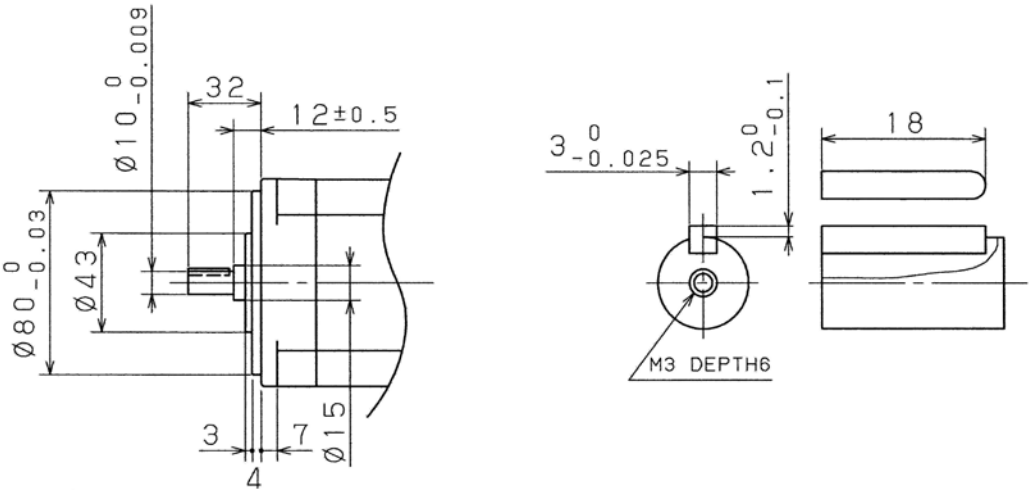

- **ϕ14 straight shaft with key way**

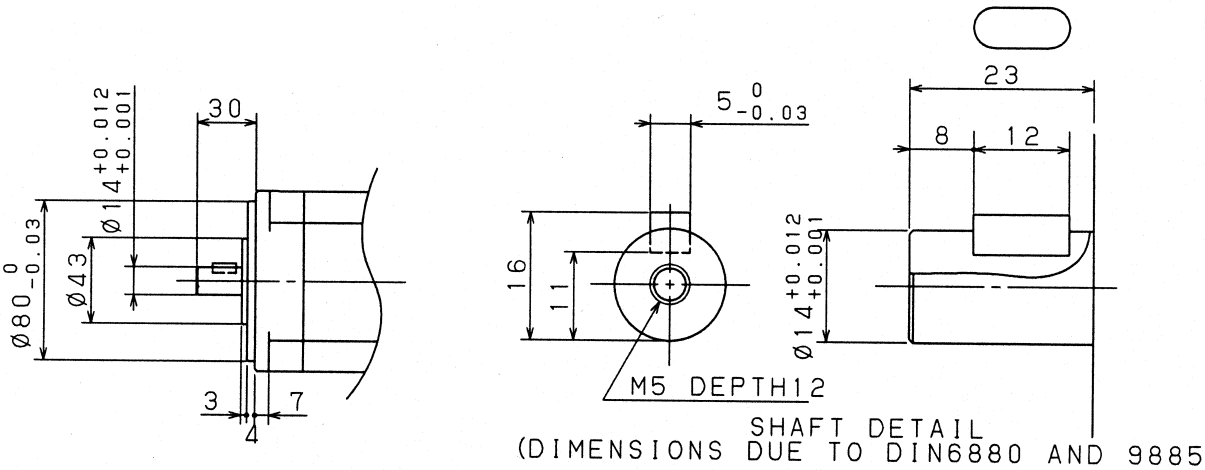

© MyFANUC 2D51CC9CD8564E3B8C4DE377C2D11C41

(3) Allowable axis load

The allowable axis load is indicated below.
If a load exceeding the allowable axis load is applied, the bearing or shaft may be damaged.
For details of the allowable axis load, see Section 3.2, “MOUNTING A SERVO MOTOR”.

Radial load	Axial load	(Reference) Front bearing specification
245[N] (25 [kgf])	78[N] (8 [kgf])	6003

(4) Shaft run-out precision

The shaft run-out precision is indicated below.
For details of the shaft run-out precision, see Section 3.2, “MOUNTING A SERVO MOTOR”.

Shaft dia. run-out	Faucet joint run-out	Mounting face run-out
0.02mm or less	0.04mm or less	0.05mm or less

(5) Power and brake connector

Manufacture : Tyco Electronics Japan G.K.
Manufacturer specification : 1473060-2

The power and brake connector has a water-proof property when engaged with the connector on the cable side.
The following shows the shape and pin layout of the power connector.

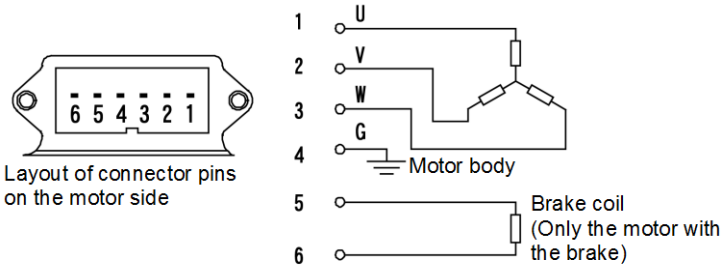

NOTE
No surge absorber for brake is contained in the motor.
Prepare a surge absorber in the power magnetics cabinet.

For the specifications, shape, and pin layout of the pulsecoder connector, see Section 1.4, "FEEDBACK SENSOR".

© MyFANUC 2D51CC9CD8564E3B8C4DE377C2D11C41

1.3.3.2 Models αiS 8-B, αiS 12-B, αiS 8HV-B, αiS 12HV-B, αiF 4-B, αiF 8-B, αiF 4HV-B, and αiF 8HV-B

(1) Outline drawing of the motors

(a) Standard

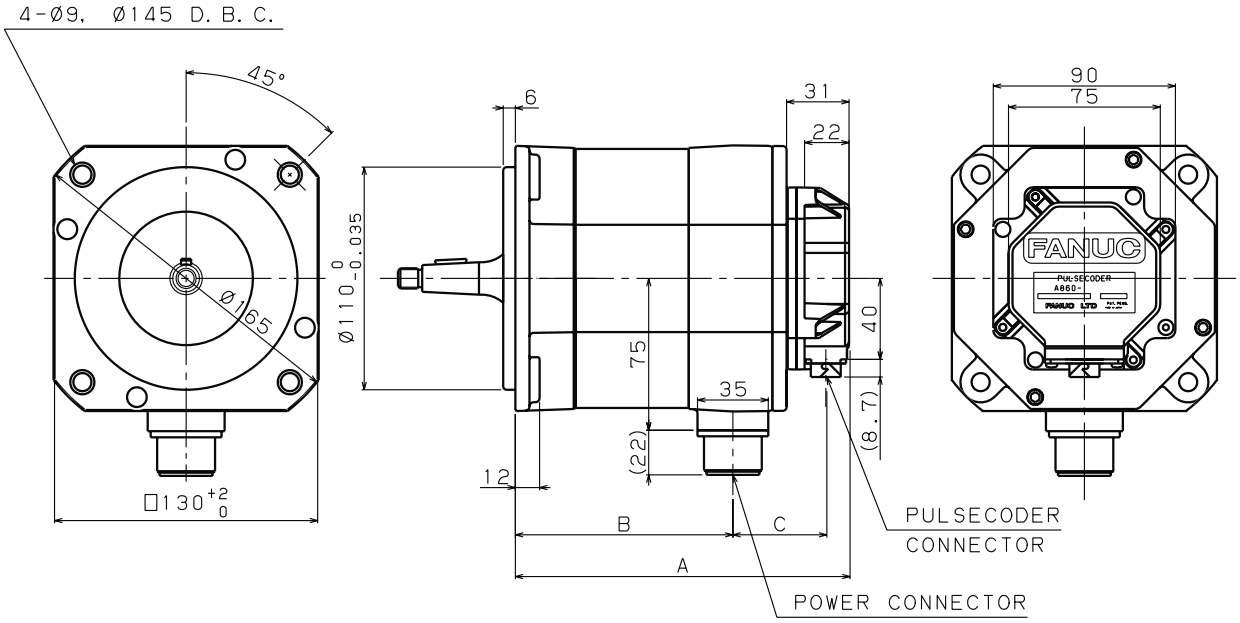

MODEL	A	B	C
αiS 8-B, αiS 8HV-B αiF 4-B, αiF 4HV-B	166	108	47
αiS 12-B, αiS 12HV-B αiF 8-B, αiF 8HV-B	222	164	

© MyFANUC 2D51CC9CD8564E3B8C4DE377C2D11C41

(b) With a brake

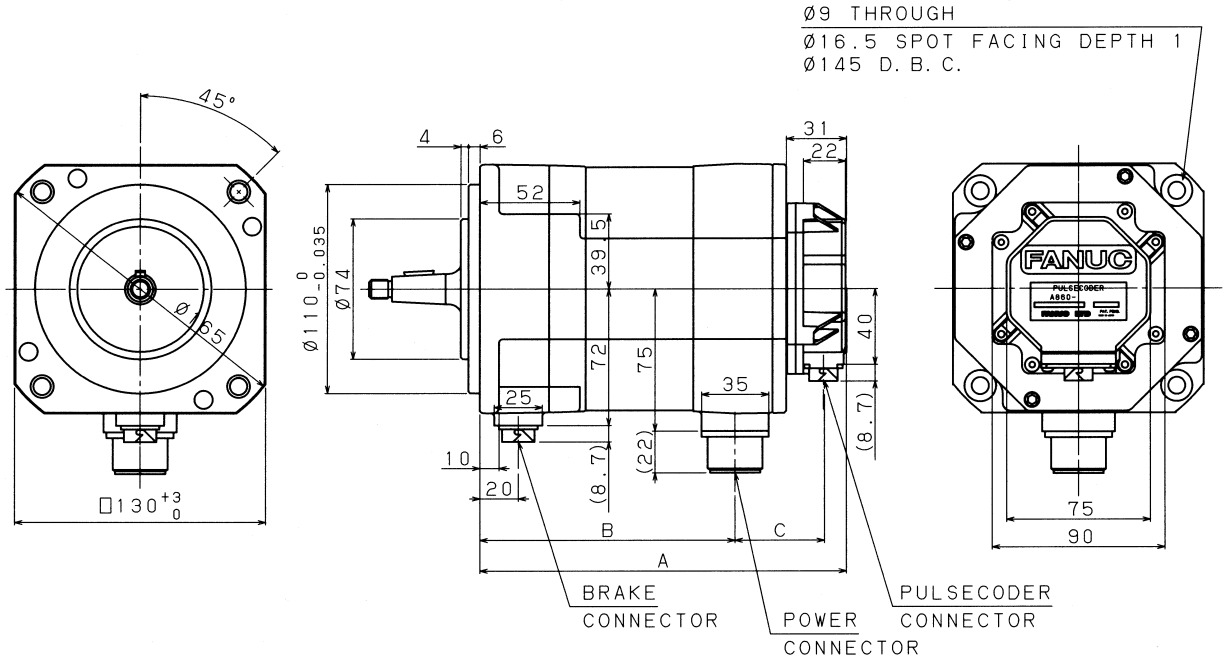

MODEL	A	B	C
αiS 8-B, αiS 8HV-B αiF 4-B, αiF 4HV-B	191	133	47
αiS 12-B, αiS 12HV-B αiF 8-B, αiF 8HV-B	247	189	

© MyFANUC 2D51CC9CD8564E3B8C4DE377C2D11C41

(2) Shaft shape

(a) Shaft shape types

The shafts of the motors have the following shapes:

	Taper shaft	Straight shaft	Straight shaft with key way
αiS 8-B, αiS 8HV-B αiF 4-B, αiF 4HV-B αiF 8-B, αiF 8HV-B	ϕ16	ϕ19	ϕ19
αiS 12-B, αiS 12HV-B	ϕ16 (ϕ24)	ϕ24	ϕ24

* Shown within parentheses is the option for modification.
It is applicable to A06B-□□□□- B△○▽#0063 or #0163.

(b) Shaft details

- **ϕ16 taper shaft (standard)**

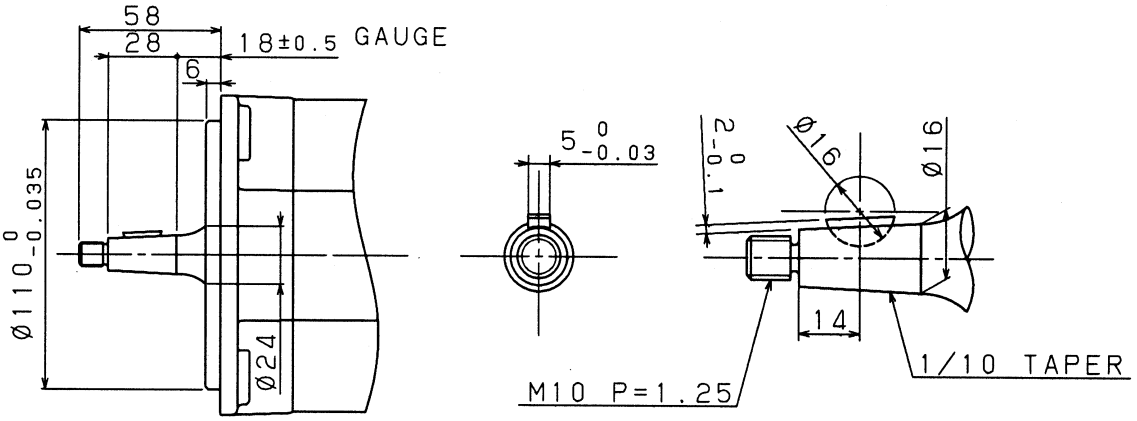

- **ϕ16 taper shaft (with a brake)**

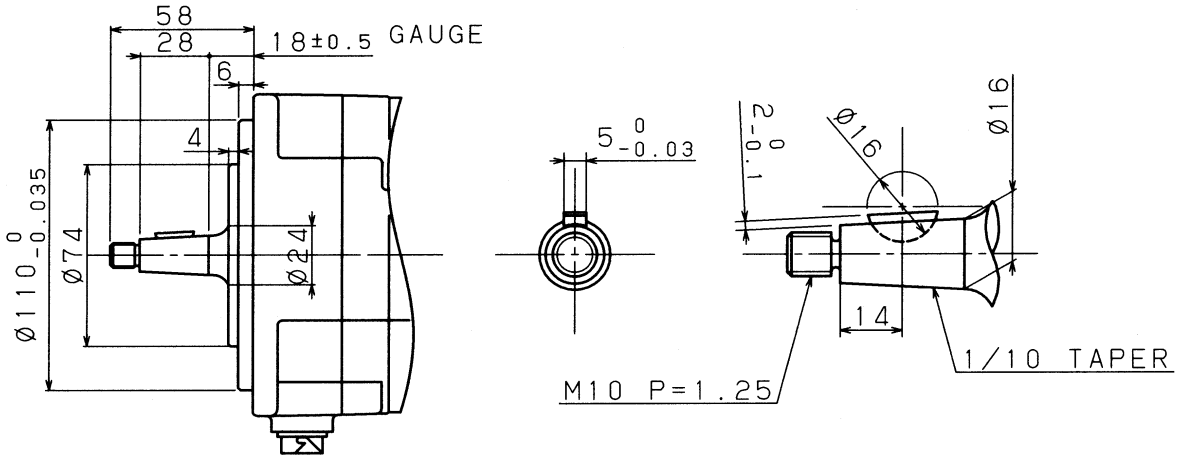

© MyFANUC 2D51CC9CD8564E3B8C4DE377C2D11C41

- **ϕ19 straight shaft (standard)**

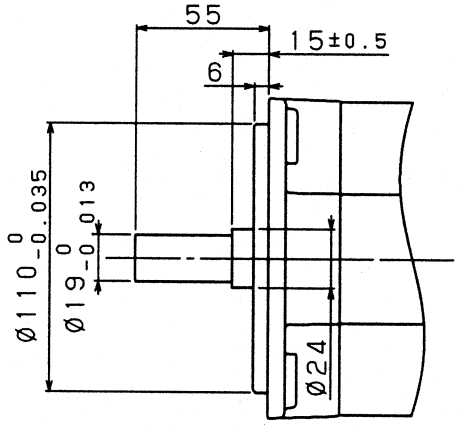

- **ϕ19 straight shaft (with a brake)**

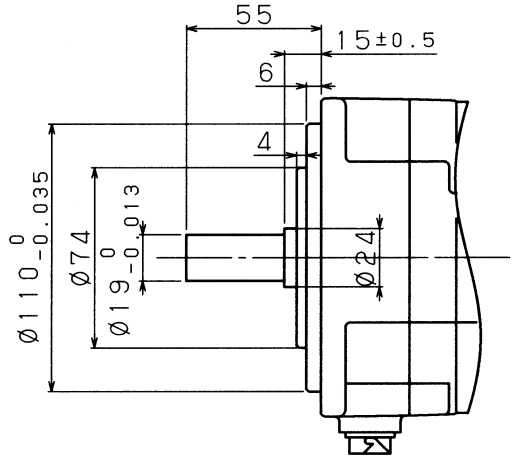

- **ϕ19 straight shaft with key way (standard)**

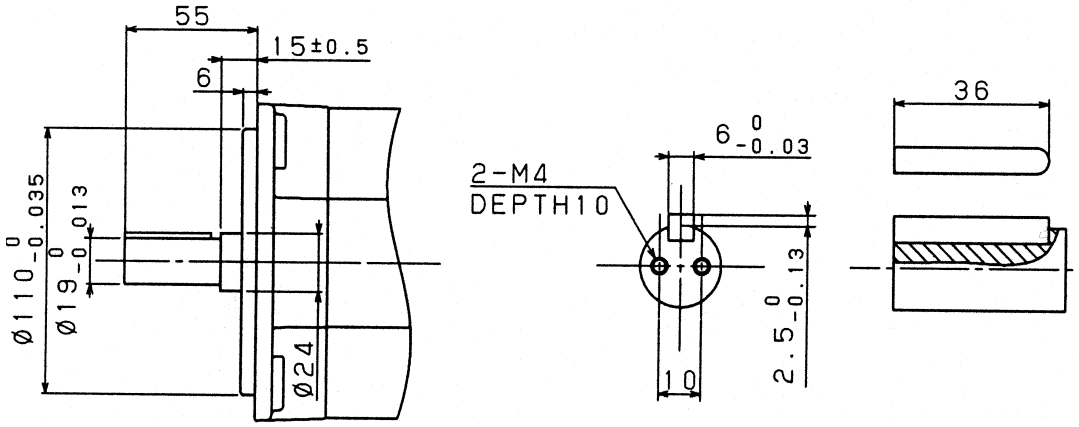

© MyFANUC 2D51CC9CD8564E3B8C4DE377C2D11C41

- **ϕ19 straight shaft with key way (with a brake)**

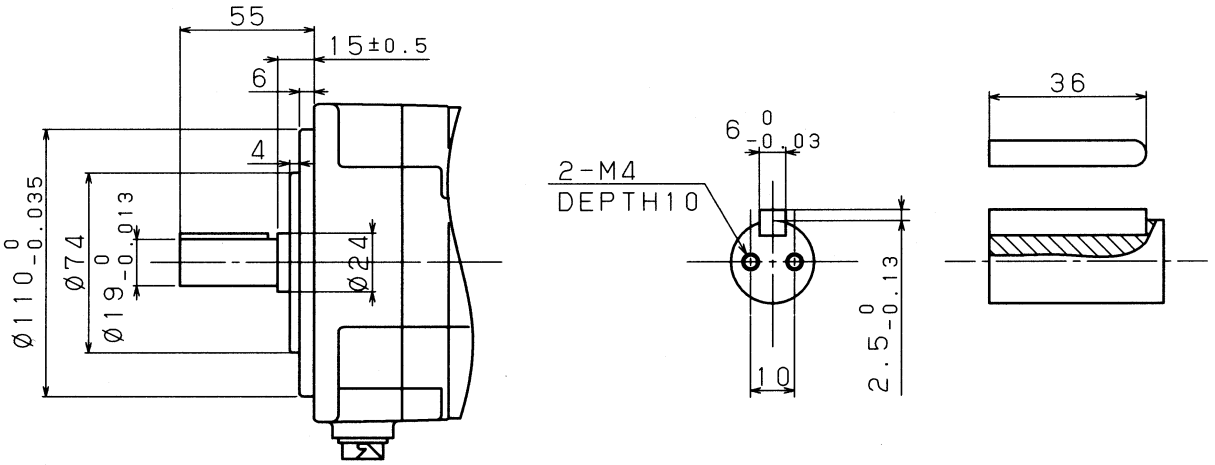

- **ϕ24 taper shaft (standard)**
  (*) Modified specifications; applicable only to αiS12-B and αiS12HV-B

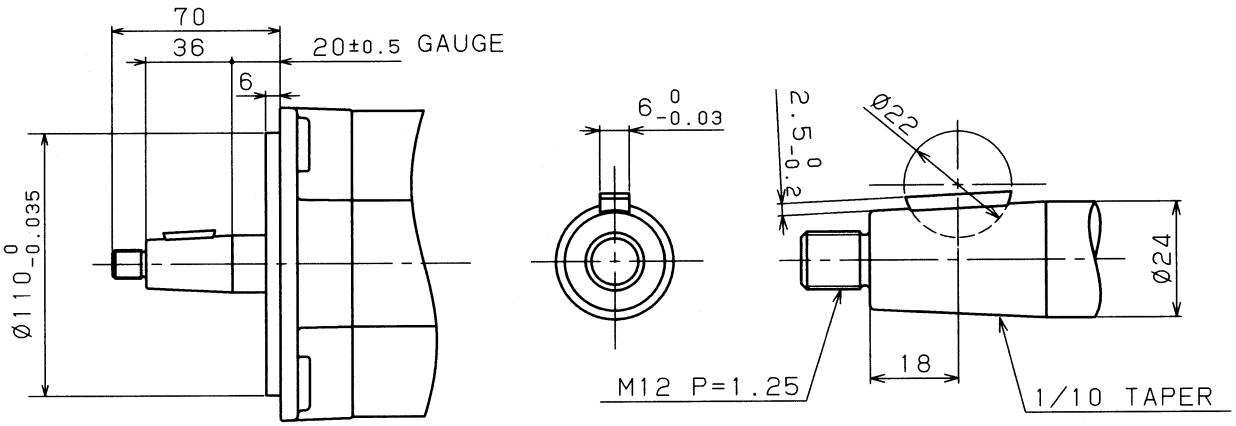

- **ϕ24 taper shaft (with a brake)**
  (*)Modified specifications; applicable only to αiS12-B and αiS12HV-B

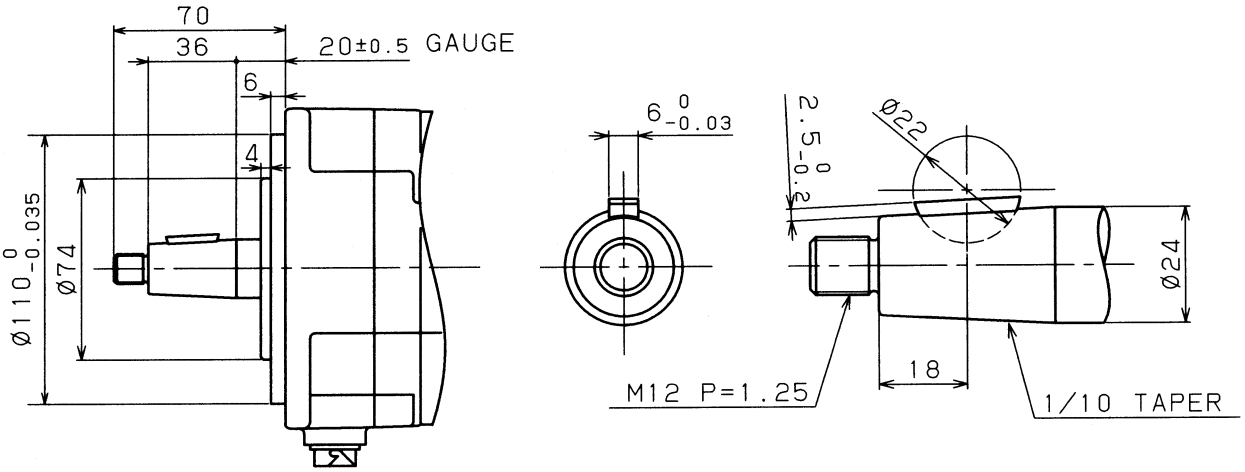

© MyFANUC 2D51CC9CD8564E3B8C4DE377C2D11C41

- **ϕ24 straight shaft (standard)**

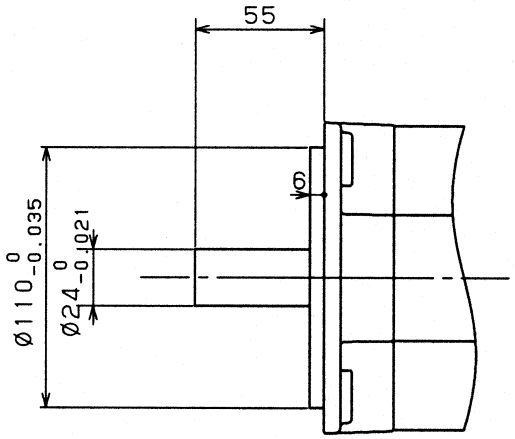

- **ϕ24 straight shaft (with a brake)**

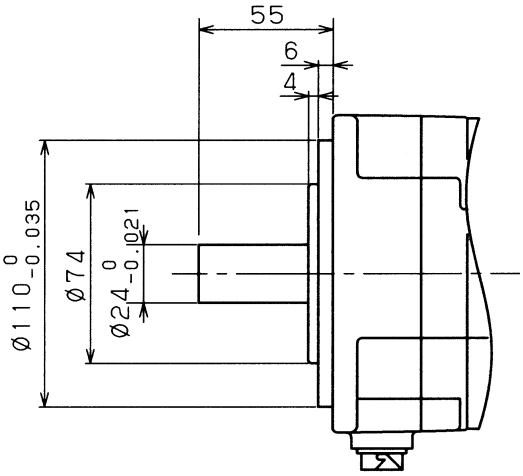

- **ϕ24 straight shaft with key way (standard)**

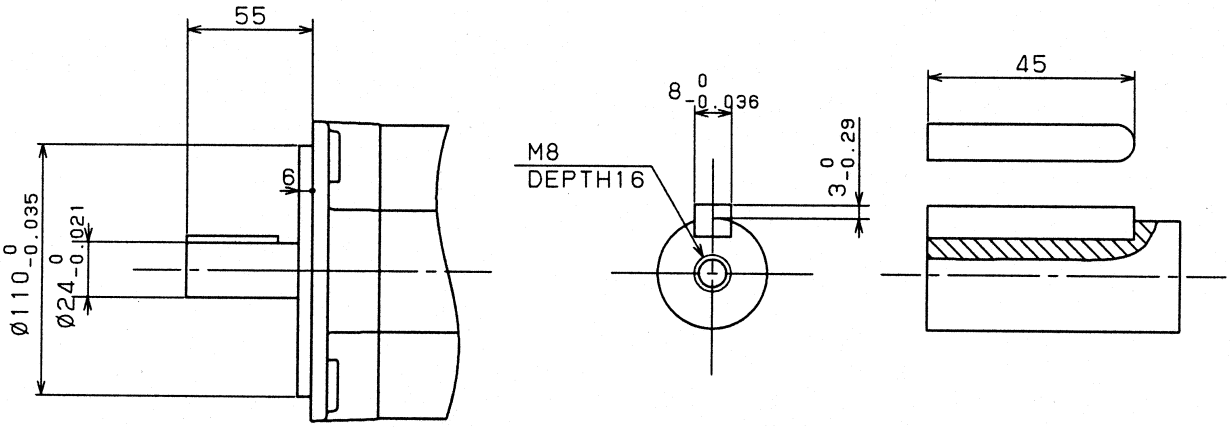

© MyFANUC 2D51CC9CD8564E3B8C4DE377C2D11C41

- **ϕ24 straight shaft with key way (with a brake)**

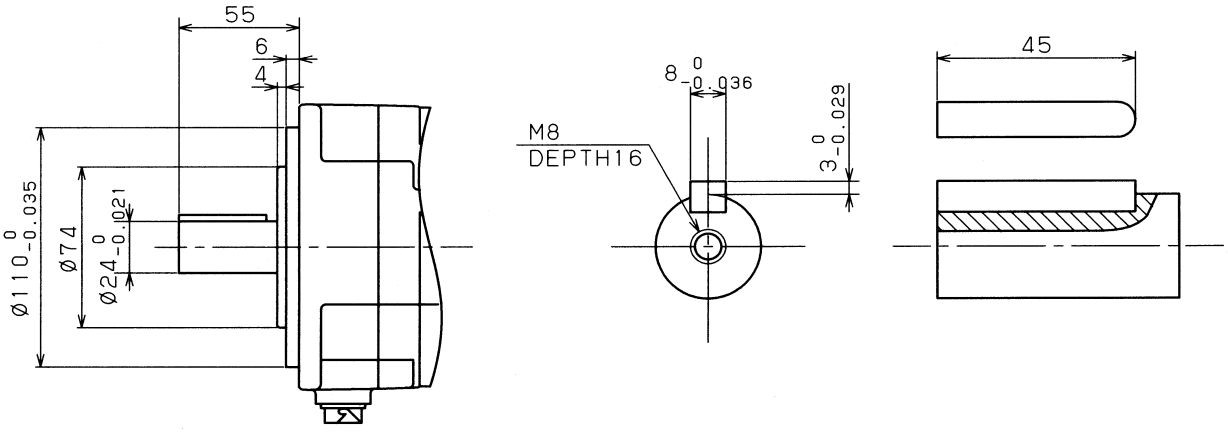

© MyFANUC 2D51CC9CD8564E3B8C4DE377C2D11C41

(3) Allowable axis load

The allowable axis load is indicated below.
If a load exceeding the allowable axis load is applied, the bearing or shaft may be damaged.
For details of the allowable axis load, see Section 3.2, “MOUNTING A SERVO MOTOR”.

Radial load	Axial load	(Reference) Front bearing specification
686[N] (70 [kgf])	196[N] (20 [kgf])	6205

(4) Shaft run-out precision

The shaft run-out precision is indicated below.
For details of the shaft run-out precision, see Section 3.2, “MOUNTING A SERVO MOTOR”.

Shaft dia. run-out	Faucet joint run-out	Mounting face run-out
0.02mm or less	0.04mm or less	0.05mm or less

(5) Power connector

Manufacture: Japan Aviation Electronics Industry
Manufacturer specification: JL10-2E18-10PE

As the power connector a receptacle connector having a water-proof property by itself (when it is not engaged) is used as standard.
Either a bayonet-type connector or screw-type connector can be connected.
Strictly speaking, this power connector does not meet the MS standard, but it can be used as a connector compatible with the MS-standard round connector.
Connecting a plug connector other than those mentioned in this manual may lead to poor waterproof performance. Contact the manufacturer of the connector in question.

The following shows the shape and pin layout of the power connector.

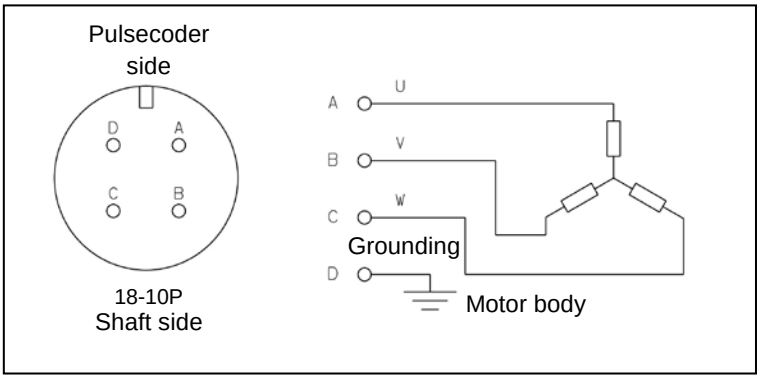

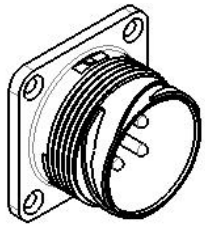

Power connector 18-10P
Applicable models: αiS 8/4000-B, etc.

For the specifications, shapes, and pin layouts of the connectors of the pulsecoder and brake, see Section 1.4, "FEEDBACK SENSOR" and Subsection 1.3.4, “Built-In Brake”.

© MyFANUC 2D51CC9CD8564E3B8C4DE377C2D11C41

1.3.3.3 Models αiS 22-B to αiS 60-B FAN, αiS 22HV-B to αiS 60HV FAN-B, αiF 12-B to αiF 40 FAN-B, αiF 12HV-B to αiF 40HV FAN-B

(1) Outline drawing of the motors

(a) Standard

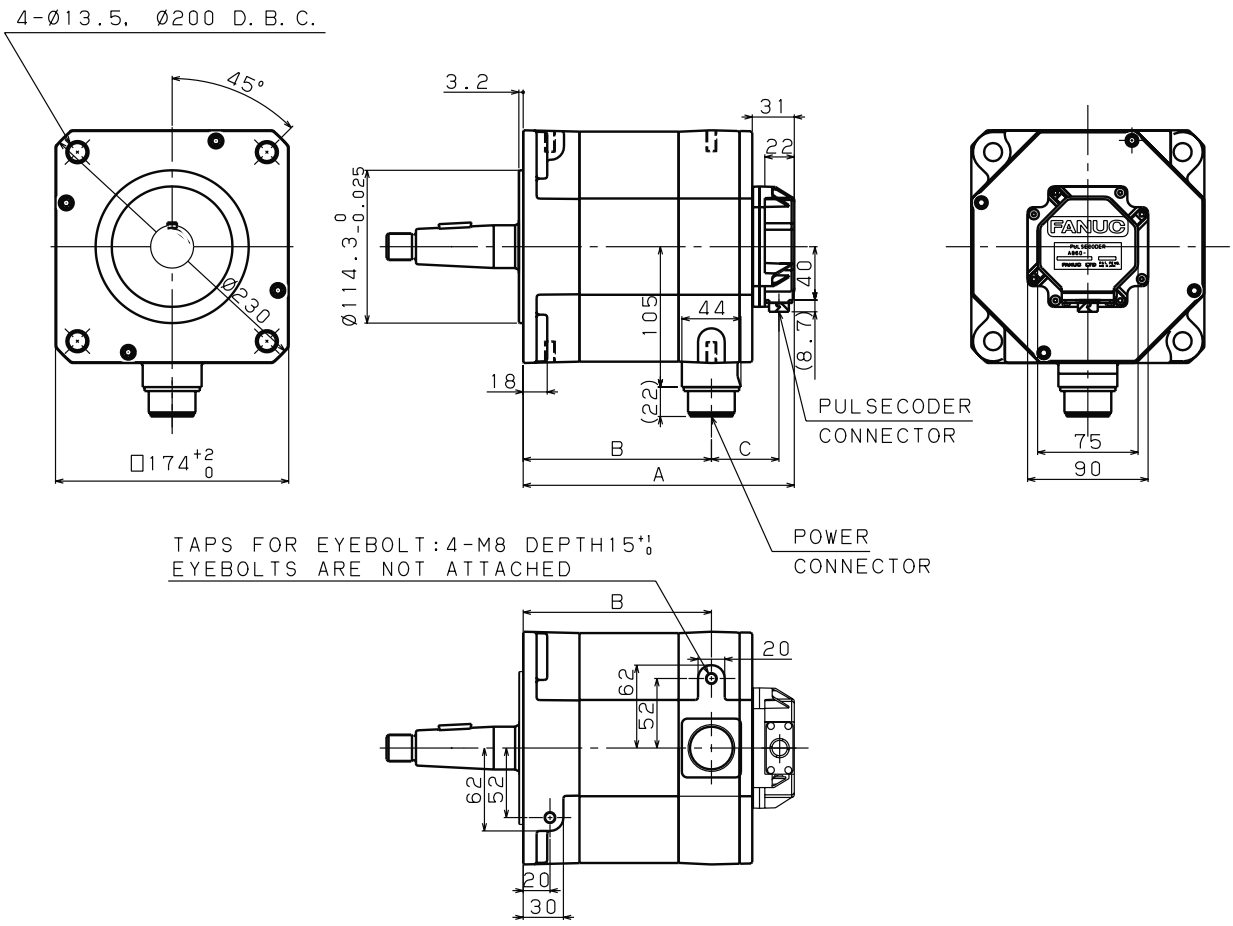

MODEL	A	B	C
αiS 22-B, αiS 22HV-B αiF 12-B, αiF 12HV-B	202	141	50
αiS 30-B, αiS 30HV-B	239	178	
αiS 40-B, αiS 40HV-B αiF 22-B, αiF 22HV-B	276	215	
αiS 50-B, αiS 50HV-B αiF 30-B, αiF 30HV-B	350	289	
αiS 60-B, αiS 60HV-B αiF 40-B, αiF 40HV-B	424	363	

© MyFANUC 2D51CC9CD8564E3B8C4DE377C2D11C41

(b) With a brake

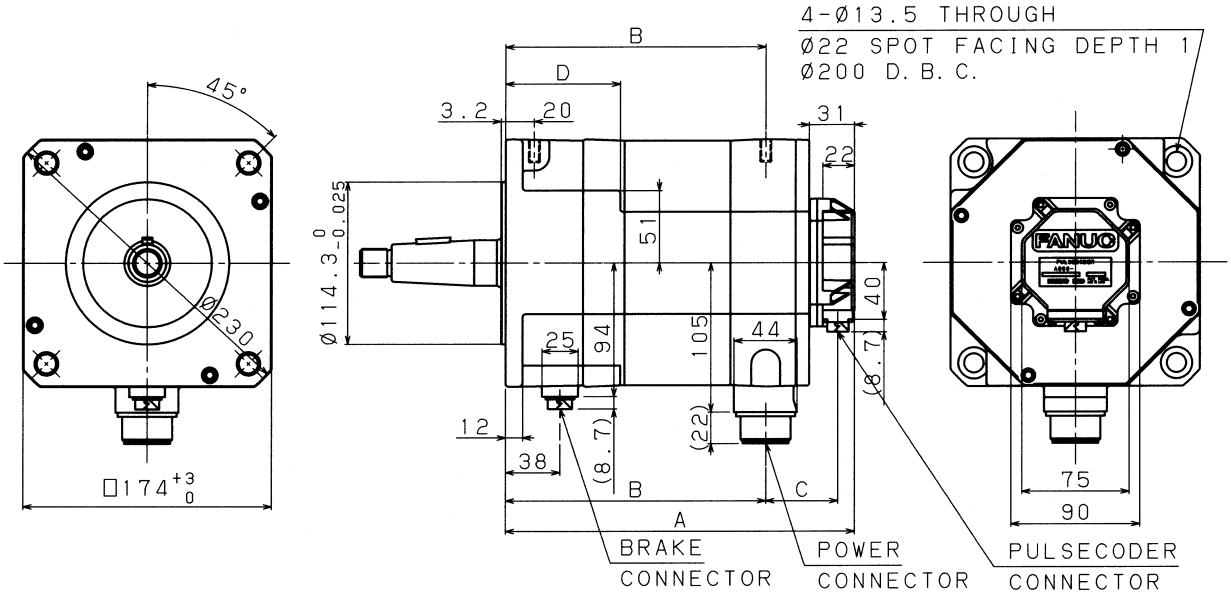

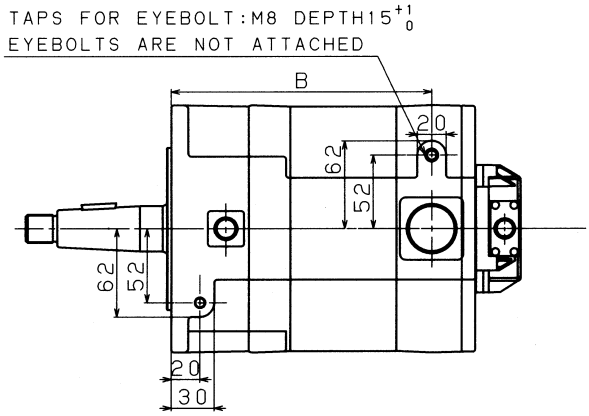

MODEL	Brake	A	B	C	D
αiS 22-B, αiS 22HV-B αiF 12-B, αiF 12HV-B	35Nm	243	182	50	80
αiS 30-B, αiS 30HV-B		280	219		
αiS 40-B, αiS 40HV-B αiF 22-B, αiF 22HV-B		317	256		
αiF 30-B, αiF 30HV-B		391	330		
αiF 40-B, αiF 40HV-B		465	404		
αiS 40-B, αiS 40HV-B	70Nm	342	281	50	105
αiS 50-B, αiS 50HV-B		416	355		
αiS 60-B, αiS 60HV-B αiF 40-B, αiF 40HV-B		490	429		

© MyFANUC 2D51CC9CD8564E3B8C4DE377C2D11C41

(c) With a fan

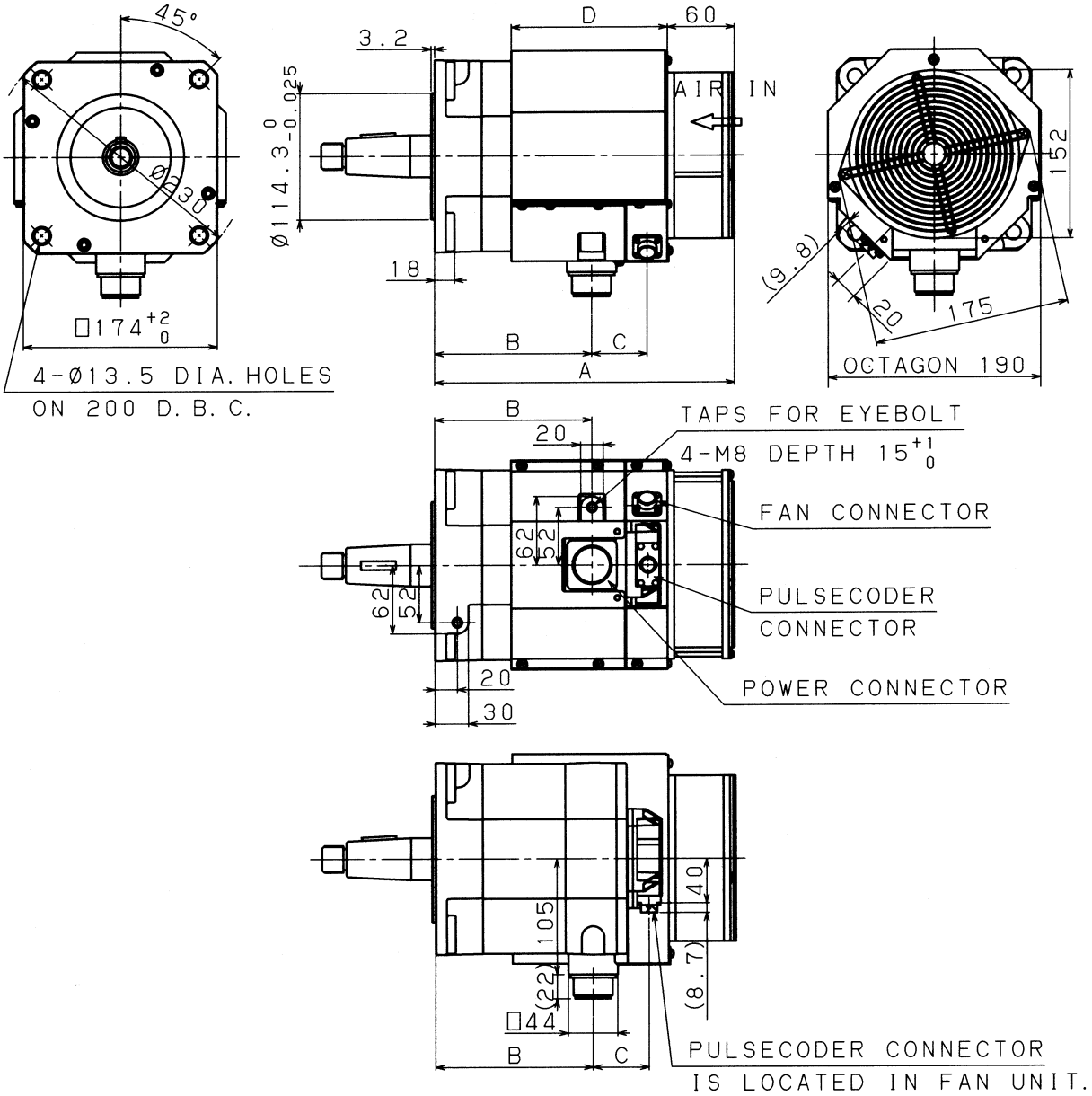

MODEL	A	B	C	D
αiS 50 FAN-B, αiS 50HV FAN-B	416	289	50	288
αiS 60 FAN-B, αiS 60HV FAN-B αiF 40 FAN-B, αiF 40HV FAN-B	490	363		

The motor does not include a circuit breaker for protecting the fan. Prepare such a circuit breaker in the power magnetics cabinet.

© MyFANUC 2D51CC9CD8564E3B8C4DE377C2D11C41

(d) With a fan and brake

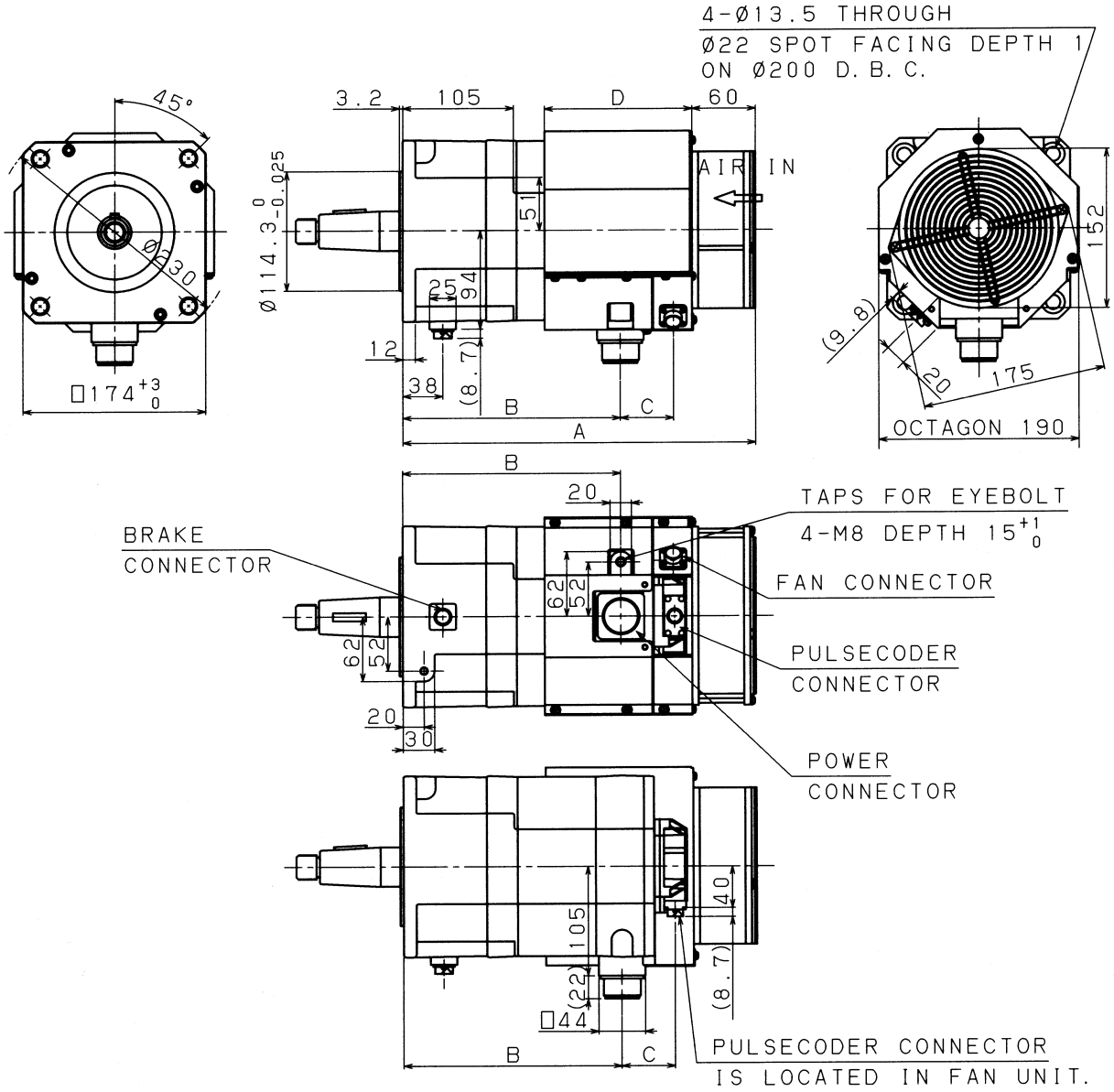

MODEL	Brake	A	B	C	D
αiS 50 FAN-B, αiS 50HV FAN-B	70Nm	482	355	50	288
αiS 60 FAN-B, αiS 60HV FAN-B αiF 40 FAN-B, αiF 40HV FAN-B		556	429		

The motor does not include a circuit breaker for protecting the fan. Prepare such a circuit breaker in the power magnetics cabinet.

© MyFANUC 2D51CC9CD8564E3B8C4DE377C2D11C41

(2) Shaft shape

(a) Shaft shape types

The shafts of the motors have the following shapes:

	Taper shaft	Straight shaft	Straight shaft with key way
αiS 22-B, αiS 22HV-B αiS 30-B, αiS 30HV-B αiS 40-B, αiS 40HV-B αiF 12-B, αiF 12HV-B αiF 22-B, αiF 22HV-B αiF 30-B, αiF 30HV-B	ϕ 32	ϕ 35	ϕ 35
αiS 50-B, αiS 50HV-B αiS 60-B, αiS 60HV-B (including models with a fan)	ϕ 38	ϕ 35	—
αiF 40-B, αiF 40HV-B (including models with a fan)	ϕ 38	ϕ 35	ϕ 35

(b) Shaft details

- **ϕ32 taper shaft**

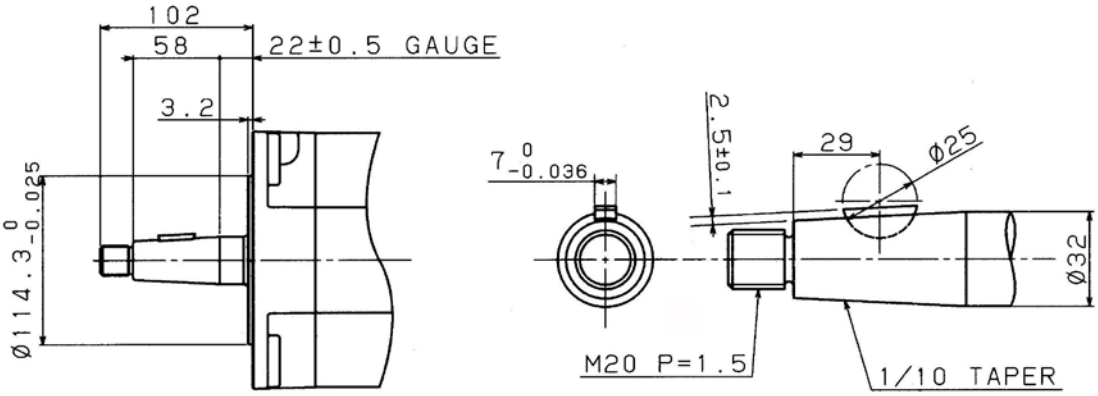

- **ϕ38 taper shaft**

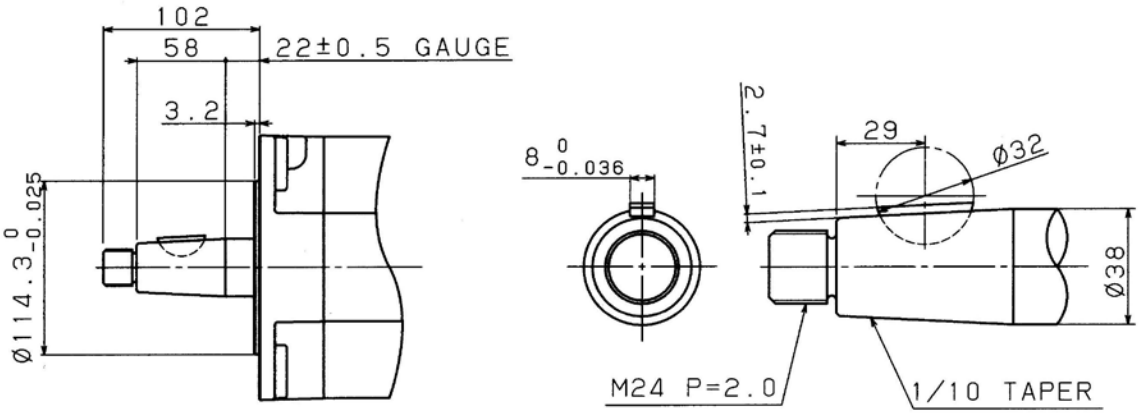

© MyFANUC 2D51CC9CD8564E3B8C4DE377C2D11C41

- **ϕ35 straight shaft**

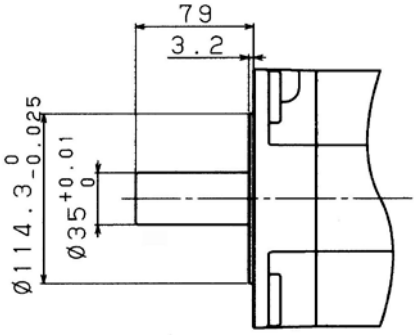

- **ϕ35 straight shaft with key way**

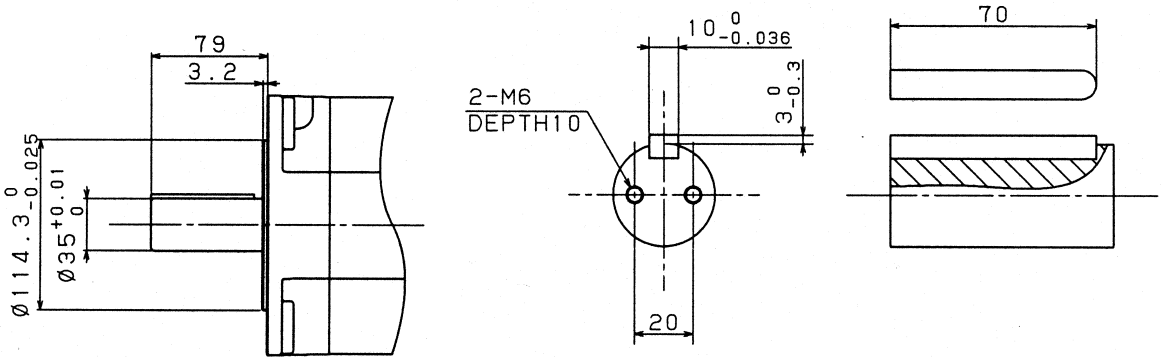

© MyFANUC 2D51CC9CD8564E3B8C4DE377C2D11C41

(3) Allowable axis load

The allowable axis load is indicated below.
If a load exceeding the allowable axis load is applied, the bearing or shaft may be damaged.
For details of the allowable axis load, see Section 3.2, “MOUNTING A SERVO MOTOR”.

Radial load	Axial load	(Reference) Front bearing specification
1960[N] (200 [kgf])	588[N] (60 [kgf])	6208

(4) Shaft run-out precision

The shaft run-out precision is indicated below.
For details of the shaft run-out precision, see Section 3.2, “MOUNTING A SERVO MOTOR”.

Shaft dia. run-out	Faucet joint run-out	Mounting face run-out
0.03mm or less	0.05mm or less	0.06mm or less

(5) Power connector

(a)Types of power connectors

The following power connectors are used for the motors:

Motor	Power connector
αiS 22/4000-B, αiS 22/6000-B αiS 30/4000-B, αiS 40/4000-B αiS 50/2000-B, αiS 60/2000-B	MS 22-22P compatible connector
αiS 50/3000-B, αiS 50/3000 FAN-B αiS 60/3000-B, αiS 60/3000 FAN-B	MS 24-10P compatible connector
αiS 22/4000HV-B, αiS 22/6000HV-B αiS 30/4000HV-B, αiS 40/4000HV-B αiS 50/2000HV-B, αiS 60/2000HV-B	MS 22-22P compatible connector
αiS 50/3000HV-B, αiS 50/3000HV FAN-B αiS 60/3000HV-B, αiS 60/3000HV FAN-B	MS 22-22P compatible connector
αiF 12/4000-B, αiF 22/3000-B αiF 22/4000-B, αiF 30/4000-B αiF 40/3000-B αiF 40/3000 FAN-B	MS 22-22P compatible connector
αiF 12/4000HV-B, αiF 22/3000HV-B αiF 22/4000HV-B, αiF 30/4000HV-B αiF 40/3000HV-B αiF 40/3000HV FAN-B	MS 22-22P compatible connector

© MyFANUC 2D51CC9CD8564E3B8C4DE377C2D11C41

- MS22-22P compatible connector

Manufacture: Japan Aviation Electronics Industry
Manufacturer specification: JL10-2E22-22PE

As the power connector a receptacle connector having a water-proof property by itself (when it is not engaged) is used as standard.
Either a bayonet-type connector or screw-type connector can be connected.
Strictly speaking, this power connector does not meet the MS standard, but it can be used as a connector compatible with the MS-standard round connector.
Connecting a plug connector other than those mentioned in this manual may lead to poor waterproof performance. Contact the manufacturer of the connector in question.

The following shows the specification, shape, and pin layout of the power connector.

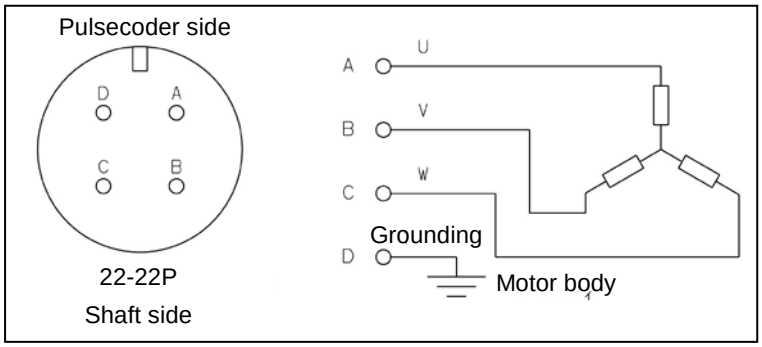

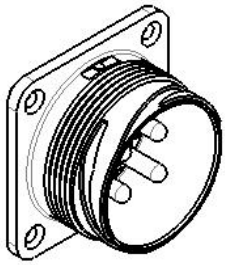

Power connector: 22-22P
Applicable models: αiS 22/4000-B, etc.

- MS24-10P compatible connector

Manufacture: Japan Aviation Electronics Industry
Manufacturer specification: JL04V-2E24-10PE(G)-B-R

As the power connector a receptacle connector having a water-proof property by itself (when it is not engaged) is used as standard.
Strictly speaking, this power connector does not meet the MS standard, but it can be used as a connector compatible with the MS-standard round connector.

The following shows the specification, shape, and pin layout of the power connector.

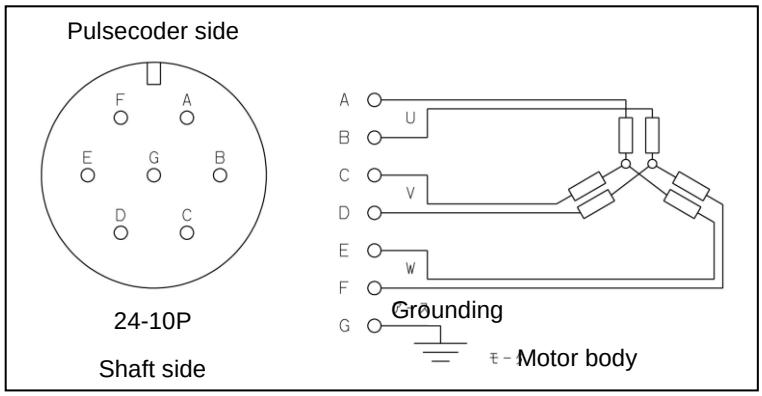

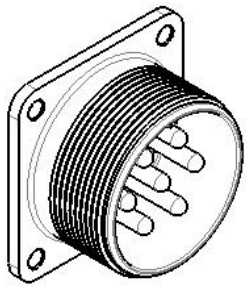

Power connector: 24-10P
Applicable models: αiS 50/3000 FAN-B, etc.

For the specifications, shapes, and pin layouts of the connectors of the pulsecoder, brake, and fan, see Section 1.4, “FEEDBACK SENSOR”, Subsection 1.3.4, “Built-In Brake”, and Subsection 1.3.5, “Cooling Fan”.

© MyFANUC 2D51CC9CD8564E3B8C4DE377C2D11C41

1.3.3.4 Models αiS150-B, αiS 150HV-B

(1) Outline drawing of the motors

(a) Standard

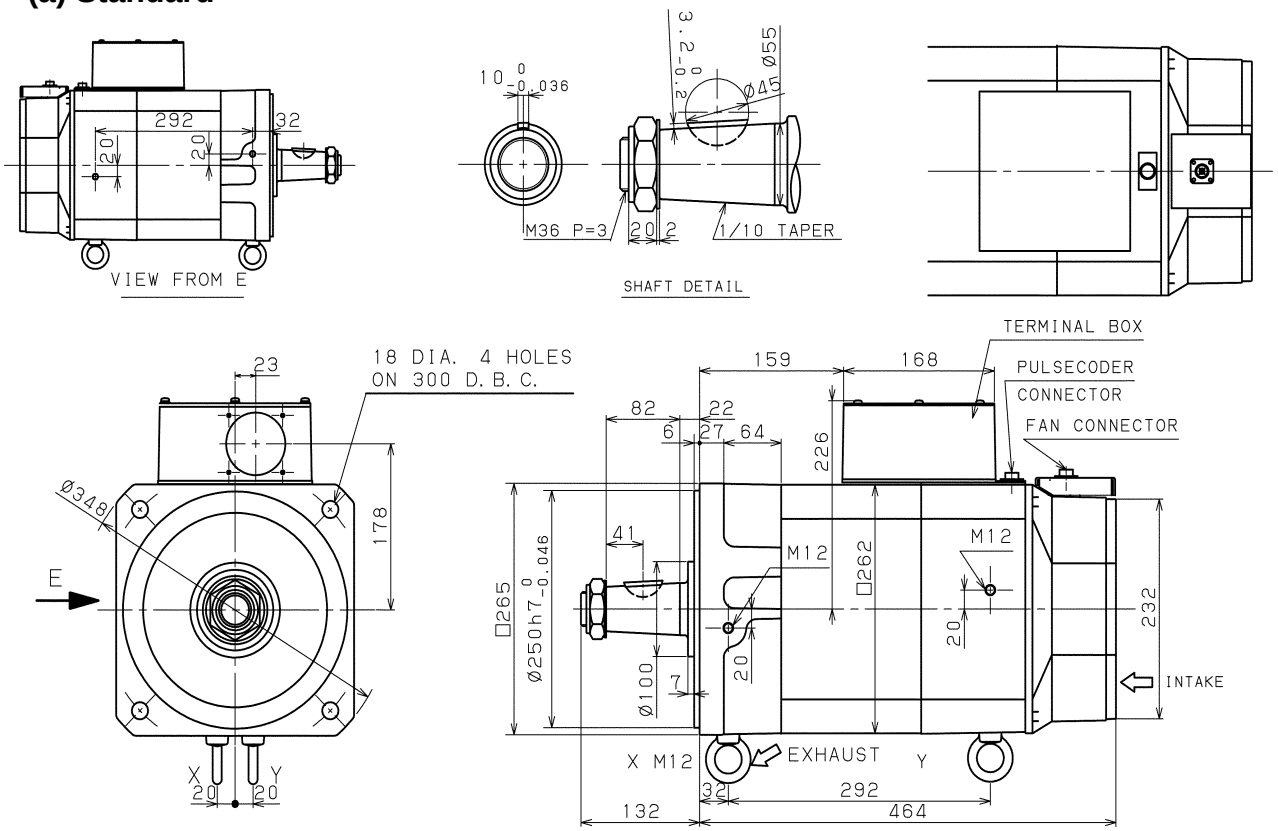

The motor does not include a circuit breaker for protecting the fan. Prepare such a circuit breaker in the power magnetics cabinet.

(2) Allowable axis load

The allowable axis load is indicated below.
If a load exceeding the allowable axis load is applied, the bearing or shaft may be damaged.
For details of the allowable axis load, see Section 3.2, “MOUNTING A SERVO MOTOR”.

Radial load	Axial load	(Reference) Front bearing specification
5880[N] (600 [kgf])	1960[N] (200 [kgf])	6314

(3) Shaft run-out precision

The shaft run-out precision is indicated below.
For details of the shaft run-out precision, see Section 3.2, “MOUNTING A SERVO MOTOR”.

Shaft dia. run-out	Faucet joint run-out	Mounting face run-out
0.06mm or less	0.06mm or less	0.08mm or less

© MyFANUC 2D51CC9CD8564E3B8C4DE377C2D11C41

(4) Power Terminal Layout

The following shows the power terminal layout in the terminal box.

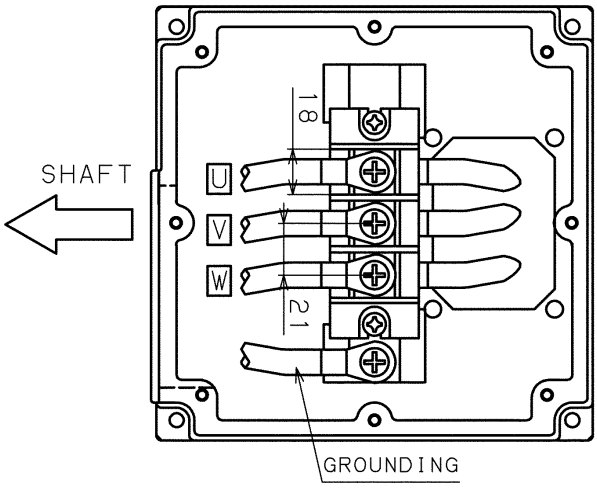

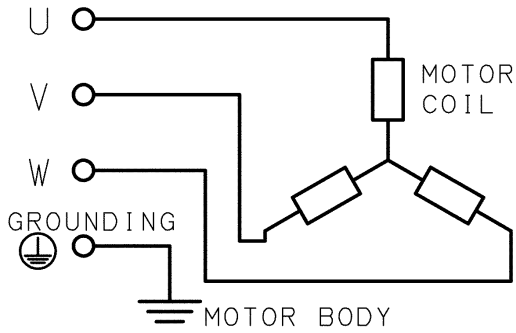

Power terminal size and ground terminal size: M6
Tightening torque: 3.5 to 4.5Nm

⚠ CAUTION

1 Securely connect power wires and short bars to the terminal block with the specified tightening torque according to the procedure described in this section. If the motor runs with a terminal loosely connected, the terminal block may get abnormally hot, resulting in a fire. The terminal may also be disconnected, resulting in a ground fault, short circuit, or electric shock.

2 To keep the insulation distance, note the following points:
When attaching a crimp terminal to the end of a power wire, always cover the crimping section of the crimp terminal with an insulating tube.
When an insulating cover is mounted on the terminal block, screw the power wires and remount the cover in place before using the motor.

© MyFANUC 2D51CC9CD8564E3B8C4DE377C2D11C41

(5) Cabling

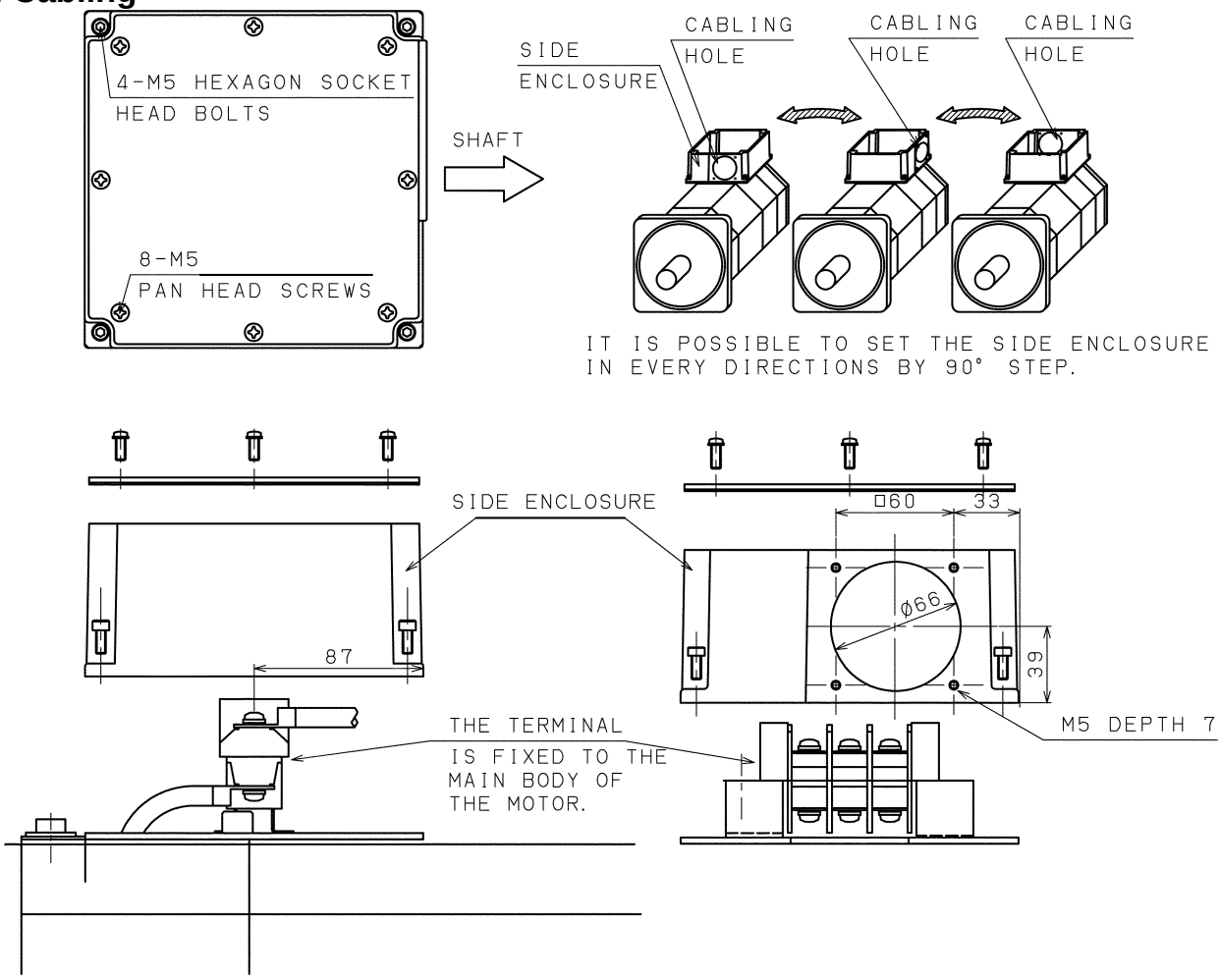

1. Before cabling, the motor can be dismantled by removing the four M5 hexagon socket head bolts. At the time of installation, check that the waterproofing rubber packing is not damaged, then install it with a tightening torque of 2.0 N·m to 2.5 N·m. At this time, ensure that foreign matter is not caught.
2. To meet the IP level, a protection such as a conduit is required for the cabling hole. For details, refer to Subsection 3.3.2, "Usage Considering Environmental Resistance" in FANUC AC SERVO MOTOR α*i*-B series DESCRIPTIONS (B-65262EN).
3. The enclosure of the terminal box can be oriented in any direction in steps of 90°.
4. The four M5 hexagon socket head bolts fixing the enclosure of the terminal box may be loosened due to the cable weight and vibration applied to the terminal box. Thus, apply threadlocking adhesive (medium strength). Even if the orientation of the enclosure is not to be changed, remove the hexagon socket head bolts fixing the enclosure, and apply threadlocking adhesive.
5. For the specifications, shapes, and pin layouts of the connectors of the pulsecoder and fan, see Section 1.4, "FEEDBACK SENSOR" and Subsection 1.3.5, "Cooling Fan".

© MyFANUC 2D51CC9CD8564E3B8C4DE377C2D11C41

1.3.3.5 Models αiS 300-B, αiS 500-B, αiS 300HV-B, αiS 500HV-B

(1) Outline drawing of the motors

(a) Standard

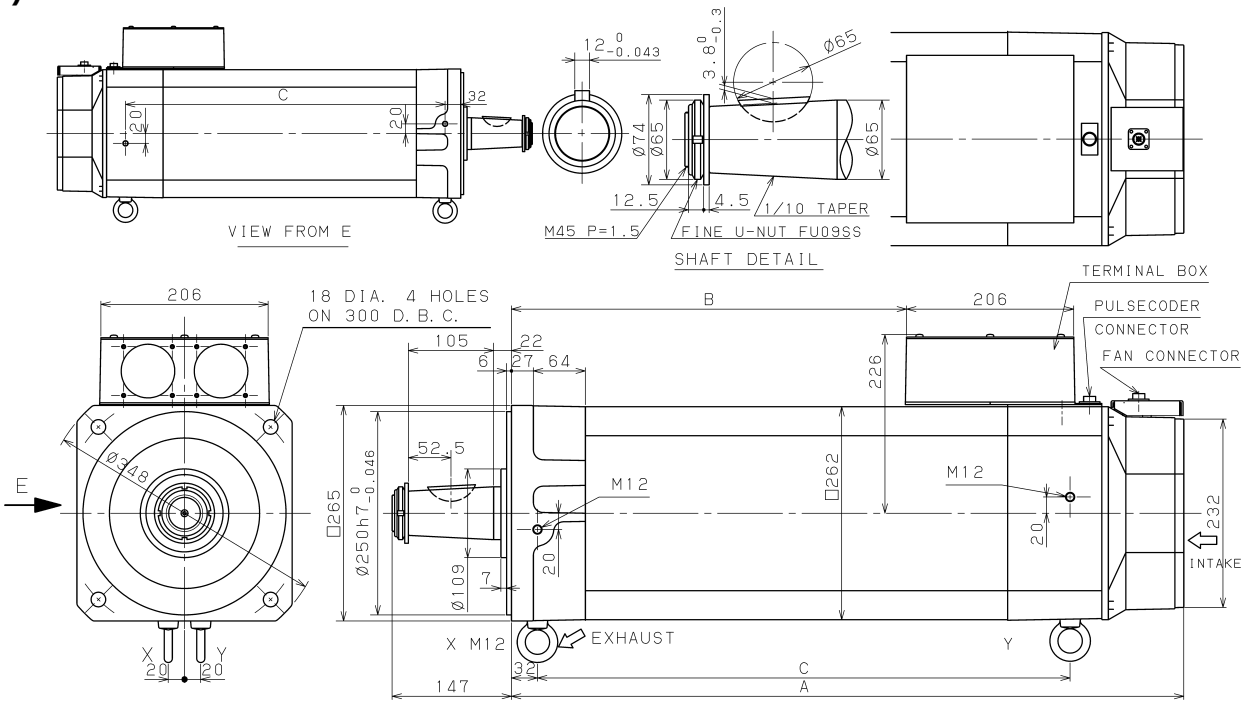

MODEL	A	B	C
αiS 300-B, αiS 300HV-B	620	279	448
αiS 500-B, αiS 500HV-B	828	487	656

The motor does not include a circuit breaker for protecting the fan. Prepare such a circuit breaker in the power magnetics cabinet.

(2) Allowable axis load

The allowable axis load is indicated below.
If a load exceeding the allowable axis load is applied, the bearing or shaft may be damaged.
For details of the allowable axis load, see Section 3.2, “MOUNTING A SERVO MOTOR”.

Bearing type (Motor specification number)	Radial load	Axial load	(Reference) Front bearing specification
Cylindrical roller bearing type (A06B-2□□□-B010)	11760[N] (1200 [kgf])	1960[N] (200 [kgf])	NU2214
Ball bearing type (A06B-2□□□-B050)	5880[N] (600 [kgf])	1960[N] (200 [kgf])	6314

When the maximum radial load is up to 600 kgf as the use condition, use the ball bearing type.
(Example: Direct connection structure with a flexible coupling or rigid coupling)
When the maximum radial load exceeds 600 kgf as the use condition, use the cylindrical roller bearing type. (Example: Connection structure with timing belts and gears)

© MyFANUC 2D51CC9CD8564E3B8C4DE377C2D11C41

(3) Shaft run-out precision

The shaft run-out precision is indicated below.
For details of the shaft run-out precision, see Section 3.2, “MOUNTING A SERVO MOTOR”.

Shaft dia. run-out	Faucet joint run-out	Mounting face run-out
0.06mm or less	0.06mm or less	0.08mm or less

(4) Power Terminal Layout (for αiS 300-B and αiS 500-B)

The following shows the power terminal layout in the terminal box.

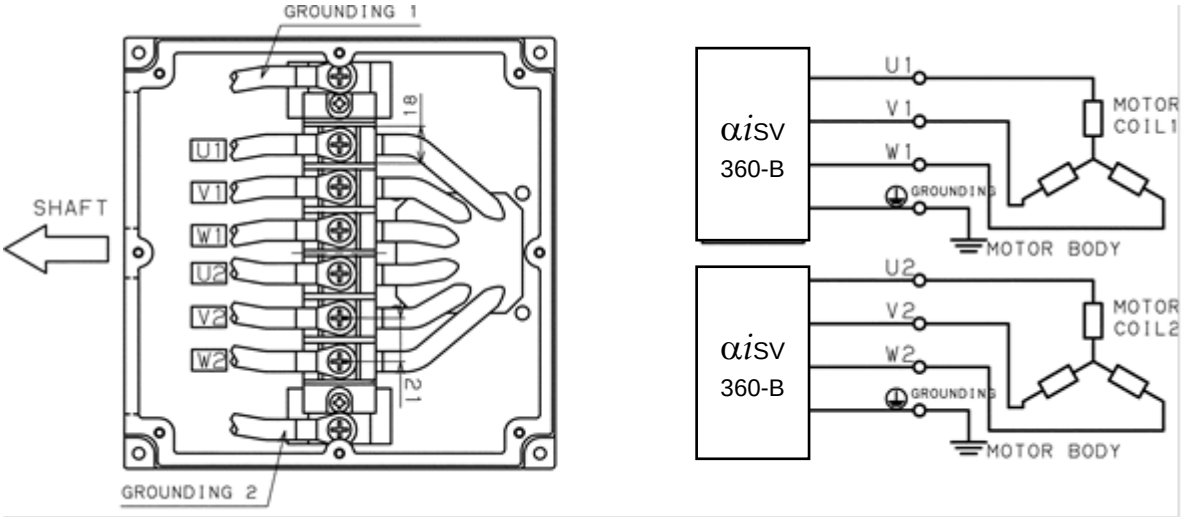

Power terminal size and ground terminal size: M6
Tightening torque: 3.5 to 4.5Nm

(5) Power Terminal Layout (for αiS 300HV-B and αiS 500HV-B)

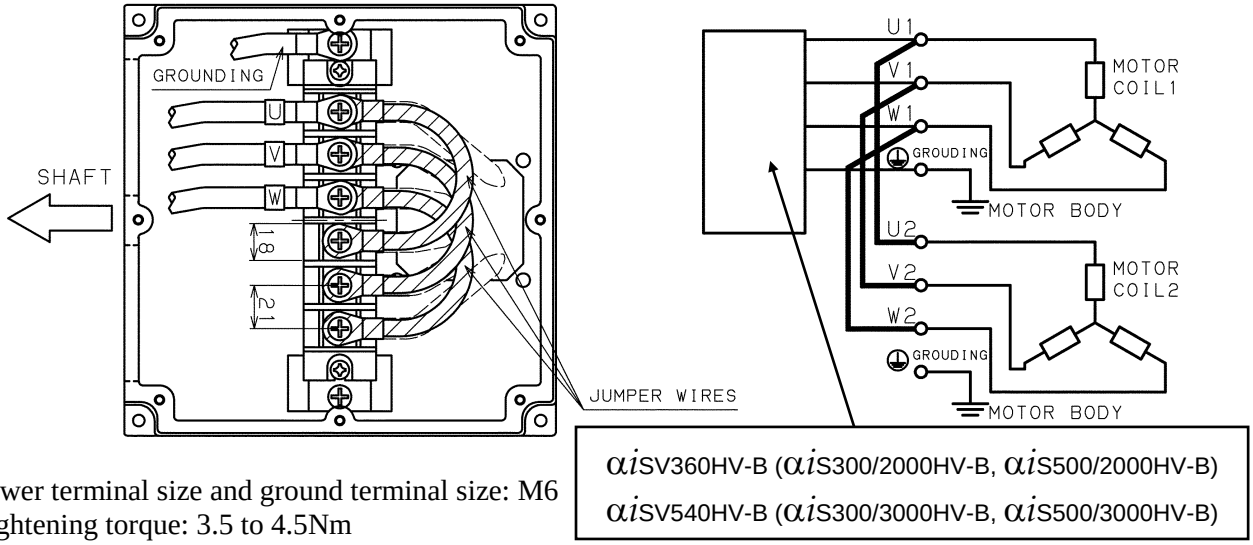

Power terminal size and ground terminal size: M6
Tightening torque: 3.5 to 4.5Nm

* When jumper wires are used, one of ground terminals may be left open. Also tighten this screw with the above torque securely.

© MyFANUC 2D51CC9CD8564E3B8C4DE377C2D11C41

⚠ CAUTION

1 Securely connect power wires and short bars to the terminal block with the specified tightening torque according to the procedure described in this section. If the motor runs with a terminal loosely connected, the terminal block may get abnormally hot, resulting in a fire. The terminal may also be disconnected, resulting in a ground fault, short circuit, or electric shock.

2 An incorrect connection of jumper wires causes abnormal heat generation, equipment malfunction, or failure.

3 To keep the insulation distance, note the following points:
When attaching a crimp terminal to the end of a power wire, always cover the crimping section of the crimp terminal with an insulating tube.
When an insulating cover is mounted on the terminal block, screw the power wires and remount the cover in place before using the motor.

(6) Cabling (for αiS 300-B, αiS 500-B, αiS 300HV-B, and αiS 500HV-B)

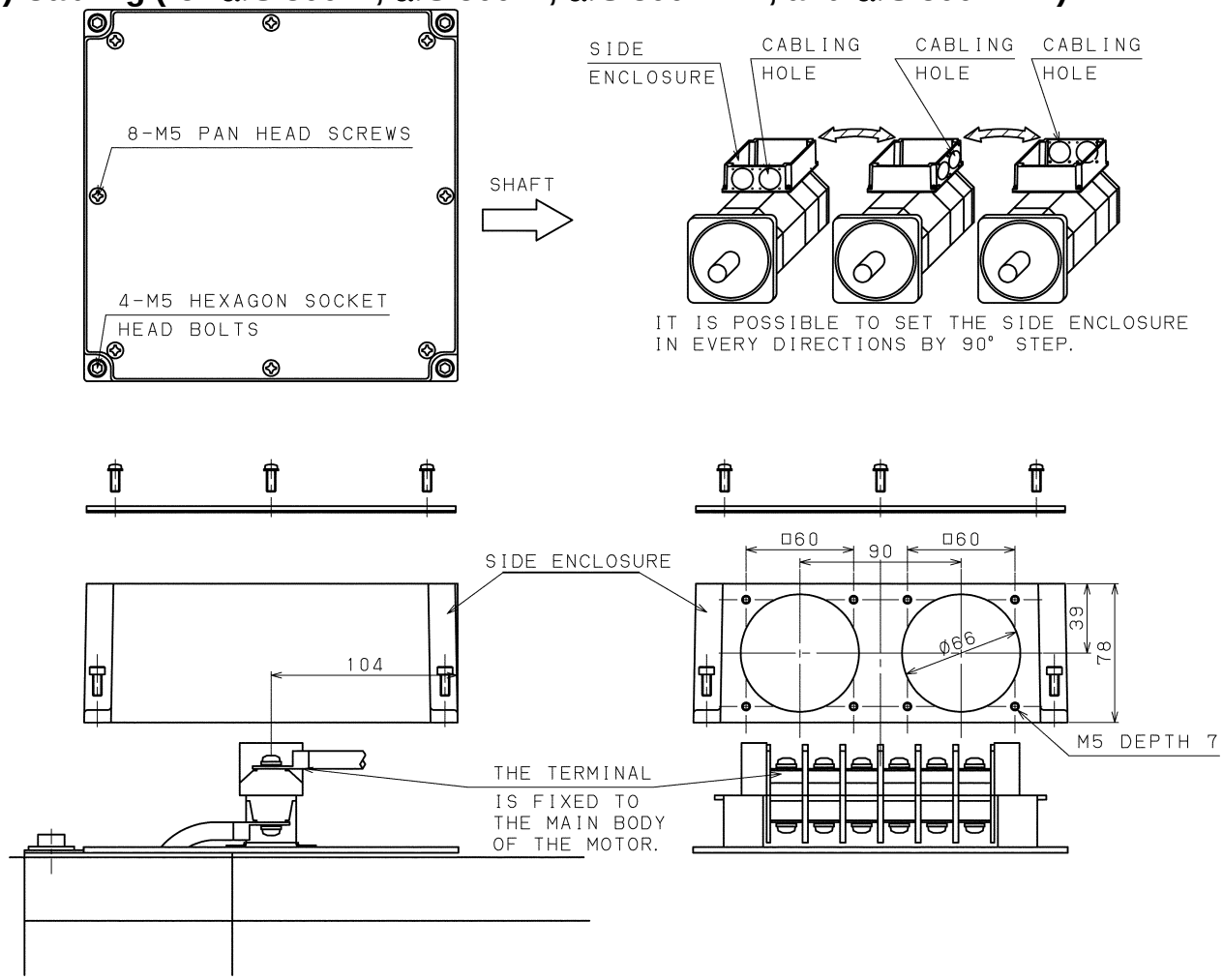

1. Before cabling, the motor can be dismantled by removing the four M5 hexagon socket head bolts and the eight M5 pan head screws. At the time of installation, check that the waterproofing rubber packing is not damaged, then install it with a tightening torque of 2.0 N·m to 2.5 N·m. At this time, ensure that foreign matter is not caught.
2. To meet the IP level, a protection such as a conduit is required for the cabling hole. See Subsection 3.3.2, “Usage Considering Environmental Resistance”.
3. The enclosure of the terminal box can be oriented in any direction in steps of 90°.

© MyFANUC 2D51CC9CD8564E3B8C4DE377C2D11C41

4. The four M5 hexagon socket head bolts fixing the enclosure of the terminal box may be loosened due to the cable weight and vibration applied to the terminal box. Thus, apply threadlocking adhesive (medium strength). Even if the orientation of the enclosure is not to be changed, remove the hexagon socket head bolts fixing the enclosure, and apply threadlocking adhesive (medium strength)
5. For the specifications, shapes, and pin layouts of the connectors of the pulsecoder and fan, see Section 1.4, "FEEDBACK SENSOR" and Subsection 1.3.5, "Cooling Fan".

1.3.3.6 Model αiS 1000/2000HV-B

(1) Outline drawing of the motors

(a) Standard

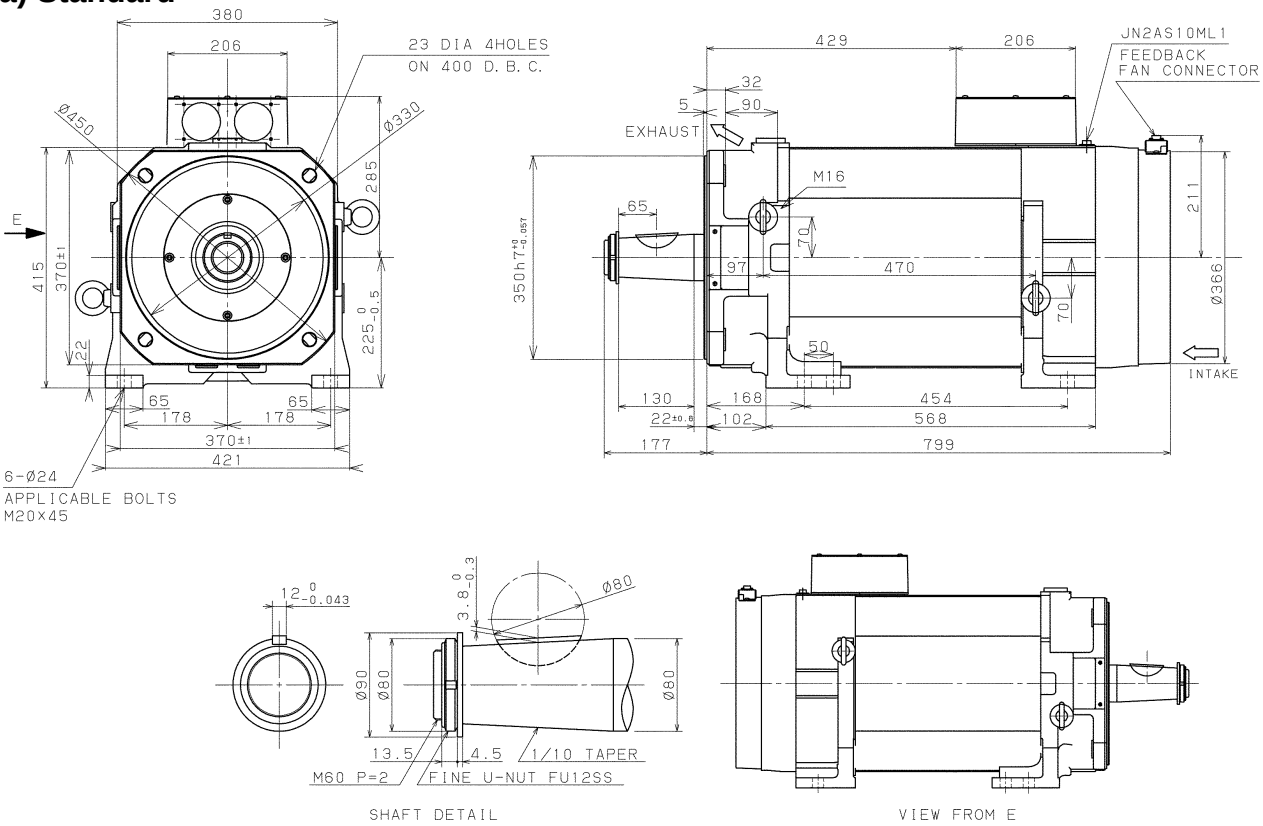

1. The motor does not include a circuit breaker for protecting the fan. Prepare such a circuit breaker in the power magnetics cabinet.
2. The motor cannot be mounted on the machine with the flange alone. Support the weight of the motor by securing the foot by six bolts. Use the flange as the reference for centering with the machine. For information about the mounting of a motor, see Section 3.2, "MOUNTING A SERVO MOTOR".
3. Consult with FANUC for any other mounting method.

(2) Allowable axis load

The allowable axis load is indicated below.
If a load exceeding the allowable axis load is applied, the bearing or shaft may be damaged.
For details of the allowable axis load, see Section 3.2, “MOUNTING A SERVO MOTOR”.

© MyFANUC 2D51CC9CD8564E3B8C4DE377C2D11C41

Radial load	Axial load	(Reference) Front bearing specification
13720[N] (1400 [kgf])	1960[N] (200 [kgf])	6317 Duplex bearing

(3) Shaft run-out precision

The shaft run-out precision is indicated below.
For details of the shaft run-out precision, see Section 3.2, “MOUNTING A SERVO MOTOR”.

Shaft dia. run-out	Faucet joint run-out	Mounting face run-out
0.08mm or less	0.11mm or less	0.14mm or less

(4) Power Terminal Layout

The following shows the power terminal layout in the terminal box.

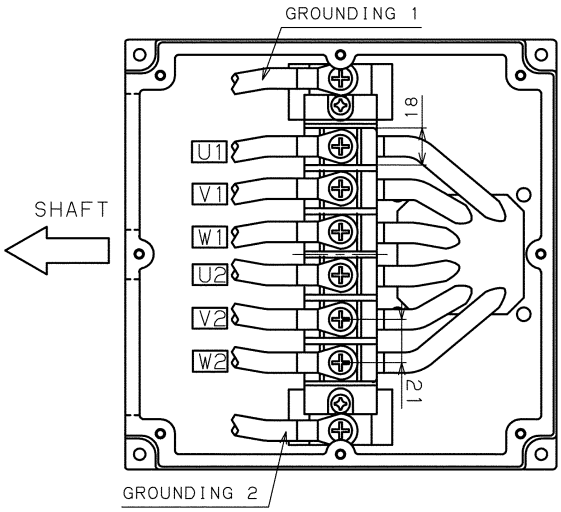

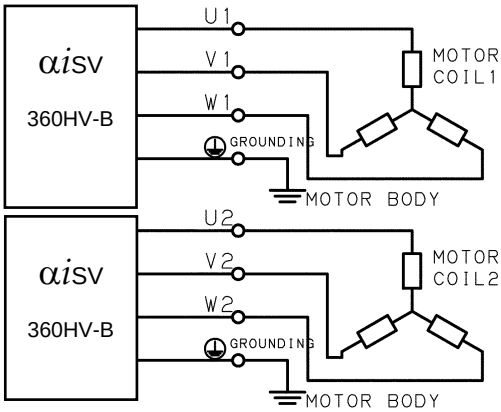

Power terminal size and ground terminal size: M6
Tightening torque: 3.5 to 4.5Nm

⚠ CAUTION

1 Securely connect power wires and short bars to the terminal block with the specified tightening torque according to the procedure described in this section. If the motor runs with a terminal loosely connected, the terminal block may get abnormally hot, resulting in a fire. The terminal may also be disconnected, resulting in a ground fault, short circuit, or electric shock.

2 To keep the insulation distance, note the following points:
When attaching a crimp terminal to the end of a power wire, always cover the crimping section of the crimp terminal with an insulating tube.
When an insulating cover is mounted on the terminal block, screw the power wires and remount the cover in place before using the motor.

© MyFANUC 2D51CC9CD8564E3B8C4DE377C2D11C41

(5) Cabling

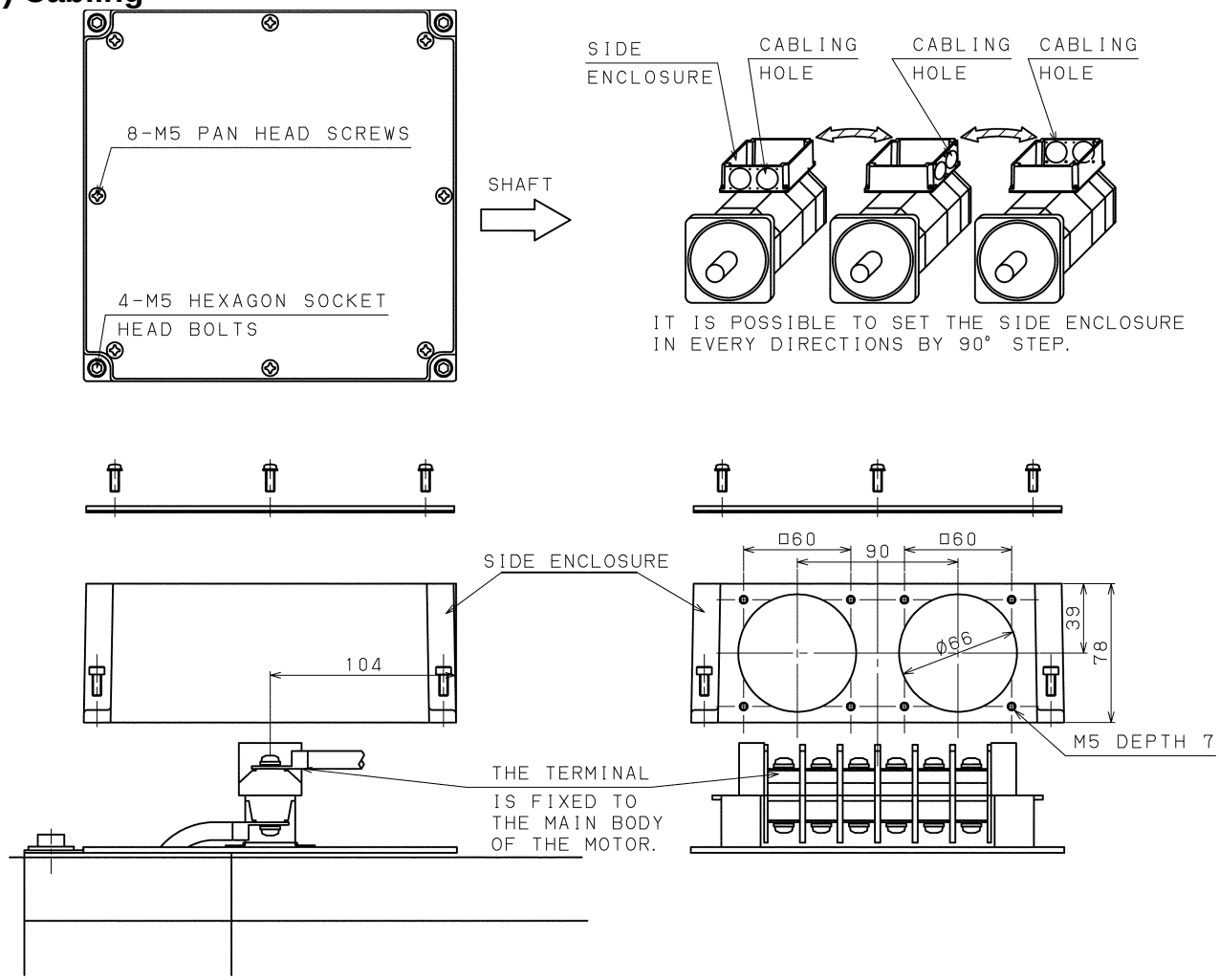

1. Before cabling, the motor can be dismantled by removing the four M5 hexagon socket head bolts and the eight M5 pan head screws. At the time of installation, check that the waterproofing rubber packing is not damaged, then install it with a tightening torque of 2.0 N·m to 2.5 N·m. At this time, ensure that foreign matter is not caught.
2. To meet the IP level, a protection such as a conduit is required for the cabling hole. See Subsection 3.3.2, “Usage Considering Environmental Resistance”.
3. The enclosure of the terminal box can be oriented in any direction in steps of 90°.
4. The four M5 hexagon socket head bolts fixing the enclosure of the terminal box may be loosened due to the cable weight and vibration applied to the terminal box. Thus, apply threadlocking adhesive (medium strength). Even if the orientation of the enclosure is not to be changed, remove the hexagon socket head bolts fixing the enclosure, and apply threadlocking adhesive (medium strength)
5. For the specifications, shapes, and pin layouts of the connectors of the pulsecoder and fan, see Section 1.4, "FEEDBACK SENSOR" and Subsection 1.3.5, "Cooling Fan".

© MyFANUC 2D51CC9CD8564E3B8C4DE377C2D11C41

1.3.3.7 Model αiS 1000/3000HV-B

(1) Outline drawing of the motors

(a) Standard

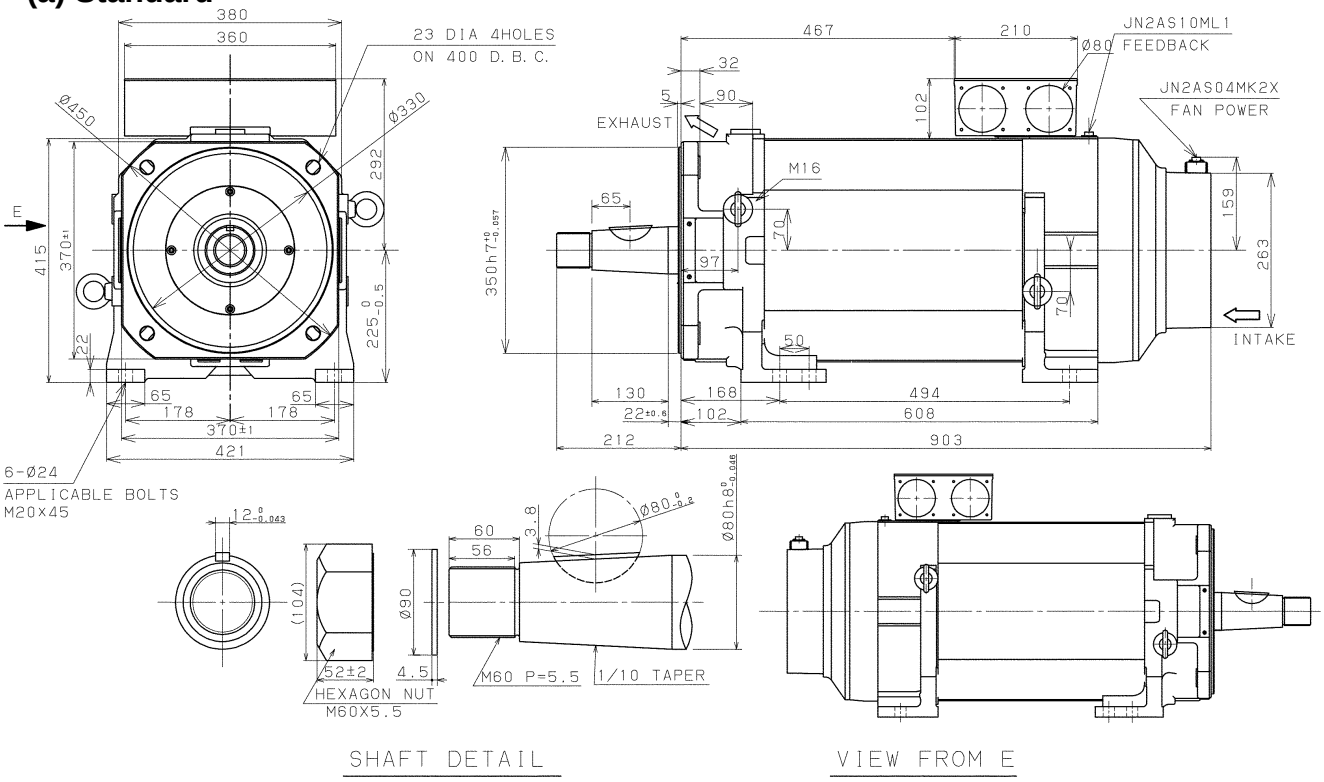

1. The motor does not include a circuit breaker for protecting the fan. Prepare such a circuit breaker in the power magnetics cabinet.
2. The motor cannot be mounted on the machine with the flange alone. Support the weight of the motor by securing the foot by six bolts. Use the flange as the reference for centering with the machine. For information about the mounting of a motor, see Section 3.2, "MOUNTING A SERVO MOTOR".
3. Consult with FANUC for any other mounting method.

(2) Allowable axis load

The allowable axis load is indicated below.
If a load exceeding the allowable axis load is applied, the bearing or shaft may be damaged.
For details of the allowable axis load, see Section 3.2, “MOUNTING A SERVO MOTOR”.

Radial load	Axial load	(Reference) Front bearing specification
13720[N] (1400[kgf])	1960[N] (200[kgf])	6317 Duplex bearing

(3) Shaft run-out precision

The shaft run-out precision is indicated below.
For details of the shaft run-out precision, see Section 3.2, “MOUNTING A SERVO MOTOR”.

Shaft dia. run-out	Faucet joint run-out	Mounting face run-out
0.08mm or less	0.11mm or less	0.14mm or less

© MyFANUC 2D51CC9CD8564E3B8C4DE377C2D11C41

(4) Power Terminal Layout

The following shows the power terminal layout in the terminal box.

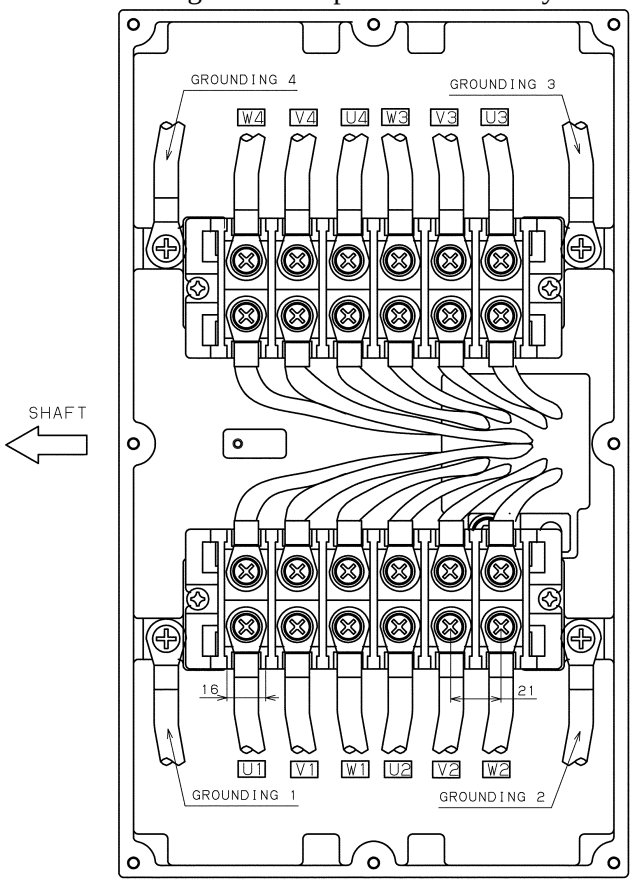

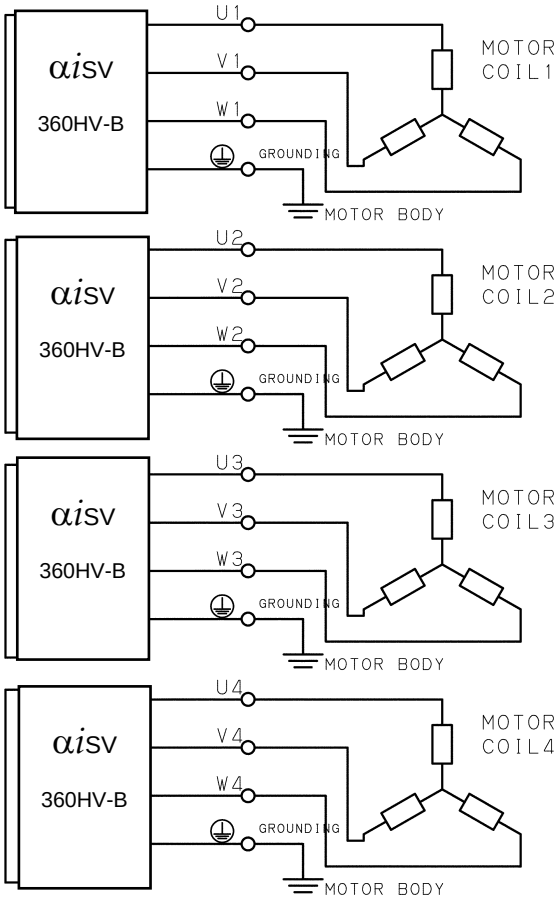

Power terminal size and ground terminal size: M6
Tightening torque: 3.5 to 4.5Nm

> ⚠ **CAUTION**
>
> 1 Securely connect power wires and short bars to the terminal block with the specified tightening torque according to the procedure described in this section. If the motor runs with a terminal loosely connected, the terminal block may get abnormally hot, resulting in a fire. The terminal may also be disconnected, resulting in a ground fault, short circuit, or electric shock.
>
> 2 To keep the insulation distance, note the following points:
> When attaching a crimp terminal to the end of a power wire, always cover the crimping section of the crimp terminal with an insulating tube.
> When an insulating cover is mounted on the terminal block, screw the power wires and remount the cover in place before using the motor.

© MyFANUC 2D51CC9CD8564E3B8C4DE377C2D11C41

(5) Cabling

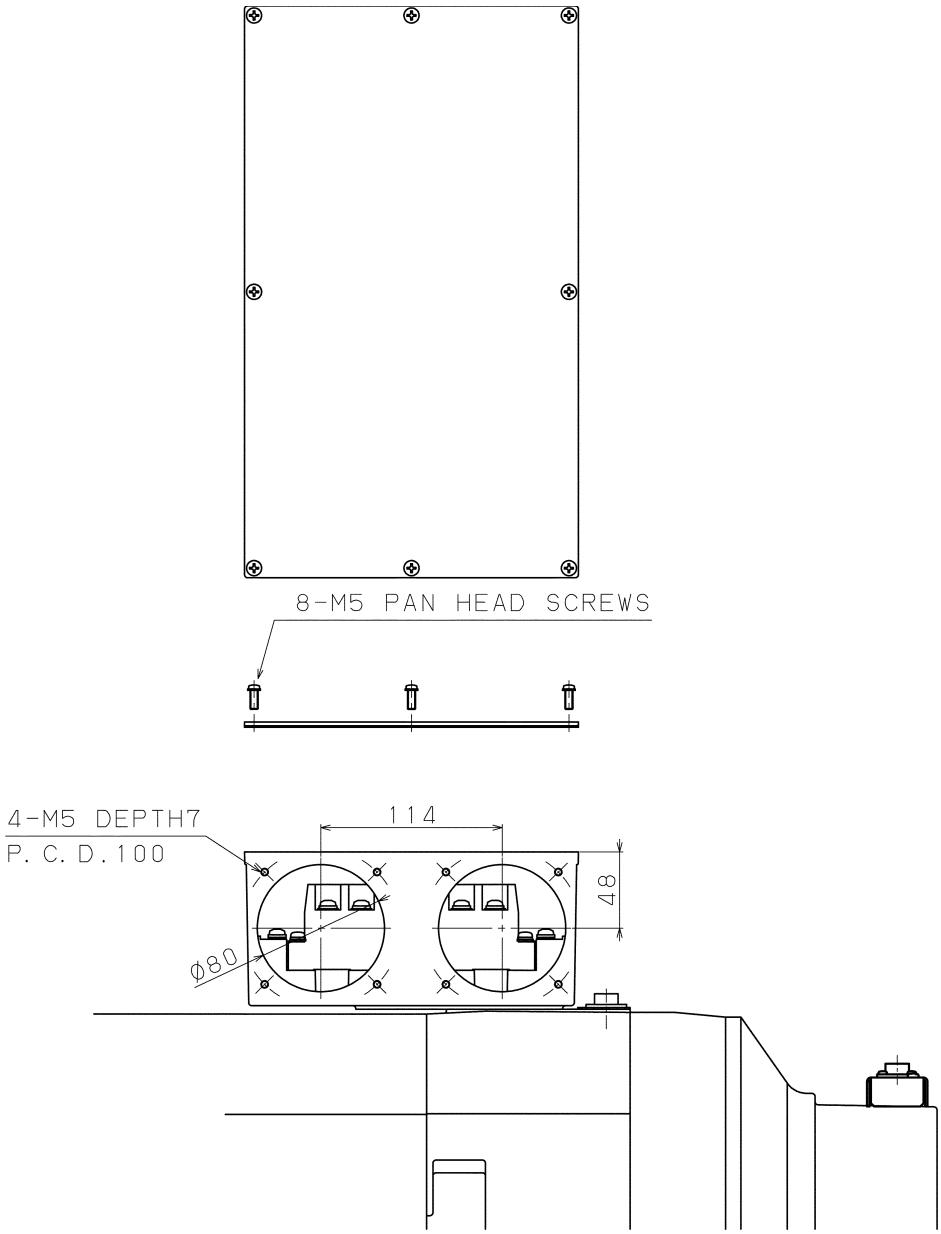

1. Before cabling, the motor can be dismantled by removing the four M5 hexagon socket head bolts and the eight M5 pan head screws. At the time of installation, check that the waterproofing rubber packing is not damaged, then install it with a tightening torque of 2.0 N·m to 2.5 N·m. At this time, ensure that foreign matter is not caught.
2. To meet the IP level, a protection such as a conduit is required for the cabling hole. For details, see Subsection 3.3.2, “Usage Considering Environmental Resistance”.
3. For the specifications, shapes, and pin layouts of the pulsecoder, see Section 1.4, "FEEDBACK SENSOR" and Subsection 1.3.5, "Cooling Fan".

© MyFANUC 2D51CC9CD8564E3B8C4DE377C2D11C41

1.3.3.8 Model αiS 1500/3000HV-B

(1) Outline drawing of the motors

(a) Standard

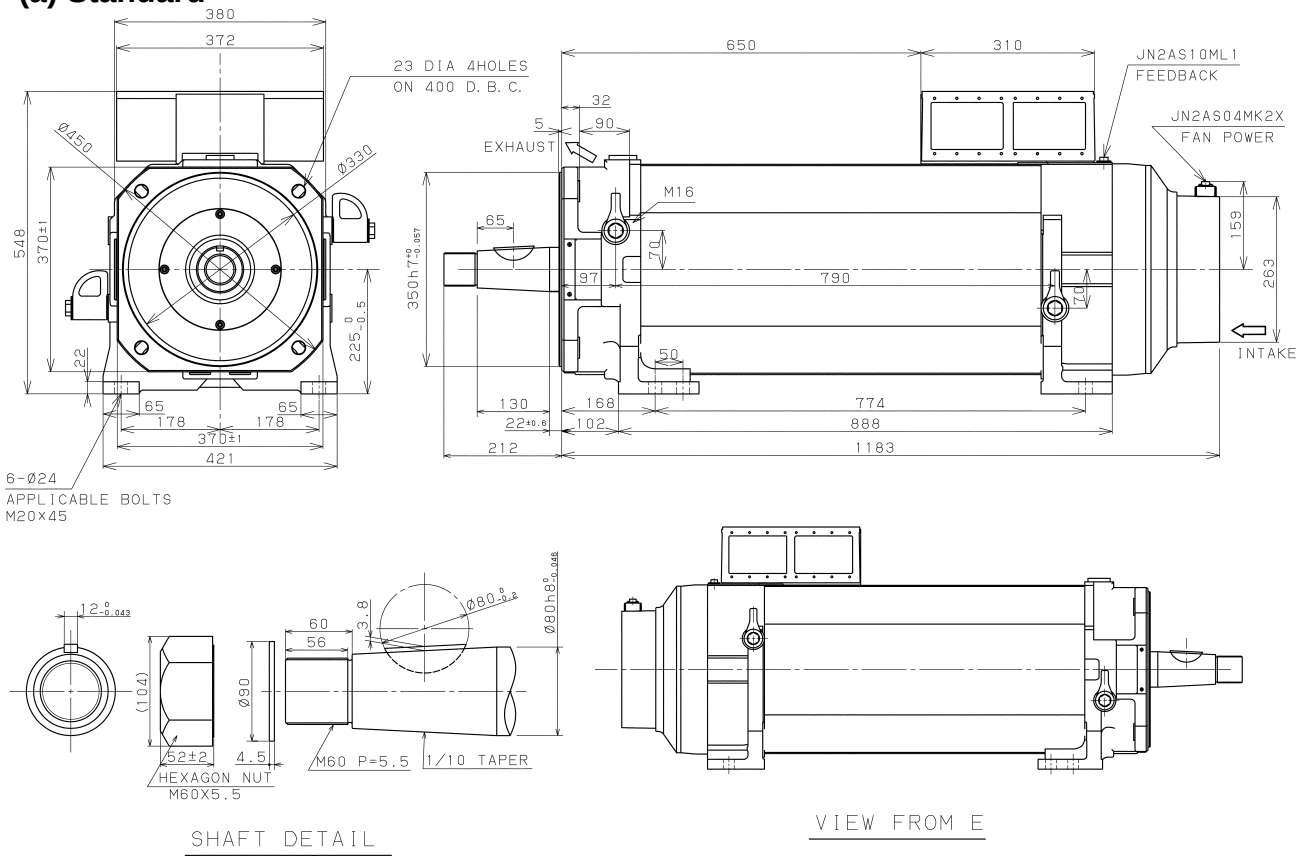

1. The motor does not include a circuit breaker for protecting the fan. Prepare such a circuit breaker in the power magnetics cabinet.
2. The motor cannot be mounted on the machine with the flange alone. Support the weight of the motor by securing the foot by six bolts. Use the flange as the reference for centering with the machine. For information about the mounting of a motor, see Section 3.2, "MOUNTING A SERVO MOTOR".
3. Consult with FANUC for any other mounting method.

(2) Allowable axis load

The allowable axis load is indicated below.
If a load exceeding the allowable axis load is applied, the bearing or shaft may be damaged.
For details of the allowable axis load, see Section 3.2, “MOUNTING A SERVO MOTOR”.

Radial load	Axial load	(Reference) Front bearing specification
13720[N] (1400[kgf])	1960[N] (200[kgf])	6317 Duplex bearing

© MyFANUC 2D51CC9CD8564E3B8C4DE377C2D11C41

(3) Shaft run-out precision

The shaft run-out precision is indicated below.
For details of the shaft run-out precision, see Section 3.2, “MOUNTING A SERVO MOTOR”.

Shaft dia. run-out	Faucet joint run-out	Mounting face run-out
0.08mm or less	0.11mm or less	0.14mm or less

(4) Power Terminal Layout

The following shows the power terminal layout in the terminal box.

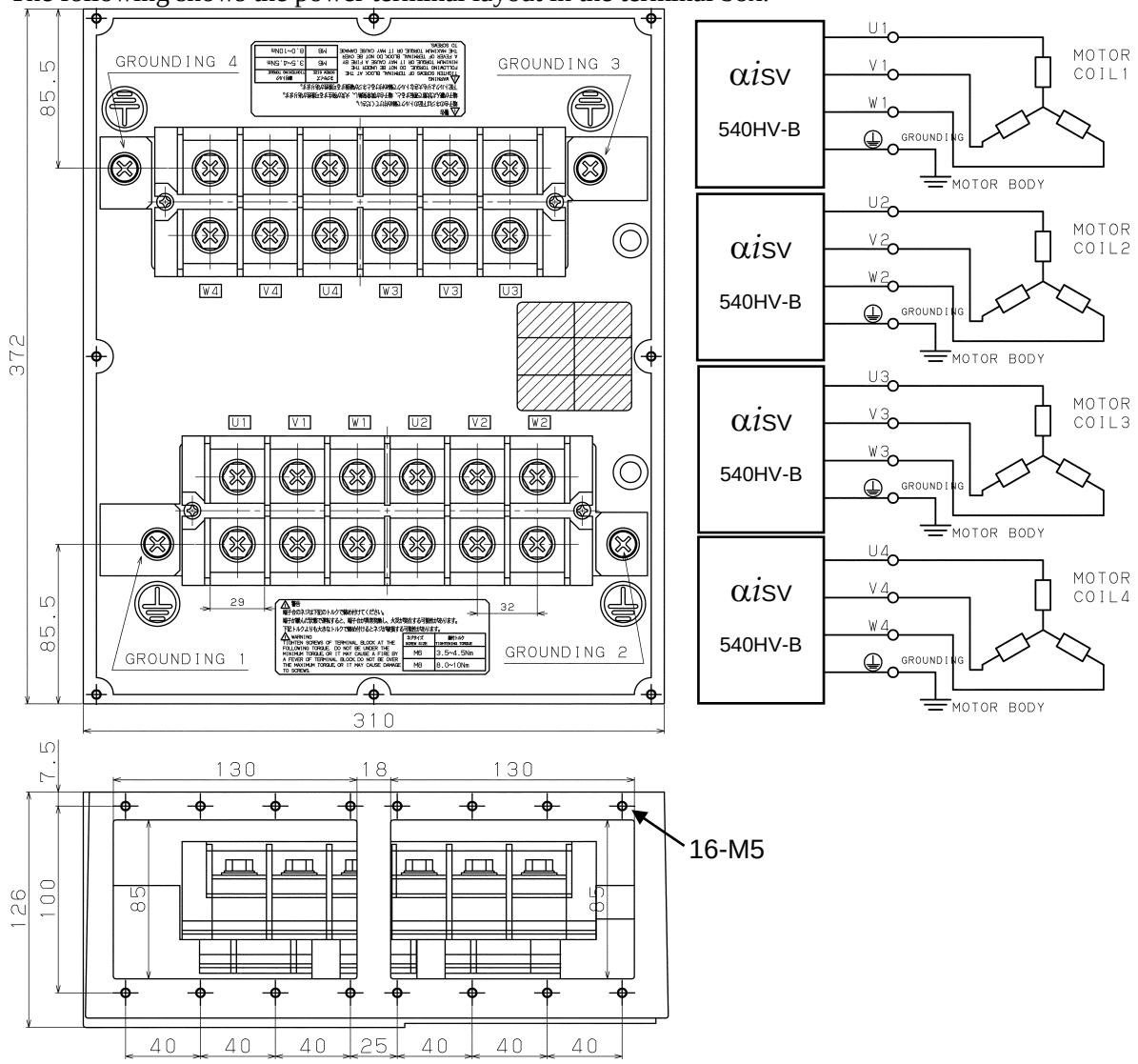

Power terminal size and ground terminal size: M8
Tightening torque: 8.0 to 10.0Nm

© MyFANUC 2D51CC9CD8564E3B8C4DE377C2D11C41

> ⚠ **CAUTION**
> 1 Securely connect power wires and short bars to the terminal block with the specified tightening torque according to the procedure described in this section. If the motor runs with a terminal loosely connected, the terminal block may get abnormally hot, resulting in a fire. The terminal may also be disconnected, resulting in a ground fault, short circuit, or electric shock.
> 2 To keep the insulation distance, note the following points:
> When attaching a crimp terminal to the end of a power wire, always cover the crimping section of the crimp terminal with an insulating tube.
> When an insulating cover is mounted on the terminal block, screw the power wires and remount the cover in place before using the motor.

(5) Cabling

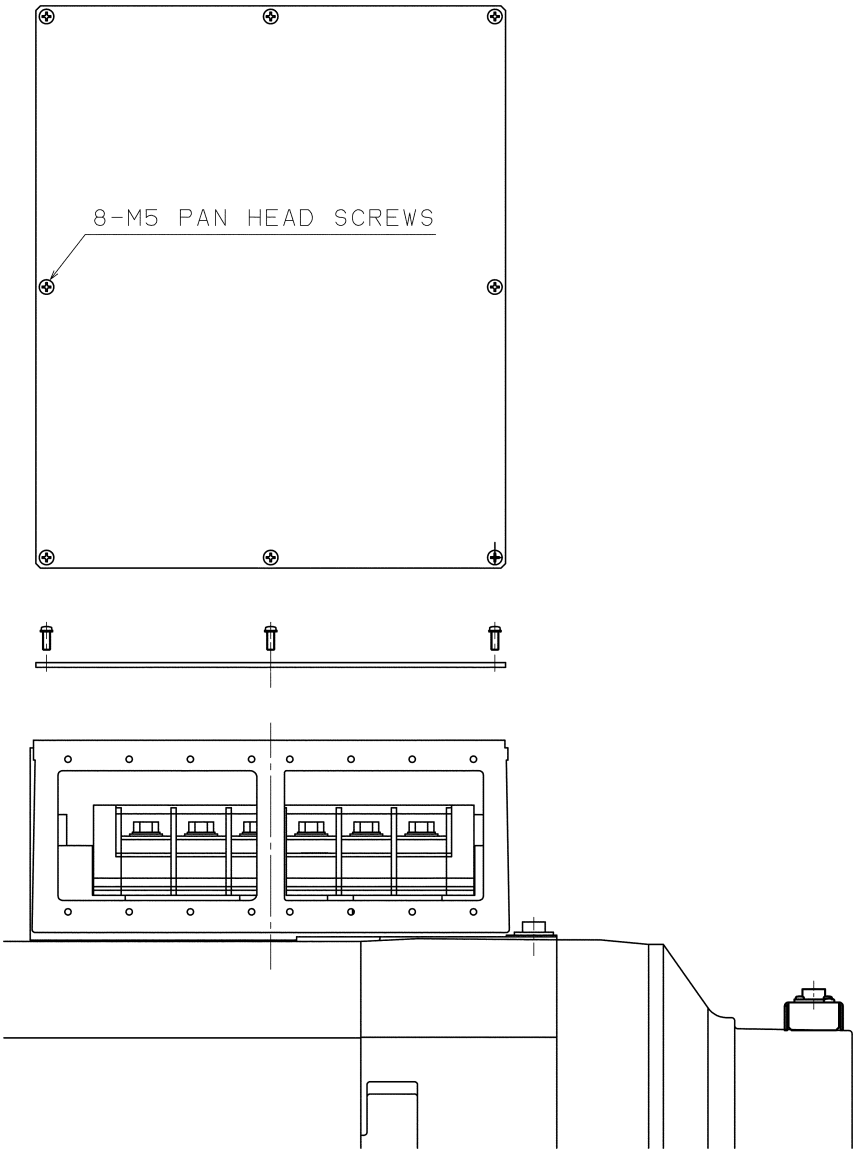

1. Before cabling, the motor can be dismantled by removing the eight M5 pan head screws. At the time of installation, check that the waterproofing rubber packing is not damaged, then install it with a tightening torque of 2.0 N·m to 2.5 N·m. At this time, ensure that foreign matter is not caught.

© MyFANUC 2D51CC9CD8564E3B8C4DE377C2D11C41

2. To meet the IP level, a protection such as a conduit is required for the cabling hole. For details, see Subsection 3.3.2, “Usage Considering Environmental Resistance”.
3. For the specifications, shapes, and pin layouts of the pulsecoder, see Section 1.4, "FEEDBACK SENSOR" and Subsection 1.3.5, "Cooling Fan".

© MyFANUC 2D51CC9CD8564E3B8C4DE377C2D11C41

1.3.3.9 Models αiS 2000 HV, αiS 3000 HV

(1) Outline drawing of the motors

(a) Standard

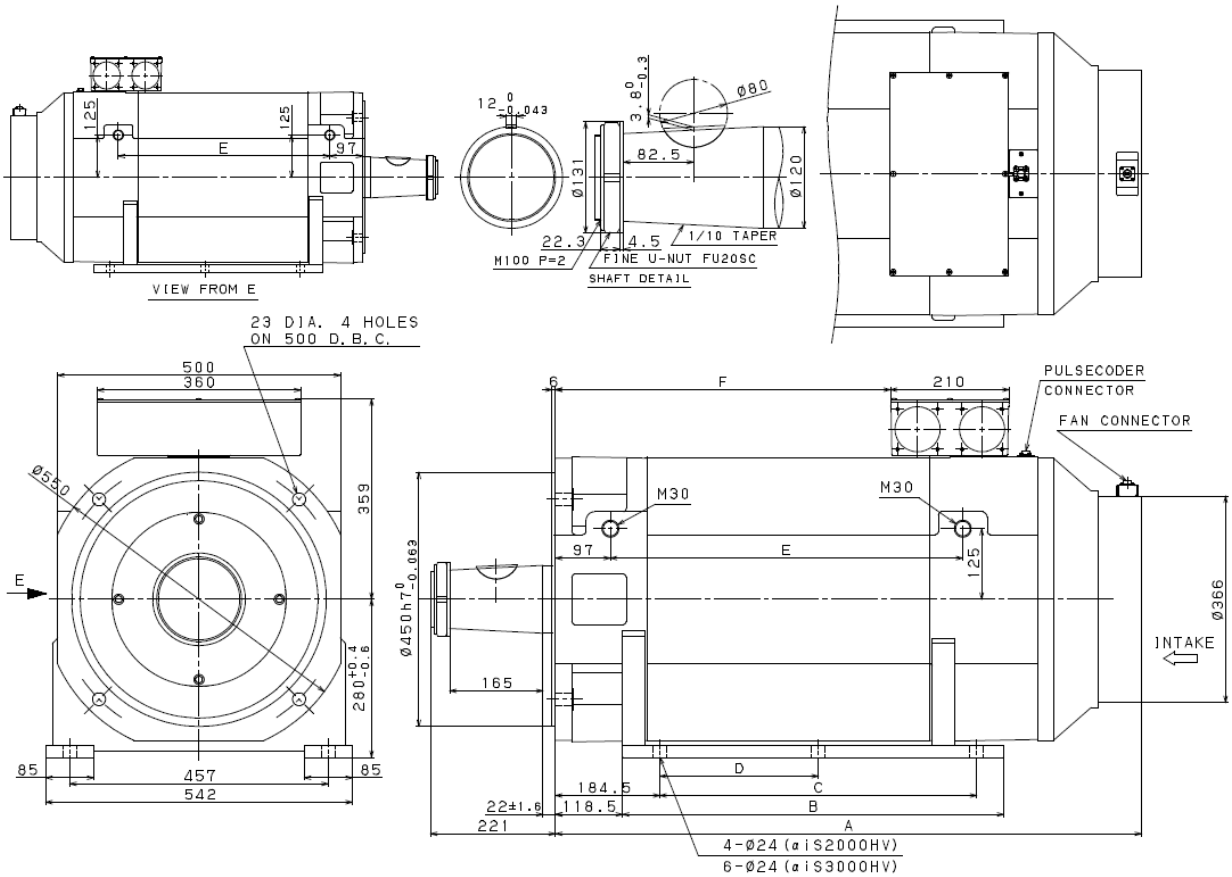

MODEL	A	B	C	D	E	F
αiS 2000HV	1036	674	560	-	623	588
αiS 3000HV	1436	1074	960	560	1023	988

1. The motor does not include a circuit breaker for protecting the fan. Prepare such a circuit breaker in the power magnetics cabinet.
2. The motor cannot be mounted on the machine with the flange alone. At the time of mounting, ensure that the shaft is horizontal and the foot faces downward. Support the weight of the motor by securing the foot by bolts. Use the flange as the reference for centering with the machine. For information about the mounting of a motor, see Section 3.2, "MOUNTING A SERVO MOTOR".
3. Consult with FANUC for any other mounting method.

(2) Allowable axis load

The allowable axis load is indicated below.
If a load exceeding the allowable axis load is applied, the bearing or shaft may be damaged.
For details of the allowable axis load, see Section 3.2, “MOUNTING A SERVO MOTOR”.

Radial load	Axial load	(Reference) Front bearing specification
40000[N] (4080[kgf])	4000[N] ([410kgf])	NU2226

© MyFANUC 2D51CC9CD8564E3B8C4DE377C2D11C41

(3) Shaft run-out precision

The shaft run-out precision is indicated below.
For details of the shaft run-out precision, see Section 3.2, “MOUNTING A SERVO MOTOR”.

Shaft dia. run-out	Faucet joint run-out	Mounting face run-out
0.08mm or less	0.13mm or less	0.16mm or less

(4) Power Terminal Layout

The following shows the power terminal layout in the terminal box.

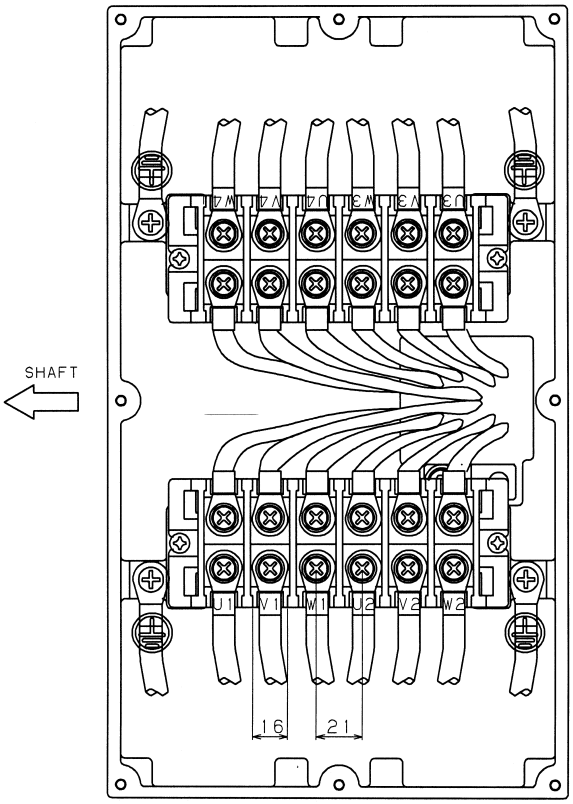

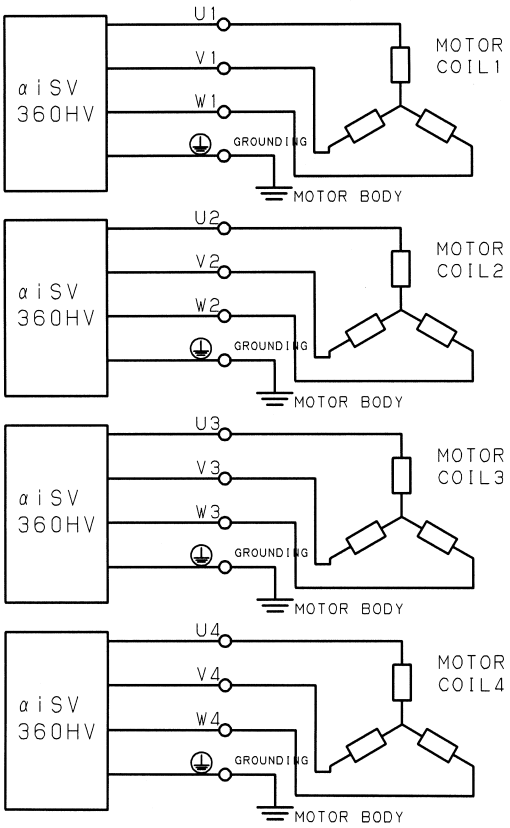

Power terminal size and ground terminal size: M6
Tightening torque: 3.5 to 4.5Nm

⚠ CAUTION

1 Securely connect power wires and short bars to the terminal block with the specified tightening torque according to the procedure described in this section. If the motor runs with a terminal loosely connected, the terminal block may get abnormally hot, resulting in a fire. The terminal may also be disconnected, resulting in a ground fault, short circuit, or electric shock.

2 To keep the insulation distance, note the following points:
When attaching a crimp terminal to the end of a power wire, always cover the crimping section of the crimp terminal with an insulating tube.
When an insulating cover is mounted on the terminal block, screw the power wires and remount the cover in place before using the motor.

© MyFANUC 2D51CC9CD8564E3B8C4DE377C2D11C41

(5) Cabling

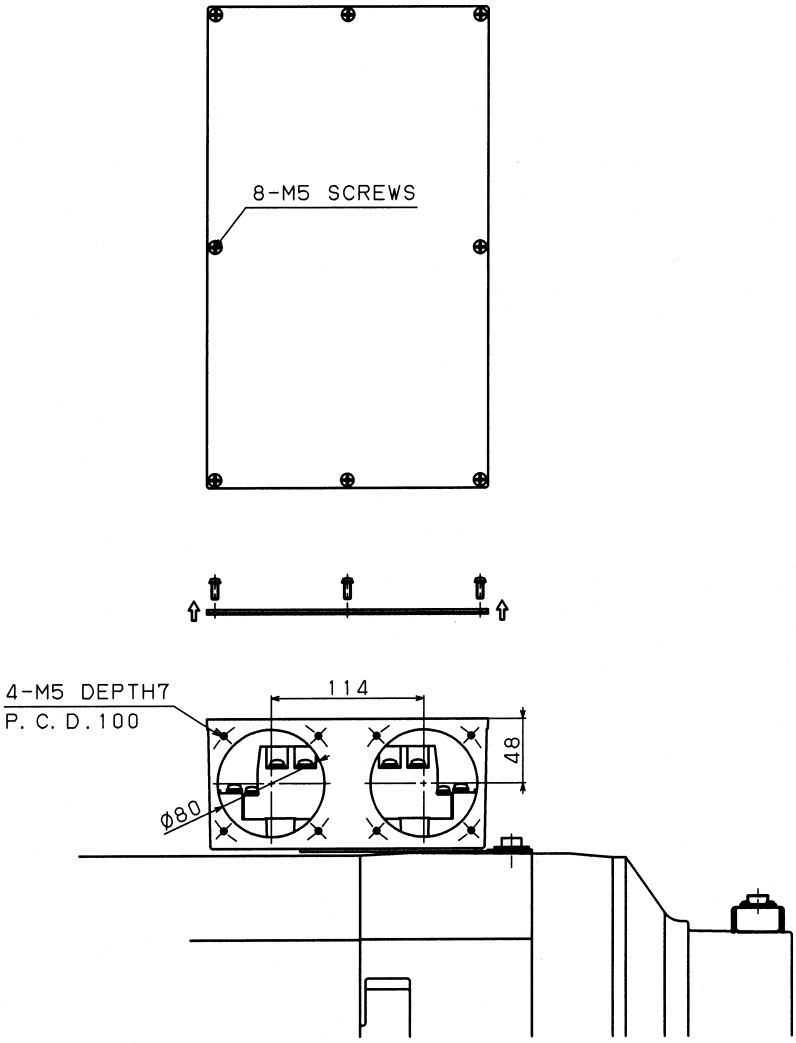

1. Before cabling, the motor can be dismantled by removing the four M5 hexagon socket head bolts and the eight M5 pan head screws. At the time of installation, check that the waterproofing rubber packing is not damaged, then install it with a tightening torque of 2.0 N·m to 2.5 N·m. At this time, ensure that foreign matter is not caught.
2. To meet the IP level, a protection such as a conduit is required for the cabling hole. See Subsection 3.3.2, “Usage Considering Environmental Resistance”.
3. For the specifications, shapes, and pin layouts of the connectors of the pulsecoder and fan, see separate chapters.

© MyFANUC 2D51CC9CD8564E3B8C4DE377C2D11C41

1.3.4 Built-In Brake

The FANUC AC Servo Motor αi –B/αi series has some motors that include a holding brake. This chapter explains the specifications of built-in brakes and gives cautions.
The motor with a built-in brake differs from that with no brake in outside dimensions. For the outside dimensions, see the Subsection 1.3.3, “Outline Drawings.”
Built-in brakes are common to servo motors with and without -B.

This subsection, "Built-In Brake ", consists of the following sections:

1.3.4.1 Brake specifications
1.3.4.2 Connecting a brake
1.3.4.3 Reduced backlash brake
1.3.4.4 Cautions on use
1.3.4.5 Reducing the amount of brake axis fall

1.3.4.1 Brake specifications

The specifications of built-in brakes are listed below.

Motor model		Unit	αiS 2-B, αiS 4-B αiF 1-B, αiF 2-B (Including HV)	αiS 8-B, αiS 12-B αiF 4-B, αiF 8-B (Including HV)
Brake torque		Nm	3	8
		kgf·cm	31	82
Response time	Release	msec	60	80
	Hold	msec	20	20
Power supply	Voltage	V	24VDC (±10%)	
	Current	A	0.9	1.1
	Wattage	W	22	26
Weight increase		kg	Approx. 1.0	Approx. 2.2
Moment of inertia increase		$kg·m^2$	0.00002	0.00007
		$kgf·cm·s^2$	0.0002	0.0007

Motor model		Unit	αiS 22-B to αiS40-B αiF 12-B to αiF 40-B (Including HV)	αiS 40-B to αiS 60-B αiS 50 FAN-B αiS 60 FAN-B αiF 40-B αiF 40 FAN-B (Including HV)
			Standard brake	High-torque brake
Brake torque		Nm	35	70
		kgf·cm	357	714
Response time	Release	msec	160	300
	Hold	msec	30	50
Power supply	Voltage	V	24VDC (±10%)	
	Current	A	1.2	2.4
	Wattage	W	29	58
Weight increase		kg	Approx. 6.0	Approx. 10
Moment of inertia increase		$kg·m^2$	0.0006	0.0009
		$kgf·cm·s^2$	0.006	0.009

The values shown above are standard values at 20°C.

© MyFANUC 2D51CC9CD8564E3B8C4DE377C2D11C41

1.3.4.2 Connecting a brake

(1) Brake connectors

The following shows the shape and pin arrangement of the brake connectors.
For the connected cables and the connectors on the cable side, see Subsection 2.1.3, "Connectors on the Cable Side".

For models αiS 2-B, αiS 4-B (including HV) and αiF 1-B to αiF 2-B

The connector is the same as the power connector.
For the connector specifications, see Subsection 1.3.3, "Outline Drawings".

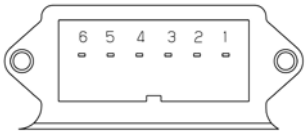

Connections: 5=BK, 6=BK
(Connect to inside of power connector.)
(1=U, 2=V, 3=W, 4=GND)

* BK indicates a power supply (24 VDC, 0 VDC) for the brake. The brake is nonpolarized.

For models αiS 8 to αiS 60 (including HV) and αiF 4-B to αiF 40-B (including HV)

Manufacture: Japan Aviation Electronics Industry
Manufacturer specification: JN2AS04MK2-R

This connector alone is water-proof.

The shape and pin layout of the connector are shown below.

Pulsecoder side

Shaft side

Connections: 1=BK, 2=BK,
3=NC (Not Connected),
4=GND (Note)

* BK indicates a power supply (24 VDC, 0 VDC) for the brake. The brake is nonpolarized.

NOTE
Since pin 4 is connected to the brake cabinet, it can be used when the shield wire of a brake cable needs to be connected.

© MyFANUC 2D51CC9CD8564E3B8C4DE377C2D11C41

(2) Connection of the Brakes

Configure a brake circuit by referencing the following brake connection diagrams and the circuit parts shown in the following section.

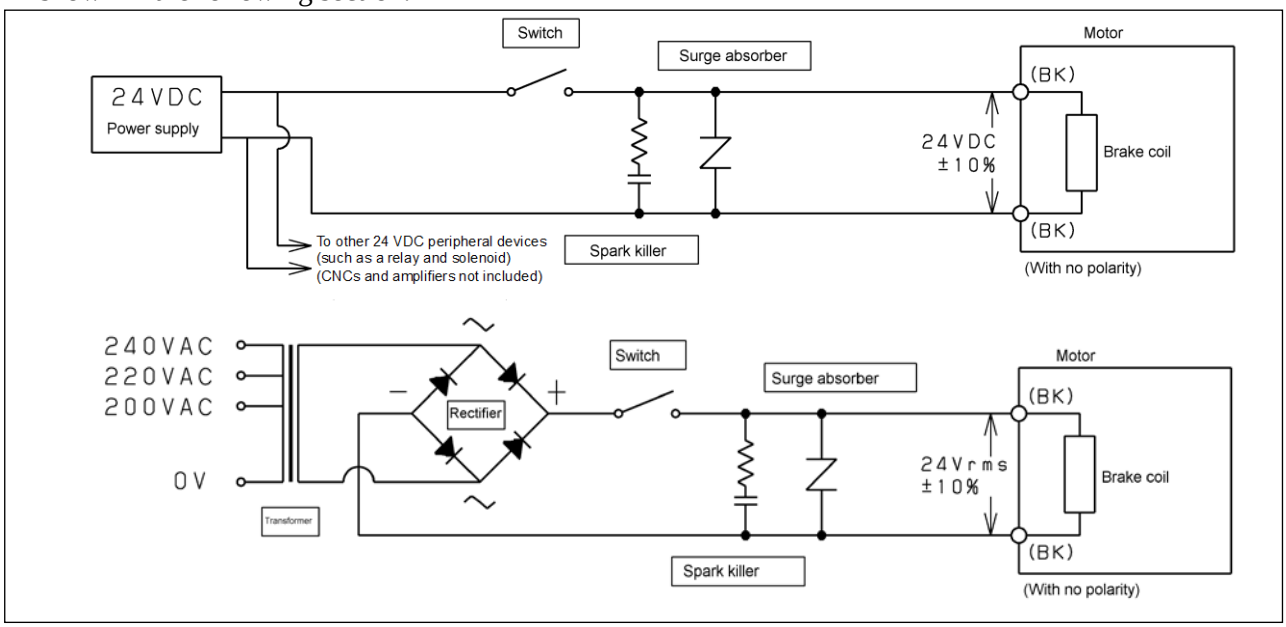

1 Use 24 VDC as power for the brake of the FANUC AC servo motor αi-B/αi series. Power produced by full-wave rectification after transforming commercial power (50 Hz/60 Hz) is also available.

2 Use a power supply separated from the 24 V power supply for the CNC and amplifier as the power supply for the brake. If the control power supply is also used for the brake, a CNC or amplifier malfunction or another danger may occur. The power supply for a relay, solenoid, or another peripheral device can be used for the brake. Be careful of the power capacity and changes in voltage due to changes in load.

3 For full-wave rectification, transform the secondary side voltage during energization of the brake into approximately 29 VAC by taking voltage drop in the rectifier or cable into account. In this case, check the power capacity and power voltage fluctuations sufficiently and then make sure the fluctuations of the voltage applied to the brake during energization falls within 24 Vrms ±10%. Switch the transformer's primary side input to a desired position such as 100-110-120 VAC or 200-220-240 VAC.

4 Because the brake is an inductive load, the durability of the switch's contact declines compared with a resistive load. Use a contact with sufficient capacity and confirm the durability of the switch's contact practically.

5 If plural brakes are driven, use the separated circuits for each brake except a power supply.

6 You can use either positive or negative power pin to connect the brake because the brake coil is nonpolarized.

7 Use a shielded cable as required.

© MyFANUC 2D51CC9CD8564E3B8C4DE377C2D11C41

(3) Parts for brake circuits

Configure a brake circuit by referencing the following parts.

Models αiS 2-B to αiS 40-B, αiF 1-B to αiF 40-B (3Nm brake, 8Nm brake, or 35Nm brake)

<Normal use (switching frequency of up to a hundred thousand times>

Name	Model No.	Specifications	Name of Manufacturer	FANUC Procurement Dwg. No.
Surge absorber	ERZV10D820	Varistor voltage 82V Max. allowable circuit voltage 50VAC	Panasonic Corporation	-
Spark killer	XEB0471	0.1μF / 47Ω Rated voltage 250 VAC	OKAYA ELECTRIC IND. CO., LTD.	-
Switch	LY2	Rated load 110VAC 10A / 24VDC 10A	OMRON Corporation	-
Rectifier	D3SB60 (Note 1)	Peak reverse voltage: 600V Output current: 2.3 A (with no fin)	SHINDENGEN ELECTRIC MFG. CO., LTD.	A06B-6050-K112

The specifications of parts for brake circuits are only reference. Although there is an example of switching test to approximately a hundred thousand times with a combination listed above, the example is not a guarantee of any failure.

<High-frequency use (switching frequency exceeding a hundred thousand times>

Name	Model No.	Specifications	Name of Manufacturer	FANUC Procurement Dwg. No.
Surge absorber	ERZV10D820	Varistor voltage 82V Max. allowable circuit voltage 50VAC	Panasonic Corporation	-
Spark killer	XEB0105	0.5μF / 10Ω Rated voltage 250 VAC	OKAYA ELECTRIC IND. CO., LTD.	-
Switch	LY2	Rated load 110VAC 10A / 24VDC 10A	OMRON Corporation	-
Rectifier	D3SB60 (Note 1)	Peak reverse voltage: 600V Output current: 2.3 A (with no fin)	SHINDENGEN ELECTRIC MFG. CO., LTD.	A06B-6050-K112

The specifications of parts for brake circuits are only reference. Although there is an example of switching test to approximately two million times with a combination listed above, the example is not a guarantee of any failure.

⚠ **CAUTION**

Confirm the durability of switch's contact practically, according to the required switching frequency.

If the contact cannot be open, the brake keeps released and the machine may not be held.

NOTE

1 At an ambient temperature of 20°C, the temperature of the rectifier rises to about 60°C when one brake axis is used or to about 90°C when two brake axes are used. Use a radiator fin as required.

© MyFANUC 2D51CC9CD8564E3B8C4DE377C2D11C41

Models αiS 40-B to αiS 60-B, αiS 50 FAN-B, αiS 60 FAN-B, αiF 40-B, αiF 40 FAN-B (70Nm brake)

<Normal use (switching frequency of up to a hundred thousand times>

Name	Model No.	Specifications	Name of Manufacturer	FANUC Procurement Dwg. No.
Surge absorber	ERZV20D820 (Note 2)	Varistor voltage 82V Max. allowable circuit voltage 50VAC	Panasonic Corporation	-
Spark killer	XEB0105	0.5μF / 10Ω Rated voltage 250 VAC	OKAYA ELECTRIC IND. CO., LTD.	-
Switch	LY2	Rated load 110VAC 10A / 24VDC 10A	OMRON Corporation	-
Rectifier	D3SB60 (Note 3)	Peak reverse voltage: 600V Output current: 2.3 A (with no fin)	SHINDENGEN ELECTRIC MFG. CO., LTD.	A06B-6050-K112

The specifications of parts for brake circuits are only reference. Although there is an example of switching test to approximately a hundred thousand times with a combination listed above, the example is not a guarantee of any failure.

<High-frequency use (switching frequency exceeding a hundred thousand times>

Name	Model No.	Specifications	Name of Manufacturer	FANUC Procurement Dwg. No.
Surge absorber	ERZV20D820 (Note 2)	Varistor voltage 82V Max. allowable circuit voltage 50VAC	Panasonic Corporation	-
Spark killer	XEB0105 Two in parallel	1.0μF / 5Ω(Note 4) Rated voltage 250 VAC	OKAYA ELECTRIC IND. CO., LTD.	-
Switch	LY2	Rated load 110VAC 10A / 24VDC 10A	OMRON Corporation	-
Rectifier	D3SB60 (Note 3)	Peak reverse voltage: 600V Output current: 2.3 A (with no fin)	SHINDENGEN ELECTRIC MFG. CO., LTD.	A06B-6050-K112

The specifications of parts for brake circuits are only reference. Although there is an example of switching test to approximately two million times with a combination listed above, the example is not a guarantee of any failure.

NOTE

2 The surge absorber capacity is larger than that for the 35N·m brake.
3 Use a radiator fin. In addition, use one brake axis per rectifier.
4 The value obtained when two spark killers are used in parallel is indicated for specifications.

© MyFANUC 2D51CC9CD8564E3B8C4DE377C2D11C41

1.3.4.3 Reduced backlash brake

The Reduced backlash brake is an option used to reduce a small amount of axis dropping that may occur in the event of an emergency stop or power outage due to the backlash of the built-in brake and motor shaft.

The mechanical and electrical specifications of this brake are the same as the standard brake. The outside dimensions and mounting dimensions of a motor with this brake are also the same as that with the standard brake.

When using a motor with this brake, follow the instructions given below.
Otherwise, the small amount of axis dropping may not be able to be reduced or the motor may fail.

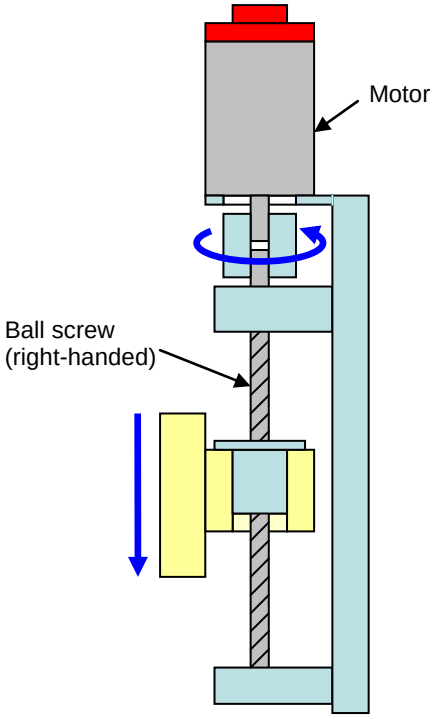

1 Mount the motor with the shaft facing downward, as shown at right. Arrange mechanically so that the vertical axis drops when the motor is turned counterclockwise relative to the pulsecoder. (Turning the motor clockwise does not produce any reduction effect.)

2 If the gravity load torque is great and there is little leeway in the brake holding torque, the reduction effect becomes weaker, resulting in an increase in the small amount of axis dropping. It is recommended to use the motor with not more than 70% of the brake holding torque.

3 If the lifting function against gravity at emergency stop is used at the same time, no backlash reduction effect can be obtained.

© MyFANUC 2D51CC9CD8564E3B8C4DE377C2D11C41

1.3.4.4 Cautions on use

⚠ CAUTION

Pay attention to the following points when motors with built-in brakes are used. These may cause a failure and the machine may not be held.

1 The built-in brake is designed for holding. Do not use the brake for braking.

2 Do not drive the motor without the brake released.

3 Do not apply an order to rotate the motor until the brake has been released completely.

4 Release the brake after the motor excitation is turned on. Hold the brake before the motor excitation is turned off.

5 Do not use the brake as a support for stopping, with the motor placed in the excitation state.

6 Make sure that the motor surface does not get wet with the cutting fluid etc. If water-proof performance is required, as in the case in which a motor is used in a cutting fluid mist atmosphere, specify an IP67 type motor. For details, refer to Subsection 3.3.2, “Usage Considering Environmental Resistance”.

7 The total length of a model such as the αiF40-B with a built-in brake is much longer than that of the model with no built-in brake. Be careful not to apply excessive force to the opposite side of the mounting flange or to apply excessive acceleration to the entire motor.

⚠ WARNING

On the machine, install a stop device for securing safety.

The brake built into the servo motor is not a stop device for securing safety. The machine may not be held if a failure occurs.

© MyFANUC 2D51CC9CD8564E3B8C4DE377C2D11C41

1.3.4.5 Reducing the amount of brake axis fall

During use of a motor with a brake, the amount of falling along an axis at a power failure or emergency stop, or when the CNC power supply is turned off during excitation of the motor may become an issue. To operate the brake immediately and reduce the amount of falling along an axis to a minimum, note the following points:

(1) To operate the brake immediately, the switch and relay for controlling on and off must be installed on the DC side (at the position shown in the following figure) of the break circuit.
If the contact is installed on the AC side (between the transformer's secondary side and rectifier), it takes time until holding starts because of the current returned to the rectifier diodes.

(2) To reduce the amount of falling along a vertical axis, the switch or relay must be turned off at a power failure as soon as possible. To turn the relay off immediately at a power failure, it is effective to supply the relay driving power from the main power supply whenever possible as shown in the following figure.

(3) To prevent the axis from falling at a moment of an emergency stop, use the "brake control function" in the servo software. This function enables continuous excitation of the motor for a set time until the motor built-in brake operates.
For details, see Parameter Manual (B-65270EN).

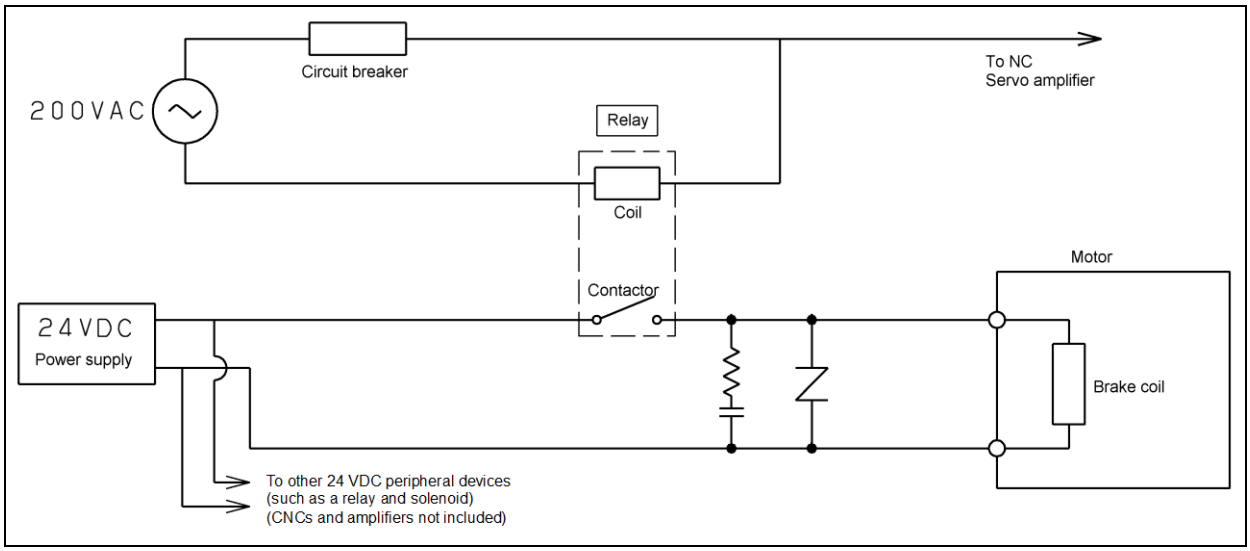

© MyFANUC 2D51CC9CD8564E3B8C4DE377C2D11C41

1.3.5 Cooling Fan

Cooling fans are available for the models αiS50 FAN-B, αiS50HV FAN-B, αiS60 FAN-B, αiS60HV FAN-B, αiF40 FAN-B, αiF40HV FAN-B, αiS150-B, αiS150HV-B, αiS300-B, αiS300HV-B, αiS500-B, αiS500HV-B, αiS1000HV-B, αiS1500HV-B, αiS2000HV, and αiS 3000HV.
This subsection describes these cooling fans.

This subsection, "Cooling Fan", consists of the following sections:

1.3.5.1 Cooling fan specifications
1.3.5.2 Connecting a cooling fan

1.3.5.1 Cooling fan specifications

The specifications of the fan supplied with each motor are listed below.

αiS 50 FAN-B, αiS 60 FAN-B, αiF 40 FAN-B
αiS 50HV FAN-B, αiS 60HV FAN-B, αiF 40HV FAN-B

Motor model	αiS 50/3000 FAN-B αiS 60/3000 FAN-B αiF 40/3000 FAN-B		αiS 50/3000HV FAN-B αiS 60/3000HV FAN-B αiF 40/3000HV FAN-B	
Input voltage	Single-phase 200VAC		Single-phase 230VAC	
	50Hz	60Hz	50Hz	60Hz
	170 to 220VAC	170 to 242VAC	196 to 253VAC	196 to 253VAC
Rated input	41W±10%	36W±10%	43W±10%	38W±10%
Steady-state current	0.325A±10%	0.270A±10%	0.290A±10%	0.230A±10%
Degree of protection (IEC34-5)	IP00			

NOTE
For the models with fan, the degree of protection of the fan connector section is IP00.

αiS 150-B to αiS 500-B,
αiS 150HV-B to αiS 500HV-B

Motor model	αiS 150/3000-B αiS 300/2000-B αiS 500/2000-B		αiS 150/3000HV-B αiS 300/2000HV-B αiS 300/3000HV-B αiS 500/2000HV-B αiS 500/3000HV-B	
Input voltage	Three-phase 200VAC		Three-phase 400VAC	
	50Hz	60Hz	50Hz	60Hz
	170 to 240VAC	170 to 240VAC	340 to 460VAC	340 to 528VAC
Rated input	60W	90W	80W	120W
Steady-state current	$0.2A_{rms}$	$0.3A_{rms}$	$0.2\ A_{rms}$	$0.2A_{rms}$
Protection circuit set temperature	140℃			
Degree of protection (IEC34-5)	IP00			

© MyFANUC 2D51CC9CD8564E3B8C4DE377C2D11C41

NOTE
1 For the models with fan, the degree of protection of the fan connector section is IP00.
2 **Pay attention to the driving voltage.**
The driving voltage of the fan equals the driving voltage of the motor. For the αiS 150-B to αiS 500-B models, **three-phase, 200 VAC** is used. For the αiS 150HV-B to αiS 500HV-B models, **three-phase, 400 VAC** is used.

αiS 1000HV-B, αiS 1500HV-B, αiS 2000HV, αiS 3000HV

Motor model	αiS 1000/2000HV-B		αiS 1000/3000HV-B αiS 1500/3000HV-B αiS 2000/2000HV αiS 3000/2000HV	
Input voltage	Three-phase 400VAC			
	50Hz	60Hz	50Hz	60Hz
	340 to 480VAC	340 to 528VAC	340 to 480VAC	340 to 528VAC
Rated input	200W	260W	550W	800W
Steady-state current	$0.3A_{rms}$	$0.4A_{rms}$	$0.8A_{rms}$	$1.3A_{rms}$
Protection circuit set temperature	140℃			
Degree of protection (IEC34-5)	IP00			

NOTE
1 For the models with fan, the degree of protection of the fan connector section is IP00.
2 **Pay attention to the driving voltage.**
The driving voltage of the fan equals the driving voltage of the motor. For the αiS 1000HV-B to αiS 3000HV, **three-phase, 400 VAC** is used.

© MyFANUC 2D51CC9CD8564E3B8C4DE377C2D11C41

1.3.5.2 Connecting a cooling fan

(1) In case that other electronics devices are in parallel with fan

The following figure shows how to connect to a fan unit when other electronics devices are in parallel with fan unit next to a breaker or a contactor.

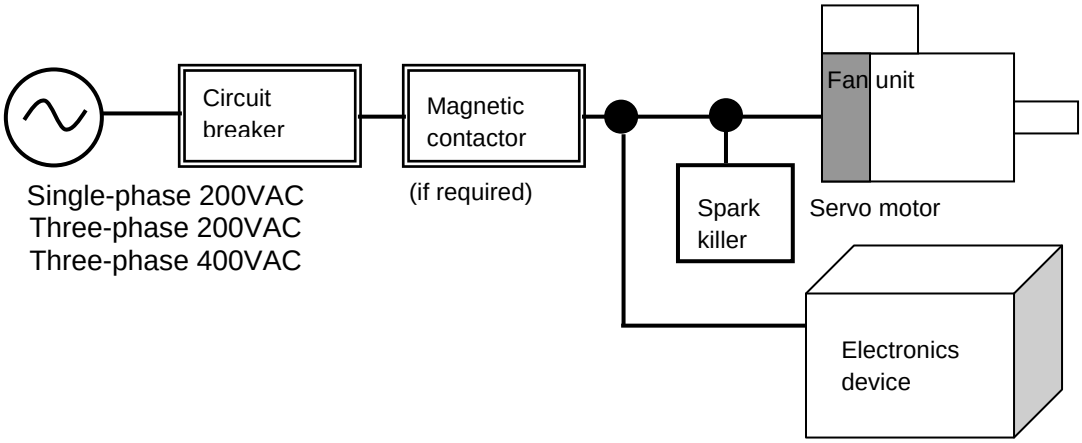

NOTE

When surges need to reduce with reason that other electronics devices are in parallel with fan unit, use a spark killer.

© MyFANUC 2D51CC9CD8564E3B8C4DE377C2D11C41

(2) Cooling Fan Circuit

The following figure shows how to connect to a fan unit.
Note that the input voltage is different for each unit.
For the connected cable and the connector on the cable side, see Subsection 2.1.3, "Connectors on the

αiS 50 FAN-B, αiS 60 FAN-B, αiF 40 FAN-B
αiS 50HV FAN-B, αiS 60HV FAN-B, αiF 40HV FAN-B

Manufacture: Japan Aviation Electronics Industry
Manufacturer specification: JN2AS04MK2X-R
This connector is not water-proof.
The shape and pin layout of the connector are shown below.

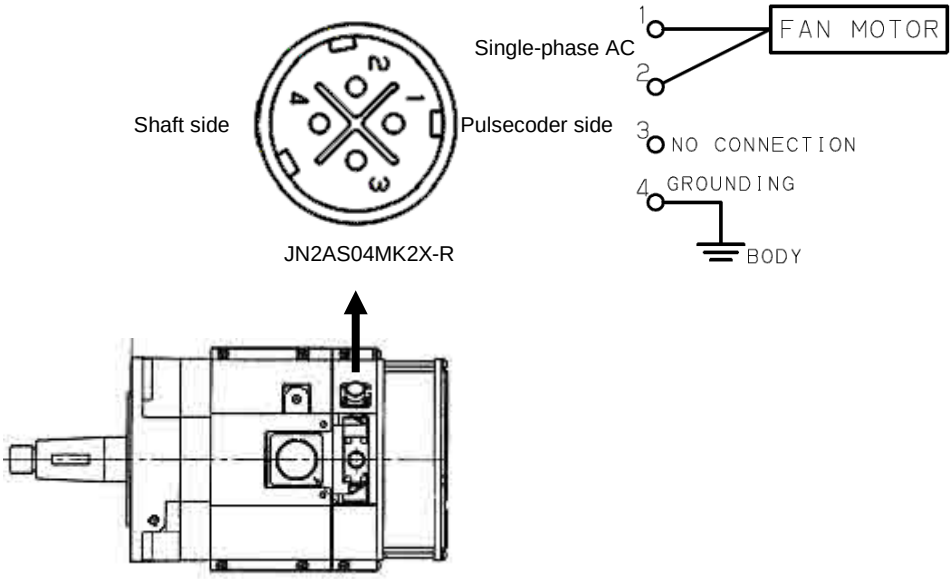

The following figure shows circuit example.

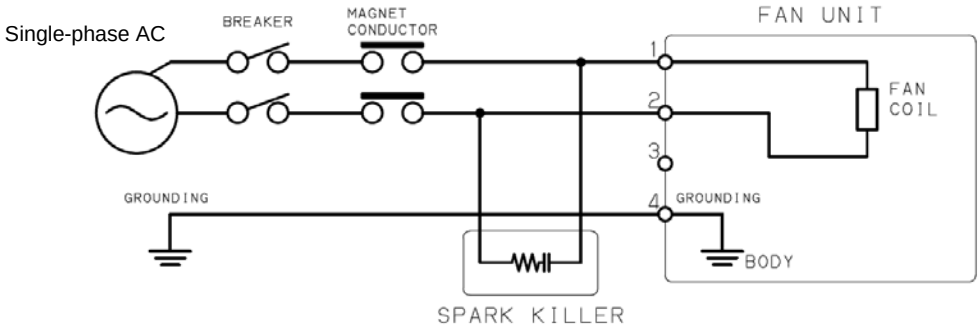

NOTE
This figure shows an example that uses a spark killer.

The following table list shows input voltage.

Motor model	Input voltage
αiS 50/3000 FAN-B, αiS 60/3000 FAN-B, αiF 40/3000 FAN-B	Single-phase 200VAC
αiS 50/3000HV FAN-B, αiS 60/3000HV FAN-B, αiF 40/3000HV FAN-B	Single-phase 230VAC

© MyFANUC 2D51CC9CD8564E3B8C4DE377C2D11C41

αiS 150-B to αiS 500-B,
αiS 150HV-B to αiS 3000HV

Manufacture: Japan Aviation Electronics Industry
Manufacturer specification: JN2AS04MK2X-R
This connector is not water-proof.
The shape and pin layout of the connector are shown below.

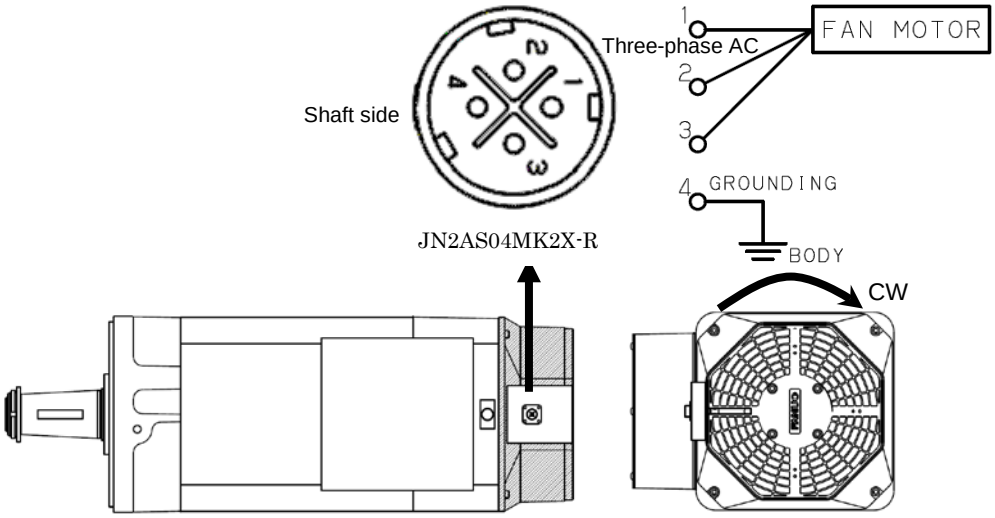

The following figure shows circuit example.

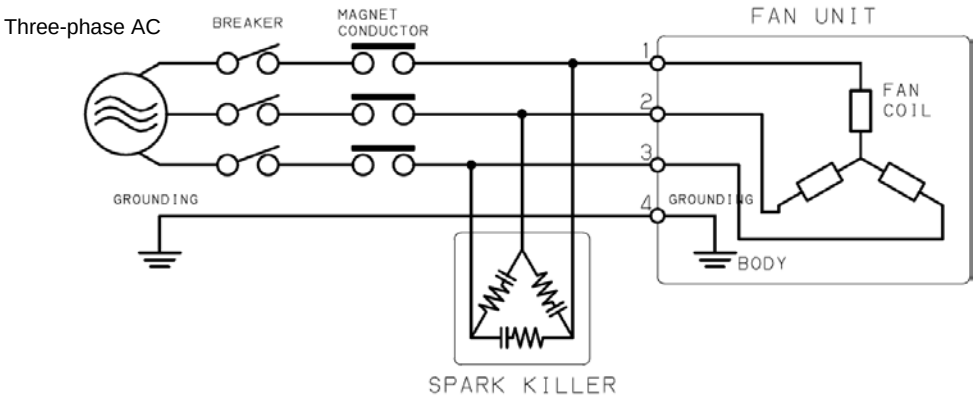

NOTE
This figure shows an example that uses a spark killer.

The following table list shows input voltage.

Motor model	Input voltage
αiS 150-B to αiS 500-B	Three-phase 200VAC
αiS 150HV-B to αiS 500HV-B αiS 1000/2000HV-B αiS 1000/3000HV-B, αiS 1500/3000HV-B, αiS 2000/2000HV to αiS 3000/2000HV	Three-phase 400VAC

If the three phases are connected incorrectly, the fan rotates in the reverse direction. But the direction of air flow is the same because the fan is a radial fan. However, the fan rotating in the reverse direction produces a less air flow, resulting in a degraded effect of cooling and increased load current. So, the fan can overheat and stop. If the fan overheat repeats many times, the fan unit may cause trouble. Be sure to connect the three phases correctly.

© MyFANUC 2D51CC9CD8564E3B8C4DE377C2D11C41

(3) Recommended parts of cooling fan circuit

Configure fan circuit by referencing the recommended parts shown in the following table lists.

Grouping of servo motor with a fan

Motor model	Input voltage	Group
αiS 50 FAN-B, αiS 60 FAN-B, αiF 40 FAN-B	Single-phase 200VAC	A
αiS 50HV FAN-B, αiS 60HV FAN-B, αiF 40HV FAN-B	Single-phase 230VAC	
αiS 150-B to αiS 500-B	Three-phase 200VAC	B
αiS 150HV-B to αiS 500HV-B αiS 1000/2000HV-B	Three-phase 400VAC	C
αiS 1000/3000HV-B, αiS 1500/3000HV-B αiS 2000/2000HV to αiS 3000/2000HV	Three-phase 400VAC	D

The following table lists the recommended spark killer.

Model No.	Manufacturer	Specifications	Group			
			A	B	C	D
CRE-30680	OKAYA ELECTRIC IND. CO.,LTD.	0.3μF / 68Ω With stand voltage250V min.	○			
3CRE-30680		0.3μF / 68Ω With stand voltage250V min.		○		
3CRH-30330		0.33μF / 33Ω With stand voltage500V min.		Note 2	○	
3CRH-50270		0.47μF / 27Ω With stand voltage500V min.		Note 2	Note 2	○

NOTE

1 One spark killer is available for 4 fan motors maximum.
2 These model of spark killer can be used instead of circle models.

© MyFANUC 2D51CC9CD8564E3B8C4DE377C2D11C41

(4) Cooling fan protection circuit

The fan motor inside the cooling fan includes a protection circuit based on a thermal protector.

αiS 50 FAN-B, αiS 60 FAN-B, αiF 40 FAN-B, αiS 50HV FAN-B, αiS 60HV FAN-B, αiF 40HV FAN-B

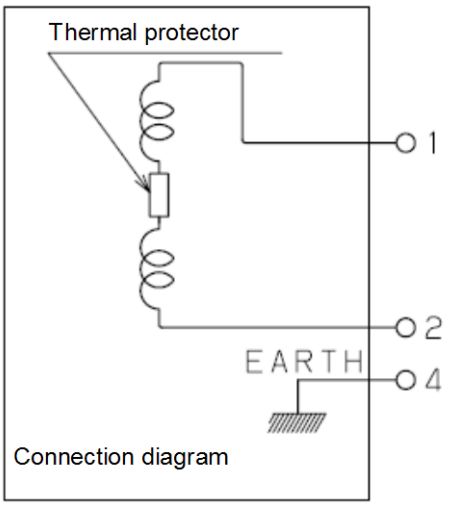

αiS 150-B to αiS 500-B
αiS 150HV-B to αiS 3000HV

A thermal protector is installed in two positions, namely, phase R and phase S.

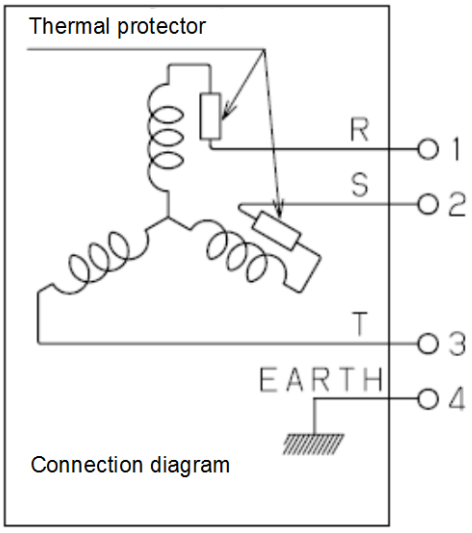

NOTE

A thermal protector operates when the temperature of the winding inside the fan motor rises to 140°C.

© MyFANUC 2D51CC9CD8564E3B8C4DE377C2D11C41

1.4 FEEDBACK SENSOR

All αi-B/αi series AC servo motors contain Pulsecoder (optical encoder) as a feedback sensor which detects position and velocity.
Separate type position sensors are also available for detecting a position by attaching directly to a ball screw or machine.

This section, "FEEDBACK SENSOR", consists of the following sections:

1.4.1 Pulsecoder
1.4.2 Separate Pulsecoder

1.4.1 Pulsecoder

All αi-B/αi AC servo motors feature Pulsecoder (optical encoder). The Pulsecoder outputs position information and an alarm signal. The outline drawing of Pulsecoder is not given in this section because it is contained in a motor. See the outline drawing of each motor model.

1.4.1.1 Types of Pulsecoders and Designation

The following table lists the types of Pulsecoders.

Pulsecoder type	Resolution [Division/rev]	Absolute/ incremental	Applicable motor
αiA4000	4,000,000	Absolute	αiS 2-B to αiS 60-B (Including HV) αiF 1-B to αiF 40-B (Including HV) αiS 150-B to αiS 500-B (Including HV) αiS 1000HV-B, αiS 1500HV-B
αiA32000	32,000,000	Absolute	αiS 2-B to αiS 60-B (Including HV) αiF 1-B to αiF 40-B (Including HV)
αiA1000	1,000,000	Absolute	αiS 2000HV, αiS 3000HV

For how to specify Pulsecoder, see the Section 1.2, “ORDERING SPECIFICATION NUMBER” because Pulsecoder is specified together with a motor.

1.4.1.2 Connecting Pulsecoder

Connector

Manufacturer specification:

JN2AS10UL1-R (manufacture: Japan Aviation Electronics Industry)
HR34B-12WR-10PD (manufacture: Hirose Electric)

The connector of the αi-B/αi series Pulsecoder is water-proof when engaged with the cable connector. (When the motor is left singly, the connector is water-proof when the cap mounted at shipment is fit in the connector.)

© MyFANUC 2D51CC9CD8564E3B8C4DE377C2D11C41

The signals of the αi-B/αi series Pulsecoder are arranged as follows:

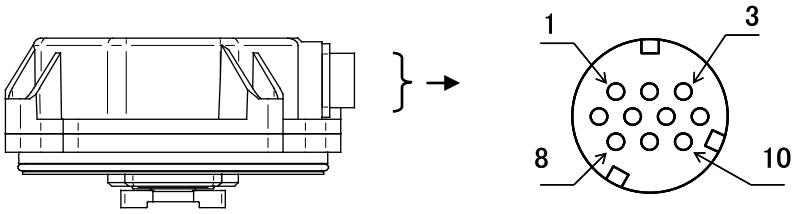

Signal name	Pin No. (αiA4000, αiA32000, αiA1000)
RD	6
*RD	5
+5V	8,9
0V	7,10
FG	3
+6V	4

Connector kits

For information on connectors and crimping jigs required for creating a feedback cable, see Subsection 2.1.3, “Connectors on the Cable Side.”

NOTE

If the motor is mounted on a movable part, or a flexible tube is used for the connector, excessive force may be applied to the connector. In this case, fix the feedback cable to prevent the connector from being broken.

Connecting Pulsecoder to an amplifier

For cables connecting Pulsecoder and amplifier, refer to “FANUC SERVO AMPLIFIER αi-B series For (B-65412EN)”, "FANUC SERVO AMPLIFIER αi series Descriptions (B-65282EN)", or FANUC SERVO AMPLIFIER βi series Descriptions (B-65322EN)."

In particular, special care should be taken when the Pulsecoder is connected to an I/O link amplifier. For details, refer to the description of the I/O link amplifier in "FANUC SERVO AMPLIFIER βi series Descriptions (B-65322EN)".

1.4.1.3 Absolute-type Pulsecoder

When the CNC is turned off, the Pulsecoder position detection function is backed up by battery. So, when the CNC is next turned on, the operator does not have to perform reference position return.

For backup, a battery unit must be installed in the CNC or servo amplifier.

If a low-battery indication appears on the CNC, replace the new battery as soon as possible.

For this Pulsecoder, the function is backed up for about 10 minutes by a backup capacitor when the battery is removed. In the backup status, the battery can be replaced when the power to the servo amplifier is off.

The operator does not also have to perform reference position return after replacing the feedback cable or servo amplifier.

© MyFANUC 2D51CC9CD8564E3B8C4DE377C2D11C41

1.4.2 Separate Pulsecoder

For detecting a position by attaching directly to a ball screw or a machine, use a separate Pulsecoder.

1.4.2.1 Separate Pulsecoder type and designation

Separate Pulsecoder are available.

Separate Pulsecoder name	Resolution	Allowable maximum speed	Absolute/ incremental	Ordering number
αA1000S	1,000,000 /rev	4000min^{-1}	Absolute	**A860-0372-T001**

1.4.2.2 Separate Pulsecoder specifications

Pulsecoder αA1000S

Item		Specification
Power voltage		5 [V]±5%
Current consumption		Up to 0.3 [A]
Working temperature range		0 to +60 [°C]
Resolution		1,000,000 [/rev.]
Maximum speed of rotation		4000 [min^{-1}]
Input shaft moment of inertia		Up to 1×10^{-4} [kg·m^2]
Input shaft startup torque		Up to 0.1 [N·m]
Input shaft allowable load	Radial	100 [N]
	Axial	50 [N]
Shaft diameter run-out		0.02×10^{-3}[m]
Structure		Dust-proof, drip-proof (IP55 or equivalent: when water-proof connector is fitted)
Vibration resistance acceleration		5 [G] (50 to 2,000[Hz])
Weight		Approx. 0.75 [kg]

* For information about the positional relationship between the shaft key groove and the origin in the rotation direction of the separate type Pulsecoder shaft, see Subsection 1.4.2.5, "Cautions when using a separate type Pulsecoder".

1.4.2.3 Connecting a separate type Pulsecoder

The layout of connector pins is shown below.
For the connection diagram for separate type Pulsecoders, refer to the relevant CNC connection manual.

Layout of Connector Pins of Pulsecoder αA1000S

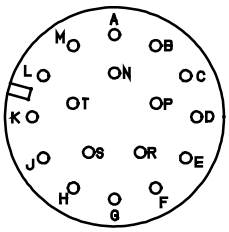

MS3102A20-29PW

Signal name	Pin No. αA1000S MS3102A20-29PW
SD	A
*SD	D
REQ	F
*REQ	G
+5V	J,K
0V	N,T
Shield	H
+6VA	R
0VA	S

© MyFANUC 2D51CC9CD8564E3B8C4DE377C2D11C41

1.4.2.4 Outline drawings of separate Pulsecoder

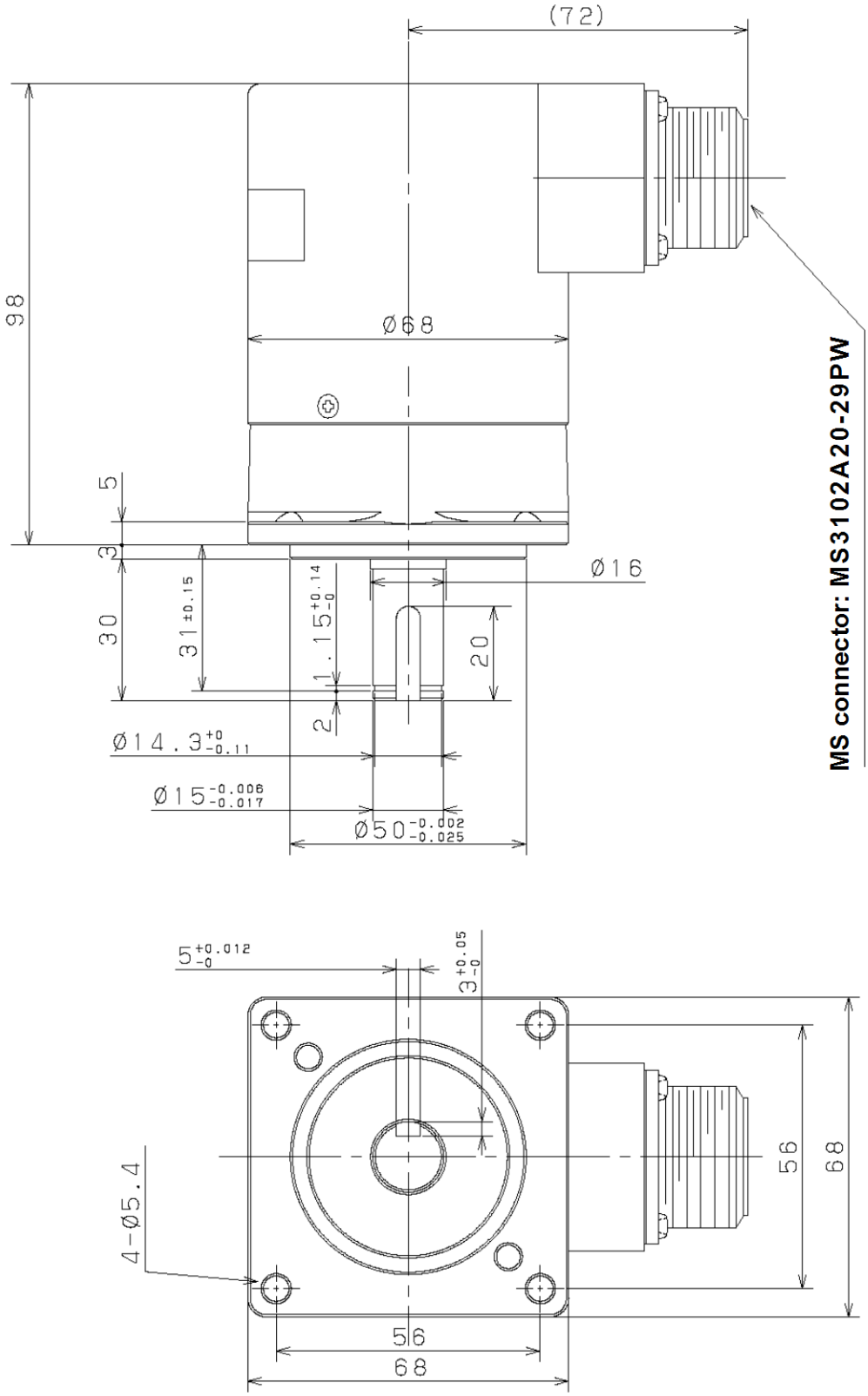

Fig. 1.4.2.4 Pulsecoder αA1000S

© MyFANUC 2D51CC9CD8564E3B8C4DE377C2D11C41

1.4.2.5 Cautions when using a separate type Pulsecoder

Pay attention to the following items when using the separate Pulsecoder.

- Increase the machine rigidity between the servo motor and the Pulsecoder to minimize mechanical vibration. If the machine rigidity is low or the structure vibrates, poor performance, over shoot is likely to occur.

- When the separate Pulsecoder is used, the influence of gear, ball screw pitch error or table inclination is decreased and the positioning accuracy and geometrical accuracy (roundness, etc.) are increased, but the smoothness may deteriorate due to the elasticity in the machine between the servo motor and the separate Pulsecoder.

- It is necessary to use the built-in Pulsecoder with a resolution equal to or finer than that of the separate Pulsecoder.

- To connect the separate Pulsecoder to the CNC, connect only the signals described in the connecting manual.
  When the other signal is connected, the unit may occur malfunction.

- When the key groove of the shaft is located at the position of the MS connector, which is regarded as the position of 0°, the origin of the separate type Pulsecoder is located at 0° ±22.5°. The separate type Pulsecoder that meets this specification is provided with products manufactured on and after May 10, 2013.
  To find out about the manufacture date, see the nameplate. (See the figure below.)

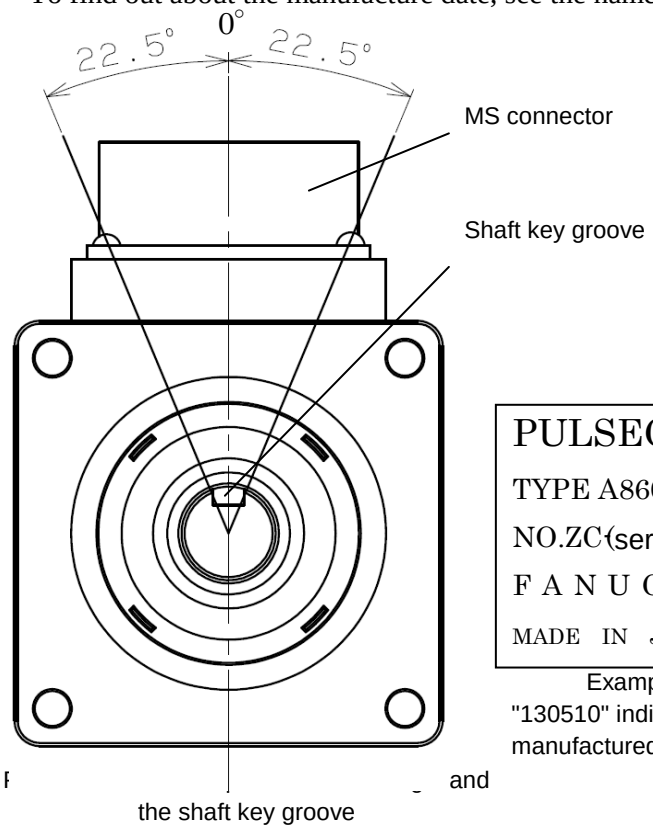

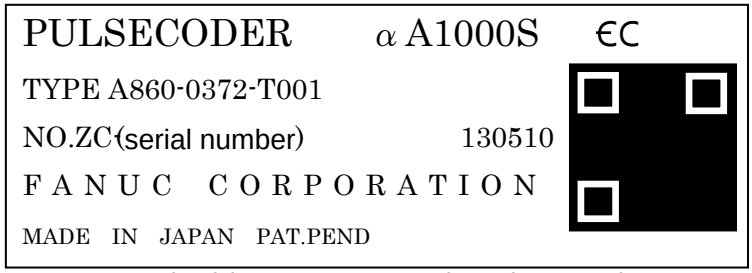

Example of the separate type Pulsecoder nameplate
"130510" indicates that the separate type Pulsecoder was manufactured on May 10, 2013.

© MyFANUC 2D51CC9CD8564E3B8C4DE377C2D11C41

2 CONFIGURATION AND SELECTION

Chapter 2, "CONFIGURATION AND SELECTION", consists of the following sections:

2.1 SYSTEM CONFIGURATION
2.2 MOTOR SELECTION

2.1 SYSTEM CONFIGURATION

2.1.1 Connecting a Servo Motor

For the FANUC AC Servo Motor αi series, connect the power line of the motor and the signal line of a Pulsecoder to an FANUC Servo Amplifier. When the motor has a built-in brake or cooling fan as an option, connect the built-in brake or cooling fan to the specified power supply.

Connection diagram

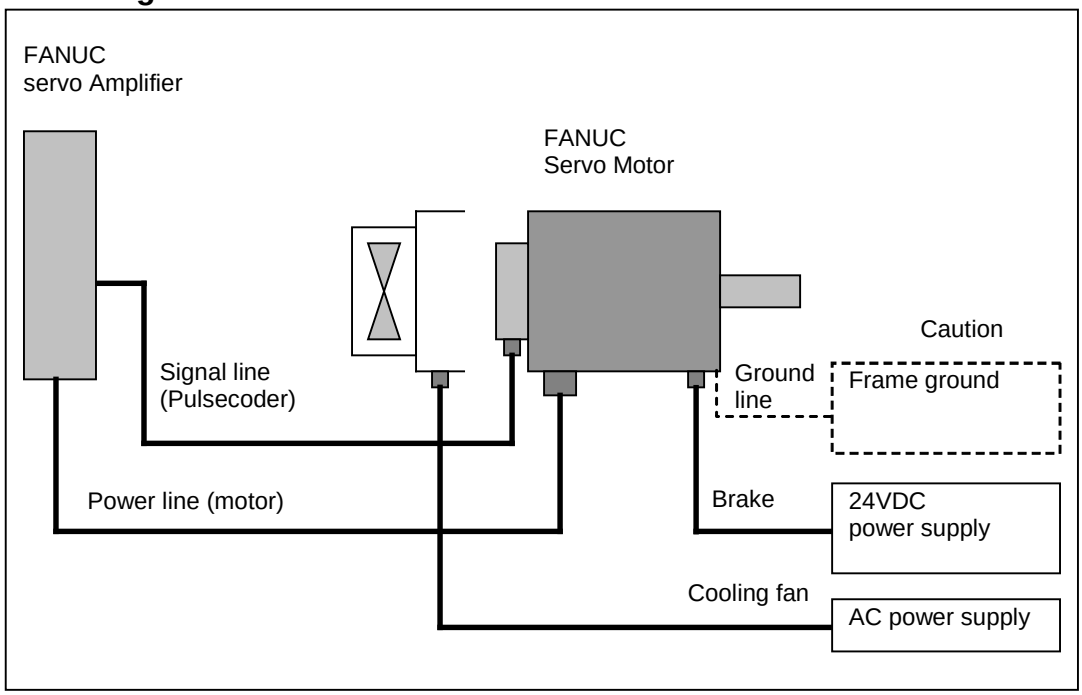

⚠ CAUTION
If a motor is not connected to ground through the machine (cabinet) in which the motor is installed, connect the motor grounding point and the amplifier grounding point to absorb noise. In this case, use a wire with a thickness of at least 1.25 mm^2, other than the GND conductor in the power line. Keep the wire as far from the power line as possible.

© MyFANUC 2D51CC9CD8564E3B8C4DE377C2D11C41

Connecting the power line

For the pin layout of the power connector on the servo motor side or the layout of the power terminals, see Subsection 1.3.3, "Outline Drawings".

For details of the connector of a cable connected to the servo motor, see Subsection 2.1.3, "Connectors on the Cable Side."

For the pin size and cabling of the models connected to the terminal block (αiS 150-B to αiS 500-B, αiS 150HV-B to αiS 3000HV), see Subsection 1.3.3, "Outline Drawings".

For details of selection of a power line and the shapes of the connector and terminal connected to a servo amplifier, refer to “FANUC SERVO AMPLIFIER 30i-B series Descriptions (B-65412EN)” or "FANUC SERVO AMPLIFIER αi series Descriptions (B-65282EN)."

Connecting the signal line

For details of the signal connector on a Pulsecoder, see Section 1.4, "FEEDBACK SENSOR".

For details of the connector of a cable connected to a Pulsecoder, see Subsection 2.1.3, "Connectors on the Cable Side."

For details of selection of a signal line and the connector connected to a servo amplifier, refer to “FANUC SERVO AMPLIFIER 30i-B series Descriptions (B-65412EN)” or "FANUC SERVO AMPLIFIER αi series Descriptions (B-65282EN)."

Connecting a built-in brake

For details of how to connect the power connector on a built-in brake and the power supply, see Subsection 1.3.4, "Built-in Brake."

For details of the connector of a cable connected to a built-in brake, see Subsection 2.1.3, "Connectors on the Cable Side."

Connecting a cooling fan

For the power connector on the cooling fan side, the type of power supply for driving the fan, and power cabling, see Subsection 1.3.5, "Cooling Fan".

For details of the connector of a cable connected to a cooling fan, see Subsection 2.1.3, "Connectors on the Cable Side."

2.1.2 Applicable Amplifiers

The FANUC AC Servo Motor αi-B/αi series can be driven using FANUC Servo Amplifier αiSV-B/αiSV series, αiSVP-B series, βiSV-B/βiSV series, or βiSVSP-B series. For the ordering specification numbers of servo amplifiers, refer to “FANUC SERVO AMPLIFIER 30i-B series Descriptions (B-65412EN)”, "FANUC SERVO AMPLIFIER αi series Descriptions (B-65282EN)", or "FANUC SERVO AMPLIFIER βi series Descriptions (B-65322EN)".

© MyFANUC 2D51CC9CD8564E3B8C4DE377C2D11C41

2.1.2.1 Combinations with servo amplifiers αiSV-B, αiSVP-B, βiSV-B, and βiSVSP-B

αiSV-B and αiSVP-B amplifiers (200V, 160A or less)

Continuous torque (at low speed)		1	2		4			8			12	
Motor	αiS-B		αiS 2 /5000-B	αiS 2 /6000-B	αiS 4 /5000-B	αiS 4 /6000-B			αiS 8 /4000-B	αiS 8 /6000-B	αiS12 /4000-B	αiS12 /6000-B
Amplifier	αiF-B	αiF 1 /5000-B	αiF 2 /5000-B				αiF 4 /5000-B	αiF 8 /3000-B	αiF 8 /4000-B		αiF12 /4000-B	
αiSV 4-B	-											
αiSV 20-B	-	○	○	○	○	○						
αiSV 40-B	-	▲	▲	▲	▲	▲	○	○				
αiSV 80-B	-						▲	▲	○	○	○	
αiSV 160-B	-											○
αiSV 4/4-B	L axis											
	M axis											
αiSV 4/20-B	L axis											
	M axis	○	○	○	○	○						
αiSV 20/20-B	L axis	○	○	○	○	○						
	M axis	○	○	○	○	○						
αiSV 20/40-B	L axis	○	○	○	○	○						
	M axis	▲	▲	▲	▲	▲	○	○				
αiSV 40/40-B	L axis	▲	▲	▲	▲	▲	○	○				
	M axis	▲	▲	▲	▲	▲	○	○				
αiSV 40/80-B	L axis	▲	▲	▲	▲	▲	○	○				
	M axis						▲	▲	○	○	○	
αiSV 80/80-B	L axis						▲	▲	○	○	○	
	M axis						▲	▲	○	○	○	
αiSV 80/160-B	L axis						▲	▲	○	○	○	
	M axis											○
αiSV 160/160-B	L axis											○
	M axis											○
αiSV 4/4/4-B	L axis											
	M axis											
	N axis											
αiSV 20/20/20-B	L axis	○	○	○	○	○						
	M axis	○	○	○	○	○						
	N axis	○	○	○	○	○						
αiSV 20/20/40-B	L axis	○	○	○	○	○						
	M axis	○	○	○	○	○						
	N axis	▲	▲	▲	▲	▲	○	○				
αiSV 40/40/40-B	L axis	▲	▲	▲	▲	▲	○	○				
	M axis	▲	▲	▲	▲	▲	○	○				
	N axis	▲	▲	▲	▲	▲	○	○				
αiSV 80/80/80-B	L axis						▲	▲	○	○	○	
	M axis						▲	▲	○	○	○	
	N axis						▲	▲	○	○	○	
αiSVP 20/20/20-2.2-B	L axis	○	○	○	○	○						
	M axis	○	○	○	○	○						
	N axis	○	○	○	○	○						
αiSVP 20/20/20-5.5-B	L axis	○	○	○	○	○						
	M axis	○	○	○	○	○						
	N axis	○	○	○	○	○						
αiSVP 40/40/40-2.2-B	L axis	▲	▲	▲	▲	▲	○	○				
	M axis	▲	▲	▲	▲	▲	○	○				
	N axis	▲	▲	▲	▲	▲	○	○				

Note) Each symbol is as described below.

○: Standard combination.

▲: To combine this motor, the motor control parameter must be changed.
If wishing to use this combination, contact FANUC.
Invalid parameter setting may damage the motor.

© MyFANUC 2D51CC9CD8564E3B8C4DE377C2D11C41

Continuous torque (at low speed)		22			30	40		50	60
Motor	αiS-B		αiS22 /4000-B	αiS22 /6000-B	αiS30 /4000-B	αiS40 /4000-B		αiS50 /2000-B	αiS60 /2000-B
Amplifier	αiF-B	αiF22 /3000-B	αiF22 /4000-B		αiF30 /4000-B	αiF40 /3000-B	αiF40 /3000 FAN-B		
αiSV 4-B	-								
αiSV 20-B	-								
αiSV 40-B	-								
αiSV 80-B	-	○							
αiSV 160-B	-		○	○	○	○	○	○	○
αiSV 4/4-B	L axis								
	M axis								
αiSV 4/20-B	L axis								
	M axis								
αiSV 20/20-B	L axis								
	M axis								
αiSV 20/40-B	L axis								
	M axis								
αiSV 40/40-B	L axis								
	M axis								
αiSV 40/80-B	L axis								
	M axis	○							
αiSV 80/80-B	L axis	○							
	M axis	○							
αiSV 80/160-B	L axis	○							
	M axis		○	○	○	○	○	○	○
αiSV 160/160-B	L axis		○	○	○	○	○	○	○
	M axis		○	○	○	○	○	○	○
αiSV 4/4/4-B	L axis								
	M axis								
	N axis								
αiSV 20/20/20-B	L axis								
	M axis								
	N axis								
αiSV 20/20/40-B	L axis								
	M axis								
	N axis								
αiSV 40/40/40-B	L axis								
	M axis								
	N axis								
αiSV 80/80/80-B	L axis	○							
	M axis	○							
	N axis	○							
αiSVP 20/20/20-2.2-B	L axis								
	M axis								
	N axis								
αiSVP 20/20/20-5.5-B	L axis								
	M axis								
	N axis								
αiSVP 40/40/40-2.2-B	L axis								
	M axis								
	N axis								

© MyFANUC 2D51CC9CD8564E3B8C4DE377C2D11C41

Amplifiers αiSV-B (200V, 360A or more)

Continuous torque (at low speed)		50		60		150	300	500
Motor / Amplifier	αiS-B	αiS 50 /3000-B	αiS 50 /3000 FAN-B	αiS 60 /3000-B	αiS 60 /3000 FAN-B	αiS 150 /3000-B	αiS 300 /2000-B	αiS 500 /2000-B
αiSV 360-B	-	○	○	○	○	○		
αiSV 360-B x2	-						○	○

Note: For a motor driven by multiple servo amplifier, such as the αiS 300-B motor, the torque tandem control option is required.

© MyFANUC 2D51CC9CD8564E3B8C4DE377C2D11C41

βiSV-B and βiSVSP-B amplifiers (200V, 80A or less)

Continuous torque (at low speed)		1	2		4			8			12	22
Motor	αiS-B		αiS 2 /5000-B	αiS 2 /6000-B	αiS 4 /5000-B	αiS 4 /6000-B			αiS 8 /4000-B	αiS 8 /6000-B	αiS12 /4000-B	
Amplifier	αiF-B	αiF 1 /5000-B	αiF 2 /5000-B				αiF 4 /5000-B	αiF 8 /3000-B	αiF 8 /4000-B		αiF12 /4000-B	αiF22 /3000-B
βiSV 4-B	-											
βiSV 20-B	-	○	○	○	○	○						
βiSV 40-B	-	▲	▲	▲	▲	▲	○	○				
βiSV 80-B	-						▲	▲	○	○	○	○
βiSV 20/20-B	L axis	○	○	○	○	○						
	M axis	○	○	○	○	○						
βiSV 40/40-B	L axis	▲	▲	▲	▲	▲	○	○				
	M axis	▲	▲	▲	▲	▲	○	○				
βiSVSP 20/20-7.5-B	L axis	○	○	○	○	○						
	M axis	○	○	○	○	○						
βiSVSP 20/20-11-B	L axis	○	○	○	○	○						
	M axis	○	○	○	○	○						
βiSVSP 40/40-15-B	L axis	▲	▲	▲	▲	▲	○	○				
	M axis	▲	▲	▲	▲	▲	○	○				
βiSVSP 40/40-18-B	L axis	▲	▲	▲	▲	▲	○	○				
	M axis	▲	▲	▲	▲	▲	○	○				
βiSVSP 80/80-18-B	L axis						▲	▲	○	○	○	○
	M axis						▲	▲	○	○	○	○
βiSVSP 20/20/40-7.5-B	L axis	○	○	○	○	○						
	M axis	○	○	○	○	○						
	N axis	▲	▲	▲	▲	▲	○	○				
βiSVSP 20/20/40-11-B	L axis	○	○	○	○	○						
	M axis	○	○	○	○	○						
	N axis	▲	▲	▲	▲	▲	○	○				
βiSVSP 40/40/40-11-B	L axis	▲	▲	▲	▲	▲	○	○				
	M axis	▲	▲	▲	▲	▲	○	○				
	N axis	▲	▲	▲	▲	▲	○	○				
βiSVSP 40/40/40-15-B	L axis	▲	▲	▲	▲	▲	○	○				
	M axis	▲	▲	▲	▲	▲	○	○				
	N axis	▲	▲	▲	▲	▲	○	○				
βiSVSP 40/40/80-15-B	L axis	▲	▲	▲	▲	▲	○	○				
	M axis	▲	▲	▲	▲	▲	○	○				
	N axis						▲	▲	○	○	○	○
βiSVSP 40/40/80-18-B	L axis	▲	▲	▲	▲	▲	○	○				
	M axis	▲	▲	▲	▲	▲	○	○				
	N axis						▲	▲	○	○	○	○
βiSVSP 80/80/80-18-B	L axis						▲	▲	○	○	○	○
	M axis						▲	▲	○	○	○	○
	N axis						▲	▲	○	○	○	○

(Note) It is not able to connect the servo motor αi-B series (specification number A06B-2□□□-Bxxx) to the servo amplifier βiSV-B series (I/O Link Option) (A06B-6132,6133,6162,6163-Hxxx).

Note) Each symbol is as described below.

○: Standard combination.

▲: To combine this motor, the motor control parameter must be changed.
If wishing to use this combination, contact FANUC.
Invalid parameter setting may damage the motor.

© MyFANUC 2D51CC9CD8564E3B8C4DE377C2D11C41

αiSV-B and αiSVP-B amplifiers (400V, 80A or less)

Continuous torque (at low speed)		2		4			8			12	
Motor / Amplifier	αiS-B	αiS 2 /5000 HV-B	αiS 2 /6000 HV-B	αiS 4 /5000 HV-B	αiS 4 /6000 HV-B			αiS 8 /4000 HV-B	αiS 8 /6000 HV-B	αiS12 /4000 HV-B	αiS12 /6000 HV-B
	αiF-B					αiF 4 /5000 HV-B	αiF 8 /3000 HV-B	αiF 8 /4000 HV-B		αiF12 /4000 HV-B	
αiSV 10HV-B	-	○	○	○	○						
αiSV 20HV-B	-	▲	▲	▲	▲	○	○				
αiSV 40HV-B	-					▲	▲	○	○	○	
αiSV 80HV-B	-										○
αiSV 10/10HV-B	L axis	○	○	○	○						
	M axis	○	○	○	○						
αiSV 10/20HV-B	L axis	○	○	○	○						
	M axis	▲	▲	▲	▲	○	○				
αiSV 20/20HV-B	L axis	▲	▲	▲	▲	○	○				
	M axis	▲	▲	▲	▲	○	○				
αiSV 20/40HV-B	L axis	▲	▲	▲	▲	○	○				
	M axis					▲	▲	○	○	○	
αiSV 40/40HV-B	L axis					▲	▲	○	○	○	
	M axis					▲	▲	○	○	○	
αiSV 40/80HV-B	L axis					▲	▲	○	○	○	
	M axis										○
αiSV 80/80HV-B	L axis										○
	M axis										○
αiSV 10/10/10HV-B	L axis	○	○	○	○						
	M axis	○	○	○	○						
	N axis	○	○	○	○						
αiSV 10/10/20HV-B	L axis	○	○	○	○						
	M axis	○	○	○	○						
	N axis	▲	▲	▲	▲	○	○				
αiSV 20/20/20HV-B	L axis	▲	▲	▲	▲	○	○				
	M axis	▲	▲	▲	▲	○	○				
	N axis	▲	▲	▲	▲	○	○				
αiSV 40/40/40HV-B	L axis					▲	▲	○	○	○	
	M axis					▲	▲	○	○	○	
	N axis					▲	▲	○	○	○	
αiSVP 10/10/10-5.5HV-B	L axis	○	○	○	○						
	M axis	○	○	○	○						
	N axis	○	○	○	○						

Note) Each symbol is as described below.

○: Standard combination.

▲: To combine this motor, the motor control parameter must be changed.
If wishing to use this combination, contact FANUC.
Invalid parameter setting may damage the motor.

© MyFANUC 2D51CC9CD8564E3B8C4DE377C2D11C41

Continuous torque (at low speed)		22			30		40			50	60
Motor / Amplifier	αiS-B		αiS22 /4000 HV-B	αiS22 /6000 HV-B	αiS30 /4000 HV-B		αiS40 /4000 HV-B			αiS50 /2000 HV-B	αiS60 /2000 HV-B
	αiF-B	αiF22 /3000 HV-B	αiF22 /4000 HV-B			αiF30 /4000 HV-B		αiF40 /3000 HV-B	αiF40 /3000 HV FAN-B		
αiSV 10HV-B	-										
αiSV 20HV-B	-										
αiSV 40HV-B	-	○									
αiSV 80HV-B	-		○	○	○	○	○	○	○	○	○
αiSV 10/10HV-B	L axis										
	M axis										
αiSV 10/20HV-B	L axis										
	M axis										
αiSV 20/20HV-B	L axis										
	M axis										
αiSV 20/40HV-B	L axis										
	M axis	○									
αiSV 40/40HV-B	L axis	○									
	M axis	○									
αiSV 40/80HV-B	L axis	○									
	M axis		○	○	○	○	○	○	○	○	○
αiSV 80/80HV-B	L axis		○	○	○	○	○	○	○	○	○
	M axis		○	○	○	○	○	○	○	○	○
αiSV 10/10/10HV-B	L axis										
	M axis										
	N axis										
αiSV 10/10/20HV-B	L axis										
	M axis										
	N axis										
αiSV 20/20/20HV-B	L axis										
	M axis										
	N axis										
αiSV 40/40/40HV-B	L axis	○									
	M axis	○									
	N axis	○									
αiSVP 10/10/10-5.5HV-B	L axis										
	M axis										
	N axis										

αiSV-B amplifiers (400V, 180A or more)

Continuous torque (at low speed)		50		60		150	300	
Motor / Amplifier	αiS-B	αiS 50 /3000 HV-B	αiS 50 /3000 HV FAN-B	αiS 60 /3000 HV-B	αiS 60 /3000 HV FAN-B	αiS 150 /3000 HV-B	αiS 300 /2000 HV-B	αiS 300 /3000 HV-B
αiSV 180HV-B	-	○	○	○	○	○		
αiSV 180HVS-B		○	○	○	○			
αiSV 360HV-B	-						○	
αiSV 360HV-B x2	-							
αiSV 360HV-B x4	-							
αiSV 540HV-B	-							○

© MyFANUC 2D51CC9CD8564E3B8C4DE377C2D11C41

Continuous torque (at low speed)		500		1000		1500	2000	3000
Motor / Amplifier	αiS	αiS 500 /2000 HV-B	αiS 500 /3000 HV-B	αiS 1000 /2000HV-B	αiS 1000 /3000HV-B	αiS 1500 /3000HV-B	αiS 2000 /2000HV	αiS 3000 /2000HV
αiSV 180HV-B	-							
αiSV 180HVS-B								
αiSV 360HV-B	-	○						
αiSV 360HV-B x2	-			○				
αiSV 360HV-B x4	-				○		○	○
αiSV 540HV-B	-		○					
αiSV 540HV-B x4	-					○		

Note: For a motor driven by multiple servo amplifier, such as the αiS 1000HV-B motor, the torque tandem control option is required.

βiSV-B and βiSVSP-B amplifiers (400V, 40A or less)

Continuous torque (at low speed)		2		4			8			12	22
Motor / Amplifier	αiS-B	αiS 2 /5000 HV-B	αiS 2 /6000 HV-B	αiS 4 /5000 HV-B	αiS 4 /6000 HV-B			αiS 8 /4000 HV-B	αiS 8 /6000 HV-B	αiS12 /4000 HV-B	
	αiF-B					αiF 4 /5000 HV-B	αiF 8 /3000 HV-B	αiF 8 /4000 HV-B		αiF12 /4000 HV-B	αiF22 /3000 HV-B
βiSV 10HV-B	-	○	○	○	○						
βiSV 20HV-B	-	▲	▲	▲	▲	○	○				
βiSV 40HV-B	-					▲	▲	○	○	○	○
βiSVSP 10/10-11HV-B	L axis	○	○	○	○						
	M axis	○	○	○	○						
βiSVSP 40/40-18HV-B	L axis					▲	▲	○	○	○	○
	M axis					▲	▲	○	○	○	○
βiSVSP 20/20/20-11HV-B	L axis	▲	▲	▲	▲	○	○				
	M axis	▲	▲	▲	▲	○	○				
	N axis	▲	▲	▲	▲	○	○				
βiSVSP 20/20/40-15HV-B	L axis	▲	▲	▲	▲	○	○				
	M axis	▲	▲	▲	▲	○	○				
	N axis					▲	▲	○	○	○	○
βiSVSP 40/40/40-18HV-B	L axis					▲	▲	○	○	○	○
	M axis					▲	▲	○	○	○	○
	N axis					▲	▲	○	○	○	○

(Note) It is not able to connect the servo motor αi-B series (specification number A06B-2□□□-Bxxx) to the servo amplifier βiSV-B series (I/O Link Option) (A06B-6132,6133,6162,6163-Hxxx).

Note) Each symbol is as described below.

○: Standard combination.

▲: To combine this motor, the motor control parameter must be changed.
If wishing to use this combination, contact FANUC.
Invalid parameter setting may damage the motor.

© MyFANUC 2D51CC9CD8564E3B8C4DE377C2D11C41

⚠ CAUTION

1 When servo amplifiers βiSVSP-B are combined with the following servo motors, the dynamic brake stop distance is longer than when servo amplifier αiSV-B or the one-axis servo amplifier βiSV-B are combined with the following servo motors. Read the "coefficients for dynamic brake calculation" to confirm whether the dynamic brake stop distance fits the desired stop distance. For how to calculate the dynamic brake stop distance and the details, see Subsection 2.2.2.7, "Calculating the dynamic brake stop distance".

[Servo motor specifications]
αiS 8/4000-B, αiS 8/6000-B, αiS 12/4000-B,
αiF 4/5000-B, αiF 8/3000-B, αiF 8/4000-B, αiF 12/4000-B, αiF 22/3000-B

2 For not only the motors listed in 1 above but also all other motors, it is recommended to apply the quick stop function as a function to shorten the stop distance in the event of an emergency stop or a power failure. For details, refer to "PARAMETER MANUAL (B-65270EN)". To make sure that the quick stop function operates in the event of a power failure, keep the control power supply (24 VDC) for the CNC and the servo amplifier by using, for example, an uninterruptible power supply (UPS).

3 If an alarm occurs, the stop distance cannot be shortened because the quick stop function does not operate.

4 If applying the quick stop function, be sure to confirm with an actual machine that the stop distance of the servo motor is shortened in the event of an emergency stop or a power failure.

⚠ CAUTION

1 If a motor is used in a combination other than those listed above, it may become broken.

2 For servo amplifiers, refer to “FANUC SERVO AMPLIFIER αi-B series Descriptions (B-65412EN)” or “FANUC SERVO AMPLIFIER βi-B series Descriptions (B-65322EN)."

3 If you want to use a motor in combination with the α/β series servo amplifier, consult with FANUC.

© MyFANUC 2D51CC9CD8564E3B8C4DE377C2D11C41

2.1.2.2 Combinations with servo amplifiers with αiSV, βiSV, and βiSVSP

αiSV amplifiers (200V, 160A or less)

Continuous torque (at low speed)		1	2		4			8			12	
Motor / Amplifier	αiS-B		αiS 2 /5000-B	αiS 2 /6000-B	αiS 4 /5000-B	αiS 4 /6000-B			αiS 8 /4000-B	αiS 8 /6000-B	αiS12 /4000-B	αiS12 /6000-B
	αiF-B	αiF 1 /5000-B	αiF 2 /5000-B				αiF 4 /5000-B	αiF 8 /3000-B	αiF 8 /4000-B		αiF12 /4000-B	
αiSV 4	-											
αiSV 20 αiSV 20L	-	○	○	○	○	○						
αiSV 40 αiSV 40L	-						○	○				
αiSV 80 αiSV 80L	-								○	○	○	
αiSV 160 αiSV 160L	-											○
αiSV 4/4	L axis											
	M axis											
αiSV 4/20	L axis											
	M axis	○	○	○	○	○						
αiSV 20/20 αiSV 20/20L	L axis	○	○	○	○	○						
	M axis	○	○	○	○	○						
αiSV 20/40 αiSV 20/40L	L axis	○	○	○	○	○						
	M axis						○	○				
αiSV 40/40 αiSV 40/40L	L axis						○	○				
	M axis						○	○				
αiSV 40/80 αiSV 40/80L	L axis						○	○				
	M axis								○	○	○	
αiSV 80/80 αiSV 80/80L	L axis								○	○	○	
	M axis								○	○	○	
αiSV 80/160	L axis								○	○	○	
	M axis											○
αiSV 160/160	L axis											○
	M axis											○
αiSV 4/4/4	L axis											
	M axis											
	N axis											
αiSV 20/20/20	L axis	○	○	○	○	○						
	M axis	○	○	○	○	○						
	N axis	○	○	○	○	○						
αiSV 20/20/40	L axis	○	○	○	○	○						
	M axis	○	○	○	○	○						
	N axis						○	○				
αiSV 40S/40S/40	L axis						○	○				
	M axis						○	○				
	N axis						○	○				

© MyFANUC 2D51CC9CD8564E3B8C4DE377C2D11C41

Continuous torque (at low speed)		22			30	40			50	60
Motor / Amplifier	αiS-B		αiS22 /4000-B	αiS22 /6000-B	αiS30 /4000-B			αiS40 /4000-B	αiS50 /2000-B	αiS60 /2000-B
	αiF-B	αiF22 /3000-B	αiF22 /4000-B		αiF30 /4000-B	αiF40 /3000-B	αiF40 /3000 FAN-B			
αiSV 4	-									
αiSV 20 αiSV 20L	-									
αiSV 40 αiSV 40L	-									
αiSV 80 αiSV 80L	-	○								
αiSV 160 αiSV 160L	-		○	○	○	○	○	○	○	○
αiSV 4/4	L axis									
	M axis									
αiSV 4/20	L axis									
	M axis									
αiSV 20/20 αiSV 20/20L	L axis									
	M axis									
αiSV 20/40 αiSV 20/40L	L axis									
	M axis									
αiSV 40/40 αiSV 40/40L	L axis									
	M axis									
αiSV 40/80 αiSV 40/80L	L axis									
	M axis	○								
αiSV 80/80 αiSV 80/80L	L axis	○								
	M axis	○								
αiSV 80/160	L axis	○								
	M axis		○	○	○	○		○	○	○
αiSV 160/160	L axis		○	○	○	○		○	○	○
	M axis		○	○	○	○		○	○	○
αiSV 4/4/4	L axis									
	M axis									
	N axis									
αiSV 20/20/20	L axis									
	M axis									
	N axis									
αiSV 20/20/40	L axis									
	M axis									
	N axis									
αiSV 40S/40S/40	L axis									
	M axis									
	N axis									

αiSV amplifiers (200V, 360A or more)

Continuous torque (at low speed)		50		60		150	300	500
Motor / Amplifier	αiS-B	αiS 50 /3000-B	αiS 50 /3000 FAN-B	αiS 60 /3000-B	αiS 60 /3000 FAN-B	αiS 150 /3000-B	αiS 300 /2000-B	αiS 500 /2000-B
αiSV 360	-	○	○	○	○	○		
αiSV 360 x2	-						○	○

Note) For a motor driven by multiple servo amplifier, such as the αiS 300-B motor, the torque tandem control option or the PWM distribution module is required.

© MyFANUC 2D51CC9CD8564E3B8C4DE377C2D11C41

βiSV amplifiers (200V, 80A or less)

Continuous torque (at low speed)		1	2		4			8			12	22
Motor / Amplifier	αiS-B		αiS 2 /5000-B	αiS 2 /6000-B	αiS 4 /5000-B	αiS 4 /6000-B			αiS 8 /4000-B	αiS 8 /6000-B	αiS12 /4000-B	
	αiF-B	αiF 1 /5000-B	αiF 2 /5000-B				αiF 4 /5000-B	αiF 8 /3000-B	αiF 8 /4000-B		αiF12 /4000-B	αiF22 /3000-B
βiSV 4	-											
βiSV 20		○	○	○	○	○						
βiSV 40							○	○				
βiSV 80									○	○	○	○
βiSV 20/20	L axis	○	○	○	○	○						
	M axis	○	○	○	○	○						
βiSV 40/40	L axis						○	○				
	M axis						○	○				

(Note) It is not able to connect the servo motor αi-B series (specification number A06B-2□□□-Bxxx) to the servo amplifier βiSV-B series (I/O Link Option) (A06B-6132,6133,6162,6163-Hxxx).

© MyFANUC 2D51CC9CD8564E3B8C4DE377C2D11C41

αiSV amplifiers (400V, 80A or less)

Continuous torque (at low speed)		2		4			8			12	
Motor / Amplifier	αiS-B	αiS 2 /5000 HV-B	αiS 2 /6000 HV-B	αiS 4 /5000 HV-B	αiS 4 /6000 HV-B			αiS 8 /4000 HV-B	αiS 8 /6000 HV-B	αiS12 /4000 HV-B	αiS12 /6000 HV-B
	αiF-B					αiF 4 /5000 HV-B	αiF 8 /3000 HV-B	αiF 8 /4000 HV-B		αiF12 /4000 HV-B	
αiSV 10HV αiSV 10HVL	-	○	○	○	○						
αiSV 20HV αiSV 20HVL	-					○	○				
αiSV 40HV αiSV 40HVL	-							○	○	○	
αiSV 80HV αiSV 80HVL	-										○
αiSV 10/10HV αiSV 10/10HVL	L axis	○	○	○	○						
	M axis	○	○	○	○						
αiSV 20/20HV αiSV 20/20HVL	L axis					○	○				
	M axis					○	○				
αiSV 20/40HV αiSV 20/40HVL	L axis					○	○				
	M axis							○	○	○	
αiSV 40/40HV αiSV 40/40HVL	L axis							○	○	○	
	M axis							○	○	○	
αiSV 40/80HV	L axis							○	○	○	
	M axis										○
αiSV 80/80HV	L axis										○
	M axis										○

Continuous torque (at low speed)		22			30		40			50	60
Motor / Amplifier	αiS-B		αiS22 /4000 HV-B	αiS22 /6000 HV-B	αiS30 /4000 HV-B		αiS40 /4000 HV-B			αiS50 /2000 HV-B	αiS60 /2000 HV-B
	αiF-B	αiF22 /3000 HV-B	αiF22 /4000 HV-B			αiF30 /4000 HV-B		αiF40 /3000 HV-B	αiF40 /3000 HV FAN-B		
αiSV 10HV αiSV 10HVL	-										
αiSV 20HV αiSV 20HVL	-										
αiSV 40HV αiSV 40HVL	-	○									
αiSV 80HV αiSV 80HVL	-		○	○	○		○			○	○
αiSV 10/10HV αiSV 10/10HVL	L axis										
	M axis										
αiSV 20/20HV αiSV 20/20HVL	L axis										
	M axis										
αiSV 20/40HV αiSV 20/40HVL	L axis										
	M axis	○									
αiSV 40/40HV αiSV 40/40HVL	L axis	○									
	M axis	○									
αiSV 40/80HV	L axis	○									
	M axis		○	○	○		○			○	○
αiSV 80/80HV	L axis		○	○	○		○			○	○
	M axis		○	○	○		○			○	○

© MyFANUC 2D51CC9CD8564E3B8C4DE377C2D11C41

αiSV amplifiers (400V, 180A or more)

Continuous torque (at low speed)		50		60		150	300	
Motor / Amplifier	αiS-B	αiS 50 /3000 HV-B	αiS 50 /3000 HV FAN-B	αiS 60 /3000 HV-B	αiS 60 /3000 HV FAN-B	αiS 150 /3000 HV-B	αiS 300 /2000 HV-B	αiS 300 /3000 HV-B
αiSV 180HV	-	○	○	○	○	○		
αiSV 360HV	-						○	
αiSV 360HV x2	-							
αiSV 360HV x4	-							
αiSV 540HV	-							○

Continuous torque (at low speed)		500		1000		1500	2000	3000
Motor / Amplifier	αiS	αiS 500 /2000 HV-B	αiS 500 /3000 HV-B	αiS 1000 /2000 HV-B	αiS 1000 /3000 HV-B	αiS 1500 /3000 HV-B	αiS 2000 /2000 HV	αiS 3000 /2000 HV
αiSV 180HV	-							
αiSV 360HV	-	○						
αiSV 360HV x2	-			○				
αiSV 360HV x4	-				○		○	○
αiSV 540HV	-		○					
αiSV 540HV x4	-					○		

Note) For a motor driven by multiple servo amplifier, such as the αiS 1000HV-B motor, the torque tandem control option or the PWM distribution module is required.

βiSV amplifiers (400V, 40A or less)

Continuous torque (at low speed)		2		4			8			12	22
Motor	αiS-B	αiS 2 /5000 HV-B	αiS 2 /6000 HV-B	αiS 4 /5000 HV-B	αiS 4 /6000 HV-B			αiS 8 /4000 HV-B	αiS 8 /6000 HV-B	αiS12 /4000 HV-B	
Amplifier	αiF-B					αiF 4 /5000 HV-B	αiF 8 /3000 HV-B	αiF 8 /4000 HV-B		αiF12 /4000 HV-B	αiF22 /3000 HV-B
βiSV 10HV	-	○	○	○	○						
βiSV 20HV	-					○	○				
βiSV 40HV	-							○	○	○	○

(Note) It is not able to connect the servo motor αi-B series (specification number A06B-2□□□-Bxxx) to the servo amplifier βiSV-B series (I/O Link Option) (A06B-6132,6133,6162,6163-Hxxx).

© MyFANUC 2D51CC9CD8564E3B8C4DE377C2D11C41

⚠ **CAUTION**

1 When servo amplifiers βiSV40/40 are combined with the following servo motors, the dynamic brake stop distance is longer than when servo amplifiers αiSV or the one-axis servo amplifier βiSV40 are combined with the following servo motors. Read the "coefficients for dynamic brake calculation" to confirm whether the dynamic brake stop distance fits the desired stop distance. For how to calculate the dynamic brake stop distance and the details, see Subsection 2.2.2.7, "Calculating the dynamic brake stop distance".

[Servo motor specifications]
αiF 4/5000-B, αiF 8/3000-B

2 For not only the motors listed in 1 above but also all other motors, it is recommended to apply the quick stop function as a function to shorten the stop distance in the event of an emergency stop or a power failure. For details, refer to "PARAMETER MANUAL (B-65270EN)". To make sure that the quick stop function operates in the event of a power failure, keep the control power supply (24 VDC) for the CNC and the servo amplifier by using, for example, an uninterruptible power supply (UPS).

3 If an alarm occurs, the stop distance cannot be shortened because the quick stop function does not operate.

4 If applying the quick stop function, be sure to confirm with an actual machine that the stop distance of the servo motor is shortened in the event of an emergency stop or a power failure.

⚠ **CAUTION**

1 If a motor is used in a combination other than those listed above, it may become broken.

2 For servo amplifiers, refer to “FANUC SERVO AMPLIFIER αi series Descriptions (B-65282EN)” or “FANUC SERVO AMPLIFIER βi series Descriptions (B-65322EN)."

3 If you want to use a motor in combination with the α/β series servo amplifier, consult with FANUC.

© MyFANUC 2D51CC9CD8564E3B8C4DE377C2D11C41

2.1.3 Connectors on the Cable Side

This Subsection describes the specifications of the connectors on the cable side that are to be connected to a motor. For the specifications and pin layout of the connector mounted on a motor, see Subsection 1.3.3, "Outline Drawings".

This Subsection classifies connectors by the following groups:

Group	Servo motor name
Group A	αiS 2/5000-B, αiS 2/6000-B, αiS 4/5000-B, αiS 4/6000-B, αiS 2/5000HV-B, αiS 2/6000HV-B, αiS 4/5000HV-B, αiS 4/6000HV-B, αiF 1/5000-B, αiF 2/5000-B
Group B	αiS 8/4000-B, αiS 8/6000-B, αiS 12/4000-B, αiS 12/6000-B, αiS 8/4000HV-B, αiS 8/6000HV-B, αiS 12/4000HV-B, αiS 12/6000HV-B, αiF 4/5000-B, αiF 8/3000-B, αiF 8/4000-B, αiF 4/5000HV-B, αiF 8/3000HV-B, αiF 8/4000HV-B
Group C	αiS 22/4000-B, αiS 22/6000-B, αiS 30/4000-B, αiS 40/4000-B, αiS 50/2000-B, αiS 60/2000-B, αiS 22/4000HV-B, αiS 22/6000HV-B, αiS 30/4000HV-B, αiS 40/4000HV-B, αiS 50/2000HV-B, αiS 60/2000HV-B, αiS 50/3000HV-B, αiS 50/3000HV FAN-B, αiS 60/3000HV-B, αiS 60/3000HV FAN-B, αiF 12/4000-B, αiF 22/3000-B, αiF 22/4000-B, αiF 30/4000-B, αiF 40/3000-B, αiF 40/3000 FAN-B, αiF 12/4000HV-B, αiF 22/3000HV-B, αiF 22/4000HV-B, αiF 30/4000HV-B, αiF 40/3000HV-B, αiF 40/3000HV FAN-B
Group D	αiS 50/3000-B, αiS 50/3000 FAN-B αiS 60/3000-B, αiS 60/3000 FAN-B
Group E	αiS 150/3000-B, αiS 150/3000HV-B, αiS 300/2000-B, αiS 500/2000-B, αiS 300/2000HV-B, αiS 300/3000HV-B, αiS 500/2000HV-B, αiS 500/3000HV-B, αiS 1000/2000HV-B, αiS 1000/3000HV-B, αiS 1500/3000HV-B, αiS 2000/2000HV, αiS 3000/2000HV

This Subsection, "Connectors on the Cable Side", consists of the following sections:

2.1.3.1 Connectors for signals (for all αi-B/αi series models)
2.1.3.2 Connectors for power
2.1.3.3 Connectors for the brake
2.1.3.4 Connectors for the fan
2.1.3.5 Connection to a conduit hose

© MyFANUC 2D51CC9CD8564E3B8C4DE377C2D11C41

2.1.3.1 Connectors for signals (for all αi-B/αi series models)

For all servo motors of the αi-B/αi series, a small dedicated connector is used for signals.
The connector is water-proof when engaged with the motor connector.
There are two types of connectors depending on how a cable is connected to a connector; the crimp type and the solder type. For the crimp type connector, a dedicated crimping tool is required.
The diameter of the cable used is restricted considering cable clamp and voltage drop. The connectors for signals do not have to conform to IEC60034.

Crimp type connector (Japan Aviation Electronics Industry)

	For signal			
Connector kit (FANUC specification)	Straight type	A06B-6114-K204#S		
	Right angle type	A06B-6114-K204#E		
	* With the FANUC specifications, the following connector by Japan Aviation Electronics Industry, (with two types of bushings: for ϕ5.7 to ϕ7.3 and for ϕ6.5 to ϕ8.0) and the contacts (individual type) are included.			
Connector specifications	Straight type	JN2DS10SL1-R (Compatible cable O.D. ϕ5.7 to ϕ7.3) JN2DS10SL2-R (Compatible cable O.D. ϕ6.5 to ϕ8.0)		
	Right angle type	JN2FS10SL1-R (Compatible cable O.D. ϕ5.7 to ϕ7.3) JN2FS10SL2-R (Compatible cable O.D. ϕ6.5 to ϕ8.0)		
Contact specifications	Individual	JN1-22-22S-PKG100 (100 pieces)		
	Reel	JN1-22-22S-10000 (10,000 pieces)		
	Insulation external diameter	ϕ1.5 or less		
Used wire		0V, 5V	6V	RD,*RD
	Cable length: 28m or less	0.3 mm^2 × 2	0.3 mm^2	Twisted pair of at least 0.18 mm^2
	Cable length: 50m or less	0.5mm^2 × 2	0.5mm^2	
		* Use a cable of which strand configuration is 20/0.18 or 104/0.08.		
Tool for crimping terminal	Handy crimping tool	AWG #21 (0.5mm^2:20/0.18) #23 (0.3mm^2) #25 (0.18mm^2)	Japan Aviation Electronics Industry	CT150-2-JN1-E
			FANUC	A06B-6114-K201#JN1E
		AWG #20 (0.5mm^2:104/0.08) #21 (0.5mm^2:20/0.18) #25 (0.18mm^2)	Japan Aviation Electronics Industry	CT150-2-JN1-D
			FANUC	A06B-6114-K201#JN1D
	Automatic crimping tool	Main unit	CP215-5B	
		Applicator	3502-JN1-2C	
Tool for pulling terminal out	Japan Aviation Electronics Industry		ET-JN1	
	FANUC		A06B-6114-K201#JN1R	

© MyFANUC 2D51CC9CD8564E3B8C4DE377C2D11C41

The outside dimensions of each type of connector when engaged are shown below:

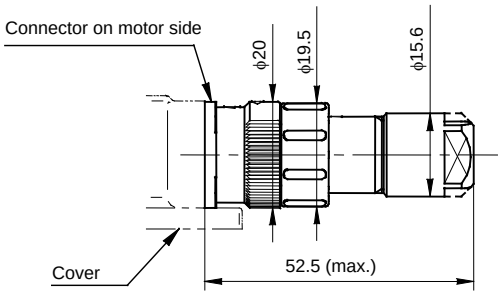

Straight type

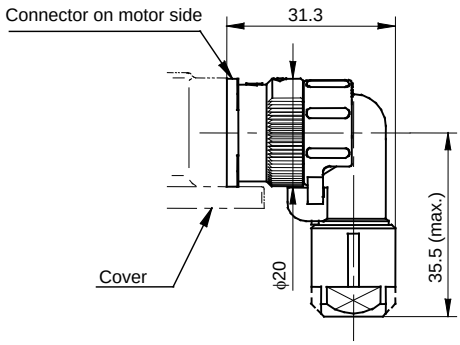

Right angle type

The outside dimensions of the Japan Aviation Electronics Industry's connector

Crimp type connector (Hirose Electric)

	For signal			
Connector specifications	Straight type	HR34B-12WPD-10SC (Compatible cable O.D. ϕ5.7 to ϕ7.3) HR34B-12WPE-10SC (Compatible cable O.D. ϕ6.5 to ϕ8.0) (HR34B-12WPK-10SC (Compatible cable O.D. ϕ8.0 to ϕ9.0))		
	Right angle type	HR34B-12WLPD-10SC (Compatible cable O.D. ϕ5.7 to ϕ7.3) HR34B-12WLPE-10SC (Compatible cable O.D. ϕ6.5 to ϕ8.0) (HR34B-12WLPK-10SC (Compatible cable O.D. ϕ8.0 to ϕ9.0))		
Contact specifications	Loose piece contact	HR34B-SC1-111		
	Strip contact	HR34B-SC1-211		
	Compatible cable	AWG #20 to #25		
	Insulation external diameter	ϕ1.34 or less		
Used wire		0V, 5V	6V	RD,*RD
	Cable length: 28m or less	0.3 $mm^2 \times 2$	0.3 mm^2	Twisted pair of at least 0.18 mm^2
	Cable length: 50m or less	0.5$mm^2 \times 2$	0.5mm^2	
Tool for crimping terminal	Handy crimping tool (AWG#20,23,25)		HT304/HR34B-1	
	Automatic crimping tool	Main unit	CM-105	(Available for HR34B-SC1-211)
		Applicator	AP105-HR34B-1	
Tool for pulling terminal out	RP6-SC-TP			

* Specification number is all of Hirose Electric's specification.

> ⚠ **CAUTION**
> Because the structure of crimp type connector of Hirose Electric is different from the one of Japan Aviation Electronics Industry, be sure to use the same maker's connector, contacts and crimping tool when assembling the connector.

© MyFANUC 2D51CC9CD8564E3B8C4DE377C2D11C41

The outside dimensions of each type of connector when engaged are shown below:

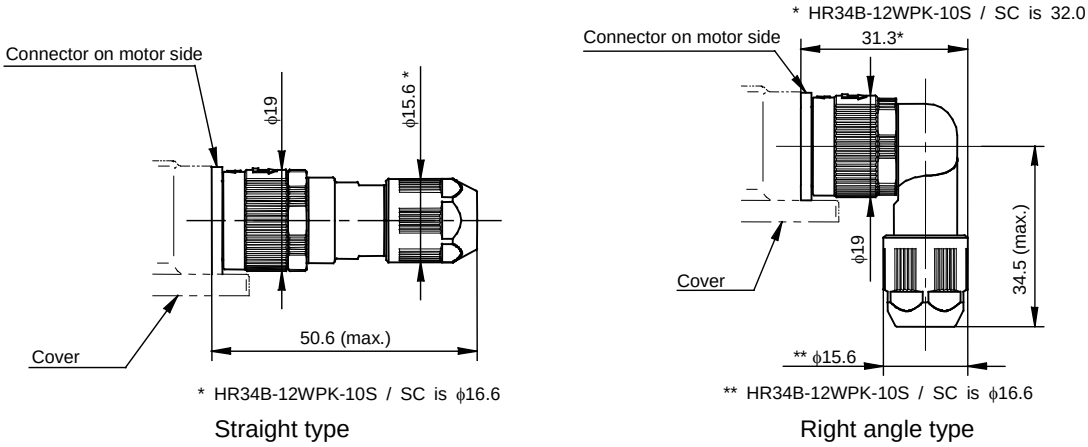

The outside dimensions of the Hirose Electric's connector

Solder type connector (Hirose Electric)

	For signal			
Connector kit (FANUC specification)	Straight type	A06B-6114-K205#S		
	Right angle type	A06B-6114-K205#E		
	* With the FANUC specifications, the following connector by Hirose Electric, (with two types of bushings and endnuts: for ϕ5.7 to ϕ7.3 and for ϕ6.5 to ϕ8.0) are included.			
Connector specifications	Straight type	HR34B-12WPD-10S (Compatible cable O.D. ϕ5.7 to ϕ7.3) HR34B-12WPE-10S (Compatible cable O.D. ϕ6.5 to ϕ8.0) (HR34B-12WPK-10S (Compatible cable O.D. ϕ8.0 to ϕ9.0))		
	Right angle type	HR34B-12WLPD-10S (Compatible cable O.D. ϕ5.7 to ϕ7.3) HR34B-12WLPE-10S (Compatible cable O.D. ϕ6.5 to ϕ8.0) (HR34B-12WLPK-10S (Compatible cable O.D. ϕ8.0 to ϕ9.0))		
Compatible cable	AWG #20 or less (ϕ 0.8mm or less)			
Used wire		0V, 5V	6V	RD,*RD
	Cable length: 28m or less	0.3 $mm^2 \times 2$	0.3 mm^2	Twisted pair of at least 0.18 mm^2
	Cable length: 50m or less	0.5$mm^2 \times 2$	0.5mm^2	

* The outside dimensions of each type of connector when engaged are the same as the crimp type connector.

Solder type connector (Japan Aviation Electronics Industry)

	For signal	
Contact specifications	Individual (100pieces)	JN1-22-22F-PKG100
	Individual (10pieces)	JN1-22-22F-PKG10
Compatible cable	AWG #20 or less (Insulation external diameter ϕ1.5mm or less)	

* This type connector uses the solderable contact. And other parts are the same as crimp type of Japan Aviation Electronics Industry's connector.

© MyFANUC 2D51CC9CD8564E3B8C4DE377C2D11C41

⚠ CAUTION

1 In case that the cable is prepared by MTB, total resistance of 5V and 0V must be less than 2Ω.

2 The motor-side plug connector accepts a wire whose diameter is 0.5 mm^2 (wire construction: 20/0.18 or 104/0.08; sheath outer diameter: ϕ1.5 or less) and a cable whose sheath diameter is ϕ5.7 to 8.0. When using a thicker wire or cable, take measures described below.

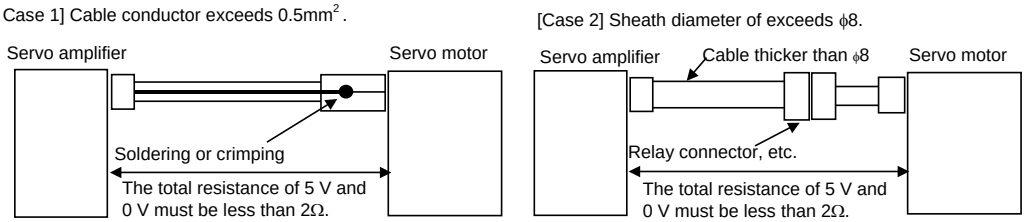

Procedure for engaging feedback cable connectors

Engage the feedback cable connectors according to the procedure described below, and check that they are engaged securely.

1 Checking the mating surfaces and the key direction
Check that the mating surfaces are free from any substance such as foreign particles or oil.

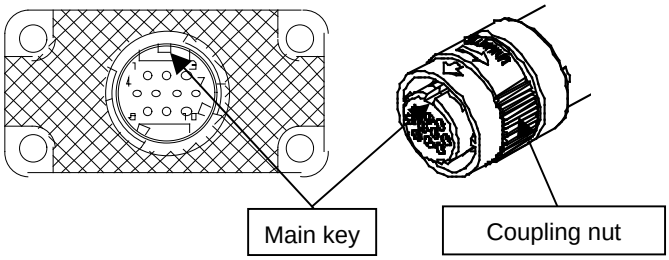

2 Engaging the connectors
Hold the connector at the position shown in the figure, insert it straightforward until it snaps into place.

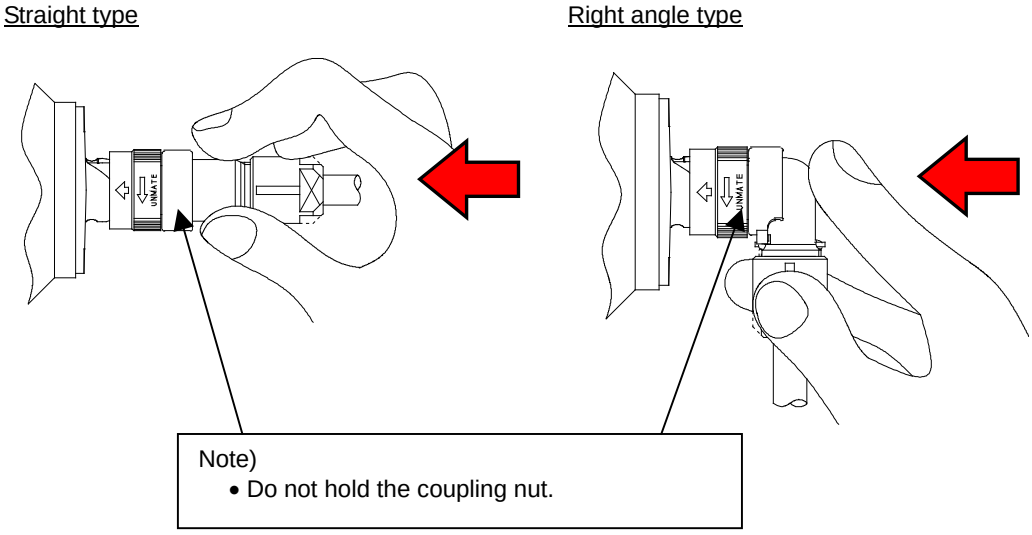

© MyFANUC 2D51CC9CD8564E3B8C4DE377C2D11C41

3 Checking the engaged status

<1> Check that the arrow on the connector is positioned at the center as shown in the figure below. If the arrow is not at the center, turn the coupling nut by hand so that the arrow is at the correct position.

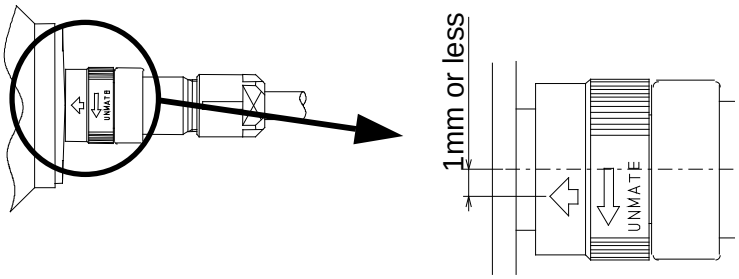

<2> Hold the connector at the position shown in the following figure, and check that the connector does not come off when it is pulled lightly.

Straight type

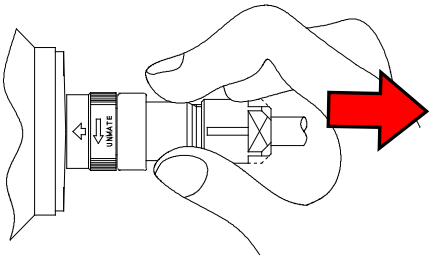

Right angle type

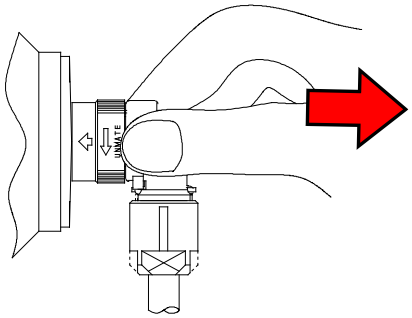

Note)
- Do not pull the cable.
- Pull the connector straightforward.

© MyFANUC 2D51CC9CD8564E3B8C4DE377C2D11C41

2.1.3.2 Connectors for power

(1) Connectors for power (for group A)

Dedicated connectors which are TUV approved are available as the connector for power for the αiS 2-B, αiS 4-B, αiS 2 HV-B, αiS 4 HV-B, αiF 1-B, and αiF 2-B.
For the connector of the motor with a brake, perform cabling for the power and cabling for the brake at the same time.
The following subsection describes the specifications as a connector kit. These connectors are water-proof when engaged.
To connect the cable, a dedicated crimping tool must be used.
Consider crimping and cable clamp. Also note that there are restrictions.

		For power
Connector kit specifications (Including the contact)	Straight type (standard)	1473063-2 (Tyco Electronics Japan GK) A06B-6114-K220#S (FANUC specification)
	Right angle type (CAUTION 1)	1473393-2 (Tyco Electronics Japan GK) A06B-6114-K220#E (FANUC specification)
Applicable wire size (CAUTION 2)		AWG#18 to 16
Insulation external diameter (CAUTION 3)		ϕ1.8 to 2.8
Compatible cable O.D. (CAUTION 4)		ϕ9.2 to ϕ9.9, ϕ9.9 to ϕ11.4
Tool for crimping terminal (CAUTION 5)		91579-1 (Tyco Electronics Japan GK) A06B-6114-K221#C (FANUC specification)
Tool for pulling terminal out (CAUTION 5)		1463329-1 (Tyco Electronics Japan GK) A06B-6114-K221#R (FANUC specification)

⚠ CAUTION

1 For the right angle type, a cable juts from the motor in a vertical direction. To connect a conduit hose to the connector, use the right angle type. (The straight type cannot be used due to dimensional restrictions.)
2 The contact is of the crimp type. Be careful of the applicable wire.
3 The crimping contact crimps the covering in addition to the wire. Follow the dimensions listed above.
An insulation of a smaller diameter may be able to be connected by a wire or tool, however. For details, contact Tyco Electronics Japan GK.
4 To satisfy the TUV-approved and waterproof performance, a cable of an outside diameter within the applicable cable clamp range must be used.
The connector kit includes two types of rubber bushings (cable clamps): one for ϕ9.2 to ϕ9.9 (blue) and the other for ϕ9.9 to ϕ11.4 (black).
5 Dedicated tools are required for crimping and extracting the contact. Keep them on hand when required.

© MyFANUC 2D51CC9CD8564E3B8C4DE377C2D11C41

(2) Connectors for power (for groups B to D)

To meet the IEC60034 standard, TUV-approved plug connectors and cable clamps should be used in connecting the power cable. To meet the IEC60034 standard by using a cable or conduit hose seal adapter, contact the manufacturer for details.
As cable-side plug connectors for the FANUC AC servo motor α*i*–B series, "IP67 rated, TUV-approved, bayonet type", " IP67 rated, TUV-approved, screw type", and " IP67 rated, screw type" are available. (All connectors are black.)

The specifications of each connector are explained based on the examples shown below.

Ordering specification number of the power connector kit

The specification numbers used for ordering a power connector kit from FANUC are listed below. The power connector kit contains a plug connector on the cable side (conforming to IP67, TUV approved type) described subsequently.

Bayonet-type connectors

Group		Power connector kit specification	Content
Group B		A06B-6200-K810	Single block type connector [D]
	Cable outer diameter ϕ11 to 14.1	A06B-6200-K811	Straight type connector [A] + cable clamp [C]
		A06B-6200-K812	Right angle type connector [B] + cable clamp [C]
Group C		A06B-6200-K813	Single block type connector [D]
	Cable outer diameter ϕ12.9 to 16	A06B-6200-K814	Straight type connector [A] + cable clamp [C]
		A06B-6200-K815	Right angle type connector [B] + cable clamp [C]
	Cable outer diameter ϕ18 to 20	A06B-6200-K822	Straight type connector [A] + cable clamp [C]
		A06B-6200-K823	Right angle type connector [B] + cable clamp [C]

Screw-type connectors

Group		Power connector kit specification	Content
Group B		A06B-6079-K810	Single block type connector [D]
	Cable outer diameter ϕ10.3 to 14.3	A06B-6079-K811	Straight type connector [A] + cable clamp [C]
		A06B-6079-K812	Right angle type connector [B] + cable clamp [C]
Group C		A06B-6079-K813	Single block type connector [D]
	Cable outer diameter ϕ12.9 to 16	A06B-6079-K814	Straight type connector [A] + cable clamp [C]
		A06B-6079-K815	Right angle type connector [B] + cable clamp [C]
	Cable outer diameter ϕ18 to 20	A06B-6079-K822	Straight type connector [A] + cable clamp [C]
		A06B-6079-K823	Right angle type connector [B] + cable clamp [C]
Group D		A06B-6079-K816	Single block type connector [D]
	Cable outer diameter ϕ15 to 18	A06B-6079-K817	Straight type connector [A] + cable clamp [C]
		A06B-6079-K818	Right angle type connector [B] + cable clamp [C]

© MyFANUC 2D51CC9CD8564E3B8C4DE377C2D11C41

Example of connector connection

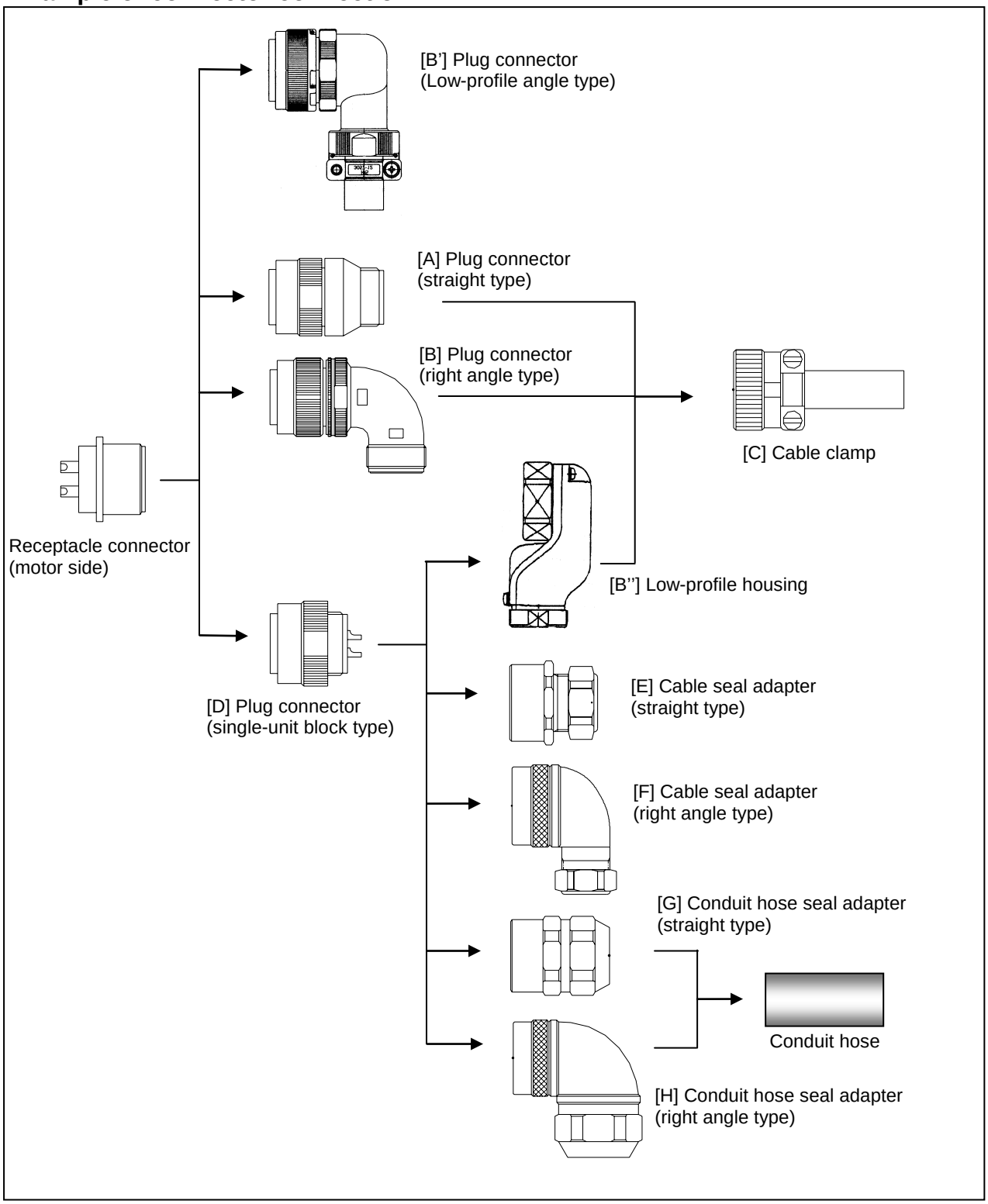

© MyFANUC 2D51CC9CD8564E3B8C4DE377C2D11C41

Specifications of plug connectors on the cable side (IP67 rated, TUV-approved, bayonet type)

The specifications of the cable-side plug connectors of the "IP67 rated, TUV-approved, bayonet type" of each manufacturer are shown below. For details of the connectors, contact each manufacturer.

Model Name	[D] Single Block Type Plug Connector	[A] Straight Type Plug Connector	[B] Right angle Type Plug Connector	[C] Cable Clamp
GroupB	(Japan Aviation Electronics Industry)			
	JL10-6A18-10SE	JL10-6A18-10SE-EB	JL10-8A18-10SE-EB	(1) JL04-18CK(07)-R (2) JL04-18CK(10)-R (3) JL04-18CK(13)-R (4) JL04-18CK(15)-R
	Solder pot diameter ϕ2.6 Applicable wire 3.45mm^2 or less			Compatible cable O.D. (1) ϕ5 to ϕ8 (2) ϕ8 to ϕ11 (3) ϕ11 to ϕ14.1 (4) ϕ14.1 to ϕ15
GroupC	(Japan Aviation Electronics Industry)			
	JL10-6A22-22SE	JL10-6A22-22SE-EB (for (1) to (3)) JL10-6A22-22SE-EB1 (for (4))	JL10-8A22-22SE-EB (for (1) to (3)) JL10-8A22-22SE-EB1 (for (4))	(1) JL04-2022CK(09)-R (2) JL04-2022CK(12)-R (3) JL04-2022CK(14)-R (4) JL04-2428CK(20)-R
	Solder pot diameter ϕ5.3 Applicable wire 10mm^2 or less			Compatible cable O.D. (1) ϕ6.5 to ϕ9.5 (2) ϕ9.5 to ϕ13 (3) ϕ12.9 to ϕ16 (4) ϕ18 to ϕ20
GroupD	(Bayonet connectors are not supported as the motor-side connectors of group D.) (Select the motor-side connectors from the screw-type connectors shown in the next section.)			

* For the connectors of size 22-22, the part number of the plug connector differs depending on the type of cable clamp.

> ⚠ **CAUTION**
> TUV have certified that the plug connectors and cable clamps listed above, when combined with the FANUC AC Servo Motor αi series, satisfy the VDE0627 safety standard.

© MyFANUC 2D51CC9CD8564E3B8C4DE377C2D11C41

Specifications of plug connectors on the cable side (IP67 rated, TUV-approved, screw type)

The specifications of the cable-side plug connectors of the "IP67 rated, TUV-approved, screw type" of each manufacturer are shown below. For details of the connectors, contact each manufacturer.

Model Name	[D] Single Block Type Plug Connector	[A] Straight Type Plug Connector	[B] Right angle Type Plug Connector	[B'] Low-profile angle type Plug Connector (with clamp)	[B''] Low-profile housing	[C] Cable Clamp
Group B	(Hirose Electric)					
	H/MS3106A 18-10S-D-T(76)	H/MS3106A 18-10S-D-T(73)	H/MS3108B 18-10S-D-T(73)	(1)H/MS08A 18-10S-DT10D(73) (2)H/MS08A 18-10S-DT10D1(73)		H/MS3057-10A (73)
	Solder pot diameter ϕ2.6 Applicable wire 3.45mm^2 or less			Solder pot diameter ϕ2.5 Compatible cable O.D. (1) ϕ12 to ϕ14.3 (2) ϕ10 to ϕ12.5		Compatible cable O.D. ϕ10.3 to ϕ14.3
Group C	(Japan Aviation Electronics Industry)					
	JL04V-6A22-22SE-R (Both (1) and (2))	(1)JL04V-6A22-22SE-EB-R (2)JL04V-6A22-22SE-EB1-R	(1)JL04V-8A22-22SE-EBH-R (2)JL04V-8A22-22SE-EB1H-R		(1)JL04-22 EBA (2) Not supported	(1)JL04-2022CK (14)-R (2)JL04-2428CK (20)-R
	Solder pot diameter ϕ5.3 Applicable wire 10mm^2 or less (Applicable wire 5.5mm^2 or less In the case of single block + low-profile housing)				Compatible cable O.D. (1) ϕ12.9 to ϕ16, (2) ϕ18 to ϕ20	
Group D	(Japan Aviation Electronics Industry)					
	JL04V-6A24-10SE(G)-R	JL04V-6A24-10SE(G)-EB-R	JL04V-8A24-10SE(G)-EB-R		JL04-24 EBA	(3)JL04-2428CK (17)-R (4)JL04-2428CK (20)-R
	Solder pot diameter ϕ3.5 (G terminal: ϕ5.3) Applicable wire 5.5mm^2 or less (G terminal: 8.0mm^2 or less)				Compatible cable O.D. (3) ϕ15 to ϕ18, (4) ϕ18 to ϕ20	

* For the connectors of size 22-22, the part number of the plug connector differs depending on the type of cable clamp.

* For the connectors of size 24-10, the part number of the plug connector differs depending on the type of cable clamp.

* The items preceded by the same number in ( ) correspond to each other.

⚠ CAUTION

1 TUV have certified that the plug connectors and cable clamps listed above, when combined with the FANUC AC Servo Motor αi series, satisfy the VDE0627 safety standard.
Several manufacturers offer other plug connectors. For information about whether the plug connectors satisfy the safety standard when combined with the FANUC αi series, contact the corresponding manufacturer.
- Hirose Electric (HRS) : H/MS310 TUV-conforming series
- Japan Aviation Electronics Industry (JAE) : JL04V series
- DDK Ltd. (DDK) : CE05 series

© MyFANUC 2D51CC9CD8564E3B8C4DE377C2D11C41

Specifications of plug connectors on the cable side (IP67 rated, screw type)

The specifications of the cable-side plug connectors of the "IP67 rated, screw type" of each manufacturer are shown below. For details of the connectors, contact each manufacturer.

Model Name	[D] Single Block Plug Connector	[A] Straight Type Plug Connector	[B] Right angle Type Plug Connector	[B] Low-profile angle type Plug Connector	[B''] Low-profile housing	[C] Cable Clamp
Group B	(Japan Aviation Electronics Industry)					
	JA06A-18-10S -J1-R	JA06A-18-10S -J1-EB-R	JA08A-18-10S -J1-EBH-R		JL04V-18 EBA	JL04-18CK (13)-R
	(Hirose Electric)					
	H/MS3106A 18-10S(13)	H/MS3106A 18-10S(10)	H/MS3108B 18-10S(10)	H/MS08A18-10 S-DT10D(10)		H/MS3057 -10A(10)
	(DDK Ltd.)					
	D/MS3106A 18-10S(D190)	D/MS3106A 18-10S-BSS	D/MS3108A 18-10S-BAS			CE3057 -10A-1-D
Group C	(Japan Aviation Electronics Industry)					
	JA06A-22-22S -J1-R	JA06A-22-22S -J1-EB-R	JA08A-22-22S -J1-EB-R		JL04V-22 EBA	JL04-2022 CK (14)-R
	(Hirose Electric)					
	H/MS3106A 22-22S(13)	H/MS3106A 22-22S(10)	H/MS3108B 22-22S(10)	H/MS08A22-22 S-DT12D(10)		H/MS3057 -12A(10)
	(DDK Ltd.)					
	D/MS3106A 22-22S(D190)	D/MS3106A 22-22S-BSS	D/MS3108A 22-22S-BAS			CE3057 -12A-1-D
Group D	(Japan Aviation Electronics Industry)					
	JA06A-24-10S -J1-R	JA06A-24-10S -J1-EB-R	JA08A-24-10S- J1-EB-R		JL04V-24 EBA	JL04-2428 CK (17)-R
	(Hirose Electric)					
	H/MS3106A 24-10S(13)	H/MS3106A 24-10S(10)	H/MS3108B 24-10S(10)			H/MS3057 -16A(10)
	(DDK Ltd.)					
	D/MS3106A 24-10S(D190)	D/MS-3106A 24-10S-BSS	D/MS3108A 24-10S-BAS			CE3057 -16A-1-D

© MyFANUC 2D51CC9CD8564E3B8C4DE377C2D11C41

2.1.3.3 Connectors for the brake

The connector for the brake for group A is the same as the power connector. See Subsection 2.1.3.2, "Connectors for power".
The following subsections describe the connectors for the brake for groups B to E.

(1) Connectors for the brake (for groups B to D)

The models αiS 8-B to αiS 60-B (including HV) and αiF 4-B to αiF 40-B (including HV) use a dedicated connector to connect the built-in brake cable.
This connector is water-proof. It is connected by soldering, so no special tool is required.
Consider soldering, cable clamp, and voltage drop. Also note that there are restrictions. The connector for the 24-V brake does not conform to the IEC60034 standard.

Specifications of connectors for brake

		Japan Aviation Electronics Industry	Hirose Electric
Connector specifications	Straight type	JN2DS04FK2-R (Japan Aviation Electronics Industry) A06B-6114-K213#S (FANUC specification)	HR34B-12WPD-4S (Hirose Electric) HR34B-12WPE-4S (Hirose Electric)
	Right angle	JN2FS04FK2-R (Japan Aviation Electronics Industry) A06B-6114-K213#E (FANUC specification)	HR34B-12WLPD-4S (Hirose Electric) HR34B-12WLPE-4S (Hirose Electric)
Applicable wire size		AWG#16 or less (1.25mm^2 or less) * Solder pot diameter ϕ1.9	
Insulation external diameter		ϕ2.7 or less	
Compatible cable O.D.		ϕ6.5 to 8.0	ϕ5.7 to 7.3:HR34B-12WPD-4S HR34B-12WLPD-4S
			ϕ6.5 to 8.0:HR34B-12WPE-4S HR34B-12WLPE-4S
Example of applicable wire		300-V two-conductor vinyl heavy-duty power cord cable VCTF (JIS C 3306) or equivalent	
Applicable wire size and cable length		0.75mm^2 (AWG#18) when cable length 30 m or less	
		1.25mm^2 (AWG#16) when cable length 50 m or less	

Japan Aviation Electronics Industry

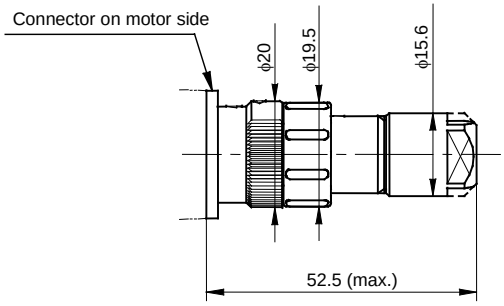

Straight type

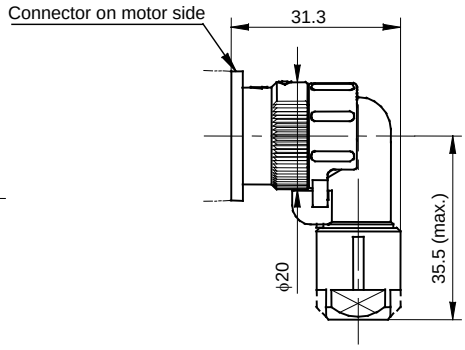

Right angle type

© MyFANUC 2D51CC9CD8564E3B8C4DE377C2D11C41

Hirose Electric

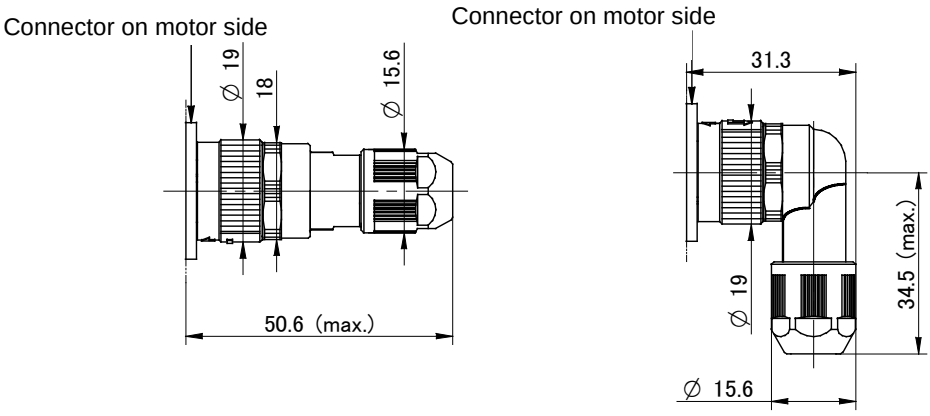

Straight type Right angle type

⚠ CAUTION

1 The same body is used for the brake and fan connectors. They differ in the key position to prevent an improper insertion.
2 If the cable length is longer than or equal to 50 m, take measures such as installation of repeaters so that the sum of wire resistance (for both ways) becomes 1.5Ω or less.
3 For details of brakes, see Subsection 1.3.4, "Built-in brake."

© MyFANUC 2D51CC9CD8564E3B8C4DE377C2D11C41

2.1.3.4 Connectors for the fan

The models αiS 50 FAN-B to αiS 500-B, αiS 50HV FAN-B to αiS 3000HV, αiF 40 FAN-B, and αiF 40HV FAN-B use a dedicated connector to connect the cooling fan and power supply for the fan.
This connector is water-proof. It is connected by soldering, so no special tool is required.
Consider soldering, cable clamp, and voltage drop. Also note that there are restrictions.

Specifications of connectors for fan

		Japan Aviation Electronics Industry	Hirose Electric
Connector specifications	Straight type	JN2DS04FK2X-R (Japan Aviation Electronics Industry) A06B-6114-K214#S (FANUC specification)	HR34B-12WPD-4S-X (Hirose Electric) HR34B-12WPE-4S-X (Hirose Electric)
	Right angle	JN2FS04FK2X-R (Japan Aviation Electronics Industry) A06B-6114-K214#E (FANUC specification)	HR34B-12WLPD-4S-X (Hirose Electric) HR34B-12WLPE-4S-X (Hirose Electric)
Applicable wire size		AWG#16 or less (1.25mm^2 or less) * Solder pot diameter ϕ1.9	
Insulation external diameter		ϕ2.7 or less	
Compatible cable O.D.		ϕ6.5 to 8.0	ϕ5.7 to 7.3:HR34B-12WPD-4S-X HR34B-12WLPD-4S-X
			ϕ6.5 to 8.0:HR34B-12WPE-4S-X HR34B-12WLPE-4S-X

Example of applicable wire

Motor models	αiS 50/3000 FAN-B αiS 60/3000 FAN-B αiS 50/3000HV FAN-B αiS 60/3000HV FAN-B αiF 40/3000 FAN-B αiF 40/3000HV FAN-B	αiS 150/3000-B αiS 300/2000-B αiS 500/2000-B	αiS 150/3000HV-B αiS 300/2000HV-B αiS 300/3000HV-B αiS 500/2000HV-B αiS 500/3000HV-B αiS 1000/2000HV-B αiS 1000/3000HV-B αiS 1500/3000HV-B αiS 2000/2000HV αiS 3000/2000HV
Example of applicable wire	300-V three-conductor vinyl heavy-duty power cord cable VCTF (JIS C 3306) or equivalent	300-V rated cable	600-V rated cable (300/500-V rated cable: IEC standard)
Applicable wire size and cable length	0.5 mm^2 or more (AWG#20)		

© MyFANUC 2D51CC9CD8564E3B8C4DE377C2D11C41

Japan Aviation Electronics Industry

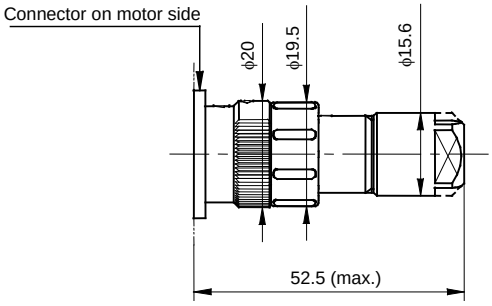

Straight type

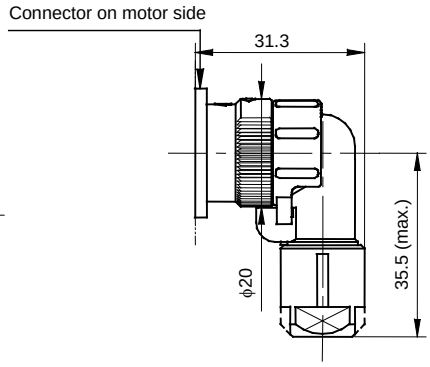

Right angle type

Hirose Electric

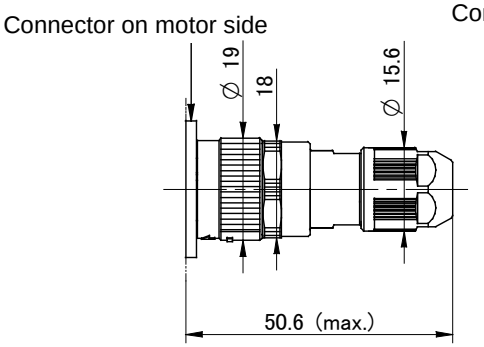

Straight type

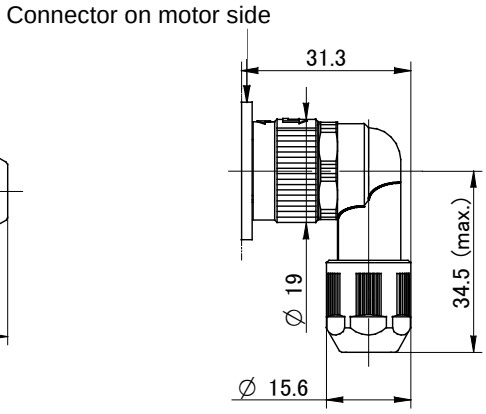

Right angle type

⚠ CAUTION

1 The same body is used for the brake and fan connectors. They differ in the key position to prevent an improper insertion.
2 If the cable length is longer than or equal to 50 m, take measures such as installation of repeaters so that the sum of wire resistance (for both ways) becomes 1.5Ω or less.
3 For details of brakes, see Subsection 1.3.5, "Cooling Fan."

© MyFANUC 2D51CC9CD8564E3B8C4DE377C2D11C41

2.1.3.5 Connection to a conduit hose

This section gives information on the specifications of several adapters to be connected that are made by conduit hose manufacturers for reference purposes. Before using an adapter, contact the corresponding conduit hose manufacturer.

For power: seal adapter specifications

Model Name		[E] Cable Seal adapter Straight Type	[F] Cable Seal adapter Right angle Type	[G] Conduit hose Seal adapter Straight Type	[H] Conduit hose Seal adapter Right angle Type
Group A				N2BM20-FN4 (SANKEI) MAS-SG16-M20 (NEOFLEX)	
Group B	Plug Connector H/MS3106A 18-10S-D -T(13) * Screw type	C2KD1218 (SANKEI) YSO 18-12-14 (DAIWA DENGYOU) ACS-12RL-MS18F (NIPPON FLEX) CG12S-JL18 (NEOFLEX)	C29KD1218 (SANKEI) YLO 18-12-14 (DAIWA DENGYOU) ACA-12RL-MS18F (NIPPON FLEX) CG12A-JL18 (NEOFLEX)	KMKD1618 (SANKEI) MSA 16-18 (DAIWA DENGYOU) RCC-104RL-MS18F (NIPPON FLEX) MAS16S-JL18 (NEOFLEX)	KM90KD1618 (SANKEI) MAA 16-18 (DAIWA DENGYOU) RCC-304RL-MS18F (NIPPON FLEX) MAS16A-JL18 (NEOFLEX)
	Plug Connector JL10-6A18 -10SE * Bayonet type	C2OU1618-FN16 (SANKEI) ACS-12JL10-18SE (NIPPON FLEX)	C29OU1618-FN16 (SANKEI)	K2OU1618-FN16 (SANKEI) MSJL10-16-18 (DAIWA DENGYOU) RCC-104JL10-18SE (NIPPON FLEX) MAS-16S-JL18SE (NEOFLEX)	K29OU1618-FN16 (SANKEI)
Group C	Plug Connector JL04V-6A22 -22SE-R * Screw type	C2KD1622 (SANKEI) YSO 22-12-14 (DAIWA DENGYOU) ACS-16RL-MS22F (NIPPON FLEX) CG16S-JL22 (NEOFLEX)	C29KD1622 (SANKEI) YLO 22-12-14 (DAIWA DENGYOU) ACA-16RL-MS22F (NIPPON FLEX) CG16A-JL22 (NEOFLEX)	KMKD2222 (SANKEI) MSA 22-22 (DAIWA DENGYOU) RCC-106RL-MS22F (NIPPON FLEX) MAS22S-JL22 (NEOFLEX)	KM90KD2222 (SANKEI) MAA 22-22 (DAIWA DENGYOU) RCC-306RL-MS22F (NIPPON FLEX) MAS22A-JL22 (NEOFLEX)
	Plug Connector JL10-6A22 -22SE * Bayonet type	C2OU20-22-FN16 (SANKEI) YSJL10-22-12 to 14 (DAIWA DENGYOU) ACS-16JL10-22SE (NIPPON FLEX)	C29OU2022-FN16 (SANKEI)	K2OU2222-FN16 (SANKEI) MSJL10-22-22 (DAIWA DENGYOU) RCC-106JL10-18SE (NIPPON FLEX) MAS-22S-JL22SE (NEOFLEX)	K29OU2222-FN16 (SANKEI)
Group D	Plug Connector JL04V-6A24 -10SE(G)-R	C2KD2024 (SANKEI) YSO 24-15-17 (DAIWA DENGYOU) ACS-20RL-MS24F (NIPPON FLEX) CG22S-JL24 (NEOFLEX)	C29KD2024 (SANKEI) YLO 24-15-17 (DAIWA DENGYOU) ACA-20RL-MS24F (NIPPON FLEX) CG22A-JL24 (NEOFLEX)	KMKD2224 (SANKEI) RCC-106RL-MS24F (NIPPON FLEX) MAS22S-JL24 (NEOFLEX)	KM90KD2224 (SANKEI) MAA 22-24 (DAIWA DENGYOU) RCC-306RL-MS24F (NIPPON FLEX) MAS22A-JL24 (NEOFLEX)

© MyFANUC 2D51CC9CD8564E3B8C4DE377C2D11C41

For signal: seal adapter specifications

Model Name	[E] Cable Seal adapter Straight Type	[F] Cable Seal adapter Right angle Type	[G] Conduit hose Seal adapter Straight Type	[H] Conduit hose Seal adapter Right angle Type
Common to all models			N2KY16-FN3 (SANKEI) PCJN-12-M13F (DAIWA DENGYOU) RQJN-M13-9 RQJN-M13-16 (NEOFLEX)	

For brake: seal adapter specifications

Model Name	[E] Cable Seal adapter Straight Type	[F] Cable Seal adapter Right angle Type	[G] Conduit hose Seal adapter Straight Type	[H] Conduit hose Seal adapter Right angle Type
Common to all models			N2KY16-FN3 (SANKEI) PCJN-12-M13F (DAIWA DENGYOU) RQJN-M13-9 RQJN-M13-16 (NEOFLEX)	

© MyFANUC 2D51CC9CD8564E3B8C4DE377C2D11C41

2.1.4 Conditions for Approval Related to the IEC60034 Standard

This Subsection describes the conditions the following FANUC AC servo motor αi-B/αi series must clear before they can be approved for the IEC60034 standard. For details on EMC compliance authorization, refer to the separate manual "Compliance with EMC Directives."
This Subsection, "Conditions for Approval Related to the IEC60034 Standard", consists of the following sections:

2.1.4.1 Types of motors to be approved
2.1.4.2 Approved specifications
2.1.4.3 Connectors required for approval

2.1.4.1 Types of motors to be approved

The following FANUC AC Servo Motor αi-B/αi series can comply with the IEC60034 standard if you follow the descriptions in this chapter.
The TUV mark is printed on the nameplates of the following motors.
The FANUC AC Servo Motor αi-B/αi series has two types of motors: one type is driven by FANUC servo amplifiers (for 200 to 240 VAC) and the other type is driven by FANUC servo amplifiers (400 to 480 VAC).

αiS -B series (200V)

Model name	Motor specification number
αiS 2/5000-B	A06B-2212-Bxxx
αiS 2/6000-B	A06B-2218-Bxxx
αiS 4/5000-B	A06B-2215-Bxxx
αiS 4/6000-B	A06B-2210-Bxxx
αiS 8/4000-B	A06B-2235-Bxxx
αiS 8/6000-B	A06B-2232-Bxxx
αiS 12/4000-B	A06B-2238-Bxxx
αiS 12/6000-B	A06B-2230-Bxxx
αiS 22/4000-B	A06B-2265-Bxxx
αiS 22/6000-B	A06B-2262-Bxxx
αiS 30/4000-B	A06B-2268-Bxxx
αiS 40/4000-B	A06B-2272-Bxxx
αiS 50/2000-B	A06B-2042-Bxxx
αiS 60/2000-B	A06B-2044-Bxxx
αiS 50/3000-B αiS 50/3000 FAN-B	A06B-2275-Bxxx
αiS 60/3000-B αiS 60/3000 FAN-B	A06B-2278-Bxxx
αiS 150/3000-B	A06B-2026-Bxxx
αiS 300/2000-B	A06B-2292-Bxxx
αiS 500/2000-B	A06B-2295-Bxxx

© MyFANUC 2D51CC9CD8564E3B8C4DE377C2D11C41

αiS-B series (400V)

Model name	Motor specification number
αiS 2/5000HV-B	A06B-2213-Bxxx
αiS 2/6000HV-B	A06B-2219-Bxxx
αiS 4/5000HV-B	A06B-2216-Bxxx
αiS 4/6000HV-B	A06B-2214-Bxxx
αiS 8/4000HV-B	A06B-2236-Bxxx
αiS 8/6000HV-B	A06B-2233-Bxxx
αiS 12/4000HV-B	A06B-2239-Bxxx
αiS 12/6000HV-B	A06B-2237-Bxxx
αiS 22/4000HV-B	A06B-2266-Bxxx
αiS 22/6000HV-B	A06B-2263-Bxxx
αiS 30/4000HV-B	A06B-2269-Bxxx
αiS 40/4000HV-B	A06B-2273-Bxxx
αiS 50/2000HV-B	A06B-2043-Bxxx
αiS 60/2000HV-B	A06B-2045-Bxxx
αiS 50/3000HV-B αiS 50/3000HV FAN-B	A06B-2276-Bxxx
αiS 60/3000HV-B αiS 60/3000HV FAN-B	A06B-2279-Bxxx
αiS 150/3000HV-B	A06B-2027-Bxxx
αiS 300/2000HV-B	A06B-2293-Bxxx
αiS 300/3000HV-B	A06B-2290-Bxxx
αiS 500/2000HV-B	A06B-2296-Bxxx
αiS 500/3000HV-B	A06B-2297-Bxxx
αiS 1000/2000HV-B	A06B-2098-Bxxx
αiS 1000/3000HV-B	A06B-2099-Bxxx
αiS 1500/3000HV-B	A06B-2097-Bxxx
αiS 2000/2000HV	A06B-0091-Bxxx

αiF-B series (200V)

Model name	Motor specification number
αiF 1/5000-B	A06B-2202-Bxxx
αiF 2/5000-B	A06B-2205-Bxxx
αiF 4/5000-B	A06B-2223-Bxxx
αiF 8/3000-B	A06B-2227-Bxxx
αiF 8/4000-B	A06B-2228-Bxxx
αiF 12/4000-B	A06B-2243-Bxxx
αiF 22/3000-B	A06B-2247-Bxxx
αiF 22/4000-B	A06B-2248-Bxxx
αiF 30/4000-B	A06B-2253-Bxxx
αiF 40/3000-B αiF 40/3000 FAN-B	A06B-2257-Bxxx

© MyFANUC 2D51CC9CD8564E3B8C4DE377C2D11C41

αiF-B series (400V)

Model name	Motor specification number
αiF 4/5000HV-B	A06B-2225-Bxxx
αiF 8/3000HV-B	A06B-2229-Bxxx
αiF 8/4000HV-B	A06B-2220-Bxxx
αiF 12/4000HV-B	A06B-2245-Bxxx
αiF 22/3000HV-B	A06B-2249-Bxxx
αiF 22/4000HV-B	A06B-2240-Bxxx
αiF 30/4000HV-B	A06B-2255-Bxxx
αiF 40/3000HV-B αiF 40/3000HV FAN-B	A06B-2259-Bxxx

2.1.4.2 Approved specifications

The following specifications are approved for the IEC60034 standard.

(1) Motor speed (IEC60034-1)

The "rated-output speed" and "allowable maximum speed" are given on the data sheet in Chapter 1, “SPECIFICATIONS.”
The rated-output speed is the speed which specifies the rated output.
The allowable maximum speeds are specified in such a way that the approval conditions of the IEC60034-1 standard, as they relate to rotational speed, are satisfied.
When the allowable maximum speeds are used, the characteristics are not guaranteed.

(2) Output (IEC60034-1)

The "rated output" available with a motor is given on the data sheet in Chapter 1, “SPECIFICATIONS.”
The rated output is guaranteed as continuous output for the rated-output speed under Insulation Class F.

The output in an intermittent operation range is not specified.

(3) Protection type (IEC60034-5)

Motor protection confirms to IP65. (The Pulsecoder connector is waterproof when engaged.)
Motor protection of Models with fan confirms to IP65 except the fan motor and the fan connectors (αiS 2000/2000HV confirms to IP44 except the fan connectors. The connectors of pulsecoders are water-proof when engaged.)

The protection types mentioned above do not apply to the part that the motor axis penetrates.

IP4□:Machine protected from introduction of solid foreign matter over 1.0 mm
Electric cables and wires with a diameter or thickness greater than 1.0 mm do not enter.

IP6□:Completely dust-proof machine
This structure completely prevents dust from entering the machine.

IP□4:Machine protected from water spray
Water sprayed on the motor from any direction will have no harmful effect.

IP□5:Sprinkle-proof machines
A sprinkle-proof machine shall not suffer inadvertent influence when they are exposed to water sprinkled from nozzles at any angle to the machine.

© MyFANUC 2D51CC9CD8564E3B8C4DE377C2D11C41

The conditions of the IP□5 type test are as follows:

Nozzle inside diameter	6.3 [mm]
Amount of sprinkled water	0.0125 [m^3/min]
Water pressure at the nozzle	30 [kPa]
Test time for a 1-m^2 surface area of the machine to be tested	1 [min]
Minimum test time	3 [min]
Distance between the nozzle and machine	Approximately 3 [m]

> ⚠ **CAUTION**
> IP□5 evaluates machines for waterproofness in a short-term test as described above, allowing chances that the machines may get dry after the test. If a machine is exposed to liquids other than water or so continuously to water that it cannot get dry, it may suffer inadvertent influence even if the degree of exposure is low.

(4) Cooling method (IEC60034-6)

The motor cooling methods are as listed below.

Motor model	IC code	Method
αiS 50/3000 FAN-B αiS 60/3000 FAN-B αiS 150/3000-B αiS 300/2000-B αiS 500/2000-B αiS 50/3000HV FAN-B αiS 60/3000HV FAN-B αiS 150/3000HV-B αiS 300/2000HV-B αiS 300/3000HV-B αiS 500/2000HV-B αiS 500/3000HV-B αiS 1000/2000HV-B αiS 1000/3000HV-B αiS 1500/3000HV-B αiS 2000/2000HV αiF 40/3000 FAN-B αiF 40/3000HV FAN-B	IC416	Fully closed; Air-cooled by an external independence fan
Models except for the above	IC410	Fully closed; cooled by a natural air flow

(5) Mounting method (IEC60034-7)

αiS 2-B to αiS 500-B, αiS 2HV-B to αiS 500HV-B, αiF 1-B to αiF 40-B, and αiF 4HV-B to αiF 40HV-B can be mounted using the following method:

IMB5: Flange mounting with the shaft facing sideways (from the rear)
IMV3: Flange mounting with the shaft facing downward (from the rear)
IMV1: Flange mounting with the shaft facing upward (from the rear)

αiS 1000/2000HV-B, αiS 1000/3000HV-B, and αiS 1500/3000HV-B can be mounted as follows. Consult with FANUC for any other mounting method.

IMB3: Feet bottom mounting with the shaft facing sideways (from the rear)
IMB6: Left feet side mounting with the shaft facing sideways (from the rear)
IMB7: Right feet side mounting with the shaft facing sideways (from the rear)
IMV5: Foot mounting with the shaft facing downward (from the rear)
IMV6: Foot mounting with the shaft facing upward (from the rear)

© MyFANUC 2D51CC9CD8564E3B8C4DE377C2D11C41

αiS 2000/2000HV can be mounted as follows. Consult with FANUC for any other mounting method.
IMB3: Feet bottom mounting with the shaft facing sideways (from the rear)

(6) Heat protection (IEC60034-11)

The FANUC AC servo motor conforms to the heat protection standard (IEC60034-11) by using an overheat protection circuit with temperature detection (overheat alarm) or an overheat protection circuit with current detection (OVC alarm).

(7) Grounding (IEC60204-1)

For each servo motor, continuity between the ground terminal and housing of the power connector has been checked based on the IEC60204-1 safety standard and it has been ensured that it satisfies the standard.
The ground wire to be connected to the motor must have a diameter not smaller than the diameter of each phase wire.

(8) Remarks

For details on EMC compliance authorization, refer to the separate manual "Compliance with EMC Directives"
Mechanical and electrical safety of each motor should be evaluated after the motor is mounted on the machine.

2.1.4.3 Connectors required for approval

Power connector and fan connector

The power and cooling fan must be connected to the motor with a TUV-approved connector and a cable clamp. For details, see Subsection 2.1.1, "Connecting a Servo Motor".

- The TUV-approved plug connectors and cable clamps in Subsection 2.1.3, "Connectors on the Cable Side", are approved by TUV that they conform to the safety standard VDE0627 when combined with the FANUC AC Servo Motor αi-B series. As indicated in the table below, several manufacturers offer other plug connectors. For information about whether the plug connectors satisfy the safety standard when combined with the FANUC AC servo motor αi-B series, contact the corresponding manufacturer. Contact the manufacturers if you require details of their products.

Manufacturer	Product series name
Tyco Electronics Japan GK	Dynamic Series
Hirose Electric (HRS)	H/MS310 TUV-conforming series
Japan Aviation Electronics Industry (JAE)	JL04V series
DDK Ltd. (DDK)	CE05 series

- If a cable or conduit hose seal adapter is used, consult an appropriate connector maker.

© MyFANUC 2D51CC9CD8564E3B8C4DE377C2D11C41

2.2 MOTOR SELECTION

A servo motor should be selected based on the load on the servo motor, rapid traverse rate, unit, and other conditions. The load on the servo motor is the following types of torque: steady-state load torque (including gravity and friction), acceleration torque required for acceleration/deceleration, and, for a machine tool, cutting torque by cutting force.
When selecting a motor, calculate these loads accurately according to the instructions in this chapter and check that the calculated values satisfy the conditions for selecting a serve motor described in this chapter.
This chapter describes how to calculate the load and other conditions using a table with a horizontal axis as an example.

2.2.1 Conditions for Selecting a Servo Motor

The conditions for selecting a servo motor are given below.

[Selection condition 1] Steady-state load torque

- **The steady-state load torque including mechanical friction and gravity must fall within approximately 70% of the continuous torque (at low speed) of a motor.**
  If the steady-state load torque is close to the continuous torque (at low speed), the root-mean-square value of the total torque including the acceleration torque is more likely to exceed the continuous torque (at low speed).
  Along the vertical axis, the load may be increased during lifting and at stop due to a mechanical factor. In this case, the theoretically calculated gravity retaining torque must be 60% (less than 60% in some cases) of the continuous torque (at low speed) of a motor.
  This figure of "within 70% of the steady-state load torque rating" is for reference only. Determine the appropriate torque based upon actual machine tool conditions.

[Selection condition 2] Motor speed

- **The motor speed must not exceed the maximum motor speed (rated speed during continuous operation).**
  Calculate the motor speed and check that the speed does not exceed the maximum motor speed. For continuous operation, check that the speed does not exceed the rated speed.

[Selection condition 3] Load moment of inertia ratio

- **The load moment of inertia ratio must be appropriate.**
  The ratio of rotor moment of inertia and load moment of inertia (load moment of inertia ratio) greatly affects the controllability of the motor as well as the acceleration/deceleration time in rapid traverse.
  When the load moment of inertia does not exceed three times the rotor moment of inertia, an ordinary metal cutting machine can be used without problems, while the controllability may have to be lowered a little in some cases.
  In the case of a machine for cutting a curve at a high speed, such as a router for woodworking, however, it is appropriate to keep the load moment of inertia smaller than or equal to the rotor moment of inertia.
  If the load moment of inertia exceeds three to five times the rotor moment of inertia, the controllability of the motor may be adversely affected. If the load moment of inertia is much greater than three times the rotor moment of inertia, adjustment within the normal range may be insufficient. Avoid using a machine with such a great load moment of inertia.
  There are limitations on the load moment of inertia ratio when the dynamic brake is used. If you want to drive the motor with a load moment of inertia ratio greater than the allowable value, contact FANUC.

© MyFANUC 2D51CC9CD8564E3B8C4DE377C2D11C41

[Selection condition 4] Acceleration torque

- **Acceleration can be made with a desired time constant.**
  Since the load torque generally helps deceleration, if acceleration can be executed with a desired time constant, deceleration can be made with the same time constant, through both acceleration and deceleration should be considered in principle. Calculate the acceleration torque and check that the torque required for acceleration is within the intermittent operating zone of the motor.

[Selection condition 5] Root-mean-square value of torque

- **The root-mean-square value of torque in a cycle must be sufficiently greater than the continuous torque (at low speed).**
  A motor gets hot in proportion to the square of the torque. For a servo motor for which the load condition always changes, the calculated root-mean-square value of torque in a cycle must be sufficiently greater than the continuous torque (at low speed).
  Pay attention, in particular, when the cutting load, acceleration/deceleration condition, and other load conditions variously change in a cycle.
  When the desired frequency of positioning in rapid traverse becomes greater, the ratio of the time during which the acceleration/deceleration torque is being applied to the entire operation time increases and the root-mean-square value of torque increases. In this case, increasing the acceleration/deceleration time constant is effective to decrease the root-mean-square value of torque.

[Selection condition 6] Percentage duty cycle and ON time with the maximum cutting torque

- **The time during which the table can be moved with the maximum cutting torque (percentage duty cycle and ON time) must be within a desired range.**
  The continuously applied torque such as the cutting load may exceed the continuous torque (at low speed). In this case, use overload duty curves to check how the ratio (percentage duty cycle) of the load applying time to the no-load applying time and the time during which the load is being applied (ON time) change.

[Selection condition 7] Dynamic brake stop distance

- **The stop distance when the dynamic brake is applied at an emergency stop must be within a desired range.**
  If the stop distance is not within the desired range, the machine may cause a collision at an emergency stop.

Along the vertical axis (for motors with a brake)
[Selection condition 8] Brake retaining torque

- **The load torque should be within the brake retaining torque.**
  If this cannot be satisfied, counter balance and so forth should be taken into consideration.

The following sections explain the procedure for selecting a motor sequentially for each selection condition. Determine whether each selection condition above is satisfied.

© MyFANUC 2D51CC9CD8564E3B8C4DE377C2D11C41

NOTE

When handling units, be extremely careful not to use different systems of units. For example, the weight of an object should be expressed in [kg] in the SI system of units because it is handled as "mass" or [kgf] in the gravitational system of units because it is handled as "force." Moment of inertia is expressed in [kg·m^2] in the SI system of units or in [kgf·cm·sec^2] in the gravitational system of units.

In this manual, both systems of units are written together to support them.

$$(1\mathrm{kg} \cdot \mathrm{m}^2 = \frac{100}{9.8} \mathrm{kgf} \cdot \mathrm{cm} \cdot \mathrm{s}^2)$$

© MyFANUC 2D51CC9CD8564E3B8C4DE377C2D11C41

2.2.2 Selecting a Motor

Sample model for calculations for selecting a servo motor

The following subsections explain how to calculate conditions for selecting a servo motor best suited for a table with a horizontal axis with the following specifications.

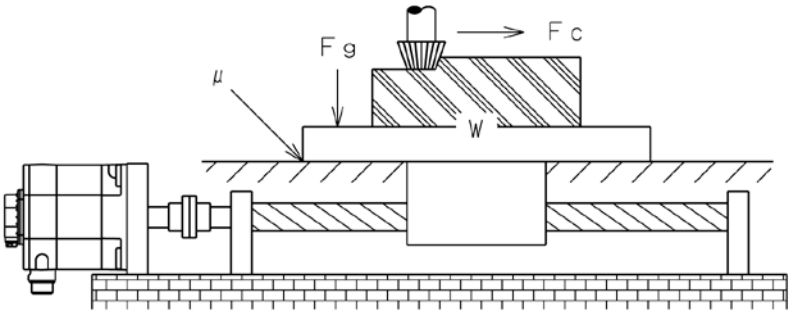

Sample mechanical specifications of the table and workpiece

W :	Weight of movable parts (table and workpiece)	=11760[N]=1200[kgf]
w :	Mass of movable parts (table and workpiece)	=1200[kg]
μ :	Friction coefficient of the sliding surface	=0.05
η :	Efficiency of the driving system (including a ball screw)	=0.9
F_g :	Gib fastening force (kgf)	=490[N]=50[kgf]
F_c :	Thrust counter force caused by the cutting force (kgf)	=4900[N]=500[kgf]
F_{cf}:	Force by which the table is pressed against the sliding surface, caused by the moment of cutting force	=294[N]=30[kgf]
Z_1/Z_2 :	Gear reduction ratio	= 1/1
T_{bf} :	Friction torque applied to the motor shaft	=0.8[N·m]=8[kgf·cm]

Sample specifications of the feed screw (ball screw)

D_b :	Shaft diameter	$=40\times10^{-3}$[m]=40[mm]
L_b :	Shaft length	=1[m]=1000[mm]
P :	Pitch	$=20\times10^{-3}$[m/rev]=20[mm/rev]

Sample specifications of the operation of the motor shaft

T_a :	Acceleration torque	[N·m][kgf·cm]
V :	Workpiece rapid traverse rate	=60[m/min]
V_m :	Motor speed in rapid traverse	[min^{-1}]
t_a :	Acceleration time	=0.08[s]
J_M :	Moment of inertia of rotor	[$kg\cdot m^2$][$kgf\cdot cm\cdot sec^2$]
J_L :	Load moment of inertia	[$kg\cdot m^2$][$kgf\cdot cm\cdot sec^2$]
k_s :	Position loop gain	=30[s^{-1}]

© MyFANUC 2D51CC9CD8564E3B8C4DE377C2D11C41

2.2.2.1 Calculating the load torque

When a part moves along an axis at a constant speed, the torque obtained by multiplying the weight of the workpiece driving section by the friction coefficient is always applied. On a vertical or slanted axis, the motor keeps producing torque because it works against gravity. In addition, the motor also produces torque when the machine on the horizontal axis stops in proportion to the load friction. This continuously applied load torque is the steady-state load torque.
In cutting feed, the load torque is applied by cutting thrust. This is the cutting torque.
The above types of torque are generically called the load torque. The load torque applied to the motor shaft is generally given by the following equation:

$$T_m = \frac{F \times l}{2\pi\eta} + T_f$$

T_m : Load torque applied to the motor shaft [N·m]
F : Force required to move a movable part (table or tool post) along the axis [N]
l : Traveling distance of the machine tool per revolution of the motor = P × (Z_1/Z_2) [m/rev]
η : Efficiency of the driving system (including a ball screw)
T_f : Friction torque of the nut of the ball screw or bearing applied to the motor shaft (input if necessary) [N·m]

The force (F) is mainly given by the following equations:

When cutting is not executed (vertical axis):

$F=(w-w_c)g=W-W_c$

w_c : Mass of the counterbalance [kg]
Wc : Weight of the counterbalance [kgf]

When cutting is not executed (horizontal axis):

$F=\mu(W+F_g)$

When cutting is in progress (horizontal axis) (constant load + cutting thrust):

$F=F_c+\mu(W+F_g+F_{cf})$

[Example of calculation for condition 1] Steady-state load torque

For a table with a horizontal axis as given as a model, the steady-state load torque when cutting is not executed is calculated as follows:

Example $F=0.05\times(11760+490)=612.5[N]=62.5[kgf]$

$T_m=(612.5\times20\times10^{-3}\times1)\div(2\times\pi\times0.9)+0.8$

$=3.0[N\cdot m]=30.6[kgf\cdot cm]$

Cautions in calculating the load torque

When calculating the torque, take the following precautions:

- Allow for the friction torque caused by the gib fastening force (F_g).
  The torque calculated only from the weight of a movable part and the friction coefficient is generally quite small. The gib fastening force and precision of the sliding surface may have a great effect on the torque.

- The pre-load of the bearing or nut of the ball screw, pre-tension of the screw, and other factors may make T_{bf} of the rolling contact considerable.
  In a small, lightweight machine tool, the friction torque will greatly affect the entire torque.

© MyFANUC 2D51CC9CD8564E3B8C4DE377C2D11C41

- Allow for an increase in friction on the sliding surface (F_{cf}) caused by the cutting resistance. The cutting resistance and the driving force generally do not act through a common point as illustrated below. When a large cutting resistance is applied, the moment increases the load on the sliding surface.
  When calculating the torque during cutting, allow for the friction torque caused by the load.

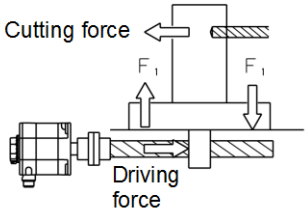

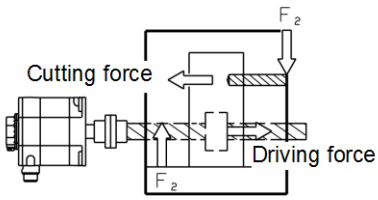

- The feedrate may cause the friction torque to vary greatly. Obtain an accurate value by closely examining variations in friction depending on variations in speed, the mechanism for supporting the table (sliding contact, rolling contact, static pressure, etc.), material of the sliding surface, lubricating system, and other factors.

- The friction torque of a single machine varies widely due to adjustment conditions, ambient temperature, and lubrication conditions. Collect a great amount of measurement data of identical models so that a correct load torque can be calculated. When adjusting the gib fastening force and backlash, monitor the friction torque. Avoid generating an unnecessarily great torque.

2.2.2.2 Calculating the motor speed

Calculate the motor speed using the movable part rapid traverse rate and traveling distance per revolution of the motor and check that the calculated motor speed does not exceed the maximum motor speed (rated speed for continuous operation).

$$V_m = \frac{V}{l}$$

V_m : Motor speed in rapid traverse [min^{-1}]
V : Workpiece rapid traverse rate [m/min]
l : Traveling distance per revolution of the motor [m/rev]= $P \times Z_1/Z_2$

[Example of calculation for condition 2] Motor speed

When V is 60 [m/min] and l is $P \times Z_1/Z_2 = 0.020 \times 1/1 = 0.020$ [m/rev], V_m is 60/0.020 = 3000 [min^{-1}]. This value does not exceed the rated speed of the αiS 22/4000-B provisionally selected.
Then, select a motor whose load torque when cutting is not executed (continuous torque (at low speed)) is 3.0 [N·m] and whose maximum speed is at least 3000 [min^{-1}] from the data sheet. The αiS 22/4000-B (with a continuous torque (at low speed) of 22 [N·m]) is provisionally selected with considering the acceleration/deceleration condition described in the following subsection.

2.2.2.3 Calculating the load moment of inertia

Unlike the load torque, an accurate load moment of inertia can be obtained just by calculation. The moment of inertia of any object moved by the revolution of a driving motor forms the load moment of inertia of the motor, regardless of whether the object is rotated or moved along a straight line. The load moment of inertia can be obtained by calculating the moment of inertia of each driven object individually and adding all those moment values according to a set of rules. The moment of inertia of almost all objects, including the several basic ones shown below, can be calculated in this way.

© MyFANUC 2D51CC9CD8564E3B8C4DE377C2D11C41

- Moment of inertia of a cylindrical object (ball screw, gear, coupling, etc.)

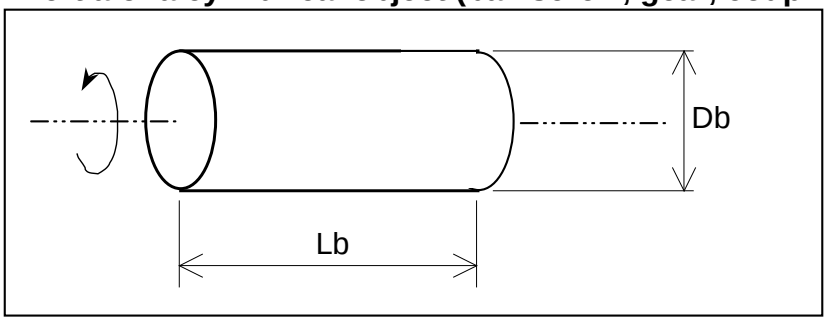

The moment of inertia of a cylindrical object rotating about its central axis is calculated as follows:

—SI unit————————————————————————————

$$J_b = \frac{\pi \gamma_b}{32} D_b^4 L_b \qquad [\mathrm{kg \cdot m^2}]$$

J_b : Moment of inertia [kg·m^2]
γ_b : Weight of the object per unit volume [kg/m^3]
D_b : Diameter of the object [m]
L_b : Length of the object [m]

—Gravitational system of units————————————————————————

$$J_b = \frac{\pi \gamma_b}{32 \times 980} D_b^4 L_b \qquad [\mathrm{kgf \cdot cm \cdot s^2}]$$

J_b : Moment of inertia [kgf·cm·s^2]
γ_b : Weight of the object per unit volume [kg/cm^3]
D_b : Diameter of the object [cm]
L_b : Length of the object [cm]

[Example of calculation for condition 3-1] Load moment of inertia

Example)

When the shaft of a ball screw is made of steel (γ_b=7.8×10^3[kg/m^3]), moment of inertia J_b of the shaft is calculated as follows:
When D_b=0.040[m], L_b=1[m],
Jb=7.8×10^3×π÷32×0.040^4×1=0.00196[kg·m^2] (=0.0200[kgf·cm·s^2])

$$(1\mathrm{kg \cdot m^2} = \frac{100}{9.8}\mathrm{kgf \cdot cm \cdot s^2})$$

© MyFANUC 2D51CC9CD8564E3B8C4DE377C2D11C41

- **Moment of inertia of a heavy object moving along a straight line (table, workpiece, etc.)**

—SI unit————————————————————————————

$$J_b = w \times \left(\frac{l}{2\pi}\right)^2 \quad [\mathrm{kg \cdot m^2}]$$

w : Mass of the object moving along a straight line [kg]
l : Traveling distance along a straight line per revolution of the motor [m]

—Gravitational system of units————————————————————————

$$J_b = \frac{W}{980} \times \left(\frac{l}{2\pi}\right)^2 \quad [\mathrm{kgf \cdot cm \cdot s^2}]$$

W : Weight of the object moving along a straight line [kgf]
l : Traveling distance along a straight line per revolution of the motor [cm]

[Example of calculation for condition 3-2] Load moment of inertia

Example)

When w is 1200 [kg] and l is 20 [mm], the moment of inertia J_w of a table and workpiece is calculated as follows:

$J_w = 1200 \times (0.020 \div 2 \div \pi)^2 = 0.01216\ [\mathrm{kg \cdot m^2}] = 0.1241[\mathrm{kgf \cdot cm \cdot s^2}]$

- **Moment of inertia of an object whose speed is decelerated or accelerated with respect to the motor shaft**

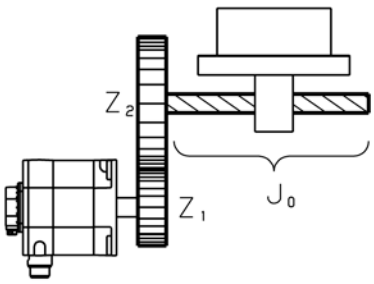

The moment of inertia applied to the motor shaft for J_O is calculated as follows:

$$J = \left(\frac{Z_1}{Z_2}\right)^2 \times J_0 \quad or \quad \left(\frac{1}{Z}\right)^2 \times J_0$$

J_0 : Moment of inertia before deceleration
Z_1, Z_2 : Number of teeth when the gear connection
1/Z : Deceleration ratio

© MyFANUC 2D51CC9CD8564E3B8C4DE377C2D11C41

- Moment of inertia of a cylindrical object whose center of rotation is displaced

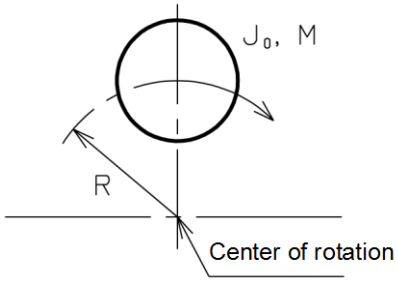

$$J = J_0 + MR^2$$

J_0 : Moment of inertia around the center of the cylindrical object
M : Weight of the object
R : Radius of rotation

The above equation is used for such purposes as to calculate the moment of inertia of a large gear which is hollowed out in order to reduce the moment of inertia and weight.
The sum of the moment of inertia calculated above is the load moment of inertia J for accelerating the motor.

- Cautions regarding the limitations on the load moment of inertia

The load moment of inertia has a great effect on the controllability of the motor as well as the time for acceleration/deceleration in rapid traverse. Specifically, if the load moment of inertia becomes greater, a change in the specified speed causes the motor to take more time to reach the new specified speed. When a machine tool is moved along two axes at a high speed to cut a curve such as an arc, a larger error occurs than if the moment of inertia is smaller.
Normally, when the load moment of inertia is smaller than or equal to the rotor moment of inertia of the motor, the problems mentioned above do not occur. When the load moment of inertia does not exceed three times the rotor moment of inertia, the controllability may have to be lowered a little but this does not adversely affect the operation of an ordinary metal cutting machine. In the case of a machine for cutting a curve at a high speed, such as a router for woodworking, however, it is appropriate to keep the load moment of inertia smaller than or equal to the rotor moment of inertia.
If the load moment of inertia exceeds three to five times the rotor moment of inertia, the controllability of the motor may be adversely affected. If the load moment of inertia is much greater than three times the rotor moment of inertia, adjustment within the normal range may be insufficient. Avoid using a machine with such a great moment of inertia.
There are limitations on the load moment of inertia ratio when the dynamic brake is used. If you want to drive the motor when a load moment of inertia ratio is greater than five times (or greater than three times for αiS22/6000HV-B and αiS500/3000HV-B), contact FANUC.

[Example of calculation for condition 3-3] Load moment of inertia ratio

Since the sum of J_b and J_w obtained in calculation examples 3-1 and 3-2 is the load moment of inertia J_L, the load moment of inertia can be calculated as follows:

$J_L = 0.00196 + 0.01216 = 0.01412$ [kgm^2]

Since the rotor moment of inertia of αiS22/4000-B is 0.0053 [kgm^2], the load moment of inertia ratio is 2.7 times, which is within the allowable range.

2.2.2.4 Calculating the acceleration torque

Calculate the acceleration torque required for the motor to accelerate and then obtain the torque required for acceleration by calculating the total torque including the steady-state load torque calculated before. Next, confirm the result is included in the intermittent operation area for the motor.

© MyFANUC 2D51CC9CD8564E3B8C4DE377C2D11C41

(1) Calculating acceleration torque

Calculate the angular acceleration, based on the assumption that the motor shaft operates ideally in the acceleration/deceleration mode determined by the NC. Multiply the angular acceleration by the total moment of inertia (rotor moment of inertia + load moment of inertia) to obtain the acceleration torque.
In rapid traverse, there are linear acceleration/deceleration and feed-forward during rapid traverse + bell-shaped acceleration/ deceleration. The equations for calculating the acceleration torque in each mode are given below.

- Acceleration torque in linear acceleration/deceleration

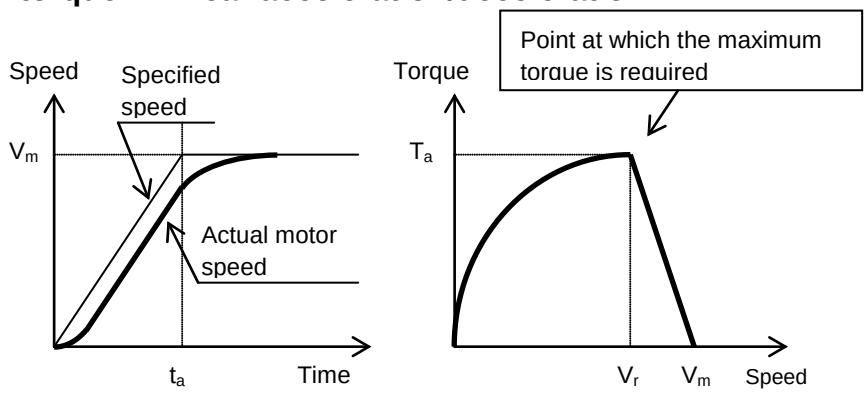

When the torque is T_a and the speed is V_r in the above figure, the maximum torque is required. The equations for calculating T_a and V_r are given below:

$$T_a = V_m \times \frac{2\pi}{60} \times \frac{1}{t_a} \times (J_M + J_L / \eta) \times (1 - e^{-k_s \cdot t_a})$$

$$V_r = V_m \times \{1 - \frac{1}{t_a \cdot k_s}(1 - e^{-k_s \cdot t_a})\}$$

- T_a : Acceleration torque [Nm]
- V_m : Motor speed in rapid traverse [min^{-1}]
- t_a : Acceleration time [sec]
- J_M : Moment of inertia of rotor [kgm^2]
- J_L : Load moment of inertia [kgm^2]
- V_r : Motor speed at which the acceleration torque starts to decrease [min^{-1}]
- k_s : Position loop gain [sec^{-1}]
- η : Machine tool efficiency
- e : base of a natural logarithm (≒ 2.71)

[Example of calculation for condition 4-1] Example of calculation

Try to perform linear acceleration/deceleration under the following condition.

V_m= 3000 [min^{-1}]
t_a = 0.08 [s]
k_s=30 [s^{-1}]
J_L= 0.01412[kgm^2]

Select the αiS 22/4000-B provisionally selected in example of calculation <1>.
Since the rotor moment of inertia J_M is 0.0053 [kgm^2] for αiS22/4000-B , T_a and V_r are as follows.

$T_a = 3000 \times (2\pi/60) \times (1/0.08) \times (0.0053+0.01412 \div 0.9) \times (1-e^{-30\times0.08})$
$=74.9[Nm]=765[kgfcm]$

$V_r = 3000 \times \{1-1/(0.08 \times 30) \times (1-e^{-30\times0.08})\}=1863[min^{-1}]$

© MyFANUC 2D51CC9CD8564E3B8C4DE377C2D11C41

- **Acceleration torque in feed-forward during rapid traverse + bell-shaped acceleration/deceleration**

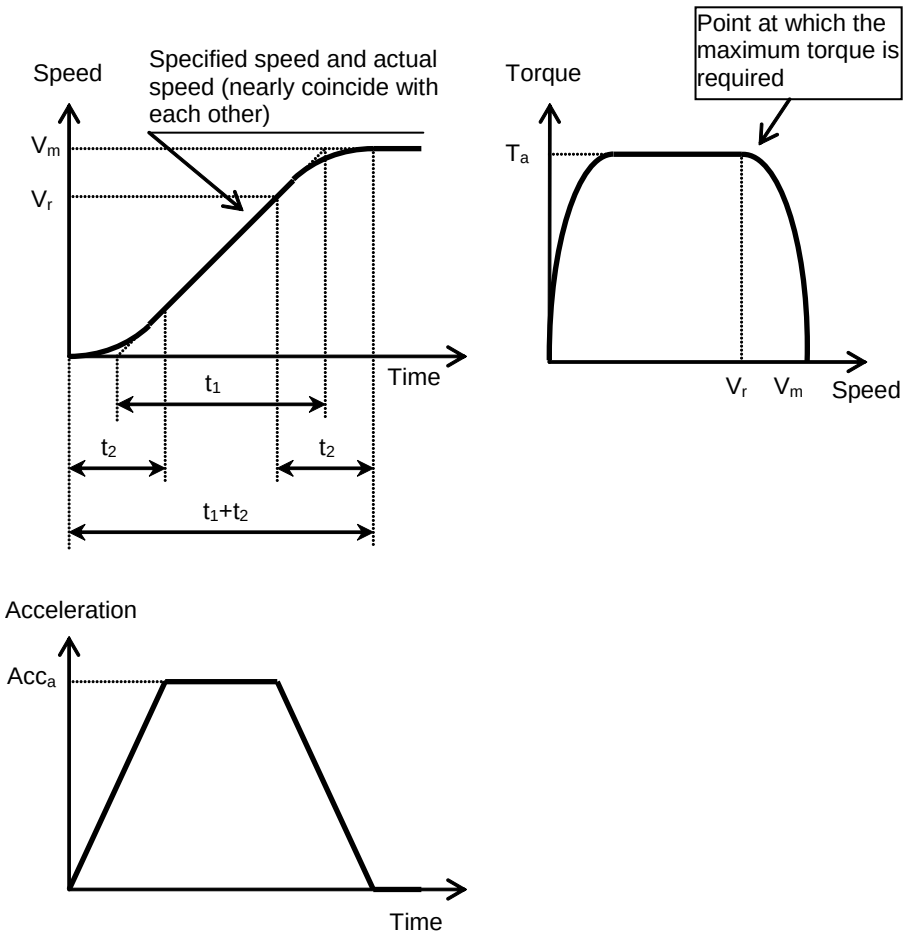

When the feed-forward coefficient is large enough, the acceleration torque in feed-forward during rapid traverse + bell-shaped acceleration/deceleration can approximate to the value obtained with the feed-forward coefficient = 1. When the feed-forward coefficient is 1, the equations for calculating the acceleration torque (T_a), speed (V_r), and maximum workpiece acceleration (Acc_a) are given below:

$$T_a = V_m \times \frac{2\pi}{60} \times \frac{1}{t_1} \times (J_M + J_L / \eta)$$

$$V_r = V_m \times (1 - \frac{t_2}{2t_1})$$

$$Acc_a = V_m \times \frac{1}{60} \times \frac{1}{t_1} \times P$$

T_a : Acceleration torque [Nm]
V_m : Motor speed in rapid traverse [min^{-1}]
t_1 : Acceleration time constant T1 [sec]
t_2 : Acceleration time constant T2 [sec]
J_M : Moment of inertia of rotor [kgm^2]
J_L : Load moment of inertia [kgm^2]
η : Machine tool efficiency
V_r : Motor speed at which the acceleration torque starts to decrease [min^{-1}]
Acc_a : Maximum workpiece acceleration [m/sec^2] = [G]
P : Pitch [m/rev]

© MyFANUC 2D51CC9CD8564E3B8C4DE377C2D11C41

(Reference)

Minimizing t_1 and increasing t_2 by the same amount allows the maximum workpiece acceleration (Acc_a) to be increased and the motor speed at which the acceleration torque starts to decrease (V_r) to be decreased. This allows the efficient use of the motor acceleration torque.
If t_2 is too large, the positioning completion time ($t_1 + t_2$) tends to increase.
Consequently, achieving a balance between t_1 and t_2 is effective in obtaining required specifications of the machine.

(2) Calculating the torque required by the motor shaft in acceleration

To obtain the torque required by the motor shaft (T), add the steady-state load torque (T_m) to the acceleration torque (T_a). (Cutting torque Tcf is assumed not to be applied.)

$T = T_a + T_m$	
T	: Torque required by the motor axis
T_a	: Acceleration torque
T_m	: Steady-state load torque

[Example of calculation for condition 4-2] Acceleration torque

When T_m is 3.0 [N·m] as calculated in example of calculation 1 and T_a is 74.9 [N·m] as calculated in example of calculation 4-1, the acceleration torque (T) is calculated as follows:

T = 74.9[N·m] + 3.0[N·m] = 77.9[N·m]

The speed when the maximum torque is required (V_r) is 1863 [min^{-1}].

The speed-torque characteristics of the α*i*S 22/4000-B, given below, show that the point of 77.9 [N·m]/1863 [min^{-1}] is beyond the intermittent operating zone of the α*i*S 22/4000-B (the torque is insufficient).

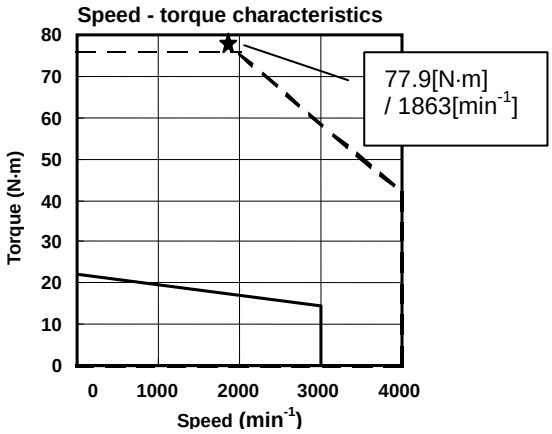

Speed - torque characteristics for α*i*S 22/4000-B

If it is impossible to change the operation specifications of the shaft (such as to increase the acceleration time), a larger motor must be selected.
Select the α*i*S 30/4000-B (rotor moment of inertia (J_M) = 0.0076 [$kg·m^2$], 1.9 times load moment of inertia ratio) and calculate the acceleration torque again.

T_a=83.2[Nm]=849[kgfcm]
V_r=1863[min^{-1}]
T=83.2[Nm]+3.0[Nm] = 86.2[Nm]

The speed-torque characteristics of the α*i*S 30/4000-B, given below, show that the point of 86.2 [N·m]/1863 [min^{-1}] is within the intermittent operating zone of the α*i*S 30/4000 (acceleration is possible).

© MyFANUC 2D51CC9CD8564E3B8C4DE377C2D11C41

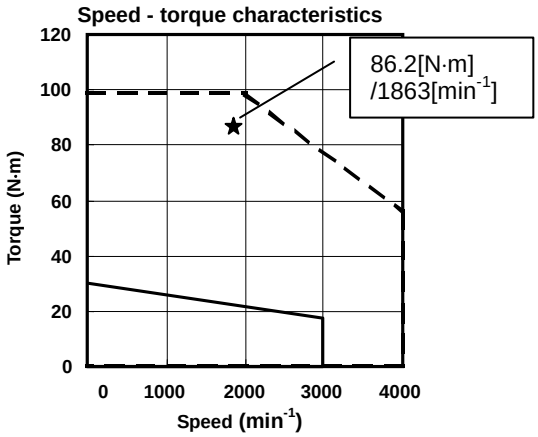

Speed - torque characteristics for αiS 30/4000

2.2.2.5 Calculating the root-mean-square value of the torques

A motor gets hot in proportion to the square of the torque. For a servo motor for which the load condition always changes, the calculated root-mean-square value of torque in a cycle must be sufficiently greater than the continuous torque (at low speed) T_c.

- Root-mean-square value of torque in acceleration/deceleration in rapid traverse

First, generate an operation cycle which performs acceleration/ deceleration in rapid traverse with a desired frequency of positioning in rapid traverse. Write the time-speed graph and time-torque graph as shown below.

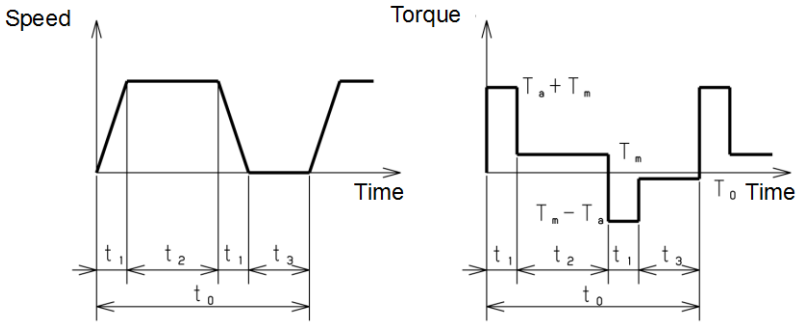

From the time-torque graph, obtain the root-mean-square value of torques applied to the motor during the single operation cycle. Check whether the value is smaller than or equal to the continuous torque (at low speed) T_c.

$$T_{rms} = \sqrt{\frac{(T_a + T_m)^2 t_1 + T_m{}^2 t_2 + (T_a - T_m)^2 t_1 + T_0{}^2 t_3}{t_0}}$$

T_a : Acceleration torque
T_m : Steady-state load torque
T_o : Torque when stopped

When T_{rms} falls within 90% of the continuous torque (at low speed) T_c, the servo motor can be used. (The entire thermal efficiency and other margins must be considered.)

© MyFANUC 2D51CC9CD8564E3B8C4DE377C2D11C41

NOTE

The motor actually rotates, but the determination must be based on the continuous torque (at low speed) T_c.
When the motor is being operated at high speed for a comparatively large proportion of the time, you must take the rotating speed of the motor into consideration and evaluate whether output can be specified in terms of a continuous operation torque.

[Example of calculation for condition 5]
Root-mean-square value of the torques

αiS30/4000 (T_c = 30[Nm] = 306[kgfcm]), T_a = 83.2[Nm],
$T_m = T_o$ = 3.0[Nm], t_1 = 0.08[sec], t_2 = 2.0[sec], t_3 = 3.0[sec]

$$T_{rms} = \sqrt{\frac{(83.2+3.0)^2 \times 0.08 + 3.0^2 \times 2.0 + (83.2-3.0)^2 \times 0.08 + 3.0^2 \times 3.0}{0.08 \times 2 + 2.0 + 3.0}}$$

= 15.0[Nm] < $T_s \times 0.9$ = 30 × 0.9 = 27[Nm]
The αiS30/4000-B can be used for operation.

- Root-mean-square value of torque in a cycle in which the load varies

If the load conditions (cutting load, acceleration/deceleration conditions, etc.) vary widely in a single cycle, write a time-torque graph according to the operation cycle, as in above item. Obtain the root-mean-square value of the torques and check that the value is smaller than or equal to the continuous torque (at low speed) T_c.

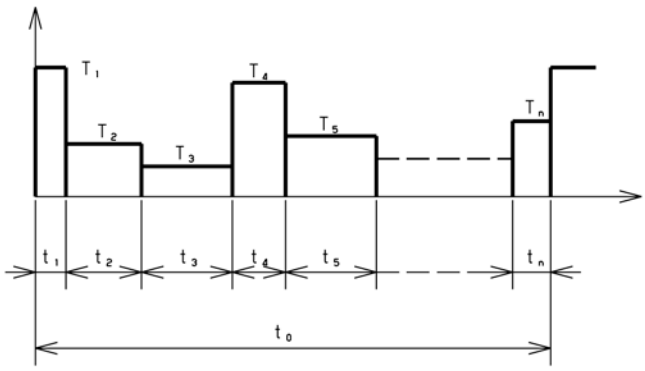

$$T_{rms} = \sqrt{\frac{T_1^2 t_1 + T_2^2 t_2 + T_3^2 t_3 + \cdots + T_n^2 t_n}{t_0}}$$

$t_0 = t_1 + t_2 + t_3 + \cdots + t_n$

NOTE

The motor actually rotates, but the determination must be based on the continuous torque (at low speed) T_c. When the motor is being operated at high speed for a comparatively large proportion of the time, you must take the rotating speed of the motor into consideration and evaluate whether output can be specified in terms of a continuous operation torque.

© MyFANUC 2D51CC9CD8564E3B8C4DE377C2D11C41

2.2.2.6 Calculating the Percentage duty cycle and ON time with the maximum cutting torque

Confirm that the time (duty percentage and ON time) during which the maximum cutting torque can be applied for cutting is shorter than the desired cutting time.
First, calculate the load torque applied when the cutting thrust (F_c) is applied to the motor shaft (T_{ms}). When this load torque is smaller than the product of the motor continuous torque (at low speed) (T_c) and thermal efficiency (α), the motor can be used in continuous cutting. If the value is greater than the product, follow the procedure below to calculate the ON time during which the maximum cutting load torque (T_{ms}) can be applied to the motor (t_{ON}) and the percentage ratio (percentage duty cycle with the maximum cutting torque) of the ON time to the total time of a single cutting cycle (t).
α is assumed to be 0.9. Calculate the percentage considering the specifications of the machine.

- Determining whether continuous operation can be performed with the maximum cutting torque

Calculate the percentage duty cycle, according to the following figure and expressions.

$T_{ms}<T_s\times\alpha$ Operation can be continued with the maximum cutting torque. (The percentage duty cycle with the maximum cutting torque is 100%.) $T_{ms}>T_s\times\alpha$ Calculate the percentage duty cycle, according to the following figure and expressions.

[Example of calculation for condition 6-1]
Percentage duty cycle and ON time with the maximum cutting torque

The load torque in cutting is calculated as follows:

$F=F_c+\mu(W+F_g+F_{cf})$

$F=4900+0.05\times(11760+490+294)=5527[N]=564[kgf]$

$T_m=(5527\times 20\times 10^{-3}\times 1)\div(2\times\pi\times 0.9)+0.8=20.3[Nm]=208[kgfcm]$

The continuous torque (at low speed) of the αiS30/4000-B (T_c) is 30 [N·m] = 306 [kgf·cm].

$T_c\times a= 30\times 0.9 = 27[Nm] > Tms = 20.3[Nm]$

No problems will occur in continuous cutting.

- Calculating the percentage duty cycle with the maximum cutting torque

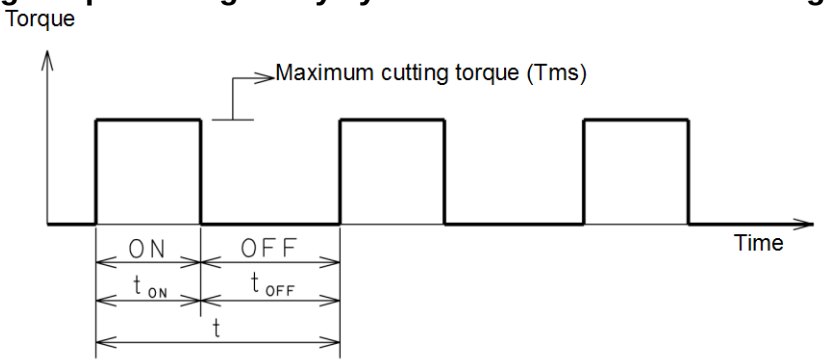

If the load torque (T_{ms}) is greater than the product of the motor continuous torque (at low speed) T_c and thermal efficiency (α), calculate the root-mean-square value of torque applied in a single cutting cycle. Specify t_{ON} and t_{OFF} so that the value does not exceed the product of the motor continuous torque (at low speed) T_c and thermal efficiency (α). Then, calculate the percentage duty cycle with the maximum cutting torque as shown below.

© MyFANUC 2D51CC9CD8564E3B8C4DE377C2D11C41

Percentage duty cycle with the maximum cutting torque (Tms) = $\frac{t_{on}}{t_{on}+t_{off}} \times 100[\%]$

[Example of calculation for condition 6-2]
Percentage duty cycle and ON time with the maximum cutting force

Example)

Assume that Tms is 40 [N·m] (Tm is 3.0 [N·m]).

$$\sqrt{\frac{40^2 t_{on} + 3^2 t_{off}}{t_{on} + t_{off}}} < 27[\mathrm{Nm}]$$ (90% of the continuous torque (at low speed) T_c of the αiS30/4000-B)

Therefore,

$$\frac{t_{on}}{t_{off}} < 0.83$$

The above ratio of the non-cutting time to the cutting time is required. The percentage duty cycle is calculated as follows:

$$\frac{t_{on}}{t_{on}+t_{off}} \times 100 = 45.3\%$$

- Limitations on ON time

The period during which continuous operation under an overload is allowed is also restricted by the OVC alarm level and overload duty cycle characteristics. Refer to Subsection 1.3.2.1, “About characteristic curves and data sheet” for details.

© MyFANUC 2D51CC9CD8564E3B8C4DE377C2D11C41

2.2.2.7 Calculating the dynamic brake stop distance

The equation for calculating the coasting distance when an abnormality occurs and the machine tool is stopped by dynamic braking with both ends of the motor power line shorted (dynamic brake stop distance) is given below:

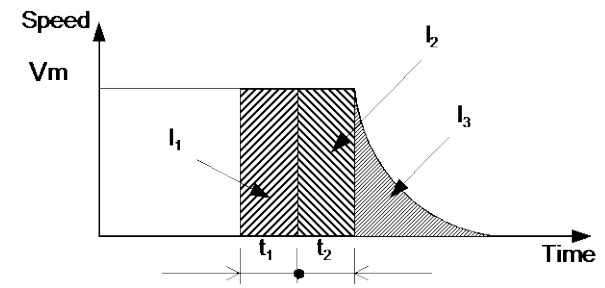

Vm : Rapid traverse rate, mm/sec or [deg /sec]
l_1 : Coasting distance due to delay time t_1 of receiver
l_2 : Coasting distance due to deceleration time t_2 of magnetic contactor (MCC)
l_3 : Coasting distance by dynamic braking after magnetic contactor has been operated
(t_1+t_2) is usually about 0.05 [sec].

$$\text{Coasting distance due} = Vm \times (t_2 + t_2) + (J_M + J_L) \times (A \times No + B \times No^3) \times L$$

$[mm]\ or\ [\text{deg}]$

J_M : Moment of inertia of rotor [kgm^2] [$kgfcms^2$]
J_L : Load moment of inertia [kgm^2] [$kgfcms^2$]
N_o : Motor speed at rapid traverse (min^{-1})
L : Machine movement on one-rotation of motor [mm/rev] or [deg/rev] ($N_o/60 \times L = V_m$)
A : Coefficient A for calculating the dynamic brake stop distance
B : Coefficient B for calculating the dynamic brake stop distance
For details of A and B, see the table on the next item.
For J_M, see the data sheet of each motor in the Chapter 1, “SPECIFICATIONS.”

There are two ways of shortening this dynamic brake stop distance: Emergency stop distance shortening function, and emergency stop distance shortening function effective also during power interruptions (additional hardware is required).

[Example of calculation for condition 7] Dynamic brake stop distance

Assume that the desired stop distance is 150 [mm].

Coasting distance = (3000/60×20)[mm/sec] ×0.05[sec]+(0.0076[kgm^2]+0.01412[kgm^2])
× (4.0×10^{-2}×3000[min^{-1}]+3.1×10^{-9}×3000^3[min^{-1}]) ×20[mm/rev]
=138[mm]

It has been shown that the machine tool can be stopped within the desired stop distance.
Finally, the α*i*S 30/4000-B which satisfies selection conditions 1 to 6 is selected.

© MyFANUC 2D51CC9CD8564E3B8C4DE377C2D11C41

⚠ **CAUTION**

1 Calculate and certainly confirm the dynamic brake stop distance by using coefficients for calculating the dynamic brake distance if it is within the assumption on the machine.

2 Applying the quick stop functions are recommended for shortening the stop distance at emergency stop or power failure.
As for the detail of this functions, refer to the PARAMETER MANUAL (B-65270EN).
For certain working of the quick stop functions at the power failure, keep the control power supply (24VDC) for CNC and servo amplifier by using the uninterruptible power supply (UPS) for example.

3 If some alarms occur, the stop distance will not be short because the quick stop functions do not operate effectively.

4 It should be certainly confirmed at the actual machine that the stop distance is shortened at emergency stop or power failure when the quick stop functions are applied.

© MyFANUC 2D51CC9CD8564E3B8C4DE377C2D11C41

Coefficients for dynamic brake calculation

When combining with servo amplifiers αiSV-B/βiSV-B and αiSV/βiSV

αiS-B series (200-V system)

Model	SI unit		Gravitational system of units	
	A	B		A
αiS 2/5000-B（Note 1）	1.9×10^{-1}	9.0×10^{-8}	1.9×10^{-2}	8.8×10^{-9}
αiS 2/6000-B（Note 1）	2.9×10^{-1}	1.3×10^{-7}	2.8×10^{-2}	1.3×10^{-8}
αiS 4/5000-B（Note 1）	7.6×10^{-2}	5.4×10^{-8}	7.4×10^{-3}	5.2×10^{-9}
αiS 4/6000-B（Note 1）	1.1×10^{-1}	8.3×10^{-8}	1.1×10^{-2}	8.2×10^{-9}
αiS 8/4000-B	1.8×10^{-1}	1.1×10^{-8}	1.8×10^{-2}	1.1×10^{-9}
αiS 8/6000-B	4.2×10^{-1}	4.4×10^{-9}	4.1×10^{-2}	4.3×10^{-10}
αiS 12/4000-B	1.1×10^{-1}	4.1×10^{-9}	1.1×10^{-2}	4.0×10^{-10}
αiS 12/6000-B	1.2×10^{-1}	3.6×10^{-9}	1.2×10^{-2}	3.5×10^{-10}
αiS 22/4000-B	5.8×10^{-2}	5.2×10^{-9}	5.7×10^{-3}	5.1×10^{-10}
αiS 22/6000-B	1.2×10^{-1}	2.9×10^{-9}	1.2×10^{-2}	2.9×10^{-10}
αiS 30/4000-B	4.0×10^{-2}	3.1×10^{-9}	3.9×10^{-3}	3.0×10^{-10}
αiS 40/4000-B	2.9×10^{-2}	2.2×10^{-9}	2.8×10^{-3}	2.2×10^{-10}
αiS 50/2000-B	1.3×10^{-2}	2.3×10^{-9}	1.3×10^{-3}	2.2×10^{-10}
αiS 60/2000-B	1.0×10^{-2}	1.7×10^{-9}	9.9×10^{-4}	1.6×10^{-10}
αiS 50/3000-B	2.1×10^{-2}	1.4×10^{-9}	2.0×10^{-3}	1.4×10^{-10}
αiS 50/3000 FAN-B	2.1×10^{-2}	1.4×10^{-9}	2.0×10^{-3}	1.4×10^{-10}
αiS 60/3000-B	1.2×10^{-2}	1.4×10^{-9}	1.2×10^{-3}	1.4×10^{-10}
αiS 60/3000 FAN-B	1.2×10^{-2}	1.4×10^{-9}	1.2×10^{-3}	1.4×10^{-10}
αiS150/3000-B	7.8×10^{-3}	1.9×10^{-9}	7.6×10^{-4}	1.9×10^{-10}
αiS 300/2000-B	4.4×10^{-3}	7.9×10^{-10}	4.3×10^{-4}	7.8×10^{-11}
αiS 500/2000-B	2.3×10^{-3}	5.0×10^{-10}	2.2×10^{-4}	4.9×10^{-11}

(Note 1) When αiSV40-B, αiSV20/40-B, αiSV40/40-B, or αiSV40/80-B is used for the L axis, αiSV20/20/40-B, αiSV40/40/40-B, βiSV40-B, αiSV20L, αiSV20/20L, or αiSV20/40 is used for the L axis,
or αiSV20/40L is used for the L axis

Model	SI unit		Gravitational system of units	
	A	B	A	B
αiS2/5000-B	4.6×10^{-1}	3.7×10^{-8}	4.5×10^{-2}	3.6×10^{-9}
αiS2/6000-B	6.9×10^{-1}	5.6×10^{-8}	6.8×10^{-2}	5.5×10^{-9}
αiS4/5000-B	3.1×10^{-1}	1.3×10^{-8}	3.0×10^{-2}	1.3×10^{-9}
αiS4/6000-B	4.6×10^{-1}	2.1×10^{-8}	4.5×10^{-2}	2.0×10^{-9}

© MyFANUC 2D51CC9CD8564E3B8C4DE377C2D11C41

αiS series (400-V system)

Model	SI unit		Gravitational system of units	
	A	B		A
αiS2/5000HV-B	(Note 2) (Note 3)			
αiS2/6000HV-B				
αiS4/5000HV-B				
αiS4/6000HV-B				
αiS8/4000HV-B	1.4×10^{-1}	1.4×10^{-8}	1.4×10^{-2}	1.4×10^{-9}
αiS8/6000HV-B	3.2×10^{-1}	5.8×10^{-9}	3.1×10^{-2}	5.6×10^{-10}
αiS12/4000HV-B	8.4×10^{-2}	5.3×10^{-9}	8.2×10^{-3}	5.2×10^{-10}
αiS12/6000HV-B	2.1×10^{-1}	2.1×10^{-9}	2.0×10^{-2}	2.1×10^{-10}
αiS22/4000HV-B	1.2×10^{-1}	2.5×10^{-9}	1.2×10^{-2}	2.5×10^{-10}
αiS22/6000HV-B	2.1×10^{-1}	1.7×10^{-9}	2.1×10^{-2}	1.7×10^{-10}
αiS30/4000HV-B	6.7×10^{-2}	1.8×10^{-9}	6.6×10^{-3}	1.8×10^{-10}
αiS40/4000HV-B	4.9×10^{-2}	1.3×10^{-9}	4.8×10^{-3}	1.3×10^{-10}
αiS50/2000HV-B	2.2×10^{-2}	1.3×10^{-9}	2.2×10^{-3}	1.3×10^{-10}
αiS60/2000HV-B	1.7×10^{-2}	9.8×10^{-10}	1.7×10^{-3}	9.6×10^{-11}
αiS50/3000HV-B	6.3×10^{-3}	4.5×10^{-9}	6.2×10^{-4}	4.4×10^{-10}
αiS50/3000HV FAN-B	6.3×10^{-3}	4.5×10^{-9}	6.2×10^{-4}	4.4×10^{-10}
αiS60/3000HV-B	3.8×10^{-3}	4.4×10^{-9}	3.7×10^{-4}	4.3×10^{-10}
αiS60/3000HV FAN-B	3.8×10^{-3}	4.4×10^{-9}	3.7×10^{-4}	4.3×10^{-10}
αiS150/3000HV-B	2.3×10^{-3}	6.2×10^{-9}	2.3×10^{-4}	6.1×10^{-10}
αiS300/2000HV-B	2.1×10^{-3}	1.7×10^{-9}	2.0×10^{-4}	1.7×10^{-10}
αiS300/3000HV-B	2.9×10^{-3}	1.2×10^{-9}	2.8×10^{-4}	1.2×10^{-10}
αiS500/2000HV-B	1.1×10^{-3}	1.0×10^{-9}	1.1×10^{-4}	1.0×10^{-10}
αiS500/3000HV-B	1.6×10^{-3}	7.1×10^{-10}	1.5×10^{-4}	7.0×10^{-11}
αiS1000/2000HV-B	6.6×10^{-4}	1.2×10^{-9}	6.4×10^{-5}	1.1×10^{-10}
αiS1000/3000HV-B	8.8×10^{-4}	7.1×10^{-10}	8.6×10^{-5}	6.9×10^{-11}
αiS1500/3000HV-B	8.9×10^{-4}	2.4×10^{-10}	8.7×10^{-5}	2.3×10^{-11}
αiS2000/2000HV	3.3×10^{-4}	1.3×10^{-10}	3.2×10^{-5}	1.3×10^{-11}
αiS3000/2000HV	1.7×10^{-4}	7.4×10^{-11}	1.6×10^{-5}	7.3×10^{-12}

(Note 2) When αiSV10HV-B, αiSV10/10HV-B, αiSV10/10/10HV-B, or αiSVP10/10/10-5.5HV-B is used

Model	SI unit		Gravitational system of units	
	A	B	A	B
αiS2/5000HV-B	1.9×10^{-1}	9.0×10^{-8}	1.9×10^{-2}	8.8×10^{-9}
αiS2/6000HV-B	2.9×10^{-1}	1.4×10^{-7}	2.8×10^{-2}	1.4×10^{-8}
αiS4/5000HV-B	8.4×10^{-2}	4.9×10^{-8}	8.2×10^{-3}	4.8×10^{-9}
αiS4/6000HV-B	1.3×10^{-1}	8.1×10^{-8}	1.2×10^{-2}	7.9×10^{-9}

(Note 3) When αiSV20HV-B, αiSV10/20HV-B, αiSV20/20HV-B, or αiSV20/40HV-B is used for the L axis,
or αiSV10/10/20HV-B, αiSV20/20/20HV-B, βiSV10HV-B, βiSV20HV-B, αiSV10HV, αiSV10HVL, αiSV10/10HV, αiSV10/10HVL, or βiSV10HV is used

Model	SI unit		Gravitational system of units	
	A	B	A	B
αiS2/5000HV-B	3.9×10^{-1}	4.4×10^{-8}	3.8×10^{-2}	4.4×10^{-10}
αiS2/6000HV-B	5.9×10^{-1}	6.7×10^{-8}	5.8×10^{-2}	6.8×10^{-10}
αiS4/5000HV-B	2.6×10^{-1}	1.6×10^{-8}	2.5×10^{-2}	1.5×10^{-9}
αiS4/6000HV-B	3.8×10^{-1}	2.6×10^{-8}	3.8×10^{-2}	2.6×10^{-9}

© MyFANUC 2D51CC9CD8564E3B8C4DE377C2D11C41

αiF-B series (200-V system)

Model	SI unit		Gravitational system of units	
	A	B	A	B
αiF1/5000-B (Note 4)	5.0×10^{-1}	2.6×10^{-7}	4.9×10^{-2}	2.5×10^{-8}
αiF2/5000-B (Note 4)	1.8×10^{-1}	1.6×10^{-7}	1.7×10^{-2}	1.6×10^{-8}
αiF4/5000-B (Notes 5, 6)	4.5×10^{-1}	2.8×10^{-8}	4.4×10^{-2}	2.8×10^{-9}
αiF8/3000-B (Notes 5, 6)	1.4×10^{-1}	1.7×10^{-8}	1.4×10^{-2}	1.7×10^{-9}
αiF8/4000-B	2.5×10^{-1}	9.9×10^{-9}	2.4×10^{-2}	9.7×10^{-10}
αiF12/4000-B	1.9×10^{-1}	1.7×10^{-8}	1.9×10^{-2}	1.7×10^{-9}
αiF22/3000-B	6.0×10^{-2}	9.9×10^{-9}	5.9×10^{-3}	9.7×10^{-10}
αiF22/4000-B	7.3×10^{-2}	8.2×10^{-9}	7.1×10^{-3}	8.0×10^{-10}
αiF30/4000-B	5.8×10^{-2}	3.9×10^{-9}	5.7×10^{-3}	3.8×10^{-10}
αiF40/3000-B	2.6×10^{-2}	6.0×10^{-9}	2.5×10^{-3}	5.8×10^{-10}
αiF40/3000 FAN-B	2.6×10^{-2}	6.0×10^{-9}	2.5×10^{-3}	5.8×10^{-10}

(Note 4) When αiSV40-B, αiSV20/40-B, αiSV40/40-B, or αiSV40/80-B is used for the L axis, αiSV20/20/40-B, αiSV40/40/40-B, βiSV40-B, αiSV20L, αiSV20/20L, or αiSV20/40 is used for the L axis,
or αiSV20/40L is used for the L axis

Model	SI unit		Gravitational system of units	
	A	B	A	B
αiF1/5000-B	1.2	1.1×10^{-7}	1.2×10^{-1}	1.0×10^{-8}
αiF2/5000-B	4.9×10^{-1}	5.8×10^{-8}	4.8×10^{-2}	5.7×10^{-9}

(Note 5) When servo amplifier αiSV40S/40S/40 is used for the L or M axis,
or servo amplifier βiSV40/40-B or βiSV40/40-B is used

Model	SI unit		Gravitational system of units	
	A	B	A	B
αiF4/5000-B	8.3×10^{-2}	1.6×10^{-7}	8.1×10^{-3}	1.5×10^{-8}
αiF8/3000-B	3.3×10^{-2}	9.7×10^{-8}	3.3×10^{-3}	9.5×10^{-9}

(Note 6) When αiSV80-B or αiSV40/80-B is used for the M axis,
αiSV80/80-B or αiSV80/160-B is used for the L axis,
or αiSV80/80/80-B or βiSV80-B is used

Model	SI unit		Gravitational system of units	
	A	B	A	B
αiF4/5000-B	3.6×10^{-1}	3.6×10^{-8}	3.5×10^{-2}	3.5×10^{-9}
αiF8/3000-B	1.2×10^{-1}	2.7×10^{-8}	1.2×10^{-2}	2.6×10^{-9}

© MyFANUC 2D51CC9CD8564E3B8C4DE377C2D11C41

αiF-B series (400-V system)

Model	SI unit		Gravitational system of units	
	A	B	A	B
αiF4/5000HV-B	(Note 7)			
αiF8/3000HV-B	(Note 8)			
αiF8/4000HV-B	1.9×10^{-1}	1.3×10^{-8}	1.8×10^{-2}	1.3×10^{-9}
αiF12/4000HV-B	1.5×10^{-1}	2.3×10^{-8}	1.4×10^{-2}	2.2×10^{-9}
αiF22/3000HV-B	4.5×10^{-2}	1.3×10^{-8}	4.4×10^{-3}	1.3×10^{-9}
αiF22/4000HV-B	1.2×10^{-1}	4.8×10^{-9}	1.2×10^{-2}	4.7×10^{-10}
αiF30/4000HV-B	1.0×10^{-1}	2.3×10^{-9}	9.8×10^{-3}	2.2×10^{-10}
αiF40/3000HV-B	4.4×10^{-2}	3.6×10^{-9}	4.3×10^{-3}	3.5×10^{-10}
αiF40/3000HV FAN-B	4.4×10^{-2}	3.6×10^{-9}	4.3×10^{-3}	3.5×10^{-10}

(Note 7) When αiSV20HV-B or αiSV10/20HV-B is used for the M axis,
αiSV20/20HV-B or αiSV20/40HV-B is used for the L axis,
αiSV10/10/20HV-B is used for the N axis,
αiSV20/20/20HV-B, βiSV20HV-B, αiSV20HV, αiSV20HVL, αiSV20/20HV,
αiSV20/20HVL, αiSV20/40HV, and αiSV20/40HVL are used for the L axis,
or βiSV20HV is used

Model	SI unit		Gravitational system of units	
	A	B	A	B
αiF4/5000HV-B	3.9×10^{-1}	3.3×10^{-8}	3.8×10^{-2}	3.2×10^{-9}
αiF8/3000HV-B	1.1×10^{-1}	2.2×10^{-8}	1.1×10^{-2}	2.2×10^{-9}

(Note 8) When αiSV40HV-B or αiSV20/40HV-B is used for the M axis,
αiSV40/40HV-B or αiSV40/80HV-B is used for the L axis,
or αiSV40/40/40HV-B or βiSV40HV-B is used

Model	SI unit		Gravitational system of units	
	A	B	A	B
αiF4/5000HV-B	3.1×10^{-1}	4.1×10^{-8}	3.1×10^{-2}	4.0×10^{-9}
αiF8/3000HV-B	8.9×10^{-1}	2.7×10^{-8}	8.7×10^{-2}	2.7×10^{-9}

When combining with servo amplifiers αiSVP-B/βiSVSP-B

αiS-B series (200-V system) (Note 10)

Model	SI unit		Gravitational system of units	
	A	B	A	B
αiS 2/5000-B	1.9×10^{-1}	9.0×10^{-8}	1.9×10^{-2}	8.8×10^{-9}
αiS 2/6000-B	2.9×10^{-1}	1.3×10^{-7}	2.8×10^{-2}	1.3×10^{-8}
αiS 4/5000-B	7.6×10^{-2}	5.4×10^{-8}	7.4×10^{-3}	5.2×10^{-9}
αiS 4/6000-B	1.1×10^{-1}	8.3×10^{-8}	1.1×10^{-2}	8.2×10^{-9}
αiS 8/4000-B (Note 9)	3.5×10^{-2}	5.8×10^{-8}	3.5×10^{-3}	5.6×10^{-9}
αiS 8/6000-B (Note 9)	4.4×10^{-2}	4.2×10^{-8}	4.3×10^{-3}	4.1×10^{-9}
αiS 12/4000-B (Note 9)	1.5×10^{-2}	3.5×10^{-8}	1.4×10^{-3}	3.4×10^{-9}

© MyFANUC 2D51CC9CD8564E3B8C4DE377C2D11C41

αiS-B series (400-V system)

Model	SI unit		Gravitational system of units	
	A	B	A	B
αiS 2/5000HV-B	1.9×10^{-1}	9.0×10^{-8}	1.9×10^{-2}	8.8×10^{-9}
αiS 2/6000HV-B	2.9×10^{-1}	1.4×10^{-7}	2.8×10^{-2}	1.4×10^{-8}
αiS 4/5000HV-B	8.4×10^{-2}	4.9×10^{-8}	8.2×10^{-3}	4.8×10^{-9}
αiS 4/6000HV-B	1.3×10^{-1}	8.1×10^{-8}	1.2×10^{-2}	7.9×10^{-9}
αiS 8/4000HV-B (Note 9)	3.2×10^{-2}	6.4×10^{-8}	3.1×10^{-3}	6.3×10^{-9}
αiS 8/6000HV-B (Note 9)	3.4×10^{-2}	5.3×10^{-8}	3.4×10^{-3}	5.2×10^{-9}
αiS 12/4000HV-B (Note 9)	1.4×10^{-2}	3.2×10^{-8}	1.4×10^{-3}	3.1×10^{-9}

αiF-B series (200-V system) (Note 10)

Model	SI unit		Gravitational system of units	
	A	B	A	B
αi F1/5000-B	5.0×10^{-1}	2.6×10^{-7}	4.9×10^{-2}	2.5×10^{-8}
αiF2/5000-B	1.8×10^{-1}	1.6×10^{-7}	1.7×10^{-2}	1.6×10^{-8}
αiF4/5000-B (Note 9)	8.3×10^{-2}	1.6×10^{-7}	8.1×10^{-3}	1.5×10^{-8}
αiF8/3000-B (Note 9)	3.3×10^{-2}	9.7×10^{-8}	3.3×10^{-3}	9.5×10^{-9}
αiF8/4000-B (Note 9)	3.3×10^{-2}	7.4×10^{-8}	3.2×10^{-3}	7.2×10^{-9}
αiF12/4000-B (Note 9)	2.3×10^{-2}	1.4×10^{-7}	2.3×10^{-3}	1.4×10^{-8}
αiF22/3000-B (Note 9)	7.7×10^{-3}	7.6×10^{-8}	7.6×10^{-4}	7.5×10^{-9}

αiF-B series (400-V system)

Model	SI unit		Gravitational system of units	
	A	B	A	B
αiF4/5000-B (Note 9)	8.0×10^{-2}	1.6×10^{-7}	7.9×10^{-3}	1.6×10^{-8}
αiF8/3000-B (Note 9)	2.6×10^{-2}	9.2×10^{-8}	2.6×10^{-3}	9.0×10^{-9}
αiF8/4000-B (Note 9)	2.8×10^{-2}	8.8×10^{-8}	2.7×10^{-3}	8.6×10^{-9}
αiF12/4000-B (Note 9)	2.0×10^{-2}	1.7×10^{-7}	1.9×10^{-3}	1.7×10^{-8}
αiF22/3000-B (Note 9)	6.1×10^{-3}	9.5×10^{-8}	6.0×10^{-4}	9.3×10^{-9}

(Note 9) When these motors are combined with the servo amplifiers βiSVSP-B, the dynamic brake stop distance is longer than when these servo motors are combined with servo amplifers αiSV-B/βiSV-B/αiSV/βiSV . Please confirm whether the dynamic brake stop distance fits the desired stop distance. For how to calculate the dynamic brake stop distance and the details, see Subsection 2.2.2.7, "Calculating the dynamic brake stop distance".

(Note 10) It is not possible to combine servo amplifier βiSVSP with αiS-B series servo motors or αiF-B series servo motors.

The values of A and B are calculated by assuming that the resistance of the power line is 0.05Ω per phase. The coefficient may change, depending on the type of the servo amplifier. Consult with FANUC to use another amplifier.

© MyFANUC 2D51CC9CD8564E3B8C4DE377C2D11C41

To protect the servo amplifier, make sure that the allowable load moment of inertia listed below is not exceeded.

	Motor model	Speed during use	Allowable load moment of inertia (reflected to motor shaft) * Rotor moment of inertia of the motor itself not included
1	αiF 4/5000HV-B	Higher than 4000 min^{-1}	0.0041 kgm^2 (Up to 3.0 times the rotor moment of inertia)
		0 to 4000 min^{-1}	0.0068 kgm^2 (Up to 5.0 times the rotor moment of inertia)
2	αiF 22/4000HV-B	0 to 4000 min^{-1}	0.0360 kgm^2 (Up to 3.0 times the rotor moment of inertia)
3	αiF 30/4000HV-B	Higher than 3000 min^{-1}	0.0340 kgm^2 (Up to 2.0 times the rotor moment of inertia)
		0 to 3000 min^{-1}	0.0510 kgm^2 (Up to 3.0 times the rotor moment of inertia)
4	αiF 40/3000HV-B	0 to 3000 min^{-1}	0.0660kgm^2 (Up to 3.0 times the rotor moment of inertia)
5	αiS 22/6000HV-B	0 to 6000 min^{-1}	0.0158 kgm^2 (Up to 3.0 times the rotor moment of inertia)
6	αiS 500/3000HV-B	0 to 3000 min^{-1}	0.3810 kgm^2 (Up to 3.0 times the rotor moment of inertia)
7	Other models than above models	0 to maximum motor speed	Up to 5.0 times the rotor moment of inertia

⚠ **CAUTION**
If exceeding the above condition, contact FANUC.

⚠ **WARNING**
1 If the motor stops from its maximum rotational speed with greater than the allowable load moment of inertia ratio, the inside of the servo amplifier may become abnormally hot, possibly causing damage to the servo amplifier.
Make no mistakes in the calculations of load moment of inertia.
2 If load moment of inertia exceeds the allowable condition, and any alarms or power failure (with the condition quick stop functions ineffective) occur among the rapid traverse, take 30 minutes intervals after power failure because of the protection of the servo amplifier.
If the stopping motion by the dynamic brake is continuously repeated within the 30minutes, the inside of the servo amplifier may become abnormally hot and possibly being damaged.

2.2.3 About the Servo Motor Selection Data Table

Select a suitable motor according to load conditions, rapid traverse rate, increment system and other factors. To aid in selecting the correct motor, we recommend filling in the "Servo Motor Selection Data Table" on the following page.
This section describes the servo motor selection data table.

2.2.3.1 Servo motor selection data table

The Servo Motor Selection Data Table for the SI system of units and that for the gravitational system of units are given on the following pages.

© MyFANUC 2D51CC9CD8564E3B8C4DE377C2D11C41

Servo Motor Selection Data Table

SI unit

User name		**Kind of machine tool**	
CNC equipment		**Type of machine tool**	
Spindle motor			

Item		Axis				
Specifications of moving object						
* Weight of moving object (including workpiece, etc.)		kg				
* Axis movement direction (horizontal, vertical, rotation, slant)						
* Angle of the slant		deg				
* Counterbalance (forth)		N				
* Table support (sliding, rolling, static pressure)						
* Ball screw	Diameter	mm				
	Pitch	mm				
	Length	mm				
* Rack and pinion	Diameter of pinion	mm				
	Thickness of pinion	mm				
* Friction coefficient						
Machine tool efficiency						
* Total gear ratio						
Mechanical specifications						
Traveling distance of the machine tool per revolution of the motor		mm/rev				
Least input increment of CNC		mm				
* Rapid traverse feedrate		mm/min				
Motor speed in rapid traverse		1/min				
* Total load moment of inertia applied to the motor shaft (*1)		kg· m^2				
Moment of inertia of coupling, reducer, pulley, etc.		kg· m^2				
* Steady-state load torque (*2)		N· m				
* Cutting thrust		N				
Maximum cutting torque		N· m				
Required percentage duty cycle/ON time with the maximum cutting torque		%				
Positioning distance		mm				
Required positioning time (*3)		sec				
In-position set value		mm				
Rapid traverse positioning frequency (continuous, intermittent)		times/min				
Dynamic brake stop distance		mm				
Motor specifications and characteristics						
Motor type						
Pulsecoder						
Shaft shape						
Brake (Yes/No)						
Feed-forward during rapid traverse (Yes/No)						
Acceleration/deceleration time constant in rapid traverse	T_1	msec				
	T_2	msec				
Position loop gain		1/sec				

CAUTION
Be sure to fill in units other than the above if used. (Sometimes "deg" is used instead of "mm" for the rotary axis.)

* Note required values for selecting the motor.

*1 If possible, enter the total load moment of inertia. If you enter the moment of inertia values of coupling, reducer, pulley, etc. (applied to the motor shaft) in the next item, you can also calculate the total load moment of inertia by adding the weight of the moving object and ball screw values by theoretical calculation in the case of a linear axis.
In the case of a rotary axis, be sure to enter the moment of inertia because it cannot be obtained by theoretical calculation.

*2 Steady-state load torque refers to the steady-state components, such as friction (holding torque is included in the case of a vertical axis), involved when the motor revolves once. Enter the steady-state load torque if possible. If details are unknown, a value calculated theoretically from the weight and friction coefficient will be used. Enter the steady-state load torque of the rotary axis in the same way as for load moment of inertia. You do not need to enter the torque required for acceleration/deceleration.

*3 Servo delay and setting times must also be taken into consideration in the positioning time.

(**)Comments

© MyFANUC 2D51CC9CD8564E3B8C4DE377C2D11C41

Servo Motor Selection Data Table

Gravitational system of units

User name		**Kind of machine tool**	
CNC equipment		**Type of machine tool**	
Spindle motor			

Item		Axis				
Specifications of moving object						
* Weight of moving object (including workpiece, etc.)		kgf				
* Axis movement direction (horizontal, vertical, rotation, slant)						
* Angle of the slant		deg				
* Counterbalance (forth)		kgf				
* Table support (sliding, rolling, static pressure)						
* Ball screw	Diameter	mm				
	Pitch	mm				
	Length	mm				
* Rack and pinion	Diameter of pinion	mm				
	Thickness of pinion	mm				
* Friction coefficient						
Machine tool efficiency						
* Total gear ratio						
Mechanical specifications						
Traveling distance of the machine tool per revolution of the motor		mm/rev				
Least input increment of CNC		mm				
* Rapid traverse feedrate		mm/min				
Motor speed in rapid traverse		1/min				
* Total load moment of inertia applied to the motor shaft (*1)		kgf· cm· s^2				
Moment of inertia of coupling, reducer, pulley, etc.		kgf· cm· s^2				
* Steady-state load torque (*2)		kgf· cm				
* Cutting thrust		kgf				
Maximum cutting torque		kgf· cm				
Required percentage duty cycle/ON time with the maximum cutting torque		%				
Positioning distance		mm				
Required positioning time (*3)		sec				
In-position set value		mm				
Rapid traverse positioning frequency (continuous, intermittent)		times/min				
Dynamic brake stop distance		mm				
Motor specifications and characteristics						
Motor type						
Pulsecoder						
Shaft shape						
Brake (Yes/No)						
Feed-forward during rapid traverse (Yes/No)						
Acceleration/deceleration time constant in rapid traverse	T_1	msec				
	T_2	msec				
Position loop gain		1/sec				

CAUTION

Be sure to fill in units other than the above if used. (Sometimes "deg" is used instead of "mm" for the rotary axis.)

* Note required values for selecting the motor.

*1 If possible, enter the total load moment of inertia. If you enter the moment of inertia values of coupling, reducer, pulley, etc. (applied to the motor shaft) in the next item, you can also calculate the total load moment of inertia by adding the weight of the moving object and ball screw values by theoretical calculation in the case of a linear axis. In the case of a rotary axis, be sure to enter the moment of inertia because it cannot be obtained by theoretical calculation.

*2 Steady-state load torque refers to the steady-state components, such as friction (holding torque is included in the case of a vertical axis), involved when the motor revolves once. Enter the steady-state load torque if possible. If details are unknown, a value calculated theoretically from the weight and friction coefficient will be used. Enter the steady-state load torque of the rotary axis in the same way as for load moment of inertia. You do not need to enter the torque required for acceleration/deceleration.

*3 Servo delay and setting times must also be taken into consideration in the positioning time.

(**)Comments

© MyFANUC 2D51CC9CD8564E3B8C4DE377C2D11C41

2.2.3.2 Explanation of Items

(1) Title

- User name

Fill in this blank with the name of the user.

- Kind of machine tool

Fill in this blank with a general name of machine tools, such as lathe, milling machine, machining center, and others.

- Type of machine tool

Fill in this blank with the type of machine tool decided by machine tool builder.

- CNC equipment

Fill in this blank with the model name of CNC employed.

- Spindle motor

Enter the specifications and output of the spindle motor. (This item is needed when selecting PS.)

- Axis

Fill in this blank with names of axes practically employed in CNC command.
If the number of axes exceeds 4 axes, enter them in the second sheet.

(2) Specifications of moving object

Be sure to enter data in this row. Data entered here is needed for determining the approximate motor load conditions (moment of inertia, load torque).

- Mass(weight) of driven parts

Enter the mass(weight) of driven parts, such as table, tool post, etc. by the maximum value including the weight of workpiece, jig, and so on. Do not include the weight of the counter balance in the next item in this item.

- Axis movement direction

Enter horizontal, vertical, slant, or rotation as the movement directions of driven parts such as the table and tool post.
Be sure to enter data because the axis movement direction is required for calculating the steady-state load torque and regenerative energy.

- Angle of the slant

Enter the angle which the movement direction forms with a horizontal surface only when the movement direction slants upward.
Be sure to enter data because the axis movement direction is required for calculating the steady-state load torque and regenerative energy.

- Counter balance

Enter the weight of the counter balance in the vertical axis, if provided.
Enter whether the counter balance is made by a weight or force as this influences moment of inertia.

© MyFANUC 2D51CC9CD8564E3B8C4DE377C2D11C41

- Table support

Enter the type of table slide (e.g. rolling, sliding or static pressure).
Enter a special slide way material like Turcite, if used. Also enter the friction coefficient value. This item is significant in estimating the friction coefficient for calculating mainly the load torque.

- Ball screw

For a ball screw, enter the diameter, pitch, and length in order.
If a rack and pinion or other mechanism is used, also enter the traveling distance of the machine tool per revolution of the pinion.

- Rack and pinion

For a rack and pinion, enter the diameter and thickness of the pinion.

- Friction coefficient

Enter the friction coefficient of the table.

- Machine tool efficiency

This value is used for calculating the transfer efficiency of motor output on a machine tool. Standard value is 0.9.
Generally, a drop in transfer efficiency is expected if a reduction gear having a large deceleration rate is used.

- Total gear ratio

Enter the gear ratio between the ball screw and the servo motor, gear ratio between the final stage pinion and the servo motor in case of the rack pinion drive, or gear ratio between the table and the motor in case of rotary table.

(3) Mechanical specifications

Enter basic data that is required for selecting the motor.
For details on how to calculate each of the items, see Section 2.2.2~~4.2~~, “SELECTING A MOTOR.”

- Movement per rotation of motor

Enter the movement of the machine tool when the motor rotates one turn.
Example

- When the pitch of ball screw is 12 [mm] and the gear ratio is 2/3,
  12 [mm] × 2/3 = 8 [mm]
- When the gear ratio is 1/72 in rotary table ;
  360 [deg.] × 1/72 = 5 [deg.]

- Least input increment CNC

Enter the least input increment of NC command. (The standard value is 0.001 [mm].)

- Rapid traverse rate

Enter the rapid traverse rate required for machine tool specifications.

- Motor speed in rapid traverse

Enter the motor speed during rapid traverse.

- Motor shaft converted load moment of inertia

Enter a load moment of inertia applied by the moving object reflected on the motor shaft. While this includes the moment of inertia of the workpiece, ball screw, coupling, etc., the rotor moment of inertia of

© MyFANUC 2D51CC9CD8564E3B8C4DE377C2D11C41

the motor is not included. For information about this calculation method, see Subsection 2.2.2.3, "Calculating the load moment of inertia."
In the case of a linear axis, if you enter the next item, you can have the load moment of inertia obtained by theoretical calculation. In the case of a rotary axis, however, be sure to enter the load moment of inertia because it cannot be obtained by theoretical calculation. Entering two significant digits past the decimal point as the moment of inertia is sufficient. (Example: 0.2865 → 0.29)

- Moment of inertia of coupling, reducer, pulley, etc.

Enter the load moment of inertia of the coupling and other transmission mechanisms; this does not include, the load moment of inertia of the weight of the moving object and the ball screw. Entering two significant digits past the decimal point as the moment of inertia is sufficient. (Example: 0.2865 → 0.29)

- Steady-state load torque

Enter the torque obtained by calculating the force applied for moving the machine tool and state-state components such as friction (including holding torque in the case of a gravity shaft) reflected on the motor shaft when it is rotating at a fixed speed. (Do not include any torque required for acceleration/deceleration in this item.) If details are unknown, use a value calculated logically from the weight and friction coefficient. Enter the steady-state load torque of the rotary axis in the same way as for load moment of inertia as it cannot be calculated logically.
If the load torque values differ during lifting and lowering in the vertical axis, enter both values. Also, if the load torque values differ during rapid traverse and cutting feed, enter a notice to that effect.
Since torque produced in low speed without cutting may be applied even when the motor has stopped, a sufficient allowance is necessary as compared with the continued rated torque of the motor. Suppress this load torque so that it is lower than 70% of the continuous rated torque.

- Cutting thrust

Enter the maximum value of the force applied during cutting by the force in the feed axis direction.

- Maximum cutting torque

Enter the torque value on the motor shaft corresponding to the maximum value of the above cutting thrust. When you enter this value, add the steady-state load to the motor shaft converted value for the cutting thrust.
Since the torque transfer efficiency may substantially deteriorate to a large extent due to the reaction from the slideway, etc. produced by the cutting thrust, obtain an accurate value by taking measured values in similar machine tools and other data into account.

- Maximum cutting duty / ON time

Enter the duty time and ON time with the maximum cutting torque in the above item applied.

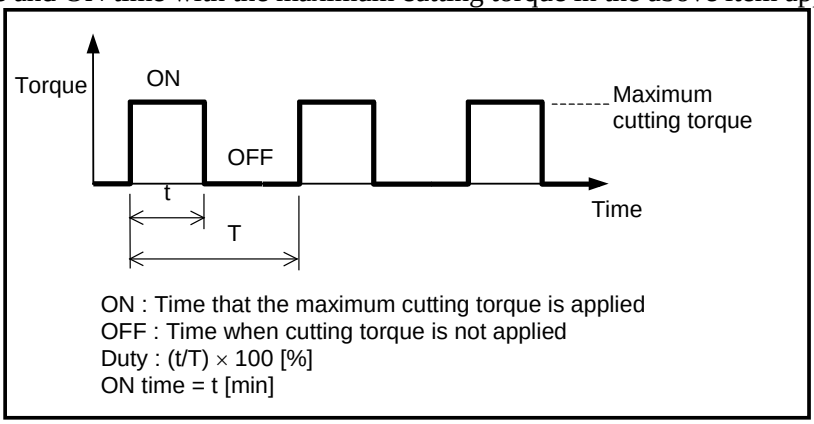

© MyFANUC 2D51CC9CD8564E3B8C4DE377C2D11C41

- Positioning distance

Enter the distance as a condition required for calculating the rapid traverse positioning frequency.
When an exclusive positioning device is used, enter this value together with the desired positioning time below.

- Required positioning time

Enter the required positioning time when an exclusive positioning device is used.
When the device is actually attached on the machine tool, note that servo delay and setting times must also be taken into consideration in the positioning time.

- In-position set value

Enter the in-position set value as a condition required for calculating the above positioning times when an exclusive positioning device is used.
Note that the positioning time changes according to this value.

- Rapid traverse positioning frequency

Enter the rapid traverse positioning frequency by the number of times per minute.
Enter whether the value is for continuous positioning over a long period of time or for intermittent positioning within a fixed period of time. (This value is used to check the OVC alarm and whether the motor is overheated or not by a flowing current during acceleration/deceleration, or to check the regenerative capacity of the amplifier.)

(4) Motor specifications and characteristics

- Motor type

Enter the motor type, if desired.

- Pulsecoder

Enter the specifications of the feedback sensor (Pulsecoder) built into the motor.

- Shaft shape

Enter the shape of the motor shaft.

- Brake (Yes/No)

Enter whether or not the motor has a brake.

- Feed-forward during rapid traverse

Enter whether or not feed-forward control during rapid traverse is used.
Generally, feed-forward control can reduce the delay time in executing servo commands. However, overheating of the motor is more likely to occur as a higher torque is required for acceleration/ deceleration.
Since mechanical shock increases in linear acceleration/deceleration, the bell-shaped acceleration/deceleration or fine acceleration/ deceleration (FAD) function is generally used together with feed-forward control.

- Acceleration/deceleration time constant at rapid traverse

Enter the acceleration/deceleration time constant in rapid traverse.
The acceleration/deceleration time is determined according to the load moment of inertia, load torque, motor output torque, and working speed.
The acceleration/deceleration mode in rapid traverse is linear acceleration/deceleration or feed-forward during rapid traverse + bell-shaped acceleration/deceleration. Enter T_1 only for linear acceleration/deceleration or T_1 and T_2 for feed-forward during rapid traverse + bell-shaped acceleration/deceleration.

© MyFANUC 2D51CC9CD8564E3B8C4DE377C2D11C41

Linear acceleration/deceleration

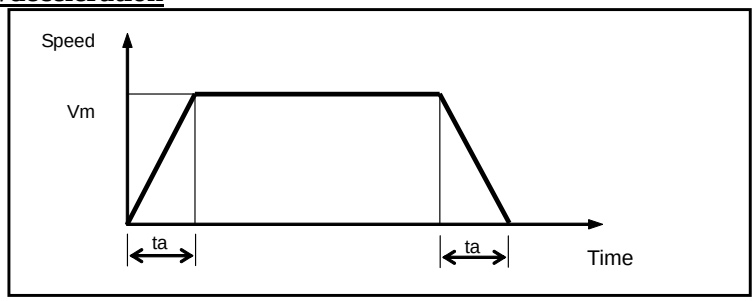

When cutting feed is important, enter the time constant in cutting feed. The acceleration/deceleration mode in cutting feed is linear acceleration/deceleration, exponential acceleration/deceleration, or bell-shaped acceleration/deceleration. Enter t_e only for the time constant in cutting feed.

Exponential acceleration/deceleration

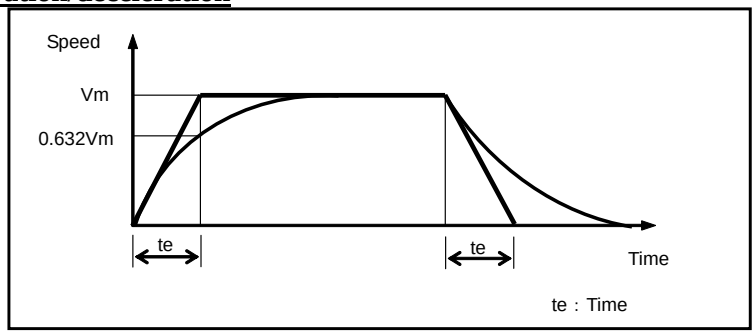

- Position loop gain

Fill in this blank with a value which is considered to be settable judging it from the load moment of inertia value based on experiences.
Since this value is not always applicable due to rigidity, damping constant, and other factors of the machine tool, it is usually determined on the actual machine tool. If the position sensor is mounted outside the motor, this value is affected by the machine tool rigidity, backlash amount, and friction torque value. Enter these values without fail.

- Dynamic brake stop distance

Enter the coasting distance when an abnormality occurs and the machine tool is stopped by dynamic braking with both ends of the motor power line shorted.

2.2.4 Selecting the αiPS

When selecting the αiPS, use the values shown in "DATA FOR SELECTING THE αiPS " as they are, in the equation for the selection of the αiPS. For details of the selection method, refer to "HOW TO SELECT THE αiPS SERIES" in the FANUC SERVO AMPLIFIER αi-B series DESCRIPTIONS (B-65412EN) and "HOW TO SELECT THE αiPS SERIES" in the FANUC SERVO AMPLIFIER αi series DESCRIPTIONS (B-65282EN).
As for the "data for selecting the αiPS ", Appendix A of this manual contains tables extracted from the FANUC SERVO AMPLIFIER αi-B series DESCRIPTIONS (B-65412EN).

© MyFANUC 2D51CC9CD8564E3B8C4DE377C2D11C41

3 HANDLING, INSTALLATION, AND USE ENVIRONMENT OF THE MOTOR

This chapter describes the handling of the FANUC AC servo motor α*i*-B/α*i* series, how to install it to the machine, and the points to note on its use environment.

This chapter, "HANDLING, INSTALLATION, AND USE ENVIRONMENT OF THE MOTOR", consists of the following sections:

3.1 HANDLING OF THE SERVO MOTOR
3.2 MOUNTING A SERVO MOTOR
3.3 USE ENVIRONMENT FOR SERVO MOTORS

© MyFANUC 2D51CC9CD8564E3B8C4DE377C2D11C41

3.1 HANDLING OF THE SERVO MOTOR

3.1.1 Checking a Delivered Servo Motor and Storing a Servo Motor

When the servo motor is delivered, check the following items.

- The motor meets the specifications. (Specifications of the model/shaft/sensor)
- Damage caused by the transportation.
- The shaft is normal when rotated by hand.
- The brake works.
- Looseness or play in screws.

FANUC servo motors are completely checked before shipment, and the inspection at acceptance is normally unnecessary. When an inspection is required, check the specifications (wiring, current, voltage, etc.) of the motor and sensor. Store the motor indoors. The storage temperature is -20°C to +60°C. Avoid storing in the following places.

- Place with high humidity so condensation will form.
- Place with extreme temperature changes.
- Place always exposed to vibration.
  (The bearing may be damaged.)
- Place with much dust.

3.1.2 Separating and Disposing of a Servo Motor

For a servo motor, a plastic part is used.
Disassemble the motor as shown in the following figure, separate the plastic part (Pulsecoder cover), and dispose of the motor. The following plastic material is used:
Plastic material : > (PBT+PC)-GF(30)FR(17)<

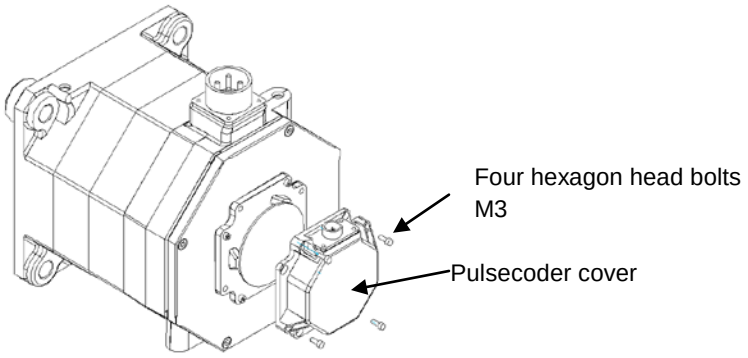

3.2 MOUNTING A SERVO MOTOR

3.2.1 Methods for coupling the shaft

In many cases, the following four methods are used for coupling the motor shaft to the ball screw on a machine: Direct connection through a flexible coupling, direct connection through a rigid coupling,

© MyFANUC 2D51CC9CD8564E3B8C4DE377C2D11C41

connection through gears, and connection through timing belts. It is important to understand the advantages and disadvantages of each method, and select one that is most suitable for the machine.

Direct connection using a flexible coupling

Direct connection by a flexible coupling has the following advantages over connection using gears:

- Even if the angle of the motor shaft to the ball screw changes, it can be compensated to a certain extent.
- Because a flexible coupling connects elements with less backlash, driving noise from joints can be significantly suppressed.

However, this method has the following disadvantages:

- The motor shaft and the ball screw must not slide from each other in the radial direction (for single coupling).
- Loose assembly may result in lower rigidity.

When the motor shaft needs to be connected directly to the ball screw, connecting them using a flexible coupling facilitates adjustment and installation of the motor.
To use a single coupling, the machine needs to be designed so that the centers of the motor shaft and the ball screw are aligned. (In the same way as with a rigid coupling, the use of a single coupling demands that there be almost no relative eccentricity between the axes.)
If it is difficult to align the centers, a double coupling needs to be employed.

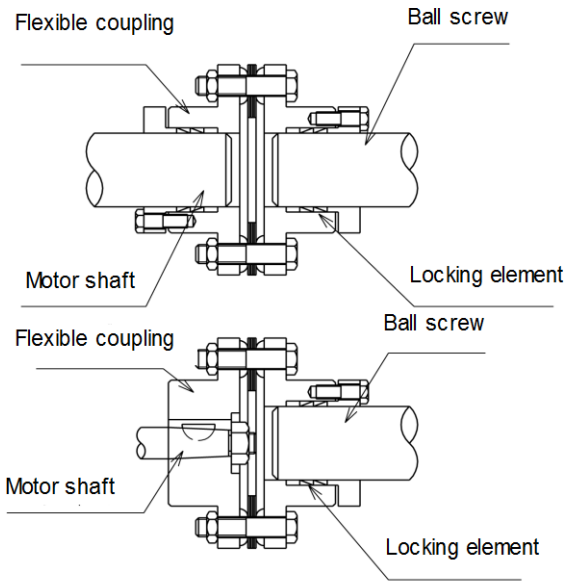

Direct connection using a rigid coupling

Direct connection using a rigid coupling has the following advantages over direct connection using a flexible coupling:

- More economical
- The coupling rigidity can be increased.
- If the rigidity is the same as with a flexible coupling, the moment of inertia can be reduced.

However, this method has the following disadvantages:

- The motor shaft and the ball screw must not slide from each other in the radial direction, and the angle of the motor shaft to the ball screw must be fixed.

For this reason, a rigid coupling needs to be mounted very carefully.
It is desirable that the run-out of the ball screw is 0.01 mm or less. When a rigid coupling is used on the motor shaft, the run-out of the hole for the ball screw must be set to 0.01 mm or less by adjusting the tightness of the locking element.

© MyFANUC 2D51CC9CD8564E3B8C4DE377C2D11C41

The run-out of the motor shaft and the ball screw in the radial direction can be adjusted or compensated to a certain extent by deflection. Note, however, that it is difficult to adjust or measure changes in the angle. Therefore, the structure of the machine should be such that precision can be fully guaranteed.

Gears

This method is used when the motor cannot be put in line with the ball screw because of the mechanical interference problem or when the reduction gear is required in order to obtain large torque. The following attention should be paid to the gear coupling method:

- Grinding finish should be given to the gear, and eccentricity, pitch error, tooth-shape deviations etc. should be reduced as much as possible. Please use the JIS, First Class as a reference of precision.
- Adjustment of backlash should be carefully performed. Generally, if there is too little backlash, a high-pitched noise will occur during high-speed operation, and if the backlash is too big, a drumming sound of the tooth surfaces will occur during acceleration/deceleration. Since these noises are sensitive to the amount of backlash, the structure should be so that adjustment of backlash is possible at construction time.

Timing belt

A timing belt is used in the same cases as gear connection, but in comparison, it has advantages such as low cost and reduced noise during operation, etc. However, it is necessary to correctly understand the characteristics of timing belts and use them appropriately to maintain high precision.
Generally, the rigidity of timing belt is sufficiently higher than that of
other mechanical parts such as ball screw or bearing, so there is no danger of inferiority of performance of control caused by reduction of rigidity by using timing belt. When using a timing belt with a position sensor on the motor shaft, there are cases where poor precision caused by backlash of the belt tooth and pulley tooth, or elongation of belt after a long time becomes problem, so consideration should be given to whether these errors significantly affect precision. In case the position sensor is mounted behind the timing belt (for example, on the ball screw axis), a problem of precision does not occur.
Life of the timing belt largely varies according to mounting precision and tension adjustment. Please refer to the manufacturer's Instruction Manual for correct use.
When using a timing belt, be careful about the radial load. See Subsection 3.2.3, “Allowable Axis Load for a Servo Motor”.

3.2.2 Fastening the Shaft

Taper shaft

In case of taper shafts, the load must be exerted on the tapered surface.
For this reason, at least 70% of gage fitting is required on the tapered surface.
In addition, the screw at the end of the taper shaft must be tightened with a proper torque to achieve sufficient axial force.

Straight shaft

To use a straight shaft that has no key way, connect the shaft with a coupling using a locking element. Because the locking element connects elements by the friction generated when the screw is tightened, it is free from backlash and the concentration of stress. For this reason, the locking element is highly reliable for connecting elements.
To assure sufficient transmission with the locking element, factors such as the tightening torque of the screw, the size of the screw, the number of screws, the clamping flange, and the rigidity of connecting elements are important. Refer to the manufacturer's specifications before using the locking element. When a coupling or gear is mounted using the locking element, tighten the screws to remove a run-out of the coupling or gear including the shaft.

© MyFANUC 2D51CC9CD8564E3B8C4DE377C2D11C41

Straight shaft with a key way

In a straight shaft with a key way, torque is transmitted at the key.
This means that if there is a looseness between the key and key way, the impact incurred at the time of inversion increases, which can result in shaft breakage, or a backlash occurs as a result of the looseness, which can lower positioning accuracy. Therefore, the key and key way should be designed so as to minimize the looseness between them.
When performing acceleration abruptly or frequently, select a taper shaft or straight shaft with no key groove.

3.2.3 Allowable Axis Load for a Servo Motor

The allowable axis load for the shaft of each motor is indicated in Subsection 1.3.3, "Outline Drawings". Using a motor under a load higher than the allowable axial load may break the motor. When designing a machine and connecting a motor to the machine, fully consider the following points:

- The allowable radial load is determined, assuming that a radial load is applied to the end of the shaft.
- Applying a load higher than the allowable axis load may break the bearing. Applying a radial load higher than the allowable radial load may break the shaft due to a fatigue failure.
- A radial load indicates the constant force continuously applied to the shaft depending on the mounting method (such as belt tension) and the force by the load torque (such as dividing moment by pulley radius).
- When a timing belt is used, the belt tension is critical particularly. Too tight a belt causes a fault such as the broken shaft. Belt tension must be controlled so as not to exceed the limits calculated from the allowable radial load. Positioning the pulley as close to the bearing as possible in design can prevent possible faults such as the broken shaft.
- In some use conditions, the pulley diameter and gear size should be considered. For example, when the αi F4-Bmodel is used with a gear and pulley with a radius of 2.5 cm or less, the radial load with a torque of 17.6 Nm (180 kgfcm) exceeds the allowable axis load, 686 N (70 kgf). In this case, take measures such as supporting the end of the motor shaft mechanically.
- If a motor may be used under a load higher than the allowable axis load, the machine tool builder should examine the life by referencing the shaft diameter, bearing, and other factors. Since the standard single-row deep-groove ball bearing is used for the motor bearing, a too high axial load cannot be used. To use a worm or helical gear, in particular, use another bearing.
- The motor bearing is generally fixed with a C-snap ring, and there is a small play in the axial direction. If the axial play affects the positioning in the case of using a worm or helical gear, fit it with another bearing.

© MyFANUC 2D51CC9CD8564E3B8C4DE377C2D11C41

3.2.4 Shaft Run-out Precision of a Servo Motor

The shaft run-out precision of each motor is indicated in Subsection 1.3.3, "Outline Drawings". The methods of measuring the shaft run-out precision are specified below:

Item	Measuring method
Shaft diameter run-out	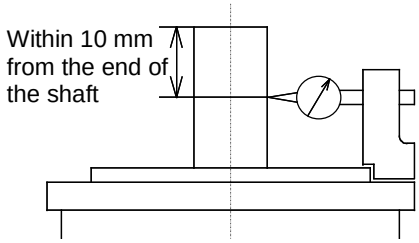
Run-out of the faucet joint for mounting the flange against the center of the shaft (Only for flange type)	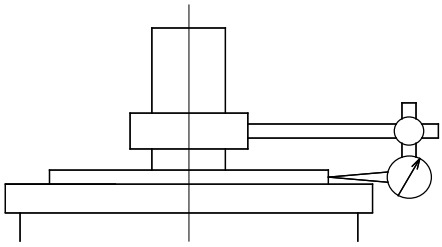
Run-out of the flange mounting surface against the center of the shaft (Only for flange type)	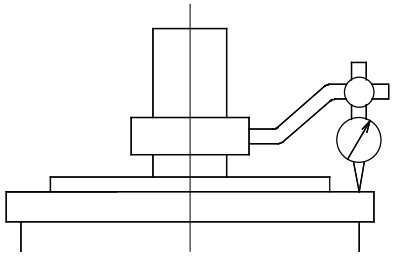

3.2.5 Other Notes on Axis Design

Machine movement per 1 revolution of motor shaft

The machine movement per 1 revolution of motor shaft must be determined at the first stage of machine design referring the load torque, load inertia moment, rapid traverse speed, and relation between minimum increment and resolution of the position sensor mounted on the motor shaft. To determine this amount, the following conditions should be taken into consideration.

- The machine movement per 1 revolution of motor shaft must be such that the desired rapid traverse speed can be obtained. For example, if the maximum motor speed is 1500 min^{-1} and the rapid traverse speed must be 12 m/min., the machine movement per 1 rev. must be 8 mm/rev. or higher.

- As the machine movement per 1 revolution of motor shaft is reduced, both the load torque and the load inertia moment reflected to motor shaft also decrease.
  Therefore, to obtain large thrust, the machine movement per 1 rev. should be the lowest value at which the desired rapid traverse speed can be obtained.

- Assuming that the accuracy of the reduction gear is ideal, it is advantageous to make the machine movement per 1 rev. of motor shaft as low as possible to obtain the highest accuracy in mechanical servo operations. In addition, minimizing the machine movement per 1 rev. of motor shaft can

© MyFANUC 2D51CC9CD8564E3B8C4DE377C2D11C41

increase the servo rigidity as seen from the machine's side, which can contribute to system accuracy and minimize the influence of external load changes.

- When the machine is operation is characterized by repeated acceleration/deceleration cycles, a heating problem may occur due to the current flow caused by the acceleration and deceleration. Should this occur, the machine travel distance per motor shaft revolution should be modified. Given optimum conditions, the machine travel distance per motor shaft revolution is set such that the motor's rotor inertia moment equals the load inertia moment based on motor shaft conversion. For machines such as punch presses and PCB drilling machines, the machine's travel distance per motor shaft revolution should be set so as to satisfy this optimum condition as far as possible, while also considering the rapid traverse rate and increment system.

Precautions for using linear scale

In the case where the machine moves in a linear direction and movement is directly detected by linear scale such as inductosyn, magne-scale etc., special considerations are necessary in comparison with the method where feedback is produced by detecting the motor shaft rotation. This is because the machine movement now directly influences the characteristics of the control system.

The following block diagram shows feedback produced using a linear scale.

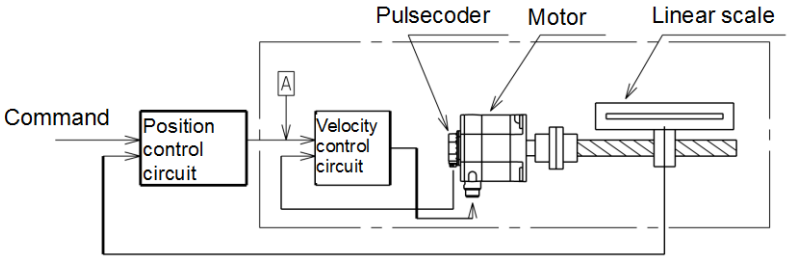

The response of this control system is determined by the adjustment value (position loop gain) of the position control circuit. In other words, the position loop gain is determined by the specified response time of the control system. In the diagram above, the section enclosed by the broken line is called the velocity loop.
Unless the response time of this section where position signal is detected is sufficiently shorter than the response time determined by the position loop gain, the system does not operate properly. In other words, when a command signal is put into point A, response time of the machine where position signals are detected must be sufficiently shorter than the response time defined by the position loop gain.
If the response of the sensor section is slow, the position loop gain should be reduced to have the system operate normally, and as a result, the response of the whole system becomes slow. The same problem is caused when moment of inertia is great.
The main causes for slow response are the mass of the machine and the elastic deformation of the machine system. The larger the volume, and the greater the elastic deformation, the slower the response becomes.
As an index for estimating the response of this machine system, the natural frequency of the machine is used, and this is briefly calculated by the following equation.

$$W_m = \frac{1}{2\pi} \times \sqrt{\frac{K_m}{J_L}}$$

W_m : Natural frequency
J_L : Load inertia moment reflected to motor shaft
K_m : Rigidity of machine system
(=Torque necessary to elastically deform 1[rad] at the motor shaft when the machine table is clamped.)

© MyFANUC 2D51CC9CD8564E3B8C4DE377C2D11C41

The above values can be obtained by calculating the elastic deformation for each section of the driving system. The machine should be designed so that the value of this natural frequency [Hz] will be more than or equal to the value of the position loop gain [sec^{-1}]. For example, when setting 20 [sec^{-1}] as the value of position loop gain, natural frequency of machine system must be more than 20 [Hz].
In this case, the response of the control system becomes a problem for extremely small amounts of movement. Consequently, the natural frequency should be calculated from the rigidity at extremely small displacement such as 10 [μm] or less.

Stick slip

If machine movement causes a stick slip, the control system does not operate normally. That is, it does not stop where it is supposed to, but a phenomenon occurs where it goes beyond and then back within an extremely small range (hunting).
To avoid stick slip, the machine rigidity should be increased, or friction characteristics of the sliding surface should be improved. When the sliding surface friction characteristic is as in the figure below, stick slip occurs easily.

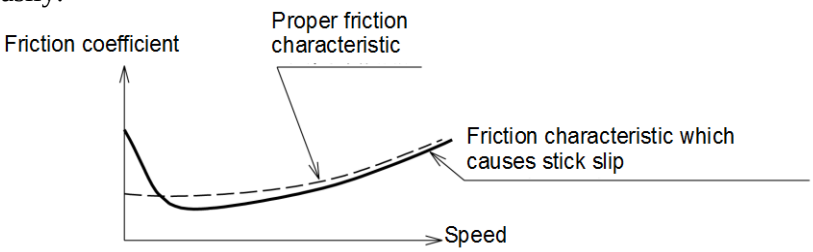

Value of machine overrun (Damping coefficient of machine system)

When the machine is floated by static pressure, etc., there are cases where the machine keeps on moving within the range of backlash although the motor shaft has stopped. If this amount is large, hunting will also occur. To avoid this, backlash should be reduced (especially the backlash of the last mass where position sensor is mounted) and the appropriate damping should be considered.

Reciprocating motion over a short distance

Continuing reciprocating motions over a short distance with a small number of revolutions causes the bearing to become short of lubricant, which can shorten the life of the bearing. When such motions are performed, special care should be taken by, for example, turning the motor at least one turn periodically.

3.2.6 Cautions in Mounting a Servo Motor

The servo motor contains precision sensor, and is carefully machined and assembled to provide the required precision. Pay attention to the following items to maintain the precision and prevent damage to the sensor.

- Secure the servo motor uniformly using four bolt holes provided on the front flange. (For the αiS 1000HV to αiS 3000HV, the motor's own weight must be supported by the feet, and the flange must be used as the reference for alignment to the machine.)

© MyFANUC 2D51CC9CD8564E3B8C4DE377C2D11C41

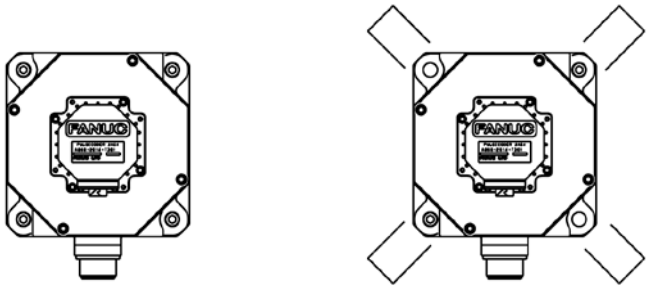

- Ensure that the surface on which the machine is mounted is sufficiently flat.
  When mounting on the machine, take care not to apply a shock to the motor.

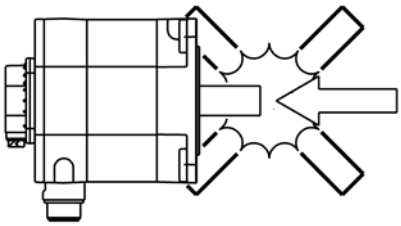

- When it is unavoidable to tap the motor for adjusting the position, etc., use a plastic hammer and tap only the front flange if possible.

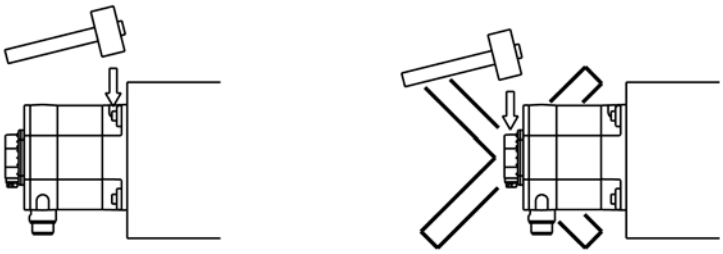

A precision sensor is directly connected to the servo motor shaft.
Pay attention to the following items to prevent damage to the sensor.

- When connecting the power transmission elements such as a gear, a pulley and a coupling to the shaft, take care not to apply a shock to the shaft.

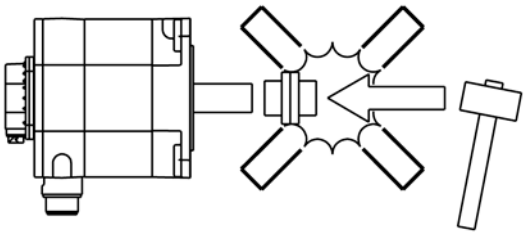

- Generally, in the case of straight shaft, use a locking element for connection with the shaft.

- In the case of tapered shaft, match the tapered surface with the power transmission element and fix by tightening the screw at the end. When the woodruff key is too tight, don't tap it with a hammer.

© MyFANUC 2D51CC9CD8564E3B8C4DE377C2D11C41

Use the woodruff key mainly for positioning, and use the tapered surface for torque transmission. Machine the tapered surface of the power transmission element so that over 70% of the whole surface is contacted.

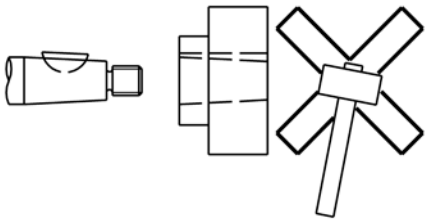

- To remove the connected power transmission element, be sure to use a jig such as a gear puller.

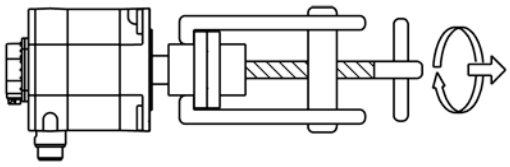

- When tapping slightly to remove the tightly contacted tapered surface, tap in the radial direction to prevent a shock in the axial direction.

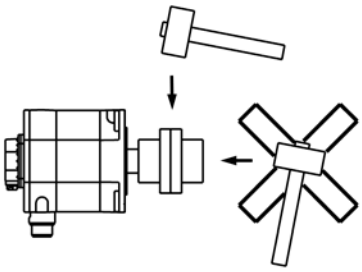

- Suppress the rotary unbalance of the connected power transmission element to the level as low as possible. It is usually believed that there is no problem in the symmetrical form. Be careful when rotating continuously the asymmetrical different form power transmission element. Even if the vibration caused by the unbalance is as small as 0.5G, it may damage the motor bearing or the sensor.

- An exclusive large oil seal is used in the flange of the motor.
  The oil seal surface is made of steel plate. Take care not to apply a force to the oil seal when installing the motor or connecting the power transmission elements.

- Carefully secure the foot of the motor on the machine so that the motor is not displaced. If the motor is displaced during operation, excessive shear force may be applied to bolts used for securing the foot on the machine and securing the motor on the foot, resulting in the bolts being broken. In the worst case, the motor may fall off.
  If you want to drive the motor through timing belts, in particular, attach stoppers to the foot so that external force generated by the belts is applied.

© MyFANUC 2D51CC9CD8564E3B8C4DE377C2D11C41

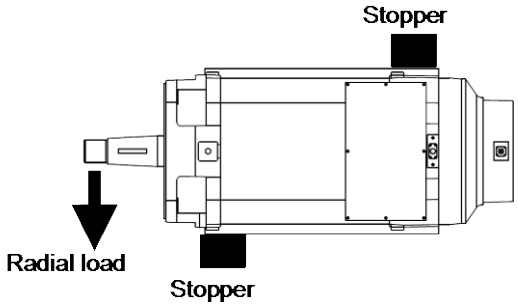

- For a motor with the foot, the squareness between the foot mounted surface and front flange surface is not specified. When securing the motor on the machine, fix the motor on either of the foot mounted surface and front flange surface. Otherwise, excessive force may be applied to the motor, resulting in the motor being broken.

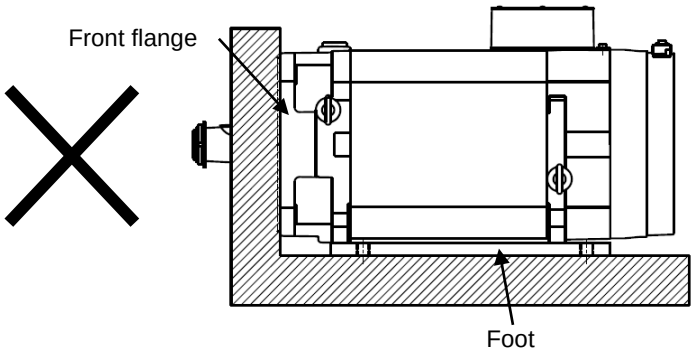

Do not set up the α*i*S8-B or higher or α*i*F4-B or higher servo motor (whose flange size is at least 130 mm) with the pulsecoder down. If you want to use the motor with the shaft directed upward, set up the motor so that its own weight is not applied to the pulsecoder as shown in the figure below.

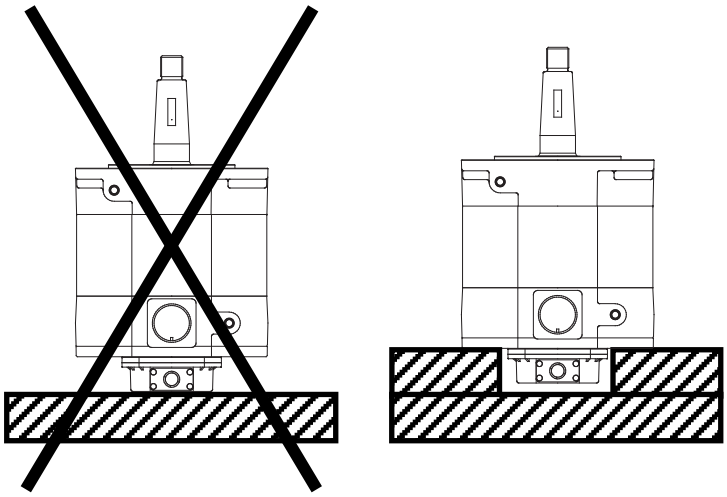

© MyFANUC 2D51CC9CD8564E3B8C4DE377C2D11C41

3.3 USE ENVIRONMENT FOR SERVO MOTORS

3.3.1 Ambient Temperature, Humidity, Installation Height, and Vibration

Ambient temperature

The ambient temperature should be 0°C to 40°C. If the ambient temperature exceeds this range, the operating conditions must be eased to prevent the motor and detector from overheating. (The specification values and external dimensions in the data sheet assume an ambient temperature of 20°C.)

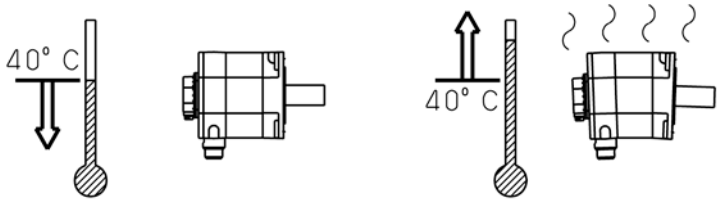

Ambient humidity

The ambient humidity should be 80%RH or less and no condensation should not be caused.

Installation height

Up to 1,000 meters above the sea level requires, no particular provision for attitude. When operating the machine at a higher level, special care is unnecessary if the ambient temperature is lowered 1°C at every 100m higher than 1,000m. For example, when the machine is installed at a place of 1,500 meters above sea level, there is no problem if the ambient temperature is 35°C or less.

Vibration

When installed in a machine, the vibration applied to the motor must not exceed 5G.

If any one of the four environmental conditions (ambient temperature, ambient humidity, installation height, and vibration) specified above is not satisfied, the output must be restricted.

3.3.2 Usage Considering Environmental Resistance

Overview

The motor is an electric part, and if the lubricant or cutting fluid falls on the motor, it will enter the inside of the motor, possibly adversely affecting the motor. In particular, if the cutting fluid adheres to the motor, it will deteriorate the resin or rubber sealing members, causing a large amount of cutting fluid to enter the inside of the motor and possibly damaging the motor. When using the motor, note the points described below.

Level of motor protection

For the standard type, the level of motor protection is such that a single motor unit can satisfy IP65 of the IEC 60034-5 standard, and a single motor unit of α*i*S 2000/2000HV and above can satisfy IP44 of the IEC 60034-5 standard. (Except the fan motor and the connectors of models with a fan. The connectors of Pulsecoders are water-proof when engaged.)
As options, IP67 type motors are also available. (Except models with a fan and the α*i*S 300/2000 and above. The connectors of Pulsecoders are water-proof when engaged.)
The protection types mentioned above do not apply to the part that the motor axis penetrates.

© MyFANUC 2D51CC9CD8564E3B8C4DE377C2D11C41

For a description of the water-proof properties of each connector, see the section on that connector.

IP4□ : Machine protected from introduction of solid foreign matter over 1.0 mm
Electric cables and wires with a diameter or thickness greater than 1.0 mm do not enter.

IP6□ : Fully dust-proof machine
Structure completely free from the entry of dust.

IP□4 : Machine protected from water spray
Water sprayed on the motor from any direction will have no harmful effect.

IP□5 : Machine protected from injected water
Water injected from a nozzle to the machine in any direction does not have a harmful impact on the machine.

IP□7 : Machine protected from the effect of seeping water
If the machine is immersed in water at a prescribed pressure for a prescribed duration, there is no possibility that an amount of water that has a harmful impact on the machine enters the machine.

If sufficient water-proof performance is required, as in the case in which a motor is used in a cutting fluid mist atmosphere, specify an IP67 type motor.
Note that both the standard and IP67 types satisfy the provisions for short-time water immersion, and do not guarantee their water-proof performance in an atmosphere in which the cutting fluid is applied directly to the motor. Before actual use, note the points described below.

Motor periphery

If the cutting fluid or lubricant falls on the motor, it will adversely affect the sealing properties of the motor surface, entering the inside of the motor and possibly damaging the motor. Note the following points on use.

Make sure that the motor surface is never wet with the cutting fluid or lubricant, and also make sure that no fluid builds up around the motor. If there is a possibility of the surface being wet, a cover is required. Be sure to mount a cover even when using an IP67 type motor.

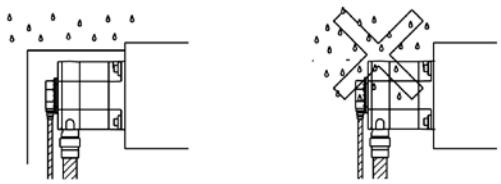

If the cutting fluid is misted, the cutting fluid may be condensed on the inside of the cover and fall on the motor. Make sure that no condensed droplets fall on the motor.

Completely separate the machining area from the motor area, using a telescopic cover, accordion curtain, and so on. Note that partitions such as accordion curtains are consumable and require periodic inspection for damage.

Output shaft seal (oil seal)

For all models, the shaft of the servo motor is provided with an oil seal to prevent entry of oil and other fluids into the motor. It does not, however, completely prevent the entry of lubricant and other fluids depending on the working conditions. Note the following points on use.

© MyFANUC 2D51CC9CD8564E3B8C4DE377C2D11C41

When the motor is rotating, the oil seal has an effect of discharging any oil that enters, but if it is pressurized for a long time when the motor is stopped, it may allow oil to enter through the lip. When lubrication with an oil bath is conducted for gear engagement, for example, the oil level must be below the lip of the oil seal of the shaft, and the oil level must be adjusted so that the oil does nothing but splash on the lip.

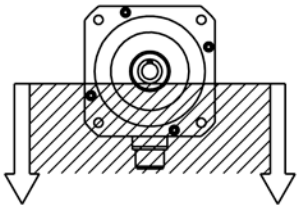

Diameters of the oil seal lips of motor shafts

Motor model	Oil seal diameter
αiS 2-B, αiS 4-B, αiS 2HV-B, αiS 4HV-B, αiF 1-B, αiF 2-B	ϕ15 [mm]
αiS 8-B, αiS 12-B, αiS 8HV-B, αiS 12HV-B, αiF 4-B, αiF 8-B, αiF 4HV-B, αiF 8HV-B	ϕ24 [mm]
αiS 22-B, αiS 30-B, αiS 40-B, αiS 22HV-B, αiS 30HV-B, αiS 40HV-B, αiF 12-B, αiF 22-B, αiF 30-B, αiF 12HV-B, αiF 22HV-B, αiF 30HV-B (Only the straight shaft type of the following) αiS 50-B, αiS 50HV-B, αiS 60-B, αiS 60HV-B, αiF 40-B, αiF 40HV-B * Including those equipped with fans.	ϕ35 [mm]
(Only the taper shaft type of the following) αiS 50-B, αiS 50HV-B, αiS 60-B, αiS 60HV-B, αiF 40-B, αiF 40HV-B * Including those equipped with fans.	ϕ38 [mm]
αiS 150-B, αiS 300-B, αiS 500-B, αiS 150HV-B αiS 300HV-B, αiS 500HV-B	ϕ65 [mm]
αiS 1000HV	ϕ80 [mm]
αiS 2000HV, αiS 3000HV	ϕ120 [mm]

If the shaft is directed upward so that it is constantly immersed in oil, the oil seal of the motor alone does not provide sufficient sealing. If grease is used for lubrication, the properties of the oil seal are generally impaired. In these cases, a special design is required. For example, another oil seal is mounted on the machine side and a drain is provided so that any oil passing through that seal can is discharged outside.

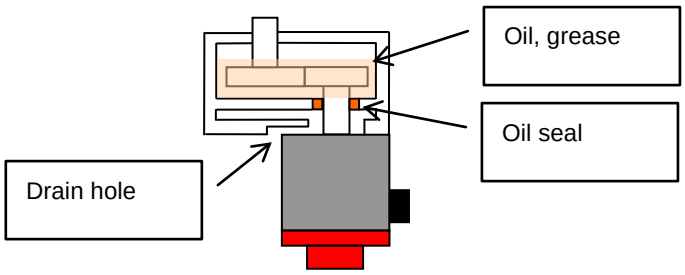

In such an environment in which the lip of the oil seal switches between dry and wet states repeatedly, if the cutting fluid flies about after the lip has worn in a dry state, the cutting fluid may easily enter the inside of the motor. In this case, provide a cover, etc. so that no cutting fluid is applied to the oil seal of the motor.

Ensure that no pressure is applied to the lip of the oil seal.

© MyFANUC 2D51CC9CD8564E3B8C4DE377C2D11C41

The cutting fluid does not provide lubrication for the oil seal lip, so that the fluid may easily enter the seal. Provide a cover so that no cutting fluid is applied to the oil seal.

The oil seal lip is made of rubber, and if foreign matters such as cutting chips get in, it will be easily worn, losing its sealing properties. Provide a cover, etc. to prevent cutting chips from entering near the lip.

Motor coupling

If a coupling box exists between the motor and the machine, employ the structure described below so that no cutting fluid builds up in the box.

Provide a cover for the top and sides of the coupling box.

Provide a drain hole at the bottom of the coupling box. The hole must be large enough to avoid clogging. Make sure that any cutting fluid that bounces back is not applied from the drain hole to the motor.

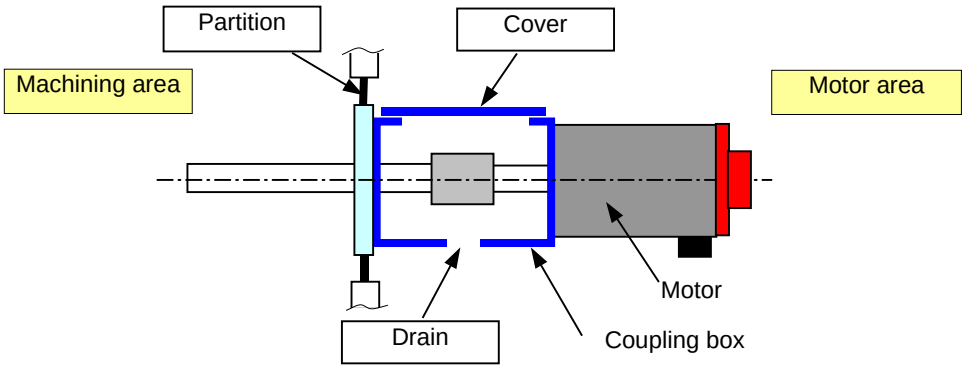

<Fault example>

The cutting fluid leaks from a gap in the accordion curtain to the motor area, and builds up in the coupling box. While the motor is moving, the cutting fluid ripples, splashing on the oil seal of the motor. The cutting fluid enters the inside of the motor there in large quantities, deteriorating the insulation of the motor.

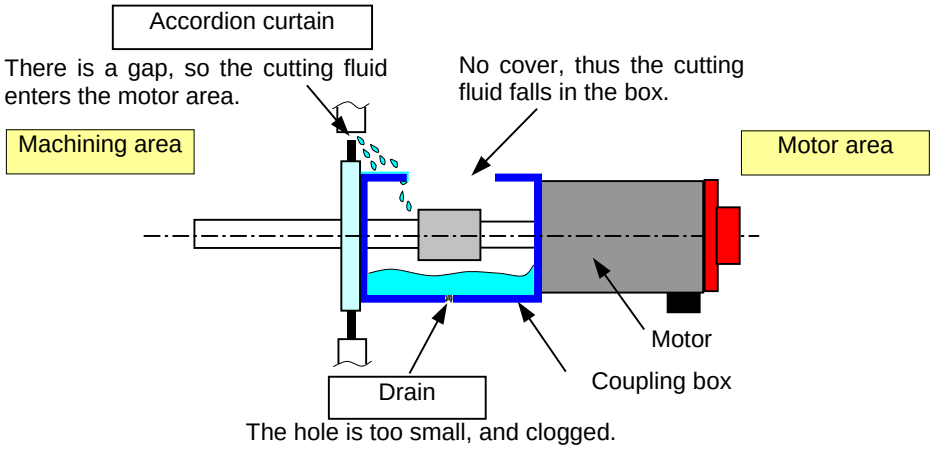

© MyFANUC 2D51CC9CD8564E3B8C4DE377C2D11C41

Connectors

Note the following points on use:

Make sure that no cutting fluid is introduced to the motor via cables. If the motor connector is used horizontally, this can be accomplished by forming a slack in the cable.

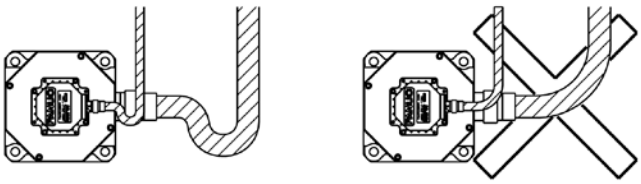

If the motor connector is directed upward, the cutting fluid collects into the cable connector. Whenever possible, direct the motor connector sideways or downward.

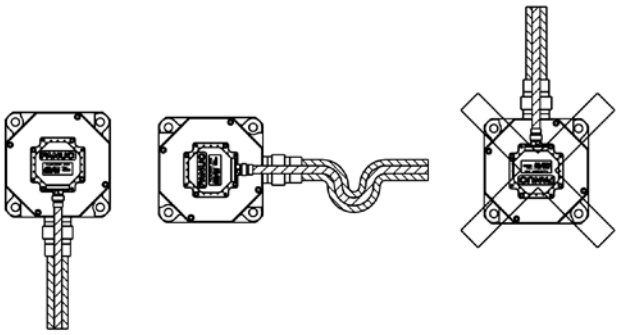

If there is a possibility of the power cable and the power connector being wet, it is recommended to use the water-proof connector plug recommended in this DESCRIPTIONS for the connector and an oil-proof cable as the power cable. (Oil-proof cable example: PUR (polyurethane) series made by LAPP)

If using a conduit hose for cable protection purposes, use the seal adapter recommended in this DESCRIPTIONS.

The feedback cable connector provides IP67 water-proof performance when it is engaged with the pulse coder connector. If the feedback cable connector is not fully engaged, the cutting fluid will enter the inside of the pulse coder from the connector, possibly causing a failure. Install the connector properly in accordance with the feedback cable engagement procedure described in this DESCRIPTIONS and check that it is engaged securely.

If the feedback cable connector cannot provide sufficient water resistance due to an assembly failure, the cutting fluid will enter the inside of the pulse coder from the connector, possibly causing a failure. When manufacturing a feedback cable connector, assemble it properly in accordance with the operator's manual issued by the connector manufacturer.

Notes on cutting fluid

Cutting fluid containing highly active sulfur or chlorine, oil-free cutting fluid called synthetic cutting fluid, or highly alkaline, water-soluble cutting fluid in particular significantly affect the CNC, motor or amplifier. Even when these components are protected from direct spraying of cutting fluid, problems as described below may arise. So special care should be taken.

- **Cutting fluid containing highly active sulfur or chlorine**
  Some cutting fluids containing sulfur or chlorine show extremely high activity of sulfur or chlorine. Ingress of such cutting fluid into the CNC, motor, or amplifier can cause corrosion of copper, silver, and so on used as parts' materials, therefore resulting in parts' failures.

© MyFANUC 2D51CC9CD8564E3B8C4DE377C2D11C41

- **Synthetic cutting fluid with high permeability**
  Some synthetic type cutting fluids that use polyalkylene glycol (PAG) as a lubricant have extremely high permeability. Such cutting fluid can easily penetrate into the motor or device through packing and so on even if the motor or device is sealed well. Penetration of such cutting fluid into the CNC, motor, or amplifier can deteriorate insulation or cause parts' failures.

- **Highly alkaline, water-soluble cutting fluid**
  Some cutting fluids that strengthen pH by alkanolamine show strong alkalinity of pH10 or higher when diluted to the standard level. Attachment of such cutting fluid to the CNC, motor, or amplifier, or penetration of such cutting fluid into them can cause chemical reaction with plastic and so on, therefore resulting in corrosion or deterioration of them.

Terminal box

For the α*i*S 150/3000-B model or higher, the power line is connected at the terminal box.

To ensure the appropriate IP level, a conduit or something similar is required at the power line lead-in hole. When connecting the conduit to the terminal box, prepare rubber packings, a water-proof connector, etc. to prevent the entry of the lubricant or cutting fluid from the wiring hole in the terminal box.

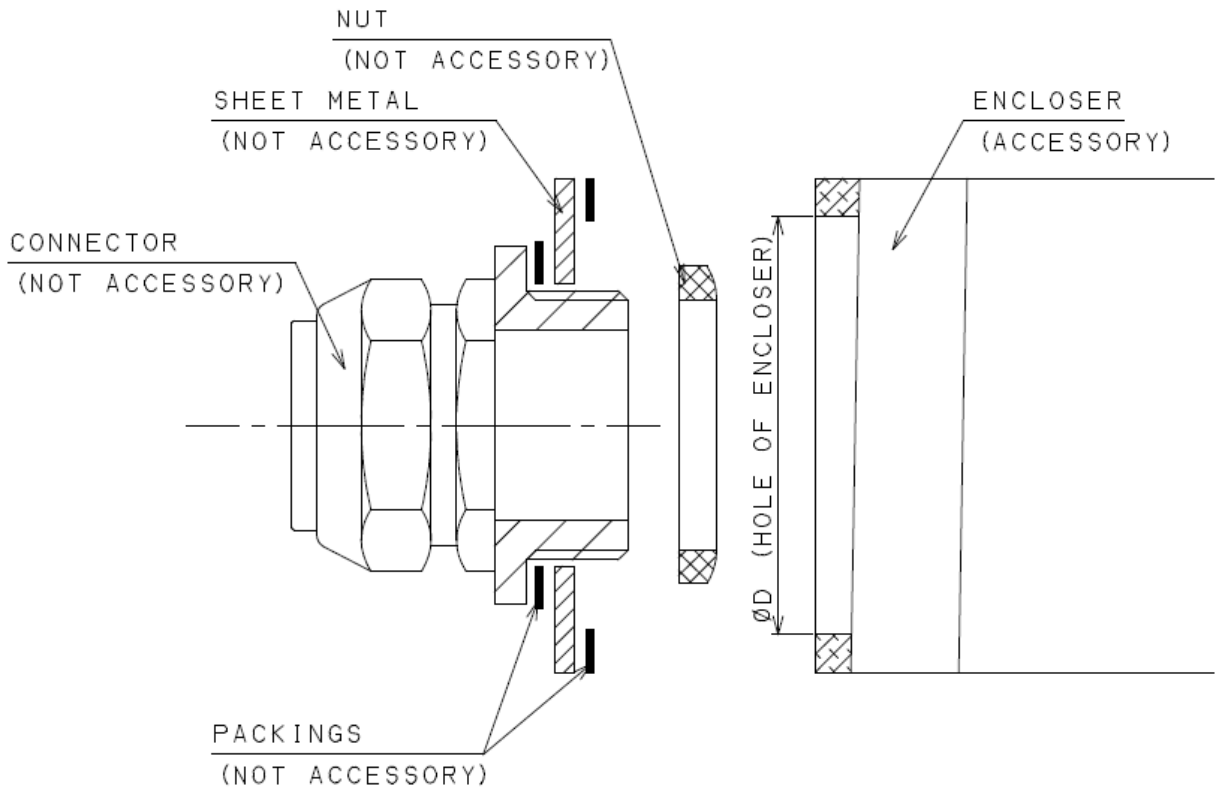

NOTE
For information on the wiring hole diameters, refer to the Subsection 1.3.3, "Outline Drawings."

Fan motor

The fan motor provides low water-proof performance, so make sure that a fan unit and a fan-equipped motor are not employed in an environment in which the cutting fluid is applied.

© MyFANUC 2D51CC9CD8564E3B8C4DE377C2D11C41

If lubricant or cutting fluid mist, particles, or cutting chips are drawn into the fan motor, the air holes in the motor and the blades of the fan motor will clog, causing the cooling capacity to reduce. Employ a machine structure that allows clean, cooling air to be fed into the motor.

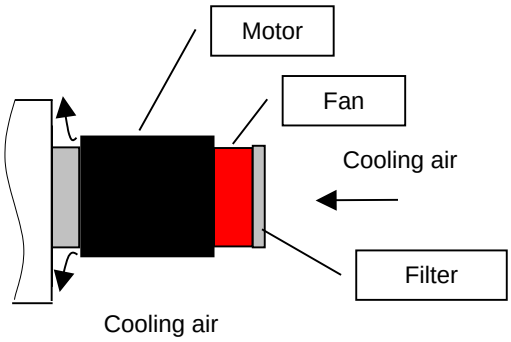

© MyFANUC 2D51CC9CD8564E3B8C4DE377C2D11C41

APPENDIX

© MyFANUC 2D51CC9CD8564E3B8C4DE377C2D11C41

© MyFANUC 2D51CC9CD8564E3B8C4DE377C2D11C41

A DATA FOR SELECTING THE αiPS

CAUTION

1 This appendix contains an extract from the FANUC SERVO AMPLIFIER αi-B series CNC DESCRIPTIONS (B-65412EN) concerning the servo motor output data for selecting the αiPS.
For details of how to select the αiPS, refer to "HOW TO SELECT THE αiPS SERIES" in the FANUC SERVO AMPLIFIER αi-B series DESCRIPTIONS (B-65412EN) and the FANUC SERVO AMPLIFIER αi series DESCRIPTIONS (B-65282EN).

2 The output values shown herein are intended for selection purposes only and do not guarantee the output of the servo motor.

3 The continuous rated output and maximum output at acceleration may be changed.

A.1 αi-B SERIES (200V)

Motor model	Continuous rated output	Maximum output at acceleration
αiF 1/5000-B	0.50kW	2.0kW
αiF 2/5000-B	0.75kW	2.9kW
αiF 4/5000-B	1.4kW	4.5kW
αiF 8/3000-B	1.6kW	5.7kW
αiF 8/4000-B	2.2kW	9.0kW
αiF 12/4000-B	3.0kW	7.6kW
αiF 22/3000-B	4.0kW	9.6kW
αiF 22/4000-B	4.0kW	17kW
αiF 30/4000-B	7.0kW	21kW (3000 min^{-1}) 23kW (4000 min^{-1})
αiF 40/3000-B	6.0kW	18kW
αiF 40/3000 FAN-B	9.0kW	18kW
αiS 2/5000-B	0.75kW	2.8kW
αiS 2/6000-B	1.0kW	2.4kW
αiS 4/5000-B	1.0kW	3.1kW
αiS 4/6000-B	1.0kW	2.9kW
αiS 8/4000-B	2.5kW	8.0kW
αiS 8/6000-B	2.2kW	11kW
αiS 12/4000-B	2.7kW	12kW
αiS 12/6000-B	2.2kW	20kW
αiS 22/4000-B	4.5kW	17kW
αiS 22/6000-B	4.5kW	21kW
αiS 30/4000-B	5.5kW	22kW
αiS 40/4000-B	5.5kW	24kW
αiS 50/2000-B	4kW	21kW
αiS 50/3000 FAN-B	14kW	39kW
αiS 60/2000-B	5kW	25kW
αiS 60/3000 FAN-B	14kW	40kW
αiS 150/3000-B	26kW	52kW
αiS 300/2000-B	52kW	96kW
αiS 500/2000-B	60kW	104kW

© MyFANUC 2D51CC9CD8564E3B8C4DE377C2D11C41

A.2 αi-B SERIES (400V)

Motor model	Continuous rated output	Maximum output at acceleration
αiF 4/5000HV-B	1.4kW	4.5kW
αiF 8/3000HV-B	1.6kW	5.7kW
αiF 8/4000HV-B	2.2kW	9.0kW
αiF 12/4000HV-B	3.0kW	7.5kW
αiF 22/3000HV-B	4.0kW	9.6kW
αiF 22/4000HV-B	4.0kW	17kW
αiF 30/4000HV-B	5.0kW	21kW (3000 min^{-1}) 23kW (4000 min^{-1})
αiF 40/3000HV-B	6.0kW	18kW
αiF 40/3000HV FAN-B	9.0kW	18kW
αiS 2/5000HV-B	0.75kW	2.8kW
αiS 2/6000HV-B	1.0kW	2.4kW
αiS 4/5000HV-B	1.0kW	3.1kW
αiS 4/6000HV-B	1.0kW	2.9kW
αiS 8/4000HV-B	2.3kW	8.0kW
αiS 8/6000HV-B	2.2kW	11kW
αiS 12/4000HV-B	2.5kW	12kW
αiS 12/6000HV-B	2.2kW	20kW
αiS 22/4000HV-B	4.5kW	19kW
αiS 22/6000HV-B	4.5kW	21kW
αiS 30/4000HV-B	5.5kW	22kW
αiS 40/4000HV-B	5.5kW	24kW
αiS 50/2000HV-B	4kW	21kW
αiS 50/3000HV FAN-B	14kW	39kW
αiS 60/2000HV-B	5kW	25kW
αiS 60/3000HV FAN-B	14kW	40kW
αiS 150/3000HV-B	26kW	52kW
αiS 300/2000HV-B	52kW	96kW
αiS 300/3000HV-B	55kW	143kW
αiS 500/2000HV-B	60kW	104kW
αiS 500/3000HV-B	60kW	160kW
αiS 1000/2000HV-B	125kW	198kW
αiS 1000/3000HV-B	170kW	350kW
αiS 1500/3000HV-B	200kW	590kW
αiS 2000/2000HV	200kW	400kW
αiS 3000/2000HV	220kW	690kW

NOTE

The continuous rated output and maximum output at acceleration may be changed.

© MyFANUC 2D51CC9CD8564E3B8C4DE377C2D11C41

B NOTES ON USING THE SERVO MOTOR FOR LIVE TOOL APPLICATIONS OF A MACHINE TOOL

This appendix contains the output graphs and torque graphs applicable when the α*i*-B/α*i* servo motor is used for live tool applications of a machine tool, as well as the notes on such use of the servo motor. The output graphs and torque graphs of ten representative models with a maximum rotation speed of 6000 [min^{-1}] are shown here.

This chapter consists of the following sections:

B.1 OUTPUT GRAPHS AND TORQUE GRAPHS (6000 [min^{-1}] MODELS)
B.2 NOTES ON USING THE SERVO MOTOR FOR LIVE TOOL APPLICATIONS
B.3 CNC FUNCTIONS FOR USING THE SERVO MOTOR FOR THE SPINDLE OR LIVE TOOL

© MyFANUC 2D51CC9CD8564E3B8C4DE377C2D11C41

B.1 OUTPUT GRAPHS AND TORQUE GRAPHS (6000 [min^{-1}] MODELS)

This section shows the output graphs and torque graphs of servo motors (models with a maximum rotation speed of 6000 [min^{-1}]).

⚠ CAUTION

1 The intermittent operating zone represents the instantaneous maximum output at acceleration (torque) of the servo motor.
It does not indicate the 30-minute rated output (torque) or S3 rated output (torque).

2 The presented output values are those of the motor shaft output, not the data for selecting the αiPS.

αiS 2/6000-B, αiS 2/6000HV-B

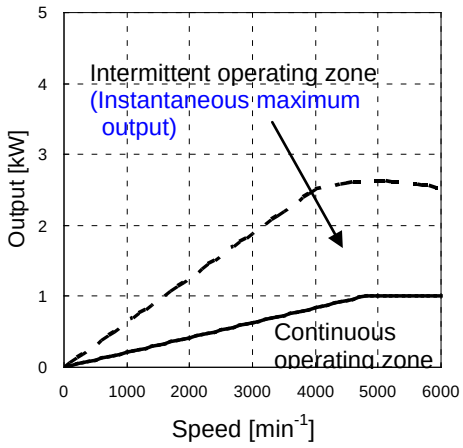

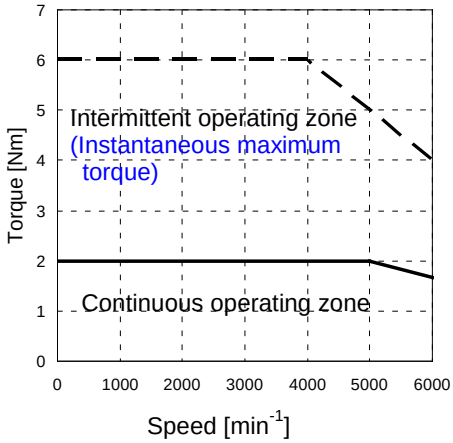

(*) The intermittent operating zone represents the instantaneous maximum output at acceleration (torque) of the servo motor.
It does not indicate the 30-minute rated output (torque) or S3 rated output (torque).

αiS 4/6000-B, αiS 4/6000HV-B

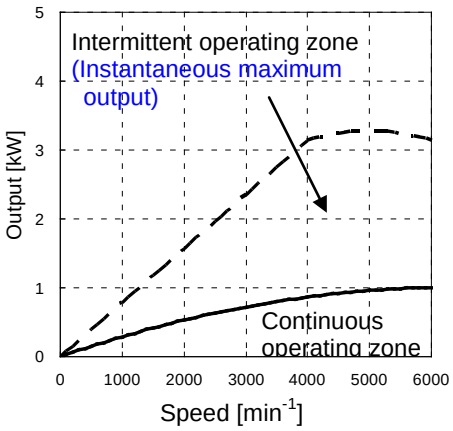

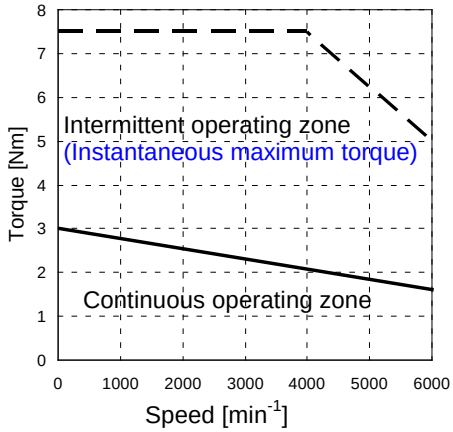

(*) The intermittent operating zone represents the instantaneous maximum output at acceleration (torque) of the servo motor.
It does not indicate the 30-minute rated output (torque) or S3 rated output (torque).

© MyFANUC 2D51CC9CD8564E3B8C4DE377C2D11C41

αiS 8/6000-B, αiS 8/6000HV-B

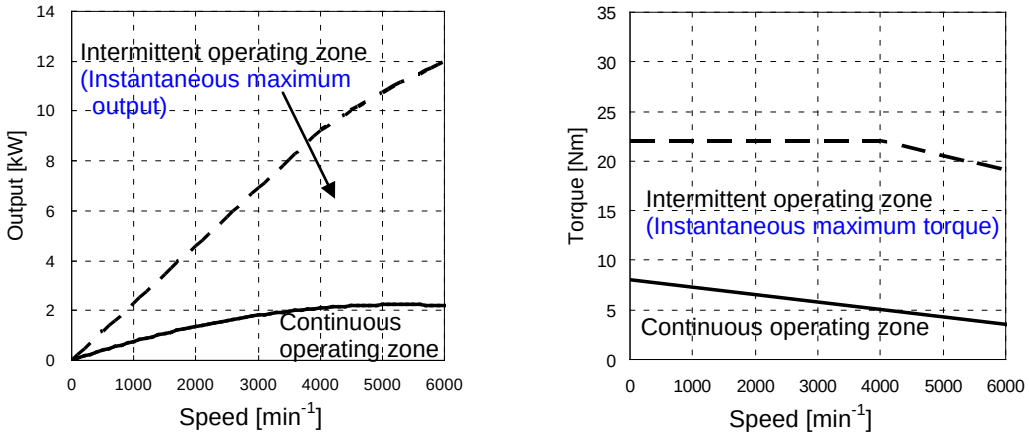

(*) The intermittent operating zone represents the instantaneous maximum output at acceleration (torque) of the servo motor.
It does not indicate the 30-minute rated output (torque) or S3 rated output (torque).

αiS 12/6000-B, αiS 12/6000HV-B

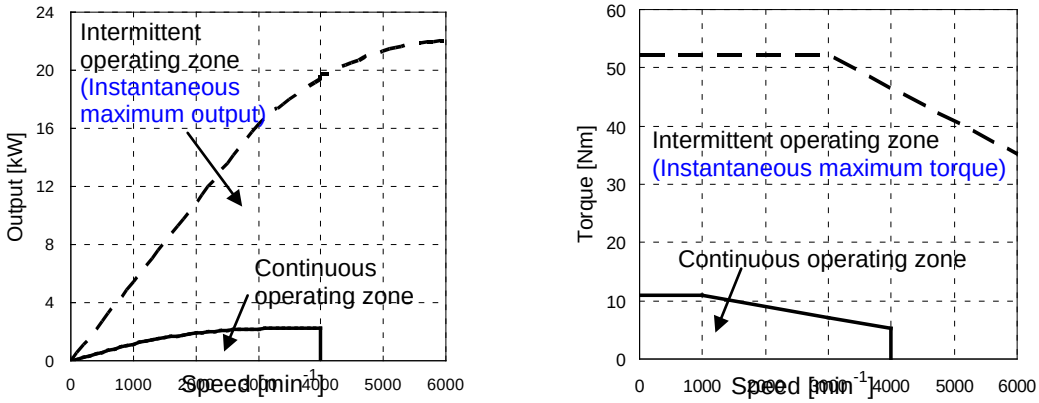

(*) The intermittent operating zone represents the instantaneous maximum output at acceleration (torque) of the servo motor.
It does not indicate the 30-minute rated output (torque) or S3 rated output (torque).

αiS 22/6000-B, αiS 22/6000HV-B

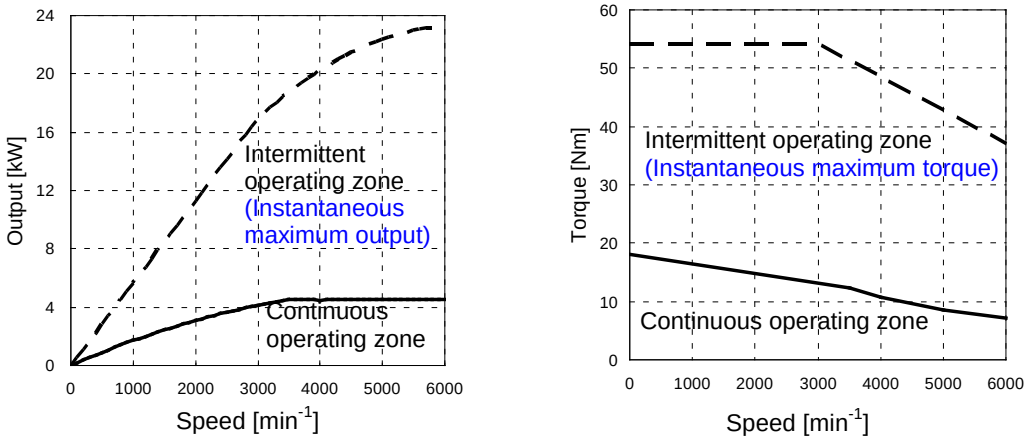

(*) The intermittent operating zone represents the instantaneous maximum output at acceleration (torque) of the servo motor.
It does not indicate the 30-minute rated output (torque) or S3 rated output (torque).

© MyFANUC 2D51CC9CD8564E3B8C4DE377C2D11C41

B.2 NOTES ON USING THE SERVO MOTOR FOR LIVE TOOL APPLICATIONS

⚠ CAUTION

1 Unlike for the AC spindle motor αi-B/αi series, "short-time rated outputs" exceeding the continuous rated output, such as 30-minute (S2) rated output and S3 rated output, are not defined for the FANUC AC servo motor αi series. TUV certification has not been obtained with relation to short-time rated outputs, and these outputs and operations based on such outputs are not guaranteed.
2 Before using the live tool beyond the continuous rated output, be sure to check whether the desired operation is possible using the actual machine. If you intend to cite short-time rated output S2 or S3 as a nominal characteristic of the machine (live tool), you must take full responsibility for doing so.
3 Continuous operation with torque exceeding the continuous operating zone may generate the overheat alarm or OVC alarm.
4 When selecting the αiPS, calculate the required αiPS capacity by using the values of the "data for selecting the αiPS" of each servo motor.
For "data for selecting the αiPS", see Appendix A, "DATA FOR SELECTING THE αiPS" or refer to the FANUC SERVO AMPLIFIER αi -B series DESCRIPTIONS (B-65412EN) or the FANUC SERVO AMPLIFIER αi series DESCRIPTIONS (B-65282EN).
5 For details of how to select the αiPS, refer to the FANUC SERVO AMPLIFIER αi -B series DESCRIPTIONS (B-65412EN) or the FANUC SERVO AMPLIFIER αi series DESCRIPTIONS (B-65282EN).
6 If you have any questions, contact FANUC.

⚠ WARNING

1 To protect the servo amplifier, ensure that the load inertia moment does not exceed the allowable value.
If the dynamic brake is applied with a load inertia moment ratio exceeding the allowable value, the servo amplifier may be burned.
For details of the allowable value of the load inertia moment and the dynamic brake, see Section 2.2, "MOTOR SELECTION".

B.3 CNC FUNCTIONS FOR USING THE SERVO MOTOR FOR THE SPINDLE OR LIVE TOOL

For details of the spindle control functions of the servo motor, refer to "SPINDLE CONTROL WITH SERVO MOTOR" in the FANUC series 30*i*-MODEL B Descriptions (B-64482EN), FANUC series 0*i*-MODEL F Descriptions (B-64602EN), etc.

© MyFANUC 2D51CC9CD8564E3B8C4DE377C2D11C41

C ABOUT αi SERIES SERVO MOTORS

Appendix C describes αi series servo motors.
The following lineup table lists αi series servo motors described herein.

Continuous torque (at low speed) Nm		2	4	8	12	22	30	40	50	60	100	200	300	500	1000
Flange size mm		90		130		174					265				380
αiS	200V	αiS 2 /5000	αiS 4 /5000	αiS 8 /4000	αiS 12 /4000	αiS 22 /4000	αiS 30 /4000	αiS 40 /4000	αiS 50 /2000	αiS 60 /2000	αiS 100 /2500	αiS 200 /2500	αiS 300 /2000	αiS 500 /2000	
		αiS 2 /6000	αiS 4 /6000	αiS 8 /6000	αiS 12 /6000	αiS 22 /6000			αiS 50 /3000 FAN	αiS 60 /3000 FAN	αiS 100 /2500 FAN	αiS 200 /2500 FAN			
	400V	αiS 2 /5000 HV	αiS 4 /5000 HV	αiS 8 /4000 HV	αiS 12 /4000 HV	αiS 22 /4000 HV	αiS 30 /4000 HV	αiS 40 /4000 HV	αiS 50 /2000 HV	αiS 60 /2000 HV	αiS 100 /2500HV	αiS 200 /2500HV	αiS 300 /2000HV	αiS 500 /2000HV	αiS 1000 /2000HV
		αiS 2 /6000 HV	αiS 4 /6000 HV	αiS 8 /6000 HV	αiS 12 /6000 HV	αiS 22 /6000 HV			αiS 50 /3000 HV FAN	αiS 60 /3000 HV FAN	αiS 100 /2500HV FAN	αiS 200 /2500HV FAN	αiS 300 /3000HV	αiS 500 /3000HV	αiS 1000 /3000HV

Continuous torque (at low speed) Nm		1	2	4	8	12	22	30	40
Flange size mm		90		130		174			
αiF	200V	αiF 1 /5000	αiF 2 /5000	αiF 4 /5000	αiF 8 /3000	αiF 12 /4000	αiF 22 /3000	αiF 30 /4000	αiF 40 /3000
					αiF 8 /4000		αiF 22 /4000		αiF 40 /3000 FAN
	400V			αiF 4 /5000 HV	αiF 8 /3000 HV	αiF 12 /4000 HV	αiF 22 /3000 HV	αiF 30 /4000 HV	αiF 40 /3000 HV
					αiF 8 /4000 HV		αiF 22 /4000 HV		αiF 40 /3000 HV FAN

This appendix describes αi series servo motors, with the focus on their differences from the current αi–B series servo motors.
For information not provided herein and details of αi series servo motors, see the related part of this manual or refer to Edition 07 of the FANUC SERVO MOTOR αi series DESCRIPTIONS (B-65262EN).

© MyFANUC 2D51CC9CD8564E3B8C4DE377C2D11C41

The model of αi-B series servo motor can be identified by replacing 2□□□ in the ordering specification number of the current αi series servo motor with 0□□□. The differences between the current and former models in appearance and specifications are as follows.

	Target model Flange size	Current αi-B series	Former αi series
Ordering specification number	All models	A06B-2□□□-B△○▽	A06B-0□□□-B△○▽
Power connector (motor side)	□130	Japan Aviation Electronics Industry JL10 series (Bayonet/screw type connector)	Hirose Electric H/MS310 TUV-approved series
	□174		Japan Aviation Electronics Industry JL04V series
Cooling fan	□174 (HV only)	Input voltage Single-phase 230 VAC	Input voltage Single-phase 200 VAC
Feedback sensor	All models	Resolution 4,000,000 [div/rev] ABS Resolution 32,000,000 [div/rev] ABS	Resolution 1,000,000 [div/rev] ABS Resolution 1,000,000 [div/rev] INC Resolution 16,000,000 [div/rev] ABS
Shaft shape	□90	ϕ14 taper shaft (modified specification)	-
	□130	ϕ24 taper shaft (modified specification)	-
Built-in brake	□174	Reduced backlash brake (modified specification)	-
Front bearing	αiS300 αiS500	Ball bearing type available	-
Mounting method/ supporting method of the motor weight	□380	Combined foot of housing	Foot bar

In this appendix, the αi-B series servo motors may be distinguished from the αi series servo motors with ordering specification numbers 0□□□ as follows.

Models with numbers 2□□□ ..... αi-B series servo motors
Models with numbers 0□□□ ..... αi series servo motors

This chapter consists of the following sections:

C.1 ORDERING SPECIFICATION NUMBERS
C.2 CHARACTERISTIC CURVES AND DATA SHEET
C.3 OUTLINE DRAWINGS
C.4 POWER CONNECTORS
C.5 COOLING FANS
C.6 FEEDBACK SENSORS

© MyFANUC 2D51CC9CD8564E3B8C4DE377C2D11C41

C.1 ORDERING SPECIFICATION NUMBERS

The ordering specification numbers of αi-B series servo motors are as follows.

A06B-□□□□-B△○▽#abcd

□□□□ An ordering specification number are described on the tables after next page.

* Every combination doesn't exist.

△

0 : Taper shaft
1 : Straight shaft
2 : Straight shaft with a key groove
3 : Taper shaft with a 24VDC brake
4 : Straight shaft with a 24VDC brake
5 : Straight shaft with a key way and a 24VDC brake

* Do not select "Straight shaft with a key groove" when a large torque or abrupt acceleration rate is required.

○

0 : Standard
1 : With a fan
2 : With a high-torque brake
3 : With a high-torque brake and a fan

* When "With a high-torque brake" is selected (○ = 2 or 3), specify△ = 3 to 5.

▽

0 : Pulsecoder αiA 1000
1 : Pulsecoder αiI 1000
2 : Pulsecoder αiA 16000

abcd

0000: Standard
0100: IP67 specification
* Omitted in case of 0000.

© MyFANUC 2D51CC9CD8564E3B8C4DE377C2D11C41

Models αiS 100 to αiS 500 (including HV), αiS 1000HV

A06B-□□□□-B△○▽#abcd

□□□□ An ordering specification number are described on the tables after next page.
* Every combination doesn't exist.

△ 0 : Taper shaft
3 : Taper shaft with a 24VDC brake

○ 0 : Standard
1 : With a fan
5 : With a fan

▽ 0 : Pulsecoder αiA 1000

abcd
0000: Standard
0100: IP67 specification
* Omitted in case of 0000.

© MyFANUC 2D51CC9CD8564E3B8C4DE377C2D11C41

The following table lists the allowable combinations of numbers represented by symbols in ordering specification numbers.

αiS series (200V)

A06B-□□□□-B△○▽#abcd

Symbol in specification No. / Servo motor name	□□□□	△						○				▽			abcd	
		0	1	2	3	4	5	0	1	2	3	0	1	2	0000	0100
αiS 2/5000	0212	○	○	○	○	○	○	○	—	—	—	○	○	○	○	○
αiS 2/6000	0218	○	○	○	○	○	○	○	—	—	—	○	○	○	○	○
αiS 4/5000	0215	○	○	○	○	○	○	○	—	—	—	○	○	○	○	○
αiS 4/6000	0210	○	○	○	○	○	○	○	—	—	—	○	○	○	○	○
αiS 8/4000	0235	○	○	○	○	○	○	○	—	—	—	○	○	○	○	○
αiS 8/6000	0232	○	○	○	○	○	○	○	—	—	—	○	○	○	○	○
αiS 12/4000	0238	○	○	○	○	○	○	○	—	—	—	○	○	○	○	○
αiS 12/6000	0230	○	○	○	○	○	○	○	—	—	—	○	○	○	○	○
αiS 22/4000	0265	○	○	○	○	○	○	○	—	—	—	○	○	○	○	○
αiS 22/6000	0262	○	○	○	○	○	○	○	—	—	—	○	○	○	○	○
αiS 30/4000	0268	○	○	○	○	○	○	○	—	—	—	○	○	○	○	○
αiS 40/4000	0272	○	○	○	○	○	○	○	—	—	—	○	○	○	○	○
		—	—	—	○	○	○	—	—	○	—	○	○	○	○	○
αiS 50/2000	0042	○	○	—	—	—	—	○	—	—	—	○	○	○	○	○
		—	—	—	○	○	—	—	—	○	—	○	○	○	○	○
αiS 60/2000	0044	○	○	—	—	—	—	○	—	—	—	○	○	○	○	○
		—	—	—	○	○	—	—	—	○	—	○	○	○	○	○
αiS 50/3000 FAN	0275	○	○	—	—	—	—	—	○	—	—	○	○	○	○	—
		—	—	—	○	○	—	—	—	—	○	○	○	○	○	—
αiS 60/3000 FAN	0278	○	○	—	—	—	—	—	○	—	—	○	○	○	○	—
		—	—	—	○	○	—	—	—	—	○	○	○	○	○	—

* When abcd is 0000, omit the specification of abcd.

* Specify △ = 3 to 5 in the case of ○ = 2 or 3.

Symbol in specification No. / Servo motor name	□□□□	△		○		▽	abcd	
		0	3	0	1	0	0000	0100
αiS 100/2500	0285	○	○	○	-	○	○	○
αiS 100/2500 FAN	0285	○	○	-	○	○	○	-
αiS 200/2500	0288	○	○	○	-	○	○	○
αiS 200/2500 FAN	0288	○	○	-	○	○	○	-
αiS 300/2000	0292	○	-	-	○	○	○	-
αiS 500/2000	0295	○	-	-	○	○	○	-

* When abcd is 0000, omit the specification of abcd.

© MyFANUC 2D51CC9CD8564E3B8C4DE377C2D11C41

αiS series (400V)

A06B-□□□□-B△○▽#abcd

Symbol in specification No. / Servo motor name	□□□□	△						○				▽			abcd	
		0	1	2	3	4	5	0	1	2	3	0	1	2	0000	0100
αiS 2/5000HV	0213	○	○	○	○	○	○	○	—	—	—	○	○	○	○	○
αiS 2/6000HV	0219	○	○	○	○	○	○	○	—	—	—	○	○	○	○	○
αiS 4/5000HV	0216	○	○	○	○	○	○	○	—	—	—	○	○	○	○	○
αiS 4/6000HV	0214	○	○	○	○	○	○	○	—	—	—	○	○	○	○	○
αiS 8/4000HV	0236	○	○	○	○	○	○	○	—	—	—	○	○	○	○	○
αiS 8/6000HV	0233	○	○	○	○	○	○	○	—	—	—	○	○	○	○	○
αiS 12/4000HV	0239	○	○	○	○	○	○	○	—	—	—	○	○	○	○	○
αiS 12/6000HV	0237	○	○	○	○	○	○	○	—	—	—	○	○	○	○	○
αiS 22/4000HV	0266	○	○	○	○	○	○	○	—	—	—	○	○	○	○	○
αiS 22/6000HV	0263	○	○	○	○	○	○	○	—	—	—	○	○	○	○	○
αiS 30/4000HV	0269	○	○	○	○	○	○	○	—	—	—	○	○	○	○	○
αiS 40/4000HV	0273	○	○	○	○	○	○	○	—	—	—	○	○	○	○	○
		—	—	—	○	○	○	—	—	○	—	○	○	○	○	○
αiS 50/2000HV	0043	○	○	—	—	—	—	○	—	—	—	○	○	○	○	○
		—	—	—	○	○	—	—	—	○	—	○	○	○	○	○
αiS 60/2000HV	0045	○	○	—	—	—	—	○	—	—	—	○	○	○	○	○
		—	—	—	○	○	—	—	—	○	—	○	○	○	○	○
αiS 50/3000HV FAN	0276	○	○	—	—	—	—	—	○	—	—	○	○	○	○	—
		—	—	—	○	○	—	—	—	—	○	○	○	○	○	—
αiS 60/3000HV FAN	0279	○	○	—	—	—	—	—	○	—	—	○	○	○	○	—
		—	—	—	○	○	—	—	—	—	○	○	○	○	○	—

* When abcd is 0000, omit the specification of abcd.
* Specify △ = 3 to 5 in the case of ○ = 2 or 3.

Symbol in specification No. / Servo motor name	□□□□	△		○			▽	abcd	
		0	3	0	1	5	0	0000	0100
αiS 100/2500HV	0286	○	○	○	-	-	○	○	○
αiS 100/2500HV FAN	0286	○	○	-	○	-	○	○	-
αiS 200/2500HV	0289	○	○	○	-	-	○	○	○
αiS 200/2500HV FAN	0289	○	○	-	○	-	○	○	-
αiS 300/2000HV	0293	○	-	-	○	-	○	○	-
αiS 300/3000HV	0290	○	-	-	○	-	○	○	-
αiS 500/2000HV	0296	○	-	-	○	-	○	○	-
αiS 500/3000HV	0297	○	-	-	○	-	○	○	-
αiS 1000/2000HV	0098	○	-	-	○	-	○	○	-
αiS 1000/3000HV	0099	○	-	-	-	○	○	○	-

* When abcd is 0000, omit the specification of abcd.

© MyFANUC 2D51CC9CD8564E3B8C4DE377C2D11C41

αiF series (200V)

A06B-□□□□-B△○▽#abcd

Symbol in specification No. / Servo motor name	□□□□	△						○				▽			abcd	
		0	1	2	3	4	5	0	1	2	3	0	1	2	0000	0100
αiF 1/5000	0202	○	○	○	○	○	○	○	—	—	—	○	○	○	○	○
αiF 2/5000	0205	○	○	○	○	○	○	○	—	—	—	○	○	○	○	○
αiF 4/5000	0223	○	○	○	○	○	○	○	—	—	—	○	○	○	○	○
αiF 8/3000	0227	○	○	○	○	○	○	○	—	—	—	○	○	○	○	○
αiF 8/4000	0228	○	○	○	○	○	○	○	—	—	—	○	○	○	○	○
αiF 12/4000	0243	○	○	○	○	○	○	○	—	—	—	○	○	○	○	○
αiF 22/3000	0247	○	○	○	○	○	○	○	—	—	—	○	○	○	○	○
αiF 22/4000	0248	○	○	○	○	○	○	○	—	—	—	○	○	○	○	○
αiF 30/4000	0253	○	○	○	○	○	○	○	—	—	—	○	○	○	○	○
αiF 40/3000	0257	○	○	○	○	○	○	○	—	—	—	○	○	○	○	○
		—	—	—	○	○	○	—	—	○	—	○	○	○	○	○
αiF 40/3000 FAN	0257	○	○	○	—	—	—	—	○	—	—	○	○	○	○	—
		—	—	—	○	○	○	—	—	—	○	○	○	○	○	—

* When abcd is 0000, omit the specification of abcd.

* Specify △ = 3 to 5 in the case of ○ = 2 or 3.

αiF series (400V)

A06B-□□□□-B△○▽#abcd

Symbol in specification No. / Servo motor name	□□□□	△						○				▽			abcd	
		0	1	2	3	4	5	0	1	2	3	0	1	2	0000	0100
αiF 4/5000HV	0225	○	○	○	○	○	○	○	—	—	—	○	○	○	○	○
αiF 8/3000HV	0229	○	○	○	○	○	○	○	—	—	—	○	○	○	○	○
αiF 8/4000HV	0220	○	○	○	○	○	○	○	—	—	—	○	○	○	○	○
αiF 12/4000HV	0245	○	○	○	○	○	○	○	—	—	—	○	○	○	○	○
αiF 22/3000 HV	0249	○	○	○	○	○	○	○	—	—	—	○	○	○	○	○
αiF 22/4000HV	0240	○	○	○	○	○	○	○	—	—	—	○	○	○	○	○
αiF 30/4000HV	0255	○	○	○	○	○	○	○	—	—	—	○	○	○	○	○
αiF 40/3000HV	0259	○	○	○	○	○	○	○	—	—	—	○	○	○	○	○
		—	—	—	○	○	○	—	—	○	—	○	○	○	○	○
αiF 40/3000HV FAN	0259	○	○	○	—	—	—	—	○	—	—	○	○	○	○	—
		—	—	—	○	○	○	—	—	—	○	○	○	○	○	—

* When abcd is 0000, omit the specification of abcd.

* Specify △ = 3 to 5 in the case of ○ = 2 or 3.

© MyFANUC 2D51CC9CD8564E3B8C4DE377C2D11C41

C.2 CHARACTERISTIC CURVES AND DATA SHEET

This section describes the characteristic curves (torque curves) and data sheet of the αiS100 FAN, αiS200 FAN, αiS100HV FAN, and αiS200HV FAN αi series servo motors.
The characteristic curves (torque curves) and data sheet of other αi series servo motors (models with numbers 0□□□) are the same as those of αi-B series servo motors (models with numbers 2□□□).
See the characteristic curves and data sheet of αi-B series servo motors in this manual (Subsection 1.3.2).

	αi-B series (models with numbers 2□□□)	**αi series (models with numbers 0□□□)**
Specification number	A06B-2□□□-B△○▽	A06B-0□□□-B△○▽

© MyFANUC 2D51CC9CD8564E3B8C4DE377C2D11C41

Model αiS 100/2500 仕様図番： A06B−0285−B□00

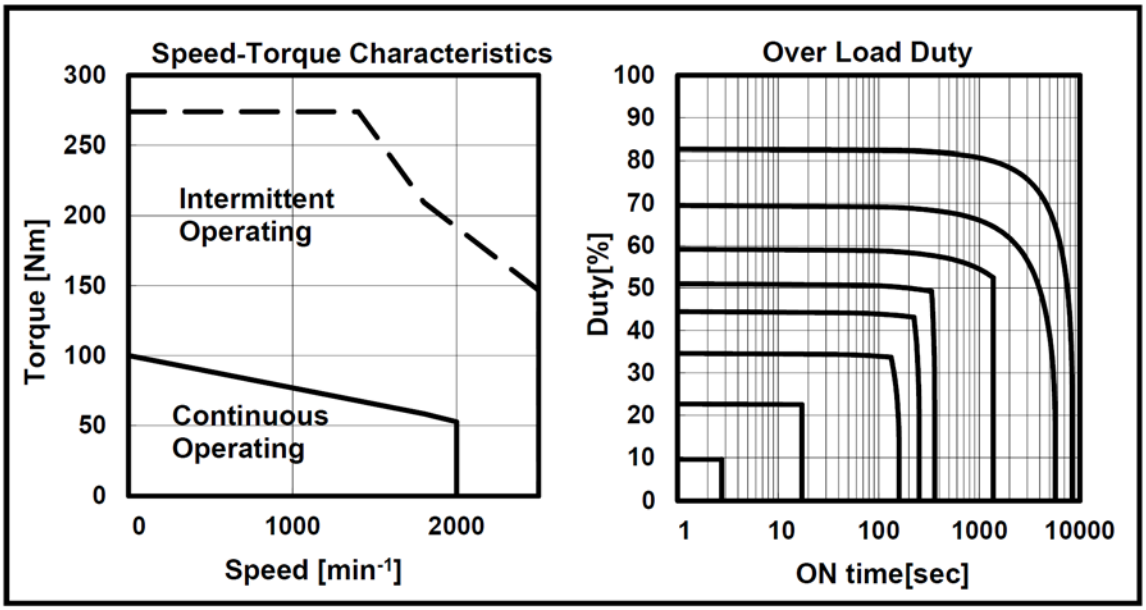

Data sheet

Parameter	Symbol	Value	Unit
Continuous Torque (at low speed) (*)	Tc	100 1020	Nm kgfcm
Continuous Current (at low speed) (*)	Ic	79	A (rms)
Rated Output (*)	Pr	11 15	kW HP
Rated Speed	Nr	2000	min^{-1}
Maximum Speed	Nmax	2500	min^{-1}
Maximum Torque (*)	Tmax	274 2800	Nm kgfcm
Moment of Inertia of Rotor	Jm	0.0252 0.257	kgm^2 $kgfcms^2$
Moment of Inertia of Rotor(with Brake)	Jm	0.0262 0.267	kgm^2 $kgfcms^2$
Torque Constant (*)	Kt	1.27 13.0	Nm/A(rms) kgfcm/A(rms)
Winding Resistance (between terminals) (*)	Ra	0.026	Ω
Thermal time constant	t_t	80	min
Static friction	Tf	2.2 22	Nm kgfcm
Weight	w	95	kg
Weight(with Brake)	w	110	kg
Max. Current of Servo Amp.	Imax	360	A (peak)

(*) The values are the standard values at 20℃ and the tolerance is ±10%.
The speed-torque characteristics very depending on the type of software,parametersetting,and input voltage of the digital servo software.(The above figures show average values.)

© MyFANUC 2D51CC9CD8564E3B8C4DE377C2D11C41

Model αiS 100/2500 FAN 仕様図番： A06B−0285−B□10

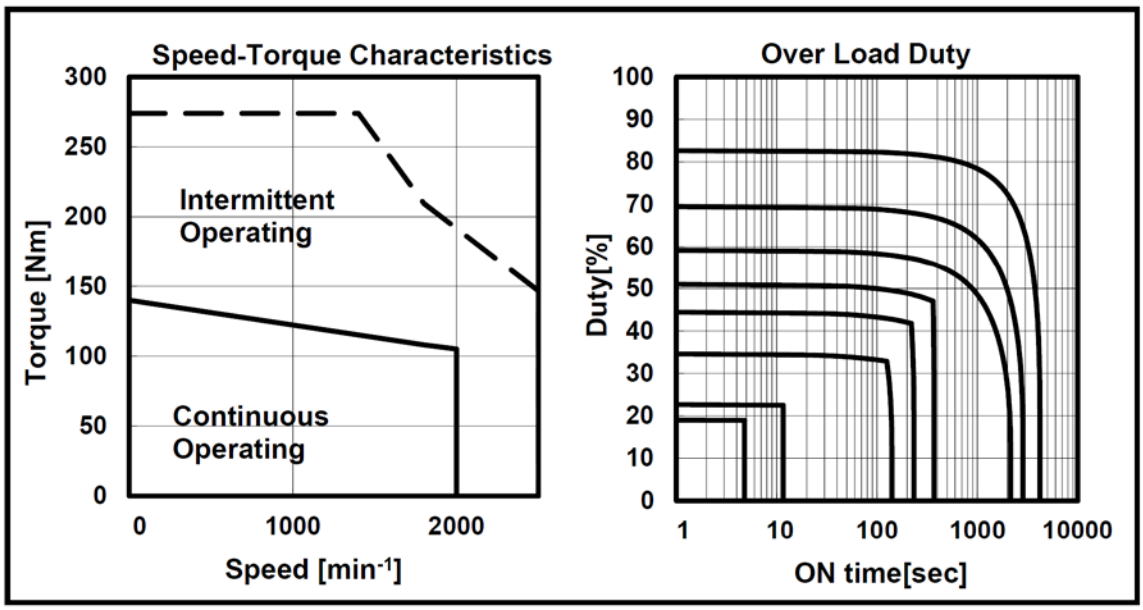

Data sheet

Parameter	Symbol	Value	Unit
Continuous Torque (at low speed) (*)	Tc	140 1430	Nm kgfcm
Continuous Current (at low speed) (*)	Ic	111	A (rms)
Rated Output (*)	Pr	22 30	kW HP
Rated Speed	Nr	2000	min^{-1}
Maximum Speed	Nmax	2500	min^{-1}
Maximum Torque (*)	Tmax	274 2800	Nm kgfcm
Moment of Inertia of Rotor	Jm	0.0252 0.257	kgm^2 $kgfcms^2$
Moment of Inertia of Rotor(with Brake)	Jm	0.0262 0.267	kgm^2 $kgfcms^2$
Torque Constant (*)	Kt	1.27 13.0	Nm/A(rms) kgfcm/A(rms)
Winding Resistance (between terminals) (*)	Ra	0.026	Ω
Thermal time constant	t_t	40	min
Static friction	Tf	2.2 22	Nm kgfcm
Weight	w	100	kg
Weight(with Brake)	w	115	kg
Max. Current of Servo Amp.	Imax	360	A (peak)

(*) The values are the standard values at 20℃ and the tolerance is ±10%.
The speed-torque characteristics very depending on the type of software,parametersetting,and input voltage of the digital servo software.(The above figures show average values.)

© MyFANUC 2D51CC9CD8564E3B8C4DE377C2D11C41

Model αiS 200/2500 仕様図番: A06B-0288-B□00

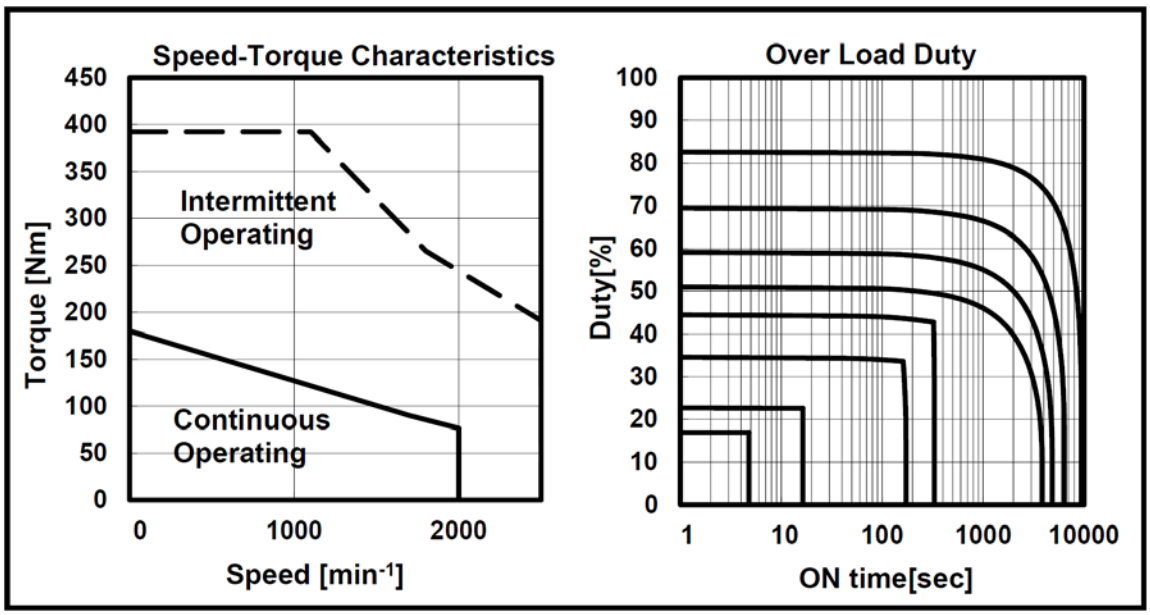

Data sheet

Parameter	Symbol	Value	Unit
Continuous Torque (at low speed) (*)	Tc	180 1840	Nm kgfcm
Continuous Current (at low speed) (*)	Ic	105	A (rms)
Rated Output (*)	Pr	16 21	kW HP
Rated Speed	Nr	2000	min^{-1}
Maximum Speed	Nmax	2500	min^{-1}
Maximum Torque (*)	Tmax	392 4000	Nm kgfcm
Moment of Inertia of Rotor	Jm	0.0431 0.440	kgm^2 $kgfcms^2$
Moment of Inertia of Rotor(with Brake)	Jm	0.0441 0.450	kgm^2 $kgfcms^2$
Torque Constant (*)	Kt	1.71 17.4	Nm/A(rms) kgfcm/A(rms)
Winding Resistance (between terminals) (*)	Ra	0.022	Ω
Thermal time constant	t_t	90	min
Static friction	Tf	2.2 22	Nm kgfcm
Weight	w	140	kg
Weight(with Brake)	w	155	kg
Max. Current of Servo Amp.	Imax	360	A (peak)

(*) The values are the standard values at 20℃ and the tolerance is ±10%.
The speed-torque characteristics very depending on the type of software,parametersetting,and input voltage of the digital servo software.(The above figures show average values.)

© MyFANUC 2D51CC9CD8564E3B8C4DE377C2D11C41

Model αiS 200/2500 FAN 仕様図番： A06B−0288−B□10

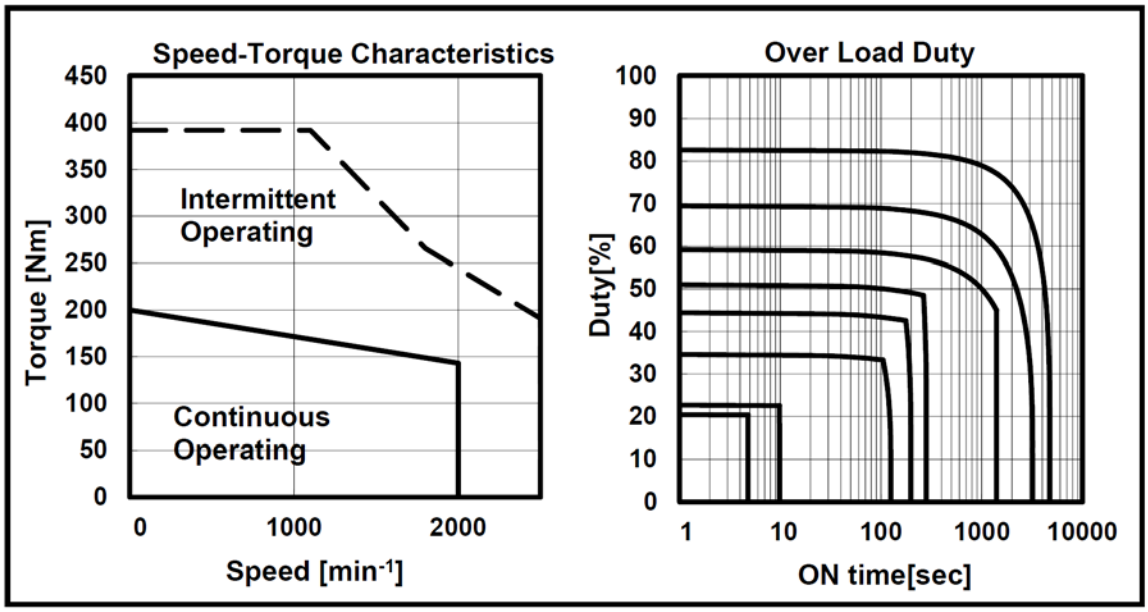

Data sheet

Parameter	Symbol	Value	Unit
Continuous Torque (at low speed) (*)	Tc	200 2040	Nm kgfcm
Continuous Current (at low speed) (*)	Ic	115	A (rms)
Rated Output (*)	Pr	30 40	kW HP
Rated Speed	Nr	2000	min^{-1}
Maximum Speed	Nmax	2500	min^{-1}
Maximum Torque (*)	Tmax	392 4000	Nm kgfcm
Moment of Inertia of Rotor	Jm	0.0431 0.440	kgm^2 $kgfcms^2$
Moment of Inertia of Rotor(with Brake)	Jm	0.0441 0.450	kgm^2 $kgfcms^2$
Torque Constant (*)	Kt	1.71 17.4	Nm/A(rms) kgfcm/A(rms)
Winding Resistance (between terminals) (*)	Ra	0.022	Ω
Thermal time constant	t_t	45	min
Static friction	Tf	2.2 22	Nm kgfcm
Weight	w	145	kg
Weight(with Brake)	w	160	kg
Max. Current of Servo Amp.	Imax	360	A (peak)

(*) The values are the standard values at 20℃ and the tolerance is ±10%.
The speed-torque characteristics very depending on the type of software,parametersetting,and input voltage of the digital servo software.(The above figures show average values.)

© MyFANUC 2D51CC9CD8564E3B8C4DE377C2D11C41

Model αiS 100/2500HV 仕様図番： A06B−0286−B□00

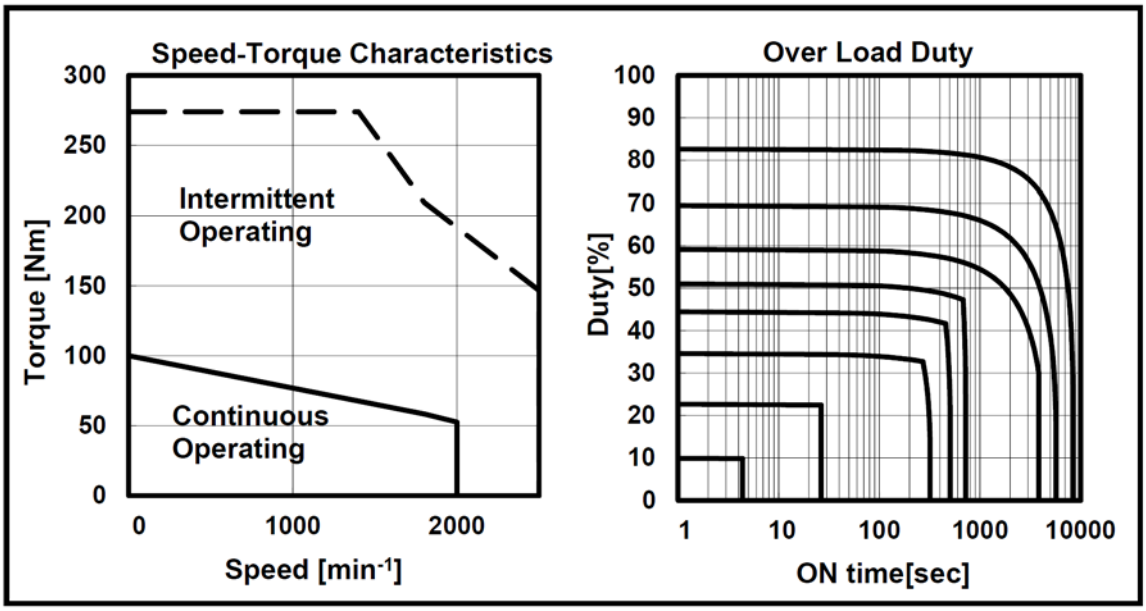

Data sheet

Parameter	Symbol	Value	Unit
Continuous Torque (at low speed) (*)	Tc	100 1020	Nm kgfcm
Continuous Current (at low speed) (*)	Ic	40	A (rms)
Rated Output (*)	Pr	11 15	kW HP
Rated Speed	Nr	2000	min^{-1}
Maximum Speed	Nmax	2500	min^{-1}
Maximum Torque (*)	Tmax	274 2800	Nm kgfcm
Moment of Inertia of Rotor	Jm	0.0252 0.257	kgm^2 $kgfcms^2$
Moment of Inertia of Rotor(with Brake)	Jm	0.0262 0.267	kgm^2 $kgfcms^2$
Torque Constant (*)	Kt	2.53 25.8	Nm/A(rms) kgfcm/A(rms)
Winding Resistance (between terminals) (*)	Ra	0.10	Ω
Thermal time constant	t_t	80	min
Static friction	Tf	2.2 22	Nm kgfcm
Weight	w	95	kg
Weight(with Brake)	w	110	kg
Max. Current of Servo Amp.	Imax	180	A (peak)

(*) The values are the standard values at 20℃ and the tolerance is ±10%.
The speed-torque characteristics very depending on the type of software,parametersetting,and input voltage of the digital servo software.(The above figures show average values.)

© MyFANUC 2D51CC9CD8564E3B8C4DE377C2D11C41

Model αiS 100/2500HV FAN 仕様図番： A06B−0286−B□10

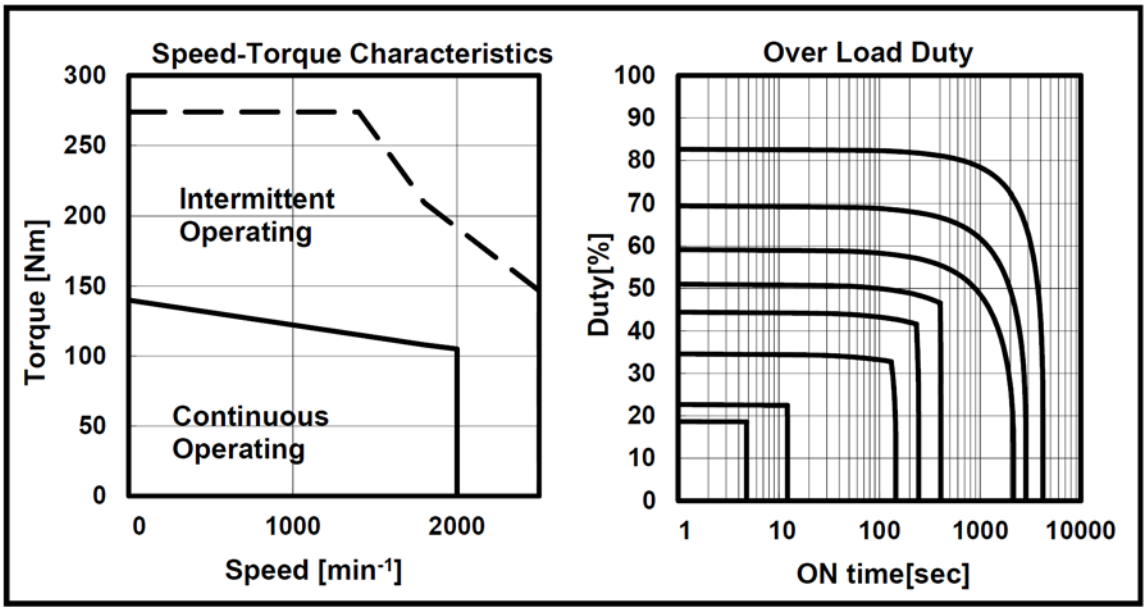

Data sheet

Parameter	Symbol	Value	Unit
Continuous Torque (at low speed) (*)	Tc	140 1430	Nm kgfcm
Continuous Current (at low speed) (*)	Ic	55	A (rms)
Rated Output (*)	Pr	22 30	kW HP
Rated Speed	Nr	2000	min^{-1}
Maximum Speed	Nmax	2500	min^{-1}
Maximum Torque (*)	Tmax	274 2800	Nm kgfcm
Moment of Inertia of Rotor	Jm	0.0252 0.257	kgm^2 $kgfcms^2$
Moment of Inertia of Rotor(with Brake)	Jm	0.0262 0.267	kgm^2 $kgfcms^2$
Torque Constant (*)	Kt	2.53 25.8	Nm/A(rms) kgfcm/A(rms)
Winding Resistance (between terminals) (*)	Ra	0.10	Ω
Thermal time constant	t_t	40	min
Static friction	Tf	2.2 22	Nm kgfcm
Weight	w	100	kg
Weight(with Brake)	w	115	kg
Max. Current of Servo Amp.	Imax	180	A (peak)

(*) The values are the standard values at 20℃ and the tolerance is ±10%.
The speed-torque characteristics very depending on the type of software,parametersetting,and input voltage of the digital servo software.(The above figures show average values.)

© MyFANUC 2D51CC9CD8564E3B8C4DE377C2D11C41

Model αiS 200/2500HV 仕様図番： A06B−0289−B□00

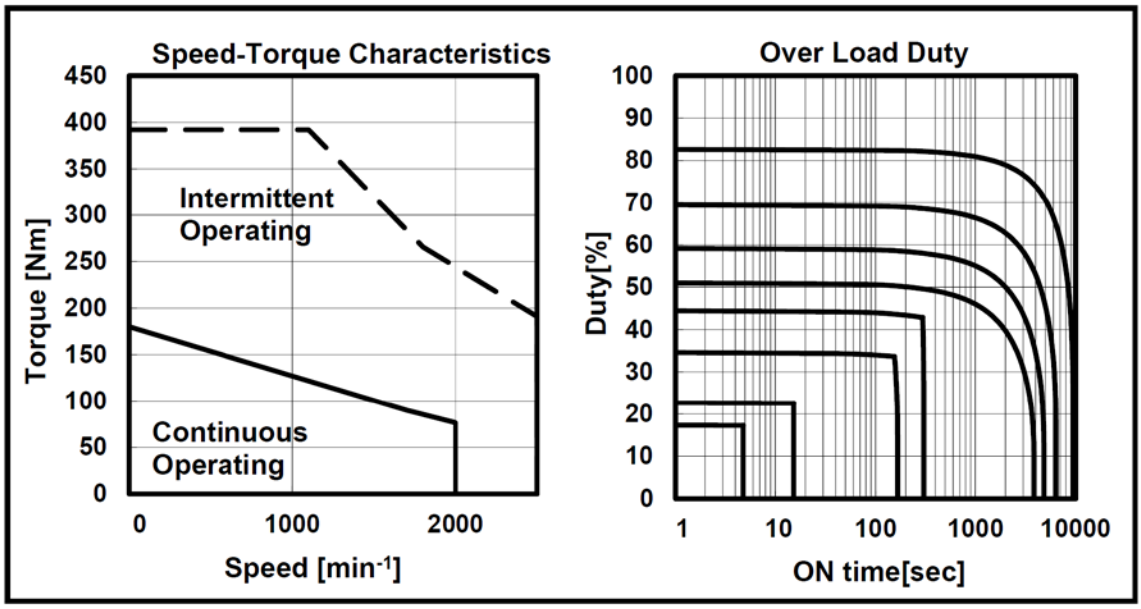

Data sheet

Parameter	Symbol	Value	Unit
Continuous Torque (at low speed) (*)	Tc	180 1840	Nm kgfcm
Continuous Current (at low speed) (*)	Ic	53	A (rms)
Rated Output (*)	Pr	16 21	kW HP
Rated Speed	Nr	2000	min^{-1}
Maximum Speed	Nmax	2500	min^{-1}
Maximum Torque (*)	Tmax	392 4000	Nm kgfcm
Moment of Inertia of Rotor	Jm	0.0431 0.440	kgm^2 $kgfcms^2$
Moment of Inertia of Rotor(with Brake)	Jm	0.0441 0.450	kgm^2 $kgfcms^2$
Torque Constant (*)	Kt	3.4 35	Nm/A(rms) kgfcm/A(rms)
Winding Resistance (between terminals) (*)	Ra	0.092	Ω
Thermal time constant	t_t	90	min
Static friction	Tf	2.2 22	Nm kgfcm
Weight	w	140	kg
Weight(with Brake)	w	155	kg
Max. Current of Servo Amp.	Imax	180	A (peak)

(*) The values are the standard values at 20℃ and the tolerance is ±10%.
The speed-torque characteristics very depending on the type of software,parametersetting,and input voltage of the digital servo software.(The above figures show average values.)

© MyFANUC 2D51CC9CD8564E3B8C4DE377C2D11C41

Model αiS 200/2500HV FAN 仕様図番： A06B−0289−B□10

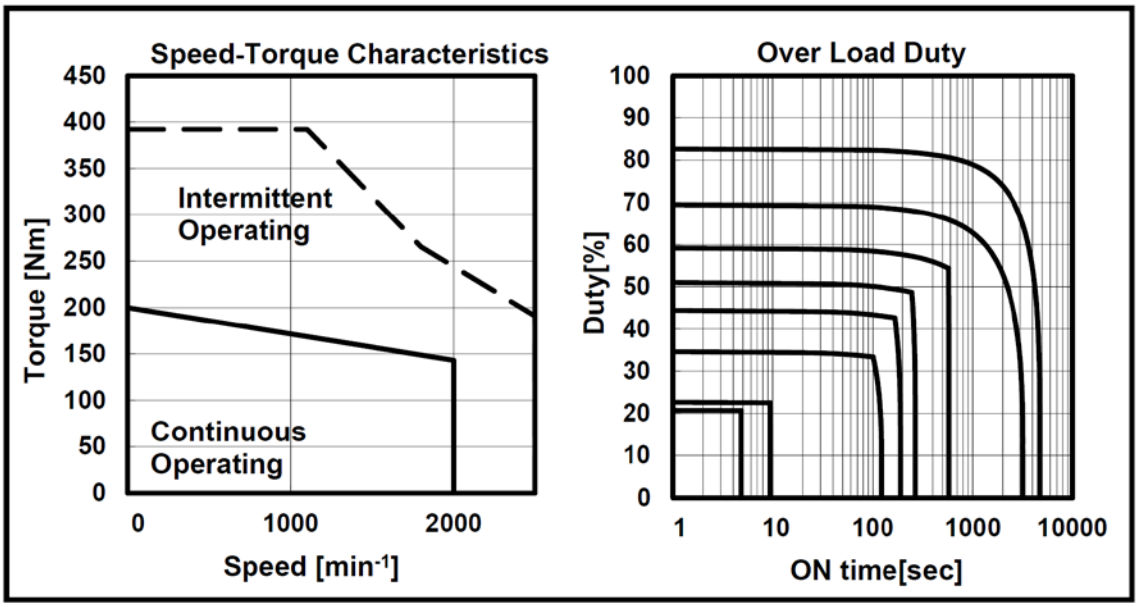

Data sheet

Parameter	Symbol	Value	Unit
Continuous Torque (at low speed) (*)	Tc	200 2040	Nm kgfcm
Continuous Current (at low speed) (*)	Ic	58	A (rms)
Rated Output (*)	Pr	30 40	kW HP
Rated Speed	Nr	2000	min^{-1}
Maximum Speed	Nmax	2500	min^{-1}
Maximum Torque (*)	Tmax	392 4000	Nm kgfcm
Moment of Inertia of Rotor	Jm	0.0431 0.440	kgm^2 $kgfcms^2$
Moment of Inertia of Rotor(with Brake)	Jm	0.0441 0.450	kgm^2 $kgfcms^2$
Torque Constant (*)	Kt	3.4 35	Nm/A(rms) kgfcm/A(rms)
Winding Resistance (between terminals) (*)	Ra	0.092	Ω
Thermal time constant	t_t	45	min
Static friction	Tf	2.2 22	Nm kgfcm
Weight	w	145	kg
Weight(with Brake)	w	160	kg
Max. Current of Servo Amp.	Imax	180	A (peak)

(*) The values are the standard values at 20℃ and the tolerance is ±10%.
The speed-torque characteristics very depending on the type of software,parametersetting,and input voltage of the digital servo software.(The above figures show average values.)

© MyFANUC 2D51CC9CD8564E3B8C4DE377C2D11C41

C.3 OUTLINE DRAWINGS

This section describes the outline drawings of the αiS100 FAN, αiS200 FAN, αiS100HV FAN, and αiS200HV FAN αi series servo motors.
The outline drawings of other αi series servo motors (models with numbers 0□□□) are the same as those of αi-B series servo motors (models with numbers 2□□□).
See the outline drawings of αi-B series servo motors in this manual (Subsection 1.3.3).

	αi-B series (models with numbers 2□□□)	**αi series (models with numbers 0□□□)**
Specification number	A06B-2□□□-B△○▽	A06B-0□□□-B△○▽

© MyFANUC 2D51CC9CD8564E3B8C4DE377C2D11C41

C.3.1 Models αiS 100 to αiS 200 FAN, αiS 100HV to αiS 200HV FAN

(1) Outline drawing of the motors

(a) Standard

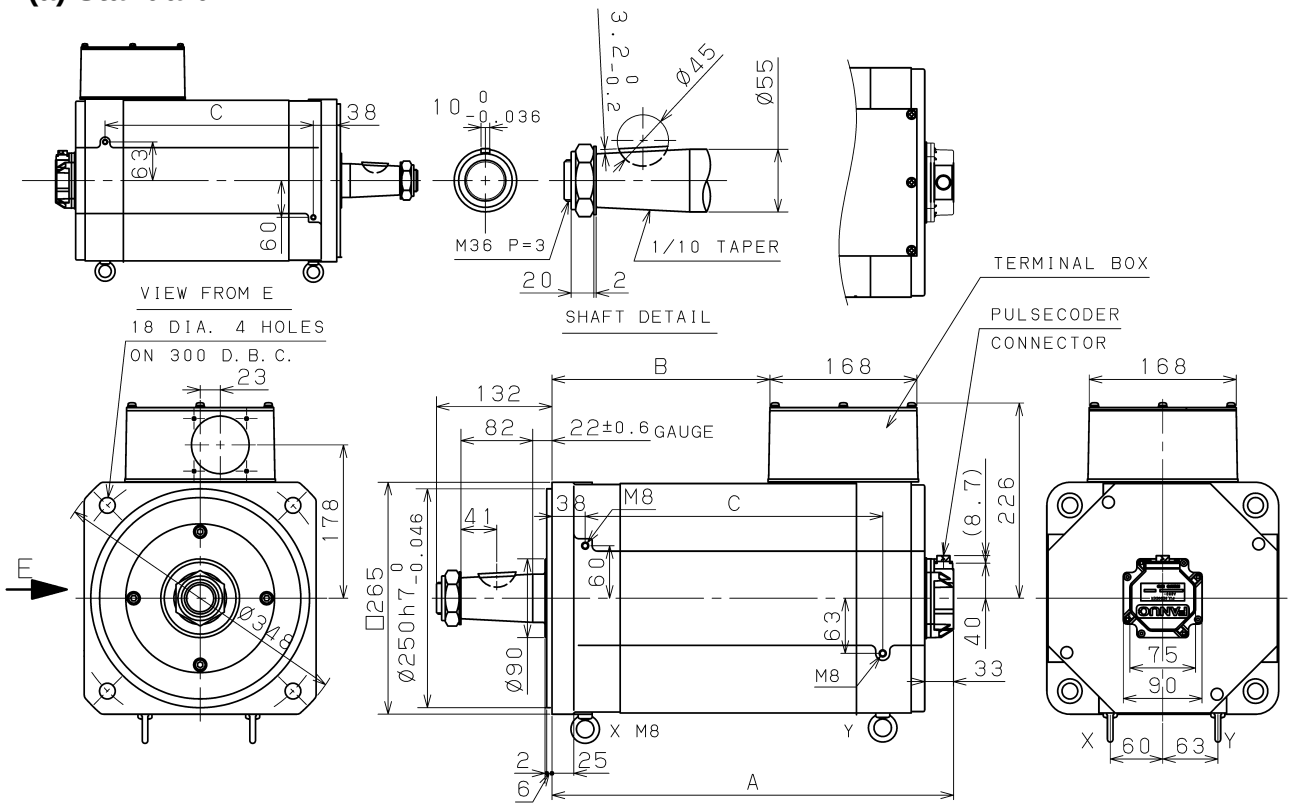

MODEL	A	B	C
αiS 100, αiS 100HV	339	129	220
αiS 200, αiS 200HV	459	249	340

© MyFANUC 2D51CC9CD8564E3B8C4DE377C2D11C41

(b) With a brake

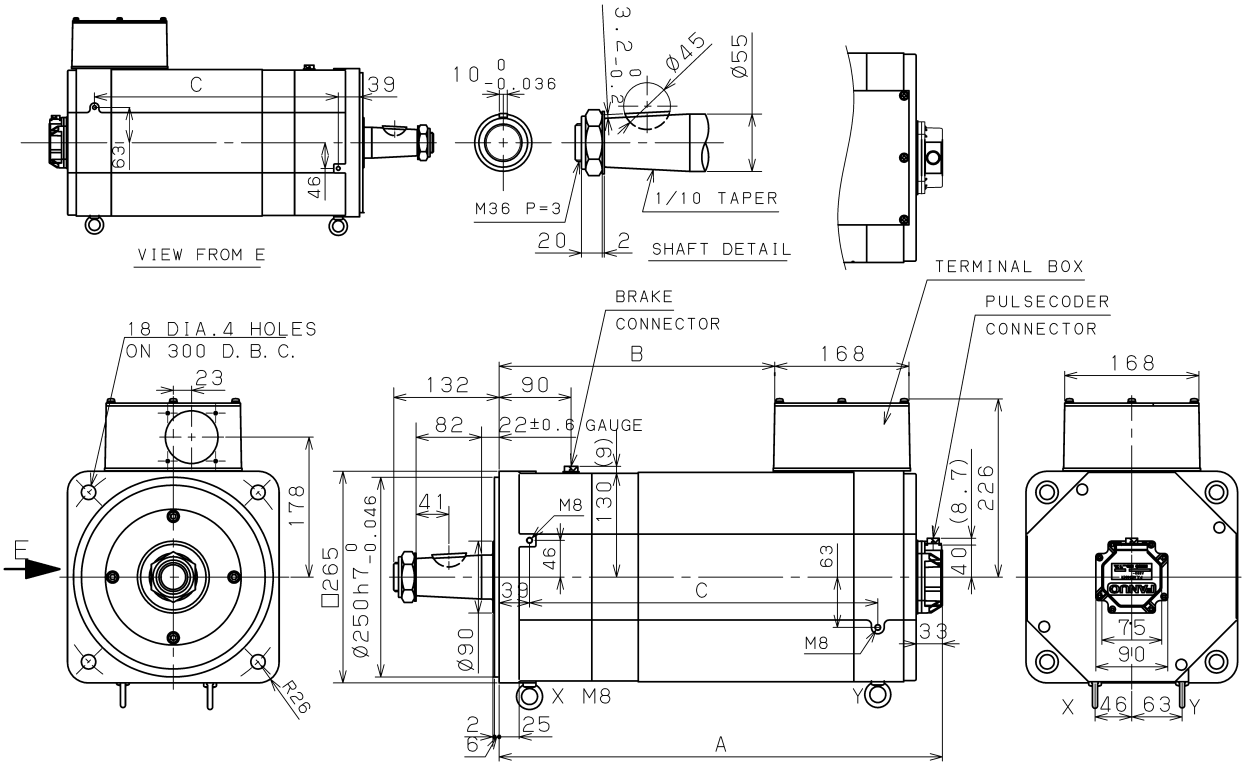

MODEL	A	B	C
αiS 100, αiS 100HV	435	225	316
αiS 200, αiS 200HV	555	345	436

© MyFANUC 2D51CC9CD8564E3B8C4DE377C2D11C41

(c) With a fan

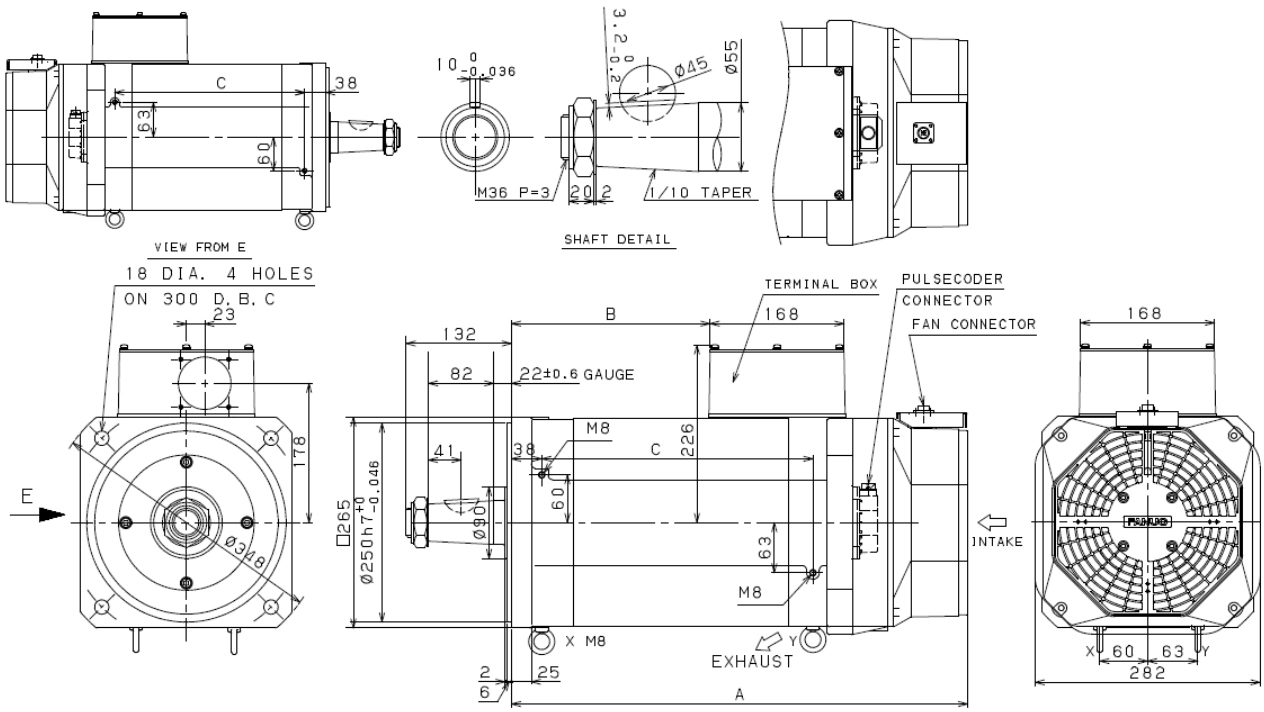

MODEL	A	B	C
αiS 100 FAN, αiS 100HV FAN	452	129	220
αiS 200 FAN, αiS 200HV FAN	572	249	340

1. The motor does not include a circuit breaker for protecting the fan. Prepare such a circuit breaker in the power magnetics cabinet.
2. Right angle type connectors cannot be connected to pulsecoders. Use straight type connectors.

© MyFANUC 2D51CC9CD8564E3B8C4DE377C2D11C41

(d) With a fan and brake

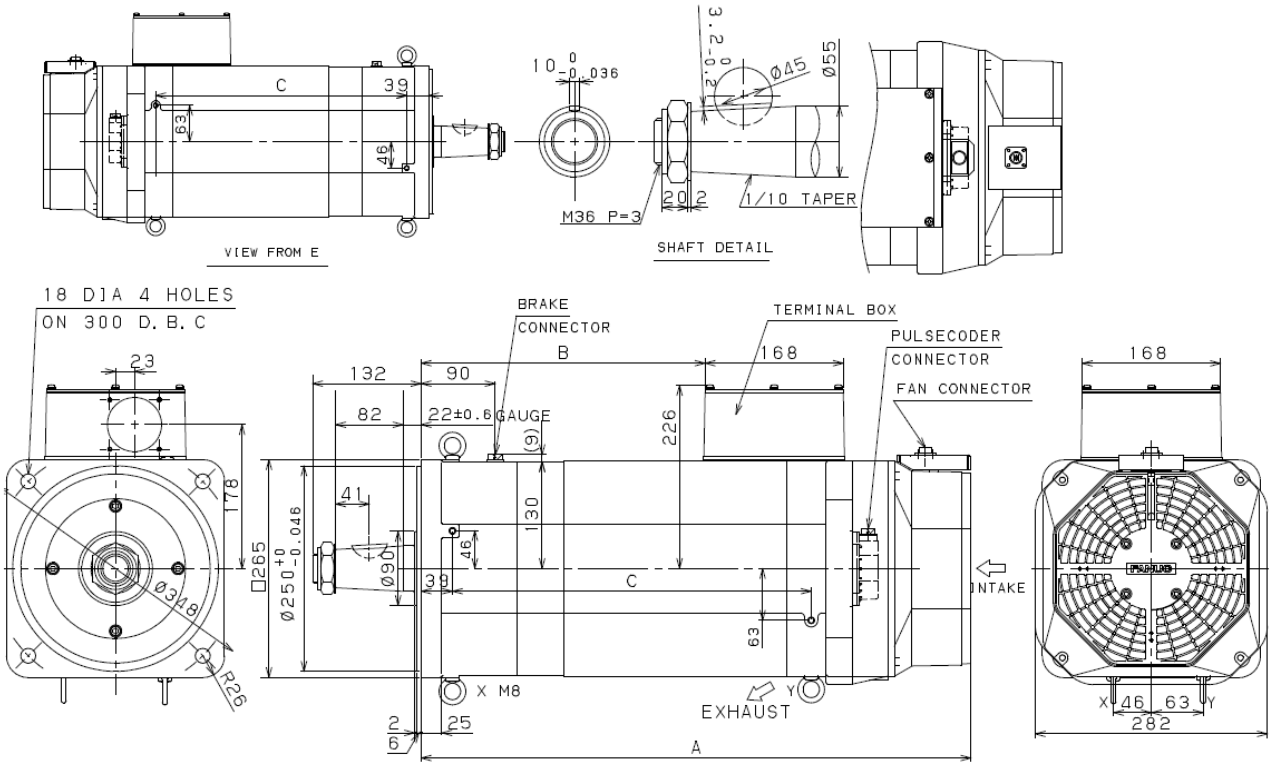

MODEL	A	B	C
αiS 100 FAN, αiS 100HV FAN	548	225	316
αiS 200 FAN, αiS 200HV FAN	668	345	436

1. The motor does not include a circuit breaker for protecting the fan. Prepare such a circuit breaker in the power magnetics cabinet.
2. Right angle type connectors cannot be connected to pulsecoders. Use straight type connectors.

© MyFANUC 2D51CC9CD8564E3B8C4DE377C2D11C41

(2) Allowable axis load

The allowable axis load is indicated below.
If a load exceeding the allowable axis load is applied, the bearing or shaft may be damaged.
For details of the allowable axis load, see Section 3.2, “MOUNTING A SERVO MOTOR”.

Radial load	Axial load	(Reference) Front bearing specification
5880[N] (600 [kgf])	2450[N] (250 [kgf])	6312

(3) Shaft run-out precision

The shaft run-out precision is indicated below.
For details of the shaft run-out precision, see Section 3.2, “MOUNTING A SERVO MOTOR”.

Shaft dia. run-out	Faucet joint run-out	Mounting face run-out
0.05mm or less	0.06mm or less	0.08mm or less

(4) Power Terminal Layout

The following shows the power terminal layout in the terminal box.

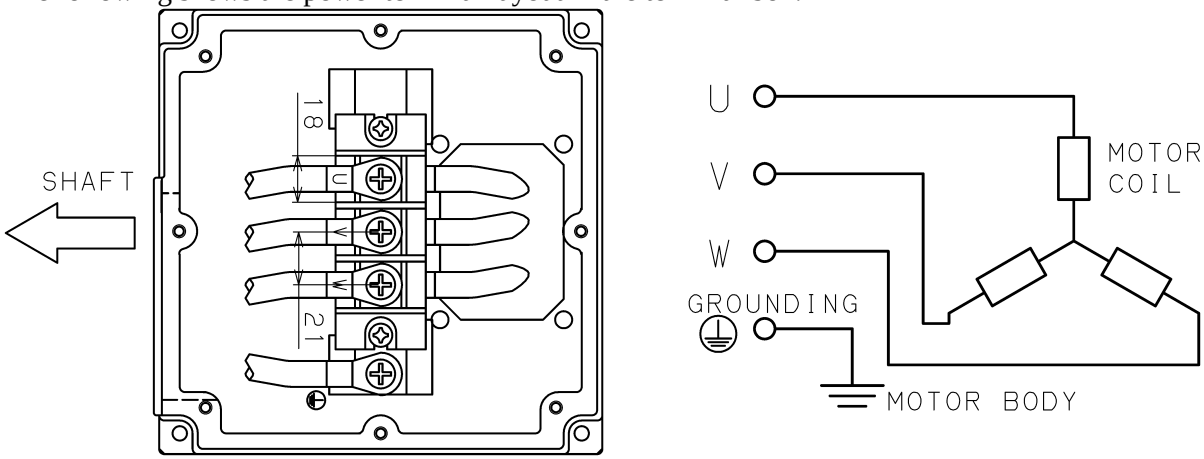

Power terminal size and ground terminal size: M6
Tightening torque: 3.5 to 4.5Nm

⚠ CAUTION

1 Securely connect power wires and short bars to the terminal block with the specified tightening torque according to the procedure described in this section. If the motor runs with a terminal loosely connected, the terminal block may get abnormally hot, resulting in a fire. The terminal may also be disconnected, resulting in a ground fault, short circuit, or electric shock.
2 To keep the insulation distance, note the following points:
When attaching a crimp terminal to the end of a power wire, always cover the crimping section of the crimp terminal with an insulating tube.
When an insulating cover is mounted on the terminal block, screw the power wires and remount the cover in place before using the motor.

© MyFANUC 2D51CC9CD8564E3B8C4DE377C2D11C41

(5) Cabling

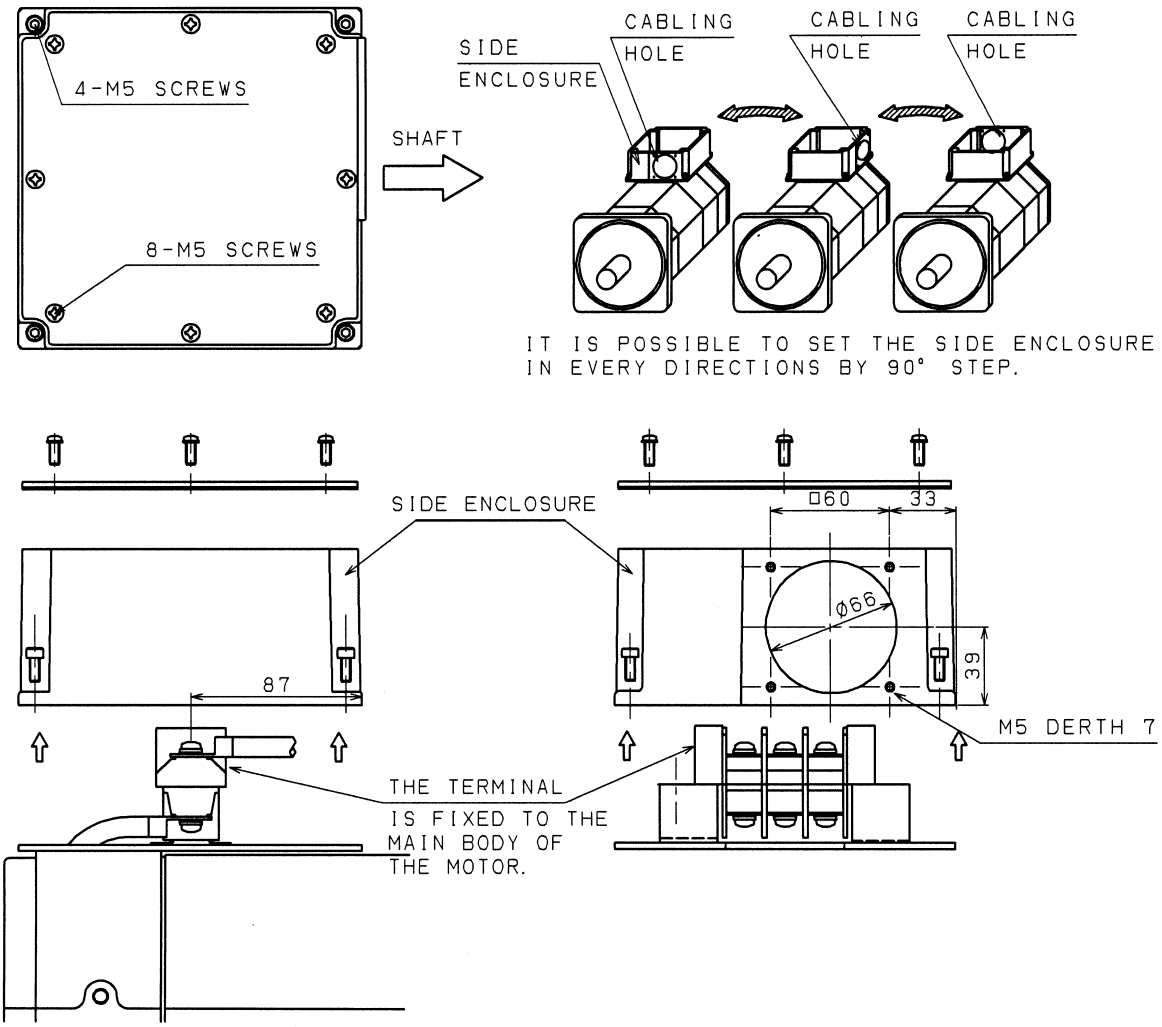

1. Before cabling, the motor can be dismantled by removing the four M5 hexagon socket head bolts and the eight M5 pan head screws. At the time of installation, check that the waterproofing rubber packing is not damaged, then install it with a tightening torque of 2.0 N·m to 2.5 N·m. At this time, ensure that foreign matter is not caught.
2. To meet the IP level, a protection such as a conduit is required for the cabling hole. See Subsection 3.3.2, “Usage Considering Environmental Resistance”.
3. The enclosure of the terminal box can be oriented in any direction in steps of 90°.
4. The four M5 hexagon socket head bolts fixing the enclosure of the terminal box may be loosened due to the cable weight and vibration applied to the terminal box. Thus, apply threadlocking adhesive (medium strength). Even if the orientation of the enclosure is not to be changed, remove the hexagon socket head bolts fixing the enclosure, and apply threadlocking adhesive (medium strength).
5. For the specifications, shapes, and pin layouts of the connectors of the pulsecoder, brake, and fan, see separate chapters.

© MyFANUC 2D51CC9CD8564E3B8C4DE377C2D11C41

C.4 POWER CONNECTORS

This section describes the power connectors of Groups B and C below that are used in αi series servo motors.

Group	Servo motor name
Group A	αiS 2/5000, αiS 2/6000, αiS 4/5000, αiS 4/6000, αiS 2/5000HV, αiS 2/6000HV, αiS 4/5000HV, αiS 4/6000HV, αiF 1/5000, αiF 2/5000
Group B	αiS 8/4000, αiS 8/6000, αiS 12/4000, αiS 12/6000, αiS 8/4000HV, αiS 8/6000HV, αiS 12/4000HV, αiS 12/6000HV, αiF 4/5000, αiF 8/3000, αiF 8/4000, αiF 4/5000HV, αiF 8/3000HV, αiF 8/4000HV
Group C	αiS 22/4000, αiS 22/6000, αiS 30/4000, αiS 40/4000, αiS 50/2000, αiS 60/2000, αiS 22/4000HV, αiS 22/6000HV, αiS 30/4000HV, αiS 40/4000HV, αiS 50/2000HV, αiS 60/2000HV, αiS 50/3000HV FAN, αiS 60/3000HV FAN, αiF 12/4000, αiF 22/3000, αiF 22/4000, αiF 30/4000, αiF 40/3000, αiF 40/3000 FAN, αiF 12/4000HV, αiF 22/3000HV, αiF 22/4000HV, αiF 30/4000HV, αiF 40/3000HV, αiF 40/3000HV FAN,
Group D	αiS 50/3000 FAN, αiS 60/3000 FAN
Group E	αiS 100/2500, αiS 100/2500 FAN, αiS 200/2500, αiS 200/2500 FAN, αiS 100/2500HV, αiS 100/2500HV FAN, αiS 200/2500HV, αiS 200/2500HV FAN
Group F	αiS 300/2000, αiS 500/2000, αiS 300/2000HV, αiS 300/3000HV, αiS 500/2000HV, αiS 500/3000HV, αiS 1000/2000HV, αiS 1000/3000HV, αiS 2000/2000HV, αiS 3000/2000HV

This section consists of the following sections:

C.4.1 Connectors for Power (Motor Side)
C.4.2 Connectors for Power (Cable Side)
C.4.3 Connection to a Conduit Hose

The brake connectors, fan connectors, and feedback sensor connectors are the same for both αi-B and αi series servo motors. See Subsection 1.3.3, "Outline Drawings" and Subsection 2.1.3, "Connectors on the Cable Side" in this manual.

© MyFANUC 2D51CC9CD8564E3B8C4DE377C2D11C41

C.4.1 Connectors for Power (Motor Side) (for Groups B and C)

C.4.1.1 Connectors for power (for Group B)

Manufacture: Hirose Electric
Manufacturer specification: H/MS3102A18-10P-D-T(10)

As the power connector a receptacle connector having a water-proof property by itself (when it is not engaged) is used as standard. Strictly speaking, this power connector does not meet the MS standard, but it can be used as a connector compatible with the MS-standard round connector.

The following shows the specification, shape, and pin layout of the power connector.

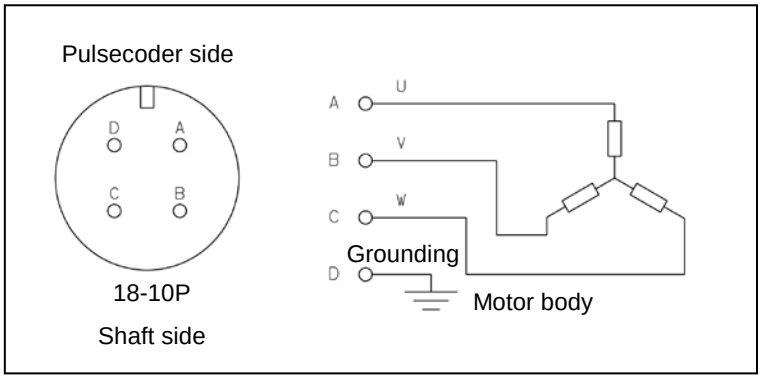

Power connector: 18-10P
Applicable models: αiS 8/4000, etc.

C.4.1.2 Connectors for power (for Group C)

Manufacture: Japan Aviation Electronics Industry
Manufacturer specification: JL04 HV-2E22-22PE-BT-R

As the power connector a receptacle connector having a water-proof property by itself (when it is not engaged) is used as standard. Strictly speaking, this power connector does not meet the MS standard, but it can be used as a connector compatible with the MS-standard round connector.

The following shows the specification, shape, and pin layout of the power connector.

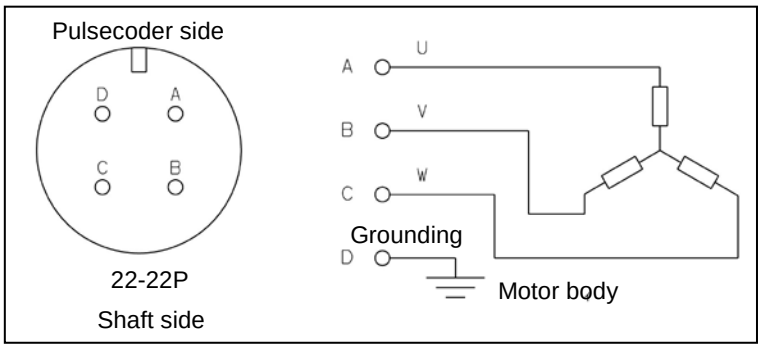

Power connector: 22-22P
Applicable models: αiS 22/4000, etc.

© MyFANUC 2D51CC9CD8564E3B8C4DE377C2D11C41

C.4.2 Connectors for Power (Cable Side) (for Groups B and C)

To meet the IEC60034 standard, TUV-approved plug connectors and cable clamps should be used in connecting the power cable. To meet the IEC60034 standard by using a cable or conduit hose seal adapter, contact the manufacturer for details. FANUC can provide “IP67 rated, TUV approved type” and “IP67 rated type” as plug connectors on the cable side for the FANUC αi series AC servo motors; all these connectors are black. Of course, conventional plug connectors may be used, because they are MS-compatible. The specifications of each connector are explained based on the examples shown below.

Ordering specification number of the power connector kit

The specification numbers used for ordering a power connector kit from FANUC are listed below. The power connector kit contains a plug connector on the cable side (conforming to IP67, TUV approved type) described subsequently.

Group		Power connector kit specification	Content
Group B		A06B-6079-K810	Single block type connector [D]
	Cable diameter ϕ10.3 to 14.3	A06B-6079-K811	Straight type connector [A] + cable clamp [C]
		A06B-6079-K812	Right angle type connector [B] + cable clamp [C]
Group C		A06B-6079-K813	Single block type connector [D]
	Cable diameter ϕ12.9 to 16	A06B-6079-K814	Straight type connector [A] + cable clamp [C]
		A06B-6079-K815	Right angle type connector [B] + cable clamp [C]
	Cable diameter ϕ18 to 20	A06B-6079-K822	Straight type connector [A] + cable clamp [C]
		A06B-6079-K823	Right angle type connector [B] + cable clamp [C]

© MyFANUC 2D51CC9CD8564E3B8C4DE377C2D11C41

Example of connector connection

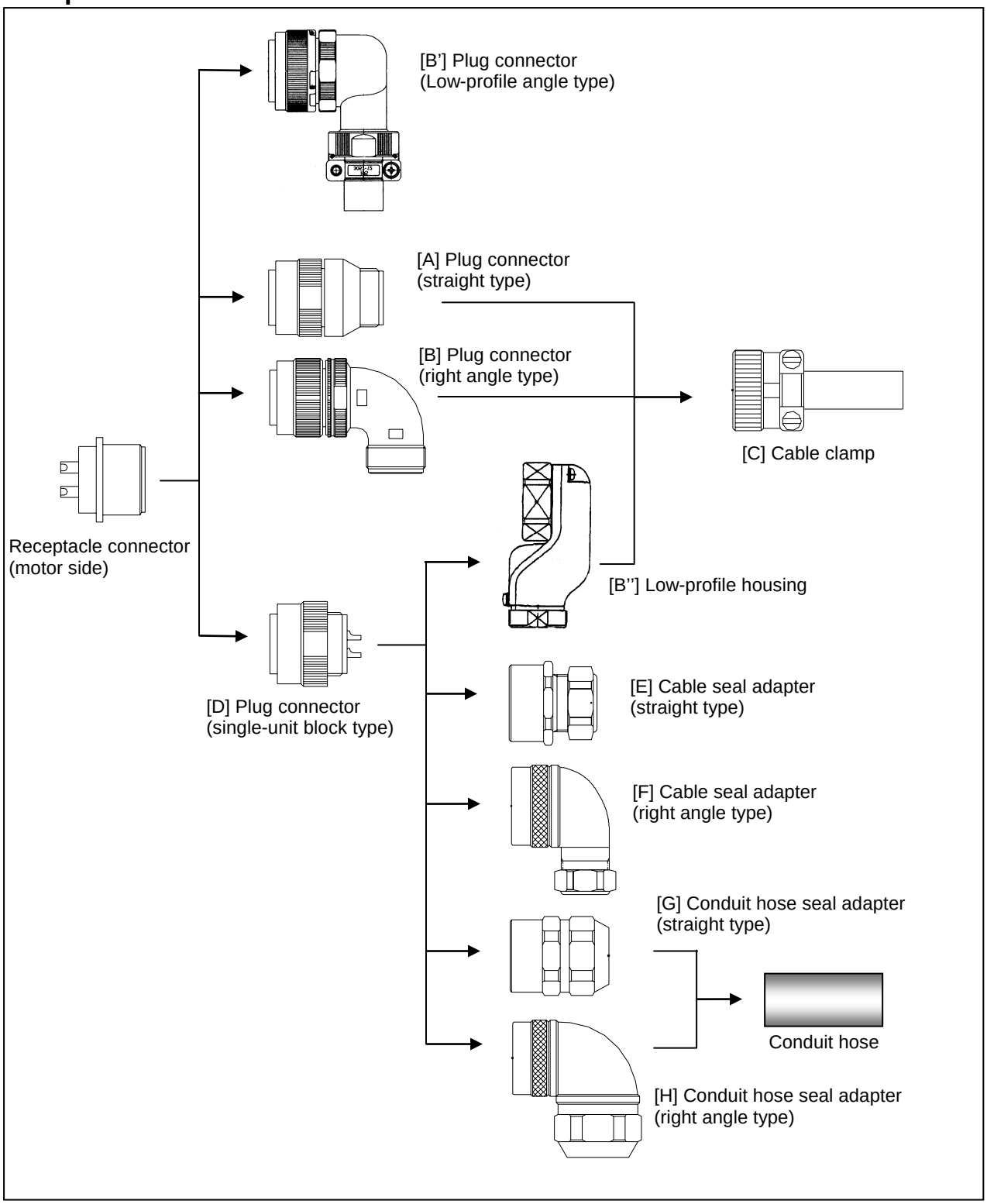

© MyFANUC 2D51CC9CD8564E3B8C4DE377C2D11C41

Specifications of plug connectors on the cable side (conforming to IP67, TUV-approved type)

The following table lists the specifications of IP67 rated, TUV approved type plug connectors on the cable side by manufacturer. For details of the connectors, contact each manufacturer.

Model Name	[D] Single Block Type Plug Connector	[A] Straight Type Plug Connector	[B] Right angle Type Plug Connector	[B'] Low-profile angle type plug connector (with clamp)	[B''] Low- profile housing	[C] Cable Clamp
Group B	(Hirose Electric)					
	H/MS3106A 18-10S-D-T(13)	H/MS3106A 18-10S-D-T(10)	H/MS3108A 18-10S-D-T(10)	(1) H/MS3108A 18-10S-DT10D(10) (2) H/MS3108A 18-10S-DT10D1(10)		H/MS3057-10A (10)
	Solder pot diameter ϕ2.6 Applicable wire 3.45mm^2 or less			Solder pot diameter ϕ2.5 Compatible cable O.D. (1) ϕ12 - ϕ14.3 (2) ϕ10 - ϕ12.5		Compatible cable O.D. ϕ10.3 - ϕ14.3
Group C	(Japan Aviation Electronics Industry)					
	JL04V-6A22-22SE-R (Both (1) and (2))	(1) JL04V-6A22-22SE-EB-R (2) JL04V-6A22-22SE-EB1-R	(1) L04V-8A22-22SE-EB-R (2) L04V-8A22-22SE-EB1-R		(1) JL04-22 EBA (2) Not supported	(1)JL04-2022 CK (14)-R (2)JL04-2428 CK (20)-R
	Solder pot diameter ϕ5.3 Applicable wire 10mm^2 or less (Applicable wire 5.5mm^2 or less In the case of single block + low-profile housing)				Compatible cable O.D. (1) ϕ12.9 - ϕ16, (2) ϕ18 - ϕ20	

* For the connectors of size 22-22, the part number of the plug connector differs depending on the type of cable clamp.

* The items preceded by the same number in ( ) correspond to each other.

⚠ CAUTION

1 TUV have certified that the plug connectors and cable clamps listed above, when combined with the FANUC AC Servo Motor αiS series and αiF series, satisfy the VDE0627 safety standard.
Several manufacturers offer other plug connectors. For information about whether the plug connectors satisfy the safety standard when combined with the FANUC αi series, contact the corresponding manufacturer.
- Hirose Electric (HRS) : H/MS310 TUV-conforming series
- Japan Aviation Electronics Industry (JAE) : JL04V series
- DDK Ltd. (DDK) : CE05 series

© MyFANUC 2D51CC9CD8564E3B8C4DE377C2D11C41

Specifications of plug connectors on the cable side (IP67 rated type)

The following table lists the specifications of IP67 rated type plug connectors on the cable side by manufacturer. For details of the connectors, contact each manufacturer.

Model Name	[D] Single Block Type Plug Connector	[A] Straight Type Plug Connector	[B] Right Angle Type Plug Connector	[B] Low-profile angle type plug connector	[B''] Low-profile housing	[C] Cable Clamp
Group B	(Japan Aviation Electronics Industry)					
	JA06A-18-10S -J1-R	JA06A-18-10S -J1-EB-R	JA08A-18-10S -J1-EB-R		JL04V-18EBA	JL04-18CK (13)-R
	(Hirose Electric)					
	H/MS3106A 18-10S(13)	H/MS3106A 18-10S(10)	H/MS3108B 18-10S(10)	H/MS08A18-10 S-DT10D(10)		H/MS3057 -10A(10)
	(DDK Ltd.)					
	D/MS3106A 18-10S(D190)	D/MS3106A 18-10S-BSS	D/MS3108A 18-10S-BAS			CE3057 -10A-1-D
Group C	(Japan Aviation Electronics Industry)					
	JA06A-22-22S -J1-R	JA06A-22-22S -J1-EB-R	JA08A-22-22S -J1-EB-R		JL04V-22EBA	JL04-2022 CK (14)-R
	(Hirose Electric)					
	H/MS3106A 22-22S(13)	H/MS3106A 22-22S(10)	H/MS3108B 22-22S(10)	H/MS08A22-22 S-DT12D(10)		H/MS3057 -12A(10)
	(DDK Ltd.)					
	D/MS3106A 22-22S(D190)	D/MS3106A 22-22S-BSS	D/MS3108A 22-22S-BAS			CE3057 -12A-1-D

© MyFANUC 2D51CC9CD8564E3B8C4DE377C2D11C41

C.4.3 Connection to a Conduit Hose

This section gives information on the specifications of several adapters to be connected that are made by conduit hose manufacturers for reference purposes. Before using an adapter, contact the corresponding conduit hose manufacturer.

For power: seal adapter specifications

Model Name	[E] Cable Seal adapter Straight type	[F] Cable Seal adapter Right angle type	[G] Conduit hose Seal adapter Straight type	[H] Conduit hose Seal adapter Right angle type
For power				
Group B	C2KD1218 (SANKEI) YSO 18-12-14 (DAIWA DENGYOU) ACS-12RL-MS18F (NIPPON FLEX) CG12S-JL18 (NEOFLEX)	C29KD1218 (SANKEI) YLO 18-12-14 (DAIWA DENGYOU) ACA-12RL-MS18F (NIPPON FLEX) CG12A-JL18 (NEOFLEX)	KMKD1618 (SANKEI) MSA 16-18 (DAIWA DENGYOU) RCC-104RL-MS18F (NIPPON FLEX) MAS16S-JL18 (NEOFLEX)	KM90KD1618 (SANKEI) MAA 16-18 (DAIWA DENGYOU) RCC-304RL-MS18F (NIPPON FLEX) MAS16A-JL18 (NEOFLEX)
Group C	C2KD1622 (SANKEI) YSO 22-12-14 (DAIWA DENGYOU) ACS-16RL-MS22F (NIPPON FLEX) CG16S-JL22 (NEOFLEX)	C29KD1622 (SANKEI) YLO 22-12-14 (DAIWA DENGYOU) ACA-16RL-MS22F (NIPPON FLEX) CG16A-JL22 (NEOFLEX)	KMKD2222 (SANKEI) MSA 22-22 (DAIWA DENGYOU) RCC-106RL-MS22F (NIPPON FLEX) MAS22S-JL22 (NEOFLEX)	KM90KD2222 (SANKEI) MAA 22-22 (DAIWA DENGYOU) RCC-306RL-MS22F (NIPPON FLEX) MAS22A-JL22 (NEOFLEX)

© MyFANUC 2D51CC9CD8564E3B8C4DE377C2D11C41

C.5 COOLING FANS

This section describes the cooling fans of αiS50HV FAN, αiS60HV FAN, and αiF40HV FAN of αi series (size 174, HV models) and the cooling fans of αiS100 FAN, αiS200 FAN, αiS100HV FAN, and αiS200HV FAN.

C.5.1 Cooling Fan Specifications
C.5.2 Connecting a Cooling Fan

C.5.1 Cooling Fan Specifications

The specifications of the cooling fan attached to the motor of αi series (HV models) are shown below. The input voltage of the cooling fan attached to the motor of αi-B series (HV models) is 230 VAC, while that of the cooling fan of αi series is 200 VAC.

αiS 50HV FAN, αiS 60HV FAN, αiF 40HV FAN

Input voltage	Single-phase 200VAC	
	50Hz	60Hz
	170 to 220VAC	170 to 242VAC
Rated input	41W±10%	36W±10%
Rated current	0.325A±10%	0.270A±10%
Degree of protection (IEC34-5)	IP00	
Applicable motor	αiS 50/3000HV FAN (A06B-0276-Bx1x, A06B-0276-Bx3x) αiS 60/3000HV FAN (A06B-0279-Bx1x, A06B-0279-Bx3x) αiF 40/3000HV FAN (A06B-0259-Bx1x, A06B-0259-Bx3x)	

NOTE
For the models with fan, the degree of protection of the fan connector section is IP00.

αiS100 FAN, αiS200 FAN
αiS100HV FAN, αiS200HV FAN

Motor model	αiS 100/2500 FAN αiS 200/2500 FAN		αiS 100/2500HV FAN αiS 200/2500HV FAN	
Input voltage	Three-phase 200VAC		Three-phase 400VAC	
	50Hz	60Hz	50Hz	60Hz
	170 to 240VAC	170 to 240VAC	340 to 460VAC	340 to 528VAC
Rated input	60W	90W	80W	120W
Steady-state current	$0.2A_{rms}$	$0.3A_{rms}$	$0.2A_{rms}$	$0.2A_{rms}$
Protection circuit set temperature	140°C			
Degree of protection (IEC60034-5)	IP00			

© MyFANUC 2D51CC9CD8564E3B8C4DE377C2D11C41

NOTE

1 For the models with fan, the degree of protection of the fan connector section is IP00.

2 **Pay attention to the driving voltage.**
The driving voltage of the fan equals the driving voltage of the motor. For the αiS 100 FAN and αiS 200 FAN models, **three-phase, 200 VAC** is used. For the αiS 100HV FAN and αiS 200HV FAN models, **three-phase, 400 VAC** is used.

C.5.2 Connecting a Cooling Fan

C.5.2.1 In case that other electronics devices are in parallel with fan

The following figure shows how to connect to a fan unit when other electronics devices are in parallel with fan unit next to a breaker or a contactor.

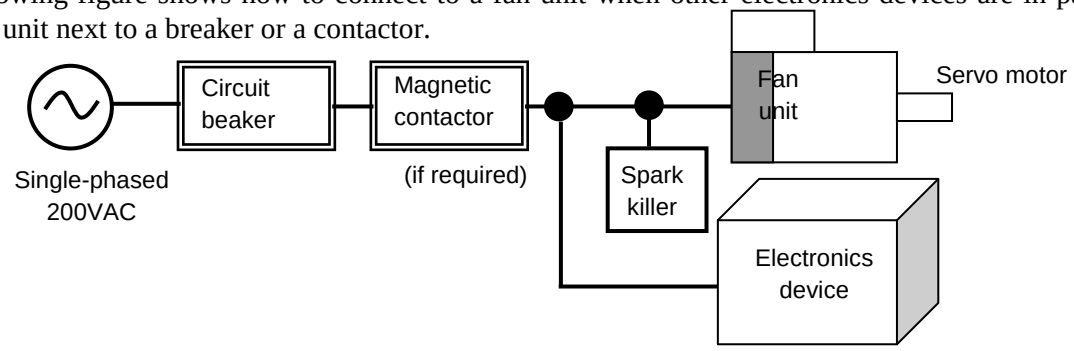

NOTE

When surges need to reduce with reason that other electronics devices are in parallel with fan unit, use a spark killer.

© MyFANUC 2D51CC9CD8564E3B8C4DE377C2D11C41

C.5.2.2 Cooling Fan Circuit

The following figure shows how to connect to a fan unit.
Note that the input voltage is different for each unit.
For information about the connection cables and cable-side connectors, refer to "Connectors on the Cable Side" in Edition 07 of the FANUC SERVO MOTOR αi series DESCRIPTIONS (B-65262EN).

αiS 50HV FAN, αiS 60HV FAN, αiF 40HV FAN

Manufacture: Japan Aviation Electronics Industry
Manufacturer specification: JN2AS04MK2X-R
This connector is not water-proof.
The shape and pin layout of the connector are shown below.

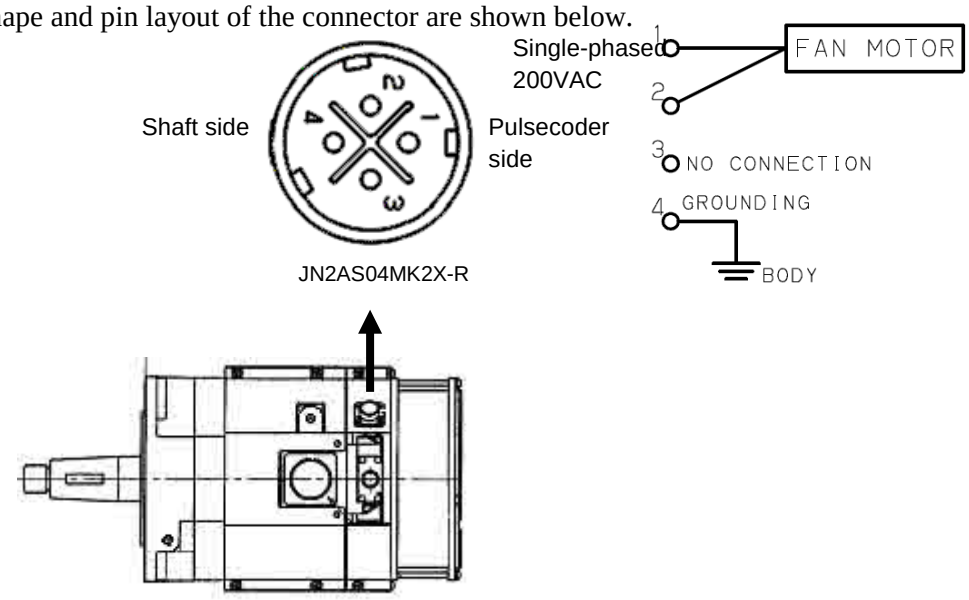

The following figure shows circuit example.

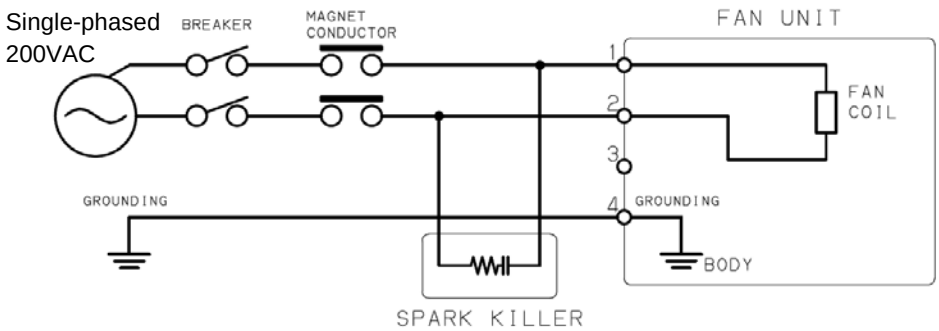

NOTE
This figure shows an example that uses a spark killer.

© MyFANUC 2D51CC9CD8564E3B8C4DE377C2D11C41

αiS100 FAN, αiS200 FAN
αiS100HV FAN, αiS200HV FAN

Manufacture: Japan Aviation Electronics Industry
Manufacturer specification: JN2AS04MK2X-R
This connector is not water-proof.
The shape and pin layout of the connector are shown below.

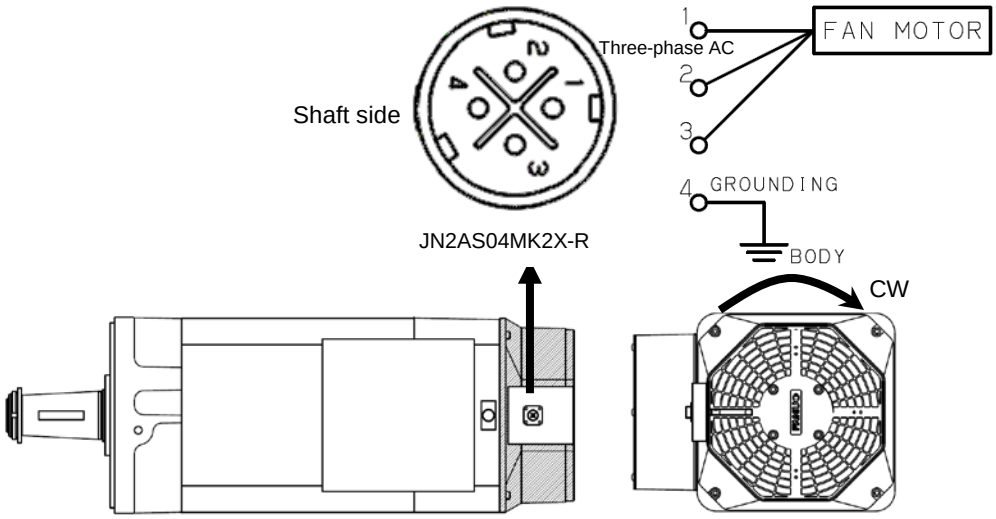

The following figure shows circuit example.

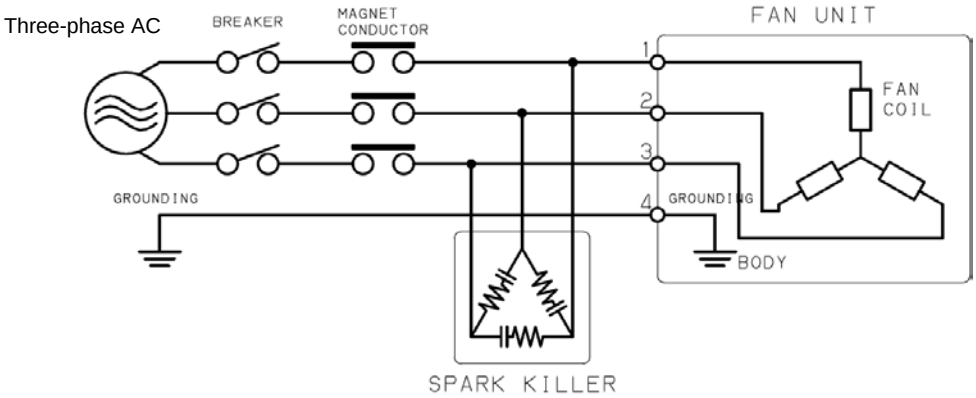

NOTE
This figure shows an example that uses a spark killer.

The following table list shows input voltage.

Motor model	Input voltage
αiS 100 FAN, αiS 200 FAN	Three-phase 200VAC
αiS 100HV FAN, αiS 200HV FAN	Three-phase 400VAC

If the three phases are connected incorrectly, the fan rotates in the reverse direction. But the direction of air flow is the same because the fan is a radial fan. However, the fan rotating in the reverse direction produces a less air flow, resulting in a degraded effect of cooling and increased load current. So, the fan can overheat and stop. If the fan overheat repeats many times, the fan unit may cause trouble. Be sure to connect the three phases correctly.

© MyFANUC 2D51CC9CD8564E3B8C4DE377C2D11C41

C.5.2.3 Recommended Parts of Cooling Fan Circuit

Configure fan circuit by referencing the recommended parts shown in the following table lists.

Grouping of servo motor with a fan

Motor model	Input voltage	Group
αiS 50 FAN, αiS 60 FAN, αiF 40 FAN	Single-phase 200VAC	A
αiS 100 FAN, αiS 200 FAN	Three-phase 200VAC	B
αiS 100HV FAN, αiS 200HV FAN	Three-phase 400VAC	C

The following table lists the recommended spark killer.

Model No.	Manufacturer	Specifications	Group		
			A	B	C
CRE-30680	OKAYA ELECTRIC IND. CO.,LTD.	0.3μF / 68Ω With stand voltage 250V min.	○		
3CRE-30680	OKAYA ELECTRIC IND. CO.,LTD.	0.3μF / 68Ω With stand voltage 250V min.		○	
3CRH-30330	OKAYA ELECTRIC IND. CO.,LTD.	0.33μF / 33Ω With stand voltage 500V min.		Note 2	○

NOTE
1 One spark killer is available for 4 fan motors maximum.
2 These model of spark killer can be used instead of circle models.

© MyFANUC 2D51CC9CD8564E3B8C4DE377C2D11C41

C.5.2.4 Cooling fan protection circuit

The fan motor inside the cooling fan includes a protection circuit based on a thermal protector.

αiS 50HV FAN, αiS 60HV FAN, αiF 40HV FAN

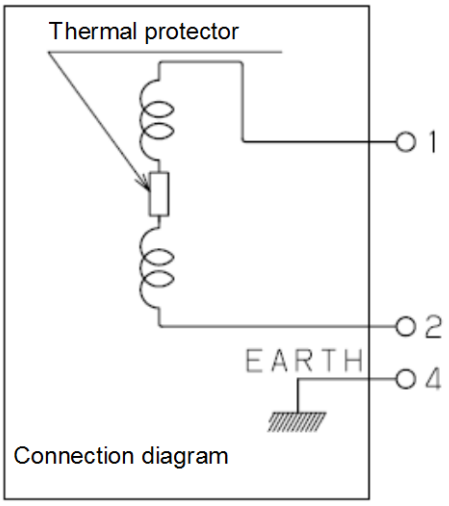

αiS100 FAN, αiS200 FAN
αiS100HV FAN, αiS200HV FAN

A thermal protector is installed in two positions, namely, phase R and phase S.

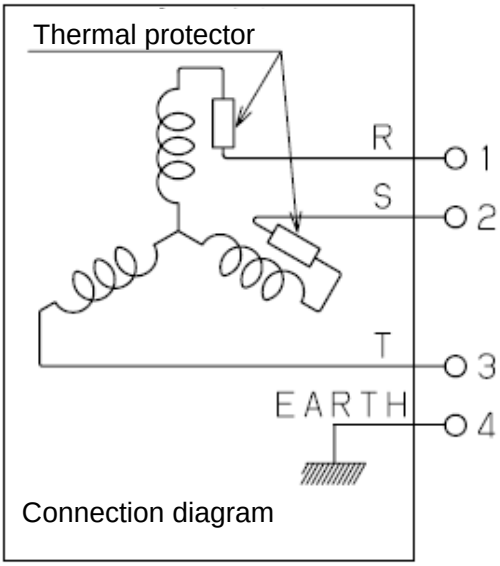

NOTE

A thermal protector operates when the temperature of the winding inside the fan motor rises to 140°C.

© MyFANUC 2D51CC9CD8564E3B8C4DE377C2D11C41

C.6 FEEDBACK SENSORS

This section describes the Pulsecoders built in αiS2 to αiS1000 (including HV) and αiF1 to αiF40 (including HV) of αi series servo motors. Since the Pulsecoder is built in the motor, no outline drawing is provided here. The outline drawing is the same for both αi-B series and αi series. See the section on the outline drawings in this manual.

C.6.1 Types of Pulsecoders and Designation

The following table lists the types of Pulsecoders.

Pulsecoder type	Resolution [Division/rev]	Absolute/ incremental	Applicable motor
αiA1000	1,000,000	Absolute	αiS 2 to αiS 1000 αiF 1 to αiF 40 (including HV)
αiI1000	1,000,000	Incremental	
αiA16000	16,000,000	Absolute	

For how to specify Pulsecoder, see the Item, “Ordering Specification Number” because Pulsecoder is specified together with a motor.

C.6.2 Connecting Pulsecoder

Connector

Manufacturer specification: JN2AS10UL1-R (Manufacture: Japan Aviation Electronics Industry)
HR34B-12WR-10PD (Manufacture: Hirose Electric)

The connector of the αi series Pulsecoder is water-proof when engaged with the cable connector. (When the motor is left singly, the connector is water-proof when the cap mounted at shipment is fit in the connector.)
The signals of the αi series Pulsecoder are arranged as follows:

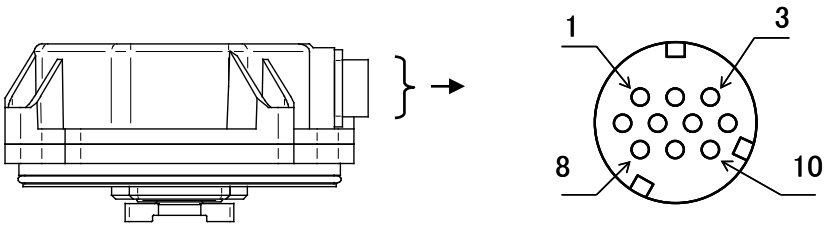

Signal name	Pin No.	
	αiA1000 **αiA16000**	**αi I1000**
RD *RD	6 5	6 5
+5V 0V	8,9 7,10	8,9 7,10
FG +6V	3 4	3 -

© MyFANUC 2D51CC9CD8564E3B8C4DE377C2D11C41

Connector kits

For information about the connectors and crimping jigs required for creating a feedback cable, see "Connectors on the Cable Side" in this manual.

NOTE

If the motor is mounted on a movable part, or a flexible tube is used for the connector, excessive force may be applied to the connector. In this case, fix the feedback cable to prevent the connector from being broken.

Connecting Pulsecoder to an amplifier

For cables connecting Pulsecoder and amplifier, refer to “FANUC SERVO AMPLIFIER αi-B series Descriptions (B-65412EN)”, "FANUC SERVO AMPLIFIER αi series Descriptions (B-65282EN)", or "FANUC SERVO AMPLIFIER βi-B series Descriptions (B-65422EN)", " FANUC SERVO AMPLIFIER βi series Descriptions (B-65322EN) ".

In particular, special care should be taken when the Pulsecoder is connected to an I/O link amplifier. For details, refer to the description of the I/O link amplifier in "FANUC SERVO AMPLIFIER βi series Descriptions (B-65322EN)".

© MyFANUC 2D51CC9CD8564E3B8C4DE377C2D11C41

ADDITIONAL INFORMATION

© MyFANUC 2D51CC9CD8564E3B8C4DE377C2D11C41

© MyFANUC 2D51CC9CD8564E3B8C4DE377C2D11C41

The combination of servo motor αiS50/3000-B, αiS50/3000 FAN-B, αiS60/3000-B, αiS60/3000 FAN-B and servo amplifier αiSV360S-B

1. Type of applied technical documents

Name	FANUC AC SERVO MOTOR αi-B / αi series DESCRIPTIONS
Spec. No. / Version	B-65262EN/10-01

2.Summary of Change

Group	Name	New, Add, Correct, Delete,	Applicable Date
Basic Function	**The combination of servo motor αiS50/3000-B, αiS50/3000 FAN-B, αiS60/3000-B, αiS60/3000 FAN-B and servo amplifier αiSV360S-B**	New	Jun.2016
Optional Function			
Unit			
Maintenance Parts			
Notice			
Correction			
Another			

© MyFANUC 2D51CC9CD8564E3B8C4DE377C2D11C41

The combination of servo motor αiS50/3000-B, αiS50/3000 FAN-B, αiS60/3000-B, αiS60/3000 FAN-B and servo amplifier αiSV360S-B

■Summary

Servo motor αiS50/3000-B, αiS50/3000 FAN-B, αiS60/3000-B, αiS60/3000 FAN-B can be driven by servo amplifier αiSV360S-B according to the following characteristics, parameter, and caution in this report.

The servo motor, which can be driven by servo amplifier αiSV360S-B, are following.

Servo motor	Ordering number
αiS50/3000-B	A06B-2275-B***
αiS50/3000 FAN-B	
αiS60/3000-B	A06B-2278-B***
αiS60/3000 FAN-B	

These servo motors are based on normal motor specification, basically. The items, which are not mentioned in this report, refer to FANUC AC SERVO MOTOR αi-B/αi series DESCRIPTION (B-65262EN).

⚠ Caution

At speed of 23rpm and under, these servo motors are limited by approximately half of its maximum torque. The limited value of maximum torque are described in the data sheet of each motor. When a load torque in machining exceeds the limited value of maximum torque, it may become a factor of the error of shape, the vibration, excess error alarm.
And HRV4 control is not appricable in this servo amplifier αiSV360S-B.
When the load torque in machining is big or HRV4 control is required, please select servo amplifier αiSV360-B.

© MyFANUC 2D51CC9CD8564E3B8C4DE377C2D11C41

■Characteristic Curves and Data Sheet

Model αi S 50/3000-B(driven by αi SV360S-B) Specification A06B-2275-B□0□,-B□2□

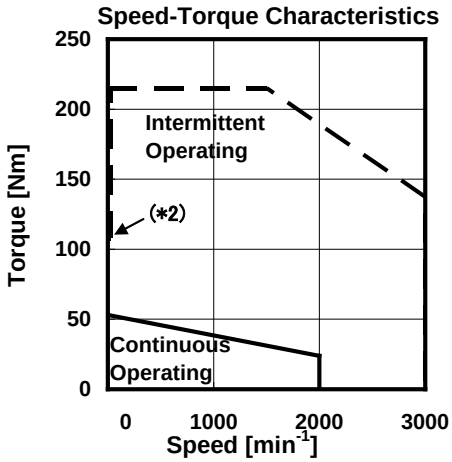

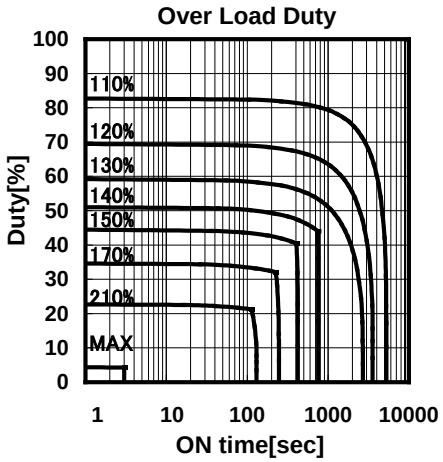

Data sheet

Parameter	Symbol	Value	Unit
Continuous Torque (at low speed) (*1)	Tc	53 541	Nm kgfcm
Continuous Current (at low speed) (*1)	Ic	53	A (rms)
Rated Output (*1)	Pr	5.0 6.7	kW HP
Rated Speed	Nr	2000	min^{-1}
Maximum Speed	Nmax	3000	min^{-1}
Maximum Torque (*1)(*2)	Tmax	215 2190	Nm kgfcm
Moment of Inertia of Rotor	Jm	0.0145 0.148	kgm^2 $kgfcms^2$
Moment of Inertia of Rotor(with 70Nm Brake)	Jm	0.0154 0.157	kgm^2 $kgfcms^2$
Torque Constant (*1)	Kt	0.95 9.7	Nm/A(rms) kgfcm/A(rms)
Winding Resistance (between terminals) (*1)	Ra	0.048	Ω
Thermal time constant	t_t	50	min
Static friction	Tf	1.8 18	Nm kgfcm
Weight	w	39	kg
Weight(with 70Nm Brake)	w	49	kg
Max. Current of Servo Amp.	Imax	360	A (peak)

(*1) The values are the standard values at 20℃ and the tolerance is ±10%.

(*2) Max torque is limited by 108Nm at under 23rpm.
HRV4 control is not applicable.

The speed-torque characteristics very depending on the type of software,parametersetting,and input voltage of the digital servo software.(The above figures show average values.)

© MyFANUC 2D51CC9CD8564E3B8C4DE377C2D11C41

Model αi S 50/3000 FAN-B(driven by αi SV360S-B) Specification A06B-2275-B□1□,-B□3□

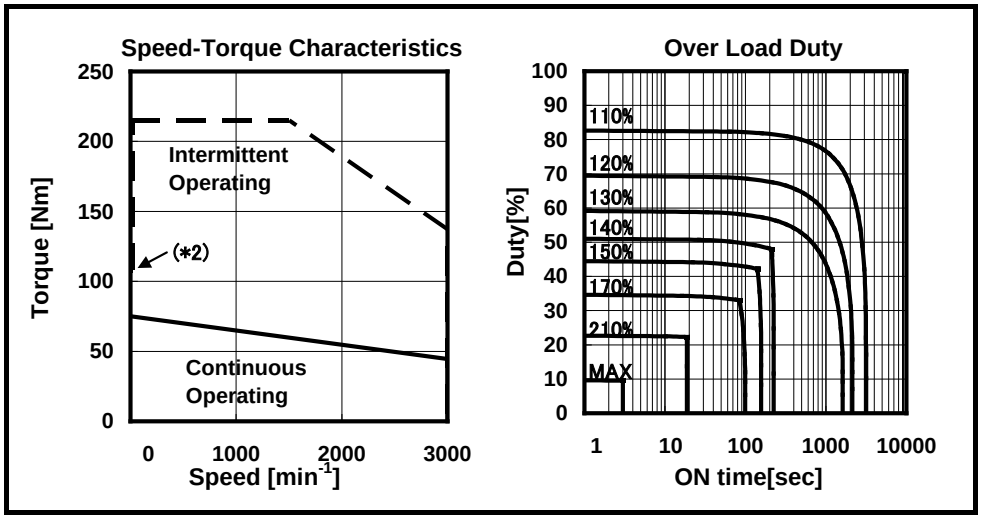

Data sheet

Parameter	Symbol	Value	Unit
Continuous Torque (at low speed) (*1)	Tc	75 765	Nm kgfcm
Continuous Current (at low speed) (*1)	Ic	79	A (rms)
Rated Output (*1)	Pr	14 19	kW HP
Rated Speed	Nr	3000	min^{-1}
Maximum Speed	Nmax	3000	min^{-1}
Maximum Torque (*1)(*2)	Tmax	215 2190	Nm kgfcm
Moment of Inertia of Rotor	Jm	0.0145 0.148	kgm^2 $kgfcms^2$
Moment of Inertia of Rotor(with 70Nm Brake)	Jm	0.0154 0.157	kgm^2 $kgfcms^2$
Torque Constant (*1)	Kt	0.95 9.7	Nm/A(rms) kgfcm/A(rms)
Winding Resistance (between terminals) (*1)	Ra	0.048	Ω
Thermal time constant	t_t	30	min
Static friction	Tf	1.8 18	Nm kgfcm
Weight	w	42	kg
Weight(with 70Nm Brake)	w	52	kg
Max. Current of Servo Amp.	Imax	360	A (peak)

(*1) The values are the standard values at 20℃ and the tolerance is ±10%.

(*2) Max torque is limited by 108Nm at under 23rpm.
HRV4 control is not applicable.

The speed-torque characteristics very depending on the type of software,parametersetting,and input voltage of the digital servo software.(The above figures show average values.)

© MyFANUC 2D51CC9CD8564E3B8C4DE377C2D11C41

Model αi **S 60/3000-B(driven by** αi **SV360S-B)** Specification A06B-2278-B□0□,-B□2□

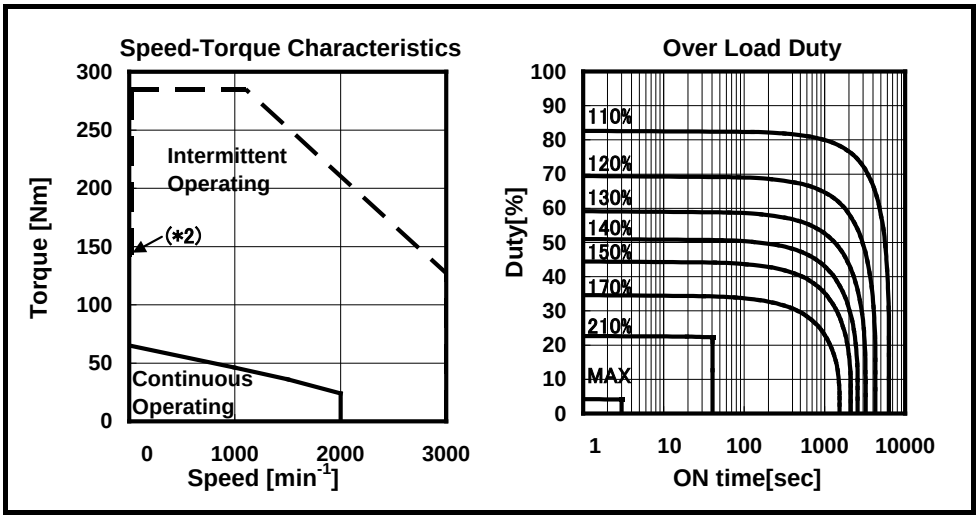

Data sheet

Parameter	Symbol	Value	Unit
Continuous Torque (at low speed) (*1)	Tc	65 663	Nm kgfcm
Continuous Current (at low speed) (*1)	Ic	52	A (rms)
Rated Output (*1)	Pr	5.0 6.7	kW HP
Rated Speed	Nr	2000	min^{-1}
Maximum Speed	Nmax	3000	min^{-1}
Maximum Torque (*1)(*2)	Tmax	285 2910	Nm kgfcm
Moment of Inertia of Rotor	Jm	0.0195 0.199	kgm^2 $kgfcms^2$
Moment of Inertia of Rotor(with 70Nm Brake)	Jm	0.0204 0.208	kgm^2 $kgfcms^2$
Torque Constant (*1)	Kt	1.26 12.9	Nm/A(rms) kgfcm/A(rms)
Winding Resistance (between terminals) (*1)	Ra	0.066	Ω
Thermal time constant	t_t	60	min
Static friction	Tf	1.8 18	Nm kgfcm
Weight	w	50	kg
Weight(with 70Nm Brake)	w	60	kg
Max. Current of Servo Amp.	Imax	360	A (peak)

(*1) The values are the standard values at 20℃ and the tolerance is ±10%.

(*2) Max torque is limited by 143Nm at under 23rpm.
HRV4 control is not applicable.

The speed-torque characteristics very depending on the type of software,parametersetting,and input voltage of the digital servo software.(The above figures show average values.)

				TITLE **The combination of αiS50/3000-B, αiS50/3000 FAN-B, αiS60/3000-B, αiS60/3000 FAN-B and servo amplifier αiSV360S-B**	
01	2016.06.16	Fujimoto	Newly designed	DRAW. No. B-65262EN/10-01	CUST.
Ed.	Date	Design.	Description	**FANUC CORPORATION**	SHEET 5/8

© MyFANUC 2D51CC9CD8564E3B8C4DE377C2D11C41

Model αi S 60/3000 FAN-B (driven by αi SV360S-B) Specification A06B-2278-B□1□,-B□3□

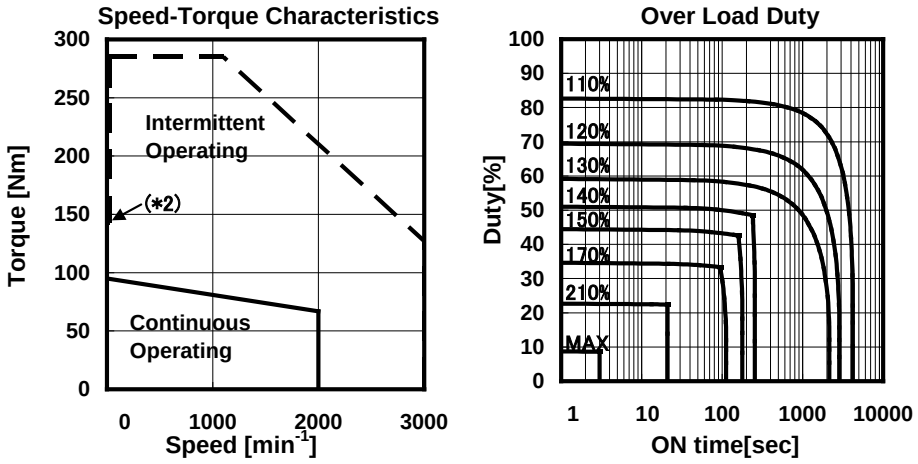

Data sheet

Parameter	Symbol	Value	Unit
Continuous Torque (at low speed) (*1)	Tc	95 969	Nm kgfcm
Continuous Current (at low speed) (*1)	Ic	75	A (rms)
Rated Output (*1)	Pr	14 19	kW HP
Rated Speed	Nr	2000	min^{-1}
Maximum Speed	Nmax	3000	min^{-1}
Maximum Torque (*1)(*2)	Tmax	285 2910	Nm kgfcm
Moment of Inertia of Rotor	Jm	0.0195 0.199	kgm^2 $kgfcms^2$
Moment of Inertia of Rotor(with 70Nm Brake)	Jm	0.0204 0.208	kgm^2 $kgfcms^2$
Torque Constant (*1)	Kt	1.26 12.9	Nm/A(rms) kgfcm/A(rms)
Winding Resistance (between terminals) (*1)	Ra	0.066	Ω
Thermal time constant	t_t	40	min
Static friction	Tf	1.8 18	Nm kgfcm
Weight	w	53	kg
Weight(with 70Nm Brake)	w	63	kg
Max. Current of Servo Amp.	Imax	360	A (peak)

(*1) The values are the standard values at 20℃ and the tolerance is ±10%.

(*2) Max torque is limited by 143Nm at under 23rpm.
HRV4 control is not applicable.

The speed-torque characteristics very depending on the type of software,parametersetting,and input voltage of the digital servo software.(The above figures show average values.)

				TITLE **The combination of αiS50/3000-B, αiS50/3000 FAN-B, αiS60/3000-B, αiS60/3000 FAN-B and servo amplifier αiSV360S-B**	
01	2016.06.16	Fujimoto	Newly designed	DRAW. No. B-65262EN/10-01	CUST.
Ed.	Date	Design.	Description	**FANUC CORPORATION**	SHEET 6/8

© MyFANUC 2D51CC9CD8564E3B8C4DE377C2D11C41

■Parameter table

Motor ID for auto loading are as follows. We will prepare the registration of these parameter in servo software from now.

Servo motor	Motor ID
αiS50/3000-B （driven by αiSV360S-B）	541
αiS50/3000 FAN-B （driven by αiSV360S-B）	542
αiS60/3000-B （driven by αiSV360S-B）	543
αiS60/3000 FAN-B（driven by αiSV360S-B）	544

Parameter tables are as follows.

Motor model	αiS50 /3000-B αiSV360S-B	αiS50 /3000-B FAN αiSV360S-B	αiS60 /3000-B αiSV360S-B	αiS60 /3000-B FAN αiSV360S-B
Order No.	2276	2276	2278	2278
Control	HRV2	HRV2	HRV2	HRV2
Motor ID	541	542	543	544
Parameter No.				
2003	00001000	00001000	00001000	00001000
2004	00000011	00000011	00000011	00000011
2005	00000000	00000000	00000000	00000000
2006	00000000	00000000	00000000	00000000
2007	00000000	00000000	00000000	00000000
2008	00000000	00000000	00000000	00000000
2009	00000000	00000000	00000000	00000000
2010	00000000	00000000	00000000	00000000
2011	00000000	00000000	00000000	00000000
2012	00000000	00000000	00000000	00000000
2013	00000000	00000000	00000000	00000000
2014	00000000	00000000	00000000	00000000
2210	00000000	00000000	00000000	00000000
2211	00001010	00001010	00001010	00001010
2300	00000000	00000000	00000000	00000000
2301	00000000	00000000	00000000	00000000
2560	00000000	00000000	00000000	00000000
2040	547	547	1191	1191
2041	-3423	-3423	-6320	-6320
2042	-1345	-1345	-1347	-1347
2043	69	69	69	69
2044	-622	-622	-617	-617
2045	0	0	0	0
2046	-8235	-8235	-8235	-8235
2047	6099	6099	6152	6152
2048	0	0	0	0
2049	0	0	0	0
2050	956	956	956	956
2051	510	510	510	510
2052	4200	4200	4200	4000
2053	31979	31979	31979	31979
2054	3	3	3	3
2055	319	319	319	319
2056	0	0	0	0
2057	-5638	-5638	-4619	-4619
2058	-1000	-1000	-2000	-2000
2059	0	0	0	0
2060	7282	7282	7282	7282
2061	504	504	500	500
2062	32558	32348	32590	32388
2063	2627	5245	2230	4744
2064	4	4	4	4
2065	7810	15639	6624	14138

Parameter No.	αiS50 /3000-B αiSV360S-B	αiS50 /3000-B FAN αiSV360S-B	αiS60 /3000-B αiSV360S-B	αiS60 /3000-B FAN αiSV360S-B
2066	0	0	0	0
2067	0	0	0	0
2068-2073	0	0	0	0
2074	4096	4096	8192	8192
2077-2083	0	0	0	0
2086	1439	2037	1326	1937
2087-2089	0	0	0	0
2090	0	0	0	0
2091-2098	0	0	0	0
2099	400	400	400	400
2100	0	0	0	0
2101	0	0	0	0
2102	0	0	0	0
2103	0	0	0	0
2104	0	0	0	0
2105	3312	3312	4411	4411
2106-2109	0	0	0	0
2110	519	519	519	519
2111	6174	6174	5220	5220
2112	0	0	0	0
2113	0	0	0	0
2127	2046	2046	2852	2852
2128	6500	6500	5000	5000
2129	2063	2063	1300	1300
2130-2132	0	0	0	0
2133	5150	5150	5150	5150
2134	8990	8990	8990	8990
2159	3597	3597	6676	6676
2160	2650	2650	2630	2630
2161	0	0	0	0
2162	32754	32739	32767	32742
2163	174	365	15	327
2164	3300	6608	2799	5973
2165	365	365	365	365
2302	23	23	23	23
2304	0	0	0	0
2305	0	0	0	0
2310	0	0	0	0
2316	3641	3641	3641	3641
2590	12500	12500	10600	10600
2591	-19900	-19900	-18500	-18500
2595	1630	1630	1631	1631

⚠ CAUTION

Please input a correct value of parameter according to the parameter table.
If the motor is driven with a wrong parameter, the motor and the amplifier may be damaged.

© MyFANUC 2D51CC9CD8564E3B8C4DE377C2D11C41

In case before the registration, please load with the following Motor ID, and input (*) parameter manually.

Servo motor	Motor ID (Reference)
αiS50/3000-B	324
αiS50/3000 FAN-B	325
αiS60/3000-B	456
αiS60/3000 FAN-B	328

© MyFANUC 2D51CC9CD8564E3B8C4DE377C2D11C41

FANUC AC SERVO MOTOR αi–B series DESCRIPTIONS

1. Type of applied technical documents

Name	FANUC AC SERVO MOTOR αi–B series DESCRIPTIONS
Spec. No. / Version	B-65262EN/10-02(16)

2.Summary of Change

Group	Name	New, Add, Correct, Delete,	Applicable Date
Basic Function	AC SERVO MOTOR αi-B series Taper shaft with brake, Straight shaft, Straight shaft with brake	New	Sep. 2016
Optional Function			
Unit			
Maintenance Parts			
Notice			
Correction			
Another			

				TITLE AC SERVO MOTOR αi–B series	
01	16.09.15	Fukushima	Newly designed	DRAW. No. B-65262EN/10-02	CUST.
Ed.	Date	Design.	Description	FANUC CORPORATION	SHEET 1/16

© MyFANUC 2D51CC9CD8564E3B8C4DE377C2D11C41

PREFACE

This description shows the specification of the following α*i*-Bseries servo motor.

αiS150/3000-B, αiS150/3000HV-B

(Taper shaft with brake, Straight shaft, Straight shaft with brake)

The contents of this descriptions

1. Ordering specification number
2. Characteristic curve and data sheet
3. Outline drawings
4. Built-In Brake
5. Connectors on the cable side
6. Others

Changes from the standard model are the shaft shape and brake.
The items that are not mentioned in this description correspond to the former α*i*S150/3000-B, α*i*S150/3000HV-B,.
Please refer to FANUC AC SERVO MOTOR α*i*–B / α*i* series DESCRIPTIONS B-65262EN.

© MyFANUC 2D51CC9CD8564E3B8C4DE377C2D11C41

1 Ordering specification number

The ordering specification numbers of the servo motors have the following format:

Models αiS 150/3000-B, αiS 150/3000HV-B,

A06B-□□□□-B△○▽#abcd

□□□□

An ordering specification number are described on the tables after next page.

△

0 : Taper shaft
1 : Straight shaft
3 : Taper shaft with a 24VDC brake
4 : Straight shaft with a 24VDC brake

○

1 : With a fan

▽

0 : Pulsecoder αiA 4000

abcd

a 0 : Standard
b 0 : Standard
cd 00 : Standard

* Omitted in case of #abcd=#0000.

© MyFANUC 2D51CC9CD8564E3B8C4DE377C2D11C41

2 Characteristic curve and data sheet

The characteristic curve and data sheet of FANUC AC SERVO MOTOR αi-B series are shown in this page.

Model αi S 150/3000-B Specification A06B-2026-B□10

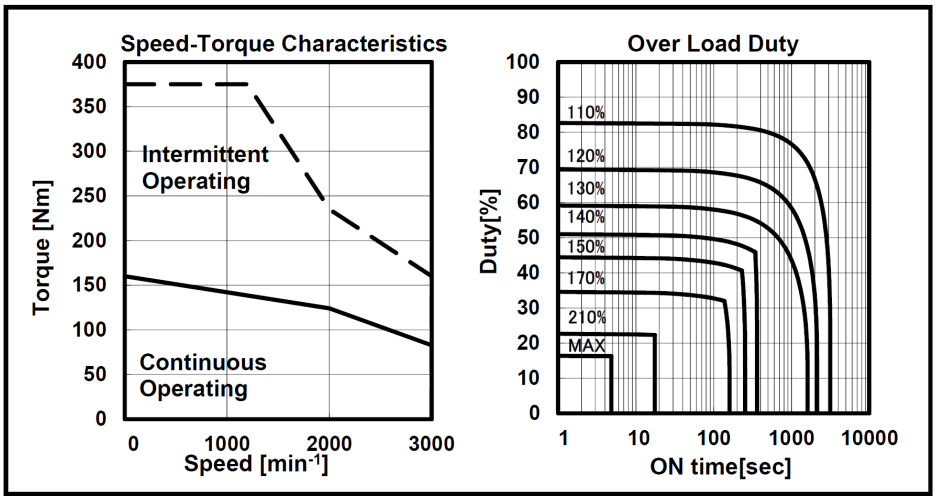

Data sheet

Parameter	Symbol	Value	Unit
Continuous Torque (at low speed) (*)	Tc	160 1630	Nm kgfcm
Continuous Current (at low speed) (*)	Ic	103	A (rms)
Rated Output (*)	Pr	26 35	kW HP
Rated Speed	Nr	3000	min^{-1}
Maximum Speed	Nmax	3000	min^{-1}
Maximum Torque (*)	Tmax	375 3830	Nm kgfcm
Moment of Inertia of Rotor	Jm	0.0425 0.434	kgm^2 $kgfcms^2$
Moment of Inertia of Rotor (with Brake)	Jm	0.0435 0.444	kgm^2 $kgfcms^2$
Torque Constant (*)	Kt	1.56 15.9	Nm/A(rms) kgfcm/A(rms)
Winding Resistance (between terminals) (*)	Ra	0.051	Ω
Thermal time constant	t_t	30	min
Static friction	Tf	2.4 24	Nm kgfcm
Weight	w	110	kg
Weight (with Brake)	w	130	kg
Max. Current of Servo Amp.	Imax	360	A (peak)

(*) The values are the standard values at 20℃ and the tolerance is ±10%.
The speed-torque characteristics very depending on the type of software,parametersetting,and input voltage of the digital servo software.(The above figures show average values.)

© MyFANUC 2D51CC9CD8564E3B8C4DE377C2D11C41

Model αi **S 150/3000HV-B** Specification A06B-2027-B□10

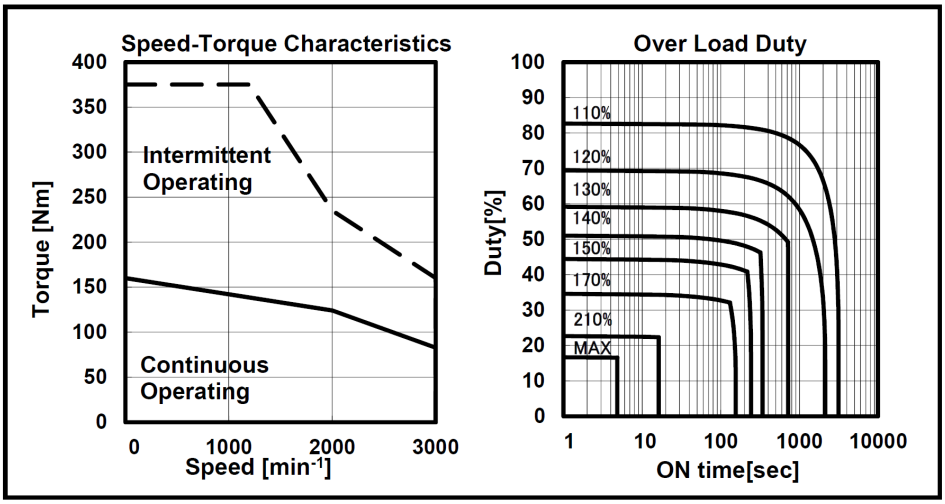

Data sheet

Parameter	Symbol	Value	Unit
Continuous Torque (at low speed) (*)	Tc	160 1630	Nm kgfcm
Continuous Current (at low speed) (*)	Ic	52	A (rms)
Rated Output (*)	Pr	26 35	kW HP
Rated Speed	Nr	3000	min^{-1}
Maximum Speed	Nmax	3000	min^{-1}
Maximum Torque (*)	Tmax	375 3830	Nm kgfcm
Moment of Inertia of Rotor	Jm	0.0425 0.434	kgm^2 $kgfcms^2$
Moment of Inertia of Rotor (with Brake)	Jm	0.0435 0.444	kgm^2 $kgfcms^2$
Torque Constant (*)	Kt	3.1 32	Nm/A(rms) kgfcm/A(rms)
Winding Resistance (between terminals) (*)	Ra	0.20	Ω
Thermal time constant	t_t	30	min
Static friction	Tf	2.4 24	Nm kgfcm
Weight	w	110	kg
Weight (with Brake)	w	130	kg
Max. Current of Servo Amp.	Imax	180	A (peak)

(*) The values are the standard values at 20℃ and the tolerance is ±10%.
The speed-torque characteristics very depending on the type of software,parametersetting,and input voltage of the digital servo software.(The above figures show average values.)

© MyFANUC 2D51CC9CD8564E3B8C4DE377C2D11C41

3 Outline drawings

The outline drawings of the FANUC AC servo motors αi-B series (motor outline drawings of the motor, shaft shape, allowable axis load, shaft run-out precision) are shown after the following page.

(a) Taper shaft with brake

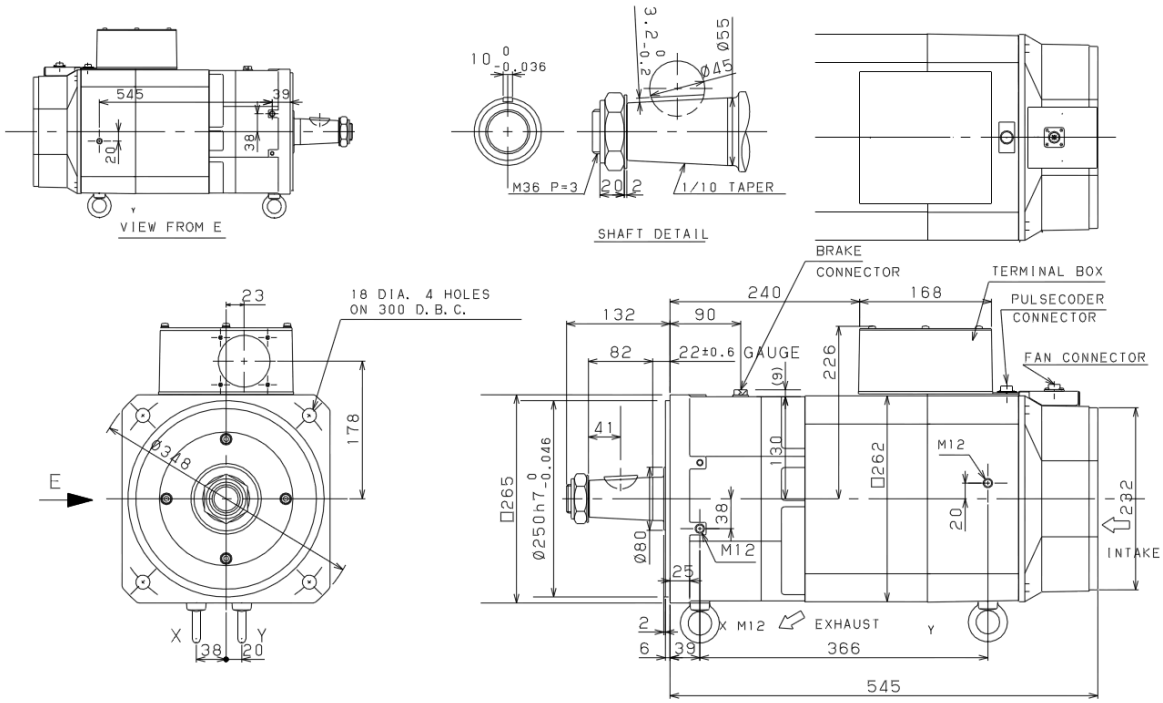

The motor does not include a circuit breaker for protecting the fan. Prepare such a circuit breaker in the power magnetics cabinet.

© MyFANUC 2D51CC9CD8564E3B8C4DE377C2D11C41

(b) Straight shaft

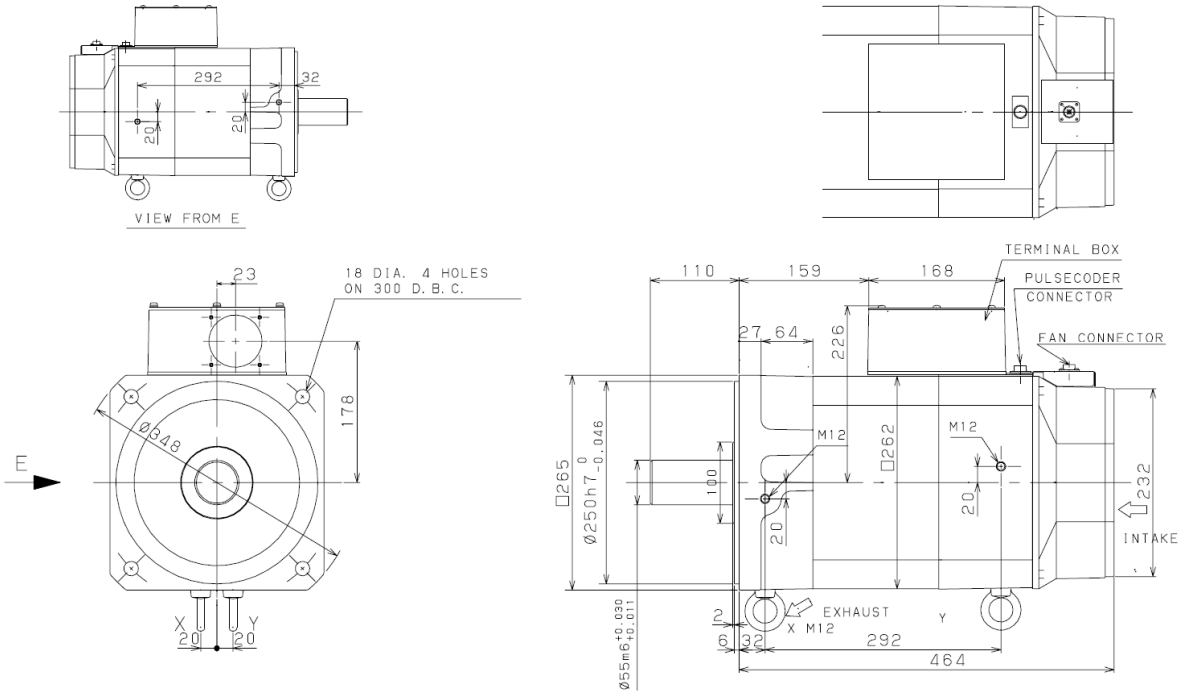

The motor does not include a circuit breaker for protecting the fan. Prepare such a circuit breaker in the power magnetics cabinet.

				TITLE AC SERVO MOTOR αi–B series	
01	16.09.15	Fukushima	Newly designed	DRAW. No. B-65262EN/10-02	CUST.
Ed.	Date	Design.	Description	FANUC CORPORATION	SHEET 7/16

© MyFANUC 2D51CC9CD8564E3B8C4DE377C2D11C41

(C) Straight shaft with brake

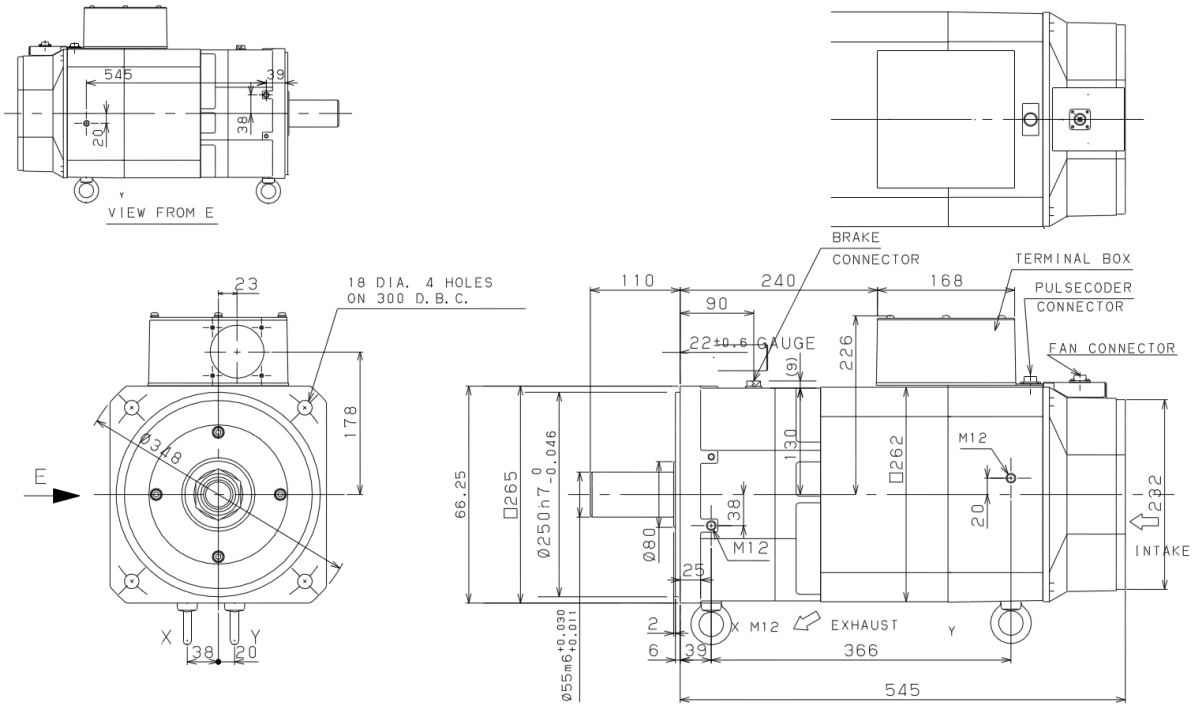

The motor does not include a circuit breaker for protecting the fan. Prepare such a circuit breaker in the power magnetics cabinet.

				TITLE AC SERVO MOTOR αi–B series	
01	16.09.15	Fukushima	Newly designed	DRAW. No. B-65262EN/10-02	CUST.
Ed.	Date	Design.	Description	FANUC CORPORATION	SHEET 8/16

© MyFANUC 2D51CC9CD8564E3B8C4DE377C2D11C41

Allowable axis load

The allowable axis load is indicated below.
If a load exceeding the allowable axis load is applied, the bearing or shaft may be damaged.
For details of the allowable axis load, see “MOUNTING A SERVO MOTOR” in FANUC AC SERVO MOTOR αi-B/αi series DESCRIPTIONS(B-65262EN).

Radial load	Axial load	(Reference) Front bearing specification
5880[N] (600 [kgf])	1960[N] (200 [kgf])	6314 6312(With brake)

Shaft run-out precision

The shaft run-out precision is indicated below.
For details of the shaft run-out precision, see “MOUNTING A SERVO MOTOR” in FANUC AC SERVO MOTOR αi-B/αi series DESCRIPTIONS(B-65262EN).

Shaft dia. run-out	Faucet joint run-out	Mounting face run-out
0.06mm or less	0.06mm or less	0.08mm or less

© MyFANUC 2D51CC9CD8564E3B8C4DE377C2D11C41

4 Built-In Brake

This chapter explains the specifications of built-in brakes and gives cautions.
The motor with a built-in brake differs from that with no brake in outside dimensions. For the outside dimensions, see the Subsection 3, “Outline Drawings.”

Brake specifications

The specifications of built-in brakes are listed below.

Motor Model		Unit	αiS150/3000-B αiS150/3000HV-B
Brake torque		Nm	150
		kgf･cm	1530
Response time	Release	msec	360
	Hold	msec	60
Power supply	Voltage	V	DC24V(±10%)
	Current	A	2.5
	Wattage	W	60
Weight increase		kg	About 20
Moment of inertia increase		$kg･m^2$	0.0010
		$kg･cm･s^2$	0.010

The values shown above are standard values at 20°C.

© MyFANUC 2D51CC9CD8564E3B8C4DE377C2D11C41

Brake connectors

The following shows the shape and pin arrangement of the brake connectors.

Manufacture: Japan Aviation Electronics Industry
Manufacturer specification: JN2AS04MK2-R

This connector alone is water-proof.
The shape and pin layout of the connector are shown below.

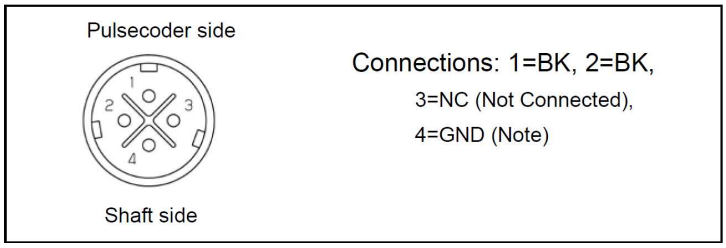

BK indicates a power supply (24 VDC, 0 VDC) for the brake. The brake is nonpolarized.

NOTE
Since pin 4 is connected to the brake cabinet, it can be used when the shield wire of a brake cable needs to be connected.

© MyFANUC 2D51CC9CD8564E3B8C4DE377C2D11C41

Connection of the Brake

Configure a brake circuit by referencing the following brake connection diagrams and the circuit parts shown in the following section.

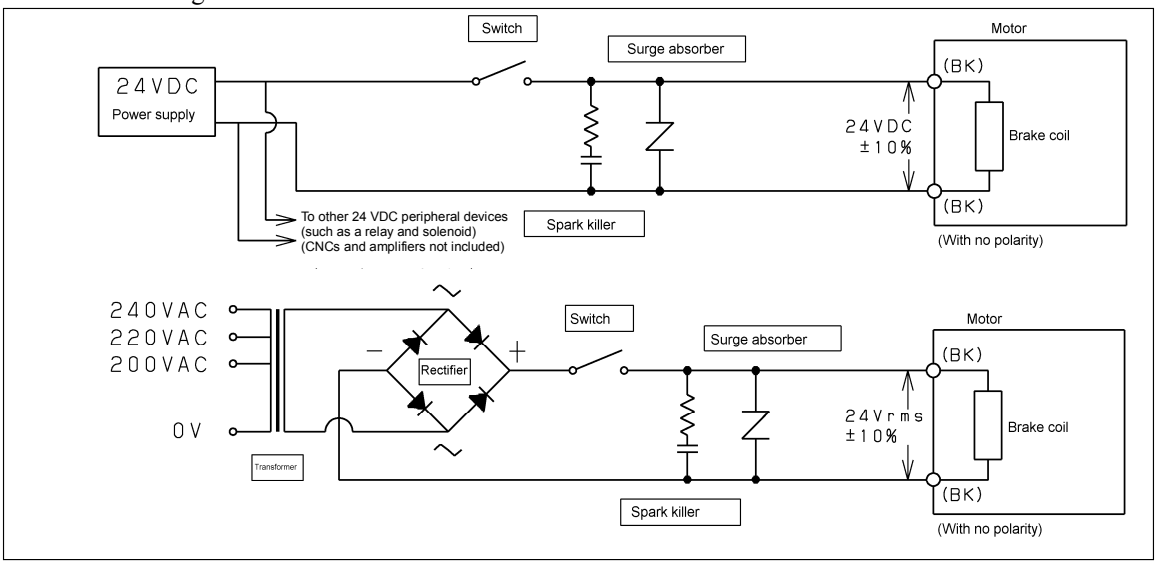

1 Use 24 VDC as power for the brake of the FANUC AC servo motor αi-B/αi series. Power produced by full-wave rectification after transforming commercial power (50 Hz/60 Hz) is also available.
2 Use a power supply separated from the 24 V power supply for the CNC and amplifier as the power supply for the brake. If the control power supply is also used for the brake, a CNC or amplifier malfunction or another danger may occur. The power supply for a relay, solenoid, or another peripheral device can be used for the brake. Be careful of the power capacity and changes in voltage due to changes in load.
3 For full-wave rectification, transform the secondary side voltage during energization of the brake into approximately 29 VAC by taking voltage drop in the rectifier or cable into account. In this case, check the power capacity and power voltage fluctuations sufficiently and then make sure the fluctuations of the voltage applied to the brake during energization falls within 24 Vrms ±10%. Switch the transformer's primary side input to a desired position such as 100-110-120 VAC or 200-220-240 VAC.
4 Because the brake is an inductive load, the durability of the switch's contact declines compared with a resistive load. Use an contact with sufficient capacity and confirm the durability of the switch's contact practically.
5 If plural brakes are driven, use the separated circuits for each brake except a power supply.
6 You can use either positive or negative power pin to connect the brake because the brake coil is nonpolarized.
7 Use a shielded cable as required.

© MyFANUC 2D51CC9CD8564E3B8C4DE377C2D11C41

Parts for brake circuits

Configure a brake circuit by referencing the following parts.

Name	Model No.	Name of Manufacturer	Specifications	FANUC Procurement Dwg. No.
Surge absorber	ERZV20D820	Panasonic Corporation	Varistor voltage 82V Max. allowable voltage 50VAC	-
Spark killer	XEB0105	OKAYA ELECTRIC IND. CO., LTD.	0.5μF / 10Ω Withstand voltage 250V	-
Switch	LY2	OMRON Corporation	Rated load capacity (resistance load) 110VAC 10A / 24VDC 10A	-
Rectifier	D3SB60 (Note)	SHINDENGEN ELECTRIC MFG. CO., LTD.	Withstand voltage 400 V min. Maximum output current: 2.3 A (with no fin)	A06B-6050-K112

NOTE

Use a radiator fin. In addition, use one brake axis per rectifier.

© MyFANUC 2D51CC9CD8564E3B8C4DE377C2D11C41

5 Connectors for the brake

Connectors for the brake

This connector is water-proof. It is connected by soldering, so no special tool is required.
Consider soldering, cable clamp, and voltage drop. Also note that there are restrictions. The connector for the 24-V brake does not conform to the IEC60034 standard.

Specifications of connectors for brake

		Japan Aviation Electronics Industry	Hirose Electric
Connector specifications	Straight type	JN2DS04FK2-R (Japan Aviation Electronics Industry) A06B-6114-K213#S (FANUC specification)	HR34B-12WPD-4S (Hirose Electric) HR34B-12WPE-4S (Hirose Electric)
	Right angle	JN2FS04FK2-R (Japan Aviation Electronics Industry) A06B-6114-K213#E (FANUC specification)	HR34B-12WLPD-4S (Hirose Electric) HR34B-12WLPE-4S (Hirose Electric)
Applicable wire size		AWG#16 or less (1.25mm^2 or less) * Solder pot diameter ϕ1.9	
Insulation external diameter		ϕ2.7 or less	
Compatible cable O.D.		ϕ6.5 to 8.0	ϕ5.7 to 7.3:HR34B-12WPD-4S HR34B-12WLPD-4S
			ϕ6.5 to 8.0:HR34B-12WPE-4S HR34B-12WLPE-4S
Example of applicable wire		300-V two-conductor vinyl heavy-duty power cord cable VCTF (JIS C 3306) or equivalent	
Applicable wire size and cable length		0.75mm^2 (AWG#18) when cable length 30 m or less 1.25mm^2 (AWG#16) when cable length 50 m or less	

© MyFANUC 2D51CC9CD8564E3B8C4DE377C2D11C41

Japan Aviation Electronics Industry

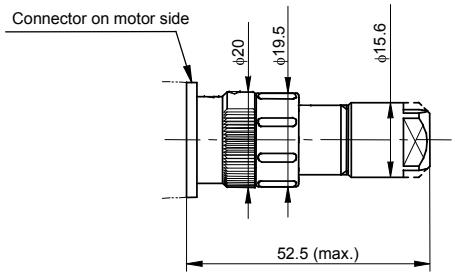

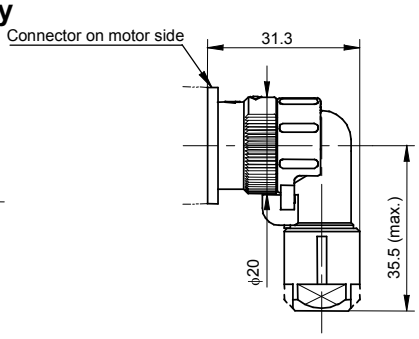

Straight type　　Right angle type

Hirose Electric

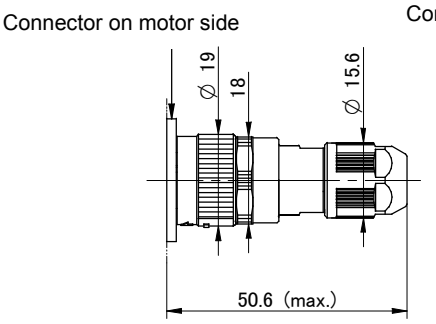

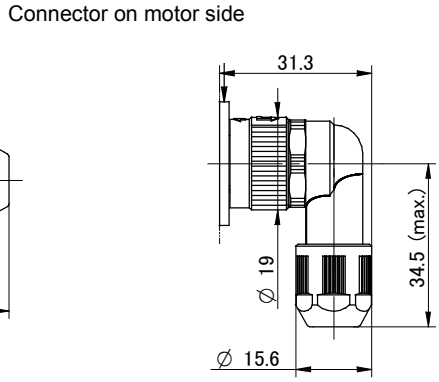

Straight type　Right angle type

⚠ CAUTION

1 The same body is used for the brake and fan connectors. They differ in the key position to prevent an improper insertion.

2 If the cable length is longer than or equal to 50 m, take measures such as installation of repeaters so that the sum of wire resistance (for both ways) becomes 1.5Ω or less.

				TITLE AC SERVO MOTOR αi–B series	
01	16.09.15	Fukushima	Newly designed	DRAW. No. B-65262EN/10-02	CUST.
Ed.	Date	Design.	Description	FANUC CORPORATION	SHEET 15/16

© MyFANUC 2D51CC9CD8564E3B8C4DE377C2D11C41

6 Others

The items that are not mentioned in this description correspond to the former αiS150/3000-B, αiS150/3000HV-B,.
Please refer to FANUC AC SERVO MOTOR αi–B / αi series DESCRIPTIONS B-65262EN.

© MyFANUC 2D51CC9CD8564E3B8C4DE377C2D11C41

FANUC AC SERVO MOTOR αi/αi-B series
Alteration of parallel key of Φ24 straight shaft

1. Type of applied technical documents

Name	FANUC AC SERVO MOTOR
Spec. No. /Version	B-65262EN/10-03

2.Summary of Change

Group	Name	New, Add, Correct, Delete,	Applicable Data
Basic Function			
Optional Function			
Unit			
Maintenance Parts			
Notice			
Correction			
Another	Alteration of parallel key	Correct	Nov. 2016

				TITLE AC SERVO MOTOR αi, αi-B series Alteration of parallel key for the power	
01	16.10.28	G.Ren	Newly designed	DRAW. No. B-65262EN/10-03	CUST.
Ed.	Date	Design.	Description	FANUC CORPORATION	SHEET 1/2

© MyFANUC 2D51CC9CD8564E3B8C4DE377C2D11C41

GENERAL

The parallel key and keyway of φ24 straight shaft of AC SERVO MOTOR αi/αi-B series is changed to 42mm from 45mm.

The servo motor that used new parallel key is same with before when install in machine.

Applicable data : Nov-2016

THE TARGET MOTOR OF MODIFICATION

Following table shows the target motor of the modification.

Series	Compatible motor
αi series	αiS12/4000, αiS12/4000HV, αiS12/6000, αiS12/6000HV
αi-B series	αiS12/4000-B, αiS12/4000HV-B, αiS12/6000-B, αiS12/6000HV-B

SHAFT SHAPE DETAILS

・φ24 straight shaft with key way (standard)

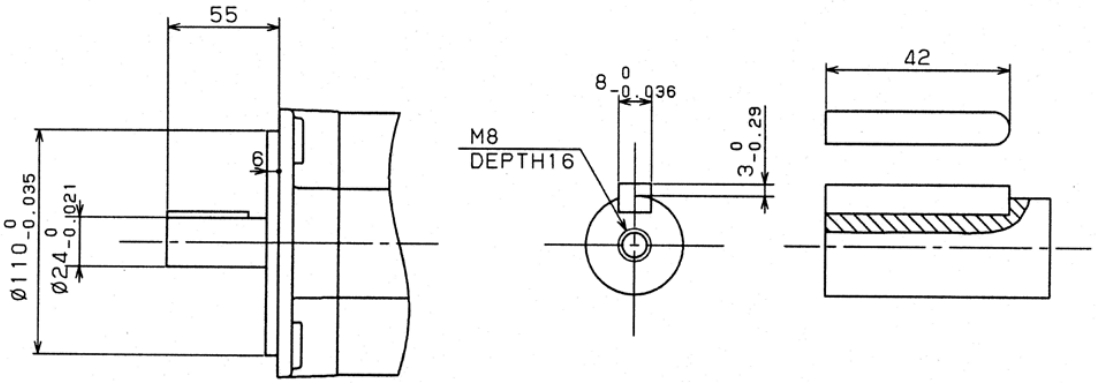

・φ24 straight shaft with key way (with a brake)

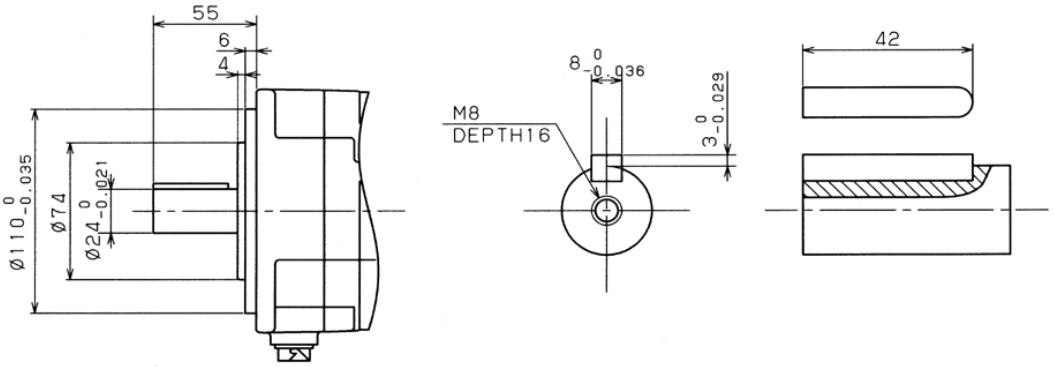

				TITLE AC SERVO MOTOR αi, αi-B series Alteration of parallel key for the power	
01	16.10.28	G.Ren	Newly designed	DRAW. No. B-65262EN/10-03	CUST.
Ed.	Date	Design.	Description	FANUC CORPORATION	SHEET 2/2

© MyFANUC 2D51CC9CD8564E3B8C4DE377C2D11C41

The risk of the motor being rotated by external force

1.Type of applied technical documents

Name	FANUC SERVO AMPLIFIER α*i*-B series DESCRIPTIONS FANUC SERVO AMPLIFIER β*i*-B series DESCRIPTIONS FANUC SERVO MOTOR α*i*-B/β*i* series DESCRIPTIONS FANUC SERVO MOTOR α*i*-B/β*i* series DESCRIPTIONS FANUC SYNCHRONOUS BUILT-IN SERVO MOTOR D*i*S series DESCRIPTIONS FANUC SYNCHRONOUS BUILT-IN SERVO MOTOR D*i*S-B series DESCRIPTIONS FANUC LINEAR MOTOR L*i*S series DESCRIPTIONS FANUC SYNCHRONOUS BUILT-IN SPINDLE MOTOR B*i*S series DESCRIPTIONS
Spec.No./Ed.	B-65412EN/02-11 B-65422EN/02-10 B-65262EN/10-04 B-65302EN/08-03 B-65332EN/03-09 B-65492EN/01-02 B-65382EN/05-08 B-65342EN/02-02

2.Summary of Change

Group	Name/Outline	New, Add, Correct, Delete	Applicable Date
Basic			
Optional Function			
Unit			
Maintenance Parts			
Notice	The risk of the motor being rotated by external force		
Correction			
Another			

Ed.	Date	Design	Description
Date	18.05.24	Design Y.Matsumoto	Check / Apprv.

Title	The risk of the motor being rotated by external force
Draw No.	B-65412EN/02-11, B-65422EN/02-10, B-65262EN/10-04, B-65302EN/08-03 B-65332EN/03-09, B-65492EN/01-02, B-65382EN/05-08, B-65342EN/02-02

FANUC CORPORATION

© MyFANUC 2D51CC9CD8564E3B8C4DE377C2D11C41

SAFETY PRECAUTIONS

This "Safety Precautions" section describes the precautions which must be observed to ensure safety when using FANUC motors and amplifiers. For proper use, understand "the risk of the motor being rotated by external force" well.

WARNING

Check that the motor is not rotated by external force at emergency stop state or alarm state.

For servo amplifiers, a dynamic break circuit drives at emergency stop state or alarm state.
If the dynamic break circuit drives and the motor is rotated by external force, servo amplifiers and the dynamic break module will produce heat abnormally, then, possibly cause a fire.

This also applies to driving a synchronous spindle motor with a spindle amplifier.
If the synchronous spindle motor is rotated by external force at alarm state, the sub module SM will produce heat abnormally, then, possibly cause a fire.

				Title. The risk of the motor being rotated by external force	
				Draw.No.. B-65412EN/02-11, B-65422EN/02-10, B-65262EN/10-04, B-65302EN/08-03 B-65332EN/03-09, B-65492EN/01-02, B-65382EN/05-08, B-65342EN/02-02	CUST.
Edit	Date	Design	Description	FANUC CORPORATION	Sheet. 2/2

© MyFANUC 2D51CC9CD8564E3B8C4DE377C2D11C41

FANUC AC SERVO MOTOR αi –B series DESCRIPTIONS
αiS 300-B～αiS 1500HV-B (straight shaft type)

1. Type of applied technical documents

Name	FANUC AC SERVO MOTOR αi –B series DESCRIPTIONS
Spec. No. / Version	B-65262EN/10-05

2.Summary of Change

Group	Name	New, Add, Correct, Delete,	Applicable Date
Basic Function	Straight shaft type	new	2018.08
Optional Function			
Unit			
Maintenance Parts			
Notice			
Correction			
Another	.		

© MyFANUC 2D51CC9CD8564E3B8C4DE377C2D11C41

1 Summary

This description is about following motors straight shaft type in FANUC AC SERVO MOTOR αi -Bseries.

αiS 300/2000-B, αiS 300/2000HV-B, αiS 300/3000HV-B
αiS 500/2000-B, αiS 500/2000HV-B, αiS 500/3000HV-B
αiS 1000/2000HV-B, αiS 1000/3000HV-B, αiS 1500/3000HV-B

Modification from standard model is outline only.
For the other contents, refer to the following descriptions.

DESCRIPTIONS 「FANUC AC SERVO MOTOR αi-B, αi series」 B-65262EN

© MyFANUC 2D51CC9CD8564E3B8C4DE377C2D11C41

2 ORDERING SPECIFICATION NUMBER

The ordering specification numbers of the servo motors have the following format.

Models

αiS 300/2000-B, αiS 300/2000HV-B, αiS 300/3000HV-B
αiS 500/2000-B, αiS 500/2000HV-B, αiS 500/3000HV-B

A06B-2□□□-B△○▽

□□□

292:	Model αiS 300/2000-B
293:	Model αiS 300/2000HV-B
290:	Model αiS 300/3000HV-B
295:	Model αiS 500/2000-B
296:	Model αiS 500/2000HV-B
297:	Model αiS 500/3000HV-B

△

1 :	Straight shaft

○

1 :	With a fan, cylindrical roller bearing
5 :	With a fan, ball bearing

▽

0 :	Pulsecoder αiA 4000

Models

αiS 1000/2000HV-B, αiS 1000/3000HV-B, αiS 1500/3000HV-B

A06B-2□□□-B△○▽

□□□

098:	Model αiS 1000/2000HV-B
099:	Model αiS 1000/3000HV-B
097:	Model αiS 1500/3000HV-B

△

1 :	Straight shaft

○

1 :	With a fan

▽

0 :	Pulsecoder αiA 4000

© MyFANUC 2D51CC9CD8564E3B8C4DE377C2D11C41

3 Shaft Shape

This chapter presents shaft shape of the FANUC AC servo motors.

3.1 Model αiS 300/2000-B, αiS 300/2000HV-B, αiS 300/3000HV-B αiS 500/2000-B, αiS 500/2000HV-B, αiS 500/3000HV-B

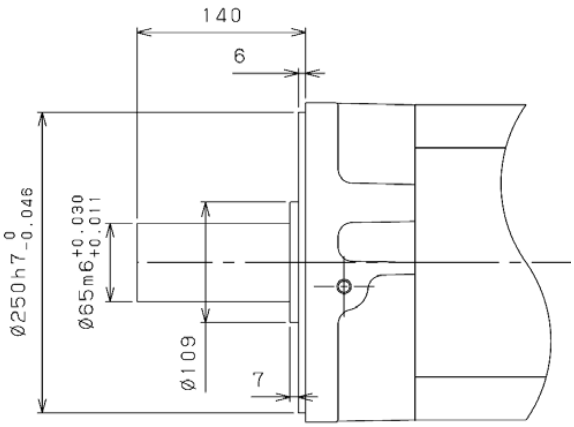

3.2 Model αiS 1000/2000HV-B, αiS 1000/3000HV-B, αiS 1500/3000HV-B

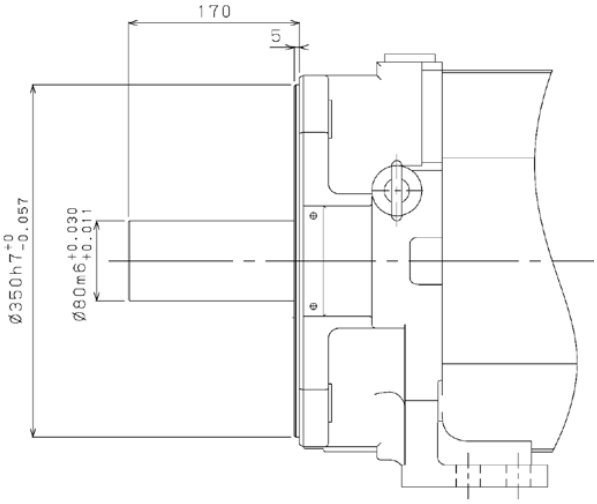

				TITLE AC SERVO MOTOR αi series αiS 300-B～αiS 1500HV-B (Straight Shaft type)	
01	19.July.18	Fukushima	Newly designed	DRAW. No. B-65262EN/10-05	CUST.
Ed.	Date	Design.	Description	FANUC CORPORATION	SHEET 4/4

© MyFANUC 2D51CC9CD8564E3B8C4DE377C2D11C41

Separate Pulsecoder αiA4000S

1. Type of applied technical documents

Name	FANUC AC SERVO MOTOR αi-B series FANUC AC SERVO MOTOR αi series DESCRIPTIONS
Spec.No./Ed	B-65262EN/10-06

2. Summary of Change

Group	Name/Outline	New, Add, Correct, Delete	Applicable Date
Basic			
Optional Function	Separate Pulsecoder αiA4000S	New	2018.10
Unit			
Maintenance Parts			
Notice			
Correction			
Another			

Ed.	Date	Design	Description
Date	18.09.28	Desig. Fukuda	Check / Apprv.

Title	Separate Pulsecoder αiA4000S
Draw No.	B-65262EN/10-06
FANUC CORPORATION	1/8

© MyFANUC 2D51CC9CD8564E3B8C4DE377C2D11C41

Outline

αiA4000S is shorter in length, has higher resolution, and is more reasonable comparing with previous separate Pulsecoder αA1000S. Configurations of a shaft, fit dimension of flange and configurations of mounting holes are compatible with αA1000S. Also, there is no change in output signals and it is not necessary to change parameters.

1. Type and designation

Separate Pulsecoder name	Resolutions	Allowable maximum speed	Absolute/ incremental	Ordering number
αiA4000S	4,000,000/rev	6,000min^{-1}	Absolute	A860-2052-T321

2. Specifications

Separate Pulsecoder αiA4000S

Item		Specification
Power voltage		5 [V] $^{+5\%}_{-10\%}$
Current consumption		Up to 0.2 [A]
Working temperature range		0 to +60 [℃]
Resolution		4,000,000 [/rev]
Maximum speed of rotation		6,000 [min^{-1}]
Input shaft moment of inertia		Up to 9.8×10^{-3} [kg・m^2]
Input shaft startup torque		Up to 0.098 [N・m]
Input shaft allowable load	Radial	98 [N]
	Axial	49 [N]
Shaft diameter run-out		0.02×10^{-3} [m]
Structure		Dust-proof, drip-proof(IP65 or equivalent: when water-proof connector is fitted)
Vibration resistance acceleration		5 [G] (50 to 2,000 [Hz])
Mass		Approx. 0.6 [kg]

© MyFANUC 2D51CC9CD8564E3B8C4DE377C2D11C41

3. Connecting

3.1 Connector

The connector of the αiA4000S is water-proof when engaged with the cable connector.

3.2 Layout of Connector Pins of αiA4000S

The layout of connector pins is shown below.

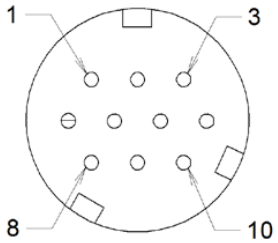

Signal name	Pin No.
SD *SD	2 1
REQ *REQ	6 5
+5V 0V	8,9 7,10
FG +6V	3 4

© MyFANUC 2D51CC9CD8564E3B8C4DE377C2D11C41

3.3 Connecting to a Separate detector interface unit

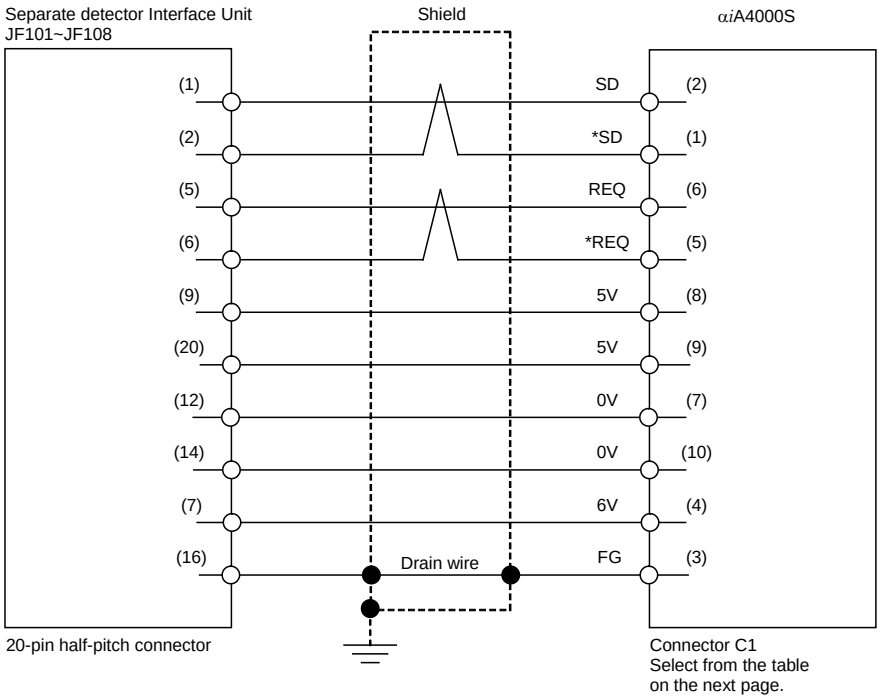

- Cable material specifications

Signal name	Cable length: 28m or less	Cable length: 50m or less
5V, 0V, 6V	0.3mm^2 x 5 Strand configuration 12/0.18 or 60/0.08 Insulation outer diameter is less than □1.5mm	0.5mm^2 x 5 Strand configuration 20/0.18 or 104/0.08 Insulation outer diameter is less than □1.5mm
SD, *SD, REQ, *REQ	0.18mm^2 or more Twisted-pair wire Insulation outer diameter is less than □1.5mm	0.18mm^2 or more Twisted-pair wire Insulation outer diameter is less than □1.5mm
Drain wire	0.15mm^2 or more	0.15mm^2 or more

© MyFANUC 2D51CC9CD8564E3B8C4DE377C2D11C41

NOTE

1 The ground plate to which the shield is connected must be placed as close as possible to the Separate detector interface unit so that the distance between the ground plate and the Separate detector interface unit becomes shortest.

2 In case that the cable which is not recommended is used, the total resistance of 5V and 0V must be less than 2Ω.

1 Sensor side connector can accept maximum 0.5mm^2 (wire construction 20/0.18 or 104/0.08,diameter ϕ1.5 or less) wire and sheath diameter is from ϕ5.7 to ϕ8.0. In case of using thicker wire or cable, the measures described below is taken.

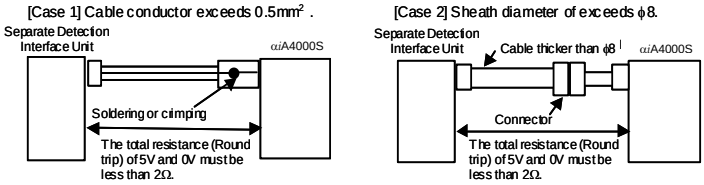

- Connector C1

Connection type	Manufacturer	Connector type	Connector specification (Manufacturer)	Contact specification (Manufacturer)	Connector kit specification (FANUC)
Crimp type	Japan Aviation Electronics Industry, LTD	Straight plug	JN2DS10SL□ (□ is "1" or "2";NOTE 1)	JN1-22-22S	A06B-6114-K204#S (Including the contact)
		Angle plug	JN2FS10SL□ (□ is "1" or "2";NOTE 1)		A06B-6114-K204#E (Including the contact)
	Hirose Electric, Co., LTD	Straight plug	HR34B-12WP△-10SC (△ is "A" or "B"; NOTE 2)	HR34B-SC1	----------
		Angle plug	HR34B-12WLP△-10SC (△ is "A" or "B"; NOTE 2)		----------
Solder type	Hirose Electric, Co., LTD	Straight plug	HR34B-12WP△-10S (△ is "A" or "B"; NOTE 2)	----------	A06B-6114-K205#S
		Angle plug	HR34B-12WLP△-10S (△ is "A" or "B"; NOTE 2)		A06B-6114-K205#E

NOTE

1 The "□" portion in the connector specifications is selected from the outer diameter of the cable sheath.
1: Compatible cable O.D. ϕ5.7 to ϕ7.3
2: Compatible cable O.D. ϕ6.5 to ϕ8.0

2 The "△" portion in the connector specifications is selected from the outer diameter of the cable sheath.
A: Compatible cable O.D. ϕ5.7 to ϕ7.3
B: Compatible cable O.D. ϕ6.5 to ϕ8.0

© MyFANUC 2D51CC9CD8564E3B8C4DE377C2D11C41

- Recommended cable

Recommended cable specification	Description	Manufacturer	Manufacturer specification	Crimp tool specification
A66L-0001-0479	Flexible cable 28m or less	Hitachi Metals, Ltd.	UL20276-SB(FLEX) 5×23AWG+2P×25AWG	A06B-6114-K201#JN1E (FANUC specification) CT150-2-JN1-E (Japan Aviation Electronics Industry specification)
A66L-0001-0488	Flexible cable 50m or less	Hitachi Metals, Ltd.	UL20276-SB(FLEX) 5×23AWG+4P×25AWG	A06B-6114-K201#JN1D (FANUC specification) CT150-2-JN1-D (Japan Aviation Electronics Industry specification)

© MyFANUC 2D51CC9CD8564E3B8C4DE377C2D11C41

4. Outline drawing

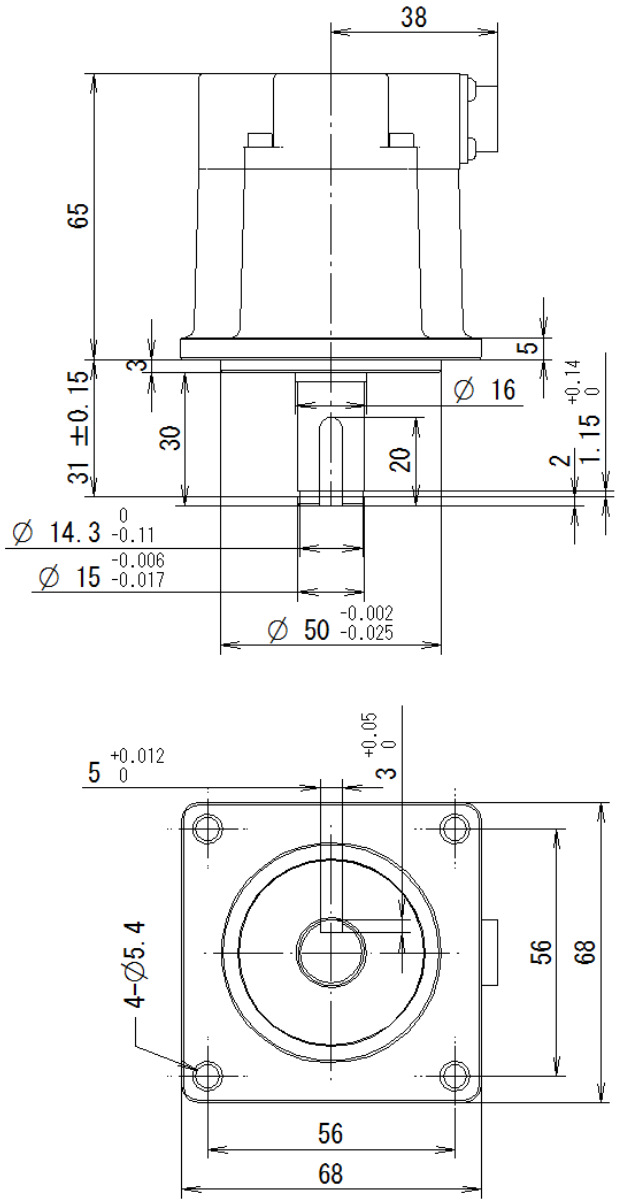

Fig. 4.1 Pulsecoder αiA4000S

Note)

Dimensions of a shaft, including key-chase, fit dimension of flange and configurations of mounting holes are the same as separate Pulsecoder αA1000S.

				Title. Separate Pulsecoder αiA4000S	
01	18.09.28	M. Fukuda	New design	Draw.No.. B-65262EN/10-06	CUST.
Edit	Date	Design	Description	FANUC CORPORATION	Sheet. 7/8

© MyFANUC 2D51CC9CD8564E3B8C4DE377C2D11C41

5. Cautions

Pay attention to the following items in using the separate Pulsecoder.

- In order to use the separate Pulsecoder, it is necessary to increase the machine rigidity between servo motor and separate Pulsecoder, and make the machine structure less backlash. If the machine rigidity is low or backlash exists, vibration, or over shoot is likely to occur.
- When the separate Pulsecoder is used, the influence of gear, ball screw pitch error or table inclination is decreased and the position accuracy will be increased, but the smoothness may deteriorate due to deficiency of the machine rigidity between the servo motor and the separate Pulsecoder, or large backlash.
- To connect the separate Pulsecoder to CNC, connect only the signals described in the connecting manual. When the other signal is connected, the unit may cause malfunctioning.
- When the key groove of the shaft is located at the position of the connector, which is regarded as the position of 0°, the origin of the separate type Pulsecoder is exists at 0° ±10°.

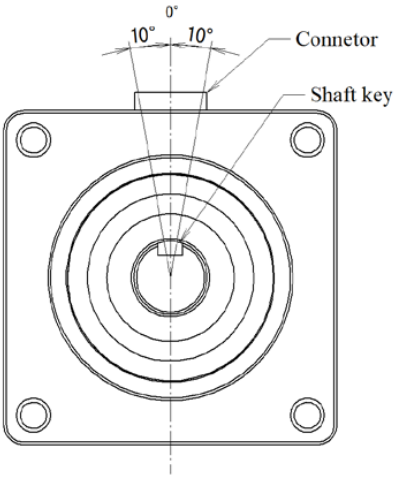

Fig 5.1 the shaft key groove

© MyFANUC 2D51CC9CD8564E3B8C4DE377C2D11C41

FANUC AC SERVO MOTOR αi-B/αi series DESCRIPTIONS
FANUC AC SERVO MOTOR βi-B/βi series DESCRIPTIONS
SERVO MOTOR with Battery-less PULSECODER

1. Type of applied technical documents

Name	FANUC AC SERVO MOTOR αi-B/αi series DESCRIPTIONS FANUC AC SERVO MOTOR βi-B/βi series DESCRIPTIONS
Spec.No./ Version	B-65262EN/10-07, B-65302EN/08-04

2.Summary of Change

Group	Name	New, Add, Correct, Delete,	Applicable Data
Basic Function			
Optional Function	Addition of servo motors with Battery-less PULSECODER * Refer to main chapter for the applicable models.	New	Sep. 2018
Unit			
Maintenance Parts			
Notice			
Correction			
Another			

© MyFANUC 2D51CC9CD8564E3B8C4DE377C2D11C41

1. SUMMARY

This document indicates the description of servo motors with Battery-less PULSECODER (αiA4000BL) in FANUC AC SERVO MOTOR FANUC αi-B, βi-B series.
Battery-less PULSECODER is selectable in following models.

αiS 2-B to αiS 500-B, αiS 2HV-B to αiS 1500HV-B, αiF 1-B to αiF 40-B, αiF 4HV-B to αiF 40HV-B
βiS 2-B to βiS 40-B, βiS 2HV-B to βiS 40HV-B, βiF 4-B to βiF 30-B
* βiS 0.2 to βiS 0.3, βiS 0.4-B to βiS 1.5-B, βiSc-B, αiS 2000HV,αiS 3000HV are not included.

These servo motors are based on specification of αi-B, βi-B servo motors with αiA4000 or βiA1000, basically.
Modifications are following items.

- Ordering specification number
- Feedback sensor
- Connectors on the cable side
- Applicable software and parameter setting
- PULSECODER maintenance

Please refer to FANUC AC SERVO MOTOR αi-B/αi series DESCRIPTION（B-65262EN）, FANUC AC SERVO MOTOR βi-B/βi series DESCRIPTION（B-65302EN）for the items which are not mentioned in this report.

CAUTION
The applicable system software and servo control software are necessary for driving a motor with Battery-less PULSECODER. Refer to section 5.1, 5.2 for detail.

CAUTION
There is a limit on the amount of multi-turn rotation in using the motor with Battery-less PULSECODER. Please refer to Section 7 for this limitation.

© MyFANUC 2D51CC9CD8564E3B8C4DE377C2D11C41

2. ORDERING SPECIFICATION NUMBER

The ordering specification number of servo motors with Battery-less PULSECODER is listed below.
(Servo motors with Battery-less PULSECODER are specified by -Byz8)

Models αiS 2-B～αiS 60-B（HV included）, αiF 1-B～αiF 40-B（HV included）

A06B-2xxx-Byz8#abcd

2xxx Ordering specification number is described on a table of this section.
* Every combination doesn't exist.

y
0 : Taper shaft
1 : Straight shaft
2 : Straight shaft with a key groove
3 : Taper shaft with a 24VDC brake
4 : Straight shaft with a 24VDC brake
5 : Straight shaft with a key way and a 24VDC brake

* Please do not select "Straight shaft with a key groove" when a large torque or acceleration rate is required.

z
0 : Standard
1 : With a fan
2 : With a high-torque reduced backlash brake
3 : With a high-torque reduced backlash brake and a fan

* When "With a high-torque reduced backlash brake" is selected (When z is selected 2 or 3), y is specified 3 to 5.

abcd

a 0 : Standard
b 0 : Standard
1 : IP67 specification
cd 00 : Standard
63 : ϕ14 taper/straight shaft (αiS2-B, αiF1-B to αiF2-B), ϕ24 taper shaft (αiS12-B)
70 : With a standard reduced backlash brake (αiS22-B to αiS40-B, αiF12-B to αiF40-B)

* When #abcd is #0000, #abcd is omitted.
* When #abcd is #ab70, x is specified 3 to 5.

© MyFANUC 2D51CC9CD8564E3B8C4DE377C2D11C41

Models αiS 150-B（HV included）

A06B-2xxx-Byz8

2xxx Ordering specification number is described on a table of this section.
* Every combination doesn't exist.

y 0 : Taper shaft
1 : Straight shaft
3 : Taper shaft with a 24VDC brake
4 : Straight shaft with a 24VDC brake

z 1 : With a fan

Models αiS 300-B ~ αiS 500-B（HV included）

A06B-2xxx-Byz8

2xxx Ordering specification number is described on a table of this section.
* Every combination doesn't exist.

y 0 : Taper shaft
1 : Straight shaft

z 1 : With a fan, cylindrical roller bearing
5 : With a fan, ball bearing

Models αiS 1000HV-B～αiS 1500HV-B

A06B-2xxx-Byz8

2xxx Ordering specification number is described on a table of this section.
* Every combination doesn't exist.

y 0 : Taper shaft
1 : Straight shaft

z 1 : With a fan

© MyFANUC 2D51CC9CD8564E3B8C4DE377C2D11C41

Models βiS 2-B～βiS 40-B (HV included), βiF 4-B～βiF 30-B

A06B-2xxx-By08#abcd

2xxx Ordering specification number are described on a table of this section.
* Every combination doesn't exist.

y
0 : Taper shaft
1 : Straight shaft
2 : Straight shaft with a key groove
3 : Taper shaft with a 24VDC brake
4 : Straight shaft with a 24VDC brake
5 : Straight shaft with a key way and a 24VDC brake

* Please do not select "Straight shaft with a key groove" when a large torque or acceleration rate is required.

abcd

a 0 : Standard
b 0 : Standard
1 : IP67 specification
cd 00 : Standard
63 : ϕ14 taper/straight shaft (βiS 2-B)
70 : Reduced backlash brake (βiS 22-B to βiS 40-B, βiF 12-B to βiF 30-B)

* When #abcd is #0000, #abcd is omitted.
* When #abcd is #ab70, x is specified 3 to 5.

© MyFANUC 2D51CC9CD8564E3B8C4DE377C2D11C41

The following table list shows allowable combinations of a number in alphabet of ordering specification number.

αiS-B series（200V） A06B-2xxx-Byz8#abcd

Alphabet in Specification No. / Servo motor model	2xxx	y						z				a	b		cd		
		0	1	2	3	4	5	0	1	2	3	0	0	1	00	63	70
αiS 2/5000-B	2212	✓	✓	✓	✓	✓	✓	✓	-	-	-	✓	✓	✓	✓	✓	-
αiS 2/6000-B	2218	✓	✓	✓	✓	✓	✓	✓	-	-	-	✓	✓	✓	✓	✓	-
αiS 4/5000-B	2215	✓	✓	✓	✓	✓	✓	✓	-	-	-	✓	✓	✓	✓	-	-
αiS 4/6000-B	2210	✓	✓	✓	✓	✓	✓	✓	-	-	-	✓	✓	✓	✓	-	-
αiS 8/4000-B	2235	✓	✓	✓	✓	✓	✓	✓	-	-	-	✓	✓	✓	✓	-	-
αiS 8/6000-B	2232	✓	✓	✓	✓	✓	✓	✓	-	-	-	✓	✓	✓	✓	-	-
αiS 12/4000-B	2238	✓	✓	✓	✓	✓	✓	✓	-	-	-	✓	✓	✓	✓	✓	-
αiS 12/6000-B	2230	✓	✓	✓	✓	✓	✓	✓	-	-	-	✓	✓	✓	✓	✓	-
αiS 22/4000-B	2265	✓	✓	✓	✓	✓	✓	✓	-	-	-	✓	✓	✓	✓	-	✓
αiS 22/6000-B	2262	✓	✓	✓	✓	✓	✓	✓	-	-	-	✓	✓	✓	✓	-	✓
αiS 30/4000-B	2268	✓	✓	✓	✓	✓	✓	✓	-	-	-	✓	✓	✓	✓	-	✓
αiS 40/4000-B	2272	✓	✓	✓	✓	✓	✓	✓	-	-	-	✓	✓	✓	✓	-	✓
		-	-	-	✓	✓	✓	-	-	✓	-	✓	✓	✓	✓	-	-
αiS 50/2000-B	2042	✓	✓	-	-	-	-	✓	-	-	-	✓	✓	✓	✓	-	-
		-	-	-	✓	✓	-	-	-	✓	-	✓	✓	✓	✓	-	-
αiS 50/3000-B	2275	✓	✓	-	-	-	-	✓	✓	-	-	✓	✓	✓	✓	-	-
		-	-	-	✓	✓	-	-	-	✓	✓	✓	✓	✓	✓	-	-
αiS 60/2000-B	2044	✓	✓	-	-	-	-	✓	-	-	-	✓	✓	✓	✓	-	-
		-	-	-	✓	✓	-	-	-	✓	-	✓	✓	✓	✓	-	-
αiS 60/3000-B	2278	✓	✓	-	-	-	-	✓	✓	-	-	✓	✓	✓	✓	-	-
		-	-	-	✓	✓	-	-	-	✓	✓	✓	✓	✓	✓	-	-

* When #abcd is #0000, #abcd is omitted.

* When z is 2 or 3, y is specified 3 to 5. When z is 1 or 3, b is specified 0.

Alphabet in Specification No. / Servo motor model	2xxx	y				z	
		0	1	3	4	1	5
αiS 150/3000-B	2026	✓	✓	✓	✓	✓	-
αiS 300/2000-B	2292	✓	✓	-	-	✓	✓
αiS 500/2000-B	2295	✓	✓	-	-	✓	✓

© MyFANUC 2D51CC9CD8564E3B8C4DE377C2D11C41

αiS-B series（400V） A06B-2xxx-Byz8#abcd

Alphabet in Specification No. / Servo motor model	2xxx	y						z				a	b		cd		
		0	1	2	3	4	5	0	1	2	3	0	0	1	00	63	70
αiS 2/5000HV-B	2213	✓	✓	✓	✓	✓	✓	✓	-	-	-	✓	✓	✓	✓	✓	-
αiS 2/6000HV-B	2219	✓	✓	✓	✓	✓	✓	✓	-	-	-	✓	✓	✓	✓	✓	-
αiS 4/5000HV-B	2216	✓	✓	✓	✓	✓	✓	✓	-	-	-	✓	✓	✓	✓	-	-
αiS 4/6000HV-B	2214	✓	✓	✓	✓	✓	✓	✓	-	-	-	✓	✓	✓	✓	-	-
αiS 8/4000HV-B	2236	✓	✓	✓	✓	✓	✓	✓	-	-	-	✓	✓	✓	✓	-	-
αiS 8/6000HV-B	2233	✓	✓	✓	✓	✓	✓	✓	-	-	-	✓	✓	✓	✓	-	-
αiS 12/4000HV-B	2239	✓	✓	✓	✓	✓	✓	✓	-	-	-	✓	✓	✓	✓	✓	-
αiS 12/6000HV-B	2237	✓	✓	✓	✓	✓	✓	✓	-	-	-	✓	✓	✓	✓	✓	-
αiS 22/4000HV-B	2266	✓	✓	✓	✓	✓	✓	✓	-	-	-	✓	✓	✓	✓	-	✓
αiS 22/6000HV-B	2263	✓	✓	✓	✓	✓	✓	✓	-	-	-	✓	✓	✓	✓	-	✓
αiS 30/4000HV-B	2269	✓	✓	✓	✓	✓	✓	✓	-	-	-	✓	✓	✓	✓	-	✓
αiS 40/4000HV-B	2273	✓	✓	✓	✓	✓	✓	✓	-	-	-	✓	✓	✓	✓	-	✓
		-	-	-	✓	✓	✓	-	-	✓	-	✓	✓	✓	✓	-	-
αiS 50/2000HV-B	2043	✓	✓	-	-	-	-	✓	-	-	-	✓	✓	✓	✓	-	-
		-	-	-	✓	✓	-	-	-	✓	-	✓	✓	✓	✓	-	-
αiS 50/3000HV-B	2276	✓	✓	-	-	-	-	✓	✓	-	-	✓	✓	✓	✓	-	-
		-	-	-	✓	✓	-	-	-	✓	✓	✓	✓	✓	✓	-	-
αiS 60/2000HV-B	2045	✓	✓	-	-	-	-	✓	-	-	-	✓	✓	✓	✓	-	-
		-	-	-	✓	✓	-	-	-	✓	-	✓	✓	✓	✓	-	-
αiS 60/3000HV-B	2279	✓	✓	-	-	-	-	✓	✓	-	-	✓	✓	✓	✓	-	-
		-	-	-	✓	✓	-	-	-	✓	✓	✓	✓	✓	✓	-	-

* When #abcd is #0000, #abcd is omitted.

* When z is 2 or 3, y is specified 3 to 5. When z is 1 or 3, b is specified 0.

Alphabet in Specification No. / Servo motor model	2xxx	y				z	
		0	1	3	4	1	5
αiS 150/3000HV-B	2027	✓	✓	✓	✓	✓	-
αiS 300/2000HV-B	2293	✓	✓	-	-	✓	✓
αiS 300/3000HV-B	2290	✓	✓	-	-	✓	✓
αiS 500/2000HV-B	2296	✓	✓	-	-	✓	✓
αiS 500/3000HV-B	2297	✓	✓	-	-	✓	✓
αiS 1000/2000HV-B	2098	✓	✓	-	-	✓	-
αiS 1000/3000HV-B	2099	✓	✓	-	-	✓	-
αiS 1500/3000HV-B	2097	✓	✓	-	-	✓	-

© MyFANUC 2D51CC9CD8564E3B8C4DE377C2D11C41

αiF-B series（200V） A06B-2xxx-Byz8#abcd

Alphabet in Specification No. / Servo motor model	2xxx	y						z				a	b		cd		
		0	1	2	3	4	5	0	1	2	3	0	0	1	00	63	70
αiF 1/5000-B	2202	✓	✓	✓	✓	✓	✓	✓	-	-	-	✓	✓	✓	✓	✓	-
αiF 2/5000-B	2205	✓	✓	✓	✓	✓	✓	✓	-	-	-	✓	✓	✓	✓	✓	-
αiF 4/5000-B	2223	✓	✓	✓	✓	✓	✓	✓	-	-	-	✓	✓	✓	✓	-	-
αiF 8/3000-B	2227	✓	✓	✓	✓	✓	✓	✓	-	-	-	✓	✓	✓	✓	-	-
αiF 8/4000-B	2228	✓	✓	✓	✓	✓	✓	✓	-	-	-	✓	✓	✓	✓	-	-
αiF 12/4000-B	2243	✓	✓	✓	✓	✓	✓	✓	-	-	-	✓	✓	✓	✓	-	✓
αiF 22/3000-B	2247	✓	✓	✓	✓	✓	✓	✓	-	-	-	✓	✓	✓	✓	-	✓
αiF 22/4000-B	2248	✓	✓	✓	✓	✓	✓	✓	-	-	-	✓	✓	✓	✓	-	✓
αiF 30/4000-B	2253	✓	✓	✓	✓	✓	✓	✓	-	-	-	✓	✓	✓	✓	-	✓
αiF 40/3000-B	2257	✓	✓	✓	✓	✓	✓	✓	✓	-	-	✓	✓	✓	✓	-	✓
		-	-	-	✓	✓	✓	-	-	✓	✓	✓	✓	✓	✓	-	-

* When #abcd is #0000, #abcd is omitted.

* When z is 2 or 3, y is specified 3 to 5. When z is 1 or 3, b is specified 0.
When z is 1, it is not possible to specify y 3 to 5.

αiF-B series（400V） A06B-2xxx-Byz8#abcd

Alphabet in Specification No. / Servo motor model	2xxx	y						z				a	b		cd		
		0	1	2	3	4	5	0	1	2	3	0	0	1	00	63	70
αiF 4/5000HV-B	2225	✓	✓	✓	✓	✓	✓	✓	-	-	-	✓	✓	✓	✓	-	-
αiF 8/3000HV-B	2229	✓	✓	✓	✓	✓	✓	✓	-	-	-	✓	✓	✓	✓	-	-
αiF 8/4000HV-B	2220	✓	✓	✓	✓	✓	✓	✓	-	-	-	✓	✓	✓	✓	-	-
αiF 12/4000HV-B	2245	✓	✓	✓	✓	✓	✓	✓	-	-	-	✓	✓	✓	✓	-	✓
αiF 22/3000HV-B	2249	✓	✓	✓	✓	✓	✓	✓	-	-	-	✓	✓	✓	✓	-	✓
αiF 22/4000HV-B	2240	✓	✓	✓	✓	✓	✓	✓	-	-	-	✓	✓	✓	✓	-	✓
αiF 30/4000HV-B	2255	✓	✓	✓	✓	✓	✓	✓	-	-	-	✓	✓	✓	✓	-	✓
αiF 40/3000HV-B	2259	✓	✓	✓	✓	✓	✓	✓	✓	-	-	✓	✓	✓	✓	-	✓
		-	-	-	✓	✓	✓	-	-	✓	✓	✓	✓	✓	✓	-	-

* When #abcd is #0000, #abcd is omitted.

* When z is 2 or 3, y is specified 3 to 5. When z is 1 or 3, b is specified 0.
When z is 1, it is not possible to specify y 3 to 5.

© MyFANUC 2D51CC9CD8564E3B8C4DE377C2D11C41

βiS-B, βiF-B series（200V） A06B-2xxx-By08#abcd

Alphabet in Specification No. / Servo motor model	2xxx	y						a	b		cd			
		0	1	2	3	4	5	0	0	1	00	63	65	70
βiS 2/4000-B	2061	✓	✓	✓	✓	✓	✓	✓	✓	✓	✓	✓	-	-
βiS 4/4000-B	2063	✓	✓	✓	✓	✓	✓	✓	✓	✓	✓	-	-	-
βiS 8/3000-B	2075	✓	✓	✓	✓	✓	✓	✓	✓	✓	✓	-	-	-
βiS 12/2000-B	2077	✓	✓	✓	✓	✓	✓	✓	✓	✓	✓	-	-	-
βiS 12/3000-B	2078	✓	✓	✓	✓	✓	✓	✓	✓	✓	✓	-	-	-
βiS 22/2000-B	2085	✓	✓	✓	✓	✓	✓	✓	✓	✓	✓	-	-	✓
βiS 22/3000-B	2082	✓	✓	✓	✓	✓	✓	✓	✓	✓	✓	-	-	✓
βiS 30/2000-B	2087	✓	✓	✓	✓	✓	✓	✓	✓	✓	✓	-	-	✓
βiS 40/2000-B	2089	✓	✓	✓	✓	✓	✓	✓	✓	✓	✓	-	-	✓
βiF 4/3000-B	2051	✓	✓	✓	✓	✓	✓	✓	✓	✓	✓	-	-	-
βiF 8/2000-B	2052	✓	✓	✓	✓	✓	✓	✓	✓	✓	✓	-	-	-
βiF 12/2000-B	2053	✓	✓	✓	✓	✓	✓	✓	✓	✓	✓	-	-	✓
βiF 22/2000-B	2054	✓	✓	✓	✓	✓	✓	✓	✓	✓	✓	-	-	✓
βiF 30/1500-B	2055	✓	✓	✓	✓	✓	✓	✓	✓	✓	✓	-	-	✓

* When #abcd is #0000, #abcd is omitted.

βiS-B series（400V） A06B-2xxx-By08#abcd

Alphabet in Specification No. / Servo motor model	2xxx	y						a	b		cd			
		0	1	2	3	4	5	0	0	1	00	63	65	70
βiS 2/4000HV-B	2062	✓	✓	✓	✓	✓	✓	✓	✓	✓	✓	✓	-	-
βiS 4/4000HV-B	2064	✓	✓	✓	✓	✓	✓	✓	✓	✓	✓	-	-	-
βiS 8/3000HV-B	2076	✓	✓	✓	✓	✓	✓	✓	✓	✓	✓	-	-	-
βiS 12/3000HV-B	2079	✓	✓	✓	✓	✓	✓	✓	✓	✓	✓	-	-	-
βiS 22/2000HV-B	2086	✓	✓	✓	✓	✓	✓	✓	✓	✓	✓	-	-	✓
βiS 22/3000HV-B	2083	✓	✓	✓	✓	✓	✓	✓	✓	✓	✓	-	-	✓
βiS 30/2000HV-B	2088	✓	✓	✓	✓	✓	✓	✓	✓	✓	✓	-	-	✓
βiS 40/2000HV-B	2090	✓	✓	✓	✓	✓	✓	✓	✓	✓	✓	-	-	✓

* When #abcd is #0000, #abcd is omitted.

© MyFANUC 2D51CC9CD8564E3B8C4DE377C2D11C41

3. FEEDBACK SENSOR

All motors contain PULSECODER (optical encoder) as a feedback sensor which detects position and velocity. Position information and alarm signals are output from PULSECODER. Since the PULSECODER is built in the motor the outline drawing is not described here. Refer to the outline drawing of the motor.
The specification of PULSECODER is described below.

PULSECODER type	Resolution [Division／rev]	Absolute/ incremental
αiA 4000BL	4,000,000	Absolute

The position is retained in Battery-less PULSECODER without battery when power supply of CNC is off.

4. Connectors on the Cable side

In this section, the specifications of the cable side connector connected to the motor are described. For the specifications of the connectors attached to the motor and the pin arrangement, refer to FANUC AC SERVO MOTOR αi-B/αi series Specifications（B-65262EN）, FANUC AC SERVO MOTOR βi-B/βi series Specifications（B-65302JA）.

4-1. Connect signal cables

For details of cable connection between servo amplifier and PULSECODER , refer to FANUC AC SERVO AMPLIFIER αi-B series Specifications（B-65412EN）, FANUC AC SERVO AMPLIFIER βi-B series Specifications（B-65422JA）. For Battery-less PULSECODER, it is not necessary to connect 6V line (It makes no problem if it is connected).

© MyFANUC 2D51CC9CD8564E3B8C4DE377C2D11C41

5. APPLICABLE SOFTWARE AND PARAMETER SETTING

> ⚠ **CAUTION**
> The system software and servo control software which supports Battery-less PULSECODER is necessary to drive a motor with Battery-less PULSECODER. Please refer to Section 5.1, 5.2 for detail.

5-1. Series and edition of applicable system software

The following system software is necessary to drive a motor with Battery-less PULSECODER.

CNC	Series	Edition
30*i*-B	G303, G313, G323, G333, G353	17.0 or later (plan)
	G30A, G31A, G32A, G33A, G35A	17.0 or later (plan)
31*i*-B	G403, G413, G453, G4G3,	17.0 or later (plan)
	G40A, G41A	17.0 or later (plan)
	G451	36.0 or later (plan)
	G441 (for transfer line)	21.0 or later (plan)
31*i*-B5	G423, G433, G483, G4H3	17.0 or later (plan)
	G42A, G43A	17.0 or later (plan)
	G481	36.0 or later (plan)
32*i*–B	G503, G513, G523	17.0 or later (plan)
	G50A, G51A	17.0 or later (plan)
	G521	36.0 or later (plan)
	G451 (for transfer line)	21.0 or later (plan)
35*i*–B	G601, G611	by the end of Feb., 2019
	G641 (for transfer line)	21.0 or later (plan)
Power Motion *i*-A	88H0	by the end of Apr., 2019
DSA-B	881R (EtherCAT I/F)	by the end of May, 2019
	881S (pulse input / analog voltage input I/F)	by the end of June, 2019
	881T (EtherCAT I/F supporting spindle drive)	by the end of May, 2019
	881U (HSSB I/F)	by the end of Aug., 2019
	881V (POWERLINK I/F)	by the end of July, 2019
0*i*-F	D4G2, D5G2, D6G2, D7G2	18.0 or later (plan)
	D4G1, D6G1	53.0 or later (plan)

© MyFANUC 2D51CC9CD8564E3B8C4DE377C2D11C41

5-2. Series and editions of applicable servo control software

The following servo control software is necessary to drive a motor with Battery-less PULSECODER.

CNC	Series	Edition
30*i*-B/31*i*-B/31*i*-B5/32*i*-B/35*i*-B	90J0	17.0 or later
Power Motion *i*-A	90JP	07.0 or later (plan)
DSA-B	90J3	09.0 or later (plan)
0*i*-F	90J5	02.0 or later (plan)
	90M0	08.0 or later (plan)
	90M8	08.0 or later (plan)

5-3. Parameter setting

Standard parameters for servo motor and the parameter setting as for the detector are the same with a motor with αiA4000, αiA32000 or βiA1000. Refer to PARAMETER MANUAL (B65270/09, Section 2.1) for detail.

© MyFANUC 2D51CC9CD8564E3B8C4DE377C2D11C41

6. PULSECODER MAINTENANCE

6-1. Ordering specification for maintenance

・PULSECODER : ordering specification

Motor model	Motor specification	PULSECODER : ordering specification	
αi-B series βi-B series	A06B-2□□□-B△○8#abcd (□△○abcd : see the Item "Ordering Specification Number")	A860-2050-T381	αi A4000BL

・Oldham's coupling : ordering specification

Motor model	Motor specification	Oldham's coupling: ordering specification
αi-B series βi-B series	A06B-2□□□-B△○8#abcd (□△○abcd : see the Item "Ordering Specification Number")	A290-0501-V535

6-2. Replacing PULSECODER

⚠ **CAUTION**

If the system software and servo control software which supports Battery-less PULSECODER is not applied, it is not possible to drive servo motors with Battery-less PULSECODER.
Please refer to Section 5.1, 5.2 for the series and edition of software which supports Battery-less PULSECODER.

PULSECODER is exchangeable in the same way as the battery backup type PULSECODER.
For details, please refer to FANUC AC SERVO MOTOR αi-B /αi series, FANUC AC SERVO MOTOR βi-B/βi series maintenance manual（B-65515EN）.
Reference point return is necessary in case of the servo motor with Battery-less PULSECODER like the case in the motor with battery backup type PULSECODER when PULSECODER is replaced.
In Battery-less PULSECODER, reference position return request is generated and BZAL does not occur, while BZAL occurs in addition to reference position return request in battery backup type PULSECODER.

© MyFANUC 2D51CC9CD8564E3B8C4DE377C2D11C41

7. Usage restriction

The movable range is within +/- 2000rev from the machine origin when Battery-less PULSECODER is used as a linear axis or rotation axis B type,
DS0300(reference position return request) and PW0000(power off request) occurs and reference position return is required in case that machine position excess the range above.

© MyFANUC 2D51CC9CD8564E3B8C4DE377C2D11C41

FANUC AC SERVO MOTOR αi-B/αi series DESCRIPTIONS
FANUC AC SERVO MOTOR βi-B/βi series DESCRIPTIONS

RoHS directive (RoHS 2) compliant and change of manufacturer's specification number for cable side power connector for □90size servo motor

1. Type of applied technical documents

Name	FANUC AC SERVO MOTOR αi-B/αi series DESCRIPTIONS FANUC AC SERVO MOTOR βi-B/βi series DESCRIPTIONS
Spec.No./ Version	B-65262EN/10, B-65302EN/08

2.Summary of Change

Group	Name	New, Add, Correct, Delete,	Applicable Data
Basic Function			
Optional Function			
Unit			
Maintenance Parts			
Notice			
Correction			
Another	RoHS directive (RoHS 2) compliant and change of manufacturer's specification number for cable side power connector for □90size servo motor		

				TITLE AC SERVO MOTOR αi-B/αi series AC SERVO MOTOR βi-B/βi series Specification change of power connector	
01	15. Mar.19	Arai	Newly designed	DRAW. No. B-65262EN/10-08 B-65302EN/08-06	CUST.
Ed.	Date	Design.	Description	FANUC CORPORATION	SHEET 1/2

© MyFANUC 2D51CC9CD8564E3B8C4DE377C2D11C41

1. SUMMARY

Change the manufacturer's specification number (model number) to comply with the European RoHS(*) Directive (RoHS 2) of the cable side power connector kits used in the □90 size of AC SERVO MOTOR αi-B/αi ,βi-B/βi series.

There is no change to the specification number of FANUC.

There is no change in the connector shape, function and performance. These connectors are compatible.

Connector kit	FANUC Specification number	Tyco Electronics Japan LLC Specification number(model number)	
		Before	After
Straight type	A06B-6114-K220#S	1473063-2	**2345834-2**
Right angle type	A06B-6114-K220#E	1473393-2	**2345832-2**

Straight type
(A06B-6114-K220#S)

Right angle type
(A06B-6114-K220#E)

The following motors use the connectors.

・αi-B/αi series.

αiF1/5000-B, αiF2/5000-B,αiS 2/5000-B, αiS 2/6000-B, αiS 4/5000-B, αiS 4/6000-B
αiS 2/5000HV-B, αiS 2/6000HV-B, αiS 4/5000HV-B, αiS 4/6000HV-B
αiF1/5000, αiF2/5000,αiS 2/5000, αiS 2/6000,αiS 4/5000,αiS 4/6000
αiS 2/5000HV, αiS 2/6000HV,αiS 4/5000HV, αiS 4/6000HV

・βi-B/βi series

βiS 2/4000-B,βiS 4/4000-B, βiS 2/4000HV-B,βiS 4/4000HV-B
βiSc 2/4000-B,βiSc 4/4000-B, βiSc 2/4000HV-B,βiSc 4/4000HV-B
βiS 2/4000,βiS 4/4000, βiS 2/4000HV,βiS 4/4000HV
βiSc 2/4000,βiSc 4/4000, βiSc 2/4000HV,βiSc 4/4000HV

(*) About the European RoHS Directive (RoHS 2)

The RoHS Directive is an EU directive on the restriction of the use of certain harmful substances such as electrical and electronic equipment.

As the RoHS Directive (RoHS 2) restricts the use of phthalate esters from July 2019, we will change the connector specifications to those containing no phthalate esters.

				TITLE AC SERVO MOTOR αi-B/αi series AC SERVO MOTOR βi-B/βi series Specification change of power connector	
01	15. Mar.19	Arai	Newly designed	DRAW. No. B-65262EN/10-08 B-65302EN/08-06	CUST.
Ed.	Date	Design.	Description	FANUC CORPORATION	SHEET 2/2

© MyFANUC 2D51CC9CD8564E3B8C4DE377C2D11C41

INDEX

<α>

αiF-B SERIES (200V) 64
αiF-B SERIES (400V) 75
αiS-B/αiS SERIES (200V) 15
αiS-B/αiS SERIES (400V) 36

<A>

ABOUT αi SERIES SERVO MOTORS....241
About characteristic curves and data sheet....11
About the Servo Motor Selection Data Table 207
Absolute-type Pulsecoder....141
Allowable Axis Load for a Servo Motor....219
Ambient Temperature, Humidity, Installation Height, and Vibration....226
Applicable Amplifiers....146
Approved specifications....181

<B>

Brake specifications 125
Built-In Brake 125

<C>

Calculating the acceleration torque 192
Calculating the dynamic brake stop distance 200
Calculating the load moment of inertia 189
Calculating the load torque 188
Calculating the motor speed....189
Calculating the Percentage duty cycle and ON time with the maximum cutting torque....198
Calculating the root-mean-square value of the torques 196
CAUTION....s-3
CAUTION LABEL s-6
Cautions in Mounting a Servo Motor....222
Cautions on use 131
Cautions when using a separate type Pulsecoder 144
Characteristic Curves and Data Sheet 11,248
Checking a Delivered Servo Motor and Storing a Servo Motor....216
CNC FUNCTIONS FOR USING THE SERVO MOTOR FOR THE SPINDLE OR LIVE TOOL....240
Combinations with servo amplifiers αiSV-B, αiSVP-B, and βiSV-B, βiSVSP-B 147
Combinations with servo amplifiers with αiSV, βiSV, and βiSVSP 155
Conditions for Approval Related to the IEC60034 Standard....179
Conditions for Selecting a Servo Motor....184
CONFIGURATION AND SELECTION....145
Connecting a brake....126
Connecting a cooling fan 135,272
Connecting a separate type Pulsecoder 142
Connecting a Servo Motor 145
Connecting Pulsecoder....140,277
Connection to a conduit hose 177,270
Connectors for power....167
Connectors for Power (Cable Side) (for Groups B and C)....266
Connectors for power (for Group B)....265
Connectors for power (for Group C)....265
Connectors for Power (Motor Side) (for Groups B and C)....265
Connectors for signals (for all αi-B/αi series models).162
Connectors for the brake 173
Connectors for the fan....175
Connectors on the Cable Side 161
Connectors required for approval....183
Cooling Fan....133
Cooling Fan Circuit....273
Cooling fan protection circuit 276
Cooling fan specifications....133,271
COOLING FANS 271

<D>

DATA FOR SELECTING THE αiPS....235
DEFINITION OF WARNING, CAUTION, AND NOTE s-1

<E>

Explanation of Items 210

<F>

Fastening the Shaft....218
Feature 2
FEEDBACK SENSOR 140
FEEDBACK SENSORS 277

<H>

HANDLING OF THE SERVO MOTOR....216
HANDLING, INSTALLATION, AND USE ENVIRONMENT OF THE MOTOR....215

<I>

αi-B SERIES (200V) 235
αi-B SERIES (400V) 236
In case that other electronics devices are in parallel with fan....272

<L>

LINEUP OF THE SERIES 1

<M>

Methods for coupling the shaft 216
Model αiS 1000/2000HV-B....112
Model αiS 1000/3000HV-B....115
Model αiS 1500/3000HV-B....118
Models αiS 100 to αiS 200 FAN, αiS 100HV to αiS 200HV FAN 258
Models αiS 2000 HV, αiS 3000 HV....122

© MyFANUC 2D51CC9CD8564E3B8C4DE377C2D11C41

Models αiS 22-B to αiS 60-B FAN, αiS 22HV-B to αiS 60HV FAN-B, αiF 12-B to αiF 40 FAN-B, αiF 12HV-B to αiF 40HV FAN-B 98
Models αiS 2-B, αiS 4-B, αiS 2HV-B, αiS 4HV-B, and αiF 1-B, αiF 2-B.....85
Models αiS 300-B, αiS 500-B, αiS 300HV-B, αiS 500HV-B 109
Models αiS 8-B, αiS 12-B, αiS 8HV-B, αiS 12HV-B, αiF 4-B, αiF 8-B, αiF 4HV-B, and αiF 8HV-B.....90
Models αiS150-B, αiS 150HV-B.....106
Motor Lineup 1
MOTOR SELECTION.....184
MOTOR SPECIFICATIONS.....10
MOUNTING A SERVO MOTOR.....216

<N>

NOTE.....s-5
NOTES ON USING THE SERVO MOTOR FOR LIVE TOOL APPLICATIONS 240
NOTES ON USING THE SERVO MOTOR FOR LIVE TOOL APPLICATIONS OF A MACHINE TOOL .237

<O>

ORDERING SPECIFICATION NUMBER.....4
ORDERING SPECIFICATION NUMBERS.....243
Other Notes on Axis Design.....220
Outline Drawings 84,257
Outline drawings of separate Pulsecoder 143
OUTPUT GRAPHS AND TORQUE GRAPHS (6000 [min^{-1}] MODELS).....238

<P>

POWER CONNECTORS 264
PREFACE p-1
Pulsecoder 140

<R>

Recommended Parts of Cooling Fan Circuit.....275
Reduced backlash brake.....130
Reducing the amount of brake axis fall.....132

<S>

SAFETY PRECAUTIONS S-1
Selecting a Motor.....187
Selecting the αiPS.....214
Separate Pulsecoder 142
Separate Pulsecoder specifications.....142
Separate Pulsecoder type and designation.....142
Separating and Disposing of a Servo Motor.....216
Servo motor selection data table 207
Shaft Run-out Precision of a Servo Motor 220
SHIPPING THE SERVO MOTOR BY AIR.....s-7
SPECIFICATIONS 1
SYSTEM CONFIGURATION 145

<T>

Terms 10
Types of motors to be approved.....179
Types of Pulsecoders and Designation.....140,277

<U>

Usage Considering Environmental Resistance.....226
USE ENVIRONMENT FOR SERVO MOTORS.....226

<W>

WARNING s-2

© MyFANUC 2D51CC9CD8564E3B8C4DE377C2D11C41

REVISION RECORD

Edition	Date	Contents
10	Apr., 2016	• Description of the electric shock caution label • Description of SHIPPING THE SERVO MOTOR BY AIR • Rewriting of the entire manual regarding the large-size models to cover the αi series servo motors with numbers 2XXX • Expansion of motor and amplifier combinations • Description of heat generation during high-speed rotation • Correction of parts for brake circuits • Correction of errors
09	Dec., 2014	• Rewriting of the names of αi series servo motors to αi-B series servo motors • Expansion of motor and amplifier combinations (seamless combinations) • Correction of errors
08	Dec., 2013	• Rewriting of the entire manual regarding the small- and medium-size models to cover the αi series servo motors with numbers 2XXX • Correction of errors
07	Aug., 2012	• Addition of models αiF 8/4000, αiF 22/4000 • Addition of models αiF 30HV, αiF 40HV, αiF 40HV (without FAN) • Increase in speeds of models αiF 4, αiF 12, αiF 30 • Correction of errors
06	Jun., 2010	• Addition of models αiS 4/6000 and αiS 12/6000 • Addition of models αiS 50/2000 and αiS 60/2000 • Addition of models αiS 300/3000HV, αiS 500/3000HV, αiS 1000/3000HV • Deletion of models αiS 50/3000 (without FAN) • Correction of errors
05	Sep., 2008	• Addition of models αiS 22/6000 and αiS 22/6000HV • Correction of errors
04	Jan., 2007	• Changing of model names of following series αis → αiS, αi → αiF • Addition of models αiS 2/6000 and αiS 8/6000 • Addition of high-torque brake (70Nm) • Addition of models αiS 100 with fan to αiS 200HV with fan • Addition of models αiS 2000HV to 3000HV • Correction of errors
03	Mar., 2003	• Addition of Servo motor αis series • Addition of Servo motor α(HV)is series • Deletion of Servo motor αMi series • Deletion of Servo motor αM(HV)i series • Deletion of Servo motor αCi series
02	Jun., 2002	• Addition of model α40i (with fan) • Addition of models αM50i, αM50i (with fan), αM100i, αM200i, αM300i, and αM500i • Addition of Servo motor α(HV)i series • Addition of Servo motor αM(HV)i series • Correction of errors
01	Jun., 2001	

© MyFANUC 2D51CC9CD8564E3B8C4DE377C2D11C41

B-65262EN/10

B-65262EN/10.06

© MyFANUC 2D51CC9CD8564E3B8C4DE377C2D11C41