# FANUC AC SERVO MOTOR βi-B series
# FANUC AC SERVO MOTOR βi series

# DESCRIPTIONS

B-65302EN/08

© FANUC CORPORATION, 2003

© MyFANUC DC7187A9420041B3806BC8E5C652D376

- No part of this manual may be reproduced in any form.
- All specifications and designs are subject to change without notice.


The products in this manual are controlled based on Japan's "Foreign Exchange and Foreign Trade Law". The export from Japan may be subject to an export license by the government of Japan.
Further, re-export to another country may be subject to the license of the government of the country from where the product is re-exported. Furthermore, the product may also be controlled by re-export regulations of the United States government.
Should you wish to export or re-export these products, please contact FANUC for advice.

The products are manufactured under strict quality control. However, when using any of the products in a facility in which a serious accident or loss is predicted due to a failure of the product, install a safety device.

In this manual we have tried as much as possible to describe all the various matters.
However, we cannot describe all the matters which must not be done, or which cannot be done, because there are so many possibilities.
Therefore, matters which are not especially described as possible in this manual should be regarded as "impossible".

© MyFANUC DC7187A9420041B3806BC8E5C652D376

# SAFETY PRECAUTIONS

This “Safety Precautions” section describes the precautions which must be observed to ensure safety when using FANUC AC servo motors.
Users of any servo motor model are requested to read this "Safety Precautions" carefully before using the servo motor.
The users are also requested to read this manual carefully and understand each function of the motor for correct use.
The users are basically forbidden to do any behavior or action not mentioned in the "Safety Precautions."
They are invited to ask FANUC previously about what behavior or action is prohibited.

This chapter is organized as follows:

DEFINITION OF WARNING, CAUTION, AND NOTE
WARNING
CAUTION
NOTE
CAUTION LABEL
SHIPPING THE SERVO MOTOR BY AIR

## DEFINITION OF WARNING, CAUTION, AND NOTE

This manual includes safety precautions for protecting the user and preventing damage to the machine. Precautions are classified into Warning and Caution according to their bearing on safety. Also, supplementary information is described as a Note. Read the Warning, Caution, and Note thoroughly before attempting to use the machine.

⚠ **WARNING**
Applied when there is a danger of the user being injured or when there is a damage of both the user being injured and the equipment being damaged if the approved procedure is not observed.

⚠ **CAUTION**
Applied when there is a danger of the equipment being damaged, if the approved procedure is not observed.

**NOTE**
The Note is used to indicate supplementary information other than Warning and Caution.

Those items described in CAUTION, if not observed, may lead to a serious result, depending on the situation. Each description of CAUTION provides important information. So, be sure to observe CAUTION.

- Read this manual carefully, and store it in a safe place.



© MyFANUC DC7187A9420041B3806BC8E5C652D376

# WARNING

**⚠ WARNING**

- **Be sure to ground a motor frame.**

To avoid electric shocks, be sure to connect the grounding terminal in the terminal box to the grounding terminal of the machine.

- **Before starting to connect a motor to electric wires, make sure they are isolated from an electric power source.**

A failure to observe this caution is very dangerous because you may get electric shocks.

- **Do not ground a motor power wire terminal or short-circuit it to another power wire terminal.**

A failure to observe this caution may cause electric shocks or a burned wiring.

* Some motors require a special connection such as a winding changeover. Refer to Subsection 1.3.3, "Outline Drawings" for details.

- **Assemble and install a power connector securely.**

If a power line is detached due to a failure in crimping or soldering, or a conductive area is exposed due to a failure in shell assembly, you may get electric shocks.

- **Do not touch a motor with a wet hand.**

A failure to observe this caution is very dangerous because you may get electric shocks.

- **Before touching a motor, shut off the power to it.**

Even if a motor is not rotating, there may be a voltage across the terminals of the motor.
Especially before touching a power supply connection, take sufficient precautions.
Otherwise you may get electric shocks.

- **Do not touch any terminal of a motor for a while (at least 20 minutes) after the power to the motor is shut off.**

High voltage remains across power line terminals of a motor for a while after the power to the motor is shut off. So, do not touch any terminal or connect it to any other equipment. Otherwise, you may get electric shocks or the motor and/or equipment may get damaged.

- **On the machine, install a stop device for securing safety.**

The brake built into the servo motor is not a stop device for securing safety. The machine may not be held if a failure occurs.

- **Do not enter the area under the vertical axis without securing safety.**

If a vertical axis drop occurs unexpectedly, you may be injured.

- **Fasten a motor firmly before driving the motor.**

If a motor is driven when the motor is not fastened firmly or is fastened insufficiently, the motor can tumble or is removed, resulting in a danger. If the motor mounting section is not sufficiently strong, the machine may be damaged or the user may be injured.

- **Do not get close to a rotary section of a motor when it is rotating.**

When a motor is rotating, clothes or fingers can be caught, resulting in an injury.



© MyFANUC DC7187A9420041B3806BC8E5C652D376

**⚠ WARNING**

- **Do not drive a motor with an object such as a key exposed.**

An object such as a key can be thrown away, resulting in an injury. Before rotating a motor, check that there is no object that is thrown away by motor rotation.

- **Do not apply a radial load exceeding the "allowable radial load".**

The shaft can break, and components can be thrown away. When the vertical axis is involved, a vertical axis drop can occur.

- **To drive a motor, use a specified amplifier and parameters.**

An incorrect combination of a motor, amplifier, and parameters may cause the motor to behave unexpectedly. This is dangerous, and the motor may get damaged.

- **Drive a motor at a load inertia moment ratio not higher than a prescribed level.**

If a dynamic brake is applied at a load inertia moment ratio higher than a prescribed level, abnormal heat generation may occur in a resistor element, resulting in an amplifier or dynamic brake module being burned or causing a fire.

- **Do not bring any dangerous stuff near a motor.**

Motors are connected to a power line, and may get hot. If a flammable is placed near a motor, it may be ignited, catch fire, or explode.

- **Be safely dressed when handling a motor.**

Wear safety shoes or gloves when handling a motor as you may get hurt on any edge or protrusion on it or electric shocks.

- **Use a crane or lift to move a motor from one place to another.**

A motor is heavy, so that if you lift a motor by hand, you may be exposed to various risks. For example, the waist can be damaged, and the motor can drop to injure you. Use equipment such as a crane as needed. (For the weight of a motor, see Chapter 1, "SPECIFICATIONS".)

## CAUTION

**⚠ CAUTION**

- **Do not touch a motor when it is running or immediately after it stops.**

A motor may get hot when it is running. Do not touch the motor before it gets cool enough. Otherwise, you may get burned.

- **Be careful not get your hair or cloths caught in a fan.**

Be careful especially for a fan used to generate an inward air flow.
Be careful also for a fan even when the motor is stopped, because it continues to rotate while the amplifier is turned on.

- **Install the components around a motor securely.**

If a component is displaced or removed during motor rotation, a danger can result.

- **Use the eyebolt of a motor to move the motor only.**

When a motor is installed on a machine, do not move the machine by using the eyebolt of the motor. Otherwise, the eyebolt and motor can be damaged.



© MyFANUC DC7187A9420041B3806BC8E5C652D376

## ⚠ CAUTION

- **Do not disassemble a motor.**

Disassembling a motor may cause a failure or trouble in it.
If disassembly is in need because of maintenance or repair, please contact a service representative of FANUC.
For pulse coder replacement, refer to the maintenance manual (B-65285EN or B-65325EN).

- **Do not machine and modify a motor.**

Do not machine and modify a motor in any case except when motor machining or modification is specified by FANUC. Modifying a motor may cause a failure or trouble in it.

- **Do not conduct dielectric strength or insulation test for a sensor.**

Such a test can damage elements in the sensor.

- **Be sure to connect motor cables correctly.**

An incorrect connection of a cable cause abnormal heat generation, equipment malfunction, or failure. Always use a cable with an appropriate current carrying capacity (or thickness). For how to connect cables to motors, refer to Subsection 1.3.3, “Outline Drawings”.

- **Do not apply shocks to a motor or cause scratches to it.**

If a motor is subjected to shocks or is scratched, its components may be adversely affected, resulting in normal operation being impaired. Plastic components and sensors can be damaged easily. So, handle those components very carefully. In particular, do not lift a motor by using a plastic component, connector, terminal block, and so forth.

- **Do not step or sit on a motor, and do not put a heavy object on a motor.**

If you step or sit on a motor, it may get deformed or broken. Do not put a motor on another unless they are in packages.

- **When attaching a component having inertia, such as a pulley, to a motor, ensure that any imbalance between the motor and component is minimized.**

If there is a large imbalance, the motor may vibrates abnormally, resulting in the motor being broken.

- **Be sure to attach a key to a motor with a keyed shaft.**

If a motor with a keyed shaft runs with no key attached, it may impair torque transmission or cause imbalance, resulting in the motor being broken.

- **Use a motor under an appropriate environmental condition.**

Using a motor in an adverse environment may cause a failure or trouble in it. Refer to Chapter 3, “HANDLING, INSTALLATION, AND USE ENVIRONMENT OF THE MOTOR” for details of the operating and environmental conditions for motors.

- **Do not apply a commercial power source voltage directly to a motor.**

Applying a commercial power source voltage directly to a motor may result in its windings being burned. Be sure to use a specified amplifier for supplying voltage to the motor.

- **Do not use the brake built into a motor for braking.**

The brake built into a servo motor is designed for holding. If the brake is used for braking, a failure can occur.



© MyFANUC DC7187A9420041B3806BC8E5C652D376

**⚠ CAUTION**

- **Ensure that motors are cooled if they are those that require forcible cooling.**

If a motor that requires forcible cooling is not cooled normally, it may cause a failure or trouble. For a fan-cooled motor, ensure that it is not clogged or blocked with dust and dirt. For a liquid-cooled motor, ensure that the amount of the liquid is appropriate and that the liquid piping is not clogged. For both types, perform regular cleaning and inspection.

- **When storing a motor, put it in a dry (non-condensing) place at room temperature (0 to 40 °C).**

If a motor is stored in a humid or hot place, its components may get damaged or deteriorated. In addition, keep a motor in such a position that its shaft is held horizontal and its terminal box is at the top.

- **FANUC motors are designed for use with machines. Do not use them for any other purpose.**

If a FANUC motor is used for an unintended purpose, it may cause an unexpected symptom or trouble. If you want to use a motor for an unintended purpose, previously consult with FANUC.

## NOTE

**NOTE**

- **Ensure that a base or frame on which a motor is mounted is strong enough.**

Motors are heavy. If a base or frame on which a motor is mounted is not strong enough, it is impossible to achieve the required precision.

- **Do not remove a nameplate from a motor.**

If a nameplate comes off, be careful not to lose it. If the nameplate is lost, the motor becomes unidentifiable, resulting in maintenance becoming impossible.

- **When testing the winding or insulation resistance of a motor, satisfy the conditions stipulated in IEC60034.**

Testing a motor under a condition severer than those specified in IEC60034 may damage the motor.

- **Before using a motor, measure its winding and insulation resistances, and make sure they are normal.**

Especially for a motor that has been stored for a prolonged period of time, conduct these checks. A motor may deteriorate depending on the condition under which it is stored or the time during which it is stored. For the winding resistances of motors, refer to Chapter 1, “SPECIFICATIONS”, or ask FANUC. For insulation resistances, see the following table.



© MyFANUC DC7187A9420041B3806BC8E5C652D376

**NOTE**

- **To use a motor as long as possible, perform periodic maintenance and inspection for it, and check its winding and insulation resistances.**

Note that extremely severe inspections (such as dielectric strength tests) of a motor may damage its windings. For the winding resistances of motors, refer to Chapter 1, “SPECIFICATIONS”, or ask FANUC. For insulation resistances, see the following table.

**MOTOR INSULATION RESISTANCE MEASUREMENT**

Measure an insulation resistance between each winding and motor frame using an insulation resistance meter (500 VDC). Judge the measurements according to the following table. Make an insulation resistance measurement on a single motor unit after detaching cords such as a power line.

| Insulation resistance | Judgment |
|---|---|
| 100 MΩ or higher | Acceptable |
| 10 to 100 MΩ | The winding has begun deteriorating. There is no problem with the performance at present. Be sure to perform periodic inspection. |
| 1 to 10 MΩ | The winding has considerably deteriorated. Special care is in need. Be sure to perform periodic inspection. |
| Lower than 1 MΩ | Unacceptable. Replace the motor. |

## CAUTION LABEL

The following label is attached to the motor.
Attach this label to a prominent place on the motor to call attention to the user.

Heat caution label (compliance with the IEC standard)

Electric shock caution label (compliance with the IEC standard)

**Heat caution label**

Since the motor is heated to a high temperature during operation or immediately after a stop, touching the motor may cause a burn.
So, attach this label to a prominent place to call attention when the surface is exposed and may be touched.

Remark:

The mark of this label conforms to the IEC standard, which is a global standard.
The mark has the meaning of heat caution, so the description is omitted.

**Electric shock caution label**

This label indicates the risk of electric shock. Before installing the motor or performing maintenance work, turn off the power of the motor. Attach this label to a prominent place on the motor, such as on the upper lid of the terminal box.



© MyFANUC DC7187A9420041B3806BC8E5C652D376

Remark:

The mark of this label conforms to the IEC standard, which is a global standard.
The mark has the meaning of electric shock caution, so the description is omitted.

## SHIPPING THE SERVO MOTOR BY AIR

Although the servo motors described in this manual contain magnets in their rotor, the magnetic circuit is closed between the rotor and stator, so they do not fall under "magnetized material" (which has a maximum magnetic field strength sufficient to cause a compass deflection of more than 2 degrees at a distance of 2.1 m from any point on the surface of the package) defined in the IATA Dangerous Goods Regulations. The assembled servo motor can be transported by air as general cargo.



© MyFANUC DC7187A9420041B3806BC8E5C652D376

© MyFANUC DC7187A9420041B3806BC8E5C652D376

# PREFACE

This manual describes the specifications, outline drawings, detectors and other options, usage, and selection method of the FANUC AC Servo Motor β*i*-B/βseries (β*i*S-B/β*i*S, β*i*Sc-B/β*i*Sc, β*i*F-B/β*i*F series).

A servo motor can be used for machine tool feed axis applications as well as for many other types of machines such as machine tool peripheral axes, injection molding machines, press machines, and conveying devices. The main body of the manual discusses the usage of a servo motor and the general precautions to observe when using it. Make sure you understand the instructions provided herein before using a servo motor.
The points to note when using a servo motor for live tool applications of a machine tool are described in Appendix B, "NOTES ON USING THE SERVO MOTOR FOR LIVE TOOL APPLICATIONS OF A MACHINE TOOL".

This manual describes the layout of power pins and the output of detector signals but does not provide information about connection to a servo amplifier and a CNC. For the connection, refer to FANUC SERVO AMPLIFIER α*i*-B series Descriptions (B-65412EN), FANUC SERVO AMPLIFIER α*i* series Descriptions (B-65282EN), Maintenance Manual (B-65285EN), FANUC SERVO AMPLIFIER β*i*–B series Descriptions (B-65422EN) and Maintenance Manual (B-65425EN), FANUC SERVO AMPLIFIER β*i* series Descriptions (B-65322EN), and Maintenance Manual (B-65325EN).

In this manual, servo motor names are sometimes abbreviated as follows:
Example) β*i*S 22/2000-B → β*i*S 22-B

## Related manuals

The following nine kinds of manuals are available for FANUC SERVO MOTOR β*i*–B series. In the table, this manual is marked with an asterisk (*).

| Document name | Document number | Major contents | Major usage | |
|---|---|---|---|---|
| FANUC AC SERVO MOTOR β*i* –B series<br>FANUC AC SERVO MOTOR β*i* series<br>DESCRIPTIONS | B-65302EN | • Specification<br>• Characteristics<br>• External dimensions | • Selection of motor<br>• Connection of motor | * |
| FANUC SERVO AMPLIFIER α*i*-B series<br>FANUC AC SERVO MOTOR α*i* series<br>DESCRIPTIONS | B-65412EN | • Specifications and functions<br>• Installation<br>• External dimensions and maintenance area<br>• Connections | • Selection of amplifier<br>• Connection of amplifier | |
| FANUC SERVO AMPLIFIER α*i* series<br>DESCRIPTIONS | B-65282EN | | | |
| FANUC SERVO AMPLIFIER β*i*–B series<br>DESCRIPTIONS | B-65422EN | | | |
| FANUC SERVO AMPLIFIER β*i* series<br>DESCRIPTIONS | B-65322EN | | | |
| FANUC AC SERVO MOTOR α*i* series<br>FANUC AC SPINDLE MOTOR α*i* series<br>FANUC SERVO AMPLIFIER α*i* series<br>MAINTENANCE MANUAL | B-65285EN | • Start up procedure<br>• Troubleshooting<br>• Maintenance of motor | • Start up the system (Hardware)<br>• Troubleshooting<br>• Maintenance of motor | |



© MyFANUC DC7187A9420041B3806BC8E5C652D376

| Document name | Document number | Major contents | Major usage | |
|---|---|---|---|---|
| FANUC AC SERVO MOTOR βi series<br>FANUC AC SPINDLE MOTOR βi series<br>FANUC SERVO AMPLIFIER βi–B series<br>MAINTENANCE MANUAL | B-65425EN | • Start up procedure<br>• Troubleshooting<br>• Maintenance of motor | • Start up the system (Hardware)<br>• Troubleshooting<br>• Maintenance of motor | |
| FANUC AC SERVO MOTOR βi series<br>FANUC AC SPINDLE MOTOR βi series<br>FANUC SERVO AMPLIFIER βi series<br>MAINTENANCE MANUAL | B-65325EN | • Start up procedure<br>• Troubleshooting<br>• Maintenance of motor | • Start up the system (Hardware)<br>• Troubleshooting<br>• Maintenance of motor | |
| FANUC AC SERVO MOTOR αi-B/αi series<br>FANUC AC SERVO MOTOR βi-B/βi series<br>FANUC LINEAR MOTOR LiS series<br>FANUC SYNCHRONOUS BUILT-IN SERVO MOTOR DiS series<br>PARAMETER MANUAL | B-65270EN | • Initial setting<br>• Setting parameters<br>• Description of parameters | • Start up the system (Software)<br>• Tuning the system (Parameters) | |



© MyFANUC DC7187A9420041B3806BC8E5C652D376

# TABLE OF CONTENTS


**SAFETY PRECAUTIONS ..... S-1**
DEFINITION OF WARNING, CAUTION, AND NOTE ..... s-1
WARNING ..... s-2
CAUTION ..... s-3
NOTE ..... s-5
CAUTION LABEL ..... s-6
SHIPPING THE SERVO MOTOR BY AIR ..... s-7

**PREFACE ..... p-1**

**1 SPECIFICATIONS ..... 1**
1.1 LINE-UP OF THE SERIES ..... 1
1.1.1 Motor Line-up ..... 1
1.1.2 Feature ..... 2
1.2 ORDERING SPECIFICATION NUMBER ..... 4
1.3 MOTOR SPECIFICATIONS ..... 7
1.3.1 Terms ..... 7
1.3.2 Characteristic Curves and Data Sheet ..... 8
1.3.2.1 About characteristic curves and data sheet ..... 8
1.3.2.2 βiS-B/βiS SERIES (200V) ..... 12
1.3.2.3 βiS-B SERIES (400V) ..... 26
1.3.2.4 βiSc-B SERIES (200V) ..... 34
1.3.2.5 βiSc-B SERIES (400V) ..... 40
1.3.2.6 βiF-B SERIES (200V) ..... 44
1.3.3 Outline Drawings ..... 49
1.3.3.1 Models βiS 0.2 and βiS 0.3 ..... 50
1.3.3.2 Models βiS 0.4-B to βiS 1-B ..... 56
1.3.3.3 Models βiS 2-B, βiS 4-B, βiS 2HV-B, βiS 4HV-B, βiSc 2-B, βiSc 4-B, βiSc 2HV-B, and βiSc 4HV-B ..... 60
1.3.3.4 Models βiS 8-B, βiS 12-B, βiS 8HV-B, βiS 12HV-B, βiSc 8-B, βiSc 12-B, βiSc 8HV-B, βiSc 12HV-B, βiF 4-B, and βiF 8-B ..... 65
1.3.3.5 Models βiS 22-B to βiS 40-B, βiS 22HV-B to βiS 40HV-B, βiSc 22-B, and βiF 12-B to βiF 30-B ..... 72
1.3.4 Built-In Brake ..... 76
1.3.4.1 Brake specifications ..... 76
1.3.4.2 Connecting a brake ..... 77
1.3.4.3 Reduced backlash brake ..... 80
1.3.4.4 Cautions on use ..... 81
1.3.4.5 Reducing the amount of brake axis fall ..... 82
1.4 FEEDBACK SENSOR ..... 83
1.4.1 Pulsecoder ..... 83
1.4.1.1 Types of Pulsecoders and Designation ..... 83
1.4.1.2 Connecting Pulsecoder ..... 84
1.4.1.3 Absolute-type Pulsecoder ..... 85
1.4.2 Separate Pulsecoder ..... 85
1.4.2.1 Separate Pulsecoder type and designation ..... 85
1.4.2.2 Separate Pulsecoder specifications ..... 85
1.4.2.3 Connecting a separate type Pulsecoder ..... 86
1.4.2.4 Outline drawings of separate Pulsecoder ..... 87
1.4.2.5 Cautions when using a separate type Pulsecoder ..... 88




© MyFANUC DC7187A9420041B3806BC8E5C652D376

**2 CONFIGURATION AND SELECTION ..... 89**
2.1 SYSTEM CONFIGURATION ..... 89
2.1.1 Connecting a Servo Motor ..... 89
2.1.2 Applicable Amplifiers ..... 90
2.1.2.1 Combinations of the βiS-B/βiSc-B/βiF-B servo motors and the αiSV-B/αiSVP-B/βiSV-B/βiSVSP-B servo amplifiers ..... 90
2.1.2.2 Combinations of the βiS-B/βiSc-B/βiF-B servo motors and the αiSV/βiSV/βiSVSP/βiSVSPc servo amplifiers ..... 98
2.1.3 Connectors on the Cable Side ..... 104
2.1.3.1 Connectors for signals ..... 105
2.1.3.2 Connectors for power ..... 113
2.1.3.3 Connectors for the brake ..... 122
2.1.3.4 Connection to a conduit hose ..... 125
2.1.4 Conditions for Approval Related to the IEC60034 Standard ..... 127
2.1.4.1 Types of motors to be approved ..... 127
2.1.4.2 Approved specifications ..... 128
2.1.4.3 Connectors required for approval ..... 130
2.2 MOTOR SELECTION ..... 131
2.2.1 Conditions for Selecting a Servo Motor ..... 131
2.2.2 Selecting a Motor ..... 134
2.2.2.1 Calculating the load torque ..... 135
2.2.2.2 Calculating the motor speed ..... 136
2.2.2.3 Calculating the load moment of inertia ..... 137
2.2.2.4 Calculating the acceleration torque ..... 139
2.2.2.5 Calculating the root-mean-square value of the torques ..... 143
2.2.2.6 Calculating the Percentage duty cycle and ON time with the maximum cutting torque ..... 145
2.2.2.7 Calculating the dynamic brake stop distance ..... 147
2.2.3 About the Servo Motor Selection Data Table ..... 154
2.2.3.1 Servo motor selection data table ..... 154
2.2.3.2 Explanation of Items ..... 157
2.2.4 Selecting the αiPS ..... 161

**3 HANDLING, INSTALLATION, AND USE ENVIRONMENT OF THE MOTOR ..... 162**
3.1 HANDLING OF THE SERVO MOTOR ..... 162
3.1.1 Checking a Delivered Servo Motor and Storing a Servo Motor ..... 162
3.1.2 Separating and Disposing of a Servo Motor ..... 162
3.2 MOUNTING A SERVO MOTOR ..... 163
3.2.1 Methods for coupling the shaft ..... 163
3.2.2 Fastening the Shaft ..... 165
3.2.3 Allowable Axis Load for a Servo Motor ..... 165
3.2.4 Shaft Run-out Precision of a Servo Motor ..... 166
3.2.5 Other Notes on Axis Design ..... 167
3.2.6 Cautions in Mounting a Servo Motor ..... 169
3.2.7 Notes on Servo Motors with the Pulsecoder βiA 1000 (for the βiSc-B only) Attached ..... 172
3.3 USE ENVIRONMENT FOR SERVO MOTORS ..... 173
3.3.1 Ambient Temperature, Humidity, Installation Height, and Vibration ..... 173
3.3.2 Usage Considering Environmental Resistance ..... 173

APPENDIX

**A DATA FOR SELECTING THE αiPS ..... 181**



© MyFANUC DC7187A9420041B3806BC8E5C652D376

A.1 βi-B SERIES (200V) ..... 181
A.2 βi-B SERIES (400V) ..... 182

**B NOTES ON USING THE SERVO MOTOR FOR LIVE TOOL APPLICATIONS OF A MACHINE TOOL ..... 183**
B.1 OUTPUT GRAPHS AND TORQUE GRAPHS (6000 **[min$^{-1}$]** MODELS) ..... 184
B.2 NOTES ON USING THE SERVO MOTOR FOR LIVE TOOL APPLICATIONS ..... 185
B.3 CNC FUNCTIONS FOR USING THE SERVO MOTOR FOR THE SPINDLE OR LIVE TOOL ..... 185

**C ABOUT βi SERIES SERVO MOTORS ..... 186**
C.1 ORDERING SPECIFICATION NUMBERS ..... 188
C.2 CHARACTERISTIC CURVES AND DATA SHEET ..... 190
C.3 OUTLINE DRAWINGS ..... 191
C.4 POWER CONNECTORS ..... 194
C.4.1 Connectors for Power (Motor Side) (for Groups D and E) ..... 195
C.4.1.1 Connectors for power (for Group D) ..... 195
C.4.1.2 Connectors for power (for Group E) ..... 195
C.4.2 Connectors for Power (Cable Side) (for Groups D and E) ..... 196
C.4.3 Connection to a Conduit Hose ..... 200
C.5 FEEDBACK SENSORS ..... 201
C.5.1 Types of Pulsecoders and Designation ..... 201
C.5.2 Connecting Pulsecoder ..... 201

**D NOTES ON ADJUSTING βi-B/βi SERVO MOTOR PARAMETERS .. 203**

ADDITIONAL INFORMATION



© MyFANUC DC7187A9420041B3806BC8E5C652D376

© MyFANUC DC7187A9420041B3806BC8E5C652D376

# 1 SPECIFICATIONS

Chapter 1, "SPECIFICATIONS", consists of the following sections:

1.1 LINE-UP OF THE SERIES
1.2 ORDERING SPECIFICATION NUMBER
1.3 MOTOR SPECIFICATIONS
1.4 FEEDBACK SENSOR

## 1.1 LINE-UP OF THE SERIES

### 1.1.1 Motor Line-up

The FANUC AC Servo Motor β*i*-B series consist of the following series, each of which has the listed characteristics.

| Series | Voltage | continuous torque (at low speed) | Feature | Applications |
|---|---|---|---|---|
| β*i*S-B | 200V | 0.2 to 36 Nm | High cost-performance model driven by a small-capacity amplifier | Feed axes in machine tools<br>Peripherals of machine tools<br>Industrial machines |
| | 400V | 2 to 36 Nm | β*i*S-B models applicable to 400VAC input | |
| β*i*Sc-B | 200V | 2 to 20 Nm | High cost-performance model best for low-end lathes | |
| | 400V | 2 to 20 Nm | β*i*Sc-B models applicable to 400VAC input | |
| β*i*F-B | 200V | 3.5 to 27 Nm | Medium inertia model for feed axes in economical machine tools | |



© MyFANUC DC7187A9420041B3806BC8E5C652D376

### Line-up

| Continuous torque (at low speed) Nm | | 0.16 | 0.32 | 0.4 | 0.65 | 1.2 | 2 | 3.5 | 3.5 | 7 | 11 | 11 | 20 | 27 | 36 |
|---|---|---|---|---|---|---|---|---|---|---|---|---|---|---|---|
| Flange size mm | | 40 | | 60 | | | 90 | | 130 | | | 174 | | | |
| βiS-B | 200V | βiS 0.2 /5000 | βiS 0.3 /5000 | βiS 0.4 /5000-B | βiS 0.5 /6000-B | βiS 1 /6000-B | βiS 2 /4000-B | βiS 4 /4000-B | | βiS 8 /3000-B | βiS 12 /2000-B<br>βiS 12 /3000-B | | βiS 22 /2000-B<br>βiS 22 /2000-B | βiS 30 /2000-B | βiS 40 /2000-B |
| | 400V | | | | | | βiS 2 /4000 HV-B | βiS 4 /4000 HV-B | | βiS 8 /3000 HV-B | βiS 12 /3000 HV-B | | βiS 22 /2000 HV-B<br>βiS 22 /3000 HV-B | βiS 30 /2000 HV-B | βiS 40 /2000 HV-B |
| βiSc-B | 200V | | | | | | βiSc 2 /4000-B | βiSc 4 /4000-B | | βiSc 8 /3000-B | βiSc 12 /2000-B<br>βiSc 12 /3000-B | | βiSc 22 /2000-B | | |
| | 400V | | | | | | βiSc 2 /4000 HV-B | βiSc 4 /4000 HV-B | | βiSc 8 /3000 HV-B | βiSc 12 /3000 HV-B | | | | |
| βiF-B | 200V | | | | | | | | βiF 4 /3000-B | βiF 8 /2000-B | | βiF 12 /2000-B | βiF 22 /2000-B | βiF 30 /1500-B | |

## 1.1.2 Feature

The FANUC AC Servo Motor βi series is an AC servo motor suitable for feed axes and peripherals of machine tools, and industrial machines. This servo motor realizes high cost-performance when combined with a small-capacity amplifier. This series has the following features:

### Compact

The use of a latest magnet and the optimized mechanical design reduce the total length and weight, therefore realizing light, compact motors.

### Smooth rotation

The optimized magnetic pole structure enables smooth rotation to give sufficient basic performance for feed axes in machine tools to this series. (βiS 2-B to βiS 40-B, βiF 4-B to βiF 30-B)

### Excellent acceleration

The use of a special rotor shape brings small and light motors, and a high level of torque. These motors, therefore, provide excellent acceleration characteristics.

### Controllability

The use of the latest servo software maintains controllability even when a disturbance occurs.

### High reliability

A totally-enclosed, friction-free brushless design is used. This allows the servo motors to be used in demanding environments with no need for special checks or maintenance.



© MyFANUC DC7187A9420041B3806BC8E5C652D376

## Excellent waterproofing

The adoption of water-proof connectors, combined with a unique stator seal structure, ensure high water-proofing. (For the β*i*S 0.4-B to β*i*S 40-B, β*i*F 4-B to β*i*F 30-B)

## Built-in, high-precision encoder

A low-indexing-error optical encoder (Pulsecoder) is built into the motors. This Pulsecoder enables precise positioning. (Resolution 65,536, 1,000,000/rev.)

## Powerful brake

A powerful brake with an increased holding torque is available as an option. The brake uses an asbestos-free design.

## 200-V and 400-V power supply specifications

A lineup of 400-V power supply specification motors is provided in addition to the 200-V power supply specification motors.
A suitable motor can be selected according to the local power supply specification.
(β*i*S 2HV-B to β*i*S 40HV-B)

**β*i*-B series**



© MyFANUC DC7187A9420041B3806BC8E5C652D376

# 1.2 ORDERING SPECIFICATION NUMBER

The ordering specification numbers of the servo motors have the following format:

A06B-□□□□-B△0▽#abcd

□□□□ An ordering specification number are described on the tables after next page.
* Every combination doesn't exist.

△ 0 : Taper shaft
1 : Straight shaft
2 : Straight shaft with a key groove
3 : Taper shaft with a 24VDC brake
4 : Straight shaft with a 24VDC brake
5 : Straight shaft with a key way and a 24VDC brake

* Do not select "Straight shaft with a key groove" when a large torque or abrupt acceleration rate is required.

▽ 3 : Pulsecoder βA 64B (βiS0.2, βiS0.3)
Pulsecoder βiA 64 (βiS0.4-B to βiS1-B)
Pulsecoder βiA 1000 (βiS2-B to βiS40-B, βiF4-B to βiF30-B)
7 : Pulsecoder βiA 1000 (for the βiSc-B only) (βiSc2-B to βiSc22-B)

abcd
a 0 : Standard
b 0 : Standard
1 : IP67 specification (excluding βiS0.2 and βiS0.3)
cd 00 : Standard
63 : ϕ14 taper/straight shaft (βiS2-B, βiSc2-B)
65 : IP67 specification (βiS0.2, βiS0.3)
70 : Reduced backlash brake (βiS22-B to βiS40-B, βiSc22-B, βiF12-B to βiF30-B)

* When #abcd is #0000, omit the specification of #abcd.
* When #abcd is #ab70 (reduced backlash brake), specify △ = 3 to 5.

**⚠ CAUTION**
For the Servo Motor βiSc-B series, note the following:
- The motor ID information (specification number, serial number, and other information) and the motor temperature information are omitted.
- The servo parameters, the use of the servo motor (prohibition of the mounting of a rear fan unit, etc.), and the overload duty characteristics differ from βiS-B models.



© MyFANUC DC7187A9420041B3806BC8E5C652D376

The following table lists the allowable combinations of numbers represented by symbols in ordering specification numbers.

### βiS-B, βiSc-B, βiF-B series (200V) A06B-□□□□-B△0▽#abcd

| Symbol in specification No. / Servo motor name | □□□□ | △ | | | | | | ▽ | | a | b | | cd | | | |
|---|---|---|---|---|---|---|---|---|---|---|---|---|---|---|---|---|
| | | 0 | 1 | 2 | 3 | 4 | 5 | 3 | 7 | 0 | 0 | 1 | 00 | 63 | 65 | 70 |
| βiS 0.2/5000 | 0111 | - | ○ | ○ | - | ○ | ○ | ○ | - | ○ | ○ | - | ○ | - | ○ | - |
| βiS 0.3/5000 | 0112 | - | ○ | ○ | - | ○ | ○ | ○ | - | ○ | ○ | - | ○ | - | ○ | - |
| βiS 0.4/5000-B | 2114 | - | ○ | ○ | - | ○ | ○ | ○ | - | ○ | ○ | ○ | ○ | - | - | - |
| βiS 0.5/6000-B | 2115 | - | ○ | ○ | - | ○ | ○ | ○ | - | ○ | ○ | ○ | ○ | - | - | - |
| βiS 1/6000-B | 2116 | - | ○ | ○ | - | ○ | ○ | ○ | - | ○ | ○ | ○ | ○ | - | - | - |
| βiS 2/4000-B | 2061 | ○ | ○ | ○ | ○ | ○ | ○ | ○ | - | ○ | ○ | ○ | ○ | ○ | - | - |
| βiSc 2/4000-B | 2061 | ○ | ○ | ○ | ○ | ○ | ○ | - | ○ | ○ | ○ | ○ | ○ | ○ | - | - |
| βiS 4/4000-B | 2063 | ○ | ○ | ○ | ○ | ○ | ○ | ○ | - | ○ | ○ | ○ | ○ | - | - | - |
| βiSc 4/4000-B | 2063 | ○ | ○ | ○ | ○ | ○ | ○ | - | ○ | ○ | ○ | ○ | ○ | - | - | - |
| βiS 8/3000-B | 2075 | ○ | ○ | ○ | ○ | ○ | ○ | ○ | - | ○ | ○ | ○ | ○ | - | - | - |
| βiSc 8/3000-B | 2075 | ○ | ○ | ○ | ○ | ○ | ○ | - | ○ | ○ | ○ | ○ | ○ | - | - | - |
| βiS 12/2000-B | 2077 | ○ | ○ | ○ | ○ | ○ | ○ | ○ | - | ○ | ○ | ○ | ○ | - | - | - |
| βiSc 12/2000-B | 2077 | ○ | ○ | ○ | ○ | ○ | ○ | - | ○ | ○ | ○ | ○ | ○ | - | - | - |
| βiS 12/3000-B | 2078 | ○ | ○ | ○ | ○ | ○ | ○ | ○ | - | ○ | ○ | ○ | ○ | - | - | - |
| βiSc 12/3000-B | 2078 | ○ | ○ | ○ | ○ | ○ | ○ | - | ○ | ○ | ○ | ○ | ○ | - | - | - |
| βiS 22/2000-B | 2085 | ○ | ○ | ○ | ○ | ○ | ○ | ○ | - | ○ | ○ | ○ | ○ | - | - | ○ |
| βiSc 22/2000-B | 2085 | ○ | ○ | ○ | ○ | ○ | ○ | - | ○ | ○ | ○ | ○ | ○ | - | - | ○ |
| βiS 22/3000-B | 2082 | ○ | ○ | ○ | ○ | ○ | ○ | ○ | - | ○ | ○ | ○ | ○ | - | - | ○ |
| βiS 30/2000-B | 2087 | ○ | ○ | ○ | ○ | ○ | ○ | ○ | - | ○ | ○ | ○ | ○ | - | - | ○ |
| βiS 40/2000-B | 2089 | ○ | ○ | ○ | ○ | ○ | ○ | ○ | - | ○ | ○ | ○ | ○ | - | - | ○ |
| βiF 4/3000-B | 2051 | ○ | ○ | ○ | ○ | ○ | ○ | ○ | - | ○ | ○ | ○ | ○ | - | - | - |
| βiF 8/2000-B | 2052 | ○ | ○ | ○ | ○ | ○ | ○ | ○ | - | ○ | ○ | ○ | ○ | - | - | - |
| βiF 12/2000-B | 2053 | ○ | ○ | ○ | ○ | ○ | ○ | ○ | - | ○ | ○ | ○ | ○ | - | - | ○ |
| βiF 22/2000-B | 2054 | ○ | ○ | ○ | ○ | ○ | ○ | ○ | - | ○ | ○ | ○ | ○ | - | - | ○ |
| βiF 30/1500-B | 2055 | ○ | ○ | ○ | ○ | ○ | ○ | ○ | - | ○ | ○ | ○ | ○ | - | - | ○ |



© MyFANUC DC7187A9420041B3806BC8E5C652D376

**βiS-B series (400V) A06B-□□□□-B△0▽#abcd**

| Symbol in specification No. / Servo motor name | □□□□ | △ | | | | | | ▽ | | a | b | | cd | | | |
|---|---|---|---|---|---|---|---|---|---|---|---|---|---|---|---|---|
| | | 0 | 1 | 2 | 3 | 4 | 5 | 3 | 7 | 0 | 0 | 1 | 00 | 63 | 65 | 70 |
| βiS 2/4000HV-B | 2062 | ○ | ○ | ○ | ○ | ○ | ○ | ○ | - | ○ | ○ | ○ | ○ | ○ | - | - |
| βiSc 2/4000HV-B | 2062 | ○ | ○ | ○ | ○ | ○ | ○ | - | ○ | ○ | ○ | ○ | ○ | ○ | - | - |
| βiS 4/4000HV-B | 2064 | ○ | ○ | ○ | ○ | ○ | ○ | ○ | - | ○ | ○ | ○ | ○ | - | - | - |
| βiSc 4/4000HV-B | 2064 | ○ | ○ | ○ | ○ | ○ | ○ | - | ○ | ○ | ○ | ○ | ○ | - | - | - |
| βiS 8/3000HV-B | 2076 | ○ | ○ | ○ | ○ | ○ | ○ | ○ | - | ○ | ○ | ○ | ○ | - | - | - |
| βiSc 8/3000HV-B | 2076 | ○ | ○ | ○ | ○ | ○ | ○ | - | ○ | ○ | ○ | ○ | ○ | - | - | - |
| βiS 12/3000HV-B | 2079 | ○ | ○ | ○ | ○ | ○ | ○ | ○ | - | ○ | ○ | ○ | ○ | - | - | - |
| βiSc 12/3000HV-B | 2079 | ○ | ○ | ○ | ○ | ○ | ○ | - | ○ | ○ | ○ | ○ | ○ | - | - | - |
| βiS 22/2000HV-B | 2086 | ○ | ○ | ○ | ○ | ○ | ○ | ○ | - | ○ | ○ | ○ | ○ | - | - | ○ |
| βiS 22/3000HV-B | 2083 | ○ | ○ | ○ | ○ | ○ | ○ | ○ | - | ○ | ○ | ○ | ○ | - | - | ○ |
| βiS 30/2000HV-B | 2088 | ○ | ○ | ○ | ○ | ○ | ○ | ○ | - | ○ | ○ | ○ | ○ | - | - | ○ |
| βiS 40/2000HV-B | 2090 | ○ | ○ | ○ | ○ | ○ | ○ | ○ | - | ○ | ○ | ○ | ○ | - | - | ○ |

* When #abcd is #0000, omit the specification of #abcd.

* For the differences between the models (with specification number 2xxx) of βiS0.4-B to βiS40-B (including HV) and βiS, refer to Appendix C.



© MyFANUC DC7187A9420041B3806BC8E5C652D376

# 1.3 MOTOR SPECIFICATIONS

## 1.3.1 Terms

To ensure consistency with our other models (synchronous built-in servo motor D*i*S series, spindle motor β*i*I series, etc.), this manual uses some terms and symbols that are different from those used before.
The following table shows the correspondence between the key terms and symbols of the previous version (Edition 05) of the Descriptions (B-65302EN) and those of this version.

Correspondence table

| This version (Edition 08) | | Previous version (Edition 05 or former) | | Unit (SI) | Description |
|---|---|---|---|---|---|
| Term | Symbol | Term | Symbol | | |
| Continuous torque (at low speed) | Tc | Stall torque | Ts | Nm | Torque that allows the motor to operate continuously at low speed (Note)<br>(Note) Low speed = 0 to 200 [$min^{-1}$] |
| Continuous current (at low speed) | Ic | Stall current | Is | A(rms) | Value obtained by dividing continuous torque Tc (low-speed rotation) by torque constant Kt |
| Rated current | Ir | - | - | A(rms) | Current available when rated output Pr is given at rated rotation speed Nr |
| Moment of inertia | - | Inertia | - | $kg{\cdot}m^2$ | Physical quantity expressing an object's resistance to changes in shape |
| Rotor moment of inertia<br>or<br>Moment of inertia of rotor | Jm | Rotor inertia | Jm | $kg{\cdot}m^2$ | Moment of inertia of the rotor of the motor |
| Load moment of inertia | - | Load inertia | - | $kg{\cdot}m^2$ | Moment of inertia coupled to the rotor |
| Load moment of inertia ratio | - | Load inertia ratio | - | - | Ratio of the load moment of inertia to the moment of inertia of the rotor |
| Winding resistance (between terminals) | Ra | Armature resistance (1 phase) | Ra | Ω | Winding resistance of the motor |



© MyFANUC DC7187A9420041B3806BC8E5C652D376

## 1.3.2 Characteristic Curves and Data Sheet

### 1.3.2.1 About characteristic curves and data sheet

The specifications of each motor are described by the characteristic curves and data sheet given below.

#### (1) Characteristic curves

The characteristic curves representing the "speed-torque characteristics" and "overload duty characteristic" are given for each motor model.

**Speed-torque characteristics**

Speed-torque characteristics indicate the relationship between the output torque and speed of the motor.
In the continuous operating zone, the motor winding temperature and pulsecoder temperature do not exceed the following overheat temperatures when the ambient temperature is 20°C.

- Motor winding: 140°C
- Pulsecoder: 100°C

In the continuous operating zone, the motor can be used continuously with any combination of a speed and a torque. In the intermittent operating zone outside the continuous operating zone, the motor can be used intermittently within the range of the overload duty characteristic curve.

In the high-speed operating zone, to drive the motor stably, the current may increase even at no load, depending on the speed.
(In the intermittent operating zone, the actual current (%) displayed in the servo setting screen of the CNC may exceed 100% even at no load, depending on the model in use.)

In the high-speed operating zone, in addition, heat generated due to the current depending on the speed and heat caused by permanent magnets increase, so the motor becomes hot and overheated even at no load.

The torque decreases by 0.11% for the β*i*S-B/β*i*S series or by 0.19% for the β*i*F-B/β*i*F series according to the negative temperature coefficient of magnetic materials every time the internal temperature of the motor increases by 1°C after exceeding 20°C.

The intermittent operating zone may be limited by the motor input voltage.
The values in the data sheets are those observed when the input voltage is 200 V or 400 V.



© MyFANUC DC7187A9420041B3806BC8E5C652D376

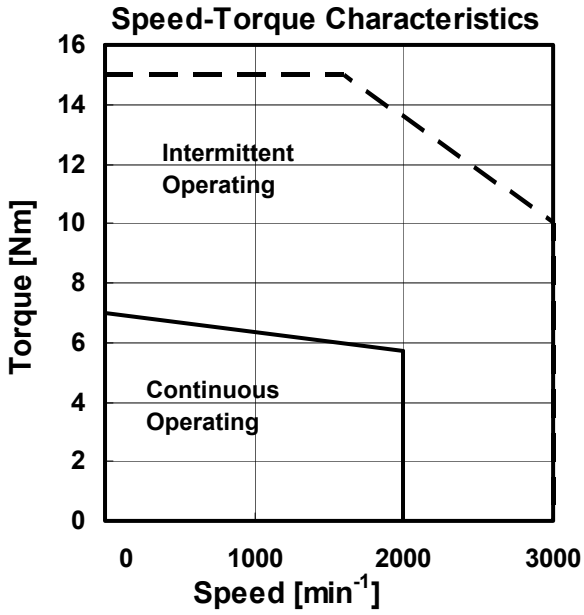


**Example of βiS 8/3000-B**

## Overload duty characteristic

The overload duty characteristic represents the relationship between the time duty and the ON time (load time) where the motor can be operated with no temperature limit (limit by the overheat or overcurrent alarm) when the motor is used at low speed with a torque exceeding the continuous operating zone (overload toque).

There are two motor temperature limits that determine overload duty curves; one is based on the motor overheat and the other is based on the overcurrent alarm (OVC alarm) with which the soft thermal function of the servo software protects against a rapid increase in temperature.

The overload duty characteristic determined by the limit based on the overheat is represented by a curve in a relatively long time range where the load time is at least about 100 seconds. The one determined by the limit based on the overcurrent alarm is represented by a curve in a relatively short time range of up to about 100 seconds. The final overload duty characteristic is represented by the curve limited and described using either of these characteristic values, whichever is shorter.

The settings of the soft thermal function for monitoring overcurrent differ depending on each motor. If the motor is in the overload status at a motor speed of about 0, an overcurrent (OVC) alarm may be issued for a time shorter than described. Note that, since the driving device (such as an amplifier), pulsecoder, and other components also contain a thermal protection device, some other restrictions may be imposed depending on the use conditions.

The time duty indicates the ratio of the torque load time to the total time of a single cycle.

The ON time indicates the time during which the torque continues to be applied within a single cycle.

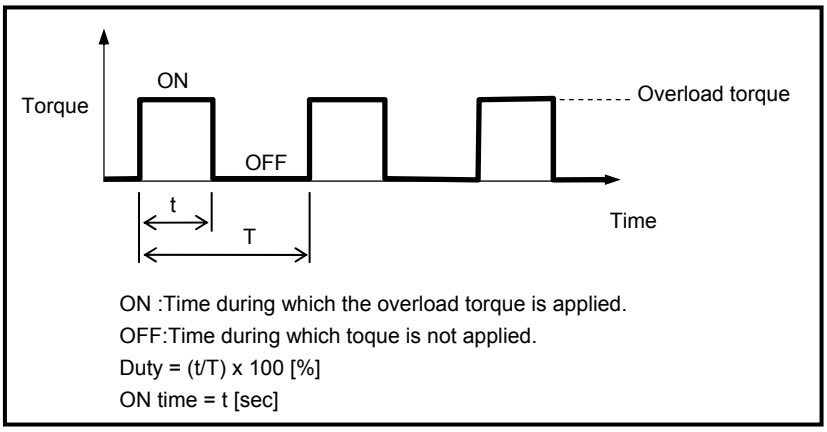




© MyFANUC DC7187A9420041B3806BC8E5C652D376

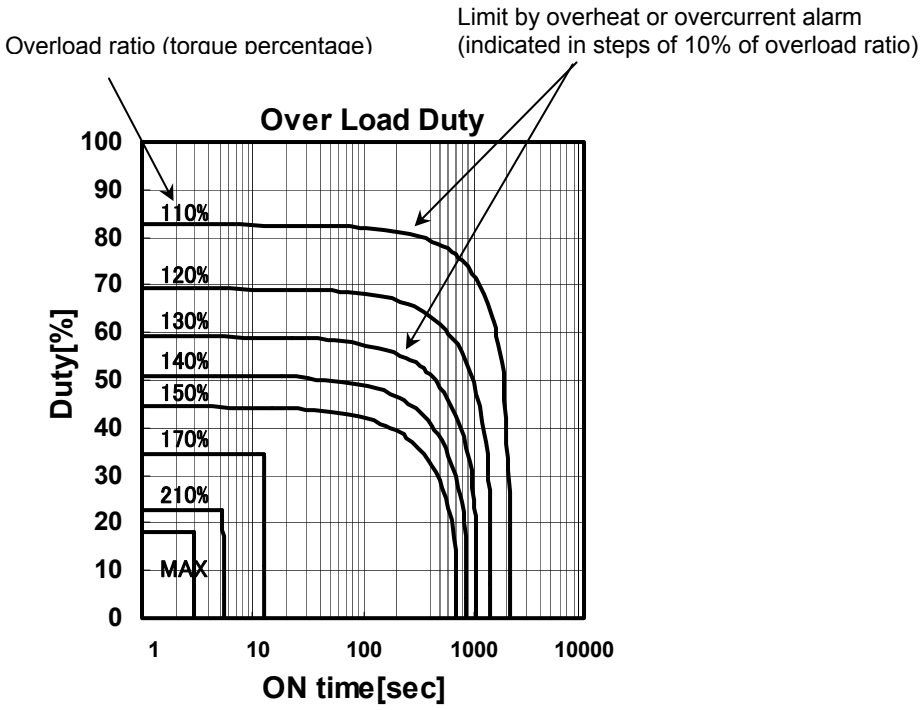


**Example) Overload duty characteristic for βiS 8/3000-B**

The procedure for determining the time duty and ON time is as follows.

<1> Calculate the overload ratio (torque percent) using the formula below.
Overload ratio = overload torque ÷ continuous torque (during low-speed rotation)

<2> The motor can be operated with the time duty and ON time at any point on or inside the curve corresponding to the overload ratio obtained from <1> for the overload duty characteristic.

## (2) Data Sheet

The data sheet gives the values of motor parameters relating to the performance.
The values of parameters are those under the following conditions.

- The ambient temperature for the motor is 20°C.
- The error is ±10%.

The following parameters are given on the data sheet:

### Continuous torque (at low speed): $T_c$ [Nm]

Torque that allows the motor to operate continuously at low speed (Note) (ambient temperature 20°C)
(Note) Low speed = 0 to 200 [$min^{-1}$]

### Continuous current (at low speed): $I_c$ [Arms]

Value obtained by dividing continuous torque (low-speed rotation) $T_c$ by torque constant $K_t$

### Rated output: $P_r$ [kW]

Continuous output at rated rotation speed $N_r$ [$min^{-1}$]

### Rating rotation speed: $N_r$ [$min^{-1}$]

Rotation speed for which the rated output is specified

### Maximum rotation speed: $N_{max}$ [$min^{-1}$]

Maximum speed at which the motor can operate



© MyFANUC DC7187A9420041B3806BC8E5C652D376

### Maximum torque: $T_{max}$ [Nm]

Maximum motor torque

More specifically, torque with which the motor can intermittently be operated within the current restricted range (from 0 [$min^{-1}$] to the beginning of dropping of the shoulder)

Note that this value varies according to fluctuations in the internal temperature of the motor, motor parameters, limits of the amplifier, etc. Also, the maximum torque may usually be lower than the calculated value (the product of individual motor torque constants and amplifier current limits) due to magnetic saturation and other factors.

### Rotor moment of inertia: $J_m$ [kg·$m^2$] [kgf·cm·$sec^2$]

Moment of inertia of the rotor of the motor

The values for the standard specification with no brake and for the specification with a brake are given.

### Torque constant: $K_t$ [N·m /Arms] [kgf·cm/Arms]

Torque developed per ampere of phase current [Arms] when the internal temperature of the motor is 20°C. (This is also known as torque sensitivity.)

This value is a motor-specific constant, and is calculated by the flux distribution and location of coils in the armature, and the dimensions of the motor.

The torque constant decreases by 0.11% for the β*i*S-B/β*i*S series or by 0.19% for the β*i*F-B/β*i*F series according to the temperature coefficient of the magnet every time the temperature of the magnet increases by 1°C after it exceeds 20°C.

### Winding resistance: $R_a$ [Ω]

Resistance between motor terminals

### Thermal time constant: $t_t$ [min]

This is a function of the initial rate of rise of winding temperature at rated current. It is defined as the time required to attain 63.2 percent of the final temperature rise.

### Axis friction torque: $T_f$ [N·m] [kgf·cm]

This is the no-load torque required just to rotate the rotor.

### Mass: w [kg]

This is the mass of the motor.

The masses of the motor with brakes and that without brakes are indicated.

### Maximum current of applicable servo amplifiers

Applicable servo amplifiers are briefly described.

For more specific servo amplifiers, see Subsection 2.1.2, "Applicable Amplifiers."



© MyFANUC DC7187A9420041B3806BC8E5C652D376

## 1.3.2.2 βiS-B/βiS SERIES (200V)

**Model βiS 0.2/5000** Specification: A06B-0111-B□03

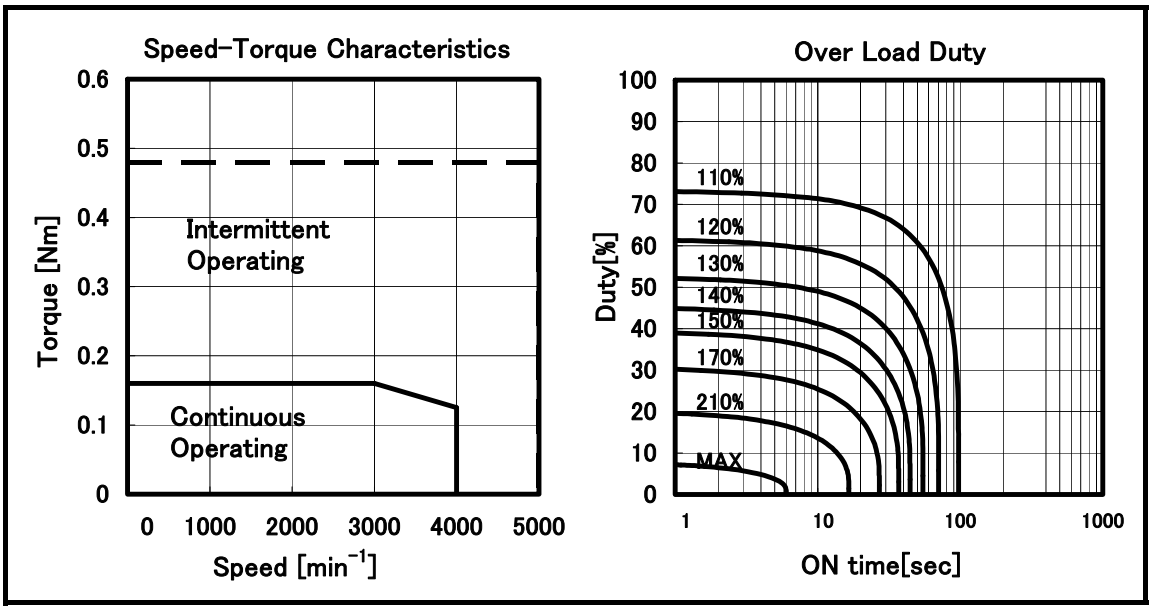


**Data sheet**

| Parameter | Symbol | Value | Unit |
|---|---|---|---|
| **Continuous Torque (at low speed) (*)** | Tc | 0.16<br>1.6 | Nm<br>kgfcm |
| **Continuous Current (at low speed) (*)** | Ic | 0.84 | A (rms) |
| **Rated Output (*)** | Pr | 0.05<br>0.07 | kW<br>HP |
| **Rated Speed** | Nr | 4000 | $min^{-1}$ |
| **Maximum Speed** | Nmax | 5000 | $min^{-1}$ |
| **Maximum Torque (*)** | Tmax | 0.48<br>4.9 | Nm<br>kgfcm |
| **Moment of Inertia of Rotor** | Jm | 0.0000019<br>0.0000194 | $kgm^2$<br>$kgfcms^2$ |
| **Moment of Inertia of Rotor(with Brake)** | Jm | 0.0000039<br>0.0000398 | $kgm^2$<br>$kgfcms^2$ |
| **Torque Constant (*)** | Kt | 0.191<br>1.95 | Nm/A(rms)<br>kgfcm/A(rms) |
| **Winding Resistance (between terminals) (*)** | Ra | 12 | Ω |
| **Thermal time constant** | $t_t$ | 5 | min |
| **Static friction** | Tf | 0.02<br>0.2 | Nm<br>kgfcm |
| **Weight** | w | 0.33 | kg |
| **Weight(with Brake)** | w | 0.55 | kg |
| **Max. Current of Servo Amp.** | Imax | 4 | A (peak) |

(*) The values are the standard values at 20℃ and the tolerance is ±10%.
The speed-torque characteristics very depending on the type of software,parametersetting,and input voltage of the digital servo software.(The above figures show average values.)



© MyFANUC DC7187A9420041B3806BC8E5C652D376

**Model βiS 0.3/5000** Specification: A06B-0112-B□03

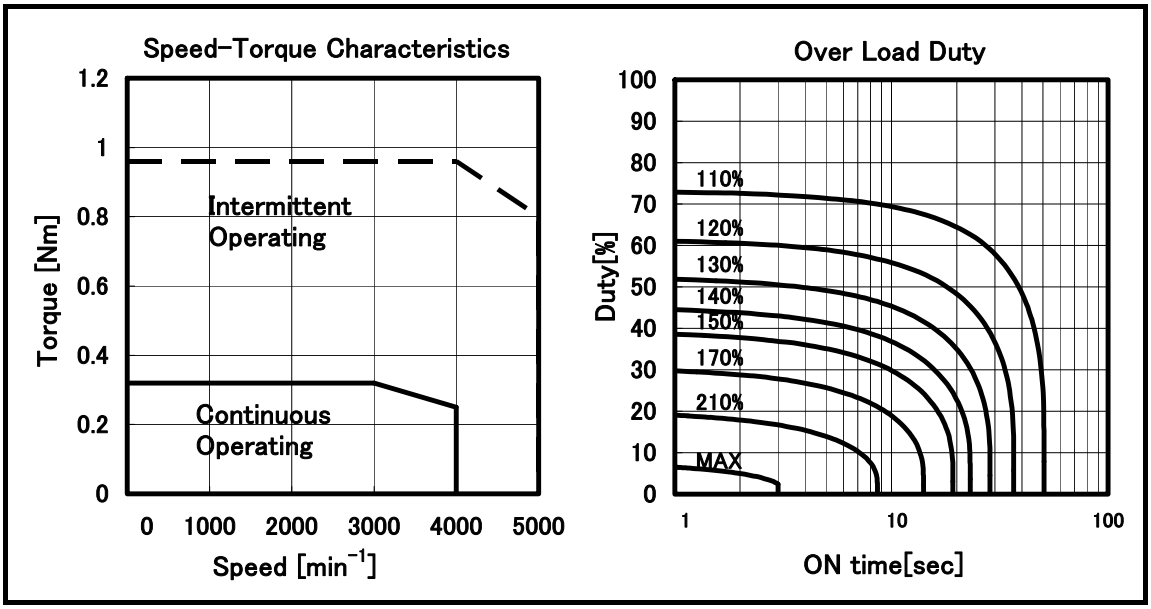


**Data sheet**

| Parameter | Symbol | Value | Unit |
|---|---|---|---|
| **Continuous Torque (at low speed) (*)** | Tc | 0.32<br>3.3 | Nm<br>kgfcm |
| **Continuous Current (at low speed) (*)** | Ic | 0.84 | A (rms) |
| **Rated Output (*)** | Pr | 0.10<br>0.13 | kW<br>HP |
| **Rated Speed** | Nr | 4000 | $min^{-1}$ |
| **Maximum Speed** | Nmax | 5000 | $min^{-1}$ |
| **Maximum Torque (*)** | Tmax | 1.0<br>9.8 | Nm<br>kgfcm |
| **Moment of Inertia of Rotor** | Jm | 0.0000034<br>0.0000347 | $kgm^2$<br>$kgfcms^2$ |
| **Moment of Inertia of Rotor(with Brake)** | Jm | 0.0000054<br>0.0000551 | $kgm^2$<br>$kgfcms^2$ |
| **Torque Constant (*)** | Kt | 0.38<br>3.9 | Nm/A(rms)<br>kgfcm/A(rms) |
| **Winding Resistance (between terminals) (*)** | Ra | 20 | Ω |
| **Thermal time constant** | $t_t$ | 8 | min |
| **Static friction** | Tf | 0.02<br>0.2 | Nm<br>kgfcm |
| **Weight** | w | 0.44 | kg |
| **Weight(with Brake)** | w | 0.66 | kg |
| **Max. Current of Servo Amp.** | Imax | 4 | A (peak) |

(*) The values are the standard values at 20℃ and the tolerance is ±10%.

The speed-torque characteristics very depending on the type of software,parametersetting,and input voltage of the digital servo software.(The above figures show average values.)



© MyFANUC DC7187A9420041B3806BC8E5C652D376

**Model βiS 0.4/5000-B** Specification: A06B-2114-B□03

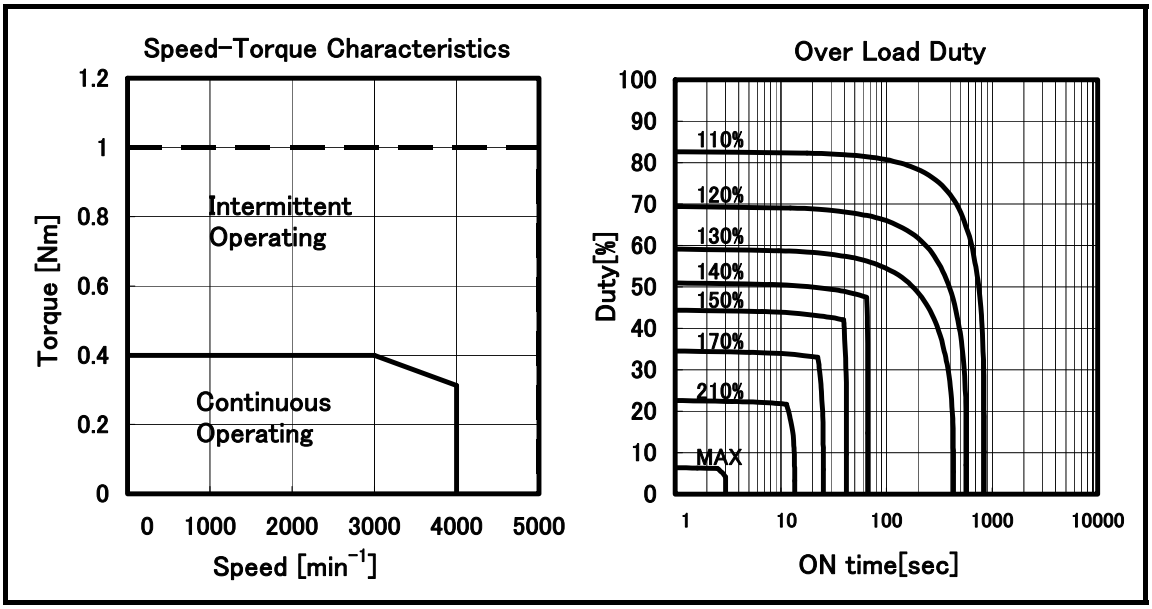


**Data sheet**

| Parameter | Symbol | Value | Unit |
|---|---|---|---|
| **Continuous Torque (at low speed) (*)** | Tc | 0.4<br>4.1 | Nm<br>kgfcm |
| **Continuous Current (at low speed) (*)** | Ic | 3.6 | A (rms) |
| **Rated Output (*)** | Pr | 0.13<br>0.17 | kW<br>HP |
| **Rated Speed** | Nr | 4000 | $min^{-1}$ |
| **Maximum Speed** | Nmax | 5000 | $min^{-1}$ |
| **Maximum Torque (*)** | Tmax | 1.0<br>10 | Nm<br>kgfcm |
| **Moment of Inertia of Rotor** | Jm | 0.000010<br>0.000102 | $kgm^2$<br>$kgfcms^2$ |
| **Moment of Inertia of Rotor(with Brake)** | Jm | 0.000019<br>0.000194 | $kgm^2$<br>$kgfcms^2$ |
| **Torque Constant (*)** | Kt | 0.112<br>1.14 | Nm/A(rms)<br>kgfcm/A(rms) |
| **Winding Resistance (between terminals) (*)** | Ra | 1.1 | Ω |
| **Thermal time constant** | $t_t$ | 8 | min |
| **Static friction** | Tf | 0.04<br>0.4 | Nm<br>kgfcm |
| **Weight** | w | 0.8 | kg |
| **Weight(with Brake)** | w | 1.2 | kg |
| **Max. Current of Servo Amp.** | Imax | 20 | A (peak) |

(*) The values are the standard values at 20℃ and the tolerance is ±10%.

The speed-torque characteristics very depending on the type of software,parametersetting,and input voltage of the digital servo software.(The above figures show average values.)



© MyFANUC DC7187A9420041B3806BC8E5C652D376

**Model βiS 0.5/6000-B** Specification: A06B-2115-B□03

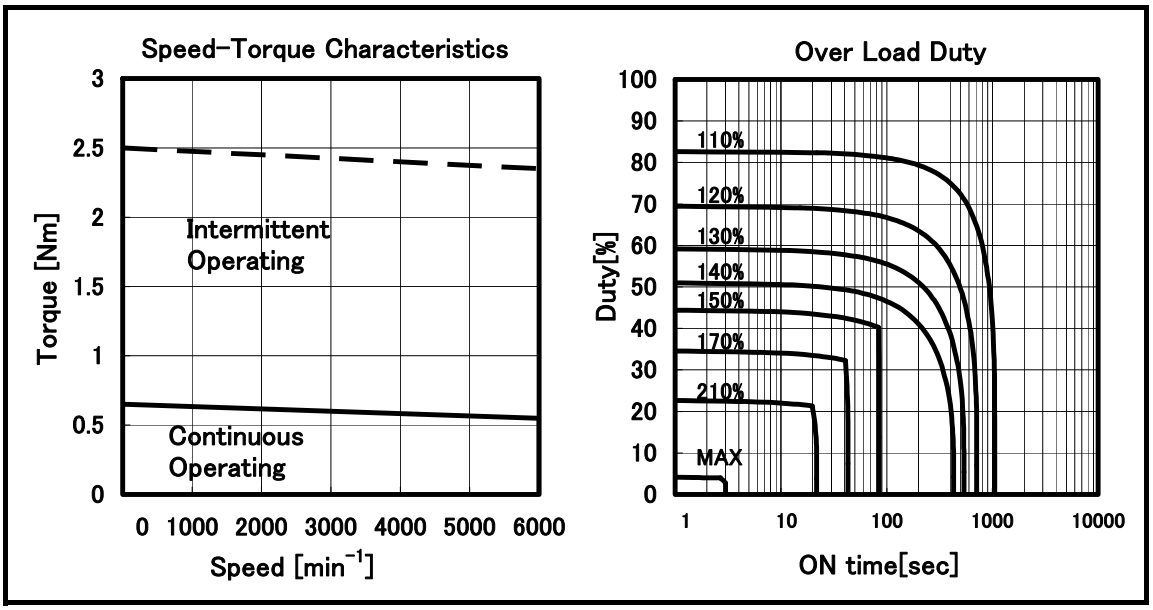


**Data sheet**

| Parameter | Symbol | Value | Unit |
|---|---|---|---|
| **Continuous Torque (at low speed) (*)** | Tc | 0.65<br>6.6 | Nm<br>kgfcm |
| **Continuous Current (at low speed) (*)** | Ic | 2.9 | A (rms) |
| **Rated Output (*)** | Pr | 0.35<br>0.47 | kW<br>HP |
| **Rated Speed** | Nr | 6000 | $min^{-1}$ |
| **Maximum Speed** | Nmax | 6000 | $min^{-1}$ |
| **Maximum Torque (*)** | Tmax | 2.5<br>26 | Nm<br>kgfcm |
| **Moment of Inertia of Rotor** | Jm | 0.000018<br>0.000184 | $kgm^2$<br>$kgfcms^2$ |
| **Moment of Inertia of Rotor(with Brake)** | Jm | 0.000027<br>0.000276 | $kgm^2$<br>$kgfcms^2$ |
| **Torque Constant (*)** | Kt | 0.223<br>2.28 | Nm/A(rms)<br>kgfcm/A(rms) |
| **Winding Resistance (between terminals) (*)** | Ra | 1.7 | Ω |
| **Thermal time constant** | $t_t$ | 10 | min |
| **Static friction** | Tf | 0.04<br>0.4 | Nm<br>kgfcm |
| **Weight** | w | 1.0 | kg |
| **Weight(with Brake)** | w | 1.4 | kg |
| **Max. Current of Servo Amp.** | Imax | 20 | A (peak) |

(*) The values are the standard values at 20℃ and the tolerance is ±10%.

The speed-torque characteristics very depending on the type of software,parametersetting,and input voltage of the digital servo software.(The above figures show average values.)



© MyFANUC DC7187A9420041B3806BC8E5C652D376

**Model βiS 1/6000-B** Specification: A06B-2116-B□03

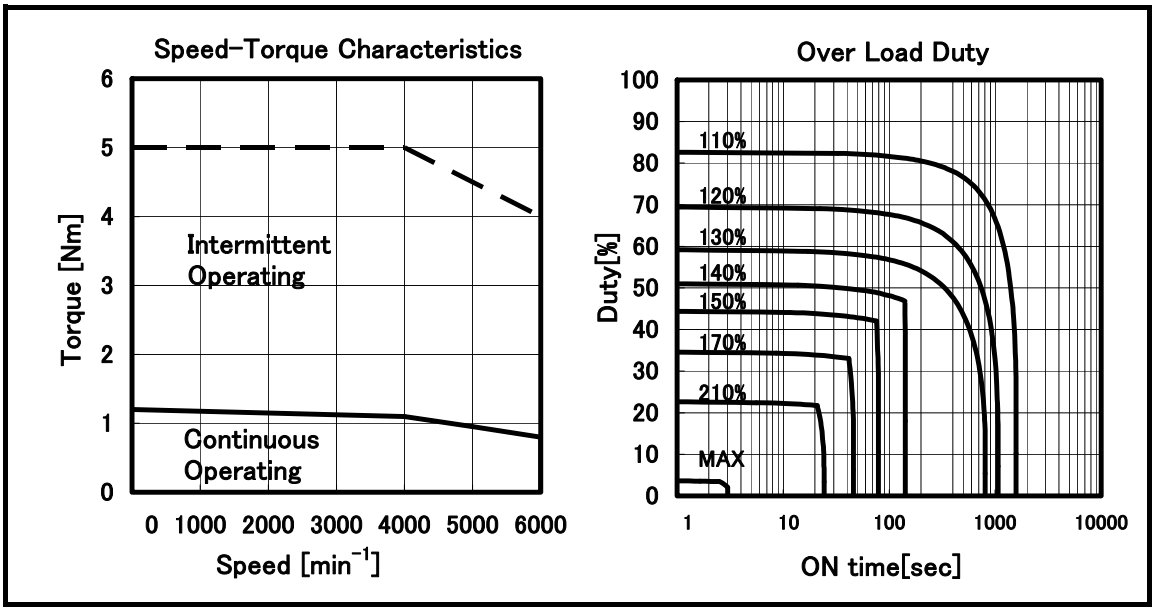


**Data sheet**

| Parameter | Symbol | Value | Unit |
|---|---|---|---|
| **Continuous Torque (at low speed) (*)** | Tc | 1.2<br>12 | Nm<br>kgfcm |
| **Continuous Current (at low speed) (*)** | Ic | 2.7 | A (rms) |
| **Rated Output (*)** | Pr | 0.50<br>0.67 | kW<br>HP |
| **Rated Speed** | Nr | 6000 | $min^{-1}$ |
| **Maximum Speed** | Nmax | 6000 | $min^{-1}$ |
| **Maximum Torque (*)** | Tmax | 5.0<br>51 | Nm<br>kgfcm |
| **Moment of Inertia of Rotor** | Jm | 0.000034<br>0.000347 | $kgm^2$<br>$kgfcms^2$ |
| **Moment of Inertia of Rotor(with Brake)** | Jm | 0.000043<br>0.000439 | $kgm^2$<br>$kgfcms^2$ |
| **Torque Constant (*)** | Kt | 0.45<br>4.6 | Nm/A(rms)<br>kgfcm/A(rms) |
| **Winding Resistance (between terminals) (*)** | Ra | 3.0 | Ω |
| **Thermal time constant** | $t_t$ | 15 | min |
| **Static friction** | Tf | 0.04<br>0.4 | Nm<br>kgfcm |
| **Weight** | w | 1.5 | kg |
| **Weight(with Brake)** | w | 1.9 | kg |
| **Max. Current of Servo Amp.** | Imax | 20 | A (peak) |

(*) The values are the standard values at 20℃ and the tolerance is ±10%.

The speed-torque characteristics very depending on the type of software,parametersetting,and input voltage of the digital servo software.(The above figures show average values.)



© MyFANUC DC7187A9420041B3806BC8E5C652D376

**Model βiS 2/4000-B** Specification: A06B-2061-B□03

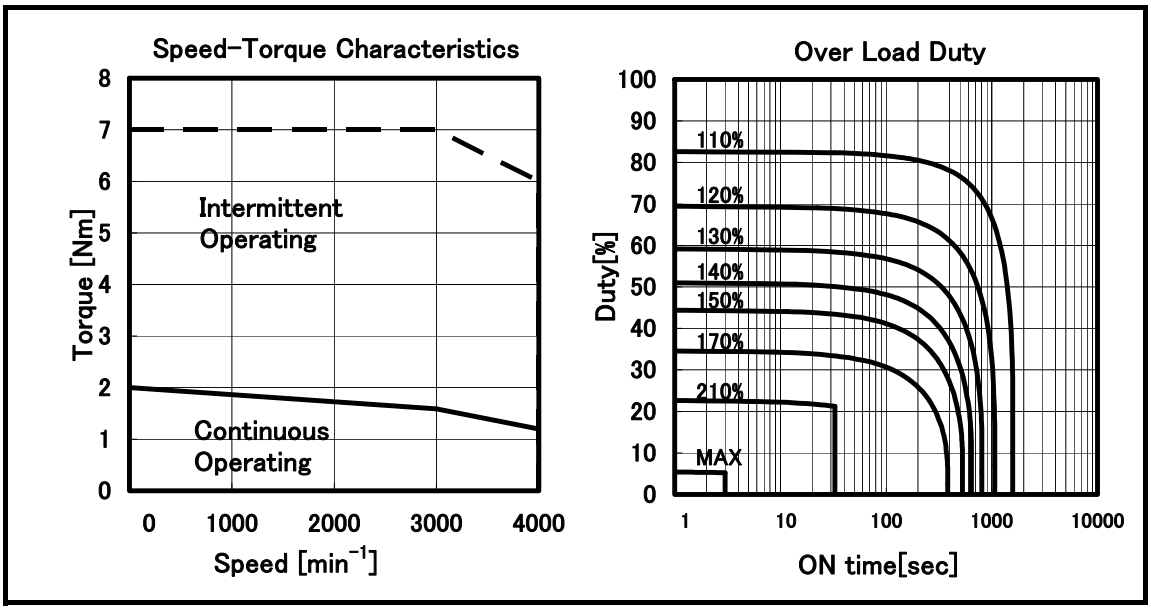


**Data sheet**

| Parameter | Symbol | Value | Unit |
|---|---|---|---|
| **Continuous Torque (at low speed) (*)** | Tc | 2.0<br>20 | Nm<br>kgfcm |
| **Continuous Current (at low speed) (*)** | Ic | 3.3 | A (rms) |
| **Rated Output (*)** | Pr | 0.50<br>0.67 | kW<br>HP |
| **Rated Speed** | Nr | 4000 | $min^{-1}$ |
| **Maximum Speed** | Nmax | 4000 | $min^{-1}$ |
| **Maximum Torque (*)** | Tmax | 7.0<br>71 | Nm<br>kgfcm |
| **Moment of Inertia of Rotor** | Jm | 0.000291<br>0.00297 | $kgm^2$<br>$kgfcms^2$ |
| **Moment of Inertia of Rotor(with Brake)** | Jm | 0.000311<br>0.00317 | $kgm^2$<br>$kgfcms^2$ |
| **Torque Constant (*)** | Kt | 0.62<br>6.3 | Nm/A(rms)<br>kgfcm/A(rms) |
| **Winding Resistance (between terminals) (*)** | Ra | 3.2 | Ω |
| **Thermal time constant** | $t_t$ | 15 | min |
| **Static friction** | Tf | 0.1<br>1 | Nm<br>kgfcm |
| **Weight** | w | 2.8 | kg |
| **Weight(with Brake)** | w | 3.8 | kg |
| **Max. Current of Servo Amp.** | Imax | 20 | A (peak) |

(*) The values are the standard values at 20℃ and the tolerance is ±10%.

The speed-torque characteristics very depending on the type of software,parametersetting,and input voltage of the digital servo software.(The above figures show average values.)



© MyFANUC DC7187A9420041B3806BC8E5C652D376

**Model βiS 4/4000-B** Specification: A06B-2063-B□03

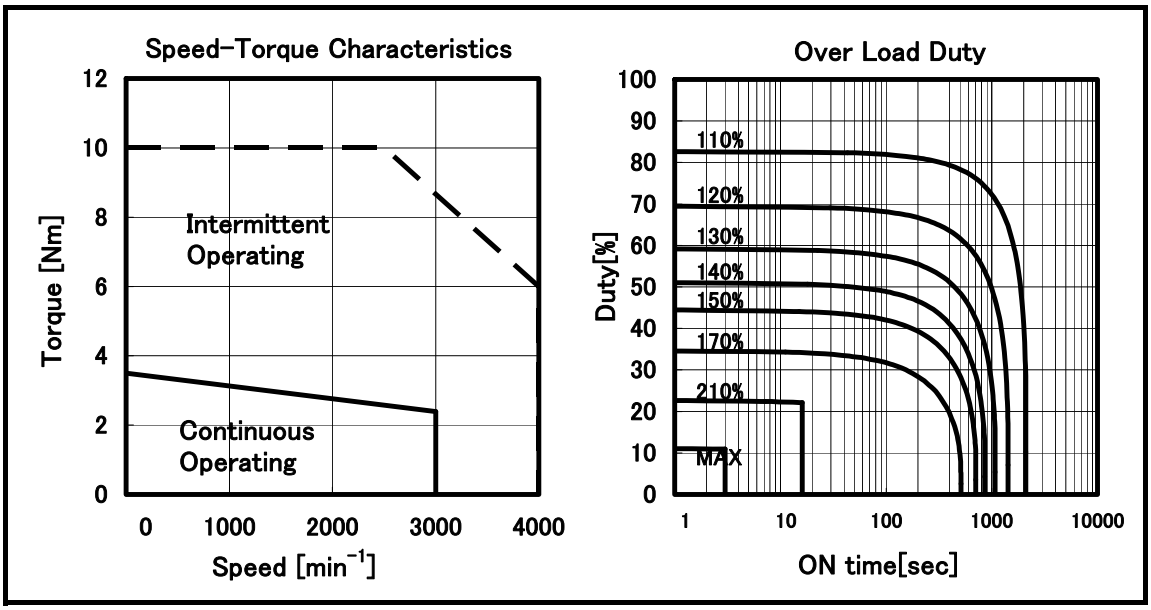


**Data sheet**

| Parameter | Symbol | Value | Unit |
|---|---|---|---|
| **Continuous Torque (at low speed) (*)** | Tc | 3.5<br>36 | Nm<br>kgfcm |
| **Continuous Current (at low speed) (*)** | Ic | 4.7 | A (rms) |
| **Rated Output (*)** | Pr | 0.75<br>1.0 | kW<br>HP |
| **Rated Speed** | Nr | 3000 | $min^{-1}$ |
| **Maximum Speed** | Nmax | 4000 | $min^{-1}$ |
| **Maximum Torque (*)** | Tmax | 10<br>102 | Nm<br>kgfcm |
| **Moment of Inertia of Rotor** | Jm | 0.000515<br>0.00526 | $kgm^2$<br>$kgfcms^2$ |
| **Moment of Inertia of Rotor(with Brake)** | Jm | 0.000535<br>0.00546 | $kgm^2$<br>$kgfcms^2$ |
| **Torque Constant (*)** | Kt | 0.75<br>7.7 | Nm/A(rms)<br>kgfcm/A(rms) |
| **Winding Resistance (between terminals) (*)** | Ra | 1.9 | Ω |
| **Thermal time constant** | $t_t$ | 20 | min |
| **Static friction** | Tf | 0.2<br>2 | Nm<br>kgfcm |
| **Weight** | w | 4.3 | kg |
| **Weight(with Brake)** | w | 5.3 | kg |
| **Max. Current of Servo Amp.** | Imax | 20 | A (peak) |

(*) The values are the standard values at 20℃ and the tolerance is ±10%.

The speed-torque characteristics very depending on the type of software,parametersetting,and input voltage of the digital servo software.(The above figures show average values.)



© MyFANUC DC7187A9420041B3806BC8E5C652D376

**Model βiS 8/3000-B** Specification: A06B-2075-B□03

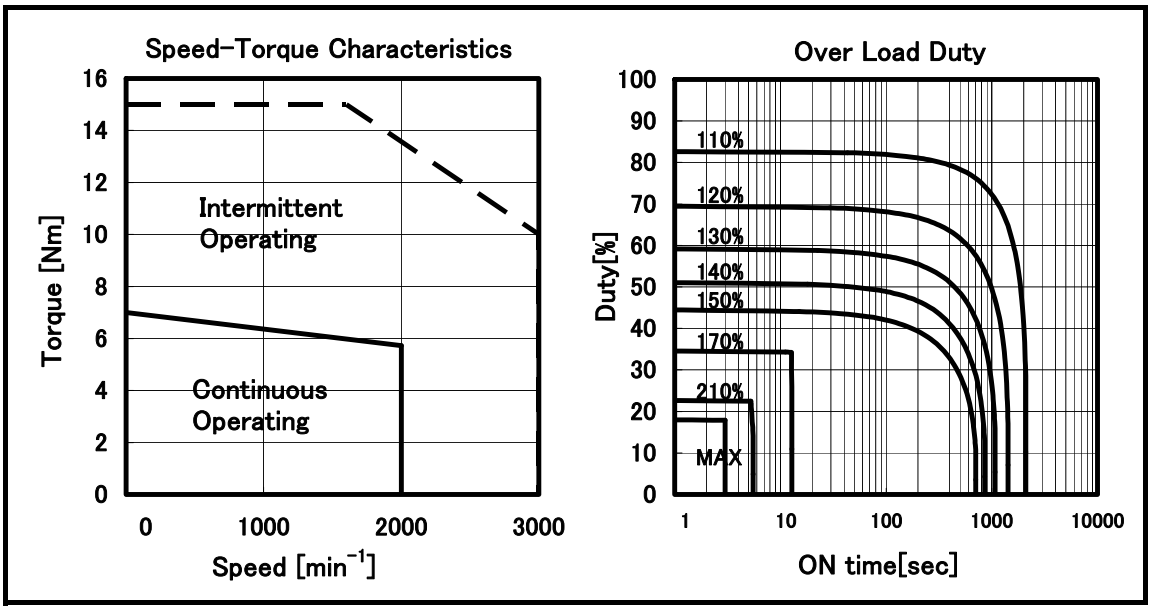


**Data sheet**

| Parameter | Symbol | Value | Unit |
|---|---|---|---|
| **Continuous Torque (at low speed) (*)** | Tc | 7.0<br>71 | Nm<br>kgfcm |
| **Continuous Current (at low speed) (*)** | Ic | 6.0 | A (rms) |
| **Rated Output (*)** | Pr | 1.2<br>1.6 | kW<br>HP |
| **Rated Speed** | Nr | 2000 | $min^{-1}$ |
| **Maximum Speed** | Nmax | 3000 | $min^{-1}$ |
| **Maximum Torque (*)** | Tmax | 15<br>153 | Nm<br>kgfcm |
| **Moment of Inertia of Rotor** | Jm | 0.00117<br>0.0119 | $kgm^2$<br>$kgfcms^2$ |
| **Moment of Inertia of Rotor(with Brake)** | Jm | 0.00124<br>0.0127 | $kgm^2$<br>$kgfcms^2$ |
| **Torque Constant (*)** | Kt | 1.16<br>11.8 | Nm/A(rms)<br>kgfcm/A(rms) |
| **Winding Resistance (between terminals) (*)** | Ra | 2.0 | Ω |
| **Thermal time constant** | $t_t$ | 20 | min |
| **Static friction** | Tf | 0.3<br>3 | Nm<br>kgfcm |
| **Weight** | w | 7.4 | kg |
| **Weight(with Brake)** | w | 9.6 | kg |
| **Max. Current of Servo Amp.** | Imax | 20 | A (peak) |

(*) The values are the standard values at 20℃ and the tolerance is ±10%.

The speed-torque characteristics very depending on the type of software,parametersetting,and input voltage of the digital servo software.(The above figures show average values.)



© MyFANUC DC7187A9420041B3806BC8E5C652D376

**Model βiS 12/2000-B** Specification A06B-0077-B□03

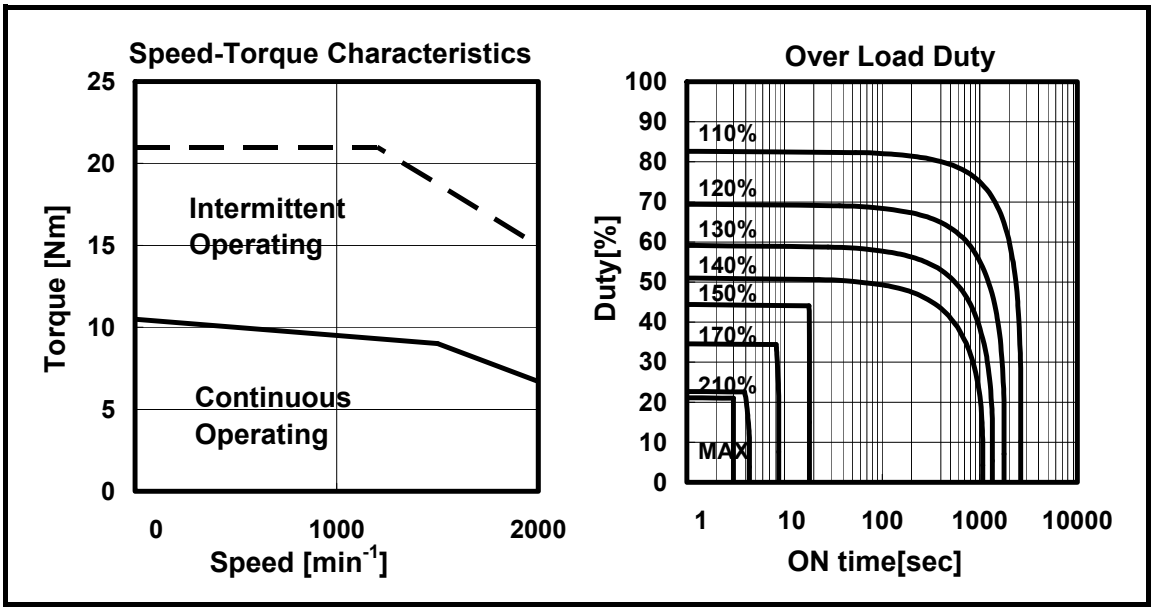


**Data sheet**

| Parameter | Symbol | Value | Unit |
|---|---|---|---|
| **Continuous Torque (at low speed) (*)** | Tc | 10.5<br>107 | Nm<br>kgfcm |
| **Continuous Current (at low speed) (*)** | Ic | 6.5 | A (rms) |
| **Rated Output (*)** | Pr | 1.4<br>1.9 | kW<br>HP |
| **Rated Speed** | Nr | 2000 | $min^{-1}$ |
| **Maximum Speed** | Nmax | 2000 | $min^{-1}$ |
| **Maximum Torque (*)** | Tmax | 21<br>214 | Nm<br>kgfcm |
| **Moment of Inertia of Rotor** | Jm | 0.00228<br>0.0233 | $kgm^2$<br>$kgfcms^2$ |
| **Moment of Inertia of Rotor(with Brake)** | Jm | 0.00235<br>0.0240 | $kgm^2$<br>$kgfcms^2$ |
| **Torque Constant (*)** | Kt | 1.62<br>16.5 | Nm/A(rms)<br>kgfcm/A(rms) |
| **Winding Resistance (between terminals) (*)** | Ra | 1.7 | Ω |
| **Thermal time constant** | $t_t$ | 25 | min |
| **Static friction** | Tf | 0.4<br>4 | Nm<br>kgfcm |
| **Weight** | w | 11.9 | kg |
| **Weight(with Brake)** | w | 14.1 | kg |
| **Max. Current of Servo Amp.** | Imax | 20 | A (peak) |

(*) The values are the standard values at 20℃ and the tolerance is ±10%.
The speed-torque characteristics very depending on the type of software,parametersetting,and input voltage of the digital servo software.(The above figures show average values.)



© MyFANUC DC7187A9420041B3806BC8E5C652D376

**Model βiS 12/3000-B** Specification: A06B-2078-B□03

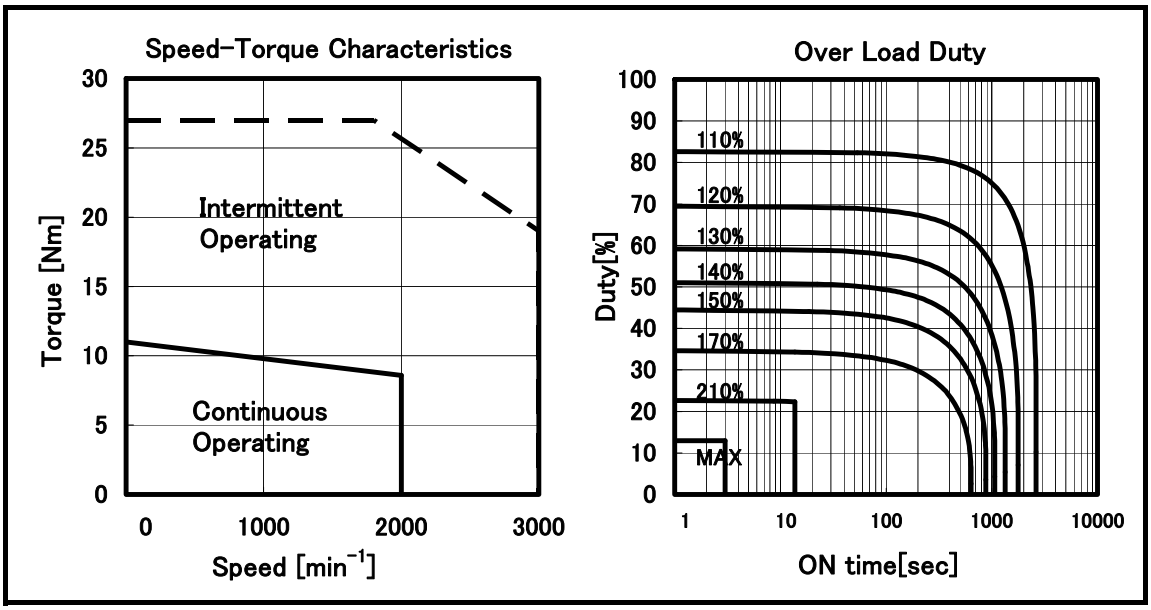


**Data sheet**

| Parameter | Symbol | Value | Unit |
|---|---|---|---|
| **Continuous Torque (at low speed) (*)** | Tc | 11<br>112 | Nm<br>kgfcm |
| **Continuous Current (at low speed) (*)** | Ic | 10.2 | A (rms) |
| **Rated Output (*)** | Pr | 1.8<br>2.4 | kW<br>HP |
| **Rated Speed** | Nr | 2000 | $min^{-1}$ |
| **Maximum Speed** | Nmax | 3000 | $min^{-1}$ |
| **Maximum Torque (*)** | Tmax | 27<br>276 | Nm<br>kgfcm |
| **Moment of Inertia of Rotor** | Jm | 0.00228<br>0.0233 | $kgm^2$<br>$kgfcms^2$ |
| **Moment of Inertia of Rotor(with Brake)** | Jm | 0.00235<br>0.0240 | $kgm^2$<br>$kgfcms^2$ |
| **Torque Constant (*)** | Kt | 1.08<br>11.0 | Nm/A(rms)<br>kgfcm/A(rms) |
| **Winding Resistance (between terminals) (*)** | Ra | 0.78 | Ω |
| **Thermal time constant** | $t_t$ | 25 | min |
| **Static friction** | Tf | 0.4<br>4 | Nm<br>kgfcm |
| **Weight** | w | 11.9 | kg |
| **Weight(with Brake)** | w | 14.1 | kg |
| **Max. Current of Servo Amp.** | Imax | 40 | A (peak) |

(*) The values are the standard values at 20℃ and the tolerance is ±10%.

The speed-torque characteristics very depending on the type of software,parametersetting,and input voltage of the digital servo software.(The above figures show average values.)



© MyFANUC DC7187A9420041B3806BC8E5C652D376

**Model βiS 22/2000-B** Specification: A06B-2085-B□03

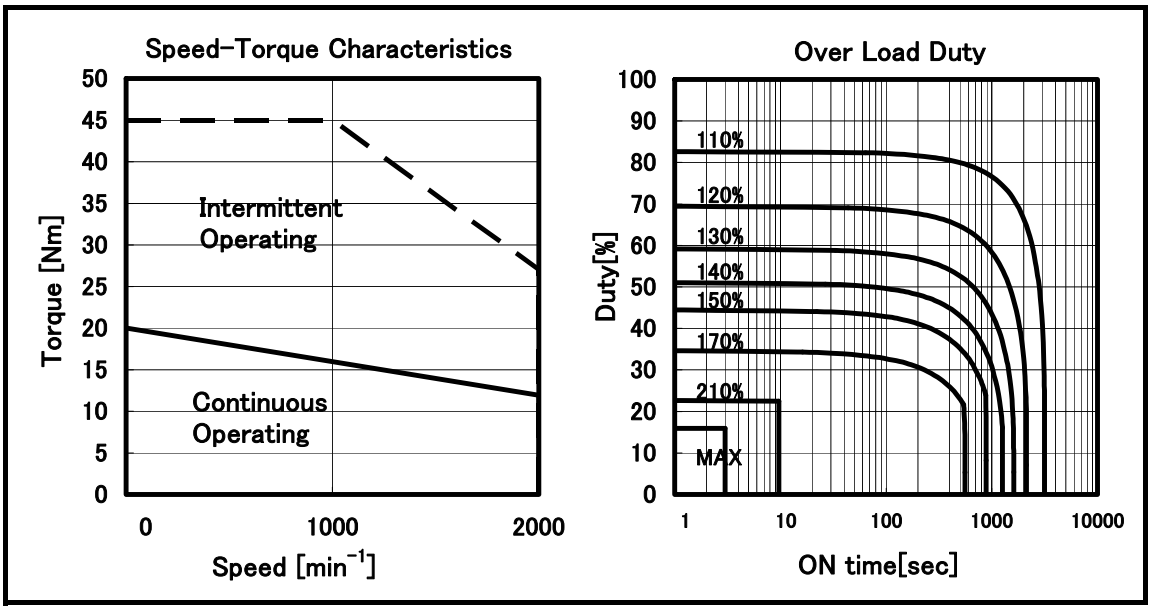


**Data sheet**

| Parameter | Symbol | Value | Unit |
|---|---|---|---|
| **Continuous Torque (at low speed) (*)** | Tc | 20<br>204 | Nm<br>kgfcm |
| **Continuous Current (at low speed) (*)** | Ic | 11.3 | A (rms) |
| **Rated Output (*)** | Pr | 2.5<br>3.4 | kW<br>HP |
| **Rated Speed** | Nr | 2000 | $min^{-1}$ |
| **Maximum Speed** | Nmax | 2000 | $min^{-1}$ |
| **Maximum Torque (*)** | Tmax | 45<br>459 | Nm<br>kgfcm |
| **Moment of Inertia of Rotor** | Jm | 0.00527<br>0.0538 | $kgm^2$<br>$kgfcms^2$ |
| **Moment of Inertia of Rotor(with 35Nm Brake)** | Jm | 0.00587<br>0.0599 | $kgm^2$<br>$kgfcms^2$ |
| **Torque Constant (*)** | Kt | 1.77<br>18.1 | Nm/A(rms)<br>kgfcm/A(rms) |
| **Winding Resistance (between terminals) (*)** | Ra | 0.88 | Ω |
| **Thermal time constant** | $t_t$ | 30 | min |
| **Static friction** | Tf | 0.8<br>8 | Nm<br>kgfcm |
| **Weight** | w | 17 | kg |
| **Weight(with 35Nm Brake)** | w | 23 | kg |
| **Max. Current of Servo Amp.** | Imax | 40 | A (peak) |

(*) The values are the standard values at 20℃ and the tolerance is ±10%.

The speed-torque characteristics very depending on the type of software,parametersetting,and input voltage of the digital servo software.(The above figures show average values.)



© MyFANUC DC7187A9420041B3806BC8E5C652D376

**Model βiS 22/3000-B** Specification: A06B-2082-B□03

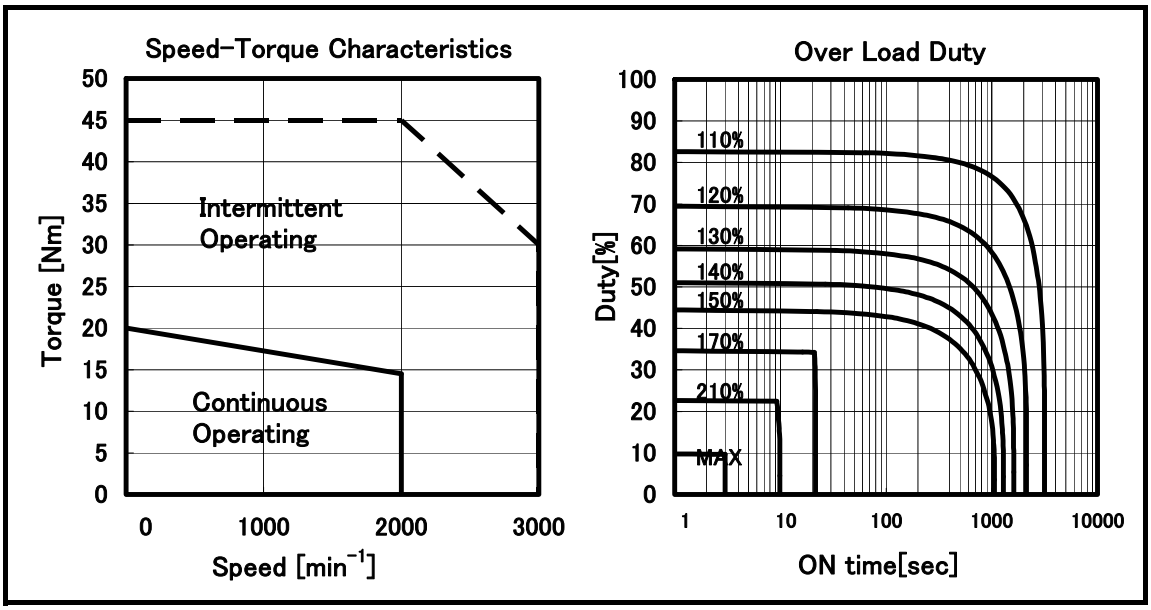


**Data sheet**

| Parameter | Symbol | Value | Unit |
|---|---|---|---|
| **Continuous Torque (at low speed) (*)** | Tc | 20<br>204 | Nm<br>kgfcm |
| **Continuous Current (at low speed) (*)** | Ic | 17.7 | A (rms) |
| **Rated Output (*)** | Pr | 3.0<br>4.0 | kW<br>HP |
| **Rated Speed** | Nr | 2000 | $min^{-1}$ |
| **Maximum Speed** | Nmax | 3000 | $min^{-1}$ |
| **Maximum Torque (*)** | Tmax | 45<br>459 | Nm<br>kgfcm |
| **Moment of Inertia of Rotor** | Jm | 0.00527<br>0.0538 | $kgm^2$<br>$kgfcms^2$ |
| **Moment of Inertia of Rotor(with 35Nm Brake)** | Jm | 0.00587<br>0.0599 | $kgm^2$<br>$kgfcms^2$ |
| **Torque Constant (*)** | Kt | 1.13<br>11.5 | Nm/A(rms)<br>kgfcm/A(rms) |
| **Winding Resistance (between terminals) (*)** | Ra | 0.34 | Ω |
| **Thermal time constant** | $t_t$ | 30 | min |
| **Static friction** | Tf | 0.8<br>8 | Nm<br>kgfcm |
| **Weight** | w | 17 | kg |
| **Weight(with 35Nm Brake)** | w | 23 | kg |
| **Max. Current of Servo Amp.** | Imax | 80 | A (peak) |

(*) The values are the standard values at 20℃ and the tolerance is ±10%.

The speed-torque characteristics very depending on the type of software,parametersetting,and input voltage of the digital servo software.(The above figures show average values.)



© MyFANUC DC7187A9420041B3806BC8E5C652D376

**Model βiS 30/2000-B** Specification: A06B-2087-B□03

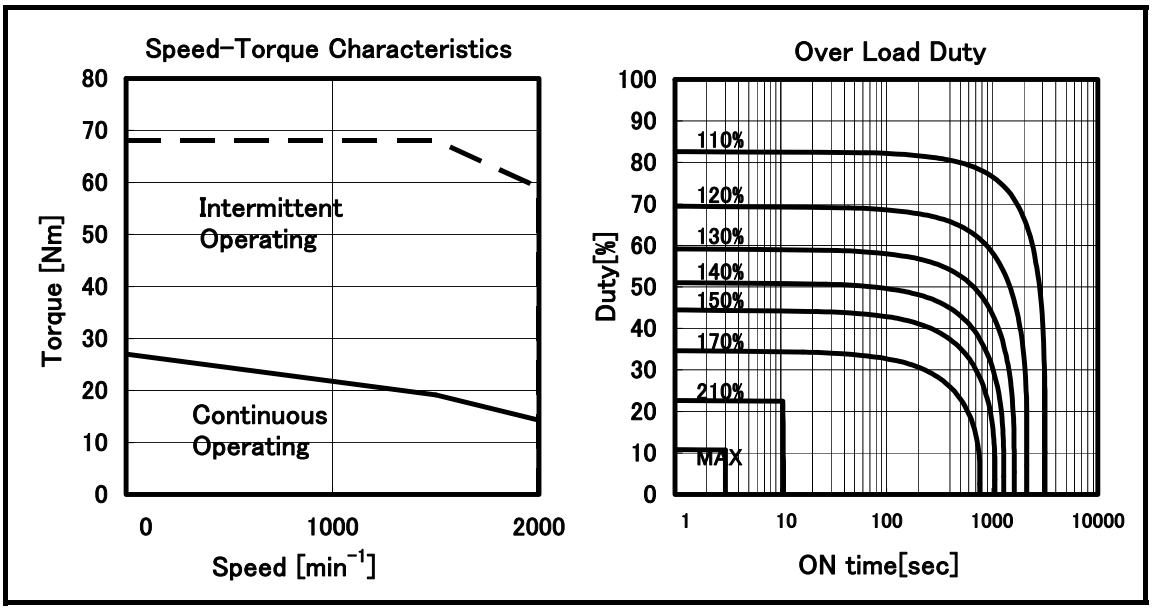


**Data sheet**

| Parameter | Symbol | Value | Unit |
|---|---|---|---|
| **Continuous Torque (at low speed) (*)** | Tc | 27<br>276 | Nm<br>kgfcm |
| **Continuous Current (at low speed) (*)** | Ic | 18.6 | A (rms) |
| **Rated Output (*)** | Pr | 3.0<br>4.0 | kW<br>HP |
| **Rated Speed** | Nr | 2000 | $min^{-1}$ |
| **Maximum Speed** | Nmax | 2000 | $min^{-1}$ |
| **Maximum Torque (*)** | Tmax | 68<br>694 | Nm<br>kgfcm |
| **Moment of Inertia of Rotor** | Jm | 0.00759<br>0.0774 | $kgm^2$<br>$kgfcms^2$ |
| **Moment of Inertia of Rotor(with 35Nm Brake)** | Jm | 0.00819<br>0.0836 | $kgm^2$<br>$kgfcms^2$ |
| **Torque Constant (*)** | Kt | 1.45<br>14.8 | Nm/A(rms)<br>kgfcm/A(rms) |
| **Winding Resistance (between terminals) (*)** | Ra | 0.30 | Ω |
| **Thermal time constant** | $t_t$ | 30 | min |
| **Static friction** | Tf | 0.8<br>8 | Nm<br>kgfcm |
| **Weight** | w | 23 | kg |
| **Weight(with 35Nm Brake)** | w | 29 | kg |
| **Max. Current of Servo Amp.** | Imax | 80 | A (peak) |

(*) The values are the standard values at 20℃ and the tolerance is ±10%.

The speed-torque characteristics very depending on the type of software,parametersetting,and input voltage of the digital servo software.(The above figures show average values.)



© MyFANUC DC7187A9420041B3806BC8E5C652D376

**Model βiS 40/2000-B** Specification: A06B-2089-B□03

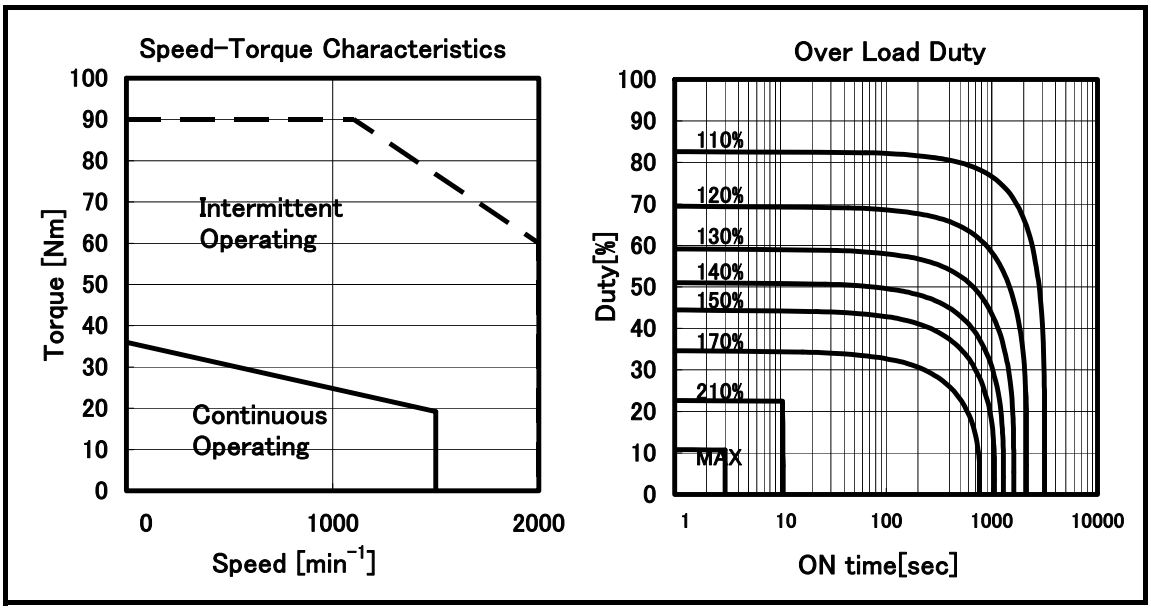


**Data sheet**

| Parameter | Symbol | Value | Unit |
|---|---|---|---|
| **Continuous Torque (at low speed) (*)** | Tc | 36<br>367 | Nm<br>kgfcm |
| **Continuous Current (at low speed) (*)** | Ic | 18.6 | A (rms) |
| **Rated Output (*)** | Pr | 3.0<br>4.0 | kW<br>HP |
| **Rated Speed** | Nr | 1500 | $min^{-1}$ |
| **Maximum Speed** | Nmax | 2000 | $min^{-1}$ |
| **Maximum Torque (*)** | Tmax | 90<br>918 | Nm<br>kgfcm |
| **Moment of Inertia of Rotor** | Jm | 0.00990<br>0.101 | $kgm^2$<br>$kgfcms^2$ |
| **Moment of Inertia of Rotor(with 35Nm Brake)** | Jm | 0.0105<br>0.107 | $kgm^2$<br>$kgfcms^2$ |
| **Torque Constant (*)** | Kt | 1.94<br>19.8 | Nm/A(rms)<br>kgfcm/A(rms) |
| **Winding Resistance (between terminals) (*)** | Ra | 0.34 | Ω |
| **Thermal time constant** | $t_t$ | 30 | min |
| **Static friction** | Tf | 1.2<br>12 | Nm<br>kgfcm |
| **Weight** | w | 28 | kg |
| **Weight(with 35Nm Brake)** | w | 34 | kg |
| **Max. Current of Servo Amp.** | Imax | 80 | A (peak) |

(*) The values are the standard values at 20℃ and the tolerance is ±10%.

The speed-torque characteristics very depending on the type of software,parametersetting,and input voltage of the digital servo software.(The above figures show average values.)



© MyFANUC DC7187A9420041B3806BC8E5C652D376

## 1.3.2.3 βiS-B SERIES (400V)

**Model βiS 2/4000HV-B** Specification: A06B-2062-B□03

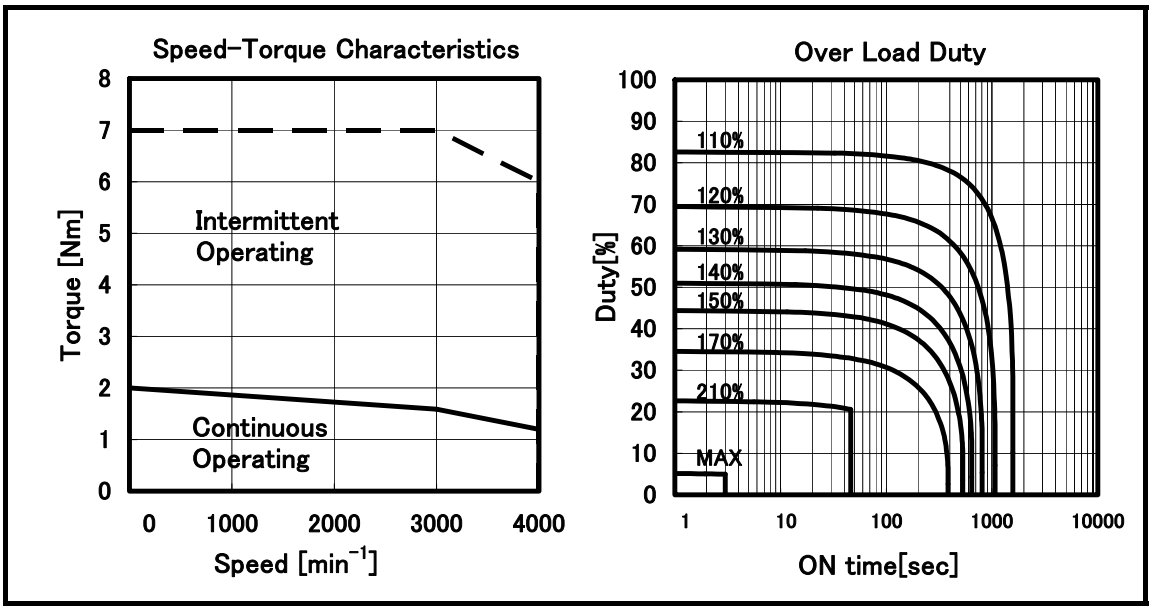


**Data sheet**

| Parameter | Symbol | Value | Unit |
|---|---|---|---|
| **Continuous Torque (at low speed) (*)** | Tc | 2.0<br>20 | Nm<br>kgfcm |
| **Continuous Current (at low speed) (*)** | Ic | 1.6 | A (rms) |
| **Rated Output (*)** | Pr | 0.50<br>0.67 | kW<br>HP |
| **Rated Speed** | Nr | 4000 | $min^{-1}$ |
| **Maximum Speed** | Nmax | 4000 | $min^{-1}$ |
| **Maximum Torque (*)** | Tmax | 7.0<br>71 | Nm<br>kgfcm |
| **Moment of Inertia of Rotor** | Jm | 0.000291<br>0.00297 | $kgm^2$<br>$kgfcms^2$ |
| **Moment of Inertia of Rotor(with Brake)** | Jm | 0.000311<br>0.00317 | $kgm^2$<br>$kgfcms^2$ |
| **Torque Constant (*)** | Kt | 1.23<br>12.6 | Nm/A(rms)<br>kgfcm/A(rms) |
| **Winding Resistance (between terminals) (*)** | Ra | 13.2 | Ω |
| **Thermal time constant** | $t_t$ | 15 | min |
| **Static friction** | Tf | 0.1<br>1 | Nm<br>kgfcm |
| **Weight** | w | 2.8 | kg |
| **Weight(with Brake)** | w | 3.8 | kg |
| **Max. Current of Servo Amp.** | Imax | 10 | A (peak) |

(*) The values are the standard values at 20℃ and the tolerance is ±10%.

The speed-torque characteristics very depending on the type of software,parametersetting,and input voltage of the digital servo software.(The above figures show average values.)



© MyFANUC DC7187A9420041B3806BC8E5C652D376

**Model βiS 4/4000HV-B** Specification: A06B-2064-B□03

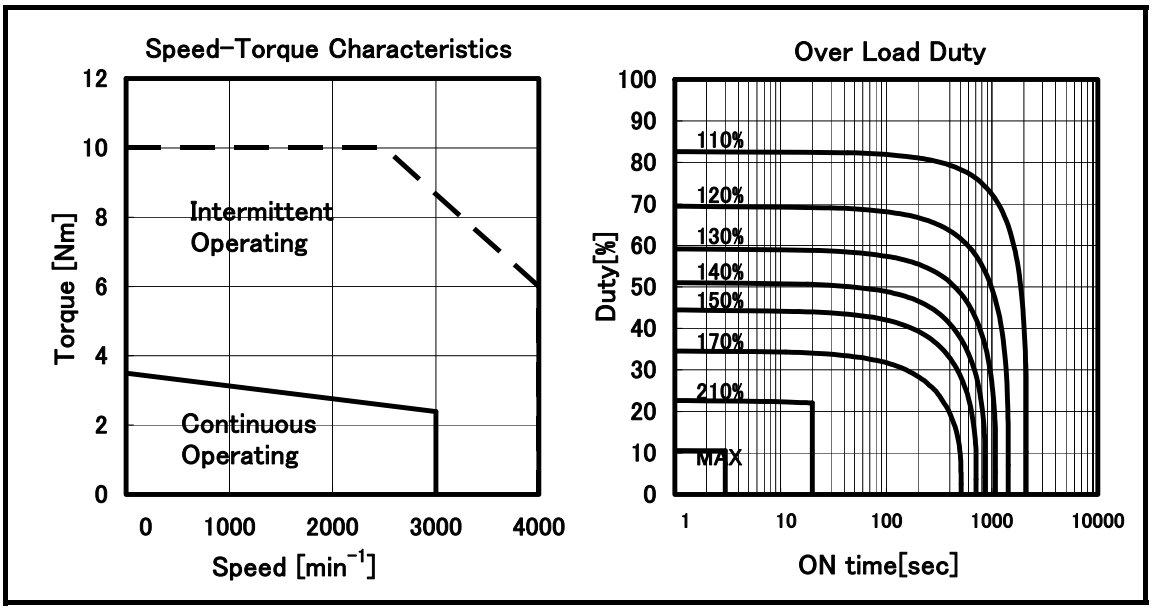


**Data sheet**

| Parameter | Symbol | Value | Unit |
|---|---|---|---|
| **Continuous Torque (at low speed) (*)** | Tc | 3.5<br>36 | Nm<br>kgfcm |
| **Continuous Current (at low speed) (*)** | Ic | 2.3 | A (rms) |
| **Rated Output (*)** | Pr | 0.75<br>1.0 | kW<br>HP |
| **Rated Speed** | Nr | 3000 | $min^{-1}$ |
| **Maximum Speed** | Nmax | 4000 | $min^{-1}$ |
| **Maximum Torque (*)** | Tmax | 10<br>102 | Nm<br>kgfcm |
| **Moment of Inertia of Rotor** | Jm | 0.000515<br>0.00526 | $kgm^2$<br>$kgfcms^2$ |
| **Moment of Inertia of Rotor(with Brake)** | Jm | 0.000535<br>0.00546 | $kgm^2$<br>$kgfcms^2$ |
| **Torque Constant (*)** | Kt | 1.50<br>15.3 | Nm/A(rms)<br>kgfcm/A(rms) |
| **Winding Resistance (between terminals) (*)** | Ra | 8.0 | Ω |
| **Thermal time constant** | $t_t$ | 20 | min |
| **Static friction** | Tf | 0.2<br>2 | Nm<br>kgfcm |
| **Weight** | w | 4.3 | kg |
| **Weight(with Brake)** | w | 5.3 | kg |
| **Max. Current of Servo Amp.** | Imax | 10 | A (peak) |

(*) The values are the standard values at 20℃ and the tolerance is ±10%.

The speed-torque characteristics very depending on the type of software,parametersetting,and input voltage of the digital servo software.(The above figures show average values.)



© MyFANUC DC7187A9420041B3806BC8E5C652D376

**Model βiS 8/3000HV-B** Specification: A06B-2076-B□03

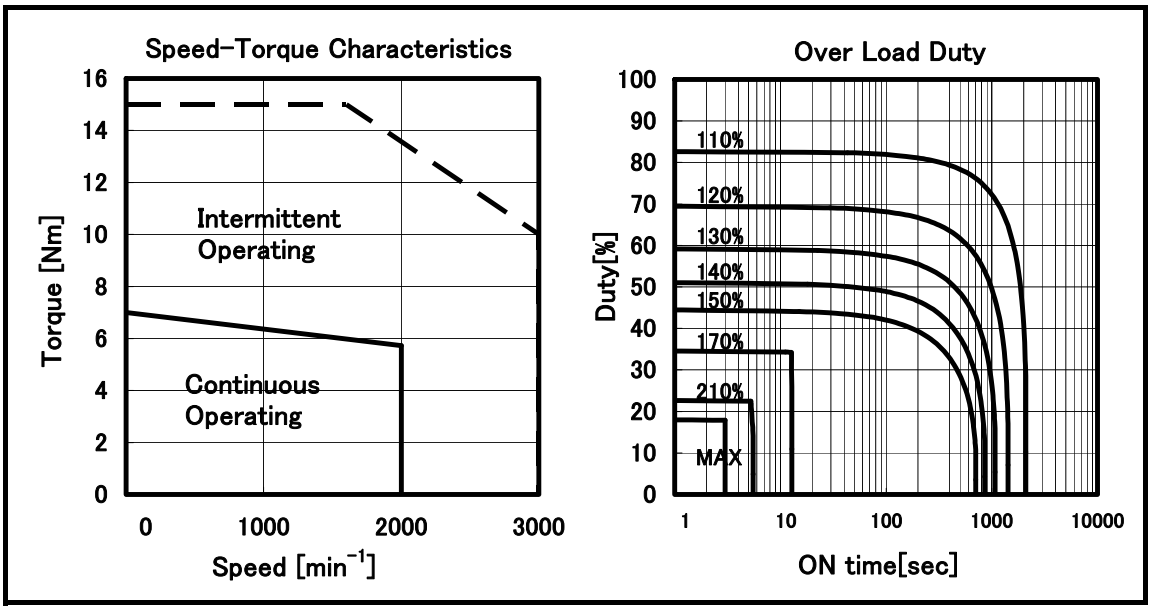


**Data sheet**

| Parameter | Symbol | Value | Unit |
|---|---|---|---|
| **Continuous Torque (at low speed) (*)** | Tc | 7.0<br>71 | Nm<br>kgfcm |
| **Continuous Current (at low speed) (*)** | Ic | 3.0 | A (rms) |
| **Rated Output (*)** | Pr | 1.2<br>1.6 | kW<br>HP |
| **Rated Speed** | Nr | 2000 | $min^{-1}$ |
| **Maximum Speed** | Nmax | 3000 | $min^{-1}$ |
| **Maximum Torque (*)** | Tmax | 15<br>153 | Nm<br>kgfcm |
| **Moment of Inertia of Rotor** | Jm | 0.00117<br>0.0119 | $kgm^2$<br>$kgfcms^2$ |
| **Moment of Inertia of Rotor(with Brake)** | Jm | 0.00124<br>0.0127 | $kgm^2$<br>$kgfcms^2$ |
| **Torque Constant (*)** | Kt | 2.32<br>23.7 | Nm/A(rms)<br>kgfcm/A(rms) |
| **Winding Resistance (between terminals) (*)** | Ra | 7.8 | Ω |
| **Thermal time constant** | $t_t$ | 20 | min |
| **Static friction** | Tf | 0.3<br>3 | Nm<br>kgfcm |
| **Weight** | w | 7.4 | kg |
| **Weight(with Brake)** | w | 9.6 | kg |
| **Max. Current of Servo Amp.** | Imax | 10 | A (peak) |

(*) The values are the standard values at 20℃ and the tolerance is ±10%.

The speed-torque characteristics very depending on the type of software,parametersetting,and input voltage of the digital servo software.(The above figures show average values.)



© MyFANUC DC7187A9420041B3806BC8E5C652D376

**Model βiS 12/3000HV-B** Specification: A06B-2079-B□03

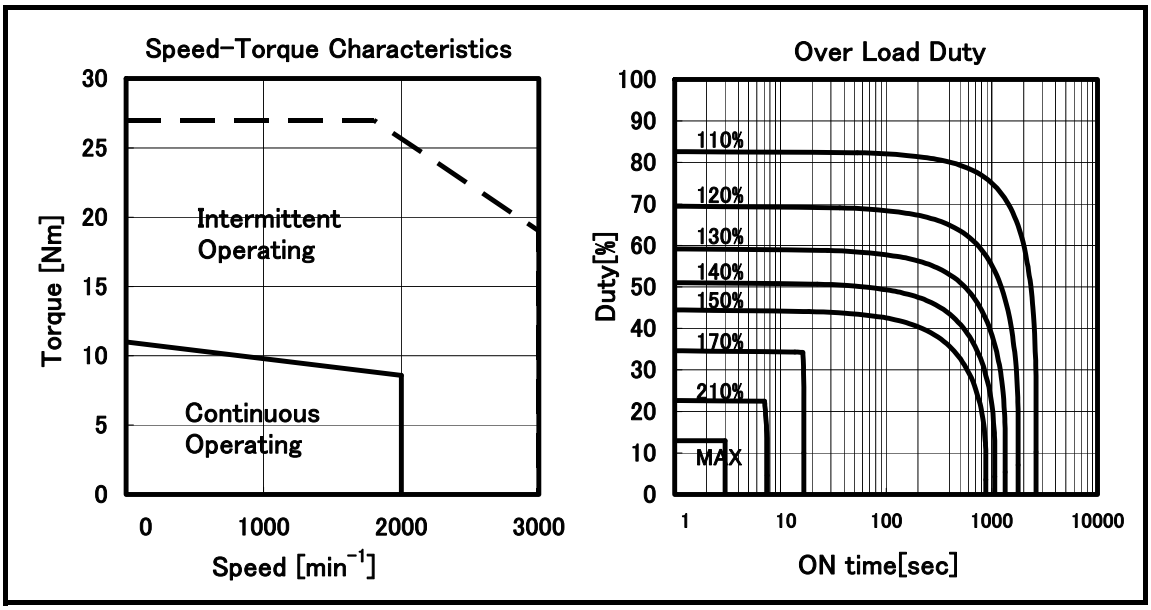


**Data sheet**

| Parameter | Symbol | Value | Unit |
|---|---|---|---|
| **Continuous Torque (at low speed) (*)** | Tc | 11<br>112 | Nm<br>kgfcm |
| **Continuous Current (at low speed) (*)** | Ic | 5.1 | A (rms) |
| **Rated Output (*)** | Pr | 1.8<br>2.4 | kW<br>HP |
| **Rated Speed** | Nr | 2000 | $min^{-1}$ |
| **Maximum Speed** | Nmax | 3000 | $min^{-1}$ |
| **Maximum Torque (*)** | Tmax | 27<br>276 | Nm<br>kgfcm |
| **Moment of Inertia of Rotor** | Jm | 0.00228<br>0.0233 | $kgm^2$<br>$kgfcms^2$ |
| **Moment of Inertia of Rotor(with Brake)** | Jm | 0.00235<br>0.0240 | $kgm^2$<br>$kgfcms^2$ |
| **Torque Constant (*)** | Kt | 2.16<br>22.0 | Nm/A(rms)<br>kgfcm/A(rms) |
| **Winding Resistance (between terminals) (*)** | Ra | 3.2 | Ω |
| **Thermal time constant** | $t_t$ | 25 | min |
| **Static friction** | Tf | 0.4<br>4 | Nm<br>kgfcm |
| **Weight** | w | 11.9 | kg |
| **Weight(with Brake)** | w | 14.1 | kg |
| **Max. Current of Servo Amp.** | Imax | 20 | A (peak) |

(*) The values are the standard values at 20℃ and the tolerance is ±10%.

The speed-torque characteristics very depending on the type of software,parametersetting,and input voltage of the digital servo software.(The above figures show average values.)



© MyFANUC DC7187A9420041B3806BC8E5C652D376

**Model βiS 22/2000HV-B** Specification: A06B-2086-B□03

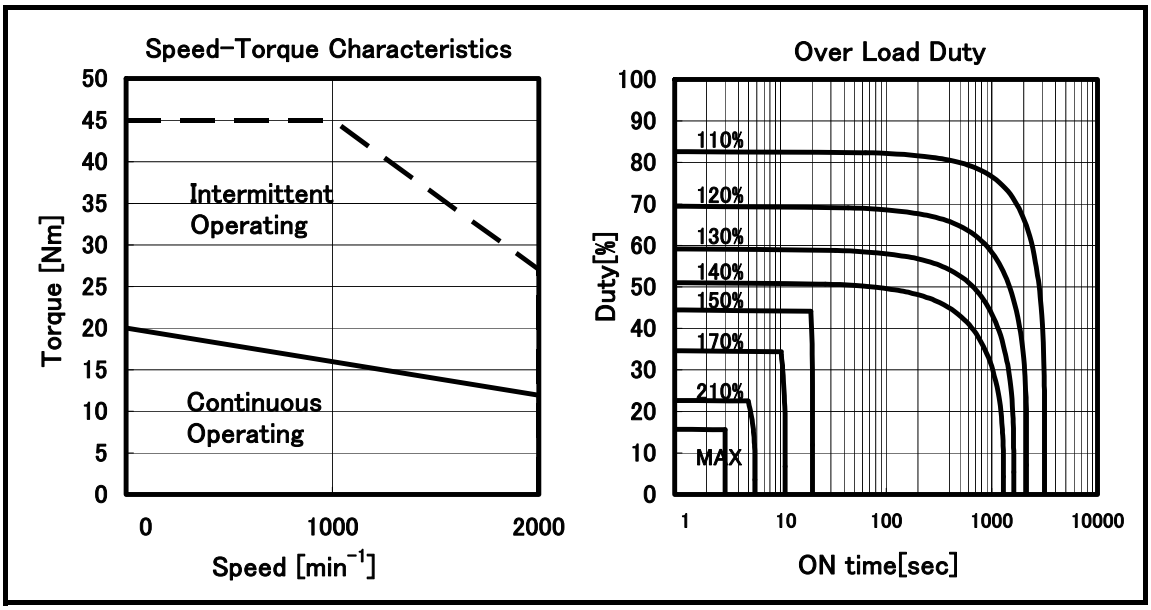


**Data sheet**

| Parameter | Symbol | Value | Unit |
|---|---|---|---|
| **Continuous Torque (at low speed) (*)** | Tc | 20<br>204 | Nm<br>kgfcm |
| **Continuous Current (at low speed) (*)** | Ic | 5.6 | A (rms) |
| **Rated Output (*)** | Pr | 2.5<br>3.4 | kW<br>HP |
| **Rated Speed** | Nr | 2000 | $min^{-1}$ |
| **Maximum Speed** | Nmax | 2000 | $min^{-1}$ |
| **Maximum Torque (*)** | Tmax | 45<br>459 | Nm<br>kgfcm |
| **Moment of Inertia of Rotor** | Jm | 0.00527<br>0.0538 | $kgm^2$<br>$kgfcms^2$ |
| **Moment of Inertia of Rotor(with 35Nm Brake)** | Jm | 0.00587<br>0.0599 | $kgm^2$<br>$kgfcms^2$ |
| **Torque Constant (*)** | Kt | 3.5<br>36 | Nm/A(rms)<br>kgfcm/A(rms) |
| **Winding Resistance (between terminals) (*)** | Ra | 3.6 | Ω |
| **Thermal time constant** | $t_t$ | 30 | min |
| **Static friction** | Tf | 0.8<br>8 | Nm<br>kgfcm |
| **Weight** | w | 17 | kg |
| **Weight(with 35Nm Brake)** | w | 23 | kg |
| **Max. Current of Servo Amp.** | Imax | 20 | A (peak) |

(*) The values are the standard values at 20℃ and the tolerance is ±10%.

The speed-torque characteristics very depending on the type of software,parametersetting,and input voltage of the digital servo software.(The above figures show average values.)



© MyFANUC DC7187A9420041B3806BC8E5C652D376

**Model βiS 22/3000HV-B** Specification: A06B-2083-B□03

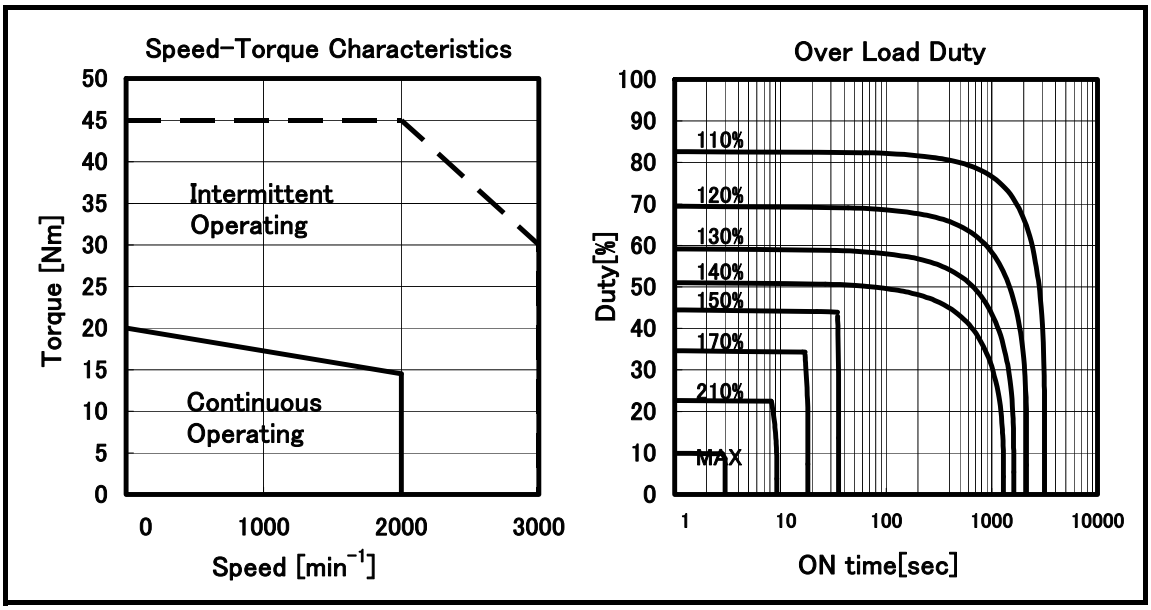


**Data sheet**

| Parameter | Symbol | Value | Unit |
|---|---|---|---|
| **Continuous Torque (at low speed) (*)** | Tc | 20<br>204 | Nm<br>kgfcm |
| **Continuous Current (at low speed) (*)** | Ic | 8.9 | A (rms) |
| **Rated Output (*)** | Pr | 3.0<br>4.0 | kW<br>HP |
| **Rated Speed** | Nr | 2000 | $min^{-1}$ |
| **Maximum Speed** | Nmax | 3000 | $min^{-1}$ |
| **Maximum Torque (*)** | Tmax | 45<br>459 | Nm<br>kgfcm |
| **Moment of Inertia of Rotor** | Jm | 0.00527<br>0.0538 | $kgm^2$<br>$kgfcms^2$ |
| **Moment of Inertia of Rotor(with 35Nm Brake)** | Jm | 0.00587<br>0.0599 | $kgm^2$<br>$kgfcms^2$ |
| **Torque Constant (*)** | Kt | 2.26<br>23.1 | Nm/A(rms)<br>kgfcm/A(rms) |
| **Winding Resistance (between terminals) (*)** | Ra | 1.4 | Ω |
| **Thermal time constant** | $t_t$ | 30 | min |
| **Static friction** | Tf | 0.8<br>8 | Nm<br>kgfcm |
| **Weight** | w | 17 | kg |
| **Weight(with 35Nm Brake)** | w | 23 | kg |
| **Max. Current of Servo Amp.** | Imax | 40 | A (peak) |

(*) The values are the standard values at 20℃ and the tolerance is ±10%.

The speed-torque characteristics very depending on the type of software,parametersetting,and input voltage of the digital servo software.(The above figures show average values.)



© MyFANUC DC7187A9420041B3806BC8E5C652D376

**Model βiS 30/2000HV-B** Specification: A06B-2088-B□03

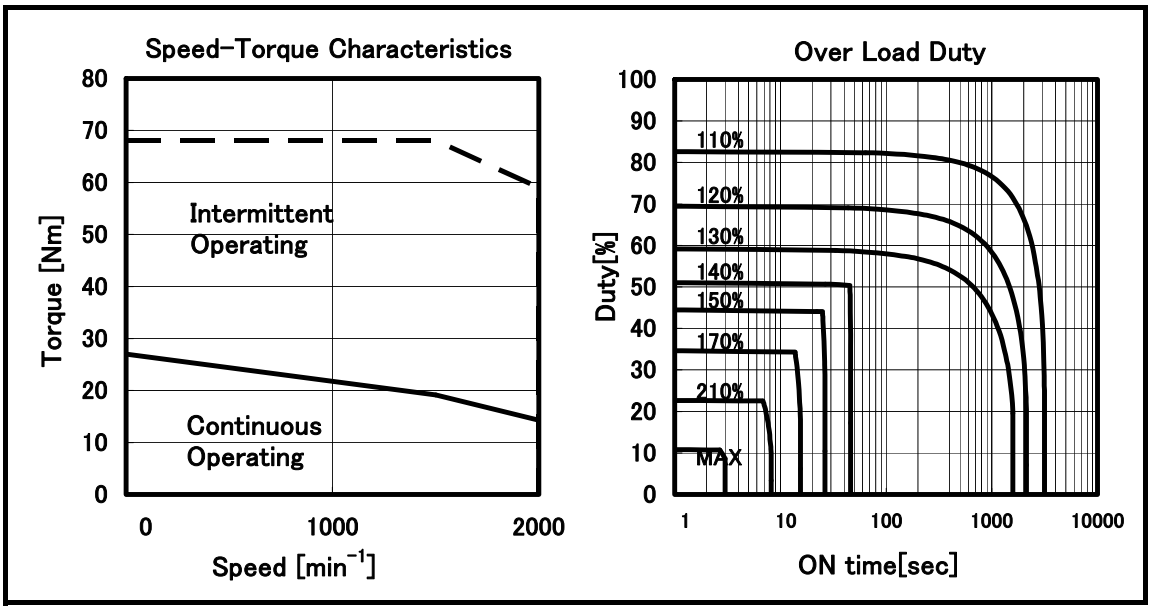


**Data sheet**

| Parameter | Symbol | Value | Unit |
|---|---|---|---|
| **Continuous Torque (at low speed) (*)** | Tc | 27<br>276 | Nm<br>kgfcm |
| **Continuous Current (at low speed) (*)** | Ic | 9.3 | A (rms) |
| **Rated Output (*)** | Pr | 3.0<br>4.0 | kW<br>HP |
| **Rated Speed** | Nr | 2000 | $min^{-1}$ |
| **Maximum Speed** | Nmax | 2000 | $min^{-1}$ |
| **Maximum Torque (*)** | Tmax | 68<br>694 | Nm<br>kgfcm |
| **Moment of Inertia of Rotor** | Jm | 0.00759<br>0.0774 | $kgm^2$<br>$kgfcms^2$ |
| **Moment of Inertia of Rotor(with 35Nm Brake)** | Jm | 0.00819<br>0.0836 | $kgm^2$<br>$kgfcms^2$ |
| **Torque Constant (*)** | Kt | 2.90<br>29.6 | Nm/A(rms)<br>kgfcm/A(rms) |
| **Winding Resistance (between terminals) (*)** | Ra | 1.2 | Ω |
| **Thermal time constant** | $t_t$ | 30 | min |
| **Static friction** | Tf | 0.8<br>8 | Nm<br>kgfcm |
| **Weight** | w | 23 | kg |
| **Weight(with 35Nm Brake)** | w | 29 | kg |
| **Max. Current of Servo Amp.** | Imax | 40 | A (peak) |

(*) The values are the standard values at 20℃ and the tolerance is ±10%.

The speed-torque characteristics very depending on the type of software,parametersetting,and input voltage of the digital servo software.(The above figures show average values.)



© MyFANUC DC7187A9420041B3806BC8E5C652D376

**Model βiS 40/2000HV-B** Specification: A06B-2090-B□03

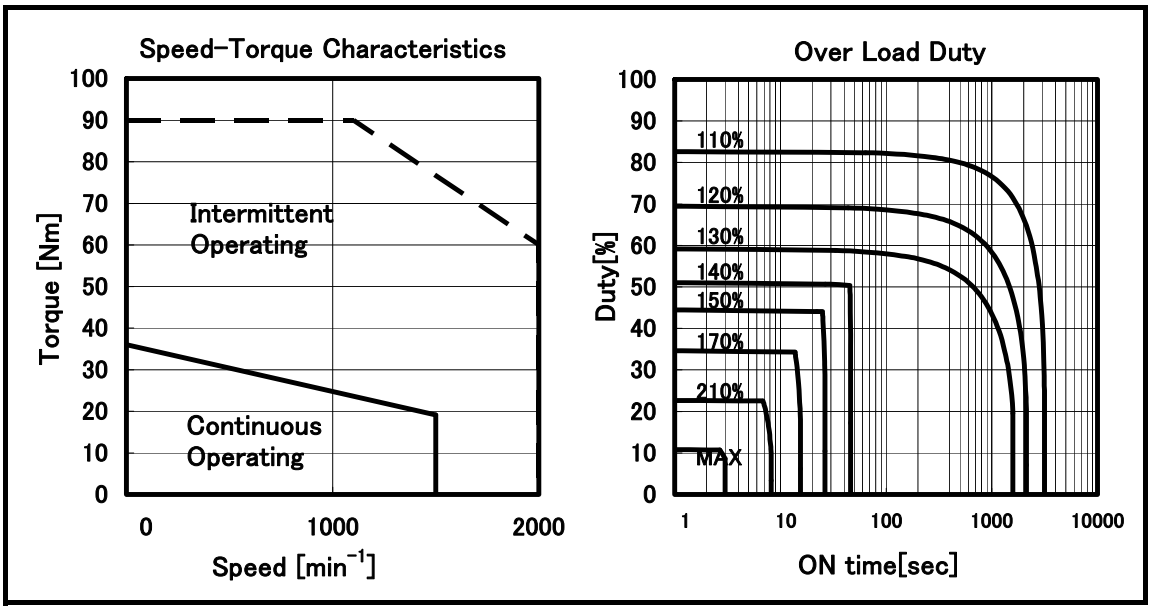


**Data sheet**

| Parameter | Symbol | Value | Unit |
|---|---|---|---|
| **Continuous Torque (at low speed) (*)** | Tc | 36<br>367 | Nm<br>kgfcm |
| **Continuous Current (at low speed) (*)** | Ic | 9.3 | A (rms) |
| **Rated Output (*)** | Pr | 3.0<br>4.0 | kW<br>HP |
| **Rated Speed** | Nr | 1500 | $min^{-1}$ |
| **Maximum Speed** | Nmax | 2000 | $min^{-1}$ |
| **Maximum Torque (*)** | Tmax | 90<br>918 | Nm<br>kgfcm |
| **Moment of Inertia of Rotor** | Jm | 0.00990<br>0.101 | $kgm^2$<br>$kgfcms^2$ |
| **Moment of Inertia of Rotor(with 35Nm Brake)** | Jm | 0.0105<br>0.107 | $kgm^2$<br>$kgfcms^2$ |
| **Torque Constant (*)** | Kt | 3.9<br>40 | Nm/A(rms)<br>kgfcm/A(rms) |
| **Winding Resistance (between terminals) (*)** | Ra | 1.3 | Ω |
| **Thermal time constant** | $t_t$ | 30 | min |
| **Static friction** | Tf | 1.2<br>12 | Nm<br>kgfcm |
| **Weight** | w | 28 | kg |
| **Weight(with 35Nm Brake)** | w | 34 | kg |
| **Max. Current of Servo Amp.** | Imax | 40 | A (peak) |

(*) The values are the standard values at 20℃ and the tolerance is ±10%.

The speed-torque characteristics very depending on the type of software,parametersetting,and input voltage of the digital servo software.(The above figures show average values.)



© MyFANUC DC7187A9420041B3806BC8E5C652D376

## 1.3.2.4 βiSc-B SERIES (200V)

**Model βiSc 2/4000-B** Specification: A06B-2061-B□07

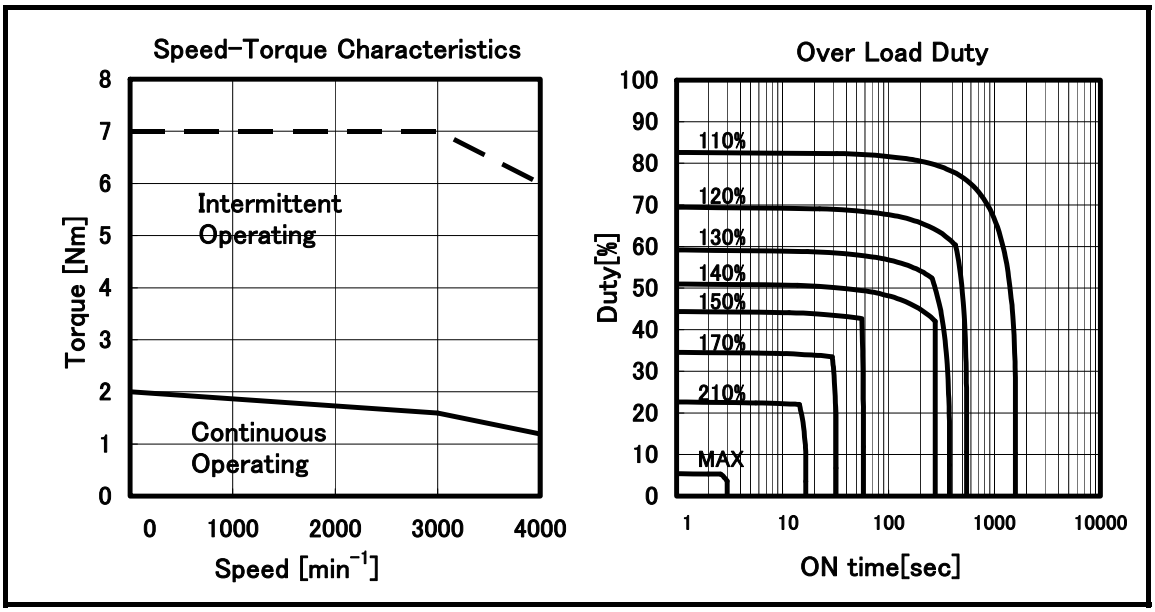


**Data sheet**

| Parameter | Symbol | Value | Unit |
|---|---|---|---|
| **Continuous Torque (at low speed) (*)** | Tc | 2.0<br>20 | Nm<br>kgfcm |
| **Continuous Current (at low speed) (*)** | Ic | 3.3 | A (rms) |
| **Rated Output (*)** | Pr | 0.50<br>0.67 | kW<br>HP |
| **Rated Speed** | Nr | 4000 | $min^{-1}$ |
| **Maximum Speed** | Nmax | 4000 | $min^{-1}$ |
| **Maximum Torque (*)** | Tmax | 7.0<br>71 | Nm<br>kgfcm |
| **Moment of Inertia of Rotor** | Jm | 0.000291<br>0.00297 | $kgm^2$<br>$kgfcms^2$ |
| **Moment of Inertia of Rotor(with Brake)** | Jm | 0.000311<br>0.00317 | $kgm^2$<br>$kgfcms^2$ |
| **Torque Constant (*)** | Kt | 0.62<br>6.3 | Nm/A(rms)<br>kgfcm/A(rms) |
| **Winding Resistance (between terminals) (*)** | Ra | 3.2 | Ω |
| **Thermal time constant** | $t_t$ | 15 | min |
| **Static friction** | Tf | 0.1<br>1 | Nm<br>kgfcm |
| **Weight** | w | 2.8 | kg |
| **Weight(with Brake)** | w | 3.8 | kg |
| **Max. Current of Servo Amp.** | Imax | 20 | A (peak) |

(*) The values are the standard values at 20℃ and the tolerance is ±10%.

The speed-torque characteristics very depending on the type of software,parametersetting,and input voltage of the digital servo software.(The above figures show average values.)



© MyFANUC DC7187A9420041B3806BC8E5C652D376

**Model βiSc 4/4000-B** Specification: A06B-2063-B□07

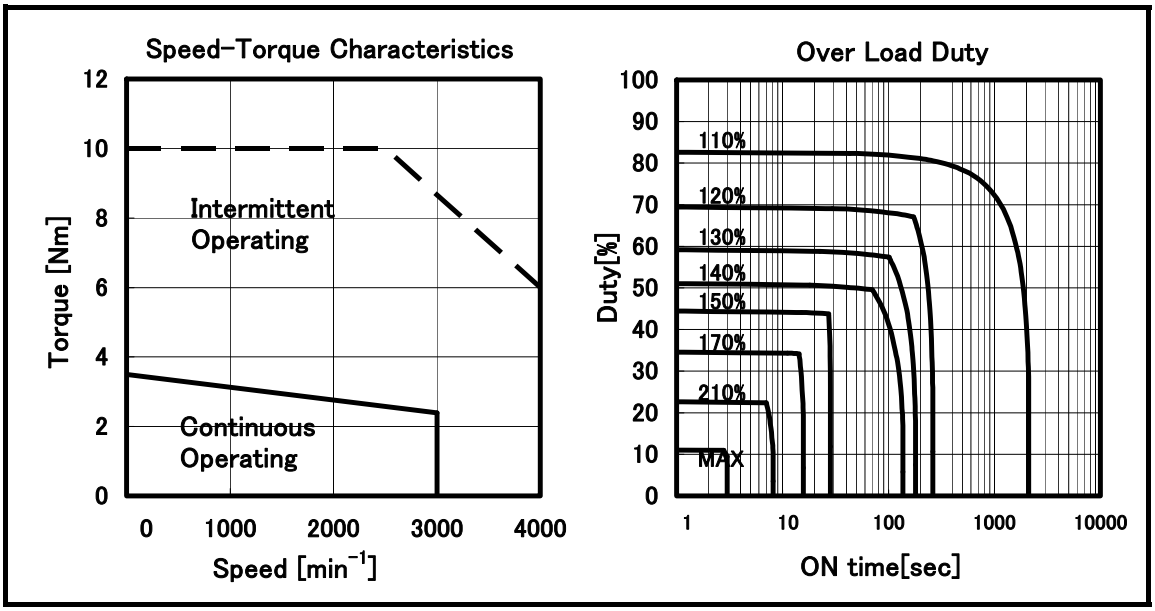


**Data sheet**

| Parameter | Symbol | Value | Unit |
|---|---|---|---|
| **Continuous Torque (at low speed) (*)** | Tc | 3.5<br>36 | Nm<br>kgfcm |
| **Continuous Current (at low speed) (*)** | Ic | 4.7 | A (rms) |
| **Rated Output (*)** | Pr | 0.75<br>1.0 | kW<br>HP |
| **Rated Speed** | Nr | 3000 | $min^{-1}$ |
| **Maximum Speed** | Nmax | 4000 | $min^{-1}$ |
| **Maximum Torque (*)** | Tmax | 10<br>102 | Nm<br>kgfcm |
| **Moment of Inertia of Rotor** | Jm | 0.000515<br>0.00526 | $kgm^2$<br>$kgfcms^2$ |
| **Moment of Inertia of Rotor(with Brake)** | Jm | 0.000535<br>0.00546 | $kgm^2$<br>$kgfcms^2$ |
| **Torque Constant (*)** | Kt | 0.75<br>7.7 | Nm/A(rms)<br>kgfcm/A(rms) |
| **Winding Resistance (between terminals) (*)** | Ra | 1.9 | Ω |
| **Thermal time constant** | $t_t$ | 20 | min |
| **Static friction** | Tf | 0.2<br>2 | Nm<br>kgfcm |
| **Weight** | w | 4.3 | kg |
| **Weight(with Brake)** | w | 5.3 | kg |
| **Max. Current of Servo Amp.** | Imax | 20 | A (peak) |

(*) The values are the standard values at 20℃ and the tolerance is ±10%.
The speed-torque characteristics very depending on the type of software,parametersetting,and input voltage of the digital servo software.(The above figures show average values.)



© MyFANUC DC7187A9420041B3806BC8E5C652D376

**Model βiSc 8/3000-B** Specification: A06B-2075-B□07

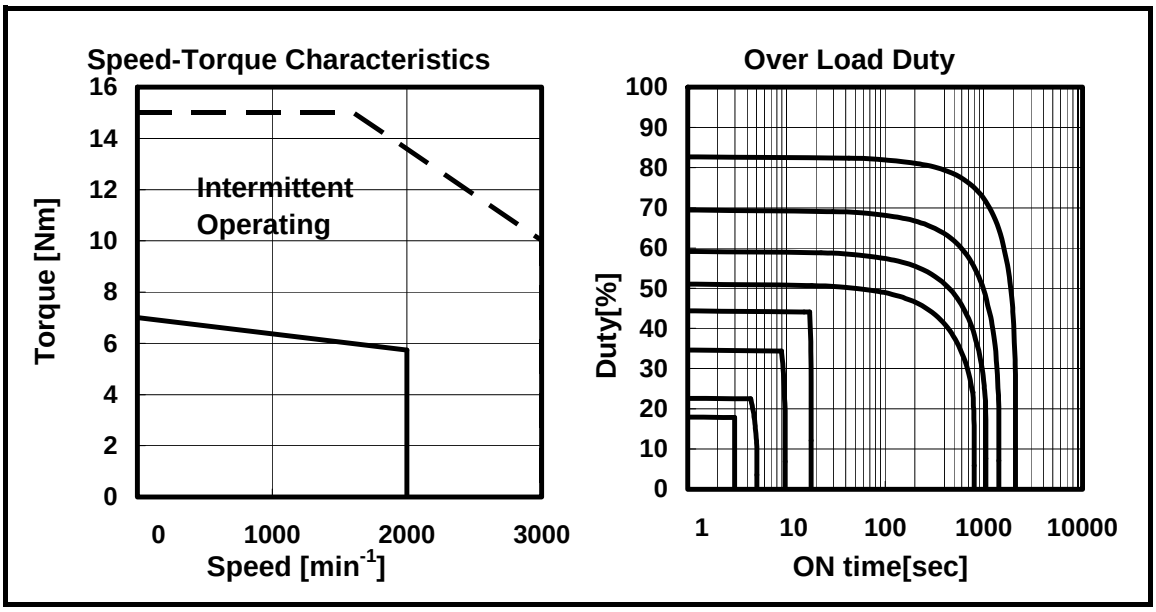


**Data sheet**

| Parameter | Symbol | Value | Unit |
|---|---|---|---|
| **Continuous Torque (at low speed) (*)** | Tc | 7.0<br>71 | Nm<br>kgfcm |
| **Continuous Current (at low speed) (*)** | Ic | 6.0 | A (rms) |
| **Rated Output (*)** | Pr | 1.2<br>1.6 | kW<br>HP |
| **Rated Speed** | Nr | 2000 | $min^{-1}$ |
| **Maximum Speed** | Nmax | 3000 | $min^{-1}$ |
| **Maximum Torque (*)** | Tmax | 15<br>153 | Nm<br>kgfcm |
| **Moment of Inertia of Rotor** | Jm | 0.00117<br>0.0119 | $kgm^2$<br>$kgfcms^2$ |
| **Moment of Inertia of Rotor(with Brake)** | Jm | 0.00124<br>0.0127 | $kgm^2$<br>$kgfcms^2$ |
| **Torque Constant (*)** | Kt | 1.16<br>11.8 | Nm/A(rms)<br>kgfcm/A(rms) |
| **Winding Resistance (between terminals) (*)** | Ra | 2.0 | Ω |
| **Thermal time constant** | $t_t$ | 20 | min |
| **Static friction** | Tf | 0.3<br>3 | Nm<br>kgfcm |
| **Weight** | w | 7.4 | kg |
| **Weight(with Brake)** | w | 9.6 | kg |
| **Max. Current of Servo Amp.** | Imax | 20 | A (peak) |

(*) The values are the standard values at 20℃ and the tolerance is ±10%.

The speed-torque characteristics very depending on the type of software,parametersetting,and input voltage of the digital servo software.(The above figures show average values.)



© MyFANUC DC7187A9420041B3806BC8E5C652D376

**Model βiSc 12/2000-B** Specification: A06B-2077-B□07

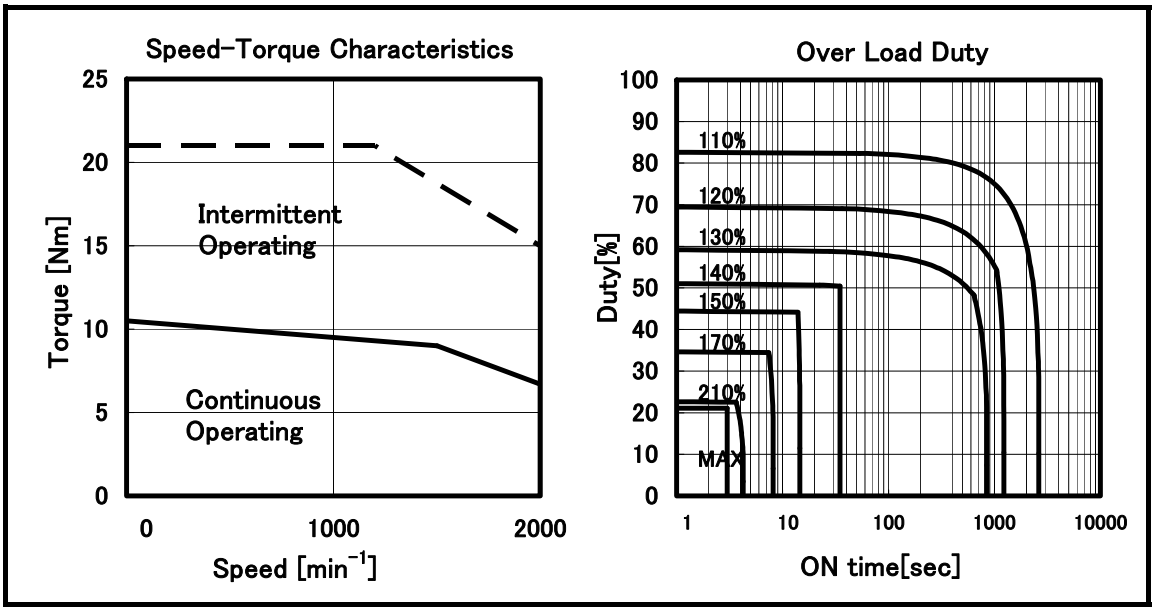


**Data sheet**

| Parameter | Symbol | Value | Unit |
|---|---|---|---|
| **Continuous Torque (at low speed) (*)** | Tc | 10.5<br>107 | Nm<br>kgfcm |
| **Continuous Current (at low speed) (*)** | Ic | 6.5 | A (rms) |
| **Rated Output (*)** | Pr | 1.4<br>1.9 | kW<br>HP |
| **Rated Speed** | Nr | 2000 | $min^{-1}$ |
| **Maximum Speed** | Nmax | 2000 | $min^{-1}$ |
| **Maximum Torque (*)** | Tmax | 21<br>214 | Nm<br>kgfcm |
| **Moment of Inertia of Rotor** | Jm | 0.00228<br>0.0233 | $kgm^2$<br>$kgfcms^2$ |
| **Moment of Inertia of Rotor(with Brake)** | Jm | 0.00235<br>0.0240 | $kgm^2$<br>$kgfcms^2$ |
| **Torque Constant (*)** | Kt | 1.62<br>16.5 | Nm/A(rms)<br>kgfcm/A(rms) |
| **Winding Resistance (between terminals) (*)** | Ra | 1.7 | Ω |
| **Thermal time constant** | $t_t$ | 25 | min |
| **Static friction** | Tf | 0.4<br>4 | Nm<br>kgfcm |
| **Weight** | w | 11.9 | kg |
| **Weight(with Brake)** | w | 14.1 | kg |
| **Max. Current of Servo Amp.** | Imax | 20 | A (peak) |

(*) The values are the standard values at 20℃ and the tolerance is ±10%.

The speed-torque characteristics very depending on the type of software,parametersetting,and input voltage of the digital servo software.(The above figures show average values.)



© MyFANUC DC7187A9420041B3806BC8E5C652D376

**Model βiSc 12/3000-B** Specification: A06B-2078-B□07

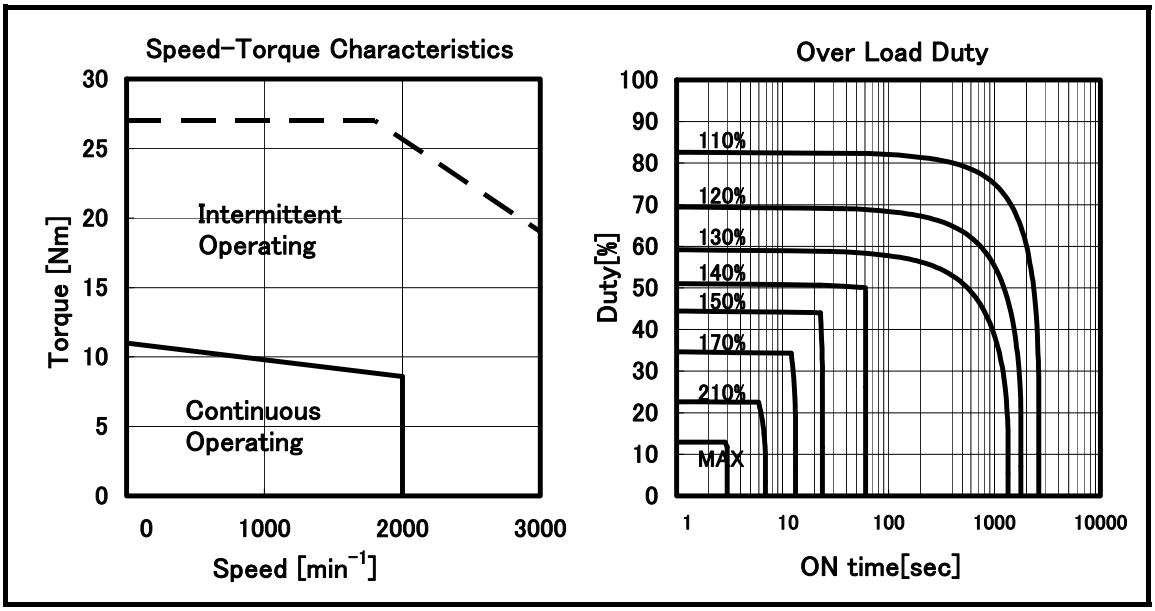


**Data sheet**

| Parameter | Symbol | Value | Unit |
|---|---|---|---|
| **Continuous Torque (at low speed) (*)** | Tc | 11<br>112 | Nm<br>kgfcm |
| **Continuous Current (at low speed) (*)** | Ic | 10.2 | A (rms) |
| **Rated Output (*)** | Pr | 1.8<br>2.4 | kW<br>HP |
| **Rated Speed** | Nr | 2000 | $min^{-1}$ |
| **Maximum Speed** | Nmax | 3000 | $min^{-1}$ |
| **Maximum Torque (*)** | Tmax | 27<br>276 | Nm<br>kgfcm |
| **Moment of Inertia of Rotor** | Jm | 0.00228<br>0.0233 | $kgm^2$<br>$kgfcms^2$ |
| **Moment of Inertia of Rotor(with Brake)** | Jm | 0.00235<br>0.0240 | $kgm^2$<br>$kgfcms^2$ |
| **Torque Constant (*)** | Kt | 1.08<br>11.0 | Nm/A(rms)<br>kgfcm/A(rms) |
| **Winding Resistance (between terminals) (*)** | Ra | 0.78 | Ω |
| **Thermal time constant** | $t_t$ | 25 | min |
| **Static friction** | Tf | 0.4<br>4 | Nm<br>kgfcm |
| **Weight** | w | 11.9 | kg |
| **Weight(with Brake)** | w | 14.1 | kg |
| **Max. Current of Servo Amp.** | Imax | 40 | A (peak) |

(*) The values are the standard values at 20℃ and the tolerance is ±10%.
The speed-torque characteristics very depending on the type of software,parametersetting,and input voltage of the digital servo software.(The above figures show average values.)



© MyFANUC DC7187A9420041B3806BC8E5C652D376

**Model βiSc 22/2000-B** Specification: A06B-2085-B□07

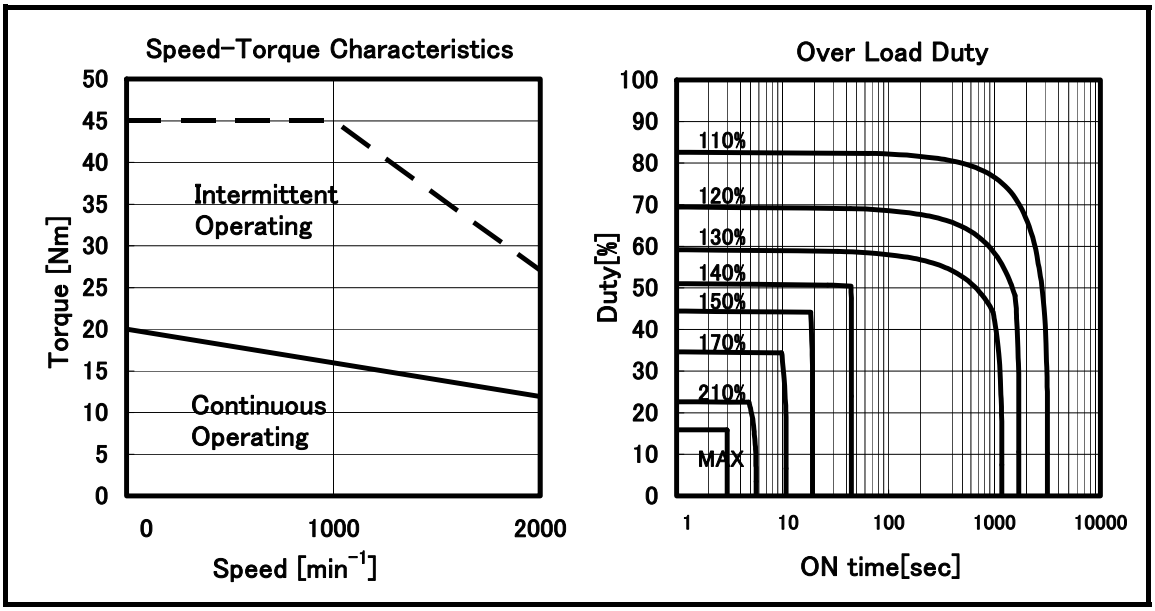


**Data sheet**

| Parameter | Symbol | Value | Unit |
|---|---|---|---|
| **Continuous Torque (at low speed) (*)** | Tc | 20<br>204 | Nm<br>kgfcm |
| **Continuous Current (at low speed) (*)** | Ic | 11.3 | A (rms) |
| **Rated Output (*)** | Pr | 2.5<br>3.4 | kW<br>HP |
| **Rated Speed** | Nr | 2000 | $min^{-1}$ |
| **Maximum Speed** | Nmax | 2000 | $min^{-1}$ |
| **Maximum Torque (*)** | Tmax | 45<br>459 | Nm<br>kgfcm |
| **Moment of Inertia of Rotor** | Jm | 0.00527<br>0.0538 | $kgm^2$<br>$kgfcms^2$ |
| **Moment of Inertia of Rotor(with 35Nm Brake)** | Jm | 0.00587<br>0.0599 | $kgm^2$<br>$kgfcms^2$ |
| **Torque Constant (*)** | Kt | 1.77<br>18.1 | Nm/A(rms)<br>kgfcm/A(rms) |
| **Winding Resistance (between terminals) (*)** | Ra | 0.88 | Ω |
| **Thermal time constant** | $t_t$ | 30 | min |
| **Static friction** | Tf | 0.8<br>8 | Nm<br>kgfcm |
| **Weight** | w | 17 | kg |
| **Weight(with 35Nm Brake)** | w | 23 | kg |
| **Max. Current of Servo Amp.** | Imax | 40 | A (peak) |

(*) The values are the standard values at 20℃ and the tolerance is ±10%.
The speed-torque characteristics very depending on the type of software,parametersetting,and input voltage of the digital servo software.(The above figures show average values.)



© MyFANUC DC7187A9420041B3806BC8E5C652D376

## 1.3.2.5 βiSc-B SERIES (400V)

**Model βiSc 2/4000HV-B** Specification: A06B-2062-B□07

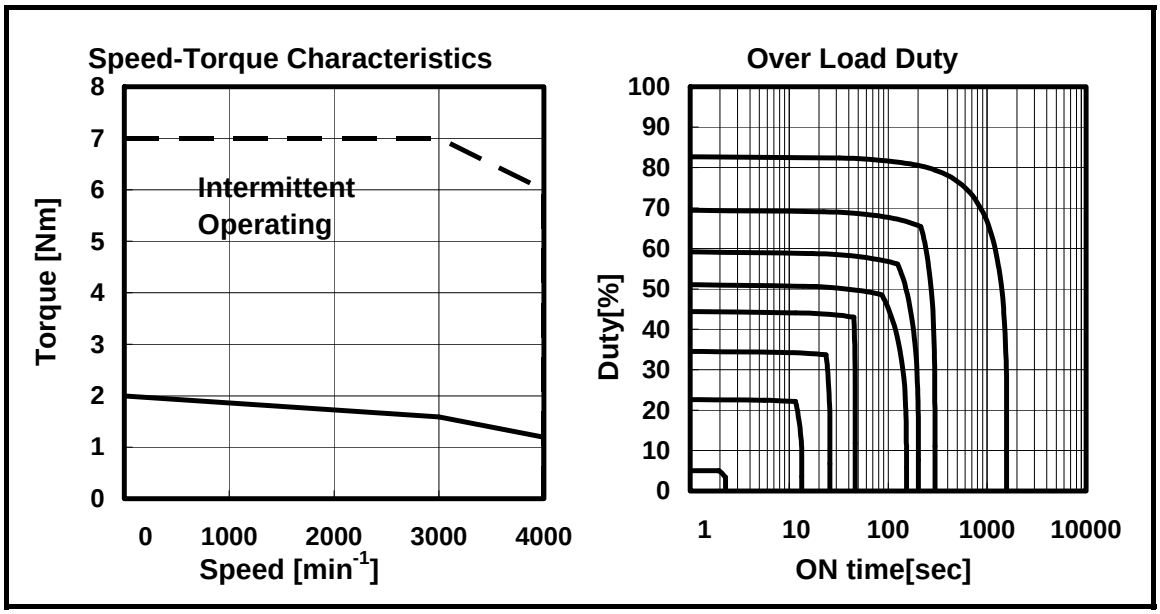


**Data sheet**

| Parameter | Symbol | Value | Unit |
|---|---|---|---|
| **Continuous Torque (at low speed) (*)** | Tc | 2.0<br>20 | Nm<br>kgfcm |
| **Continuous Current (at low speed) (*)** | Ic | 1.6 | A (rms) |
| **Rated Output (*)** | Pr | 0.50<br>0.67 | kW<br>HP |
| **Rated Speed** | Nr | 4000 | $min^{-1}$ |
| **Maximum Speed** | Nmax | 4000 | $min^{-1}$ |
| **Maximum Torque (*)** | Tmax | 7.0<br>71 | Nm<br>kgfcm |
| **Moment of Inertia of Rotor** | Jm | 0.000291<br>0.00297 | $kgm^2$<br>$kgfcms^2$ |
| **Moment of Inertia of Rotor(with Brake)** | Jm | 0.000311<br>0.00317 | $kgm^2$<br>$kgfcms^2$ |
| **Torque Constant (*)** | Kt | 1.23<br>12.6 | Nm/A(rms)<br>kgfcm/A(rms) |
| **Winding Resistance (between terminals) (*)** | Ra | 13.2 | Ω |
| **Thermal time constant** | $t_t$ | 15 | min |
| **Static friction** | Tf | 0.1<br>1 | Nm<br>kgfcm |
| **Weight** | w | 2.8 | kg |
| **Weight(with Brake)** | w | 3.8 | kg |
| **Max. Current of Servo Amp.** | Imax | 10 | A (peak) |

(*) The values are the standard values at 20℃ and the tolerance is ±10%.

The speed-torque characteristics very depending on the type of software,parametersetting,and input voltage of the digital servo software.(The above figures show average values.)



© MyFANUC DC7187A9420041B3806BC8E5C652D376

**Model βiSc 4/4000HV-B** Specification: A06B-2064-B□07

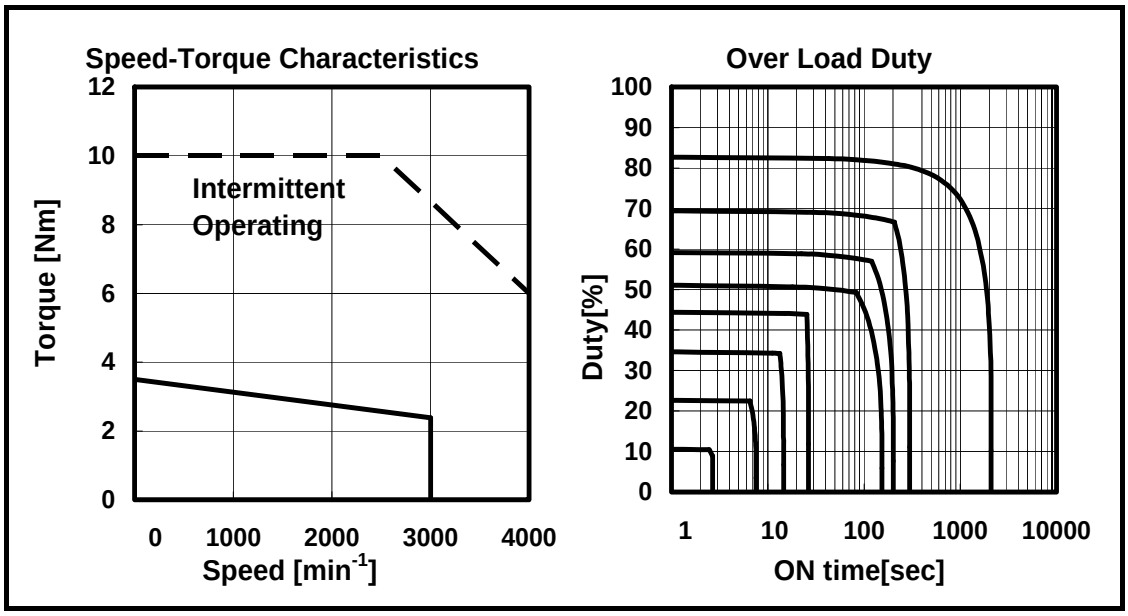


**Data sheet**

| Parameter | Symbol | Value | Unit |
|---|---|---|---|
| **Continuous Torque (at low speed) (*)** | Tc | 3.5<br>36 | Nm<br>kgfcm |
| **Continuous Current (at low speed) (*)** | Ic | 2.3 | A (rms) |
| **Rated Output (*)** | Pr | 0.75<br>1.0 | kW<br>HP |
| **Rated Speed** | Nr | 3000 | $min^{-1}$ |
| **Maximum Speed** | Nmax | 4000 | $min^{-1}$ |
| **Maximum Torque (*)** | Tmax | 10<br>102 | Nm<br>kgfcm |
| **Moment of Inertia of Rotor** | Jm | 0.000515<br>0.00526 | $kgm^2$<br>$kgfcms^2$ |
| **Moment of Inertia of Rotor(with Brake)** | Jm | 0.000535<br>0.00546 | $kgm^2$<br>$kgfcms^2$ |
| **Torque Constant (*)** | Kt | 1.50<br>15.3 | Nm/A(rms)<br>kgfcm/A(rms) |
| **Winding Resistance (between terminals) (*)** | Ra | 8.0 | Ω |
| **Thermal time constant** | $t_t$ | 20 | min |
| **Static friction** | Tf | 0.2<br>2 | Nm<br>kgfcm |
| **Weight** | w | 4.3 | kg |
| **Weight(with Brake)** | w | 5.3 | kg |
| **Max. Current of Servo Amp.** | Imax | 10 | A (peak) |

(*) The values are the standard values at 20℃ and the tolerance is ±10%.

The speed-torque characteristics very depending on the type of software,parametersetting,and input voltage of the digital servo software.(The above figures show average values.)



© MyFANUC DC7187A9420041B3806BC8E5C652D376

**Model βiSc 8/3000HV-B**

Specification: A06B-2076-B□07

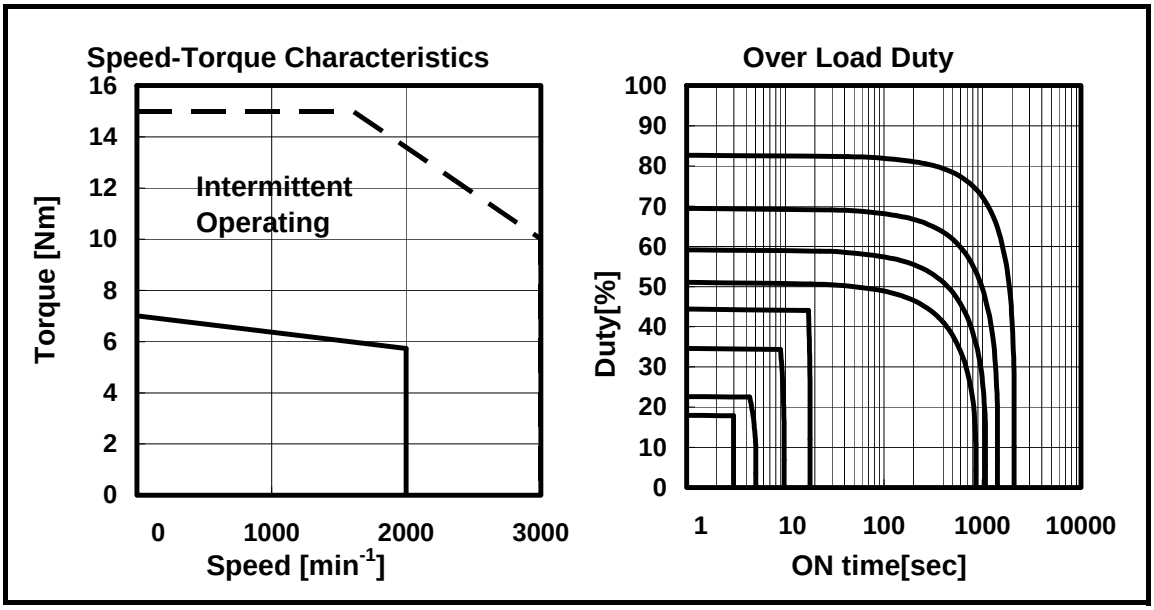


**Data sheet**

| Parameter | Symbol | Value | Unit |
|---|---|---|---|
| **Continuous Torque (at low speed) (*)** | Tc | 7.0<br>71 | Nm<br>kgfcm |
| **Continuous Current (at low speed) (*)** | Ic | 3.0 | A (rms) |
| **Rated Output (*)** | Pr | 1.2<br>1.6 | kW<br>HP |
| **Rated Speed** | Nr | 2000 | $min^{-1}$ |
| **Maximum Speed** | Nmax | 3000 | $min^{-1}$ |
| **Maximum Torque (*)** | Tmax | 15<br>153 | Nm<br>kgfcm |
| **Moment of Inertia of Rotor** | Jm | 0.00117<br>0.0119 | $kgm^2$<br>$kgfcms^2$ |
| **Moment of Inertia of Rotor(with Brake)** | Jm | 0.00124<br>0.0127 | $kgm^2$<br>$kgfcms^2$ |
| **Torque Constant (*)** | Kt | 2.32<br>23.7 | Nm/A(rms)<br>kgfcm/A(rms) |
| **Winding Resistance (between terminals) (*)** | Ra | 7.8 | Ω |
| **Thermal time constant** | $t_t$ | 20 | min |
| **Static friction** | Tf | 0.3<br>3 | Nm<br>kgfcm |
| **Weight** | w | 7.4 | kg |
| **Weight(with Brake)** | w | 9.6 | kg |
| **Max. Current of Servo Amp.** | Imax | 10 | A (peak) |

(*) The values are the standard values at 20℃ and the tolerance is ±10%.

The speed-torque characteristics very depending on the type of software,parametersetting,and input voltage of the digital servo software.(The above figures show average values.)



© MyFANUC DC7187A9420041B3806BC8E5C652D376

**Model βiSc 12/3000HV-B** Specification: A06B-2079-B□07

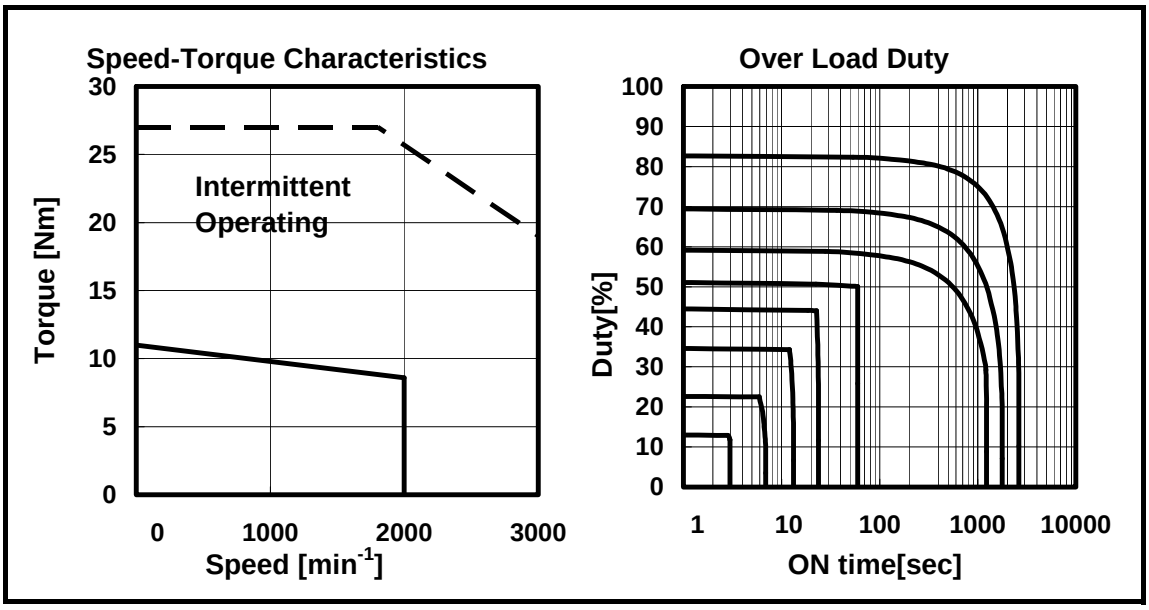


**Data sheet**

| Parameter | Symbol | Value | Unit |
|---|---|---|---|
| **Continuous Torque (at low speed) (*)** | Tc | 11<br>112 | Nm<br>kgfcm |
| **Continuous Current (at low speed) (*)** | Ic | 5.1 | A (rms) |
| **Rated Output (*)** | Pr | 1.8<br>2.4 | kW<br>HP |
| **Rated Speed** | Nr | 2000 | $min^{-1}$ |
| **Maximum Speed** | Nmax | 3000 | $min^{-1}$ |
| **Maximum Torque (*)** | Tmax | 27<br>276 | Nm<br>kgfcm |
| **Moment of Inertia of Rotor** | Jm | 0.00228<br>0.0233 | $kgm^2$<br>$kgfcms^2$ |
| **Moment of Inertia of Rotor(with Brake)** | Jm | 0.00235<br>0.0240 | $kgm^2$<br>$kgfcms^2$ |
| **Torque Constant (*)** | Kt | 2.16<br>22.0 | Nm/A(rms)<br>kgfcm/A(rms) |
| **Winding Resistance (between terminals) (*)** | Ra | 3.2 | Ω |
| **Thermal time constant** | $t_t$ | 25 | min |
| **Static friction** | Tf | 0.4<br>4 | Nm<br>kgfcm |
| **Weight** | w | 11.9 | kg |
| **Weight(with Brake)** | w | 14.1 | kg |
| **Max. Current of Servo Amp.** | Imax | 20 | A (peak) |

(*) The values are the standard values at 20℃ and the tolerance is ±10%.

The speed-torque characteristics very depending on the type of software,parametersetting,and input voltage of the digital servo software.(The above figures show average values.)



© MyFANUC DC7187A9420041B3806BC8E5C652D376

## 1.3.2.6 βiF-B SERIES (200V)

**Model βiF 4/3000-B** Specification: A06B-2051-B□03

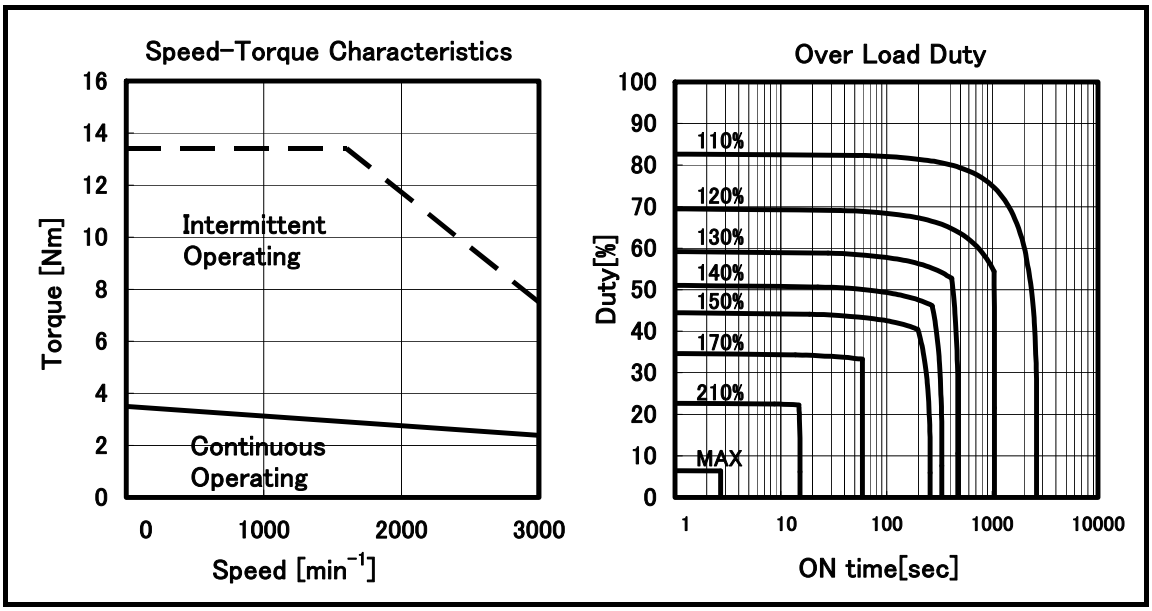


**Data sheet**

| Parameter | Symbol | Value | Unit |
|---|---|---|---|
| **Continuous Torque (at low speed) (*)** | Tc | 3.5<br>36 | Nm<br>kgfcm |
| **Continuous Current (at low speed) (*)** | Ic | 3.6 | A (rms) |
| **Rated Output (*)** | Pr | 0.75<br>1.0 | kW<br>HP |
| **Rated Speed** | Nr | 3000 | $min^{-1}$ |
| **Maximum Speed** | Nmax | 3000 | $min^{-1}$ |
| **Maximum Torque (*)** | Tmax | 13.4<br>137 | Nm<br>kgfcm |
| **Moment of Inertia of Rotor** | Jm | 0.00135<br>0.0138 | $kgm^2$<br>$kgfcms^2$ |
| **Moment of Inertia of Rotor(with Brake)** | Jm | 0.00142<br>0.0145 | $kgm^2$<br>$kgfcms^2$ |
| **Torque Constant (*)** | Kt | 0.98<br>10.0 | Nm/A(rms)<br>kgfcm/A(rms) |
| **Winding Resistance (between terminals) (*)** | Ra | 3.4 | Ω |
| **Thermal time constant** | $t_t$ | 25 | min |
| **Static friction** | Tf | 0.3<br>3 | Nm<br>kgfcm |
| **Weight** | w | 7.5 | kg |
| **Weight(with Brake)** | w | 9.7 | kg |
| **Max. Current of Servo Amp.** | Imax | 20 | A (peak) |

(*) The values are the standard values at 20℃ and the tolerance is ±10%.
The speed-torque characteristics very depending on the type of software,parametersetting,and input voltage of the digital servo software.(The above figures show average values.)



© MyFANUC DC7187A9420041B3806BC8E5C652D376

**Model βiF 8/2000-B** Specification: A06B-2052-B□03

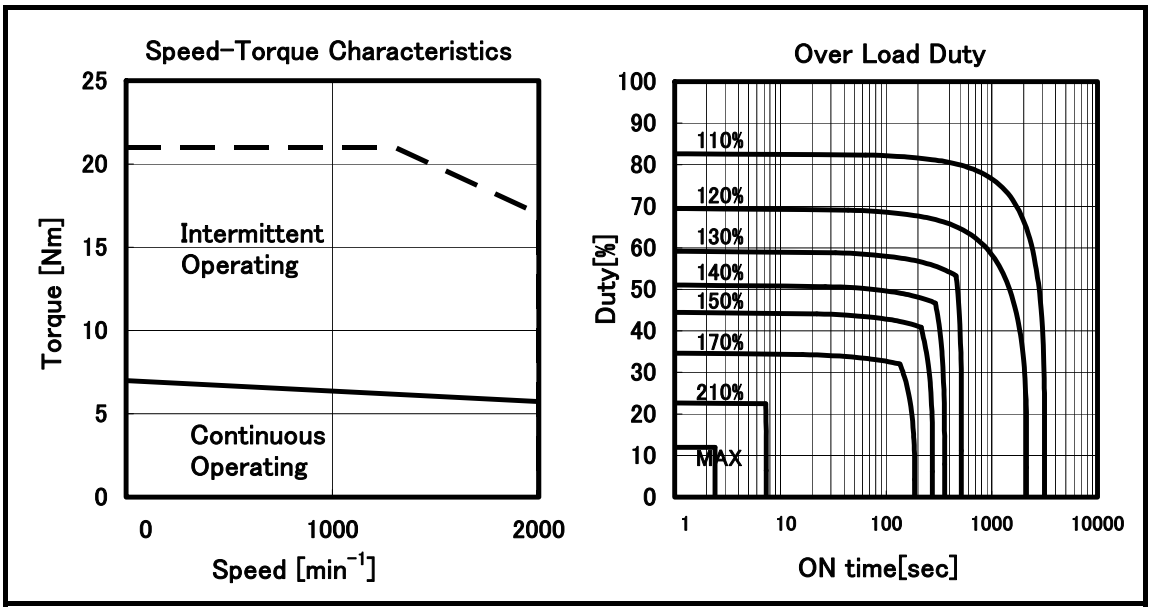


**Data sheet**

| Parameter | Symbol | Value | Unit |
|---|---|---|---|
| **Continuous Torque (at low speed) (*)** | Tc | 7.0<br>71 | Nm<br>kgfcm |
| **Continuous Current (at low speed) (*)** | Ic | 4.9 | A (rms) |
| **Rated Output (*)** | Pr | 1.2<br>1.6 | kW<br>HP |
| **Rated Speed** | Nr | 2000 | $min^{-1}$ |
| **Maximum Speed** | Nmax | 2000 | $min^{-1}$ |
| **Maximum Torque (*)** | Tmax | 21<br>214 | Nm<br>kgfcm |
| **Moment of Inertia of Rotor** | Jm | 0.00257<br>0.0262 | $kgm^2$<br>$kgfcms^2$ |
| **Moment of Inertia of Rotor(with Brake)** | Jm | 0.00264<br>0.0269 | $kgm^2$<br>$kgfcms^2$ |
| **Torque Constant (*)** | Kt | 1.43<br>14.6 | Nm/A(rms)<br>kgfcm/A(rms) |
| **Winding Resistance (between terminals) (*)** | Ra | 2.4 | Ω |
| **Thermal time constant** | $t_t$ | 30 | min |
| **Static friction** | Tf | 0.3<br>3 | Nm<br>kgfcm |
| **Weight** | w | 12.3 | kg |
| **Weight(with Brake)** | w | 14.5 | kg |
| **Max. Current of Servo Amp.** | Imax | 20 | A (peak) |

(*) The values are the standard values at 20℃ and the tolerance is ±10%.

The speed-torque characteristics very depending on the type of software,parametersetting,and input voltage of the digital servo software.(The above figures show average values.)



© MyFANUC DC7187A9420041B3806BC8E5C652D376

**Model βiF 12/2000-B** Specification: A06B-2053-B□03

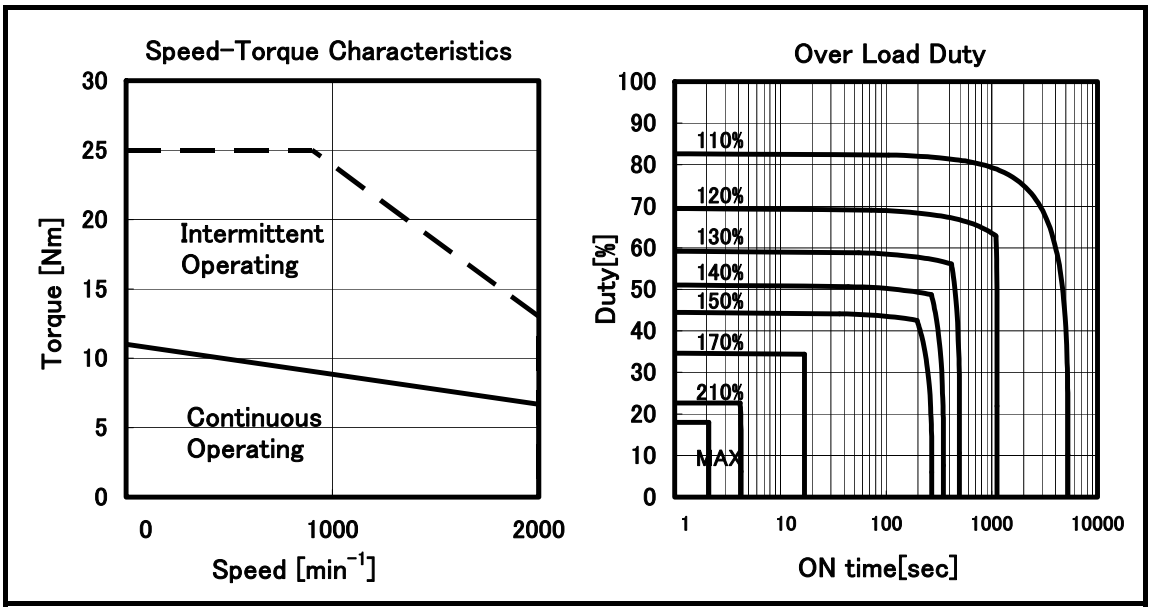


**Data sheet**

| Parameter | Symbol | Value | Unit |
|---|---|---|---|
| **Continuous Torque (at low speed) (*)** | Tc | 11<br>112 | Nm<br>kgfcm |
| **Continuous Current (at low speed) (*)** | Ic | 6.0 | A (rms) |
| **Rated Output (*)** | Pr | 1.4<br>1.9 | kW<br>HP |
| **Rated Speed** | Nr | 2000 | $min^{-1}$ |
| **Maximum Speed** | Nmax | 2000 | $min^{-1}$ |
| **Maximum Torque (*)** | Tmax | 25<br>255 | Nm<br>kgfcm |
| **Moment of Inertia of Rotor** | Jm | 0.00620<br>0.0633 | $kgm^2$<br>$kgfcms^2$ |
| **Moment of Inertia of Rotor(with 35Nm Brake)** | Jm | 0.00680<br>0.0694 | $kgm^2$<br>$kgfcms^2$ |
| **Torque Constant (*)** | Kt | 1.85<br>18.9 | Nm/A(rms)<br>kgfcm/A(rms) |
| **Winding Resistance (between terminals) (*)** | Ra | 2.4 | Ω |
| **Thermal time constant** | $t_t$ | 50 | min |
| **Static friction** | Tf | 0.8<br>8 | Nm<br>kgfcm |
| **Weight** | w | 18 | kg |
| **Weight(with 35Nm Brake)** | w | 24 | kg |
| **Max. Current of Servo Amp.** | Imax | 20 | A (peak) |

(*) The values are the standard values at 20℃ and the tolerance is ±10%.

The speed-torque characteristics very depending on the type of software,parametersetting,and input voltage of the digital servo software.(The above figures show average values.)



© MyFANUC DC7187A9420041B3806BC8E5C652D376

**Model βiF 22/2000-B** Specification: A06B-2054-B□03

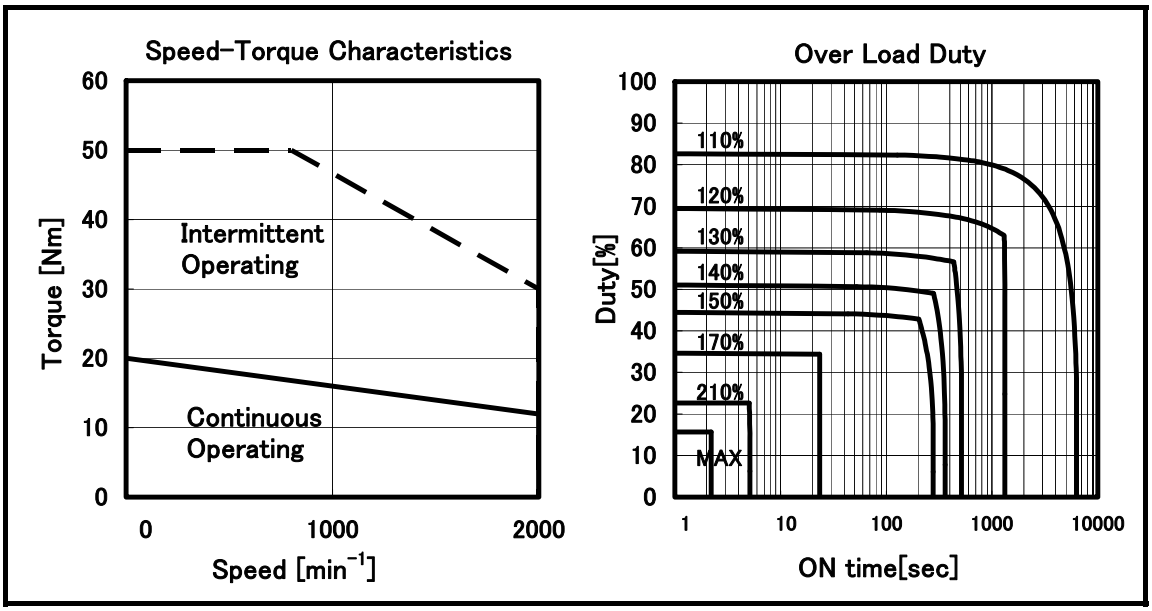


**Data sheet**

| Parameter | Symbol | Value | Unit |
|---|---|---|---|
| **Continuous Torque (at low speed) (*)** | Tc | 20<br>204 | Nm<br>kgfcm |
| **Continuous Current (at low speed) (*)** | Ic | 11.2 | A (rms) |
| **Rated Output (*)** | Pr | 2.5<br>3.4 | kW<br>HP |
| **Rated Speed** | Nr | 2000 | $min^{-1}$ |
| **Maximum Speed** | Nmax | 2000 | $min^{-1}$ |
| **Maximum Torque (*)** | Tmax | 50<br>510 | Nm<br>kgfcm |
| **Moment of Inertia of Rotor** | Jm | 0.0120<br>0.122 | $kgm^2$<br>$kgfcms^2$ |
| **Moment of Inertia of Rotor(with 35Nm Brake)** | Jm | 0.0126<br>0.129 | $kgm^2$<br>$kgfcms^2$ |
| **Torque Constant (*)** | Kt | 1.79<br>18.3 | Nm/A(rms)<br>kgfcm/A(rms) |
| **Winding Resistance (between terminals) (*)** | Ra | 0.88 | Ω |
| **Thermal time constant** | $t_t$ | 60 | min |
| **Static friction** | Tf | 1.2<br>12 | Nm<br>kgfcm |
| **Weight** | w | 29 | kg |
| **Weight(with 35Nm Brake)** | w | 35 | kg |
| **Max. Current of Servo Amp.** | Imax | 40 | A (peak) |

(*) The values are the standard values at 20℃ and the tolerance is ±10%.

The speed-torque characteristics very depending on the type of software,parametersetting,and input voltage of the digital servo software.(The above figures show average values.)



© MyFANUC DC7187A9420041B3806BC8E5C652D376

**Model βiF 30/1500-B** Specification: A06B-2055-B□03

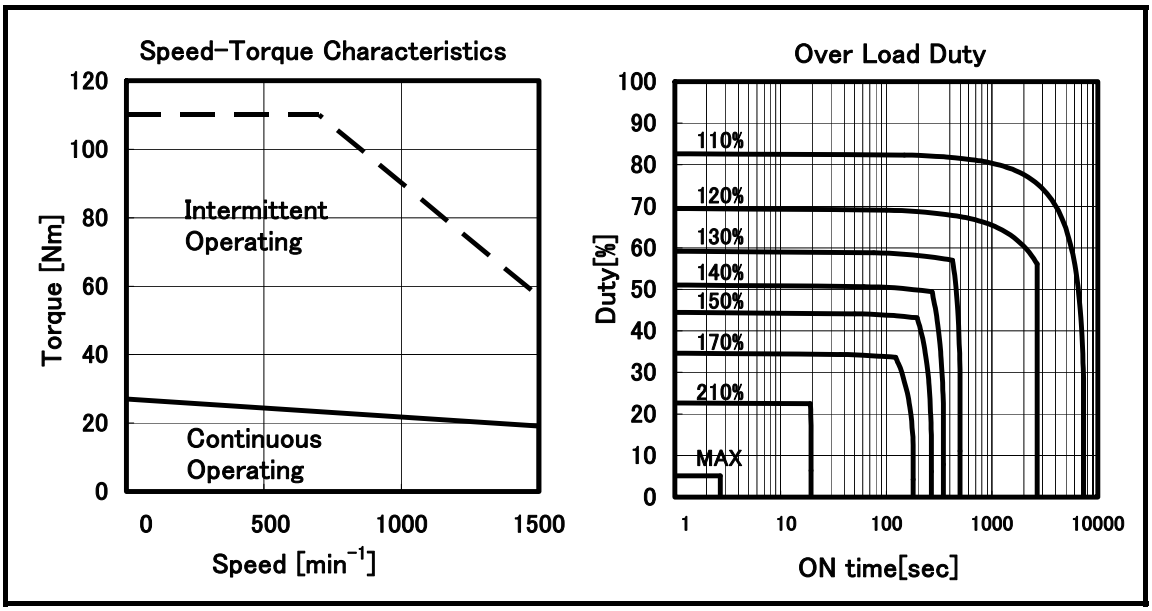


**Data sheet**

| Parameter | Symbol | Value | Unit |
|---|---|---|---|
| **Continuous Torque (at low speed) (*)** | Tc | 27<br>276 | Nm<br>kgfcm |
| **Continuous Current (at low speed) (*)** | Ic | 12.8 | A (rms) |
| **Rated Output (*)** | Pr | 3.0<br>4.0 | kW<br>HP |
| **Rated Speed** | Nr | 1500 | $min^{-1}$ |
| **Maximum Speed** | Nmax | 1500 | $min^{-1}$ |
| **Maximum Torque (*)** | Tmax | 110<br>1120 | Nm<br>kgfcm |
| **Moment of Inertia of Rotor** | Jm | 0.0170<br>0.173 | $kgm^2$<br>$kgfcms^2$ |
| **Moment of Inertia of Rotor(with 35Nm Brake)** | Jm | 0.0176<br>0.180 | $kgm^2$<br>$kgfcms^2$ |
| **Torque Constant (*)** | Kt | 2.11<br>21.5 | Nm/A(rms)<br>kgfcm/A(rms) |
| **Winding Resistance (between terminals) (*)** | Ra | 0.76 | Ω |
| **Thermal time constant** | $t_t$ | 70 | min |
| **Static friction** | Tf | 1.8<br>18 | Nm<br>kgfcm |
| **Weight** | w | 40 | kg |
| **Weight(with 35Nm Brake)** | w | 46 | kg |
| **Max. Current of Servo Amp.** | Imax | 80 | A (peak) |

(*) The values are the standard values at 20℃ and the tolerance is ±10%.

The speed-torque characteristics very depending on the type of software,parametersetting,and input voltage of the digital servo software.(The above figures show average values.)



© MyFANUC DC7187A9420041B3806BC8E5C652D376

## 1.3.3 Outline Drawings

This chapter presents outline drawings of the FANUC AC servo motors.
The shaft shape, allowable axis load, shaft run-out precision, and power pin layout are also shown.

This subsection, "Outline Drawings", consists of the following sections:

1.3.3.1 Models βiS 0.2 and βiS 0.3
1.3.3.2 Models βiS 0.4-B to βiS 1-B
1.3.3.3 Models βiS 2-B, βiS 4-B, βiS 2HV-B, βiS 4HV-B, βiSc 2-B, βiSc 4-B, βiSc 2HV-B, and βiSc 4HV-B
1.3.3.4 Models βiS 8-B, βiS 12-B, βiS 8HV-B, βiS 12HV-B, βiSc 8-B, βiSc 12-B, βiSc 8HV-B, βiSc 12HV-B, βiF 4-B, and βiF 8-B
1.3.3.5 Models βiS 22-B to βiS 40-B, βiS 22HV-B to βiS 40HV-B, βiSc 22-B, and βiF 12-B to βiF 30-B



© MyFANUC DC7187A9420041B3806BC8E5C652D376

## 1.3.3.1 Models βiS 0.2 and βiS 0.3

### (1) Outline drawing of the motors

#### (a) Standard

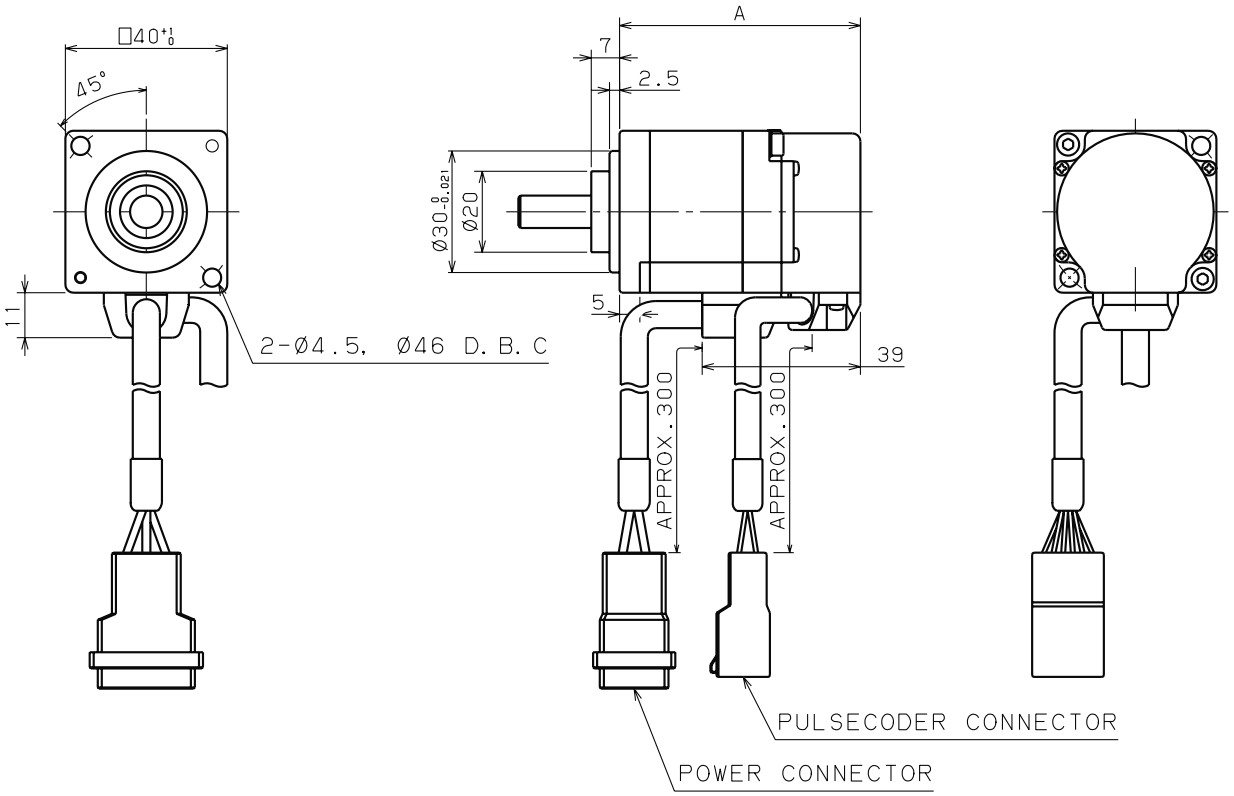


| MODEL | A |
|---|---|
| βiS 0.2 | 59.5 |
| βiS 0.3 | 73.5 |



© MyFANUC DC7187A9420041B3806BC8E5C652D376

### (b) With a brake

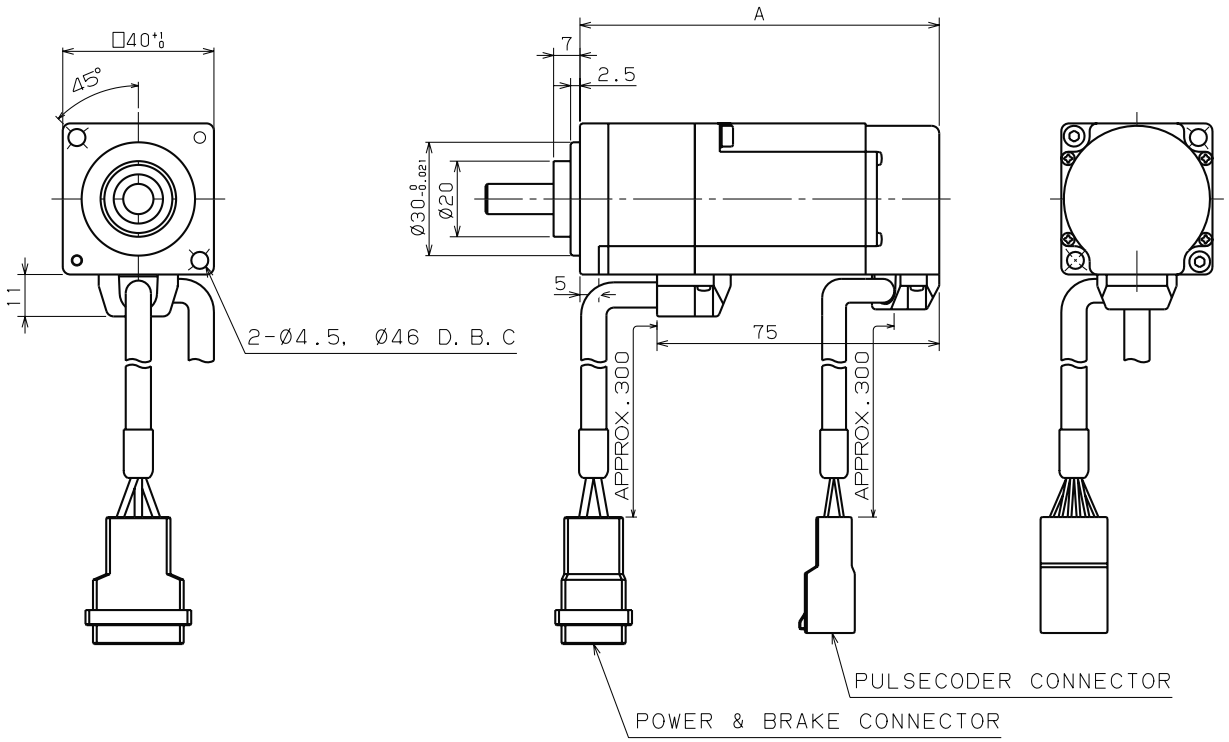


| MODEL | A |
|---|---|
| βiS 0.2 | 95 |
| βiS 0.3 | 109 |



© MyFANUC DC7187A9420041B3806BC8E5C652D376

## (c) Standard (IP67 specification)

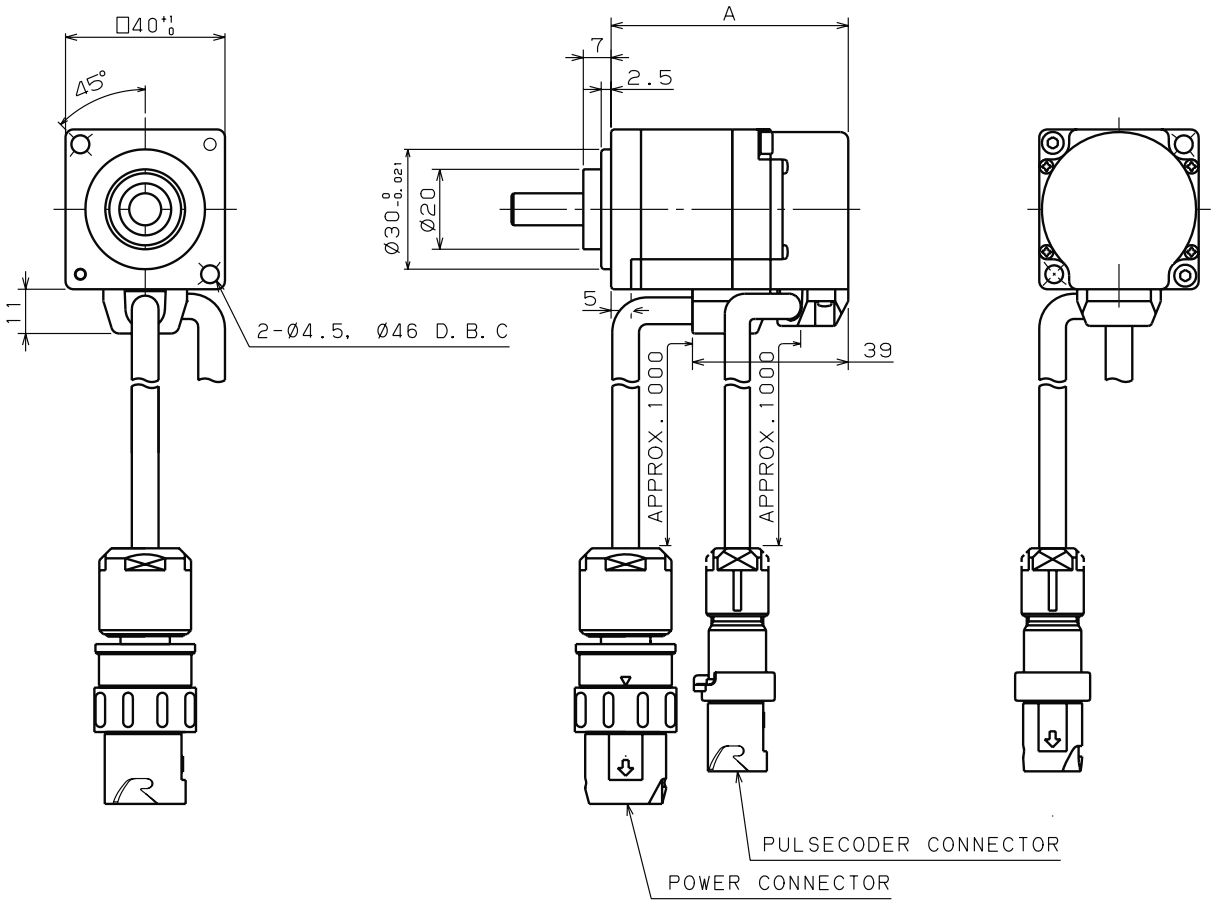


| MODEL | A |
|---|---|
| βiS 0.2 | 59.5 |
| βiS 0.3 | 73.5 |



© MyFANUC DC7187A9420041B3806BC8E5C652D376

## (d) With a brake (IP67 specification)

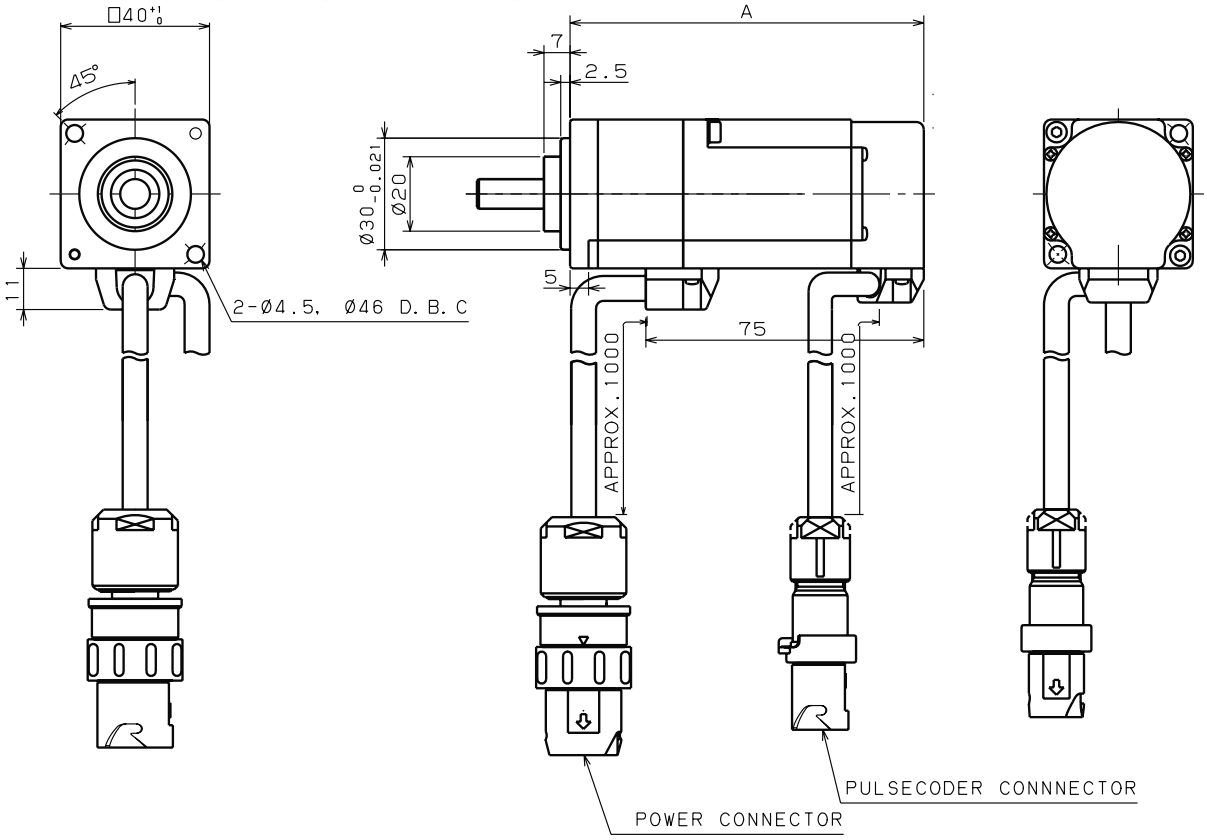


| MODEL | A |
|---|---|
| βiS 0.2 | 95 |
| βiS 0.3 | 109 |



© MyFANUC DC7187A9420041B3806BC8E5C652D376

## (2) Shaft shape

### (a) Shaft shape types

The shafts of the motors have the following shapes:

| | Straight shaft | Straight shaft with key way |
|---|---|---|
| βiS 0.2, βiS 0.3 | ϕ8 | ϕ8 |

### (b) Shaft details

- **ϕ8 straight shaft**

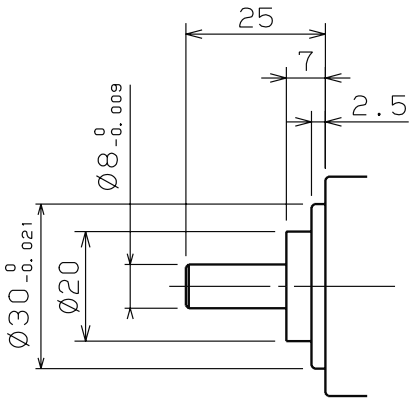


- **ϕ8 straight shaft with key way**

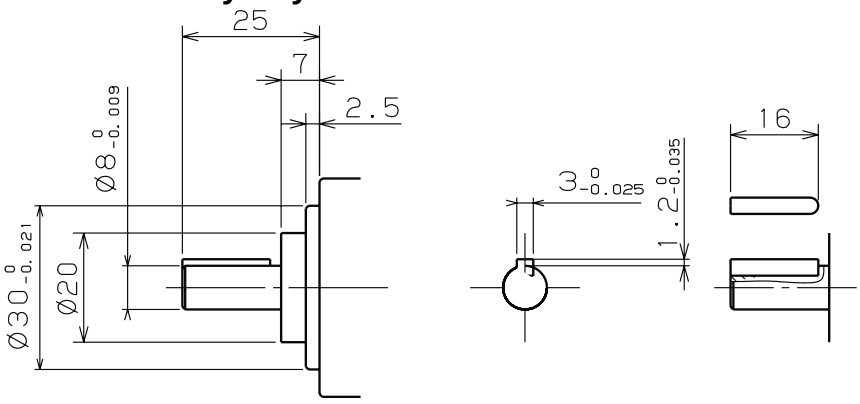


## (3) Allowable axis load

The allowable axis load is indicated below.
If a load exceeding the allowable axis load is applied, the bearing or shaft may be damaged.
For details of the allowable axis load, see Section 3.2, “MOUNTING A SERVO MOTOR”.

| Radial load | Axial load | (Reference)<br>Front bearing specification |
|---|---|---|
| 63[N]<br>(6.4 [kgf]) | 39[N]<br>(4 [kgf]) | 699 |

## (4) Shaft run-out precision

The shaft run-out precision is indicated below.
For details of the shaft run-out precision, see Section 3.2, “MOUNTING A SERVO MOTOR”.

| Shaft dia. run-out | Faucet joint run-out | Mounting face run-out |
|---|---|---|
| 0.02mm or less | 0.04mm or less | 0.06mm or less |



© MyFANUC DC7187A9420041B3806BC8E5C652D376

## (5) Power and brake connector

Manufacture: Tyco Electronics Japan G.K.
Manufacturer specification: 3-179554-3

The power and brake connectors do not have a water-proof property when engaged with the connector on the cable side.

The following shows the shape and pin layout of the power connector.

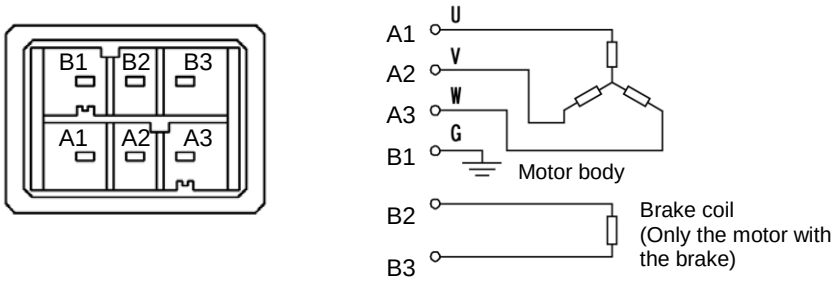


**NOTE**
No surge absorber for brake is contained in the motor.
Prepare a surge absorber in the power magnetics cabinet.

The specifications of IP67 are as follows.

Manufacture: Japan Aviation Electronics Industry
Manufacturer specification: JN1HW06PL4

The power and brake connector has a water-proof property when engaged with the connector on the cable side.

The following shows the shape and pin layout of the power connector.

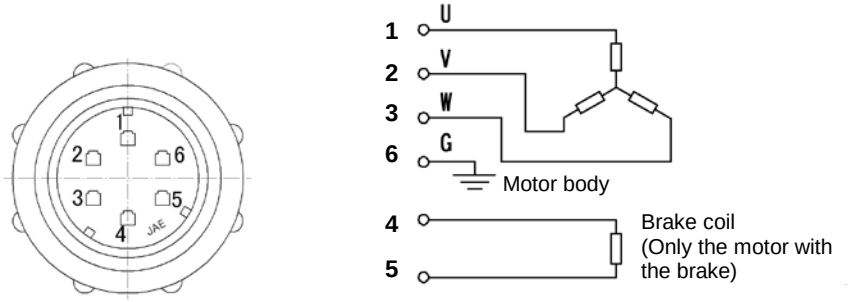


**NOTE**
No surge absorber for brake is contained in the motor.
Prepare a surge absorber in the power magnetics cabinet.

For the specifications, shape, and pin layout of the pulsecoder connector, see Section 1.4, “FEEDBACK SENSOR”.



© MyFANUC DC7187A9420041B3806BC8E5C652D376

## 1.3.3.2 Models βiS 0.4-B to βiS 1-B

### (1) Outline drawing of the motors

#### (a) Standard

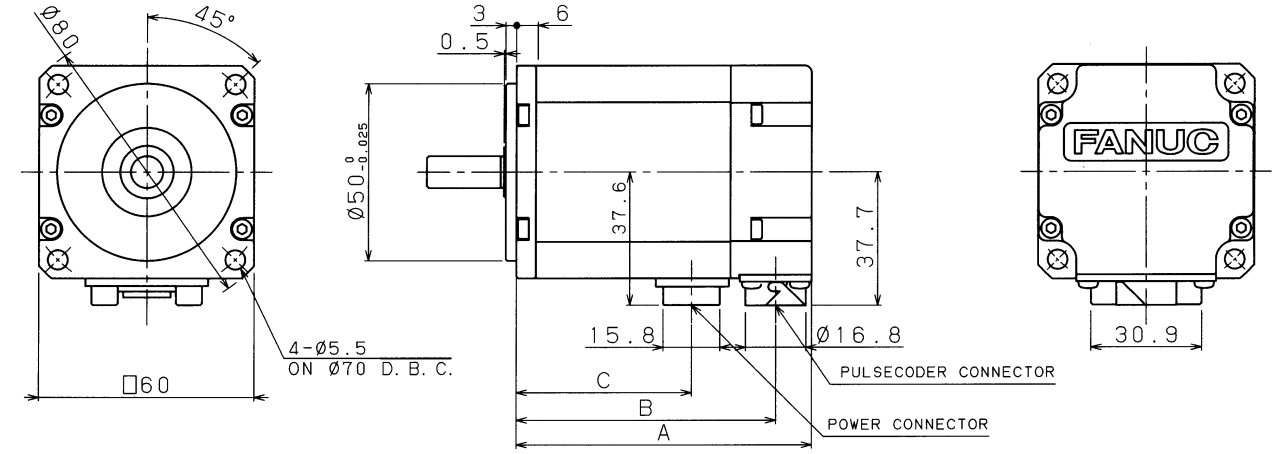


Connector engagement drawing (right angle)

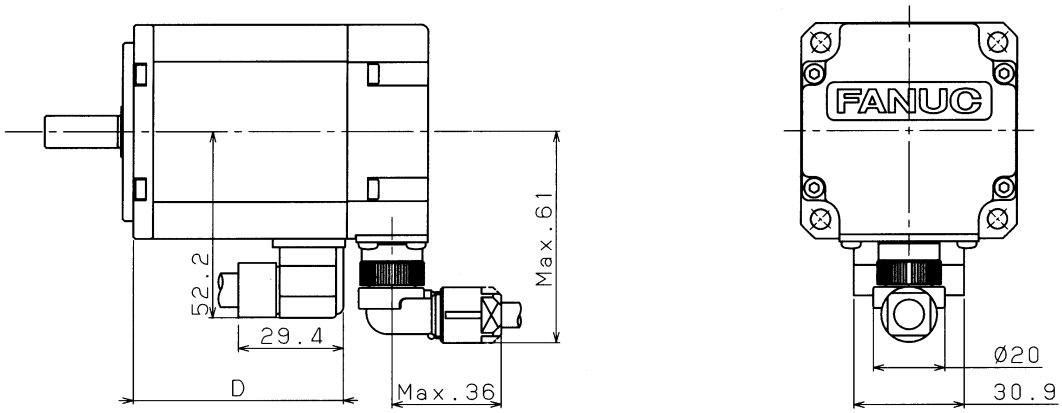


Connector engagement drawing (straight)

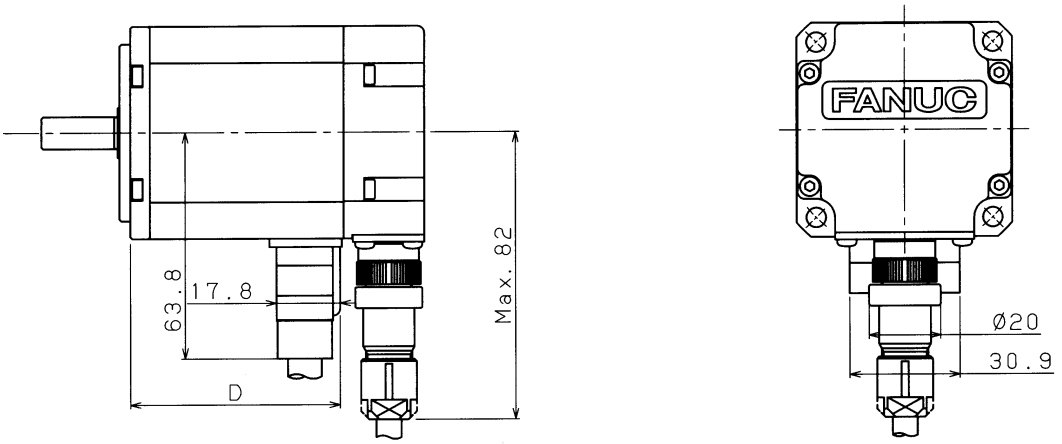


| MODEL | A | B | C | D |
|---|---|---|---|---|
| βiS 0.4-B | 68 | 58 | 34.5 | 44.3 |
| βiS 0.5-B | 82.5 | 72.5 | 49 | 58.8 |
| βiS 1-B | 111.5 | 101.5 | 78 | 87.8 |



© MyFANUC DC7187A9420041B3806BC8E5C652D376

### (b) With a brake

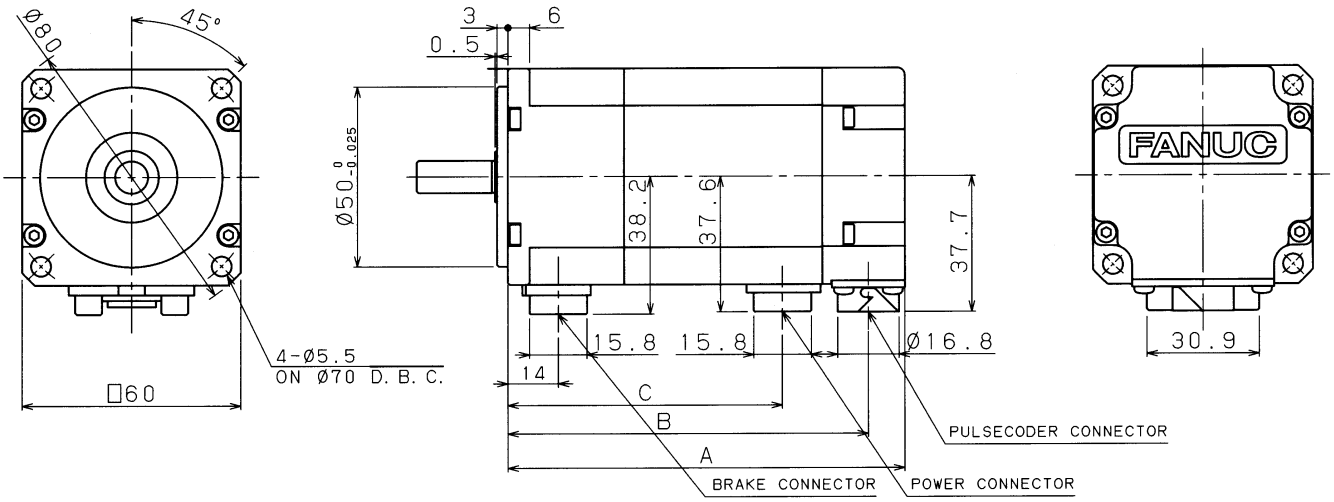


Connector engagement drawing (right angle)

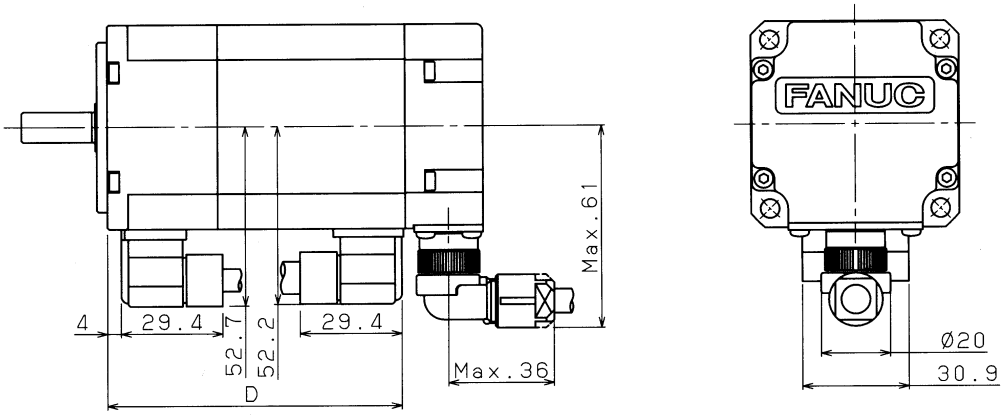


Connector engagement drawing (straight)

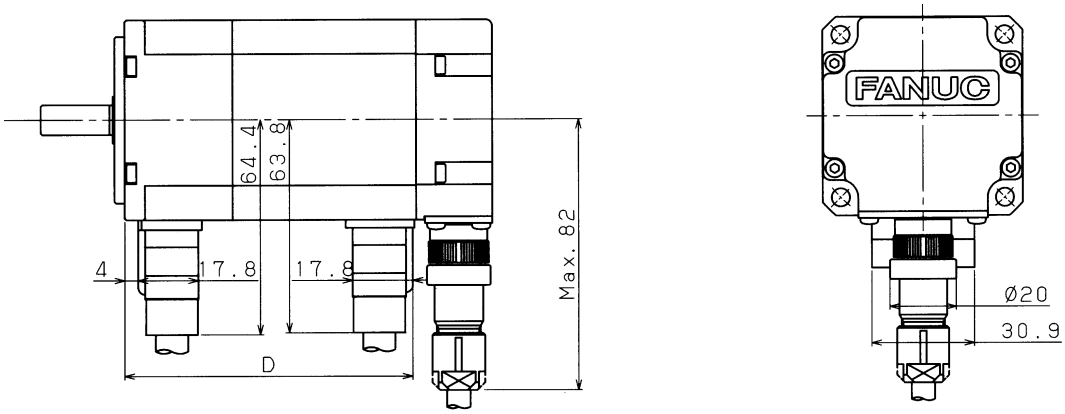


| MODEL | A | B | C | D |
|---|---|---|---|---|
| βiS0.4-B | 94.5 | 84.5 | 61 | 70.8 |
| βiS0.5-B | 109 | 99 | 75.5 | 85.3 |
| βiS1-B | 138 | 128 | 104.5 | 114.3 |



© MyFANUC DC7187A9420041B3806BC8E5C652D376

## (2) Shaft shape

### (a) Shaft shape types

The shafts of the motors have the following shapes:

| | Straight shaft | Straight shaft with key way |
|---|---|---|
| βiS 0.4-B, βiS 0.5-B | ϕ9 | ϕ9 |
| βiS 1 | ϕ14 | ϕ14 |

### (b) Shaft details

- **ϕ9 straight shaft**

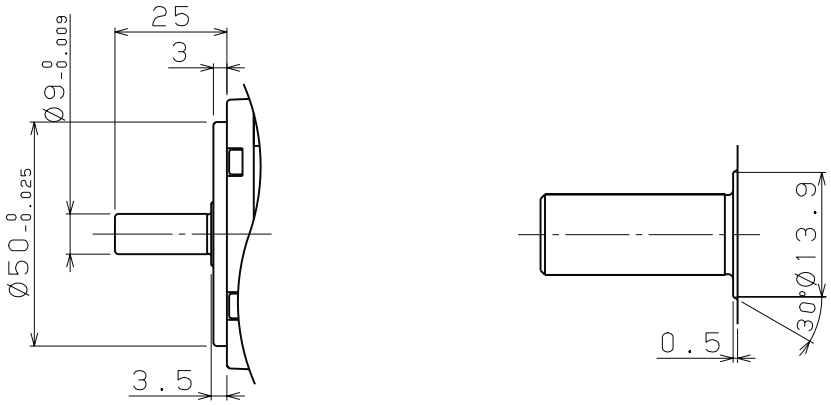


- **ϕ9 straight shaft with key way**

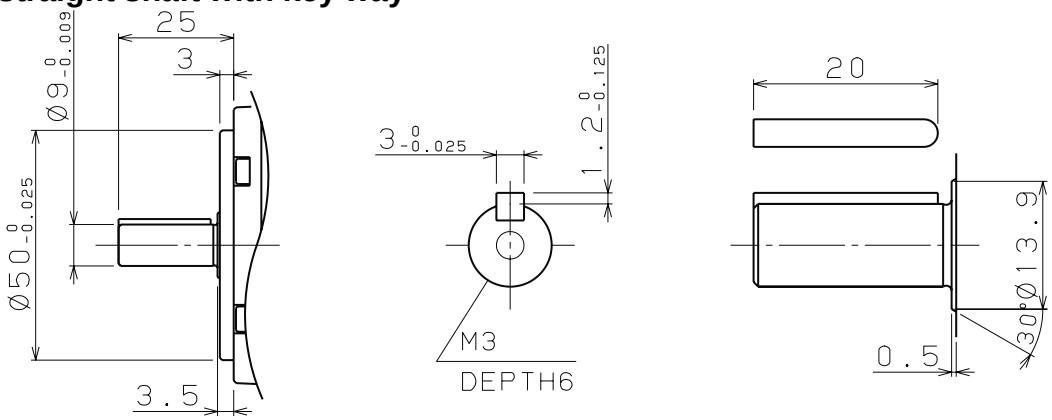


- **ϕ14 straight shaft**

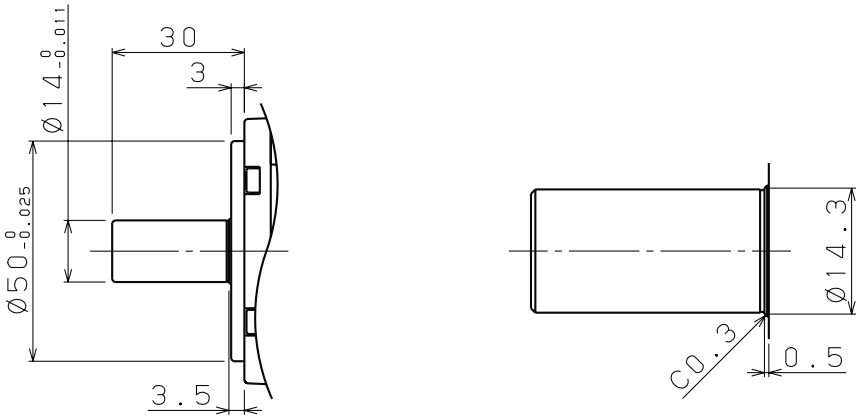




© MyFANUC DC7187A9420041B3806BC8E5C652D376

- **ϕ14 straight shaft with key way**

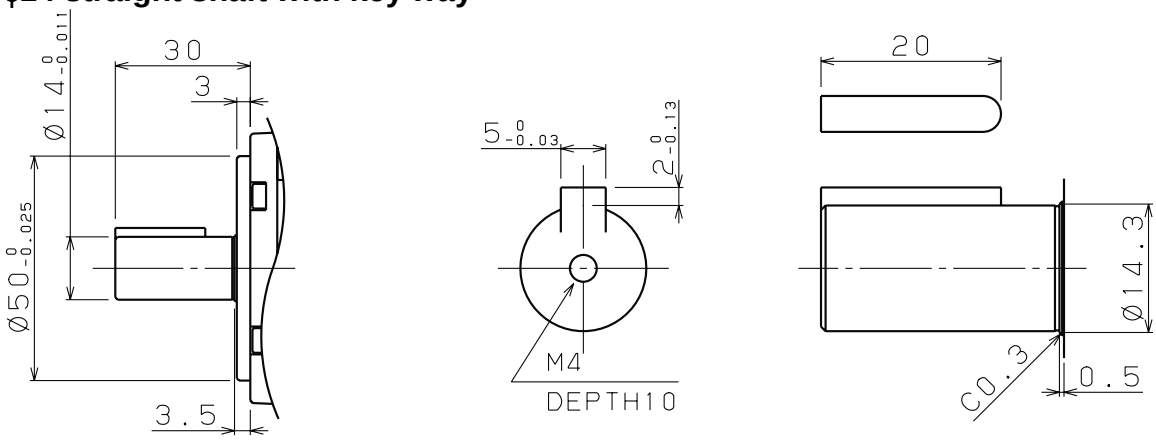


## (3) Allowable axis load

The allowable axis load is indicated below.
If a load exceeding the allowable axis load is applied, the bearing or shaft may be damaged.
For details of the allowable axis load, see Section 3.2, “MOUNTING A SERVO MOTOR”.

| Radial load | Axial load | (Reference)<br>Front bearing specification |
|---|---|---|
| 196[N]<br>(20 [kgf]) | 49[N]<br>(5 [kgf]) | 6902 |

## (4) Shaft run-out precision

The shaft run-out precision is indicated below.
For details of the shaft run-out precision, see Section 3.2, “MOUNTING A SERVO MOTOR”.

| Shaft dia. run-out | Faucet joint run-out | Mounting face run-out |
|---|---|---|
| 0.02mm or less | 0.04mm or less | 0.06mm or less |

## (5) Power connector

Manufacture: MOLEX JAPAN Co., Ltd.
Manufacturer specification: 55618-0401

The power connector has a water-proof property when engaged with the connector on the cable side.
The following shows the shape and pin layout of the power connector.

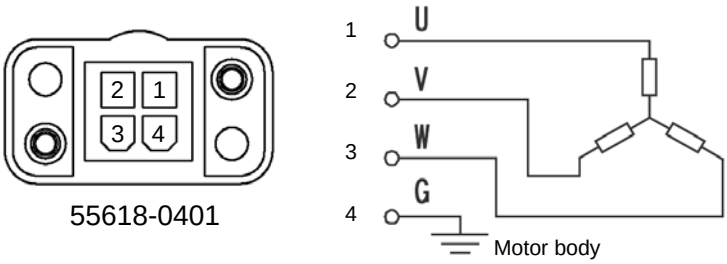


For the specifications, shape, and pin layout of the pulsecoder connector, see Section 1.4, “FEEDBACK SENSOR”.



© MyFANUC DC7187A9420041B3806BC8E5C652D376

## 1.3.3.3 Models βiS 2-B, βiS 4-B, βiS 2HV-B, βiS 4HV-B, βiSc 2-B, βiSc 4-B, βiSc 2HV-B, and βiSc 4HV-B

### (1) Outline drawing of the motors

#### (a) Standard

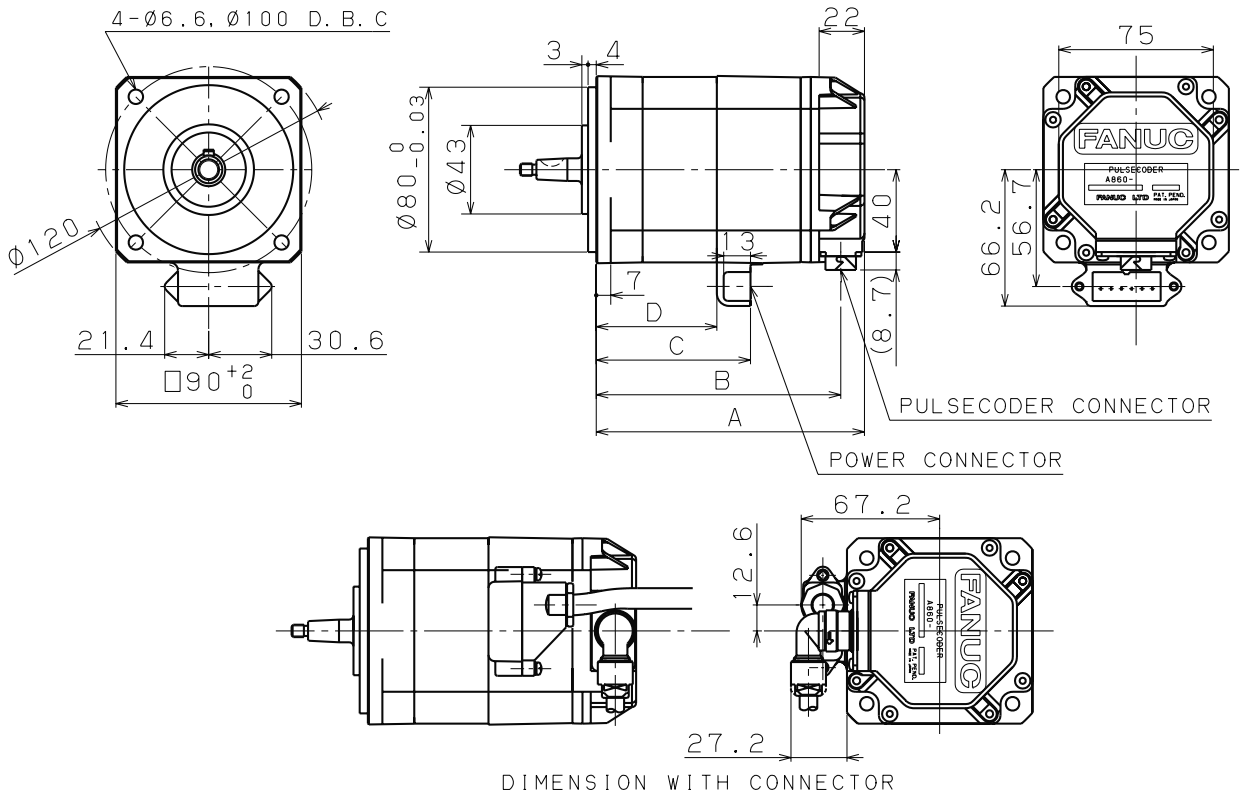


| MODEL | A | B | C | D |
|---|---|---|---|---|
| βiS2-B, βiS2HV-B<br>βiSc2-B, βiSc2HV-B | 130 | 119 | 75 | 59 |
| βiS4-B, βiS4HV-B<br>βiSc4-B, βiSc4HV-B | 166 | 155 | 111 | 95 |



© MyFANUC DC7187A9420041B3806BC8E5C652D376

### (b) With a brake

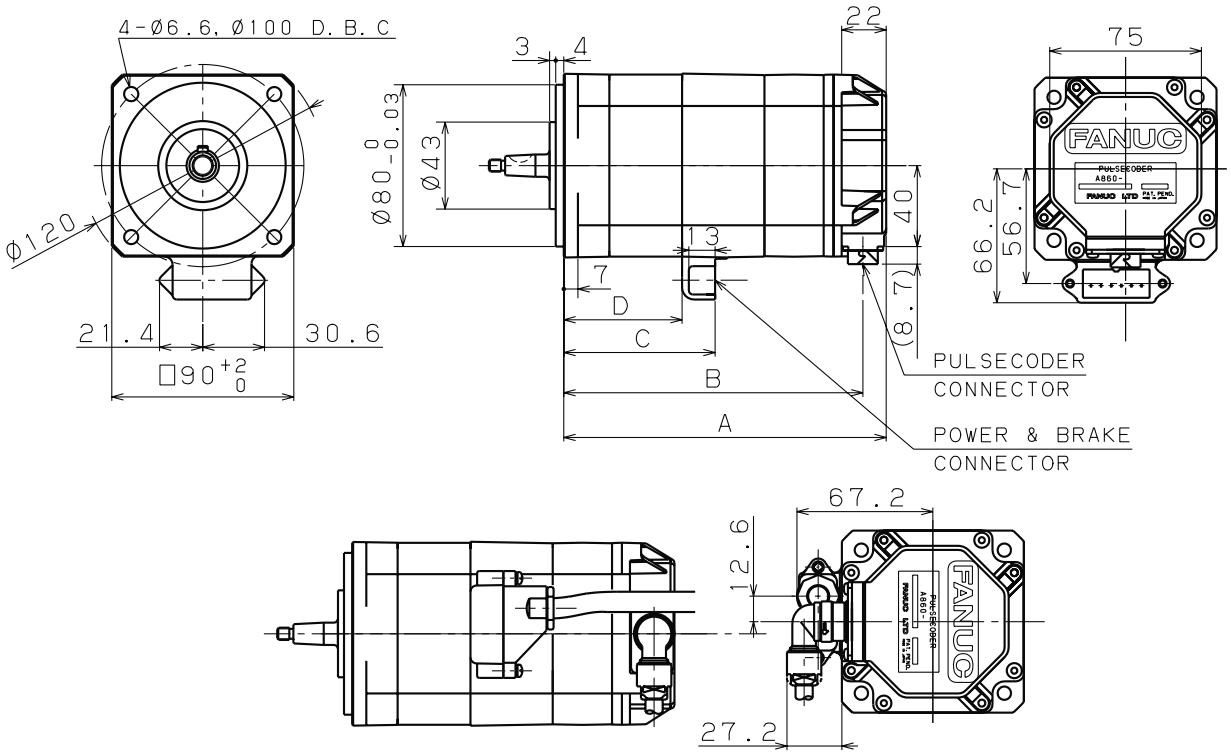


DIMENSION WITH CONNECTOR

| MODEL | A | B | C | D |
|---|---|---|---|---|
| βiS2-B, βiS2HV-B<br>βiSc2-B, βiSc2HV-B | 159 | 148 | 75 | 59 |
| βiS4-B, βiS4HV-B<br>βiSc4-B, βiSc4HV-B | 195 | 184 | 111 | 95 |



© MyFANUC DC7187A9420041B3806BC8E5C652D376

## (2) Shaft shape

### (a) Shaft shape types

The shafts of the motors have the following shapes:

| | Taper shaft | Straight shaft | Straight shaft with key way |
|---|---|---|---|
| βiS2-B, βiS2HV-B, βiSc2-B, βiSc2HV-B | ϕ11 (ϕ14) | ϕ10 (ϕ14) | ϕ10 (ϕ14) |
| βiS4-B, βiS4HV-B, βiSc4-B, βiSc4HV-B | ϕ14 | ϕ14 | ϕ14 |

* Shown within parentheses is the option for modification.
It is applicable to A06B-□□□□-B△0▽#0063 or #0163.

### (b) Shaft details

- **ϕ11 taper shaft**

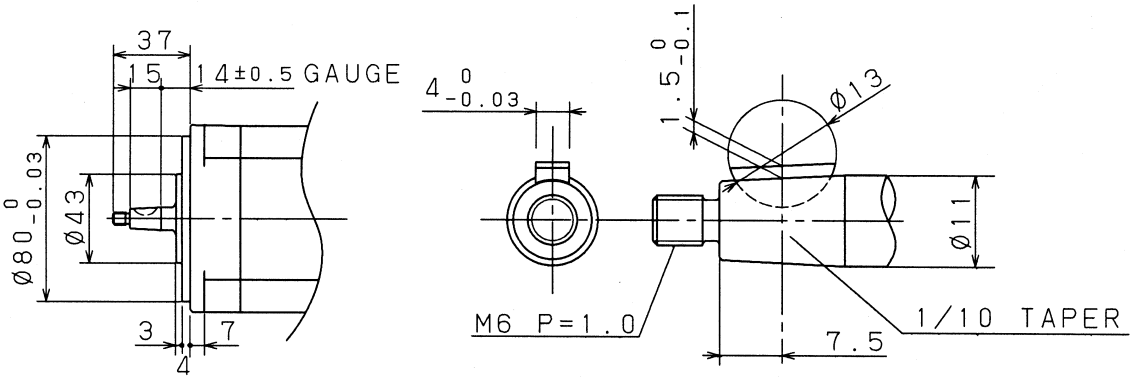


- **ϕ14 taper shaft**

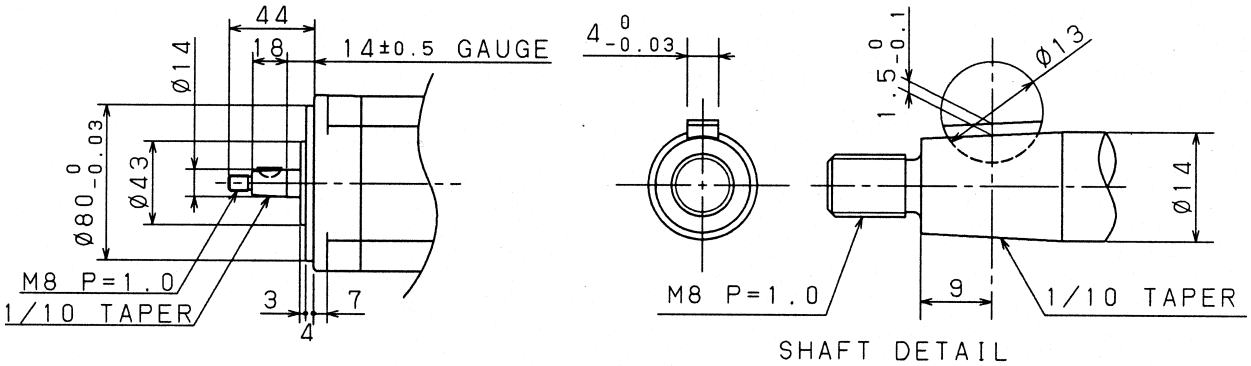


- **ϕ10 straight shaft**

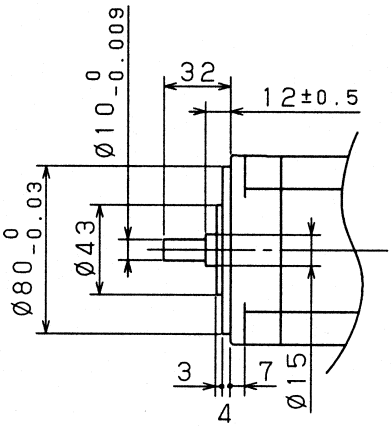




© MyFANUC DC7187A9420041B3806BC8E5C652D376

- **ϕ14 straight shaft**

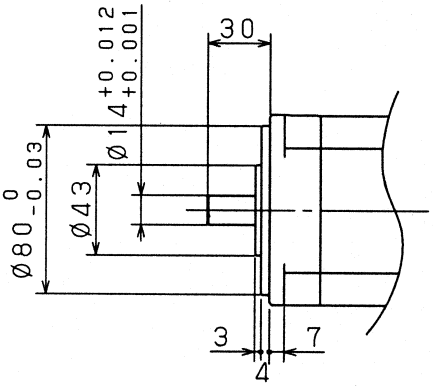


- **ϕ10 straight shaft with key way**

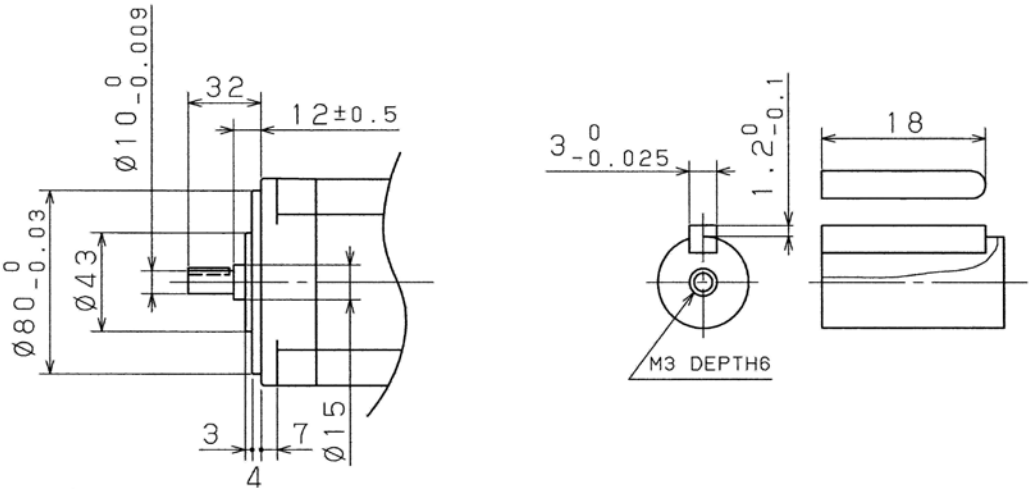


- **ϕ14 straight shaft with key way**

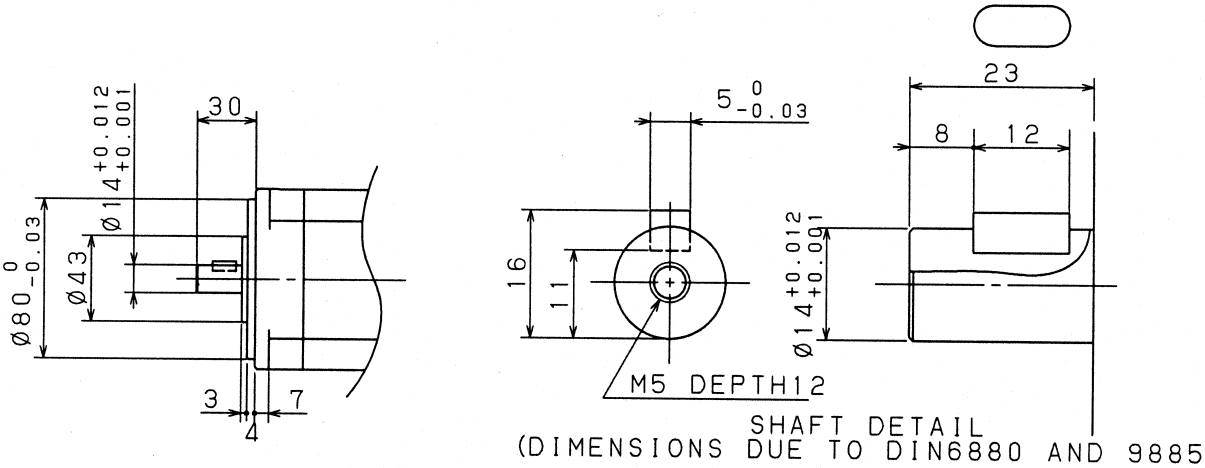




© MyFANUC DC7187A9420041B3806BC8E5C652D376

## (3) Allowable axis load

The allowable axis load is indicated below.
If a load exceeding the allowable axis load is applied, the bearing or shaft may be damaged.
For details of the allowable axis load, see Section 3.2, “MOUNTING A SERVO MOTOR”.

| Radial load | Axial load | (Reference)<br>Front bearing specification |
|---|---|---|
| 245[N]<br>(25 [kgf]) | 78[N]<br>(8 [kgf]) | 6003 |

## (4) Shaft run-out precision

The shaft run-out precision is indicated below.
For details of the shaft run-out precision, see Section 3.2, “MOUNTING A SERVO MOTOR”.

| Shaft dia. run-out | Faucet joint run-out | Mounting face run-out |
|---|---|---|
| 0.02mm or less | 0.04mm or less | 0.06mm or less |

## (5) Power and brake connector

Manufacture: Tyco Electronics Japan G.K.
Manufacturer specification: 1473060-2

The power and brake connector has a water-proof property when engaged with the connector on the cable side.
The following shows the shape and pin layout of the power connector.

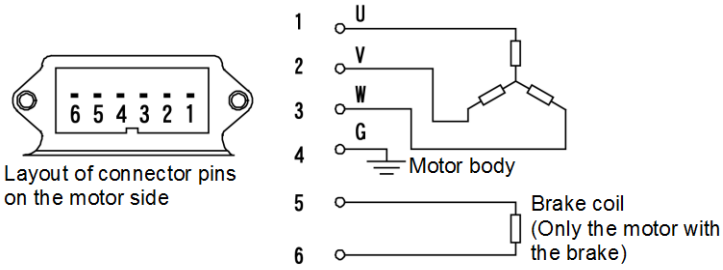


**NOTE**
No surge absorber for brake is contained in the motor.
Prepare a surge absorber in the power magnetics cabinet.

For the specifications, shape, and pin layout of the pulsecoder connector, see Section 1.4, “FEEDBACK SENSOR”.



© MyFANUC DC7187A9420041B3806BC8E5C652D376

## 1.3.3.4 Models βiS 8-B, βiS 12-B, βiS 8HV-B, βiS 12HV-B, βiSc 8-B, βiSc 12-B, βiSc 8HV-B, βiSc 12HV-B, βiF 4-B, and βiF 8-B

### (1) Outline drawing of the motors

#### (a) Standard

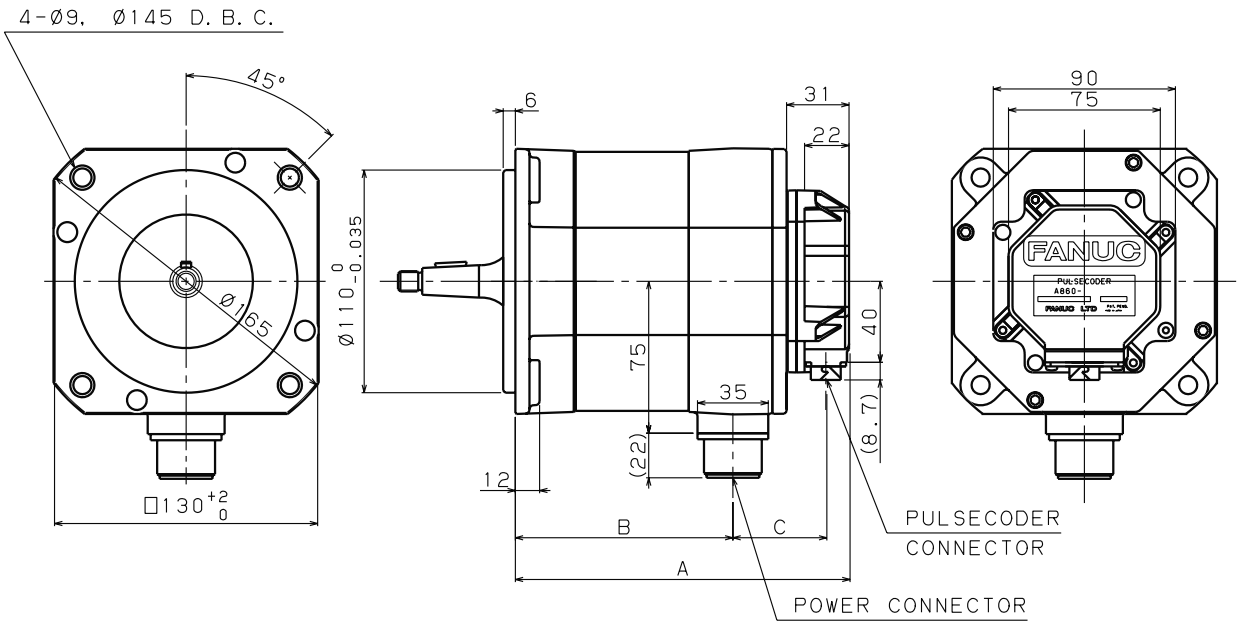


| MODEL | A | B | C |
|---|---|---|---|
| βiS8-B, βiS8HV-B<br>βiSc8-B, βiSc8HV-B<br>βiF4-B | 166 | 108 | 47 |
| βiS12-B, βiS12HV-B<br>βiSc12-B, βiSc12HV-B<br>βiF8-B | 222 | 164 | |



© MyFANUC DC7187A9420041B3806BC8E5C652D376

### (b) With a brake

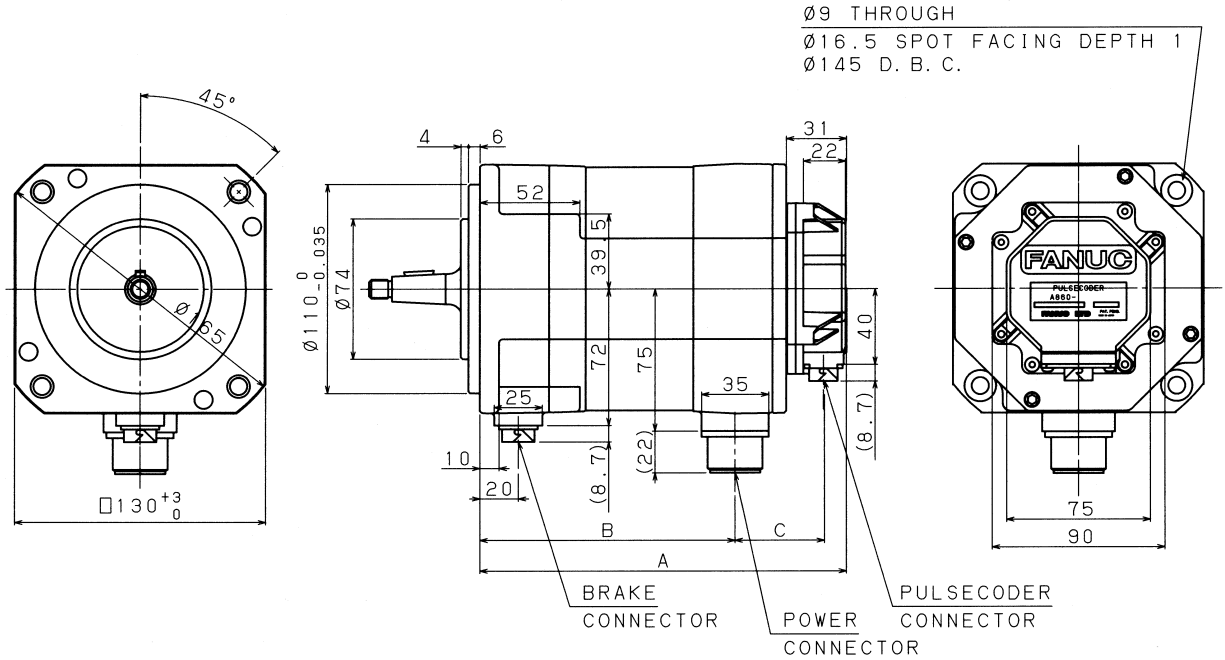


| MODEL | A | B | C |
|---|---|---|---|
| βiS8-B, βiS8HV-B<br>βiSc8-B, βiSc8HV-B<br>βiF4-B | 191 | 133 | 47 |
| βiS12, βiS12HV-B<br>βiSc12-B, βiSc12HV-B<br>βiF8-B | 247 | 189 | |



© MyFANUC DC7187A9420041B3806BC8E5C652D376

## (2) Shaft shape

### (a) Shaft shape types

The shafts of the motors have the following shapes:

| | Taper shaft | Straight shaft | Straight shaft with key way |
|---|---|---|---|
| βiS8-B, βiS8HV-B<br>βiSc8-B, βiSc8HV-B<br>βiF4-B, βiF8-B | ϕ16 | ϕ19 | ϕ19 |
| βiS12-B, βiS12HV-B<br>βiSc12-B, βiSc12HV-B | ϕ16 | ϕ24 | ϕ24 |

### (b) Shaft details

- **ϕ16 taper shaft (standard)**

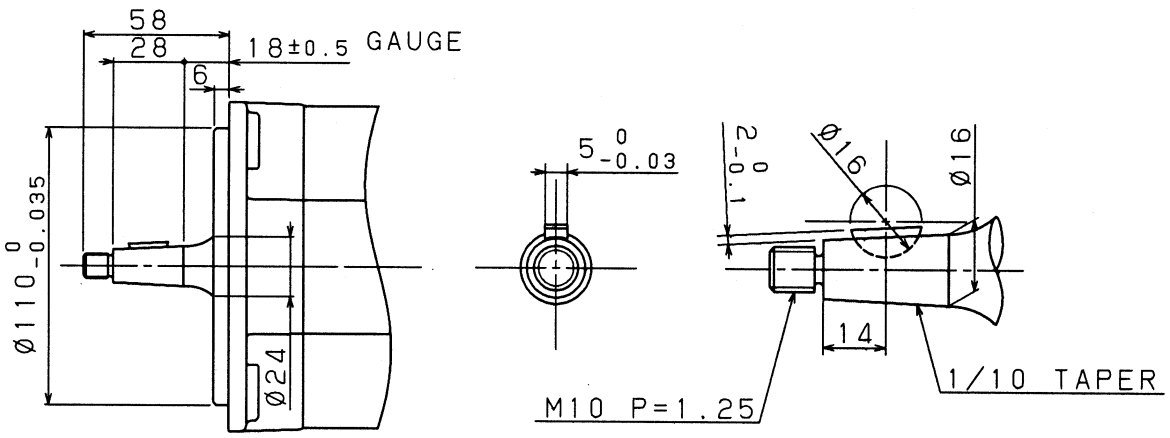


- **ϕ16 taper shaft (with a brake)**

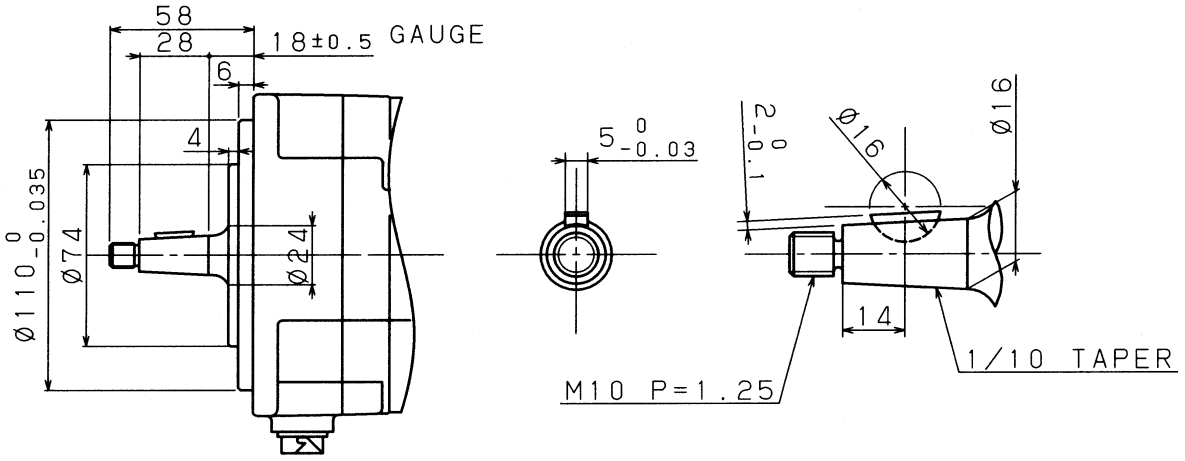




© MyFANUC DC7187A9420041B3806BC8E5C652D376

- **ϕ19 straight shaft (standard)**

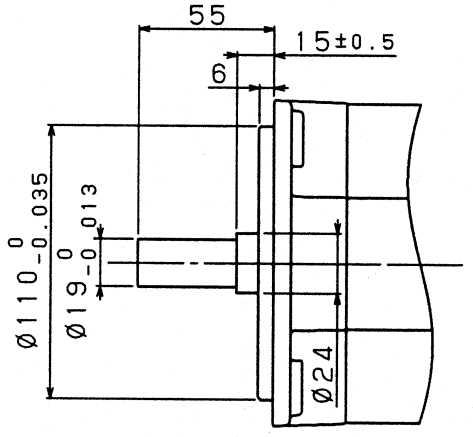


- **ϕ19 straight shaft (with a brake)**

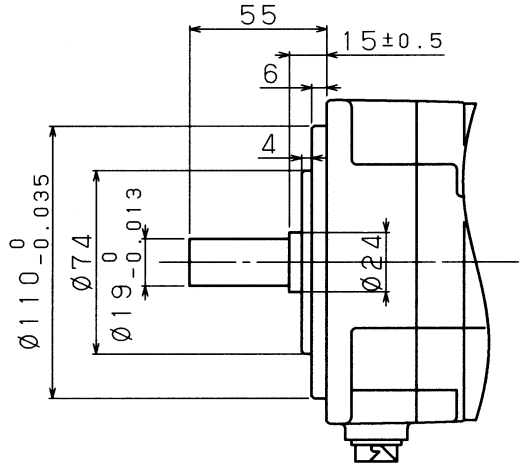


- **ϕ19 straight shaft with key way (standard)**

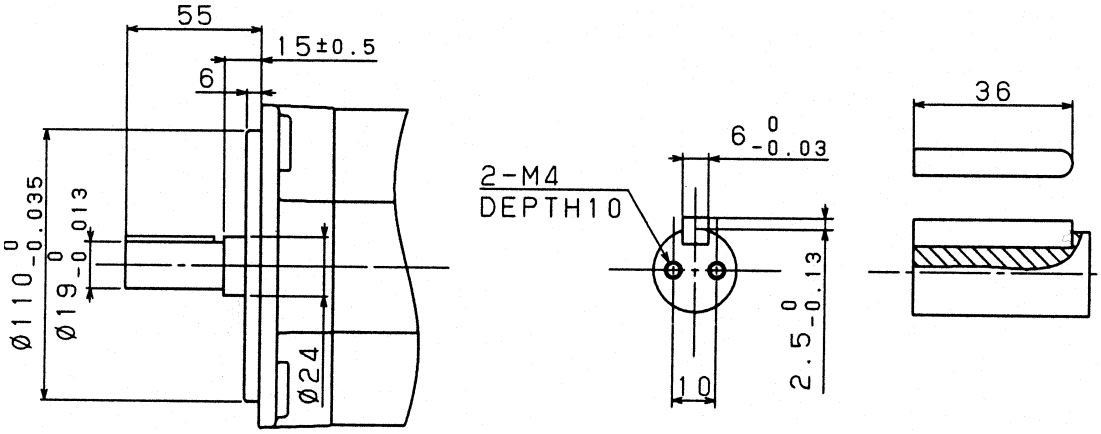




© MyFANUC DC7187A9420041B3806BC8E5C652D376

- **ϕ19 straight shaft with key way (with a brake)**

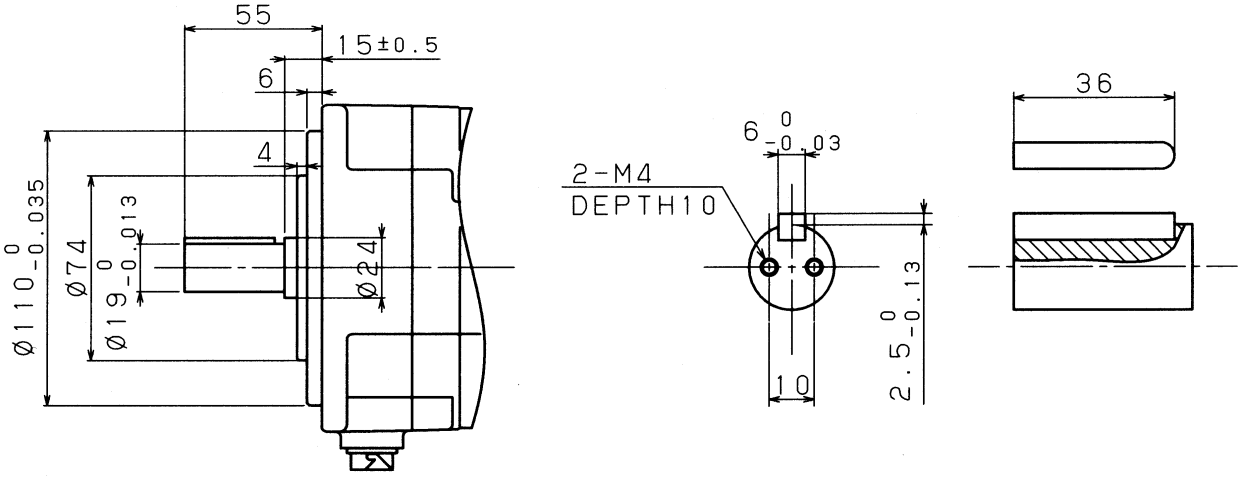


- **ϕ24 straight shaft (standard)**

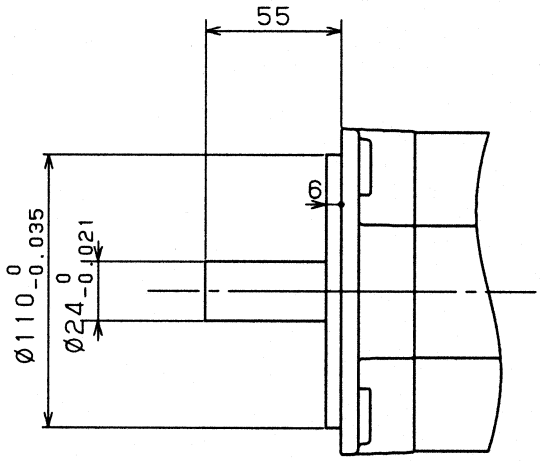


- **ϕ24 straight shaft (with a brake)**

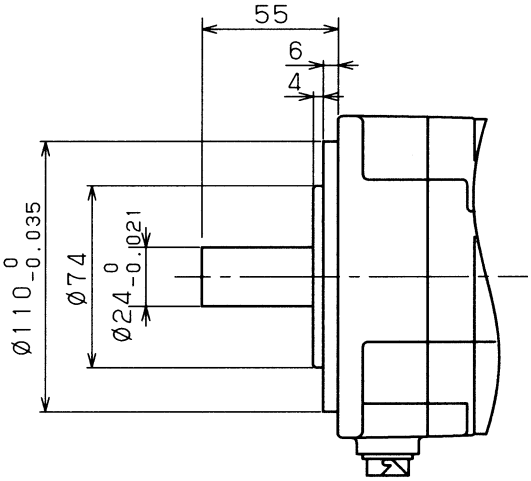




© MyFANUC DC7187A9420041B3806BC8E5C652D376

- **ϕ24 straight shaft with key way (standard)**

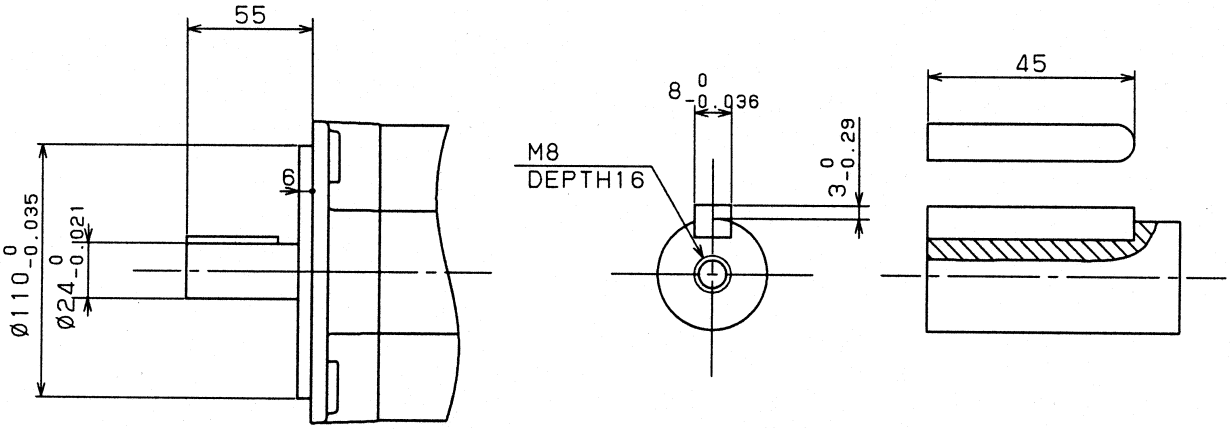


- **ϕ24 straight shaft with key way (with a brake)**

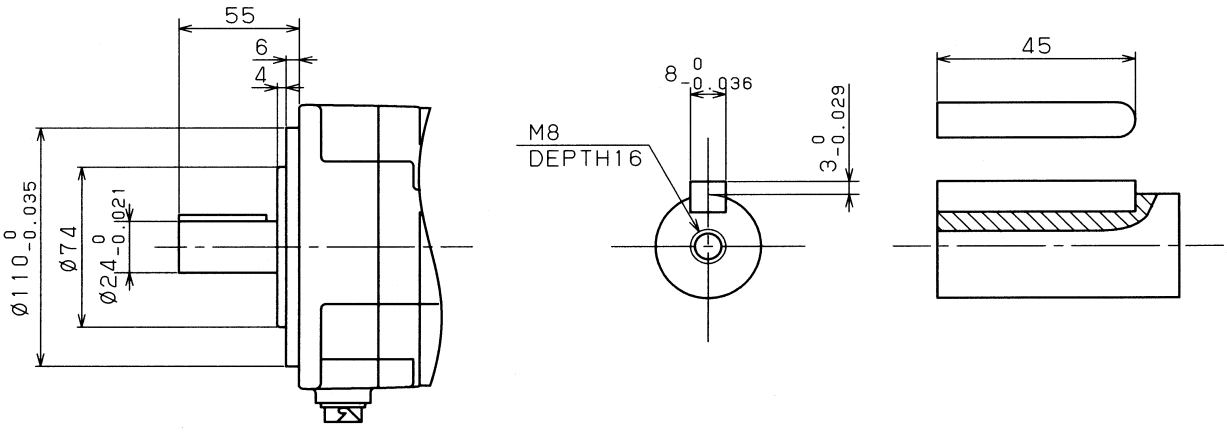




© MyFANUC DC7187A9420041B3806BC8E5C652D376

## (3) Allowable axis load

The allowable axis load is indicated below.
If a load exceeding the allowable axis load is applied, the bearing or shaft may be damaged.
For details of the allowable axis load, see Section 3.2, “MOUNTING A SERVO MOTOR”.

| Radial load | Axial load | (Reference)<br>Front bearing specification |
|---|---|---|
| 686[N]<br>(70 [kgf]) | 196[N]<br>(20 [kgf]) | 6205 |

## (4) Shaft run-out precision

The shaft run-out precision is indicated below.
For details of the shaft run-out precision, see Section 3.2, “MOUNTING A SERVO MOTOR”.

| Shaft dia. run-out | Faucet joint run-out | Mounting face run-out |
|---|---|---|
| 0.02mm or less | 0.04mm or less | 0.06mm or less |

## (5) Power connector

Manufacture: Japan Aviation Electronics Industry
Manufacturer specification: JL10-2E18-10PE

As the power connector a receptacle connector having a water-proof property by itself (when it is not engaged) is used as standard.
Either a bayonet-type connector or screw-type connector can be connected.
Strictly speaking, this power connector does not meet the MS standard, but it can be used as a connector compatible with the MS-standard round connector.
Connecting a plug connector other than those mentioned in this manual may lead to poor waterproof performance. Contact the manufacturer of the connector in question.

The following shows the shape and pin layout of the power connector.

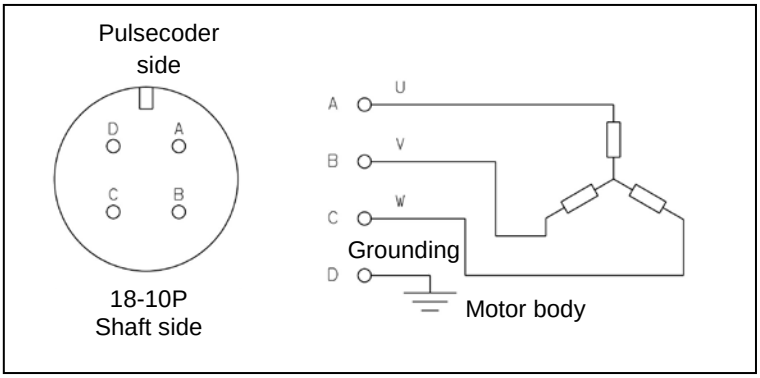


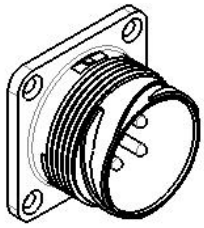

Power connector 18-10P
Applicable models: βiS 8/3000-B, etc.

For the specifications, shapes, and pin layouts of the connectors of the pulsecoder and brake, see Section 1.4, "FEEDBACK SENSOR" and Subsection 1.3.4, “Built-In Brake”.



© MyFANUC DC7187A9420041B3806BC8E5C652D376

## 1.3.3.5 Models βiS 22-B to βiS 40-B, βiS 22HV-B to βiS 40HV-B, βiSc 22-B, and βiF 12-B to βiF 30-B

### (1) Outline drawing of the motors

#### (a) Standard

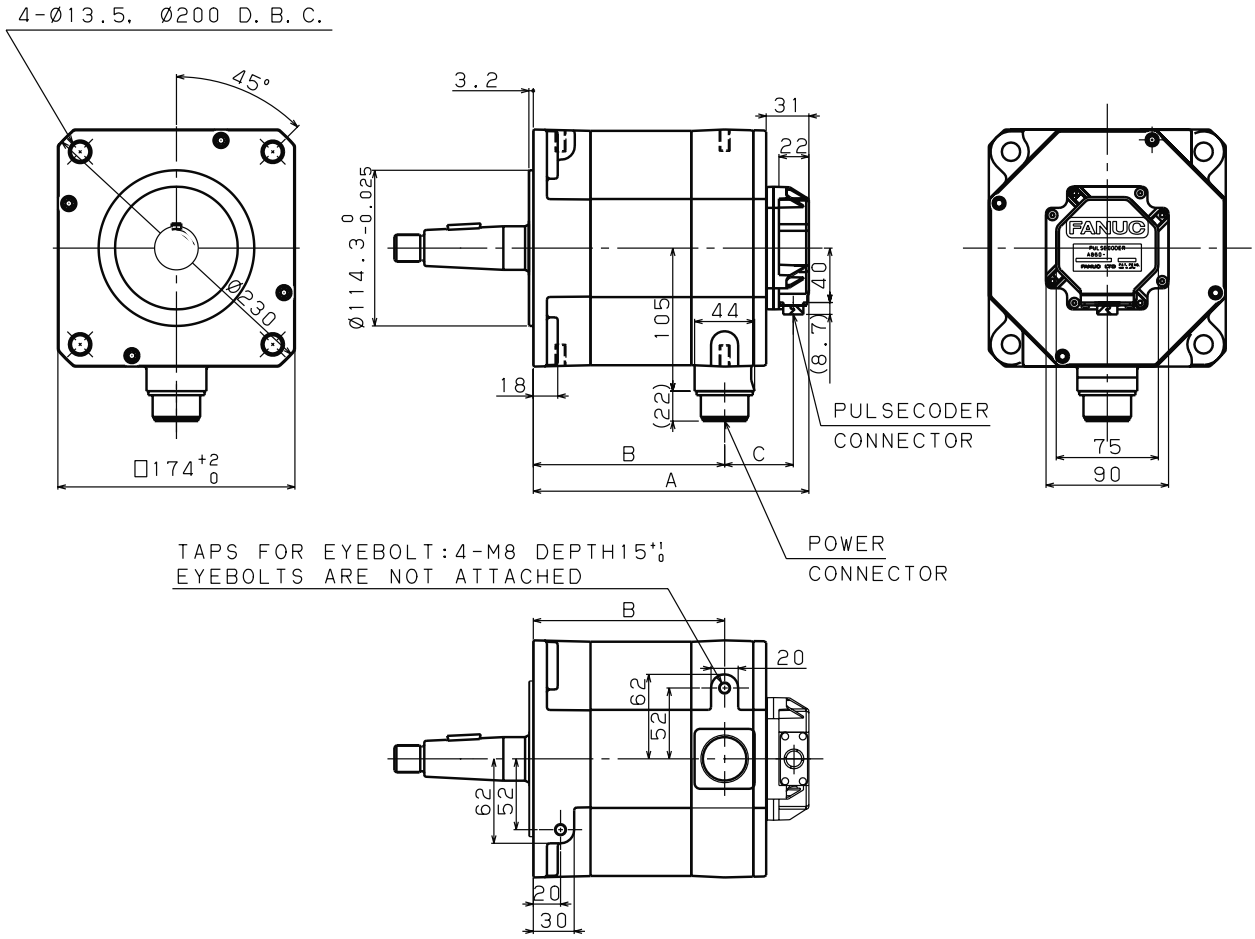


| MODEL | A | B | C |
|---|---|---|---|
| βiS22-B, βiS22HV-B, βiSc22-B<br>βiF12-B | 202 | 141 | 50 |
| βiS30-B, βiS30HV-B | 239 | 178 | |
| βiS40-B, βiS40HV-B<br>βiF22-B | 276 | 215 | |
| βiF30-B | 350 | 289 | |



© MyFANUC DC7187A9420041B3806BC8E5C652D376

### (b) With a brake

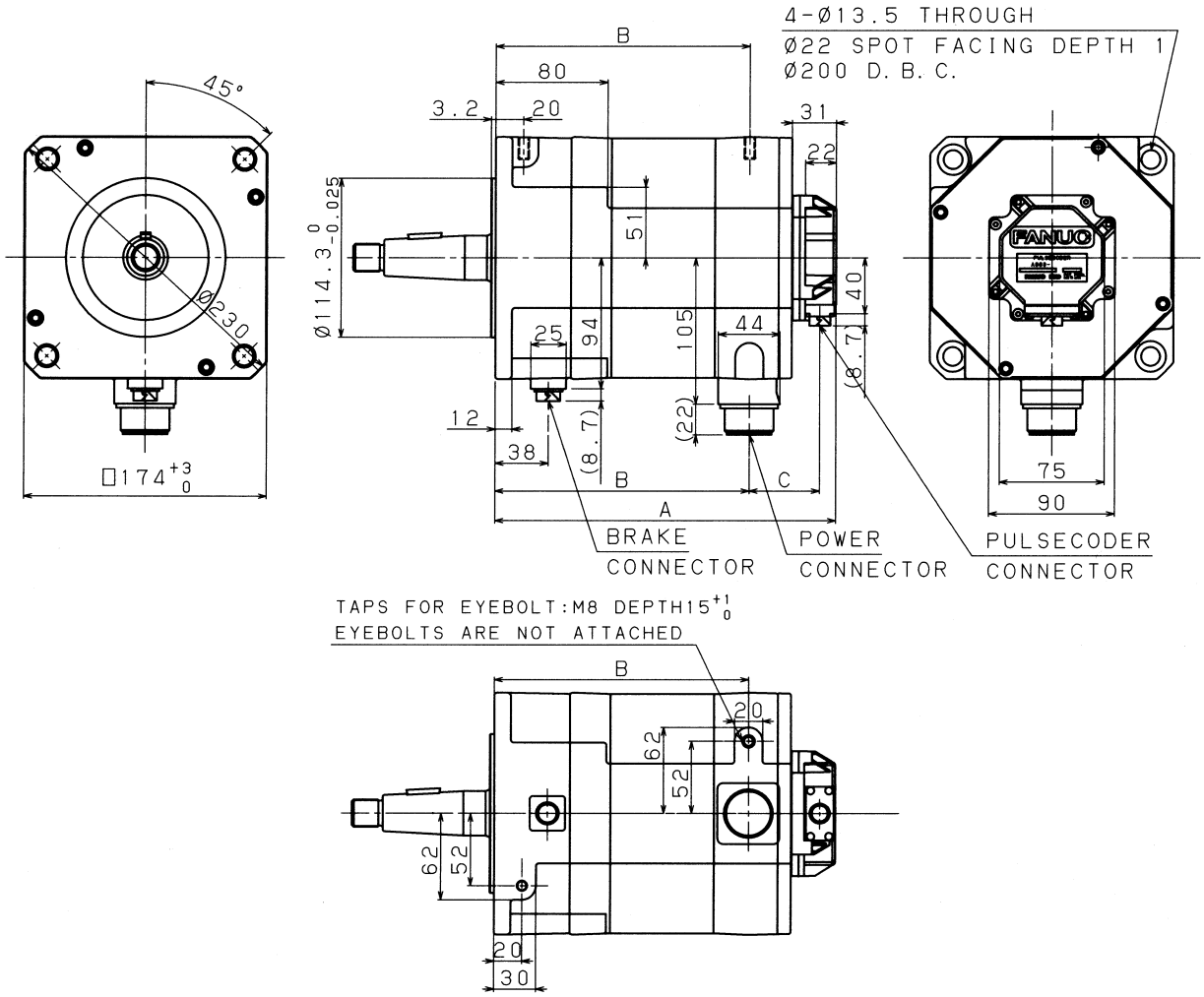


| MODEL | A | B | C |
|---|---|---|---|
| βiS22-B, βiS22HV-B, βiSc22-B<br>βiF12-B | 243 | 182 | 50 |
| βiS30-B, βiS30HV-B | 280 | 219 | |
| βiS40-B, βiS40HV-B<br>βiF22-B | 317 | 256 | |
| βiF30-B | 391 | 330 | |



© MyFANUC DC7187A9420041B3806BC8E5C652D376

## (2) Shaft shape

### (a) Shaft shape types

The shafts of the motors have the following shapes:

| | Taper shaft | Straight shaft | Straight shaft with key way |
|---|---|---|---|
| βiS22-B, βiS22HV-B, βiSc22-B, βiS30-B, βiS30HV-B, βiS40-B, βiS40HV-B, βiF12-B, βiF22-B, βiF30-B | ϕ32 | ϕ35 | ϕ35 |

### (b) Shaft details

- **ϕ32 taper shaft**

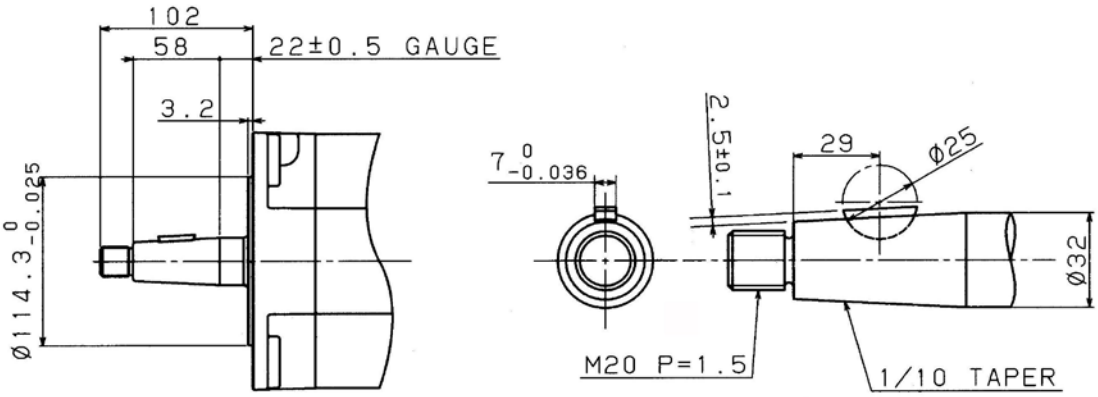


- **ϕ35 straight shaft**

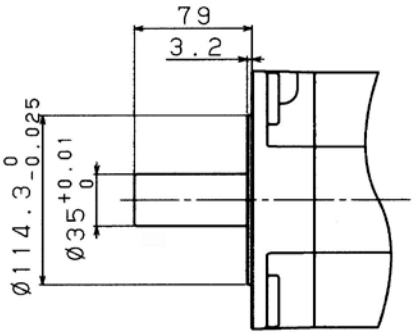


- **ϕ35 straight shaft with key way**

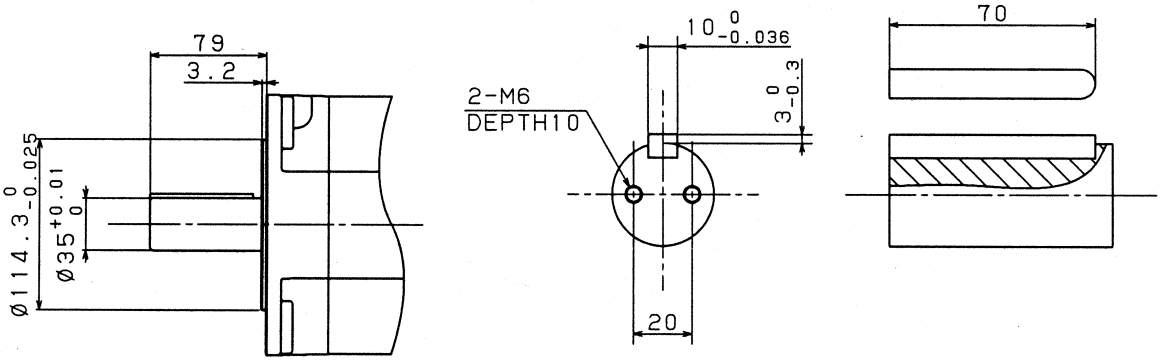




© MyFANUC DC7187A9420041B3806BC8E5C652D376

## (3) Allowable axis load

The allowable axis load is indicated below.
If a load exceeding the allowable axis load is applied, the bearing or shaft may be damaged.
For details of the allowable axis load, see Section 3.2, “MOUNTING A SERVO MOTOR”.

| Radial load | Axial load | (Reference)<br>Front bearing specification |
|---|---|---|
| 1960[N]<br>(200 [kgf]) | 588[N]<br>(60 [kgf]) | 6208 |

## (4) Shaft run-out precision

The shaft run-out precision is indicated below.
For details of the shaft run-out precision, see Section 3.2, “MOUNTING A SERVO MOTOR”.

| Shaft dia. run-out | Faucet joint run-out | Mounting face run-out |
|---|---|---|
| 0.03mm or less | 0.05mm or less | 0.07mm or less |

## (5) Power connector

Manufacture: Japan Aviation Electronics Industry
Manufacturer specification: JL10-2E22-22PE

As the power connector a receptacle connector having a water-proof property by itself (when it is not engaged) is used as standard.
Either a bayonet-type connector or screw-type connector can be connected.
Strictly speaking, this power connector does not meet the MS standard, but it can be used as a connector compatible with the MS-standard round connector.
Connecting a plug connector other than those mentioned in this manual may lead to poor waterproof performance. Contact the manufacturer of the connector in question.

The following shows the specification, shape, and pin layout of the power connector.

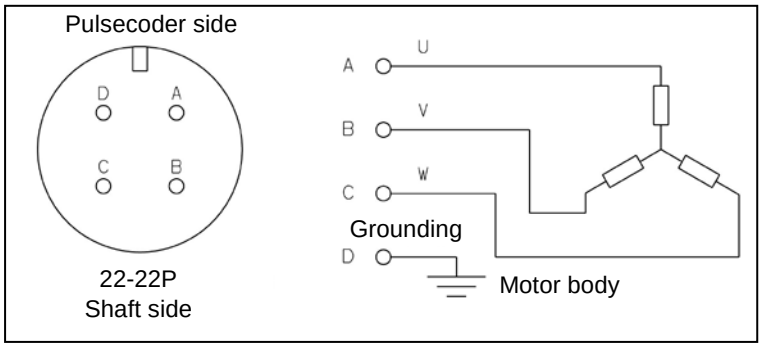


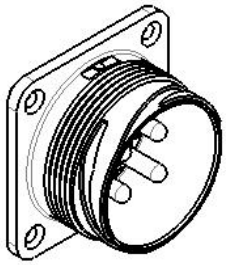

Power connector: 22-22P
Applicable models: βiS 22/3000-B, etc.

For the specifications, shapes, and pin layouts of the connectors of the pulsecoder, brake, and fan, see Section 1.4, “FEEDBACK SENSOR” and Subsection 1.3.4, “Built-In Brake”.



© MyFANUC DC7187A9420041B3806BC8E5C652D376

# 1.3.4 Built-In Brake

The FANUC AC Servo Motor β*i*–B/β*i* series has some motors that include a holding brake. This chapter explains the specifications of built-in brakes and gives cautions.
The motor with a built-in brake differs from that with no brake in outside dimensions. For the outside dimensions, see the Subsection 1.3.3, “Outline Drawings.”
Built-in brakes are common to servo motors with and without -B.

This subsection, "Built-In Brake ", consists of the following sections:

1.3.4.1 Brake specifications
1.3.4.2 Connecting a brake
1.3.4.3 Reduced backlash brake
1.3.4.4 Cautions on use
1.3.4.5 Reducing the amount of brake axis fall

## 1.3.4.1 Brake specifications

The specifications of built-in brakes are listed below.

| Motor model | | Unit | βiS0.2<br>βiS0.3 | βiS0.4-B<br>βiS0.5-B | βiS1-B | βiS2-B<br>βiS4-B<br>βiSc2-B<br>βiSc4-B<br>(including HV) | βiS8-B<br>βiS12-B<br>βiSc8-B<br>βiSc12-B<br>(including HV)<br><br>βiF4-B<br>βiF8-B | βiS22-B<br>βiS30-B<br>βiS40-B<br>(including HV)<br><br>βiSc22-B<br>βiF12-B<br>βiF22-B<br>βiF30-B |
|---|---|---|---|---|---|---|---|---|
| Brake torque | | Nm | 0.32 | 0.65 | 1.2 | 3 | 8 | 35 |
| | | kgf·cm | 3.3 | 6.6 | 12 | 31 | 82 | 357 |
| Response time | Release | msec | 40 | 40 | 40 | 60 | 80 | 160 |
| | Hold | msec | 20 | 20 | 20 | 20 | 20 | 30 |
| Power supply | Voltage | V | DC24V (±10%) | | | | | |
| | Current | A | 0.3 | 0.5 | 0.5 | 0.9 | 1.1 | 1.2 |
| | Wattage | W | 7 | 12 | 12 | 22 | 26 | 29 |
| Weight increase | | kg | Approx. 0.2 | Approx. 0.4 | Approx. 0.4 | Approx. 1.0 | Approx. 2.2 | Approx. 6.0 |
| Moment of inertia increase | | $kg·m^2$ | 0.000002 | 0.000009 | 0.000009 | 0.00002 | 0.00007 | 0.0006 |
| | | $kgf·cm·s^2$ | 0.00002 | 0.00009 | 0.00009 | 0.0002 | 0.0007 | 0.006 |

The values shown above are standard values at 20°C.



© MyFANUC DC7187A9420041B3806BC8E5C652D376

## 1.3.4.2 Connecting a brake

### (1) Brake connectors

The following shows the shape and pin arrangement of the brake connectors.
For the connected cables and the connectors on the cable side, see Subsection 2.1.3, "Connectors on the Cable Side".

#### For models βiS 0.2 and βiS 0.3

The connector is the same as the power connector.
For the connector specifications, see Subsection 1.3.3, "Outline Drawings".

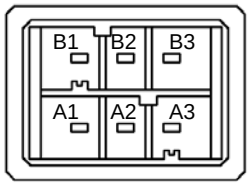


Connections: B2=BK, B3=BK
(Connect to inside of power connector.)
(A1=U, A2=V, A3=W, B1=GND)

* BK indicates a power supply (24 VDC, 0 VDC) for the brake. The brake is nonpolarized.

#### For models βiS 0.2 and βiS 0.3 (IP67 specification)

The brake connector for models βiS 0.2 and βiS 0.3 (IP67 specification) also serves as the power connector.
For the connector specifications, see Subsection 1.3.3, "Outline Drawings".

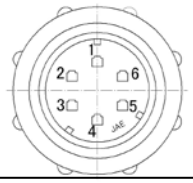


Connections: 4=BK, 5=BK
(Connect to inside of power connector.)
(1=U, 2=V, 3=W, 6=ND)

* BK indicates a power supply (24 VDC, 0 VDC) for the brake. The brake is nonpolarized.

#### For models βiS 0.4 –B to βiS 1-B

Manufacture: MOLEX JAPAN Co., Ltd.
Manufacturer specification: 55619-0401

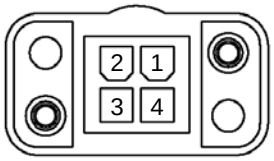


Connections: 1=BK, 2=BK, 4=GND

* BK indicates a power supply (24 VDC, 0 VDC) for the brake. The brake is nonpolarized.

#### For models βiS 2-B, βiS 4-B (including HV), βiSc 2-B, and βiSc 4-B (including HV)

The connector is the same as the power connector.
For the connector specifications, see Subsection 1.3.3, "Outline Drawings".

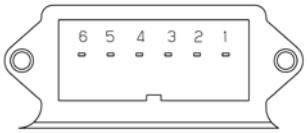


Connections: 5=BK, 6=BK
(Connect to inside of power connector.)
(1=U, 2=V, 3=W, 4=GND)

* BK indicates a power supply (24 VDC, 0 VDC) for the brake. The brake is nonpolarized.



© MyFANUC DC7187A9420041B3806BC8E5C652D376

### For models βiS 8-B to βiS 40-B (including HV), βiSc 8-B, βiSc 12-B (including HV), and βiF 4-B to βiF 30-B

Manufacture: Japan Aviation Electronics Industry
Manufacturer specification: JN2AS04MK2-R

This connector alone is water-proof.

The shape and pin layout of the connector are shown below.

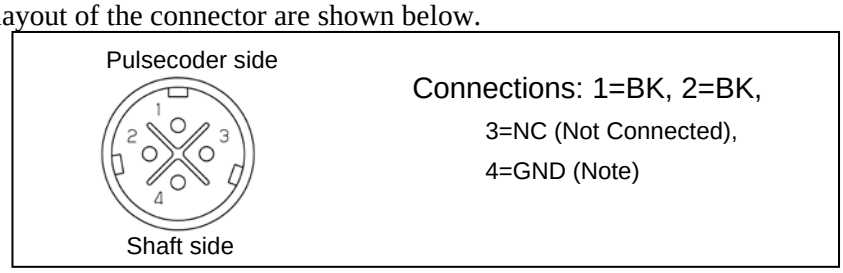


* BK indicates a power supply (24 VDC, 0 VDC) for the brake. The brake is nonpolarized.

**NOTE**
Since pin 4 is connected to the brake cabinet, it can be used when the shield wire of a brake cable needs to be connected.

## (2) Connection of the Brakes

Configure a brake circuit by referencing the following brake connection diagrams and the circuit parts shown in the following section.

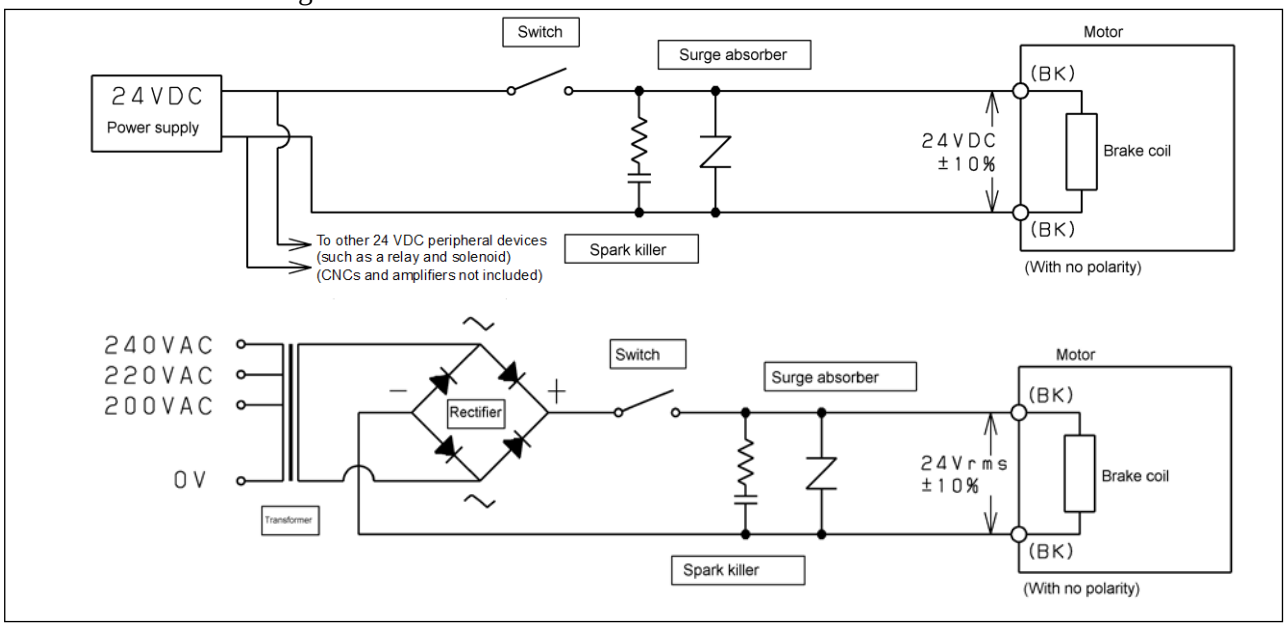


1 Use 24 VDC as power for the brake of the FANUC AC servo motor βi-B/βi series. Power produced by full-wave rectification after transforming commercial power (50 Hz/60 Hz) is also available.
2 Use a power supply separated from the 24 V power supply for the CNC and amplifier as the power supply for the brake. If the control power supply is also used for the brake, a CNC or amplifier malfunction or another danger may occur. The power supply for a relay, solenoid, or another peripheral device can be used for the brake. Be careful of the power capacity and changes in voltage due to changes in load.
3 For full-wave rectification, transform the secondary side voltage during energization of the brake into approximately 29 VAC by taking voltage drop in the rectifier or cable into account. In this case, check the power capacity and power voltage fluctuations sufficiently and then make sure the



© MyFANUC DC7187A9420041B3806BC8E5C652D376

fluctuations of the voltage applied to the brake during energization falls within 24 Vrms ±10%. Switch the transformer's primary side input to a desired position such as 100-110-120 VAC or 200-220-240 VAC.

4 Because the brake is an inductive load, the durability of the switch's contact declines compared with a resistive load. Use a contact with sufficient capacity and confirm the durability of the switch's contact practically.

5 If plural brakes are driven, use the separated circuits for each brake except a power supply.

6 You can use either positive or negative power pin to connect the brake because the brake coil is nonpolarized.

7 Use a shielded cable as required.

## (3) Parts for brake circuits

Configure a brake circuit by referencing the following parts.

### All models of the βiS-B, βiSc-B, and βiF-B series

<Normal use (switching frequency of up to a hundred thousand times>

| Name | Model No. | Specifications | Name of Manufacturer | FANUC Procurement Dwg. No. |
|---|---|---|---|---|
| Surge absorber | ERZV10D820 | Varistor voltage 82V<br>Max. allowable circuit voltage 50VAC | Panasonic Corporation | - |
| Spark killer | XEB0471 | 0.1μF / 47Ω<br>Rated voltage 250VAC | OKAYA ELECTRIC IND. CO., LTD. | - |
| Switch | LY2 | Rated load<br>110VAC 10A / 24VDC 10A | OMRON Corporation | - |
| Rectifier | D3SB60<br>(Note 1) | Peak reverse voltage: 600V<br>Output current: 2.3A (with no fin) | SHINDENGEN ELECTRIC MFG. CO., LTD. | A06B-6050-K112 |

The specifications of parts for brake circuits are only reference. Although there is an example of switching test to approximately a hundred thousand times with a combination listed above, the example is not a guarantee of any failure.

<High-frequency use (switching frequency exceeding a hundred thousand times>

| Name | Model No. | Specifications | Name of Manufacturer | FANUC Procurement Dwg. No. |
|---|---|---|---|---|
| Surge absorber | ERZV10D820 | Varistor voltage 82V<br>Max. allowable circuit voltage 50VAC | Panasonic Corporation | - |
| Spark killer | XEB0105 | 0.5μF / 10Ω<br>Rated voltage 250VAC | OKAYA ELECTRIC IND. CO., LTD. | - |
| Switch | LY2 | Rated load<br>110VAC 10A / 24VDC 10A | OMRON Corporation | - |
| Rectifier | D3SB60<br>(Note 1) | Peak reverse voltage: 600V<br>Output current: 2.3A (with no fin) | SHINDENGEN ELECTRIC MFG. CO., LTD. | A06B-6050-K112 |

The specifications of parts for brake circuits are only reference. Although there is an example of switching test to approximately two million times with a combination listed above, the example is not a guarantee of any failure.



© MyFANUC DC7187A9420041B3806BC8E5C652D376

> ⚠ **CAUTION**
> **Confirm the durability of switch's contact practically, according to the required switching frequency.**
> If the contact cannot be open, the brake keeps released and the machine may not be held.

> **NOTE**
> 1 At an ambient temperature of 20°C, the temperature of the rectifier rises to about 60°C when one brake axis is used or to about 90°C when two brake axes are used. Use a radiator fin as required.

## 1.3.4.3 Reduced backlash brake

The reduced backlash brake is an option used to reduce a small amount of axis dropping that may occur in the event of an emergency stop or power outage due to the backlash of the built-in brake and motor shaft.

The mechanical and electrical specifications of this optional brake are the same as the standard brake. The outside dimensions and mounting dimensions of a motor with this optional brake are also the same as that with the standard brake.

When using a motor with this optional brake, follow the instructions given below.
Otherwise, the small amount of axis dropping may not be able to be reduced or the motor may fail.

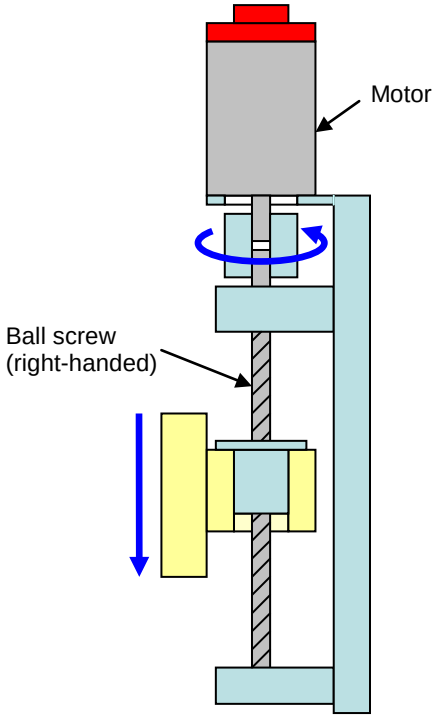


1 Mount the motor with the shaft facing downward, as shown at right. Arrange mechanically so that the vertical axis drops when the motor is turned counterclockwise relative to the pulsecoder. (Turning the motor clockwise does not produce any reduction effect.)

2 If the gravity load torque is great and there is little leeway in the brake holding torque, the reduction effect becomes weaker, resulting in an increase in the small amount of axis dropping. It is recommended to use the motor with not more than 70% of the brake holding torque.

3 If the lifting function against gravity at emergency stop is used at the same time, no backlash reduction effect can be obtained.



© MyFANUC DC7187A9420041B3806BC8E5C652D376

### 1.3.4.4 Cautions on use

**⚠ CAUTION**

Pay attention to the following points when motors with built-in brakes are used. These may cause a failure and the machine may not be held.

1 The built-in brake is designed for holding. Do not use the brake for braking.

2 Do not drive the motor without the brake released.

3 Do not apply an order to rotate the motor until the brake has been released completely.

4 Release the brake after the motor excitation is turned on. Hold the brake before the motor excitation is turned off.

5 Do not use the brake as a support for stopping, with the motor placed in the excitation state.

6 Make sure that the motor surface does not get wet with the cutting fluid etc. If water-proof performance is required, as in the case in which a motor is used in a cutting fluid mist atmosphere, specify an IP67 type motor. For details, refer to Subsection 3.3.2, “Usage Considering Environmental Resistance”.

7 The shaft of the β*i*-B/β*i* series motor (other than β*i*S0.4-B to β*i*S1-B or β*i*S0.4 to β*i*S1) becomes a little magnetized when the brake is released.
How the machine is affected differs depending on the shaft end connection method. The machine is roughly considered to be affected as follows.
<u>For connection with a coupling</u>
The coupling attenuates the flux density, so the machine is slightly affected by the magnetized shaft. Check to be sure with an actual machine.
<u>For direct connection with gears</u>
The machine is affected more than for connection with a coupling. Carefully check with an actual machine whether entering of magnetized foreign matters such as cutting chips from the outside adversely affect gears.

**⚠ WARNING**

**On the machine, install a stop device for securing safety.**

The brake built into the servo motor is not a stop device for securing safety. The machine may not be held if a failure occurs.



© MyFANUC DC7187A9420041B3806BC8E5C652D376

## 1.3.4.5 Reducing the amount of brake axis fall

During use of a motor with a brake, the amount of falling along an axis at a power failure or emergency stop, or when the CNC power supply is turned off during excitation of the motor may become an issue. To operate the brake immediately and reduce the amount of falling along an axis to a minimum, note the following points:

(1) To operate the brake immediately, the switch and relay for controlling on and off must be installed on the DC side (at the position shown in the following figure) of the break circuit.
If the contact is installed on the AC side (between the transformer's secondary side and rectifier), it takes time until holding starts because of the current returned to the rectifier diodes.

(2) To reduce the amount of falling along a vertical axis, the switch or relay must be turned off at a power failure as soon as possible. To turn the relay off immediately at a power failure, it is effective to supply the relay driving power from the main power supply whenever possible as shown in the following figure.

(3) To prevent the axis from falling at a moment of an emergency stop, use the "brake control function" in the servo software. This function enables continuous excitation of the motor for a set time until the motor built-in brake operates.
For details, see Parameter Manual (B-65270EN).

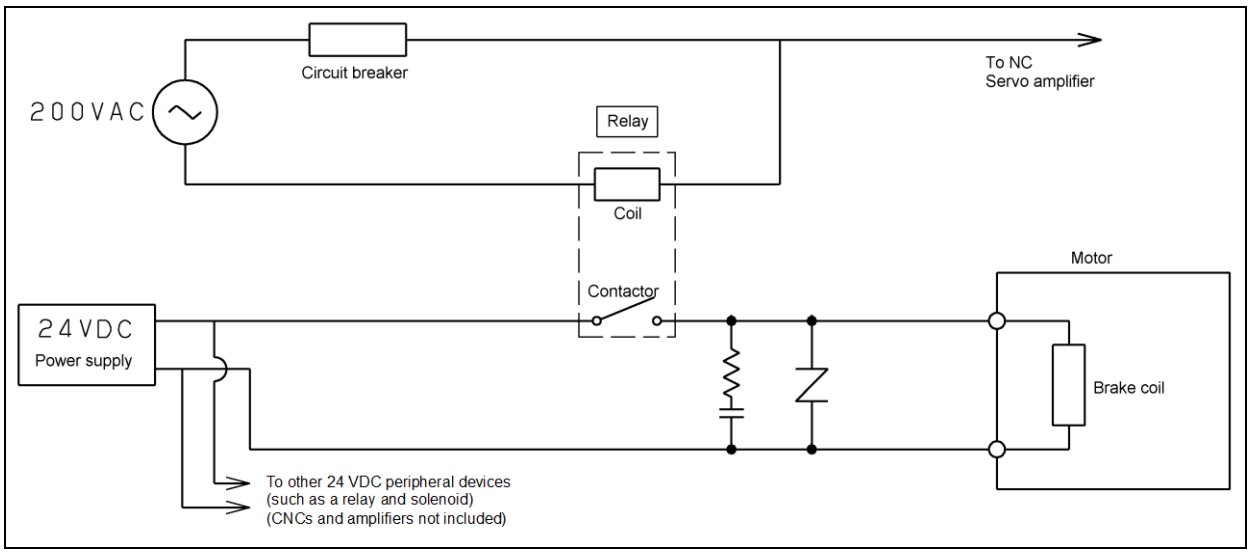




© MyFANUC DC7187A9420041B3806BC8E5C652D376

# 1.4 FEEDBACK SENSOR

All β*i*–B/β*i* series AC servo motors contain Pulsecoder (optical encoder) as a feedback sensor which detects position and velocity.
Separate type position sensors are also available for detecting a position by attaching directly to a ball screw or machine.

This Section, "FEEDBACK SENSOR", consists of the following sections:

1.4.1 Pulsecoder
1.4.2 Separate Pulsecoder

## 1.4.1 Pulsecoder

All β*i*–B/β*i* AC servo motors feature Pulsecoder (optical encoder). The Pulsecoder outputs position information and an alarm signal. The outline drawing of Pulsecoder is not given in this section because it is contained in a motor. See the outline drawing of each motor model.

### 1.4.1.1 Types of Pulsecoders and Designation

The following table lists the types of Pulsecoders.

| Pulsecoder type | Resolution [Division/rev] | Absolute/ incremental | Applicable motor |
|---|---|---|---|
| βA 64B | 65,536 | Absolute | β*i*S0.2, β*i*S0.3 |
| β*i*A 64 | 65,536 | Absolute | β*i*S0.4-B~β*i*S1-B |
| β*i*A 1000 | 1,000,000 | Absolute | β*i*S2-B~β*i*S40-B (including HV)<br>β*i*Sc2-B~β*i*Sc22-B (including HV)<br>β*i*F4-B~β*i*F30-B |

For how to specify Pulsecoder, see the Section 1.2, “ORDERING SPECIFICATION NUMBER” because Pulsecoder is specified together with a motor.



© MyFANUC DC7187A9420041B3806BC8E5C652D376

## 1.4.1.2 Connecting Pulsecoder

### Connector

The connectors of the β*i* series pulsecoders are water-proof when engaged with connectors on the cable side other than the βA 64B. (When the motor is left singly, the connector is water-proof when the cap mounted at shipment is fit in the connector.)
The signals of the β*i* series Pulsecoder are arranged as follows:

**βA 64B**

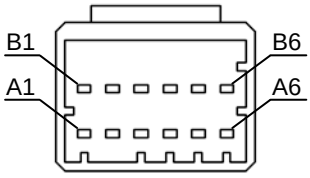


Manufacturer specification:
1-1318115-6 (Manufacture: Tyco Electronics Japan G.K.)

**βA 64B (IP67 specification), β*i*A 64, β*i*A 1000**

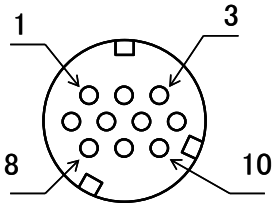


Manufacturer specification:

JN1HS10PL1 (Manufacture: Japan Aviation Electronics Industry)
(βA 64B (IP67 specification))

JN2AS10UL1-R (Manufacture: Japan Aviation Electronics Industry)
HR34B-12WR-10PD (Manufacture: Hirose Electric)
(β*i*A 64, β*i*A 1000)

| | Pin No. | | | |
|---|---|---|---|---|
| **Signal name** | **βA 64B** | **βA 64B (IP67 specification)** | **β*i*A 64** | **β*i*A 1000** |
| SD | A4 | 2 | - | - |
| *SD | B4 | 1 | - | - |
| REQ | A3 | 6 | - | - |
| *REQ | B3 | 5 | - | - |
| RD | - | - | 6 | 6 |
| *RD | - | - | 5 | 5 |
| +5V | A2,B2 | 8,9 | 8,9 | 8,9 |
| 0V | A1,B1,A6 | 7,10 | 7,10 | 7,10 |
| FG | B6 | 3 | 3 | 3 |
| +6V | A5 | 4 | 4 | 4 |

### Connector kits

For information on connectors and crimping jigs required for creating a feedback cable, see Subsection 2.1.3.1, “Connectors for signals.”

**NOTE**
If the motor is mounted on a movable part, or a flexible tube is used for the connector, excessive force may be applied to the connector. In this case, fix the feedback cable to prevent the connector from being broken.

### Connecting Pulsecoder to an amplifier

For cables connecting Pulsecoder and amplifier, refer to “FANUC SERVO AMPLIFIER α*i*–B series Descriptions (B-65412EN)”, "FANUC SERVO AMPLIFIER α*i* series Descriptions (B-65282EN)", or



© MyFANUC DC7187A9420041B3806BC8E5C652D376

"FANUC SERVO AMPLIFIER βi–B series Descriptions (B-65422EN)", "FANUC SERVO AMPLIFIER βi series Descriptions (B-65322EN)".
In particular, special care should be taken when the Pulsecoder is connected to an I/O link amplifier. For details, refer to the description of the I/O link amplifier in "FANUC SERVO AMPLIFIER βi series Descriptions (B-65322EN)".

### 1.4.1.3 Absolute-type Pulsecoder

When the CNC is turned off, the Pulsecoder position detection function is backed up by battery. So, when the CNC is next turned on, the operator does not have to perform reference position return.
For backup, a battery unit must be installed in the CNC or servo amplifier.
If a low-battery indication appears on the CNC, replace the new battery as soon as possible.
For any Pulsecoder except βA 64B, the function is backed up for about 10 minutes by a backup capacitor contained in the pulsecoder when the battery is removed. In the backup status, the battery can be replaced when the power to the servo amplifier is off.
The operator does not also have to perform reference position return after replacing the feedback cable or servo amplifier.

## 1.4.2 Separate Pulsecoder

For detecting a position by attaching directly to a ball screw or a machine, use a separate Pulsecoder.

### 1.4.2.1 Separate Pulsecoder type and designation

Separate Pulsecoder are available.

| Separate Pulsecoder name | Resolution | Allowable maximum speed | Absolute/ incremental | Ordering number |
|---|---|---|---|---|
| αA1000S | 1,000,000 /rev | 4000min$^{-1}$ | Absolute | **A860-0372-T001** |

### 1.4.2.2 Separate Pulsecoder specifications

**Pulsecoder αA1000S**

| Item | | Specification |
|---|---|---|
| Power voltage | | 5 [V]±5% |
| Current consumption | | Up to 0.3 [A] |
| Working temperature range | | 0 to +60 [°C] |
| Resolution | | 1,000,000 [/rev.] |
| Maximum speed of rotation | | 4000 [min$^{-1}$] |
| Input shaft moment of inertia | | Up to 1×10$^{-4}$ [kg·m$^2$] |
| Input shaft startup torque | | Up to 0.1 [N·m] |
| Input shaft allowable load | Radial | 100 [N] |
| | Axial | 50 [N] |
| Shaft diameter run-out | | 0.02×10$^{-3}$[m] |
| Structure | | Dust-proof, drip-proof (IP55 or equivalent: when water-proof connector is fitted) |
| Vibration resistance acceleration | | 5 [G] (50 to 2,000[Hz]) |
| Weight | | Approx. 0.75 [kg] |

* For information about the positional relationship between the shaft key groove and the origin in the rotation direction of the separate type Pulsecoder shaft, see Subsection 1.4.2.5, "Cautions when using a separate type Pulsecoder".



© MyFANUC DC7187A9420041B3806BC8E5C652D376

## 1.4.2.3 Connecting a separate type Pulsecoder

The layout of connector pins is shown below.
For the connection diagram for separate type Pulsecoders, refer to the relevant CNC connection manual.

### Layout of Connector Pins of Pulsecoder αA1000S

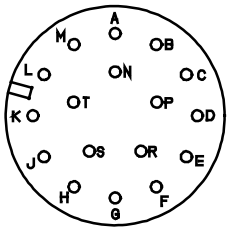


MS3102A20-29PW

| Signal name | Pin No. αA1000S MS3102A20-29PW |
|---|---|
| SD | A |
| *SD | D |
| REQ | F |
| *REQ | G |
| +5V | J,K |
| 0V | N,T |
| Shield | H |
| +6VA | R |
| 0VA | S |



© MyFANUC DC7187A9420041B3806BC8E5C652D376

## 1.4.2.4 Outline drawings of separate Pulsecoder

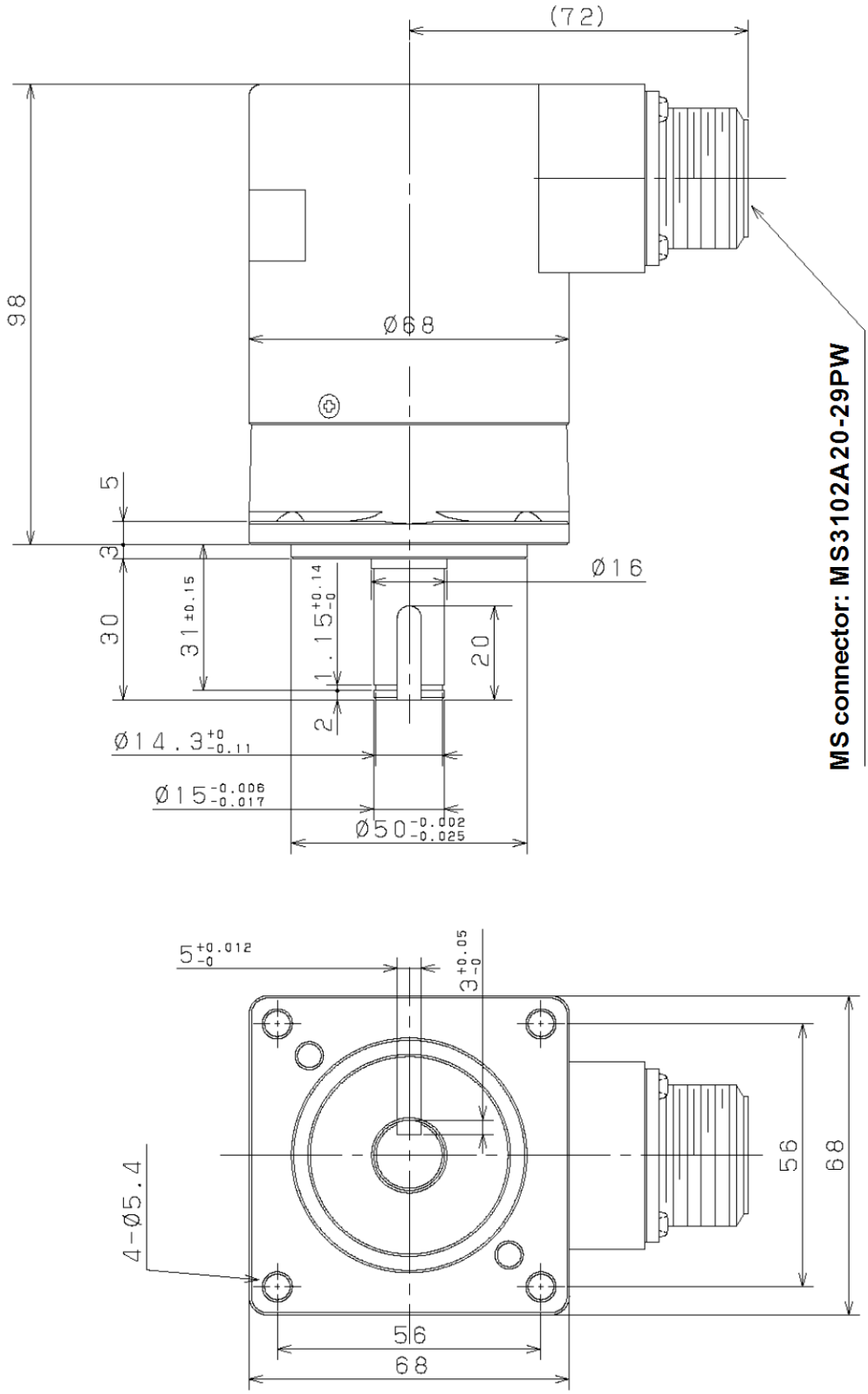


**Fig. 1.4.2.4 Pulsecoder αA1000S**



© MyFANUC DC7187A9420041B3806BC8E5C652D376

## 1.4.2.5 Cautions when using a separate type Pulsecoder

Pay attention to the following items when using the separate Pulsecoder.

- Increase the machine rigidity between the servo motor and the Pulsecoder to minimize mechanical vibration. If the machine rigidity is low or the structure vibrates, poor performance, over shoot is likely to occur.

- When the separate Pulsecoder is used, the influence of gear, ball screw pitch error or table inclination is decreased and the positioning accuracy and geometrical accuracy (roundness, etc.) are increased, but the smoothness may deteriorate due to the elasticity in the machine between the servo motor and the separate Pulsecoder.

- It is necessary to use the built-in Pulsecoder with a resolution equal to or finer than that of the separate Pulsecoder.

- To connect the separate Pulsecoder to the CNC, connect only the signals described in the connecting manual.
  When the other signal is connected, the unit may occur malfunction.

- When the key groove of the shaft is located at the position of the MS connector, which is regarded as the position of 0°, the origin of the separate type Pulsecoder is located at 0° ±22.5°. The separate type Pulsecoder that meets this specification is provided with products manufactured on and after May 10, 2013.
  To find out about the manufacture date, see the nameplate. (See the figure below.)

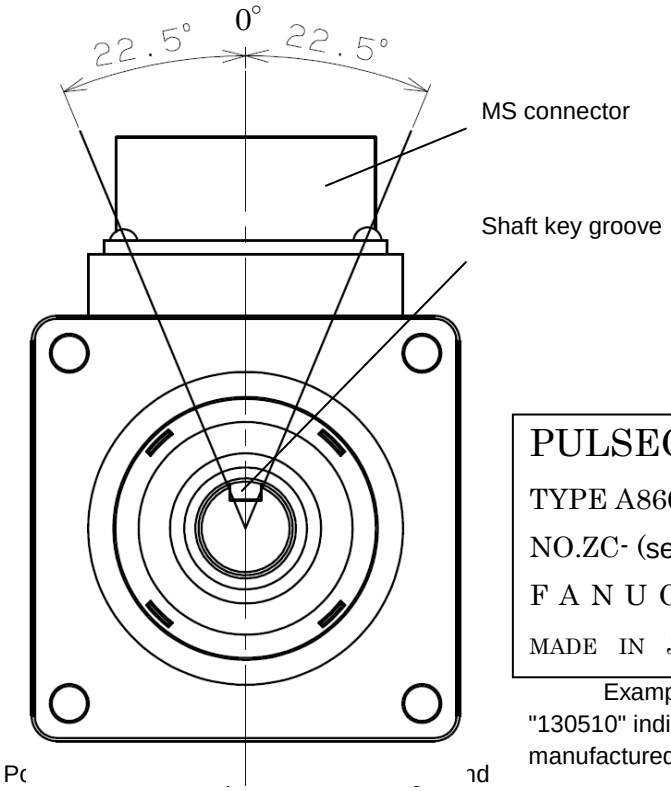


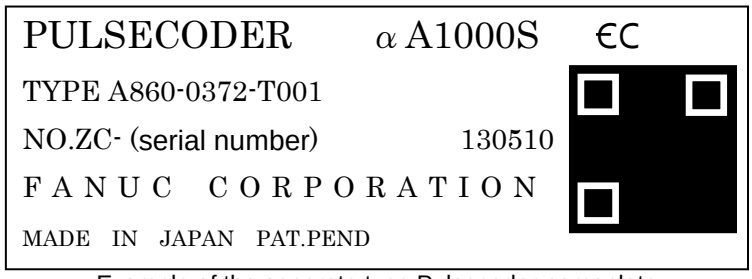


Example of the separate type Pulsecoder nameplate
"130510" indicates that the separate type Pulsecoder was manufactured on May 10, 2013.



© MyFANUC DC7187A9420041B3806BC8E5C652D376

# 2 CONFIGURATION AND SELECTION

Chapter 2, "CONFIGURATION AND SELECTION", consists of the following sections:

2.1 SYSTEM CONFIGURATION
2.2 MOTOR SELECTION

## 2.1 SYSTEM CONFIGURATION

### 2.1.1 Connecting a Servo Motor

For the FANUC AC Servo Motor β*i*-B/β*i* series, connect the power line of the motor and the signal line of a Pulsecoder to an FANUC Servo Amplifier. When the motor has a built-in brake or cooling fan as an option, connect the built-in brake or cooling fan to the specified power supply.

**Connection diagram**

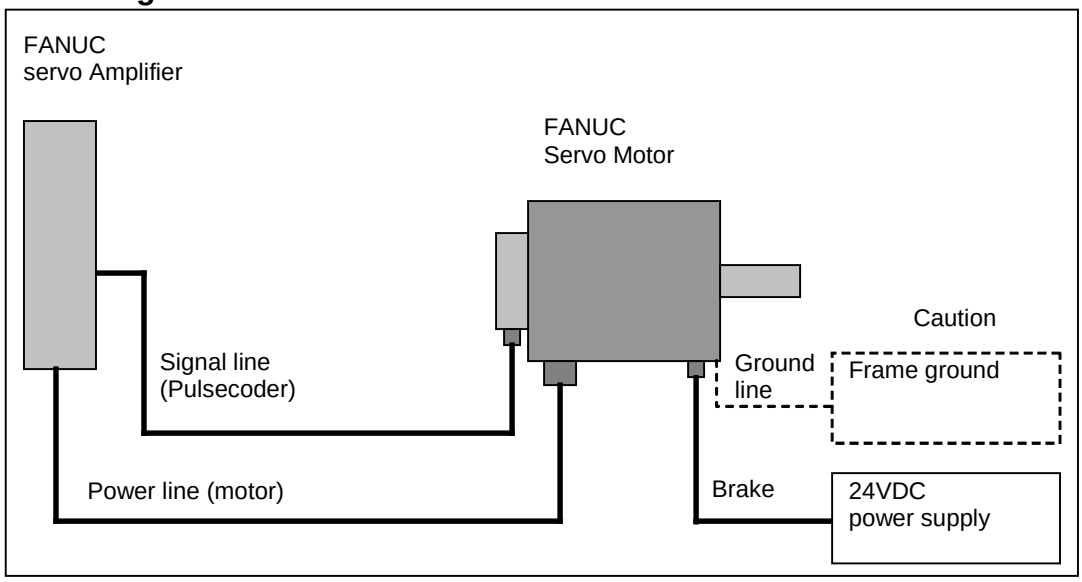


> ⚠ **CAUTION**
> If a motor is not connected to ground through the machine (cabinet) in which the motor is installed, connect the motor grounding point and the amplifier grounding point to absorb noise. In this case, use a wire with a thickness of at least 1.25 $mm^2$, other than the GND conductor in the power line. Keep the wire as far from the power line as possible.

**Connecting the power line**

For the pin layout of the power connector on the servo motor side or the layout of the power terminals, see Subsection 1.3.3, "Outline Drawings".
For details of the connector of a cable connected to the servo motor, see Subsection 2.1.3, "Connectors on the Cable Side."
For details of selection of a power line and the shapes of the connector and terminal connected to a servo amplifier, refer to “FANUC SERVO AMPLIFIER α*i*-B series Descriptions (B-65412EN)”, "FANUC SERVO AMPLIFIER α*i* series Descriptions (B-65282EN)", "FANUC SERVO AMPLIFIER β*i*–B series Descriptions (B-65422EN)", or "FANUC SERVO AMPLIFIER β*i* series Descriptions (B-65322EN) ".



© MyFANUC DC7187A9420041B3806BC8E5C652D376

### Connecting the signal line

For details of the signal connector on a Pulsecoder, see Section 1.4, "FEEDBACK SENSOR".
For details of the connector of a cable connected to a Pulsecoder, see Subsection 2.1.3, "Connectors on the Cable Side."
For details of selection of a signal line and the connector connected to a servo amplifier, refer to “FANUC SERVO AMPLIFIER α*i*-B series CNC Descriptions (B-65412EN)”, "FANUC SERVO AMPLIFIER α*i* series Descriptions (B-65282EN)", "FANUC SERVO AMPLIFIER β*i*–B series Descriptions (B-65422EN)", or "FANUC SERVO AMPLIFIER β*i* series Descriptions (B-65322EN)."

### Connecting a built-in brake

For details of how to connect the power connector on a built-in brake and the power supply, see Subsection 1.3.4, "Built-in Brake."
For details of the connector of a cable connected to a built-in brake, see Subsection 2.1.3, "Connectors on the Cable Side."

## 2.1.2 Applicable Amplifiers

The FANUC AC Servo Motor β*i*SV-B/β*i* series can be driven using FANUC Servo Amplifier α*i*SV-B/α*i*SV series, α*i*SVP-B series, β*i*SV-B/β*i*SV series, or β*i*SVSP-B/β*i*SVSP series. For the ordering specification numbers of servo amplifiers, refer to “FANUC SERVO AMPLIFIER α*i*-B series Descriptions (B-65412EN)”, "FANUC SERVO AMPLIFIER α*i* series Descriptions (B-65282EN)", "FANUC SERVO AMPLIFIER β*i*–B series Descriptions (B-65422EN)", or "FANUC SERVO AMPLIFIER β*i* series Descriptions (B-65322EN)".

### 2.1.2.1 Combinations of the β*i*S-B/β*i*Sc-B/β*i*F-B servo motors and the α*i*SV-B/α*i*SVP-B/β*i*SV-B/β*i*SVSP-B servo amplifiers



© MyFANUC DC7187A9420041B3806BC8E5C652D376

## αiSV-B and αiSVP-B amplifiers (200V, 80A or less)

| Continuous torque (at low speed) | | 0.16 | 0.32 | 0.4 | 0.65 | 1.2 | 2 | 3.5 | 7 | 11 | |
|---|---|---|---|---|---|---|---|---|---|---|---|
| Motor / Amplifier | βiS-B | βiS 0.2 /5000 | βiS 0.3 /5000 | βiS 0.4 /5000-B | βiS 0.5 /6000-B | βiS 1 /6000-B | βiS 2 /4000-B | βiS 4 /4000-B | βiS 8 /3000-B | βiS12 /2000-B | βiS12 /3000-B |
| | βiSc-B | | | | | | βiSc 2 /4000-B | βiSc 4 /4000-B | βiSc 8 /3000-B | βiSc12 /2000-B | βiSc12 /3000-B |
| | βiF-B | | | | | | | βiF 4 /3000-B | βiF 8 /2000-B | βiF 12 /2000-B | |
| αiSV 4-B | - | ○ | ○ | | | | | | | | |
| αiSV 20-B | - | | | ○ | ○ | ○ | ○ | ○ | ○ | ○ | |
| αiSV 40-B | - | | | ▲ | ▲ | ▲ | ▲ | ▲ | ▲ | ▲ | ○ |
| αiSV 80-B | - | | | | | | | | | | ▲ |
| αiSV 4/4-B | L axis | ○ | ○ | | | | | | | | |
| | M axis | ○ | ○ | | | | | | | | |
| αiSV 4/20-B | L axis | ○ | ○ | | | | | | | | |
| | M axis | | | ○ | ○ | ○ | ○ | ○ | ○ | ○ | |
| αiSV 20/20-B | L axis | | | ○ | ○ | ○ | ○ | ○ | ○ | ○ | |
| | M axis | | | ○ | ○ | ○ | ○ | ○ | ○ | ○ | |
| αiSV 20/40-B | L axis | | | ○ | ○ | ○ | ○ | ○ | ○ | ○ | |
| | M axis | | | ▲ | ▲ | ▲ | ▲ | ▲ | ▲ | ▲ | ○ |
| αiSV 40/40-B | L axis | | | ▲ | ▲ | ▲ | ▲ | ▲ | ▲ | ▲ | ○ |
| | M axis | | | ▲ | ▲ | ▲ | ▲ | ▲ | ▲ | ▲ | ○ |
| αiSV 40/80-B | L axis | | | ▲ | ▲ | ▲ | ▲ | ▲ | ▲ | ▲ | ○ |
| | M axis | | | | | | | | | | ▲ |
| αiSV 80/80-B | L axis | | | | | | | | | | ▲ |
| | M axis | | | | | | | | | | ▲ |
| αiSV 80/160-B | L axis | | | | | | | | | | ▲ |
| | M axis | | | | | | | | | | |
| αiSV 4/4/4-B | L axis | ○ | ○ | | | | | | | | |
| | M axis | ○ | ○ | | | | | | | | |
| | N axis | ○ | ○ | | | | | | | | |
| αiSV 20/20/20-B | L axis | | | ○ | ○ | ○ | ○ | ○ | ○ | ○ | |
| | M axis | | | ○ | ○ | ○ | ○ | ○ | ○ | ○ | |
| | N axis | | | ○ | ○ | ○ | ○ | ○ | ○ | ○ | |
| αiSV 20/20/40-B | L axis | | | ○ | ○ | ○ | ○ | ○ | ○ | ○ | |
| | M axis | | | ○ | ○ | ○ | ○ | ○ | ○ | ○ | |
| | N axis | | | ▲ | ▲ | ▲ | ▲ | ▲ | ▲ | ▲ | ○ |
| αiSV 40/40/40-B | L axis | | | ▲ | ▲ | ▲ | ▲ | ▲ | ▲ | ▲ | ○ |
| | M axis | | | ▲ | ▲ | ▲ | ▲ | ▲ | ▲ | ▲ | ○ |
| | N axis | | | ▲ | ▲ | ▲ | ▲ | ▲ | ▲ | ▲ | ○ |
| αiSV 80/80/80-B | L axis | | | | | | | | | | ▲ |
| | M axis | | | | | | | | | | ▲ |
| | N axis | | | | | | | | | | ▲ |
| αiSVP 20/20/20-2.2-B | L axis | | | ○ | ○ | ○ | ○ | ○ | ○ | ○ | |
| | M axis | | | ○ | ○ | ○ | ○ | ○ | ○ | ○ | |
| | N axis | | | ○ | ○ | ○ | ○ | ○ | ○ | ○ | |
| αiSVP 20/20/20-5.5-B | L axis | | | ○ | ○ | ○ | ○ | ○ | ○ | ○ | |
| | M axis | | | ○ | ○ | ○ | ○ | ○ | ○ | ○ | |
| | N axis | | | ○ | ○ | ○ | ○ | ○ | ○ | ○ | |
| αiSVP 40/40/40-2.2-B | L axis | | | ▲ | ▲ | ▲ | ▲ | ▲ | ▲ | ▲ | ○ |
| | M axis | | | ▲ | ▲ | ▲ | ▲ | ▲ | ▲ | ▲ | ○ |
| | N axis | | | ▲ | ▲ | ▲ | ▲ | ▲ | ▲ | ▲ | ○ |

Note) Each symbol is as described below.

○: Standard combination.

▲: To combine this motor, the motor control parameter must be changed.
If wishing to use this combination, contact FANUC.
Invalid parameter setting may damage the motor.



© MyFANUC DC7187A9420041B3806BC8E5C652D376

| Continuous torque (at low speed) | | 20 | | 27 | 36 |
|---|---|---|---|---|---|
| Motor / Amplifier | βiS-B | βiS 22 /2000-B | βiS 22 /3000-B | βiS 30 /2000-B | βiS 40 /2000-B |
| | βiSc-B | βiSc 22 /2000-B | | | |
| | βiF-B | βiF 22 /2000-B | | βiF 30 /1500-B | |
| αiSV 4-B | - | | | | |
| αiSV 20-B | - | | | | |
| αiSV 40-B | - | ○ | | | |
| αiSV 80-B | - | ▲ | ○ | ○ | ○ |
| αiSV 4/4-B | L axis | | | | |
| | M axis | | | | |
| αiSV 4/20-B | L axis | | | | |
| | M axis | | | | |
| αiSV 20/20-B | L axis | | | | |
| | M axis | | | | |
| αiSV 20/40-B | L axis | | | | |
| | M axis | ○ | | | |
| αiSV 40/40-B | L axis | ○ | | | |
| | M axis | ○ | | | |
| αiSV 40/80-B | L axis | ○ | | | |
| | M axis | ▲ | ○ | ○ | ○ |
| αiSV 80/80-B | L axis | ▲ | ○ | ○ | ○ |
| | M axis | ▲ | ○ | ○ | ○ |
| αiSV 80/160-B | L axis | ▲ | ○ | ○ | ○ |
| | M axis | | | | |
| αiSV 4/4/4-B | L axis | | | | |
| | M axis | | | | |
| | N axis | | | | |
| αiSV 20/20/20-B | L axis | | | | |
| | M axis | | | | |
| | N axis | | | | |
| αiSV 20/20/40-B | L axis | | | | |
| | M axis | | | | |
| | N axis | ○ | | | |
| αiSV 40/40/40-B | L axis | ○ | | | |
| | M axis | ○ | | | |
| | N axis | ○ | | | |
| αiSV 80/80/80-B | L axis | ▲ | ○ | ○ | ○ |
| | M axis | ▲ | ○ | ○ | ○ |
| | N axis | ▲ | ○ | ○ | ○ |
| αiSVP 20/20/20-2.2-B | L axis | | | | |
| | M axis | | | | |
| | N axis | | | | |
| αiSVP 20/20/20-5.5-B | L axis | | | | |
| | M axis | | | | |
| | N axis | | | | |
| αiSVP 40/40/40-2.2-B | L axis | ○ | | | |
| | M axis | ○ | | | |
| | N axis | ○ | | | |

Note) Each symbol is as described below.

○: Standard combination.

▲: To combine this motor, the motor control parameter must be changed.
If wishing to use this combination, contact FANUC.
Invalid parameter setting may damage the motor.



© MyFANUC DC7187A9420041B3806BC8E5C652D376

## βiSV-B and βiSVSP-B amplifiers (200V, 80A or less)

| Continuous torque (at low speed) | | 0.16 | 0.32 | 0.4 | 0.65 | 1.2 | 2 | 3.5 | 7 | 11 | |
|---|---|---|---|---|---|---|---|---|---|---|---|
| Motor / Amplifier | βiS-B | βiS 0.2 /5000 | βiS 0.3 /5000 | βiS 0.4 /5000-B | βiS 0.5 /6000-B | βiS 1 /6000-B | βiS 2 /4000-B | βiS 4 /4000-B | βiS 8 /3000-B | βiS12 /2000-B | βiS12 /3000-B |
| | βiSc-B | | | | | | βiSc 2 /4000-B | βiSc 4 /4000-B | βiSc 8 /3000-B | βiSc12 /2000-B | βiSc12 /3000-B |
| | βiF-B | | | | | | | βiF 4 /3000-B | βiF 8 /2000-B | βiF 12 /2000-B | |
| βiSV 4-B | - | ○ | ○ | | | | | | | | |
| βiSV 20-B | - | | | ○ | ○ | ○ | ○ | ○ | ○ | ○ | |
| βiSV 40-B | - | | | ▲ | ▲ | ▲ | ▲ | ▲ | ▲ | ▲ | ○ |
| βiSV 80-B | - | | | | | | | | | | ▲ |
| βiSV 20/20-B | L axis | | | ○ | ○ | ○ | ○ | ○ | ○ | ○ | |
| | M axis | | | ○ | ○ | ○ | ○ | ○ | ○ | ○ | |
| βiSV 40/40-B | L axis | | | ▲ | ▲ | ▲ | ▲ | ▲ | ▲ | ▲ | ○ |
| | M axis | | | ▲ | ▲ | ▲ | ▲ | ▲ | ▲ | ▲ | ○ |
| βiSVSP 20/20-7.5-B | L axis | | | ○ | ○ | ○ | ○ | ○ | ○ | ○ | |
| | M axis | | | ○ | ○ | ○ | ○ | ○ | ○ | ○ | |
| βiSVSP 20/20-11-B | L axis | | | ○ | ○ | ○ | ○ | ○ | ○ | ○ | |
| | M axis | | | ○ | ○ | ○ | ○ | ○ | ○ | ○ | |
| βiSVSP 40/40-15-B | L axis | | | ▲ | ▲ | ▲ | ▲ | ▲ | ▲ | ▲ | ○ |
| | M axis | | | ▲ | ▲ | ▲ | ▲ | ▲ | ▲ | ▲ | ○ |
| βiSVSP 40/40-18-B | L axis | | | ▲ | ▲ | ▲ | ▲ | ▲ | ▲ | ▲ | ○ |
| | M axis | | | ▲ | ▲ | ▲ | ▲ | ▲ | ▲ | ▲ | ○ |
| βiSVSP 80/80-18-B | L axis | | | | | | | | | | ▲ |
| | M axis | | | | | | | | | | ▲ |
| βiSVSP 20/20/40-7.5-B | L axis | | | ○ | ○ | ○ | ○ | ○ | ○ | ○ | |
| | M axis | | | ○ | ○ | ○ | ○ | ○ | ○ | ○ | |
| | N axis | | | ▲ | ▲ | ▲ | ▲ | ▲ | ▲ | ▲ | ○ |
| βiSVSP 20/20/40-11-B | L axis | | | ○ | ○ | ○ | ○ | ○ | ○ | ○ | |
| | M axis | | | ○ | ○ | ○ | ○ | ○ | ○ | ○ | |
| | N axis | | | ▲ | ▲ | ▲ | ▲ | ▲ | ▲ | ▲ | ○ |
| βiSVSP 40/40/40-11-B | L axis | | | ▲ | ▲ | ▲ | ▲ | ▲ | ▲ | ▲ | ○ |
| | M axis | | | ▲ | ▲ | ▲ | ▲ | ▲ | ▲ | ▲ | ○ |
| | N axis | | | ▲ | ▲ | ▲ | ▲ | ▲ | ▲ | ▲ | ○ |
| βiSVSP 40/40/40-15-B | L axis | | | ▲ | ▲ | ▲ | ▲ | ▲ | ▲ | ▲ | ○ |
| | M axis | | | ▲ | ▲ | ▲ | ▲ | ▲ | ▲ | ▲ | ○ |
| | N axis | | | ▲ | ▲ | ▲ | ▲ | ▲ | ▲ | ▲ | ○ |
| βiSVSP 40/40/80-15-B | L axis | | | ▲ | ▲ | ▲ | ▲ | ▲ | ▲ | ▲ | ○ |
| | M axis | | | ▲ | ▲ | ▲ | ▲ | ▲ | ▲ | ▲ | ○ |
| | N axis | | | | | | | | | | ▲ |
| βiSVSP 40/40/80-18-B | L axis | | | ▲ | ▲ | ▲ | ▲ | ▲ | ▲ | ▲ | ○ |
| | M axis | | | ▲ | ▲ | ▲ | ▲ | ▲ | ▲ | ▲ | ○ |
| | N axis | | | | | | | | | | ▲ |
| βiSVSP 80/80/80-18-B | L axis | | | | | | | | | | ▲ |
| | M axis | | | | | | | | | | ▲ |
| | N axis | | | | | | | | | | ▲ |

Note ) It is not able to connect the servo motor βi-B series (specification number A06B-2□□□-Bxxx) to the servo amplifier βiSV-B series (I/O Link Option) (A06B-6132,6133,6162,6163-Hxxx).

Note) Each symbol is as described below.

○: Standard combination.

▲: To combine this motor, the motor control parameter must be changed.
If wishing to use this combination, contact FANUC.
Invalid parameter setting may damage the motor.



© MyFANUC DC7187A9420041B3806BC8E5C652D376

| Continuous torque (at low speed) | | 20 | | 27 | 36 |
|---|---|---|---|---|---|
| Motor / Amplifier | βiS | βiS 22 /2000 | βiS 22 /3000 | βiS 30 /2000 | βiS 40 /2000 |
| | βiSc | βiSc 22 /2000 | | | |
| | βiF | βiF 22 /2000 | | βiF 30 /1500 | |
| βiSV 4-B | - | | | | |
| βiSV 20-B | - | | | | |
| βiSV 40-B | - | ○ | | | |
| βiSV 80-B | - | ▲ | ○ | ○ | ○ |
| βiSV 20/20-B | L axis | | | | |
| | M axis | | | | |
| βiSV 40/40-B | L axis | ○ | | | |
| | M axis | ○ | | | |
| βiSVSP 20/20-7.5-B | L axis | | | | |
| | M axis | | | | |
| βiSVSP 20/20-11-B | L axis | | | | |
| | M axis | | | | |
| βiSVSP 40/40-15-B | L axis | ○ | | | |
| | M axis | ○ | | | |
| βiSVSP 40/40-18-B | L axis | ○ | | | |
| | M axis | ○ | | | |
| βiSVSP 80/80-18-B | L axis | ▲ | ○ | ○ | ○ |
| | M axis | ▲ | ○ | ○ | ○ |
| βiSVSP 20/20/40-7.5-B | L axis | | | | |
| | M axis | | | | |
| | N axis | ○ | | | |
| βiSVSP 20/20/40-11-B | L axis | | | | |
| | M axis | | | | |
| | N axis | ○ | | | |
| βiSVSP 40/40/40-11-B | L axis | ○ | | | |
| | M axis | ○ | | | |
| | N axis | ○ | | | |
| βiSVSP 40/40/40-15-B | L axis | ○ | | | |
| | M axis | ○ | | | |
| | N axis | ○ | | | |
| βiSVSP 40/40/80-15-B | L axis | ○ | | | |
| | M axis | ○ | | | |
| | N axis | ▲ | ○ | ○ | ○ |
| βiSVSP 40/40/80-18-B | L axis | ○ | | | |
| | M axis | ○ | | | |
| | N axis | ▲ | ○ | ○ | ○ |
| βiSVSP 80/80/80-18-B | L axis | ▲ | ○ | ○ | ○ |
| | M axis | ▲ | ○ | ○ | ○ |
| | N axis | ▲ | ○ | ○ | ○ |

Note) It is not able to connect the servo motor βi-B series (specification number A06B-2□□□-Bxxx) to the servo amplifier βiSV-B series (I/O Link Option) (A06B-6132,6133,6162,6163-Hxxx).

Note) Each symbol is as described below.

○: Standard combination.

▲: To combine this motor, the motor control parameter must be changed.
If wishing to use this combination, contact FANUC.
Invalid parameter setting may damage the motor.



© MyFANUC DC7187A9420041B3806BC8E5C652D376

### αiSV-B amplifiers (400V, 40A or less)

| Continuous torque (at low speed) | | 2 | 3.5 | 7 | 11 | 20 | | 27 | 36 |
|---|---|---|---|---|---|---|---|---|---|
| Motor / Amplifier | βiS-B | βiS 2 /4000 HV-B | βiS 4 /4000 HV-B | βiS 8 /3000 HV-B | βiS12 /3000 HV-B | βiS 22 /2000 HV-B | βiS 22 /3000 HV-B | βiS 30 /2000 HV-B | βiS 40 /2000 HV-B |
| | βiSc-B | βiSc 2 /4000 HV-B | βiSc 4 /4000 HV-B | βiSc 8 /3000 HV-B | βiSc12 /3000 HV-B | | | | |
| αiSV 10HV-B | - | ○ | ○ | ○ | | | | | |
| αiSV 20HV-B | - | ▲ | ▲ | ▲ | ○ | ○ | | | |
| αiSV 40HV-B | - | | | | ▲ | ▲ | ○ | ○ | ○ |
| αiSV 10/10HV-B | L axis | ○ | ○ | ○ | | | | | |
| | M axis | ○ | ○ | ○ | | | | | |
| αiSV 10/20HV-B | L axis | ○ | ○ | ○ | | | | | |
| | M axis | ▲ | ▲ | ▲ | ○ | ○ | | | |
| αiSV 20/20HV-B | L axis | ▲ | ▲ | ▲ | ○ | ○ | | | |
| | M axis | ▲ | ▲ | ▲ | ○ | ○ | | | |
| αiSV 20/40HV-B | L axis | ▲ | ▲ | ▲ | ○ | ○ | | | |
| | M axis | | | | ▲ | ▲ | ○ | ○ | ○ |
| αiSV 40/40HV-B | L axis | | | | ▲ | ▲ | ○ | ○ | ○ |
| | M axis | | | | ▲ | ▲ | ○ | ○ | ○ |
| αiSV 40/80HV-B | L axis | | | | ▲ | ▲ | ○ | ○ | ○ |
| | M axis | | | | | | | | |
| αiSV 10/10/10HV-B | L axis | ○ | ○ | ○ | | | | | |
| | M axis | ○ | ○ | ○ | | | | | |
| | N axis | ○ | ○ | ○ | | | | | |
| αiSV 10/10/20HV-B | L axis | ○ | ○ | ○ | | | | | |
| | M axis | ○ | ○ | ○ | | | | | |
| | N axis | ▲ | ▲ | ▲ | ○ | ○ | | | |
| αiSV 20/20/20HV-B | L axis | ▲ | ▲ | ▲ | ○ | ○ | | | |
| | M axis | ▲ | ▲ | ▲ | ○ | ○ | | | |
| | N axis | ▲ | ▲ | ▲ | ○ | ○ | | | |
| αiSV 40/40/40HV-B | L axis | | | | ▲ | ▲ | ○ | ○ | ○ |
| | M axis | | | | ▲ | ▲ | ○ | ○ | ○ |
| | N axis | | | | ▲ | ▲ | ○ | ○ | ○ |
| αiSVP 10/10/10-5.5HV-B | L axis | ○ | ○ | ○ | | | | | |
| | M axis | ○ | ○ | ○ | | | | | |
| | N axis | ○ | ○ | ○ | | | | | |

Note) Each symbol is as described below.

○: Standard combination.

▲: To combine this motor, the motor control parameter must be changed.
If wishing to use this combination, contact FANUC.
Invalid parameter setting may damage the motor.



© MyFANUC DC7187A9420041B3806BC8E5C652D376

### βiSV-B and βiSVSP-B amplifiers (400V, 40A or less)

| Continuous torque (at low speed) | | 2 | 3.5 | 7 | 11 | 20 | | 27 | 36 |
|---|---|---|---|---|---|---|---|---|---|
| Motor / Amplifier | βiS-B | βiS 2 /4000 HV-B | βiS 4 /4000 HV-B | βiS 8 /3000 HV-B | βiS12 /3000 HV-B | βiS 22 /2000 HV-B | βiS 22 /3000 HV-B | βiS 30 /2000 HV-B | βiS 40 /2000 HV-B |
| | βiSc-B | βiSc 2 /4000 HV-B | βiSc 4 /4000 HV-B | βiSc 8 /3000 HV-B | βiSc12 /3000 HV-B | | | | |
| βiSV 10HV-B | - | ○ | ○ | ○ | | | | | |
| βiSV 20HV-B | - | ▲ | ▲ | ▲ | ○ | ○ | | | |
| βiSV 40HV-B | - | | | | ▲ | ▲ | ○ | ○ | ○ |
| βiSVSP 10/10-11HV-B | L axis | ○ | ○ | ○ | | | | | |
| | M axis | ○ | ○ | ○ | | | | | |
| βiSVSP 40/40-18HV-B | L axis | | | | ▲ | ▲ | ○ | ○ | ○ |
| | M axis | | | | ▲ | ▲ | ○ | ○ | ○ |
| βiSVSP 20/20/20-11HV-B | L axis | ▲ | ▲ | ▲ | ○ | ○ | | | |
| | M axis | ▲ | ▲ | ▲ | ○ | ○ | | | |
| | N axis | ▲ | ▲ | ▲ | ○ | ○ | | | |
| βiSVSP 20/20/40-15HV-B | L axis | ▲ | ▲ | ▲ | ○ | ○ | | | |
| | M axis | ▲ | ▲ | ▲ | ○ | ○ | | | |
| | N axis | | | | ▲ | ▲ | ○ | ○ | ○ |
| βiSVSP 40/40/40-18HV-B | L axis | | | | ▲ | ▲ | ○ | ○ | ○ |
| | M axis | | | | ▲ | ▲ | ○ | ○ | ○ |
| | N axis | | | | ▲ | ▲ | ○ | ○ | ○ |

Note) It is not able to connect the servo motor βi-B series (specification number A06B-2□□□-Bxxx) to the servo amplifier βiSV-B series (I/O Link Option) (A06B-6132,6133,6162,6163-Hxxx).

Note) Each symbol is as described below.

○: Standard combination.

▲: To combine this motor, the motor control parameter must be changed.
If wishing to use this combination, contact FANUC.
Invalid parameter setting may damage the motor.



© MyFANUC DC7187A9420041B3806BC8E5C652D376

⚠ **CAUTION**

1 When servo amplifiers two-axis βiSV-B or βiSVSP-B are combined with the following servo motors, the dynamic brake stop distance is longer than when servo amplifier αiSV-B or the one-axis servo amplifier βiSV-B are combined with the following servo motors. Read the "coefficients for dynamic brake calculation" to confirm whether the dynamic brake stop distance fits the desired stop distance. For how to calculate the dynamic brake stop distance and the details, see Subsection 2.2.2.7, "Calculating the dynamic brake stop distance".

[Servo motor specifications]
βiS 12/3000-B, βiSc 12/3000-B, βiS 22/2000-B, βiS 22/3000-B,
βiS 30/2000-B, βiS 40/2000-B, βiF 22/2000-B, βiF 30/1500-B

2 For not only the motors listed in 1 above but also all other motors, it is recommended to apply the quick stop function as a function to shorten the stop distance in the event of an emergency stop or a power failure. For details, refer to "PARAMETER MANUAL (B-65270EN)". To make sure that the quick stop function operates in the event of a power failure, keep the control power supply (24 VDC) for the CNC and the servo amplifier by using, for example, an uninterruptible power supply (UPS).

3 If an alarm occurs, the stop distance cannot be shortened because the quick stop function does not operate.

4 If applying the quick stop function, be sure to confirm with an actual machine that the stop distance of the servo motor is shortened in the event of an emergency stop or a power failure.

⚠ **CAUTION**

1 If a motor is used in a combination other than those listed above, it may become broken.

2 For servo amplifiers, refer to “FANUC SERVO AMPLIFIER αi-B series Descriptions (B-65412EN)”, “FANUC SERVO AMPLIFIER αi series Descriptions (B-65282EN)”, “FANUC SERVO AMPLIFIER βi-B series Descriptions (B-65422EN)”, or “FANUC SERVO AMPLIFIER βi series Descriptions (B-65322EN)."

3 If you want to use a motor in combination with the α/β series servo amplifier, consult with FANUC.



© MyFANUC DC7187A9420041B3806BC8E5C652D376

## 2.1.2.2 Combinations of the βiS-B/βiSc-B/βiF-B servo motors and the αiSV/βiSV/βiSVSP/βiSVSPc servo amplifiers

### αiSV amplifiers (200V, 80A or less)

| Continuous torque (at low speed) | | 0.16 | 0.32 | 0.4 | 0.65 | 1.2 | 2 | 3.5 | 7 | 11 | |
|---|---|---|---|---|---|---|---|---|---|---|---|
| Motor / Amplifier | βiS-B | βiS 0.2 /5000-B | βiS 0.3 /5000-B | βiS 0.4 /5000-B | βiS 0.5 /6000-B | βiS 1 /6000-B | βiS 2 /4000-B | βiS 4 /4000-B | βiS 8 /3000-B | βiS12 /2000-B | βiS12 /3000-B |
| | βiSc-B | | | | | | βiSc 2 /4000-B | βiSc 4 /4000-B | βiSc 8 /3000-B | βiSc12 /2000-B | βiSc12 /3000-B |
| | βiF-B | | | | | | | βiF 4 /3000-B | βiF 8 /2000-B | βiF 12 /2000-B | |
| αiSV 4 | - | ○ | ○ | | | | | | | | |
| αiSV 20<br>αiSV 20L | - | | | ○ | ○ | ○ | ○ | ○ | ○ | ○ | |
| αiSV 40<br>αiSV 40L | - | | | | | | | | | | ○ |
| αiSV 80<br>αiSV 80L | - | | | | | | | | | | |
| αiSV 4/4 | L axis | ○ | ○ | | | | | | | | |
| | M axis | ○ | ○ | | | | | | | | |
| αiSV 4/20 | L axis | ○ | ○ | | | | | | | | |
| | M axis | | | ○ | ○ | ○ | ○ | ○ | ○ | ○ | |
| αiSV 20/20<br>αiSV 20/20L | L axis | | | ○ | ○ | ○ | ○ | ○ | ○ | ○ | |
| | M axis | | | ○ | ○ | ○ | ○ | ○ | ○ | ○ | |
| αiSV 20/40<br>αiSV 20/40L | L axis | | | ○ | ○ | ○ | ○ | ○ | ○ | ○ | |
| | M axis | | | | | | | | | | ○ |
| αiSV 40/40<br>αiSV 40/40L | L axis | | | | | | | | | | ○ |
| | M axis | | | | | | | | | | ○ |
| αiSV 40/80<br>αiSV 40/80L | L axis | | | | | | | | | | ○ |
| | M axis | | | | | | | | | | |
| αiSV 80/80<br>αiSV 80/80L | L axis | | | | | | | | | | |
| | M axis | | | | | | | | | | |
| αiSV 80/160 | L axis | | | | | | | | | | |
| | M axis | | | | | | | | | | |
| αiSV 4/4/4 | L axis | ○ | ○ | | | | | | | | |
| | M axis | ○ | ○ | | | | | | | | |
| | N axis | ○ | ○ | | | | | | | | |
| αiSV 20/20/20 | L axis | | | ○ | ○ | ○ | ○ | ○ | ○ | ○ | |
| | M axis | | | ○ | ○ | ○ | ○ | ○ | ○ | ○ | |
| | N axis | | | ○ | ○ | ○ | ○ | ○ | ○ | ○ | |
| αiSV 20/20/40 | L axis | | | ○ | ○ | ○ | ○ | ○ | ○ | ○ | |
| | M axis | | | ○ | ○ | ○ | ○ | ○ | ○ | ○ | |
| | N axis | | | | | | | | | | ○ |
| αiSV 40S/40S/40 | L axis | | | | | | | | | | ○ |
| | M axis | | | | | | | | | | ○ |
| | N axis | | | | | | | | | | ○ |



© MyFANUC DC7187A9420041B3806BC8E5C652D376

| Continuous torque (at low speed) | | 20 | | 27 | 36 |
|---|---|---|---|---|---|
| Motor / Amplifier | βiS-B | βiS 22 /2000-B | βiS 22 /3000-B | βiS 30 /2000-B | βiS 40 /2000-B |
| | βiSc-B | βiSc 22 /2000-B | | | |
| | βiF-B | βiF 22 /2000-B | | βiF 30 /1500-B | |
| αiSV 4 | - | | | | |
| αiSV 20<br>αiSV 20L | - | | | | |
| αiSV 40<br>αiSV 40L | - | ○ | | | |
| αiSV 80<br>αiSV 80L | - | | ○ | ○ | ○ |
| αiSV 4/4 | L axis | | | | |
| | M axis | | | | |
| αiSV 4/20 | L axis | | | | |
| | M axis | | | | |
| αiSV 20/20<br>αiSV 20/20L | L axis | | | | |
| | M axis | | | | |
| αiSV 20/40<br>αiSV 20/40L | L axis | | | | |
| | M axis | ○ | | | |
| αiSV 40/40<br>αiSV 40/40L | L axis | ○ | | | |
| | M axis | ○ | | | |
| αiSV 40/80<br>αiSV 40/80L | L axis | ○ | | | |
| | M axis | | ○ | ○ | ○ |
| αiSV 80/80<br>αiSV 80/80L | L axis | | ○ | ○ | ○ |
| | M axis | | ○ | ○ | ○ |
| αiSV 80/160 | L axis | | ○ | ○ | ○ |
| | M axis | | | | |
| αiSV 4/4/4 | L axis | | | | |
| | M axis | | | | |
| | N axis | | | | |
| αiSV 20/20/20 | L axis | | | | |
| | M axis | | | | |
| | N axis | | | | |
| αiSV 20/20/40 | L axis | | | | |
| | M axis | | | | |
| | N axis | ○ | | | |
| αiSV 40S/40S/40 | L axis | | | | |
| | M axis | | | | |
| | N axis | ○ | | | |



© MyFANUC DC7187A9420041B3806BC8E5C652D376

### βiSV, βiSVSP and βiSVSPc amplifiers (200V, 80A or less)

| Continuous torque (at low speed) | | 0.16 | 0.32 | 0.4 | 0.65 | 1.2 | 2 | 3.5 | 7 | 11 | |
|---|---|---|---|---|---|---|---|---|---|---|---|
| Motor / Amplifier | βiS-B | βiS 0.2 /5000 | βiS 0.3 /5000 | βiS 0.4 /5000-B | βiS 0.5 /6000-B | βiS 1 /6000-B | βiS 2 /4000-B | βiS 4 /4000-B | βiS 8 /3000-B | βiS12 /2000-B | βiS12 /3000-B |
| | βiSc-B | | | | | | βiSc 2 /4000-B | βiSc 4 /4000-B | βiSc 8 /3000-B | βiSc12 /2000-B | βiSc12 /3000-B |
| | βiF-B | | | | | | | βiF 4 /3000-B | βiF 8 /2000-B | βiF 12 /2000-B | |
| βiSV 4 | - | ○ | ○ | | | | | | | | |
| βiSV 20 | - | | | ○ | ○ | ○ | ○ | ○ | ○ | ○ | |
| βiSV 40 | - | | | | | | | | | | ○ |
| βiSV 80 | - | | | | | | | | | | |
| βiSV 20/20 | L axis | | | ○ | ○ | ○ | ○ | ○ | ○ | ○ | |
| | M axis | | | ○ | ○ | ○ | ○ | ○ | ○ | ○ | |
| βiSV 40/40 | L axis | | | | | | | | | | ○ |
| | M axis | | | | | | | | | | ○ |
| βiSVSP 20/20-7.5 | L axis | | | ○ | ○ | ○ | ○ | ○ | ○ | ○ | |
| | M axis | | | ○ | ○ | ○ | ○ | ○ | ○ | ○ | |
| βiSVSP 20/20-11 | L axis | | | ○ | ○ | ○ | ○ | ○ | ○ | ○ | |
| | M axis | | | ○ | ○ | ○ | ○ | ○ | ○ | ○ | |
| βiSVSP 40/40-15 | L axis | | | ▲ | ▲ | ▲ | ▲ | ▲ | ▲ | ▲ | ○ |
| | M axis | | | ▲ | ▲ | ▲ | ▲ | ▲ | ▲ | ▲ | ○ |
| βiSVSP 40/40-18 | L axis | | | ▲ | ▲ | ▲ | ▲ | ▲ | ▲ | ▲ | ○ |
| | M axis | | | ▲ | ▲ | ▲ | ▲ | ▲ | ▲ | ▲ | ○ |
| βiSVSP 80/80-18 | L axis | | | | | | | | | | ▲ |
| | M axis | | | | | | | | | | ▲ |
| βiSVSP 20/20/40-7.5 | L axis | | | ○ | ○ | ○ | ○ | ○ | ○ | ○ | |
| | M axis | | | ○ | ○ | ○ | ○ | ○ | ○ | ○ | |
| | N axis | | | ▲ | ▲ | ▲ | ▲ | ▲ | ▲ | ▲ | ○ |
| βiSVSP 20/20/40-11 | L axis | | | ○ | ○ | ○ | ○ | ○ | ○ | ○ | |
| | M axis | | | ○ | ○ | ○ | ○ | ○ | ○ | ○ | |
| | N axis | | | ▲ | ▲ | ▲ | ▲ | ▲ | ▲ | ▲ | ○ |
| βiSVSP 40/40/40-11 | L axis | | | ▲ | ▲ | ▲ | ▲ | ▲ | ▲ | ▲ | ○ |
| | M axis | | | ▲ | ▲ | ▲ | ▲ | ▲ | ▲ | ▲ | ○ |
| | N axis | | | ▲ | ▲ | ▲ | ▲ | ▲ | ▲ | ▲ | ○ |
| βiSVSP 40/40/40-15 | L axis | | | ▲ | ▲ | ▲ | ▲ | ▲ | ▲ | ▲ | ○ |
| | M axis | | | ▲ | ▲ | ▲ | ▲ | ▲ | ▲ | ▲ | ○ |
| | N axis | | | ▲ | ▲ | ▲ | ▲ | ▲ | ▲ | ▲ | ○ |
| βiSVSP 40/40/80-15 | L axis | | | ▲ | ▲ | ▲ | ▲ | ▲ | ▲ | ▲ | ○ |
| | M axis | | | ▲ | ▲ | ▲ | ▲ | ▲ | ▲ | ▲ | ○ |
| | N axis | | | | | | | | | | ▲ |
| βiSVSP 40/40/80-18 | L axis | | | ▲ | ▲ | ▲ | ▲ | ▲ | ▲ | ▲ | ○ |
| | M axis | | | ▲ | ▲ | ▲ | ▲ | ▲ | ▲ | ▲ | ○ |
| | N axis | | | | | | | | | | ▲ |
| βiSVSP 80/80/80-18 | L axis | | | | | | | | | | ▲ |
| | M axis | | | | | | | | | | ▲ |
| | N axis | | | | | | | | | | ▲ |
| βiSVSPc 20/20-7.5<br>βiSVSPc 20/20-7.5L | L axis | | | | | | ○ | ○ | ○ | ○ | |
| | M axis | | | | | | ○ | ○ | ○ | ○ | |
| βiSVSPc 20/20-11 | L axis | | | | | | ○ | ○ | ○ | ○ | |
| | M axis | | | | | | ○ | ○ | ○ | ○ | |
| βiSVSPc 20/20/20-7.5<br>βiSVSPc 20/20/20-7.5L | L axis | | | | | | ○ | ○ | ○ | ○ | |
| | M axis | | | | | | ○ | ○ | ○ | ○ | |
| | N axis | | | | | | ○ | ○ | ○ | ○ | |
| βiSVSPc 20/20/20-11 | L axis | | | | | | ○ | ○ | ○ | ○ | |
| | M axis | | | | | | ○ | ○ | ○ | ○ | |
| | N axis | | | | | | ○ | ○ | ○ | ○ | |

Note) The βiSVSPc amplifiers are for βiSc servo motors only.

Note ) It is not able to connect the servo motor βi-B series (specification number A06B-2□□□-Bxxx) to the servo amplifier βiSV series (I/O Link Option) (A06B-6132,6133,6162,6163-Hxxx).

Note) Each symbol is as described below.

○: Standard combination.

▲: To combine this motor, the motor control parameter must be changed.
If wishing to use this combination, contact FANUC. Invalid parameter setting may damage the motor.



© MyFANUC DC7187A9420041B3806BC8E5C652D376

| Continuous torque (at low speed) | | 20 | | 27 | 36 |
|---|---|---|---|---|---|
| Motor / Amplifier | βiS | βiS 22 /2000 | βiS 22 /3000 | βiS 30 /2000 | βiS 40 /2000 |
| | βiSc | βiSc 22 /2000 | | | |
| | βiF | βiF 22 /2000 | | βiF 30 /1500 | |
| βiSV 4 | - | | | | |
| βiSV 20 | - | | | | |
| βiSV 40 | - | ○ | | | |
| βiSV 80 | - | | ○ | ○ | ○ |
| βiSV 20/20 | L axis | | | | |
| | M axis | | | | |
| βiSV 40/40 | L axis | ○ | | | |
| | M axis | ○ | | | |
| βiSVSP 20/20-7.5 | L axis | | | | |
| | M axis | | | | |
| βiSVSP 20/20-11 | L axis | | | | |
| | M axis | | | | |
| βiSVSP 40/40-15 | L axis | ○ | | | |
| | M axis | ○ | | | |
| βiSVSP 40/40-18 | L axis | ○ | | | |
| | M axis | ○ | | | |
| βiSVSP 80/80-18 | L axis | ▲ | ○ | ○ | ○ |
| | M axis | ▲ | ○ | ○ | ○ |
| βiSVSP 20/20/40-7.5 | L axis | | | | |
| | M axis | | | | |
| | N axis | ○ | | | |
| βiSVSP 20/20/40-11 | L axis | | | | |
| | M axis | | | | |
| | N axis | ○ | | | |
| βiSVSP 40/40/40-11 | L axis | ○ | | | |
| | M axis | ○ | | | |
| | N axis | ○ | | | |
| βiSVSP 40/40/40-15 | L axis | ○ | | | |
| | M axis | ○ | | | |
| | N axis | ○ | | | |
| βiSVSP 40/40/80-15 | L axis | ○ | | | |
| | M axis | ○ | | | |
| | N axis | ▲ | ○ | ○ | ○ |
| βiSVSP 40/40/80-18 | L axis | ○ | | | |
| | M axis | ○ | | | |
| | N axis | ▲ | ○ | ○ | ○ |
| βiSVSP 80/80/80-18 | L axis | ▲ | ○ | ○ | ○ |
| | M axis | ▲ | ○ | ○ | ○ |
| | N axis | ▲ | ○ | ○ | ○ |
| βiSVSPc 20/20-7.5<br>βiSVSPc 20/20-7.5L | L axis | | | | |
| | M axis | | | | |
| βiSVSPc 20/20-11 | L axis | | | | |
| | M axis | | | | |
| βiSVSPc 20/20/20-7.5<br>βiSVSPc 20/20/20-7.5L | L axis | | | | |
| | M axis | | | | |
| | N axis | | | | |
| βiSVSPc 20/20/20-11 | L axis | | | | |
| | M axis | | | | |
| | N axis | | | | |

Note) The βiSVSPc amplifiers are for βiSc servo motors only.

Note ) It is not able to connect the servo motor βi-B series (specification number A06B-2□□□-Bxxx) to the servo amplifier βiSV series (I/O Link Option) (A06B-6132,6133,6162,6163-Hxxx).

Note) Each symbol is as described below.

○: Standard combination.

▲: To combine this motor, the motor control parameter must be changed.
If wishing to use this combination, contact FANUC.
Invalid parameter setting may damage the motor.



© MyFANUC DC7187A9420041B3806BC8E5C652D376

### αiSV amplifier (400V, 40A or less)

| Continuous torque (at low speed) | | 2 | 3.5 | 7 | 11 | 20 | | 27 | 36 |
|---|---|---|---|---|---|---|---|---|---|
| Motor / Amplifier | βiS-B | βiS 2 /4000 HV-B | βiS 4 /4000 HV-B | βiS 8 /3000 HV-B | βiS12 /3000 HV-B | βiS 22 /2000 HV-B | βiS 22 /3000 HV-B | βiS 30 /2000 HV-B | βiS 40 /2000 HV-B |
| | βiSc-B | βiSc 2 /4000 HV-B | βiSc 4 /4000 HV-B | βiSc 8 /3000 HV-B | βiSc12 /3000 HV-B | | | | |
| αiSV 10HV<br>αiSV 10HVL | - | ○ | ○ | ○ | | | | | |
| αiSV 20HV<br>αiSV 20HVL | - | | | | ○ | ○ | | | |
| αiSV 40HV<br>αiSV 40HVL | - | | | | | | ○ | ○ | ○ |
| αiSV 10/10HV<br>αiSV 10/10HVL | L axis | ○ | ○ | ○ | | | | | |
| | M axis | ○ | ○ | ○ | | | | | |
| αiSV 20/20HV<br>αiSV 20/20HVL | L axis | | | | ○ | ○ | | | |
| | M axis | | | | ○ | ○ | | | |
| αiSV 20/40HV<br>αiSV 20/40HVL | L axis | | | | ○ | ○ | | | |
| | M axis | | | | | | ○ | ○ | ○ |
| αiSV 40/40HV<br>αiSV 40/40HVL | L axis | | | | | | ○ | ○ | ○ |
| | M axis | | | | | | ○ | ○ | ○ |
| αiSV 40/80HV | L axis | | | | | | ○ | ○ | ○ |
| | M axis | | | | | | | | |

### βiSV amplifiers (400V, 40A or less)

| Continuous torque (at low speed) | | 2 | 3.5 | 7 | 11 | 20 | | 27 | 36 |
|---|---|---|---|---|---|---|---|---|---|
| Motor / Amplifier | βiS-B | βiS 2 /4000 HV-B | βiS 4 /4000 HV-B | βiS 8 /3000 HV-B | βiS12 /3000 HV-B | βiS 22 /2000 HV-B | βiS 22 /3000 HV-B | βiS 30 /2000 HV-B | βiS 40 /2000 HV-B |
| | βiSc-B | βiSc 2 /4000 HV-B | βiSc 4 /4000 HV-B | βiSc 8 /3000 HV-B | βiSc12 /3000 HV-B | | | | |
| βiSV 10HV | - | ○ | ○ | ○ | | | | | |
| βiSV 20HV | - | | | | ○ | ○ | | | |
| βiSV 40HV | - | | | | | | ○ | ○ | ○ |

Note ) It is not able to connect the servo motor βi-B series (specification number A06B-2□□□-Bxxx) to the servo amplifier βiSV series (I/O Link Option) (A06B-6132,6133,6162,6163-Hxxx).



© MyFANUC DC7187A9420041B3806BC8E5C652D376

⚠ **CAUTION**

1 When servo amplifiers two-axis βiSV or βiSVSP are combined with the following servo motors, the dynamic brake stop distance is longer than when servo amplifier αiSV or the one-axis servo amplifier βiSV are combined with the following servo motors. Read the "coefficients for dynamic brake calculation" to confirm whether the dynamic brake stop distance fits the desired stop distance. For how to calculate the dynamic brake stop distance and the details, see Subsection 2.2.2.7, "Calculating the dynamic brake stop distance".

[Servo motor specifications]
βiS 12/3000-B, βiSc 12/3000-B, βiS 22/2000-B, βiS 22/3000-B,
βiS 30/2000-B, βiS 40/2000-B, βiF 22/2000-B, βiF 30/1500-B

2 For not only the motors listed in 1 above but also all other motors, it is recommended to apply the quick stop function as a function to shorten the stop distance in the event of an emergency stop or a power failure. For details, refer to "PARAMETER MANUAL (B-65270EN)". To make sure that the quick stop function operates in the event of a power failure, keep the control power supply (24 VDC) for the CNC and the servo amplifier by using, for example, an uninterruptible power supply (UPS).

3 If an alarm occurs, the stop distance cannot be shortened because the quick stop function does not operate.

4 If applying the quick stop function, be sure to confirm with an actual machine that the stop distance of the servo motor is shortened in the event of an emergency stop or a power failure.

⚠ **CAUTION**

1 If a motor is used in a combination other than those listed above, it may become broken.

2 For servo amplifiers, refer to “FANUC SERVO AMPLIFIER αi-B series Descriptions (B-65412EN)”, “FANUC SERVO AMPLIFIER αi series Descriptions (B-65282EN)”, “FANUC SERVO AMPLIFIER βi-B series Descriptions (B-65422EN)”, or “FANUC SERVO AMPLIFIER βi series Descriptions (B-65322EN)."

3 If you want to use a motor in combination with the α/β series servo amplifier, consult with FANUC.



© MyFANUC DC7187A9420041B3806BC8E5C652D376

## 2.1.3 Connectors on the Cable Side

This Subsection describes the specifications of the connectors on the cable side that are to be connected to a motor. For the specifications and pin layout of the connector mounted on a motor, see Subsection 1.3.3, "Outline Drawings".

This Subsection classifies connectors by the following groups:

| Group | Servo motor name |
|---|---|
| Group A-1 | βiS 0.2/5000, βiS 0.3/5000 |
| Group A-2 | βiS 0.2/5000, βiS 0.3/5000 (IP67 specification) |
| Group B | βiS 0.4/5000-B, βiS 0.5/6000-B, βiS 1/6000-B |
| Group C | βiS 2/4000-B, βiS 4/4000-B<br>βiS 2/4000HV-B, βiS 4/4000HV-B<br>βiSc 2/4000-B, βiSc 4/4000-B<br>βiSc 2/4000HV-B, βiSc 4/4000HV-B |
| Group D | βiS 8/3000-B, βiS 12/2000-B, βiS 12/3000-B<br>βiS 8/3000HV-B, βiS 12/3000HV-B<br>βiSc 8/3000-B, βiSc 12/2000-B, βiSc 12/3000-B<br>βiSc 8/3000HV-B, βiSc 12/3000HV-B<br>βiF 4/3000-B, βiF 8/2000-B |
| Group E | βiS 22/2000-B, βiS 22/3000-B, βiS 30/2000-B, βiS 40/2000-B<br>βiS 22/2000HV-B , βiS 22/3000HV-B<br>βiS 30/2000HV-B, βiS 40/2000HV-B<br>βiSc 22/2000-B<br>βiF 12/2000-B, βiF 22/2000-B, βiF 30/1500-B |

This Subsection, "Connectors on the Cable Side", consists of the following sections:

2.1.3.1 Connectors for signals
2.1.3.2 Connectors for power
2.1.3.3 Connectors for the brake
2.1.3.4 Connection to a conduit hose



© MyFANUC DC7187A9420041B3806BC8E5C652D376

## 2.1.3.1 Connectors for signals

### (1) Connectors for signals (group A-1)

Connectors for signals in Group A are not water-proof.
To connect the cable, a dedicated crimping tool must be used.
Consider crimping, cable clamp, and voltage drop. Also note that there are restrictions.

| | | For signal | | |
|---|---|---|---|---|
| **Housing specification (Tyco Electronics Japan G.K.)** | | 1-1318118-6 (D-2100D 12-position receptacle housing) | | |
| **Contact specifications (Tyco Electronics Japan G.K.)** | | 1318107-1 (D-2 receptacle contact M) | | 1318108-1 (D-2 receptacle contact S) |
| | **Applicable wire size** | 0.18 to 0.5 $mm^2$ | 0.3 to 0.85 $mm^2$ | 0.08 to 0.2 $mm^2$ |
| | **Insulation external diameter** | ϕ0.88 to 1.5 mm | ϕ1.1 to 1.87 mm | ϕ0.88 to 1.5 mm |
| | **Applicable crimping tool** | 1463475-1 (Dedicated crimping tool) | 1276654-1 (D-2 M standard tool) | 1276653-1 (D-2 S standard tool) |

The following signal connector kit is available:

| | For signal |
|---|---|
| **Connector kit specification (FANUC specification)** | A06B-6114-K241 |
| **Contents of the connector kit** | Receptacle housing (1-1318118-6)×1<br>Receptacle contact D-2 M (1318107-1)×12 |

The following dedicated tools are required for this connector.

| | Applicable contact | Tyco Electronics Japan G.K. specification | FANUC specification |
|---|---|---|---|
| **Crimping tool** | D-2 contact size M (Dedicated crimping tool for which the applicable wire size is 0.18 to 0.5 $mm^2$.) | 1463475-1 | A06B-6114-K242 |
| | D-2 contact size M | 1276654-1 | A06B-6110-K220#D2M |
| | D-2 contact size S | 1276653-1 | - |
| **Extractor** | D-2 contact | 1276716-1 | A06B-6110-K220#D2R |

**NOTE**

1 When you use the recommended wire (cable diameter of 0.18 to 0.5 $mm^2$) only with one D-2 size M contact, the above dedicated crimping tool is required. Use a standard crimping tool for a D-2 contact within the applicable range, with checking the size of the wire to be used, contact type, and crimping tool specification.

2 The contacts are of the type which crimps the covering in addition to the wire. Follow the dimension of the insulation part listed above. An insulation of a diameter outside the above range may be able to be connected depending on the wire or tool, however. For details, contact the connector manufacturer.

⚠ **CAUTION**

In case that the cable is prepared by MTB, total resistance of 5V and 0V must be less than 2Ω.

### (2) Connectors for signals (group A-2)

The connector is water-proof when engaged with the motor connector.



© MyFANUC DC7187A9420041B3806BC8E5C652D376

There are two types of connectors depending on how a cable is connected to a connector; the crimp type and the solder type. For the crimp type connector, a dedicated crimping tool is required.
The diameter of the cable used is restricted considering cable clamp and voltage drop.

### Crimp type connector (Japan Aviation Electronics Industry)

| | For signal | | | |
|---|---|---|---|---|
| Connector kit (FANUC specification) | Straight type | A06B-6114-K204#S | | |
| | Right angle type | A06B-6114-K204#E | | |
| | * With the FANUC specifications, the following connector by Japan Aviation Electronics Industry, (with two types of bushings: for ϕ5.7 to ϕ7.3 and for ϕ6.5 to ϕ8.0) and the contacts (individual type) are included. | | | |
| Connector specifications | Straight type | JN2DS10SL1-R (Compatible cable O.D. ϕ5.7 to ϕ7.3)<br>JN2DS10SL2-R (Compatible cable O.D. ϕ6.5 to ϕ8.0) | | |
| | Right angle type | JN2FS10SL1-R (Compatible cable O.D. ϕ5.7 to ϕ7.3)<br>JN2FS10SL2-R (Compatible cable O.D. ϕ6.5 to ϕ8.0) | | |
| Contact specifications | Individual | JN1-22-22S-PKG100 (100 pieces) | | |
| | Reel | JN1-22-22S-10000 (10,000 pieces) | | |
| | Insulation external diameter | ϕ1.5 or less | | |
| Used wire | | 0V, 5V | 6V | SD, *SD, REQ, *REQ |
| | Cable length: 28m or less | 0.3 $mm^2 \times 2$ | 0.3 $mm^2$ | Twisted pair of at least 0.18 $mm^2$ |
| | Cable length: 50m or less | 0.5$mm^2 \times 2$ | 0.5$mm^2$ | |
| | | * Use a cable of which strand configuration is 20/0.18 or 104/0.08. | | |
| Tool for crimping terminal | Handy crimping tool | AWG<br>#21 (0.5$mm^2$:20/0.18)<br>#23 (0.3$mm^2$)<br>#25 (0.18$mm^2$) | Japan Aviation Electronics Industry | CT150-2-JN1-E |
| | | | FANUC | A06B-6114-K201#JN1E |
| | | AWG<br>#20 (0.5$mm^2$:104/0.08)<br>#21 (0.5$mm^2$:20/0.18)<br>#25 (0.18$mm^2$) | Japan Aviation Electronics Industry | CT150-2-JN1-D |
| | | | FANUC | A06B-6114-K201#JN1D |
| | Automatic crimping tool | Main unit | CP215-5B | |
| | | Applicator | 3502-JN1-2C | |
| Tool for pulling terminal out | Japan Aviation Electronics Industry | ET-JN1 | | |
| | FANUC | A06B-6114-K201#JN1R | | |



© MyFANUC DC7187A9420041B3806BC8E5C652D376

### Solder type connector (Japan Aviation Electronics Industry)

| | For signal | |
|---|---|---|
| Connector specifications | Individual (100 pieces) | JN1-22-22F-PKG100 |
| | Individual (10 pieces) | JN1-22-22F-PKG10 |
| Compatible cable | AWG #20 or less (Insulation external diameter ϕ1.5mm or less) | |

* This type connector uses the solderable contact. And other parts are the same as crimp type of Japan Aviation Electronics Industry's connector.

The outside dimensions of each type of connector when engaged are shown below:

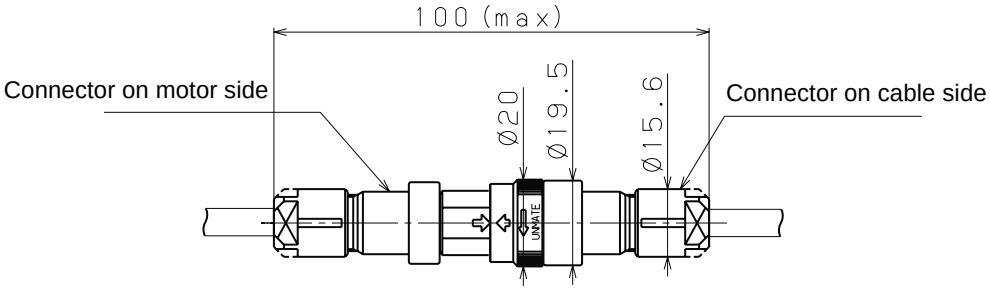


**The outside dimensions of the Japan Aviation Electronics Industry's connector**

⚠ **CAUTION**

1 In case that the cable is prepared by MTB, total resistance of 5V and 0V must be less than 2Ω.

2 The motor-side plug connector accepts a wire whose diameter is 0.5 $mm^2$ (wire construction: 20/0.18 or 104/0.08; sheath outer diameter: ϕ1.5 or less) and a cable whose sheath diameter is ϕ5.7 to 8.0. When using a thicker wire or cable, take measures described below.

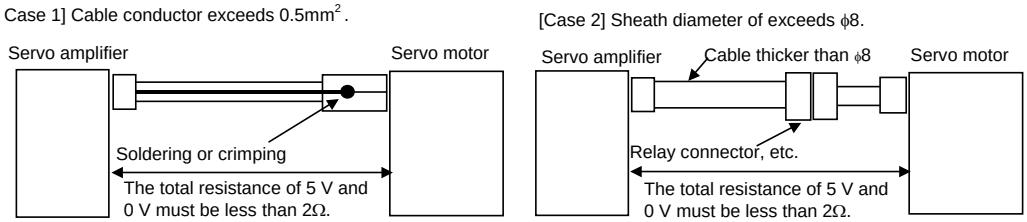




© MyFANUC DC7187A9420041B3806BC8E5C652D376

## (3) Connectors for signals (group B to E)

As the connectors for signals of Groups B to E, a common small dedicated connector is used.
This connector has a water-proof property when engaged with the connector on the motor side.
There are two types of connector to connect the cable: crimp type and solder type. For a crimp type connector, a dedicated crimping tool of its manufacturer must be used.
Also note that there are restrictions on the wire diameter that take into consideration the cable clamp and voltage drop. The IEC60034 standard does not apply to the connectors for signals.

### Crimp type connector (Japan Aviation Electronics Industry)

| | For signal | | | |
|---|---|---|---|---|
| Connector kit (FANUC specification) | Straight type | A06B-6114-K204#S | | |
| | Right angle type | A06B-6114-K204#E | | |
| | * The connector kit of the FANUC specification includes the Japan Aviation Electronics Industry-made connectors mentioned below (with two types of bushings for applicable cable diameters ϕ5.7 to ϕ7.3 and ϕ6.5 to ϕ8.0) and contacts (individual terminals). | | | |
| Connector specifications | Straight type | JN2DS10SL1-R (Compatible cable O.D. ϕ5.7 to ϕ7.3)<br>JN2DS10SL2-R (Compatible cable O.D. ϕ6.5 to ϕ8.0) | | |
| | Right angle type | JN2FS10SL1-R (Compatible cable O.D. ϕ5.7 to ϕ7.3)<br>JN2FS10SL2-R (Compatible cable O.D. ϕ6.5 to ϕ8.0) | | |
| Contact specifications | Individual | JN1-22-22S-PKG100 (100 pieces) | | |
| | Reel | JN1-22-22S-10000 (10,000 pieces) | | |
| | Insulation external diameter | ϕ1.5 or less | | |
| Used wire | | 0V, 5V | 6V | RD,*RD |
| | Cable length: 28m or less | 0.3 $mm^2 \times 2$ | 0.3 $mm^2$ | Twisted pair of at least 0.18 $mm^2$ |
| | Cable length: 50m or less | 0.5$mm^2 \times 2$ | 0.5$mm^2$ | |
| | | * Use a cable of which strand configuration is 20/0.18 or 104/0.08. | | |
| Tool for crimping terminal | Handy crimping tool | AWG<br>#21 (0.5$mm^2$:20/0.18)<br>#23 (0.3$mm^2$)<br>#25 (0.18$mm^2$) | Japan Aviation Electronics Industry | CT150-2-JN1-E |
| | | | FANUC | A06B-6114-K201#JN1E |
| | | AWG<br>#20 (0.5$mm^2$:104/0.08)<br>#21 (0.5$mm^2$:20/0.18)<br>#25 (0.18$mm^2$) | Japan Aviation Electronics Industry | CT150-2-JN1-D |
| | | | FANUC | A06B-6114-K201#JN1D |
| | Automatic crimping tool | Main unit | CP215-5B | |
| | | Applicator | 3502-JN1-2C | |
| Tool for pulling terminal out | Japan Aviation Electronics Industry | ET-JN1 | | |
| | FANUC | A06B-6114-K201#JN1R | | |



© MyFANUC DC7187A9420041B3806BC8E5C652D376

The outside dimensions of each type of connector when engaged are shown below:

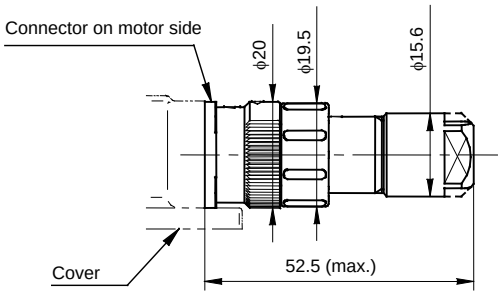


Straight type

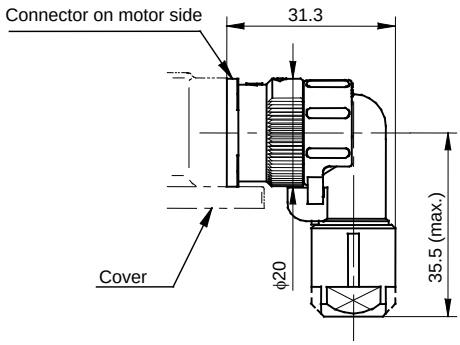


Right angle type

**The outside dimensions of the Japan Aviation Electronics Industry's crimp type connector**

## Crimp type connector (Hirose Electric)

| | For signal | | | | |
|---|---|---|---|---|---|
| Connector specifications | Straight type | HR34B-12WPD-10SC (Compatible cable O.D. ϕ5.7 to ϕ7.3)<br>HR34B-12WPE-10SC (Compatible cable O.D. ϕ6.5 to ϕ8.0)<br>(HR34B-12WPK-10SC (Compatible cable O.D. ϕ8.0 to ϕ9.0)) | | | |
| | Right angle type | HR34B-12WLPD-10SC (Compatible cable O.D. ϕ5.7 to ϕ7.3)<br>HR34B-12WLPE-10SC (Compatible cable O.D. ϕ6.5 to ϕ8.0)<br>(HR34B-12WLPK-10SC (Compatible cable O.D. ϕ8.0 to ϕ9.0)) | | | |
| Contact specifications | Loose piece contact | HR34B-SC1-111 | | | |
| | Strip contact | HR34B-SC1-211 | | | |
| | Compatible cable | AWG #20 to #25 | | | |
| | Insulation external diameter | ϕ1.34 or less | | | |
| Used wire | | 0V, 5V | 6V | RD,*RD | |
| | Cable length: 28m or less | 0.3 $mm^2 \times 2$ | 0.3 $mm^2$ | Twisted pair of at least 0.18 $mm^2$ | |
| | Cable length: 50m or less | 0.5$mm^2 \times 2$ | 0.5$mm^2$ | | |
| Tool for crimping terminal | Handy crimping tool (AWG#20,23,25) | HT304/HR34B-1 | | | |
| | Automatic crimping tool | Main unit | CM-105 | (Available for HR34B-SC1-211) | |
| | | Applicator | AP105-HR34B-1 | | |
| Tool for pulling terminal out | RP6-SC-TP | | | | |

* Specification number is all of Hirose Electric's specification.

> ⚠ **CAUTION**
> Because the structure of crimp type connector of Hirose Electric is different from the one of Japan Aviation Electronics Industry, be sure to use the same maker's connector, contacts and crimping tool when assembling the connector.



© MyFANUC DC7187A9420041B3806BC8E5C652D376

The outside dimensions of each type of connector when engaged are shown below:

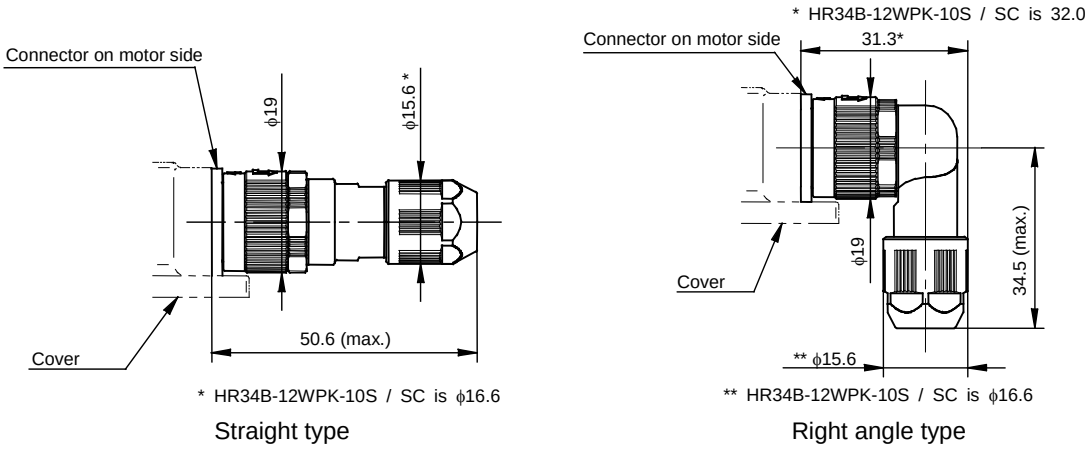


**The outside dimensions of the Hirose Electric's connector**

## Solder type connector (Hirose Electric)

| | For signal | | | |
|---|---|---|---|---|
| Connector kit (FANUC specification) | Straight type | A06B-6114-K205#S | | |
| | Right angle type | A06B-6114-K205#E | | |
| | * With the FANUC specifications, the following connector by Hirose Electric, (with two types of bushings and endnuts: for ϕ5.7 to ϕ7.3 and for ϕ6.5 to ϕ8.0) are included. | | | |
| Connector specifications | Straight type | HR34B-12WPD-10S (Compatible cable O.D. ϕ5.7 to ϕ7.3)<br>HR34B-12WPE-10S (Compatible cable O.D. ϕ6.5 to ϕ8.0)<br>(HR34B-12WPK-10S (Compatible cable O.D. ϕ8.0 to ϕ9.0)) | | |
| | Right angle type | HR34B-12WLPD-10S (Compatible cable O.D. ϕ5.7 to ϕ7.3)<br>HR34B-12WLPE-10S (Compatible cable O.D. ϕ6.5 to ϕ8.0)<br>(HR34B-12WLPK-10S (Compatible cable O.D. ϕ8.0 to ϕ9.0)) | | |
| Compatible cable | AWG #20 or less (ϕ 0.8mm or less) | | | |
| Used wire | | 0V, 5V | 6V | RD,*RD |
| | Cable length: 28m or less | 0.3 $mm^2 \times 2$ | 0.3 $mm^2$ | Twisted pair of at least 0.18 $mm^2$ |
| | Cable length: 50m or less | 0.5$mm^2 \times 2$ | 0.5$mm^2$ | |

* The outside dimensions of each type of connector when engaged are the same as the crimp type connector.

## Solder type connector (Japan Aviation Electronics Industry)

| | For signal | |
|---|---|---|
| Connector specifications | Individual (100 pieces) | JN1-22-22F-PKG100 |
| | Individual (10 pieces) | JN1-22-22F-PKG10 |
| Compatible cable | AWG #20 or less (Insulation external diameter ϕ1.5mm or less) | |

* This type connector uses the solderable contact. And other parts are the same as crimp type of Japan Aviation Electronics Industry's connector.



© MyFANUC DC7187A9420041B3806BC8E5C652D376

**⚠ CAUTION**

1 In case that the cable is prepared by MTB, total resistance of 5V and 0V must be less than 2Ω.

2 The motor-side plug connector accepts a wire whose diameter is 0.5 $mm^2$ (wire construction: 20/0.18 or 104/0.08; sheath outer diameter: ϕ1.5 or less) and a cable whose sheath diameter is ϕ5.7 to 8.0. When using a thicker wire or cable, take measures described below.

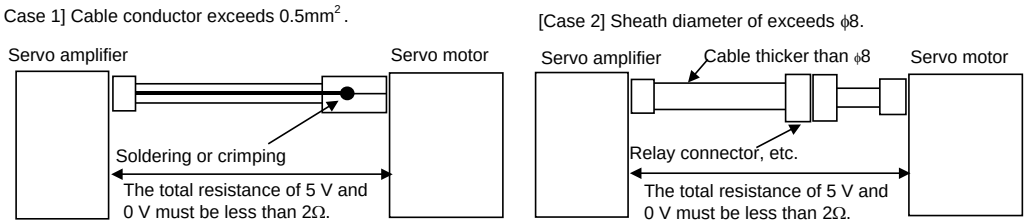


## Procedure for engaging feedback cable connectors

Engage the feedback cable connectors according to the procedure described below, and check that they are engaged securely.

1 Checking the mating surfaces and the key direction
Check that the mating surfaces are free from any substance such as foreign particles or oil.

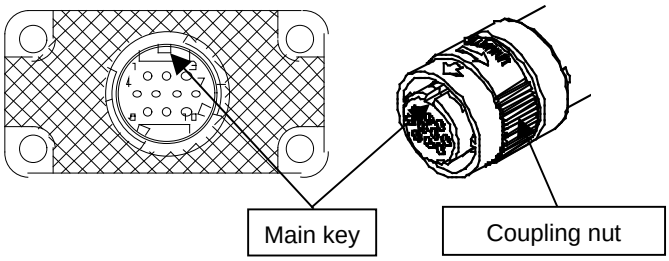


2 Engaging the connectors
Hold the connector at the position shown in the figure, insert it straightforward until it snaps into place.

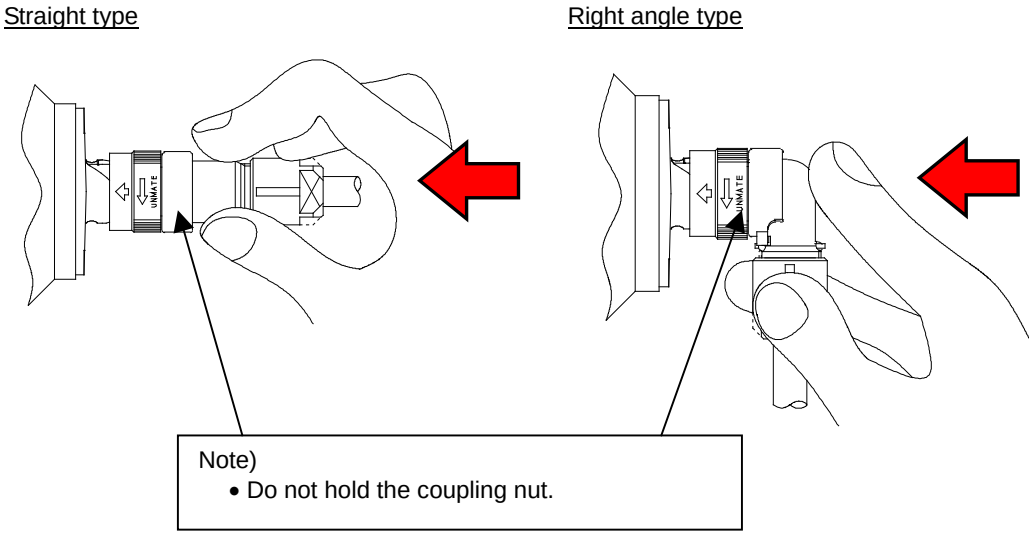




© MyFANUC DC7187A9420041B3806BC8E5C652D376

3 Checking the engaged status

<1> Check that the arrow on the connector is positioned at the center as shown in the figure below. If the arrow is not at the center, turn the coupling nut by hand so that the arrow is at the correct position.

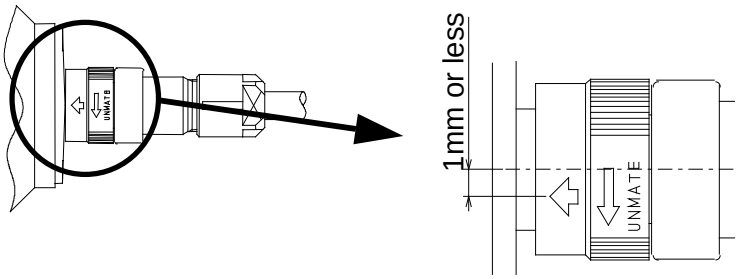


<2> Hold the connector at the position shown in the following figure, and check that the connector does not come off when it is pulled lightly.

Straight type

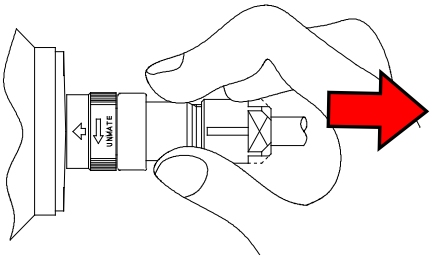

Right angle type

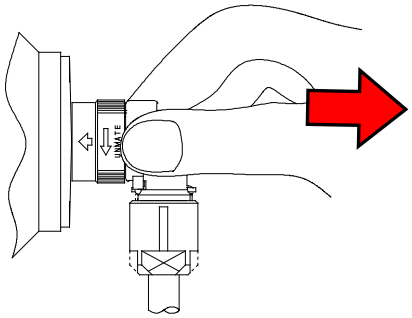

Note)
- Do not pull the cable.
- Pull the connector straightforward.



© MyFANUC DC7187A9420041B3806BC8E5C652D376

## 2.1.3.2 Connectors for power

### (1) Connectors for power (for group A-1)

Dedicated connectors which are TUV approved are available as the connector for power for group A (β*i*S 0.2 and β*i*S 0.3). The following subsection describes the specifications as a connector kit. These connectors are not water-proof when engaged.
To connect the cable, a dedicated crimping tool must be used.
Consider crimping and cable clamp. Also note that there are restrictions.

| | | For power and brake |
|---|---|---|
| Housing specification (Tyco Electronics Japan G.K.) | | 3-178129-6 (D-3200M 6-position receptacle housing XY) |
| Contact specifications (Tyco Electronics Japan G.K.) | | 1-175218-2 (D-3 receptacle contact L) |
| | Applicable wire size | 0.5 to 1.25 $mm^2$ |
| | Insulation external diameter | ϕ1.8 to 2.8 mm |

The following power and brake connector kit is available:

| | For power and brake |
|---|---|
| Connector kit specifications (FANUC specification) | A06B-6114-K240 |
| Contents of the connector kit | Receptacle housing (3-178129-6) × 1<br>Receptacle contact D-3 L (1-175218-2) × 6 |

The following dedicated tools are required for this connector.

| | Applicable contact | Tyco Electronics Japan G.K. specification | FANUC specification |
|---|---|---|---|
| Crimping tool | D-3 contact size L | 914596-3 | A06B-6110-K220#D3L |
| Extractor | D-3 contact | 234168-1 | A06B-6110-K220#D3R |

⚠ **CAUTION**
The contacts are of the type which crimps the covering in addition to the wire. Follow the dimension of the insulation part listed above. An insulation of a diameter outside the above range may be able to be connected depending on the wire or tool, however. For details, contact the connector manufacturer.



© MyFANUC DC7187A9420041B3806BC8E5C652D376

## (2) Connectors for power (for group A-2)

This connector has a water-proof property when engaged with the connector on the motor side.
To connect the cable, a dedicated crimping tool must be used.
Consider crimping and cable clamp. Also note that there are restrictions.

<table>
<tr><th></th><th colspan="3">For power</th></tr>
<tr><td>Connector kit specifications</td><td colspan="3">A06B-6114-K252#S (FANUC specification)<br>JN2DW06SLK (Japan Aviation Electronics Industry)<br>* The connector kit includes the main bodies of the Japan Aviation Electronics Industry-made connectors mentioned below and three types of bushings (applicable cable diameters: ϕ6.0 to ϕ8.0, ϕ8.0 to ϕ10.0, and ϕ10.0 to ϕ12.0) and contacts (6 JN1-22-20S terminals).</td></tr>
<tr><td>Connector specifications (Japan Aviation Electronics Industry)</td><td colspan="3">JN2DW06SL4 (Compatible cable O.D. : ϕ6.0 to ϕ8.0)<br>JN2DW06SL1 (Compatible cable O.D. : ϕ8.0 to ϕ10.0)<br>JN2DW06SL2 (Compatible cable O.D. : ϕ10.0 to ϕ12.0)</td></tr>
<tr><td rowspan="3">Contact specifications</td><td>JN1-22-20S-R-PKG100</td><td rowspan="3">Applicable wire size</td><td>AWG20, AWG21</td></tr>
<tr><td>JN1-22-22S-PKG100</td><td>AWG21 to AWG25</td></tr>
<tr><td>JN1-22-26S-PKG100</td><td>AWG26 to AWG28</td></tr>
<tr><td>Insulation external diameter</td><td colspan="3">ϕ1.5 or less</td></tr>
<tr><td>Compatible cable O.D.</td><td colspan="3">ϕ6.0 to ϕ8.0<br>ϕ8.0 to ϕ10.0<br>ϕ10.0 to ϕ12.0</td></tr>
<tr><td rowspan="2">Crimping tool</td><td colspan="2">AWG#21 (0.5mm$^2$:20/0.18),<br>AWG#23 (0.3mm$^2$),<br>AWG#25 (0.18mm$^2$)</td><td>CT150-2-JN1-E<br>(Japan Aviation Electronics Industry)<br>A06B-6114-K201#JN1E<br>(FANUC specification)</td></tr>
<tr><td colspan="2">AWG#20 (0.5mm$^2$:104/0.08),<br>AWG#21 (0.5mm$^2$:20/0.18),<br>AWG#25 (0.18mm$^2$)</td><td>CT150-2-JN1-D<br>(Japan Aviation Electronics Industry)<br>A06B-6114-K201#JN1D<br>(FANUC specification)</td></tr>
<tr><td>Extractor</td><td colspan="3">ET150-2-JN1-E (Japan Aviation Electronics Industry)<br>A06B-6114-K201#E (FANUC specification)</td></tr>
</table>

**⚠ CAUTION**

1 The contacts are of the type which crimps the covering in addition to the wire. Follow the dimension of the insulation part listed above. An insulation of a diameter outside the above range may be able to be connected depending on the wire or tool, however. For details, contact the connector manufacturer.



© MyFANUC DC7187A9420041B3806BC8E5C652D376

The outside dimensions of each type of connector when engaged are shown below:

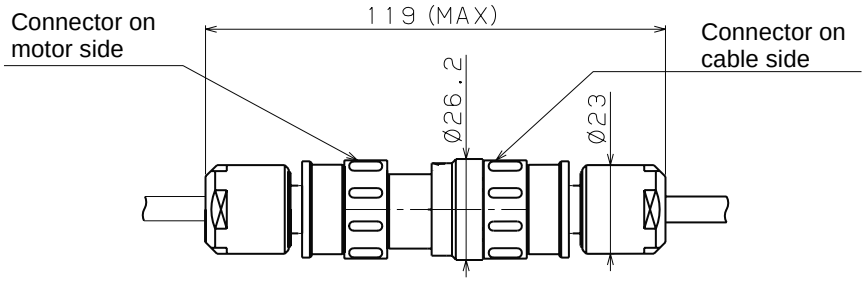


**The outside dimensions of the Japan Aviation Electronics Industry's connector**

## (3) Connectors for power (for group B)

Dedicated connectors which are TUV approved are available as the connector for power for group B (β*i*S 0.4-B to β*i*S 1-B). The following subsection describes the specifications as a connector kit. These connectors are water-proof when engaged.
To connect the cable, a dedicated crimping tool must be used.
Consider crimping and cable clamp. Also note that there are restrictions.

| | | For power |
|---|---|---|
| Connector body specifications (MOLEX JAPAN Co., Ltd.) | Straight type | 54983-0001 |
| | Right angle type | 55765-0001 |
| Contact specifications (MOLEX JAPAN Co., Ltd.) | | 56052-8100 |
| | Applicable wire size | 0.75 to 1.05 $mm^2$ (AWG18 to AWG17) |
| | Insulation external diameter | ϕ2.5 mm or less |
| | Compatible cable O.D. | ϕ9.1 to ϕ9.8 mm |

The following power connector kit is available:

| | | For power |
|---|---|---|
| Connector kit specifications (FANUC specification) | Straight type | A06B-6114-K230#S |
| | Right angle type | A06B-6114-K230#E |
| Contents of the connector kit | | Connector body × 1<br>Contact × 4 |

The following dedicated tools are required for this connector.

| | MOLEX JAPAN Co., Ltd. | FANUC specification |
|---|---|---|
| Crimping tool | 57406-5000 | A06B-6114-K234#C |
| Extractor | 57406-6000 | A06B-6114-K234#R |

⚠ **CAUTION**
The contacts are of the type which crimps the covering in addition to the wire. Follow the dimension of the insulation part listed above. An insulation of a diameter outside the above range may be able to be connected depending on the wire or tool, however. For details, contact the connector manufacturer.



© MyFANUC DC7187A9420041B3806BC8E5C652D376

## (4) Connectors for power (for group C)

Dedicated connectors which are TUV approved are available as the connector for power for group C (βiS 2-B, βiS 4-B, βiS 2HV-B, βiS 4HV-B, βiSc 2-B, βiSc 4-B, βiSc 2HV-B, and βiSc 4HV-B).
For the connector of the motor with a brake, perform cabling for the power and cabling for the brake at the same time.
The following subsection describes the specifications as a connector kit. These connectors are water-proof when engaged.
To connect the cable, a dedicated crimping tool must be used.
Consider crimping and cable clamp. Also note that there are restrictions.

| | | For power |
|---|---|---|
| Connector kit specifications (Including the contact) | Straight type (standard) | 1473063-2 (Tyco Electronics Japan G.K.)<br>A06B-6114-K220#S (FANUC specification) |
| | Right angle type (Caution 1) | 1473393-2 (Tyco Electronics Japan G.K.)<br>A06B-6114-K220#E (FANUC specification) |
| Applicable wire size(Caution 2) | | AWG#18 to 16 |
| Insulation external diameter(Caution 3) | | ϕ1.8 to ϕ2.8 |
| Compatible cable O.D.(Caution 4) | | ϕ9.2 to ϕ9.9, ϕ9.9 to ϕ11.4 |
| Crimping tool(Caution 5) | | 91579-1 (Tyco Electronics Japan G.K.)<br>A06B-6114-K221#C (FANUC specification) |
| Extractor(Caution 5) | | 1463329-1 (Tyco Electronics Japan G.K.)<br>A06B-6114-K221#R (FANUC specification) |

⚠ **CAUTION**

1 For the right angle type, a cable juts from the motor in a vertical direction. To connect a conduit hose to the connector, use the right angle type. (The straight type cannot be used due to dimensional restrictions.)
2 The contact is of the crimp type. Be careful of the applicable wire.
3 The crimping contact crimps the covering in addition to the wire. Follow the dimensions listed above.
An insulation of a smaller diameter may be able to be connected by a wire or tool, however. For details, contact Tyco Electronics Japan G.K.
4 To satisfy the TUV-approved and waterproof performance, a cable of an outside diameter within the applicable cable clamp range must be used. The connector kit includes two types of rubber bushings (cable clamps): one for ϕ9.2 to ϕ9.9 (blue) and the other for ϕ9.9 to ϕ11.4 (black).
5 Dedicated tools are required for crimping and extracting the contact. Keep them on hand when required.



© MyFANUC DC7187A9420041B3806BC8E5C652D376

## (5) Connectors for power (for groups D and E)

To meet the IEC60034 standard, TUV-approved plug connectors and cable clamps should be used in connecting the power cable. To meet the IEC60034 standard by using a cable or conduit hose seal adapter, contact the manufacturer for details.
As cable-side plug connectors for the FANUC AC servo motor β*i*-B series, "IP67 rated, TUV-approved, bayonet type", "IP67 rated, TUV-approved, screw type", and "IP67 rated, screw type" are available. (All connectors are black.)

The specifications of each connector are explained based on the examples shown below.

### Ordering specification number of the power connector kit

The specification numbers used for ordering a power connector kit from FANUC are listed below. The power connector kit contains a plug connector on the cable side (conforming to IP67, TUV approved type) described subsequently.

Bayonet-type connectors

| Group | | Power connector kit specification | Content |
|---|---|---|---|
| Group D | | A06B-6200-K810 | Single block type connector [D] |
| | Cable outer diameter ϕ11 to 14.1 | A06B-6200-K811 | Straight type connector [A] + cable clamp [C] |
| | | A06B-6200-K812 | Right angle type connector [B] + cable clamp [C] |
| Group E | | A06B-6200-K813 | Single block type connector [D] |
| | Cable outer diameter ϕ12.9 to 16 | A06B-6200-K814 | Straight type connector [A] + cable clamp [C] |
| | | A06B-6200-K815 | Right angle type connector [B] + cable clamp [C] |
| | Cable outer diameter ϕ18 to 20 | A06B-6200-K822 | Straight type connector [A] + cable clamp [C] |
| | | A06B-6200-K823 | Right angle type connector [B] + cable clamp [C] |

Screw-type connectors

| Group | | Power connector kit specification | Content |
|---|---|---|---|
| Group D | | A06B-6079-K810 | Single block type connector [D] |
| | Cable outer diameter ϕ10.3 to 14.3 | A06B-6079-K811 | Straight type connector [A] + cable clamp [C] |
| | | A06B-6079-K812 | Right angle type connector [B] + cable clamp [C] |
| Group E | | A06B-6079-K813 | Single block type connector [D] |
| | Cable outer diameter ϕ12.9 to 16 | A06B-6079-K814 | Straight type connector [A] + cable clamp [C] |
| | | A06B-6079-K815 | Right angle type connector [B] + cable clamp [C] |
| | Cable outer diameter ϕ18 to 20 | A06B-6079-K822 | Straight type connector [A] + cable clamp [C] |
| | | A06B-6079-K823 | Right angle type connector [B] + cable clamp [C] |



© MyFANUC DC7187A9420041B3806BC8E5C652D376

## Example of connector connection

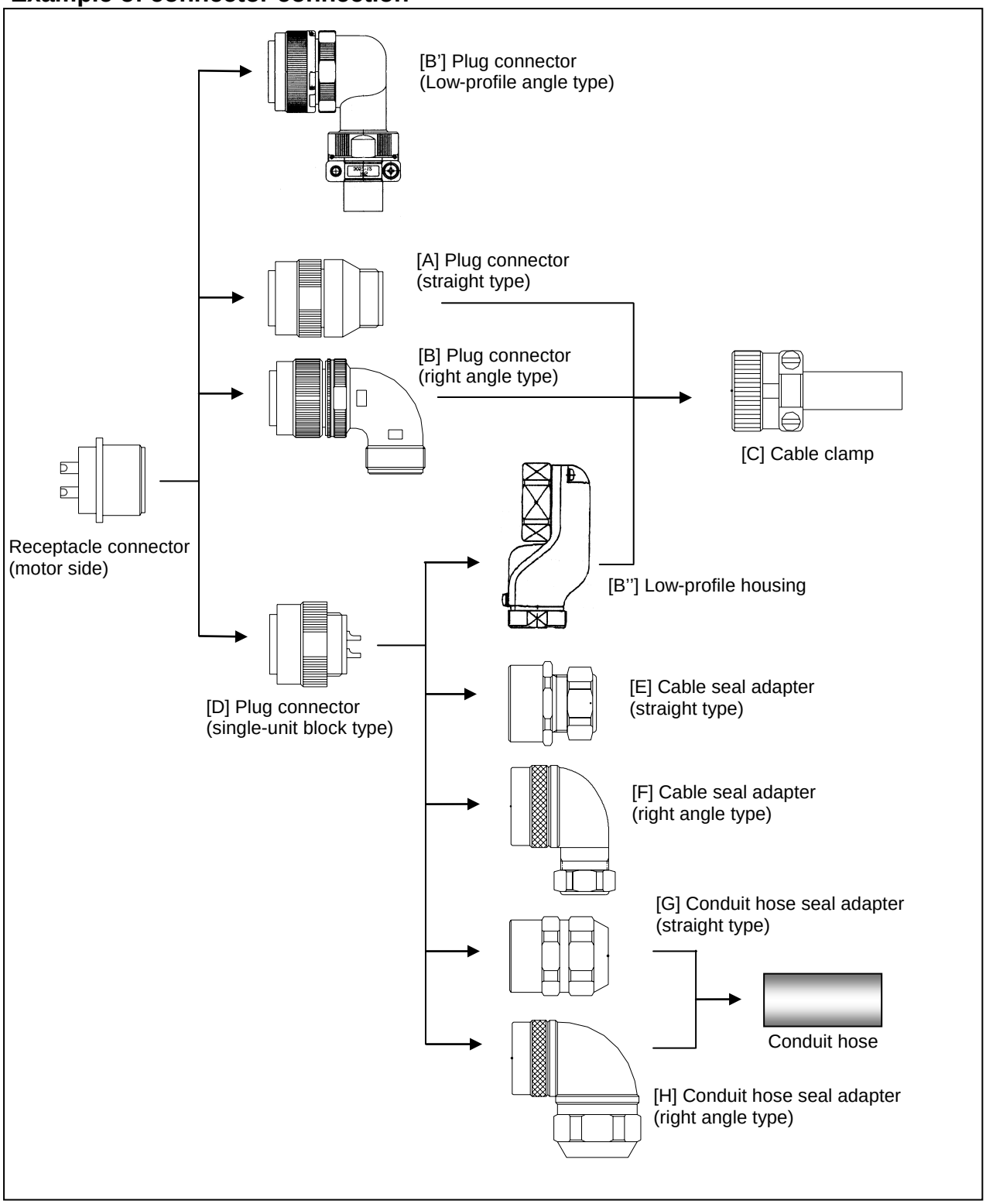




© MyFANUC DC7187A9420041B3806BC8E5C652D376

### Specifications of plug connectors on the cable side (IP67 rated, TUV-approved, bayonet type)

The specifications of the cable-side plug connectors of the "IP67 rated, TUV-approved, bayonet type" of each manufacturer are shown below. For details of the connectors, contact each manufacturer.

| Model Name | [D] Single Block Type Plug Connector | [A] Straight Type Plug Connector | [B] Right angle Type Plug Connector | [C] Cable Clamp |
|---|---|---|---|---|
| Group D | (Japan Aviation Electronics Industry) | | | |
| | JL10-6A18-10SE | JL10-6A18-10SE-EB | JL10-8A18-10SE-EB | (1)JL04-18CK(07)-R<br>(2)JL04-18CK(10)-R<br>(3)JL04-18CK(13)-R<br>(4)JL04-18CK(15)-R |
| | Solder pot diameter ϕ2.6<br>Applicable wire 3.5mm$^2$ or less | | | Compatible cable O.D.<br>(1) ϕ5 to ϕ8<br>(2) ϕ8 to ϕ11<br>(3) ϕ11~ϕ14.1<br>(4) ϕ14.1 to ϕ15 |
| Group E | (Japan Aviation Electronics Industry) | | | |
| | JL10-6A22-22SE | JL10-6A22-22SE-EB<br>(for (1) to (3))<br>JL10-6A22-22SE-EB1<br>(for (4)) | JL10-8A22-22SE-EB<br>(for (1) to (3))<br>JL10-8A22-22SE-EB1<br>(for (4)) | (1)JL04-2022CK(09)-R<br>(2)JL04-2022CK(12)-R<br>(3)JL04-2022CK(14)-R<br>(4)JL04-2428CK(20)-R |
| | Solder pot diameter ϕ5.3<br>Applicable wire 10mm$^2$ or less | | | Compatible cable O.D.<br>(1) ϕ6.5 to ϕ9.5<br>(2) ϕ9.5 to ϕ13<br>(3) ϕ12.9~ϕ16<br>(4) ϕ18~ϕ20 |

* For the connectors of size 22-22, the part number of the plug connector differs depending on the type of cable clamp.

> ⚠ **CAUTION**
> TUV have certified that the plug connectors and cable clamps listed above, when combined with the FANUC AC Servo Motor β*i* series, satisfy the VDE0627 safety standard.



© MyFANUC DC7187A9420041B3806BC8E5C652D376

### Specifications of plug connectors on the cable side (IP67 rated, TUV-approved, screw type)

The specifications of the cable-side plug connectors of the "IP67 rated, TUV-approved, screw type" of each manufacturer are shown below. For details of the connectors, contact each manufacturer.

| Model Name | [D] Single Block Type Plug Connector | [A] Straight Type Plug Connector | [B] Right angle Type Plug Connector | [B'] Low-profile angle type Plug Connector (with clamp) | [B''] Low-profile housing | [C] Cable Clamp |
|---|---|---|---|---|---|---|
| Group D | (Hirose Electric) | | | | | |
| | H/MS3106A 18-10S-D-T(76) | H/MS3106A 18-10S-D-T(73) | H/MS3108B 18-10S-D-T(73) | (1) H/MS08A 18-10S-DT10D(73) (2) H/MS08A 18-10S-DT10D1(73) | | H/MS3057-10A (73) |
| | Solder pot diameter ϕ2.6 Applicable wire 3.45mm$^2$ or less | | | Solder pot diameter ϕ2.5 Compatible cable O.D. (1) ϕ12~ϕ14.3 (2) ϕ10~ϕ12.5 | | Compatible cable O.D. ϕ10.3~ϕ14.3 |
| Group E | (Japan Aviation Electronics Industry) | | | | | |
| | JL04V-6A22-22SE-R (Both (1) and (2)) | (1)JL04V-6A22-22SE-EB-R (2)JL04V-6A22-22SE-EB1-R | (1)JL04V-8A22-22SE-EBH-R (2)JL04V-8A22-22SE-EB1H-R | | (1) JL04-22 EBA (2) Not supported | (1) JL04-2022CK (14)-R (2) JL04-2428CK (20)-R |
| | Solder pot diameter ϕ5.3 Applicable wire 10mm$^2$ or less (Applicable wire 5.5mm$^2$ or less In the case of single block + low-profile housing) | | | | Compatible cable O.D. (1) ϕ12.9~ϕ16, (2) ϕ18~ϕ20 | |

* For the connectors of size 22-22, the part number of the plug connector differs depending on the type of cable clamp.

* The items preceded by the same number in ( ) correspond to each other.

**⚠ CAUTION**

1 TUV have certified that the plug connectors and cable clamps listed above, when combined with the FANUC AC Servo Motor β*i* series, satisfy the VDE0627 safety standard.
Several manufacturers offer other plug connectors. For information about whether the plug connectors satisfy the safety standard when combined with the FANUC α*i* series, contact the corresponding manufacturer.
- Hirose Electric (HRS) : H/MS310 TUV-conforming series
- Japan Aviation Electronics Industry (JAE) : JL04V series
- DDK Ltd. (DDK) : CE05 series



© MyFANUC DC7187A9420041B3806BC8E5C652D376

## Specifications of plug connectors on the cable side (IP67 rated, screw type)

The specifications of the cable-side plug connectors of the "IP67 rated, screw type" of each manufacturer are shown below. For details of the connectors, contact each manufacturer.

| Model Name | [D] Single Block Plug Connector | [A] Straight Type Plug Connector | [B] Right angle Type Plug Connector | [B] Low-profile angle type Plug Connector | [B''] Low-profile housing | [C] Cable Clamp |
|---|---|---|---|---|---|---|
| Group D | (Japan Aviation Electronics Industry) | | | | | |
| | JA06A-18-10S -J1-R | JA06A-18-10S -J1-EB-R | JA08A-18-10S -J1-EBH-R | | JL04V-18 EBA | JL04-18CK (13)-R |
| | (Hirose Electric) | | | | | |
| | H/MS3106A 18-10S(76) | H/MS3106A 18-10S(73) | H/MS3108B 18-10S(73) | H/MS08A18-10 S-DT10D(73) | | H/MS3057 -10A(73) |
| | (DDK Ltd.) | | | | | |
| | D/MS3106A 18-10S(D190) | D/MS3106A 18-10S-BSS | D/MS3108A 18-10S-BAS | | | CE3057 -10A-1-D |
| Group E | (Japan Aviation Electronics Industry) | | | | | |
| | JA06A-22-22S -J1-R | JA06A-22-22S -J1-EB-R | JA08A-22-22S -J1-EBH-R | | JL04V-22 EBA | JL04-2022 CK (14)-R |
| | (Hirose Electric) | | | | | |
| | H/MS3106A 22-22S(73) | H/MS3106A 22-22S(73) | H/MS3108B 22-22S(73) | H/MS08A22-22 S-DT12D(73) | | H/MS3057 -12A(73) |
| | (DDK Ltd.) | | | | | |
| | D/MS3106A 22-22S(D190) | D/MS3106A 22-22S-BSS | D/MS3108A 22-22S-BAS | | | CE3057 -12A-1-D |



© MyFANUC DC7187A9420041B3806BC8E5C652D376

## 2.1.3.3 Connectors for the brake

The connector for the brake for groups A-1, A-2, and C is the same as the power connector. See Subsection 2.1.3.2, "Connectors for power".
The following subsections describe the connectors for the brake for groups B, D, and E.

### (1) Connectors for the brake (for group B)

The models βiS 0.4-B to βiS 1-B use a dedicated connector to connect the built-in brake cable.
The following subsection describes the specifications as a connector kit. These connectors are water-proof when engaged.
To connect the cable, a dedicated crimping tool must be used.
Consider crimping and cable clamp. Also note that there are restrictions.

#### Specifications of connectors for brake

| | | For brake |
|---|---|---|
| Connector body specifications (MOLEX JAPAN Co., Ltd.) | Straight type | 54982-0001 |
| | Right angle type | 55766-0001 |
| Contact specifications (MOLEX JAPAN Co., Ltd.) | | 56052-8300 |
| | Applicable wire size | 0.3 to 0.74 $mm^2$ (AWG22 to AWG19) |
| | Insulation external diameter | ϕ1.2 to ϕ2.0 |
| | Compatible cable O.D. | ϕ6.2 to ϕ6.7 mm |

The following brake connector kit is available.

| | | For brake |
|---|---|---|
| Connector kit specifications (FANUC specification) | Straight type | A06B-6114-K232#S |
| | Right angle type | A06B-6114-K232#E |
| Contents of the connector kit | | Connector body × 1<br>Contact × 3 |

The dedicated tools for this connector are the same as those for the power connector.
See "(2) Connectors for power (for group B)" in Subsection 2.1.3.2.

> ⚠ **CAUTION**
> The contacts are of the type which crimps the covering in addition to the wire. Follow the dimension of the insulation part listed above. An insulation of a diameter outside the above range may be able to be connected depending on the wire or tool, however. For details, contact the connector manufacturer.



© MyFANUC DC7187A9420041B3806BC8E5C652D376

## (2) Connectors for the brake (for groups D and E)

The models β*i*S 8-B to β*i*S 40-B (including HV), β*i*Sc 8-B to β*i*Sc 22-B (including HV), β*i*F 4-B to β*i*F 30-B use a dedicated connector to connect the built-in brake cable.
This connector is water-proof. It is connected by soldering, so no special tool is required.
Consider soldering, cable clamp, and voltage drop. Also note that there are restrictions. The connector for the 24-V brake does not conform to the IEC60034 standard.

### Specifications of connectors for brake

| | | Japan Aviation Electronics Industry | Hirose Electric |
|---|---|---|---|
| Connector specifications | Straight type | JN2DS04FK2-R<br>(Japan Aviation Electronics Industry)<br>A06B-6114-K213#S<br>(FANUC specification) | HR34B-12WPD-4S<br>(Hirose Electric)<br>HR34B-12WPE-4S<br>(Hirose Electric) |
| | Right angle type | JN2FS04FK2-R<br>(Japan Aviation Electronics Industry)<br>A06B-6114-K213#E<br>(FANUC specification) | HR34B-12WLPD-4S<br>(Hirose Electric)<br>HR34B-12WLPE-4S<br>(Hirose Electric) |
| Compatible cable | | AWG#16 or less (1.25mm$^2$ or less)<br>* Solder pot diameter ϕ1.9 | |
| Insulation external diameter | | ϕ2.7 or less | |
| Compatible cable O.D. | | ϕ6.5 to 8.0 | ϕ5.7 to ϕ7.3: HR34B-12WPD-4S<br>HR34B-12WLPD-4S |
| | | | ϕ6.5 to ϕ8.0: HR34B-12WPE-4S<br>HR34B-12WLPE-4S |
| Example of applicable wire | | 300-V two-conductor vinyl heavy-duty power cord cable VCTF (JIS C 3306) or equivalent | |
| Applicable wire size and cable length | | Cable length: 30m or less : 0.75mm$^2$ (AWG#18) | |
| | | Cable length: 50m or less : 1.25mm$^2$ (AWG#16) | |

### Japan Aviation Electronics Industry

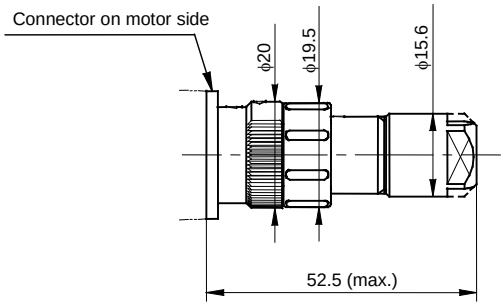


Straight type

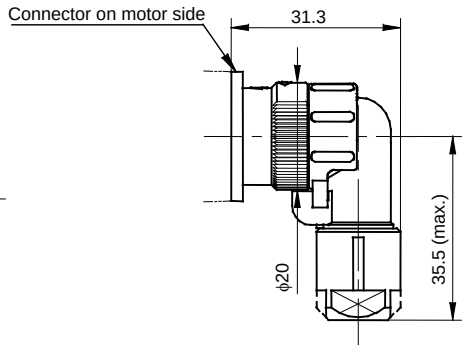


Right angle type



© MyFANUC DC7187A9420041B3806BC8E5C652D376

## Hirose Electric

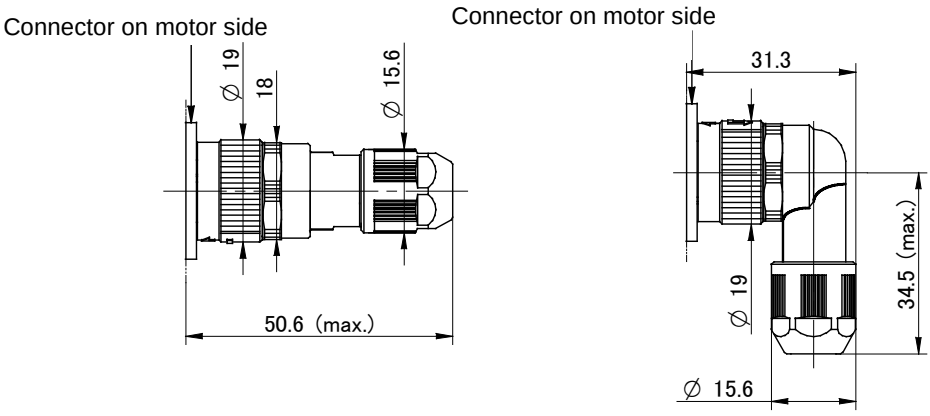


Straight type Right angle type

**⚠ CAUTION**

1 The same body is used for the brake and fan connectors. They differ in the key position to prevent an improper insertion.
2 If the cable length is longer than or equal to 50 m, take measures such as installation of repeaters so that the sum of wire resistance (for both ways) becomes 1.5Ω or less.
3 For details of brakes, see Subsection 1.3.4, "Built-in brake."



© MyFANUC DC7187A9420041B3806BC8E5C652D376

## 2.1.3.4 Connection to a conduit hose

This section gives information on the specifications of several adapters to be connected that are made by conduit hose manufacturers for reference purposes. Before using an adapter, contact the corresponding conduit hose manufacturer.

**For power: seal adapter specifications**

| **Model Name** | | **[E]**<br>**Cable**<br>**Seal adapter**<br>**Straight Type** | **[F]**<br>**Cable**<br>**Seal adapter**<br>**Right angle Type** | **[G]**<br>**Conduit hose**<br>**Seal adapter**<br>**Straight Type** | **[H]**<br>**Conduit hose**<br>**Seal adapter**<br>**Right angle Type** |
|---|---|---|---|---|---|
| Group C | | | | N2BM20-FN4<br>(SANKEI)<br>MAS-SG16-M20<br>(NEOFLEX) | |
| Group D | Plug Connector H/MS3106A 18-10S-D -T(13)<br>* Screw type | C2KD1218<br>(SANKEI)<br>YSO 18-12-14<br>(DAIWA DENGYOU)<br>ACS-12RL-MS18F<br>(NIPPON FLEX)<br>CG12S-JL18<br>(NEOFLEX) | C29KD1218<br>(SANKEI)<br>YLO 18-12-14<br>(DAIWA DENGYOU)<br>ACA-12RL-MS18F<br>(NIPPON FLEX)<br>CG12A-JL18<br>(NEOFLEX) | KMKD1618<br>(SANKEI)<br>MSA 16-18<br>(DAIWA DENGYOU)<br>RCC-104RL-MS18F<br>(NIPPON FLEX)<br>MAS16S-JL18<br>(NEOFLEX) | KM90KD1618<br>(SANKEI)<br>MAA 16-18<br>(DAIWA DENGYOU)<br>RCC-304RL-MS18F<br>(NIPPON FLEX)<br>MAS16A-JL18<br>(NEOFLEX) |
| | Plug Connector JL10-6A18 -10SE<br>* Bayonet type | C2OU1618-FN16<br>(SANKEI)<br>ACS-12JL10-18SE<br>(NIPPON FLEX) | C29OU1618-FN16<br>(SANKEI) | K2OU1618-FN16<br>(SANKEI)<br>MSJL10-16-18<br>(DAIWA DENGYOU)<br>RCC-104JL10-18SE<br>(NIPPON FLEX)<br>MAS-16S-JL18SE<br>(NEOFLEX) | K29OU1618-FN16<br>(SANKEI) |
| Group E | Plug Connector JL04V-6A22 -22SE-R<br>* Screw type | C2KD1622<br>(SANKEI)<br>YSO 22-12-14<br>(DAIWA DENGYOU)<br>ACS-16RL-MS22F<br>(NIPPON FLEX)<br>CG16S-JL22<br>(NEOFLEX) | C29KD1622<br>(SANKEI)<br>YLO 22-12-14<br>(DAIWA DENGYOU)<br>ACA-16RL-MS22F<br>(NIPPON FLEX)<br>CG16A-JL22<br>(NEOFLEX) | KMKD2222<br>(SANKEI)<br>MSA 22-22<br>(DAIWA DENGYOU)<br>RCC-106RL-MS22F<br>(NIPPON FLEX)<br>MAS22S-JL22<br>(NEOFLEX) | KM90KD2222<br>(SANKEI)<br>MAA 22-22<br>(DAIWA DENGYOU)<br>RCC-306RL-MS22F<br>(NIPPON FLEX)<br>MAS22A-JL22<br>(NEOFLEX) |
| | Plug Connector JL10-6A22 -22SE<br>* Bayonet type | C2OU20-22-FN16<br>(SANKEI)<br>ACS-16JL10-22SE<br>(NIPPON FLEX) | C29OU2022-FN16<br>(SANKEI) | K2OU2222-FN16<br>(SANKEI)<br>RCC-106JL10-18SE<br>(NIPPON FLEX)<br>MAS-22S-JL22SE<br>(NEOFLEX) | K29OU2222-FN16<br>(SANKEI) |



© MyFANUC DC7187A9420041B3806BC8E5C652D376

**For signal: seal adapter specifications**

| Model Name | [E] Cable Seal adapter Straight Type | [F] Cable Seal adapter Right angle Type | [G] Conduit hose Seal adapter Straight Type | [H] Conduit hose Seal adapter Right angle Type |
|---|---|---|---|---|
| Common to all models (excluding βiS 0.2 and βiS 0.3) | | | N2KY16-FN3 (SANKEI) PCJN-12-M13F (DAIWA DENGYOU) RQJN-M13-9 RQJN-M13-16 (NEOFLEX) | |

**For brake: seal adapter specifications**

| Model Name | [E] Cable Seal adapter Straight Type | [F] Cable Seal adapter Right angle Type | [G] Conduit hose Seal adapter Straight Type | [H] Conduit hose Seal adapter Right angle Type |
|---|---|---|---|---|
| Common to all models (excluding βiS 0.2 and βiS 0.3) | | | N2KY16-FN3 (SANKEI) PCJN-12-M13F (DAIWA DENGYOU) RQJN-M13-9 RQJN-M13-16 (NEOFLEX) | |



© MyFANUC DC7187A9420041B3806BC8E5C652D376

## 2.1.4 Conditions for Approval Related to the IEC60034 Standard

This Subsection describes the conditions the following FANUC AC servo motor β*i* series must clear before they can be approved for the IEC60034 standard. For details on EMC compliance authorization, refer to the separate manual "Compliance with EMC Directives."

This Subsection, "Conditions for Approval Related to the IEC60034 Standard", consists of the following sections:

2.1.4.1 Types of motors to be approved
2.1.4.2 Approved specifications
2.1.4.3 Connectors required for approval

### 2.1.4.1 Types of motors to be approved

The following FANUC AC Servo Motor β*i*–B/β*i* series can comply with the IEC60034 standard if you follow the descriptions in this chapter.
The TUV mark is printed on the nameplates of the following motors.
The FANUC AC Servo Motor β*i* series has two types of motors: one type is driven by FANUC servo amplifiers (for 200 to 240 VAC) and the other type is driven by FANUC servo amplifiers (400 to 480 VAC).

**β*i*S series (200V)**

| Model name | Motor specification number |
|---|---|
| β*i*S 0.2/5000 | A06B-0111-Bxx3 |
| β*i*S 0.3/5000 | A06B-0112-Bxx3 |
| β*i*S 0.4/5000-B | A06B-2114-Bxx3 |
| β*i*S 0.5/6000-B | A06B-2115-Bxx3 |
| β*i*S 1/6000-B | A06B-2116-Bxx3 |
| β*i*S 2/4000-B | A06B-2061-Bxx3 |
| β*i*S 4/4000-B | A06B-2063-Bxx3 |
| β*i*S 8/3000-B | A06B-2075-Bxx3 |
| β*i*S 12/2000-B | A06B-2077-Bxx3 |
| β*i*S 12/3000-B | A06B-2078-Bxx3 |
| β*i*S 22/2000-B | A06B-2085-Bxx3 |
| β*i*S 22/3000-B | A06B-2082-Bxx3 |
| β*i*S 30/2000-B | A06B-2087-Bxx3 |
| β*i*S 40/2000-B | A06B-2089-Bxx3 |

NOTE) Excluding the IP67 specification of β*i*S 0.2/5000 and β*i*S 0.3/5000

**β*i*S series (400V)**

| Model name | Motor specification number |
|---|---|
| β*i*S 2/4000HV-B | A06B-2062-Bxx3 |
| β*i*S 4/4000HV-B | A06B-2064-Bxx3 |
| β*i*S 8/3000HV-B | A06B-2076-Bxx3 |
| β*i*S 12/3000HV-B | A06B-2079-Bxx3 |
| β*i*S 22/2000HV-B | A06B-2086-Bxx3 |
| β*i*S 22/3000HV-B | A06B-2083-Bxx3 |
| β*i*S 30/2000HV-B | A06B-2088-Bxx3 |
| β*i*S 40/2000HV-B | A06B-2089-Bxx3 |



© MyFANUC DC7187A9420041B3806BC8E5C652D376

**βiSc series (200V)**

| Model name | Motor specification number |
|---|---|
| βiSc 2/4000-B | A06B-2061-Bx07 |
| βiSc 4/4000-B | A06B-2063-Bx07 |
| βiSc 8/3000-B | A06B-2075-Bx07 |
| βiSc 12/2000-B | A06B-2077-Bx07 |
| βiSc 12/3000-B | A06B-2078-Bx07 |
| βiSc 22/2000-B | A06B-2085-Bx07 |

**βiSc series (400V)**

| Model name | Motor specification number |
|---|---|
| βiSc 2/4000HV-B | A06B-2062-Bx07 |
| βiSc 4/4000HV-B | A06B-2064-Bx07 |
| βiSc 8/3000HV-B | A06B-2076-Bx07 |
| βiSc 12/3000HV-B | A06B-2079-Bx07 |

**βiF series (200V)**

| Model name | Motor specification number |
|---|---|
| βiF 4/3000-B | A06B-2051-Bx03 |
| βiF 8/2000-B | A06B-2052-Bx03 |
| βiF 12/2000-B | A06B-2053-Bx03 |
| βiF 22/2000-B | A06B-2054-Bx03 |
| βiF 30/1500-B | A06B-2055-Bx03 |

## 2.1.4.2 Approved specifications

The following specifications are approved for the IEC60034 standard.

### (1) Motor speed (IEC60034-1)

The "rated-output speed" and "allowable maximum speed" are given on the data sheet in Chapter 1, “SPECIFICATIONS.”
The rated-output speed is the speed which specifies the rated output.
The allowable maximum speeds are specified in such a way that the approval conditions of the IEC60034-1 standard, as they relate to rotational speed, are satisfied.
When the allowable maximum speeds are used, the characteristics are not guaranteed.

### (2) Output (IEC60034-1)

The "rated output" available with a motor is given on the data sheet in Chapter 1, “SPECIFICATIONS.”
The rated output is guaranteed as continuous output for the rated-output speed under Insulation Class F.

The output in an intermittent operation range is not specified.

### (3) Protection type (IEC60034-5)

Motor protection confirms to IP65. (The pulsecoder connectors other than those of βiS 0.2 and βiS 03 are water-proof when engaged. The power connectors and pulsecoder connectors of βiS 0.2 and βiS 03 are not water-proof even when engaged.)

The protection types mentioned above do not apply to the part that the motor axis penetrates.

IP4□:Machine protected from introduction of solid foreign matter over 1.0 mm
Electric cables and wires with a diameter or thickness greater than 1.0 mm do not enter.



© MyFANUC DC7187A9420041B3806BC8E5C652D376

IP6□:Completely dust-proof machine
This structure completely prevents dust from entering the machine.

IP□4:Machine protected from water spray
Water sprayed on the motor from any direction will have no harmful effect.

IP□5:Sprinkle-proof machines
A sprinkle-proof machine shall not suffer inadvertent influence when they are exposed to water sprinkled from nozzles at any angle to the machine.

The conditions of the IP□5 type test are as follows:

| | |
|---|---|
| Nozzle inside diameter | 6.3 [mm] |
| Amount of sprinkled water | 0.0125 [$m^3$/min] |
| Water pressure at the nozzle | 30 [kPa] |
| Test time for a 1-$m^2$ surface area of the machine to be tested | 1 [min] |
| Minimum test time | 3 [min] |
| Distance between the nozzle and machine | Approximately 3 [m] |

**⚠ CAUTION**
IP□5 evaluates machines for waterproofness in a short-term test as described above, allowing chances that the machines may get dry after the test. If a machine is exposed to liquids other than water or so continuously to water that it cannot get dry, it may suffer inadvertent influence even if the degree of exposure is low.

## (4) Cooling method (IEC60034-6)

The cooling method is fully-closed, natural air cooling for all models. The IC code is IC410.

## (5) Mounting method (IEC60034-7)

All motors can be mounted as follows:
IMB5: Flange mounting with the shaft facing sideways (from the rear)
IMV1: Flange mounting with the shaft facing upward (from the rear)
IMV3: Flange mounting with the shaft facing downward (from the rear)

## (6) Heat protection (IEC60034-11)

The FANUC AC servo motor conforms to the heat protection standard (IEC60034-11) by using an overheat protection circuit with temperature detection (overheat alarm) or an overheat protection circuit with current detection (OVC alarm).

## (7) Grounding (IEC60204-1)

For FANUC AC Servo Motor, continuity between the ground terminal and housing of the power connector has been checked based on the IEC60204-1 safety standard and it has been ensured that it satisfies the standard.
The ground wire to be connected to the motor must have a diameter not smaller than the diameter of each phase wire.

## (8) Remarks

For details on EMC compliance authorization, refer to the separate manual "Compliance with EMC Directives"
Mechanical and electrical safety of each motor should be evaluated after the motor is mounted on the machine.



© MyFANUC DC7187A9420041B3806BC8E5C652D376

## 2.1.4.3 Connectors required for approval

### Power connector and fan connector

The power must be connected to the motor with a TUV-approved connector and a cable clamp. For details, see Subsection 2.1.1, "Connecting a Servo Motor".

- The TUV-approved plug connectors and cable clamps in Subsection 2.1.3, "Connectors on the Cable Side", are approved by TUV that they conform to the safety standard VDE0627 when combined with the FANUC AC Servo Motor β*i*–B/β*i* series. As indicated in the table below, several manufacturers offer other plug connectors. For information about whether the plug connectors satisfy the safety standard when combined with the FANUC AC servo motor β*i*–B/β*i* series, contact the corresponding manufacturer. Contact the manufacturers if you require details of their products.

| Manufacturer | Product series name |
|---|---|
| Tyco Electronics Japan G.K. | Dynamic Series |
| MOLEX JAPAN Co., Ltd. | 5.08 pitch motor connector series |
| Hirose Electric (HRS) | H/MS310 TUV-conforming series |
| Japan Aviation Electronics Industry (JAE) | JL04V series |
| DDK Ltd. (DDK) | CE05 series |

- If a cable or conduit hose seal adapter is used, consult an appropriate connector maker.



© MyFANUC DC7187A9420041B3806BC8E5C652D376

# 2.2 MOTOR SELECTION

A servo motor should be selected based on the load on the servo motor, rapid traverse rate, unit, and other conditions. The load on the servo motor is the following types of torque: steady-state load torque (including gravity and friction), acceleration torque required for acceleration/deceleration, and, for a machine tool, cutting torque by cutting force.
When selecting a motor, calculate these loads accurately according to the instructions in this chapter and check that the calculated values satisfy the conditions for selecting a serve motor described in this chapter.
This chapter describes how to calculate the load and other conditions using a table with a horizontal axis as an example.

## 2.2.1 Conditions for Selecting a Servo Motor

The conditions for selecting a servo motor are given below.

### [Selection condition 1] Steady-state load torque

- **The steady-state load torque including mechanical friction and gravity must fall within approximately 70% of the continuous torque (at low speed) of a motor.**
  If the steady-state load torque is close to the continuous torque (at low speed), the root-mean-square value of the total torque including the acceleration torque is more likely to exceed the continuous torque (at low speed).
  Along the vertical axis, the load may be increased during lifting and at stop due to a mechanical factor. In this case, the theoretically calculated gravity retaining torque must be 60% (less than 60% in some cases) of the continuous torque (at low speed) of a motor.
  This figure of "within 70% of the steady-state load torque rating" is for reference only. Determine the appropriate torque based upon actual machine tool conditions.

### [Selection condition 2] Motor speed

- **The motor speed must not exceed the maximum motor speed (rated speed during continuous operation).**
  Calculate the motor speed and check that the speed does not exceed the maximum motor speed. For continuous operation, check that the speed does not exceed the rated speed.

### [Selection condition 3] Load moment of inertia ratio

- **The load moment of inertia ratio must be appropriate.**
  The ratio of rotor moment of inertia and load moment of inertia (load moment of inertia ratio) greatly affects the controllability of the motor as well as the acceleration/deceleration time in rapid traverse.
  When the load moment of inertia does not exceed three times the rotor moment of inertia, an ordinary metal cutting machine can be used without problems, while the controllability may have to be lowered a little in some cases.
  In the case of a machine for cutting a curve at a high speed, such as a router for woodworking, however, it is appropriate to keep the load moment of inertia smaller than or equal to the rotor moment of inertia.
  If the load moment of inertia exceeds three to five times the rotor moment of inertia, the controllability of the motor may be adversely affected. If the load moment of inertia is much greater than three times the rotor moment of inertia, adjustment within the normal range may be insufficient. Avoid using a machine with such a great load moment of inertia.
  There are limitations on the load moment of inertia ratio when the dynamic brake is used. If you want to drive the motor with a load moment of inertia ratio greater than the allowable value, contact FANUC.



© MyFANUC DC7187A9420041B3806BC8E5C652D376

## [Selection condition 4] Acceleration torque

- **Acceleration can be made with a desired time constant.**
  Since the load torque generally helps deceleration, if acceleration can be executed with a desired time constant, deceleration can be made with the same time constant, through both acceleration and deceleration should be considered in principle. Calculate the acceleration torque and check that the torque required for acceleration is within the intermittent operating zone of the motor.

## [Selection condition 5] Root-mean-square value of torque

- **The root-mean-square value of torque in a cycle must be sufficiently greater than the continuous torque (at low speed).**
  A motor gets hot in proportion to the square of the torque. For a servo motor for which the load condition always changes, the calculated root-mean-square value of torque in a cycle must be sufficiently greater than the continuous torque (at low speed).
  Pay attention, in particular, when the cutting load, acceleration/deceleration condition, and other load conditions variously change in a cycle.
  When the desired frequency of positioning in rapid traverse becomes greater, the ratio of the time during which the acceleration/deceleration torque is being applied to the entire operation time increases and the root-mean-square value of torque increases. In this case, increasing the acceleration/deceleration time constant is effective to decrease the root-mean-square value of torque.

## [Selection condition 6] Percentage duty cycle and ON time with the maximum cutting torque

- **The time during which the table can be moved with the maximum cutting torque (percentage duty cycle and ON time) must be within a desired range.**
  The continuously applied torque such as the cutting load may exceed the continuous torque (at low speed). In this case, use overload duty curves to check how the ratio (percentage duty cycle) of the load applying time to the no-load applying time and the time during which the load is being applied (ON time) change.

## [Selection condition 7] Dynamic brake stop distance

- **The stop distance when the dynamic brake is applied at an emergency stop must be within a desired range.**
  If the stop distance is not within the desired range, the machine may cause a collision at an emergency stop.

## Along the vertical axis (for motors with a brake)
## [Selection condition 8] Brake retaining torque

- **The load torque should be within the brake retaining torque.**
  If this cannot be satisfied, counter balance and so forth should be taken into consideration.

The following sections explain the procedure for selecting a motor sequentially for each selection condition. Determine whether each selection condition above is satisfied.



© MyFANUC DC7187A9420041B3806BC8E5C652D376

**NOTE**

When handling units, be extremely careful not to use different systems of units. For example, the weight of an object should be expressed in [kg] in the SI system of units because it is handled as "mass" or [kgf] in the gravitational system of units because it is handled as "force." Moment of inertia is expressed in [kg·m$^2$] in the SI system of units or in [kgf·cm·sec$^2$] in the gravitational system of units.

In this manual, both systems of units are written together to support them.

$$( 1\mathrm{kg} \cdot \mathrm{m}^2 = \frac{100}{9.8} \mathrm{kgf} \cdot \mathrm{cm} \cdot \mathrm{s}^2 )$$



© MyFANUC DC7187A9420041B3806BC8E5C652D376

# 2.2.2 Selecting a Motor

## Sample model for calculations for selecting a servo motor

The following subsections explain how to calculate conditions for selecting a servo motor best suited for a table with a horizontal axis with the following specifications.

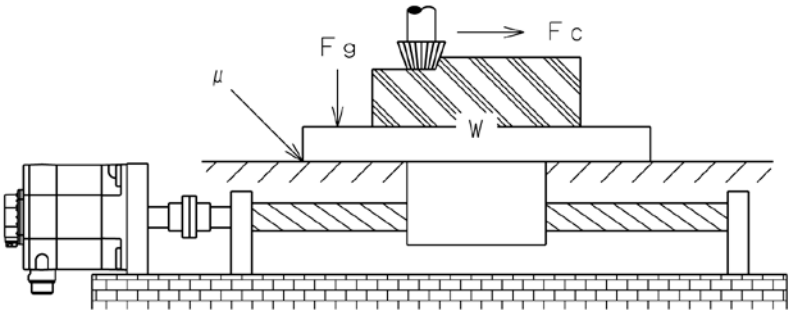


**Sample mechanical specifications of the table and workpiece**

| | | |
|---|---|---|
| W : | Weight of movable parts (table and workpiece) | =2940[N]=300[kgf] |
| w : | Mass of movable parts (table and workpiece) | =300[kg] |
| μ : | Friction coefficient of the sliding surface | =0.05 |
| η : | Efficiency of the driving system (including a ball screw) | =0.9 |
| $F_g$ : | Gib fastening force (kgf) | =490[N]=50[kgf] |
| $F_c$ : | Thrust counter force caused by the cutting force (kgf) | =980[N]=100[kgf] |
| $F_{cf}$: | Force by which the table is pressed against the sliding surface, caused by the moment of cutting force | =294[N]=30[kgf] |
| $Z_1/Z_2$ : | Gear reduction ratio | = 1/1 |
| $T_f$ : | Friction torque applied to the motor shaft | =0.8[N·m]=8[kgf·cm] |

**Sample specifications of the feed screw (ball screw)**

| | | |
|---|---|---|
| $D_b$ : | Shaft diameter | $=25\times10^{-3}$[m]=25[mm] |
| $L_b$ : | Shaft length | =1[m]=1000[mm] |
| P : | Pitch | $=20\times10^{-3}$[m/rev]=20[mm/rev] |

**Sample specifications of the operation of the motor shaft**

| | | |
|---|---|---|
| $T_a$ : | Acceleration torque | [N·m][kgf·cm] |
| V : | Workpiece rapid traverse rate | =60[m/min] |
| $V_m$ : | Motor speed in rapid traverse | [$min^{-1}$] |
| $t_a$ : | Acceleration time | =0.10[s] |
| $J_M$ : | Moment of inertia of rotor | [$kg\cdot m^2$][$kgf\cdot cm\cdot sec^2$] |
| $J_L$ : | Load moment of inertia | [$kg\cdot m^2$][$kgf\cdot cm\cdot sec^2$] |
| $k_s$ : | Position loop gain | =30[$s^{-1}$] |



© MyFANUC DC7187A9420041B3806BC8E5C652D376

## 2.2.2.1 Calculating the load torque

When a part moves along an axis at a constant speed, the torque obtained by multiplying the weight of the workpiece driving section by the friction coefficient is always applied. On a vertical or slanted axis, the motor keeps producing torque because it works against gravity. In addition, the motor also produces torque when the machine on the horizontal axis stops in proportion to the load friction. This continuously applied load torque is the steady-state load torque.
In cutting feed, the load torque is applied by cutting thrust. This is the cutting torque.
The above types of torque are generically called the load torque. The load torque applied to the motor shaft is generally given by the following equation:

$$T_m = \frac{F \times l}{2\pi\eta} + T_f$$

$T_m$ : Load torque applied to the motor shaft [N·m]
F : Force required to move a movable part (table or tool post) along the axis [N]
$l$ : Traveling distance of the machine tool per revolution of the motor = P × ($Z_1/Z_2$) [m/rev]
$\eta$ : Efficiency of the driving system (including a ball screw)
$T_f$ : Friction torque of the nut of the ball screw or bearing applied to the motor shaft (input if necessary) [N·m]

The force (F) is mainly given by the following equations:

When cutting is not executed (vertical axis):

$F=(w-w_c)g=W-W_c$

$w_c$ : Mass of the counterbalance [kg]
Wc : Weight of the counterbalance [kgf]

When cutting is not executed (horizontal axis):

$F=\mu(W+F_g)$

When cutting is in progress (horizontal axis) (constant load + cutting thrust):

$F=F_c+\mu(W+F_g+F_{cf})$

### [Example of calculation for condition 1] Steady-state load torque

For a table with a horizontal axis as given as a model, the steady-state load torque when cutting is not executed is calculated as follows:

Example F $=0.05 \times (2940+490)=171.5[N]=17.5[kgf]$
$T_m = (171.5 \times 20 \times 10^{-3} \times 1) \div (2 \times \pi \times 0.9)+0.8$
$=1.4[Nm]=14.3[kgfcm]$

### Cautions in calculating the load torque

When calculating the torque, take the following precautions:

- Allow for the friction torque caused by the gib fastening force ($F_g$).
  The torque calculated only from the weight of a movable part and the friction coefficient is generally quite small. The gib fastening force and precision of the sliding surface may have a great effect on the torque.

- The pre-load of the bearing or nut of the ball screw, pre-tension of the screw, and other factors may make $T_{bf}$ of the rolling contact considerable.
  In a small, lightweight machine tool, the friction torque will greatly affect the entire torque.



© MyFANUC DC7187A9420041B3806BC8E5C652D376

- Allow for an increase in friction on the sliding surface ($F_{cf}$) caused by the cutting resistance. The cutting resistance and the driving force generally do not act through a common point as illustrated below. When a large cutting resistance is applied, the moment increases the load on the sliding surface.
  When calculating the torque during cutting, allow for the friction torque caused by the load.

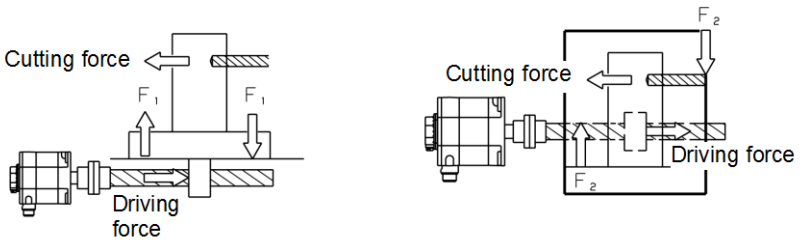


- The feedrate may cause the friction torque to vary greatly. Obtain an accurate value by closely examining variations in friction depending on variations in speed, the mechanism for supporting the table (sliding contact, rolling contact, static pressure, etc.), material of the sliding surface, lubricating system, and other factors.

- The friction torque of a single machine varies widely due to adjustment conditions, ambient temperature, and lubrication conditions. Collect a great amount of measurement data of identical models so that a correct load torque can be calculated. When adjusting the gib fastening force and backlash, monitor the friction torque. Avoid generating an unnecessarily great torque.

## 2.2.2.2 Calculating the motor speed

Calculate the motor speed using the movable part rapid traverse rate and traveling distance per revolution of the motor and check that the calculated motor speed does not exceed the maximum motor speed (rated speed for continuous operation).

$$V_m = \frac{V}{l}$$

$V_m$ : Motor speed in rapid traverse [$min^{-1}$]
$V$ : Workpiece rapid traverse rate [m/min]
$l$ : Traveling distance per revolution of the motor [m/rev]= $P \times Z_1/Z_2$

### [Example of calculation for condition 2] Motor speed

When V is 60 [m/min] and l is $P \times Z_1/Z_2 = 0.020 \times 1/1 = 0.020$ [m/rev], $V_m$ is 60/0.020 = 3000 $min^{-1}$.
Then, select a motor whose load torque when cutting is not executed (continuous torque (at low speed)) is 1.4 [N·m] and whose maximum speed is at least 3000 [$min^{-1}$] from the data sheet. The β*i*S 8/3000-B (with a continuous torque (at low speed) of 7.0 [N·m]) is provisionally selected with considering the acceleration/deceleration condition described in the following subsection.



© MyFANUC DC7187A9420041B3806BC8E5C652D376

## 2.2.2.3 Calculating the load moment of inertia

Unlike the load torque, an accurate load moment of inertia can be obtained just by calculation. The moment of inertia of any object moved by the revolution of a driving motor forms the load moment of inertia of the motor, regardless of whether the object is rotated or moved along a straight line. The load moment of inertia can be obtained by calculating the moment of inertia of each driven object individually and adding all those moment values according to a set of rules. The moment of inertia of almost all objects, including the several basic ones shown below, can be calculated in this way.

- **Moment of inertia of a cylindrical object (ball screw, gear, coupling, etc.)**

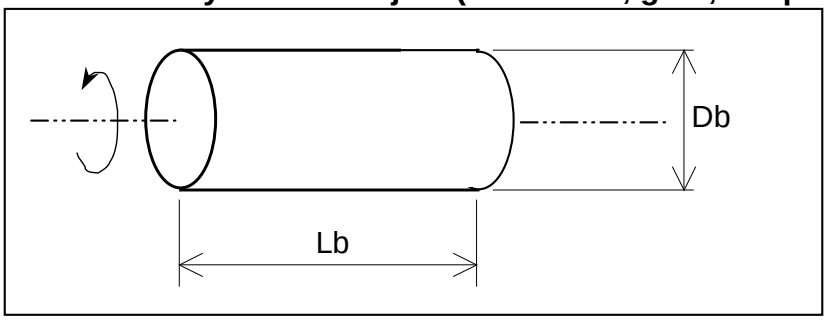


The moment of inertia of a cylindrical object rotating about its central axis is calculated as follows:

—SI unit————————————————————————————

$$J_b = \frac{\pi \gamma_b}{32} D_b^4 L_b \qquad [\mathrm{kg \cdot m^2}]$$

$J_b$ : Moment of inertia [kg·m$^2$]
$\gamma_b$ : Weight of the object per unit volume [kg/m$^3$]
$D_b$ : Diameter of the object [m]
$L_b$ : Length of the object [m]

—Gravitational system of units————————————————————————

$$J_b = \frac{\pi \gamma_b}{32 \times 980} D_b^4 L_b \qquad [\mathrm{kgf \cdot cm \cdot s^2}]$$

$J_b$ : Moment of inertia [kgf·cm·s$^2$]
$\gamma_b$ : Weight of the object per unit volume [kg/cm$^3$]
$D_b$ : Diameter of the object [cm]
$L_b$ : Length of the object [cm]

### [Example of calculation for condition 3-1] Load moment of inertia

Example)

When the shaft of a ball screw is made of steel ($\gamma_b$=7.8×10$^3$[kg/m$^3$]), moment of inertia $J_b$ of the shaft is calculated as follows:
When $D_b$=0.040[m], $L_b$=1[m],
Jb=7.8×10$^3$×π÷32×0.040$^4$×1=0.00196[kg·m$^2$] (=0.0200[kgf·cm·s$^2$])

$$(1\mathrm{kg \cdot m^2} = \frac{100}{9.8}\mathrm{kgf \cdot cm \cdot s^2})$$

- **Moment of inertia of a heavy object moving along a straight line (table, workpiece, etc.)**



© MyFANUC DC7187A9420041B3806BC8E5C652D376

—SI unit————————————————————————————

$$J_b = w \times \left(\frac{l}{2\pi}\right)^2 \quad [\text{kg·m}^2]$$

$w$ : Mass of the object moving along a straight line [kg]
$l$ : Traveling distance along a straight line per revolution of the motor [m]

—Gravitational system of units————————————————————————

$$J_b = \frac{W}{980} \times \left(\frac{l}{2\pi}\right)^2 \quad [\text{kgf·cm·s}^2]$$

W : Weight of the object moving along a straight line [kgf]
$l$ : Traveling distance along a straight line per revolution of the motor [cm]

## [Example of calculation for condition 3-2] Load moment of inertia

Example)

When w is 1200 [kg] and $l$ is 20 [mm], the moment of inertia $J_w$ of a table and workpiece is calculated as follows:

$J_w = 300 \times (0.020 \div 2 \div \pi)^2 = 0.00304$ [kg·m$^2$] = 0.0310[kgf·cm·s$^2$]

### - Moment of inertia of an object whose speed is decelerated or accelerated with respect to the motor shaft

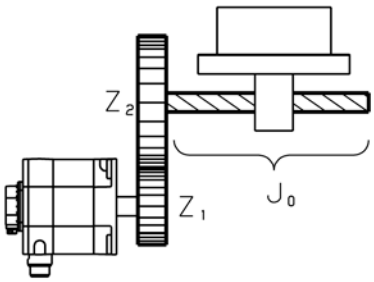


The moment of inertia applied to the motor shaft for $J_O$ is calculated as follows:

$$J = \left(\frac{Z_1}{Z_2}\right)^2 \times J_0 \quad or \quad \left(\frac{1}{Z}\right)^2 \times J_0$$

$J_o$ : Moment of inertia before deceleration
$Z_1$,$Z_2$ : Number of teeth when the gear connection
1/Z : Deceleration ratio

### - Moment of inertia of a cylindrical object whose center of rotation is displaced

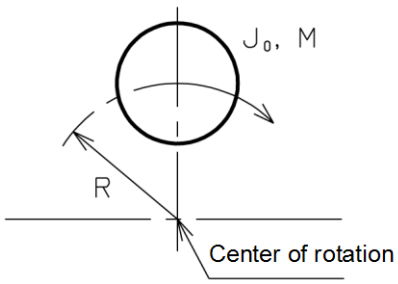




© MyFANUC DC7187A9420041B3806BC8E5C652D376

$$J = J_0 + MR^2$$

$J_o$ : Moment of inertia around the center of the cylindrical object
M : Weight of the object
R : Radius of rotation

The above equation is used for such purposes as to calculate the moment of inertia of a large gear which is hollowed out in order to reduce the moment of inertia and weight.
The sum of the moment of inertia values calculated above is the load moment of inertia J for accelerating the motor.

### - Cautions regarding the limitations on the load moment of inertia

The load moment of inertia has a great effect on the controllability of the motor as well as the time for acceleration/deceleration in rapid traverse. Specifically, if the load moment of inertia becomes greater, a change in the specified speed causes the motor to take more time to reach the new specified speed. When a machine tool is moved along two axes at a high speed to cut a curve such as an arc, a larger error occurs than if the moment of inertia is smaller.
Normally, when the load moment of inertia is smaller than or equal to the rotor moment of inertia of the motor, the problems mentioned above do not occur. When the load moment of inertia does not exceed three times the rotor moment of inertia, the controllability may have to be lowered a little but this does not adversely affect the operation of an ordinary metal cutting machine. In the case of a machine for cutting a curve at a high speed, such as a router for woodworking, however, it is appropriate to keep the load moment of inertia smaller than or equal to the rotor moment of inertia.
If the load moment of inertia exceeds three to five times the rotor moment of inertia, the controllability of the motor may be adversely affected. If the load moment of inertia is much greater than three times the rotor moment of inertia, adjustment within the normal range may be insufficient. Avoid using a machine with such a great moment of inertia.
There are limitations on the load moment of inertia ratio when the dynamic brake is used. If you want to drive the motor when a load moment of inertia ratio is greater than five times, contact FANUC.

### [Example of calculation for condition 3-3] Load moment of inertia ratio

Since the sum of $J_b$ and $J_w$ obtained in calculation examples 3-1 and 3-2 is the load moment of inertia $J_L$, the load moment of inertia can be calculated as follows:

$J_L = 0.00030 + 0.00304 = 0.00334$ [kgm$^2$]

Since the rotor moment of inertia of β*i*S 8/3000-B is 0.00117 [kgm$^2$], the load moment of inertia ratio is 2.85 times, which is within the allowable range.

## 2.2.2.4 Calculating the acceleration torque

Calculate the acceleration torque required for the motor to accelerate and then obtain the torque required for acceleration by calculating the total torque including the steady-state load torque calculated before. Next, confirm the result is included in the intermittent operation area for the motor.

### (1) Calculating acceleration torque

Calculate the angular acceleration, based on the assumption that the motor shaft operates ideally in the acceleration/deceleration mode determined by the NC. Multiply the angular acceleration by the total moment of inertia (rotor moment of inertia + load moment of inertia) to obtain the acceleration torque.
In rapid traverse, there are linear acceleration/deceleration and feed-forward during rapid traverse + bell-shaped acceleration/ deceleration. The equations for calculating the acceleration torque in each mode are given below.



© MyFANUC DC7187A9420041B3806BC8E5C652D376

- **Acceleration torque in linear acceleration/deceleration**

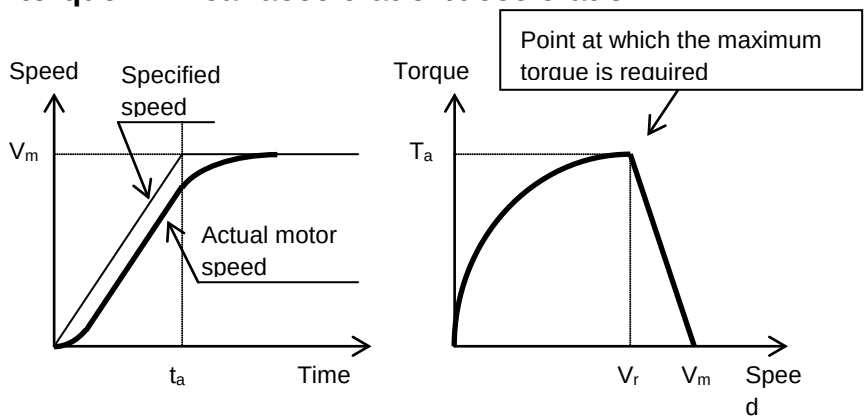


When the torque is $T_a$ and the speed is $V_r$ in the above figure, the maximum torque is required. The equations for calculating $T_a$ and $V_r$ are given below:

$$T_a = V_m \times \frac{2\pi}{60} \times \frac{1}{t_a} \times (J_M + J_L / \eta) \times (1 - e^{-k_s \cdot t_a})$$

$$V_r = V_m \times \{1 - \frac{1}{t_a \cdot k_s}(1 - e^{-k_s \cdot t_a})\}$$

$T_a$ : Acceleration torque [Nm]
$V_m$ : Motor speed in rapid traverse [$min^{-1}$]
$t_a$ : Acceleration time [sec]
$J_M$ : Moment of inertia of rotor [$kgm^2$]
$J_L$ : Load moment of inertia [$kgm^2$]
$V_r$ : Motor speed at which the acceleration torque starts to decrease [$min^{-1}$]
$k_s$ : Position loop gain [$sec^{-1}$]
$\eta$ : Machine tool efficiency
e : base of a natural logarithm (≒ 2.71)

## [Example of calculation for condition 4-1] Example of calculation

Try to perform linear acceleration/deceleration under the following condition.

$V_m$= 3000 [$min^{-1}$]
$t_a$ = 0.1 [s]
$k_s$=30 [$s^{-1}$]
$J_L$= 0.00334[$kgm^2$]

Select the β*i*S 8/3000-B provisionally selected in example of calculation <1>.
Since the rotor moment of inertia $J_M$ is 0.00117 [$kgm^2$] for β*i*S 8/3000, $T_a$ and $V_r$ are as follows.

$T_a$ = 3000 × (2π/60) × (1/0.1) × (0.00117+0.00334 ÷ 0.9) × (1-$e^{-30\times0.1}$)
= 14.6[Nm]=149[kgfcm]
$V_r$ = 3000 × {1-1/(0.1 × 30) × (1-$e^{-30\times0.1}$)}=2050[$min^{-1}$]



© MyFANUC DC7187A9420041B3806BC8E5C652D376

- **Acceleration torque in feed-forward during rapid traverse + bell-shaped acceleration/deceleration**

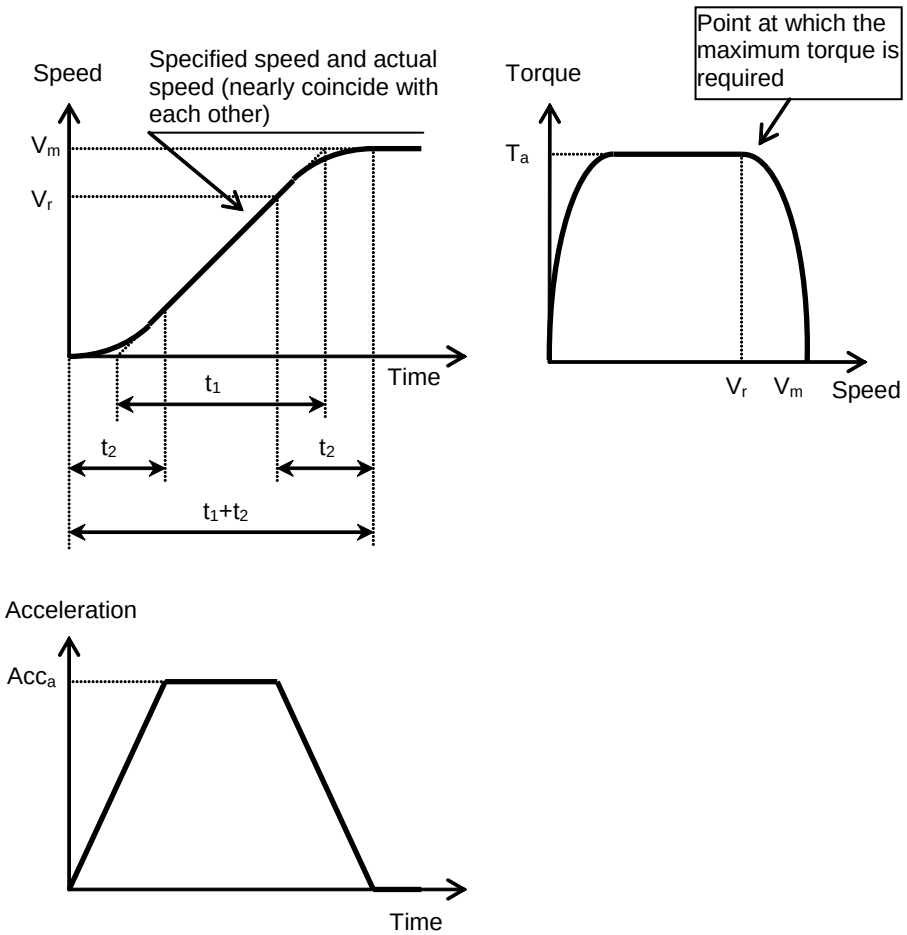


When the feed-forward coefficient is large enough, the acceleration torque in feed-forward during rapid traverse + bell-shaped acceleration/deceleration can approximate to the value obtained with the feed-forward coefficient = 1. When the feed-forward coefficient is 1, the equations for calculating the acceleration torque ($T_a$), speed ($V_r$), and maximum workpiece acceleration ($Acc_a$) are given below:

$$T_a = V_m \times \frac{2\pi}{60} \times \frac{1}{t_1} \times (J_M + J_L / \eta)$$

$$V_r = V_m \times (1 - \frac{t_2}{2t_1})$$

$$Acc_a = V_m \times \frac{1}{60} \times \frac{1}{t_1} \times P$$

$T_a$ : Acceleration torque [Nm]
$V_m$ : Motor speed in rapid traverse [$min^{-1}$]
$t_1$ : Acceleration time constant T1 [sec]
$t_2$ : Acceleration time constant T2 [sec]
$J_M$ : Moment of inertia of rotor [$kgm^2$]
$J_L$ : Load moment of inertia [$kgm^2$]
$\eta$ : Machine tool efficiency
$V_r$ : Motor speed at which the acceleration torque starts to decrease [$min^{-1}$]
$Acc_a$ : Maximum workpiece acceleration [$m/sec^2$] = [G]
P : Pitch [m/rev]



© MyFANUC DC7187A9420041B3806BC8E5C652D376

(Reference)

Minimizing $t_1$ and increasing $t_2$ by the same amount allows the maximum workpiece acceleration ($Acc_a$) to be increased and the motor speed at which the acceleration torque starts to decrease ($V_r$) to be decreased. This allows the efficient use of the motor acceleration torque.
If $t_2$ is too large, the positioning completion time ($t_1 + t_2$) tends to increase.
Consequently, achieving a balance between $t_1$ and $t_2$ is effective in obtaining required specifications of the machine.

## (2) Calculating the torque required by the motor shaft in acceleration

To obtain the torque required by the motor shaft (T), add the steady-state load torque ($T_m$) to the acceleration torque ($T_a$). (Cutting torque Tcf is assumed not to be applied.)

| | |
|---|---|
| $T = T_a + T_m$ | |
| T | : Torque required by the motor axis |
| $T_a$ | : Acceleration torque |
| $T_m$ | : Steady-state load torque |

## [Example of calculation for condition 4-2] Acceleration torque

When $T_m$ is 1.4 [N·m] as calculated in example of calculation 1 and $T_a$ is 14.6 [N·m] as calculated in example of calculation 4-1, the acceleration torque (T) is calculated as follows:

T = 14.6[N·m] + 1.4[N·m] = 16.0[N·m]

The speed when the maximum torque is required ($V_r$) is 2050[$min^{-1}$].

The speed-torque characteristics of the β*i*S 8/3000-B, given below, show that the point of 16.0[Nm]/ 2050[$min^{-1}$] is beyond the intermittent operating zone of the β*i*S 8/3000-B (the torque is insufficient).

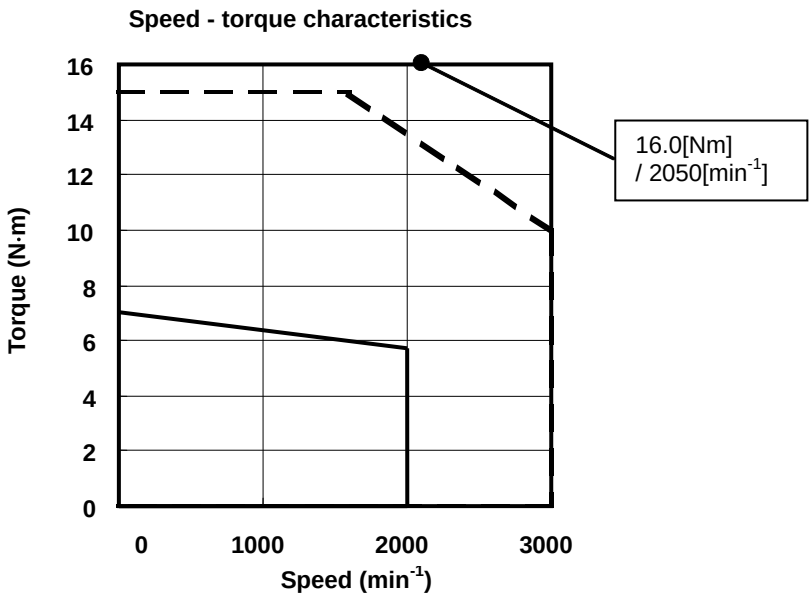


**Speed - torque characteristics for β*i*S 8/3000-B**

If it is impossible to change the operation specifications of the shaft (such as to increase the acceleration time), a larger motor must be selected.
Select the β*i*S 12/3000-B (rotor moment of inertia ($J_M$) = 0.00228[$kgm^2$], 1.5 times load moment of inertia ratio) and calculate the acceleration torque again.

$T_a$=17.9 [Nm]=182.5[kgfcm]
$V_r$=2050[$min^{-1}$]
T=17.9[Nm]+1.4[Nm] = 19.3[Nm]



© MyFANUC DC7187A9420041B3806BC8E5C652D376

The speed-torque characteristics of the β*i*S 12/3000-B, given below, show that the point of 19.3[Nm]/ 2050[min$^{-1}$] is within the intermittent operating zone of the β*i*S 12/3000-B (acceleration is possible).

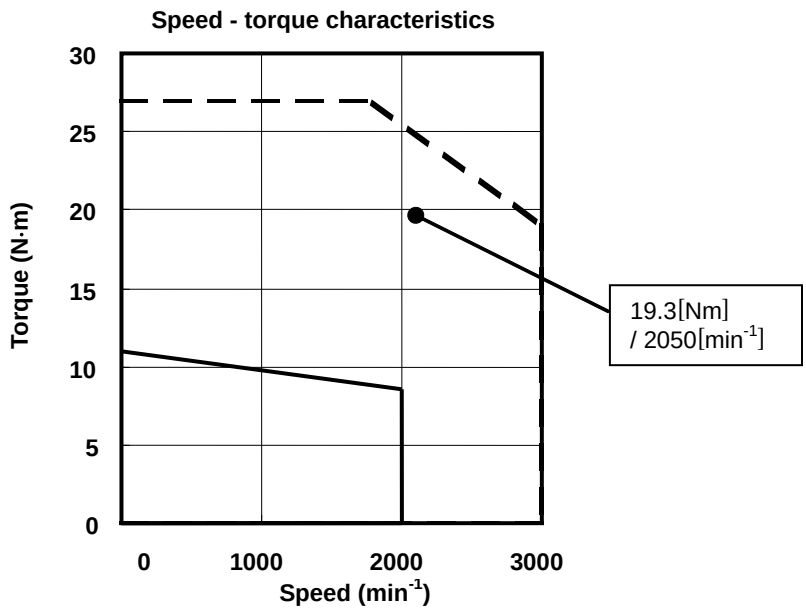


**Speed - torque characteristics for β*i*S 12/3000-B**

## 2.2.2.5 Calculating the root-mean-square value of the torques

A motor gets hot in proportion to the square of the torque. For a servo motor for which the load condition always changes, the calculated root-mean-square value of torque in a cycle must be sufficiently greater than the continuous torque (at low speed) $T_c$.

### - Root-mean-square value of torque in acceleration/deceleration in rapid traverse

First, generate an operation cycle which performs acceleration/ deceleration in rapid traverse with a desired frequency of positioning in rapid traverse. Write the time-speed graph and time-torque graph as shown below.

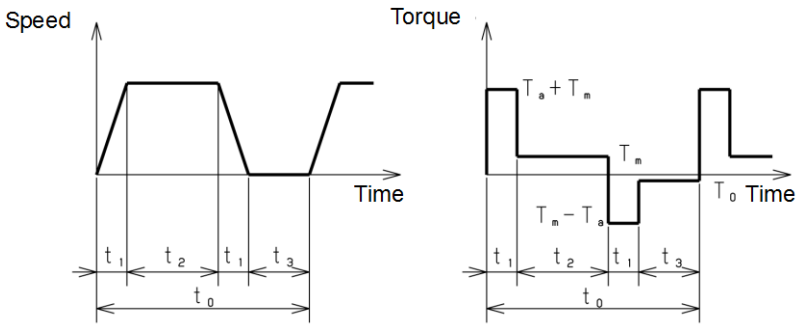


From the time-torque graph, obtain the root-mean-square value of torques applied to the motor during the single operation cycle. Check whether the value is smaller than or equal to the continuous torque (at low speed) $T_c$.

$$T_{rms} = \sqrt{\frac{(T_a + T_m)^2 t_1 + T_m{}^2 t_2 + (T_a - T_m)^2 t_1 + T_0{}^2 t_3}{t_0}}$$

$T_a$ : Acceleration torque
$T_m$ : Steady-state load torque
$T_o$ : Torque when stopped



© MyFANUC DC7187A9420041B3806BC8E5C652D376

When $T_{rms}$ falls within 90% of the continuous torque (at low speed) $T_c$, the servo motor can be used. (The entire thermal efficiency and other margins must be considered.)

> **NOTE**
> The motor actually rotates, but the determination must be based on the continuous torque (at low speed) $T_c$.
> When the motor is being operated at high speed for a comparatively large proportion of the time, you must take the rotating speed of the motor into consideration and evaluate whether output can be specified in terms of a continuous operation torque.

## [Example of calculation for condition 5]
## Root-mean-square value of the torques

βiS 12/3000-B ( $T_c$ = 1.4[Nm] = 14.3[kgfcm] ), $T_a$ = 17.9[Nm],
$T_m = T_o$ = 1.4[Nm], $t_1$ = 0.1[sec], $t_2$ = 2.0[sec], $t_3$ = 3.0[sec]

$$T_{rms} = \sqrt{\frac{(17.9+1.4)^2 \times 0.1 + 1.4^2 \times 2.0 + (17.9-1.4)^2 \times 0.1 + 1.4^2 \times 3.0}{0.1 \times 2 + 2.0 + 3.0}}$$

= 3.8[Nm]=38.8[kgf·m] < $T_s \times 0.9$ = 11 × 0.9 = 9.9[Nm] = 101.0[kgf·cm]
The βiS 12/3000-B can be used for operation.

### - Root-mean-square value of torque in a cycle in which the load varies

If the load conditions (cutting load, acceleration/deceleration conditions, etc.) vary widely in a single cycle, write a time-torque graph according to the operation cycle, as in above item. Obtain the root-mean-square value of the torques and check that the value is smaller than or equal to the continuous torque (at low speed) $T_c$.

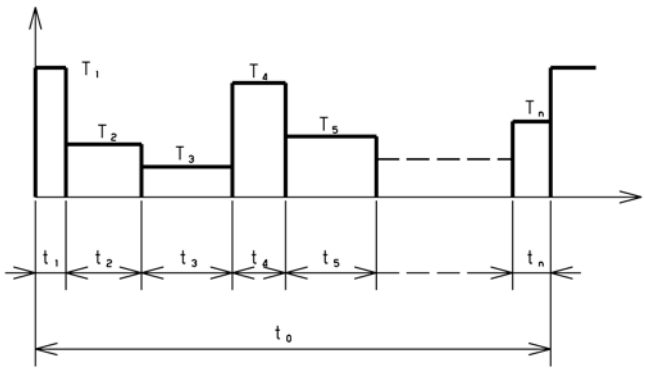


$$T_{rms} = \sqrt{\frac{T_1^2 t_1 + T_2^2 t_2 + T_3^2 t_3 + \cdots + T_n^2 t_n}{t_0}}$$

$t_0 = t_1 + t_2 + t_3 + \cdots + t_n$

> **NOTE**
> The motor actually rotates, but the determination must be based on the continuous torque (at low speed) $T_c$. When the motor is being operated at high speed for a comparatively large proportion of the time, you must take the rotating speed of the motor into consideration and evaluate whether output can be specified in terms of a continuous operation torque.



© MyFANUC DC7187A9420041B3806BC8E5C652D376

## 2.2.2.6 Calculating the Percentage duty cycle and ON time with the maximum cutting torque

Confirm that the time (duty percentage and ON time) during which the maximum cutting torque can be applied for cutting is shorter than the desired cutting time.
First, calculate the load torque applied when the cutting thrust ($F_c$) is applied to the motor shaft ($T_{ms}$). When this load torque is smaller than the product of the motor continuous torque (at low speed) ($T_c$) and thermal efficiency ($\alpha$), the motor can be used in continuous cutting. If the value is greater than the product, follow the procedure below to calculate the ON time during which the maximum cutting load torque ($T_{ms}$) can be applied to the motor ($t_{ON}$) and the percentage ratio (percentage duty cycle with the maximum cutting torque) of the ON time to the total time of a single cutting cycle (t).
$\alpha$ is assumed to be 0.9. Calculate the percentage considering the specifications of the machine.

### - Determining whether continuous operation can be performed with the maximum cutting torque

Calculate the percentage duty cycle, according to the following figure and expressions.

| |
|---|
| $T_{ms}<T_s\times\alpha$<br>Operation can be continued with the maximum cutting torque. (The percentage duty cycle with the maximum cutting torque is 100%.)<br>$T_{ms}>T_s\times\alpha$<br>Calculate the percentage duty cycle, according to the following figure and expressions. |

### [Example of calculation for condition 6-1]
### Percentage duty cycle and ON time with the maximum cutting torque

The load torque in cutting is calculated as follows:

$F=F_c+\mu(W+F_g+F_{cf})$

$F=980+0.05\times(2940+490+294)=1166[N]=119[kgf]$

$T_m=(1166\times 20\times 10^{-3}\times 1)\div(2\times\pi\times 0.9)+0.8=4.9[Nm]=50[kgfcm]$

The continuous torque (at low speed) of the $\beta i$S 12/3000-B ($T_c$) is 11[Nm] = 112.2[kgfcm].

$T_c\times a= 11\times 0.9 = 9.9[Nm]=101.0[kgfcm] > Tms = 4.9[Nm]=50[kgfcm]$

No problems will occur in continuous cutting.

### - Calculating the percentage duty cycle with the maximum cutting torque

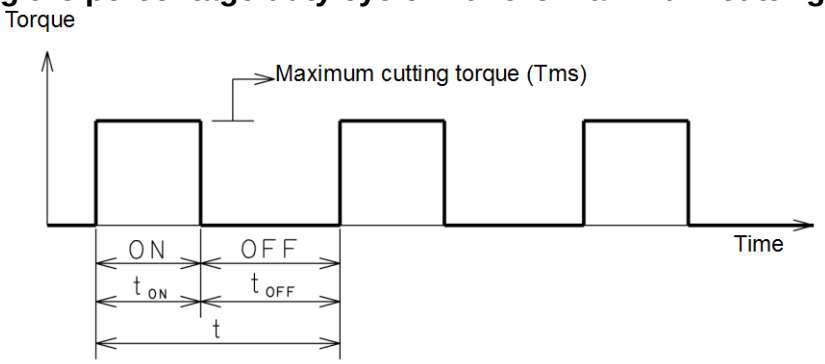


If the load torque ($T_{ms}$) is greater than the product of the motor continuous torque (at low speed) $T_c$ and thermal efficiency ($\alpha$), calculate the root-mean-square value of torque applied in a single cutting cycle. Specify $t_{ON}$ and $t_{OFF}$ so that the value does not exceed the product of the motor continuous torque (at low speed) $T_c$ and thermal efficiency ($\alpha$). Then, calculate the percentage duty cycle with the maximum cutting torque as shown below.



© MyFANUC DC7187A9420041B3806BC8E5C652D376

Percentage duty cycle with the maximum cutting torque (Tms) = $\frac{t_{on}}{t_{on}+t_{off}} \times 100[\%]$

## [Example of calculation for condition 6-2]
## Percentage duty cycle and ON time with the maximum cutting force

Example)

Assume that Tms is 15 [N·m] (Tm is 1.4 [N·m]).

$\sqrt{\frac{15^2 t_{on} + 1.4^2 t_{off}}{t_{on} + t_{off}}} < 9.9$[Nm] (90% of the continuous torque (at low speed) $T_c$ of the β*i*S 12/3000-B)

Therefore,

$$\frac{t_{on}}{t_{off}} < 0.76$$

The above ratio of the non-cutting time to the cutting time is required. The percentage duty cycle is calculated as follows:

$$\frac{t_{on}}{t_{on}+t_{off}} \times 100 = 43.0\%$$

### - Limitations on ON time

The period during which continuous operation under an overload is allowed is also restricted by the OVC alarm level and overload duty cycle characteristics. Refer to Subsection 1.3.2.1, “About characteristic curves and data sheet” for details.



© MyFANUC DC7187A9420041B3806BC8E5C652D376

## 2.2.2.7 Calculating the dynamic brake stop distance

The equation for calculating the coasting distance when an abnormality occurs and the machine tool is stopped by dynamic braking with both ends of the motor power line shorted (dynamic brake stop distance) is given below:

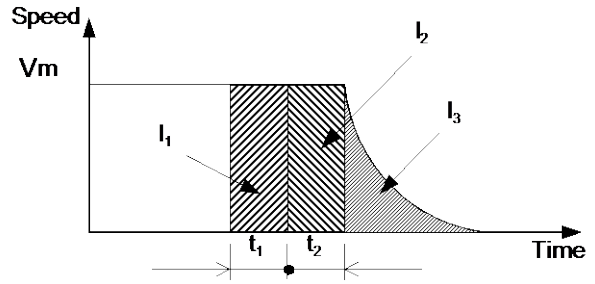


Vm : Rapid traverse rate, mm/sec or [deg /sec]
$l_1$ : Coasting distance due to delay time $t_1$ of receiver
$l_2$ : Coasting distance due to deceleration time $t_2$ of magnetic contactor (MCC)
$l_3$ : Coasting distance by dynamic braking after magnetic contactor has been operated
($t_1$+$t_2$) is usually about 0.05 [sec].

$$\text{Coasting distance due} = Vm \times (t_2 + t_2) + (J_M + J_L) \times (A \times No + B \times No^3) \times L$$

[mm] or [deg]

- $J_M$ : Moment of inertia of rotor [$kgm^2$ ] [$kgfcms^2$]
- $J_L$ : Load moment of inertia [$kgm^2$ ] [$kgfcms^2$]
- $N_o$ : Motor speed at rapid traverse ($min^{-1}$)
- L : Machine movement on one-rotation of motor [mm/rev] or [deg/rev] ($N_o/60 \times L = V_m$)
- A : Coefficient A for calculating the dynamic brake stop distance
- B : Coefficient B for calculating the dynamic brake stop distance

For details of A and B, see the table on the next item.
For $J_M$, see the data sheet of each motor in the Chapter 1, “SPECIFICATIONS.”

There are two ways of shortening this dynamic brake stop distance: Emergency stop distance shortening function, and emergency stop distance shortening function effective also during power interruptions (additional hardware is required).

### [Example of calculation for condition 7] Dynamic brake stop distance

Assume that the desired stop distance is 150 [mm].

Coasting distance = (3000/60 × 20)[mm/sec] × 0.05[sec]+(0.00228[$kgm^2$]+0.00334[$kgm^2$])
× (1.0 × $10^{-1}$ × 3000[$min^{-1}$]+4.5 × $10^{-9}$ × $3000^3$[$min^{-1}$]) × 20[mm/rev]
=131[mm]

It has been shown that the machine tool can be stopped within the desired stop distance.
Finally, the β*i*S 12/3000-B which satisfies selection conditions 1 to 6 is selected.



© MyFANUC DC7187A9420041B3806BC8E5C652D376

⚠ **CAUTION**

1 Calculate and certainly confirm the dynamic brake stop distance by using coefficients for calculating the dynamic brake distance if it is within the assumption on the machine.

2 Applying the quick stop functions are recommended for shortening the stop distance at emergency stop or power failure.
As for the detail of this functions, refer to the PARAMETER MANUAL (B-65270EN).
For certain working of the quick stop functions at the power failure, keep the control power supply (24VDC) for CNC and servo amplifier by using the uninterruptible power supply(UPS) for example.

3 If some alarms occur, the stop distance will not be short because the quick stop functions do not operate effectively.

4 It should be certainly confirmed at the actual machine that the stop distance is shortened at emergency stop or power failure when the quick stop functions are applied.



© MyFANUC DC7187A9420041B3806BC8E5C652D376

## Coefficients for dynamic brake calculation

### When combining with servo amplifiers αiSV-B/βiSV-B and αiSV/βiSV

**βiS-B, βiSc-B (200-V system)**

| Model | SI units | | Gravitational system of units | |
|---|---|---|---|---|
| | A | B | A | B |
| βiS 0.2/5000 | 8.3 | $5.8 \times 10^{-7}$ | $8.1 \times 10^{-1}$ | $5.7 \times 10^{-8}$ |
| βiS 0.3/5000 | 3.4 | $4.6 \times 10^{-7}$ | $3.4 \times 10^{-1}$ | $4.5 \times 10^{-8}$ |
| βiS 0.4/5000-B | (Note 1)<br>(Note 2) | | | |
| βiS 0.5/6000-B | | | | |
| βiS 1/6000-B | | | | |
| βiS 2/4000-B<br>βiSc 2/4000-B | | | | |
| βiS 4/4000-B<br>βiSc 4/4000-B | | | | |
| βiS 8/3000-B<br>βiSc 8/3000-B | | | | |
| βiS 12/2000-B<br>βiSc 12/2000-B | | | | |
| βiS 12/3000-B<br>βiSc 12/3000-B | (Note 3)<br>(Note 4)<br>(Note 5) | | | |
| βiS 22/2000-B<br>βiSc 22/2000-B | | | | |
| βiS 22/3000-B | $6.7 \times 10^{-2}$ | $4.0 \times 10^{-9}$ | $6.6 \times 10^{-3}$ | $3.9 \times 10^{-10}$ |
| βiS 30/2000-B | $4.0 \times 10^{-2}$ | $2.8 \times 10^{-9}$ | $3.9 \times 10^{-3}$ | $2.7 \times 10^{-10}$ |
| βiS 40/2000-B | $2.3 \times 10^{-2}$ | $2.6 \times 10^{-9}$ | $2.2 \times 10^{-3}$ | $2.5 \times 10^{-10}$ |

(Note 1) When αiSV20-B or αiSV4/20-B is used for the M axis,
αiSV20/20-B, βiSV20-B, βiSV20/20-B, βiSV40/40-B, αiSV20, or αiSV4/20 is used for the M axis,
or αiSV20/20, αiSV20/20L, αiSV20/20/20, βiSV20, βiSV20/20, or βiSV40/40 is used

| Model | SI units | | Gravitational system of units | |
|---|---|---|---|---|
| | A | B | A | B |
| βiS 0.4/5000-B | 2.3 | $4.6 \times 10^{-7}$ | $2.3 \times 10^{-1}$ | $4.5 \times 10^{-8}$ |
| βiS 0.5/6000-B | $9.0 \times 10^{-1}$ | $2.1 \times 10^{-7}$ | $8.8 \times 10^{-2}$ | $2.0 \times 10^{-8}$ |
| βiS 1/6000-B | $3.8 \times 10^{-1}$ | $8.8 \times 10^{-8}$ | $3.7 \times 10^{-2}$ | $8.7 \times 10^{-9}$ |
| βiS 2/4000-B<br>βiSc 2/4000-B | $2.1 \times 10^{-1}$ | $8.1 \times 10^{-8}$ | $2.1 \times 10^{-2}$ | $7.9 \times 10^{-9}$ |
| βiS 4/4000-B<br>βiSc 4/4000-B | $8.7 \times 10^{-2}$ | $4.1 \times 10^{-8}$ | $8.5 \times 10^{-3}$ | $4.0 \times 10^{-9}$ |
| βiS 8/3000-B<br>βiSc 8/3000-B | $3.9 \times 10^{-2}$ | $5.3 \times 10^{-8}$ | $3.8 \times 10^{-3}$ | $5.2 \times 10^{-9}$ |
| βiS 12/2000-B<br>βiSc 12/2000-B | $1.7 \times 10^{-2}$ | $2.7 \times 10^{-8}$ | $1.7 \times 10^{-3}$ | $2.6 \times 10^{-9}$ |



© MyFANUC DC7187A9420041B3806BC8E5C652D376

(Note 2) When αiSV40-B, αiSV20/40-B, αiSV40/40-B, or αiSV40/80-B is used for the L axis,
αiSV20/20/40-B, αiSV40/40/40-B, βiSV40-B, αiSV20L, αiSV40, αiSV40L, αiSV20/20L, or αiSV20/40 is used for the L axis,
or αiSV20/40L is used for the L axis

| Model | SI units | | Gravitational system of units | |
|---|---|---|---|---|
| | A | B | A | B |
| βiS 0.4/5000-B | 10 | $1.1 \times 10^{-7}$ | $9.8 \times 10^{-1}$ | $1.0 \times 10^{-8}$ |
| βiS 0.5/6000-B | 2.9 | $6.4 \times 10^{-8}$ | $2.9 \times 10^{-1}$ | $6.2 \times 10^{-9}$ |
| βiS 1/6000-B | $8.6 \times 10^{-1}$ | $3.9 \times 10^{-8}$ | $8.5 \times 10^{-2}$ | $3.8 \times 10^{-9}$ |
| βiS 2/4000-B<br>βiSc 2/4000-B | $4.8 \times 10^{-1}$ | $3.6 \times 10^{-8}$ | $4.7 \times 10^{-2}$ | $3.6 \times 10^{-9}$ |
| βiS 4/4000-B<br>βiSc 4/4000-B | $2.6 \times 10^{-1}$ | $1.4 \times 10^{-8}$ | $2.6 \times 10^{-2}$ | $1.3 \times 10^{-9}$ |
| βiS 8/3000-B<br>βiSc 8/3000-B | $1.1 \times 10^{-1}$ | $1.8 \times 10^{-8}$ | $1.1 \times 10^{-2}$ | $1.8 \times 10^{-9}$ |
| βiS 12/2000-B<br>βiSc 12/2000-B | $5.5 \times 10^{-2}$ | $8.5 \times 10^{-9}$ | $5.4 \times 10^{-3}$ | $8.3 \times 10^{-10}$ |

(Note 3) When αiSV40-B or αiSV20/40-B is used for the M axis, αiSV40/40-B or αiSV40/80-B is used for the L axis, αiSV20/20/40-B is used for the N axis, αiSV40/40/40-B, βiSV40-B, αiSV40, αiSV40L, αiSV20/40 is used for the M axis, αiSV20/40L is used for the M axis, αiSV40/40, αiSV40/40L, αiSV40/80 is used for the L axis, αiSV40/80L is used for the L axis, αiSV20/20/40 is used for the N axis, αiSV40S/40S/40 is used for the N axis, or βiSV40 is used

| Model | SI units | | Gravitational system of units | |
|---|---|---|---|---|
| | A | B | A | B |
| βiS 12/3000-B<br>βiSc 12/3000-B | $1.0 \times 10^{-1}$ | $4.5 \times 10^{-9}$ | $1.0 \times 10^{-2}$ | $4.4 \times 10^{-10}$ |
| βiS 22/2000-B (*)<br>βiSc 22/2000-B (*) | $4.0 \times 10^{-2}$ | $7.0 \times 10^{-9}$ | $3.9 \times 10^{-3}$ | $6.8 \times 10^{-10}$ |

(Note 4) When αiSV40S/40S/40 is used for the L or M axis, or βiSV40/40-B or βiSV40/40 is used

| Model | SI units | | Gravitational system of units | |
|---|---|---|---|---|
| | A | B | A | B |
| βiS 12/3000-B<br>βiSc 12/3000-B | $1.9 \times 10^{-2}$ | $2.5 \times 10^{-8}$ | $1.9 \times 10^{-3}$ | $2.4 \times 10^{-9}$ |
| βiS 22/2000-B (*)<br>βiSc 22/2000-B (*) | $7.8 \times 10^{-3}$ | $3.5 \times 10^{-8}$ | $7.6 \times 10^{-4}$ | $3.5 \times 10^{-9}$ |

(*) It is not able to connect βiS22/2000-B and βiSc22/2000-B to the L or M axis of αiSV40S/40S/40.

(Note 5) When αiSV80-B or αiSV40/80-B is used for the M axis,
αiSV80/80-B or αiSV80/160-B is used for the L axis, or
αiSV80/80/80-B or βiSV80-B is used



© MyFANUC DC7187A9420041B3806BC8E5C652D376

| Model | SI units | | Gravitational system of units | |
|---|---|---|---|---|
| | A | B | A | B |
| βiS 12/3000-B<br>βiSc 12/3000-B | $8.3 \times 10^{-2}$ | $5.7 \times 10^{-9}$ | $8.1 \times 10^{-3}$ | $5.6 \times 10^{-10}$ |
| βiS 22/2000-B<br>βiSc 22/2000-B | $3.2 \times 10^{-2}$ | $8.7 \times 10^{-9}$ | $3.1 \times 10^{-3}$ | $8.6 \times 10^{-10}$ |

**βiS-B series (400-V system)**

| Model | SI units | | Gravitational system of units | |
|---|---|---|---|---|
| | A | B | A | B |
| βiS 2/4000HV-B<br>βiSc 2/4000HV-B | (Note 6)<br>(Note 7) | | | |
| βiS 4/4000HV-B<br>βiSc 4/4000HV-B | | | | |
| βiS 8/3000HV-B<br>βiSc 8/3000HV-B | | | | |
| βiS 12/3000HV-B<br>βiSc 12/3000HV-B | (Note 8)<br>(Note 9) | | | |
| βiS 22/2000HV-B | | | | |
| βiS 22/3000HV-B | $5.1 \times 10^{-2}$ | $5.1 \times 10^{-9}$ | $5.0 \times 10^{-3}$ | $5.0 \times 10^{-10}$ |
| βiS 30/2000HV-B | $3.0 \times 10^{-2}$ | $3.7 \times 10^{-9}$ | $2.9 \times 10^{-3}$ | $3.6 \times 10^{-10}$ |
| βiS 40/2000HV-B | $1.7 \times 10^{-2}$ | $3.4 \times 10^{-9}$ | $1.7 \times 10^{-3}$ | $3.3 \times 10^{-10}$ |

(Note 6) When αiSV10HV-B, αiSV10/10HV-B, or αiSV10/10/10HV-B is used

| Model | SI units | | Gravitational system of units | |
|---|---|---|---|---|
| | A | B | A | B |
| βiS 2/4000HV-B<br>βiSc 2/4000HV-B | $2.2 \times 10^{-1}$ | $8.0 \times 10^{-8}$ | $2.1 \times 10^{-2}$ | $7.8 \times 10^{-9}$ |
| βiS 4/4000HV-B<br>βiSc 4/4000HV-B | $8.9 \times 10^{-2}$ | $4.0 \times 10^{-8}$ | $8.7 \times 10^{-3}$ | $4.0 \times 10^{-9}$ |
| βiS 8/3000HV-B<br>βiSc 8/3000HV-B | $3.7 \times 10^{-2}$ | $5.6 \times 10^{-8}$ | $3.6 \times 10^{-3}$ | $5.5 \times 10^{-9}$ |

(Note 7) When αiSV20HV-B, αiSV10/20HV-B, αiSV20/20HV-B, or αiSV20/40HV-B is used for the L axis, or αiSV10/10/20HV-B, αiSV20/20/20HV-B, βiSV10HV-B, βiSV20HV-B, αiSV10HV, αiSV10HVL, αiSV10/10HV, αiSV10/10HVL, or βiSV10HV is used

| Model | SI units | | Gravitational system of units | |
|---|---|---|---|---|
| | A | B | A | B |
| βiS 2/4000HV-B<br>βiSc 2/4000HV-B | $4.2 \times 10^{-1}$ | $4.2 \times 10^{-8}$ | $4.1 \times 10^{-2}$ | $4.1 \times 10^{-9}$ |
| βiS 4/4000HV-B<br>βiSc 4/4000HV-B | $2.2 \times 10^{-1}$ | $1.6 \times 10^{-8}$ | $2.2 \times 10^{-2}$ | $1.6 \times 10^{-9}$ |
| βiS 8/3000HV-B<br>βiSc 8/3000HV-B | $9.3 \times 10^{-2}$ | $2.2 \times 10^{-8}$ | $9.1 \times 10^{-3}$ | $2.2 \times 10^{-9}$ |



© MyFANUC DC7187A9420041B3806BC8E5C652D376

(Note 8) When αiSV20HV-B or αiSV10/20HV-B is used for the M axis, αiSV20/20HV-B or αiSV20/40HV-B is used for the L axis, αiSV10/10/20HV-B is used for the N axis, αiSV20/20/20HV-B, βiSV20HV-B, αiSV20HV, αiSV20HVL, αiSV20/20HV, αiSV20/20HVL, or αiSV20/40HV is used for the L axis, αiSV20/40HVL is used for the L axis, or βiSV20HV is used

| Model | SI units | | Gravitational system of units | |
|---|---|---|---|---|
| | A | B | A | B |
| βiS 12/3000HV-B<br>βiSc 12/3000HV-B | $8.1 \times 10^{-2}$ | $5.8 \times 10^{-9}$ | $8.0 \times 10^{-3}$ | $5.7 \times 10^{-10}$ |
| βiS 22/2000HV-B | $3.1 \times 10^{-2}$ | $9.8 \times 10^{-9}$ | $3.0 \times 10^{-3}$ | $9.6 \times 10^{-10}$ |

(Note 9) When αiSV40HV-B or αiSV20/40HV-B is used for the M axis, αiSV40/40HV-B or αiSV40/80HV-B is used for the L axis, or αiSV40/40/40HV-B or βiSV40HV-B is used

| Model | SI units | | Gravitational system of units | |
|---|---|---|---|---|
| | A | B | A | B |
| βiS 12/3000HV-B<br>βiSc 12/3000HV-B | $6.5 \times 10^{-2}$ | $7.2 \times 10^{-9}$ | $6.4 \times 10^{-3}$ | $7.1 \times 10^{-10}$ |
| βiS 22/2000HV-B | $2.5 \times 10^{-2}$ | $1.2 \times 10^{-8}$ | $2.5 \times 10^{-3}$ | $1.2 \times 10^{-9}$ |

**βiF-B series (200-V system)**

| Model | SI units | | Gravitational system of units | |
|---|---|---|---|---|
| | A | B | A | B |
| βiF 4/3000-B (Note 10) | $9.0 \times 10^{-2}$ | $1.4 \times 10^{-7}$ | $8.9 \times 10^{-3}$ | $1.4 \times 10^{-8}$ |
| βiF 8/2000-B (Note 10) | $3.0 \times 10^{-2}$ | $8.2 \times 10^{-8}$ | $2.9 \times 10^{-3}$ | $8.0 \times 10^{-9}$ |
| βiF 12/2000-B (Note 10) | $1.8 \times 10^{-2}$ | $1.7 \times 10^{-7}$ | $1.8 \times 10^{-3}$ | $1.6 \times 10^{-8}$ |
| βiF 22/2000-B (Notes 11, 12) | $3.9 \times 10^{-2}$ | $1.5 \times 10^{-8}$ | $3.8 \times 10^{-3}$ | $1.5 \times 10^{-9}$ |
| βiF 30/1500-B | $2.2 \times 10^{-2}$ | $1.1 \times 10^{-8}$ | $2.1 \times 10^{-3}$ | $1.1 \times 10^{-9}$ |

(Note 10) When αiSV40-B, αiSV20/40-B, αiSV40/40-B, or αiSV40/80-B is used for the L axis, αiSV20/20/40-B, αiSV40/40/40-B, βiSV40-B, αiSV20L, αiSV20/20L, or αiSV20/40 is used for the L axis, or αi SV20/40L is used for L axis

| Model | SI units | | Gravitational system of units | |
|---|---|---|---|---|
| | A | B | A | B |
| βiF 4/3000-B | $1.9 \times 10^{-1}$ | $6.7 \times 10^{-8}$ | $1.9 \times 10^{-2}$ | $6.5 \times 10^{-9}$ |
| βiF 8/2000-B | $7.9 \times 10^{-2}$ | $3.1 \times 10^{-8}$ | $7.7 \times 10^{-3}$ | $3.0 \times 10^{-9}$ |
| βiF 12/2000-B | $4.7 \times 10^{-2}$ | $6.4 \times 10^{-8}$ | $4.6 \times 10^{-3}$ | $6.2 \times 10^{-9}$ |

(Note 11) When βiSV40/40-B or βiSV40/40 is used

| Model | SI units | | Gravitational system of units | |
|---|---|---|---|---|
| | A | B | A | B |
| βiF 22/2000 | $7.6 \times 10^{-3}$ | $7.8 \times 10^{-8}$ | $7.5 \times 10^{-4}$ | $7.6 \times 10^{-9}$ |

(Note 12) When αiSV80-B or αiSV40/80-B is used for the M axis, αiSV80/80-B or αiSV80/160-B is used for the L axis, or αiSV80/80/80-B or βiSV80-B is used



© MyFANUC DC7187A9420041B3806BC8E5C652D376

| Model | SI units | | Gravitational system of units | |
|---|---|---|---|---|
| | A | B | A | B |
| βiF 22/2000 | $3.1\times10^{-2}$ | $1.9\times10^{-8}$ | $3.0\times10^{-3}$ | $1.9\times10^{-9}$ |

## When combining with servo amplifier αiSVP-B/βiSVSP-B and βiSVSP

### βiS-B, βiSc-B series (200-V system)

| Model | SI units | | Gravitational system of units | |
|---|---|---|---|---|
| | A | B | A | B |
| βiS 0.4/5000-B | 2.3 | $4.6\times10^{-7}$ | $2.3\times10^{-1}$ | $4.5\times10^{-8}$ |
| βiS 0.5/6000-B | $9.0\times10^{-1}$ | $2.1\times10^{-7}$ | $8.8\times10^{-2}$ | $2.0\times10^{-8}$ |
| βiS 1/6000-B | $3.8\times10^{-1}$ | $8.8\times10^{-8}$ | $3.7\times10^{-2}$ | $8.7\times10^{-9}$ |
| βiS 2/4000-B<br>βiSc 2/4000-B | $2.1\times10^{-1}$ | $8.1\times10^{-8}$ | $2.1\times10^{-2}$ | $7.9\times10^{-9}$ |
| βiS 4/4000-B<br>βiSc 4/4000-B | $8.7\times10^{-2}$ | $4.1\times10^{-8}$ | $8.5\times10^{-3}$ | $4.0\times10^{-9}$ |
| βiS 8/3000-B<br>βiSc 8/3000-B | $3.9\times10^{-2}$ | $5.3\times10^{-8}$ | $3.8\times10^{-3}$ | $5.2\times10^{-9}$ |
| βiS 12/2000-B<br>βiSc 12/2000-B | $1.7\times10^{-2}$ | $2.7\times10^{-8}$ | $1.7\times10^{-3}$ | $2.6\times10^{-9}$ |
| βiS 12/3000-B<br>βiSc 12/3000-B | $1.9\times10^{-2}$ | $2.5\times10^{-8}$ | $1.9\times10^{-3}$ | $2.4\times10^{-9}$ |
| βiS 22/2000-B<br>βiSc 22/2000-B | $7.8\times10^{-3}$ | $3.5\times10^{-8}$ | $7.6\times10^{-4}$ | $3.5\times10^{-9}$ |
| βiS 22/3000-B | $8.6\times10^{-3}$ | $3.1\times10^{-8}$ | $8.4\times10^{-4}$ | $3.1\times10^{-9}$ |
| βiS 30/2000-B | $4.8\times10^{-3}$ | $2.3\times10^{-8}$ | $4.8\times10^{-4}$ | $2.3\times10^{-9}$ |
| βiS 40/2000-B | $3.0\times10^{-3}$ | $2.0\times10^{-8}$ | $3.0\times10^{-4}$ | $2.0\times10^{-9}$ |

### βiS-B, βiSc-B series (400-V system)

| Model | SI units | | Gravitational system of units | |
|---|---|---|---|---|
| | A | B | A | B |
| βiS 2/4000HV-B<br>βiSc 2/4000HV-B | $2.2\times10^{-1}$ | $8.0\times10^{-8}$ | $2.1\times10^{-2}$ | $7.8\times10^{-9}$ |
| βiS 4/4000HV-B<br>βiSc 4/4000HV-B | $8.9\times10^{-1}$ | $4.0\times10^{-8}$ | $8.7\times10^{-2}$ | $4.0\times10^{-9}$ |
| βiS 8/3000HV-B<br>βiSc 8/3000HV-B | $3.7\times10^{-2}$ | $5.6\times10^{-8}$ | $3.6\times10^{-3}$ | $5.5\times10^{-9}$ |
| βiS 12/3000HV-B<br>βiSc 12/3000HV-B | $1.7\times10^{-2}$ | $2.7\times10^{-8}$ | $1.7\times10^{-3}$ | $2.7\times10^{-9}$ |
| βiS 22/2000HV-B | $7.2\times10^{-3}$ | $4.2\times10^{-8}$ | $7.0\times10^{-4}$ | $4.1\times10^{-9}$ |
| βiS 22/3000HV-B | $7.2\times10^{-3}$ | $3.7\times10^{-8}$ | $7.0\times10^{-4}$ | $3.6\times10^{-9}$ |
| βiS 30/2000HV-B | $3.9\times10^{-3}$ | $2.9\times10^{-8}$ | $3.8\times10^{-4}$ | $2.8\times10^{-9}$ |
| βiS 40/2000HV-B | $2.4\times10^{-3}$ | $2.5\times10^{-8}$ | $2.3\times10^{-4}$ | $2.5\times10^{-9}$ |



© MyFANUC DC7187A9420041B3806BC8E5C652D376

**βiF-B series (200-V system)**

| Model | SI units | | Gravitational system of units | |
|---|---|---|---|---|
| | A | B | A | B |
| βiF 4/3000-B | $9.0 \times 10^{-2}$ | $1.4 \times 10^{-7}$ | $8.9 \times 10^{-3}$ | $1.4 \times 10^{-8}$ |
| βiF 8/2000-B | $3.0 \times 10^{-2}$ | $8.2 \times 10^{-8}$ | $2.9 \times 10^{-3}$ | $8.0 \times 10^{-9}$ |
| βiF 12/2000-B | $1.8 \times 10^{-2}$ | $1.7 \times 10^{-7}$ | $1.8 \times 10^{-3}$ | $1.6 \times 10^{-8}$ |
| βiF 22/2000-B | $7.6 \times 10^{-3}$ | $7.8 \times 10^{-8}$ | $7.5 \times 10^{-4}$ | $7.6 \times 10^{-9}$ |
| βiF 30/1500-B | $4.8 \times 10^{-3}$ | $5.1 \times 10^{-8}$ | $4.7 \times 10^{-4}$ | $5.0 \times 10^{-9}$ |

The values of A and B are calculated by assuming that the resistance of the power line is 0.05Ω per phase.
The coefficient may change, depending on the type of the servo amplifier. Consult with FANUC to use another amplifier.

To protect the servo amplifier, make sure that the allowable load moment of inertia listed below is not exceeded.

| Motor model | Speed during use | Allowable load moment of inertia (reflected to motor shaft)<br>* Rotor moment of inertia of the motor itself not included |
|---|---|---|
| βiS, βiSc, βiF | 0 to maximum motor speed | Up to 5.0 times the rotor moment of inertia |

⚠ **CAUTION**
If exceeding the above condition, contact FANUC.

⚠ **WARNING**
1 If the motor stops from its maximum rotational speed with greater than the allowable load moment of inertia ratio, the inside of the servo amplifier may become abnormally hot, possibly causing damage to the servo amplifier.
Make no mistakes in the calculations of load moment of inertia.
2 If load moment of inertia exceeds the allowable condition, and any alarms or power failure (with the condition quick stop functions ineffective) occur among the rapid traverse, take 30 minutes intervals after power failure because of the protection of the servo amplifier.
If the stopping motion by the dynamic brake is continuously repeated within the 30minutes, the inside of the servo amplifier may become abnormally hot and possibly being damaged.

## 2.2.3 About the Servo Motor Selection Data Table

Select a suitable motor according to load conditions, rapid traverse rate, increment system and other factors. To aid in selecting the correct motor, we recommend filling in the "Servo Motor Selection Data Table" on the following page.
This section describes the servo motor selection data table.

### 2.2.3.1 Servo motor selection data table

The Servo Motor Selection Data Table for the SI system of units and that for the gravitational system of units are given on the following pages.



© MyFANUC DC7187A9420041B3806BC8E5C652D376

**Servo Motor Selection Data Table**

**SI unit**

| | | | |
|---|---|---|---|
| **User name** | | **Kind of machine tool** | |
| **CNC equipment** | | **Type of machine tool** | |
| **Spindle motor** | | | |

| **Item** | | Axis | | | | |
|---|---|---|---|---|---|---|
| **Specifications of moving object** | | | | | | |
| * Weight of moving object (including workpiece, etc.) | | kg | | | | |
| * Axis movement direction (horizontal, vertical, rotation, slant) | | | | | | |
| * Angle of the slant | | deg | | | | |
| * Counterbalance (forth) | | N | | | | |
| * Table support (sliding, rolling, static pressure) | | | | | | |
| * Ball screw | Diameter | mm | | | | |
| | Pitch | mm | | | | |
| | Length | mm | | | | |
| * Rack and pinion | Diameter of pinion | mm | | | | |
| | Thickness of pinion | mm | | | | |
| * Friction coefficient | | | | | | |
| Machine tool efficiency | | | | | | |
| * Total gear ratio | | | | | | |
| **Mechanical specifications** | | | | | | |
| Traveling distance of the machine tool per revolution of the motor | | mm/rev | | | | |
| Least input increment of CNC | | mm | | | | |
| * Rapid traverse feedrate | | mm/min | | | | |
| Motor speed in rapid traverse | | 1/min | | | | |
| * Total load moment of inertia applied to the motor shaft (*1) | | kg· $m^2$ | | | | |
| Moment of inertia of coupling, reducer, pulley, etc. | | kg· $m^2$ | | | | |
| * Steady-state load torque (*2) | | N· m | | | | |
| * Cutting thrust | | N | | | | |
| Maximum cutting torque | | N· m | | | | |
| Required percentage duty cycle/ON time with the maximum cutting torque | | % | | | | |
| Positioning distance | | mm | | | | |
| Required positioning time (*3) | | sec | | | | |
| In-position set value | | mm | | | | |
| Rapid traverse positioning frequency (continuous, intermittent) | | times/min | | | | |
| Dynamic brake stop distance | | mm | | | | |
| **Motor specifications and characteristics** | | | | | | |
| Motor type | | | | | | |
| Pulsecoder | | | | | | |
| Shaft shape | | | | | | |
| Brake (Yes/No) | | | | | | |
| Feed-forward during rapid traverse (Yes/No) | | | | | | |
| Acceleration/deceleration time constant in rapid traverse | $T_1$ | msec | | | | |
| | $T_2$ | msec | | | | |
| Position loop gain | | 1/sec | | | | |

CAUTION
Be sure to fill in units other than the above if used. (Sometimes "deg" is used instead of "mm" for the rotary axis.)

* Note required values for selecting the motor.

*1 If possible, enter the total load moment of inertia. If you enter the moment of inertia values of coupling, reducer, pulley, etc. (applied to the motor shaft) in the next item, you can also calculate the total load moment of inertia by adding the weight of the moving object and ball screw values by theoretical calculation in the case of a linear axis.
In the case of a rotary axis, be sure to enter the moment of inertia because it cannot be obtained by theoretical calculation.

*2 Steady-state load torque refers to the steady-state components, such as friction (holding torque is included in the case of a vertical axis), involved when the motor revolves once. Enter the steady-state load torque if possible. If details are unknown, a value calculated theoretically from the weight and friction coefficient will be used. Enter the steady-state load torque of the rotary axis in the same way as for load moment of inertia. You do not need to enter the torque required for acceleration/deceleration.

*3 Servo delay and setting times must also be taken into consideration in the positioning time.

(**)Comments



© MyFANUC DC7187A9420041B3806BC8E5C652D376

**Servo Motor Selection Data Table**

**Gravitational system of units**

| | | | |
|---|---|---|---|
| **User name** | | **Kind of machine tool** | |
| **CNC equipment** | | **Type of machine tool** | |
| **Spindle motor** | | | |

| **Item** | | Axis | | | | |
|---|---|---|---|---|---|---|
| **Specifications of moving object** | | | | | | |
| * Weight of moving object (including workpiece, etc.) | | kgf | | | | |
| * Axis movement direction (horizontal, vertical, rotation, slant) | | | | | | |
| * Angle of the slant | | deg | | | | |
| * Counterbalance (forth) | | kgf | | | | |
| * Table support (sliding, rolling, static pressure) | | | | | | |
| * Ball screw | Diameter | mm | | | | |
| | Pitch | mm | | | | |
| | Length | mm | | | | |
| * Rack and pinion | Diameter of pinion | mm | | | | |
| | Thickness of pinion | mm | | | | |
| * Friction coefficient | | | | | | |
| Machine tool efficiency | | | | | | |
| * Total gear ratio | | | | | | |
| **Mechanical specifications** | | | | | | |
| Traveling distance of the machine tool per revolution of the motor | | mm/rev | | | | |
| Least input increment of CNC | | mm | | | | |
| * Rapid traverse feedrate | | mm/min | | | | |
| Motor speed in rapid traverse | | 1/min | | | | |
| * Total load moment of inertia applied to the motor shaft (*1) | | kgf· cm· $s^2$ | | | | |
| Moment of inertia of coupling, reducer, pulley, etc. | | kgf· cm· $s^2$ | | | | |
| * Steady-state load torque (*2) | | kgf· cm | | | | |
| * Cutting thrust | | kgf | | | | |
| Maximum cutting torque | | kgf· cm | | | | |
| Required percentage duty cycle/ON time with the maximum cutting torque | | % | | | | |
| Positioning distance | | mm | | | | |
| Required positioning time (*3) | | sec | | | | |
| In-position set value | | mm | | | | |
| Rapid traverse positioning frequency (continuous, intermittent) | | times/min | | | | |
| Dynamic brake stop distance | | mm | | | | |
| **Motor specifications and characteristics** | | | | | | |
| Motor type | | | | | | |
| Pulsecoder | | | | | | |
| Shaft shape | | | | | | |
| Brake (Yes/No) | | | | | | |
| Feed-forward during rapid traverse (Yes/No) | | | | | | |
| Acceleration/deceleration time constant in rapid traverse | $T_1$ | msec | | | | |
| | $T_2$ | msec | | | | |
| Position loop gain | | 1/sec | | | | |

CAUTION

Be sure to fill in units other than the above if used. (Sometimes "deg" is used instead of "mm" for the rotary axis.)

* Note required values for selecting the motor.

*1 If possible, enter the total load moment of inertia. If you enter the moment of inertia values of coupling, reducer, pulley, etc. (applied to the motor shaft) in the next item, you can also calculate the total load moment of inertia by adding the weight of the moving object and ball screw values by theoretical calculation in the case of a linear axis. In the case of a rotary axis, be sure to enter the moment of inertia because it cannot be obtained by theoretical calculation.

*2 Steady-state load torque refers to the steady-state components, such as friction (holding torque is included in the case of a vertical axis), involved when the motor revolves once. Enter the steady-state load torque if possible. If details are unknown, a value calculated theoretically from the weight and friction coefficient will be used. Enter the steady-state load torque of the rotary axis in the same way as for load moment of inertia. You do not need to enter the torque required for acceleration/deceleration.

*3 Servo delay and setting times must also be taken into consideration in the positioning time.

(**)Comments



© MyFANUC DC7187A9420041B3806BC8E5C652D376

## 2.2.3.2 Explanation of Items

### (1) Title

#### - User name

Fill in this blank with the name of the user.

#### - Kind of machine tool

Fill in this blank with a general name of machine tools, such as lathe, milling machine, machining center, and others.

#### - Type of machine tool

Fill in this blank with the type of machine tool decided by machine tool builder.

#### - CNC equipment

Fill in this blank with the name of CNC employed.

#### - Spindle motor

Enter the specifications and output of the spindle motor. (This item is needed when selecting PS.)

#### - Axis

Fill in this blank with names of axes practically employed in CNC command.
If the number of axes exceeds 4 axes, enter them in the second sheet.

### (2) Specifications of moving object

Be sure to enter data in this row. Data entered here is needed for determining the approximate motor load conditions (moment of inertia, load torque).

#### - Mass(weight) of driven parts

Enter the mass(weight) of driven parts, such as table, tool post, etc. by the maximum value including the weight of workpiece, jig, and so on. Do not include the weight of the counter balance in the next item in this item.

#### - Axis movement direction

Enter horizontal, vertical, slant, or rotation as the movement directions of driven parts such as the table and tool post.
Be sure to enter data because the axis movement direction is required for calculating the steady-state load torque and regenerative energy.

#### - Angle of the slant

Enter the angle which the movement direction forms with a horizontal surface only when the movement direction slants upward.
Be sure to enter data because the axis movement direction is required for calculating the steady-state load torque and regenerative energy.

#### - Counter balance

Enter the weight of the counter balance in the vertical axis, if provided.
Enter whether the counter balance is made by a weight or force as this influences moment of inertia.



© MyFANUC DC7187A9420041B3806BC8E5C652D376

### - Table support

Enter the type of table slide (e.g. rolling, sliding or static pressure).
Enter a special slide way material like Turcite, if used. Also enter the friction coefficient value. This item is significant in estimating the friction coefficient for calculating mainly the load torque.

### - Ball screw

For a ball screw, enter the diameter, pitch, and length in order.
If a rack and pinion or other mechanism is used, also enter the traveling distance of the machine tool per revolution of the pinion.

### - Rack and pinion

For a rack and pinion, enter the diameter and thickness of the pinion.

### - Friction coefficient

Enter the friction coefficient of the table.

### - Machine tool efficiency

This value is used for calculating the transfer efficiency of motor output on a machine tool. Standard value is 0.9.
Generally, a drop in transfer efficiency is expected if a reduction gear having a large deceleration rate is used.

### - Total gear ratio

Enter the gear ratio between the ball screw and the servo motor, gear ratio between the final stage pinion and the servo motor in case of the rack pinion drive, or gear ratio between the table and the motor in case of rotary table.

## (3) Mechanical specifications

Enter basic data that is required for selecting the motor.
For details on how to calculate each of the items, see Section 2.2.2, “SELECTING A MOTOR.”

### - Movement per rotation of motor

Enter the movement of the machine tool when the motor rotates one turn.
Example

- When the pitch of ball screw is 12 [mm] and the gear ratio is 2/3,
  12 [mm] × 2/3 = 8 [mm]
- When the gear ratio is 1/72 in rotary table ;
  360 [deg.] × 1/72 = 5 [deg.]

### - Least input increment CNC

Enter the least input increment of NC command. (The standard value is 0.001 [mm].)

### - Rapid traverse rate

Enter the rapid traverse rate required for machine tool specifications.

### - Motor speed in rapid traverse

Enter the motor speed during rapid traverse.

### - Motor shaft converted load moment of inertia

Enter a load moment of inertia applied by the moving object reflected on the motor shaft. While this includes the moment of inertia of the workpiece, ball screw, coupling, etc., the rotor moment of inertia of



© MyFANUC DC7187A9420041B3806BC8E5C652D376

the motor is not included. For information about this calculation method, see Subsection 2.2.2.3, "Calculating the load moment of inertia."
In the case of a linear axis, if you enter the next item, you can have the load moment of inertia obtained by theoretical calculation. In the case of a rotary axis, however, be sure to enter the load moment of inertia because it cannot be obtained by theoretical calculation. Entering two significant digits past the decimal point as the moment of inertia is sufficient. (Example: 0.2865 → 0.29)

### - Moment of inertia of coupling, reducer, pulley, etc.

Enter the load inertia moment of the coupling and other transmission mechanisms; this does not include, the load moment of inertia of the weight of the moving object and the ball screw. Entering two significant digits past the decimal point as the moment of inertia is sufficient. (Example: 0.2865 → 0.29)

### - Steady-state load torque

Enter the torque obtained by calculating the force applied for moving the machine tool and state-state components such as friction (including holding torque in the case of a gravity shaft) reflected on the motor shaft when it is rotating at a fixed speed. (Do not include any torque required for acceleration/deceleration in this item.) If details are unknown, use a value calculated logically from the weight and friction coefficient. Enter the steady-state load torque of the rotary axis in the same way as for load moment of inertia as it cannot be calculated logically.
If the load torque values differ during lifting and lowering in the vertical axis, enter both values. Also, if the load torque values differ during rapid traverse and cutting feed, enter a notice to that effect.
Since torque produced in low speed without cutting may be applied even when the motor has stopped, a sufficient allowance is necessary as compared with the continued rated torque of the motor. Suppress this load torque so that it is lower than 70% of the continuous rated torque.

### - Cutting thrust

Enter the maximum value of the force applied during cutting by the force in the feed axis direction.

### - Maximum cutting torque

Enter the torque value on the motor shaft corresponding to the maximum value of the above cutting thrust. When you enter this value, add the steady-state load to the motor shaft converted value for the cutting thrust.
Since the torque transfer efficiency may substantially deteriorate to a large extent due to the reaction from the slideway, etc. produced by the cutting thrust, obtain an accurate value by taking measured values in similar machine tools and other data into account.

### - Maximum cutting duty / ON time

Enter the duty time and ON time with the maximum cutting torque in the above item applied.

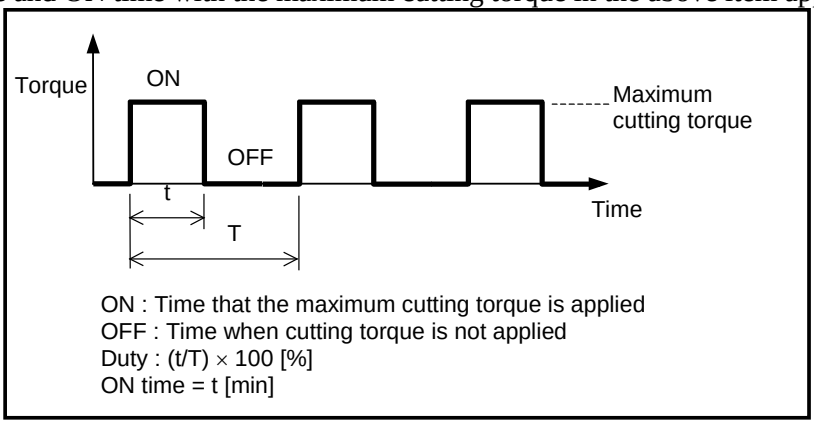




© MyFANUC DC7187A9420041B3806BC8E5C652D376

### - Positioning distance

Enter the distance as a condition required for calculating the rapid traverse positioning frequency.
When an exclusive positioning device is used, enter this value together with the desired positioning time below.

### - Required positioning time

Enter the required positioning time when an exclusive positioning device is used.
When the device is actually attached on the machine tool, note that servo delay and setting times must also be taken into consideration in the positioning time.

### - In-position set value

Enter the in-position set value as a condition required for calculating the above positioning times when an exclusive positioning device is used.
Note that the positioning time changes according to this value.

### - Rapid traverse positioning frequency

Enter the rapid traverse positioning frequency by the number of times per minute.
Enter whether the value is for continuous positioning over a long period of time or for intermittent positioning within a fixed period of time. (This value is used to check the OVC alarm and whether the motor is overheated or not by a flowing current during acceleration/deceleration, or to check the regenerative capacity of the amplifier.)

## (4) Motor specifications and characteristics

### - Motor type

Enter the motor type, if desired.

### - Pulsecoder

Enter the specifications of the feedback sensor (Pulsecoder) built into the motor.

### - Shaft shape

Enter the shape of the motor shaft.

### - Brake (Yes/No)

Enter whether or not the motor has a brake.

### - Feed-forward during rapid traverse

Enter whether or not feed-forward control during rapid traverse is used.
Generally, feed-forward control can reduce the delay time in executing servo commands. However, overheating of the motor is more likely to occur as a higher torque is required for acceleration/ deceleration.
Since mechanical shock increases in linear acceleration/deceleration, the bell-shaped acceleration/deceleration or fine acceleration/ deceleration (FAD) function is generally used together with feed-forward control.

### - Acceleration/deceleration time constant at rapid traverse

Enter the acceleration/deceleration time constant in rapid traverse.
The acceleration/deceleration time is determined according to the load moment of inertia, load torque, motor output torque, and working speed.
The acceleration/deceleration mode in rapid traverse is linear acceleration/deceleration or feed-forward during rapid traverse + bell-shaped acceleration/deceleration. Enter $T_1$ only for linear acceleration/deceleration or $T_1$ and $T_2$ for feed-forward during rapid traverse + bell-shaped acceleration/deceleration.



© MyFANUC DC7187A9420041B3806BC8E5C652D376

**Linear acceleration/deceleration**

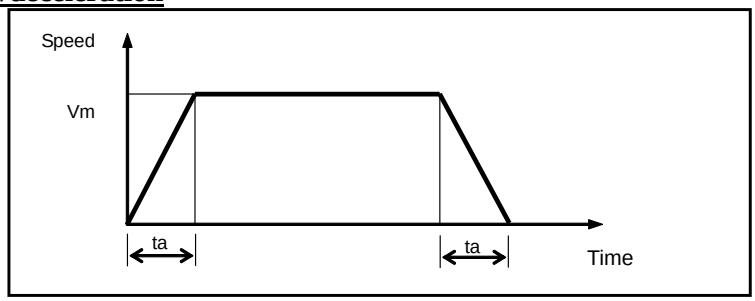


When cutting feed is important, enter the time constant in cutting feed. The acceleration/deceleration mode in cutting feed is linear acceleration/deceleration, exponential acceleration/deceleration, or bell-shaped acceleration/deceleration. Enter $t_e$ only for the time constant in cutting feed.

**Exponential acceleration/deceleration**

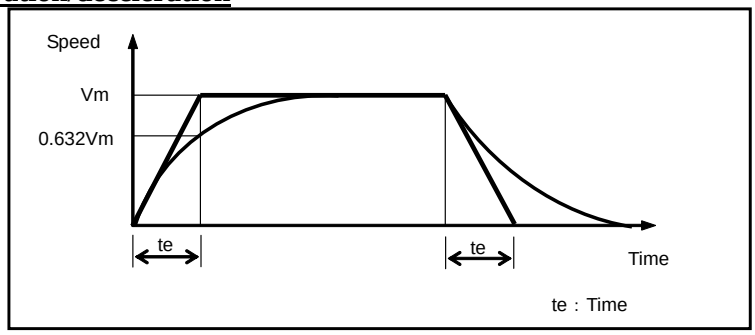


### - Position loop gain

Fill in this blank with a value which is considered to be settable judging it from the load moment of inertia value based on experiences.
Since this value is not always applicable due to rigidity, damping constant, and other factors of the machine tool, it is usually determined on the actual machine tool. If the position sensor is mounted outside the motor, this value is affected by the machine tool rigidity, backlash amount, and friction torque value. Enter these values without fail.

### - Dynamic brake stop distance

Enter the coasting distance when an abnormality occurs and the machine tool is stopped by dynamic braking with both ends of the motor power line shorted.

## 2.2.4 Selecting the αiPS

When selecting the αiPS, use the values shown in "DATA FOR SELECTING THE αiPS " as they are, in the equation for the selection of the αiPS. For details of the selection method, refer to "HOW TO SELECT THE αiPS SERIES" in the FANUC SERVO AMPLIFIER αi-B series DESCRIPTIONS (B-65412EN) and "HOW TO SELECT THE αiPS SERIES" in the FANUC SERVO AMPLIFIER αi series DESCRIPTIONS (B-65282EN).
As for the "data for selecting the αiPS", Appendix A of this manual contains tables extracted from the FANUC SERVO AMPLIFIER αi-B series DESCRIPTIONS (B-65412EN).



© MyFANUC DC7187A9420041B3806BC8E5C652D376

# 3 HANDLING, INSTALLATION, AND USE ENVIRONMENT OF THE MOTOR

This chapter describes the handling of the FANUC AC servo motor β*i*-B/β*i* series, how to install it to the machine, and the points to note on its use environment.

This Chapter, "HANDLING, INSTALLATION, AND USE ENVIRONMENT OF THE MOTOR", consists of the following sections:

3.1 HANDLING OF THE SERVO MOTOR
3.2 MOUNTING A SERVO MOTOR
3.3 USE ENVIRONMENT FOR SERVO MOTORS

## 3.1 HANDLING OF THE SERVO MOTOR

### 3.1.1 Checking a Delivered Servo Motor and Storing a Servo Motor

When the servo motor is delivered, check the following items.

- The motor meets the specifications. (Specifications of the model/shaft/sensor)
- Damage caused by the transportation.
- The shaft is normal when rotated by hand.
- The brake works.
- Looseness or play in screws.

FANUC servo motors are completely checked before shipment, and the inspection at acceptance is normally unnecessary. When an inspection is required, check the specifications (wiring, current, voltage, etc.) of the motor and sensor. Store the motor indoors. The storage temperature is -20°C to +60°C. Avoid storing in the following places.

- Place with high humidity so condensation will form.
- Place with extreme temperature changes.
- Place always exposed to vibration.
  (The bearing may be damaged.)
- Place with much dust.

### 3.1.2 Separating and Disposing of a Servo Motor

For a servo motor, a plastic part is used.
Disassemble the motor as shown in the following figure, separate the plastic part (Pulsecoder cover), and dispose of the motor. The following plastic material is used:
Plastic material : > (PBT+PC)-GF(30)FR(17)<



© MyFANUC DC7187A9420041B3806BC8E5C652D376

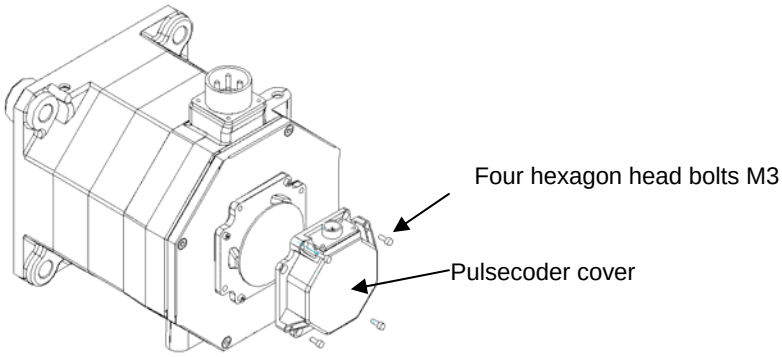


# 3.2 MOUNTING A SERVO MOTOR

## 3.2.1 Methods for coupling the shaft

In many cases, the following four methods are used for coupling the motor shaft to the ball screw on a machine: Direct connection through a flexible coupling, direct connection through a rigid coupling, connection through gears, and connection through timing belts. It is important to understand the advantages and disadvantages of each method, and select one that is most suitable for the machine.

### Direct connection using a flexible coupling

Direct connection by a flexible coupling has the following advantages over connection using gears:

- Even if the angle of the motor shaft to the ball screw changes, it can be compensated to a certain extent.
- Because a flexible coupling connects elements with less backlash, driving noise from joints can be significantly suppressed.

However, this method has the following disadvantages:

- The motor shaft and the ball screw must not slide from each other in the radial direction (for single coupling).
- Loose assembly may result in lower rigidity.

When the motor shaft needs to be connected directly to the ball screw, connecting them using a flexible coupling facilitates adjustment and installation of the motor.
To use a single coupling, the machine needs to be designed so that the centers of the motor shaft and the ball screw are aligned. (In the same way as with a rigid coupling, the use of a single coupling demands that there be almost no relative eccentricity between the axes.)
If it is difficult to align the centers, a double coupling needs to be employed.



© MyFANUC DC7187A9420041B3806BC8E5C652D376

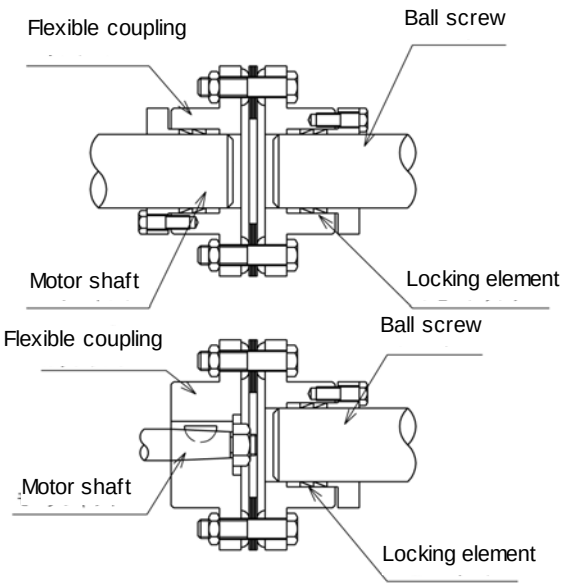


## Direct connection using a rigid coupling

Direct connection using a rigid coupling has the following advantages over direct connection using a flexible coupling:

- More economical
- The coupling rigidity can be increased.
- If the rigidity is the same as with a flexible coupling, the moment of inertia can be reduced.

However, this method has the following disadvantages:

- The motor shaft and the ball screw must not slide from each other in the radial direction, and the angle of the motor shaft to the ball screw must be fixed.

For this reason, a rigid coupling needs to be mounted very carefully.
It is desirable that the run-out of the ball screw is 0.01 mm or less. When a rigid coupling is used on the motor shaft, the run-out of the hole for the ball screw must be set to 0.01 mm or less by adjusting the tightness of the locking element.
The run-out of the motor shaft and the ball screw in the radial direction can be adjusted or compensated to a certain extent by deflection. Note, however, that it is difficult to adjust or measure changes in the angle. Therefore, the structure of the machine should be such that precision can be fully guaranteed.

## Gears

This method is used when the motor cannot be put in line with the ball screw because of the mechanical interference problem or when the reduction gear is required in order to obtain large torque. The following attention should be paid to the gear coupling method:

- Grinding finish should be given to the gear, and eccentricity, pitch error, tooth-shape deviations etc. should be reduced as much as possible. Please use the JIS, First Class as a reference of precision.
- Adjustment of backlash should be carefully performed. Generally, if there is too little backlash, a high-pitched noise will occur during high-speed operation, and if the backlash is too big, a drumming sound of the tooth surfaces will occur during acceleration/deceleration. Since these noises are sensitive to the amount of backlash, the structure should be so that adjustment of backlash is possible at construction time.

## Timing belt

A timing belt is used in the same cases as gear connection, but in comparison, it has advantages such as low cost and reduced noise during operation, etc. However, it is necessary to correctly understand the characteristics of timing belts and use them appropriately to maintain high precision.
Generally, the rigidity of timing belt is sufficiently higher than that of other mechanical parts such as ball screw or bearing, so there is no danger of inferiority of performance of control caused by reduction of



© MyFANUC DC7187A9420041B3806BC8E5C652D376

rigidity by using timing belt. When using a timing belt with a position sensor on the motor shaft, there are cases where poor precision caused by backlash of the belt tooth and pulley tooth, or elongation of belt after a long time becomes problem, so consideration should be given to whether these errors significantly affect precision. In case the position sensor is mounted behind the timing belt (for example, on the ball screw axis), a problem of precision does not occur.
Life of the timing belt largely varies according to mounting precision and tension adjustment. Please refer to the manufacturer's Instruction Manual for correct use.
When using a timing belt, be careful about the radial load. See Subsection 3.2.3, “Allowable Axis Load for a Servo Motor”.

## 3.2.2 Fastening the Shaft

### Taper shaft

In case of taper shafts, the load must be exerted on the tapered surface.
For this reason, at least 70% of gage fitting is required on the tapered surface.
In addition, the screw at the end of the taper shaft must be tightened with a proper torque to achieve sufficient axial force.

### Straight shaft

To use a straight shaft that has no key way, connect the shaft with a coupling using a locking element. Because the locking element connects elements by the friction generated when the screw is tightened, it is free from backlash and the concentration of stress. For this reason, the locking element is highly reliable for connecting elements.
To assure sufficient transmission with the locking element, factors such as the tightening torque of the screw, the size of the screw, the number of screws, the clamping flange, and the rigidity of connecting elements are important. Refer to the manufacturer's specifications before using the locking element. When a coupling or gear is mounted using the locking element, tighten the screws to remove a run-out of the coupling or gear including the shaft.

### Straight shaft with a key way

In a straight shaft with a key way, torque is transmitted at the key.
This means that if there is a looseness between the key and key way, the impact incurred at the time of inversion increases, which can result in shaft breakage, or a backlash occurs as a result of the looseness, which can lower positioning accuracy. Therefore, the key and key way should be designed so as to minimize the looseness between them.
When performing acceleration abruptly or frequently, select a taper shaft or straight shaft with no key groove.

## 3.2.3 Allowable Axis Load for a Servo Motor

The allowable axis load for the shaft of each motor is indicated in Subsection 1.3.3, "Outline Drawings". Using a motor under a load higher than the allowable axial load may break the motor. When designing a machine and connecting a motor to the machine, fully consider the following points:

- The allowable radial load is determined, assuming that a radial load is applied to the end of the shaft.
- Applying a load higher than the allowable axis load may break the bearing. Applying a radial load higher than the allowable radial load may break the shaft due to a fatigue failure.
- A radial load indicates the constant force continuously applied to the shaft depending on the mounting method (such as belt tension) and the force by the load torque (such as dividing moment by pulley radius).
- When a timing belt is used, the belt tension is critical particularly. Too tight a belt causes a fault such as the broken shaft. Belt tension must be controlled so as not to exceed the limits calculated



© MyFANUC DC7187A9420041B3806BC8E5C652D376

from the allowable radial load. Positioning the pulley as close to the bearing as possible in design can prevent possible faults such as the broken shaft.

- In some use conditions, the pulley diameter and gear size should be considered. For example, when the β*i*S 8-B model is used with a gear and pulley with a radius of 2 cm or less, the radial load with a torque of 15 N·m (153 kgf·cm) exceeds 686 N (70 kgf). In this case, take measures such as supporting the end of the motor shaft mechanically.
- If a motor may be used under a load higher than the allowable axis load, the machine tool builder should examine the life by referencing the shaft diameter, bearing, and other factors. Since the standard single-row deep-groove ball bearing is used for the motor bearing, a too high axial load cannot be used. To use a worm or helical gear, in particular, use another bearing.
- The motor bearing is generally fixed with a C-snap ring, and there is a small play in the axial direction. If the axial play affects the positioning in the case of using a worm or helical gear, fit it with another bearing.

## 3.2.4 Shaft Run-out Precision of a Servo Motor

The shaft run-out precision of each motor is indicated in Subsection 1.3.3, "Outline Drawings". The methods of measuring the shaft run-out precision are specified below:

| Item | Measuring method |
|---|---|
| Shaft diameter run-out | 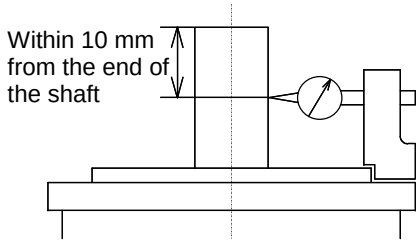 |
| Run-out of the faucet joint for mounting the flange against the center of the shaft (Only for flange type) | 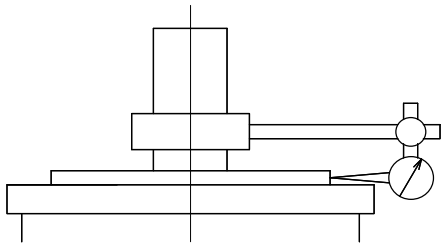 |
| Run-out of the flange mounting surface against the center of the shaft (Only for flange type) | 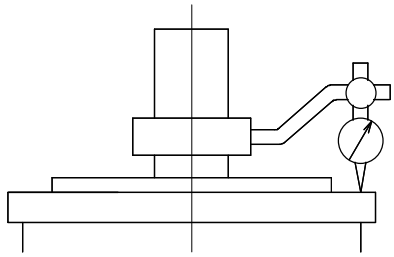 |



© MyFANUC DC7187A9420041B3806BC8E5C652D376

## 3.2.5 Other Notes on Axis Design

### Machine movement per 1 revolution of motor shaft

The machine movement per 1 revolution of motor shaft must be determined at the first stage of machine design referring the load torque, load inertia moment, rapid traverse speed, and relation between minimum increment and resolution of the position sensor mounted on the motor shaft. To determine this amount, the following conditions should be taken into consideration.

- The machine movement per 1 revolution of motor shaft must be such that the desired rapid traverse speed can be obtained. For example, if the maximum motor speed is 1500 $min^{-1}$ and the rapid traverse speed must be 12 m/min., the machine movement per 1 rev. must be 8 mm/rev. or higher.

- As the machine movement per 1 revolution of motor shaft is reduced, both the load torque and the load inertia moment reflected to motor shaft also decrease.
  Therefore, to obtain large thrust, the machine movement per 1 rev. should be the lowest value at which the desired rapid traverse speed can be obtained.

- Assuming that the accuracy of the reduction gear is ideal, it is advantageous to make the machine movement per 1 rev. of motor shaft as low as possible to obtain the highest accuracy in mechanical servo operations. In addition, minimizing the machine movement per 1 rev. of motor shaft can increase the servo rigidity as seen from the machine's side, which can contribute to system accuracy and minimize the influence of external load changes.

- When the machine is operation is characterized by repeated acceleration/deceleration cycles, a heating problem may occur due to the current flow caused by the acceleration and deceleration. Should this occur, the machine travel distance per motor shaft revolution should be modified. Given optimum conditions, the machine travel distance per motor shaft revolution is set such that the motor's rotor inertia moment equals the load inertia moment based on motor shaft conversion. For machines such as punch presses and PCB drilling machines, the machine's travel distance per motor shaft revolution should be set so as to satisfy this optimum condition as far as possible, while also considering the rapid traverse rate and increment system.

### Precautions for using linear scale

In the case where the machine moves in a linear direction and movement is directly detected by linear scale such as inductosyn, magne-scale etc., special considerations are necessary in comparison with the method where feedback is produced by detecting the motor shaft rotation. This is because the machine movement now directly influences the characteristics of the control system.

The following block diagram shows feedback produced using a linear scale.

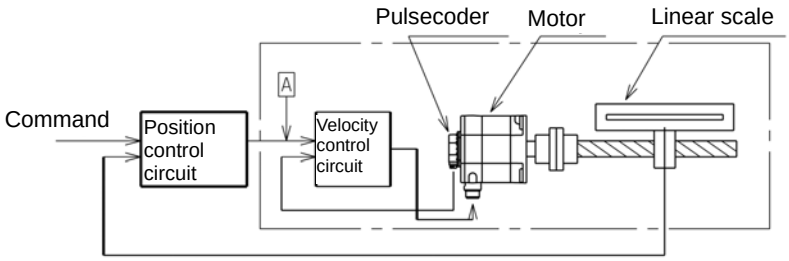


The response of this control system is determined by the adjustment value (position loop gain) of the position control circuit. In other words, the position loop gain is determined by the specified response time of the control system. In the diagram above, the section enclosed by the broken line is called the velocity loop.



© MyFANUC DC7187A9420041B3806BC8E5C652D376

Unless the response time of this section where position signal is detected is sufficiently shorter than the response time determined by the position loop gain, the system does not operate properly. In other words, when a command signal is put into point A, response time of the machine where position signals are detected must be sufficiently shorter than the response time defined by the position loop gain.
If the response of the sensor section is slow, the position loop gain should be reduced to have the system operate normally, and as a result, the response of the whole system becomes slow. The same problem is caused when moment of inertia is great.
The main causes for slow response are the mass of the machine and the elastic deformation of the machine system. The larger the volume, and the greater the elastic deformation, the slower the response becomes.
As an index for estimating the response of this machine system, the natural frequency of the machine is used, and this is briefly calculated by the following equation.

$$W_m = \frac{1}{2\pi} \times \sqrt{\frac{K_m}{J_L}}$$

$W_m$ : Natural frequency
$J_L$ : Load inertia moment reflected to motor shaft
$K_m$ : Rigidity of machine system
(=Torque necessary to elastically deform 1[rad] at the motor shaft when the machine table is clamped.)

The above values can be obtained by calculating the elastic deformation for each section of the driving system. The machine should be designed so that the value of this natural frequency [Hz] will be more than or equal to the value of the position loop gain [$sec^{-1}$]. For example, when setting 20 [$sec^{-1}$] as the value of position loop gain, natural frequency of machine system must be more than 20 [Hz].
In this case, the response of the control system becomes a problem for extremely small amounts of movement. Consequently, the natural frequency should be calculated from the rigidity at extremely small displacement such as 10 [μm] or less.

## Stick slip

If machine movement causes a stick slip, the control system does not operate normally. That is, it does not stop where it is supposed to, but a phenomenon occurs where it goes beyond and then back within an extremely small range (hunting).
To avoid stick slip, the machine rigidity should be increased, or friction characteristics of the sliding surface should be improved. When the sliding surface friction characteristic is as in the figure below, stick slip occurs easily.

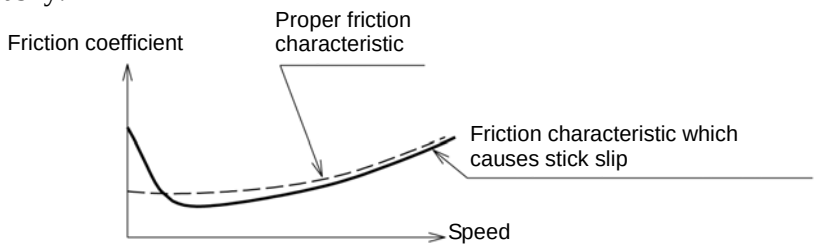


## Value of machine overrun (Damping coefficient of machine system)

When the machine is floated by static pressure, etc., there are cases where the machine keeps on moving within the range of backlash although the motor shaft has stopped. If this amount is large, hunting will also occur. To avoid this, backlash should be reduced (especially the backlash of the last mass where position sensor is mounted) and the appropriate damping should be considered.

## Reciprocating motion over a short distance

Continuing reciprocating motions over a short distance with a small number of revolutions causes the bearing to become short of lubricant, which can shorten the life of the bearing. When such motions are performed, special care should be taken by, for example, turning the motor at least one turn periodically.



© MyFANUC DC7187A9420041B3806BC8E5C652D376

## 3.2.6 Cautions in Mounting a Servo Motor

The servo motor contains precision sensor, and is carefully machined and assembled to provide the required precision. Pay attention to the following items to maintain the precision and prevent damage to the sensor.

- Secure the servo motor uniformly using four bolt holes provided on the front flange.

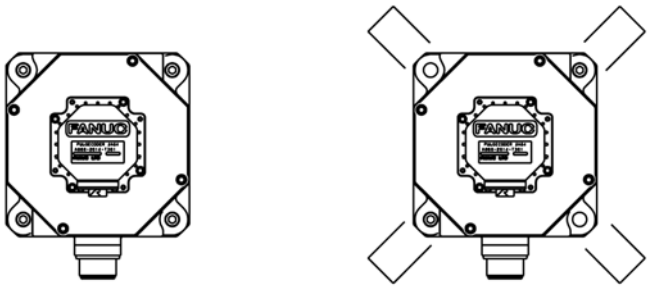

- Ensure that the surface on which the machine is mounted is sufficiently flat.
  When mounting on the machine, take care not to apply a shock to the motor.

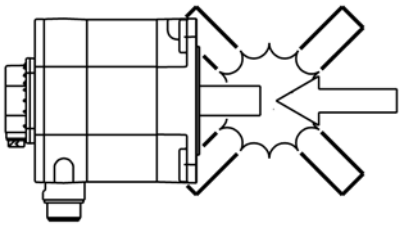

- When it is unavoidable to tap the motor for adjusting the position, etc., use a plastic hammer and tap only the front flange if possible.

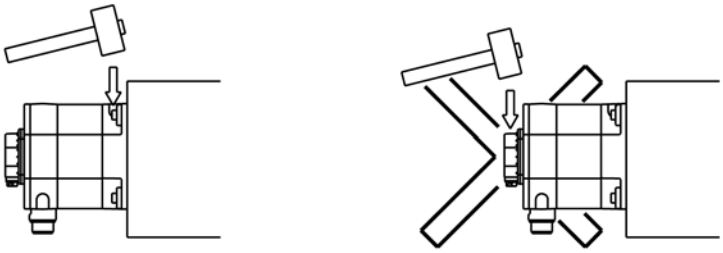



© MyFANUC DC7187A9420041B3806BC8E5C652D376

A precision sensor is directly connected to the servo motor shaft.
Pay attention to the following items to prevent damage to the sensor.

- When connecting the power transmission elements such as a gear, a pulley and a coupling to the shaft, take care not to apply a shock to the shaft.

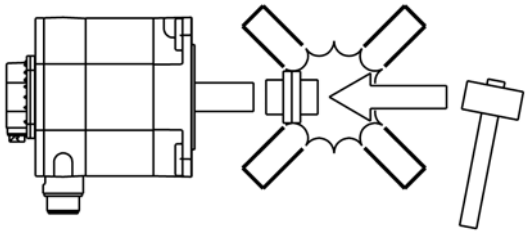

- Generally, in the case of straight shaft, use a locking element for connection with the shaft.

- In the case of tapered shaft, match the tapered surface with the power transmission element and fix by tightening the screw at the end. When the woodruff key is too tight, don't tap it with a hammer. Use the woodruff key mainly for positioning, and use the tapered surface for torque transmission. Machine the tapered surface of the power transmission element so that over 70% of the whole surface is contacted.

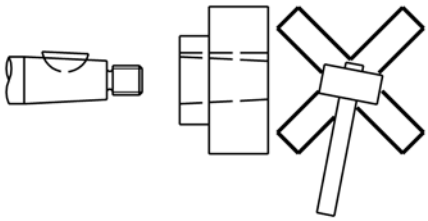

- To remove the connected power transmission element, be sure to use a jig such as a gear puller.

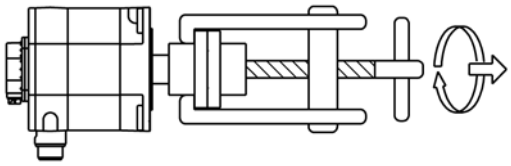

- When tapping slightly to remove the tightly contacted tapered surface, tap in the radial direction to prevent a shock in the axial direction.

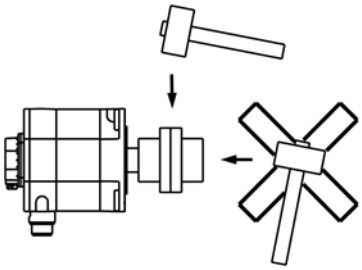



© MyFANUC DC7187A9420041B3806BC8E5C652D376

- Suppress the rotary unbalance of the connected power transmission element to the level as low as possible. It is usually believed that there is no problem in the symmetrical form. Be careful when rotating continuously the asymmetrical different form power transmission element. Even if the vibration caused by the unbalance is as small as 0.5G, it may damage the motor bearing or the sensor.

- An exclusive large oil seal is used in the flange of the motor.
  The oil seal surface is made of steel plate. Take care not to apply a force to the oil seal when installing the motor or connecting the power transmission elements.

- Cables run from motor models β*i*S 0.2 and β*i*S 0.3. Take care not to apply stress to the cables when using these models.

- Do not set up the βiS8-B or higher or βiF4-B or higher servo motor (whose flange size is at least 130 mm) with the pulsecoder down. If you want to use the motor with the shaft directed upward, set up the motor so that its own weight is not applied to the pulsecoder as shown in the figure below.

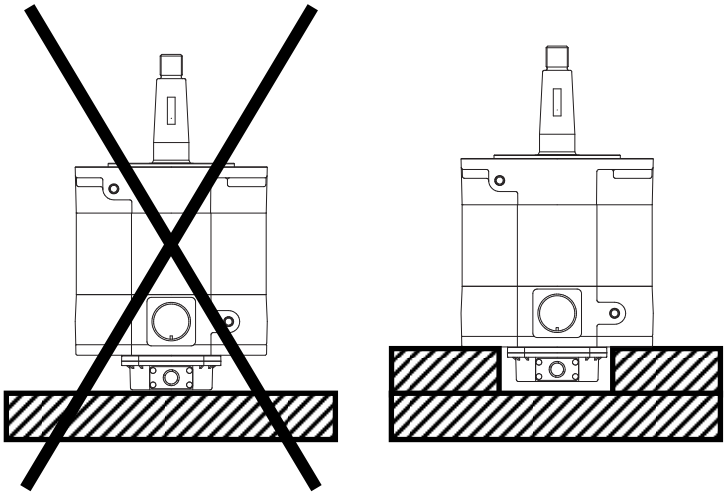



© MyFANUC DC7187A9420041B3806BC8E5C652D376

## 3.2.7 Notes on Servo Motors with the Pulsecoder βiA 1000 (for the βiSc-B only) Attached

- To use this model, it is important to set the soft thermal properly. Set it properly, referring to the Parameter Manual (B-65270EN).

- Never mount a rear fan unit to this motor. Otherwise, overheat protection may not be performed properly.

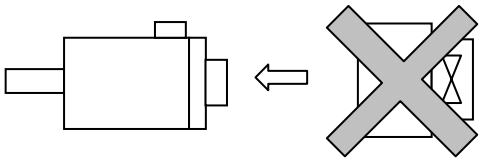

> ⚠ **WARNING**
> Failure to follow the notes above may result may cause the motor to be damaged.

- Do not use the pulsecoder in such a way that it is exposed to strong wind. Otherwise, overheat protection may not be performed properly. Do not use it in such a structure in which only the pulsecoder is cooled, either.

- If an OVC alarm is generated, wait for a couple of minutes and then restart it.



© MyFANUC DC7187A9420041B3806BC8E5C652D376

# 3.3 USE ENVIRONMENT FOR SERVO MOTORS

## 3.3.1 Ambient Temperature, Humidity, Installation Height, and Vibration

### Ambient temperature

The ambient temperature should be 0°C to 40°C. If the ambient temperature exceeds this range, the operating conditions must be eased to prevent the motor and detector from overheating. (The specification values and external dimensions in the data sheet assume an ambient temperature of 20°C.)

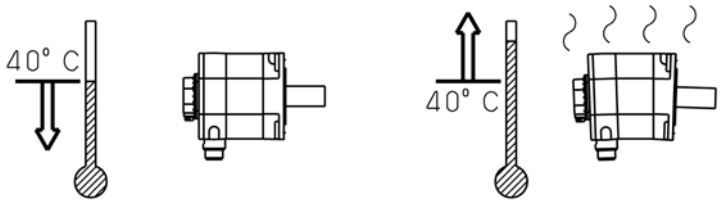


### Ambient humidity

The ambient humidity should be 80%RH or less and no condensation should not be caused.

### Installation height

Up to 1,000 meters above the sea level requires, no particular provision for attitude. When operating the machine at a higher level, special care is unnecessary if the ambient temperature is lowered 1°C at every 100m higher than 1,000m. For example, when the machine is installed at a place of 1,500 meters above sea level, there is no problem if the ambient temperature is 35°C or less.

### Vibration

When installed in a machine, the vibration applied to the motor must not exceed 5G.

If any one of the four environmental conditions (ambient temperature, ambient humidity, installation height, and vibration) specified above is not satisfied, the output must be restricted.

## 3.3.2 Usage Considering Environmental Resistance

### Overview

The motor is an electric part, and if the lubricant or cutting fluid falls on the motor, it will enter the inside of the motor, possibly adversely affecting the motor. In particular, if the cutting fluid adheres to the motor, it will deteriorate the resin or rubber sealing members, causing a large amount of cutting fluid to enter the inside of the motor and possibly damaging the motor. When using the motor, note the points described below.

### Level of motor protection

For the standard type, the level of motor protection is such that a single motor unit can satisfy IP65 of the IEC 60034-5 standard. As options, IP67 type motors are also available.
The protection types mentioned above do not apply to the part that the motor axis penetrates.
For a description of the water-proof properties of each connector, see the section on that connector.

IP6☐ : Fully dust-proof machine
Structure completely free from the entry of dust.



© MyFANUC DC7187A9420041B3806BC8E5C652D376

IP□5 : Machine protected from injected water

Water injected from a nozzle to the machine in any direction does not have a harmful impact on the machine.

IP□7 : Machine protected from the effect of seeping water

If the machine is immersed in water at a prescribed pressure for a prescribed duration, there is no possibility that an amount of water that has a harmful impact on the machine enters the machine.

If sufficient water-proof performance is required, as in the case in which a motor is used in a cutting fluid mist atmosphere, specify an IP67 type motor.
Note that both the standard and IP67 types satisfy the provisions for short-time water immersion, and do not guarantee their water-proof performance in an atmosphere in which the cutting fluid is applied directly to the motor. Before actual use, note the points described below.

## Motor periphery

If the cutting fluid or lubricant falls on the motor, it will adversely affect the sealing properties of the motor surface, entering the inside of the motor and possibly damaging the motor. Note the following points on use.

**Make sure that the motor surface is never wet with the cutting fluid or lubricant, and also make sure that no fluid builds up around the motor. If there is a possibility of the surface being wet, a cover is required. Be sure to mount a cover even when using an IP67 type motor.**

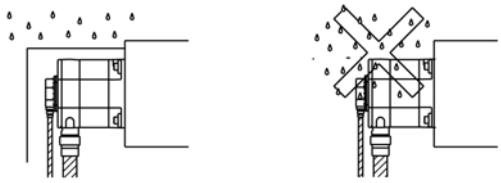

If the cutting fluid is misted, the cutting fluid may be condensed on the inside of the cover and fall on the motor. Make sure that no condensed droplets fall on the motor.

Completely separate the machining area from the motor area, using a telescopic cover, accordion curtain, and so on. Note that partitions such as accordion curtains are consumable and require periodic inspection for damage.

## Output shaft seal (oil seal)

For all models, the shaft of the servo motor is provided with an oil seal to prevent entry of oil and other fluids into the motor. It does not, however, completely prevent the entry of lubricant and other fluids depending on the working conditions. Note the following points on use.

When the motor is rotating, the oil seal has an effect of discharging any oil that enters, but if it is pressurized for a long time when the motor is stopped, it may allow oil to enter through the lip. When lubrication with an oil bath is conducted for gear engagement, for example, the oil level must be below the lip of the oil seal of the shaft, and the oil level must be adjusted so that the oil does nothing but splash on the lip.



© MyFANUC DC7187A9420041B3806BC8E5C652D376

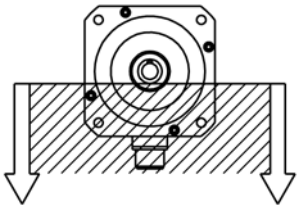

Diameters of the oil seal lips of motor shafts

| Motor model | Oil seal diameter |
|---|---|
| βiS0.2, βiS0.3 | ϕ8 [mm] |
| βiS0.4-B, βiS0.5-B, βiS1-B | ϕ14.9[mm] |
| βiS2-B, βiS2HV-B, βiSc2-B, βiSc2HV-B<br>βiS4-B, βiS4HV-B, βiSc4-B, βiSc4HV-B | ϕ15 [mm] |
| βiS8-B, βiS8HV-B, βiSc8-B, βiSc8HV-B<br>βiS12-B, βiS12HV-B, βiSc12-B, βiSc12HV-B<br>βiF4-B, βiF8-B | ϕ24 [mm] |
| βiS22-B, βiS22HV-B, βiSc22-B<br>βiS30-B, βiS30HV-B<br>βiS40-B, βiS40HV-B<br>βiF12-B, βiF22-B, βiF30-B | ϕ35 [mm] |

If the shaft is directed upward so that it is constantly immersed in oil, the oil seal of the motor alone does not provide sufficient sealing. If grease is used for lubrication, the properties of the oil seal are generally impaired. In these cases, a special design is required. For example, another oil seal is mounted on the machine side and a drain is provided so that any oil passing through that seal can is discharged outside.

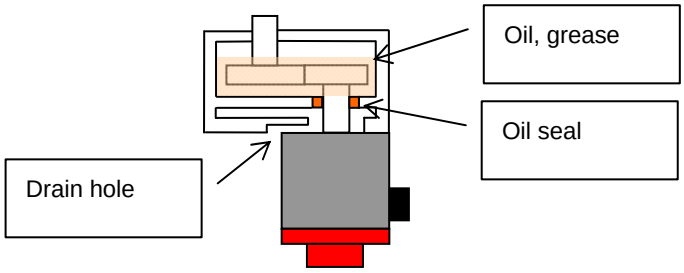


In such an environment in which the lip of the oil seal switches between dry and wet states repeatedly, if the cutting fluid flies about after the lip has worn in a dry state, the cutting fluid may easily enter the inside of the motor. In this case, provide a cover, etc. so that no cutting fluid is applied to the oil seal of the motor.

Ensure that no pressure is applied to the lip of the oil seal.

The cutting fluid does not provide lubrication for the oil seal lip, so that the fluid may easily enter the seal. Provide a cover so that no cutting fluid is applied to the oil seal.

The oil seal lip is made of rubber, and if foreign matters such as cutting chips get in, it will be easily worn, losing its sealing properties. Provide a cover, etc. to prevent cutting chips from entering near the lip.

## Motor coupling

If a coupling box exists between the motor and the machine, employ the structure described below so that no cutting fluid builds up in the box.

Provide a cover for the top and sides of the coupling box.



© MyFANUC DC7187A9420041B3806BC8E5C652D376

Provide a drain hole at the bottom of the coupling box. The hole must be large enough to avoid clogging. Make sure that any cutting fluid that bounces back is not applied from the drain hole to the motor.

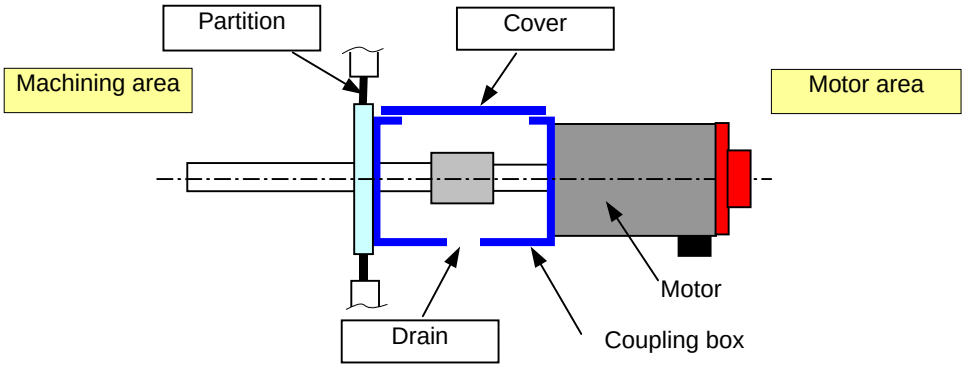


**<Fault example>**

The cutting fluid leaks from a gap in the accordion curtain to the motor area, and builds up in the coupling box. While the motor is moving, the cutting fluid ripples, splashing on the oil seal of the motor. The cutting fluid enters the inside of the motor there in large quantities, deteriorating the insulation of the motor.

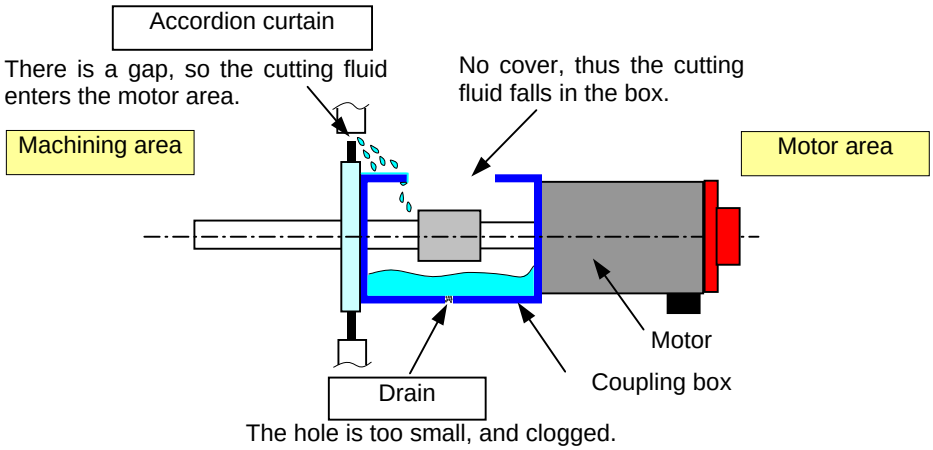


## Connectors

Note the following points on use:

Make sure that no cutting fluid is introduced to the motor via cables. If the motor connector is used horizontally, this can be accomplished by forming a slack in the cable.

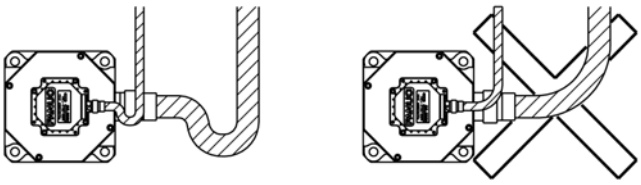



© MyFANUC DC7187A9420041B3806BC8E5C652D376

If the motor connector is directed upward, the cutting fluid collects into the cable connector. Whenever possible, direct the motor connector sideways or downward.

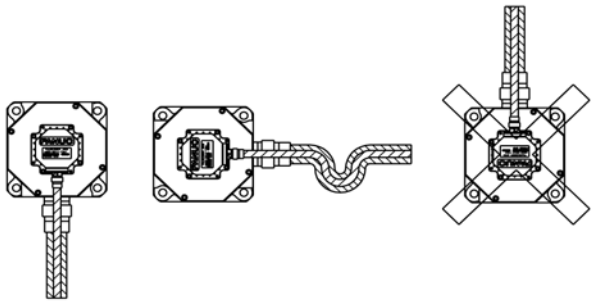

If there is a possibility of the power cable and the power connector being wet, it is recommended to use the water-proof connector plug recommended in this DESCRIPTIONS for the connector and an oil-proof cable as the power cable. (Oil-proof cable example: PUR (polyurethane) series made by LAPP)

If using a conduit hose for cable protection purposes, use the seal adapter recommended in this DESCRIPTIONS.

The feedback cable connector provides IP67 water-proof performance when it is engaged with the pulse coder connector. If the feedback cable connector is not fully engaged, the cutting fluid will enter the inside of the pulse coder from the connector, possibly causing a failure. Install the connector properly in accordance with the feedback cable engagement procedure described in this DESCRIPTIONS and check that it is engaged securely.

If the feedback cable connector cannot provide sufficient water resistance due to an assembly failure, the cutting fluid will enter the inside of the pulse coder from the connector, possibly causing a failure. When manufacturing a feedback cable connector, assemble it properly in accordance with the operator's manual issued by the connector manufacturer.

## Notes on cutting fluid

Cutting fluid containing highly active sulfur or chlorine, oil-free cutting fluid called synthetic cutting fluid, or highly alkaline, water-soluble cutting fluid in particular significantly affect the CNC, motor or amplifier. Even when these components are protected from direct spraying of cutting fluid, problems as described below may arise. So special care should be taken.

- **Cutting fluid containing highly active sulfur or chlorine**
  Some cutting fluids containing sulfur or chlorine show extremely high activity of sulfur or chlorine. Ingress of such cutting fluid into the CNC, motor, or amplifier can cause corrosion of copper, silver, and so on used as parts' materials, therefore resulting in parts' failures.

- **Synthetic cutting fluid with high permeability**
  Some synthetic type cutting fluids that use polyalkylene glycol (PAG) as a lubricant have extremely high permeability. Such cutting fluid can easily penetrate into the motor or device through packing and so on even if the motor or device is sealed well. Penetration of such cutting fluid into the CNC, motor, or amplifier can deteriorate insulation or cause parts’ failures.

- **Highly alkaline, water-soluble cutting fluid**
  Some cutting fluids that strengthen pH by alkanolamine show strong alkalinity of pH10 or higher when diluted to the standard level. Attachment of such cutting fluid to the CNC, motor, or amplifier, or penetration of such cutting fluid into them can cause chemical reaction with plastic and so on, therefore resulting in corrosion or deterioration of them.



© MyFANUC DC7187A9420041B3806BC8E5C652D376

© MyFANUC DC7187A9420041B3806BC8E5C652D376

# APPENDIX

© MyFANUC DC7187A9420041B3806BC8E5C652D376

© MyFANUC DC7187A9420041B3806BC8E5C652D376

# A DATA FOR SELECTING THE αiPS

**⚠ CAUTION**

1 This appendix contains an extract from the FANUC SERVO AMPLIFIER αi-B series DESCRIPTIONS (B-65412EN) concerning the servo motor output data for selecting the αiPS.
For details of how to select the αiPS, refer to "HOW TO SELECT THE αiPS SERIES" in the FANUC SERVO AMPLIFIER αi-B series DESCRIPTIONS (B-65412EN) and the FANUC SERVO AMPLIFIER αi series DESCRIPTIONS (B-65282EN).

2 The output values shown herein are intended for selection purposes only and do not guarantee the output of the servo motor.

3 The continuous rated output and maximum output at acceleration may be changed.

## A.1 βi-B SERIES (200V)

| Motor model | Continuous rated output | Maximum output at acceleration |
|---|---|---|
| βiS 0.2/5000 | 0.05kW | 0.24kW |
| βiS 0.3/5000 | 0.1kW | 0.4kW |
| βiS 0.4/5000-B | 0.13kW | 0.5kW |
| βiS 0.5/6000-B | 0.35kW | 1.3kW |
| βiS 1/6000-B | 0.5kW | 2.3kW |
| βiS 2/4000-B | 0.5kW | 2.3kW |
| βiS 4/4000-B | 0.75kW | 2.5kW |
| βiS 8/3000-B | 1.2kW | 2.8kW |
| βiS 12/2000-B | 1.4kW | 2.8kW |
| βiS 12/3000-B | 1.8kW | 5.4kW |
| βiS 22/2000-B | 2.5kW | 5.2kW |
| βiS 22/3000-B | 3.0kW | 8.8kW |
| βiS 30/2000-B | 3.0kW | 11kW |
| βiS 40/2000-B | 3.0kW | 11kW |
| βiSc 2/4000-B | 0.5kW | 2.3kW |
| βiSc 4/4000-B | 0.75kW | 2.5kW |
| βiSc 8/3000-B | 1.2kW | 2.8kW |
| βiSc 12/2000-B | 1.4kW | 2.8kW |
| βiSc 12/3000-B | 1.8kW | 5.4kW |
| βiSc 22/2000-B | 2.5kW | 5.2kW |
| βiF 4/3000-B | 0.75kW | 2.3kW |
| βiF 8/2000-B | 1.2kW | 3.2kW |
| βiF 12/2000-B | 1.4kW | 2.6kW |
| βiF 22/2000-B | 2.5kW | 5.7kW |
| βiF 30/1500-B | 3.0kW | 8.7kW |

**NOTE**

The continuous rated output and maximum output at acceleration may be changed.



© MyFANUC DC7187A9420041B3806BC8E5C652D376

# A.2 βi-B SERIES (400V)

| Motor model | Continuous rated output | Maximum output at acceleration |
|---|---|---|
| βiS 2/4000HV-B | 0.5kW | 2.3kW |
| βiS 4/4000HV-B | 0.75kW | 2.5kW |
| βiS 8/3000HV-B | 1.2kW | 2.8kW |
| βiS 12/3000HV-B | 1.8kW | 5.4kW |
| βiS 22/2000HV-B | 2.5kW | 5.2kW |
| βiS 22/3000HV-B | 3.0kW | 8.8kW |
| βiS 30/2000HV-B | 3.0kW | 11kW |
| βiS 40/2000HV-B | 3.0kW | 11kW |
| βiSc 2/4000HV-B | 0.5kW | 2.3kW |
| βiSc 4/4000HV-B | 0.75kW | 2.5kW |
| βiSc 8/3000HV-B | 1.2kW | 2.8kW |
| βiSc 12/3000HV-B | 1.8kW | 5.4kW |

**NOTE**

The continuous rated output and maximum output at acceleration may be changed.



© MyFANUC DC7187A9420041B3806BC8E5C652D376

# B NOTES ON USING THE SERVO MOTOR FOR LIVE TOOL APPLICATIONS OF A MACHINE TOOL

This appendix contains the output graphs and torque graphs applicable when the β*i*-B/β*i* servo motor is used for live tool applications of a machine tool, as well as the notes on such use of the servo motor. The output graphs and torque graphs of two representative models with a maximum rotation speed of 6000 [$min^{-1}$] are shown here.

This chapter consists of the following sections:

B.1 OUTPUT GRAPHS AND TORQUE GRAPHS (6000 [$min^{-1}$] MODELS)
B.2 NOTES ON USING THE SERVO MOTOR FOR LIVE TOOL APPLICATIONS
B.3 CNC FUNCTIONS FOR USING THE SERVO MOTOR FOR THE SPINDLE OR LIVE TOOL



© MyFANUC DC7187A9420041B3806BC8E5C652D376

# B.1 OUTPUT GRAPHS AND TORQUE GRAPHS (6000 [min$^{-1}$] MODELS)

This section shows the output graphs and torque graphs of servo motors (models with a maximum rotation speed of 6000 [min$^{-1}$]).

**⚠ CAUTION**

1 The intermittent operating zone represents the instantaneous maximum output at acceleration (torque) of the servo motor.
It does not indicate the 30-minute rated output (torque) or S3 rated output (torque).

2 The presented output values are those of the motor shaft output, not the data for selecting the $\alpha i$PS.

$\beta i$S 0.5/6000-B

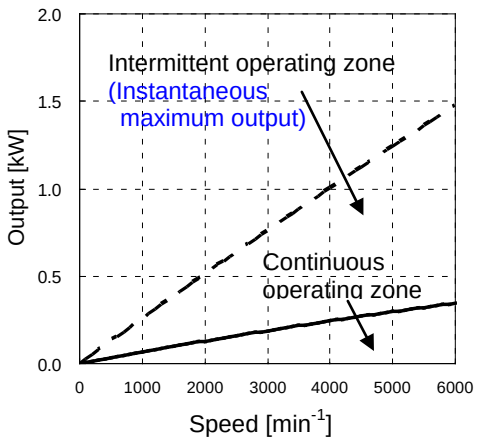


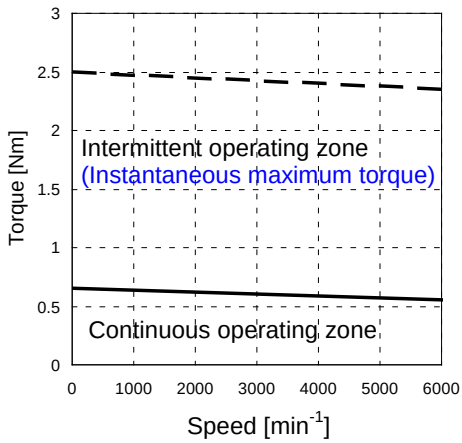


(*) The intermittent operating zone represents the instantaneous maximum output at acceleration (torque) of the servo motor.
It does not indicate the 30-minute rated output (torque) or S3 rated output (torque).

$\beta i$S 1/6000

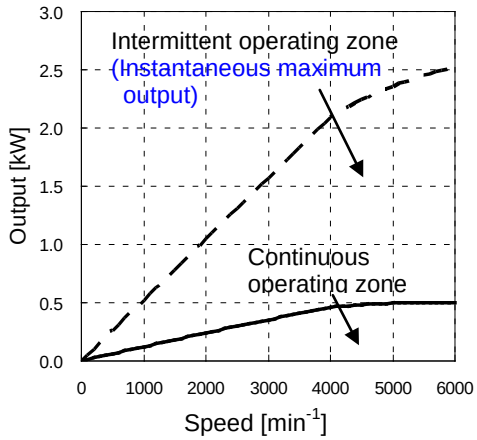


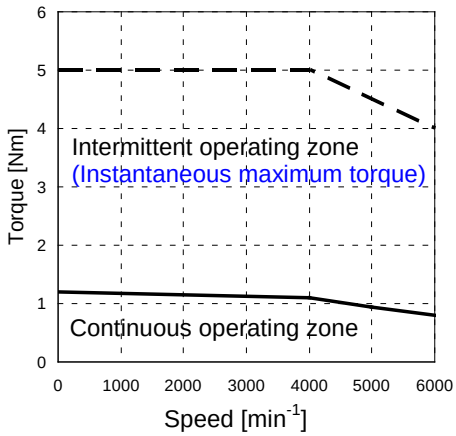


(*) The intermittent operating zone represents the instantaneous maximum output at acceleration (torque) of the servo motor.
It does not indicate the 30-minute rated output (torque) or S3 rated output (torque).



© MyFANUC DC7187A9420041B3806BC8E5C652D376

# B.2 NOTES ON USING THE SERVO MOTOR FOR LIVE TOOL APPLICATIONS

**⚠ CAUTION**

1 Unlike for the AC spindle motor βi series, "short-time rated outputs" exceeding the continuous rated output, such as 30-minute (S2) rated output and S3 rated output, are not defined for the FANUC AC servo motor βi-B/βi series. TUV certification has not been obtained with relation to short-time rated outputs, and these outputs and operations based on such outputs are not guaranteed.
2 Before using the live tool beyond the continuous rated output, be sure to check whether the desired operation is possible using the actual machine. If you intend to cite short-time rated output S2 or S3 as a nominal characteristic of the machine (live tool), you must take full responsibility for doing so.
3 Continuous operation with torque exceeding the continuous operating zone may generate the overheat alarm or OVC alarm.
4 When selecting the αiPS, calculate the required αiPS capacity by using the values of the "data for selecting the αiPS" of each servo motor.
For "data for selecting the αiPS", see Appendix A, "DATA FOR SELECTING THE αiPS" or refer to the FANUC SERVO AMPLIFIER αi-B series DESCRIPTIONS (B-65412EN) or the FANUC SERVO AMPLIFIER αi series DESCRIPTIONS (B-65282EN).
5 For details of how to select the αiPS, refer to the FANUC SERVO AMPLIFIER αi-B series DESCRIPTIONS (B-65412EN) or the FANUC SERVO AMPLIFIER αi series DESCRIPTIONS (B-65282EN).
6 If you have any questions, contact FANUC.

**⚠ WARNING**

1 To protect the servo amplifier, ensure that the load inertia moment does not exceed the allowable value.
If the dynamic brake is applied with a load inertia moment ratio exceeding the allowable value, the servo amplifier may be burned.
For details of the allowable value of the load inertia moment and the dynamic brake, see Section 2.2, "MOTOR SELECTION".

# B.3 CNC FUNCTIONS FOR USING THE SERVO MOTOR FOR THE SPINDLE OR LIVE TOOL

For details of the spindle control functions of the servo motor, refer to "SPINDLE CONTROL WITH SERVO MOTOR" in the FANUC series 30i-MODEL B Descriptions (B-64482EN), etc.



© MyFANUC DC7187A9420041B3806BC8E5C652D376

# C ABOUT βi SERIES SERVO MOTORS

Appendix C describes βi series servo motors.
The following lineup table lists βi series servo motors described herein.

| Continuous torque (at low speed) Nm | | 0.4 | 0.65 | 1.2 | 2 | 3.5 | 3.5 | 7 | 11 | 11 | 20 | 27 | 36 |
|---|---|---|---|---|---|---|---|---|---|---|---|---|---|
| Flange size mm | | 60 | | | 90 | | 130 | | | 174 | | | |
| βiS | 200V | βiS 0.4 /5000 | βiS 0.5 /6000 | βiS 1 /6000 | βiS 2 /4000 | βiS 4 /4000 | | βiS 8 /3000 | βiS 12 /2000<br>βiS 12 /3000 | | βiS 22 /2000<br>βiS 22 /3000 | βiS 30 /2000 | βiS 40 /2000 |
| | 400V | | | | βiS 2 /4000 HV | βiS 4 /4000 HV | | βiS 8 /3000 HV | βiS 12 /3000 HV | | βiS 22 /2000 HV<br>βiS 22 /3000 HV | βiS 30 /2000 HV | βiS 40 /2000 HV |
| βiSc | 200V | | | | βiSc 2 /4000 | βiSc 4 /4000 | | βiSc 8 /3000 | βiSc 12 /2000<br>βiSc 12 /3000 | | βiSc 22 /2000 | | |
| βiF | 200V | | | | | | βiF 4 /3000 | βiF 8 /2000 | | βiF 12 /2000 | βiF 22 /2000 | βiF 30 /1500 | |

This appendix describes βi series servo motors, with the focus on differences from βi-B series servo motors.
For information not provided herein and details of the βi series servo motors, see the related part of this manual or refer to Edition 05 of the FANUC SERVO MOTOR βi series DESCRIPTIONS (B-65302EN).
The model of the βi series servo motor can be identified by replacing 2□□□ in the ordering specification number of βi–B series servo motor with 0□□□. The differences between βi-B series and βi series models in appearance and specifications are as follows.

| | Target model<br>Flange size | βi-B series | βi series |
|---|---|---|---|
| Ordering specification number | □60, □90<br>□130, □174 | A06B-2□□□-B△○▽ | A06B-0□□□-B△○▽ |
| Power connector (motor side) | □130 | Japan Aviation Electronics Industry<br>JL10 series<br>(Bayonet/screw type connector) | Hirose Electric<br>H/MS310 TUV-approved series |
| | □174 | | Japan Aviation Electronics Industry<br>JL04V series |
| Feedback sensor | □90<br>□130, □174 | Resolution 1,000,000 [div/rev] ABS | Resolution 131,072 [div/rev] ABS |
| Shaft shape | □90 | ϕ14 taper shaft (modified specification) | - |
| Built-in brake | □174 | Reduced backlash brake (modified specification) | - |



© MyFANUC DC7187A9420041B3806BC8E5C652D376

In this appendix, βi-B series servo motors may be distinguished from βi series servo motors with ordering specification numbers 0□□□ as follows.

Models with numbers 2□□□ ..... βi-B series servo motors
Models with numbers 0□□□ ..... βi series servo motors

This chapter consists of the following sections:

C.1 ORDERING SPECIFICATION NUMBERS
C.2 CHARACTERISTIC CURVES AND DATA SHEET
C.3 OUTLINE DRAWINGS
C.4 POWER CONNECTORS
C.5 FEEDBACK SENSORS



© MyFANUC DC7187A9420041B3806BC8E5C652D376

# C.1 ORDERING SPECIFICATION NUMBERS

The ordering specification numbers of βi series servo motors are as follows.

A06B-□□□□-B△0▽#abcd

□□□□ An ordering specification number are described on the tables after next page.

* Every combination doesn't exist.

△ 0 : Taper shaft
1 : Straight shaft
2 : Straight shaft with a key groove
3 : Taper shaft with a 24VDC brake
4 : Straight shaft with a 24VDC brake
5 : Straight shaft with a key way and a 24VDC brake

* Do not select "Straight shaft with a key groove" when a large torque or abrupt acceleration rate is required.

▽ 3 : Pulsecoder βiA 64 (βiS 0.4 to βiS1)
Pulsecoder βiA 128 (βiS 2 to βiS 40, βiF 4 to βiF 30)
7 : Pulsecoder βiA 128 (for the βiSc only)

abcd
0000 : Standard
0100 : IP67 specification
* Omitted in case of 0000.

**⚠ CAUTION**
For the Servo Motor βiSc series, note the following:
- The motor ID information (specification number, serial number, and other information) and the motor temperature information are omitted.
- The servo parameters, the use of the servo motor (prohibition of the mounting of a rear fan unit, etc.), and the overload duty characteristics differ from those of existing models.



© MyFANUC DC7187A9420041B3806BC8E5C652D376

The following table lists the allowable combinations of numbers represented by symbols in ordering specification numbers.

## βiS, βiSc, and βiF series (200V)

A06B-□□□□-B△0▽#abcd

| Symbol in specification No. / Servo motor name | □□□□ | △ | | | | | | ▽ | | abcd | |
|---|---|---|---|---|---|---|---|---|---|---|---|
| | | 0 | 1 | 2 | 3 | 4 | 5 | 3 | 7 | 0000 | 0100 |
| βiS 0.4/5000 | 0114 | – | ○ | ○ | – | ○ | ○ | ○ | – | ○ | ○ |
| βiS 0.5/6000 | 0115 | – | ○ | ○ | – | ○ | ○ | ○ | – | ○ | ○ |
| βiS 1/6000 | 0116 | – | ○ | ○ | – | ○ | ○ | ○ | – | ○ | ○ |
| βiS 2/4000 | 0061 | ○ | ○ | ○ | ○ | ○ | ○ | ○ | – | ○ | ○ |
| βiSc 2/4000 | 0061 | ○ | ○ | ○ | ○ | ○ | ○ | – | ○ | ○ | ○ |
| βiS 4/4000 | 0063 | ○ | ○ | ○ | ○ | ○ | ○ | ○ | – | ○ | ○ |
| βiSc 4/4000 | 0063 | ○ | ○ | ○ | ○ | ○ | ○ | – | ○ | ○ | ○ |
| βiS 8/3000 | 0075 | ○ | ○ | ○ | ○ | ○ | ○ | ○ | – | ○ | ○ |
| βiSc 8/3000 | 0075 | ○ | ○ | ○ | ○ | ○ | ○ | – | ○ | ○ | ○ |
| βiS 12/2000 | 0077 | ○ | ○ | ○ | ○ | ○ | ○ | ○ | – | ○ | ○ |
| βiSc 12/2000 | 0077 | ○ | ○ | ○ | ○ | ○ | ○ | – | ○ | ○ | ○ |
| βiS 12/3000 | 0078 | ○ | ○ | ○ | ○ | ○ | ○ | ○ | – | ○ | ○ |
| βiSc 12/3000 | 0078 | ○ | ○ | ○ | ○ | ○ | ○ | – | ○ | ○ | ○ |
| βiS 22/2000 | 0085 | ○ | ○ | ○ | ○ | ○ | ○ | ○ | – | ○ | ○ |
| βiSc 22/2000 | 0085 | ○ | ○ | ○ | ○ | ○ | ○ | – | ○ | ○ | ○ |
| βiS 22/3000 | 0082 | ○ | ○ | ○ | ○ | ○ | ○ | ○ | – | ○ | ○ |
| βiS 30/2000 | 0087 | ○ | ○ | ○ | ○ | ○ | ○ | ○ | – | ○ | ○ |
| βiS 40/2000 | 0089 | ○ | ○ | ○ | ○ | ○ | ○ | ○ | – | ○ | ○ |
| βiF 4/3000 | 0051 | ○ | ○ | ○ | ○ | ○ | ○ | ○ | – | ○ | ○ |
| βiF 8/2000 | 0052 | ○ | ○ | ○ | ○ | ○ | ○ | ○ | – | ○ | ○ |
| βiF 12/2000 | 0053 | ○ | ○ | ○ | ○ | ○ | ○ | ○ | – | ○ | ○ |
| βiF 22/2000 | 0054 | ○ | ○ | ○ | ○ | ○ | ○ | ○ | – | ○ | ○ |
| βiF 30/1500 | 0055 | ○ | ○ | ○ | ○ | ○ | ○ | ○ | – | ○ | ○ |

* When abcd is 0000, omit the specification of abcd.

## βiS series (400V)

A06B-□□□□-B△0▽#abcd

| Symbol in specification No. / Servo motor name | □□□□ | △ | | | | | | ▽ | | abcd | |
|---|---|---|---|---|---|---|---|---|---|---|---|
| | | 0 | 1 | 2 | 3 | 4 | 5 | 3 | 7 | 0000 | 0100 |
| βiS 2/4000HV | 0062 | ○ | ○ | ○ | ○ | ○ | ○ | ○ | – | ○ | ○ |
| βiS 4/4000HV | 0064 | ○ | ○ | ○ | ○ | ○ | ○ | ○ | – | ○ | ○ |
| βiS 8/3000HV | 0076 | ○ | ○ | ○ | ○ | ○ | ○ | ○ | – | ○ | ○ |
| βiS 12/3000HV | 0079 | ○ | ○ | ○ | ○ | ○ | ○ | ○ | – | ○ | ○ |
| βiS 22/2000HV | 0086 | ○ | ○ | ○ | ○ | ○ | ○ | ○ | – | ○ | ○ |
| βiS 22/3000HV | 0083 | ○ | ○ | ○ | ○ | ○ | ○ | ○ | – | ○ | ○ |
| βiS 30/2000HV | 0088 | ○ | ○ | ○ | ○ | ○ | ○ | ○ | – | ○ | ○ |
| βiS 40/2000HV | 0090 | ○ | ○ | ○ | ○ | ○ | ○ | ○ | – | ○ | ○ |

* When abcd is 0000, omit the specification of abcd.



© MyFANUC DC7187A9420041B3806BC8E5C652D376

# C.2 CHARACTERISTIC CURVES AND DATA SHEET

The characteristic curves (torque curves) and data sheet of βi series servo motors (models with numbers 0□□□) are the same as those of βi-B series servo motors (models with numbers 2□□□).
See the characteristic curves and data sheet of βi-B series servo motors in this manual (Subsection 1.3.2).

| | **βi-B series (models with numbers 2□□□)** | **βi series (models with numbers 0□□□)** |
|---|---|---|
| Specification number | A06B-2□□□-B△○▽ | A06B-0□□□-B△○▽ |



© MyFANUC DC7187A9420041B3806BC8E5C652D376

# C.3 OUTLINE DRAWINGS

The outline drawings of β*i* series servo motors (models with numbers 0□□□) are the same as those of β*i*-B series servo motors (models with numbers 2□□□), except β*i*S0.4, β*i*S0.5, and β*i*S1.
See the outline drawings of β*i*-B series servo motors in this manual (Subsection 1.3.3).

| | **β*i*-B series (models with numbers 2□□□)** | **β*i* series (models with numbers 0□□□)** |
|---|---|---|
| Specification number | A06B-2□□□-B△○▽ | A06B-0□□□-B△○▽ |

The outline drawings of the β*i*S0.4, β*i*S0.5, and β*i*S1 motors of β*i* series are shown below.



© MyFANUC DC7187A9420041B3806BC8E5C652D376

## Outline drawing of the βiS 0.4 to βiS 1 motors (models with numbers 0xxx)

### Standard

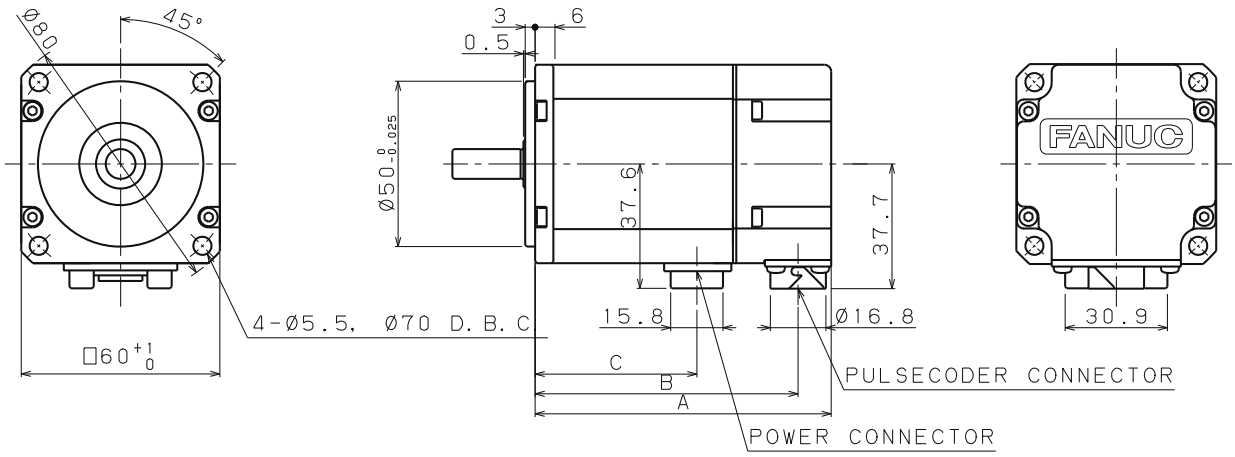


Connector engagement drawing (right angle)

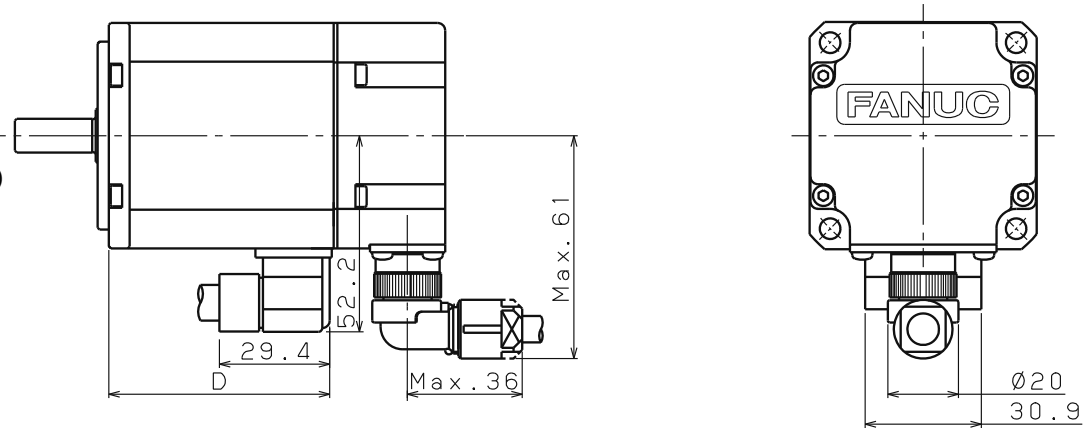


Connector engagement drawing (straight)

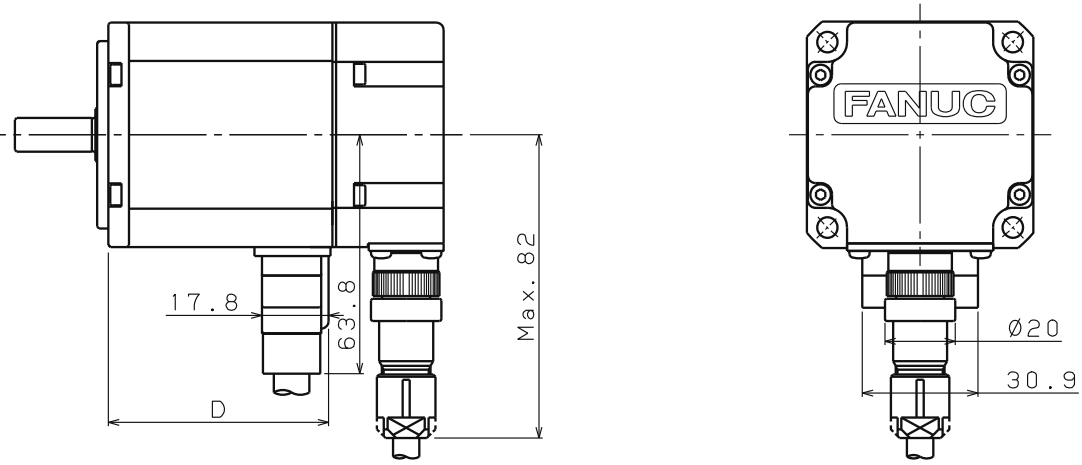


| MODEL | A | B | C | D |
|---|---|---|---|---|
| βiS 0.4 | 75 | 65 | 34.5 | 44.3 |
| βiS 0.5 | 89.5 | 79.5 | 49 | 58.8 |
| βiS 1 | 118.5 | 108.5 | 78 | 87.8 |



© MyFANUC DC7187A9420041B3806BC8E5C652D376

## Outline drawing of the βiS 0.4 to βiS 1 motors (models with numbers 0xxx)

### With a brake

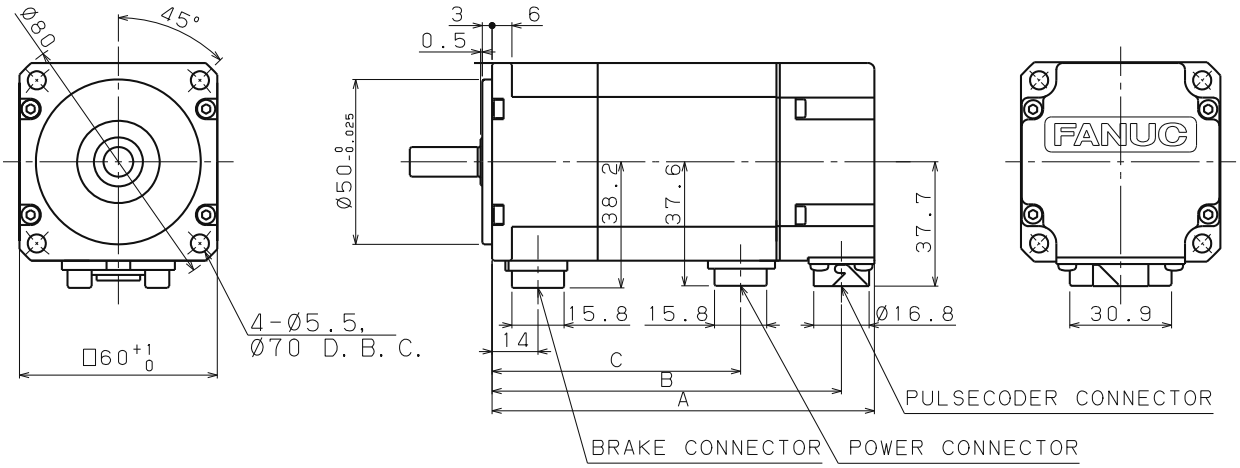


Connector engagement drawing (right angle)

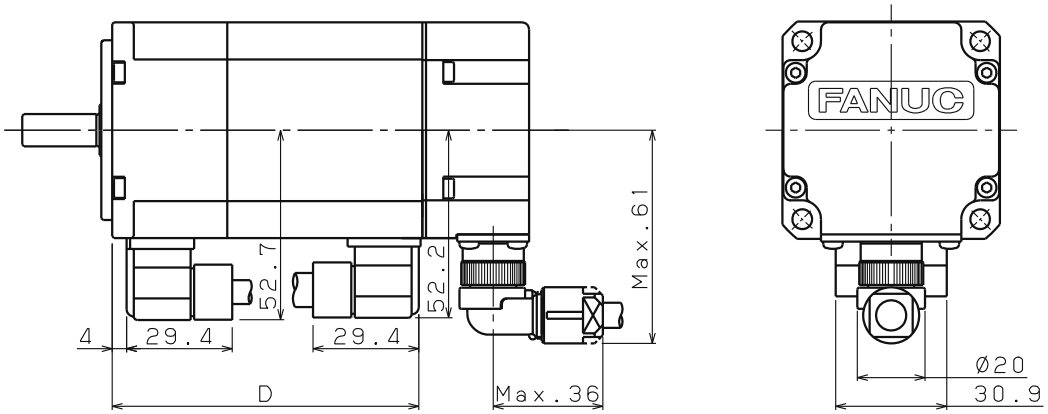


Connector engagement drawing (straight)

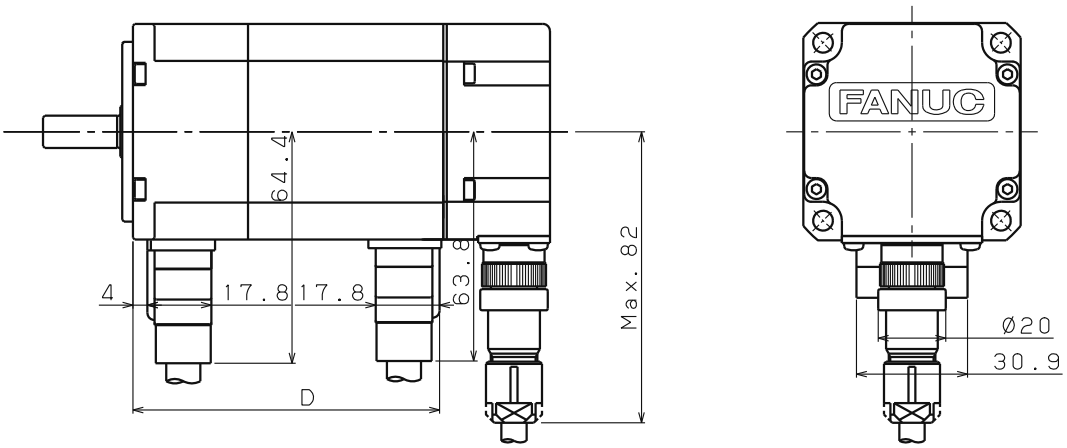


| MODEL | A | B | C | D |
|---|---|---|---|---|
| βiS 0.4 | 101.5 | 91.5 | 61 | 70.8 |
| βiS 0.5 | 116 | 106 | 75.5 | 85.3 |
| βiS 1 | 145 | 135 | 104.5 | 114.3 |



© MyFANUC DC7187A9420041B3806BC8E5C652D376

# C.4 POWER CONNECTORS

This section describes the power connectors of Groups D and E below that are used in the former βi series servo motors.

| Group | Servo motor name |
|---|---|
| Group A | βiS 0.2/5000, βiS 0.3/5000 |
| Group B | βiS 0.4/5000, βiS 0.5/6000, βiS 1/6000 |
| Group C | βiS 2/4000, βiS 4/4000<br>βiS 2/4000HV, βiS 4/4000HV<br>βiSc 2/4000, βiSc 4/4000 |
| Group D | βiS 8/3000, βiS 12/2000, βiS 12/3000<br>βiS 8/3000HV, βiS 12/3000HV<br>βiSc 8/3000, βiSc 12/2000, βiSc 12/3000<br>βiF 4/3000, βiF 8/2000 |
| Group E | βiS 22/2000, βiS 22/3000, βiS 30/2000, βiS 40/2000<br>βiS 22/2000HV, βiS 22/3000HV<br>βiS 30/2000HV, βiS 40/2000HV<br>βiSc 22/2000<br>βiF 12/2000, βiF 22/2000, βiF 30/1500 |

This section consists of the following sections:

C.4.1 Connectors for Power (Motor Side)
C.4.2 Connectors for Power (Cable Side)
C.4.3 Connection to a Conduit Hose

The brake connectors and feedback sensor connectors are the same for both βi-B and βi series servo motors. See Subsection 1.3.3, "Outline Drawings" and Subsection 2.1.3, "Connectors on the Cable Side" in this manual.



© MyFANUC DC7187A9420041B3806BC8E5C652D376

## C.4.1 Connectors for Power (Motor Side) (for Groups D and E)

### C.4.1.1 Connectors for power (for Group D)

Manufacture: Hirose Electric
Manufacturer specification: H/MS3102A18-10P-D-T(10)

As the power connector a receptacle connector having a water-proof property by itself (when it is not engaged) is used as standard. Strictly speaking, this power connector does not meet the MS standard, but it can be used as a connector compatible with the MS-standard round connector.

The following shows the specification, shape, and pin layout of the power connector.

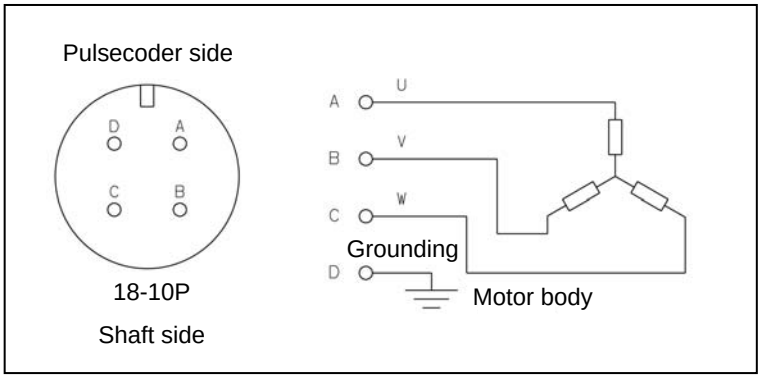

Power connector: 18-10P
Applicable models: βiS 8/4000, etc.

### C.4.1.2 Connectors for power (for Group E)

Manufacture: Japan Aviation Electronics Industry
Manufacturer specification: JL04 HV-2E22-22PE-BT-R

As the power connector a receptacle connector having a water-proof property by itself (when it is not engaged) is used as standard. Strictly speaking, this power connector does not meet the MS standard, but it can be used as a connector compatible with the MS-standard round connector.

The following shows the specification, shape, and pin layout of the power connector.

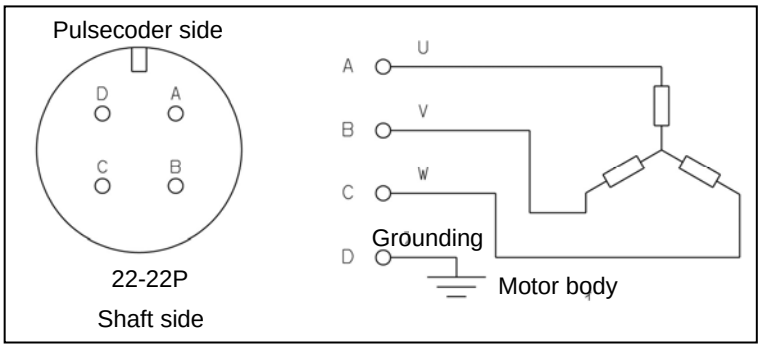

Power connector: 22-22P
Applicable models: βiS 22/3000, etc.



© MyFANUC DC7187A9420041B3806BC8E5C652D376

## C.4.2 Connectors for Power (Cable Side) (for Groups D and E)

To meet the IEC60034 standard, TUV-approved plug connectors and cable clamps should be used in connecting the power cable. To meet the IEC60034 standard by using a cable or conduit hose seal adapter, contact the manufacturer for details. FANUC can provide “IP67 rated, TUV approved type” and “IP67 rated type” as plug connectors on the cable side for the FANUC βi series AC servo motors; all these connectors are black. Of course, conventional plug connectors may be used, because they are MS-compatible. The specifications of each connector are explained based on the examples shown below.

### Ordering specification number of the power connector kit

The specification numbers used for ordering a power connector kit from FANUC are listed below. The power connector kit contains a plug connector on the cable side (conforming to IP67, TUV approved type) described subsequently.

| Group | | Power connector kit specification | Content |
|---|---|---|---|
| Group D | | A06B-6079-K810 | Single block type connector [D] |
| | Cable diameter ϕ10.3 to 14.3 | A06B-6079-K811 | Straight type connector [A] + cable clamp [C] |
| | | A06B-6079-K812 | Right angle type connector [B] + cable clamp [C] |
| Group E | | A06B-6079-K813 | Single block type connector [D] |
| | Cable diameter ϕ12.9 to 16 | A06B-6079-K814 | Straight type connector [A] + cable clamp [C] |
| | | A06B-6079-K815 | Right angle type connector [B] + cable clamp [C] |
| | Cable diameter ϕ18 to 20 | A06B-6079-K822 | Straight type connector [A] + cable clamp [C] |
| | | A06B-6079-K823 | Right angle type connector [B] + cable clamp [C] |



© MyFANUC DC7187A9420041B3806BC8E5C652D376

## Example of connector connection

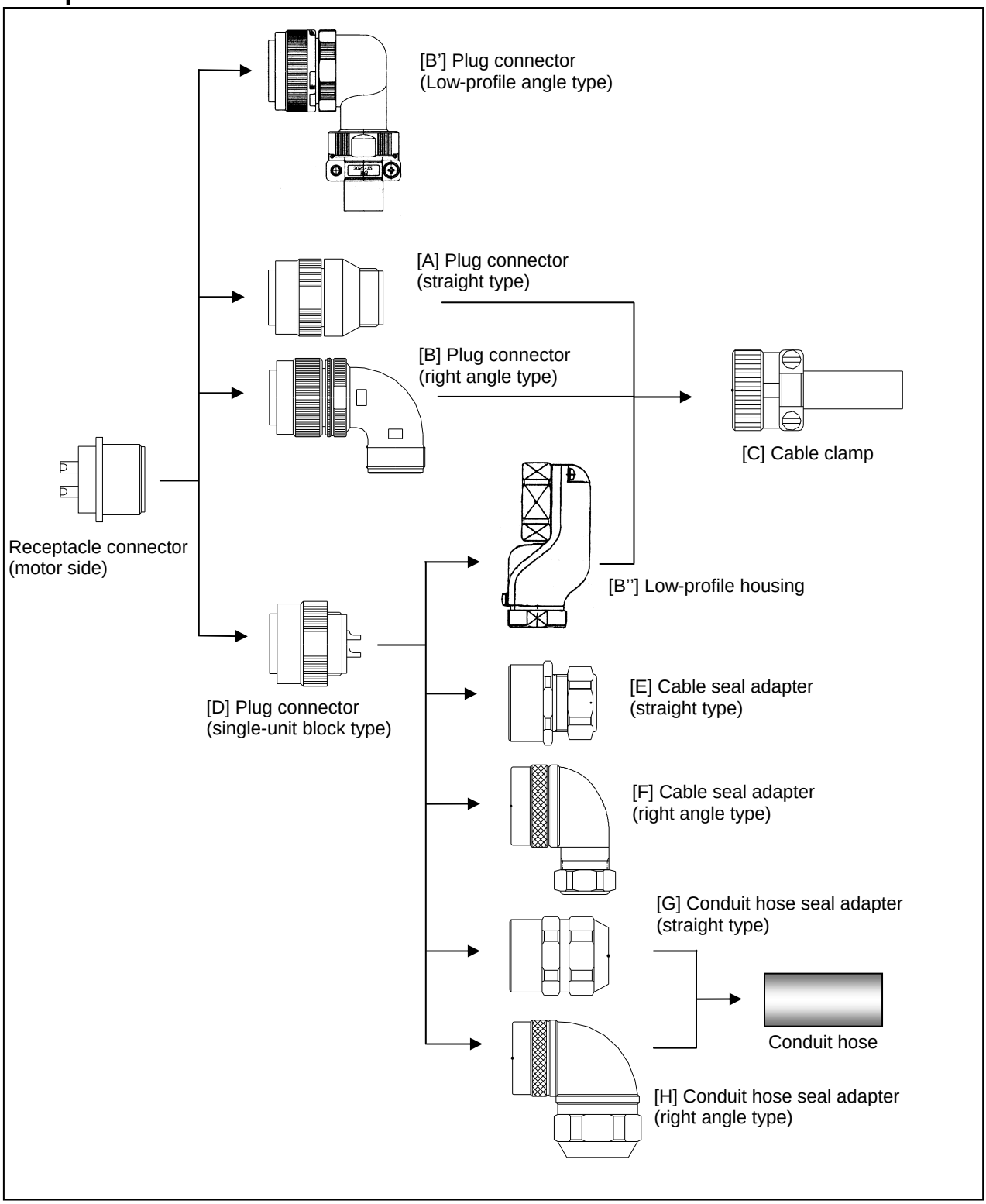




© MyFANUC DC7187A9420041B3806BC8E5C652D376

## Specifications of plug connectors on the cable side (conforming to IP67, TUV-approved type)

The following table lists the specifications of IP67 rated, TUV approved type plug connectors on the cable side by manufacturer. For details of the connectors, contact each manufacturer.

| Model Name | [D] Single Block Type Plug Connector | [A] Straight Type Plug Connector | [B] Right angle Type Plug Connector | [B'] Low-profile angle type plug connector (with clamp) | [B''] Low- profile housing | [C] Cable Clamp |
|---|---|---|---|---|---|---|
| Group D | (Hirose Electric) | | | | | |
| | H/MS3106A 18-10S-D-T(13) | H/MS3106A 18-10S-D-T(10) | H/MS3108A 18-10S-D-T(10) | (1) H/MS3108A 18-10S-DT10D(10) (2) H/MS3108A 18-10S-DT10D1(10) | | H/MS3057-10A (10) |
| | Solder pot diameter ϕ2.6 Applicable wire 3.45mm$^2$ or less | | | Solder pot diameter ϕ2.5 Compatible cable O.D. (1) ϕ12 - ϕ14.3 (2) ϕ10 - ϕ12.5 | | Compatible cable O.D. ϕ10.3 - ϕ14.3 |
| Group E | (Japan Aviation Electronics Industry) | | | | | |
| | JL04V-6A22-22SE-R (Both (1) and (2)) | (1) JL04V-6A22-22SE-EB-R (2) JL04V-6A22-22SE-EB1-R | (1) L04V-8A22-22SE-EB-R (2) L04V-8A22-22SE-EB1-R | | (1) JL04-22 EBA (2) Not supported | (1)JL04-2022 CK (14)-R (2)JL04-2428 CK (20)-R |
| | Solder pot diameter ϕ5.3 Applicable wire 10mm$^2$ or less (Applicable wire 5.5mm$^2$ or less In the case of single block + low-profile housing) | | | | Compatible cable O.D. (1) ϕ12.9 - ϕ16, (2) ϕ18 - ϕ20 | |

* For the connectors of size 22-22, the part number of the plug connector differs depending on the type of cable clamp.

* The items preceded by the same number in ( ) correspond to each other.

**⚠ CAUTION**

1 TUV have certified that the plug connectors and cable clamps listed above, when combined with the FANUC AC Servo Motor αiS series and αiF series, satisfy the VDE0627 safety standard.
Several manufacturers offer other plug connectors. For information about whether the plug connectors satisfy the safety standard when combined with the FANUC αi series, contact the corresponding manufacturer.
- Hirose Electric (HRS) : H/MS310 TUV-conforming series
- Japan Aviation Electronics Industry (JAE) : JL04V series
- DDK Ltd. (DDK) : CE05 series



© MyFANUC DC7187A9420041B3806BC8E5C652D376

## Specifications of plug connectors on the cable side (IP67 rated type)

The following table lists the specifications of IP67 rated type plug connectors on the cable side by manufacturer. For details of the connectors, contact each manufacturer.

| Model Name | [D] Single Block Type Plug Connector | [A] Straight Type Plug Connector | [B] Right Angle Type Plug Connector | [B] Low-profile angle type plug connector | [B''] Low-profile housing | [C] Cable Clamp |
|---|---|---|---|---|---|---|
| Group D | (Japan Aviation Electronics Industry) | | | | | |
| | JA06A-18-10S -J1-R | JA06A-18-10S -J1-EB-R | JA08A-18-10S -J1-EB-R | | JL04V-18EBA | JL04-18CK (13)-R |
| | (Hirose Electric) | | | | | |
| | H/MS3106A 18-10S(13) | H/MS3106A 18-10S(10) | H/MS3108B 18-10S(10) | H/MS08A18-10 S-DT10D(10) | | H/MS3057 -10A(10) |
| | (DDK Ltd.) | | | | | |
| | D/MS3106A 18-10S(D190) | D/MS3106A 18-10S-BSS | D/MS3108A 18-10S-BAS | | | CE3057 -10A-1-D |
| Group E | (Japan Aviation Electronics Industry) | | | | | |
| | JA06A-22-22S -J1-R | JA06A-22-22S -J1-EB-R | JA08A-22-22S -J1-EB-R | | JL04V-22EBA | JL04-2022 CK (14)-R |
| | (Hirose Electric) | | | | | |
| | H/MS3106A 22-22S(13) | H/MS3106A 22-22S(10) | H/MS3108B 22-22S(10) | H/MS08A22-22 S-DT12D(10) | | H/MS3057 -12A(10) |
| | (DDK Ltd.) | | | | | |
| | D/MS3106A 22-22S(D190) | D/MS3106A 22-22S-BSS | D/MS3108A 22-22S-BAS | | | CE3057 -12A-1-D |



© MyFANUC DC7187A9420041B3806BC8E5C652D376

## C.4.3 Connection to a Conduit Hose

This section gives information on the specifications of several adapters to be connected that are made by conduit hose manufacturers for reference purposes. Before using an adapter, contact the corresponding conduit hose manufacturer.

**For power: seal adapter specifications**

| Model Name | [E] Cable Seal adapter Straight type | [F] Cable Seal adapter Right angle type | [G] Conduit hose Seal adapter Straight type | [H] Conduit hose Seal adapter Right angle type |
|---|---|---|---|---|
| For power | | | | |
| Group D | C2KD1218<br>(SANKEI)<br>YSO 18-12-14<br>(DAIWA DENGYOU)<br>ACS-12RL-MS18F<br>(NIPPON FLEX)<br>CG12S-JL18<br>(NEOFLEX) | C29KD1218<br>(SANKEI)<br>YLO 18-12-14<br>(DAIWA DENGYOU)<br>ACA-12RL-MS18F<br>(NIPPON FLEX)<br>CG12A-JL18<br>(NEOFLEX) | KMKD1618<br>(SANKEI)<br>MSA 16-18<br>(DAIWA DENGYOU)<br>RCC-104RL-MS18F<br>(NIPPON FLEX)<br>MAS16S-JL18<br>(NEOFLEX) | KM90KD1618<br>(SANKEI)<br>MAA 16-18<br>(DAIWA DENGYOU)<br>RCC-304RL-MS18F<br>(NIPPON FLEX)<br>MAS16A-JL18<br>(NEOFLEX) |
| Group E | C2KD1622<br>(SANKEI)<br>YSO 22-12-14<br>(DAIWA DENGYOU)<br>ACS-16RL-MS22F<br>(NIPPON FLEX)<br>CG16S-JL22<br>(NEOFLEX) | C29KD1622<br>(SANKEI)<br>YLO 22-12-14<br>(DAIWA DENGYOU)<br>ACA-16RL-MS22F<br>(NIPPON FLEX)<br>CG16A-JL22<br>(NEOFLEX) | KMKD2222<br>(SANKEI)<br>MSA 22-22<br>(DAIWA DENGYOU)<br>RCC-106RL-MS22F<br>(NIPPON FLEX)<br>MAS22S-JL22<br>(NEOFLEX) | KM90KD2222<br>(SANKEI)<br>MAA 22-22<br>(DAIWA DENGYOU)<br>RCC-306RL-MS22F<br>(NIPPON FLEX)<br>MAS22A-JL22<br>(NEOFLEX) |



© MyFANUC DC7187A9420041B3806BC8E5C652D376

# C.5 FEEDBACK SENSORS

This section describes the Pulsecoder βiA128 built in βiS2 to βi40 (including HV), βiSc 2 to βiSc 22, and βiF 4 to βiF 30 of βi series servo motors. Since the Pulsecoder is built in the motor, no outline drawing is provided here.
The outlines of the above Pulsecoders are the same for both βi–B series and βi series. See the section on the outline drawings in this manual.

## C.5.1 Types of Pulsecoders and Designation

The following table lists the types of Pulsecoders.

| Pulsecoder type | Resolution [Division/rev] | Absolute/ incremental | Applicable motor |
|---|---|---|---|
| **βiA 128** | 131,072 | Absolute | βiS 2 to βiS 40(including HV)<br>βiSc 2 to βiSc 22<br>βiF 4 to βiF 30 |

For how to specify Pulsecoder, see the Item, “Ordering Specification Number” because Pulsecoder is specified together with a motor.

## C.5.2 Connecting Pulsecoder

### Connector

Manufacturer specification: JN2AS10UL1-R (Manufacture: Japan Aviation Electronics Industry)
HR34B-12WR-10PD (Manufacture: Hirose Electric)

The connector of the βi series Pulsecoder is water-proof when engaged with the cable connector. (When the motor is left singly, the connector is water-proof when the cap mounted at shipment is fit in the connector.)
The signals of the βi series Pulsecoder are arranged as follows:

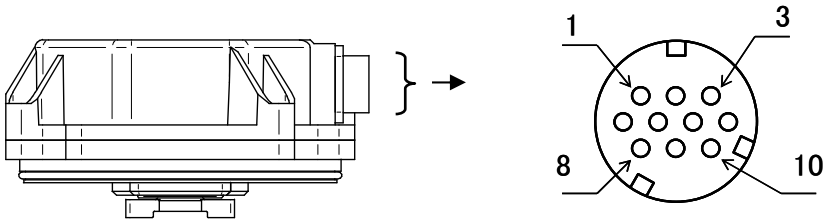


| Signal name | Pin No. (βiA128) |
|---|---|
| RD | 6 |
| *RD | 5 |
| +5V | 8,9 |
| 0V | 7,10 |
| FG | 3 |
| +6V | 4 |

### Connector kits

For information about the connectors and crimping jigs required for creating a feedback cable, see Subsection 2.1.3, "Connectors on the Cable Side".



© MyFANUC DC7187A9420041B3806BC8E5C652D376

**NOTE**

If the motor is mounted on a movable part, or a flexible tube is used for the connector, excessive force may be applied to the connector. In this case, fix the feedback cable to prevent the connector from being broken.

### Connecting Pulsecoder to an amplifier

For cables connecting Pulsecoder and amplifier, refer to “FANUC SERVO AMPLIFIER αi-B series Descriptions (B-65412EN)”, "FANUC SERVO AMPLIFIER αi series Descriptions (B-65282EN)", or FANUC SERVO AMPLIFIER βi series Descriptions (B-65322EN)."

In particular, special care should be taken when the Pulsecoder is connected to an I/O link amplifier. For details, refer to the description of the I/O link amplifier in "FANUC SERVO AMPLIFIER βi series Descriptions (B-65322EN)".



© MyFANUC DC7187A9420041B3806BC8E5C652D376

# D NOTES ON ADJUSTING βi-B/βi SERVO MOTOR PARAMETERS

For the velocity loop gain of the βi-B/βi servo motors, the doubled response is obtained by the motor-specific standard parameter setting as compared with the velocity loop gain of the αi-B/αi servo motors. For this reason, specifying half the value specified for the αi-B/αi servo motors for the velocity loop gain on the servo setting screen for the βi-B/βi servo motors obtains the response equivalent to that for the αi-B/αi servo motors.

Example) Specifying 200% for the αi-B/αi servo motors and specifying 100% for the βi-B/βi servo motors for the velocity loop gain on the servo setting screen obtain the same gain on control.



© MyFANUC DC7187A9420041B3806BC8E5C652D376

© MyFANUC DC7187A9420041B3806BC8E5C652D376

# ADDITIONAL INFORMATION

© MyFANUC DC7187A9420041B3806BC8E5C652D376

© MyFANUC DC7187A9420041B3806BC8E5C652D376

# Increasing intermittent operating zone of βiS22/3000-B~βiS40/2000-B

1. Type of applied technical documents

| | |
|---|---|
| Name | FANUC AC SERVO MOTOR βi-B / βi series DESCRIPTIONS |
| Spec. No. / Version | B-65302EN/08-01 |

2. Summary of Change

| Group | Name | New, Add, Correct, Delete, | Applicable Date |
|---|---|---|---|
| Basic Function | Increasing intermittent operating zone of βiS22/3000-B~βiS40/2000-B | New | Feb.2016 |
| Optional Function | | | |
| Unit | | | |
| Maintenance Parts | | | |
| Notice | | | |
| Correction | | | |
| Another | | | |

| | | | | | |
|---|---|---|---|---|---|
| | | | | TITLE Increasing intermittent operating zone of βiS22/3000-B~βiS40/2000-B | |
| 01 | 2016.02.10 | Fujimoto | Newly designed | DRAW. No. B-65302EN/08-01 | CUST. |
| Ed. | Date | Design. | Description | FANUC CORPORATION | SHEET 1/10 |

© MyFANUC DC7187A9420041B3806BC8E5C652D376

## Increasing intermittent operating zone of βiS22/3000-B~βiS40/2000-B

■Summary

The cautions, the values for selecting αiPS-B(power supply), parameters, torque curves, and data sheet, for increasing intermittent operating zone by using new prepared parameters for servo motors βiS22/3000-B~βiS40/2000-B are described in this report.

The target servo motors are following, except for βiS22/3000~βiS40/2000（A06B-0xxx-Bxxx）.

| Servo motor | Ordering number |
|---|---|
| βiS22/3000-B | A06B-2082-B*** |
| βiS22/3000HV-B | A06B-2083-B*** |
| βiS30/2000-B | A06B-2087-B*** |
| βiS30/2000HV-B | A06B-2088-B*** |
| βiS40/2000-B | A06B-2089-B*** |
| βiS40/2000HV-B | A06B-2090-B*** |

These servo motors are based on normal motor specification, basically.
The items, which are not mentioned in this report, refer to FANUC AC SERVO MOTOR βi-B/βi series DESCRIPTION (B-65302EN).

■Output data for selecting αiPS-B(power supply)

The following data is the output value of the servo motor to select the αiPS-B.
The values of βiS22/3000-B and βiS22/3000HV-B for selection of the αiPS-B need to modify as following about Maximum output at acceleration.

| Servo Motor | Continuous rated output | Maximum output at acceleration |
|---|---|---|
| βiS22/3000-B | 3kW | 11kW (8.8kW - before modified) |
| βiS22/3000HV-B | 3kW | 11kW (8.8kW - before modified) |
| βiS30/2000-B | 3kW | 11kW |
| βiS30/2000HV-B | 3kW | 11kW |
| βiS40/2000-B | 3kW | 11kW |
| βiS40/2000HV-B | 3kW | 11kW |

The values are only for selection of the αiPS-B. It is not to guarantee the output of the servo motor.



© MyFANUC DC7187A9420041B3806BC8E5C652D376

■Characteristic Curves and Data Sheet

**Model** βi S 22/3000-B **(Increasing intermittent operating zone)** Specification A06B-2082-B□03

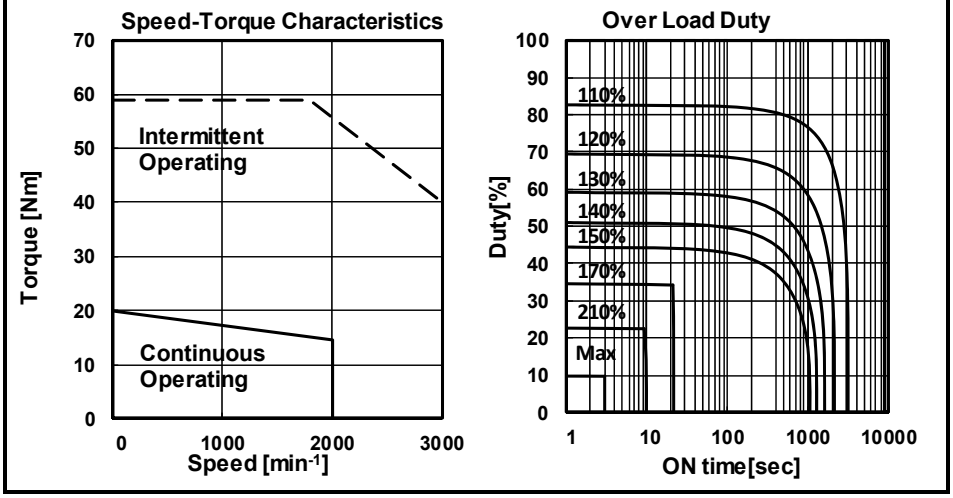


**Data sheet**

| Parameter | Symbol | Value | Unit |
|---|---|---|---|
| **Continuous Torque (at low speed) (*)** | Tc | 20<br>204 | Nm<br>kgfcm |
| **Continuous Current (at low speed) (*)** | Ic | 17.7 | A (rms) |
| **Rated Output (*)** | Pr | 3.0<br>4.0 | kW<br>HP |
| **Rated Speed** | Nr | 2000 | $min^{-1}$ |
| **Maximum Speed** | Nmax | 3000 | $min^{-1}$ |
| **Maximum Torque (*)** | Tmax | 59<br>602 | Nm<br>kgfcm |
| **Moment of Inertia of Rotor** | Jm | 0.00527<br>0.0538 | $kgm^2$<br>$kgfcms^2$ |
| **Moment of Inertia of Rotor(with 35Nm Brake)** | Jm | 0.00587<br>0.0599 | $kgm^2$<br>$kgfcms^2$ |
| **Torque Constant (*)** | Kt | 1.13<br>11.5 | Nm/A(rms)<br>kgfcm/A(rms) |
| **Winding Resistance (between terminals) (*)** | Ra | 0.34 | Ω |
| **Thermal time constant** | $t_t$ | 30 | min |
| **Static friction** | Tf | 0.8<br>8 | Nm<br>kgfcm |
| **Weight** | w | 17 | kg |
| **Weight(with 35Nm Brake)** | w | 23 | kg |
| **Max. Current of Servo Amp.** | Imax | 80 | A (peak) |

(*) The values are the standard values at 20℃ and the tolerance is ±10%.

The speed-torque characteristics very depending on the type of software,parametersetting,and input voltage of the digital servo software.(The above figures show average values.)

| | | | | | |
|---|---|---|---|---|---|
| | | | | TITLE **Increasing intermittent operating zone of βiS22/3000-B~βiS40/2000-B** | |
| 01 | 2016.02.10 | Fujimoto | Newly designed | DRAW. No. B-65302EN/08-01 | CUST. |
| Ed. | Date | Design. | Description | **FANUC CORPORATION** | SHEET 3/10 |

© MyFANUC DC7187A9420041B3806BC8E5C652D376

**Model** βi S 22/3000 HV-B (Increasing intermittent operating zone) Specification A06B-2083-B□03

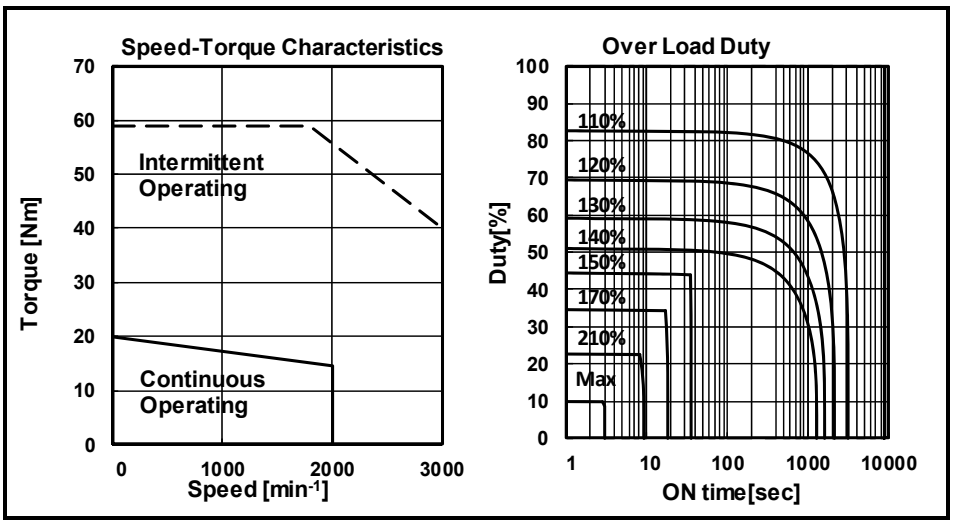


**Data sheet**

| Parameter | Symbol | Value | Unit |
|---|---|---|---|
| **Continuous Torque (at low speed) (*)** | Tc | 20<br>204 | Nm<br>kgfcm |
| **Continuous Current (at low speed) (*)** | Ic | 8.9 | A (rms) |
| **Rated Output (*)** | Pr | 3.0<br>4.0 | kW<br>HP |
| **Rated Speed** | Nr | 2000 | $min^{-1}$ |
| **Maximum Speed** | Nmax | 3000 | $min^{-1}$ |
| **Maximum Torque (*)** | Tmax | 59<br>602 | Nm<br>kgfcm |
| **Moment of Inertia of Rotor** | Jm | 0.00527<br>0.0538 | $kgm^2$<br>$kgfcms^2$ |
| **Moment of Inertia of Rotor(with 35Nm Brake)** | Jm | 0.00587<br>0.0599 | $kgm^2$<br>$kgfcms^2$ |
| **Torque Constant (*)** | Kt | 2.26<br>23.1 | Nm/A(rms)<br>kgfcm/A(rms) |
| **Winding Resistance (between terminals) (*)** | Ra | 1.4 | Ω |
| **Thermal time constant** | $t_t$ | 30 | min |
| **Static friction** | Tf | 0.8<br>8 | Nm<br>kgfcm |
| **Weight** | w | 17 | kg |
| **Weight(with 35Nm Brake)** | w | 23 | kg |
| **Max. Current of Servo Amp.** | Imax | 40 | A (peak) |

(*) The values are the standard values at 20℃ and the tolerance is ±10%.

The speed-torque characteristics very depending on the type of software,parametersetting,and input voltage of the digital servo software.(The above figures show average values.)

| | | | | | |
|---|---|---|---|---|---|
| | | | | TITLE **Increasing intermittent operating zone of βiS22/3000-B~βiS40/2000-B** | |
| 01 | 2016.02.10 | Fujimoto | Newly designed | DRAW. No. B-65302EN/08-01 | CUST. |
| Ed. | Date | Design. | Description | **FANUC CORPORATION** | SHEET 4/10 |

© MyFANUC DC7187A9420041B3806BC8E5C652D376

**Model** βi S 30/2000-B (Increasing intermittent operating zone) Specification A06B-2087-B□03

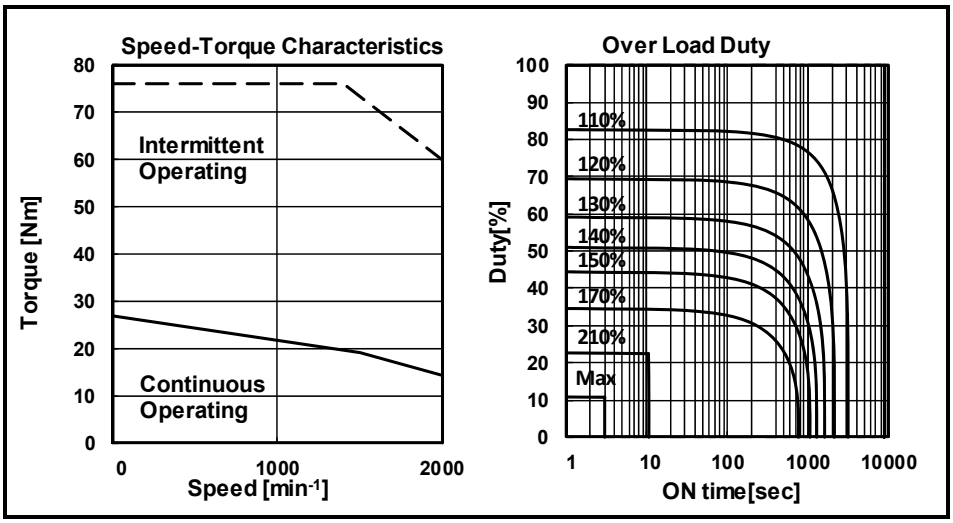


**Data sheet**

| Parameter | Symbol | Value | Unit |
|---|---|---|---|
| **Continuous Torque (at low speed) (*)** | Tc | 27<br>276 | Nm<br>kgfcm |
| **Continuous Current (at low speed) (*)** | Ic | 18.6 | A (rms) |
| **Rated Output (*)** | Pr | 3.0<br>4.0 | kW<br>HP |
| **Rated Speed** | Nr | 2000 | $min^{-1}$ |
| **Maximum Speed** | Nmax | 2000 | $min^{-1}$ |
| **Maximum Torque (*)** | Tmax | 76<br>775 | Nm<br>kgfcm |
| **Moment of Inertia of Rotor** | Jm | 0.00759<br>0.0774 | $kgm^2$<br>$kgfcms^2$ |
| **Moment of Inertia of Rotor(with 35Nm Brake)** | Jm | 0.00819<br>0.0836 | $kgm^2$<br>$kgfcms^2$ |
| **Torque Constant (*)** | Kt | 1.45<br>14.8 | Nm/A(rms)<br>kgfcm/A(rms) |
| **Winding Resistance (between terminals) (*)** | Ra | 0.30 | Ω |
| **Thermal time constant** | $t_t$ | 30 | min |
| **Static friction** | Tf | 0.8<br>8 | Nm<br>kgfcm |
| **Weight** | w | 23 | kg |
| **Weight(with 35Nm Brake)** | w | 29 | kg |
| **Max. Current of Servo Amp.** | Imax | 80 | A (peak) |

(*) The values are the standard values at 20℃ and the tolerance is ±10%.

The speed-torque characteristics very depending on the type of software,parametersetting,and input voltage of the digital servo software.(The above figures show average values.)

| | | | | | |
|---|---|---|---|---|---|
| | | | | TITLE **Increasing intermittent operating zone of βiS22/3000-B~βiS40/2000-B** | |
| 01 | 2016.02.10 | Fujimoto | Newly designed | DRAW. No. B-65302EN/08-01 | CUST. |
| Ed. | Date | Design. | Description | **FANUC CORPORATION** | SHEET 5/10 |

© MyFANUC DC7187A9420041B3806BC8E5C652D376

**Model** βi S 30/2000HV-B (Increasing intermittent operating zone) Specification A06B-2088-B□03

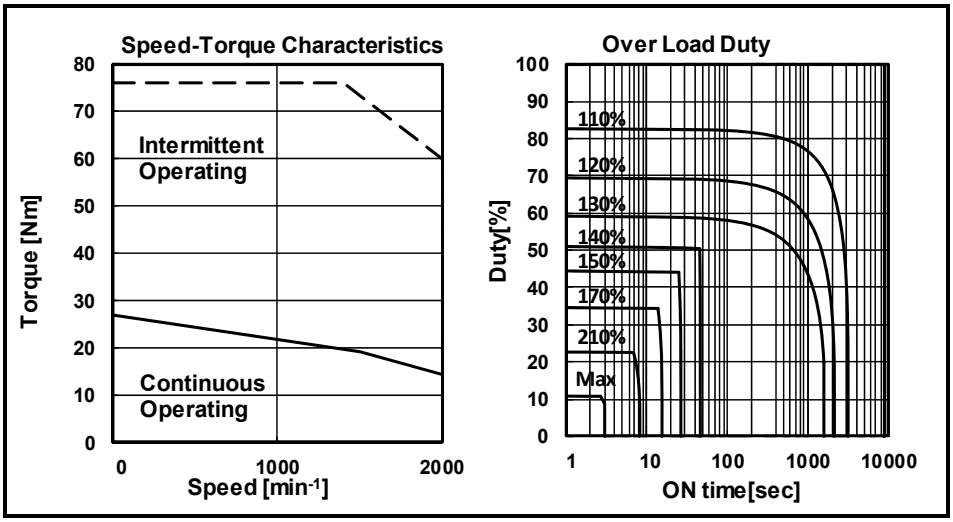


**Data sheet**

| Parameter | Symbol | Value | Unit |
|---|---|---|---|
| **Continuous Torque (at low speed) (*)** | Tc | 27 | Nm |
| | | 276 | kgfcm |
| **Continuous Current (at low speed) (*)** | Ic | 9.3 | A (rms) |
| **Rated Output (*)** | Pr | 3.0 | kW |
| | | 4.0 | HP |
| **Rated Speed** | Nr | 2000 | $min^{-1}$ |
| **Maximum Speed** | Nmax | 2000 | $min^{-1}$ |
| **Maximum Torque (*)** | Tmax | 76 | Nm |
| | | 775 | kgfcm |
| **Moment of Inertia of Rotor** | Jm | 0.00759 | $kgm^2$ |
| | | 0.0774 | $kgfcms^2$ |
| **Moment of Inertia of Rotor(with 35Nm Brake)** | Jm | 0.00819 | $kgm^2$ |
| | | 0.0836 | $kgfcms^2$ |
| **Torque Constant (*)** | Kt | 2.90 | Nm/A(rms) |
| | | 29.6 | kgfcm/A(rms) |
| **Winding Resistance (between terminals) (*)** | Ra | 1.2 | Ω |
| **Thermal time constant** | $t_t$ | 30 | min |
| **Static friction** | Tf | 0.8 | Nm |
| | | 8 | kgfcm |
| **Weight** | w | 23 | kg |
| **Weight(with 35Nm Brake)** | w | 29 | kg |
| **Max. Current of Servo Amp.** | Imax | 40 | A (peak) |

(*) The values are the standard values at 20℃ and the tolerance is ±10%.

The speed-torque characteristics very depending on the type of software,parametersetting,and input voltage of the digital servo software.(The above figures show average values.)



© MyFANUC DC7187A9420041B3806BC8E5C652D376

**Model** βi S 40/2000-B (Increasing intermittent operating zone) Specification A06B-2089-B□03

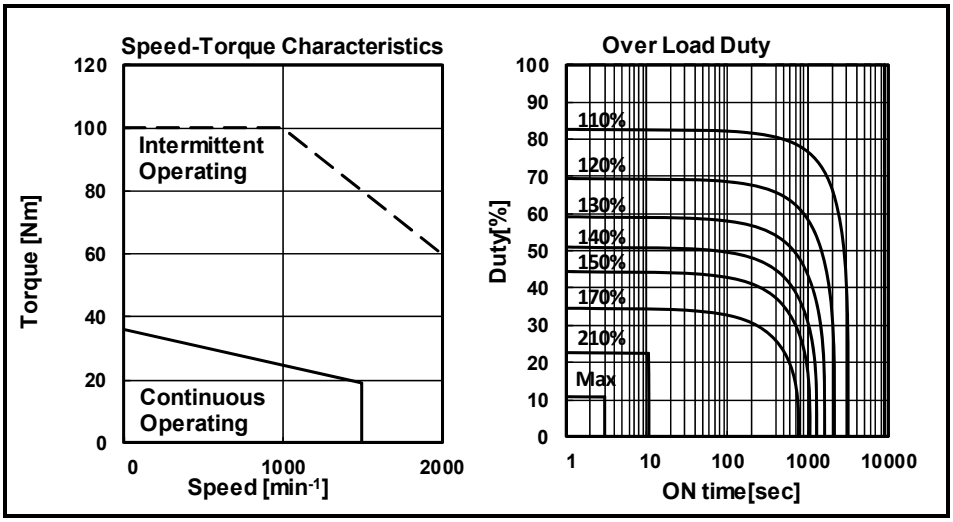


**Data sheet**

| Parameter | Symbol | Value | Unit |
|---|---|---|---|
| **Continuous Torque (at low speed) (*)** | Tc | 36<br>367 | Nm<br>kgfcm |
| **Continuous Current (at low speed) (*)** | Ic | 18.6 | A (rms) |
| **Rated Output (*)** | Pr | 3.0<br>4.0 | kW<br>HP |
| **Rated Speed** | Nr | 1500 | $min^{-1}$ |
| **Maximum Speed** | Nmax | 2000 | $min^{-1}$ |
| **Maximum Torque (*)** | Tmax | 100<br>1020 | Nm<br>kgfcm |
| **Moment of Inertia of Rotor** | Jm | 0.00990<br>0.101 | $kgm^2$<br>$kgfcms^2$ |
| **Moment of Inertia of Rotor(with 35Nm Brake)** | Jm | 0.0105<br>0.107 | $kgm^2$<br>$kgfcms^2$ |
| **Torque Constant (*)** | Kt | 1.94<br>19.8 | Nm/A(rms)<br>kgfcm/A(rms) |
| **Winding Resistance (between terminals) (*)** | Ra | 0.34 | Ω |
| **Thermal time constant** | $t_t$ | 30 | min |
| **Static friction** | Tf | 1.2<br>12 | Nm<br>kgfcm |
| **Weight** | w | 28 | kg |
| **Weight(with 35Nm Brake)** | w | 34 | kg |
| **Max. Current of Servo Amp.** | Imax | 80 | A (peak) |

(*) The values are the standard values at 20℃ and the tolerance is ±10%.

The speed-torque characteristics very depending on the type of software,parametersetting,and input voltage of the digital servo software.(The above figures show average values.)

| | | | | | |
|---|---|---|---|---|---|
| | | | | TITLE **Increasing intermittent operating zone of βiS22/3000-B~βiS40/2000-B** | |
| 01 | 2016.02.10 | Fujimoto | Newly designed | DRAW. No. B-65302EN/08-01 | CUST. |
| Ed. | Date | Design. | Description | **FANUC CORPORATION** | SHEET 7/10 |

© MyFANUC DC7187A9420041B3806BC8E5C652D376

**Model** βiS 40/2000HV-B (Increasing intermittent operating zone) Specification A06B-2090-B□03

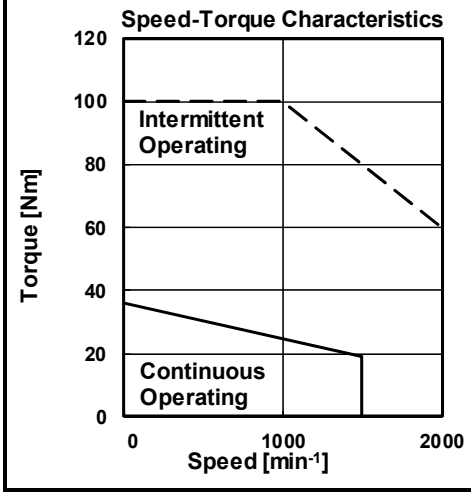


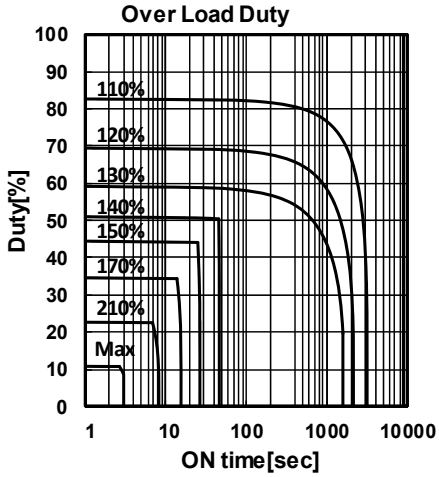


**Data sheet**

| Parameter | Symbol | Value | Unit |
|---|---|---|---|
| **Continuous Torque (at low speed) (*)** | Tc | 36 | Nm |
| | | 367 | kgfcm |
| **Continuous Current (at low speed) (*)** | Ic | 9.3 | A (rms) |
| **Rated Output (*)** | Pr | 3.0 | kW |
| | | 4.0 | HP |
| **Rated Speed** | Nr | 1500 | $min^{-1}$ |
| **Maximum Speed** | Nmax | 2000 | $min^{-1}$ |
| **Maximum Torque (*)** | Tmax | 100 | Nm |
| | | 1020 | kgfcm |
| **Moment of Inertia of Rotor** | Jm | 0.00990 | $kgm^2$ |
| | | 0.101 | $kgfcms^2$ |
| **Moment of Inertia of Rotor(with 35Nm Brake)** | Jm | 0.0105 | $kgm^2$ |
| | | 0.107 | $kgfcms^2$ |
| **Torque Constant (*)** | Kt | 3.9 | Nm/A(rms) |
| | | 40 | kgfcm/A(rms) |
| **Winding Resistance (between terminals) (*)** | Ra | 1.3 | Ω |
| **Thermal time constant** | $t_t$ | 30 | min |
| **Static friction** | Tf | 1.2 | Nm |
| | | 12 | kgfcm |
| **Weight** | w | 28 | kg |
| **Weight(with 35Nm Brake)** | w | 34 | kg |
| **Max. Current of Servo Amp.** | Imax | 40 | A (peak) |

(*) The values are the standard values at 20℃ and the tolerance is ±10%.

The speed-torque characteristics very depending on the type of software,parametersetting,and input voltage of the digital servo software.(The above figures show average values.)



© MyFANUC DC7187A9420041B3806BC8E5C652D376

■Parameter table

Parameter tables are as follows. This parameter enables increasing intermittent operating zone. We will prepare the registration of these parameter in servo software from now. In case before the registration, please input these parameter manually.

**⚠ CAUTION**

Please input a correct value of parameter according to the following lists.

If the motor is driven with a wrong parameter,the motor and the amplifier may be damaged.

| | Motor model | βiS22 /3000-B (Torque Up) | βiS22 /3000HV-B (Torque Up) | βiS30 /2000-B (Torque Up) | βiS30 /2000HV-B (Torque Up) | βiS40 /2000-B (Torque Up) | βiS40 /2000HV-B (Torque Up) |
|---|---|---|---|---|---|---|---|
| | Order No. | 2082 | 2083 | 2087 | 2088 | 2089 | 2090 |
| | Control | HRV2 | HRV2 | HRV2 | HRV2 | HRV2 | HRV2 |
| | Motor ID | 535 | 536 | 537 | 538 | 539 | 540 |
| | Parameter No. | | | | | | |
| | 2003 | 00001000 | 00001000 | 00001000 | 00001000 | 00001000 | 00001000 |
| | 2004 | 00000011 | 00000011 | 00000011 | 00000011 | 00000011 | 00000011 |
| | 2005 | 00000000 | 00000000 | 00000000 | 00000000 | 00000000 | 00000000 |
| | 2006 | 00000000 | 00000000 | 00000000 | 00000000 | 00000000 | 00000000 |
| | 2007 | 00000000 | 00000000 | 00000000 | 00000000 | 00000000 | 00000000 |
| | 2008 | 00000000 | 00000000 | 00000000 | 00000000 | 00000000 | 00000000 |
| | 2009 | 00000000 | 00000000 | 00000000 | 00000000 | 00000000 | 00000000 |
| | 2010 | 00000000 | 00000000 | 00000000 | 00000000 | 00000000 | 00000000 |
| | 2011 | 00000000 | 00000000 | 00000000 | 00000000 | 00000000 | 00000000 |
| | 2012 | 00000000 | 00000000 | 00000000 | 00000000 | 00000000 | 00000000 |
| * | 2013 | 00000000 | 00000000 | 00000000 | 00000000 | 00000000 | 00000000 |
| * | 2014 | 00000000 | 00000000 | 00000000 | 00000000 | 00000000 | 00000000 |
| | 2210 | 00000000 | 00000000 | 00000000 | 00000000 | 00000000 | 00000000 |
| * | 2211 | 00001010 | 00001010 | 00001010 | 00001010 | 00001010 | 00001010 |
| | 2300 | 00000000 | 00000000 | 00000000 | 00000000 | 00000000 | 00000000 |
| | 2301 | 00000000 | 00000000 | 00000000 | 00000000 | 00000000 | 00000000 |
| | 2560 | 00000000 | 00000000 | 00000000 | 00000000 | 00000000 | 00000000 |
| | 2040 | 1157 | 1146 | 1650 | 1650 | 1624 | 1624 |
| | 2041 | -5102 | -5267 | -6565 | -6565 | -7197 | -7197 |
| | 2042 | -1332 | -1332 | -2681 | -2681 | -1341 | -1341 |
| | 2043 | 198 | 192 | 214 | 214 | 208 | 208 |
| | 2044 | -1766 | -1722 | -1912 | -1912 | -1870 | -1870 |
| | 2045 | 0 | 0 | 0 | 0 | 0 | 0 |
| | 2046 | -8235 | -8235 | -8235 | -8235 | -8235 | -8235 |
| | 2047 | 4297 | 4406 | 3971 | 3971 | 4057 | 4057 |
| | 2048 | 0 | 0 | 0 | 0 | 0 | 0 |
| | 2049 | 0 | 0 | 0 | 0 | 0 | 0 |
| | 2050 | 956 | 956 | 956 | 956 | 956 | 956 |
| | 2051 | 510 | 510 | 510 | 510 | 510 | 510 |
| | 2052 | 4200 | 4200 | 2800 | 2800 | 2600 | 2600 |
| | 2053 | 21 | 21 | 21 | 21 | 21 | 21 |
| | 2054 | 1894 | 1894 | 1894 | 1894 | 1894 | 1894 |
| | 2055 | 319 | 319 | 319 | 319 | 319 | 319 |
| | 2056 | 0 | 0 | 0 | 0 | 0 | 0 |
| | 2057 | -6174 | -6174 | -4647 | -4647 | -3881 | -3881 |
| | 2058 | -2843 | -2843 | -3115 | -3115 | -3732 | -3732 |
| | 2059 | 0 | 0 | 0 | 0 | 0 | 0 |
| * | 2060 | 7282 | 7282 | 7282 | 7282 | 7282 | 7282 |
| | 2061 | 716 | 698 | 775 | 777 | 758 | 758 |
| | 2062 | 32520 | 32548 | 32413 | 32413 | 32413 | 32413 |
| | 2063 | 3097 | 2755 | 4431 | 4431 | 4431 | 4431 |
| | 2064 | 4 | 4 | 4 | 4 | 4 | 4 |
| | 2065 | 9212 | 8192 | 13201 | 13201 | 13201 | 13201 |



© MyFANUC DC7187A9420041B3806BC8E5C652D376

| Parameter No. | βiS22 /3000-B (Torque Up) | βiS22 /3000HV-B (Torque Up) | βiS30 /2000-B (Torque Up) | βiS30 /2000HV-B (Torque Up) | βiS40 /2000-B (Torque Up) | βiS40 /2000HV-B (Torque Up) |
|---|---|---|---|---|---|---|
| 2066 | 0 | 0 | 0 | 0 | 0 | 0 |
| 2067 | 0 | 0 | 0 | 0 | 0 | 0 |
| 2068-2073 | 0 | 0 | 0 | 0 | 0 | 0 |
| 2074 | 12288 | 8192 | 8192 | 8192 | 8192 | 8192 |
| 2077-2083 | 0 | 0 | 0 | 0 | 0 | 0 |
| 2086 | 2121 | 2069 | 2154 | 2154 | 2154 | 2154 |
| 2087-2089 | 0 | 0 | 0 | 0 | 0 | 0 |
| 2090 | 0 | 0 | 0 | 0 | 0 | 0 |
| 2091-2098 | 0 | 0 | 0 | 0 | 0 | 0 |
| 2099 | 400 | 400 | 400 | 400 | 400 | 400 |
| 2100 | 0 | 0 | 0 | 0 | 0 | 0 |
| 2101 | 0 | 0 | 0 | 0 | 0 | 0 |
| 2102 | 0 | 0 | 0 | 0 | 0 | 0 |
| 2103 | 0 | 0 | 0 | 0 | 0 | 0 |
| 2104 | 0 | 0 | 0 | 0 | 0 | 0 |
| 2105 | 848 | 869 | 1127 | 1127 | 1503 | 1503 |
| 2106-2109 | 0 | 0 | 0 | 0 | 0 | 0 |
| 2110 | 1289 | 1289 | 1546 | 1546 | 263 | 263 |
| * 2111 | 5016 | 5016 | 4054 | 4054 | 2815 | 2815 |
| 2112 | 0 | 0 | 0 | 0 | 0 | 0 |
| 2113 | 0 | 0 | 0 | 0 | 0 | 0 |
| 2127 | 1967 | 3894 | 2095 | 2095 | 2712 | 2712 |
| 2128 | 6000 | 6000 | 3066 | 3066 | 3354 | 3354 |
| 2129 | 2315 | 2315 | 1548 | 1548 | 1038 | 1038 |
| 2130-2132 | 0 | 0 | 0 | 0 | 0 | 0 |
| 2133 | 5647 | 5647 | 4110 | 4110 | 2567 | 2567 |
| 2134 | 12820 | 12820 | 12814 | 12814 | 8967 | 8967 |
| 2159 | 6422 | 6425 | 5138 | 5141 | 5652 | 4112 |
| 2160 | 2610 | 2610 | 2620 | 2620 | 2620 | 2630 |
| 2161 | 0 | 0 | 0 | 0 | 0 | 0 |
| 2162 | 32765 | 32765 | 32765 | 32765 | 32765 | 32765 |
| 2163 | 40 | 38 | 34 | 34 | 36 | 36 |
| 2164 | 7166 | 6815 | 7387 | 7387 | 7713 | 7713 |
| 2165 | 85 | 45 | 85 | 45 | 85 | 45 |
| 2302 | 0 | 0 | 0 | 0 | 0 | 0 |
| 2304 | 0 | 0 | 0 | 0 | 0 | 0 |
| 2305 | 0 | 0 | 0 | 0 | 0 | 0 |
| 2310 | 0 | 0 | 0 | 0 | 823 | 1646 |
| 2316 | 0 | 0 | 0 | 0 | 0 | 0 |
| 2590 | 7650 | 8300 | 13100 | 12900 | 12100 | 12200 |
| 2591 | -13760 | -14600 | -18500 | -18800 | -18500 | -18700 |
| 2595 | 1643 | 1539 | 1541 | 1540 | 1441 | 1435 |

The parameters with * mark is changed in comparison with the loading a parameter of the following Motor ID.

| Servo Motor | Motor ID |
|---|---|
| βiS22/3000-B | 313 |
| βiS22/3000HV-B | 314 |
| βiS30/2000-B | 472 |
| βiS30/2000HV-B | 473 |
| βiS40/2000-B | 474 |
| βiS40/2000HV-B | 475 |



© MyFANUC DC7187A9420041B3806BC8E5C652D376

**FANUC AC SERVO MOTOR βi/βi-B series**
**Alteration of parallel key of Φ24 straight shaft**

1. Type of applied technical documents

| | |
|---|---|
| Name | FANUC AC SERVO MOTOR |
| Spec. No. /Version | B-65302EN/08-02 |

2.Summary of Change

| Group | Name | New, Add, Correct, Delete, | Applicable Data |
|---|---|---|---|
| Basic Function | | | |
| Optional Function | | | |
| Unit | | | |
| Maintenance Parts | | | |
| Notice | | | |
| Correction | | | |
| Another | Alteration of parallel key | Correct | Nov. 2016 |

| | | | | | |
|---|---|---|---|---|---|
| | | | | TITLE | AC SERVO MOTOR βi, βi-B series Alteration of parallel key for the power |
| 01 | 16.10.28 | G.Ren | Newly designed | DRAW. No. B-65302EN/08-02 | CUST. |
| Ed. | Date | Design. | Description | FANUC CORPORATION | SHEET 1/2 |

© MyFANUC DC7187A9420041B3806BC8E5C652D376

## GENERAL

The parallel key and keyway of φ24 straight shaft of AC SERVO MOTOR β*i*/β*i*-B series is changed to 42mm from 45mm.

The servo motor that used new parallel key is same with before when install in machine.

**Applicable data : Nov-2016**

## THE TARGET MOTOR OF MODIFICATION

**Following table shows the target motor of the modification.**

| Series | Compatible motor |
|---|---|
| β*i* series | β*i*S12/2000, β*i*S12/3000, β*i*S12/3000HV |
| β*i*-B series | β*i*S12/2000-B, β*i*S12/3000-B, β*i*S12/3000HV-B |

## SHAFT SHAPE DETAILS

**・φ24 straight shaft with key way (standard)**

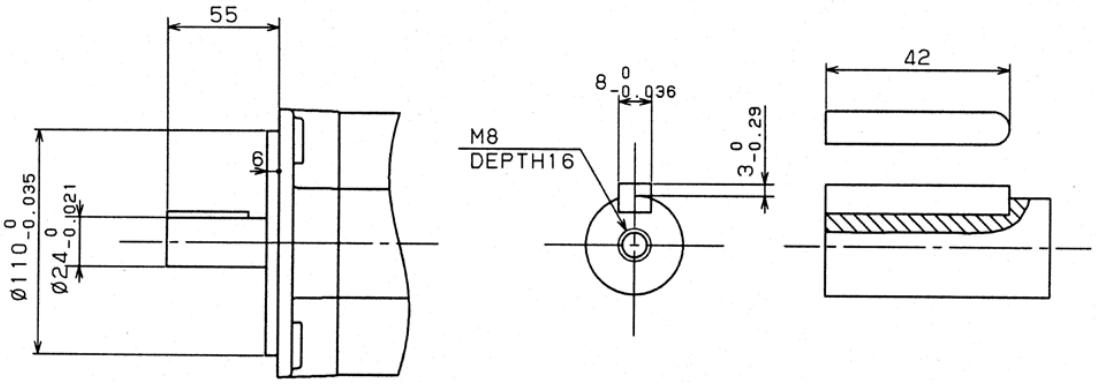


・φ24 straight shaft with key way (with a brake)

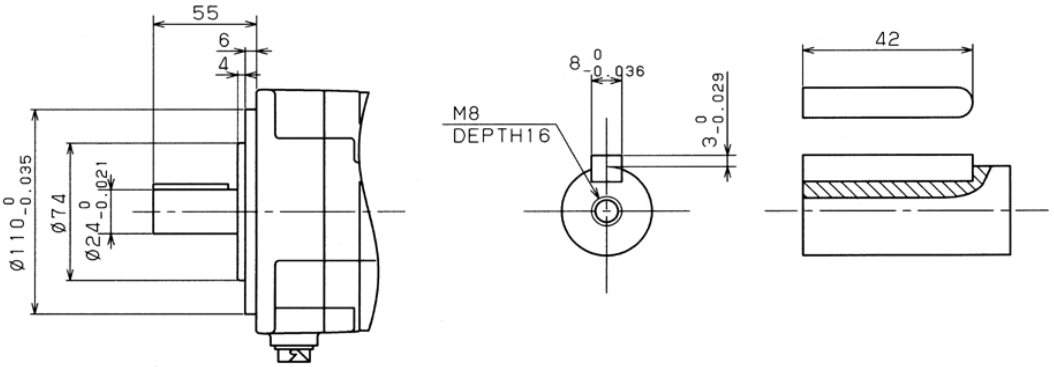


| | | | | | |
|---|---|---|---|---|---|
| | | | | TITLE AC SERVO MOTOR β*i*, β*i*-B series Alteration of parallel key for the power | |
| 01 | 16.10.28 | G.Ren | Newly designed | DRAW. No. B-65302EN/08-02 | CUST. |
| Ed. | Date | Design. | Description | FANUC CORPORATION | SHEET 2/2 |

© MyFANUC DC7187A9420041B3806BC8E5C652D376

**FANUC AC SERVO MOTOR βi-B / βi series DESCRIPTIONS**
**βiS 0.5/6000-B, βiS 1/6000-B, βiS 1.5/6000-B**
**βiS 0.5/6000HV-B, βiS 1/6000HV-B, βiS 1.5/6000HV-B**

1. Type of applied technical documents

| | |
|---|---|
| Name | FANUC AC SERVO MOTOR βi-B / βi series DESCRIPTIONS |
| Spec. No. /Version | B-65302EN/08-02 |

2.Summary of Change

| Group | Name | New, Add, Correct, Delete, | Applicable Data |
|---|---|---|---|
| Basic Function | AC Servo Motor<br>βiS 0.5/6000-B, βiS 1/6000-B, βiS 1.5/6000-B<br>βiS 0.5/6000HV-B, βiS 1/6000HV-B, βiS 1.5/6000HV-B | New | June. 2017 |
| Optional Function | | | |
| Unit | | | |
| Maintenance Parts | | | |
| Notice | | | |
| Correction | | | |
| Another | Add FANUC specification for crimping tool. | | |

| | | | | | |
|---|---|---|---|---|---|
| 03 | 11.Oct.17 | K.Ono | Add FANUC specification for crimping tool T.Tamaki | TITLE | AC SERVO MOTOR βi−B series βiS0.5-B, βiS1-B βiS1.5-B, βiS0.5HV-B, βiS1HV-B βiS1.5HV-B |
| 02 | 30.Aug.17 | K.Yamada | Revise applicable amplifier T.Tamaki | | |
| 01 | 4.Aug.17 | K.Yamada | Newly designed T.Tamaki | DRAW. No. | B-65302EN/08-02 CUST. |
| Ed. | Date | Design. | Description | FANUC CORPORATION | Ed. 1/27 |

© MyFANUC DC7187A9420041B3806BC8E5C652D376

## GENERAL

This description shows the specification of the following motors.

**FANUC AC SERVO MOTOR βi-B series**

βiS 0.5/6000-B, βiS 1/6000-B, βiS 1.5/6000-B

βiS 0.5/6000HV-B, βiS 1/6000HV-B, βiS 1.5/6000HV-B

βiS 0.5/6000-B (A06B-2015-Bxxx) , βiS 1/6000-B(A06B-2017-Bxxx),described in this document are motors different from conventional βiS 0.5/6000-B (A06B-2115-Bxxx) , βiS 1/6000-B(A06B-2116-Bxxx).
For conventional βiS 0.5/6000-B (A06B-2115-Bxxx) , βiS 1/6000-B(A06B-2116-Bxxx) please refer to FANUC AC SERVO MOTOR βi-B / βi series DESCRIPTIONS B-65302EN

Note)
These motors are based on IEC60034-1. The items that are not mentioned this report correspond to FANUC AC SERVO MOTOR βi-B series. Please refer to FANUC AC SERVO MOTOR βi-B / βi series DESCRIPTIONS B-65302EN, too.



© MyFANUC DC7187A9420041B3806BC8E5C652D376

# 1. TYPE OF MOTORS AND DESIGNATION

The ordering specification numbers of the servo motors have the following format:

A06B-□□□□-B△0▽#abcd

□□□□

2015 : βiS 0.5/6000-B
2016 : βiS 0.5/6000HV-B
2017 : βiS 1/6000-B
2018 : βiS 1/6000HV-B
2019 : βiS 1.5/6000-B
2020 : βiS 1.5/6000HV-B

△

1 : Straight shaft
2 : Straight shaft with a key groove
4 : Straight shaft with a 24VDC brake
5 : Straight shaft with a key way and a 24VDC brake
* Do not select "Straight shaft with a key groove" when a large torque or abrupt acceleration rate is required.

○

3 : Pulsecoder βiA 1000

abcd

0000 : Standard
0100 : IP67 specification
* Omitted in case of #0000.

# 2. CHARACTERISTIC CURVES AND DATA SHEET

Please refer to the following.

| Ed. | Date | Design. | Description | |
|---|---|---|---|---|
| 03 | 11.Oct.17 | K.Ono | Add FANUC specification for crimping tool | T.Tamaki |
| 02 | 30.Aug.17 | K.Yamada | Revise applicable amplifier | T.Tamaki |
| 01 | 4.Aug.17 | K.Yamada | Newly designed | T.Tamaki |

TITLE: AC SERVO MOTOR βi-B series βiS0.5-B, βiS1-B βiS1.5-B, βiS0.5HV-B, βiS1HV-B βiS1.5HV-B

DRAW. No. B-65302EN/08-02 CUST.

FANUC CORPORATION Ed. 3/27

© MyFANUC DC7187A9420041B3806BC8E5C652D376

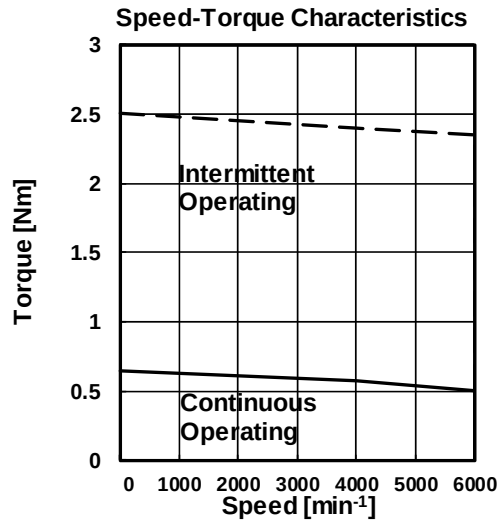


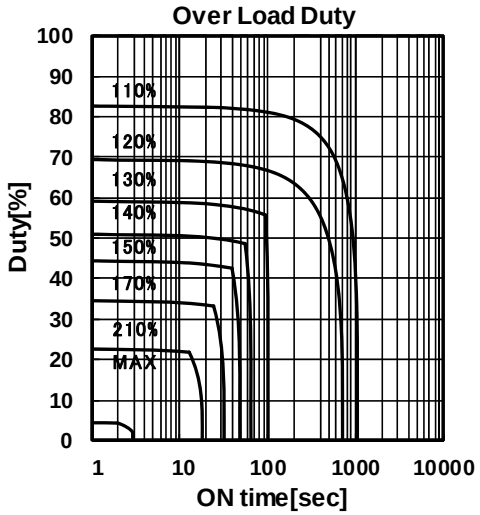


**Data sheet**

| Parameter | Symbol | Value | Unit |
|---|---|---|---|
| **Continuous Torque (at low speed) (*)** | Tc | 0.65<br>6.6 | Nm<br>kgfcm |
| **Continuous Current (at low speed) (*)** | Ic | 3.0 | A (rms) |
| **Rated Output (*)** | Pr | 0.30<br>0.40 | kW<br>HP |
| **Rated Speed** | Nr | 6000 | $min^{-1}$ |
| **Maximum Speed** | Nmax | 6000 | $min^{-1}$ |
| **Maximum Torque (*)** | Tmax | 2.5<br>26 | Nm<br>kgfcm |
| **Moment of Inertia of Rotor** | Jm | 0.0000260<br>0.000265 | $kgm^2$<br>$kgfcms^2$ |
| **Moment of Inertia of Rotor(with Brake)** | Jm | 0.0000350<br>0.000357 | $kgm^2$<br>$kgfcms^2$ |
| **Torque Constant (*)** | Kt | 0.22<br>2.22 | Nm/A(rms)<br>kgfcm/A(rms) |
| **Winding Resistance (between terminals) (*)** | Ra | 1.9 | Ω |
| **Thermal time constant** | $t_t$ | 10 | min |
| **Static friction** | Tf | 0.1<br>1 | Nm<br>kgfcm |
| **Weight** | w | 0.8 | kg |
| **Weight(with Brake)** | w | 1.2 | kg |
| **Max. Current of Servo Amp.** | Imax | 20 | A (peak) |

(*) The values are the standard values at 20℃ and the tolerance is ±10%.

The speed-torque characteristics very depending on the type of software,parametersetting,and input voltage of the digital servo software.(The above figures show average values.)

| Ed. | Date | Design. | Description | |
|---|---|---|---|---|
| 03 | 11.Oct.17 | K.Ono | Add FANUC specification for crimping tool | T.Tamaki |
| 02 | 30.Aug.17 | K.Yamada | Revise applicable amplifier | T.Tamaki |
| 01 | 4.Aug.17 | K.Yamada | Newly designed | T.Tamaki |

TITLE: AC SERVO MOTOR βi-B series βiS0.5-B, βiS1-B βiS1.5-B, βiS0.5HV-B, βiS1HV-B βiS1.5HV-B

DRAW. No. B-65302EN/08-02 CUST.

FANUC CORPORATION Ed. 4/27

© MyFANUC DC7187A9420041B3806BC8E5C652D376

**Model βi S 0.5/6000HV-B** Specification A06B-2016-B□03

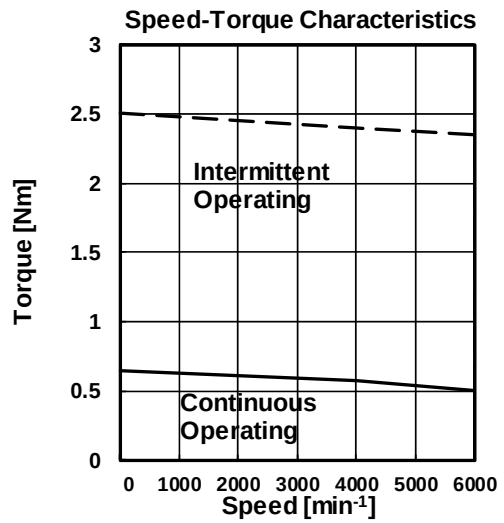


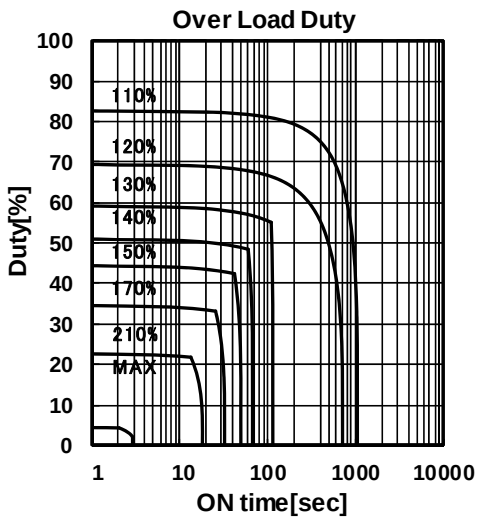


**Data sheet**

| Parameter | Symbol | Value | Unit |
|---|---|---|---|
| **Continuous Torque (at low speed) (*)** | Tc | 0.65<br>6.6 | Nm<br>kgfcm |
| **Continuous Current (at low speed) (*)** | Ic | 1.5 | A (rms) |
| **Rated Output (*)** | Pr | 0.30<br>0.40 | kW<br>HP |
| **Rated Speed** | Nr | 6000 | $min^{-1}$ |
| **Maximum Speed** | Nmax | 6000 | $min^{-1}$ |
| **Maximum Torque (*)** | Tmax | 2.5<br>26 | Nm<br>kgfcm |
| **Moment of Inertia of Rotor** | Jm | 0.0000260<br>0.000265 | $kgm^2$<br>$kgfcms^2$ |
| **Moment of Inertia of Rotor(with Brake)** | Jm | 0.0000350<br>0.000357 | $kgm^2$<br>$kgfcms^2$ |
| **Torque Constant (*)** | Kt | 0.44<br>4.5 | Nm/A(rms)<br>kgfcm/A(rms) |
| **Winding Resistance (between terminals) (*)** | Ra | 8.2 | Ω |
| **Thermal time constant** | $t_t$ | 10 | min |
| **Static friction** | Tf | 0.1<br>1 | Nm<br>kgfcm |
| **Weight** | w | 0.8 | kg |
| **Weight(with Brake)** | w | 1.2 | kg |
| **Max. Current of Servo Amp.** | Imax | 10 | A (peak) |

(*) The values are the standard values at 20℃ and the tolerance is ±10%.

The speed-torque characteristics very depending on the type of software,parametersetting,and input voltage of the digital servo software.(The above figures show average values.)

| Ed. | Date | Design. | Description | |
|---|---|---|---|---|
| 03 | 11.Oct.17 | K.Ono | Add FANUC specification for crimping tool | T.Tamaki |
| 02 | 30.Aug.17 | K.Yamada | Revise applicable amplifier | T.Tamaki |
| 01 | 4.Aug.17 | K.Yamada | Newly designed | T.Tamaki |

TITLE: AC SERVO MOTOR βi-B series βiS0.5-B, βiS1-B βiS1.5-B, βiS0.5HV-B, βiS1HV-B βiS1.5HV-B

DRAW. No. B-65302EN/08-02 CUST.

FANUC CORPORATION Ed. 5/27

© MyFANUC DC7187A9420041B3806BC8E5C652D376

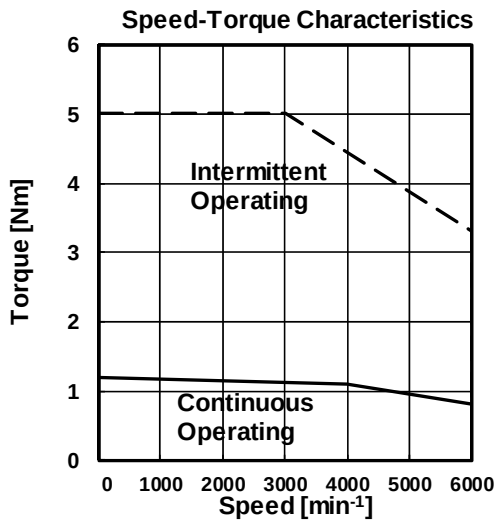


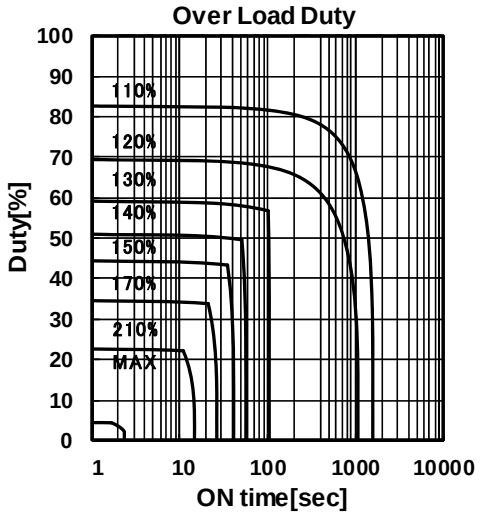


**Data sheet**

| Parameter | Symbol | Value | Unit |
|---|---|---|---|
| **Continuous Torque (at low speed) (*)** | Tc | 1.2 | Nm |
| | | 12 | kgfcm |
| **Continuous Current (at low speed) (*)** | Ic | 2.7 | A (rms) |
| **Rated Output (*)** | Pr | 0.50 | kW |
| | | 0.67 | HP |
| **Rated Speed** | Nr | 6000 | $min^{-1}$ |
| **Maximum Speed** | Nmax | 6000 | $min^{-1}$ |
| **Maximum Torque (*)** | Tmax | 5.0 | Nm |
| | | 51 | kgfcm |
| **Moment of Inertia of Rotor** | Jm | 0.0000480 | $kgm^2$ |
| | | 0.000490 | $kgfcms^2$ |
| **Moment of Inertia of Rotor(with Brake)** | Jm | 0.0000570 | $kgm^2$ |
| | | 0.000582 | $kgfcms^2$ |
| **Torque Constant (*)** | Kt | 0.44 | Nm/A(rms) |
| | | 4.5 | kgfcm/A(rms) |
| **Winding Resistance (between terminals) (*)** | Ra | 3.2 | Ω |
| **Thermal time constant** | $t_t$ | 15 | min |
| **Static friction** | Tf | 0.1 | Nm |
| | | 1 | kgfcm |
| **Weight** | w | 1.2 | kg |
| **Weight(with Brake)** | w | 1.6 | kg |
| **Max. Current of Servo Amp.** | Imax | 20 | A (peak) |

(*) The values are the standard values at 20℃ and the tolerance is ±10%.

The speed-torque characteristics very depending on the type of software,parametersetting,and input voltage of the digital servo software.(The above figures show average values.)

| Ed. | Date | Design. | Description | |
|---|---|---|---|---|
| 03 | 11.Oct.17 | K.Ono | Add FANUC specification for crimping tool | T.Tamaki |
| 02 | 30.Aug.17 | K.Yamada | Revise applicable amplifier | T.Tamaki |
| 01 | 4.Aug.17 | K.Yamada | Newly designed | T.Tamaki |

TITLE: AC SERVO MOTOR βi-B series βiS0.5-B, βiS1-B βiS1.5-B, βiS0.5HV-B, βiS1HV-B βiS1.5HV-B

DRAW. No. B-65302EN/08-02 CUST.

FANUC CORPORATION Ed. 6/27

© MyFANUC DC7187A9420041B3806BC8E5C652D376

**Model βi S 1/6000HV-B** Specification A06B-2018-B□03

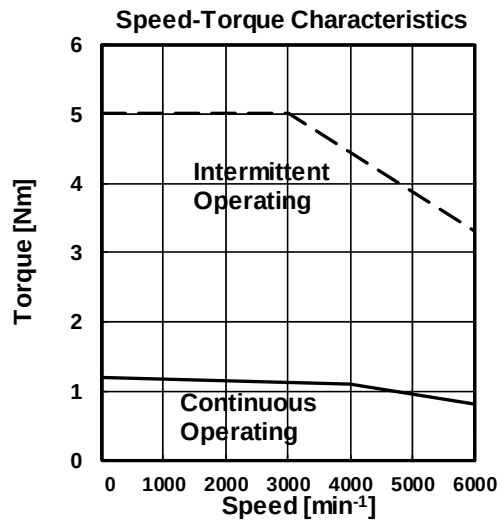


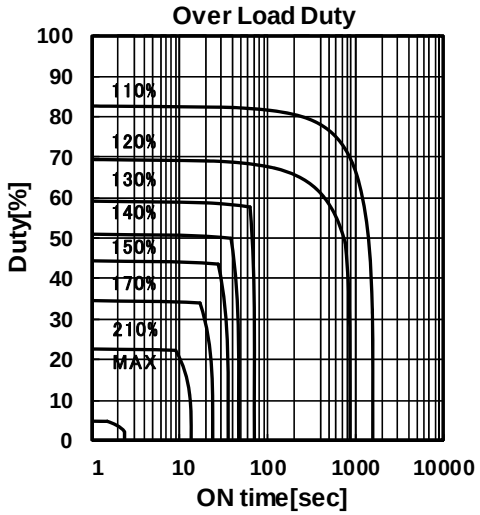


**Data sheet**

| Parameter | Symbol | Value | Unit |
|---|---|---|---|
| **Continuous Torque (at low speed) (*)** | Tc | 1.2 | Nm |
| | | 12 | kgfcm |
| **Continuous Current (at low speed) (*)** | Ic | 1.4 | A (rms) |
| **Rated Output (*)** | Pr | 0.50 | kW |
| | | 0.67 | HP |
| **Rated Speed** | Nr | 6000 | $min^{-1}$ |
| **Maximum Speed** | Nmax | 6000 | $min^{-1}$ |
| **Maximum Torque (*)** | Tmax | 5.0 | Nm |
| | | 51 | kgfcm |
| **Moment of Inertia of Rotor** | Jm | 0.0000480 | $kgm^2$ |
| | | 0.000490 | $kgfcms^2$ |
| **Moment of Inertia of Rotor(with Brake)** | Jm | 0.0000570 | $kgm^2$ |
| | | 0.000582 | $kgfcms^2$ |
| **Torque Constant (*)** | Kt | 0.87 | Nm/A(rms) |
| | | 8.9 | kgfcm/A(rms) |
| **Winding Resistance (between terminals) (*)** | Ra | 13 | Ω |
| **Thermal time constant** | $t_t$ | 15 | min |
| **Static friction** | Tf | 0.1 | Nm |
| | | 1 | kgfcm |
| **Weight** | w | 1.2 | kg |
| **Weight(with Brake)** | w | 1.6 | kg |
| **Max. Current of Servo Amp.** | Imax | 10 | A (peak) |

(*) The values are the standard values at 20℃ and the tolerance is ±10%.

The speed-torque characteristics very depending on the type of software,parametersetting,and input voltage of the digital servo software.(The above figures show average values.)

| Ed. | Date | Design. | Description | |
|---|---|---|---|---|
| 03 | 11.Oct.17 | K.Ono | Add FANUC specification for crimping tool | T.Tamaki |
| 02 | 30.Aug.17 | K.Yamada | Revise applicable amplifier | T.Tamaki |
| 01 | 4.Aug.17 | K.Yamada | Newly designed | T.Tamaki |

TITLE: AC SERVO MOTOR βi-B series βiS0.5-B, βiS1-B βiS1.5-B, βiS0.5HV-B, βiS1HV-B βiS1.5HV-B

DRAW. No. B-65302EN/08-02 CUST.

FANUC CORPORATION Ed. 7/27

© MyFANUC DC7187A9420041B3806BC8E5C652D376

**Model βi S 1.5/6000-B** Specification A06B-2019-B□03

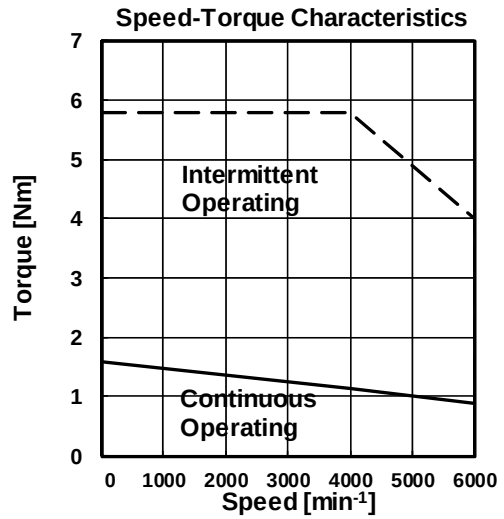


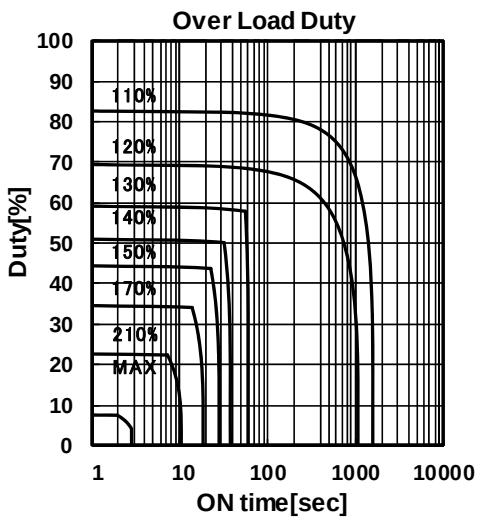


**Data sheet**

| Parameter | Symbol | Value | Unit |
|---|---|---|---|
| **Continuous Torque (at low speed) (*)** | Tc | 1.6 | Nm |
| | | 16 | kgfcm |
| **Continuous Current (at low speed) (*)** | Ic | 3.9 | A (rms) |
| **Rated Output (*)** | Pr | 0.55 | kW |
| | | 0.74 | HP |
| **Rated Speed** | Nr | 6000 | $min^{-1}$ |
| **Maximum Speed** | Nmax | 6000 | $min^{-1}$ |
| **Maximum Torque (*)** | Tmax | 5.8 | Nm |
| | | 59 | kgfcm |
| **Moment of Inertia of Rotor** | Jm | 0.0000710 | $kgm^2$ |
| | | 0.000724 | $kgfcms^2$ |
| **Moment of Inertia of Rotor(with Brake)** | Jm | 0.0000806 | $kgm^2$ |
| | | 0.000822 | $kgfcms^2$ |
| **Torque Constant (*)** | Kt | 0.41 | Nm/A(rms) |
| | | 4.2 | kgfcm/A(rms) |
| **Winding Resistance (between terminals) (*)** | Ra | 1.7 | Ω |
| **Thermal time constant** | $t_t$ | 15 | min |
| **Static friction** | Tf | 0.1 | Nm |
| | | 1 | kgfcm |
| **Weight** | w | 1.6 | kg |
| **Weight(with Brake)** | w | 2.1 | kg |
| **Max. Current of Servo Amp.** | Imax | 20 | A (peak) |

(*) The values are the standard values at 20℃ and the tolerance is ±10%.

The speed-torque characteristics very depending on the type of software,parametersetting,and input voltage of the digital servo software.(The above figures show average values.)

| Ed. | Date | Design. | Description | |
|---|---|---|---|---|
| 03 | 11.Oct.17 | K.Ono | Add FANUC specification for crimping tool | T.Tamaki |
| 02 | 30.Aug.17 | K.Yamada | Revise applicable amplifier | T.Tamaki |
| 01 | 4.Aug.17 | K.Yamada | Newly designed | T.Tamaki |

TITLE: AC SERVO MOTOR βi-B series βiS0.5-B, βiS1-B βiS1.5-B, βiS0.5HV-B, βiS1HV-B βiS1.5HV-B

DRAW. No. B-65302EN/08-02 CUST.

FANUC CORPORATION Ed. 8/27

© MyFANUC DC7187A9420041B3806BC8E5C652D376

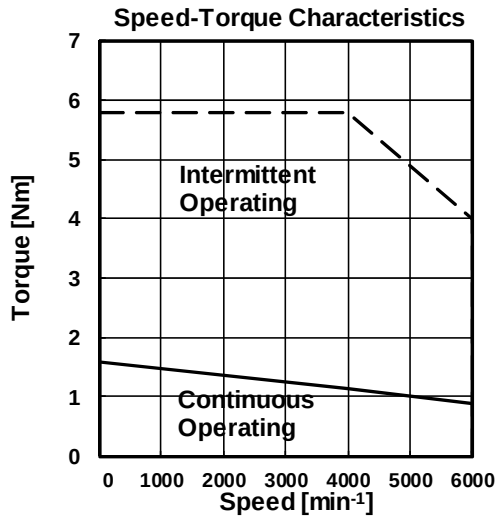


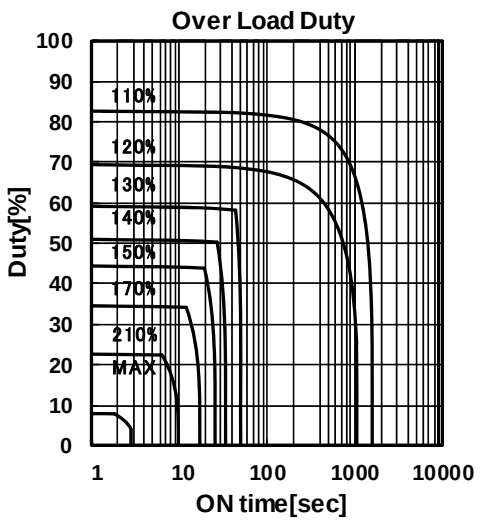


**Data sheet**

| Parameter | Symbol | Value | Unit |
|---|---|---|---|
| **Continuous Torque (at low speed) (*)** | Tc | 1.6<br>16 | Nm<br>kgfcm |
| **Continuous Current (at low speed) (*)** | Ic | 2.0 | A (rms) |
| **Rated Output (*)** | Pr | 0.55<br>0.74 | kW<br>HP |
| **Rated Speed** | Nr | 6000 | $min^{-1}$ |
| **Maximum Speed** | Nmax | 6000 | $min^{-1}$ |
| **Maximum Torque (*)** | Tmax | 5.8<br>59 | Nm<br>kgfcm |
| **Moment of Inertia of Rotor** | Jm | 0.0000710<br>0.000724 | $kgm^2$<br>$kgfcms^2$ |
| **Moment of Inertia of Rotor(with Brake)** | Jm | 0.0000806<br>0.000822 | $kgm^2$<br>$kgfcms^2$ |
| **Torque Constant (*)** | Kt | 0.82<br>8.4 | Nm/A(rms)<br>kgfcm/A(rms) |
| **Winding Resistance (between terminals) (*)** | Ra | 6.7 | Ω |
| **Thermal time constant** | $t_t$ | 15 | min |
| **Static friction** | Tf | 0.1<br>1 | Nm<br>kgfcm |
| **Weight** | w | 1.6 | kg |
| **Weight(with Brake)** | w | 2.1 | kg |
| **Max. Current of Servo Amp.** | Imax | 10 | A (peak) |

(*) The values are the standard values at 20℃ and the tolerance is ±10%.

The speed-torque characteristics very depending on the type of software,parametersetting,and input voltage of the digital servo software.(The above figures show average values.)

| Ed. | Date | Design. | Description | |
|---|---|---|---|---|
| 03 | 11.Oct.17 | K.Ono | Add FANUC specification for crimping tool | T.Tamaki |
| 02 | 30.Aug.17 | K.Yamada | Revise applicable amplifier | T.Tamaki |
| 01 | 4.Aug.17 | K.Yamada | Newly designed | T.Tamaki |

TITLE: AC SERVO MOTOR βi-B series βiS0.5-B, βiS1-B βiS1.5-B, βiS0.5HV-B, βiS1HV-B βiS1.5HV-B

DRAW. No. B-65302EN/08-02 CUST.

FANUC CORPORATION Ed. 9/27

© MyFANUC DC7187A9420041B3806BC8E5C652D376

# 3. OUTLINE DRAWINGS

### Outline Drawing of the Motor (standard)

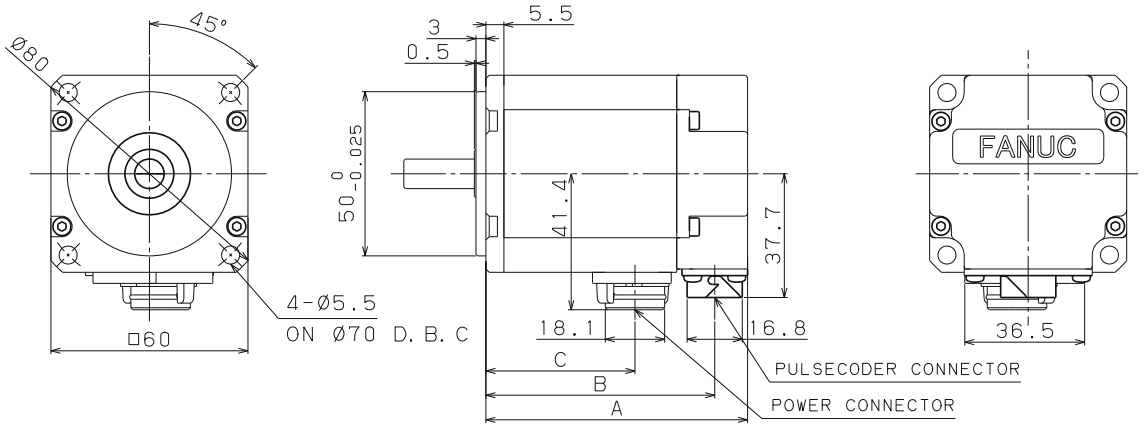


Connector engagement drawing
(right angle)

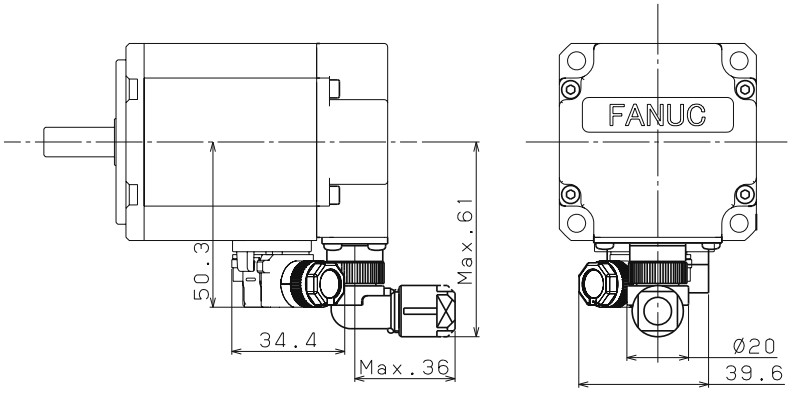


| MODEL | A | B | C |
|---|---|---|---|
| βiS 0.5-B,βiS 0.5HV-B | 79.5 | 69.5 | 45 |
| βiS 1-B,βiS 1HV-B | 100.5 | 90.5 | 66 |
| βiS 1.5-B,βiS 1.5HV-B | 121.5 | 111.5 | 87 |

| Ed. | Date | Design. | Description | |
|---|---|---|---|---|
| 03 | 11.Oct.17 | K.Ono | Add FANUC specification for crimping tool | T.Tamaki |
| 02 | 30.Aug.17 | K.Yamada | Revise applicable amplifier | T.Tamaki |
| 01 | 4.Aug.17 | K.Yamada | Newly designed | T.Tamaki |

TITLE: AC SERVO MOTOR βi-B series βiS0.5-B, βiS1-B βiS1.5-B, βiS0.5HV-B, βiS1HV-B βiS1.5HV-B

DRAW. No. B-65302EN/08-02 CUST.

FANUC CORPORATION Ed. 10/27

© MyFANUC DC7187A9420041B3806BC8E5C652D376

## Outline Drawing of the Motor (with Brake)

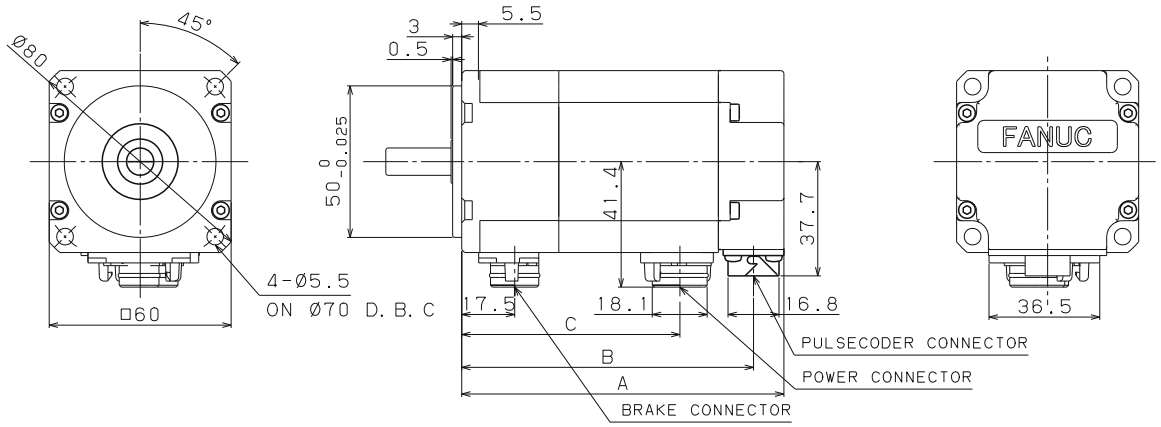


Connector engagement drawing
(right angle)

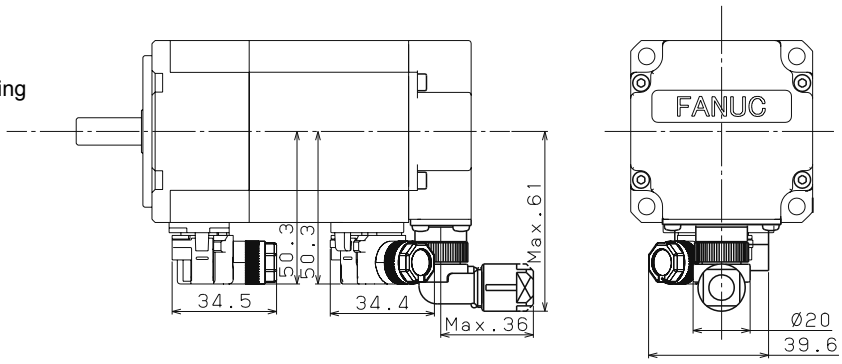


| MODEL | A | B | C |
|---|---|---|---|
| βiS 0.5-B,βiS 0.5HV-B | 106 | 96 | 71.5 |
| βiS 1-B,βiS 1HV-B | 127 | 117 | 92.5 |
| βiS 1.5-B,βiS 1.5HV-B | 163 | 153 | 128.5 |

| Ed. | Date | Design. | Description | |
|---|---|---|---|---|
| 03 | 11.Oct.17 | K.Ono | Add FANUC specification for crimping tool | T.Tamaki |
| 02 | 30.Aug.17 | K.Yamada | Revise applicable amplifier | T.Tamaki |
| 01 | 4.Aug.17 | K.Yamada | Newly designed | T.Tamaki |

TITLE: AC SERVO MOTOR βi-B series βiS0.5-B, βiS1-B βiS1.5-B, βiS0.5HV-B, βiS1HV-B βiS1.5HV-B

DRAW. No. B-65302EN/08-02 CUST.

FANUC CORPORATION Ed. 11/27

© MyFANUC DC7187A9420041B3806BC8E5C652D376

## 3-2. Shaft Shape

### Shaft shape types

The shafts of the motors have the following shapes:

| | Straight shaft | Straight shaft with key way |
|---|---|---|
| βiS 0.5-B | ϕ9 | ϕ9 |
| βiS 1-B, βiS 1.5-B, | ϕ14 | ϕ14 |

### (b) Shaft details

- **ϕ9 straight shaft**

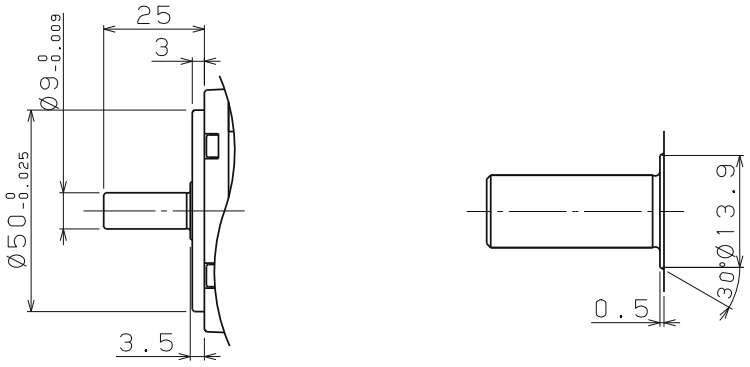


- **ϕ9 straight shaft with key way**

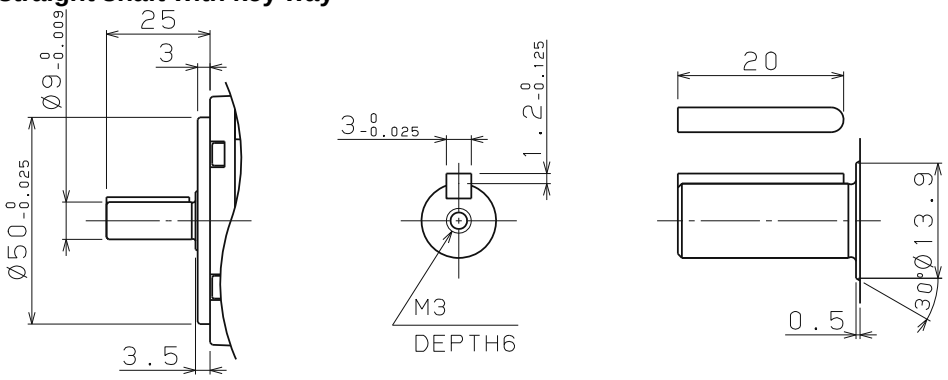


| Ed. | Date | Design. | Description | | |
|---|---|---|---|---|---|
| 03 | 11.Oct.17 | K.Ono | Add FANUC specification for crimping tool | T.Tamaki | TITLE AC SERVO MOTOR βi-B series βiS0.5-B, βiS1-B βiS1.5-B, βiS0.5HV-B, βiS1HV-B βiS1.5HV-B |
| 02 | 30.Aug.17 | K.Yamada | Revise applicable amplifier | T.Tamaki | |
| 01 | 4.Aug.17 | K.Yamada | Newly designed | T.Tamaki | DRAW. No. B-65302EN/08-02 CUST. |
| | | | | | FANUC CORPORATION Ed. 12/27 |

© MyFANUC DC7187A9420041B3806BC8E5C652D376

- **ϕ14 straight shaft**

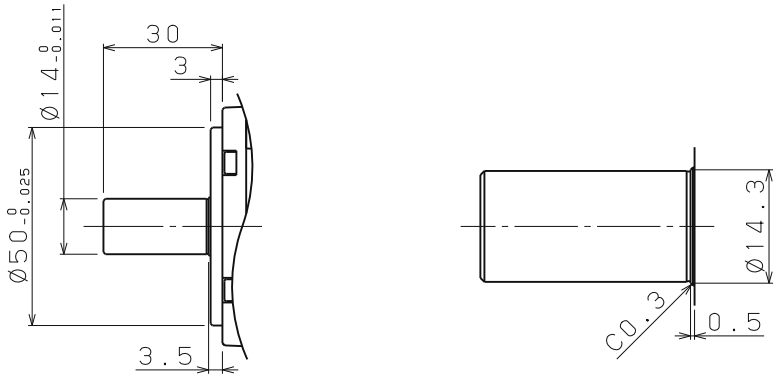


- **ϕ14 straight shaft with key way**

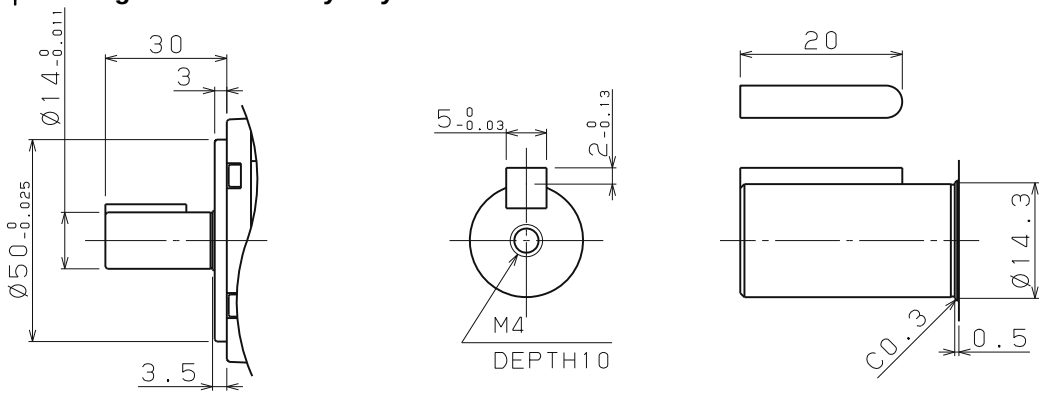


## 3-3. Allowable axis load

The allowable axis load is indicated below.
If a load exceeding the allowable axis load is applied, the bearing or shaft may be damaged.
For details of the allowable axis load, see FANUC AC SERVO MOTOR β*i*-B/β*i* series DESCRIPTIONS B-65302EN.

| Radial load | Axial load | (Reference)<br>Front bearing specification |
|---|---|---|
| 196[N]<br>(20 [kgf]) | 49[N]<br>(5 [kgf]) | 6002 |



© MyFANUC DC7187A9420041B3806BC8E5C652D376

## 3-4. Shaft run-out precision

The shaft run-out precision is indicated below.

For details of the shaft run-out precision, see FANUC AC SERVO MOTOR βi-B/βi series DESCRIPTIONS B-65302EN.

| Shaft dia. run-out | Faucet joint run-out | Mounting face run-out |
|---|---|---|
| 0.02mm or less | 0.04mm or less | 0.06mm or less |

## 3-5. Power connector

The following power connector is used for the motors:
Manufacture: Tyco Electronics Japan G.K.
Manufacturer specification: 2822926-1
The power connector alone is water-proof.
The following shows the shape and pin layout of the power connector.

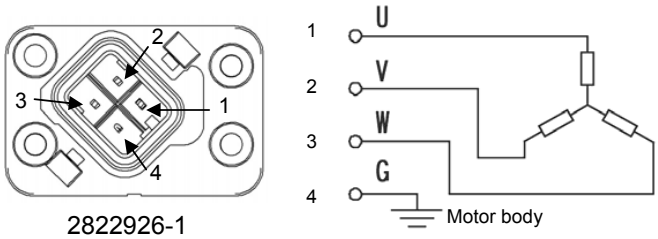


For the connected cables and the connectors on the cable side, see section 9-2, "Connectors for power".

# 4. FEEDBACK SENSOR

These servo motors contain Pulsecoder (optical encoder) as a feedback sensor which detects position and velocity.
The outline drawing of Pulsecoder is not given in this section because it is contained in a motor. See the outline drawing of each motor model.
The following table lists the types of Pulsecoders.

| Pulsecoder type | Resolution [Division/rev] | Absolute/ incremental |
|---|---|---|
| βiA 1000 | 1,000,000 | Absolute |

For details of the Feedback sensor, see FANUC AC SERVO MOTOR βi-B/βi series DESCRIPTIONS B-65302EN.



© MyFANUC DC7187A9420041B3806BC8E5C652D376

# 5. BRAKE

This chapter explains the specifications of built-in brakes and gives cautions.
The motor with a built-in brake differs from that with no brake in outside dimensions. For the outside dimensions, see the Section 3, “Outline Drawings.”.

## 5-1. Brake specifications

The specifications of built-in brakes are listed below.

| Motor model | | Unit | βiS0.5/6000-B<br>βiS0.5/6000HV-B | βiS1/6000-B<br>βiS1/6000HV-B | βiS1.5/6000-B<br>βiS1.5/6000HV-B |
|---|---|---|---|---|---|
| Brake torque | | Nm | 0.65 | 1.2 | 1.6 |
| | | kgf·cm | 6.6 | 12 | 16 |
| Response time | Release | msec | 40 | 40 | 40 |
| | Hold | msec | 20 | 20 | 20 |
| Power supply | Voltage | V | DC24(±10%) | | |
| | Current | A | 0.5 | 0.5 | 0.5 |
| | Wattage | W | 12 | 12 | 12 |
| Weight increase | | kg | Approx. 0.4 | Approx. 0.4 | Approx. 0.5 |
| Moment of inertia increase | | $kg·m^2$ | 0.000009 | 0.000009 | 0.00001 |
| | | $kgf·cm·s^2$ | 0.00009 | 0.00009 | 0.0001 |

The values shown above are standard values at 20℃



© MyFANUC DC7187A9420041B3806BC8E5C652D376

## 5-2. Brake connector

The following shows the shape and pin arrangement of the brake connectors.
The Brake connector alone is water-proof.
For the connected cables and the connectors on the cable side, see Subsection 9-3, "Connectors for the brake".
Manufacture : Tyco Electronics Japan G.K.
Manufacturer specification : 2304867-1

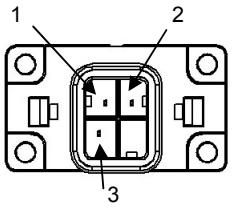


Connections: 1=BK, 2=BK, 3=GND

BK indicates a power supply (24 VDC, 0 VDC) for the brake. The brake is nonpolarized.
For details of the connecting a brake, see FANUC AC SERVO MOTOR βi-B/βi series DESCRIPTIONS B-65302EN.

| Ed. | Date | Design. | Description | |
|---|---|---|---|---|
| 03 | 11.Oct.17 | K.Ono | Add FANUC specification for crimping tool | T.Tamaki |
| 02 | 30.Aug.17 | K.Yamada | Revise applicable amplifier | T.Tamaki |
| 01 | 4.Aug.17 | K.Yamada | Newly designed | T.Tamaki |

TITLE: AC SERVO MOTOR βi-B series βiS0.5-B, βiS1-B βiS1.5-B, βiS0.5HV-B, βiS1HV-B βiS1.5HV-B

DRAW. No. B-65302EN/08-02 CUST.

FANUC CORPORATION Ed. 16/27

© MyFANUC DC7187A9420041B3806BC8E5C652D376

# 6. APPLICABLE AMPLIFIER

These motors can be driven using FANUC Servo Amplifier αiSV /αiSV-B series or βiSV /βiSV-B series.
These motors can not be driven using βiSV /βiSV-B (I/O Link Option).
For the ordering specification numbers of servo amplifiers, refer to "FANUC SERVO AMPLIFIER αi-B series DESCRIPTIONS (B-65412EN)" or "FANUC SERVO AMPLIFIER βi-B series DESCRIPTIONS (B-65422EN)".

### Combinations with the αiSV -B/αiSV P-B servo amplifiers (200V)

| Continuous torque (at low speed) | | 0.65 | 1.2 | 1.5 |
|---|---|---|---|---|
| Motor / Amplifier | | βiS 0.5 /6000-B | βiS 1 /6000-B | βiS 1.5 /6000-B |
| αiSV 20-B | - | ○ | ○ | ○ |
| αiSV 40-B | - | ▲ | ▲ | ▲ |
| αiSV 4/20-B | L axis | | | |
| | M axis | ○ | ○ | ○ |
| αiSV 20/20-B | L axis | ○ | ○ | ○ |
| | M axis | ○ | ○ | ○ |
| αiSV 20/40-B | L axis | ○ | ○ | ○ |
| | M axis | ▲ | ▲ | ▲ |
| αiSV 40/40-B | L axis | ▲ | ▲ | ▲ |
| | M axis | ▲ | ▲ | ▲ |
| αiSV 40/80-B | L axis | ▲ | ▲ | ▲ |
| | M axis | | | |
| αiSV 20/20/20-B | L axis | ○ | ○ | ○ |
| | M axis | ○ | ○ | ○ |
| | N axis | ○ | ○ | ○ |
| αiSV 20/20/40-B | L axis | ○ | ○ | ○ |
| | M axis | ○ | ○ | ○ |
| | N axis | ▲ | ▲ | ▲ |
| αiSV 40/40/40-B | L axis | ▲ | ▲ | ▲ |
| | M axis | ▲ | ▲ | ▲ |
| | N axis | ▲ | ▲ | ▲ |
| αiSVP 20/20/20-2.2-B | L axis | ○ | ○ | ○ |
| | M axis | ○ | ○ | ○ |
| | N axis | ○ | ○ | ○ |
| αiSVP 20/20/20-5.5-B | L axis | ○ | ○ | ○ |
| | M axis | ○ | ○ | ○ |
| | N axis | ○ | ○ | ○ |
| αiSVP 40/40/40-2.2-B | L axis | ▲ | ▲ | ▲ |
| | M axis | ▲ | ▲ | ▲ |
| | N axis | ▲ | ▲ | ▲ |

(Note) Each symbol is as described below.
○: Standard combination.
▲: To combine this motor, the motor control parameter must be changed.
If wishing to use this combination, contact FANUC.
Making incorrect parameter settings may damage the motor.



© MyFANUC DC7187A9420041B3806BC8E5C652D376

## Combinations with the βiSV-B/βiSVSP-B servo amplifiers (200V)

| Continuous torque (at low speed) | | 0.65 | 1.2 | 1.5 | |
|---|---|---|---|---|---|
| Motor / Amplifier | | βiS 0.5 /6000-B | βiS 1 /6000-B | βiS 1.5 /6000-B | |
| βiSV 20-B | - | ○ | ○ | ○ | *1) |
| βiSV 40-B | - | ▲ | ▲ | ▲ | *1) |
| βiSV 20/20-B | L axis | ○ | ○ | ○ | |
| | M axis | ○ | ○ | ○ | |
| βiSV 40/40-B | L axis | ▲ | ▲ | ▲ | |
| | M axis | ▲ | ▲ | ▲ | |
| βiSVSP 20/20-7.5-B | L axis | ○ | ○ | ○ | |
| | M axis | ○ | ○ | ○ | |
| βiSVSP 20/20-11-B | L axis | ○ | ○ | ○ | |
| | M axis | ○ | ○ | ○ | |
| βiSVSP 40/40-15-B | L axis | ▲ | ▲ | ▲ | |
| | M axis | ▲ | ▲ | ▲ | |
| βiSVSP 40/40-18-B | L axis | ▲ | ▲ | ▲ | |
| | M axis | ▲ | ▲ | ▲ | |
| βiSVSP 20/20/40-7.5-B | L axis | ○ | ○ | ○ | |
| | M axis | ○ | ○ | ○ | |
| | N axis | ▲ | ▲ | ▲ | |
| βiSVSP 20/20/40-11-B | L axis | ○ | ○ | ○ | |
| | M axis | ○ | ○ | ○ | |
| | N axis | ▲ | ▲ | ▲ | |
| βiSVSP 40/40/40-11-B | L axis | ▲ | ▲ | ▲ | |
| | M axis | ▲ | ▲ | ▲ | |
| | N axis | ▲ | ▲ | ▲ | |
| βiSVSP 40/40/40-15-B | L axis | ▲ | ▲ | ▲ | |
| | M axis | ▲ | ▲ | ▲ | |
| | N axis | ▲ | ▲ | ▲ | |
| βiSVSP 40/40/80-15-B | L axis | ▲ | ▲ | ▲ | |
| | M axis | ▲ | ▲ | ▲ | |
| | N axis | | | | |
| βiSVSP 40/40/80-18-B | L axis | ▲ | ▲ | ▲ | |
| | M axis | ▲ | ▲ | ▲ | |
| | N axis | | | | |

(Note) Each symbol is as described below.
○: Standard combination.
▲: To combine this motor, the motor control parameter must be changed.
If wishing to use this combination, contact FANUC.
Making incorrect parameter settings may damage the motor.

*1) βi SV-B(I/O Link Option) can not be combined.



© MyFANUC DC7187A9420041B3806BC8E5C652D376

## Combinations with the αiSV-B /αiSV P-B servo amplifiers (400V)

| Continuous torque (at low speed) | | 0.65 | 1.2 | 1.5 |
|---|---|---|---|---|
| Motor / Amplifier | | βiS 0.5 /6000HV-B | βiS 1 /6000HV-B | βiS 1.5 /6000HV-B |
| . | | 1 | | |
| αiSV 10HV-B | - | ○ | ○ | ○ |
| αiSV 20HV-B | - | ▲ | ▲ | ▲ |
| αiSV 10/10HV-B | L axis | ○ | ○ | ○ |
| | M axis | ○ | ○ | ○ |
| αiSV 10/20HV-B | L axis | ○ | ○ | ○ |
| | M axis | ▲ | ▲ | ▲ |
| αiSV 20/20HV-B | L axis | ▲ | ▲ | ▲ |
| | M axis | ▲ | ▲ | ▲ |
| αiSV 20/40HV-B | L axis | ▲ | ▲ | ▲ |
| | M axis | | | |
| αiSV 10/10/10HV-B | L axis | ○ | ○ | ○ |
| | M axis | ○ | ○ | ○ |
| | N axis | ○ | ○ | ○ |
| αiSV 10/10/20HV-B | L axis | ○ | ○ | ○ |
| | M axis | ○ | ○ | ○ |
| | N axis | ▲ | ▲ | ▲ |
| αiSV 20/20/20HV-B | L axis | ▲ | ▲ | ▲ |
| | M axis | ▲ | ▲ | ▲ |
| | N axis | ▲ | ▲ | ▲ |
| αiSVP 10/10/10-5.5HV-B | L axis | ○ | ○ | ○ |
| | M axis | ○ | ○ | ○ |
| | N axis | ○ | ○ | ○ |

(Note) Each symbol is as described below.

○: Standard combination.

▲: To combine this motor, the motor control parameter must be changed.
If wishing to use this combination, contact FANUC.
Making incorrect parameter settings may damage the motor.



© MyFANUC DC7187A9420041B3806BC8E5C652D376

## Combinations with the βiSV-B/βiSVSP-B servo amplifiers (400V)

| Continuous torque (at low speed) | | 0.65 | 1.2 | 1.5 | |
|---|---|---|---|---|---|
| Motor / Amplifier | | βiS 0.5 /6000HV-B | βiS 1 /6000HV-B | βiS 1.5 /6000HV-B | |
| βiSV 10HV-B | - | ○ | ○ | ○ | *1) |
| βiSV 20HV-B | - | ▲ | ▲ | ▲ | *1) |
| βiSVSP 10/10-11HV-B | L axis | ○ | ○ | ○ | |
| | M axis | ○ | ○ | ○ | |
| βiSVSP 20/20/20-11HV-B | L axis | ▲ | ▲ | ▲ | |
| | M axis | ▲ | ▲ | ▲ | |
| | N axis | ▲ | ▲ | ▲ | |
| βiSVSP 20/20/40-15HV-B | L axis | ▲ | ▲ | ▲ | |
| | M axis | ▲ | ▲ | ▲ | |
| | N axis | | | | |

(Note) Each symbol is as described below.
○: Standard combination.
▲: To combine this motor, the motor control parameter must be changed.
If wishing to use this combination, contact FANUC.
Making incorrect parameter settings may damage the motor.
*1) βi SV-B(I/O Link Option) can not be combined.

## Combinations with the αiSV servo amplifiers (200V)

| Continuous torque (at low speed) | | 0.65 | 1.2 | 1.5 |
|---|---|---|---|---|
| Motor / Amplifier | | βiS 0.5 /6000-B | βiS 1 /6000-B | βiS 1.5 /6000-B |
| αiSV 20<br>αiSV 20L | - | ○ | ○ | ○ |
| αiSV 4/20 | L axis | | | |
| | M axis | ○ | ○ | ○ |
| αiSV 20/20<br>αiSV 20/20L | L axis | ○ | ○ | ○ |
| | M axis | ○ | ○ | ○ |
| αiSV 20/40<br>αiSV 20/40L | L axis | ○ | ○ | ○ |
| | M axis | | | |
| αiSV 20/20/20 | L axis | ○ | ○ | ○ |
| | M axis | ○ | ○ | ○ |
| | N axis | ○ | ○ | ○ |
| αiSV 20/20/40 | L axis | ○ | ○ | ○ |
| | M axis | ○ | ○ | ○ |
| | N axis | | | |

(Note) Each symbol is as described below.
○: Standard combination.
▲: To combine this motor, the motor control parameter must be changed.
If wishing to use this combination, contact FANUC.
Making incorrect parameter settings may damage the motor.



© MyFANUC DC7187A9420041B3806BC8E5C652D376

## Combinations with the βiSV/βiSVSP servo amplifiers (200V)

| Continuous torque (at low speed) | | 0.65 | 1.2 | 1.5 | |
|---|---|---|---|---|---|
| Motor / Amplifier | | βiS 0.5 /6000-B | βiS 1 /6000-B | βiS 1.5 /6000-B | |
| βiSV 20 | - | ○ | ○ | ○ | ＊1) |
| βiSV 20/20 | L axis | ○ | ○ | ○ | |
| | M axis | ○ | ○ | ○ | |
| βiSVSP 20/20-7.5 | L axis | ○ | ○ | ○ | |
| | M axis | ○ | ○ | ○ | |
| βiSVSP 20/20-11 | L axis | ○ | ○ | ○ | |
| | M axis | ○ | ○ | ○ | |
| βiSVSP 20/20/40-7.5 | L axis | ○ | ○ | ○ | |
| | M axis | ○ | ○ | ○ | |
| | N axis | | | | |
| βiSVSP 20/20/40-11 | L axis | ○ | ○ | ○ | |
| | M axis | ○ | ○ | ○ | |
| | N axis | | | | |

(Note) Each symbol is as described below.
○: Standard combination.
▲: To combine this motor, the motor control parameter must be changed.
If wishing to use this combination, contact FANUC.
Making incorrect parameter settings may damage the motor.
*1) βi SV(I/O Link Option) can not be combined.

## Combinations with the αiSV servo amplifiers (400V)

| Continuous torque (at low speed) | | 0.65 | 1.2 | 1.5 |
|---|---|---|---|---|
| Motor / Amplifier | | βiS 0.5 /6000HV-B | βiS 1 /6000HV-B | βiS 1.5 /6000HV-B |
| αiSV 10HV<br>αiSV 10HVL | - | ○ | ○ | ○ |
| αiSV 10/10HV<br>αiSV 10/10HVL | L axis | ○ | ○ | ○ |
| | M axis | ○ | ○ | ○ |

(Note) Each symbol is as described below.
○: Standard combination.
▲: To combine this motor, the motor control parameter must be changed.
If wishing to use this combination, contact FANUC.
Making incorrect parameter settings may damage the motor.

## Combinations with the βiSV servo amplifiers (400V)

| Continuous torque (at low speed) | | 0.65 | 1.2 | 1.5 | |
|---|---|---|---|---|---|
| Motor / Amplifier | | βiS 0.5 /6000HV-B | βiS 1 /6000HV-B | βiS 1.5 /6000HV-B | |
| βiSV 10HV | - | ○ | ○ | ○ | ＊1) |
| βiSV 20HV | - | ▲ | ▲ | ▲ | ＊1) |

(Note) Each symbol is as described below.
○: Standard combination.
▲: To combine this motor, the motor control parameter must be changed.
If wishing to use this combination, contact FANUC. Making incorrect parameter settings may damage the motor.
*1) βi SV(I/O Link Option) can not be combined.

| Ed. | Date | Design. | Description | |
|---|---|---|---|---|
| 03 | 11.Oct.17 | K.Ono | Add FANUC specification for crimping tool | T.Tamaki |
| 02 | 30.Aug.17 | K.Yamada | Revise applicable amplifier | T.Tamaki |
| 01 | 4.Aug.17 | K.Yamada | Newly designed | T.Tamaki |

TITLE: AC SERVO MOTOR βi-B series βiS0.5-B, βiS1-B βiS1.5-B, βiS0.5HV-B, βiS1HV-B βiS1.5HV-B

DRAW. No. B-65302EN/08-02 CUST.

FANUC CORPORATION Ed. 21/27

© MyFANUC DC7187A9420041B3806BC8E5C652D376

# 7. Output data for selecting αiPS-B amplifiers

| Motor model | Continuous rated output | Maximum output at acceleration |
|---|---|---|
| βiS 0.5/6000-B | 0.30kW | 1.5kW |
| βiS 1/6000-B | 0.50kW | 2.5kW |
| βiS 1.5/6000-B | 0.55kW | 2.6kW |
| βiS 0.5/6000HV-B | 0.30kW | 1.5kW |
| βiS 1/6000HV-B | 0.50kW | 2.5kW |
| βiS 1.5/6000HV-B | 0.55kW | 2.6kW |

⚠ **CAUTION**
These data is only for selecting the PS and it doesn't guarantee the power of motors.

# 8. COEFFICIENTS FOR CALCULATING THE DYNAMIC BRAKE STOPPING DISTANCE

**200V system**

**When combining with servo amplifier**

**αiSV20-B, αiSV4/20-B(is used for the M axis,), αiSV20/20-B, αi SV20/20/20-B, βiSV20-B, βiSV20/20-B, βiSV40/40-B, αiSV20, αiSV4/20(is used for the M axis,), αiSV20/20, αiSV20/20L, αiSV20/20/20, βiSV20,βiSV20/20,βiSV40/40, αiSVP-B/βiSVP-B series, βiSVSP series**

| Model | SI units | | Gravitational system of units | |
|---|---|---|---|---|
| | A | B | A | B |
| βiS 0.5/6000-B | 1.1 | $3.5\times10^{-7}$ | $1.1\times10^{-1}$ | $3.4\times10^{-8}$ |
| βiS 1/6000-B | $4.3\times10^{-1}$ | $1.8\times10^{-7}$ | $4.2\times10^{-2}$ | $1.8\times10^{-8}$ |
| βiS 1.5/6000-B | $2.7\times10^{-1}$ | $2.1\times10^{-7}$ | $2.7\times10^{-2}$ | $2.0\times10^{-8}$ |

**When combining with servo amplifier**

**αiSV40-B,αiSV20/40-B,αiSV40/40-B,αiSV40/80-B(is used for the L axis), αiSV20/20/40-B, αiSV40/40/40-B, αiSV20L, αiSV40, αiSV40L, αiSV20/20L, αiSV20/40(is used for the L axis) αiSV20/40L(is used for the L axis)**

| Model | SI units | | Gravitational system of units | |
|---|---|---|---|---|
| | A | B | A | B |
| βiS 0.5/6000-B | 3.2 | $1.2\times10^{-7}$ | $3.1\times10^{-1}$ | $1.1\times10^{-8}$ |
| βiS 1/6000-B | $9.6\times10^{-1}$ | $8.1\times10^{-8}$ | $9.4\times10^{-2}$ | $7.9\times10^{-9}$ |
| βiS 1.5/6000-B | $8.7\times10^{-1}$ | $6.6\times10^{-8}$ | $8.5\times10^{-2}$ | $6.4\times10^{-9}$ |



© MyFANUC DC7187A9420041B3806BC8E5C652D376

## 400V system

**When combining with servo amplifier**
**αiSV10HV-B,αiSV10/10HV-B,αiSV10/10/10HV-B, αiSVP-B/βiSVP-B series, βiSVSP series**

| Model | SI units | | Gravitational system of units | |
|---|---|---|---|---|
| | A | B | A | B |
| βiS 0.5/6000HV-B | 1.1 | $2.8\times10^{-7}$ | $1.1\times10^{-1}$ | $2.7\times10^{-8}$ |
| βiS 1/6000HV-B | $4.4\times10^{-1}$ | $1.5\times10^{-7}$ | $4.3\times10^{-2}$ | $1.5\times10^{-8}$ |
| βiS 1.5/6000HV-B | $2.5\times10^{-1}$ | $2.3\times10^{-7}$ | $2.5\times10^{-2}$ | $2.2\times10^{-8}$ |

**When combining with servo amplifier**
**αiSV20HV-B,αiSV10/20HV-B,αiSV20/20HV-B,αiSV20/40HV-B(is used for the L axis)**
**αiSV10/10/20HV-B,αiSV20/20/20HV-B,βiSV10HV-B,βiSV20HV-B,**
**αiSV10HV,αiSV10HVL,αiSV10/10HV,αiSV10/10HVL,βiSV10HV**

| Model | SI units | | Gravitational system of units | |
|---|---|---|---|---|
| | A | B | A | B |
| βiS 0.5/6000HV-B | 2.7 | $1.1\times10^{-7}$ | $2.6\times10^{-1}$ | $1.1\times10^{-8}$ |
| βiS 1/6000HV-B | $8.4\times10^{-1}$ | $8.1\times10^{-8}$ | $8.2\times10^{-2}$ | $8.0\times10^{-9}$ |
| βiS 1.5/6000HV-B | $7.0\times10^{-1}$ | $8.2\times10^{-8}$ | $6.8\times10^{-2}$ | $8.0\times10^{-9}$ |

⚠ **CAUTION**

- Calculate and certainly confirm the dynamic brake stop distance by using coefficients for calculating the dynamic brake distance in this document if it is within the assumption on the machine.
  As for the calculation and the detail of the dynamic brake stop distance, refer to the FANUC AC SERVO MOTOR βi-B / βi series DESCRIPTIONS B-65302EN.
- Applying the quick stop functions are recommended for shortening the stop distance at emergency stop or power failure.
  As for the detail of this functions, refer to the FANUC AC SERVO MOTOR PARAMETER MANUAL B-65270EN.
  For certain working of the quick stop functions at the power failure, keep the control power supply (DC24V) for CNC and servo amplifier by using the uninterruptible power supply(UPS) for example.
- If some alarms occur, the stop distance will not be short because the quick stop function does not operate effectively.
- It should be certainly confirmed at the actual machine that the stop distance is shortened at emergency stop or power failure when the quick stop functions are applied.
- The resistor element, which is built into the servo amplifier, for the dynamic brake is designed based on energy generated when the load inertia becomes five times the motor inertia and the motor stops from its maximum rotational speed.
  If exceeding the above condition, contact FANUC.



© MyFANUC DC7187A9420041B3806BC8E5C652D376

⚠ WARNING

- If the motor stops from its maximum rotational speed with greater than the allowable load inertia ratio, the inside of the servo amplifier may become abnormally hot, possibly causing damage to the servo amplifier.
  Make no mistakes in the calculations of load inertia.
- If load inertia exceed the allowable condition, and any alarms or power failure (with the condition quick stop functions ineffective) occur among the rapid traverse, take 30 minutes intervals after power failure because of the protection of the servo amplifier.

  If the stopping motion by the dynamic brake is continuously repeated within the 30minutes, the inside of the servo amplifier may become abnormally hot and possibly being damaged.

# 9. Connectors on the Cable Side

This Subsection describes the specifications of the connectors on the cable side that are to be connected to a motor. For the specifications and pin layout of the connector mounted on a motor, see Subsection 3-5," Power connector",Subsection 5-2,"Brake connector".

## 9-1. Connectors for signals

For the specifications of the connector for signals, see FANUC AC SERVO MOTOR βi-B/βi series DESCRIPTIONS B-65302EN.(This connector is the same specifications as the connectors for signals of Groups B to E)

## 9-2. Connectors for power

The following subsection describes the specifications as a connector kit. These connectors arewater-proof when engaged.
To connect the cable, a dedicated crimping tool must be used.
Consider crimping and cable clamp. Also note that there are restrictions.

| | | For power |
|---|---|---|
| Connector kit specifications (Including the contact) | Straight type | - |
| | Right angle type | 2822933-2 (Tyco Electronics Japan G.K.)<br>A06B-6114-K260 (FANUC specification) |
| Applicable wire size | | 0.5～0.76 $mm^2$ (AWG#20 to 18) |
| Insulation external diameter | | ϕ1.85 to ϕ2.3 |
| Compatible cable O.D. | | ϕ6.8 to ϕ7.5 |
| Crimping tool | | 2255334-1 (Tyco Electronics Japan G.K.)<br>A06B-6114-K264#C (FANUC specification) |

Note) Brake connector is only for right angle type.
Extractor is none



© MyFANUC DC7187A9420041B3806BC8E5C652D376

## 9-3. Connectors for the brake

The following subsections describe the connectors for the brake. These connectors are water-proof when engaged.
To connect the cable, a dedicated crimping tool must be used.
Consider crimping and cable clamp. Also note that there are restrictions.

| | | For brake |
|---|---|---|
| Connector kit specifications (Including the contact) | Straight type | - |
| | Right angle type | 2304873-2 (Tyco Electronics Japan G.K.)<br>A06B-6114-K262 (FANUC specification) |
| Applicable wire size | | 0.13～0.33 $mm^2$ (AWG#26 to 22) |
| Insulation external diameter | | $\phi$1.0 to $\phi$1.2 |
| Compatible cable O.D. | | $\phi$6.8 to $\phi$7.5 |
| Crimping tool | | 1596847-1 (Tyco Electronics Japan G.K.)<br>A06B-6114-K265#C (FANUC specification) |

Note) Brake connector is only for right angle type.
Extractor is none

# 10. SERVO PARAMETERS

## 10-1. Auto loading

As for each motor servo software doesn't support automatic setting so far (July. 2017).
Please set the appropriate parameters manually according to the table as shown in the next page.

## 10-2. Manual setting

Parameter table for each motorare shown in the next page.
Please set the appropriate parameters manually according to the table.

**⚠ CAUTION**
If a motor is used in a wrong parameter, it may become broken.



© MyFANUC DC7187A9420041B3806BC8E5C652D376

| | Motor model | βiS 0.5/ 6000-B | βiS 1/ 6000-B | βiS 1.5/ 6000-B | βiS 0.5/ 6000HV-B | βiS 1/ 6000HV-B | βiS 1.5/ 6000HV-B |
|---|---|---|---|---|---|---|---|
| | Motor specification | 2015 | 2017 | 2019 | 2016 | 2018 | 2020 |
| | Motor ID No. | - | - | - | - | - | - |
| PRM NO | SERVO PRM | | | | | | |
| 2001 | | 00000101 | 00000101 | 00000101 | 00000101 | 00000101 | 00000101 |
| 2003 | | 00001000 | 00001000 | 00001000 | 00001000 | 00001000 | 00001000 |
| 2004 | | 10000011 | 10000011 | 10000011 | 10000011 | 10000011 | 10000011 |
| 2005 | | 00000000 | 00000000 | 00000000 | 00000000 | 00000000 | 00000000 |
| 2006 | | 00000000 | 00000000 | 00000000 | 00000000 | 00000000 | 00000000 |
| 2007 | | 00000000 | 00000000 | 00000000 | 00000000 | 00000000 | 00000000 |
| 2008 | | 00000000 | 00000000 | 00000000 | 00000000 | 00000000 | 00000000 |
| 2009 | | 00000000 | 00000000 | 00000000 | 00000000 | 00000000 | 00000000 |
| 2010 | | 00000000 | 00000000 | 00000000 | 00000000 | 00000000 | 00000000 |
| 2011 | | 00000000 | 00000000 | 00000000 | 00000000 | 00000000 | 00000000 |
| 2012 | | 00000000 | 00000000 | 00000000 | 00000000 | 00000000 | 00000000 |
| 2013 | | 00000000 | 00000000 | 00000000 | 00000000 | 00000000 | 00000000 |
| 2014 | | 00000000 | 00000000 | 00000000 | 00000000 | 00000000 | 00000000 |
| 2210 | | 00000000 | 00000000 | 00000000 | 00000000 | 00000000 | 00000000 |
| 2211 | | 00000010 | 00000010 | 00000010 | 00000010 | 00000010 | 00000010 |
| 2300 | | 00000000 | 00000000 | 00000000 | 00000000 | 00000000 | 00000000 |
| 2301 | | 01000010 | 01000010 | 01000010 | 01000010 | 01000010 | 01000010 |
| 2560 | | 00100000 | 00100000 | 00100000 | 00100000 | 00100000 | 00100000 |
| 2040 | CUR GAIN I | 335 | 640 | 540 | 330 | 725 | 485 |
| 2041 | CUR GAIN P | -1130 | -2400 | -1760 | -1115 | -2400 | -1550 |
| 2042 | CUR GAIN 3 | -1195 | -1219 | -1295 | -1175 | -1202 | -1230 |
| 2043 | VEL GAIN I | 10 | 9 | 14 | 10 | 9 | 14 |
| 2044 | VEL GAIN P | -89 | -81 | -122 | -89 | -80 | -125 |
| 2045 | VEL GAIN 3 | 0 | 0 | 0 | 0 | 0 | 0 |
| 2046 | VEL GAIN 4 | -8235 | -8235 | -8235 | -8235 | -8235 | -8235 |
| 2047 | OBSERVER POA1 | -4286 | -4708 | -3117 | -4286 | -4722 | -3034 |
| 2048 | BLACC CMP | 0 | 0 | 0 | 0 | 0 | 0 |
| 2049 | DPFMX | 0 | 0 | 0 | 0 | 0 | 0 |
| 2050 | OBSERVER POK1 | 956 | 956 | 956 | 956 | 956 | 956 |
| 2051 | OBSERVER POK2 | 510 | 510 | 510 | 510 | 510 | 510 |
| 2052 | OVER SPEED | 0 | 0 | 0 | 0 | 0 | 0 |
| 2053 | DB-CMP PPMAX | 21 | 21 | 21 | 21 | 21 | 21 |
| 2054 | DB-CMP PDDP | 1894 | 1894 | 1894 | 1894 | 1894 | 1894 |
| 2055 | DB-CMP PHYST | 319 | 319 | 319 | 319 | 319 | 319 |
| 2056 | EMFCMP | 0 | 0 | 0 | 0 | 0 | 0 |
| 2057 | D-PHASE CUR | 0 | -14085 | -12083 | 0 | -14085 | -12083 |
| 2058 | D-PHASE CUR | 0 | -1000 | -600 | 0 | -1000 | -600 |
| 2059 | PPBAS | 0 | 0 | 0 | 0 | 0 | 0 |
| 2060 | TCMD LIMIT | 7282 | 6554 | 7282 | 7282 | 6554 | 7282 |
| 2061 | INERTIA | 72 | 65 | 99 | 72 | 65 | 101 |
| 2062 | OVC K1 | 32690 | 32685 | 32630 | 32690 | 32685 | 32630 |
| 2063 | OVC K2 | 979 | 1031 | 1724 | 979 | 1031 | 1724 |
| 2064 | TGALMLV | 4 | 4 | 4 | 4 | 4 | 4 |
| 2065 | OVC LIMIT | 2801 | 2387 | 4809 | 2801 | 2387 | 4809 |
| 2066 | ACC FB GAIN | 0 | 0 | 0 | 0 | 0 | 0 |
| 2067 | TCMD FILTER | 0 | 0 | 0 | 0 | 0 | 0 |
| 2068-2073 | | 0 | 0 | 0 | 0 | 0 | 0 |
| 2074 | AALPH | 0 | 0 | 0 | 0 | 0 | 0 |
| 2077-2083 | | 0 | 0 | 0 | 0 | 0 | 0 |
| 2086 | RATED CURRENT | 1379 | 1273 | 1807 | 1379 | 1273 | 1807 |
| 2087-2089 | | 0 | 0 | 0 | 0 | 0 | 0 |
| 2090 | ROBSTL | 0 | 0 | 0 | 0 | 0 | 0 |
| 2091-2098 | | 0 | 0 | 0 | 0 | 0 | 0 |
| 2099 | ONEPSL | 400 | 400 | 400 | 400 | 400 | 400 |
| 2100 | INPA1 | 0 | 0 | 0 | 0 | 0 | 0 |
| 2101 | INPA2 | 0 | 0 | 0 | 0 | 0 | 0 |
| 2102 | DBLIM | 0 | 0 | 0 | 0 | 0 | 0 |
| 2103 | ABVOF | 0 | 0 | 0 | 0 | 0 | 0 |
| 2104 | ABTSH | 0 | 0 | 0 | 0 | 0 | 0 |
| 2105 | TORQUE CONST. | 41 | 84 | 82 | 41 | 84 | 80 |
| 2106-2109 | | 0 | 0 | 0 | 0 | 0 | 0 |
| 2110 | MGSTCM | 20 | 1029 | 257 | 20 | 1029 | 257 |
| 2111 | TQLIM IN DEC. | 15376 | 0 | 0 | 15376 | 0 | 0 |
| 2112 | AMRDML | 0 | 0 | 0 | 0 | 0 | 0 |
| 2113 | HRV FILT | 0 | 0 | 0 | 0 | 0 | 0 |
| 2127 | NINTCT | 538 | 1017 | 1162 | 1012 | 1966 | 1154 |
| 2128 | MFWKCE | 0 | 3500 | 1000 | 0 | 3500 | 1000 |
| 2129 | MFWKBL | 0 | 3867 | 3860 | 0 | 3867 | 3860 |
| 2130-2132 | | 0 | 0 | 0 | 0 | 0 | 0 |
| 2133 | PHDLY1 | 0 | 0 | 10245 | 0 | 0 | 10245 |
| 2134 | PHDLY2 | 0 | 0 | 7700 | 0 | 0 | 7700 |
| 2159 | CGMAX | 5151 | 6689 | 4387 | 7210 | 6437 | 2839 |
| 2160 | CGMPY | 5210 | 2660 | 10340 | 7780 | 5220 | 7780 |
| 2161 | OVC STP | 110 | 110 | 110 | 110 | 110 | 110 |
| 2162 | OVC2 K1 | 32763 | 32763 | 32763 | 32763 | 32763 | 32763 |
| 2163 | OVC2 K2 | 68 | 68 | 68 | 68 | 68 | 68 |
| 2164 | OVC2 LIMIT | 2169 | 1849 | 3724 | 2169 | 1849 | 3724 |
| 2165 | MAX CURRENT | 25 | 25 | 25 | 10 | 10 | 10 |
| 2302 | TQLIM AT STOP | 0 | 0 | 0 | 0 | 0 | 0 |
| 2304 | ACCBSLM | 0 | 0 | 0 | 0 | 0 | 0 |
| 2305 | ACDCEBD | 0 | 0 | 0 | 0 | 0 | 0 |
| 2310 | DCIDBS | 0 | 0 | 0 | 0 | 0 | 0 |
| 2316 | LIMLIM | 0 | 0 | 0 | 0 | 0 | 0 |
| 2590 | PK1PLS | 1500 | 2600 | 1750 | 1400 | 2790 | 1950 |
| 2591 | PK2PLS | -2600 | -4750 | -2915 | -2300 | -4800 | -3100 |
| 2595 | HRV4PLS | 1828 | 2138 | 1215 | 1825 | 1520 | 1723 |

| Ed. | Date | Design. | Description | |
|---|---|---|---|---|
| 03 | 11.Oct.17 | K.Ono | Add FANUC specification for crimping tool | T.Tamaki |
| 02 | 30.Aug.17 | K.Yamada | Revise applicable amplifier | T.Tamaki |
| 01 | 4.Aug.17 | K.Yamada | Newly designed | T.Tamaki |

TITLE: AC SERVO MOTOR βi-B series βiS0.5-B, βiS1-B βiS1.5-B, βiS0.5HV-B, βiS1HV-B βiS1.5HV-B

DRAW. No. B-65302EN/08-02

CUST.

FANUC CORPORATION



© MyFANUC DC7187A9420041B3806BC8E5C652D376

# 11. OTHER SPECIFICATIONS

The items that are not mentioned this report correspond to FANUC AC SERVO MOTOR β*i* series .
Please refer to FANUC AC SERVO MOTOR β*i*-B/β*i* series DESCRIPTIONS B-65302EN, too.



© MyFANUC DC7187A9420041B3806BC8E5C652D376

© MyFANUC DC7187A9420041B3806BC8E5C652D376

# The risk of the motor being rotated by external force

1.Type of applied technical documents

| | |
|---|---|
| Name | FANUC SERVO AMPLIFIER α*i*-B series DESCRIPTIONS<br>FANUC SERVO AMPLIFIER β*i*-B series DESCRIPTIONS<br>FANUC SERVO MOTOR α*i*-B/β*i* series DESCRIPTIONS<br>FANUC SERVO MOTOR α*i*-B/β*i* series DESCRIPTIONS<br>FANUC SYNCHRONOUS BUILT-IN SERVO MOTOR D*i*S series DESCRIPTIONS<br>FANUC SYNCHRONOUS BUILT-IN SERVO MOTOR D*i*S-B series DESCRIPTIONS<br>FANUC LINEAR MOTOR L*i*S series DESCRIPTIONS<br>FANUC SYNCHRONOUS BUILT-IN SPINDLE MOTOR B*i*S series DESCRIPTIONS |
| Spec.No./Ed. | B-65412EN/02-11<br>B-65422EN/02-10<br>B-65262EN/10-04<br>B-65302EN/08-03<br>B-65332EN/03-09<br>B-65492EN/01-02<br>B-65382EN/05-08<br>B-65342EN/02-02 |

2.Summary of Change

| Group | Name/Outline | New, Add, Correct, Delete | Applicable Date |
|---|---|---|---|
| Basic | | | |
| Optional Function | | | |
| Unit | | | |
| Maintenance Parts | | | |
| Notice | The risk of the motor being rotated by external force | | |
| Correction | | | |
| Another | | | |

| Ed. | Date | Design | Description |
|---|---|---|---|
| | | | |
| | | | |
| | | | |
| | | | |
| | | | |
| | | | |
| | | | |

| | | | | | |
|---|---|---|---|---|---|
| Date | 18.05.24 | Design | Y.Matsumoto | Check | Apprv. |

| | |
|---|---|
| Title | The risk of the motor being rotated by external force |
| Draw No. | B-65412EN/02-11, B-65422EN/02-10, B-65262EN/10-04, B-65302EN/08-03<br>B-65332EN/03-09, B-65492EN/01-02, B-65382EN/05-08, B-65342EN/02-02 |

**FANUC CORPORATION**



© MyFANUC DC7187A9420041B3806BC8E5C652D376

# SAFETY PRECAUTIONS

This "Safety Precautions" section describes the precautions which must be observed to ensure safety when using FANUC motors and amplifiers. For proper use, understand "the risk of the motor being rotated by external force" well.

**WARNING**

**Check that the motor is not rotated by external force at emergency stop state or alarm state.**

For servo amplifiers, a dynamic break circuit drives at emergency stop state or alarm state.
If the dynamic break circuit drives and the motor is rotated by external force, servo amplifiers and the dynamic break module will produce heat abnormally, then, possibly cause a fire.

This also applies to driving a synchronous spindle motor with a spindle amplifier.
If the synchronous spindle motor is rotated by external force at alarm state, the sub module SM will produce heat abnormally, then, possibly cause a fire.

| | | | | | |
|---|---|---|---|---|---|
| | | | | Title. The risk of the motor being rotated by external force | |
| | | | | | |
| | | | | Draw.No.. B-65412EN/02-11, B-65422EN/02-10, B-65262EN/10-04, B-65302EN/08-03 B-65332EN/03-09, B-65492EN/01-02, B-65382EN/05-08, B-65342EN/02-02 | CUST. |
| Edit | Date | Design | Description | FANUC CORPORATION | Sheet. 2/2 |

© MyFANUC DC7187A9420041B3806BC8E5C652D376

**FANUC AC SERVO MOTOR αi-B/αi series DESCRIPTIONS**
**FANUC AC SERVO MOTOR βi-B/βi series DESCRIPTIONS**
**SERVO MOTOR with Battery-less PULSECODER**

1. Type of applied technical documents

| | |
|---|---|
| Name | FANUC AC SERVO MOTOR αi-B/αi series DESCRIPTIONS<br>FANUC AC SERVO MOTOR βi-B/βi series DESCRIPTIONS |
| Spec.No./ Version | B-65262EN/10-07, B-65302EN/08-04 |

2.Summary of Change

| Group | Name | New, Add, Correct, Delete, | Applicable Data |
|---|---|---|---|
| Basic Function | | | |
| Optional Function | Addition of servo motors with Battery-less PULSECODER<br>* Refer to main chapter for the applicable models. | New | Sep. 2018 |
| Unit | | | |
| Maintenance Parts | | | |
| Notice | | | |
| Correction | | | |
| Another | | | |



© MyFANUC DC7187A9420041B3806BC8E5C652D376

# 1. SUMMARY

This document indicates the description of servo motors with Battery-less PULSECODER (αiA4000BL) in FANUC AC SERVO MOTOR FANUC αi-B, βi-B series.
Battery-less PULSECODER is selectable in following models.

αiS 2-B to αiS 500-B, αiS 2HV-B to αiS 1500HV-B, αiF 1-B to αiF 40-B, αiF 4HV-B to αiF 40HV-B
βiS 2-B to βiS 40-B, βiS 2HV-B to βiS 40HV-B, βiF 4-B to βiF 30-B
* βiS 0.2 to βiS 0.3, βiS 0.4-B to βiS 1.5-B, βiSc-B, αiS 2000HV,αiS 3000HV are not included.

These servo motors are based on specification of αi-B, βi-B servo motors with αiA4000 or βiA1000, basically.
Modifications are following items.

- Ordering specification number
- Feedback sensor
- Connectors on the cable side
- Applicable software and parameter setting
- PULSECODER maintenance

Please refer to FANUC AC SERVO MOTOR αi-B/αi series DESCRIPTION（B-65262EN）, FANUC AC SERVO MOTOR βi-B/βi series DESCRIPTION（B-65302EN）for the items which are not mentioned in this report.

⚠ **CAUTION**

The applicable system software and servo control software are necessary for driving a motor with Battery-less PULSECODER. Refer to section 5.1, 5.2 for detail.

⚠ **CAUTION**

There is a limit on the amount of multi-turn rotation in using the motor with Battery-less PULSECODER. Please refer to Section 7 for this limitation.



© MyFANUC DC7187A9420041B3806BC8E5C652D376

# 2. ORDERING SPECIFICATION NUMBER

The ordering specification number of servo motors with Battery-less PULSECODER is listed below.
(Servo motors with Battery-less PULSECODER are specified by -Byz8 )

**Models αiS 2-B～αiS 60-B（HV included）, αiF 1-B～αiF 40-B（HV included）**

A06B-2xxx-Byz8#abcd

2xxx Ordering specification number is described on a table of this section.
* Every combination doesn't exist.

y
0 : Taper shaft
1 : Straight shaft
2 : Straight shaft with a key groove
3 : Taper shaft with a 24VDC brake
4 : Straight shaft with a 24VDC brake
5 : Straight shaft with a key way and a 24VDC brake

* Please do not select "Straight shaft with a key groove" when a large torque or acceleration rate is required.

z
0 : Standard
1 : With a fan
2 : With a high-torque reduced backlash brake
3 : With a high-torque reduced backlash brake and a fan

* When "With a high-torque reduced backlash brake" is selected (When z is selected 2 or 3), y is specified 3 to 5.

abcd

a 0 : Standard
b 0 : Standard
1 : IP67 specification
cd 00 : Standard
63 : ϕ14 taper/straight shaft (αiS2-B, αiF1-B to αiF2-B), ϕ24 taper shaft (αiS12-B)
70 : With a standard reduced backlash brake (αiS22-B to αiS40-B, αiF12-B to αiF40-B)

* When #abcd is #0000, #abcd is omitted.
* When #abcd is #ab70, x is specified 3 to 5.



© MyFANUC DC7187A9420041B3806BC8E5C652D376

**Models αiS 150-B（HV included）**

A06B-2xxx-Byz8

2xxx Ordering specification number is described on a table of this section.
* Every combination doesn't exist.

y 0 : Taper shaft
1 : Straight shaft
3 : Taper shaft with a 24VDC brake
4 : Straight shaft with a 24VDC brake

z 1 : With a fan

**Models αiS 300-B ~ αiS 500-B（HV included）**

A06B-2xxx-Byz8

2xxx Ordering specification number is described on a table of this section.
* Every combination doesn't exist.

y 0 : Taper shaft
1 : Straight shaft

z 1 : With a fan, cylindrical roller bearing
5 : With a fan, ball bearing

**Models αiS 1000HV-B～αiS 1500HV-B**

A06B-2xxx-Byz8

2xxx Ordering specification number is described on a table of this section.
* Every combination doesn't exist.

y 0 : Taper shaft
1 : Straight shaft

z 1 : With a fan



© MyFANUC DC7187A9420041B3806BC8E5C652D376

## Models βiS 2-B～βiS 40-B (HV included), βiF 4-B～βiF 30-B

A06B-2xxx-By08#abcd

2xxx Ordering specification number are described on a table of this section.
* Every combination doesn't exist.

y
0 : Taper shaft
1 : Straight shaft
2 : Straight shaft with a key groove
3 : Taper shaft with a 24VDC brake
4 : Straight shaft with a 24VDC brake
5 : Straight shaft with a key way and a 24VDC brake

* Please do not select "Straight shaft with a key groove" when a large torque or acceleration rate is required.

abcd

a 0 : Standard
b 0 : Standard
1 : IP67 specification
cd 00 : Standard
63 : ϕ14 taper/straight shaft (βiS 2-B)
70 : Reduced backlash brake (βiS 22-B to βiS 40-B, βiF 12-B to βiF 30-B)

* When #abcd is #0000, #abcd is omitted.
* When #abcd is #ab70, x is specified 3 to 5.



© MyFANUC DC7187A9420041B3806BC8E5C652D376

The following table list shows allowable combinations of a number in alphabet of ordering specification number.

## αiS-B series（200V） A06B-2xxx-Byz8#abcd

| Alphabet in Specification No. / Servo motor model | 2xxx | y | | | | | | z | | | | a | b | | cd | | |
|---|---|---|---|---|---|---|---|---|---|---|---|---|---|---|---|---|---|
| | | 0 | 1 | 2 | 3 | 4 | 5 | 0 | 1 | 2 | 3 | 0 | 0 | 1 | 00 | 63 | 70 |
| αiS 2/5000-B | 2212 | ✓ | ✓ | ✓ | ✓ | ✓ | ✓ | ✓ | - | - | - | ✓ | ✓ | ✓ | ✓ | ✓ | - |
| αiS 2/6000-B | 2218 | ✓ | ✓ | ✓ | ✓ | ✓ | ✓ | ✓ | - | - | - | ✓ | ✓ | ✓ | ✓ | ✓ | - |
| αiS 4/5000-B | 2215 | ✓ | ✓ | ✓ | ✓ | ✓ | ✓ | ✓ | - | - | - | ✓ | ✓ | ✓ | ✓ | - | - |
| αiS 4/6000-B | 2210 | ✓ | ✓ | ✓ | ✓ | ✓ | ✓ | ✓ | - | - | - | ✓ | ✓ | ✓ | ✓ | - | - |
| αiS 8/4000-B | 2235 | ✓ | ✓ | ✓ | ✓ | ✓ | ✓ | ✓ | - | - | - | ✓ | ✓ | ✓ | ✓ | - | - |
| αiS 8/6000-B | 2232 | ✓ | ✓ | ✓ | ✓ | ✓ | ✓ | ✓ | - | - | - | ✓ | ✓ | ✓ | ✓ | - | - |
| αiS 12/4000-B | 2238 | ✓ | ✓ | ✓ | ✓ | ✓ | ✓ | ✓ | - | - | - | ✓ | ✓ | ✓ | ✓ | ✓ | - |
| αiS 12/6000-B | 2230 | ✓ | ✓ | ✓ | ✓ | ✓ | ✓ | ✓ | - | - | - | ✓ | ✓ | ✓ | ✓ | ✓ | - |
| αiS 22/4000-B | 2265 | ✓ | ✓ | ✓ | ✓ | ✓ | ✓ | ✓ | - | - | - | ✓ | ✓ | ✓ | ✓ | - | ✓ |
| αiS 22/6000-B | 2262 | ✓ | ✓ | ✓ | ✓ | ✓ | ✓ | ✓ | - | - | - | ✓ | ✓ | ✓ | ✓ | - | ✓ |
| αiS 30/4000-B | 2268 | ✓ | ✓ | ✓ | ✓ | ✓ | ✓ | ✓ | - | - | - | ✓ | ✓ | ✓ | ✓ | - | ✓ |
| αiS 40/4000-B | 2272 | ✓ | ✓ | ✓ | ✓ | ✓ | ✓ | ✓ | - | - | - | ✓ | ✓ | ✓ | ✓ | - | ✓ |
| | | - | - | - | ✓ | ✓ | ✓ | - | - | ✓ | - | ✓ | ✓ | ✓ | ✓ | - | - |
| αiS 50/2000-B | 2042 | ✓ | ✓ | - | - | - | - | ✓ | - | - | - | ✓ | ✓ | ✓ | ✓ | - | - |
| | | - | - | - | ✓ | ✓ | - | - | - | ✓ | - | ✓ | ✓ | ✓ | ✓ | - | - |
| αiS 50/3000-B | 2275 | ✓ | ✓ | - | - | - | - | ✓ | ✓ | - | - | ✓ | ✓ | ✓ | ✓ | - | - |
| | | - | - | - | ✓ | ✓ | - | - | - | ✓ | ✓ | ✓ | ✓ | ✓ | ✓ | - | - |
| αiS 60/2000-B | 2044 | ✓ | ✓ | - | - | - | - | ✓ | - | - | - | ✓ | ✓ | ✓ | ✓ | - | - |
| | | - | - | - | ✓ | ✓ | - | - | - | ✓ | - | ✓ | ✓ | ✓ | ✓ | - | - |
| αiS 60/3000-B | 2278 | ✓ | ✓ | - | - | - | - | ✓ | ✓ | - | - | ✓ | ✓ | ✓ | ✓ | - | - |
| | | - | - | - | ✓ | ✓ | - | - | - | ✓ | ✓ | ✓ | ✓ | ✓ | ✓ | - | - |

* When #abcd is #0000, #abcd is omitted.

* When z is 2 or 3, y is specified 3 to 5. When z is 1 or 3, b is specified 0.

| Alphabet in Specification No. / Servo motor model | 2xxx | y | | | | z | |
|---|---|---|---|---|---|---|---|
| | | 0 | 1 | 3 | 4 | 1 | 5 |
| αiS 150/3000-B | 2026 | ✓ | ✓ | ✓ | ✓ | ✓ | - |
| αiS 300/2000-B | 2292 | ✓ | ✓ | - | - | ✓ | ✓ |
| αiS 500/2000-B | 2295 | ✓ | ✓ | - | - | ✓ | ✓ |



© MyFANUC DC7187A9420041B3806BC8E5C652D376

## αiS-B series（400V） A06B-2xxx-Byz8#abcd

| Alphabet in Specification No. / Servo motor model | 2xxx | y | | | | | | z | | | | a | b | | cd | | |
|---|---|---|---|---|---|---|---|---|---|---|---|---|---|---|---|---|---|
| | | 0 | 1 | 2 | 3 | 4 | 5 | 0 | 1 | 2 | 3 | 0 | 0 | 1 | 00 | 63 | 70 |
| αiS 2/5000HV-B | 2213 | ✓ | ✓ | ✓ | ✓ | ✓ | ✓ | ✓ | - | - | - | ✓ | ✓ | ✓ | ✓ | ✓ | - |
| αiS 2/6000HV-B | 2219 | ✓ | ✓ | ✓ | ✓ | ✓ | ✓ | ✓ | - | - | - | ✓ | ✓ | ✓ | ✓ | ✓ | - |
| αiS 4/5000HV-B | 2216 | ✓ | ✓ | ✓ | ✓ | ✓ | ✓ | ✓ | - | - | - | ✓ | ✓ | ✓ | ✓ | - | - |
| αiS 4/6000HV-B | 2214 | ✓ | ✓ | ✓ | ✓ | ✓ | ✓ | ✓ | - | - | - | ✓ | ✓ | ✓ | ✓ | - | - |
| αiS 8/4000HV-B | 2236 | ✓ | ✓ | ✓ | ✓ | ✓ | ✓ | ✓ | - | - | - | ✓ | ✓ | ✓ | ✓ | - | - |
| αiS 8/6000HV-B | 2233 | ✓ | ✓ | ✓ | ✓ | ✓ | ✓ | ✓ | - | - | - | ✓ | ✓ | ✓ | ✓ | - | - |
| αiS 12/4000HV-B | 2239 | ✓ | ✓ | ✓ | ✓ | ✓ | ✓ | ✓ | - | - | - | ✓ | ✓ | ✓ | ✓ | ✓ | - |
| αiS 12/6000HV-B | 2237 | ✓ | ✓ | ✓ | ✓ | ✓ | ✓ | ✓ | - | - | - | ✓ | ✓ | ✓ | ✓ | ✓ | - |
| αiS 22/4000HV-B | 2266 | ✓ | ✓ | ✓ | ✓ | ✓ | ✓ | ✓ | - | - | - | ✓ | ✓ | ✓ | ✓ | - | ✓ |
| αiS 22/6000HV-B | 2263 | ✓ | ✓ | ✓ | ✓ | ✓ | ✓ | ✓ | - | - | - | ✓ | ✓ | ✓ | ✓ | - | ✓ |
| αiS 30/4000HV-B | 2269 | ✓ | ✓ | ✓ | ✓ | ✓ | ✓ | ✓ | - | - | - | ✓ | ✓ | ✓ | ✓ | - | ✓ |
| αiS 40/4000HV-B | 2273 | ✓ | ✓ | ✓ | ✓ | ✓ | ✓ | ✓ | - | - | - | ✓ | ✓ | ✓ | ✓ | - | ✓ |
| | | - | - | - | ✓ | ✓ | ✓ | - | - | ✓ | - | ✓ | ✓ | ✓ | ✓ | - | - |
| αiS 50/2000HV-B | 2043 | ✓ | ✓ | - | - | - | - | ✓ | - | - | - | ✓ | ✓ | ✓ | ✓ | - | - |
| | | - | - | - | ✓ | ✓ | - | - | - | ✓ | - | ✓ | ✓ | ✓ | ✓ | - | - |
| αiS 50/3000HV-B | 2276 | ✓ | ✓ | - | - | - | - | ✓ | ✓ | - | - | ✓ | ✓ | ✓ | ✓ | - | - |
| | | - | - | - | ✓ | ✓ | - | - | - | ✓ | ✓ | ✓ | ✓ | ✓ | ✓ | - | - |
| αiS 60/2000HV-B | 2045 | ✓ | ✓ | - | - | - | - | ✓ | - | - | - | ✓ | ✓ | ✓ | ✓ | - | - |
| | | - | - | - | ✓ | ✓ | - | - | - | ✓ | - | ✓ | ✓ | ✓ | ✓ | - | - |
| αiS 60/3000HV-B | 2279 | ✓ | ✓ | - | - | - | - | ✓ | ✓ | - | - | ✓ | ✓ | ✓ | ✓ | - | - |
| | | - | - | - | ✓ | ✓ | - | - | - | ✓ | ✓ | ✓ | ✓ | ✓ | ✓ | - | - |

* When #abcd is #0000, #abcd is omitted.

* When z is 2 or 3, y is specified 3 to 5. When z is 1 or 3, b is specified 0.

| Alphabet in Specification No. / Servo motor model | 2xxx | y | | | | z | |
|---|---|---|---|---|---|---|---|
| | | 0 | 1 | 3 | 4 | 1 | 5 |
| αiS 150/3000HV-B | 2027 | ✓ | ✓ | ✓ | ✓ | ✓ | - |
| αiS 300/2000HV-B | 2293 | ✓ | ✓ | - | - | ✓ | ✓ |
| αiS 300/3000HV-B | 2290 | ✓ | ✓ | - | - | ✓ | ✓ |
| αiS 500/2000HV-B | 2296 | ✓ | ✓ | - | - | ✓ | ✓ |
| αiS 500/3000HV-B | 2297 | ✓ | ✓ | - | - | ✓ | ✓ |
| αiS 1000/2000HV-B | 2098 | ✓ | ✓ | - | - | ✓ | - |
| αiS 1000/3000HV-B | 2099 | ✓ | ✓ | - | - | ✓ | - |
| αiS 1500/3000HV-B | 2097 | ✓ | ✓ | - | - | ✓ | - |



© MyFANUC DC7187A9420041B3806BC8E5C652D376

## αiF-B series（200V） A06B-2xxx-Byz8#abcd

| Alphabet in Specification No. / Servo motor model | 2xxx | y | | | | | | z | | | | a | b | | cd | | |
|---|---|---|---|---|---|---|---|---|---|---|---|---|---|---|---|---|---|
| | | 0 | 1 | 2 | 3 | 4 | 5 | 0 | 1 | 2 | 3 | 0 | 0 | 1 | 00 | 63 | 70 |
| αiF 1/5000-B | 2202 | ✓ | ✓ | ✓ | ✓ | ✓ | ✓ | ✓ | - | - | - | ✓ | ✓ | ✓ | ✓ | ✓ | - |
| αiF 2/5000-B | 2205 | ✓ | ✓ | ✓ | ✓ | ✓ | ✓ | ✓ | - | - | - | ✓ | ✓ | ✓ | ✓ | ✓ | - |
| αiF 4/5000-B | 2223 | ✓ | ✓ | ✓ | ✓ | ✓ | ✓ | ✓ | - | - | - | ✓ | ✓ | ✓ | ✓ | - | - |
| αiF 8/3000-B | 2227 | ✓ | ✓ | ✓ | ✓ | ✓ | ✓ | ✓ | - | - | - | ✓ | ✓ | ✓ | ✓ | - | - |
| αiF 8/4000-B | 2228 | ✓ | ✓ | ✓ | ✓ | ✓ | ✓ | ✓ | - | - | - | ✓ | ✓ | ✓ | ✓ | - | - |
| αiF 12/4000-B | 2243 | ✓ | ✓ | ✓ | ✓ | ✓ | ✓ | ✓ | - | - | - | ✓ | ✓ | ✓ | ✓ | - | ✓ |
| αiF 22/3000-B | 2247 | ✓ | ✓ | ✓ | ✓ | ✓ | ✓ | ✓ | - | - | - | ✓ | ✓ | ✓ | ✓ | - | ✓ |
| αiF 22/4000-B | 2248 | ✓ | ✓ | ✓ | ✓ | ✓ | ✓ | ✓ | - | - | - | ✓ | ✓ | ✓ | ✓ | - | ✓ |
| αiF 30/4000-B | 2253 | ✓ | ✓ | ✓ | ✓ | ✓ | ✓ | ✓ | - | - | - | ✓ | ✓ | ✓ | ✓ | - | ✓ |
| αiF 40/3000-B | 2257 | ✓ | ✓ | ✓ | ✓ | ✓ | ✓ | ✓ | ✓ | - | - | ✓ | ✓ | ✓ | ✓ | - | ✓ |
| | | - | - | - | ✓ | ✓ | ✓ | - | - | ✓ | ✓ | ✓ | ✓ | ✓ | ✓ | - | - |

* When #abcd is #0000, #abcd is omitted.

* When z is 2 or 3, y is specified 3 to 5. When z is 1 or 3, b is specified 0.
When z is 1, it is not possible to specify y 3 to 5.

## αiF-B series（400V） A06B-2xxx-Byz8#abcd

| Alphabet in Specification No. / Servo motor model | 2xxx | y | | | | | | z | | | | a | b | | cd | | |
|---|---|---|---|---|---|---|---|---|---|---|---|---|---|---|---|---|---|
| | | 0 | 1 | 2 | 3 | 4 | 5 | 0 | 1 | 2 | 3 | 0 | 0 | 1 | 00 | 63 | 70 |
| αiF 4/5000HV-B | 2225 | ✓ | ✓ | ✓ | ✓ | ✓ | ✓ | ✓ | - | - | - | ✓ | ✓ | ✓ | ✓ | - | - |
| αiF 8/3000HV-B | 2229 | ✓ | ✓ | ✓ | ✓ | ✓ | ✓ | ✓ | - | - | - | ✓ | ✓ | ✓ | ✓ | - | - |
| αiF 8/4000HV-B | 2220 | ✓ | ✓ | ✓ | ✓ | ✓ | ✓ | ✓ | - | - | - | ✓ | ✓ | ✓ | ✓ | - | - |
| αiF 12/4000HV-B | 2245 | ✓ | ✓ | ✓ | ✓ | ✓ | ✓ | ✓ | - | - | - | ✓ | ✓ | ✓ | ✓ | - | ✓ |
| αiF 22/3000HV-B | 2249 | ✓ | ✓ | ✓ | ✓ | ✓ | ✓ | ✓ | - | - | - | ✓ | ✓ | ✓ | ✓ | - | ✓ |
| αiF 22/4000HV-B | 2240 | ✓ | ✓ | ✓ | ✓ | ✓ | ✓ | ✓ | - | - | - | ✓ | ✓ | ✓ | ✓ | - | ✓ |
| αiF 30/4000HV-B | 2255 | ✓ | ✓ | ✓ | ✓ | ✓ | ✓ | ✓ | - | - | - | ✓ | ✓ | ✓ | ✓ | - | ✓ |
| αiF 40/3000HV-B | 2259 | ✓ | ✓ | ✓ | ✓ | ✓ | ✓ | ✓ | ✓ | - | - | ✓ | ✓ | ✓ | ✓ | - | ✓ |
| | | - | - | - | ✓ | ✓ | ✓ | - | - | ✓ | ✓ | ✓ | ✓ | ✓ | ✓ | - | - |

* When #abcd is #0000, #abcd is omitted.

* When z is 2 or 3, y is specified 3 to 5. When z is 1 or 3, b is specified 0.
When z is 1, it is not possible to specify y 3 to 5.



© MyFANUC DC7187A9420041B3806BC8E5C652D376

## βiS-B, βiF-B series（200V） A06B-2xxx-By08#abcd

| Alphabet in Specification No. / Servo motor model | 2xxx | y | | | | | | a | b | | cd | | | |
|---|---|---|---|---|---|---|---|---|---|---|---|---|---|---|
| | | 0 | 1 | 2 | 3 | 4 | 5 | 0 | 0 | 1 | 00 | 63 | 65 | 70 |
| βiS 2/4000-B | 2061 | ✓ | ✓ | ✓ | ✓ | ✓ | ✓ | ✓ | ✓ | ✓ | ✓ | ✓ | - | - |
| βiS 4/4000-B | 2063 | ✓ | ✓ | ✓ | ✓ | ✓ | ✓ | ✓ | ✓ | ✓ | ✓ | - | - | - |
| βiS 8/3000-B | 2075 | ✓ | ✓ | ✓ | ✓ | ✓ | ✓ | ✓ | ✓ | ✓ | ✓ | - | - | - |
| βiS 12/2000-B | 2077 | ✓ | ✓ | ✓ | ✓ | ✓ | ✓ | ✓ | ✓ | ✓ | ✓ | - | - | - |
| βiS 12/3000-B | 2078 | ✓ | ✓ | ✓ | ✓ | ✓ | ✓ | ✓ | ✓ | ✓ | ✓ | - | - | - |
| βiS 22/2000-B | 2085 | ✓ | ✓ | ✓ | ✓ | ✓ | ✓ | ✓ | ✓ | ✓ | ✓ | - | - | ✓ |
| βiS 22/3000-B | 2082 | ✓ | ✓ | ✓ | ✓ | ✓ | ✓ | ✓ | ✓ | ✓ | ✓ | - | - | ✓ |
| βiS 30/2000-B | 2087 | ✓ | ✓ | ✓ | ✓ | ✓ | ✓ | ✓ | ✓ | ✓ | ✓ | - | - | ✓ |
| βiS 40/2000-B | 2089 | ✓ | ✓ | ✓ | ✓ | ✓ | ✓ | ✓ | ✓ | ✓ | ✓ | - | - | ✓ |
| βiF 4/3000-B | 2051 | ✓ | ✓ | ✓ | ✓ | ✓ | ✓ | ✓ | ✓ | ✓ | ✓ | - | - | - |
| βiF 8/2000-B | 2052 | ✓ | ✓ | ✓ | ✓ | ✓ | ✓ | ✓ | ✓ | ✓ | ✓ | - | - | - |
| βiF 12/2000-B | 2053 | ✓ | ✓ | ✓ | ✓ | ✓ | ✓ | ✓ | ✓ | ✓ | ✓ | - | - | ✓ |
| βiF 22/2000-B | 2054 | ✓ | ✓ | ✓ | ✓ | ✓ | ✓ | ✓ | ✓ | ✓ | ✓ | - | - | ✓ |
| βiF 30/1500-B | 2055 | ✓ | ✓ | ✓ | ✓ | ✓ | ✓ | ✓ | ✓ | ✓ | ✓ | - | - | ✓ |

* When #abcd is #0000, #abcd is omitted.

## βiS-B series（400V） A06B-2xxx-By08#abcd

| Alphabet in Specification No. / Servo motor model | 2xxx | y | | | | | | a | b | | cd | | | |
|---|---|---|---|---|---|---|---|---|---|---|---|---|---|---|
| | | 0 | 1 | 2 | 3 | 4 | 5 | 0 | 0 | 1 | 00 | 63 | 65 | 70 |
| βiS 2/4000HV-B | 2062 | ✓ | ✓ | ✓ | ✓ | ✓ | ✓ | ✓ | ✓ | ✓ | ✓ | ✓ | - | - |
| βiS 4/4000HV-B | 2064 | ✓ | ✓ | ✓ | ✓ | ✓ | ✓ | ✓ | ✓ | ✓ | ✓ | - | - | - |
| βiS 8/3000HV-B | 2076 | ✓ | ✓ | ✓ | ✓ | ✓ | ✓ | ✓ | ✓ | ✓ | ✓ | - | - | - |
| βiS 12/3000HV-B | 2079 | ✓ | ✓ | ✓ | ✓ | ✓ | ✓ | ✓ | ✓ | ✓ | ✓ | - | - | - |
| βiS 22/2000HV-B | 2086 | ✓ | ✓ | ✓ | ✓ | ✓ | ✓ | ✓ | ✓ | ✓ | ✓ | - | - | ✓ |
| βiS 22/3000HV-B | 2083 | ✓ | ✓ | ✓ | ✓ | ✓ | ✓ | ✓ | ✓ | ✓ | ✓ | - | - | ✓ |
| βiS 30/2000HV-B | 2088 | ✓ | ✓ | ✓ | ✓ | ✓ | ✓ | ✓ | ✓ | ✓ | ✓ | - | - | ✓ |
| βiS 40/2000HV-B | 2090 | ✓ | ✓ | ✓ | ✓ | ✓ | ✓ | ✓ | ✓ | ✓ | ✓ | - | - | ✓ |

* When #abcd is #0000, #abcd is omitted.



© MyFANUC DC7187A9420041B3806BC8E5C652D376

# 3. FEEDBACK SENSOR

All motors contain PULSECODER (optical encoder) as a feedback sensor which detects position and velocity. Position information and alarm signals are output from PULSECODER. Since the PULSECODER is built in the motor the outline drawing is not described here. Refer to the outline drawing of the motor.
The specification of PULSECODER is described below.

| PULSECODER type | Resolution [Division／rev] | Absolute/ incremental |
|---|---|---|
| αiA 4000BL | 4,000,000 | Absolute |

The position is retained in Battery-less PULSECODER without battery when power supply of CNC is off.

# 4. Connectors on the Cable side

In this section, the specifications of the cable side connector connected to the motor are described. For the specifications of the connectors attached to the motor and the pin arrangement, refer to FANUC AC SERVO MOTOR αi-B/αi series Specifications（B-65262EN）, FANUC AC SERVO MOTOR βi-B/βi series Specifications（B-65302JA）.

## 4-1. Connect signal cables

For details of cable connection between servo amplifier and PULSECODER , refer to FANUC AC SERVO AMPLIFIER αi-B series Specifications（B-65412EN）, FANUC AC SERVO AMPLIFIER βi-B series Specifications（B-65422JA）. For Battery-less PULSECODER, it is not necessary to connect 6V line (It makes no problem if it is connected).



© MyFANUC DC7187A9420041B3806BC8E5C652D376

# 5. APPLICABLE SOFTWARE AND PARAMETER SETTING

> ⚠ **CAUTION**
>
> The system software and servo control software which supports Battery-less PULSECODER is necessary to drive a motor with Battery-less PULSECODER. Please refer to Section 5.1, 5.2 for detail.

## 5-1. Series and edition of applicable system software

The following system software is necessary to drive a motor with Battery-less PULSECODER.

| CNC | Series | Edition |
|---|---|---|
| 30*i*-B | G303, G313, G323, G333, G353 | 17.0 or later (plan) |
| | G30A, G31A, G32A, G33A, G35A | 17.0 or later (plan) |
| 31*i*-B | G403, G413, G453, G4G3, | 17.0 or later (plan) |
| | G40A, G41A | 17.0 or later (plan) |
| | G451 | 36.0 or later (plan) |
| | G441 (for transfer line) | 21.0 or later (plan) |
| 31*i*-B5 | G423, G433, G483, G4H3 | 17.0 or later (plan) |
| | G42A, G43A | 17.0 or later (plan) |
| | G481 | 36.0 or later (plan) |
| 32*i*–B | G503, G513, G523 | 17.0 or later (plan) |
| | G50A, G51A | 17.0 or later (plan) |
| | G521 | 36.0 or later (plan) |
| | G451 (for transfer line) | 21.0 or later (plan) |
| 35*i*–B | G601, G611 | by the end of Feb., 2019 |
| | G641 (for transfer line) | 21.0 or later (plan) |
| Power Motion *i*-A | 88H0 | by the end of Apr., 2019 |
| DSA-B | 881R (EtherCAT I/F) | by the end of May, 2019 |
| | 881S (pulse input / analog voltage input I/F) | by the end of June, 2019 |
| | 881T (EtherCAT I/F supporting spindle drive) | by the end of May, 2019 |
| | 881U (HSSB I/F) | by the end of Aug., 2019 |
| | 881V (POWERLINK I/F) | by the end of July, 2019 |
| 0*i*-F | D4G2, D5G2, D6G2, D7G2 | 18.0 or later (plan) |
| | D4G1, D6G1 | 53.0 or later (plan) |



© MyFANUC DC7187A9420041B3806BC8E5C652D376

## 5-2. Series and editions of applicable servo control software

The following servo control software is necessary to drive a motor with Battery-less PULSECODER.

| CNC | Series | Edition |
|---|---|---|
| 30*i*-B/31*i*-B/31*i*-B5/32*i*-B/35*i*-B | 90J0 | 17.0 or later |
| Power Motion *i*-A | 90JP | 07.0 or later (plan) |
| DSA-B | 90J3 | 09.0 or later (plan) |
| 0*i*-F | 90J5 | 02.0 or later (plan) |
| | 90M0 | 08.0 or later (plan) |
| | 90M8 | 08.0 or later (plan) |

## 5-3. Parameter setting

Standard parameters for servo motor and the parameter setting as for the detector are the same with a motor with αiA4000, αiA32000 or βiA1000. Refer to PARAMETER MANUAL (B65270/09, Section 2.1) for detail.



© MyFANUC DC7187A9420041B3806BC8E5C652D376

# 6. PULSECODER MAINTENANCE

## 6-1. Ordering specification for maintenance

### ・PULSECODER : ordering specification

| Motor model | Motor specification | PULSECODER : ordering specification | |
|---|---|---|---|
| αi-B series<br>βi-B series | A06B-2□□□-B△○8#abcd<br>(□△○abcd : see the Item "Ordering Specification Number") | A860-2050-T381 | αi A4000BL |

### ・Oldham's coupling : ordering specification

| Motor model | Motor specification | Oldham's coupling: ordering specification |
|---|---|---|
| αi-B series<br>βi-B series | A06B-2□□□-B△○8#abcd<br>(□△○abcd : see the Item "Ordering Specification Number") | A290-0501-V535 |

## 6-2. Replacing PULSECODER

⚠ **CAUTION**

If the system software and servo control software which supports Battery-less PULSECODER is not applied, it is not possible to drive servo motors with Battery-less PULSECODER.
Please refer to Section 5.1, 5.2 for the series and edition of software which supports Battery-less PULSECODER.

PULSECODER is exchangeable in the same way as the battery backup type PULSECODER.
For details, please refer to FANUC AC SERVO MOTOR αi-B /αi series, FANUC AC SERVO MOTOR βi-B/βi series maintenance manual（B-65515EN）.
Reference point return is necessary in case of the servo motor with Battery-less PULSECODER like the case in the motor with battery backup type PULSECODER when PULSECODER is replaced.
In Battery-less PULSECODER, reference position return request is generated and BZAL does not occur, while BZAL occurs in addition to reference position return request in battery backup type PULSECODER.



© MyFANUC DC7187A9420041B3806BC8E5C652D376

# 7. Usage restriction

The movable range is within +/- 2000rev from the machine origin when Battery-less PULSECODER is used as a linear axis or rotation axis B type,
DS0300(reference position return request) and PW0000(power off request) occurs and reference position return is required in case that machine position excess the range above.



© MyFANUC DC7187A9420041B3806BC8E5C652D376

**FANUC AC SERVO MOTOR βi-B series DESCRIPTIONS**

**βiS30/2000-B, βiS40/2000-B**

**Increased maximum speed**

1. Type of applied technical documents

| | |
|---|---|
| Name | FANUC AC SERVO MOTOR βi-B/βi series DESCRIPTIONS |
| Spec.No./ Version | B-65302EN/08-05 |

2.Summary of Change

| Group | Name | New, Add, Correct, Delete, | Applicable Data |
|---|---|---|---|
| Basic Function | ・βiS30/2000-B is increased maximum speed to 2500min$^{-1}$ or 3000min$^{-1}$.<br>・βiS40/2000-B is increased maximum speed to 2500min$^{-1}$.<br>・Please note that some conditions should be required. | New | Nov. 2018 |
| Optional Function | | | |
| Unit | | | |
| Maintenance Parts | | | |
| Notice | | | |
| Correction | | | |
| Another | | | |

| | | | | | |
|---|---|---|---|---|---|
| | | | | TITLE AC SERVO MOTOR βi-B series βiS30/2000-B, βiS40/2000-B Increased maximum speed | |
| 01 | 16.Nov.18 | Akashi | Newly designed | DRAW. No. B-65302EN/08-05 | CUST. |
| Ed. | Date | Design. | Description | FANUC CORPORATION | SHEET 1/10 |

© MyFANUC DC7187A9420041B3806BC8E5C652D376

# 1. SUMMARY

Maximum speed is increased about below models of FANUC AC SERVO MOTOR β*i*-B series. Be sure to observe this manual, when the motors are used with the increased speed.

| Model | Maximum Speed (Existing) | Maximum Speed (Increased) | Required conditions |
|---|---|---|---|
| β*i*S30/2000-B | 2000 $min^{-1}$ | 2500 $min^{-1}$ | None |
| | | 3000 $min^{-1}$ | ・Changing parameters<br>・Connection with β*i*SV80-B or β*i*SV80 is not allowable.<br>・Changing main power supply voltage to 230V |
| β*i*S40/2000-B | 2000 $min^{-1}$ | 2500 $min^{-1}$ | ・Changing parameters<br>・Connection with β*i*SV80-B or β*i*SV80 is not allowable.<br>・Changing main power supply voltage to 230V |

The items that are not mentioned this report correspond to FANUC AC SERVO MOTOR β*i*-B series. Please refer to FANUC AC SERVO MOTOR β*i*-B/β*i* series DESCRIPTIONS B-65302EN.

In case of driving β*i*S30-B over 2500 $min^{-1}$, please attention following points.

> ⚠ **CAUTION**
> Please input correct values of parameters according to the parameter list.
> If a motor is driven with wrong parameters, the motor and amplifier have a risk to be damaged.

> ⚠ **CAUTION**
> It is not allowable to connect with β*i*SV80-B or β*i*SV80. At this combination, there is a possibility to occur over voltage alarm.

> ⚠ **CAUTION**
> It is necessary to change main power supply voltage. If voltage is low, there is a possibility to be unstable motor's driving.

In case of driving β*i*S40-B over 2000 $min^{-1}$, please attention following point in addition to above three points.

> ⚠ **CAUTION**
> The exceed speed alarm is issued at 2700 $min^{-1}$ to protect amplifiers. To prevent speed overshoot during acc./dec., please adjust acc./dec. time constants and servo parameters adequately.



© MyFANUC DC7187A9420041B3806BC8E5C652D376

## 2. Required conditions

・In case of driving βiS30-B under 2500 $min^{-1}$

| | |
|---|---|
| Servo Motors | Specification numbers of servo motors for order are same.<br>Please refer to the chapter 3. “Servo Motors”. |
| Servo Parameters | It is not necessary to change. |
| Applicable Amplifiers | It is not necessary to change. |
| Input voltage | It is not necessary to change. |

・In case of driving βiS30-B over 2500 $min^{-1}$, βiS40-B over 2000 $min^{-1}$

| | |
|---|---|
| Servo Motors | Specification numbers of servo motors for order are same.<br>Please refer to the chapter 3. “Servo Motors”. |
| Servo Parameters | It is necessary to change parameters.<br>Please refer to the chapter 4. “Servo Parameters”. |
| Applicable Amplifiers | It is not allowable to connect with βiSV80-B and βiSV80.<br>Please refer to the chapter 5. “Applicable Amplifiers” |
| Input voltage | It is necessary to change main power supply voltage to 230V.<br>Please refer to the chapter 6. “Input Power”. |

## 3. Servo Motors

Following table shows the applied motors and maximum speed. The specification numbers of servo motor for order are same.

| Model | Specification Number | Maximum Speed (Existing) | Maximum Speed (Increased) |
|---|---|---|---|
| βiS30/2000-B | A06B-2087-Bx0y | 2000 $min^{-1}$ | 2500 $min^{-1}$ or 3000 $min^{-1}$ |
| βiS40/2000-B | A06B-2089-Bx0y | 2000 $min^{-1}$ | 2500 $min^{-1}$ |



© MyFANUC DC7187A9420041B3806BC8E5C652D376

# 4. Servo Parameter

In case of driving βiS30-B over 2500 $min^{-1}$ or βiS40-B over 2000 $min^{-1}$, it is necessary to change the parameters. Please change the parameters according to following table. The parameters in bold flame are different from standard.
In case of driving βiS30-B under 2500 $min^{-1}$, it is not necessary to change parameter.

| Model | βiS30/2000-B (3000$min^{-1}$ driving) |
|---|---|
| Motor Specification | 2087 |
| Motor ID No. | 537 |

| Parameter No. | Parameter |
|---|---|
| 2052 | 3600 |
| 2057 | -5145 |
| 2111 | 0 |
| 2128 | 3651 |
| 2129 | 1550 |
| 2211 | 00000000 |

| Model | βiS40/2000-B (2500$min^{-1}$ driving) |
|---|---|
| Motor Specification | 2089 |
| Motor ID No. | 539 |

| Parameter No. | Parameter |
|---|---|
| 2052 | 2700 |
| 2057 | -3353 |
| 2110 | 261 |
| 2111 | 0 |
| 2128 | 3622 |
| 2129 | 1045 |
| 2133 | 2072 |
| 2134 | 8977 |
| 2301 | 01000000 |

**CAUTION**
Please input correct values of parameters according to the parameter list.
If a motor is driven with wrong parameters, the motor and amplifier have a risk to be damaged.



© MyFANUC DC7187A9420041B3806BC8E5C652D376

# 5. Applicable Amplifiers

Please refer to following lists.

> ⚠ **CAUTION**
> In case of driving βiS30-B over 2500 $min^{-1}$ or βiS40-B over 2000 $min^{-1}$,
> it is not allowable to connect with βiSV80-B or βiSV80 . At this combination, there is a possibility to occur over voltage alarm.

### αiSV-B amplifiers

| Continuous torque (at low speed) | | 27 | 27 | 36 |
|---|---|---|---|---|
| Amplifier \ Motor | | βiS 30 /2000-B 2500 $min^{-1}$ driving | βiS 30 /2000-B 3000 $min^{-1}$ driving | βiS 40 /2000-B 2500 $min^{-1}$ driving |
| αiSV 80-B | - | ✓ | ✓ | ✓ |
| αiSV 40/80-B | L axis | | | |
| | M axis | ✓ | ✓ | ✓ |
| αiSV 80/80-B | L axis | ✓ | ✓ | ✓ |
| | M axis | ✓ | ✓ | ✓ |
| αiSV 80/160-B | L axis | ✓ | ✓ | ✓ |
| | M axis | | | |
| αiSV 80/80/80-B | L axis | ✓ | ✓ | ✓ |
| | M axis | ✓ | ✓ | ✓ |
| | N axis | ✓ | ✓ | ✓ |

### βiSV-B and βiSVSP-B amplifiers

| Continuous torque (at low speed) | | 27 | 27 | 36 |
|---|---|---|---|---|
| Amplifier \ Motor | | βiS 30 /2000-B 2500 $min^{-1}$ driving | βiS 30 /2000-B 3000 $min^{-1}$ driving | βiS 40 /2000-B 2500 $min^{-1}$ driving |
| βiSV 80-B | - | ✓ | | |
| βiSVSP 80/80-18-B | L axis | ✓ | ✓ | ✓ |
| | M axis | ✓ | ✓ | ✓ |
| βiSVSP 40/40/80-15-B | L axis | | | |
| | M axis | | | |
| | N axis | ✓ | ✓ | ✓ |
| βiSVSP 40/40/80-18-B | L axis | | | |
| | M axis | | | |
| | N axis | ✓ | ✓ | ✓ |
| βiSVSP 80/80/80-18-B | L axis | ✓ | ✓ | ✓ |
| | M axis | ✓ | ✓ | ✓ |
| | N axis | ✓ | ✓ | ✓ |



© MyFANUC DC7187A9420041B3806BC8E5C652D376

### αiSV amplifiers

| Continuous torque (at low speed) | | 27 | 27 | 36 |
|---|---|---|---|---|
| Motor / Amplifier | | βiS 30 /2000-B 2500 min$^{-1}$ driving | βiS 30 /2000-B 3000 min$^{-1}$ driving | βiS 40 /2000-B 2500 min$^{-1}$ driving |
| αiSV 80<br>αiSV 80L | - | ✓ | ✓ | ✓ |
| αiSV 40/80<br>αiSV 40/80L | L axis | | | |
| | M axis | ✓ | ✓ | ✓ |
| αiSV 80/80<br>αiSV 80/80L | L axis | ✓ | ✓ | ✓ |
| | M axis | ✓ | ✓ | ✓ |
| αiSV 80/160 | L axis | ✓ | ✓ | ✓ |
| | M axis | | | |

### βiSV and βiSVSP amplifiers

| Continuous torque (at low speed) | | 27 | 27 | 36 |
|---|---|---|---|---|
| Motor / Amplifier | | βiS 30 /2000-B 2500 min$^{-1}$ driving | βiS 30 /2000-B 3000 min$^{-1}$ driving | βiS 40 /2000-B 2500 min$^{-1}$ driving |
| βiSV 80 | - | ✓ | | |
| βiSVSP 80/80-18 | L axis | ✓ | ✓ | ✓ |
| | M axis | ✓ | ✓ | ✓ |
| βiSVSP 40/40/80-15 | L axis | | | |
| | M axis | | | |
| | N axis | ✓ | ✓ | ✓ |
| βiSVSP 40/40/80-18 | L axis | | | |
| | M axis | | | |
| | N axis | ✓ | ✓ | ✓ |
| βiSVSP 80/80/80-18 | L axis | ✓ | ✓ | ✓ |
| | M axis | ✓ | ✓ | ✓ |
| | N axis | ✓ | ✓ | ✓ |



© MyFANUC DC7187A9420041B3806BC8E5C652D376

# 6. Input Power

Please refer to the following.

| Model | Maximum Speed (Increased) | Main power supply voltage |
|---|---|---|
| βiS30/2000-B | 2500 $min^{-1}$ | Three-phase 200 to 240VAC<br>* It is not necessary to change. |
| | 3000 $min^{-1}$ | Three-phase 230 to 240VAC |
| βiS40/2000-B | 2500 $min^{-1}$ | Three-phase 230 to 240VAC |

⚠ **CAUTION**

In case of driving βiS30-B over 2500 $min^{-1}$ or βiS40-B over 2000 $min^{-1}$, it is necessary to change main power supply voltage. If voltage is low, there is a possibility to be unstable motor's driving.

# 7. Specifications

Please refer to following pages.



© MyFANUC DC7187A9420041B3806BC8E5C652D376

**Model βiS 30/2000-B (2500min$^{-1}$driving)** Specification: A06B-2087-Bx0y

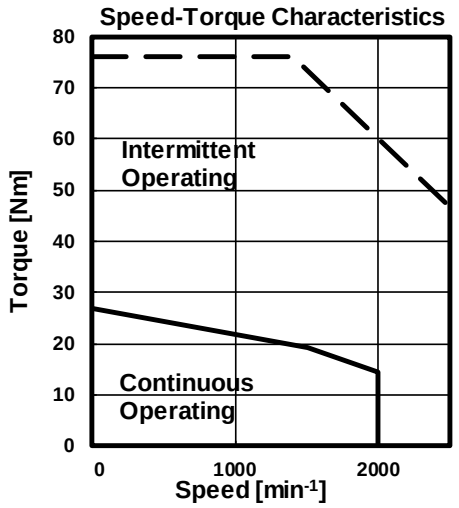


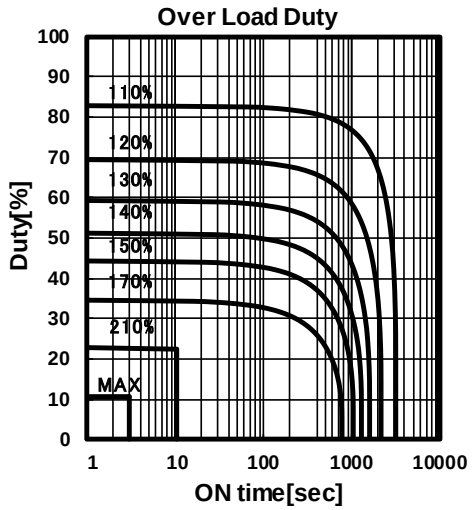


**Data sheet**

| Parameter | Symbol | Value | Unit |
|---|---|---|---|
| **Continuous Torque (at low speed) (*)** | Tc | 27 | Nm |
| | | 276 | kgfcm |
| **Continuous Current (at low speed) (*)** | Ic | 18.6 | A (rms) |
| **Rated Output (*)** | Pr | 3.0 | kW |
| | | 4.0 | HP |
| **Rated Speed** | Nr | 2000 | min$^{-1}$ |
| **Maximum Speed** | Nmax | 2500 | min$^{-1}$ |
| **Maximum Torque (*)** | Tmax | 76 | Nm |
| | | 776 | kgfcm |
| **Moment of Inertia of Rotor** | Jm | 0.00759 | kgm$^2$ |
| | | 0.0774 | kgfcms$^2$ |
| **Moment of Inertia of Rotor(with 35Nm Brake)** | Jm | 0.00819 | kgm$^2$ |
| | | 0.0836 | kgfcms$^2$ |
| **Torque Constant (*)** | Kt | 1.45 | Nm/A(rms) |
| | | 14.8 | kgfcm/A(rms) |
| **Winding Resistance (between terminals) (*)** | Ra | 0.30 | Ω |
| **Thermal time constant** | $t_t$ | 30 | min |
| **Static friction** | Tf | 0.8 | Nm |
| | | 8 | kgfcm |
| **Weight** | w | 23 | kg |
| **Weight(with 35Nm Brake)** | w | 29 | kg |
| **Max. Current of Servo Amp.** | Imax | 80 | A (peak) |

(*) The values are the standard values at 20℃ and the tolerance is ±10%.

The speed-torque characteristics very depending on the type of software,parametersetting,and input voltage of the digital servo software.(The above figures show average values.)



© MyFANUC DC7187A9420041B3806BC8E5C652D376

**Model βiS 30/2000-B (3000min$^{-1}$driving, input 230V)** Specification: A06B-2087-Bx0y

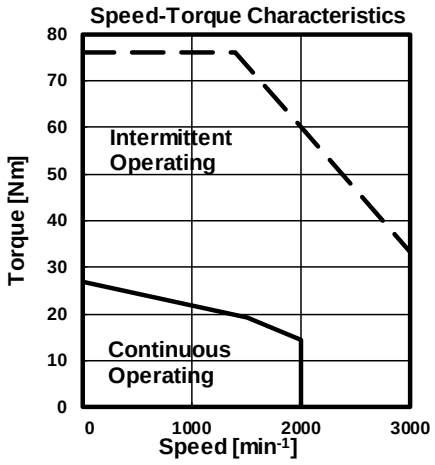


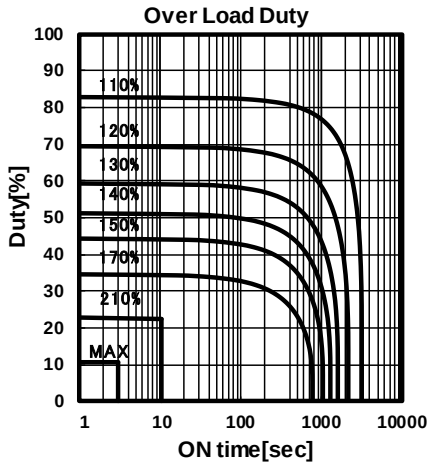


**Data sheet**

| Parameter | Symbol | Value | Unit |
|---|---|---|---|
| **Continuous Torque (at low speed) (*)** | Tc | 27 | Nm |
| | | 276 | kgfcm |
| **Continuous Current (at low speed) (*)** | Ic | 18.6 | A (rms) |
| **Rated Output (*)** | Pr | 3.0 | kW |
| | | 4.0 | HP |
| **Rated Speed** | Nr | 2000 | min$^{-1}$ |
| **Maximum Speed** | Nmax | 3000 | min$^{-1}$ |
| **Maximum Torque (*)** | Tmax | 76 | Nm |
| | | 776 | kgfcm |
| **Moment of Inertia of Rotor** | Jm | 0.00759 | kgm$^2$ |
| | | 0.0774 | kgfcms$^2$ |
| **Moment of Inertia of Rotor(with 35Nm Brake)** | Jm | 0.00819 | kgm$^2$ |
| | | 0.0836 | kgfcms$^2$ |
| **Torque Constant (*)** | Kt | 1.45 | Nm/A(rms) |
| | | 14.8 | kgfcm/A(rms) |
| **Winding Resistance (between terminals) (*)** | Ra | 0.30 | Ω |
| **Thermal time constant** | $t_t$ | 30 | min |
| **Static friction** | Tf | 0.8 | Nm |
| | | 8 | kgfcm |
| **Weight** | w | 23 | kg |
| **Weight(with 35Nm Brake)** | w | 29 | kg |
| **Max. Current of Servo Amp.** | Imax | 80 | A (peak) |

(*) The values are the standard values at 20℃ and the tolerance is ±10%.

The speed-torque characteristics very depending on the type of software,parametersetting,and input voltage of the digital servo software.(The above figures show average values.)

⚠ **CAUTION**

- Please input correct values of parameters according to the parameter list
  If a motor is driven with wrong parameters, the motor and amplifier have a risk to be damaged.
- It is not allowable to connect with βiSV80-B or βiSV80. At this combination, there is a possibility to occur over voltage alarm.
- It is necessary to change main power supply voltage. If voltage is low, there is a possibility to be unstable motor's driving.

| Ed. | Date | Design. | Description |
|---|---|---|---|
| | | | |
| | | | |
| 01 | 16.Nov.18 | Akashi | Newly designed |
| Ed. | Date | Design. | Description |

TITLE: AC SERVO MOTOR βi-B series βiS30/2000-B, βiS40/2000-B Increased maximum speed

DRAW. No. B-65302EN/08-05

CUST.

FANUC CORPORATION

SHEET 9/10

© MyFANUC DC7187A9420041B3806BC8E5C652D376

## Model βiS 40/2000-B (2500min$^{-1}$driving, input 230V)

Specification: A06B-2089-Bx0y

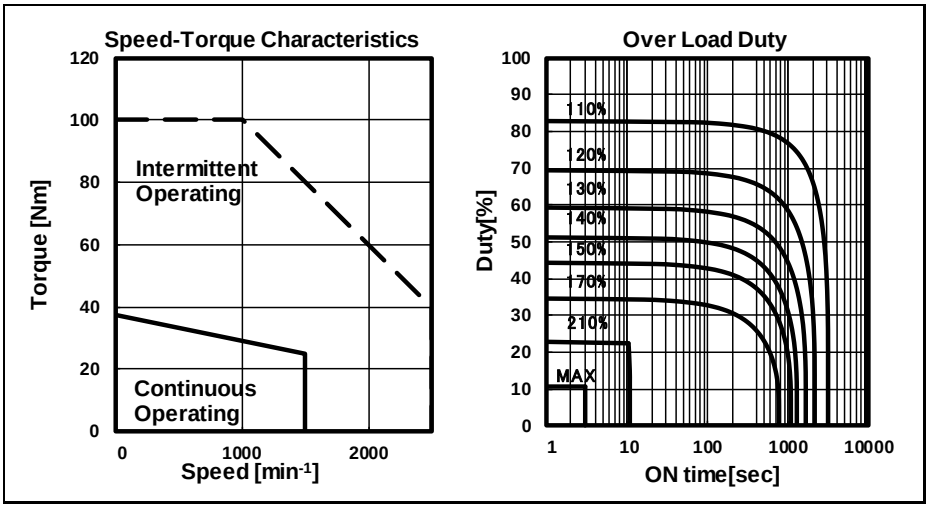


### Data sheet

| Parameter | Symbol | Value | Unit |
|---|---|---|---|
| **Continuous Torque (at low speed) (*)** | Tc | 36 | Nm |
| | | 367 | kgfcm |
| **Continuous Current (at low speed) (*)** | Ic | 18.6 | A (rms) |
| **Rated Output (*)** | Pr | 3.0 | kW |
| | | 4.0 | HP |
| **Rated Speed** | Nr | 1500 | min$^{-1}$ |
| **Maximum Speed** | Nmax | 2500 | min$^{-1}$ |
| **Maximum Torque (*)** | Tmax | 100 | Nm |
| | | 1020 | kgfcm |
| **Moment of Inertia of Rotor** | Jm | 0.00990 | kgm$^2$ |
| | | 0.101 | kgfcms$^2$ |
| **Moment of Inertia of Rotor(with 35Nm Brake)** | Jm | 0.0105 | kgm$^2$ |
| | | 0.107 | kgfcms$^2$ |
| **Torque Constant (*)** | Kt | 1.94 | Nm/A(rms) |
| | | 19.8 | kgfcm/A(rms) |
| **Winding Resistance (between terminals) (*)** | Ra | 0.34 | Ω |
| **Thermal time constant** | $t_t$ | 30 | min |
| **Static friction** | Tf | 1.2 | Nm |
| | | 12 | kgfcm |
| **Weight** | w | 28 | kg |
| **Weight(with 35Nm Brake)** | w | 34 | kg |
| **Max. Current of Servo Amp.** | Imax | 80 | A (peak) |

(*) The values are the standard values at 20℃ and the tolerance is ±10%.

The speed-torque characteristics very depending on the type of software,parametersetting,and input voltage of the digital servo software.(The above figures show average values.)

⚠ **CAUTION**

- Please input correct values of parameters according to the parameter list.
  If a motor is driven with wrong parameters, the motor and amplifier have a risk to be damaged.
- It is not allowable to connect with βiSV80-B or βiSV80. At this combination, there is a possibility to occur over voltage alarm.
- It is necessary to change main power supply voltage. If voltage is low, there is a possibility to be unstable motor's driving.
- The exceed speed alarm is issued at 2700 min-1 to protect amplifiers.
  To prevent speed overshoot during acc./dec.,please adjust acc./dec. time constants and servo parameters adequately.

| | | | | | |
|---|---|---|---|---|---|
| | | | | TITLE AC SERVO MOTOR βi-B series βiS30/2000-B, βiS40/2000-B Increased maximum speed | |
| 01 | 16.Nov.18 | Akashi | Newly designed | DRAW. No. B-65302EN/08-05 | CUST. |
| Ed. | Date | Design. | Description | FANUC CORPORATION | SHEET 10/10 |

© MyFANUC DC7187A9420041B3806BC8E5C652D376

**FANUC AC SERVO MOTOR αi-B/αi series DESCRIPTIONS**
**FANUC AC SERVO MOTOR βi-B/βi series DESCRIPTIONS**

RoHS directive (RoHS 2) compliant and change of manufacturer's specification number for cable side power connector for □90size servo motor

1. Type of applied technical documents

| | |
|---|---|
| Name | FANUC AC SERVO MOTOR αi-B/αi series DESCRIPTIONS<br>FANUC AC SERVO MOTOR βi-B/βi series DESCRIPTIONS |
| Spec.No./ Version | B-65262EN/10, B-65302EN/08 |

2.Summary of Change

| Group | Name | New, Add, Correct, Delete, | Applicable Data |
|---|---|---|---|
| Basic Function | | | |
| Optional Function | | | |
| Unit | | | |
| Maintenance Parts | | | |
| Notice | | | |
| Correction | | | |
| Another | RoHS directive (RoHS 2) compliant and change of manufacturer's specification number for cable side power connector for □90size servo motor | | |

| | | | | | |
|---|---|---|---|---|---|
| | | | | TITLE AC SERVO MOTOR αi-B/αi series<br>AC SERVO MOTOR βi-B/βi series<br>Specification change of power connector | |
| | | | | | |
| 01 | 15. Mar.19 | Arai | Newly designed | DRAW. No. B-65262EN/10-08<br>B-65302EN/08-06 | CUST. |
| Ed. | Date | Design. | Description | FANUC CORPORATION | SHEET 1/2 |

© MyFANUC DC7187A9420041B3806BC8E5C652D376

# 1. SUMMARY

Change the manufacturer's specification number (model number) to comply with the European RoHS(*) Directive (RoHS 2) of the cable side power connector kits used in the □90 size of AC SERVO MOTOR αi-B/αi ,βi-B/βi series.

There is no change to the specification number of FANUC.

There is no change in the connector shape, function and performance. These connectors are compatible.

| Connector kit | FANUC Specification number | Tyco Electronics Japan LLC Specification number(model number) | |
|---|---|---|---|
| | | Before | After |
| Straight type | A06B-6114-K220#S | 1473063-2 | **2345834-2** |
| Right angle type | A06B-6114-K220#E | 1473393-2 | **2345832-2** |

Straight type
(A06B-6114-K220#S)

Right angle type
(A06B-6114-K220#E)

The following motors use the connectors.

・αi-B/αi series.

αiF1/5000-B, αiF2/5000-B,αiS 2/5000-B, αiS 2/6000-B, αiS 4/5000-B, αiS 4/6000-B
αiS 2/5000HV-B, αiS 2/6000HV-B, αiS 4/5000HV-B, αiS 4/6000HV-B
αiF1/5000, αiF2/5000,αiS 2/5000, αiS 2/6000,αiS 4/5000,αiS 4/6000
αiS 2/5000HV, αiS 2/6000HV,αiS 4/5000HV, αiS 4/6000HV

・βi-B/βi series

βiS 2/4000-B,βiS 4/4000-B, βiS 2/4000HV-B,βiS 4/4000HV-B
βiSc 2/4000-B,βiSc 4/4000-B, βiSc 2/4000HV-B,βiSc 4/4000HV-B
βiS 2/4000,βiS 4/4000, βiS 2/4000HV,βiS 4/4000HV
βiSc 2/4000,βiSc 4/4000, βiSc 2/4000HV,βiSc 4/4000HV

(*) About the European RoHS Directive (RoHS 2)

The RoHS Directive is an EU directive on the restriction of the use of certain harmful substances such as electrical and electronic equipment.

As the RoHS Directive (RoHS 2) restricts the use of phthalate esters from July 2019, we will change the connector specifications to those containing no phthalate esters.

| | | | | | |
|---|---|---|---|---|---|
| | | | | TITLE AC SERVO MOTOR αi-B/αi series<br>AC SERVO MOTOR βi-B/βi series<br>Specification change of power connector | |
| 01 | 15. Mar.19 | Arai | Newly designed | DRAW. No. B-65262EN/10-08<br>B-65302EN/08-06 | CUST. |
| Ed. | Date | Design. | Description | FANUC CORPORATION | SHEET 2/2 |

© MyFANUC DC7187A9420041B3806BC8E5C652D376

# INDEX


**<β>**

βiF-B SERIES (200V) .....44
βiS-B SERIES (400V) .....26
βiS-B/βiS SERIES (200V).....12
βiSc-B SERIES (200V).....34
βiSc-B SERIES (400V).....40

**<A>**

About characteristic curves and data sheet.....8
About the Servo Motor Selection Data Table .....154
ABOUT βi SERIES SERVO MOTORS .....186
Absolute-type Pulsecoder.....85
Allowable Axis Load for a Servo Motor.....165
Ambient Temperature, Humidity, Installation Height, and Vibration.....173
Applicable Amplifiers.....90
Approved specifications.....128

**<B>**

Brake specifications .....76
Built-In Brake .....76

**<C>**

Calculating the acceleration torque .....139
Calculating the dynamic brake stop distance .....147
Calculating the load moment of inertia .....137
Calculating the load torque .....135
Calculating the motor speed.....136
Calculating the Percentage duty cycle and ON time with the maximum cutting torque.....145
Calculating the root-mean-square value of the torques 143
CAUTION.....s-3
CAUTION LABEL .....s-6
Cautions in Mounting a Servo Motor.....169
Cautions on use .....81
Cautions when using a separate type Pulsecoder .....88
Characteristic Curves and Data Sheet .....8,190
Checking a Delivered Servo Motor and Storing a Servo Motor.....162
CNC FUNCTIONS FOR USING THE SERVO MOTOR FOR THE SPINDLE OR LIVE TOOL....185
Combinations of the βiS-B/βiSc-B/βiF-B servo motors and the αiSV-B/αiSVP-B/βiSV-B/βiSVSP-B servo amplifiers.....90
Combinations of the βiS-B/βiSc-B/βiF-B servo motors and the αiSV/βiSV/βiSVSP/βiSVSPc servo amplifiers.....98
Conditions for Approval Related to the IEC60034 Standard.....127
Conditions for Selecting a Servo Motor.....131
CONFIGURATION AND SELECTION .....89
Connecting a brake.....77
Connecting a separate type Pulsecoder .....86
Connecting a Servo Motor .....89
Connecting Pulsecoder.....84,201
Connection to a conduit hose .....125,200
Connectors for power.....113
Connectors for Power (Cable Side) (for Groups D and E).....196
Connectors for power (for Group D).....195
Connectors for power (for Group E) .....195
Connectors for Power (Motor Side) (for Groups D and E).....195
Connectors for signals.....105
Connectors for the brake .....122
Connectors on the Cable Side .....104
Connectors required for approval.....130

**<D>**

DATA FOR SELECTING THE αiPS.....181
DEFINITION OF WARNING, CAUTION, AND NOTE .....s-1

**<E>**

Explanation of Items .....157

**<F>**

Fastening the Shaft.....165
Feature .....2
FEEDBACK SENSOR .....83
FEEDBACK SENSORS .....201

**<H>**

HANDLING OF THE SERVO MOTOR.....162
HANDLING, INSTALLATION, AND USE ENVIRONMENT OF THE MOTOR.....162

**<I>**

βi-B SERIES (200V).....181
βi-B SERIES (400V).....182

**<L>**

LINE-UP OF THE SERIES .....1

**<M>**

Methods for coupling the shaft .....163
Models βiS 0.2 and βiS 0.3.....50
Models βiS 0.4-B to βiS 1-B.....56
Models βiS 22-B to βiS 40-B, βiS 22HV-B to βiS 40HV-B, βiSc 22-B, and βiF 12-B to βiF 30-B .....72
Models βiS 2-B, βiS 4-B, βiS 2HV-B, βiS 4HV-B, βiSc 2-B, βiSc 4-B, βiSc 2HV-B, and βiSc 4HV-B .....60
Models βiS 8-B, βiS 12-B, βiS 8HV-B, βiS 12HV-B, βiSc 8-B, βiSc 12-B, βiSc 8HV-B, βiSc 12HV-B, βiF 4-B, and βiF 8-B.....65
Motor Line-up.....1
MOTOR SELECTION.....131
MOTOR SPECIFICATIONS.....7
MOUNTING A SERVO MOTOR.....163




© MyFANUC DC7187A9420041B3806BC8E5C652D376

**<N>**

NOTE ..... s-5
NOTES ON ADJUSTING β*i*-B/β*i* SERVO MOTOR PARAMETERS ..... 203
Notes on Servo Motors with the Pulsecoder β*i*A 1000 (for the β*i*Sc-B only) Attached ..... 172
NOTES ON USING THE SERVO MOTOR FOR LIVE TOOL APPLICATIONS ..... 185
NOTES ON USING THE SERVO MOTOR FOR LIVE TOOL APPLICATIONS OF A MACHINE TOOL 183

**<O>**

ORDERING SPECIFICATION NUMBER ..... 4
ORDERING SPECIFICATION NUMBERS ..... 188
Other Notes on Axis Design ..... 167
Outline Drawings ..... 49,191
Outline drawings of separate Pulsecoder ..... 87
OUTPUT GRAPHS AND TORQUE GRAPHS (6000 [$min^{-1}$] MODELS) ..... 184

**<P>**

POWER CONNECTORS ..... 194
PREFACE ..... p-1
Pulsecoder ..... 83

**<R>**

Reduced backlash brake ..... 80
Reducing the amount of brake axis fall ..... 82

**<S>**

SAFETY PRECAUTIONS ..... S-1
Selecting a Motor ..... 134
Selecting the α*i*PS ..... 161
Separate Pulsecoder ..... 85
Separate Pulsecoder specifications ..... 85
Separate Pulsecoder type and designation ..... 85
Separating and Disposing of a Servo Motor ..... 162
Servo motor selection data table ..... 154
Shaft Run-out Precision of a Servo Motor ..... 166
SHIPPING THE SERVO MOTOR BY AIR ..... s-7
SPECIFICATIONS ..... 1
SYSTEM CONFIGURATION ..... 89

**<T>**

Terms ..... 7
Types of motors to be approved ..... 127
Types of Pulsecoders and Designation ..... 83,201

**<U>**

Usage Considering Environmental Resistance ..... 173
USE ENVIRONMENT FOR SERVO MOTORS ..... 173

**<W>**

WARNING ..... s-2




© MyFANUC DC7187A9420041B3806BC8E5C652D376

# REVISION RECORD

| Edition | Date | Contents |
|---|---|---|
| 08 | Apr., 2016 | • Description of the electric shock caution label<br>• Description of SHIPPING THE SERVO MOTOR BY AIR<br>• Addition of βiSc(HV) series<br>• Description of heat generation during high-speed rotation<br>• Correction of parts for brake circuits<br>• Description of the magnetization of the shaft of a model with a brake<br>• Expansion of motor and amplifier combinations<br>• Description of a note on adjusting βi-B /βi servo motor parameters<br>• Correction of errors |
| 07 | Jan, 2015 | • Rewriting of the names of βi series servo motors to βi-B series servo motors<br>• Expansion of motor and amplifier combinations (seamless combinations)<br>• Correction of errors |
| 06 | Dec., 2013 | • Rewriting of the entire manual to cover the βi series servo motors with numbers 2XXX<br>• Correction of errors |
| 05 | Aug., 2012 | • Addition of βiF series<br>• Deletion of βiS (for the 0i only)<br>• Correction of errors |
| 04 | May, 2011 | • Addition of models βiS 30/2000(HV) and βiS 40/2000(HV)<br>• Addition of Servo Motor βiSc series<br>• Addition of crimp type signal connectors made by Hirose Electric<br>• Addition of usage (cables for βiS 0.2 and βiS 0.3)<br>• Correction of errors |
| 03 | Sep., 2008 | • Addition of models βiS 22/3000 and βiS 22/3000HV<br>• Correction of errors |
| 02 | Oct., 2007 | • Addition of models βiS 0.5/6000, βiS 1/6000, and βiS 12/2000<br>• Deletion of models βiS 0.5/5000 and βiS 1/5000<br>• Addition of servo motor only for FANUC Series 0i<br>• Addition of descriptions of “Usage considering environmental resistance”<br>• Addition of descriptions of “Notes on cutting fluid”<br>• Addition of descriptions of “Heat caution label”<br>• Correction of errors |
| 01 | May, 2003 | |



© MyFANUC DC7187A9420041B3806BC8E5C652D376

B-65302EN/08

© MyFANUC DC7187A9420041B3806BC8E5C652D376