FANUC SERVO AMPLIFIER αi series

DESCRIPTIONS

B-65282EN/07

© MyFANUC 2D5504D5BAC945D385F48627D4977F6C

- No part of this manual may be reproduced in any form.
- All specifications and designs are subject to change without notice.

The products in this manual are controlled based on Japan's "Foreign Exchange and Foreign Trade Law". The export from Japan may be subject to an export license by the government of Japan.
Further, re-export to another country may be subject to the license of the government of the country from where the product is re-exported. Furthermore, the product may also be controlled by re-export regulations of the United States government.
Should you wish to export or re-export these products, please contact FANUC for advice.

In this manual we have tried as much as possible to describe all the various matters.
However, we cannot describe all the matters which must not be done, or which cannot be done, because there are so many possibilities.
Therefore, matters which are not especially described as possible in this manual should be regarded as "impossible".

General Safety Precautions

- When an abnormality such as an alarm or a hardware failure occurs, the operations described in the specifications are not guaranteed unless otherwise specifically noted. When action corresponding to the abnormality is specifically described, take the action. When no action is described, please contact FANUC.
- The signals and functions described in the specifications cannot be used separately for safety functions unless otherwise described as being usable for the safety functions. Their specifications are not assumed to be used as the safety functions in this case, an unexpected danger may be caused. For information about the safety functions, please contact FANUC.
  Generally, the safety functions represent functions that protect the operators from machine danger.
- A wrong device connection or setting can lead to unpredictable operation. When starting to operate the machine for the first time after assembling the machine, replacing components, or modifying parameter settings, exercise the greater care by, for example, reducing the torque limit value, error detection level, or operating speed or by operating the machine in such a way that an emergency stop can be made quickly.

© MyFANUC 2D5504D5BAC945D385F48627D4977F6C

SAFETY PRECAUTIONS

This "Safety Precautions" section describes the precautions which must be observed to ensure safety when using FANUC servo amplifiers (including spindle amplifiers). Users of any control motor amplifier model are requested to read the "Safety Precautions" carefully before first using the amplifier. Users should also read the relevant description in this manual to become fully familiar with the functions of the servo amplifier.
The users are basically forbidden to do any behavior or action not mentioned in the "Safety Precautions." They are invited to ask FANUC previously about what behavior or action is prohibited.

Contents

DEFINITION OF WARNING, CAUTION, AND NOTE s-1
WARNINGS AND CAUTIONS RELATING TO MOUNTING s-2
Warning s-2
Caution s-3
Note s-4
WARNINGS AND CAUTIONS RELATING TO A PILOT RUN s-4
Warning s-4
Caution s-5
WARNINGS AND CAUTIONS RELATING TO MAINTENANCE s-5
Warning s-5
Caution s-6
Note s-7

DEFINITION OF WARNING, CAUTION, AND NOTE

This manual includes safety precautions for protecting the user and preventing damage to the machine. Precautions are classified into Warning and Caution according to their bearing on safety. Also, supplementary information is described as a Note. Read the Warning, Caution, and Note thoroughly before attempting to use the machine.

⚠ **WARNING**
Applied when there is a danger of the user being injured or when there is a danger of both the user being injured and the equipment being damaged if the approved procedure is not observed.

⚠ **CAUTION**
Applied when there is a danger of the equipment being damaged, if the approved procedure is not observed.

NOTE
The Note is used to indicate supplementary information other than Warning and Caution.

- Read this manual carefully, and store it in a safe place.

© MyFANUC 2D5504D5BAC945D385F48627D4977F6C

WARNINGS AND CAUTIONS RELATING TO MOUNTING

Warning

⚠ WARNING

- **Check the specification code of the amplifier.**
  Check that the delivered amplifier is as originally ordered.

- **Mount a ground fault interrupter.**
  To guard against fire and electric shock, fit the factory power supply or machine with a ground fault interrupter (designed for use with an inverter).

- **Securely ground the amplifier.**
  Securely connect the ground terminal and metal frame of the amplifier and motor to a common ground plate of the power magnetic cabinet.

- **Be aware of the weight of the amplifier and other components.**
  Control motor amplifiers and AC reactors are heavy. When transporting them or mounting them in the cabinet, therefore, be careful not to injured yourself or damage the equipment. Be particularly carefull not to jam your fingers between the cabinet and amplifier.

- **Never ground or short-circuit either the power supply lines or power lines.**
  Protect the lines from any stress such as bending. Handle the ends appropriately.

- **Ensure that the power supply lines, power lines, and signal lines are securely connected.**
  A loose screw, loose connection, or the like will cause a motor malfunction or overheating, or a ground fault.
  Be extremely careful with power supply lines, motor power lines, and DC link connections through which a large amount of current passes, because a loose screw (or poor contact in a connector or poor connection between a connector terminal and a cable) may cause a fire.

- **Insulate all exposed parts that are charged.**

- **Never touch the regenerative discharge resistor or radiator directly.**
  The surface of the radiator and regenerative discharge unit become extremely hot. Never touch them directly. An appropriate structure should also be considered.

- **Close the amplifier cover after completing the wiring.**
  Leaving the cover open presents a danger of electric shock.

- **Confirm that the input voltage meets the specifications of the amplifier before making connection.**
  If the input voltage exceeds the specified value (for example, if the input voltage for a 200-V input amplifier is 400 V), an internal component may be damaged and burnt out.

- **Prevent conductive, flammable, or corrosive foreign matters, mists, or water droplets from entering the unit**
  If conductive or flammable foreign matters enter the unit, explosion or corruption may be caused.
  If corrosive or conductive mists or water droplets are attached to an electronic circuit, unexpected operation may be caused in the circuit.
  The electronic circuit portion must be installed in an environment of pollution level 2 specified by IEC60664-1. To achieve pollution level 2 in a severe machine tool environment, it is generally necessary to install the portion in a cabinet that satisfies IP54.

© MyFANUC 2D5504D5BAC945D385F48627D4977F6C

Caution

⚠ CAUTION

- **Do not step or sit on the amplifier.**
  Also, do not stack unpacked amplifiers on top of each other.

- **Use the amplifier in an appropriate environment.**
  See the allowable ambient temperatures and other requirements, given in the Section 2.2, “ENVIRONMENTAL CONDITIONS” in this manual.

- **Protect the amplifier from impact.**
  Do not place anything on the amplifier.

- **Do not disassemble the amplifier.**

- **Do not block the air inlet to the radiator.**

- **Take appropriate measures to prevent cutting fluid, oil mist, or chips from being adhered to the radiator and fan motors exposed to outside air.**
  A deposit of coolant, oil mist, or chips on the air inlet will result in a reduction in the cooling efficiency. In some cases, the required efficiency cannot be achieved. The deposit may also lead to a reduction in the useful life of the fan motors or semiconductors. Especially, when outside air is drawn in, mount filters on both the air inlet and outlet. These filters must be replaced regularly.
  So, an easy-to-replace type of filter should be used.

- **Connect the power supply lines and power lines to the appropriate terminals and connectors.**

- **Connect the signal lines to the appropriate connectors.**

- **Ensure that the cables used for the power supply lines and power lines are of the appropriate diameter and temperature ratings.**

- **Do not apply an excessively large force to plastic parts.**
  If a plastic section breaks, it may cause internal damage, thus interfering with normal operation. The edge of a broken section is likely to be sharp and, therefore, presents a risk of injury.

- **Before connecting the power supply wiring, check the supply voltage.**
  Check that the supply voltage is within the range specified in this manual, then connect the power supply lines.

- **Ensure that the combination of motor and amplifier is appropriate.**

- **Ensure that valid parameters are specified.**
  Specifying an invalid parameter for the combination of motor and amplifier may not only prevent normal operation of the motor but also result in damage to the amplifier.

- **Ensure that the amplifier and peripheral equipment are securely connected.**
  Check that the magnetic contactor, circuit breaker, and other devices mounted outside the amplifier are securely connected to each other and that those devices are securely connected to the amplifier.

- **Check that the amplifier is securely mounted in the power magnetic cabinet.**
  If any clearance is left between the power magnetic cabinet and the surface on which the amplifier is mounted, dust entering the gap may build up and prevent the normal operation of the amplifier.

© MyFANUC 2D5504D5BAC945D385F48627D4977F6C

- **Apply appropriate countermeasures against noise.**
  Adequate countermeasures against noise are required to maintain normal operation of the amplifier. For example, signal lines must be routed away from power supply lines and power lines.

- **Notes relating to this product storage, transportation and environment**
  This servo amplifier uses electronic parts corroded by the halogen (fluorine, chlorine, bromine, iodine, etc.)
  Do not storage or transport or use this servo amplifier in the halogen (fluorine, chlorine, bromine, iodine, etc.) atmosphere.
  Fumigant and industrial cleaning solvent, and pesticide might contain the halogen.

Note

NOTE

- **Keep the nameplate clearly visible.**

- **Keep the legend on the nameplate clearly visible.**

- **After unpacking the amplifier, carefully check for any damage.**

- **Mount the amplifier in a location where it can be easily accessed periodic inspection and daily maintenance.**

- **Leave sufficient space around the machine to enable maintenance to be performed easily.**
  Do not place any heavy objects such that they would interfere with the opening of the doors.

- **Keep the parameter table and spare parts at hand.**
  Also, keep the specifications at hand. These items must be stored in a location where they can be retrieved immediately.

- **Provide adequate shielding.**
  A cable to be shielded must be securely connected to the ground plate, using a cable clamp or the like.

WARNINGS AND CAUTIONS RELATING TO A PILOT RUN

Warning

⚠ WARNING

- **Before turning on the power, check that the cables connected to the power magnetic cabinet and amplifier, as well as the power lines and power supply lines, are securely connected. Also, check that no lines are slack.**

- **Before turning on the power, ensure that the power magnetic cabinet is securely grounded.**

- **Before turning on the power, check that the door of the power magnetic cabinet and all other doors are closed.**
  Ensure that the door of the power magnetic cabinet containing the amplifier, and all other doors, are securely closed. During operation, all doors must be closed and locked.

- **Apply extreme caution if the door of the power magnetic cabinet or another door must be opened.**
  Only a person trained in the maintenance of the corresponding machine or equipment should open the door, and only after shutting off the power supply to the power magnetic cabinet (by opening

© MyFANUC 2D5504D5BAC945D385F48627D4977F6C

both the input circuit breaker of the power magnetic cabinet and the factory switch used to supply power to the cabinet). If the machine must be operated with the door open to enable adjustment or for some other purpose, the operator must keep his or her hands and tools well away from any dangerous voltages. Such work must be done only by a person trained in the maintenance of the machine or equipment.

- **When operating the machine for the first time, check that the machine operates as instructed.**
  To check whether the machine operates as instructed, first specify a small value for the motor, then increase the value gradually. If the motor operates abnormally, perform an emergency stop immediately.

- **After turning on the power, check the operation of the emergency stop circuit.**
  Press the emergency stop button to check that the motor stops immediately, and that the power being supplied to the amplifier is shut off by the magnetic contactor.

- **Before opening a door or protective cover of a machine to enable adjustment of the machine, first place the machine in the emergency stop state and check that the motor has stopped.**

Caution

⚠ CAUTION

- **Note whether an alarm status relative to the amplifier is displayed at power-up or during operation.**
  If an alarm is displayed, take appropriate action as explained in the maintenance manual. If the work to be done requires that the door of the power magnetic cabinet be left open, the work must be carried out by a person trained in the maintenance of the machine or equipment. Note that if some alarms are forcibly reset to enable operation to continue, the amplifier may be damaged. Take appropriate action according to the contents of the alarm.

- **Before operating the motor for the first time, mount and adjust the position and speed sensors.**
  Following the instructions given in the maintenance manual, adjust the position and speed sensors for the spindle so that an appropriate waveform is obtained.
  If the sensors are not properly adjusted, the motor may not rotate normally or the spindle may fail to stop as desired.

- **If the motor makes any abnormal noise or vibration while operating, stop it immediately.**
  Note that if operation is continued in spite of there being some abnormal noise or vibration, the amplifier may be damaged. Take appropriate corrective action, then resume operation.

- **Observe the ambient temperature and output rating requirements.**
  The continuous output rating or continuous operation period of some amplifiers may fall as the ambient temperature increases. If the amplifier is used continuously with an excessive load applied, the amplifier may be damaged.

WARNINGS AND CAUTIONS RELATING TO MAINTENANCE

Warning

⚠ WARNING

- **Read the maintenance manual carefully and ensure that you are totally familiar with its contents.**
  The maintenance manual describes daily maintenance and the procedures to be followed in the event of an alarm being issued. The operator must be familiar with these descriptions.

© MyFANUC 2D5504D5BAC945D385F48627D4977F6C

- **Notes on replacing a fuse or circuit board**
  1) Before starting the replacement work, ensure that the circuit breaker protecting the power magnetic cabinet is open.
  2) Check that the red LED that indicates that charging is in progress is not lit.
     The position of the charging LED on each model of amplifier is given in this manual. While the LED is lit, hazardous voltages are present inside the unit, and thus there is a danger of electric shock.
  3) Some circuit board components become extremely hot. Be careful not to touch these components.
  4) Ensure that a fuse having an appropriate rating is used.
  5) Check the specification code of a circuit board to be replaced. If a modification drawing number is indicated, contact FANUC before replacing the circuit board.
     Also, before and after replacing a circuit board, check its pin settings.
  6) After replacing the fuse, ensure that the screws are firmly tightened. For a socket-type fuse, ensure that the fuse is inserted correctly.
  7) After replacing the circuit board, ensure that it is securely connected.
  8) Ensure that all power lines, power supply lines, and connectors are securely connected.

- **Take care not to lose any screws.**
  When removing the case or circuit board, take care not to lose any screws. If a screw is lost inside the nit and the power is turned on, the machine may be damaged.

- **Notes on replacing the battery of the absolute Pulsecoder**
  Replace the battery only while the power is on. If the battery is replaced while the power is turned off, the stored absolute positioning data will be lost. Some α*i* series servo amplifier modules have batteries in their servo amplifiers. To replace the battery of any of those models, observe the following procedure: Open the door of the power magnetic cabinet; Leave the control power of the power supply module on; Place the machine in the emergency stop state so that the power being input to the amplifier is shut off; Then, replace the battery. Replacement work should be done only by a person who is trained in the related maintenance and safety requirements. The power magnetic cabinet in which the servo amplifier is mounted has a high-voltage section. This section presents a severe risk of electric shock.

- **Check the number of any alarm.**
  If the machine stops upon an alarm being issued, check the alarm number. Some alarms indicate that a component must be replaced. If the power is reconnected without first replacing the failed component, another component may be damaged, making it difficult to locate the original cause of the alarm.

- **Before resetting an alarm, ensure that the original cause of the alarm has been removed.**

- **Contact FANUC whenever a question relating to maintenance arises.**

Caution

⚠ CAUTION

- **Ensure that all required components are mounted.**
  When replacing a component or circuit board, check that all components, including the snubber capacitor, are correctly mounted. If the snubber capacitor is not mounted, for example, the IPM will be damaged.

- **Tighten all screws firmly.**

© MyFANUC 2D5504D5BAC945D385F48627D4977F6C

- **Check the specification code of the fuse, circuit board, and other components.**
  When replacing a fuse or circuit board, first check the specification code of the fuse or circuit board, then mount it in the correct position. The machine will not operate normally if a fuse or circuit board having other than the correct specification code is mounted, or if a fuse or circuit board is mounted in the wrong position.

- **Mount the correct cover.**
  The cover on the front of the amplifier carries a label indicating a specification code. When mounting a previously removed front cover, take care to mount it on the unit from which it was removed.

- **Notes on cleaning the radiator and fan**
  1) A dirty radiator or fan results in reduced semiconductor cooling efficiency, which degrades reliability. Periodic cleaning is necessary.
  2) Using compressed air for cleaning scatters the dust. A deposit of conductive dust on the amplifier or peripheral equipment will result in a failure.
  3) To clean the radiator, do so only after turning the power off and ensuring that the radiator has cooled to room temperature. The radiator becomes extremely hot, such that touching it during operation or immediately after power-off is likely to cause a burn. Be extremely careful when touching the radiator.

- **Notes on removing the amplifier**
  Before removing the amplifier, first ensure that the power is shut off. Be careful not to jam your fingers between the power magnetic cabinet and amplifier.

- **Unless otherwise specified, do not insert or remove any connector while the power is turned on. Otherwise, the amplifier may fail.**

Note

NOTE

- **Ensure that the battery connector is correctly inserted.**
  If the power is shut off while the battery connector is not connected correctly, the absolute position data for the machine will be lost.

- **Store the manuals in a safe place.**
  The manuals should be stored in a location where they can be accessed immediately it so required during maintenance work.

- **Notes on contacting FANUC**
  Inform FANUC of the details of an alarm and the specification code of the amplifier so that any components required for maintenance can be quickly secured, and any other necessary action can be taken without delay.

© MyFANUC 2D5504D5BAC945D385F48627D4977F6C

© MyFANUC 2D5504D5BAC945D385F48627D4977F6C

TABLE OF CONTENTS

SAFETY PRECAUTIONS s-1
DEFINITION OF WARNING, CAUTION, AND NOTE s-1
WARNINGS AND CAUTIONS RELATING TO MOUNTING s-2
Warning s-2
Caution s-3
Note s-4
WARNINGS AND CAUTIONS RELATING TO A PILOT RUN s-4
Warning s-4
Caution s-5
WARNINGS AND CAUTIONS RELATING TO MAINTENANCE s-5
Warning s-5
Caution s-6
Note s-7

1 CONFIGURATION 1
1.1 FEATURES OF THE SERVO AMPLIFIER αi SERIES 1
1.2 CONFIGURATION 2
1.2.1 200-V Input Series 2
1.2.2 400-V Input Series 4
1.3 SERVO AMPLIFIERS 5
1.4 LINEUP 6

2 SPECIFICATIONS 7
2.1 INPUT POWER 7
2.2 ENVIRONMENTAL CONDITIONS 20
2.3 SPECIFICATIONS OF THE MODULES 28
2.3.1 αi PS series 28
2.3.2 αi SV series 30
2.3.3 αi SP series 34

3 ORDERING INFORMATION 37
3.1 SERVO AMPLIFIER 37
3.1.1 200-V Input Series 37
3.1.1.1 αi PS series 37
3.1.1.2 αi PS_R series 38
3.1.1.3 αi SV series 38
3.1.1.4 αi SP series 39
3.1.2 400-V Input Series 40
3.1.2.1 αi PS series 40
3.1.2.2 αi SV series 40
3.1.2.3 αi SP series 41
3.1.3 Others 42
3.1.3.1 AC reactor 42
3.1.3.2 AC line filter 44
3.1.3.3 Sub module SW 44
3.1.3.4 Sub module SM 44
3.1.3.5 Connectors 44
3.1.3.6 Fuses 50
3.1.3.7 Power transformer 50

© MyFANUC 2D5504D5BAC945D385F48627D4977F6C

3.1.3.8 Regenerative discharge unit 53
3.1.3.9 Cables 54
3.1.3.10 Circuit breaker and magnetic contactor 54
3.1.3.11 Lightning surge protector 57
3.1.3.12 Noise filter 57
3.1.3.13 Sensors for servo 58
3.1.3.14 Battery for absolute Pulsecoder 58
3.1.3.15 Sensors for spindle 59
3.1.3.16 Power line switch unit 60

4 HOW TO SELECT THE AMPLIFIER 61

4.1 HOW TO SELECT THE αi SV SERIES (SERVO AMPLIFIER) 61
4.1.1 200-V Input Series 62
4.1.2 400-V Input Series 63
4.1.3 How to Select the Dynamic Brake Module (DBM) 64

4.2 HOW TO SELECT THE αi SP series(SPINDLE AMPLIFIER) 64
4.2.1 200-V Input Series 65
4.2.2 400-V Input Series 65

4.3 HOW TO SELECT THE αi PS series (POWER SUPPLY) 66
4.3.1 How to Obtain the αi PS series Rated Output Capability 66
4.3.2 How to Obtain the αi PS series Maximum Output Capability 67
4.3.3 How to Obtain the αi PS series Peak Maximum Output Capability 67
4.3.4 Number of Connected αi SV series and αi SP Series 68
4.3.5 Notes on 400-V Input αi PS series selection 68

4.4 HOW TO SELECT THE αi PSR series (POWER SUPPLY, RESISTANCE DISCHARGE TYPE) 68
4.4.1 How to Obtain the αi PS_R series Rated Output Capability 69
4.4.2 How to Obtain the αi PS_R series Maximum Output Capability 69
4.4.3 Number of Connected αi SV series and αi SP series 69
4.4.4 Selecting a Regenerative Discharge Unit 70

4.5 LIST OF MOTOR OUTPUT CAPACITIES FOR αi PS AND αi PSR series SELECTION 72
4.5.1 Servo Motor 72
4.5.2 Spindle Motor Continuous Rated Outputs and Maximum Outputs at Acceleration 75

5 INSTALLATION 78

5.1 LEAKAGE CURRENT 78

5.2 GROUND 79
5.2.1 Ground Systems 79
5.2.2 Grounding Method 79
5.2.3 Notes on Connecting 81

5.3 NOISE PREVENTION 82
5.3.1 Separation of Signal Lines 82
5.3.2 Cable Clamp and Shield Processing 83
5.3.3 Cabinet 85
5.3.4 Others 87

5.4 AMPLIFIER INSTALLATION 88

5.5 AMPLIFIER INSTALLATION NOTES RELATING TO SAFETY STANDARDS 88
5.5.1 Requirements of EN and IEC Standards 88
5.5.1.1 Classification in standards on insulation design 88

© MyFANUC 2D5504D5BAC945D385F48627D4977F6C

5.5.1.2 Protection against electric shock 89
5.5.1.3 Protective grounding 90
5.5.1.4 EMC 90
5.5.1.5 Notes on the emergency stop circuit configuration 91
5.5.1.6 Reduction of load ratio to ambient temperature 91
5.5.1.7 Overload protection 91
5.5.1.8 External overload protection device 91
5.5.1.9 Over-speed protection 91
5.5.1.10 24-V power supply 91
5.5.1.11 Screw tightening torque 92
5.5.1.12 Notes on ground degree of protection 92
5.5.1.13 Short-circuit protection 92
5.5.1.14 Warning label 92
5.5.1.15 Notes on connecting 93
5.5.2 Requirements of UL Standards 93
5.5.2.1 Classification in standards on insulation design 93
5.5.2.2 Protection against electric shock 94
5.5.2.3 Protective grounding 94
5.5.2.4 Overload protection 94
5.5.2.5 External overload protection device 94
5.5.2.6 Short-circuit protection 94
5.5.2.7 Over-speed protection 94
5.5.2.8 24-V power supply 95
5.5.2.9 Screw tightening torque 95
5.6 NOTES ON COOLANT (REFERENCE) 95

6 HEAT DISSIPATION 96
6.1 200-V INPUT SERIES 96
6.1.1 αi PS series 96
6.1.2 αi SV series 97
6.1.3 αi SP series 100
6.2 400-V INPUT SERIES 101
6.2.1 αi PS series 101
6.2.2 αi SV series 101
6.2.3 αi SP series 104

7 COOLING 105

8 EXTERNAL DIMENSIONS AND MAINTENANCE AREA 106
8.1 OUTLINE DRAWINGS 106
8.1.1 Outline Drawings, Weight, Panel Cut-out, and Maintenance Area of Amplifiers 106
8.1.2 AC Reactor Unit 113
8.1.3 AC Line Filter 124
8.1.4 Power Transformer 125
8.1.5 Regenerative Discharge Unit 131
8.1.6 Dynamic Brake Module (DBM) 134
8.1.7 Circuit Breaker 136
8.1.8 Magnetic Contactors 138
8.1.9 Lightning Surge Protector 145
8.1.10 Noise Filter 146
8.2 PANEL CUT-OUT DIAGRAMS 149

9 CONNECTION 155
9.1 TOTAL CONNECTION DIAGRAM 155

© MyFANUC 2D5504D5BAC945D385F48627D4977F6C

9.2 CONNECTOR LOCATION 157
9.2.1 αi PS series 157
9.2.2 αi SV series 162
9.2.3 αi SP Series 165
9.3 CABLE CONNECTION DETAILS 169
9.3.1 αi PS Series Connection Diagram 169
9.3.1.1 Details of cable K1 (power supply line) 174
9.3.1.2 Details of short bar K2 179
9.3.1.3 Details of cable K3 182
9.3.1.4 Details of cable K69 183
9.3.1.5 Details of cable K6 184
9.3.1.6 Details of cable K7 184
9.3.1.7 Details of cable K70 185
9.3.1.8 Detailed description of the connection of cables K41 (for regenerative discharge resistance), K42 (for thermostat), and K43 (for fan motor) 186
9.3.1.9 Details of cable K100 (for power failure detection output) 188
9.3.2 αi SV series Connection Diagram 189
9.3.2.1 Details of cable K2 193
9.3.2.2 Details of cable K4 193
9.3.2.3 Details of cable K69 193
9.3.2.4 Details of cable K21 194
9.3.2.5 Details of cable K22 196
9.3.2.6 Details of cable K24 200
9.3.2.7 Details of cable K25 200
9.3.2.8 Details of cable K26 201
9.3.2.9 Details of cable K102 202
9.3.2.10 Details of cable K27 202
9.3.2.11 Connecting the battery (for the absolute Pulsecoder) 203
9.3.2.12 Details of cable K70 208
9.3.3 αi SP Series Connection Diagram 208
9.3.3.1 Details of cable K2 209
9.3.3.2 Details of cable K69 209
9.3.3.3 Details of cable K10 (power cable) 209
9.3.3.4 Details of cable K70 211
9.3.3.5 Details of cable K11 211
9.3.3.6 Details of cable K12 211
9.3.3.7 Details of cable K14 213
9.3.3.8 Details of cable K16 217
9.3.3.9 Details of cable K17 221
9.3.3.10 Details of cable K33 229
9.3.3.11 Details of cable K36 232
9.3.3.12 Details of cable K71 235
9.3.3.13 Details of cable K86 237
9.3.3.14 Details of cable K88 238
9.3.3.15 Details of cable K90 239
9.3.3.16 Details of cable K96 239
9.3.3.17 Details of cable K97 240
9.3.3.18 Spindle Motor Feedback Cable Connection 242
9.4 DETAILS OF CONNECTORS 243
9.4.1 20-Pin Half-Pitch Connectors 243
9.4.2 Tyco Electronics Japan GK AMP D-5000 Series Connector 243

10 SPINDLE-RELATED OPTIONS 245
10.1 SPINDLE ORIENTATION 245
10.2 POWER LINE SWITCH CIRCUIT 245

© MyFANUC 2D5504D5BAC945D385F48627D4977F6C

10.2.1 Overview 245
10.2.2 Switch Circuit Configuration 246
10.2.3 Power Line Switch Unit 247
10.2.3.1 Specification 247
10.2.3.2 Outside and mounting dimension diagrams 248
10.2.3.3 Connection 252
10.2.3.4 Notes 252
10.3 SUB MODULE SW 254
10.3.1 Configuration 254
10.3.2 Specification 254
10.3.3 External Dimensions 256
10.3.4 Connector Installation Diagram (for Combination with αi SP 15) 258
10.3.5 Connection 259
10.4 SUB MODULE SM 260
10.4.1 Specifications 260
10.4.2 Outline Drawing 261
10.4.3 Panel Cut-out 262
10.4.4 Connection 262

11 SENSOR 263
11.1 SENSOR FOR THE SERVO SYSTEM 263
11.1.1 αiCZ SENSOR (for Separate Detector Use) 263
11.1.1.1 Specification 263
11.1.1.2 External dimensions 265
11.1.1.3 Installing the sensor 266
11.1.1.4 Connection 270
11.1.1.5 Rotation direction 275
11.1.1.6 Start-up procedure 276
11.1.1.7 Interpolation error compensation 276
11.1.1.8 Function for detecting the disconnection of the Sensor head cable 277
11.1.1.9 Procedure for initializing the Detection circuit 278
11.1.1.10 Notes on use 280
11.1.1.11 Output signal check method 281
11.2 SENSOR FOR THE SPINDLE 283
11.2.1 αi POSITIONCODER 283
11.2.1.1 Specification 283
11.2.1.2 Signal phase relationships (timing chart) 284
11.2.1.3 External dimensions 284
11.2.1.4 Connection 285
11.2.1.5 Installation conditions and notes 285
11.2.2 α POSITIONCODER S 286
11.2.2.1 Specification 286
11.2.2.2 Signal phase relationships (timing chart) 287
11.2.2.3 External dimensions 287
11.2.2.4 Connection 288
11.2.2.5 Installation conditions and notes 288
11.2.3 αiBZ SENSOR (for Spindle) 289
11.2.3.1 Specification 289
11.2.3.2 External dimensions 291
11.2.3.3 Interference of the Detection ring 294
11.2.3.4 Installing the sensor 295
11.2.3.5 Connection 298
11.2.3.6 Notes on the Detection ring 299
11.2.3.7 Usage with consideration of environmental resistance 299
11.2.4 αiBZ SENSOR (for built-in spindle motor) 301

© MyFANUC 2D5504D5BAC945D385F48627D4977F6C

11.2.4.1 Specification 301
11.2.4.2 External dimensions 303
11.2.4.3 Notes on the Detection ring 305
11.2.4.4 Usage with consideration of environmental resistance 306
11.2.4.5 Interference of the Detection ring 308
11.2.4.6 Installing the sensor 309
11.2.4.7 Connection 313
11.2.5 αiCZ SENSOR (for Spindle) 314
11.2.5.1 Specification 314
11.2.5.2 External dimensions 316
11.2.5.3 Installing the sensor 317
11.2.5.4 Connection 321
11.2.5.5 Rotation direction 323
11.2.5.6 Start-up procedure 324
11.2.5.7 Interpolation error compensation 324
11.2.5.8 Notes on use 325
11.2.5.9 Displaying the sensor amplitude and offset information 325
11.2.5.10 Maintenance target parts 326
11.2.5.11 Spindle alarms 327
11.2.6 αiCZ SENSOR (for built-in spindle motor) 327
11.2.6.1 Specification 327
11.2.6.2 External dimensions 329
11.2.6.3 Installing the sensor 330
11.2.6.4 Connection 334
11.2.6.5 Rotation direction 337
11.2.6.6 Start-up procedure 338
11.2.6.7 Interpolation error compensation 338
11.2.6.8 Notes on use 339
11.2.6.9 Displaying the sensor amplitude and offset information 339
11.2.6.10 Maintenance target parts 341

APPENDIX

A FITTING A LIGHTNING SURGE PROTECTION DEVICE 345
A.1 200-V INPUT SERIES POWER SUPPLY 345
A.2 400-V INPUT SERIES POWER SUPPLY 346
A.3 CAUTIONS 346

B CABLES 347
B.1 10-PAIR CABLE 348
B.2 COMPOSITE 7-CORE CABLE 350
B.3 COMPOSITE 10-CORE CABLE 358
B.4 COMPOSITE 12-CORE CABLE 360
B.5 COMPOSITE 16-CORE CABLE 362
B.6 10-PAIR CABLE (WITH 20 PAIRS) 363

C EXTERNAL DIMENSIONS OF EACH CONNECTOR 364
C.1 EXTERNAL DIMENSIONS AND MANUFACTURE OF EACH CONNECTOR 364

D FEEDBACK CABLE LENGTH 374
D.1 SPINDLE CABLE LENGTH (WHEN RECOMMENDED CABLES ARE USED) 374

© MyFANUC 2D5504D5BAC945D385F48627D4977F6C

D.2 PULSECODER CABLE LENGTH (WHEN RECOMMENDED CABLES ARE USED) 375

E POWER LINE FOR SERVO MOTOR AND AMPLIFIER 376
E.1 SELECTING A POWER CABLE 376
E.2 ADDING A POWER CABLE OF THE SERVO AMPLIFIER 378

F MEASURES AGAINST NOISE FROM SERVO AMPLIFIERS 384
F.1 NOISE GENERATION MECHANISM OF A SERVO AMPLIFIER 384
F.2 NOISE TYPES 385
F.3 ANTI-NOISE MEASURES 386
F.3.1 Pre-Installation Arrangement 386
F.3.2 Anti-Noise Measures 386
F.3.3 Concrete Examples of Anti-Noise Measures 387
F.3.4 Anti-Noise Measures for Power Supply Equipment and Grounding 389
F.3.5 Anti-Noise Devices 391
F.4 MISCELLANEOUS 392

G EXAMPLES OF RECOMMENDED POWER MAGNETICS CABINETS FOR SERVO AMPLIFIER INSTALLATION 393
G.1 OVERVIEW 393
G.2 DESCRIPTIONS 393
G.2.1 Power Magnetics Cabinet Seal-up 393
G.2.2 Environments for Amplifier Heat Sink Sections 398
G.2.3 Environments for Amplifier Installation 399

H DC LINK TERMINAL BLOCK SECTION PROTECTIVE COVER 401
H.1 OVERVIEW 401
H.2 HOW TO MOUNT 402

I POWER FAILURE DETECTION FUNCTION 403
I.1 OVERVIEW 403
I.2 POWER FAILURE DETECTION SPECIFICATION 403
I.3 APPLICATION TO PREVENTION OF VERTICAL AXES FROM FALLING AT POWER FAILURE 405
I.3.1 Procedure 405
I.3.2 Brake Circuit 406
I.3.3 Method for Keeping Vertical Axis Motors Energized 408
I.3.4 Cautions 410
I.3.5 Confirming Effect 410
I.3.6 Method for Supplying External Power to the Amplifier 412
I.4 USE IN COMBINATION WITH THE DUAL CHECK SAFETY FUNCTION 413

J SENSOR (OLD SPECIFICATIONS) 415
J.1 SENSOR FOR THE SYNCHRONOUS BUILT-IN SERVO MOTOR AND SEPARATE SENSOR 415
J.1.1 Absolute α*i*CZ Sensor (Serial Output, A860-2142-T***) 415
J.2 SENSOR FOR THE SPINDLE 428
J.2.1 α*i*BZ SENSOR (Conventional Dimensions, A860-2120-T***) 428
J.2.2 α*i*CZ SENSOR (Analog Output, A860-2140-T***) 434

© MyFANUC 2D5504D5BAC945D385F48627D4977F6C

K MAGNETIC SENSOR SIGNAL CONVERSION ADAPTER 445
K.1 ORDERING INFORMATION 445
K.2 SPECIFICATIONS 445
K.3 DIMENSIONS 446
K.4 CONNECTION 447
K.5 METHOD OF ADJUSTMENT 448

L HARMONIC LEAKAGE CURRENT 449

M MULTIPLE LANGUAGE SUPPORT FOR WARNINGS 450
M.1 OVERVIEW 450
M.2 ORDERING NUMBER 452

N ENERGY CHARGE MODULE (ECM) 453
N.1 OVERVIEW 454
N.2 CONFIGURATION AND ORDERING NUMBERS 455
N.2.1 Configuration 455
N.2.2 Ordering Numbers 456
N.2.2.1 Standard 456
N.2.2.2 Short Bar, Connector, and Cover 456
N.3 SPECIFICATIONS 457
N.3.1 Behavior of the Energy Charge Module (ECM) 457
N.3.2 Application 458
N.3.3 Control Module 458
N.3.4 Capacitor Module (for Smoothing) 459
N.3.5 Capacitor Module (for Charge) 459
N.3.6 Resistor Module 459
N.3.7 DC Reactor 459
N.3.8 Selection of the Power Supply 459
N.3.9 Servo Control 459
N.3.10 Environmental Conditions for the EMC 460
N.3.11 Ambient Temperature of the Power Supply and Servo Amplifier 460
N.3.12 Number of Servo Amplifiers and ECM Units To Be Connected 460
N.3.13 Amount of Heat Dissipation 460
N.4 SELECTION 461
N.4.1 Maximum Instantaneous Power and Power Pattern of the Machine 461
N.4.2 Permissible Maximum Instantaneous Power of the Machine 462
N.4.3 Check of the Maximum Output, Supply Energy, and Cycle Speed 464
N.4.4 Selection of the ECM System 466
N.4.4.1 Check of the amount of energy that can be stored per capacitor module 467
N.4.4.2 Calculation of the number of capacitor modules to be connected 469
N.4.4.3 Selection of the DC reactor 470
N.4.4.4 ECM switch setting 471
N.5 FUNCTIONS AND INTERFACES 473
N.5.1 Interfaces with the Servo Amplifier 473
N.5.2 Interface with the PMC (I/O) 474
N.5.3 Function Setting Switches of the Control Module 476
N.5.4 Alarms and Status Display 477
N.5.5 Troubleshooting and Action 480
N.6 OUTLINE DRAWINGS AND PANEL CUT-OUT DIAGRAMS 487
N.6.1 Control Module (A06B-6158-H010) 487
N.6.2 Capacitor Module 488
N.6.2.1 Capacitor module 0.011F (A06B-6158-H020) 488

© MyFANUC 2D5504D5BAC945D385F48627D4977F6C

N.6.2.2 Capacitor module 0.022F (A06B-6158-H021) 489
N.6.3 Resistor Module (A06B-6158-H030) 490
N.6.4 DC Reactor 491
N.6.4.1 DC reactor 100A (A06B-6158-H040) 491
N.6.4.2 DC reactor 60A (A06B-6158-H041) 492
N.7 CONNECTION 493
N.7.1 Total Connection Diagram 493
N.7.2 Cable Connection Details 494
N.7.2.1 Details of cables K2A and K2B (DC link connection) 494
N.7.2.2 Details of cable K2C (DC link connection) 495
N.7.2.3 Details of cable K2D 495
N.7.2.4 Details of cable K2E 496
N.7.2.5 Details of cables K116 and K117 497
N.7.2.6 Details of cable K121 498
N.7.2.7 Details of cables K70 and K70A-D 498
N.7.2.8 Details of cable K69 499
N.7.2.9 Details of cables K118 and K119 500
N.7.2.10 Details of cable K120 500
N.7.2.11 Separation of the power line and signal line 502
N.7.2.12 Connectors and short bars 502
N.8 REPLACEMENT OF MAINTENANCE PARTS 504
N.8.1 Replacement of a Fan Motor 504
N.8.2 How to Replace the Fuses 505
N.8.2.1 Replacement of the fuse on the printed-circuit board 506
N.9 (REFERENCE) LIFE OF THE CAPACITOR MODULE 506
N.10 PERIODIC MAINTENANCE 507

O POWER FAILURE BACKUP MODULE 508
O.1 OVERVIEW 509
O.2 CONFIGURATION AND ORDERING NUMBERS 511
O.2.1 Configuration 511
O.2.1.1 200-V input type 511
O.2.1.2 400-V input type 512
O.2.1.3 Required modules 513
O.2.1.4 Dynamic brake module for the servo amplifier 513
O.2.1.5 Retraction of the gravity-axis 514
O.2.2 Ordering Number 514
O.2.2.1 Power failure backup module 514
O.2.2.2 Sub module C 514
O.2.2.3 Sub module R 514
O.2.2.4 Supplement capacitor unit 514
O.2.2.5 Connectors 514
O.2.2.6 Fuses 514
O.2.2.7 Circuit breaker 515
O.2.2.8 Cables 515
O.3 SPECIFICATIONS 515
O.4 OUTLINE DRAWINGS AND PANEL CUT-OUT DIAGRAM 520
O.4.1 Outline Drawings 520
O.4.1.1 Power failure backup module 520
O.4.1.2 Sub module C and supplement capacitor unit 522
O.4.1.3 Sub module R 523
O.4.2 Panel Cut-out Diagram 524
O.5 CONNECTION 525
O.5.1 Total Connection Diagram 525
O.5.2 Details of Cable Connections 527

© MyFANUC 2D5504D5BAC945D385F48627D4977F6C

O.5.3 Cable Lead-in Diagrams and Connector Positions 536
O.5.3.1 Power failure backup module 536
O.5.3.2 Sub module C and supplement capacitor unit 538
O.5.3.3 Sub module R 538
O.5.4 Connector Location 539
O.5.4.1 Power failure backup module 539
O.5.4.2 Sub module C and supplement capacitor unit 540
O.5.4.3 Sub module R 540
O.5.5 Grounding 541
O.5.5.1 Power failure backup module 541
O.5.5.2 Sub module C and supplement capacitor unit 543
O.5.5.3 Sub module R 544
O.6 FUNCTIONS 545
O.6.1 Function Description 545
O.6.2 Control Sequences 549
O.6.2.1 Power-on sequence 549
O.6.2.2 Magnetic contactor (MCC) shutdown sequence 551
O.6.2.3 Power failure sequence (control of DC link voltage supply to the control power) 551
O.6.2.4 Power failure sequence (control of energy supply from the sub module C) 553
O.6.2.5 Power failure sequence (resistance regeneration control) 554
O.6.2.6 Sequence to be performed if an alarm or error occurs in the power failure backup module 555
O.6.3 Status Display 555
O.6.4 Alarm 556
O.6.5 Status Signals 557
O.6.6 Control Signals 557
O.6.7 Setting of the Power Failure Detection Delay Time 558
O.7 SIGNAL PROCESSING AND PARAMETER SETTING 558
O.7.1 Retract Function at Power Failure 558
O.7.1.1 When using the electronic gear box function, simple electronic gear box function, or hobbing machine function 559
O.7.1.2 When using the high-speed cycle machining retraction function 559
O.7.1.3 Power failure retract on a machining center or a lathe 560
O.7.1.4 Note on the setting of the parameter of the retract function at power failure 561
O.7.2 Stop Distance Reduction Function at Power Failure 561
O.7.2.1 Feed axis deceleration and stop 561
O.7.2.2 Deceleration and stop of the spindle 563
O.7.3 Gravity-axis Drop Prevention Function at Power Failure 564
O.8 SUB MODULE SELECTION 564
O.8.1 Selecting a Sub Module R 564
O.8.2 Selecting a Sub Module C 566
O.8.2.1 Calculating the amount of energy that can be supplied per sub module C 566
O.8.2.2 Calculating the amount of energy required for power failure retraction 567
O.8.2.3 Example of selecting a sub module C 568
O.9 LIMIT ON THE NUMBER OF AMPLIFIERS TO BE CONNECTED 570
O.9.1 Condition when Control Power Needs to be Supplied from the Outside 570
O.9.2 Connection when Control Power is Supplied from the Outside 571
O.10 OPERATION CHECK 573
O.10.1 Retract Function at Power Failure 573
O.10.2 Stop Distance Reduction Function at Power Failure 574
O.10.3 Gravity-Axis Drop Prevention Function at Power Failure 574

P VARIATION IN THE ONE-ROTATION SIGNAL DETECTION POSITION OF THE SPINDLE SENSOR 575

© MyFANUC 2D5504D5BAC945D385F48627D4977F6C

P.1 POSITION VARIATION LIST BY SENSOR 575

Q CONNECTION OF A THIRD-PARTY SPINDLE SENSOR 576

Q.1 APPLIED UNIT 576

Q.2 ELECTRICAL SPECIFICATIONS OF SPINDLE SENSOR SIGNALS 577

Q.2.1 Connectors Supporting Sensor Signals 577

Q.2.2 Input Values of JYA2 and JYA4 578

Q.2.2.1 A, B, and Z phase unprocessed signals 578

Q.2.2.2 1Vpp sine wave A and B phases (differential signal waveforms) 579

Q.2.2.3 Driver-type Z phase (differential signal waveform) 580

Q.2.2.4 Sine wave Z phase (α*i*MZ/α*i*BZ sensor compatible type: differential signal waveform) 581

Q.2.2.5 Order of A and B phase signals 582

Q.2.2.6 Notes 582

Q.2.3 Signals Input to JYA3 583

Q.2.3.1 Square wave signal waveforms (A, B, and Z phase signals) 583

Q.2.3.2 Spindle sensor for the serial interface 583

Q.3 PARAMETERS 585

Q.3.1 Overview 585

Q.3.2 List of Parameters for Sensor Setting 585

Q.3.3 Setting Motor Sensor Parameters 586

Q.3.3.1 Setting of the motor sensor type 586

Q.3.3.2 Setting the number of motor sensor teeth 587

Q.3.3.3 Thermal sensor settings used for motor overheat detection 587

Q.3.4 Setting the Spindle Sensor Parameters 588

Q.3.4.1 Setting the spindle sensor type 588

Q.3.4.2 Setting the number of spindle sensor teeth 590

ADDITIONAL INFORMATION

© MyFANUC 2D5504D5BAC945D385F48627D4977F6C

© MyFANUC 2D5504D5BAC945D385F48627D4977F6C

1 CONFIGURATION

Chapter 1, "CONFIGURATION", consists of the following sections:

1.1 FEATURES OF THE SERVO AMPLIFIER αi SERIES.....1
1.2 CONFIGURATION.....2
1.3 SERVO AMPLIFIERS 5
1.4 LINEUP 6

1.1 FEATURES OF THE SERVO AMPLIFIER αi SERIES

The servo amplifier αi series employs a modular structure, and is thinner, conserves more space, outputs less heat, and saves more energy.

Compact

(1) Use of a latest low-loss power element and a newly developed highly-efficient radiator makes it possible to reduce the depth of the fin to 100 mm, therefore reducing the depth of the amplifier.
(2) The width of the amplifier is reduced, and therefore the amplifier requires an average of approximately 30% smaller installation space in the cabinet than the conventional amplifiers.
(3) The shape of the cable connector is improved to reduce the length of cable projection into the control board.

Reduction in cabling

(1) Amplifiers can be connected with one cable.
(2) A ground connection from the motor output terminal block to the flange is included, so external cabling for this connection is no longer required. (A connection from the top of the flange to the system ground on the control board is required.)

Connector attachment to power lines

(1) Connectors are attached to input power lines and motor power lines. (For the large-capacity models, terminal blocks are used.) The time required for power line attachment to and detachment from the servo amplifier cabinet is substantially reduced.

Improved maintainability

(1) A fan motor can now be replaced in an instant manner, so that the time required to replace a fan motor is reduced substantially.
(2) Connectors are attached to input power lines and motor power lines, so that the time required for servo amplifier replacement is reduced substantially.
(3) The need to perform reference position return operation after servo amplifier replacement is eliminated.
The servo amplifier αi series has a built-in backup capacitor in the Absolute Pulsecoder as standard. The capacitor enables absolute position detection operation for about 10 minutes, so that reference position return operation after servo amplifier or feedback cable replacement is unnecessary.

© MyFANUC 2D5504D5BAC945D385F48627D4977F6C

1.2 CONFIGURATION

The FANUC αi series consists of the following units and parts:

1.2.1 200-V Input Series

(1) αi PS series (Power Supply) .....(Basic)
(2) αi PS_R series (Power Supply) [resister discharge type] .....(Basic)
(3) αi SV series (Servo Amplifier) .....(Basic)
(4) αi SP series (Spindle Amplifier) .....(Basic)
(5) AC reactor .....(Basic)
(6) Connectors (for connection cables) .....(Basic)
(7) Fuses .....(Basic)
(8) Power transformer .....(Optional)
(9) AC line filter .....(Basic)
(10) Regenerative discharge unit .....(Basic)
(11) DBM (Dynamic brake module) .....(Basic)

Basic configuration using αi PS (example)

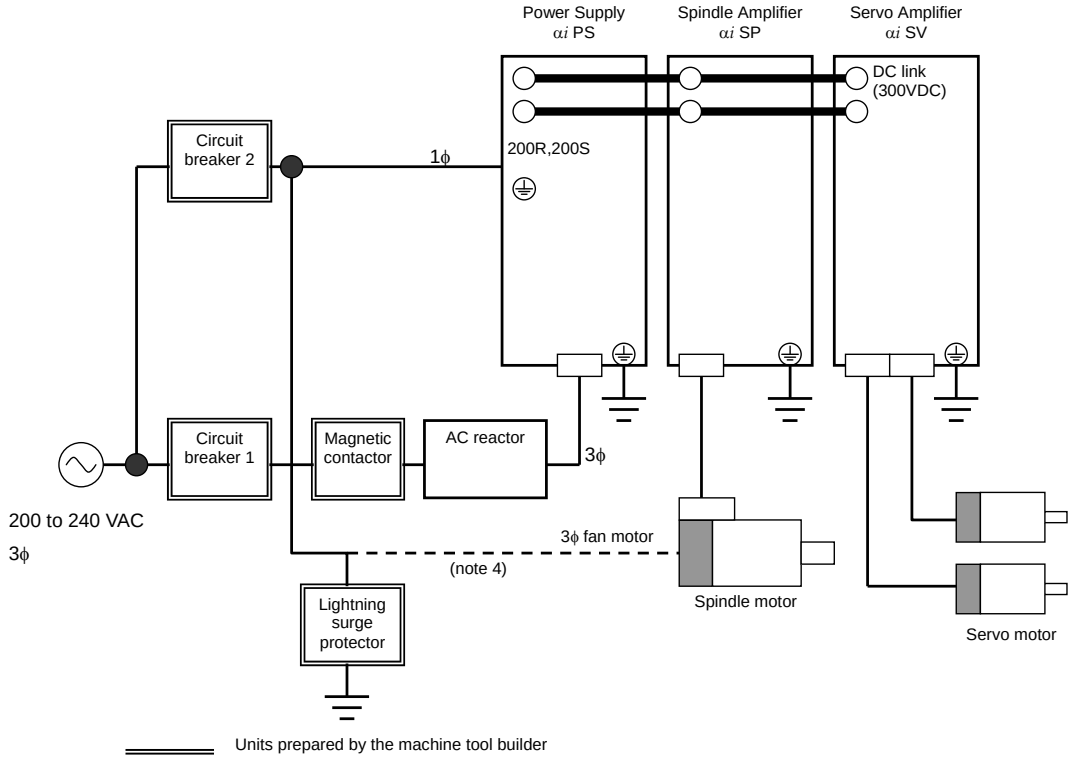

© MyFANUC 2D5504D5BAC945D385F48627D4977F6C

NOTE

1 For how to use the αi PS together with the αi SV and αi SP, see Chapter 4, "HOW TO SELECT THE MODULE".
2 A magnetic contactor, AC line filter, and circuit breakers are always required.
3 To protect the unit from surge currents caused by lightning, connect surge absorbers between lines, and between the lines and ground, at the power inlet of the power magnetic cabinet. See Appendix A, “FITTING A LIGHTNING SURGE PROTECTION DEVICE” for details.
4 When using the 3ϕ fan motor, circuit breaker 2 can be shared.

Basic configuration using αi PS_R (example)

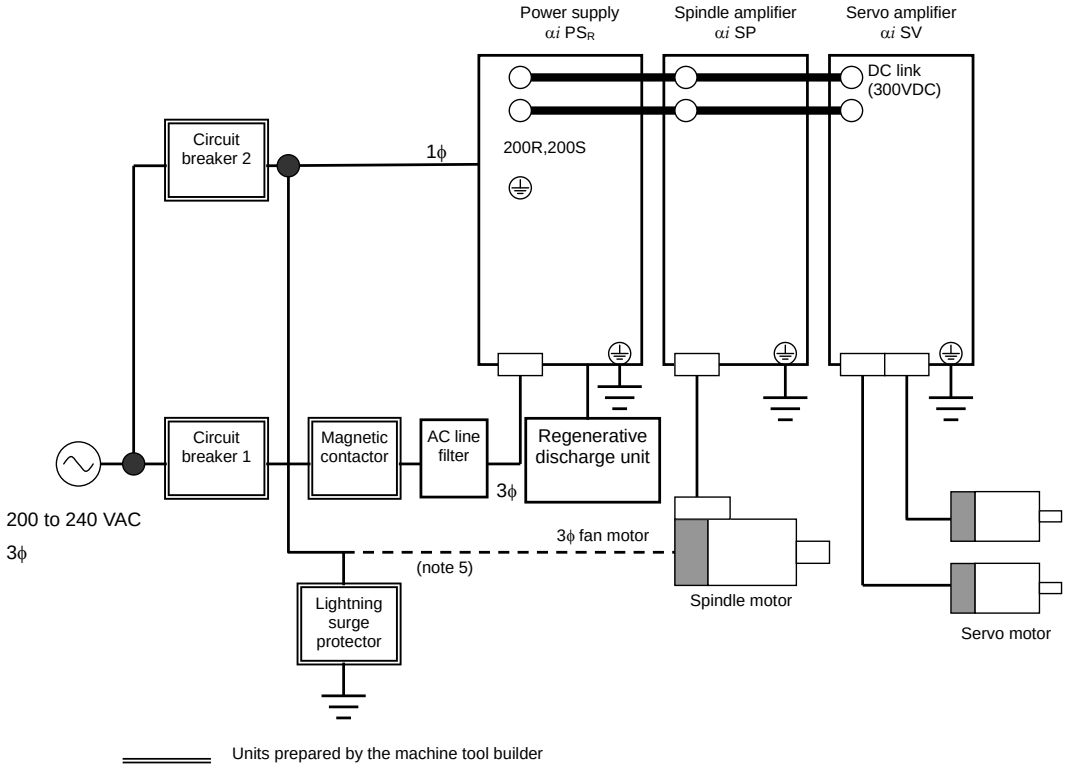

NOTE

1 For how to use the αi PS_R together with the αi SV and αi SP, see Chapter 4, " HOW TO SELECT THE AMPLIFIER ".
2 A magnetic contactor, AC line filter, and circuit breakers are always required.
3 To protect the unit from surge currents caused by lightning, connect surge absorbers between lines, and between the lines and ground, at the power inlet of the power magnetic cabinet. See Appendix A, “FITTING A LIGHTNING SURGE PROTECTION DEVICE” for details.
4 When an insulating transformer is installed, high-frequency noise to the Power Supply is reduced, so the AC line filter is not required. If the insulating transformer is installed outside the power magnetic cabinet, and the cable connecting the amplifier is exposed, the cable must be covered with a grounded metal duct, or an AC line filter must be installed.
5 When using the 3ϕ fan motor, circuit breaker 2 can be shared.

© MyFANUC 2D5504D5BAC945D385F48627D4977F6C

1.2.2 400-V Input Series

(1) αi PS series (Power Supply) .....(Basic)
(2) αi SV series (Servo Amplifier) .....(Basic)
(3) αi SP series (Spindle Amplifier) .....(Basic)
(4) AC reactor .....(Basic)
(5) Connectors (for connection cables) .....(Basic)
(6) Fuses .....(Basic)
(7) DBM (Dynamic brake module) .....(Basic)

Basic configuration using αi PS (example)

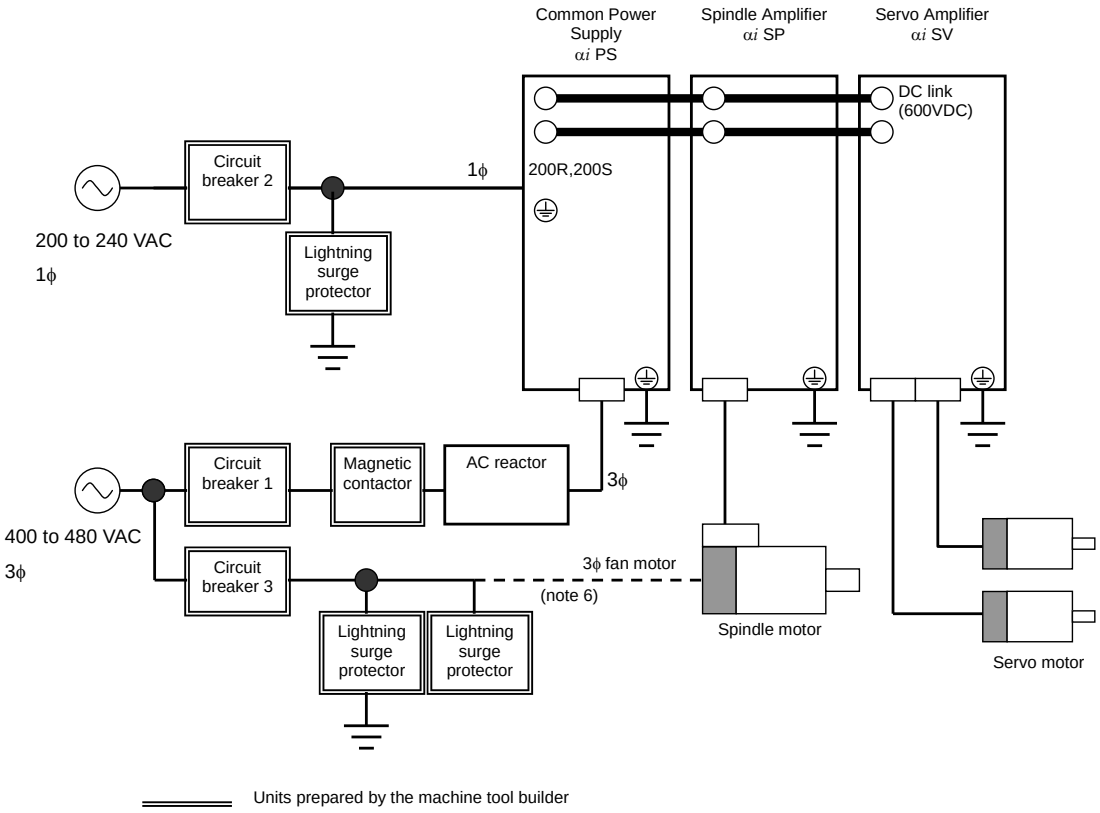

NOTE

1 For the control power supply, single–phase 200VAC is required.
2 For how to use the αi PS together with the αi SV and αi SP, see Chapter 4, " HOW TO SELECT THE AMPLIFIER ".
3 A magnetic contactor, AC line filter, and circuit breakers are always required.
4 To protect the unit from surge currents caused by lightning, connect surge absorbers between lines, and between the lines and ground, at the power inlet of the power magnetic cabinet. See APPENDIX A for details.
5 Measures must be taken to detect the operation (trip) of circuit breaker 3.
6 When using the 3ϕ fan motor (400-V power supply support type), circuit breaker 3 can be shared.

© MyFANUC 2D5504D5BAC945D385F48627D4977F6C

1.3 SERVO AMPLIFIERS

αi PS series (Power Supply)

The αi PS series power supplies are used as a main power supply of motor power and as a common power supply to supply control power to servo amplifiers. Select an appropriate Power Supply according to the output levels of the servo motor and spindle motor used.

There are three types of αi PS series, as follows:

<1> 200-V input series

This Power Supply is designed to provide a main power supply of 200 to 240 V. The module uses power regeneration that returns energy to the power supply during motor deceleration (regeneration).

<2> 400-V input series

This Power Supply can be connected to a main power supply of 400 to 480V without a transformer. The module uses power regeneration that returns energy to the power supply during motor deceleration (regeneration). It is used together with a αi SV series and αi SP series of the 400-V input series.

<3> αi PS_R series

This Power Supply is designed to provide a main power supply of 200 to 240 V. The module uses resistance regeneration that allows energy to be consumed by resistance during motor deceleration (regeneration).

<4> Regenerative discharge unit

This unit is a resistance used to consume energy during motor deceleration (regeneration). This unit is required whenever the αi PS_R is used.

αi PS - x HV
(A) (B) (C)

(A) Model name: PS = Power Supply, PS_R= Power Supply (resister discharge type)
(B) Rated output: Numeric value representing a continuous rating in kW
(C) For a 400-V input series, "HV" is added.

αi SV series (Servo Amplifier)

The αi SV series amplifiers are used to drive a servo motor. Select an appropriate amplifier according to the servo motor connected.

There are two types of αi SV series, as follows:

<1> 200-V input series

This Amplifier drives a servo motor of the 200-V input series. Amplifiers for one axis, two axes, and three axes are available.

<2> 400-V input series

This Amplifier drives a servo motor of the 400-V input series. Amplifiers for one axis and two axes are available.

αi SV x / x / x HV L
(A) (B) (C) (D) (E)(F)

(A) Model name: SV = Servo amplifier
(B) L-axis maximum output current value [Apeak]
(C) M-axis maximum output current value [Apeak]
(D) N-axis maximum output current value [Apeak]
(E) For an amplifier supporting 400-V input, "HV" is added.
(F) For an amplifier supporting HRV4 control, "L" is added.

© MyFANUC 2D5504D5BAC945D385F48627D4977F6C

αi SP series (Spindle Amplifier)

The αi SP series amplifiers are used to drive a spindle motor. Select an appropriate amplifier according to the spindle motor connected.
There are two types of αi SP series, as follows:

<1> 200-V input series
This Amplifier drives a spindle motor of the 200-V input series.

<2> 400-V input series
This Amplifier drives a spindle motor of the 400V input series.

αi SP x HV
(A) (B) (C)

(A) Model name: SP = Spindle amplifier module
(B) Output: Numeric value representing the 30-minutes rating of a matching standard motor (αi) in kW
(C) For an amplifier supporting 400-V input, "HV" is added.

1.4 LINEUP

Size	Input power supply	αi PS	αi PS_R	αi SP	αi SV		
60mm-wide Without external fin	200V		3		4, 20	4/4, 4/20 20/20	4/4/4 20/20/20
	400V				10HV	10/10HV	
60mm-wide With external fin	200V	5.5	5.5	2.2, 5.5	40, 80 160, 20L 40L, 80L	20/40, 40/40 40/80, 80/80 20/20L 20/40L 40/40L	20/20/40 40S/40S/40
	400V			5.5HV	20HV 40HV 80HV 10HVL 20HVL 40HVL	20/20HV 10/10HVL	
90mm-wide With external fin	200V	11, 15		11, 15	160L	80/160 160/160 40/80L 80/80L	
	400V	11HV, 18HV		11HV, 15HV	80HVL	20/40HV 40/40HV 40/80HV 80/80HV 20/20HVL 20/40HVL 40/40HVL	
150mm-wide With external fin	200V	26, 30, 37		22, 26, 30, 37	360		
	400V	30HV, 45HV, 60HV		30HV, 45HV	180HV		
300mm-wide With external fin	200V	55		45, 55			
	400V	75HV, 100HV		75HV, 100HV	360HV, 540HV		

© MyFANUC 2D5504D5BAC945D385F48627D4977F6C

2 SPECIFICATIONS

Chapter 2, "SPECIFICATIONS", consists of the following sections:

2.1 INPUT POWER 7
2.2 ENVIRONMENTAL CONDITIONS 20
2.3 SPECIFICATIONS OF THE MODULES 28

2.1 INPUT POWER

(1) Power supply of 200-V input series

(1) Power specification

Item	Specification
Main power supply voltage	Three-phase 200 to 240 VAC
Power supply voltage for the control	Single-phase 200 to 240 VAC (input from connector CX1A)
Allowable voltage deviation	-15% to +10% (including voltage variation due to load)
Instantaneous power failure guarantee time	3ms
Power frequency	50/60Hz, ±1Hz
Power supply unbalance	±5% of the rated voltage or less
Power supply impedance (Note)	The voltage variation must be within ±7% when a maximum output is produced for voltage at non-load time (power running and regeneration).

NOTE
When the power supply impedance is high, and the voltage variation exceeds the specified values, an alarm (DC link undervoltage alarm or DC link overvoltage alarm) can be issued in αi PS, or the output of the motor can decrease.

[Method of checking power supply impedance]

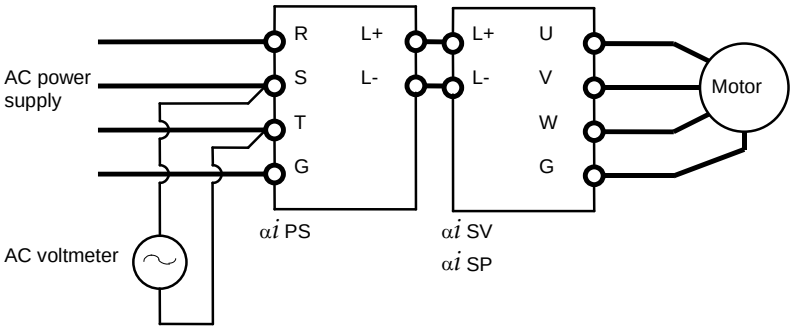

$$\frac{E0 - E1}{E0} \times 100(\%) < 7(\%)$$

E0 : Voltage at non-load time
E1 : Voltage at maximum output time (power running and regeneration)

© MyFANUC 2D5504D5BAC945D385F48627D4977F6C

(2) The power supply for αi PS control (power supply input of CX1A) must be turned on before or at the same time when the CNC is turned on. For the timing of power-on at the same time when the CNC is turned on, refer to the chapter of the power supply in the hardware connection manual of the CNC used.
(3) It is recommended that a capacitor unit for power-factor improvement not be installed. This is because the capacitor unit for power-factor improvement may adversely affect power regeneration.
(4) The rated output of the motor is guaranteed for the rated input voltage. If the input voltage changes, the rated output may not appear even when the input voltage change is within the allowable range.
(5) When the power supply is used in an area where the input voltage is not within the range of 200 to 240 VAC, a power transformer is required. When a power transformer is to be provided by the user, the power must satisfy the specifications listed below.

Transformer specification

αiPS

	αiPS 5.5	**αiPS 11**	**αiPS 15**	**αiPS 26**	**αiPS 30**	**αiPS 37**	**αiPS 55 (45kW output)**	**αiPS 55 (55kW output)**
Rated capacity (kVA)	9	17	22	37	44	53	64	79
Secondary current (A)	26	49	63	106	127	153	185	228
Secondary output voltage	200 to 240V							
Secondary voltage regulation	5%							
Secondary voltage deviation	±3%							

$\alpha i PS_R$

	$\alpha i PS_R$ 3 (2kW output)	**$\alpha i PS_R$ 3 (3kW output)**	**$\alpha i PS_R$ 5.5 (5.5kW output)**	**$\alpha i PS_R$ 5.5 (7.5kW output)**
Rated capacity (kVA)	3.5	5	9	12
Secondary current (A)	10	14.5	26	35
Secondary output voltage	200 to 240V			
Secondary voltage regulation	5%			
Secondary voltage deviation	±3%			

* The secondary current indicates the current value observed when the secondary output voltage is 200 V.

(6) Ground
The main circuit and 200V control power supply must be grounded through the neutral point or one phase of the three-phase power supply.
(7) Noise filter
To satisfy the EMC regulation enforced in the EU countries, a noise filter must be installed in the power supply input section.

© MyFANUC 2D5504D5BAC945D385F48627D4977F6C

(2) Power supply of 400-V input series

(1) Power specification

Item	Specification
Main power supply voltage	Three-phase 400 to 480 VAC Star connection, neutral grounding (For details, see Items (5) and (6).) 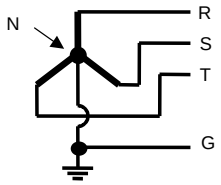
Power supply voltage for the control	Single-phase 200 to 240 VAC (input from connector CX1A) (For details, see Item (7).)
Allowable voltage deviation	-15% to +10% (including voltage variation due to load)
Instantaneous power failure guarantee time	3ms
Power frequency	50/60Hz, ±1Hz
Power supply unbalance	±5% of the rated voltage or less
Power supply impedance (Note)	The voltage variation must be within ±7% when a maximum output is produced for voltage at non-load time (power running and regeneration).

NOTE

When the power supply impedance is high, and the voltage variation exceeds the specified values, alarm (DC link undervoltage alarm or DC link overvoltage alarm) can be issued in αi PS, or the output of the motor can decrease.

[Method of checking power supply impedance]

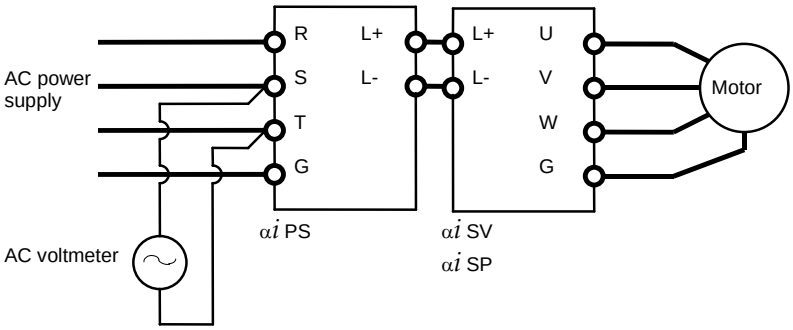

$$\frac{E0 - E1}{E0} \times 100(\%) < 7(\%)$$

E0 : Voltage at non-load time

E1 : Voltage at maximum output time (power running and regeneration)

(2) The power supply for αi PS control (power supply input of CX1A) must be turned on before or at the same time when the CNC is turned on. For the timing of power-on at the same time when the CNC is turned on, refer to the chapter of the power supply in the hardware connection manual of the CNC used.

(3) It is recommended that a capacitor unit for power-factor improvement not be installed. This is because the capacitor unit for power-factor improvement may adversely affect power regeneration.

(4) The rated output of the motor is guaranteed for the rated input voltage. If the input voltage changes, the rated output may not appear even when the input voltage change is within the allowable range.

(5) Power supply voltage for the main circuit

© MyFANUC 2D5504D5BAC945D385F48627D4977F6C

- The power specification of the main circuit for the 400-V input series of the αi series servo amplifier is as follows:
  <1> Star connection
  <2> Neutral grounding on the power supply side
  <3> A PE is provided on the power line. (The PE of the amplifier and motor is connected to the PE of the power line.)
  <4> The inter-phase voltage of the power supply is 400 to 480 VAC (-15%, +10%).
- If the power supply does not satisfy the conditions above, the power supply needs to be converted to a power supply for neutral grounding by using a star connection and an isolating-transformer.
- The 400-V input series of the αi series servo amplifier is designed in compliance with the safety standard EN50178 or EN61800-5-1 to implement insulation design of the pattern and components of the printed circuit board by ensuring that the phase voltage of the power supply and the voltage between grounds connected to the neutral point of the star connection are AC 300 Vrms or below.
  Accordingly, if the power supply does not satisfy the conditions above, the pattern and components of the printed circuit board are poorly insulated. This can cause very dangerous states including a failure in servo amplifier operation and the occurrence of a high voltage at exposed areas.

© MyFANUC 2D5504D5BAC945D385F48627D4977F6C

(6) Example of connecting the Power supply of the main circuit

No.	Power system	Power specification	Power supply of amplifier
1	TN-power system	• Star connection • Neutral grounding on the power supply side • PE provided on the power line • Power supply voltage specification 400 to 480 VAC (-15%,+10%)	• Directly connectable to the power supply (No transformer is required.)
2	TN-power system	• Star connection • Neutral grounding on the power supply side • PE provided on the power line • Power supply voltage specification Not within the range 400 to 480 VAC (-15%, +10%)	[When the power supply voltage is lower than the specified power supply voltage] The power supply voltage is increased with an auto-transformer. [When the power supply voltage is higher than the specified power supply voltage] The power supply voltage is decreased with an auto-transformer. Before starting to use the power supply, check that it conforms to the relevant safety standards.
3	TN-power system	• Delta connection • Single-phase grounding on the power supply side • PE provided on the power line	• An isolating-transformer is used. • A star connection is made on the secondary side of an isolating-transformer, and the neutral point is grounded.
4	TT-power system	• Star connection • Neutral grounding on the power supply side • No PE provided on the power line	
5	TT-power system	• Delta connection • Single-phase grounding on the power supply side • No PE provided on the power line	
6	IT-power system	• Star connection • No direct ground connection made on the power supply side • No PE provided on the power line	
7	IT-power system	• Delta connection • No direct ground connection made on the power supply side • No PE provided on the power line	• An isolating-transformer is used. • A star connection is made on the secondary side of an isolating-transformer, and the neutral point is grounded.

* The TN-power system, TT-power system, and IT-power system are based on the DC power distribution system standard IEC60364.

© MyFANUC 2D5504D5BAC945D385F48627D4977F6C

(a) TN-power system

No.	Power system	Power specification	Power supply of amplifier
1	TN-power system	• Star connection • Neutral grounding on the power supply side • PE provided on the power line • Power supply voltage specification 400 to 480 VAC (-15%,+10%)	• Directly connectable to the power supply (No transformer is required.)

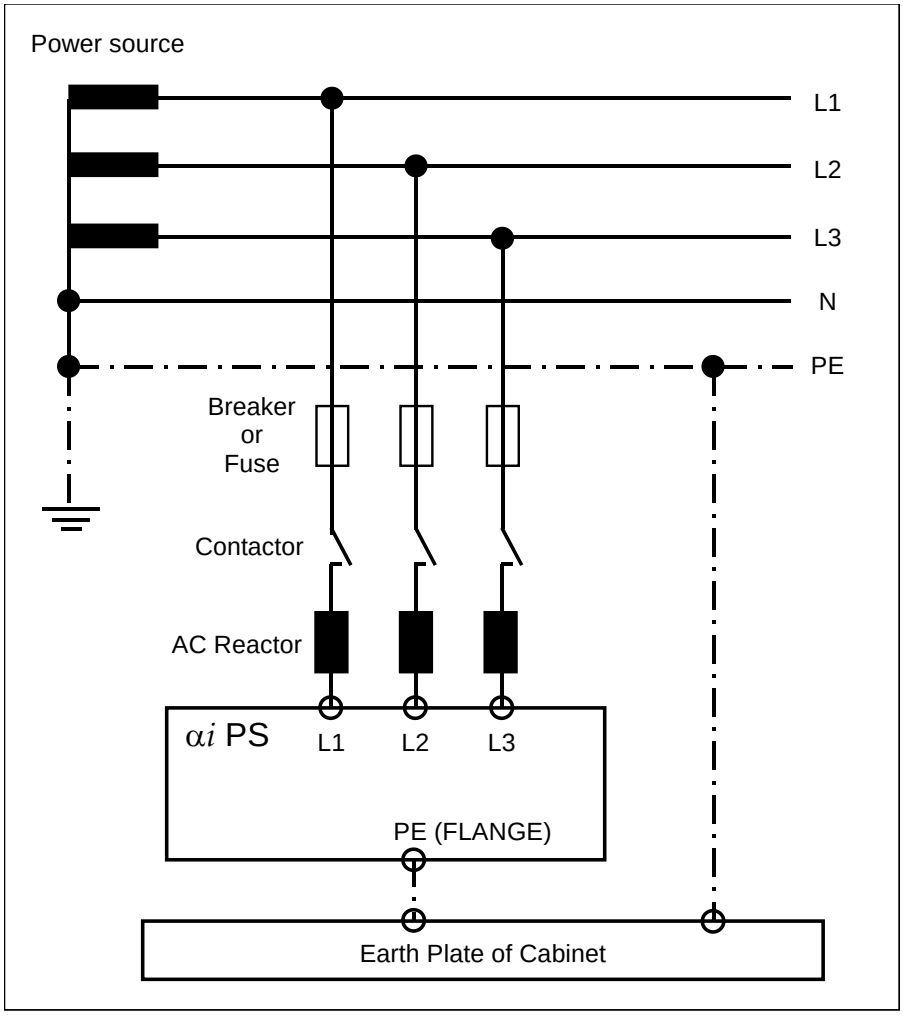

© MyFANUC 2D5504D5BAC945D385F48627D4977F6C

(b) TN-power system

No.	Power system	Power specification	Power supply of amplifier
2	TN-power system	• Star connection • Neutral grounding on the power supply side • PE provided on the power line • Power supply voltage specification Not within the range 400 to 480 VAC (-15%, +10%)	[When the power supply voltage is lower than the specified power supply voltage] The power supply voltage is increased with an auto-transformer. [When the power supply voltage is higher than the specified power supply voltage] The power supply voltage is decreased with an auto-transformer. Before starting to use the power supply, check that it conforms to the relevant safety standards.

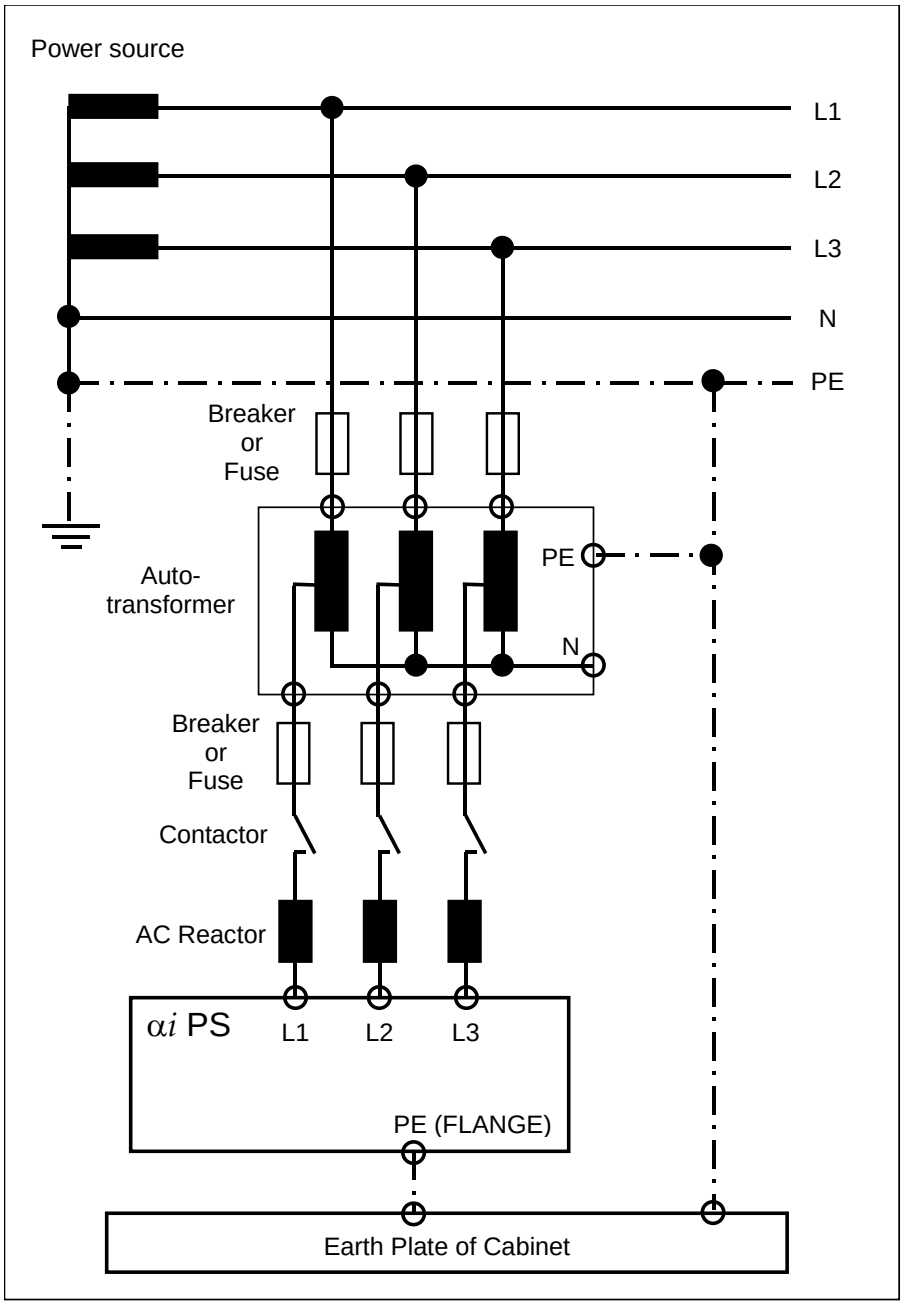

© MyFANUC 2D5504D5BAC945D385F48627D4977F6C

(c) TN-power system

No.	Power system	Power specification	Power supply of amplifier
3	TN-power system	• Delta connection • Single-phase grounding on the Power supply side • PE provided on the power line	• An isolating-transformer is used. • A star connection is made on the secondary side of an isolating-transformer, and the neutral point is grounded.

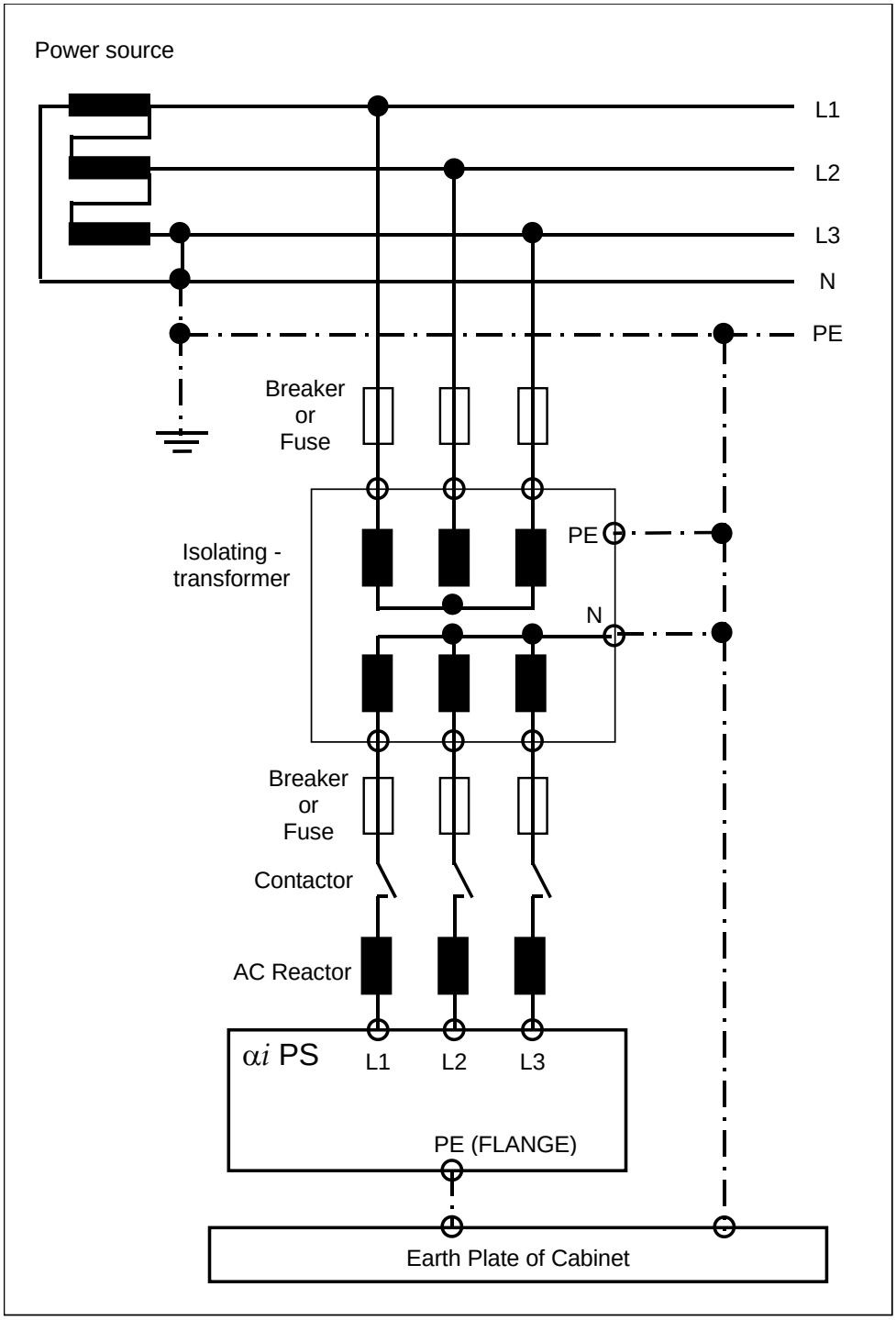

© MyFANUC 2D5504D5BAC945D385F48627D4977F6C

(d) TT-power system

No.	Power system	Power specification	Power supply of amplifier
4	TT-power system	• Star connection • Neutral grounding on the power supply side • No PE provided on the power line	• An isolating-transformer is used. • A star connection is made on the secondary side of an isolating-transformer, and the neutral point is grounded.

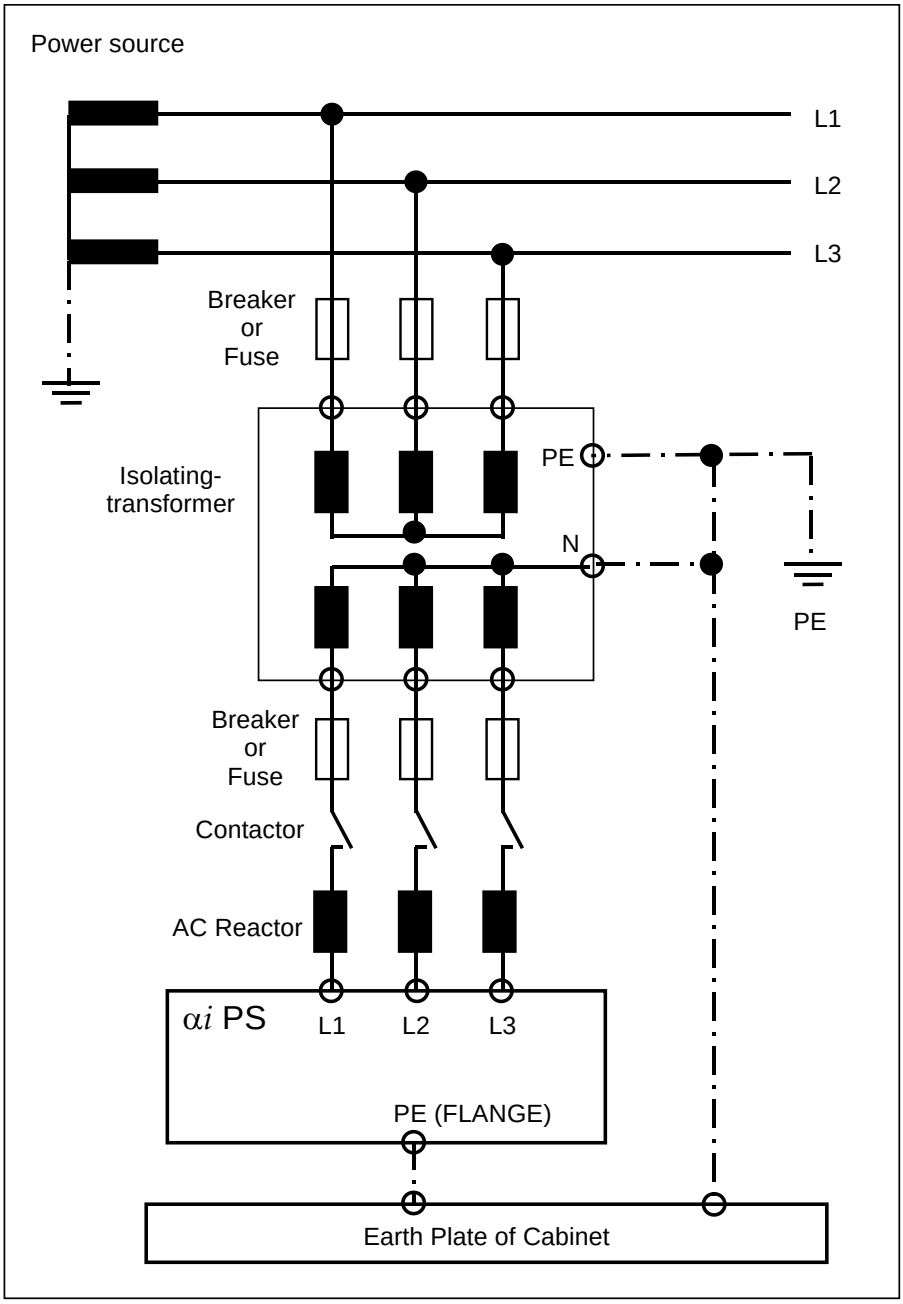

© MyFANUC 2D5504D5BAC945D385F48627D4977F6C

(e) TT-power system

No.	Power system	Power specification	Power supply of amplifier
5	TT-power system	• Delta connection • Single-phase grounding on the power supply side • No PE provided on the power line	• An isolating-transformer is used. • A star connection is made on the secondary side of an isolating-transformer, and the neutral point is grounded.

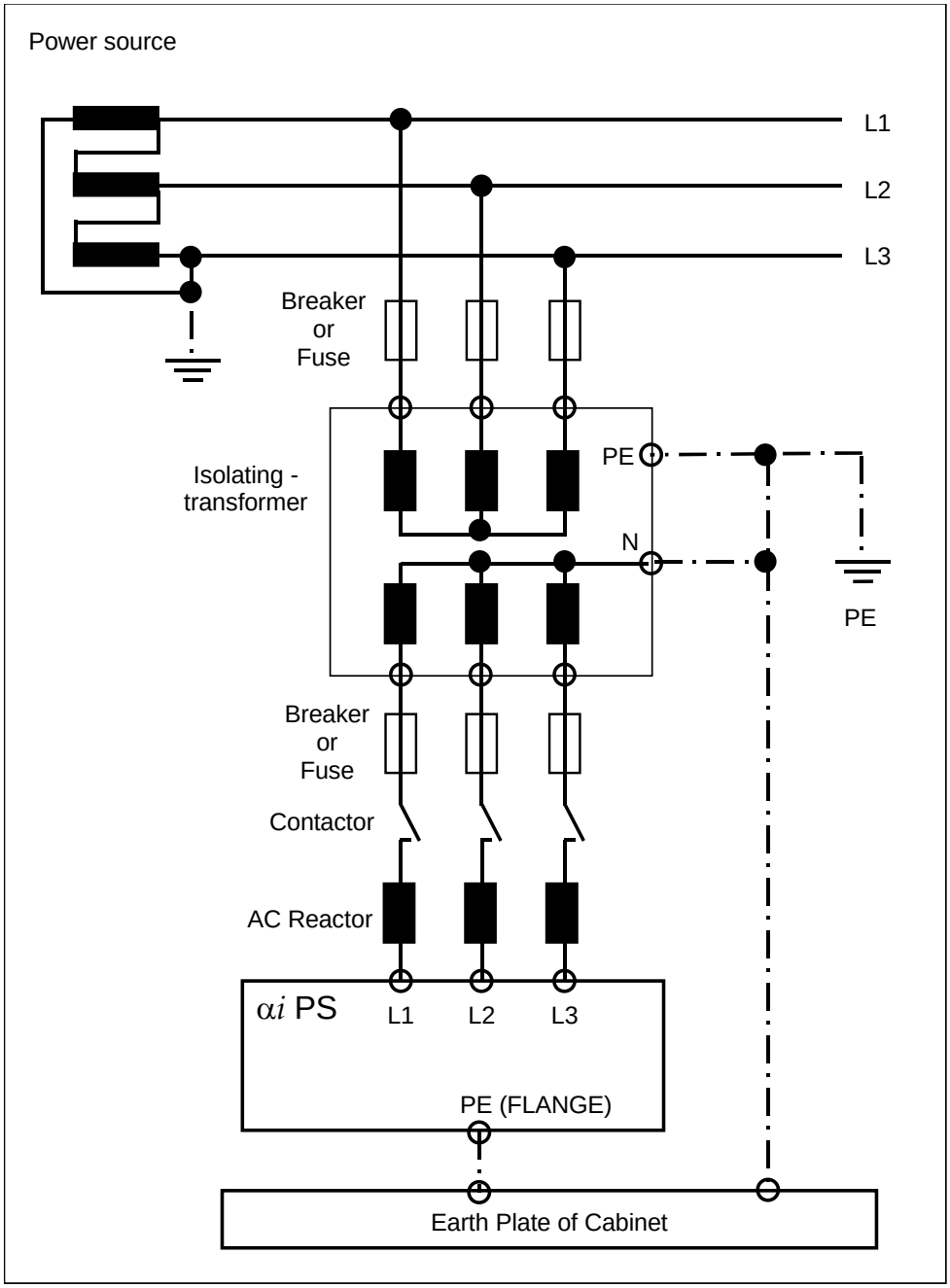

© MyFANUC 2D5504D5BAC945D385F48627D4977F6C

(f) IT-power system

No.	Power system	Power specification	Power supply of amplifier
6	IT-power system	• Star connection • No direct ground connection made on the power supply side • No PE provided on the power line	• An isolating-transformer is used. • A star connection is made on the secondary side of an isolating-transformer, and the neutral point is grounded.

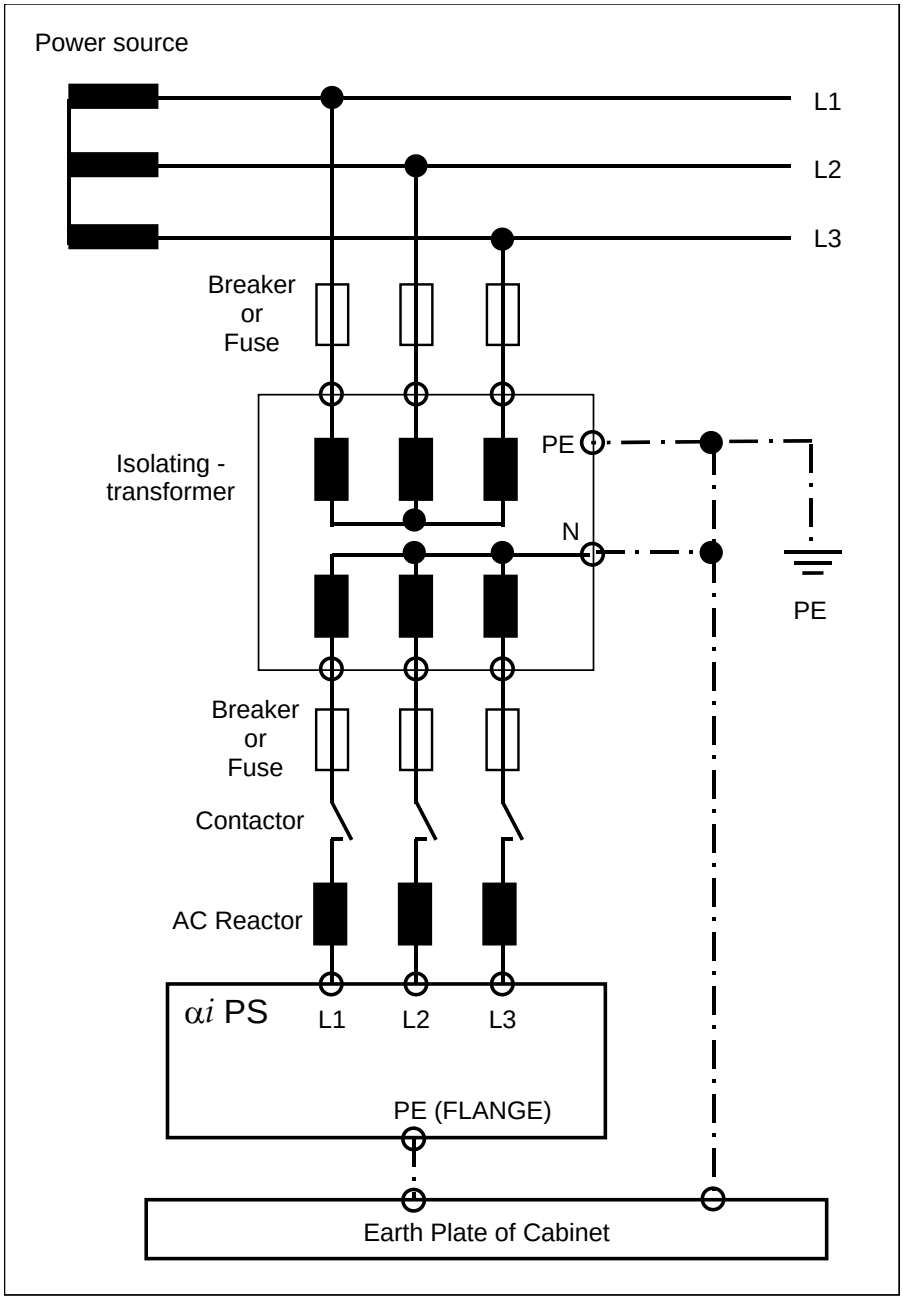

© MyFANUC 2D5504D5BAC945D385F48627D4977F6C

(g) IT-power system

No.	Power system	Power specification	Power supply of amplifier
7	IT-power system	• Delta connection • No direct ground connection made on the power supply side • No PE provided on the power line	• An isolating-transformer is used. • A star connection is made on the secondary side of an isolating-transformer, and the neutral point is grounded.

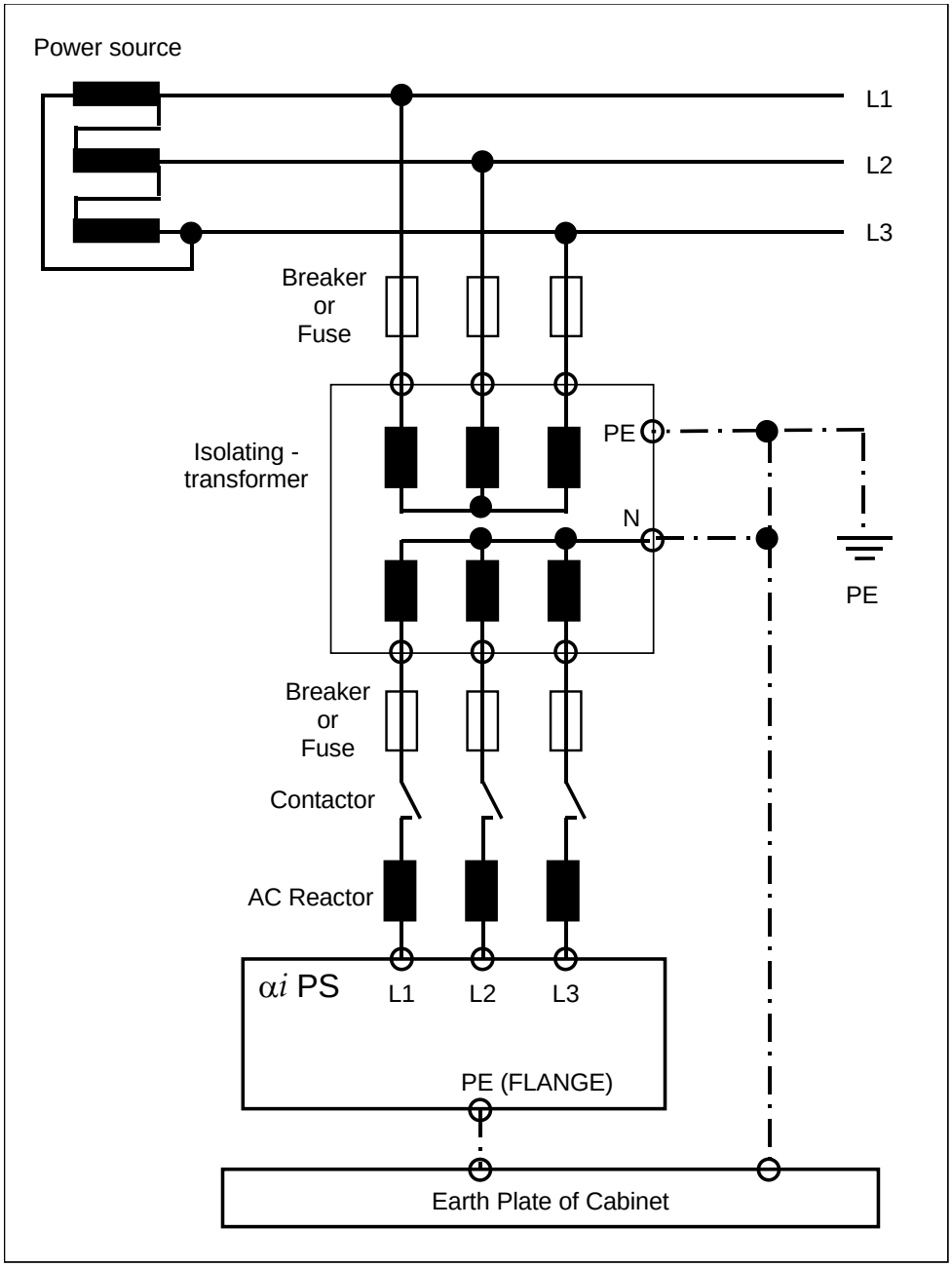

© MyFANUC 2D5504D5BAC945D385F48627D4977F6C

(7) Control power supply connection

- Specification of the control power supply voltage for the 400V input series of the αi series servo amplifier
  Single-phase 200 to 240 VAC (-15%, +10%)
- When the power supply has a neutral point, power can be supplied from the neutral point and phase voltage to the control power supply.
  When an isolating-transformer is used, connect one phase of the control power supply to the neutral point on the secondary side of the isolating-transformer.

(a) Example of connection when the three-phase power supply voltage of the main circuit is 400 to 415 VAC (-15%, +10%)
With the following connection, the control power supply voltage can be converted to single-phase 200 to 240 VAC (-15%, +10%):

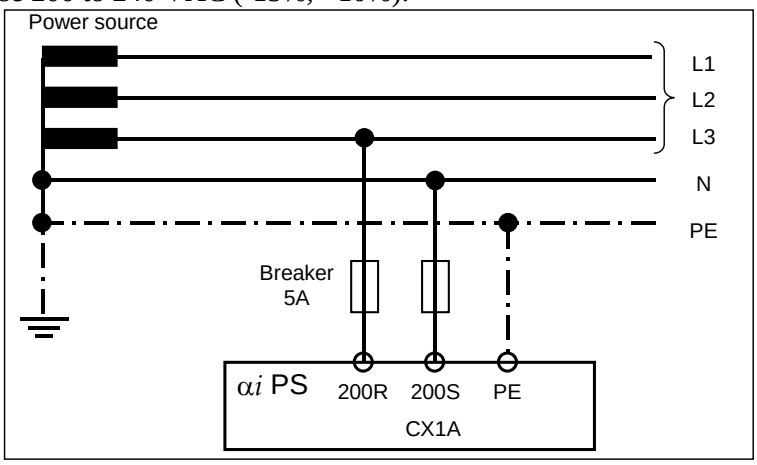

(b) Example of connection when the three-phase power supply voltage of the main circuit is 415 VAC or more
By using an auto-transformer, ensure that the single-phase power supply voltage for the control power supply is 200 to 240 VAC (-15%, +10%).

NOTE
Before starting to use the auto-transformer, check that it conforms to the relevant safety standards

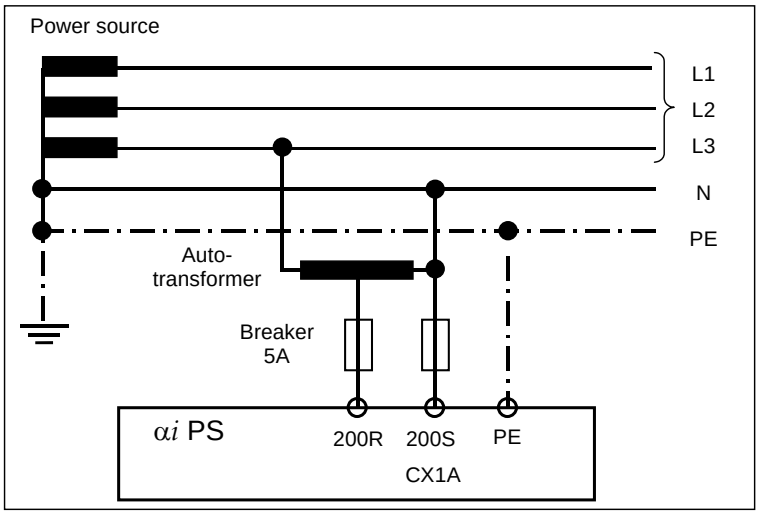

© MyFANUC 2D5504D5BAC945D385F48627D4977F6C

2.2 ENVIRONMENTAL CONDITIONS

The servo amplifier αi series must be installed in a sealed type cabinet to satisfy the following environmental requirements. For how to design such a cabinet, see Appendix G, "EXAMPLES OF RECOMMENDED POWER MAGNETICS CABINETS FOR SERVO AMPLIFIER INSTALLATION".

(1) Ambient Temperature
Ambient temperature of the unit : 0 to 55°C (at operation)
-20 to 60°C (at keeping and transportation)

(2) Humidity
Normally 90% RH or below, and condensation-free (at operation, keeping, and transportation)

(3) Vibration
Below 0.5G (at operation, keeping, and transportation)

(4) Atmosphere
Prevent conductive, flammable, or corrosive foreign matters, mists, or water droplets from entering the unit
Pollution degree: 2

(5) Altitude
1000m or less

NOTE
This servo amplifier has insulation design so that it can be used 2000 m or lower above sea level.
If the servo amplifier is installed 1000 m or higher above sea level, the allowable upper ambient temperature of the servo amplifier in the cabinet is changed as follows. Assume that the allowable upper ambient temperature of the servo amplifier in the cabinet installed 1000 m or higher above sea level decreases by 1.0°C for every 100 m rise in altitude.
If the altitude exceeds 2000 m, contact FANUC.

⚠ **WARNING**
If conductive or flammable foreign matters enter the unit, explosion or corruption may be caused.
If corrosive or conductive mists or water droplets are attached to an electronic circuit, unexpected operation may be caused in the circuit.
The electronic circuit portion must be installed in an environment of pollution degree 2 specified by IEC60664-1. To achieve pollution degree 2 in a severe machine tool environment, it is generally necessary to install the portion in a cabinet that satisfies IP54.

(6) Notes on Installation
The αi series servo amplifier is designed to be installed in the power magnetics cabinet, with its heat sink projecting through the back of the cabinet. This carries away the heat generated by the semiconductors, thus preventing heat from building up in the cabinet as much as possible. Therefore, note the following when installing the amplifier.

© MyFANUC 2D5504D5BAC945D385F48627D4977F6C

(a) Take appropriate measures to prevent coolant, oil mist, or chips from being adhered to the radiator and fan motors. A deposit of coolant, oil mist, or chips on the radiator or fan motors can lower the cooling efficiency. In some cases, the amplifier characteristics cannot sometimes be satisfied. The deposit may also reduce the service life of the fan motors or semiconductors.
When outside air is drawn in to the radiator, mount an air filter on the air inlet.

(b) No dust or cutting fluid must be able to enter through the exhaust port. The flow of cooling air must not be obstructed.

(c) The servo amplifier must be installed in a sealed type cabinet. Particularly, be sure to seal the doors and parts where cables are drawn in and out.

(d) The amplifier must be installed where it can be easily inspected, removed, and remounted for maintenance.

(e) Current lines and signal lines must be separated and noise must be suppressed. See the section 5.3 and the connection manual for each CNC for details.

(f) Each amplifier must be installed vertically.

(g) Servo amplifiers are to be arranged horizontally. When arranging servo amplifiers vertically from necessity, note the following:

1) Ensure that cooling air from a lower amplifier does not blow directly against the upper amplifier. Otherwise, radiation performance can degrade and the rated output may not be satisfied.

2) Ensure that the flow of cooling air of a lower amplifier is not impeded.

(h) Maintenance areas must be reserved for each servo amplifier.

(8) Notes relating to this product storage, transportation and environment

This servo amplifier uses electronic parts corroded by the halogen (fluorine, chlorine, bromine, iodine, etc.)

Do not storage or transport or use this servo amplifier in the halogen (fluorine, chlorine, bromine, iodine, etc.) atmosphere.

Fumigant and industrial cleaning solvent, and pesticide might contain the halogen .

© MyFANUC 2D5504D5BAC945D385F48627D4977F6C

(9) Derating

Consider derating as shown below, according to ambient temperatures.

(a) αi SV series

The solid line indicates derating when HRV2 is applied, the dotted line indicates derating when HRV3 is applied, and the dot-dash line indicates derating when HRV4 is applied.

αi SV 40 to 160

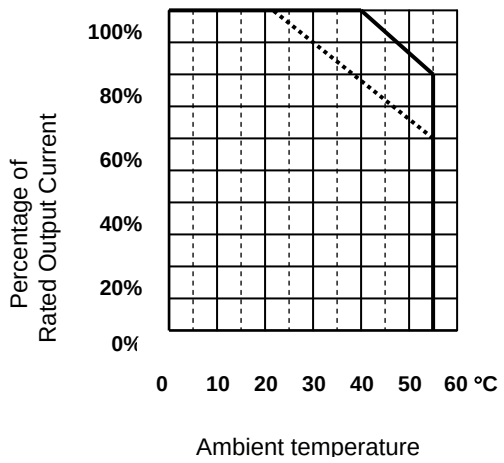

αi SV 20/40 to 160/160

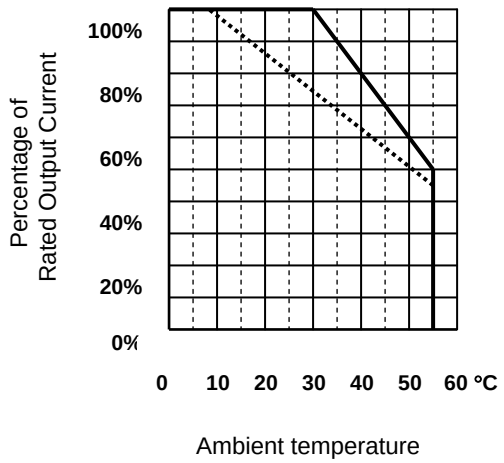

⚠ CAUTION

HRV4 cannot be applied to A06B-6114-Hxxx and -6124-Hxxx.

© MyFANUC 2D5504D5BAC945D385F48627D4977F6C

αi SV 4 to 20

αi SV 4/4 to αi SV 20/20

αi SV 4/4/4 to αi SV 20/20/40

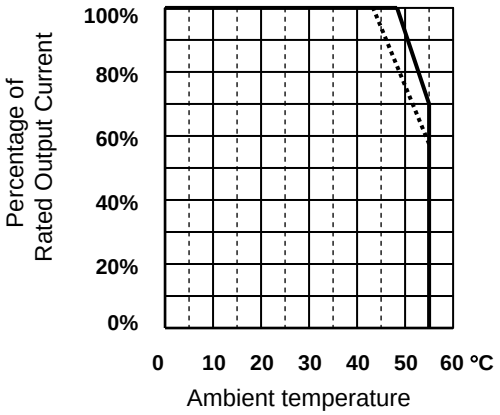

αi SV 40S/40S/40

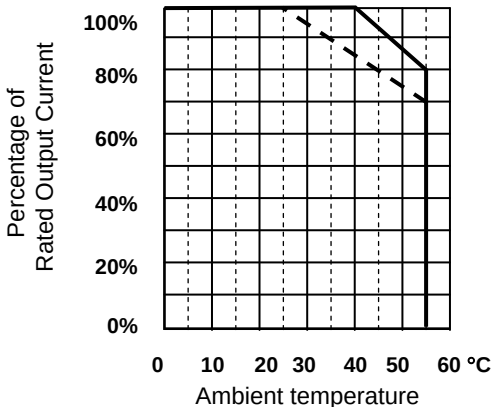

αi SV 360

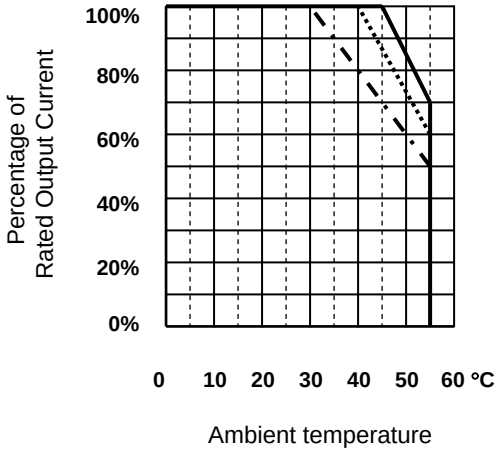

⚠ **CAUTION**
HRV4 cannot be applied to A06B-6114-Hxxx and -6124-Hxxx.

© MyFANUC 2D5504D5BAC945D385F48627D4977F6C

αi SV 20L to 160L (When HRV4 is applied)

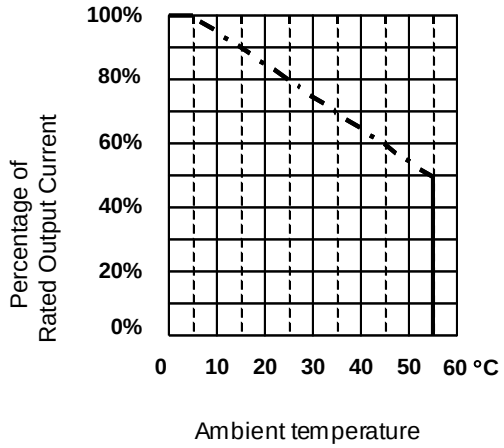

αi SV 20/20L to 80/80L (When HRV4 is applied)

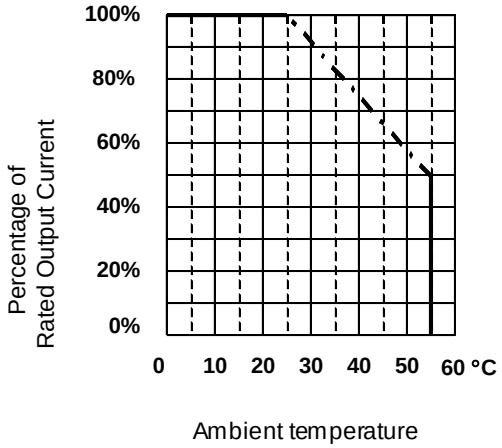

αi SV 10HV to 80HV

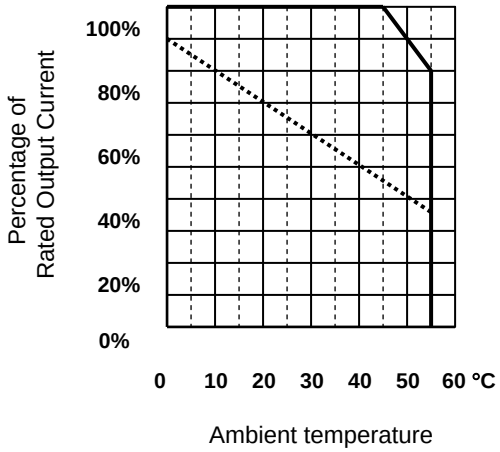

⚠ **CAUTION**
HRV4 cannot be applied to A06B-6114-Hxxx and -6124-Hxxx.

© MyFANUC 2D5504D5BAC945D385F48627D4977F6C

αi SV 180HV

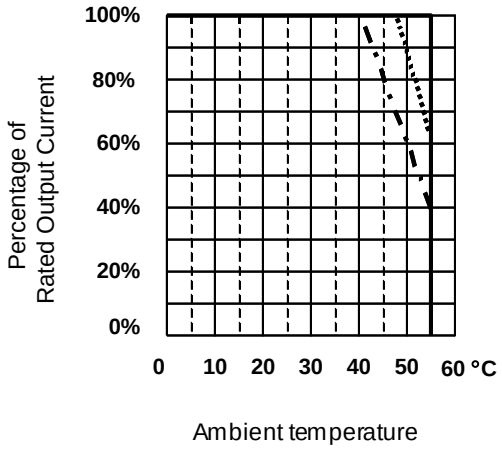

αi SV 360HV

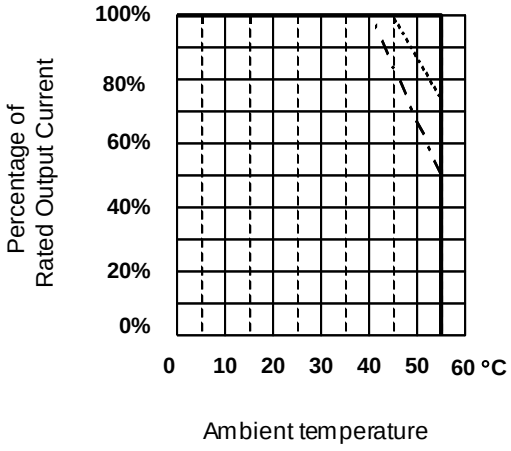

αi SV 540HV

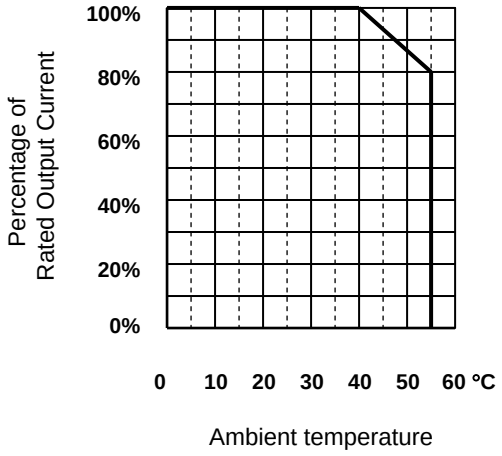

⚠ **CAUTION**
HRV4 cannot be applied to A06B-6114-Hxxx and -6124-Hxxx.

© MyFANUC 2D5504D5BAC945D385F48627D4977F6C

αi SV 10/10HV to 20/20HV

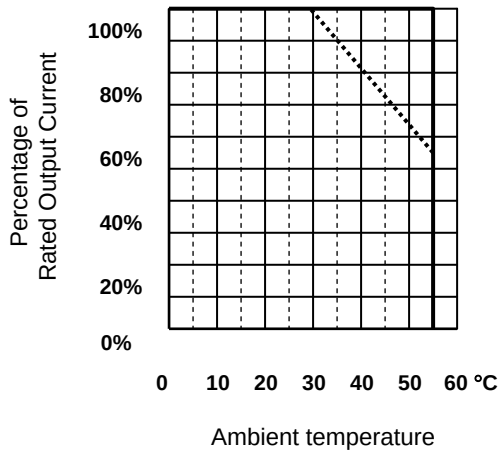

αi SV 20/40HV to 80/80HV

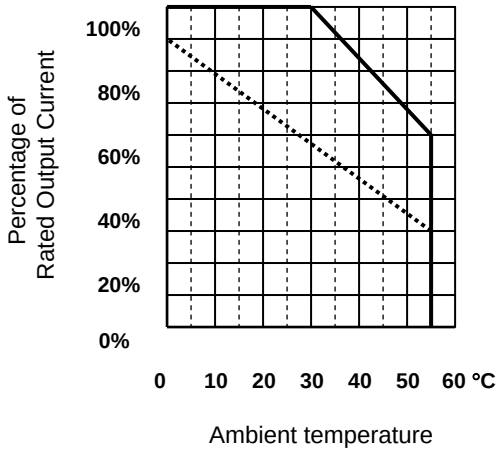

⚠ CAUTION
HRV4 cannot be applied to A06B-6114-Hxxx and -6124-Hxxx.

αi SV 10HVL to 80HVL (When HRV4 is applied)

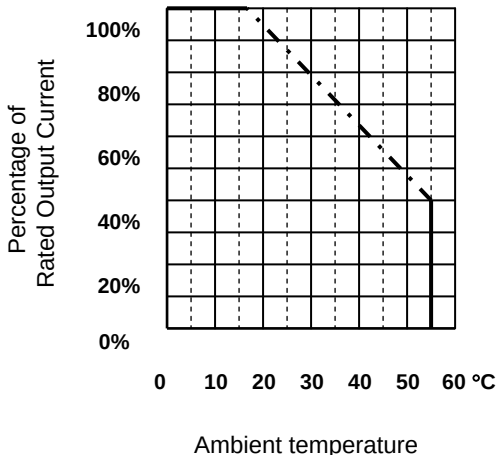

© MyFANUC 2D5504D5BAC945D385F48627D4977F6C

αi SV 10/10HVL to 40/40HVL (When HRV4 is applied)

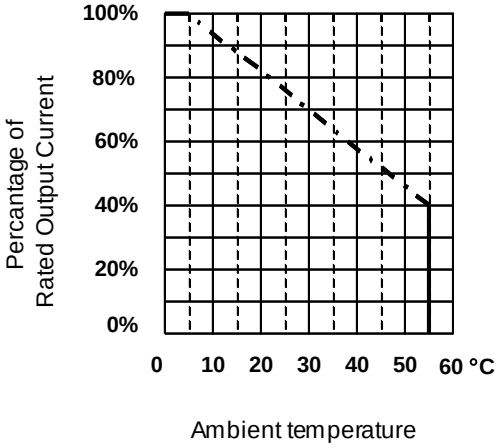

⚠ CAUTION
HRV4 cannot be applied to A06B-6114-Hxxx and -6124-Hxxx.

(b) αi SP series
αi SP 2.2 to 55
αi SP 5.5HV to 100HV

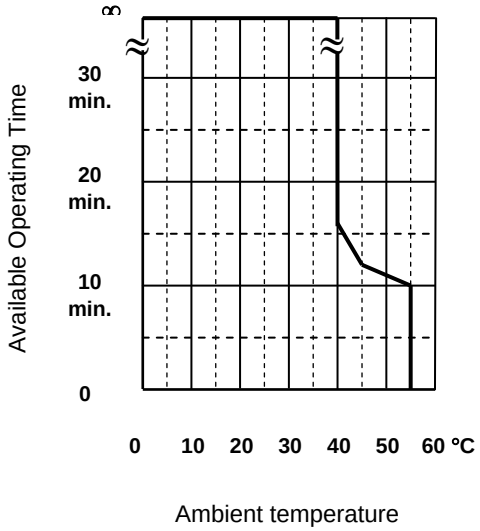

© MyFANUC 2D5504D5BAC945D385F48627D4977F6C

2.3 SPECIFICATIONS OF THE MODULES

2.3.1 αi PS series

200-V input series - power source regeneration type

Item \ Model		αi PS 5.5	αi PS 11	αi PS 15	αi PS 26	αi PS 30	αi PS 37	αi PS 55
Power supply (Note 1)	Main circuit	200 to 240VAC +10%,-15%,3ϕ 50/60Hz, ±1Hz						
	Control power	200 to 240VAC +10%,-15%,1ϕ 50/60Hz, ±1Hz						
Power equipment capacity	Main circuit	9kVA	17kVA	22kVA	37kVA	44kVA	53kVA	79kVA
	Control power	0.7kVA						
Rated output capacity (Note 2)		6.8kW	13.2kW	17.5kW	29.8kW	35kW	43kW	65kW
Control method		Regenerative control (power source generation)						

Output capacities for motor selection

Item \ Model	αi PS 5.5	αi PS 11	αi PS 15	αi PS 26	αi PS 30	αi PS 37	αi PS 55
Rated output capacity	5.5kW	11kW	15kW	26kW	30kW	37kW	55kW
Maximum output capacity	13kW	24kW	34kW	48kW	64kW	84kW	125kW
Peak maximum output capability	22kW	38kW	51kW	73kW	85kW	106kW	192kW

NOTE

1 A power transformer is necessary for voltages other than those listed in above table.
2 When selecting an αi PS, use "Output capacities for motor selection".
3 The values in the above table are applied when A06B-6140-Hxxxx is used. When A06B-6110-Hxxxx is used, the values of the maximum output capacity and peak maximum output capacity differ as shown in the table below.

Output capacities for motor selection (when A06B-6110-Hxxx is used)

Item \ Model	αi PS 5.5	αi PS 11	αi PS 15	αi PS 26	αi PS 30	αi PS 37	αi PS 55
Maximum output capacity	11kW	20kW	28kW	40kW	53kW	70kW	104kW
Peak maximum output capability	20kW	34kW	46kW	66kW	77kW	96kW	174kW

200-V input series - resister discharge type (αi PS_R)

Item \ Model		αi PS_R 3	αi PS_R 5.5
Power supply (Note 1)	Main circuit	200 to 240VAC +10%,-15%,3ϕ 50/60Hz, ±1Hz	
	Control power	200 to 240VAC +10%,-15%,1ϕ 50/60Hz, ±1Hz	
Power equipment capacity	Main circuit	5kVA	12kVA
	Control power	0.5kVA	
Rated output capacity (Note 2)		3.8kW	9.4kW
Control method		Regenerative control (resister discharge)	

Output capacities for motor selection

Item \ Model	αi PS_R 3	αi PS_R 5.5
Rated output capacity	3kW	7.5kW
Maximum output capacity	12kW	20kW

© MyFANUC 2D5504D5BAC945D385F48627D4977F6C

NOTE
1 A power transformer is necessary for voltages other than those listed in above table.
2 When selecting an αi PS_R unit, use "Output capacities for motor selection".
3 The αi PS_R 3 and αi PS_R 5.5 require regenerative discharge unit.

400-V input series - power source regeneration type

Item \ Model		αi PS 11HV	αi PS 18HV	αi PS 30HV	αi PS 45HV	αi PS 60HV	αi PS 75HV	αi PS 100HV
Power supply (Note 1)	Main circuit	400 to 480VAC +10%,-15%,3ϕ 50/60Hz, ±1Hz						
	Control power	200 to 240VAC +10%,-15%,1ϕ 50/60Hz, ±1Hz						
Power equipment capacity	Main circuit	17kVA	26kVA	44kVA	64kVA	86kVA	107kVA	143kVA
	Control power	0.7kVA						
Rated output capacity (Note 2)		13kW	21kW	35kW	50kW	68kW	82kW	110kW
Control method		Regenerative control (power source regeneration)						

Output capacities for motor selection

Item \ Model	αi PS 11HV	αi PS 18HV	αi PS 30HV	αi PS 45HV	αi PS 60HV	αi PS 75HV	αi PS 100HV
Rated output capacity	11kW	18kW	30kW	45kW	60kW	75kW	100kW
Maximum output capacity	24kW	42kW	72kW	102kW	112kW	144kW	180kW
Peak maximum output capability	38kW	64kW	96kW	137kW	150kW	193kW	220kW

NOTE
1 A power transformer is necessary for voltages other than those listed in above table.
2 When selecting an αi PS, use "Output capacities for motor selection".
3 The values in the above table are applied when A06B-6150-Hxxxx is used. When A06B-6120-Hxxxx is used, the values of the maximum output capacity and peak maximum output capacity differ as shown in the table below.

Output capacities for motor selection (when A06B-6120-Hxxx is used)

Item \ Model	αi PS 11HV	αi PS 18HV	αi PS 30HV	αi PS 45HV	αi PS 75HV	αi PS 100HV
Maximum output capacity	20kW	35kW	60kW	85kW	120kW	150kW
Peak maximum output capability	34kW	58kW	87kW	124kW	175kW	200kW

How to calculate the power equipment capacity

Calculate the power equipment capacity using the formula below.

$$\text{Power supply capacity (kVA)} = \frac{\text{Rated capacity calculated in Section 4.3 (kW)}}{\text{Rated capacity of power supply module (kW)}}$$

$$\times \text{Power supply capacity of power supply module having rated output (kVA)}$$

NOTE
Select a Power supply for which, when the motor is accelerated, the input voltage variation does not exceed 7%.

© MyFANUC 2D5504D5BAC945D385F48627D4977F6C

[How to calculate the input current of the αi PS]
Calculate the input current of the αi PS by using the formula below. Refer to the result when selecting the MCC, power cable, and circuit breaker 1, to be connected to the αi PS input section.
(Margin for selection: 1 to 1.5 times)

$$\text{PS input current (Arms)} = \frac{\text{Power equipment capacity (kVA)}}{\sqrt{3} \times \text{Nominal supply voltage (Vrms)}} \times 1.2 \text{ (margin)}$$

NOTE
Under normal conditions, assume that the nominal supply voltage (Vrms) is 200 Vrms for the 200-V input series or 400 Vrms for the 400-V input series.

2.3.2 αi SV series

Specifications (common)

Item	Specifications
Main circuit control method	Sine-wave PWM control with transistor (IGBT) bridge
Applicable CNC	16*i*-B/18*i*-B/21*i*-B/0*i*-B/C/D, 30*i*/31*i*/32*i*-A
Maximum output voltage	240 VAC
Input voltage range	283 to 339 VDC

⚠ **CAUTION**
HRV4 cannot be applied to A06B-6114-Hxxx and -6124-Hxxx.
Combine A06B-6117-Hxxx or A06B-6127-Hxxx with 0*i*–D or 30*i*-A/31*i*-A/32*i*-A.

200-V input series - 1-axis amplifier

Name	Axis	Rated output current [Arms]	Nominal current limit [Apeak]	Input power [kW]
αi SV 4	-	1.5	4	0.12
αi SV 20	-	6.5	20	2.5
αi SV 20L	-	6.5	20	2.5
αi SV 40	-	13	40	4.5
αi SV 40L	-	13	40	4.5
αi SV 80	-	19	80	5.5
αi SV 80L	-	19	80	5.5
αi SV 160	-	45	160	11
αi SV 160L	-	45	160	11
αi SV 360	-	115	360	26

200-V input series - 2-axis amplifier

Name	Axis	Rated output current [Arms]	Nominal current limit [Apeak]	Input power [kW]
αi SV 4/4	L	1.5	4	0.24
	M	1.5	4	
αi SV 4/20	L	1.5	4	2.62
	M	6.5	20	
αi SV 20/20	L	6.5	20	5
	M	6.5	20	
αi SV 20/40	L	6.5	20	7
	M	13	40	
αi SV 40/40	L	13	40	9
	M	13	40	

© MyFANUC 2D5504D5BAC945D385F48627D4977F6C

Name	Axis	Rated output current [Arms]	Nominal current limit [Apeak]	Input power [kW]
αi SV 40/80	L	13	40	10
	M	19	80	
αi SV 80/80	L	19	80	11
	M	19	80	
αi SV 80/160	L	19	80	12
	M	39	160	
αi SV 160/160	L	39	160	13
	M	39	160	
αi SV 20/20L	L	6.5	20	5
	M	6.5	20	
αi SV 20/40L	L	6.5	20	7
	M	13	40	
αi SV 40/40L	L	13	40	9
	M	13	40	
αi SV 40/80L	L	13	40	10
	M	19	80	
αi SV 80/80L	L	19	80	11
	M	19	80	

NOTE
The current limit (peak value) is a standard value. It varies by about ±10%, depending on the circuit constants.

200-V input series - 3-axis amplifier

Name	Axis	Rated output current [Arms]	Nominal current limit [Apeak]	Input power [kW]
αi SV 4/4/4	L	1.5	4	0.7
	M	1.5	4	
	N	1.5	4	
αi SV 20/20/20	L	6.5	20	7.5
	M	6.5	20	
	N	6.5	20	
αi SV 20/20/40	L	6.5	20	9.5
	M	6.5	20	
	N	13	40	
αi SV 40S/40S/40	L	10.5	40	13.5
	M	10.5	40	
	N	13	40	

400-V input series - 1-axis amplifier

Name	Axis	Rated output current [Arms]	Nominal current limit [Apeak]	Input power [kW]
αi SV 10HV	-	3.1	10	1.1
αi SV 20HV	-	5.6	20	1.7
αi SV 40HV	-	9.1	40	2.8
αi SV 80HV	-	18.2	80	5.8
αi SV 180HV	-	58	180	32
αi SV 360HV	-	115	360	63
αi SV 540HV	-	140	540	63
αi SV 10HVL	-	3.1	10	1.1

© MyFANUC 2D5504D5BAC945D385F48627D4977F6C

Name	Axis	Rated output current [Arms]	Nominal current limit [Apeak]	Input power [kW]
αi SV 20HVL	-	5.6	20	1.7
αi SV 40HVL	-	9.1	40	2.8
αi SV 80HVL	-	18.2	80	5.8

400-V input series - 2-axis amplifier

Name	Axis	Rated output current [Arms]	Nominal current limit [Apeak]	Input power [kW]
αi SV 10/10HV	L	3.1	10	2.1
	M	3.1	10	
αi SV 20/20HV	L	5.6	20	3.4
	M	5.6	20	
αi SV 20/40HV	L	5.6	20	4.5
	M	9.1	40	
αi SV 40/40HV	L	9.1	40	5.7
	M	9.1	40	
αi SV 40/80HV	L	9.1	40	8.6
	M	18.2	80	
αi SV 80/80HV	L	18.2	80	11.6
	M	18.2	80	
αi SV 10/10HVL	L	3.1	10	2.1
	M	3.1	10	
αi SV 20/20HVL	L	5.6	20	3.4
	M	5.6	20	
αi SV 20/40HVL	L	5.6	20	4.5
	M	9.1	40	
αi SV 40/40HVL	L	9.1	40	5.7
	M	9.1	40	

NOTE

The current limit (peak value) is a standard value. It varies by about ±10%, depending on the circuit constants.
In the case of αi SV 540HV, the maximum current is limited to 460 Ap when the rotation speed of the motor is low.

Dynamic brake module

Specification	Power supply voltage	Drive power supply capacity	Remarks
A06B-6079-H401	200 to 240VAC	220VA (at powering on) 22VA (after powering on)	Driven at 200 VAC
A06B-6079-H403	24VDC±10%	0.92A	Driven at DC24V
A06B-6069-H300	200 to 240VAC	220VA (at powering on) 22VA (after powering on)	Driven at 200 VAC
A06B-6069-H301	24VDC±10%	0.92A	Driven at DC24V

Dynamic brake

Refer to "FANUC AC SERVO MOTOR αi series DESCRIPTIONS (B-65262EN)" for information about the calculation of the dynamic brake stop distance.

The dynamic brake stop distance for the L-axis and M-axis (40S axes) of αi SV 40S/40S/40 is longer than that of other models (αi SV 40, αi SV20/40, αi SV40/40, and αi SV40/80).

© MyFANUC 2D5504D5BAC945D385F48627D4977F6C

As the coefficients for calculating the dynamic brake stop distance, use the values shown below.

Coefficients for the calculation with the L-axis and M-axis of αi SV 40S/40S/40

Motor model	SI unit		Gravitational system of units	
	A	B	A	B
αiF 4/4000	8.3×10^{-2}	1.6×10^{-7}	8.1×10^{-3}	1.5×10^{-8}
αiF 8/3000	3.3×10^{-2}	9.7×10^{-8}	3.3×10^{-3}	9.5×10^{-9}
βiS 12/3000	1.9×10^{-2}	2.5×10^{-8}	1.9×10^{-3}	2.4×10^{-9}

Cautions on the dynamic brake

To protect the servo amplifier, ensure that the load inertia does not exceed the allowable load inertia shown below that corresponds to the maximum rotation speed during use.

Motor model	Speed during use	Allowable load inertia (reflected to motor shaft) * Inertia of the motor itself not included	
αiF 22/4000HV	0 to 4000 min^{-1}	$0.0360kgm^2$	(Up to 3.0 times the motor inertia)
αiF 30/4000HV	Higher than 3000 min^{-1}	$0.0340kgm^2$	(Up to 2.0 times the motor inertia)
	0 to 3000 min^{-1}	$0.0510kgm^2$	(Up to 3.0 times the motor inertia)
αiS 22/6000HV	0 to 6000 min^{-1}	$0.0158kgm^2$	(Up to 3.0 times the motor inertia)
αiS 500/3000HV	0 to 3000 min^{-1}	$0.381kgm^2$	(Up to 3.0 times the motor inertia)
Other models than above models	0 to maximum motor speed	Up to 5.0 times the motor inertia	

⚠ **CAUTION**

1 If exceeding the above condition, contact FANUC.
2 Calculate and certainly confirm the dynamic brake stop distance by using coefficients for calculating the dynamic brake distance if it is within the assumption on the machine.
3 Applying the quick stop functions are recommended for shortening the stop distance at emergency stop or power failure.
As for the detail of this functions, refer to the PARAMETER MANUAL (B-65270EN).
For certain working of the quick stop functions at the power failure, keep the control power supply (24VDC) for CNC and servo amplifier by using the uninterruptible power supply(UPS) for example.
4 If some alarms occur, the stop distance will not be short because the quick stop functions does not operate effectively.
5 It should be certainly confirmed at the actual machine that the stop distance is shortened at emergency stop or power failure when the quick stop functions are applied.

⚠ **WARNING**

1 If the motor stops from its maximum rotational speed with greater than the allowable load inertia ratio, the inside of the servo amplifier may become abnormally hot, possibly causing damage to the servo amplifier.
Make no mistakes in the calculations of load inertia.

© MyFANUC 2D5504D5BAC945D385F48627D4977F6C

> ⚠ **WARNING**
> 2 If load inertia exceed the allowable condition, and any alarms or power failure (with the condition quick stop functions ineffective) occur among the rapid traverse, take 30 minutes intervals after power failure because of the protection of the servo amplifier.
> If the stopping motion by the dynamic brake is continuously repeated within the 30minutes, the inside of the servo amplifier may become abnormally hot and possibly being damaged.

2.3.3 αi SP series

200-V input series

Item \ Model	αi SP 2.2	αi SP 5.5	αi SP 11	αi SP 15	αi SP 22	αi SP 26	αi SP 30	αi SP 37	αi SP 45	αi SP 55
Rated output (HRV type)	13A	27A	48A	63A	95A	111A	133A	165A	198A	250A
	Spindle HRV2							Spindle HRV1 **Note 1**		
Maximum output voltage	240VAC									
Main circuit control method	Sine-wave PWM control with transistor (IGBT) bridge									
Input voltage range	283 to 339VDC									
Input power	2.7kW	6.8kW	13.2kW	17.5kW	25.2kW	29.8kW	35kW	43kW	56kW	65kW
Speed control range	Speed ratio 1:100									
Speed variation rate	0.1% or less of maximum speed (load variation: 10% to 100%)									
Applicable CNC	16*i*-B/18*i*-B/21*i*-B/0*i*-B/C/D, 30*i*/31*i*/32*i*-A, Power Mate *i*-D **Note 2**									
Applicable motors	See Subsection 4.2.1 of Chapter 4, "HOW TO SELECT THE AMPLIFIER" in this manual.									

400-V input series

Item \ Model	αi SP 5.5HV	αi SP 11HV	αi SP 15HV	αi SP 30HV	αi SP 45HV	αi SP 75HV	αi SP 100HV
Rated output (HRV type)	14A	23A	32A	70A	107A	170A	200A
	Spindle HRV2		Spindle HRV1 **Note 1**				
Maximum output voltage	480VAC						
Main circuit control method	Sine-wave PWM control with transistor (IGBT) bridge						
Input voltage range	565 to 679VDC						
Input power	6.8kW	13.2kW	17.5kW	35kW	50kW	82kW	110kW
Speed control range	Speed ratio 1:100						
Speed variation rate	0.1% or less of maximum speed (load variation: 10% to 100%)						
Applicable CNC	16*i*-B/18*i*-B/21*i*-B/0*i*-B/C/D, 30*i*/31*i*/32*i*-A, Power Mate *i*-D **Note 2**						
Applicable motors	See Subsection 4.2.2 of Chapter 4, "HOW TO SELECT THE AMPLIFIER" in this manual.						

© MyFANUC 2D5504D5BAC945D385F48627D4977F6C

NOTE

1 For spindle HRV2, the rated current is derated as follows:
αi SP37 85%, αi SP45 79%, αi SP55 80%
αi SP15HV 94%, αi SP30HV 83%, αi SP45HV 72%
αi SP75HV 83%, αi SP100HV 91%

2 Combine A06B-6141-Hxxx, A06B-6142-Hxxx, A06B-6144-Hxxx, A06B-6151-Hxxx, A06B-6152-Hxxx, or A06B-6154-Hxxx with 0*i* –D and 30*i*/31*i*/32*i*-A.
If combined with Power Mate *i* –D, restrictions are imposed on the functions.

Types (A and B) of αi SP models and sensors applicable to each type

Either of two αi SP models, types A and B, is available for each detector on the spindle to be used. The following lists combinations of an αi SP type, applicable sensors, and functions.

		Configuration	Configuration number									Remarks
			1	2	3	4	5	6	7	8	9	
Spindle system configuration	αi SP	TYPE A	○	○	○	○	○	○		○		
		TYPE B	○	○	○	○	○	○	○	○	○	
	Sensor on the motor	αi M sensor	○				○	○	○	○	○	
		αi MZ sensor		○								
		αi BZ sensor (for built-in spindle motor)			○							
		αi CZ sensor (for built-in spindle motor)				○						
	Sensor on the spindle	αi position coder					○					*3
		External 1-rotation						○				*3
		αi BZ sensor (for spindle)							○			*3
		αi CZ sensor (for spindle								○		
		α position coder S									○	*3
Function	Rigid tapping		○*1	○*2	○	○	○	○*2	○	○	○	
	Orientation by a position coder			○*6	○	○	○		○	○	○	
	Orientation by the external one-rotation signal							○*2				*5
	Spindle synchronization	Velocity synchronization	○*2	○*6	○	○	○	○*2	○	○	○	*4
		Phase synchronization		○*6	○	○	○	○*7	○	○	○	*4
	Threading			○*6	○	○	○		○	○	○	
	Cs-axis contour control			○*6	○				○	○	○	

*1 The spindle and motor must be interconnected directly or with a timing belt or gear. No orientation is available to adjust the tapping start position.
*2 The spindle and motor must be interconnected with a timing belt or gear.
*3 The spindle and detector must be interconnected in one-to-one connection mode.
*4 Two motor amplifiers are required.
*5 Note that the stop position moves by a backlash between the spindle and motor because of the theory of operation.
*6 The spindle and motor must be interconnected directly or with a timing belt or gear in one-to-one connection mode.
*7 Before specifying spindle synchronization, perform orientation to detect the one-rotation signal (PC1DT=1).

© MyFANUC 2D5504D5BAC945D385F48627D4977F6C

Other functions

	TYPE A	TYPE B	Remarks
Analog output of load meter and speedometer	Applicable	Applicable	Connector JY1
Analog override input	Applicable	Applicable	Connector JY1
Excitation off monitor signal output	Applicable	Applicable	Connector JX4
Position coder signal output		Applicable *1	Connector JX4
Spindle EGB function (Inter-SP communication function)		Applicable *1	Connector JX4

*1 The αi CZ sensor (for built-in spindle motor) and αi CZ sensor (for spindle) are excluded.

> ⚠ **CAUTION**
> The excitation off state signal output is not supported by A06B-6111, -6112, -6121, and -6122.

Submodule SW

By using αi SP TYPE A or αi SP TYPE B with a Submodule SW, the spindle switch function for switching between two motors (main and sub) with one spindle amplifier can be used. (*2)
For details of the sub module SW, see Chapter 10.

*2 The αi CZ sensor (for built-in spindle motor) and αi CZ sensor (for spindle) are excluded.

Submodule SM

By using αi SP TYPE B with the Submodule SM, the synchronous built-in spindle motor BiS series can be used.

> ⚠ **CAUTION**
> For the latest αiSP series, use Submodule SM unit version B or later.

© MyFANUC 2D5504D5BAC945D385F48627D4977F6C

3 ORDERING INFORMATION

Chapter 3, "ORDERING INFORMATION", consists of the following sections:

3.1 SERVO AMPLIFIER....37
3.1.1 200-V Input Series....37
3.1.1.1 αi PS series....37
3.1.1.2 αi PS_R series....38
3.1.1.3 αi SV series....38
3.1.1.4 αi SP series....39
3.1.2 400-V Input Series....40
3.1.2.1 αi PS series....40
3.1.2.2 αi SV series....40
3.1.2.3 αi SP series....41
3.1.3 Others....42
3.1.3.1 AC reactor....42
3.1.3.2 AC line filter....44
3.1.3.3 Sub module SW....44
3.1.3.4 Sub module SM....44
3.1.3.5 Connectors....44
3.1.3.6 Fuses....50
3.1.3.7 Power transformer....50
3.1.3.8 Regenerative discharge unit....53
3.1.3.9 Cables....54
3.1.3.10 Circuit breaker and magnetic contactor....54
3.1.3.11 Lightning surge protector....57
3.1.3.12 Noise filter....57
3.1.3.13 Sensors for servo....58
3.1.3.14 Battery for absolute Pulsecoder....58
3.1.3.15 Sensors for spindle....59
3.1.3.16 Power line switch unit....60

3.1 SERVO AMPLIFIER

3.1.1 200-V Input Series

3.1.1.1 αi PS series

Category	Ordering number	Name	Remarks
Standard	A06B-6140-H006	αi PS 5.5	
	A06B-6140-H011	αi PS 11	
	A06B-6140-H015	αi PS 15	
	A06B-6140-H026	αi PS 26	
	A06B-6140-H030	αi PS 30	
	A06B-6140-H037	αi PS 37	
	A06B-6140-H055	αi PS 55	

NOTE
See Section 4.3, “HOW TO SELECT THE αi PS series (POWER SUPPLY)” for details of how to select the αi PS.

© MyFANUC 2D5504D5BAC945D385F48627D4977F6C

3.1.1.2 αi PS_R series

Category	Ordering number	Name	Remarks
Standard	A06B-6115-H003	αi PS_R 3	
	A06B-6115-H006	αi PS_R 5.5	

NOTE
See Section 4.4, "HOW TO SELECT THE αi PS_R series (POWER SUPPLY RESISTOR DISCHARGE TYPE)"for details of how to select the αi PS_R.

3.1.1.3 αi SV series

1-axis amplifier

Category	Ordering number	Name	Remarks
Standard	A06B-6117-H101	αi SV 4	HRV2 and HRV3 supported
	A06B-6117-H103	αi SV 20	HRV2 and HRV3 supported
	A06B-6117-H104	αi SV 40	HRV2 and HRV3 supported
	A06B-6117-H105	αi SV 80	HRV2 and HRV3 supported
	A06B-6117-H106	αi SV 160	HRV2 and HRV3 supported
	A06B-6117-H109	αi SV 360	DBM required HRV2, HRV3, and HRV4 supported
	A06B-6117-H153	αi SV 20L	HRV4 supported
	A06B-6117-H154	αi SV 40L	HRV4 supported
	A06B-6117-H155	αi SV 80L	HRV4 supported
	A06B-6117-H156	αi SV 160L	HRV4 supported

2-axis amplifier

Category	Ordering number	Name	Remarks
Standard	A06B-6117-H201	αi SV 4/4	HRV2 and HRV3 supported
	A06B-6117-H203	αi SV 4/20	HRV2 and HRV3 supported
	A06B-6117-H205	αi SV 20/20	HRV2 and HRV3 supported
	A06B-6117-H206	αi SV 20/40	HRV2 and HRV3 supported
	A06B-6117-H207	αi SV 40/40	HRV2 and HRV3 supported
	A06B-6117-H208	αi SV 40/80	HRV2 and HRV3 supported
	A06B-6117-H209	αi SV 80/80	HRV2 and HRV3 supported
	A06B-6117-H210	αi SV 80/160	HRV2 and HRV3 supported
	A06B-6117-H211	αi SV 160/160	HRV2 and HRV3 supported
	A06B-6117-H255	αi SV 20/20L	HRV4 supported
	A06B-6117-H256	αi SV 20/40L	HRV4 supported
	A06B-6117-H257	αi SV 40/40L	HRV4 supported
	A06B-6117-H258	αi SV 40/80L	HRV4 supported
	A06B-6117-H259	αi SV 80/80L	HRV4 supported

3-axis amplifier

Category	Ordering number	Name	Remarks
Standard	A06B-6117-H301	αi SV 4/4/4	HRV2 and HRV3 supported
	A06B-6117-H303	αi SV 20/20/20	HRV2 and HRV3 supported
	A06B-6117-H304	αi SV 20/20/40	HRV2 and HRV3 supported
	A06B-6117-H306	αi SV 40S/40S/40	HRV2 and HRV3 supported

© MyFANUC 2D5504D5BAC945D385F48627D4977F6C

Category	Ordering number	Name	Remarks
Standard	A06B-6079-H401	DBM	Driven at 200 VAC
	A06B-6079-H403	DBM	Driven at 24 VDC

NOTE
1 See Section 4.1, “HOW TO SELECT THE αiSV SERIES (SERVOAMPLIFIER)” for details of how to select the αiSV.
2 For the αi SV 360, a dynamic brake module (DBM) is required.
The dynamic brake module is used to immediately stop the motor at emergency stop. Other αi SV models contain a similar function.

3.1.1.4 αi SP series

Ordering numbers depend on the detectors being used (function).

(1) TYPE A (1 spindle sensor input)

Category	Ordering number	Name	Remarks
Standard	A06B-6141-H002#H580	αi SP 2.2	
	A06B-6141-H006#H580	αi SP 5.5	
	A06B-6141-H011#H580	αi SP 11	
	A06B-6141-H015#H580	αi SP 15	
	A06B-6141-H022#H580	αi SP 22	
	A06B-6141-H026#H580	αi SP 26	
	A06B-6141-H030#H580	αi SP 30	
	A06B-6141-H037#H580	αi SP 37	
	A06B-6141-H045#H580	αi SP 45	
	A06B-6141-H055#H580	αi SP 55	

(2) TYPE B (2 spindle sensor inputs)

Category	Ordering number	Name	Remarks
Standard	A06B-6142-H002#H580	αi SP 2.2	
	A06B-6142-H006#H580	αi SP 5.5	
	A06B-6142-H011#H580	αi SP 11	
	A06B-6142-H015#H580	αi SP 15	
	A06B-6142-H022#H580	αi SP 22	
	A06B-6142-H026#H580	αi SP 26	
	A06B-6142-H030#H580	αi SP 30	
	A06B-6142-H037#H580	αi SP 37	
	A06B-6142-H045#H580	αi SP 45	
	A06B-6142-H055#H580	αi SP 55	

NOTE
See Section 4.2, “HOW TO SELECT THE αiSP SERIES (SPINDLE AMPLIFIER)” for details of how to select the αiSP.

© MyFANUC 2D5504D5BAC945D385F48627D4977F6C

(3) TYPE B (2 spindle sensor inputs)

Category	Ordering number	Name	Remarks
Standard	A06B-6144-H002#H590	αi SP 2.2	
	A06B-6144-H006#H590	αi SP 5.5	
	A06B-6144-H011#H590	αi SP 11	
	A06B-6144-H015#H590	αi SP 15	
	A06B-6144-H022#H590	αi SP 22	
	A06B-6144-H026#H590	αi SP 26	
	A06B-6144-H030#H590	αi SP 30	
	A06B-6144-H037#H590	αi SP 37	
	A06B-6144-H045#H590	αi SP 45	
	A06B-6144-H055#H590	αi SP 55	

NOTE
To use the speed tandem control (including spindle tandem drive for four or more spindles) or tandem resonance elimination control of the spindle, specify this amplifier.

3.1.2 400-V Input Series

3.1.2.1 αi PS series

Category	Ordering number	Name	Remarks
Standard	A06B-6150-H011	αi PS 11HV	
	A06B-6150-H018	αi PS 18HV	
	A06B-6150-H030	αi PS 30HV	
	A06B-6150-H045	αi PS 45HV	
	A06B-6150-H060	αi PS 60HV	
	A06B-6150-H075	αi PS 75HV	
	A06B-6150-H100	αi PS 100HV	

NOTE
See Section 4.3, “HOW TO SELECT THE αi PS series (POWER SUPPLY)” for details of how to select the αi PS.

3.1.2.2 αi SV series

1-axis amplifier

Category	Ordering number	Name	Remarks
Standard	A06B-6127-H102	αi SV 10HV	HRV2 and HRV3 supported
	A06B-6127-H103	αi SV 20HV	HRV2 and HRV3 supported
	A06B-6127-H104	αi SV 40HV	HRV2 and HRV3 supported
	A06B-6127-H105	αi SV 80HV	HRV2 and HRV3 supported
	A06B-6127-H106	αi SV 180HV	DBM required HRV2, HRV3, and HRV4 supported
	A06B-6127-H109	αi SV 360HV	DBM required HRV2, HRV3, and HRV4 supported
	A06B-6127-H110	αi SV 540HV	DBM required Only HRV2 supported
	A06B-6127-H152	αi SV 10HVL	HRV4 supported
	A06B-6127-H153	αi SV 20HVL	HRV4 supported
	A06B-6127-H154	αi SV 40HVL	HRV4 supported
	A06B-6127-H155	αi SV 80HVL	HRV4 supported

© MyFANUC 2D5504D5BAC945D385F48627D4977F6C

2-axis amplifier

Category	Ordering number	Name	Remarks
Standard	A06B-6127-H202	αi SV 10/10HV	HRV2 and HRV3 supported
	A06B-6127-H205	αi SV 20/20HV	HRV2 and HRV3 supported
	A06B-6127-H206	αi SV 20/40HV	HRV2 and HRV3 supported
	A06B-6127-H207	αi SV 40/40HV	HRV2 and HRV3 supported
	A06B-6127-H208	αi SV 40/80HV	HRV2 and HRV3 supported
	A06B-6127-H209	αi SV 80/80HV	HRV2 and HRV3 supported
	A06B-6127-H252	αi SV 10/10HVL	HRV4 supported
	A06B-6127-H255	αi SV 20/20HVL	HRV4 supported
	A06B-6127-H256	αi SV 20/40HVL	HRV4 supported
	A06B-6127-H257	αi SV 40/40HVL	HRV4 supported

Dynamic brake module

Category	Ordering number	Name	Remarks
Standard	A06B-6079-H401	DBM	αi SV 180HV, αi SV 360HV, αi SV 540HV Driven at 200 VAC
	A06B-6079-H403	DBM	αi SV 180HV, αi SV 360HV, αi SV 540HV Driven at 24 VDC
	A06B-6069-H300	DBM	αi SV 360HV (Note 3), Driven at 200 VAC
	A06B-6069-H301	DBM	αi SV 360HV (Note 3), Driven at 24 VDC

NOTE

1 See Section 4.1, “HOW TO SELECT THE αiSV SERIES (SERVOAMPLIFIER)” for details of how to select the αiSV.

2 For the αi SV 180HV, αi SV 360HV, and αi SV 540HV, a dynamic brake module (DBM) is required.
The dynamic brake module is used to immediately stop the motor at emergency stop. Other αi SV models contain a similar function.

3 A06B-6069-H300 and -H301 are used when the servo motor is the αi S1000HV, 2000HV, or 3000HV.

3.1.2.3 αi SP series

Ordering numbers depend on the detectors being used (function).

(1) TYPE A (1 spindle sensor input)

Category	Ordering number	Name	Remarks
Standard	A06B-6151-H006#H580	αi SP 5.5HV	
	A06B-6151-H011#H580	αi SP 11HV	
	A06B-6151-H015#H580	αi SP 15HV	
	A06B-6151-H030#H580	αi SP 30HV	
	A06B-6151-H045#H580	αi SP 45HV	
	A06B-6151-H075#H580	αi SP 75HV	
	A06B-6151-H100#H580	αi SP 100HV	

© MyFANUC 2D5504D5BAC945D385F48627D4977F6C

(2) TYPE B (2 spindle sensor inputs)

Category	Ordering number	Name	Remarks
Standard	A06B-6152-H006#H580	αi SP 5.5HV	
	A06B-6152-H011#H580	αi SP 11HV	
	A06B-6152-H015#H580	αi SP 15HV	
	A06B-6152-H030#H580	αi SP 30HV	
	A06B-6152-H045#H580	αi SP 45HV	
	A06B-6152-H075#H580	αi SP 75HV	
	A06B-6152-H100#H580	αi SP 100HV	

NOTE
See Section 4.2, “HOW TO SELECT THE αiSP SERIES (SPINDLE AMPLIFIER)” for details of how to select the αiSP.

(3) TYPE B (2 spindle sensor inputs)

Category	Ordering number	Name	Remarks
Standard	A06B-6154-H006#H590	αi SP 5.5HV	
	A06B-6154-H011#H590	αi SP 11HV	
	A06B-6154-H015#H590	αi SP 15HV	
	A06B-6154-H030#H590	αi SP 30HV	
	A06B-6154-H045#H590	αi SP 45HV	
	A06B-6154-H075#H590	αi SP 75HV	
	A06B-6154-H100#H590	αi SP 100HV	

NOTE
To use the speed tandem control (including spindle tandem drive for four or more spindles) or tandem resonance elimination control of the spindle, specify this amplifier.

3.1.3 Others

3.1.3.1 AC reactor

Category	Ordering number	Applicable models	Remarks
Standard	A81L-0001-0155	αi PS 5.5, 11	(Note)
	A81L-0001-0156	αi PS 15	
	A81L-0001-0157	αi PS 26	
	A81L-0001-0158	αi PS 30	
	A81L-0001-0159	αi PS 37	
	A81L-0001-0160	αi PS 55	
	A81L-0001-0163	αi PS 11HV, 18HV	(Note)
	A81L-0001-0164	αi PS 30HV, 45HV	
	A81L-0001-0179	αi PS 60HV	
	A81L-0001-0165	αi PS 75HV, 100HV	
	A81L-0001-0167	αi PS 11HV	(Note)
	A81L-0001-0170	αi PS 5.5	(Note)

For the outside dimensions, see Subsection 8.1.2, "AC Reactor Unit". For the tightening torque, see Subsection 9.3.1.1, "Details of cable K1 (Common power supply line)".

© MyFANUC 2D5504D5BAC945D385F48627D4977F6C

NOTE

When an αiSV or αiSP unit with a small capacity is connected to the αiPS, the AC reactor unit A81L-0001-0170 (200-V input) or A81L-0001-0167 (400-V input) must be used. For details, see the next item.

AC reactor used when an αi SV or αi SP with a small capacity is connected to the αi PS

- 200-V input series

When only as many αi SV or αi SP units as indicated in the tables below are connected to a power regeneration type αi PS unit, AC reactor unit A81L-0001-0170 must be used.

⚠CAUTION

1 When using the normal AC reactor, depending on the power state (when the power impedance is low or the voltage is out of balance), power regeneration is maintained and input current becomes too large, possibly damaging the amplifier.
2 This problem does not occur in the resistance regeneration type αi PS_R.

αi SV

Name	Number of connected units	Ordering number (*1)
αi SV 4	1	A06B-6117-H101
αi SV 4	2	A06B-6117-H101
αi SV 20	1	A06B-6117-H103
αi SV 20	2	A06B-6117-H103
αi SV 20L	1	A06B-6117-H153
αi SV 20L	2	A06B-6117-H153
αi SV 4/4	1	A06B-6117-H201
αi SV 4/20	1	A06B-6117-H203
αi SV 20/20	1	A06B-6117-H205
αi SV 20/20L	1	A06B-6117-H255

αi SP

Name	Number of connected units	Ordering number (*2)
αi SP 2.2	1	A06B-6141-H002#H580 A06B-6142-H002#H580

*1 The same restriction applies to the old specification A06B-6114-Hxxx.
*2 The same restriction applies to the old specifications A06B-6111-Hxxx and A06B-6112-Hxxx.

- 400-V input series

When only as many αi SV or αi SP units as indicated in the tables below are connected to a power regeneration type αi PS unit, AC reactor unit A81L-0001-0167 must be used.

⚠ CAUTION

When using the normal AC reactor, depending on the power state (when the power impedance is low or the voltage is out of balance), power regeneration is maintained and input current becomes too large, possibly damaging the amplifier.

© MyFANUC 2D5504D5BAC945D385F48627D4977F6C

αi SV

Name	Number of connected units	Ordering number (*1)
αi SV 10HV	1	A06B-6127-H102
αi SV 20HV	1	A06B-6127-H103
αi SV 10HVL	1	A06B-6127-H152
αi SV 20HVL	1	A06B-6127-H153
αi SV 10/10HV	1	A06B-6127-H202
αi SV 20/20HV	1	A06B-6127-H205
αi SV 10/10HVL	1	A06B-6127-H252
αi SV 20/20HVL	1	A06B-6127-H255

*1 The same restriction applies to the old specification A06B-6124-Hxxx.

3.1.3.2 AC line filter

Category	Ordering number	Applicable models	Remarks
Standard	A81L-0001-0171	αi PS_R 3	
	A81L-0001-0101#C	αi PS_R 5.5	

3.1.3.3 Sub module SW

Category	Ordering number	Applicable models	Remarks
Optional	A06B-6111-H401	αi SP TYPE A, TYPE B	Main unit 60-mm width
	A06B-6111-K808	αi SP 90mm,150mm TYPE A	Connection cable One cable needs to be prepared for each sub module SW.
	A06B-6111-K809	αi SP 90mm,150mm TYPE B	
	A06B-6111-K810	αi SP 60mm, TYPE A	
	A06B-6111-K811	αi SP 60mm, TYPE B	

A sub module SW can be used with the αi SP to support the spindle switch function.

(a) A cable for connecting the sub module SW and the αi SP needs to be prepared.

(b) See Section 10.3, and prepare a metal fitting for mounting the sub module SW.

3.1.3.4 Sub module SM

Category	Ordering number	Applicable models	Remarks
Optional	A06B-6111-H403	αi SP 5.5HV to 45HV TYPE B	
	A06B-6111-H404	αi SP 75HV to 100HV TYPE B	

A sub module SM is used with the αi SP TYPE B to drive a synchronous spindle motor.

3.1.3.5 Connectors

The ordering drawing number of the connectors required for connection of input/output signals of each amplifier, and the configuration of each connector, are shown below.

The "Use" column of the table indicates connection symbol K*, which is described in Section 9.3, "CABLE CONNECTION DETAILS."

For the connector dimensions, see Appendix C.

© MyFANUC 2D5504D5BAC945D385F48627D4977F6C

(1) Usable with each amplifier:
Connectors for the αi PS interface (between CXA2A and CXA2B)

Category	Ordering number	Quantity	Use	Connection tool
Standard	A06B-6110-K210	Housing: 1 pcs. Contact: 8 pcs.	K69 (Note 1)	Contact crimping tool A06B-6110-K220#D2M
	A06B-6110-K211	Housing: 1 pcs. Contact: 2 pcs.	(Note 2)	Contact crimping tool A06B-6110-K220#D2M

NOTE
1 See Subsection 9.3.1.4 as for the detailed connection of K69.
2 See Subsection 9.3.2.10 as for the connection of battery.

(2) Usable with each amplifier:
Power line connectors for motors and power supplies

Category	Ordering number	Quantity	Use	Connection tool
Standard	A06B-6110-K200 #XXSS	Housing: 1 pcs. (XX key) Contact: 4 pcs. (SS size)	K1, K10, K21	Contact crimping tool A06B-6110-K220#D5SS
	A06B-6110-K200 #XXS	Housing: 1 pcs. (XX key) Contact: 4 pcs. (S size)	K1, K10, K21	Contact crimping tool A06B-6110-K220#D5S
	A06B-6110-K200 #XXM	Housing: 1 pcs. (XX key) Contact: 4 pcs. (M size)	K1, K10, K21	Contact crimping tool A06B-6110-K220#D5M
	A06B-6110-K200 #XXL	Housing: 1 pcs. (XX key) Contact: 4 pcs. (L size)	K1, K10, K21	Contact crimping tool A06B-6110-K220#D5L
	A06B-6110-K201 #XYSS	Housing: 1 pcs. (XY key) Contact: 4 pcs. (SS size)	K1, K10, K21	Contact crimping tool A06B-6110-K220#D5SS
	A06B-6110-K201 #XYS	Housing: 1 pcs. (XY key) Contact: 4 pcs. (S size)	K1, K10, K21	Contact crimping tool A06B-6110-K220#D5S
	A06B-6110-K201 #XYM	Housing: 1 pcs. (XY key) Contact: 4 pcs. (M size)	K1, K10, K21	Contact crimping tool A06B-6110-K220#D5M
	A06B-6110-K201 #XYL	Housing: 1 pcs. (XY key) Contact: 4 pcs. (L size)	K1, K10, K21	Contact crimping tool A06B-6110-K220#D5L
	A06B-6110-K202 #YYSS	Housing: 1 pcs. (YY key) Contact: 4 pcs. (SS size)	K1, K10, K21	Contact crimping tool A06B-6110-K220#D5SS
	A06B-6110-K202 #YYS	Housing: 1 pcs. (YY key) Contact: 4 pcs. (S size)	K1, K10, K21	Contact crimping tool A06B-6110-K220#D5S
	A06B-6110-K202 #YYM	Housing: 1 pcs. (YY key) Contact: 4 pcs. (M size)	K1, K10, K21	Contact crimping tool A06B-6110-K220#D5M
	A06B-6110-K202 #YYL	Housing: 1 pcs. (YY key) Contact: 4 pcs. (L size)	K1, K10, K21	Contact crimping tool A06B-6110-K220#D5L

(3) For αi PS

Category	Ordering number	Quantity	Use	Connection tool
Standard	A06B-6071-K203	Housing: 1 pcs./module Contact: 7 pcs.	K3, K6, K7	Contact crimping tool A06B-6110-K220#D3L
	A06B-6130-K201	Housing: 1 pcs. Contact: 6 pcs.	K100	Contact crimping tool A06B-6110-K220#D2M

(4) For αi SV

Category	Ordering number	Quantity	Use	Connection tool
Standard	A06B-6078-K225	Case: 1 pcs. Connector: 1 pcs. Solder type	K22	
	A06B-6073-K216	Case: 2 pcs. Connector: 4 pcs.	K24,K25	Contact crimping tool A06B-6110-K220#D3L

© MyFANUC 2D5504D5BAC945D385F48627D4977F6C

(5) For αi SP

Category	Ordering number	Quantity	Use	Use
Standard	A06B-6078-K222	Case: 1 pcs. Connector: 1 pcs. Solder type	K14, K17, K71	
	A06B-6078-K223	Case: 1 pcs. Connector: 1 pcs. Crimp type	K12	Purchase a connector for F130-20S from Hirose Electric.
	A06B-6078-K224	Case: 1 pcs. Connector: 1 pcs. Solder type	K33	
	A06B-6078-K225	Case: 1 pcs. Connector: 1 pcs. Solder type	K16	

NOTE

1 Some connectors are attached to a cable by crimping or soldering. Be careful when placing an order.

2 When attaching a connector of crimp type, use a dedicated tool prepared by each manufacturer. For the specifications of the tools, see the description of "Connection tools" below.

Connection tools

Connector connection tools are indicated below with their ordering numbers for purchase from FANUC. The connection tools can also be directly purchased from each manufacturer.

(a) Connectors manufactured by Tyco Electronics AMP
D-2100 series (for αi PS interface)

Category	Ordering number	Manufacturer part number	Use
Optional	A06B-6110-K220#D2M	91595-1	M size Contact crimping tool
Optional	A06B-6110-K220#D2R	1276716-1	Contact extractor

D-3000 series (for αi PS)

Category	Ordering number	Manufacturer part number	Use
Optional	A06B-6110-K220#D3L	91558-1	L size Contact crimping tool
Optional	A06B-6110-K220#D3R	234168-1	Contact extractor

D-5000 series (for power line)

Category	Ordering number	Manufacturer part number	Use
Optional	A06B-6110-K220#D5SS	91596-1	SS size Contact crimping tool
Optional	A06B-6110-K220#D5S	234170-1	S size Contact crimping tool
Optional	A06B-6110-K220#D5M	234171-1	M size Contact crimping tool
Optional	A06B-6110-K220#D5L	1366044-1	L size Contact crimping tool
Optional	A06B-6110-K220#D5R	409158-1	Contact extractor

© MyFANUC 2D5504D5BAC945D385F48627D4977F6C

(b) Half-pitch 20-pin press-mount connector of Hirose Electric (FI30-20S)

Name	Manufacturer part number
Jig for neat cabling	FI30-20CAT1
Jig for press-mounting	HHP-502, FI30-20GP

(c) Half-pitch 20-pin press-mount connector of Honda Tsushin Kogyo (PCR-E20FA)

Name	Manufacturer part number
Jig for neat cabling	JGPS-015-1/1-20, JGPS-014
Jig for press-mounting	MFC-K1, PCS-K1

Connector configuration

- Configuration of A06B-6110-K210

Connector name	Manufacturer	Part number	Quantity	Use	Dimensions
CXA2A	AMP	1-1318119-4 (housing)	1	For αi PS interface	C(d)
CXA2B		131807-1 (contact)	8		-

- Configuration of A06B-6110-K211

Connector name	Manufacturer	Part number	Quantity	Use	Dimensions
CXA2A	AMP	1-1318119-4 (housing)	1	For connection to separate battery	C(d)
CXA2B		131807-1 (contact)	2		-

- Configuration of A06B-6093-K303 (Connector with lock mechanism)

Connector name	Manufacturer	Part number	Quantity	Use	Dimensions
CX5X	Japan Aviation Electronics Industry, Ltd.	IL-L2S－S3L-B (N)	1	For connection to separate battery	-
		IL-C2-1-00001	2		-

- Configuration of A06B-6110-K200#XXSS

Connector name	Manufacturer	Part number	Quantity	Use	Dimensions
CZ2	AMP	1-917807-2 (housing)	1	For L-axis motor power	-
CZ2L		1318986-6 (contact)	4	Wire diameter: 0.75 mm^2 max.	-

- Configuration of A06B-6110-K200#XXS

Connector name	Manufacturer	Part number	Quantity	Use	Dimensions
CZ2	AMP	1-917807-2 (housing)	1	For L-axis motor power	-
CZ2L		316040-6 (contact)	4	Wire diameter: 2.0mm^2 max	-

- Configuration of A06B-6110-K200#XXM

Connector name	Manufacturer	Part number	Quantity	Use	Dimensions
CZ1, CZ2	AMP	1-917807-2 (housing)	1	For input power supply and L-axis motor power	-
CZ2L		316041-6 (contact)	4	Wire diameter: 5.5mm^2 max	-

- Configuration of A06B-6110-K200#XXL

Connector name	Manufacturer	Part number	Quantity	Use	Dimensions
CZ2	AMP	1-917807-2 (housing)	1	For L-axis motor power	-
CZ2L		1318697-6 (contact)	4	Wire diameter: 8.0mm^2 max	-

© MyFANUC 2D5504D5BAC945D385F48627D4977F6C

- Configuration of A06B-6110-K201#XYSS

Connector name	Manufacturer	Part number	Quantity	Use	Dimensions
CZ2M	AMP	3-917807-2 (housing)	1	For M-axis motor power Wire diameter: 0.75 mm^2 max	-
		1318986-6 (contact)	4		-

- Configuration of A06B-6110-K201#XYS

Connector name	Manufacturer	Part number	Quantity	Use	Dimensions
CZ2M	AMP	3-917807-2 (housing)	1	For M-axis motor power Wire diameter: 2.0mm^2 max	-
		316040-6 (contact)	4		-

- Configuration of A06B-6110-K201#XYM

Connector name	Manufacturer	Part number	Quantity	Use	Dimensions
CZ2M	AMP	3-917807-2 (housing)	1	For M-axis motor power Wire diameter: 5.5mm^2 max	-
		316041-6 (contact)	4		-

- Configuration of A06B-6110-K201#XYL

Connector name	Manufacturer	Part number	Quantity	Use	Dimensions
CZ2M	AMP	3-917807-2 (housing)	1	For M-axis motor power Wire diameter: 8.0mm^2 max	-
		1318697-6 (contact)	4		-

- Configuration of A06B-6110-K202#YYSS

Connector name	Manufacturer	Part number	Quantity	Use	Dimensions
CZ2N	AMP	2-917807-2 (housing)	1	For N-axis motor power Wire diameter: 0.75 mm^2 max	-
		1318986-6 (contact)	4		-

- Configuration of A06B-6110-K202#YYS

Connector name	Manufacturer	Part number	Quantity	Use	Dimensions
CZ2N CZ3	AMP	2-917807-2 (housing)	1	For N-axis motor power PSR regenerative resistor Wire diameter: 2.0mm^2 max	-
		316040-6 (contact)	4		-

- Configuration of A06B-6110-K202#YYM

Connector name	Manufacturer	Part number	Quantity	Use	Dimensions
CZ2N	AMP	2-917807-2 (housing)	1	For N-axis motor power Wire diameter: 5.5mm^2 max	-
		316041-6 (contact)	4		-

- Configuration of A06B-6110-K202#YYL

Connector name	Manufacturer	Part number	Quantity	Use	Dimensions
CZ2N	AMP	2-917807-2 (housing)	1	For N-axis motor power Wire diameter: 8.0mm^2 max	-
		1318697-6 (contact)	4		-

- Configuration of A06B-6071-K203

Connector name	Manufacturer	Part number	Quantity	Use	Dimensions
CX1A	AMP	1-178128-3 (housing)	1	For control, single-phase 200VAC input	C(a)
		1-175218-2 (contact)	3		C(c)
CX4	AMP	1-178128-3 (housing)	1	For emergency stop signal	C(a)
		1-175218-2 (contact)	2		C(c)
CX3	AMP	2-178128-3 (housing)	1	For ON/OFF control for external MCC	C(b)
		1-175218-2 (contact)	2		C(c)

© MyFANUC 2D5504D5BAC945D385F48627D4977F6C

- Configuration of A06B-6130-K201

Connector name	Manufacturer	Part number	Quantity	Use	Dimensions
CX37	AMP	1-1318119-3 (housing)	1	For power failure detection output	-
		1318107-1 (contact)	6		-

- Configuration of A06B-6078-K225 (solder type, side cable type)

Connector name	Manufacturer	Part number	Quantity	Use	Dimensions
JFx	Hirose Electric	FI40B-2015S (connector)	1	For Pulsecoder	C(g)
		FI-20-CVS2 (case)	1		C(h)

- Configuration of A06B-6073-K216

Connector name	Manufacturer	Part number	Quantity	Use	Dimensions
CX8	AMP	2-178128-3 (housing)	1	For DB interlock signals	C(b)
		1-175218-2 (contact)	2		C(c)
CX9	AMP	1-178128-3 (housing)	1	For DB driving coil	C(a)
		1-175218-2 (contact)	2		C(c)

- Configuration of A06B-6078-K222 (solder type, side cable type)

Connector name	Manufacturer	Part number	Quantity	Use	Dimensions
JY1 JYA2 JYA3 JYA4	Hirose Electric	FI40B-20S (connector)	1	See below.	C(f)
		FI-20-CVS5 (case)	1		C(i)

Use αi M sensor, αi MZ sensor, αi BZ sensor, external one-rotation signal, speedometer, or analog override

- Configuration of A06B-6078-K223 (crimp type, side cable type)

Connector name	Manufacturer	Part number	Quantity	Use	Dimensions
JA7A JA7B	Hirose Electric	FI30-20S (connector)	1	See below.	C(e)
		FI-20-CVS2 (case)	1		C(h)

Use JA7A and JA7B : For communication between CNC and SP or SPC

- Configuration of A06B-6078-K224 (solder type, side cable type)

Connector name	Manufacturer	Part number	Quantity	Use	Dimensions
JA7A JA7B	Hirose Electric	FI40B-20S (connector)	1	See below.	C(f)
		FI-20-CVS2 (case)	1		C(h)

Use JA7A and JA7B : For communication between CNC and SP or SPC

- Configuration of A06B-6078-K225 (solder type, side cable type)

Connector name	Manufacturer	Part number	Quantity	Use	Dimensions
JYA3 JYA4	Hirose Electric	FI40B-2015S (connector)	1	See below.	C(g)
		FI-2015-CVS (case)	1		C(j)

Use JYA3: For αi position coder
JYA4: For αi position coder S

© MyFANUC 2D5504D5BAC945D385F48627D4977F6C

3.1.3.6 Fuses

The ordering numbers of fuses used with each amplifier (αi PS, αi SV, αi SP) are indicated below.

(1) For control power supply for αi PS

Category	Ordering number	Remarks
Optional	A06B-6077-K250	Manufacturer: DAITO TSUSHIN KOGYO Ltd. Manufacturer part number : DM20, DM50 Specification : 2A/250V, 5A/250V Use : For short-circuit protection of 200VAC

(2) For control power supply for αi PS_R

Category	Ordering number	Remarks
Optional	A06B-6081-K250	Manufacturer: DAITO TSUSHIN KOGYO Ltd. Manufacturer part number : DM50 Specification : 5A/250V Use : For short-circuit protection of 200VAC

(3) For control power supply for αi SV and αi SP

Category	Ordering number	Remarks
Optional	A06B-6073-K250	Manufacturer: DAITO TSUSHIN KOGYO Ltd. Manufacturer part number : LM32C Specification : 3.2A/48V Use : For short-circuit protection of 24-VDC control power supply

NOTE

1 When a fuse blows, the control circuit may often be faulty. In such a case, replacing the fuse does not correct the trouble. Replace the amplifier.

2 A fuse is installed on the control board of an amplifier, but is not directly accessible for replacement from the outside. When replacing a fuse, extract the control board.

3.1.3.7 Power transformer

When an αi PS series of the 200V input series is used in an area where the input voltage is not within the range of 200 to 240VAC, a power transformer is required. The ordering drawing numbers and specifications of power transformers manufactured by FANUC are listed below. When other than a FANUC power transformers is to be prepared by the user, it must satisfy the transformer specifications indicated Section 2.1.

Ordering drawing numbers of power transformers manufactured by FANUC

Category	Ordering number	Name	Remarks
Optional	A80L-0024-0006	For αi PS_R 3 (at 2kw output)	
	A80L-0024-0003	For αi PS_R 3 (at 3kw output)	
	A06B-6052-J001	For αi PS_R 5.5 (at 5.5kw output) For αi PS 5.5	Primary 380/415/460VAC Secondary 200VAC
	A06B-6044-J006	For αi PS_R 5.5 (at 7.5kw output) For αi PS 11i	
	A06B-6044-J007	For αi PS 15	
	A06B-6044-J010	For αi PS 26, 30	
	A06B-6044-J015	For αi PS 37 For αi PS 55 (at 45kw output)	

© MyFANUC 2D5504D5BAC945D385F48627D4977F6C

Specifications of power transformers manufactured by FANUC

Power transformer for αi PS

Model / Item	αi PS 5.5	αi PS 11	αi PS 15	αi PS 26, 30	αi PS 37 αi PS 55 (at 45kw output)
Ordering drawing number	A06B-6052-J001	A06B-6044-J006	A06B-6044-J007	A06B-6044-J010	A06B-6044-J015
FANUC drawing number	A80L-0001-0496	A80L-0001-0313	A80L-0001-0314	A80L-0001-0352	A80L-0001-0452
Rated capacity	10kVA	20kVA	30kVA	45kVA	64kVA
Rated primary voltage	380/415/460VAC 230VAC (The secondary is used as an autotransformer.) +10% -15%, 50/60±1Hz, 3ϕ				
Rated primary current	15A (at 380V)	30A (at 380V)	46A (at 380V)	68A (at 380V)	97A (at 380V)
	14A (at 415V)	28A (at 415V)	42A (at 415V)	63A (at 415V)	89A (at 415V)
	13A (at 460V)	25A (at 460V)	38A (at 460V)	56A (at 460V)	80A (at 460V)
Rated secondary voltage	200/220/230VAC				
Rated primary current	29A	58A	87A	130A	185A
Voltage regulation at the secondary	5%				
Voltage deviation at the secondary	±3%				
Connection	Y-Y connection				
Insulation	Class H (maximum allowable temperature : 180°C)				
Ambient temperature	0 to 45°C				
Allowable temperature rise	135deg				
Relative humidity	Max. 95%RH				
Type	Dry type, natural air cooling type				
Dielectric withstand voltage	2000VAC, for 1 minute				
Weight	Max. 61kg	Max. 115kg	Max. 165kg	Max. 260kg	Max. 375kg
Outline drawing	Fig.8.1.4(a)	Fig.8.1.4(b)	Fig.8.1.4(c)	Fig.8.1.4(d)	Fig.8.1.4(e)
Connection diagram	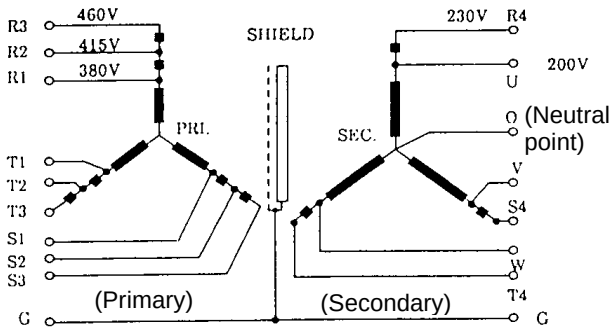				

© MyFANUC 2D5504D5BAC945D385F48627D4977F6C

Power transformer for αi PS_R

Model / Item	αi PS_R 3 (at 2kw output)	αi PS_R 3 (at 3kw output)	αi PS_R 5.5 (at 5.5kw output)	αi PS_R 5.5 (at 7.5kw output)
Ordering drawing number	A80L-0024-0006	A80L-0026-0003	A06B-6052-J001	A06B-6044-J006
FANUC drawing number	A80L-0024-0006	A80L-0026-0003	A80L-0001-0496	A80L-0001-0313
Rated capacity	3.5kVA	5kVA	10kVA	20kVA
Rated primary voltage	200/220/230/240VAC , Δ connection 380/415/460/480/550VAC , Y connection ±15%, 50/60Hz±2Hz, 3ϕ		380/415/460VAC 230VAC(The secondary is used as an autotransformer.) +10% -15%, 50/60±1Hz, 3ϕ	
Rated primary current			15A (at 380V)	30A (at 380V)
	5.3A (at 380V)	7.6A (at 380V)	14A (at 415V)	28A (at 415V)
			13A (at 460V)	25A (at 460V)
Rated secondary voltage	210VAC		200VAC	
Rated primary current	9.6A	13.7A	29A	58A
Voltage regulation at the secondary	2%		5%	
Voltage deviation at the secondary	±3%			
Connection	Δ-Δ connection or Y-Δ connection		Y-Y connection	
Insulation	Class B (maximum allowable temperature: 130°C)		Class H (maximum allowable temperature: 180°C)	
Ambient temperature	-20 to 55°C		0 to 45°C	
Allowable temperature rise	135deg			
Thermostat	B contact (operating temperature: 135°C)		None	
Relative humidity	Max. 95%RH			
Type	Dry type, natural air cooling type			
Dielectric withstand voltage	2300VAC, for 1 minute		2000VAC, for 1 minute	
Weight	Max. 27kg	Max. 36kg	Max. 61kg	Max. 115kg
Outline drawing	Fig.8.1.4(f)	Fig.8.1.4(f)	Fig.8.1.4(f)	Fig.8.1.4(f)
Connection diagram	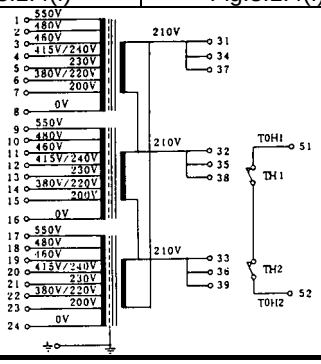		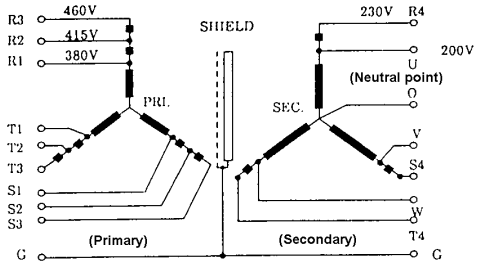	

© MyFANUC 2D5504D5BAC945D385F48627D4977F6C

Connecting a power transformer

Power transformers must be set according to the supply voltage used.

(a) Connection points of power transformers for αi PS 5.5, αi PS 11, αi PS 15, αi PS 26, αi PS 30, and αi PS 37

Supply voltage	Connection points at the primary	Remarks
380 VAC	R - R1, S - S1, T - T1 (380-V tap)	
400 VAC	R - R1, S - S1, T - T1 (380-V tap)	
415 VAC	R - R2, S - S2, T - T2 (415-V tap)	
440 VAC	R - R2, S - S2, T - T2 (415-V tap)	
460 VAC	R - R3, S - S3, T - T3 (460-V tap)	
480 VAC	R - R3, S - S3, T - T3 (460-V tap)	

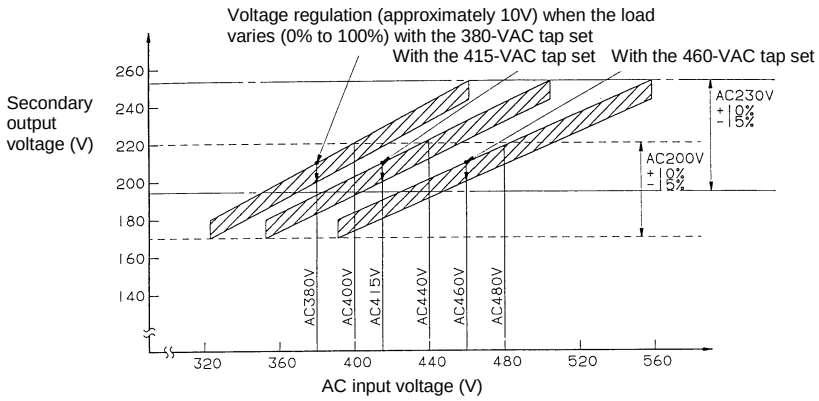

⚠ CAUTION

1 When installing a transformer in a cabinet, be careful to ensure that the transformer does not thermally affect other equipment. For example, separate the transformer from the other equipment.
2 When installing a transformer outside the cabinet, make sure that the transformer is not directly exposed to cutting chips or coolant.
3 If there is a possibility of the transformer falling, secure the transformer with bolts or similar.

3.1.3.8 Regenerative discharge unit

Whenever a αi PS_R (resistance regeneration type Power Supply) is used, a regenerative discharge unit must be specified. For how to select the regenerative discharge unit, see Subsection 4.4.4.

Category	Name	Ordering number	Remarks
Standard	αi PS_R 3	A06B-6089-H510	16Ω/100W (at natural cooling)
	αi PS_R 3, 5.5	A06B-6089-H500	16Ω/200W (at natural cooling)
		A06B-6089-H713	16Ω/800W (forced cooling fan motor is included)
	αi PS_R 5.5	A06B-6089-H711	8Ω/800W (forced cooling fan motor is included)
		A06B-6089-H712	8Ω/1200W (forced cooling fan motor is included)

See Subsection 8.1.5, "Regenerative Discharge Unit" for details of selection.

© MyFANUC 2D5504D5BAC945D385F48627D4977F6C

3.1.3.9 Cables

DC link short bar

Category	Ordering number	Applicable terminal-to-terminal distance
Optional	A06B-6078-K801	90mm (86mm - 94mm)
	A06B-6078-K803	64mm (60mm - 68mm)
	A06B-6078-K840	154mm (150mm - 158mm)
	A06B-6078-K841	300mm (298mm - 302mm)
	A06B-6078-K842	150mm (146mm - 154mm)

See 9.3.1.2 for details.
A06B-6078-K842 is used to connect between a 150-mm wide amplifier (left) and a 300-mm wide amplifier (right).

Cables for communication of amplifiers

Category	Ordering number	Cable length	Applicable amplifier width
Optional	A06B-6110-K801	200mm	150mm width amplifier
	A06B-6110-K802	150mm	90mm width amplifier
	A06B-6110-K803	100mm	60mm width amplifier
	A06B-6110-K804	400mm	300mm width amplifier

NOTE
1 The above table lists the cable for each interface between amplifiers.
(For connection of CXA2A and CXA2B)
2 The connection cable for the battery of the absolute pulse coder is not included in the cables shown above. For details, see Subsection 9.3.2.11.

Feedback cables

Category	Ordering number	Use	Remarks
Optional	A06B-6078-K811	For αiM sensor and αiMZ sensor	Cable length : 7m
	A06B-6078-K814	For αi position coder	Cable length : 7m Connector figure : Straight
	A06B-6078-K815		Cable length : 7m Connector figure : Elbow

Cables for FSSB interface

Category	Ordering number	Cable length	Applicable amplifier width
Optional	A66L-6001-0023#L150R0	15cm	For between αi SV and αi SV For between αi SP and αi SP For between αi SV and αi SP
	A66L-6001-0023#L300R0	30cm	

3.1.3.10 Circuit breaker and magnetic contactor

The circuit breaker and magnetic contactor capacities are determined by the Common Power Supply specifications. The ordering drawing numbers and specifications of the circuit breakers and magnetic contactors are shown below.
When this equipment is to be prepared by the user, it must satisfy the circuit breaker and magnetic contactor specifications indicated below.

© MyFANUC 2D5504D5BAC945D385F48627D4977F6C

Circuit breaker and magnetic contactor specifications

For αi PS and αi PS_R

PS name	Circuit breaker 1	Circuit breaker 2	Magnetic contactor	Remarks
αi PS_R 3	20A	5A	20A	
αi PS_R 5.5	30A		30A	Note 4)
	50A		50A	Note 5)
αi PS 5.5	30A to 50A		30A	
αi PS 11	55A to 75A		55A	
αi PS 15	70A to 100A		70A	
αi PS 26	120A to 150A		120A	
αi PS 30	140A to 200A		140A	
αi PS 37	175A to to 225A		175A	
αi PS 55	250A		250A	

NOTE

1 For the installation positions of the circuit breakers and magnetic contactor, see Section 1.2.
2 Set the rated voltage of circuit breakers 1 and 2 according to the power supply voltage.
3 The current and voltage of the operation coil of the magnetic contactor must be within the rating of the internal contact [CX3 (MCC)] of the αi PS.
For details, see Subsection 9.3.1.5.
4 When the αi PS_R 5.5 is used at a rated output capacity of 5.5 kW
5 When the αi PS_R 5.5 is used at a rated output capacity of 7.5 kW
6 When the circuit breaker trips, the contact of the magnetic contactor may be melted. Therefore, before turning on the circuit breaker again, check to make sure that the contact of the magnetic contactor is not melted.

For 400-V input series of αi PS

PS name	Circuit breaker 1	Circuit breaker 2	Circuit breaker 3	Magnetic contactor	Remarks
αi PS 11HV	30A	3A	3A	30A	
αi PS 18HV	45A			45A	
αi PS 30HV	75A			75A	
αi PS 45HV	125A			125A	
αi PS 60HV	150A			150 A	
αi PS 75HV	200A			200A	
αi PS 100HV	250A			250A	

NOTE

1 For the installation positions of the circuit breakers and magnetic contactor, see Section 1.2.
2 Set the rated voltage of circuit breakers 1 and 2 according to the power supply voltage.
3 The current and voltage of the operation coil of the magnetic contactor must be within the rating of the internal contact [CX3 (MCC)] of the αi PS.
For details, see Subsection 9.3.1.5.
4 When the circuit breaker trips, the contact of the magnetic contactor may be melted. Therefore, before turning on the circuit breaker again, check to make sure that the contact of the magnetic contactor is not melted.

© MyFANUC 2D5504D5BAC945D385F48627D4977F6C

Ordering drawing numbers of circuit breakers

Category	Model	Ordering number	Outline drawing	Rated current of circuit breaker
Optional	αi PS_R 3 αi PS 11HV	A06B-6077-K101	8.1.7	30A
	αi PS_R 5.5 αi PS 5.5 αi PS 18HV	A06B-6077-K102	8.1.7	50A
	αi PS 11	A06B-6077-K103	8.1.7	60A
	αi PS 15, 30HV	A06B-6077-K104	8.1.7	75A
	αi PS 45HV	A06B-6077-K108	8.1.7	125A
	αi PS 26, 30, 60HV	A06B-6077-K105	8.1.7	150A
	αi PS 37	A06B-6077-K110	8.1.7	175A
	αi PS 75HV	A06B-6077-K109	8.1.7	200A
	αi PS 55, 100HV	A06B-6077-K111	8.1.7	250A
	For control power	A06B-6077-K106	8.1.7	5A

Ordering drawing numbers of magnetic contactors

Category	Model	Ordering number	Outline drawing	Magnetic contactor specification	Magnetic contactor cover specification
Optional	αi PS_R 3 , αi PS 11HV	A06B-6077-K121	Fig. 8.1.8(a)	Fuji Electric SC-5-1	Fuji Electric SZ-JC4
	αi PS_R 5.5, αi PS 5.5 αi PS 18HV	A06B-6077-K122	Fig. 8.1.8(b)	Fuji Electric SC-N1	Fuji Electric SZ-N1J
	αi PS 11	A06B-6077-K123	Fig. 8.1.8(b)	Fuji Electric SC-N2	Fuji Electric SZ-N1J
	αi PS 15, 30HV	A06B-6077-K124	Fig. 8.1.8(c)	Fuji Electric SC-N2S	Fuji Electric SZ-N2SJ
	αi PS 26, 45HV	A06B-6077-K125	Fig. 8.1.8(d)	Fuji Electric SC-N4	Fuji Electric SZ-N4J
	αi PS 30, 60HV	A06B-6077-K126	Fig. 8.1.8(e)	Fuji Electric SC-N5	Fuji Electric SZ-N4J
	αi PS 37, 75HV	A06B-6077-K128	Fig. 8.1.8(f)	Fuji Electric SC-N7	Fuji Electric SZ-N7J
	αi PS 55, 100HV	A06B-6077-K127	Fig. 8.1.8(g)	Fuji Electric SC-N8	Fuji Electric SZ-N8J

NOTE
The coil voltage specification of the magnetic contactor is 200VAC.

© MyFANUC 2D5504D5BAC945D385F48627D4977F6C

3.1.3.11 Lightning surge protector

To protect equipment from surge voltages caused by lightning, install a lightning surge protector between lines and between a line and ground. For how to install protectors, see Appendix A.

Lightning surge protector specifications

Category	Ordering number	Specification	Outline drawing	Remarks
Optional	A06B-6200-K140	Integration type for line-to-line installation/line-to-ground installation: RSPD-500-U4	Fig. 8.1.9	Manufactured by Okaya Electric Industries Co., Ltd. Rated voltage: 500VAC / Frequency: 50/60Hz Operating temperature range: –5°C to +40°C Certified UL1449 03 Type 2
	A06B-6200-K141	Integration type for line-to-line installation/line-to-ground installation: RSPD-250-U4		Manufactured by Okaya Electric Industries Co., Ltd. Rated voltage: 250VAC / Frequency: 50/60Hz Operating temperature range: –5°C to +40°C Certified UL1449 03 Type 2

3.1.3.12 Noise filter

A noise filter must be installed in the PS input section to satisfy the requirements of the EMC Directives which are now being enforced in the EU countries.

For power supply grounded through one phase

Category	Model	Ordering number	Outline drawing	Rated output	Specification
Optional	αi PS_R 3 PS 5.5i	A06B-6077-K155	Fig. 8.1.10	30A	3SUP-HL30-ER-6: Okaya Electric Industries Co., Ltd.
	αi PS_R 5.5 αi PS 11 ,15	A06B-6077-K156		75A	3SUP-HL75-ER-6: Okaya Electric Industries Co., Ltd.
	αi PS 26, 30	A06B-6077-K157		150A	3SUP-HL150-ER-6: Okaya Electric Industries Co., Ltd.
	αi PS 37	A06B-6077-K158		200A	3SUP-HL200-ER-6: Okaya Electric Industries Co., Ltd.

For power supply grounded through neutral point

Category	Model	Ordering number	Outline drawing	Rated output	Specification
Optional	αi PS_R 3 αi PS 5.5, 11HV	A06B-6110-K160	Fig. 8.1.10	50A	NF3050C-VQ: Soshin Electric Co., Ltd.
	αi PS_R 5.5 αi PS 11 ,15 αi PS 18HV, 30HV	A06B-6110-K161		80A	NF3080C-VQ: Soshin Electric Co., Ltd.
	αi PS 26, 30 αi PS 45HV, 60HV	A06B-6110-K162		150A	NF3150C-VQ: Soshin Electric Co., Ltd.
	αi PS 37 αi PS 75HV	A06B-6110-K163		200A	NF3200C-VQ:Soshin Electric Co., Ltd.
	αi PS 55 αi PS 100HV	A06B-6110-K164		250A	NF3250C-VQ:Soshin Electric Co., Ltd.

© MyFANUC 2D5504D5BAC945D385F48627D4977F6C

⚠ **WARNING**
Use the noise filter specified with ordering number A06B-6077-K155, K156, K157, or K158 only for a 200-V power supply with single-phase grounding. Do not use it for a 400-V power supply.
If used for a 400-V power supply, the above-mentioned filter may generate abnormal heat, emit smoke, cause a short circuit, etc.

NOTE
1 The noise filters specified with ordering numbers A06B-6110-K160, K161, K162, K163, and K164 cannot be used for any power supply grounded through one phase.
2 The above models are listed as guidelines for selection. Load currents of the CNC, amplifier, and other devices flow through the noise filter. Obtain these load currents, and select a noise filter so that the obtained load currents do not exceed the rated current of the noise filter.

3.1.3.13 Sensors for servo

αi CZ sensor (for separate detector)

Category	Name	Ordering number	Number of teeth	Maximum speed (min^{-1})
Optional	αi CZ sensor 512 AS	A860-2164-T411	512	3,000
	αi CZ sensor 768 AS	A860-2164-T511	768	2,000
	αi CZ sensor 1024 AS	A860-2164-T611	1024	1,500

3.1.3.14 Battery for absolute Pulsecoder

For connection of a battery for an absolute Pulsecoder, two methods are available. For each method, options are available.

NOTE
1 A battery needs to be maintained periodically. So, [connection type 1] is recommended because this type uses a battery (consisting of four size D alkaline cells) easily obtainable from the market.
2 A built-in battery used with [connection type 2] is not available on the market, but needs to be purchased from FANUC. So, it is recommended to purchase spare built-in batteries.

[Connection type 1]
Power is fed from one battery to multiple αi SV models. (See Subsection 9.3.2.11.)

Category	Ordering number	Name	Remarks
Optional	A06B-6050-K061	Battery	Four pieces of size D battery
	A06B-6050-K060	Battery case	
	A06B-6110-K211	Battery connection connector	

[Connection type 2]
A battery is built into each αi SV. (See Subsection 9.3.2.11.)

Category	Ordering number	Name	Remarks
Optional	A06B-6114-K504	Built-in battery	Lithium battery
Optional	A06B-6114-K505	Battery case	For αi SV 60/90 mm wide

© MyFANUC 2D5504D5BAC945D385F48627D4977F6C

Category	Ordering number	Name	Remarks
Optional	A06B-6114-K506	Battery case	For αi SV 150/300 mm wide αi SV 360 αi SV 180HV αi SV 360HV αi SV 540HV

3.1.3.15 Sensors for spindle

αi Positioncoder

Category	Name	Ordering number	Remarks
Optional	αi Positioncoder	A860-2109-T302	□68 flange mounting, 10,000min^{-1}
	Connector kit	A06B-6088-K211	Straight type

αPositioncoder S (analog output type)

Category	Name	Ordering number	Remarks
Optional	αPositioncoder S	A860-0309-T352	□68 flange mounting, 10,000min^{-1}
	Connector kit	A06B-6088-K211	Straight type

αi BZ sensor (for both spindle and built-in spindle motor)

Name	Ordering number (A860-)		Remarks				
				Detection ring			
	Waterproof connector specification	Non-waterproof connector specification	Number of teeth	Maximum speed (min^{-1})	Inner diameter (mm)	Outer diameter (mm)	Mounting method
αi BZ sensor 96	2150-T111	2155-T111	96	80,000	ϕ30	ϕ39.2	Shrink fitting
αi BZ sensor 128	2150-T201	2155-T201	128	20,000	ϕ40	ϕ52	
αi BZ sensor 128H	2150-T211	2155-T211		70,000			
αi BZ sensor 192	2150-T301	2155-T301	192	20,000	ϕ60	ϕ77.6	
αi BZ sensor 192H	2150-T311	2155-T311		40,000			
αi BZ sensor 256	2150-T401	2155-T401	256	15,000	ϕ82	ϕ103.2	
αi BZ sensor 256S	2150-T404	2155-T404			ϕ88		
αi BZ sensor 256H	2150-T411	2155-T411		30,000	ϕ82		
αi BZ sensor 384	2150-T511	2155-T511	384	15,000	ϕ125	ϕ154.4	
αi BZ sensor 512	2150-T611	2155-T611	512	10,000	ϕ160	ϕ205.6	
αi BZ sensor 640	2150-T711	2155-T711	640	6,000	ϕ220	ϕ256.8	
αi BZ sensor 768	2150-T811	2155-T811	768	5,000	ϕ250	ϕ308	Shrink fitting or securing with screws
αi BZ sensor 1024	2150-T911	2155-T911	1024	3,000	ϕ360	ϕ410.4	

αi CZ sensor (for spindle)

Category	Name	Ordering number	Number of teeth	Maximum speed (min^{-1})
Optional	αi CZ sensor 512 IS	A860-2163-T411	512	15,000
	αi CZ sensor 768 IS	A860-2163-T511	768	10,000
	αi CZ sensor 1024 IS	A860-2163-T611	1024	8,000

© MyFANUC 2D5504D5BAC945D385F48627D4977F6C

αi CZ sensor (for built-in spindle motor)

Category	Name	Ordering number	Number of teeth	Maximum speed (min^{-1})
Optional	αi CZ sensor 512 I	A860-2161-T411	512	15,000
	αi CZ sensor 768 I	A860-2161-T511	768	10,000
	αi CZ sensor 1024 I	A860-2161-T611	1024	8,000

3.1.3.16 Power line switch unit

Output switch control (Y/Y switch type, Y/Δ switch type)

Category	Name	Ordering number	Remarks
Optional	Y/Y switch type	A06B-6078-K034	(Note)
	Y/Δ switch type	A06B-6078-K035	(Note)
	Y/Y switch type	A06B-6078-K036	(Note)
	Y/Δ switch type	A06B-6078-K037	(Note)

NOTE

Select one type depending on the peak rated current of a spindle motor to be applied.
For details, see Subsection 10.2.3.

© MyFANUC 2D5504D5BAC945D385F48627D4977F6C

4 HOW TO SELECT THE AMPLIFIER

Chapter 4, "HOW TO SELECT THE AMPLIFIER", consists of the following sections:

4.1 HOW TO SELECT THE αi SV SERIES (SERVO AMPLIFIER) 61
4.2 HOW TO SELECT THE αi SP SERIES (SPINDLE AMPLIFIER) 64
4.3 HOW TO SELECT THE αi PS (POWER SUPPLY) 66
4.4 HOW TO SELECT THE αi PS_R SERIES (POWER SUPPLY, RESISTANCE REGENERATION TYPE) 68
4.5 LIST OF MOTOR OUTPUT CAPACITIES FOR αi PS AND αi PS_R SERIES SELECTION 72

4.1 HOW TO SELECT THE αi SV SERIES (SERVO AMPLIFIER)

Select an appropriate αi SV module for the selected servo motor.

Table 4.1(a) Specification

No	Specification	Number of connected axes	Input voltage	Interface with CNC
1	A06B-6117-H1xx	1	200V	FSSB
2	A06B-6117-H2xx	2	200V	FSSB
3	A06B-6117-H3xx	3	200V	FSSB
4	A06B-6127-H1xx	1	400V	FSSB
5	A06B-6127-H2xx	2	400V	FSSB

© MyFANUC 2D5504D5BAC945D385F48627D4977F6C

4.1.1 200-V Input Series

Amplifier model 200V type		Motor model HRV2/3	HRV4	Outline	group A	group B	group C	group D	group E	group F	group G	group H	group I
1-axis	αiSV 4	○	○	TYPE Ⅰ	○								
	αiSV 20	○	–			○							
	αiSV 20L	○	○	TYPE Ⅱ		○							
	αiSV 40	○	–				○	○					
	αiSV 40L	○	○				○	○					
	αiSV 80	○	–						○				
	αiSV 80L	○	○						○				
	αiSV 160	○	–							○	○		
	αiSV 160L	○	○	TYPE Ⅲ						○	○		
	αiSV 360	○	○	TYPE Ⅳ								○	○(*1)
2-axes	αiSV 4/4	○	○	TYPE Ⅰ	L/M								
	αiSV 4/20	○	–		L	M							
	αiSV 20/20	○	–			L/M							
	αiSV 20/20L	○	○	TYPE Ⅱ		L/M							
	αiSV 20/40	○	–			L	M	M					
	αiSV 20/40L	○	○			L	M	M					
	αiSV 40/40	○	–				L/M	L/M					
	αiSV 40/40L	○	○				L/M	L/M					
	αiSV 40/80	○	–				L	L	M				
	αiSV 40/80L	○	○	TYPE Ⅲ			L	L	M				
	αiSV 80/80	○	–	TYPE Ⅱ					L/M				
	αiSV 80/80L	○	○	TYPE Ⅲ					L/M				
	αiSV 80/160	○	–						L	M			
	αiSV 160/160	○	–							L/M			
3-axes	αiSV 4/4/4	○	–	TYPE Ⅰ	L/M/N								
	αiSV 20/20/20	○	–			L/M/N							
	αiSV 20/20/40	○	–	TYPE Ⅱ		L/M	N	N					
	αiSV 40S/40S/40	○	–				L/M/N	N					

*1) Two servo amplifiers are necessary to drive one motor.

group A : βiS 0.2/5000, βiS 0.3/5000
group B : αiS 2/5000, αiS 2/6000, αiS 4/5000, αiS 4/6000
αiF 1/5000, αiF 2/5000
βiS 0.4/5000, βiS 0.5/6000, βiS 1/6000
βiS 2/4000, βiS 4/4000, βiS 8/3000, βiS 12/2000
βiSc 2/4000, βiSc 4/4000, βiSc 8/3000, βiSc 12/2000
βiF 4/3000, βiF 8/2000, βiF 12/2000
group C : αiF 4/5000, αiF 8/3000
βiS 12/3000
βiSc 12/3000
group D : βiS 22/2000
βiSc 22/2000
βiF 22/2000
group E : αiS 8/4000, αiS 8/6000, αiS 12/4000
αiF 8/4000, αiF 12/4000, αiF 22/3000
βiS 22/3000, βiS 30/2000, βiS 40/2000
βiF 30/1500
group F : αiS 12/6000, αiS 22/4000, αiS 22/6000, αiS 30/4000, αiS 40/4000, αiS 50/2000,
αiS 60/2000
αiF 22/4000, αiF 30/4000, αiF 40/3000

© MyFANUC 2D5504D5BAC945D385F48627D4977F6C

group G : αiF 40/3000 with fan
group H : αiS 50/3000 with fan, αiS 60/3000 with fan
αiS 100/2500, αiS 100/2500 with fan, αiS 200/2500, αiS 200/2500 with fan
group I : αiS 300/2000, αiS 500/2000

4.1.2 400-V Input Series

Amplifier model 400V type		Motor model HRV2/3	HRV4	Outline	group A	group B	group C	group D	group E	group F	group G	group H	group I
1-axis	αiSV 10HV	○	-	TYPE Ⅰ	○								
	αiSV 10HVL	○	○	TYPE Ⅱ	○								
	αiSV 20HV	○	-			○							
	αiSV 20HVL	○	○			○							
	αiSV 40HV	○	-				○						
	αiSV 40HVL	○	○				○						
	αiSV 80HV	○	-					○					
	αiSV 80HVL	○	○	TYPE Ⅲ				○					
	αiSV 180HV	○	○	TYPE Ⅳ					○				
	αiSV 360HV	○	○	TYPE Ⅴ						○	○(*1)	○(*2)	
	αiSV 540HV	○(*3)	-										○
2-axes	αiSV 10/10HV	○	_	TYPE Ⅰ	L/M								
	αiSV 10/10HVL	○	○	TYPE Ⅱ	L/M								
	αiSV 20/20HV	○	_			L/M							
	αiSV 20/20HVL	○	○	TYPE Ⅲ		L/M							
	αiSV 20/40HV	○	-			L	M						
	αiSV 20/40HVL	○	○			L	M						
	αiSV 40/40HV	○	-				L/M						
	αiSV 40/40HVL	○	○				L/M						
	αiSV 40/80HV	○	-				L	M					
	αiSV 80/80HV	○	-					L/M					

*1) Two servo amplifiers are necessary to drive one motor.
*2) Four servo amplifiers are necessary to drive one motor.
*3) Only HRV2 can be used.

group A : αiS 2/5000HV, αiS 2/6000HV, αiS 4/5000HV, αiS 4/6000HV
βiS 2/4000HV, βiS 4/4000HV, βiS 8/3000HV
group B : αiF 4/5000HV, αiF 8/3000HV
βiS 12/3000HV, βiS 22/2000HV
group C : αiS 8/4000HV, αiS 8/6000HV, αiS 12/4000HV
αiF 8/4000HV, αiF 12/4000HV, αiF 22/3000HV
βiS 22/3000HV, βiS 30/2000HV, βiS 40/2000HV
group D : αiS 12/6000HV, αiS 22/4000HV, αiS 22/6000HV, αiS 30/4000HV, αiS 40/4000HV
αiS 50/2000HV, αiS 60/2000HV
αiF 22/4000HV, αiF 30/4000HV, αiF 40/3000HV, αiF 40/3000HV with fan
group E : αiS 50/3000HV with fan, αiS 60/3000HV with fan
αiS 100/2500HV, αiS 100/2500HV with fan, αiS 200/2500HV, αiS 200/2500HV with fan
group F : αiS 300/2000HV, αiS 500/2000HV
group G : αiS 1000/2000HV
group H : αiS 1000/3000HV, αiS 2000/2000HV, αiS 3000/2000HV
group I : αiS 300/3000HV, αiS 500/3000HV

© MyFANUC 2D5504D5BAC945D385F48627D4977F6C

4.1.3 How to Select the Dynamic Brake Module (DBM)

When the αi SV 360, αi SV 180HV, or αi SV 360HV is used, an external dynamic brake module (DBM) is required. This module stops the motor immediately at, for example, emergency stop time. The other αi SV models include a feature similar to this module.
Select a dynamic brake module based on the following table:
The dynamic brake module driven at 24 VAC (A06B-6079-H403, A06B-6069-H301) is recommended if the machine protection function at power failure is used.

Dynamic brake module

Category	Ordering number	Name	Remarks
Standard	A06B-6079-H401	DBM	Driven at 200 VAC αi SV 360, αi SV 180HV αi SV 360HV αi SV 540HV
	A06B-6079-H403	DBM	Driven at 24 VDC αi SV 360, αi SV 180HV αi SV 360HV αi SV 540HV
	A06B-6069-H300	DBM	Driven at 200 VAC αi SV 360HV(*1)
	A06B-6069-H301	DBM	Driven at 24 VDC αi SV 360HV(*1)

The dynamic brake module (DBM) is designed based on the energy required to stop the motor rotating at its maximum speed when the load inertia is five times as large as the motor inertia. When this operating condition is exceeded, contact FANUC.

(*1) When the αiS 1000HV, αiS 2000HV, or αiS 3000HV is driven

4.2 HOW TO SELECT THE αi SP series(SPINDLE AMPLIFIER)

Select an appropriate αi SP series for the selected spindle motor.
αi SP series amplifiers and standard motors that can be used together are shown below. When using a built-in motor or a motor with special specifications, refer to relevant specifications, and select an αi SP series accordingly.

Table 4.2(a) Specification

No	Ordering number	Input voltage	Remarks
1	A06B-6141-H□□□#H580	200V	TYPE A
2	A06B-6142-H□□□#H580	200V	TYPE B
3	A06B-6151-H□□□#H580	400V	TYPE A
4	A06B-6152-H□□□#H580	400V	TYPE B

© MyFANUC 2D5504D5BAC945D385F48627D4977F6C

4.2.1 200-V Input Series

Amplifier model 200V type	Outline	Motor model
αiSP 2.2	TYPE Ⅱ	αiI 0.5/10000, αiI 0.5/10000(Power up model), αiI 0.5/15000(Power up model), αiI 1/10000, αiI 1/10000(Power up model)
αiSP 5.5		αiI 1.5/10000, αiI 1.5/10000(Power up model), αiI 2/10000, αiI 3/10000, αiI 1/15000, βiI 3/10000
αiSP 11	TYPE Ⅲ	αiI 2/10000(Power up model), αiI 3/10000(Power up model), αiI 6/10000, αiI 6/10000(Power up model), αiI 8/8000, αiI 3/12000, αiI 6/12000, αiI 8/10000, αiIP 12/6000,αiIP 12/6000(Power up model), αiIP 12/8000, αiIT 3/12000, αiIT 6/12000(Power up model), βiI 6/10000, βiI 8/10000, βiIP 12/6000, βiIP 15/6000, βiIP 18/6000
αiSP 15		αiI 8/8000(Power up model), αiI 12/7000, αiI 12/7000(Power up model), αiI 1.5/20000, αiI 8/12000, αiI 12/12000, αiIP 15/6000, αiIP 15/6000(Power up model), αiIP 15/8000, αiIP 18/6000, αiIP 18/6000(Power up model), αiIP 18/8000, αiIT 1.5/20000, αiIT 6/12000, αiIT 8/12000, αiIT 8/12000(Power up model), βiI 12/8000, βiIP 22/6000
αiSP 22	TYPE Ⅳ	αiI 15/7000, αiI 15/7000(Power up model), αiI 18/7000, αiI 18/7000(Power up model), αiI 2/20000, αiI 15/12000, αiI 18/12000, αiIP 22/6000, αiIP 22/6000(Power up model), αiIP 22/8000, αiIP 30/6000, αiIP 30/6000(Power up model), αiIT 2/20000, αiIT 15/10000, αiIT 15/10000(Power up model), βiI 15/7000, βiIP 30/6000, βiIP 40/6000
αiSP 26		αiI 22/7000, αiI 22/7000(Power up model), αiI 22/12000, αiIP 40/6000, αiIP 40/6000(Power up model), αiIP 50/6000, αiIP 50/6000(Power up model), αiIT 8/15000, αiIT 22/10000, αiIT 22/10000(Power up model)
αiSP 30		αiIP 60/5000, αiIT 15/15000, αiIL 8/20000, αiIL 15/15000, αiIL 26/15000
αiSP 37		αiI 30/6000, αiI 30/7000(Power up model)
αiSP 45	TYPE Ⅴ	αiI 40/6000, αiI 40/7000(Power up model)
αiSP 55		αiI 50/5000, αiI 50/5000(Power up model)

*3) "SP" of αi SP means "SPindle".

4.2.2 400-V Input Series

Amplifier model 400V type	Outline	Motor model
αiSP 5.5HV	TYPE Ⅱ	αiI 0.5/10000HV, αiI 1/10000HV, αiI 1.5/10000HV, αiI 2/10000HV, αiI 3/10000HV
αiSP 11HV	TYPE Ⅲ	αiI 6/10000HV, αiI 6/10000HV(Power up model), αiI 8/8000HV, αiIT 3/12000HV
αiSP 15HV		αiI 8/8000HV(Power up model), αiI 12/7000HV, αiI 12/7000HV(Power up model), αiIP 15/6000HV, αiIT 1.5/20000HV, αiIT 6/12000HV, αiIT 8/12000HV
αiSP 30HV	TYPE Ⅳ	αiI 15/7000HV, αiI 15/7000HV(Power up model), αiI 22/7000HV, αiI 22/7000HV(Power up model), αiIP 22/6000HV, αiIP 40/6000HV, αiIP 50/6000HV, αiIP 60/5000HV, αiIT 2/20000HV, αiIT 8/15000HV, αiIT 15/10000HV, αiIT 15/15000HV, αiIT 22/10000HV
αiSP 45HV		αiI 30/6000HV, αiI 40/6000HV, αiI 50/5000HV, αiIL 8/20000HV, αiIL 15/15000HV, αiIL 26/15000HV
αiSP 75HV	TYPE Ⅴ	αiI 60/5000HV, αiI 75/5000HV, αiI 150/5000HV *4)
αiSP 100HV		αiI 100/5000HV

*3) "SP" of αi SP means "SPindle".

*4) The αi I 150/5000HV is driven by two amplifiers.

© MyFANUC 2D5504D5BAC945D385F48627D4977F6C

4.3 HOW TO SELECT THE αi PS series (POWER SUPPLY)

When Power Supply is selected, the conditions described in this section must all be satisfied.

Calculate the required rated output capacity, maximum output capacity, and peak output capacity using the calculation methods in Subsections 4.3.1, 4.3.2, and 4.3.3 and then select an αi PS model that meets all the conditions.

Table 4.3(a) 200-V input

Model / Item	αi PS 5.5	αi PS 11	αi PS 15	αi PS 26	αi PS 30	αi PS 37	αi PS 55
Rated output capability	5.5kW	11kW	15kW	26kW	30kW	37kW	55kW
Maximum output capability	13kW	24kW	34kW	48kW	64kW	84kW	125kW
Peak output capability	22kW	38kW	51kW	73kW	85kW	106kW	192kW

Table 4.3(b) 400-V input

Model / Item	αi PS 11HV	αi PS 18HV	αi PS 30HV	αi PS 45HV	αi PS 60HV	αi PS 75HV	αi PS 100HV
Rated output capability	11kW	18kW	30kW	45kW	60kW	75kW	100kW
Maximum output capability	24kW	42kW	72kW	102kW	112kW	144kW	180kW
Peak output capability	38kW	64kW	96kW	137kW	150kW	193kW	220kW

NOTE
The above tables apply to A06B-6140-Hxxx and A06B-6150-Hxxxx. For A06B-6110-Hxxx and A06B-6120-Hxxxx, the maximum output capability and peak output capability values differ as shown in the tables below.

200V-V input (for A06B-6110-Hxxx)

Model / Item	αi PS 5.5	αi PS 11	αi PS 15	αi PS 26	αi PS 30	αi PS 37	αi PS 55
Rated output capability	5.5kW	11kW	15kW	26kW	30kW	37kW	55kW
Maximum output capability	11kW	20kW	28kW	40kW	53kW	70kW	104kW
Peak output capability	20kW	34kW	46kW	66kW	77kW	96kW	174kW

400V-V input (for A06B-6120-Hxxx)

Model / Item	αi PS 11HV	αi PS 18HV	αi PS 30HV	αi PS 45HV	αi PS 75HV	αi PS 100HV
Rated output capability	11kW	18kW	30kW	45kW	75kW	100kW
Maximum output capability	20kW	35kW	60kW	85kW	120kW	150kW
Peak output capability	34kW	58kW	87kW	124kW	175kW	200kW

4.3.1 How to Obtain the αi PS series Rated Output Capability

Select an αi PS with a rated output not less than the sum of the total continuous rated output of the spindle motors times 1.15, plus the total continuous rated output of the servo motors times 0.6.

Rated output capacity of αi PS
≥ Σ Continuous rated output of spindle motor × 1.15 + Σ Continuous rated output of servo motor × 0.6

When only αi SP is to be connected to Power Supply module, select the αi PS so that the 30-minute rated output of the spindle motor does not exceed the rated output capacity of Power Supply module.

© MyFANUC 2D5504D5BAC945D385F48627D4977F6C

Rated output capacity of an αi PS ≥ 30-minute rated output of a spindle motor

Table 4.3 lists the rated output capacities of the αi PS models. Tables 4.5.1(a) to (d) list the continuous rated outputs of the servo motors. Tables 4.5.2(a) and (b) list the continuous rated outputs or 30-minute rated output of the spindle motors.

⚠ CAUTION

In the following cases, use the continuous rated output of a servo motor × 1.0 instead of the continuous rated output of a servo motor × 0.6 for calculation:

- Only a single servo motor is connected to a single αiPS unit.
- Multiple servo motors are connected to a single αiPS unit, but they are always driven in synchronization.

The above description applies if the average output of the servo motor(s) is equivalent to the continuous rated output of the servo motor(s), and does not apply if the servo motor(s) is or are used for a feed axis or a peripheral axis of a machine having a spindle.

4.3.2 How to Obtain the αi PS series Maximum Output Capability

Select the αi PS whose maximum output capability will not be exceeded by the total of the sum of the maximum acceleration spindle motor outputs and the sum of the maximum acceleration outputs of the servo motors that are accelerated simultaneously and whose acceleration time exceeds 0.3 seconds.

Maximum output of αi PS ≥ Σ Accelerating maximum output of spindle motor + ∑Maximum acceleration-time outputs of servo motors whose acceleration time exceeds 0.3 seconds (on simultaneous acceleration/deceleration axis)

Table 4.3 lists the maximum output capacities of the αi PS models. Tables 4.5.1(a) to (d) list the accelerating maximum outputs of the servo motors. Tables 4.5.2(a) and (b) list the accelerating maximum outputs of the spindle motors.

4.3.3 How to Obtain the αi PS series Peak Maximum Output Capability

Make selection so that a total of maximum acceleration-time outputs of the spindle motors plus a total of maximum acceleration-time outputs of the servo motors that are accelerated concurrently for 0.3 seconds or less are equal to or less than the peak maximum output capacity of the αi PS.

Power Supply peak maximum output capability ≥ Σ spindle motor maximum acceleration outputs + ∑Maximum acceleration-time outputs of servo motors whose acceleration time is 0.3 seconds or less (on simultaneously accelerated axes)

Table 4.3 lists the peak output capacities of the αi PS models. Tables 4.5.1(a) to (d) list the continuous rated outputs of the servo motors. Tables 4.5.2(a) and (b) list the according maximum outputs of the spindle motors.

© MyFANUC 2D5504D5BAC945D385F48627D4977F6C

> ⚠ **CAUTION**
> When the acceleration-time constant is not identical to the deceleration-time constant and the maximum motor torque is used during deceleration as in pressing machines or injection molding machines, the maximum acceleration-time outputs in Tables 4.5.1 (a) and (c) are multiplied by 1.1.

4.3.4 Number of Connected αi SV series and αi SP Series

Multiple αi SV and αi SP models can be connected to a single αi PS, provided the above output capacity conditions are satisfied.
The table below lists the maximum number of modules which can be connected.

Table 4.3.4 Maximum number of modules that can be connected

αi SP	αi SV		
	αi SV 1-axis amplifier	αi SV 2-axis amplifier	αi SV 3-axis amplifier
2	6		
		4	
			3

> ⚠ **CAUTION**
> 1 When different types of αi SV models are connected, the following condition must be satisfied:
> Total number of connected amplifiers (6) ≥ number of αi SV 1-axis amplifiers × 1 + number of αi SV 2-axis amplifiers × 1.5 + number of αi SV 3-axis amplifiers × 2
> The maximum number of αi SV models that can be connected is the same when an αi SP is not used.
> 2 No αi SV 3-axis amplifier is available in the 400-V input series.

4.3.5 Notes on 400-V Input αi PS series selection

When the 400-V input αi PS series is used, a restriction is imposed on the combination with an αi SP.

(1) For αi SP 30HV, select αi PS 30HVi or a higher model.
(2) For αi SP 45HV, select αi PS 45HVi or a higher model.
(3) For αi SP 75HV/100HV, select αi PS 75HV or a higher model.

4.4 HOW TO SELECT THE αi PSR series (POWER SUPPLY, RESISTANCE DISCHARGE TYPE)

When Power Supply is selected, the conditions described in this section must all be satisfied.
Calculate the required rated output capacity and maximum output capacity using the calculation methods in Subsections 4.4.1 and 4.4.2 and then select an αi PS_R model that meets all the conditions.

Table 4.4 200-V input

Model / Item	αi PS_R 3	αi PS_R 5.5
Rated output capability	3kW	7.5kW
Maximum output capability	12kW	20kW

© MyFANUC 2D5504D5BAC945D385F48627D4977F6C

NOTE
No specification is defined for the peak output capability of the αi PS_R models.

4.4.1 How to Obtain the αi PS_R series Rated Output Capability

Select an αi PS_R with a rated output not less than the sum of the total continuous rated output of the spindle motors times 1.15, plus the total continuous rated output of the servo motors times 0.6.

Rated output capacity of αi PS_R
≥ Σ Continuous rated output of spindle motor × 1.15 +Σ Continuous rated output of servo motor × 0.6

When only αi SP is to be connected to an αi PS_R, select Power Supply so that the 30-minute rated output of the spindle motor does not exceed the rated output capacity of the αi PS_R.

Rated output capacity of an αi PS_R ≥ 30-minute rated output of a spindle motor

Table 4.4 lists the rated output capacities of the αi PS_R models. Tables 4.5.1(a) to (d) list the continuous rated outputs of the servo motors. Tables 4.5.2(a) and (b) list the continuous rated outputs or 30-minute rated output of the spindle motors.

4.4.2 How to Obtain the αi PS_R series Maximum Output Capability

Select an αi PS_R so that the sum of the total maximum acceleration-time output of the spindle motors and the total maximum acceleration-time output of the servo motors that are accelerated simultaneously does not exceed the maximum output capability of the αi PS_R.

Maximum output of αi PS_R
≥ Σ Accelerating maximum output of spindle motor +
Σ Maximum acceleration-time outputs of the servo motors whose acceleration time exceeds **0.3 seconds**.
(on simultaneous acceleration/deceleration axis)

Table 4.4 lists the maximum output capacities of the αi PS_R models. Tables 4.5.1(a) to (d) list the accelerating maximum outputs of the servo motors. Tables 4.5.2(a) and (b) list the accelerating maximum outputs of the spindle motors.

4.4.3 Number of Connected αi SV series and αi SP series

Multiple αi SV models and αi SP models can be connected to a single αi PS_R, provided the above output capacity conditions are satisfied.
The table below lists the maximum number of modules which can be connected.

Table 4.4.3 Maximum number of amplifiers that can be connected

αi SP	αi SV		
	αi SV 1-axis amplifier	αi SV 2-axis amplifier	αi SV 3-axis amplifier
0	4		
	1	2	
	2	1	
		1	1
1	2		
	1	1	
			1

© MyFANUC 2D5504D5BAC945D385F48627D4977F6C

> ⚠ **CAUTION**
> When αi SV amplifiers are used together, the total number of the connected amplifiers must not exceed 4.
> Total number of connected amplifiers (4) ≥ number of αi SV 1-axis amplifiers × 1 + number of αi SV 2-axis amplifiers × 1.5 + number of αi SV 3-axis amplifiers × 2
> Even when no αi SP unit is used, the number of αi SV amplifiers that can be connected does not change.

4.4.4 Selecting a Regenerative Discharge Unit

In the αi PS_R, the regenerative discharge unit (regenerative resistor) dissipates the energy generated during deceleration of a motor (regeneration).
The amount of heat generated by the regenerative discharge unit varies with the motor type, rotation speed, load inertia, and continuous repetition cycle (duty cycle). Use a regenerative discharge unit of a suitable capacity for the load and operation cycle time.

How to Calculate the Required Capacity for the Regenerative Discharge Unit

Obtain the rotation energy of each servo motor and each spindle motor from the formula shown below. Then, see Table 4.4.4, and select a regenerative discharge unit so that the sum of the rotation energy values of the servo motors and spindle motors does not exceed the capacity of the regenerative discharge unit.

Capacity of regenerative discharge unit ≥Σ Rotation energy of motor

(1) Servo motor (for horizontal movement)
Amount of regenerative discharge (power [W]) when rapid traverse acceleration/deceleration is performed once every F sec

(a) SI unit system

$$w = \frac{1}{F} \times (5.48 \times 10^{-3} \cdot (Jm + JL) \cdot Vm^2 - 5.23 \times 10^{-2} \cdot ta \cdot Vm \cdot TL)\,[W]$$

F : Frequency of rapid traverse acceleration/deceleration [sec/number of times]
Unless otherwise specified, rapid traverse acceleration/deceleration is assumed to be performed about once every 5 seconds.
Jm : Rotor inertia of the motor [kg·m^2]
JL : Motor-shaft-converted inertia of the load [kg·m^2]
Vm : Motor speed at rapid traverse [min^{-1}]
ta : Rapid traverse acceleration/deceleration time [sec]
TL : Machine frictional torque (motor-converted value) [N·m]

(b) CGS unit system

$$w = \frac{1}{F} \times (5.37 \times 10^{-4} \cdot (Jm + JL) \cdot Vm^2 - 5.13 \times 10^{-3} \cdot ta \cdot Vm \cdot TL)\,[W]$$

F : Rapid traverse acceleration/deceleration cycle [sec/number of times]
About once every five seconds unless otherwise specified
Jm : Rotor inertia of motor [kgf·cm·sec^2]
JL : Load inertia (value for motor shaft) [kgf·cm·sec^2]
Vm : Motor rotation speed for rapid traverse [min^{-1}]
ta : Rapid traverse acceleration/deceleration time [sec]
TL : Friction torque of machine (value for motor) [kg·cm]

© MyFANUC 2D5504D5BAC945D385F48627D4977F6C

(2) Servo motor (for vertical movement)
The amount of regenerative discharge (power [W]) when the operation duty for downward rapid traverse is D(%)

(a) SI unit system

$$w = 1.047 \times 10^{-1} \cdot Th \cdot Vm \times \frac{D}{100} \quad [W]$$

Th : Upward torque that the motor applies at the time of downward rapid traverse [N·m]
Vm : Motor speed at rapid traverse [min^{-1}]
D : Operation duty [%] for downward rapid traverse
D is set to 50% maximum. Usually, D is less than 50%.

(b) CGS unit system

$$w = 1.026 \times 10^{-2} \cdot Th \cdot Vm \times \frac{D}{100} \quad [W]$$

Th : Upward torque of motor during lowering by rapid traverse [kg·cm]
Vm : Motor rotation speed for rapid traverse [min^{-1}]
D : Downward operation duty during lowering by rapid traverse [%]
D is a maximum of 50% and usually less.

(3) Spindle motor

(a) SI unit system

$$w = 5.48 \times 10^{-3} \cdot (Jm + JL) \cdot N^2 \times \frac{1}{Dt} \quad [W]$$

Jm : Rotor inertia of the motor [$kg \cdot m^2$]
JL : Motor-shaft-converted inertia of the load [$kg \cdot m^2$]
N : Motor speed [min^{-1}]
Dt : Duty cycle [sec]

(b) CGS unit system

$$w = 5.37 \times 10^{-2} \cdot (Jm + JL) \cdot N^2 \times \frac{1}{Dt} [W]$$

Jm : Rotor inertia of motor [$kgf \cdot cm \cdot sec^2$]
JL : Load inertia (value for motor shaft) [$kgf \cdot cm \cdot sec^2$]
N : Motor rotation speed [min^{-1}]
Dt : Duty cycle [sec]

Cautions for selecting a regenerative discharge unit

Table.4.4.4 Required capacity for the Regenerative Discharge unit

Regenerative discharge unit	Capacity			Remarks
	Wind speed			
	0m/sec	2m/sec	4m/sec	
A06B-6089-H510	100W	250W	-	Resistance : 16Ω
A06B-6089-H500	200W	400W	600W	Resistance : 16Ω
A06B-6089-H713	-	-	800W	Forced cooling fan motor is included Resistance : 16Ω
A06B-6089-H711	-	-	800W	Forced cooling fan motor is included Resistance : 8Ω
A06B-6089-H712	-	-	1200W	Forced cooling fan motor is included Resistance : 8Ω

© MyFANUC 2D5504D5BAC945D385F48627D4977F6C

NOTE
1 The "maximum output at acceleration" value is provided only to aid in the selection of an αi PS_R; this is not a guaranteed value.
2 When a spindle motor with a maximum output of 5kW or more is used, the resistance of the regenerative discharge unit must be 8Ω. If a regenerative discharge unit with a resistance of 16Ω is used for a spindle motor with a maximum output of 5 kW or more, a regeneration excess alarm (alarm No. 08) may be generated in the αi PS_R when the spindle is decelerated.

4.5 LIST OF MOTOR OUTPUT CAPACITIES FOR αi PS AND αi PS_R series SELECTION

4.5.1 Servo Motor

This section gives the output data for servo motor. These data are used for selecting an αi PS or αi PS_R. **The output values shown here are numerical values intended only for selection purposes and do not guarantee the output of the servo motor.**
Refer to "FANUC SERVO MOTOR αi series DESCRIPTIONS (B-65262EN)" for the detailed specifications of the servo motor.

(1) Servo motor αi series (200-V input series)

Table 4.5.1(a)

Motor model	Continuous rated output	Maximum output at acceleration
αiF 1/5000	0.50kW	2.0kW
αiF 2/5000	0.75kW	2.9kW
αiF 4/5000	1.4kW	4.5kW
αiF 8/3000	1.6kW	5.7kW
αiF 8/4000	2.2kW	9.0kW
αiF 12/4000	3.0kW	7.6kW
αiF 22/3000	4.0kW	9.6kW
αiF 22/4000	4.0kW	17kW
αiF 30/4000	7.0kW	21kW (at 3000 min^{-1}) 23kW (at 4000 min^{-1})
αiF 40/3000	6.0kW	18kW
αiF 40/3000+FAN	9.0kW	18kW
αiS 2/5000	0.75kW	2.8kW
αiS 2/6000	1.0kW	2.4kW
αiS 4/5000	1.0kW	3.1kW
αiS 4/6000	1.0kW	2.9kW
αiS 8/4000	2.5kW	8.0kW
αiS 8/6000	2.2kW	11kW
αiS 12/4000	2.7kW	12kW
αiS 12/6000	2.2kW	20kW
αiS 22/4000	4.5kW	17kW
αiS 22/6000	4.5kW	21kW
αiS 30/4000	5.5kW	22kW
αiS 40/4000	5.5kW	24kW
αiS 50/2000	4kW	21kW
αiS 50/3000+FAN	14kW	39kW
αiS 60/2000	5kW	25kW
αiS 60/3000+FAN	14kW	40kW
αiS 100/2500	11kW	38kW

© MyFANUC 2D5504D5BAC945D385F48627D4977F6C

Motor model	Continuous rated output	Maximum output at acceleration
αiS 100/2500+FAN	22kW	38kW
αiS 200/2500	16kW	48kW
αiS 200/2500+FAN	30kW	48kW
αiS 300/2000	52kW	96kW
αiS 500/2000	60kW	104kW

NOTE
There is a possibility to change the data.

(2) Servo motor βiS series (200-V input series)

Table 4.5.1(b)

Motor model	Continuous rated output	Maximum output at acceleration
βiF 4/3000	0.75kW	2.3kW
βiF 8/2000	1.2kW	3.2kW
βiF 12/2000	1.4kW	2.6kW
βiF 22/2000	2.5kW	5.7kW
βiF 30/1500	3.0kW	8.7kW
βiS 0.2/5000	0.05kW	0.24kW
βiS 0.3/5000	0.1kW	0.4kW
βiS 0.4/5000	0.13kW	0.5kW
βiS 0.5/6000	0.35kW	1.3kW
βiS 1/6000	0.5kW	2.3kW
βiS 2/4000	0.5kW	2.3kW
βiS 4/4000	0.75kW	2.5kW
βiS 8/3000	1.2kW	2.8kW
βiS 12/2000	1.4kW	2.8kW
βiS 12/3000	1.8kW	5.4kW
βiS 22/2000	2.5kW	5.2kW
βiS 22/3000	3.0kW	8.8kW
βiS 30/2000	3.0kW	11kW
βiS 40/2000	3.0kW	11kW
βiSc 2/4000	0.5kW	2.3kW
βiSc 4/4000	0.75kW	2.5kW
βiSc 8/3000	1.2kW	2.8kW
βiSc 12/2000	1.4kW	2.8kW
βiSc 12/3000	1.8kW	5.4kW
βiSc 22/2000	2.5kW	5.2kW

NOTE
There is a possibility to change the data.

(3) Servo motor αi series (400-V input series)

Table 4.5.1(c)

Motor model	Continuous rated output	Maximum output at acceleration
αiF 4/5000HV	1.4kW	4.5kW
αiF 8/3000HV	1.6kW	5.7kW
αiF 8/4000HV	2.2kW	9.0kW
αiF 12/4000HV	3.0kW	7.5kW
αiF 22/3000HV	4.0kW	9.6kW
αiF 22/4000HV	4.0kW	17kW
αiF 30/4000HV	5.0kW	21kW (at 3000 min^{-1}) 23kW (at 4000 min^{-1})
αiF 40/3000HV	6.0kW	18kW

© MyFANUC 2D5504D5BAC945D385F48627D4977F6C

Motor model	Continuous rated output	Maximum output at acceleration
αiF 40/3000HV+FAN	9.0kW	18kW
αiS 2/5000HV	0.75kW	2.8kW
αiS 2/6000HV	1.0kW	2.4kW
αiS 4/5000HV	1.0kW	3.1kW
αiS 4/6000HV	1.0kW	2.9kW
αiS 8/4000HV	2.3kW	8.0kW
αiS 8/6000HV	2.2kW	11kW
αiS 12/4000HV	2.5kW	12kW
αiS 12/6000HV	2.2kW	20kW
αiS 22/4000HV	4.5kW	19kW
αiS 22/6000HV	4.5kW	21kW
αiS 30/4000HV	5.5kW	22kW
αiS 40/4000HV	5.5kW	24kW
αiS 50/2000HV	4kW	21kW
αiS 50/3000HV+FAN	14kW	39kW
αiS 60/2000HV	5kW	25kW
αiS 60/3000HV+FAN	14kW	40kW
αiS 100/2500HV	11kW	38kW
αiS 100/2500HV+FAN	22kW	38kW
αiS 200/2500HV	16kW	48kW
αiS 200/2500HV+FAN	30kW	48kW
αiS 300/2000HV	52kW	96kW
αiS 300/3000HV	55kW	143kW
αiS 500/2000HV	60kW	104kW
αiS 500/3000HV	60kW	160kW
αiS 1000/2000HV	125kW	198kW
αiS 1000/3000HV	170kW	350kW
αiS 2000/2000HV	200kW	400kW
αiS 3000/2000HV	220kW	690kW

NOTE
There is a possibility to change the data.

(4) Servo motor βiS series (400-V input series)

Table 4.5.1(d)

Motor model	Continuous rated output	Maximum output at acceleration
βiS 2/4000HV	0.5kW	2.3kW
βiS 4/4000HV	0.75kW	2.5kW
βiS 8/3000HV	1.2kW	2.8kW
βiS 12/3000HV	1.8kW	5.4kW
βiS 22/2000HV	2.5kW	5.2kW
βiS 22/3000HV	3.0kW	8.8kW
βiS 30/2000HV	3.0kW	11kW
βiS 40/2000HV	3.0kW	11kW

NOTE
There is a possibility to change the data.

© MyFANUC 2D5504D5BAC945D385F48627D4977F6C

4.5.2 Spindle Motor Continuous Rated Outputs and Maximum Outputs at Acceleration

This subsection gives the output data of the spindle motor for selecting αi PS or αi PS_R.
Refer to "FANUC SPINDLE MOTOR αi series DESCRIPTIONS (B-65272EN)" for detailed specifications. For any motor other than those mentioned below, refer to the relevant descriptions.

(1) Spindle motor αi series (200-V input series)

Table 4.5.2(a)

Motor model	Continuous rated output	30-minute rated output	S3 25% rated output	Maximum output at acceleration
αi I 0.5/10000	0.55kW	1.1kW (15-minute rated)	-	1.32kW
αi I 0.5/10000 (Power up model)	0.55kW	1.1kW (15-minute rated)	1.5kW	1.8kW
αi I 0.5/15000 (Power up model)	0.55kW	1.1kW(15-minute rated)	1.5kW	1.8kW
αi I 1/10000	1.5kW	2.2kW (15-minute rated)	-	2.64kW
αi I 1/10000 (Power up model)	1.5kW	2.2kW (15-minute rated)	3.7kW	4.44kW
αi I 1/15000	1.5kW	2.2kW (15-minute rated)	-	5.6kW
αI I 1.5/10000	1.1kW	3.7kW (10-minute rated)	-	4.44kW
αi I 1.5/10000 (Power up model)	2.2kW	3.7kW (10-minute rated)	5.5kW	6.6kW
αI I 1.5/20000	1.5kW	2.2kW (15-minute rated)	-	13kW
αi I 2/10000	2.2kW	3.7kW (15-minute rated)	-	4.44kW
αi I 2/10000 (Power up model)	2.2kW	3.7kW (15-minute rated)	5.5kW	6.6kW
αi I 2/20000	2.2kW	3.7kW (15-minute rated)	-	20kW
αi I 3/10000	3.7kW	5.5kW	-	6.6kW
αi I 3/10000 (Power up model)	3.7kW	5.5kW	7.5kW	9kW
αi I 3/12000	3.7kW	5.5kW	-	13kW
αi I 6/10000, αi I 6/12000	5.5kW	7.5kW	-	9kW
αi I 6/10000 (Power up model)	5.5kW	7.5kW	11kW	13.2kW
αi I 8/8000, αi I 8/10000, αi I 8/12000	7.5kW	11kW	-	13.2kW
αi I 8/8000 (Power up model)	7.5kW	11kW	15kW	18kW
αi I 12/7000, αi I 12/12000	11kW	15kW	-	18kW
αi I 12/7000 (Power up model)	11kW	15kW	18.5kW	22.2kW
αi I 15/7000, αi I 15/12000	15kW	18.5kW	-	22.2kW
αi I 15/7000 (Power up model)	15kW	18.5kW	25kW	30kW
αi I 18/7000, αi I 18/12000	18.5kW	22kW	-	26.4kW
αi I 18/7000 (Power up model)	18.5kW	22kW	30kW	36kW
αi I 22/7000, αi I 22/12000	22kW	26kW	-	31.2kW
αi I 22/7000 (Power up model)	22kW	26kW	35kW	42kW
αI I 30/6000	30kW	37kW	-	44.4kW
αi I 30/7000 (Power up model)	30kW	37kW	45kW	54kW
αi I 40/6000	37kW	45kW	-	54kW
αi I 40/7000 (Power up model)	37kW	45kW	55kW	66kW
αi I 50/5000	45kW	55kW	-	66kW
αi I 50/5000 (Power up model)	45kW	55kW	65kW	78kW
αi I_P 12/6000, αi I_P 12/8000	5.5kW	7.5kW	-	12.3kW
αi I_P 12/6000 (Power up model)	5.5kW	7.5kW	9kW	12.3kW
αi I_P 15/6000, αi I_P 15/8000	7.5kW	9kW	-	13.5kW
αi I_P 15/6000 (Power up model)	7.5kW	9kW	12kW	14.4kW
αi I_P 18/6000, αi I_P 18/8000	9kW	11kW	-	15.1kW
αi I_P 18/6000 (Power up model)	9kW	11kW	15kW	18kW
αi I_P 22/6000, αi I_P 22/8000	11kW	15kW	-	20kW
αi I_P 22/6000 (Power up model)	11kW	15kW	18.5kW	22.2kW
αI I_P 30/6000	15kW	18.5kW	-	25kW

© MyFANUC 2D5504D5BAC945D385F48627D4977F6C

Motor model	Continuous rated output	30-minute rated output	S3 25% rated output	Maximum output at acceleration
αi I_P 30/6000 (Power up model)	15kW	18.5kW	22kW	26.4kW
αI I_P 40/6000	18.5kW	22kW	-	29kW
αi I_P 40/6000 (Power up model)	18.5kW	22kW	26kW	31.2kW
αI I_P 50/6000	22kW	30kW	-	35.4kW
αi I_P 50/6000 (Power up model)	22kW	30kW	37kW	44.4kW
αI I_P 60/5000	22kW	30kW	-	36kW

NOTE
Continuous rated output, 30-minute rated output, and maximum output at acceleration are subject to change.

(2) Spindle motor βi series (200-V input series)

Table 4.5.2(b)

Motor model	Continuous rated output	15-minute rated output	Maximum output at acceleration
βi I 3/10000	3.7kW	5.5kW	6.1kW
βi I 6/10000	5.5kW	7.5kW	8.3kW
βi I 8/10000	7.5kW	11kW	12.1kW
βi I 12/8000	11kW	15kW	16.5kW
βi I 15/7000	15kW	18.5kW	20.3kW
βi I_P 12/6000	5.5kW	7.5kW	8.3kW
βi I_P 15/6000	7.5kW	9kW	9.9kW
βi I_P 18/6000	9kW	11kW	12.1kW
βi I_P 22/6000	11kW	15kW	16.5kW
βi I_P 30/6000	15kW	18.5kW	20.3kW
βi I_P 40/6000	15kW	18.5kW	20.3kW

NOTE
Continuous rated output, 15-minute rated output, and maximum output at acceleration are subject to change.

(3) Spindle motor αi series (400-V input series)

Table 4.5.2(c)

Motor model	Continuous rated output	30-minute rated output	S3 25% rated output	Maximum output at acceleration
αi I 0.5/10000HV	0.55kW	1.1kW (15-minute rated)	-	1.32kW
αi I 1/10000HV	1.5kW	2.2kW (15-minute rated)	-	2.64kW
αi I 1.5/10000HV	1.1kW	3.7kW (10-minute rated)	-	4.44kW
αi I 2/10000HV	2.2kW	3.7kW (15-minute rated)	-	4.44kW
αi I 3/10000HV	3.7kW	5.5kW	-	6.6kW
αi I 6/10000HV	5.5kW	7.5kW	-	9kW
αi I 6/10000HV(Power up model)	5.5kW	7.5kW	11kW	13.2kW
αi I 8/8000HV	7.5kW	11kW	-	13.2kW
αi I 8/8000HV(Power up model)	7.5kW	11kW	15kW	18kW
αi I 12/7000HV	11kW	15kW	-	18kW
αi I 12/7000HV(Power up model)	11kW	15kW	18.5kW	22.2kW
αi I 15/7000HV	15kW	18.5kW	-	22.2kW
αi I 15/7000HV(Power up model)	15kW	18.5kW	25kW	30kW
αi I 22/7000HV	22kW	26kW	-	31.2kW
αi I 22/7000HV(Power up model)	22kW	26kW	35kW	42kW
αi I 30/6000HV	30kW	37kW	-	44.4kW

© MyFANUC 2D5504D5BAC945D385F48627D4977F6C

Motor model	Continuous rated output	30-minute rated output	S3 25% rated output	Maximum output at acceleration
αi I 40/6000HV	37kW	45kW	-	54kW
αi I 50/5000HV	45kW	55kW	-	66kW
αi I 60/5000HV	60kW	75kW	-	90kW
αi I 75/5000HV	75kW	90kW	-	108kW
αi I 100/5000HV	100kW	-	-	120kW
αi I 150/5000HV	150kW	180kW	-	216kW
αi I_P 15/6000HV	7.5kW	9kW	-	13.5kW
αi I_P 22/6000HV	11kW	15kW	-	20kW
αi I_P 40/6000HV	18.5kW	22kW	-	29kW
αi I_P 50/6000HV	22kW	30kW	-	35.4kW
αi I_P 60/5000HV	22kW	30kW	-	36kW

NOTE

Continuous rated output, 30-minute rated output, and maximum output at acceleration are subject to change.

© MyFANUC 2D5504D5BAC945D385F48627D4977F6C

5 INSTALLATION

Chapter 5, "INSTALLATION", consists of the following sections:

5.1 LEAKAGE CURRENT 78
5.2 GROUND 79
5.3 NOISE PREVENTION 82
5.4 AMPLIFIER INSTALLATION 88
5.5 AMPLIFIER INSTALLATION NOTES RELATING TO SAFETY STANDARDS 88
5.6 NOTES ON COOLANT (REFERENCE) 95

5.1 LEAKAGE CURRENT

The servo amplifier α*i* series drives the motor by using the transistor PWM inverter method. This causes a high-frequency leakage current to flow via the ground drift capacitance in the motor winding, power cable, and amplifier. This may cause a device installed on Power supply side, such as a ground fault interrupter or leakage-protection relay, to malfunction.
When a circuit breaker with a ground fault interrupter is used, it must be selected so that the sum of the values calculated according to (a) and (b) described below is not greater than the non-operating current value.

(a) Selection criterion per amplifier
Model : α*i* SV and α*i* SP
Criterion for selection : 2 mA per amplifier (Note 1)

(b) Selection criterion per motor
Criterion for selection : 1 mA per motor (Note 1)

The following example shows how to use selection criteria (a) and (b):
Example :
When the system consists of α*i* SV 1-axis × 1, α*i* SV 3-axis × 1 (three motors), and α*i* SP × 1
2 mA×3 (for the amplifiers) + 1 mA×5 (for the motors) = 11 mA
→ Select a circuit breaker (Note 2) with a non-operating current of 11 mA or higher. (A general ground fault interrupter that can be used for the above example is the one with a rated sensitivity current of 30 mA and a non-operating current of 15 mA.)

NOTE
1 These criteria are for selecting a circuit breaker with a ground fault interrupter; they do not indicate accurate leakage currents.
2 A circuit breaker may malfunction depending on the frequency characteristic of the ground fault interrupter. Therefore, use a ground fault interrupter supporting the use of inverters.
3 The above criteria are values in the commercial frequency band. Some measuring instruments for measuring leakage current may sense a high frequency band, thus showing a larger value.

© MyFANUC 2D5504D5BAC945D385F48627D4977F6C

5.2 GROUND

5.2.1 Ground Systems

There are three ground systems for CNC system grounding.

(a) Signal ground system (SG)
The signal ground (SG) supplies the reference voltage (0V) of the electrical signal system.

(b) Frame ground system (FG)
The frame ground system (FG) is used for safety, and suppressing external and internal noises. In the frame ground system, the frames, panels, and shields for the interface cables between the units are connected.

(c) System ground system (PE)
In the system ground system (PE), frame ground provided for each device or among units is connected systematically to ground at one place.

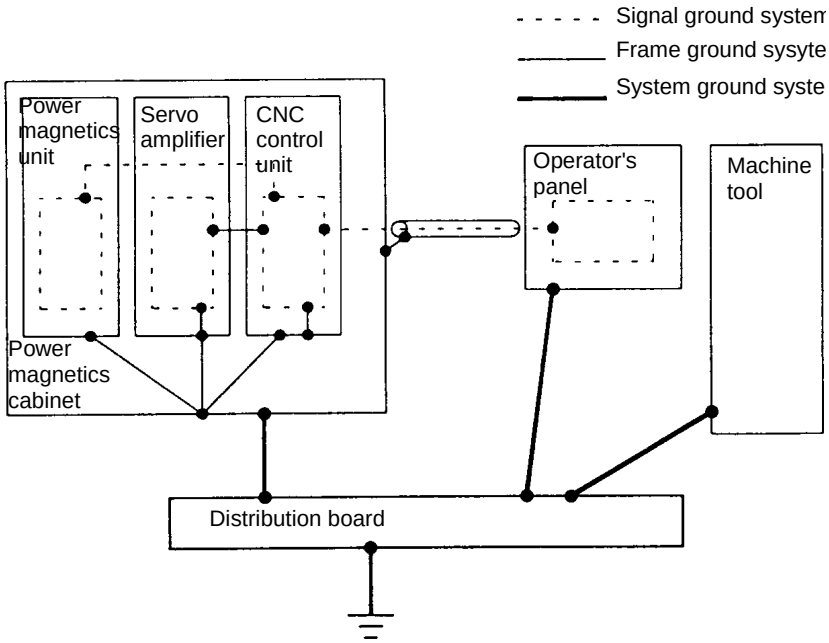

5.2.2 Grounding Method

Generally, noise that causes problems is high-frequency noise. Grounding each device with a low impedance(NOTE) is a key to suppression of high-frequency noise. Methods of grounding for this purpose are explained below.

NOTE
In addition to a resistance component, which converts current to heat, impedance contains a reactance component, which prevents the flow of AC current at a certain frequency.

(1) Multi-point grounding
If a metal plate of a cabinet is grounded with a sufficiently low impedance, the metal plate is used as a ground plate, and each device is grounded nearby. This method allows grounding to a low-impedance metal plate of the cabinet over a shortest distance, and can therefore effectively suppress high-frequency noise. On the other hand, because a metal plate of a cabinet is used as a ground plate, noise suppression efficiency depends on the structure of the cabinet. For cabinets, see Subsection 1.1.4. Fig. 5.2.2 (a) shows a cabling schematic.

© MyFANUC 2D5504D5BAC945D385F48627D4977F6C

When the multi-point grounding method is used, units can be grounded with a low impedance, and the lengths of ground cables can also be reduced, so cabling can be simplified.

> ⚠ **CAUTION**
> If a metal plate of a cabinet does not show a low impedance, a noise problem may arise between the power ground line and signal ground line.

(2) Single-point grounding
Signal lines and power lines are grounded separately, and grounding is performed at a single point to suppress noise from a power line to signal line. With this method, the length of a cable for grounding a unit tends to be long. So, to suppress high-frequency noise sufficiently, the cable diameter must be increased, or more than one connection cable must be used. Fig. 5.2.2 (b) shows a cabling schematic.

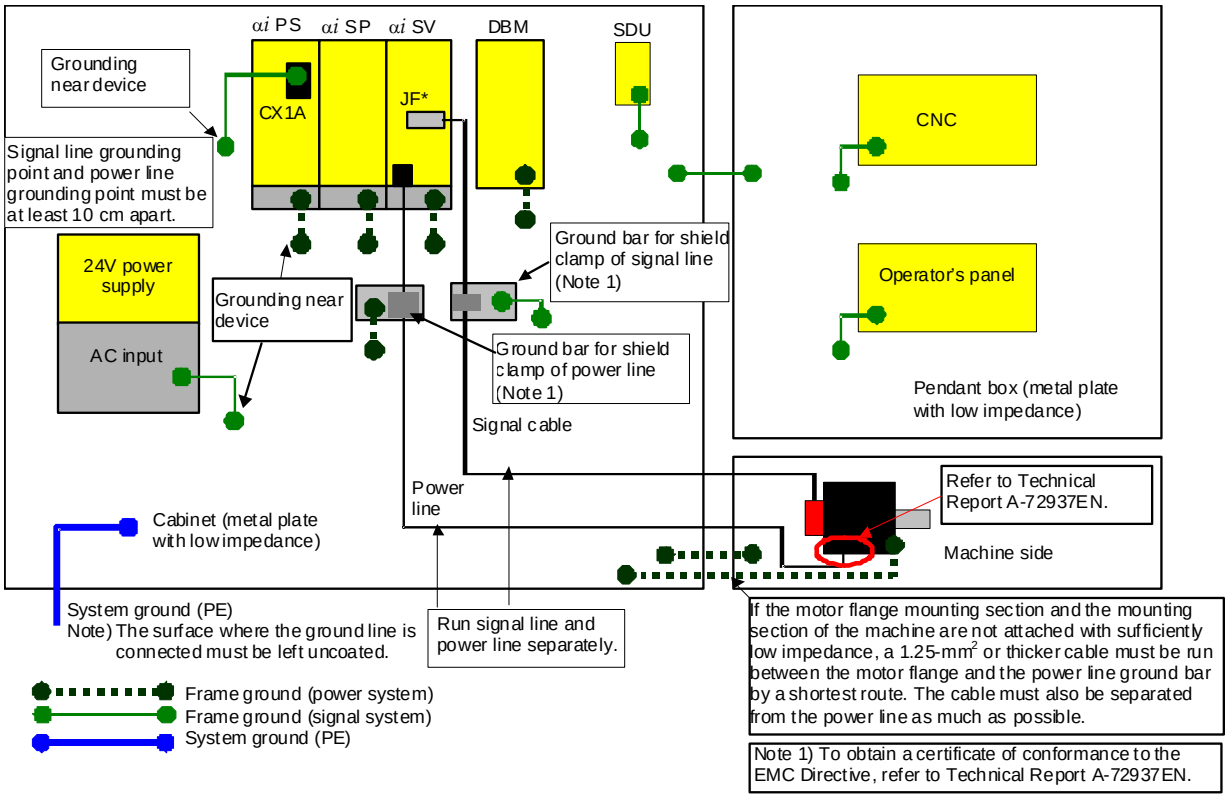

Fig. 5.2.2 (a) Schematic of multi-point grounding

© MyFANUC 2D5504D5BAC945D385F48627D4977F6C

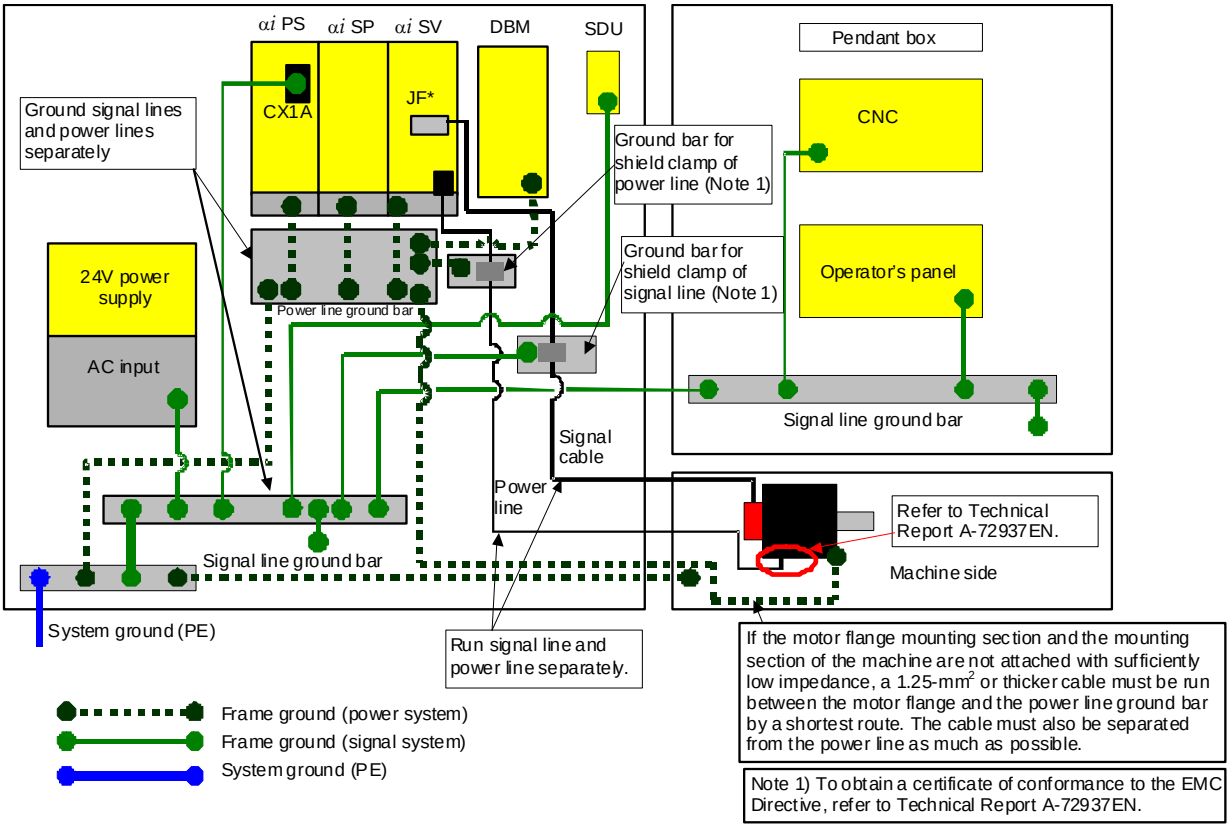

Fig. 5.2.2 (b) Schematic of single-point grounding

5.2.3 Notes on Connecting

- Connect the signal ground (0V) with the frame ground (FG) at only one place in the αi PS.
- The grounding resistance of the system ground must be 100Ω or lower for a 200-V line (class D grounding) or 10Ω or lower for a 400-V line (class C grounding).
- The system ground cable must have enough cross-sectional area to safely carry the accidental current flow into the system ground when an accident such as a short circuit occurs. (Generally, it must have the cross-sectional area of the AC power cable or more.)
- Use the cable containing the AC power wire and the system ground wire so that power is supplied with the ground wire connected.

NOTE

1 Securing the ground terminal and a cable together is not permitted.

2 The motor flange mounting section may not be able to be connected to the machine mounting section of the power magnetics cabinet via the mechanical unit at sufficiently low impedance in a machine. In this case, a cable of a minimum required length that is at least 1.25 mm^2 thick must be run from the motor flange to the frame ground of the power magnetics cabinet. The cable must also be separated from the motor power line as much as possible.

© MyFANUC 2D5504D5BAC945D385F48627D4977F6C

5.3 NOISE PREVENTION

5.3.1 Separation of Signal Lines

If a signal cable is near a power cable, noise may be induced. The signal cables must be separated from the power cables when routed. When power and signal cables cannot possibly be separated from each other, the cables must be run in parallel in the minimum distance. When a conduit is used, it is recommended that the signal cables be separated from the power cables in it.

[Types of cables]

Group	Signal type	Action
A	Amplifier input power line	Separate binding (Note 1) or electromagnetic shielding (Note 2) is necessary for group B cables.
	Motor power line	
	Magnetic contactor driving coil (Note 3)	
B	Cable between CNC and αi SP	Separate binding or electromagnetic shielding is necessary for group A cables. All cables must be shielded.
	Cable for position feedback or velocity feedback	
	Cable for Positioncoder	
	Other cable related to sensor	

NOTE

1 The groups must be 10 cm or more apart from one another when binding the cables in each group.
2 The electromagnetic shield refers to shielding between groups with grounded steel plates.
3 Attach a noise suppressor such as a spark killer to the magnetic contactor driving coil.

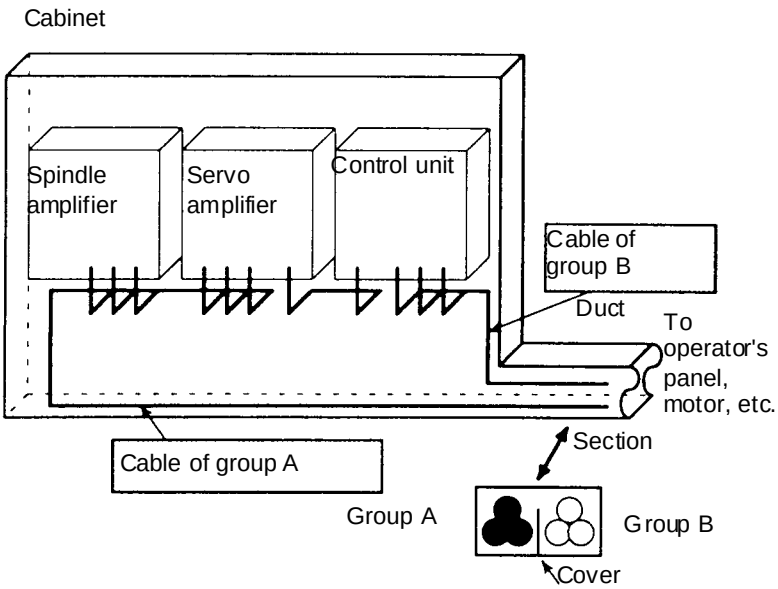

© MyFANUC 2D5504D5BAC945D385F48627D4977F6C

5.3.2 Cable Clamp and Shield Processing

Basically, signal lines require shield clamping. Correct shield clamping can suppress noise from the outside.
Strip part of the cable jacket to expose the shield sheath, and secure that part of the cable to the ground bar by using a clamp. At this time, the ground bar must be in contact with the surface of the shield so that the contact area becomes wide. (See the figure.)
When using the multi-point grounding method, remove the coating of the part where the shield clamp ground bar is connected to the cabinet, to allow surface contact.

- Terminal processing of the shield sheaths
  Perform terminal processing of the shield sheaths of the signal cables according to the description in Section 9.3.

- Cable clamp
  The cables that connect to the amplifier and that require shield processing must be clamped as indicated in Fig. 5.3.2(a).

  Clamping secures a cable and also provides shielding. Clamping must always be performed since it is very important for stable system operation.

  Connect the cable clamp of the signal cables of α*i* SV connected to common α*i* PS to common the ground plate for signals.

- Grounding
  The ground plate must be created and installed by the user as shown in Figs.5.3.2(b) to (e).

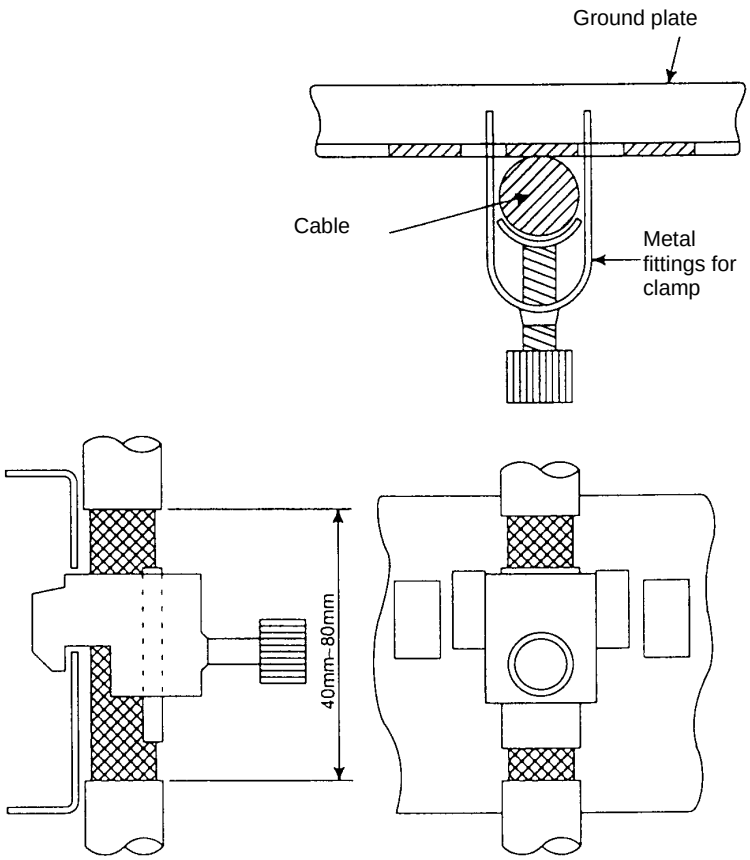

Fig.5.3.2(a) Cable clamp (1)

© MyFANUC 2D5504D5BAC945D385F48627D4977F6C

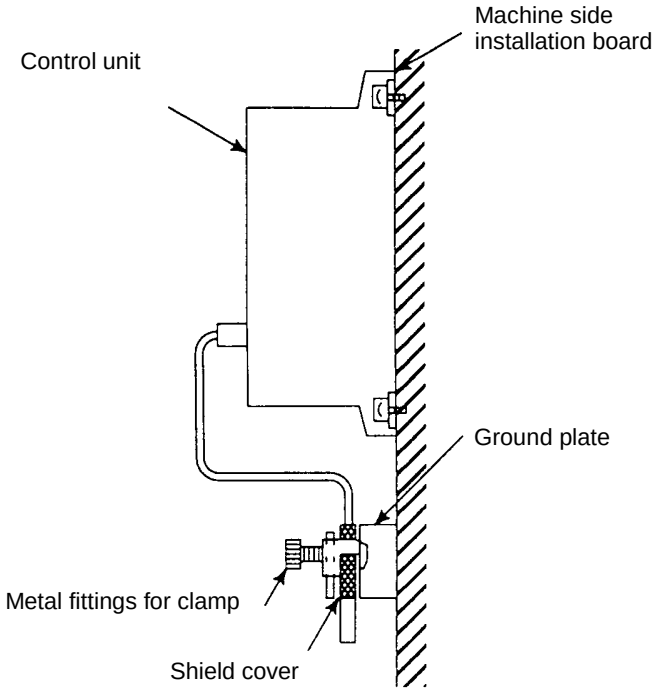

Fig.5.3.2(b) Cable clamp (2)

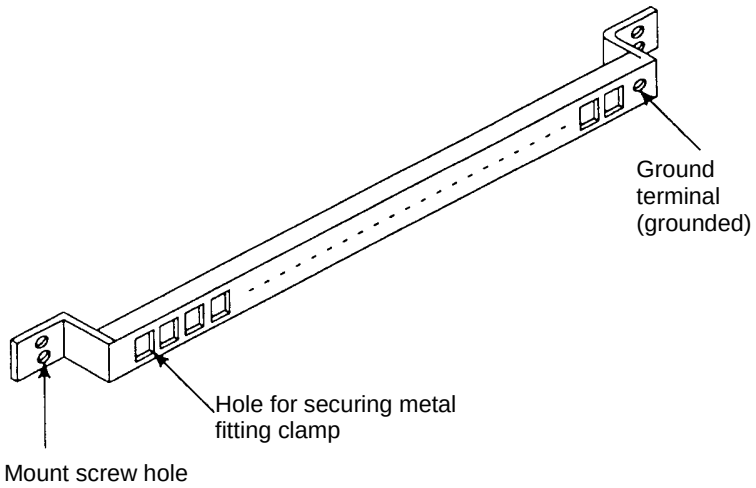

Fig.5.3.2(c) Ground plate

For the ground plate, use a metal plate of 2 mm or thicker, which surface is plated with nickel.

© MyFANUC 2D5504D5BAC945D385F48627D4977F6C

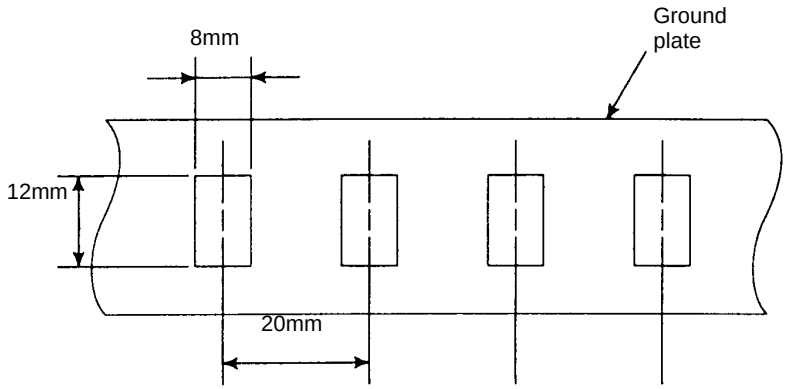

Fig.5.3.2(d) Ground plate holes

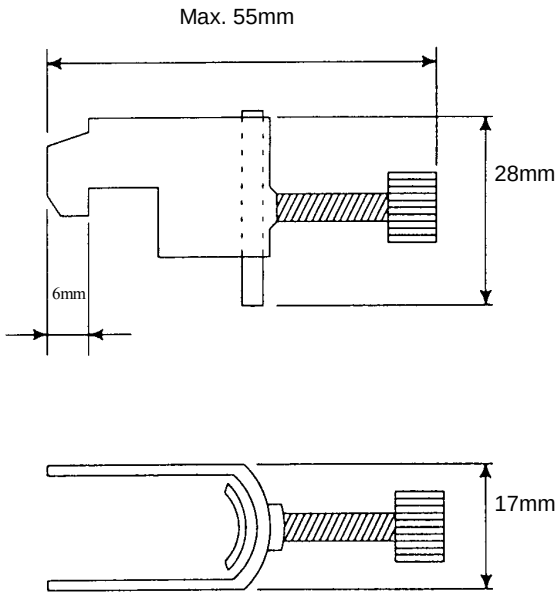

Fig.5.3.2(e) Outer drawings of metal fittings for clamp

5.3.3 Cabinet

A cabinet is a key element for improving noise resistance and suppressing radiation noise.
One factor of noise resistance and radiation noise problems is insufficient electrical conductivity between metal plates of a cabinet. Generally, noise that causes problems is high-frequency noise. Therefore, a cabinet needs to be designed considering high-frequency noise.

(1) Basic structure of a cabinet
Basically, cabinets should be made of metal.
To improve noise resistance, the metal plates of the side walls, top plate, and bottom plate of a cabinet must be electrically low-impedance conductive. So, welding is recommended for the cabinet.
Bead (continuous) welding, rather than spot welding, should be applied to the cabinet to enhance low-impedance electrical conductivity among the metal plates.
When the cabinet uses a built-up structure, joint part of each metal plate must be left uncoated, so that the plates come in direct contact with each other to provide electrical conductivity.
When metal plates are connected only via cables because of structural restrictions, it becomes more difficult to achieve low-impedance connection than when the metal plates are welded or are in direct contact. It is necessary to ensure large sectional areas of the cables used, sufficient conductivity of the connection parts, and large contact areas.

© MyFANUC 2D5504D5BAC945D385F48627D4977F6C

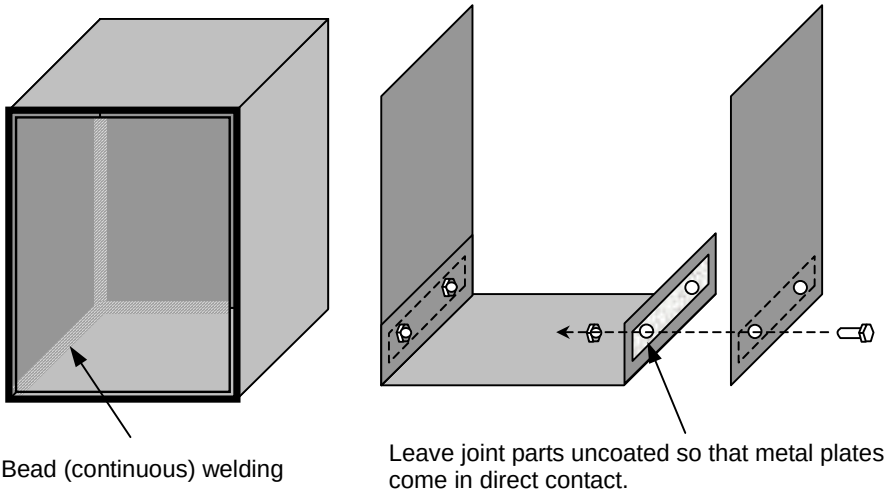

NOTE

The purpose of the description in this subsection is to provide a cabinet with low-impedance electric conductivity to improve noise resistance. To implement a protection circuit, a cable having an appropriate sectional area for the AC input power capacity of the unit mounted on each metal plate needs to be used to connect the metal plates to perform protective grounding.

(2) Installing a unit in a cabinet

Run the ground cable of the unit by a shortest route. If the conductive wire of the ground cable is thin, impedance to high-frequency noise in particular becomes high, so grounding becomes less effective. For the position of the ground terminal of each unit, see the relevant manual. When a metal plate is installed in the cabinet after a unit is attached to the metal plate, the following method should be used. Attach the metal plate to the cabinet so that their wide areas left uncoated by masking come in contact with each other. The method of using only screws to provide electric conductivity is not recommended because impedance to high frequencies cannot be decreased sufficiently.

© MyFANUC 2D5504D5BAC945D385F48627D4977F6C

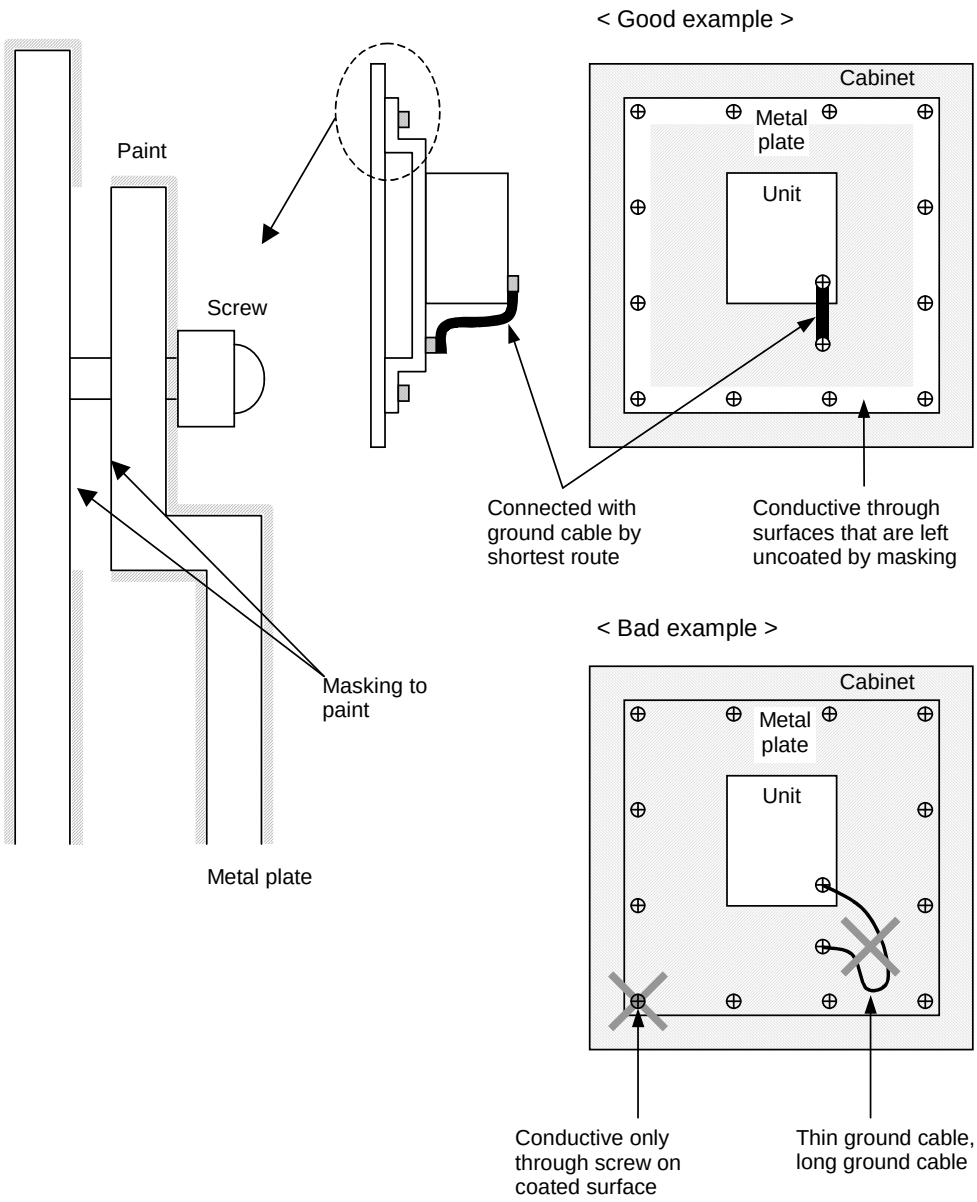

5.3.4 Others

Cable length

If a cable is longer than required, a loss of power increases, and the signal line becomes likelier to be affected by noise. Use each cable of the minimum required length.

Use of shield cables

- Satisfying the requirements of the EMC Directives
  For details, refer to "Satisfying the Requirements of the EMC Directive" (A-72937EN).

- Protection against noise
  Noise generated from the shielded wire of a power shield cable may affect signals via the shielded wire of a signal cable. For this reason, separate the ground of the shielded wire of a power cable from that of the shielded wire of a signal cable. Use different ground clamping plates (ground plates) for power cables and signal cables to improve safety.

© MyFANUC 2D5504D5BAC945D385F48627D4977F6C

5.4 AMPLIFIER INSTALLATION

A restriction is imposed on the order of amplifier installation as described below.

(1) When an αi SP 45, αi SP 55, αi SP 30HV, αi SP 45HV, αi SP 75HV, or αi SP 100HV is used
Install the αi PS and αi SP close to each other.

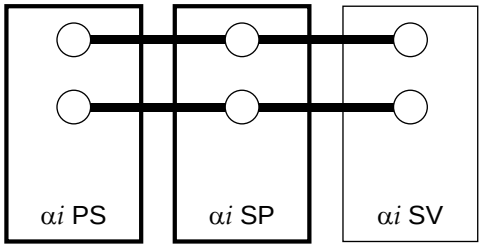

(2) When an αi SV 360HV is used
Install the αi PS and αi SV 360HV close to each other.

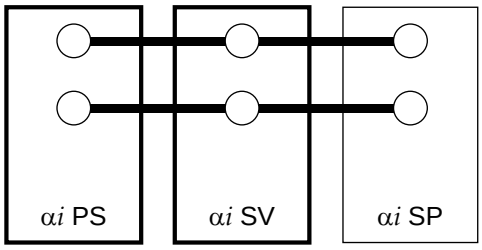

5.5 AMPLIFIER INSTALLATION NOTES RELATING TO SAFETY STANDARDS

The αi series servo amplifiers are designed to meet the following safety standards:

- EN50178 1997 or EN61800-5-1
- UL508C Second Edition or Third Edition
- CSA C22.2 No.14 (cUL)

To verify the conformity to these standards, the amplifiers are certified by TÜV Rheinland, a third certification organization, and UL.
When performing the CE Marking or UL Marking process, in design of the power magnetics cabinet, pay special attention to the installation conditions described in this section.

5.5.1 Requirements of EN and IEC Standards

5.5.1.1 Classification in standards on insulation design

(1) Insulation between circuits and between a circuit and protective ground
According to EN50178 5.2 or EN61800-5-1, insulation design of the amplifier conforms to the related standards in IEC60664 Part 1.

- The primary (the power supply and main circuit side) and the secondary (control circuit side) are separated by enforced insulation to ensure safety.
- Basic insulation is applied to the protective ground side.

© MyFANUC 2D5504D5BAC945D385F48627D4977F6C

Basic insulation is also applied between the main circuit of the power supply and the aluminum flanges (integrated with the heat sink), so connect a protective ground cable to the ground terminal of the lower aluminum flange.

(2) Installation category (overvoltage category)
In EN50178 5.2.16.2 or EN61800-5-1, power supply facilities are classified according to the impulse voltage to ground, included in the power supply to which the amplifier is connected.
This amplifier is designed to fall into installation category (overvoltage category) II.

Space distance is designed on the assumption that the rated impulse withstanding voltage (impulse voltage to ground) that appears in the power supply to which the amplifier is connected is 2.5 kV or less. If an impulse to ground that is higher than the assumed value appears in the power supply, it needs to be suppressed. In general, this condition is considered to be satisfied if an insulation transformer is used in the power supply input section of the machine. If an insulation transformer is not used, a surge protector (lightning surge absorber) must be inserted before ground to suppress impulse higher than 2.5 kV to ground.

(3) Pollution degree of the installation environment and protection class of the power magnetics cabinet
EN 50178 5.2.15.2 or EN61800-5-1 requires that when the machine is installed in the environment of ordinary plants, the class of protection against dust, coolant, chips, and so on be IP54 or higher.
If the power magnetics cabinet satisfies this requirement, the degree of pollution inside the power magnetics cabinet is considered to be class 2.

Insulation design of this amplifier assumes that the amplifier is installed in an environment with pollution degree 2.
When the amplifier is used in a general machine installation environment, install the amplifier in a power magnetics cabinet that satisfies protection class IP54 or higher.
The IP level, however, is determined by the environment (atmosphere) in which the machine is installed. So, the protection class of the power magnetics cabinet should be selected according to the environment.
When an external heat sink cooling type amplifier of which heat sink fin protrudes behind the mounting flange is used, the fin section must be in a cooling area (duct) conforming to around IP22 to IP33, and must be protected from being exposed to direct splashes of coolant, chips, and so forth.

5.5.1.2 Protection against electric shock

(1) Protection against direct contact with charged parts (EN50178 7.2.1 or EN61800-5-1)
The electric shock protection level of this amplifier after it is installed is equivalent to IP1X (hand protection), which requires protection against unintentional or careless contact.

This amplifier must be installed in a power magnetics cabinet. According to Section 6.2.1, "Electric shock protection by cabinets", in EN 60204-1, the power magnetics cabinet must be equipped with a lock so that when the power to the amplifier is on, the power magnetics cabinet cannot be opened by persons except special maintenance personnel or persons authorized to do maintenance work who have been sufficiently trained in prevention of electric shock.

If the operator of the machine needs to open the power magnetics cabinet for some operations, the operator must be given thorough safety training, or a protection cover must be provided to prevent the operator from touching the amplifier.

(2) Confirmation of discharge of the electrolytic capacitor (EN50178 7.2.1 or EN61800-5-1)
This amplifier includes a large-capacity electrolytic capacitor for the power smoothing circuit. Even after the power supply input circuit is shut off, this capacitor remains charged for a while.

© MyFANUC 2D5504D5BAC945D385F48627D4977F6C

When it becomes necessary to touch the amplifier to do maintenance work or for other purposes, wait until the discharge time indicated on the face plate of the amplifier is passed, or start work after ensuring safety by measuring the residual voltage of the DC link section with a volt-ohm meter and checking that the LED (red) indicating charging is turned off.

(3) Leakage current to the protective ground cable (EN50178 7.2.11 or EN61800-5-1)
The motor is controlled by changing the average amplitude and frequency of voltage by pulse duration modulation and applying the modulated voltage to the armature. To do this, chopper voltage at a frequency of several kilohertz, which is the carrier frequency for the pulse duration modulation, is applied to the power line of the motor.

Ground stray capacitance mainly between the motor winding and casing and between the power line and protective ground line of the motor power cable causes leakage current to flow through the protective ground line of the motor power cable and machine ground, part of which flows also to the protective ground line of the machine.
The resultant leakage current value is around 1 to 2 mA per motor axis at the commercial power frequency component (50/60Hz). However, with the measurement circuit defined by EN 50178 5.2.11 or EN61800-5-1, the sensitivity of high-frequency components cannot be reduced sufficiently, so a value greatly exceeding 3.5 mA is sometimes observed.

If the machine is not grounded, making contact with the machine can result in electric shock. Therefore, provide sufficient protection against electric shock by taking one of the following measures:
(a) Use a protective ground cable with a copper wire having a sectional area of 10 mm^2 or more.
(b) Install a ground-fault circuit interrupter to shut off power as soon as a ground fault occurs.
(c) Add a protective ground terminal to the cabinet to duplicate protective ground cable connection.
(d) When installing an RCD unit, use RCD type B.

When using a ground-fault circuit interrupter, select an electromagnetic type with low high-frequency component sensitivity or an electronic type supporting inverters to prevent troubles due to high-frequency components. Measure (a) or (d), which can detect leakage current, is recommended.

5.5.1.3 Protective grounding

The amplifier has several protective ground terminals (marked according to 417-IEC-5019). These terminals are used not only for protection against electric shock due to dielectric breakdown but also for functional grounding to prevent noise.
Connect all the protective ground terminals to the protective ground (PE) terminal in the power magnetics cabinet.

For how to connect a protective ground cable and its cable diameter, refer to Section 5.2, "GROUND", and Subsection 9.3.1.7, "Details of cable K70", in B-65282EN/07.
Note that connecting a cable terminal to a protective ground point is not permitted.

5.5.1.4 EMC

For CE Marking, the EMC Directive must be observed. FANUC's products have obtained certificates of conformance to EN61000-6-2 : 2005 and EN55011 : 2009+A1:2010 (EMC Directive 2004/108/EC) from a third certification organization.
In addition, EMC of the machine and system units must be evaluated according to the above EU and (or) other requirements.

© MyFANUC 2D5504D5BAC945D385F48627D4977F6C

5.5.1.5 Notes on the emergency stop circuit configuration

The power system in the amplifier is shut off by IGBT (transistor) and not by electro-mechanical means. When configuring an emergency stop circuit, therefore, be sure to insert a line contactor to the power input line of Power Supply for power feeding to allow electro-mechanical shut-off operation, so that voltage is applied to the control coil of the contactor via the contactor control output of Power Supply.

If the amplifier fails, even when the emergency stop command input (*ESP) of the amplifier is driven low, the output relay of Power Supply cannot sometimes be turned off, disabling the line contactor from being shut off.

To surely shut off power, besides the shut-off feature of the amplifier, the emergency stop circuit must have a redundant circuit structure that has an independent route for directly shutting off the line contactor when a command is issued from the emergency stop switch.

When a spindle amplifier module is used, if the power line is shut off during spindle rotation, the power regeneration function may not be able to stop the spindle immediately, allowing the spindle to coast for a long time. So, the redundant circuit mentioned above must have a delay feature using an off-delay timer with a normal stop time taken into account.

5.5.1.6 Reduction of load ratio to ambient temperature

Some servo amplifier models have been approved as products conforming to standards with a load reduction ratio set.
If the load ratio is exceeded during use, the permissible temperature range of a part used may be exceeded, which can result in the issuance of an overheat alarm or decrease of the life of the part. So, the amplifier must be used so that the reduction characteristic is not exceeded.
For the load reduction ratio, refer to "(6) Derating" in Section 2.2.

5.5.1.7 Overload protection

An overload protection feature is provided as follows:
In the α*i* SP, the protection feature works when the maximum output continues for 30 seconds or longer.
In the α*i* SV, the protection feature works when the current level becomes 1.3 times as high as the rated current of the motor.

5.5.1.8 External overload protection device

The servo amplifier is not equipped with a special protection device. To protect conductors, pay attention to the specifications of the power supply unit.

5.5.1.9 Over-speed protection

The α*i* series servo amplifiers are not equipped with an over-speed protection device.

5.5.1.10 24-V power supply

Normally, the power for controlling the α*i* SV and α*i* SP is supplied from the α*i* PS. When supplying the power from another external power supply, use a class 2 power supply. The class 2 power supply uses a transformer and other parts that are proven safety. For details, contact the power supply manufacturer.

© MyFANUC 2D5504D5BAC945D385F48627D4977F6C

5.5.1.11 Screw tightening torque

The screws of the servo amplifier are tightened with the following torque:

Screw size	Tightening torque (Nm)
M4	1.1 to 1.5
M5	2.0 to 2.5
M6	3.5 to 4.5
M10	15 to 16

5.5.1.12 Notes on ground degree of protection

Ground degree of protection of α*i* servo amplifier series is I. Therefore, should be connected to the protective earth (PE) connection terminal of the electric panel in the protective earth terminal of all. The amplifier has several protective ground terminals (marked according to 417-IEC-5019). These terminals are used not only for protection against electric shock due to dielectric breakdown but also for functional grounding to prevent noise. Connect all the protective ground terminals to the protective ground (PE) terminal in the power magnetics cabinet. For how to connect a protective ground cable and its cable diameter, refer to Section 1, and Subsection 8.Note that connecting a cable terminal to a protective ground point is not permitted.

5.5.1.13 Short-circuit protection

The 200-V input α*i* series servo amplifiers are suitable for use with a power supply facility with 85,000 Arms or less/240 V (max).
The 400-V input α*i* series servo amplifiers are suitable for use with a power supply facility with 85,000 Arms or less/480 V (max).

5.5.1.14 Warning label

The warning label of the following is included in the shipping box. Please attache it to your cabinet.

下のラベルをアンプ設置後にロッカ内の見やすい場所に貼付下さい。
Please put the following label on a visible location in the cabinet after the installation of amplifiers.

ファナックのアンプに関する注意事項

AC200V入力サーボアンプは電源電圧240Vにて電流85,000Arms に制限された回路でUL短絡試験を実施しており、短絡電流がこの値を超えない電源回路に適合しています。
AC400V入力サーボアンプは電源電圧480Vにて短絡電流が85,000Armsを超えない電源回路に適合しています。

⚠ 注意　感電の恐れがあります
1. 主回路電源以外に制御電源にも高電圧が印加されている部分がありますので、アンプの保守作業の前には、全ての電源を遮断して下さい。
2. 電源遮断後、主回路のコンデンサの放電には20分以上かかります。放電を完了するまでは充電部に触れないで下さい。

⚠ 警告　やけどの恐れがあります
1. アンプの保守作業の前には、全ての電源を遮断した後、少なくとも5分間は放熱器に触れないで下さい。

NOTICE ON FANUC AMPLIFIERS

"Suitable for use on a circuit capable of delivering not more than 85,000 rms symmetrical amperes, 240 V maximum." For models rated 200 V class only.
"Suitable for use on a circuit capable of delivering not more than 85,000 rms symmetrical amperes, 480 V maximum." For models rated 400 V class only.

⚠ CAUTION - RISK of Electric Shock
1.More than one disconnect switch may be required to deenergize the equipment before servicing.
2.Capacitor discharge time is at least 20 min.

⚠ WARNING　HOT SURFACE - RISK of Burn
1.Please do not touch the heat sink for 5 min. at least after cutting off the power of the equipment in servicing.

© MyFANUC 2D5504D5BAC945D385F48627D4977F6C

5.5.1.15 Notes on connecting

- Connect the signal ground (0 V) with the frame ground (FG) at only one place in the αi PS.
- The grounding resistance of the system ground must be 100Ω or lower for a 200-V line (class D grounding) or 10Ω or lower for a 400-V line (class C grounding).
- The system ground cable must have enough cross-sectional area to safely carry the accidental current that flows into the system ground in case of an accident such as a short circuit. (Generally, it must have a cross-sectional area equivalent to or larger than that of the AC power cable.)
- Use a system ground cable in which the AC power wire and the system ground wire are combined so as to prevent power from being supplied with the ground wire disconnected.

NOTE

1 Securing the ground terminal and a cable together is not permitted.

2 The motor flange mounting section may not be able to be connected to the machine mounting section of the power magnetics cabinet via the mechanical unit at sufficiently low impedance in a machine. In this case, connect the motor flange to the frame ground of the power magnetics cabinet by using the shortest possible cable that is at least 1.25 mm^2 thick. The cable must also be separated from the motor power line as much as possible.

5.5.2 Requirements of UL Standards

5.5.2.1 Classification in standards on insulation design

(1) Insulation between circuits and between a circuit and protective ground (UL508C 36, CSA C22.2 No.14)
According to UL508C, CSA C22.2 No.14, insulation design of the amplifier conforms to the requirements of UL840, CSA C22.2 No.0.2-93. Connect a protective ground cable to the ground terminal of the lower aluminum flange.

(2) Installation category (overvoltage category)
According to UL508C 36.9.4.(C), CSA C22.2 No.14, this amplifier is designed to fall into installation category (overvoltage category) III, so a surge absorber must be installed in the power input section of the machine. (UL-compliant product, clamp voltage: 6 kV or lower between phases) For details of the installation of a surge absorber, see Appendix A.

(3) Pollution degree of the installation environment and protection class of the power magnetics cabinet

UL508C, CSA C22.2 No.14 requires that when the machine is installed in the environment of ordinary plants, the power magnetics cabinet in which this amplifier is to be installed meet pollution degree class 2.
The αi series servo amplifiers are open type devices that are not equipped with a complete enclosure. If the power magnetics cabinet satisfies the above requirement, the degree of pollution inside the cabinet is considered to be class 2.
Insulation design of this amplifier assumes that the amplifier is installed in an environment with pollution degree 2.

When an external heat sink cooling type amplifier of which heat sink fin protrudes behind the mounting flange is used, the fin section must be in a cooling area (duct) conforming to around IP22 to IP33, and must be protected from being exposed to direct splashes of coolant, chips, and so forth.

© MyFANUC 2D5504D5BAC945D385F48627D4977F6C

5.5.2.2 Protection against electric shock

(1) Protection against direct contact with charged parts
This amplifier must be installed in a power magnetics cabinet. The power magnetics cabinet must be equipped with a lock so that when the power to the amplifier is on, the power magnetics cabinet cannot be opened by persons except special maintenance personnel or persons authorized to do maintenance work who have been sufficiently trained in prevention of electric shock.

If the operator of the machine needs to open the power magnetics cabinet for some operations, the operator must be given thorough safety training, or a protection cover must be provided to prevent the operator from touching the amplifier.

(2) Confirmation of discharge of the electrolytic capacitor (UL508C 21)
This amplifier includes a large-capacity electrolytic capacitor for the power smoothing circuit. Even after the power supply input circuit is shut off, this capacitor remains charged for a while.
When it becomes necessary to touch the amplifier to do maintenance work or for other purposes, wait until the discharge time indicated on the face plate of the amplifier is passed, or start work after ensuring safety by measuring the residual voltage of the DC link section with a volt-ohm meter and checking that the LED (red) indicating charging is turned off.

5.5.2.3 Protective grounding

Connect all of the protective ground terminals to the protective ground (PE) terminal in the power magnetics cabinet.
For how to connect a protective ground cable and its cable diameter, refer to Section 5.2, "GROUND" and Subsection, “Details of cable K70”.
Note that connecting a cable terminal to a protective ground point is not permitted.

5.5.2.4 Overload protection

The α*i* SP and α*i* SV are equipped with an overload protection feature.
In the α*i* SP, the protection feature works when the maximum output continues for 30 s or longer.
In the α*i* SV, the protection feature works when the current level becomes 1.3 times as high as the rated current of the motor.

5.5.2.5 External overload protection device

The servo amplifier is not equipped with a special protection device. To protect conductors, pay attention to the specifications of the power supply unit.

5.5.2.6 Short-circuit protection

The 200-V input α*i* series servo amplifiers are suitable for use with a power supply facility with 85,000 Arms or less/240 V (max).
The 400-V input α*i* series servo amplifiers are suitable for use with a power supply facility with 85,000 Arms or less//480 V (max).

5.5.2.7 Over-speed protection

The α*i* series servo amplifiers are not equipped with an over-speed protection device.

© MyFANUC 2D5504D5BAC945D385F48627D4977F6C

5.5.2.8 24-V power supply

Normally, the power for controlling the αi SV and αi SP is supplied from the αi PS. When supplying the power from another external power supply, use a class 2 power supply. The class 2 power supply uses a transformer and other parts that are proven safety. For details, contact the power supply manufacturer.

5.5.2.9 Screw tightening torque

The screws of the servo amplifier are tightened with the following torque:

Screw size	Tightening torque (Nm)
M4	1.1 to 1.5
M5	2.0 to 2.5
M6	3.5 to 4.5
M10	15 to 16

5.6 NOTES ON COOLANT (REFERENCE)

Coolant including highly active sulfur or chlorine, oil-free coolant called synthetic coolant, and water-soluble strong alkali coolant particularly affect the CNC, motor, and amplifier. Even when they are protected from being exposed to direct splashes of such coolant, problems described below may occur. So, special care should be taken.

- Coolant including highly active sulfur or chlorine
  Some of coolants including sulfur or chlorine include extremely highly active sulfur or chlorine. If such a coolant penetrates into the CNC, motor, or amplifier, it can corrode copper, silver and other metallic materials of components, therefore resulting in component failures.

- Infiltrative synthetic coolant
  Some of synthetic type coolants using polyalkylene glycol (PAG) as a lubricant component have extremely high infiltration. Such coolants easily penetrate into a motor even if it is well closed. When this kind of coolant penetrates into the CNC, motor, or amplifier, it can lead to insulation degrading and component failures.

- Water-soluble strong alkali coolant
  Some of coolants using alkanolamine to increase the pH level are so strongly alkaline that an alkalinity of pH10 or more is measured when diluted by the standard ratio. If such a coolant penetrates into the CNC, motor, or amplifier, it can cause a chemical reaction with plastic or other materials, therefore degrading the materials.

© MyFANUC 2D5504D5BAC945D385F48627D4977F6C

6 HEAT DISSIPATION

Chapter 6, "HEAT DISSIPATION", consists of the following sections:

6.1 200-V INPUT SERIES 96
6.1.1 αi PS series 96
6.1.2 αi SV series 97
6.1.3 αi SP series 100
6.2 400-V INPUT SERIES 101
6.2.1 αi PS series 101
6.2.2 αi SV series 101
6.2.3 αi SP series 104

6.1 200-V INPUT SERIES

The amount of heat dissipation by each module of the servo amplifier αi series is described below.

6.1.1 αi PS series

Table 6.1.1(a) αi PS

Name	Rated output	Total amount of heat dissipation	Residual amount of heat in the cabinet
αi PS 5.5	5.5kW	100W	53W
αi PS 11	11kW	158W	53W
αi PS 15	15kW	333W	61W
αi PS 26	26kW	597W	75W
αi PS 30	30kW	681W	79W
αi PS 37	37kW	706W	81W
αi PS 55	45kW	921W	91W
	55kW	1115W	101W

Table 6.1.1(b) AC reactor for αi PS

Name	Ordering number	Rated output	Total amount of heat dissipation
For αi PS 5.5	A81L-0001-0155	5.5kW	16W
For αi PS 11		11kW	38W
For αi PS 15	A81L-0001-0156	15kW	50W
For αi PS 26	A81L-0001-0157	26kW	70W
For αi PS 30	A81L-0001-0158	30kW	65W
For αi PS 37	A81L-0001-0159	37kW	55W
For αi PS 55	A81L-0001-0160	55kW	79W
For αi PS 5.5	A81L-0001-0170	2.2kW	35W

Table 6.1.1(c) αi PS_R

Name	Ordering number	Rated output	Total amount of heat dissipation	Residual amount of heat in the cabinet
αi PS_R3	A06B-6115-H003	3kW	60W	60W
αi PS_R 5.5	A06B-6115-H006	5.5kW	105W	55W
		7.5kW	130W	60W

© MyFANUC 2D5504D5BAC945D385F48627D4977F6C

Table 6.1.1(d) AC line filter for αi PS_R

Name	Ordering number	Rated output	Total amount of heat dissipation
αi PS_R3	A81L-0001-0083#3C	2.0kW	10W
	A81L-0001-0171	3.0kW	15W
αi PS_R 5.5	A81L-0001-0101#C	5.5kW	40W
		7.5kW	50W

6.1.2 αi SV series

The amount of heat dissipation by the αi SV depends on the αi SV model and the current that flows through the servo motor. For the current that flows through a servo motor, reference the continuous rated current of each servo motor. (For the continuous rated current of each servo motor, refer to the servo motor descriptions. For servo motors, the continuous rated current is referred to as the stall current.) As the current that flows through a servo motor, the root-mean-square value of the current that flows through an actual servo motor on a machine can be used.

(1) Total amount of heat dissipation
The total amount of heat dissipation by the αi SV is calculated according to the following expression:

Total amount of heat dissipation
= a + Ka1 × b1 + Ka2 × b2 + Ka3 × b3
a : Amount of heat dissipation determined by the αi SV model [W]
Ka1 : Coefficient determined by the αi SV [W/Arms]
b1 : Current flowing through the servo motor [Arms]
Ka2 : Coefficient determined by the αi SV [W/Arms]
b2 : Current flowing through the servo motor [Arms]
Ka3 : Coefficient determined by the αi SV [W/Arms]
b3 : Current flowing through the servo motor [Arms]

αi SV 1-axis (Total amount of heat dissipation)

Name	Specification	a [W]	Axis	K [W/Arms]		
				HRV2	HRV3	HRV4
αi SV 4	H101	13	L	5.0	6.5	-
αi SV 20	H103	13	L	5.0	6.5	-
αi SV 40	H104	13	L	4.6	5.9	-
αi SV 80	H105	13	L	4.3	5.8	-
αi SV 160	H106	17	L	4.7	6.1	-
αi SV 360	H109	25	L	4.9	5.8	7.9
αi SV 20L	H153	14	L	5.0	6.5	9.4
αi SV 40L	H154	14	L	4.6	5.9	8.4
αi SV 80L	H155	18	L	4.3	5.8	8.5
αi SV 160L	H156	16	L	4.7	6.1	8.8

αi SV 2-axis (Total amount of heat dissipation)

Name	Specification	a [W]	Axis	K [W/Arms]		
				HRV2	HRV3	HRV4
αi SV 4/4	H201	17	L	5.0	6.5	-
			M	5.0	6.5	-
αi SV 4/20	H203	17	L	5.0	6.5	-
			M	5.0	6.5	-

© MyFANUC 2D5504D5BAC945D385F48627D4977F6C

Name	Specification	a [W]	Axis	K [W/Arms]		
				HRV2	HRV3	HRV4
αi SV 20/20	H205	17	L	5.0	6.5	-
			M	5.0	6.5	-
αi SV 20/40	H206	17	L	5.0	6.5	-
			M	4.6	5.9	-
αi SV 40/40	H207	19	L	4.6	5.9	-
			M	4.6	5.9	-
αi SV 40/80	H208	19	L	4.6	5.9	-
			M	4.3	5.8	-
αi SV 80/80	H209	19	L	4.3	5.8	-
			M	4.3	5.8	-
αi SV 80/160	H210	19	L	4.3	5.8	-
			M	4.7	6.1	-
αi SV 160/160	H211	19	L	4.7	6.1	-
			M	4.7	6.1	-
αi SV 20/20L	H255	21	L	5.0	6.5	9.4
			M	5.0	6.5	9.4
αi SV 20/40L	H256	21	L	5.0	6.5	9.4
			M	4.6	5.9	8.4
αi SV 40/40L	H257	23	L	4.6	5.9	8.4
			M	4.6	5.9	8.4
αi SV 40/80L	H258	21	L	4.6	5.9	8.4
			M	4.3	5.8	8.5
αi SV 80/80L	H259	21	L	4.3	5.8	8.5
			M	4.3	5.8	8.5

αi SV 3-axis (Total amount of heat dissipation)

Name	Specification	a [W]	Axis	K [W/Arms]	
				HRV2	HRV3
αi SV 4/4/4	H301	24	L	5.0	6.5
			M	5.0	6.5
			N	5.0	6.5
αi SV 20/20/20	H303	24	L	5.0	6.5
			M	5.0	6.5
			N	5.0	6.5
αi SV 20/20/40	H304	24	L	5.0	6.5
			M	5.0	6.5
			N	4.6	5.9
αi SV 40S/40S/40	H306	24	L	4.5	5.7
			M	4.5	5.7
			N	4.6	5.9

(2) Residual amount of heat in the cabinet

By placing the radiator section of the αi SV outside the cabinet, the residual amount of heat in the cabinet can be calculated according to the expression below.

Residual amount of heat in the cabinet

= a + Kb1 × b1 + Kb2 × b2 + Kb3 × b3

a : Amount of heat dissipation determined by the αi SV model [W]

Kb1 : Coefficient determined by the αi SV [W/Arms]

b1 : Current flowing through the servo motor [Arms]

Kb2 : Coefficient determined by the αi SV [W/Arms]

b2 : Current flowing through the servo motor [Arms]

© MyFANUC 2D5504D5BAC945D385F48627D4977F6C

Kb3 : Coefficient determined by the αi SV [W/Arms]
b3 : Current flowing through the servo motor [Arms]

αi SV 1-axis

Name	Specification	a [W]	Axis	K [W/Arms]		
				HRV2	HRV3	HRV4
αi SV 4	H101	13	L	5.0	6.5	-
αi SV 20	H103	13	L	5.0	6.5	-
αi SV 40	H104	13	L	0.92	1.18	-
αi SV 80	H105	13	L	0.86	1.16	-
αi SV 160	H106	17	L	0.47	0.61	-
αi SV 360	H109	25	L	0.25	0.33	0.4
αi SV 20L	H153	14	L	5.0	6.5	9.4
αi SV 40L	H154	14	L	0.92	1.18	1.68
αi SV 80L	H155	18	L	0.43	0.58	0.85
αi SV 160L	H156	16	L	0.47	0.61	0.88

αi SV 2-axis

Name	Specification	a [W]	Axis	K [W/Arms]		
				HRV2	HRV3	HRV4
αi SV 4/4	H201	17	L	5.0	6.5	-
			M	5.0	6.5	-
αi SV 4/20	H203	17	L	5.0	6.5	-
			M	5.0	6.5	-
αi SV 20/20	H205	17	L	5.0	6.5	-
			M	5.0	6.5	-
αi SV 20/40	H206	17	L	1.0	1.3	-
			M	0.92	1.18	-
αi SV 40/40	H207	19	L	0.46	0.59	-
			M	0.46	0.59	-
αi SV 40/80	H208	19	L	0.46	0.59	-
			M	0.43	0.58	-
αi SV 80/80	H209	19	L	0.43	0.58	-
			M	0.43	0.58	-
αi SV 80/160	H210	19	L	0.43	0.58	-
			M	0.47	0.61	-
αi SV 160/160	H211	19	L	0.47	0.61	-
			M	0.47	0.61	-
αi SV 20/20L	H255	21	L	1.0	1.3	1.88
			M	1.0	1.3	1.88
αi SV 20/40L	H256	21	L	0.5	0.65	0.94
			M	0.46	0.59	0.84
αi SV 40/40L	H257	23	L	0.46	0.59	0.84
			M	0.46	0.59	0.84
αi SV 40/80L	H258	21	L	0.46	0.59	0.84
			M	0.43	0.58	0.85
αi SV 80/80L	H259	21	L	0.43	0.58	0.85
			M	0.43	0.58	0.85

© MyFANUC 2D5504D5BAC945D385F48627D4977F6C

αi SV 3-axis

Name	Specification	a [W]	Axis	K [W/Arms]	
				HRV2	HRV3
αi SV 4/4/4	H301	24	L	5.0	6.5
			M	5.0	6.5
			N	5.0	6.5
αi SV 20/20/20	H303	24	L	5.0	6.5
			M	5.0	6.5
			N	5.0	6.5
αi SV 20/20/40	H304	24	L	5.0	6.5
			M	5.0	6.5
			N	0.92	1.18
αi SV 40S/40S/40	H306	24	L	4.5	5.7
			M	4.5	5.7
			N	0.92	1.18

6.1.3 αi SP series

Table 6.1.3(a) αi SP

Name	Rated output (Note 1)	Total amount of heat dissipation	Residual amount of heat in the cabinet
αi SP2.2	1.5kW	75W	37W
αi SP 5.5	2.2kW	112W	36W
	3.7kW	120W	36W
αi SP 11	5.5kW	171W	41W
	7.5kW	218W	44W
αi SP 15	11kW	273W	45W
αi SP 22	15kW	435W	53W
	18.5kW	515W	57W
αi SP 26	22kW	684W	62W
αi SP 30	26kW	739W	65W
αi SP 37	26kW	739W	65W
αi SP 45	30kW	911W	75W
	37kW	1123W	85W
αi SP 55	45kW	1360W	98W

NOTE

1 "Rated output" indicates the continuous rated output of the motor.

2 The indicated amounts of heat dissipation assume the use of αi I series spindle motor.

© MyFANUC 2D5504D5BAC945D385F48627D4977F6C

6.2 400-V INPUT SERIES

The amount of heat dissipation by each amplifier of the 400-V input αi series servo amplifier is described below.

6.2.1 αi PS series

Table 6.2.1(a) αi PS

Name	Rated output	Total amount of heat dissipation	Residual amount of heat in the cabinet
αi PS 11HV	11kW	136W	51W
αi PS 18HV	18kW	274W	57W
αi PS 30HV	30kW	380W	64W
αi PS 45HV	30kW	394W	64W
	37kW	475W	68W
	45kW	567W	75W
αi PS 60HV	60kW	600W	75W
αi PS 75HV	60kW	600W	75W
	75kW	738W	82W
αi PS 100HV	100kW	1380W	110W

Table 6.2.1(b) AC reactor for αi PS

Name	Ordering number	Rated output	Total amount of heat dissipation
For αi PS 11HV	A81L-0001-0163	11kW	38W
For αi PS 18HV		18kW	70W
For αi PS 30HV	A81L-0001-0164	30kW	60W
For αi PS 45HV		45kW	100W
For αi PS 60HV	A81L-0001-0179	60kW	150W
For αi PS 75HV	A81L-0001-0165	75kW	120W
For αi PS 100HV		100kW	180W
For αi PS 11HV	A81L-0001-0167	11kW	55W

6.2.2 αi SV series

The amount of heat dissipation by the αi SV depends on the αi SV model and the current that flows through the servo motor. For the current that flows through a servo motor, reference the continuous rated current of each servo motor. (For the continuous rated current of each servo motor, refer to the servo motor descriptions.) As the current that flows through a servo motor, the root-mean-square value of the current that flows through an actual servo motor on a machine can be used.

(1) Total amount of heat dissipation
The total amount of heat dissipation by the αi SV is calculated according to the following expression:

Total amount of heat dissipation = a + Ka1 × b1 + Ka2 × b2
a : Amount of heat dissipation determined by the αi SV model [W]
Ka1 : Coefficient determined by the αi SV [W/Arms]
b1 : Current flowing through the servo motor [Arms]
Ka2 : Coefficient determined by the αi SV [W/Arms]
b2 : Current flowing through the servo motor [Arms]

© MyFANUC 2D5504D5BAC945D385F48627D4977F6C

αi SV 1-axis (Total amount of heat dissipation)

Name	Specification	a [W]	Axis	K [W/Arms]		
				HRV2	HRV3	HRV4
αi SV 10HV	H102	13	L	8.2	14.8	-
αi SV 20HV	H103	13	L	8.8	14.5	-
αi SV 40HV	H104	13	L	8.8	15.3	-
αi SV 80HV	H105	17	L	9.0	12.3	-
αi SV 180HV	H106	25	L	8.8	12.3	23.4
αi SV 360HV	H109	34	L	7.8	11.0	18.2
αi SV 540HV	H110	34	L	7.8	-	-
αi SV 10HVL	H152	14	L	8.2	14.8	26.4
αi SV 20HVL	H153	14	L	8.8	14.5	25.2
αi SV 40HVL	H154	18	L	8.8	15.3	27.2
αi SV 80HV	H155	16	L	9.0	12.3	23.7

αi SV 2-axis (Total amount of heat dissipation)

Name	Specification	a [W]	Axis	K [W/Arms]		
				HRV2	HRV3	HRV4
αi SV 10/10HV	H202	17	L	8.2	14.8	-
			M	8.2	14.8	-
αi SV 20/20HV	H205	17	L	8.8	14.5	-
			M	8.8	14.5	-
αi SV 20/40HV	H206	19	L	8.8	14.5	-
			M	8.8	15.3	-
αi SV 40/40HV	H207	19	L	8.8	15.3	-
			M	8.8	15.3	-
αi SV 40/80HV	H208	19	L	8.8	15.3	-
			M	9.0	12.3	-
αi SV 80/80HV	H209	19	L	9.0	12.3	-
			M	9.0	12.3	-
αi SV 10/10HVL	H252	19	L	8.2	14.8	26.4
			M	8.2	14.8	26.4
αi SV 20/20HVL	H255	21	L	8.8	14.5	25.2
			M	8.8	14.5	25.2
αi SV 20/40HVL	H256	21	L	8.8	14.5	25.2
			M	8.8	15.3	27.2
αi SV 40/40HVL	H257	21	L	8.8	15.3	27.2
			M	8.8	15.3	27.2

(2) Residual amount of heat in the cabinet

By placing the radiator section of the αi SV outside the cabinet, the residual amount of heat in the cabinet can be calculated according to the expression below.

Residual amount of heat in the cabinet

= a + Kb1 × b1 + Kb2 × b2

a : Amount of heat dissipation determined by the αi SV model [W]

Kb1 : Coefficient determined by the αi SV [W/Arms]

b1 : Current flowing through the servo motor [Arms]

Kb2 : Coefficient determined by the αi SV [W/Arms]

b2 : Current flowing through the servo motor [Arms]

© MyFANUC 2D5504D5BAC945D385F48627D4977F6C

αi SV 1-axis (Residual amount of heat in the cabinet)

Name	Specification	a [W]	Axis	K [W/Arms]		
				HRV2	HRV3	HRV4
αi SV 10HV	H102	13	L	8.2	14.8	-
αi SV 20HV	H103	13	L	1.76	2.9	-
αi SV 40HV	H104	13	L	1.76	2.9	-
αi SV 80HV	H105	17	L	0.90	1.23	-
αi SV 180HV	H106	18	L	0.44	0.62	1.17
αi SV 360HV	H109	20	L	0.39	0.55	0.91
αi SV 540HV	H110	20	L	0.39	-	-
αi SV 10HVL	H152	14	L	1.64	1.53	2.64
αi SV 20HVL	H153	14	L	0.88	1.53	2.52
αi SV 40HVL	H154	18	L	0.88	1.53	2.72
αi SV 80HV	H155	16	L	0.90	1.23	2.37

αi SV 2-axis (Residual amount of heat in the cabinet)

Name	Specification	a [W]	Axis	K [W/Arms]		
				HRV2	HRV3	HRV4
αi SV 10/10HV	H202	17	Ka1	8.2	14.8	-
			Ka2	8.2	14.8	-
αi SV 20/20HV	H205	17	Ka1	1.76	2.9	-
			Ka2	1.76	2.9	-
αi SV 20/40HV	H206	19	Ka1	0.88	1.45	-
			Ka2	0.88	1.53	-
αi SV 40/40HV	H207	19	Ka1	0.88	1.53	-
			Ka2	0.88	1.53	-
αi SV 40/80HV	H208	19	Ka1	0.88	1.53	-
			Ka2	0.90	1.23	-
αi SV 80/80HV	H209	19	Ka1	0.90	1.23	-
			Ka2	0.90	1.23	-
αi SV 10/10HVL	H252	19	Ka1	0.82	1.48	2.64
			Ka2	0.82	1.48	2.64
αi SV 20/20HVL	H255	21	Ka1	0.88	1.45	2.52
			Ka2	0.88	1.45	2.52
αi SV 20/40HVL	H256	21	Ka1	0.88	1.45	2.52
			Ka2	0.88	1.53	2.37
αi SV 40/40HVL	H257	21	Ka1	0.88	1.53	2.37
			Ka2	0.88	1.53	2.37

© MyFANUC 2D5504D5BAC945D385F48627D4977F6C

6.2.3 αi SP series

Table 6.2.3 αi SP

Name	Rated output (Note 1)	Total amount of heat dissipation	Residual amount of heat in the cabinet
αi SP 5.5HV	0.55kW	26W	18W
	1.5kW	44W	22W
	2.2kW	59W	24W
	3.7kW	87W	29W
αi SP 11HV	5.5kW	122W	37W
	7.5kW	156W	39W
αi SP 15HV	11kW	189W	40W
αi SP 30HV	15kW	247W	41W
	22kW	349W	45W
αi SP 45HV	30kW	482W	52W
	37kW	588W	57W
αi SP 75HV	60kW	1264W	91W
αi SP 100HV	100kW	2100W	150W

NOTE

1 "Rated output" indicates the continuous rated output of the motor.

2 The indicated amounts of heat dissipation assume the use of αi I series spindle motor.

© MyFANUC 2D5504D5BAC945D385F48627D4977F6C

7 COOLING

The αi series has a built-in fan motor for the external cooling fan and does not require external forced air cooling.
To maintain cooling efficiency, be sure to provide maintenance areas as described in Section 8.1.

© MyFANUC 2D5504D5BAC945D385F48627D4977F6C

8 EXTERNAL DIMENSIONS AND MAINTENANCE AREA

Chapter 8 "EXTERNAL DIMENSIONS AND MAINTENANCE AREA", consists of the following sections:

8.1 OUTLINE DRAWINGS 106
8.1.1 Outline Drawings of Amplifiers, Panel Cut-out, and Maintenance Area 106
8.1.2 AC Reactor Unit 113
8.1.3 AC Line Filter 124
8.1.4 Power Transformer 125
8.1.5 Regenerative Discharge Unit 131
8.1.6 Dynamic Brake Module (DBM) 134
8.1.7 Circuit Breaker 136
8.1.8 Magnetic Contactors 138
8.1.9 Lightning Surge Protector 145
8.1.10 Noise Filter 146
8.2 PANEL CUT-OUT DIAGRAMS 149

8.1 OUTLINE DRAWINGS

8.1.1 Outline Drawings, Weight, Panel Cut-out, and Maintenance Area of Amplifiers

(1) αi PS series

Model			Outline drawing	Panel cut-out	Maintenance area	Internal fan (*1)	Internal fan (*2)	External fan
Power regeneration type	200-V input series	αi PS 5.5	Outline drawing 2	Panel cut-out 2	Maintenance area 1	Provided	-	-
		αi PS 11	Outline drawing 3	Panel cut-out 3	Maintenance area 2	Provided	-	Provided
		αi PS 15	Outline drawing 3	Panel cut-out 3	Maintenance area 2	Provided	-	Provided
		αi PS 26	Outline drawing 4	Panel cut-out 4	Maintenance area 3	Provided	-	Provided
		αi PS 30	Outline drawing 4	Panel cut-out 4	Maintenance area 3	Provided	-	Provided
		αi PS 37	Outline drawing 4	Panel cut-out 4	Maintenance area 3	Provided	-	Provided
		αi PS 55	Outline drawing 5	Panel cut-out 5	Maintenance area 4	Provided	Provided	Provided
	400-V input series	αi PS 11HV	Outline drawing 3	Panel cut-out 3	Maintenance area 2	Provided	-	Provided
		αi PS 18HV	Outline drawing 3	Panel cut-out 3	Maintenance area 2	Provided	-	Provided
		αi PS 30HV	Outline drawing 4	Panel cut-out 4	Maintenance area 3	Provided	Provided	Provided
		αi PS 45HV	Outline drawing 4	Panel cut-out 4	Maintenance area 3	Provided	Provided	Provided
		αi PS 60HV	Outline drawing 4	Panel cut-out 4	Maintenance area 3	Provided	Provided	Provided

© MyFANUC 2D5504D5BAC945D385F48627D4977F6C

Model			Outline drawing	Panel cut-out	Maintenance area	Internal fan (*1)	Internal fan (*2)	External fan
Power regeneration type	400-V input series	αi PS 75HV	Outline drawing 5	Panel cut-out 5	Maintenance area 4	Provided	Provided	Provided
		αi PS 100HV	Outline drawing 5	Panel cut-out 5	Maintenance area 4	Provided	Provided	Provided
Resistance regeneration type	200-V input series	αi PS_R 3	Outline drawing 1	Panel cut-out 1	Maintenance area 1	-	Provided	-
		αi PS_R 5.5	Outline drawing 2	Panel cut-out 2	Maintenance area 1	-	Provided	-

■ Weight *1: Internal cooling fan, *2: Radiator cooling fan

Model	Weight
αi PS_R 3	2.6kg
αi PS_R 5.5	4.3kg
αi PS 5.5	4.9kg
αi PS 11, 15, 11HV, 18HV	6.3kg
αi PS 26, 30, 37, 30HV, 45HV, 60HV	10.7kg
αi PS 55, 75HV, 100HV	22.0kg

(2) αi SV series

Model			Outline drawing	Panel cut-out	Maintenance area	Internal fan	External fan
200-V input series	1-axis	αi SV 4	Outline drawing 1	Panel cut-out 1	Maintenance area 1	Provided	-
		αi SV 20	Outline drawing 1	Panel cut-out 1	Maintenance area 1	Provided	-
		αi SV 40	Outline drawing 2	Panel cut-out 2	Maintenance area 1	Provided	-
		αi SV 80	Outline drawing 2	Panel cut-out 2	Maintenance area 1	Provided	-
		αi SV 160	Outline drawing 2	Panel cut-out 2	Maintenance area 1	Provided	Provided
		αi SV 360	Outline drawing 4	Panel cut-out 4	Maintenance area 3	Provided	Provided
		αi SV 20L	Outline drawing 2	Panel cut-out 2	Maintenance area 1	Provided	-
		αi SV 40L	Outline drawing 2	Panel cut-out 2	Maintenance area 1	Provided	-
		αi SV 80L	Outline drawing 2	Panel cut-out 2	Maintenance area 1	Provided	Provided
		αi SV 160L	Outline drawing 3	Panel cut-out 3	Maintenance area 2	Provided	Provided
	2-axis	αi SV 4/4	Outline drawing 1	Panel cut-out 1	Maintenance area 1	Provided	-
		αi SV 4/20	Outline drawing 1	Panel cut-out 1	Maintenance area 1	Provided	-
		αi SV 20/20	Outline drawing 1	Panel cut-out 1	Maintenance area 1	Provided	-
		αi SV 20/40	Outline drawing 2	Panel cut-out 2	Maintenance area 1	Provided	-
		αi SV 40/40	Outline drawing 2	Panel cut-out 2	Maintenance area 1	Provided	Provided
		αi SV 40/80	Outline drawing 2	Panel cut-out 2	Maintenance area 1	Provided	Provided

© MyFANUC 2D5504D5BAC945D385F48627D4977F6C

Model			Outline drawing	Panel cut-out	Maintenance area	Internal fan	External fan
200-V input series	2-axis	αi SV 80/80	Outline drawing 2	Panel cut-out 2	Maintenance area 1	Provided	Provided
		αi SV 80/160	Outline drawing 3	Panel cut-out 3	Maintenance area 2	Provided	Provided
		αi SV 160/160	Outline drawing 3	Panel cut-out 3	Maintenance area 2	Provided	Provided
		αi SV 20/20L	Outline drawing 2	Panel cut-out 2	Maintenance area 1	Provided	-
		αi SV 20/40L	Outline drawing 2	Panel cut-out 2	Maintenance area 1	Provided	Provided
		αi SV 40/40L	Outline drawing 2	Panel cut-out 2	Maintenance area 1	Provided	Provided
		αi SV 40/80L	Outline drawing 3	Panel cut-out 3	Maintenance area 2	Provided	Provided
		αi SV 80/80L	Outline drawing 3	Panel cut-out 3	Maintenance area 2	Provided	Provided
	3-axis	αi SV 4/4/4	Outline drawing 1	Panel cut-out 1	Maintenance area 1	Provided	-
		αi SV 20/20/20	Outline drawing 1	Panel cut-out 1	Maintenance area 1	Provided	-
		αi SV 20/20/40	Outline drawing 2	Panel cut-out 2	Maintenance area 1	Provided	-
		αi SV 40S/40S/40	Outline drawing 2	Panel cut-out 2	Maintenance area 1	Provided	-
400-V input series	1-axis	αi SV 10HV	Outline drawing 1	Panel cut-out 1	Maintenance area 1	Provided	-
		αi SV 20HV	Outline drawing 2	Panel cut-out 2	Maintenance area 1	Provided	-
		αi SV 40HV	Outline drawing 2	Panel cut-out 2	Maintenance area 1	Provided	-
		αi SV 80HV	Outline drawing 2	Panel cut-out 2	Maintenance area 1	Provided	Provided
		αi SV 180HV	Outline drawing 4	Panel cut-out 4	Maintenance area 3	Provided	Provided
		αi SV 360HV	Outline drawing 5	Panel cut-out 5	Maintenance area 4	Provided	Provided
		αi SV 540HV	Outline drawing 5	Panel cut-out 5	Maintenance area 4	Provided	Provided
		αi SV 10HVL	Outline drawing 2	Panel cut-out 2	Maintenance area 1	Provided	-
		αi SV 20HVL	Outline drawing 2	Panel cut-out 2	Maintenance area 1	Provided	Provided
		αi SV 40HVL	Outline drawing 2	Panel cut-out 2	Maintenance area 1	Provided	Provided
		αi SV 80HVL	Outline drawing 3	Panel cut-out 3	Maintenance area 2	Provided	Provided
	2-axis	αi SV 10/10HV	Outline drawing 1	Panel cut-out 1	Maintenance area 1	Provided	-
		αi SV 20/20HV	Outline drawing 2	Panel cut-out 2	Maintenance area 1	Provided	-
		αi SV 20/40HV	Outline drawing 3	Panel cut-out 3	Maintenance area 2	Provided	Provided
		αi SV 40/40HV	Outline drawing 3	Panel cut-out 3	Maintenance area 2	Provided	Provided

© MyFANUC 2D5504D5BAC945D385F48627D4977F6C

Model			Outline drawing	Panel cut-out	Maintenance area	Internal fan	External fan
400-V input series	2-axis	αi SV 40/80HV	Outline drawing 3	Panel cut-out 3	Maintenance area 2	Provided	Provided
		αi SV 80/80HV	Outline drawing 3	Panel cut-out 3	Maintenance area 2	Provided	Provided
		αi SV 10/10HVL	Outline drawing 2	Panel cut-out 2	Maintenance area 1	Provided	-
		αi SV 20/20HVL	Outline drawing 3	Panel cut-out 3	Maintenance area 2	Provided	Provided
		αi SV 20/40HVL	Outline drawing 3	Panel cut-out 3	Maintenance area 2	Provided	Provided
		αi SV 40/40HVL	Outline drawing 3	Panel cut-out 3	Maintenance area 2	Provided	Provided

■ Weight

Model	Weight
αi SV 4, 20, 10HV	2.2kg
αi SV 40, 80, 160, 20L, 40L, 80L αi SV 20HV, 40HV, 80HV, 10HVL, 20HVL,40HVL	3.9kg
αi SV 4/4, 4/20, 20/20, 10/10HV	2.4kg
αi SV 20/40, 40/40, 40/80, 80/80, 20/40L, 40/40L αi SV 20/20HV	4.6kg
αi SV 160L, 80HVL	6.3kg
αi SV 80/160, 160/160, 40/80L, 80/80L αi SV 20/40HV, 40/40HV, 40/80HV, αi SV 80/80HV, 20/40HVL, 40/40HVL	5.5kg
αi SV 4/4/4, αi SV 20/20/20	2.6kg
αi SV 20/20/40, αi SV 40S/40S/40	3.8kg
αi SV 360, 180HV	10.7kg
αi SV 360HV, αi SV 540HV	22.0kg
DBM(A06B-6079-H401, A06B-6079-H403)	5.4kg
DBM(A06B-6069-H300, A06B-6069-H301)	10.0kg

(3) αi SP series

Model			Outline drawing	Panel cut-out	Maintenance area	Internal fan	External fan
αi series	200-V input series	αi SP 2.2	Maintenance area 2	Panel cut-out 2	Maintenance area 1	Provided	-
		αi SP 5.5	Maintenance area 2	Panel cut-out 2	Maintenance area 1	Provided	Provided
		αi SP 11	Maintenance area 3	Panel cut-out 3	Maintenance area 2	Provided	Provided
		αi SP 15	Maintenance area 3	Panel cut-out 3	Maintenance area 2	Provided	Provided
		αi SP 22	Maintenance area 4	Panel cut-out 4	Maintenance area 3	Provided	Provided
		αi SP 26	Maintenance area 4	Panel cut-out 4	Maintenance area 3	Provided	Provided
		αi SP 30	Maintenance area 4	Panel cut-out 4	Maintenance area 3	Provided	Provided
		αi SP 37	Maintenance area 4	Panel cut-out 4	Maintenance area 3	Provided	Provided
		αi SP 45	Maintenance area 5	Panel cut-out 5	Maintenance area 4	Provided	Provided

© MyFANUC 2D5504D5BAC945D385F48627D4977F6C

Model			Outline drawing	Panel cut-out	Maintenance area	Internal fan	External fan
αi series	200-V input series	αi SP 55	Maintenance area 5	Panel cut-out 5	Maintenance area 4	Provided	Provided
	400-V input series	αi SP 5.5HV	Maintenance area 2	Panel cut-out 2	Maintenance area 1	Provided	Provided
		αi SP 11HV	Maintenance area 3	Panel cut-out 3	Maintenance area 2	Provided	Provided
		αi SP 15HV	Maintenance area 3	Panel cut-out 3	Maintenance area 2	Provided	Provided
		αi SP 30HV	Maintenance area 4	Panel cut-out 4	Maintenance area 3	Provided	Provided
		αi SP 45HV	Maintenance area 4	Panel cut-out 4	Maintenance area 3	Provided	Provided
		αi SP 75HV	Maintenance area 5	Panel cut-out 5	Maintenance area 4	Provided	Provided
		αi SP 100HV	Maintenance area 5	Panel cut-out 5	Maintenance area 4	Provided	Provided

■ Weight

Model	Weight
αi SP 2.2	4.9kg
αi SP 5.5, 5.5HV	6.1kg
αi SP 11, 15, 11HV, 15HV	6.3kg
αi SP 22, 26, 30, 37,30HV, 45HV	10.7kg
αi SP 45, 55, 75HV, 100HV	22.0kg

(4) Amplifier outline drawings

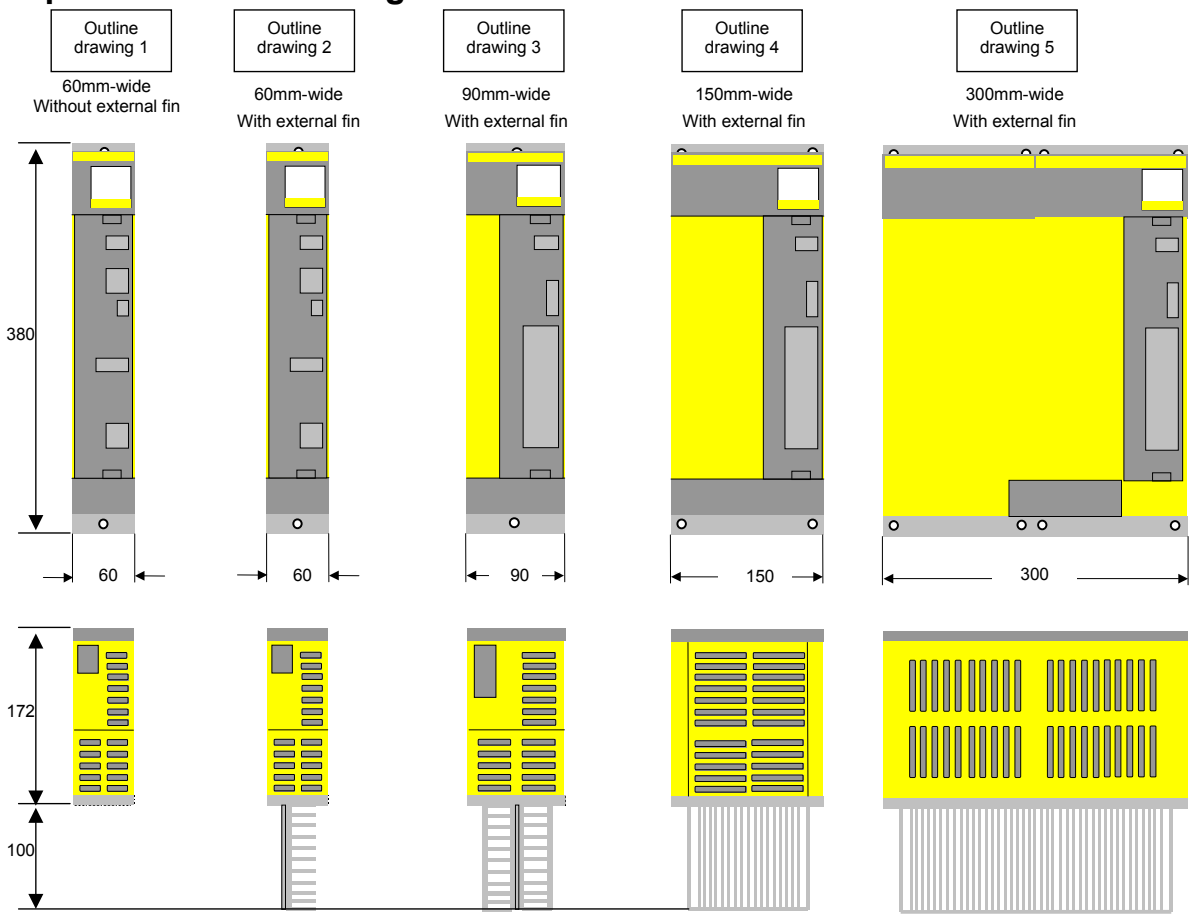

© MyFANUC 2D5504D5BAC945D385F48627D4977F6C

(5) Panel cut-out drawings

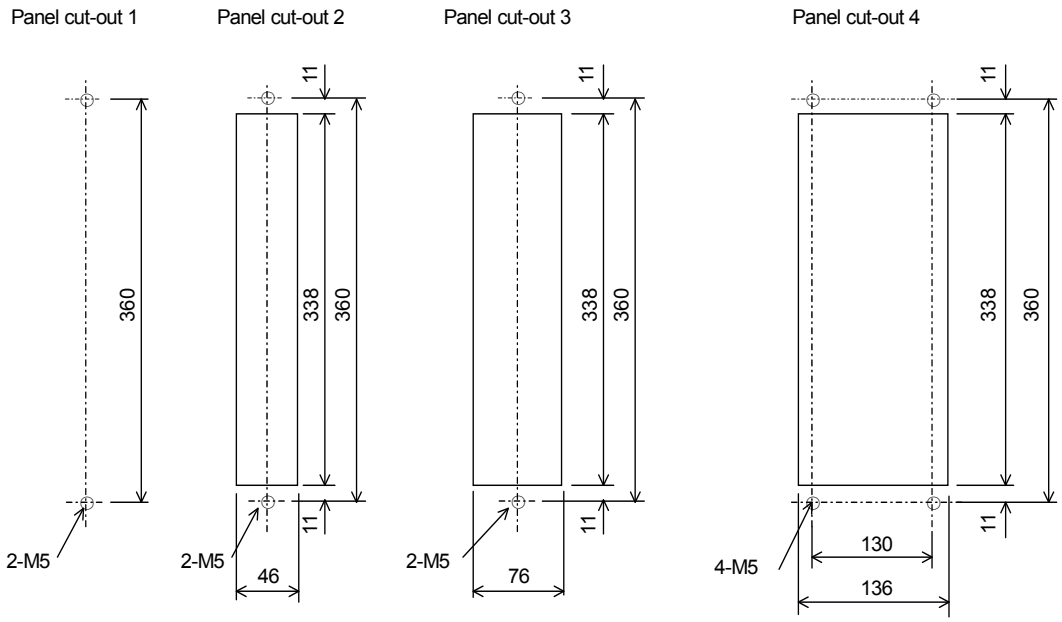

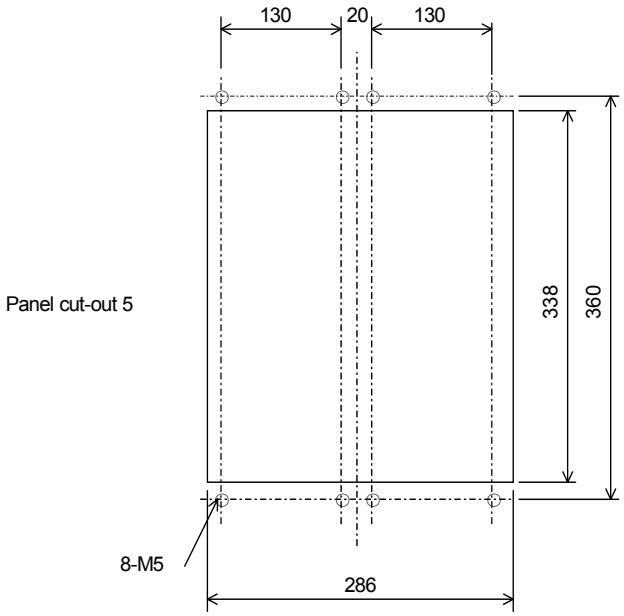

See Section 8.2 for details.

© MyFANUC 2D5504D5BAC945D385F48627D4977F6C

(6) Maintenance area drawings

An amplifier contains a fan motor for internal cooling. To allow air to flow and make replacement of a fan unit easy, be sure to reserve the shaded areas shown in the figure below.

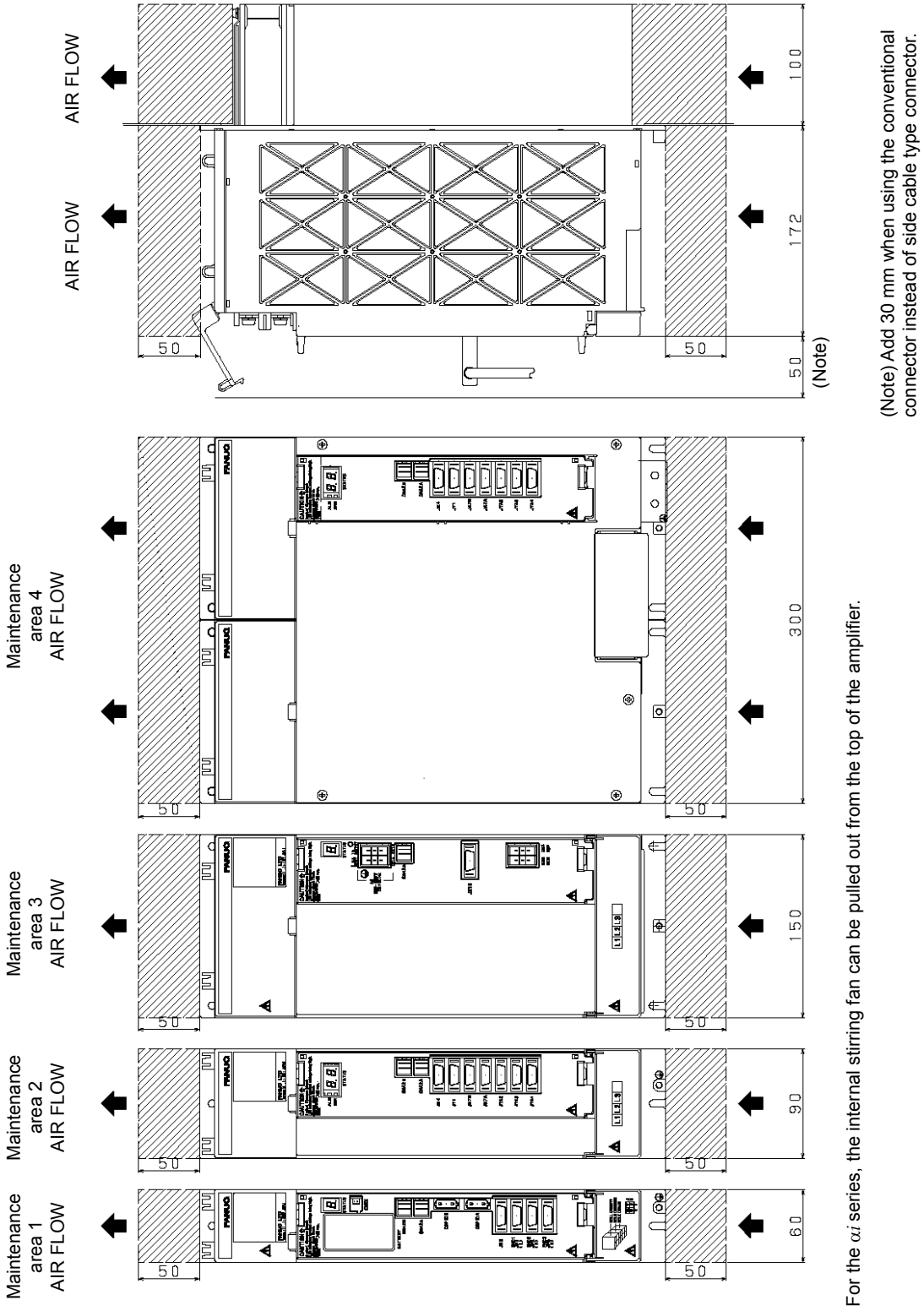

© MyFANUC 2D5504D5BAC945D385F48627D4977F6C

8.1.2 AC Reactor Unit

(a) A81L-0001-0155

There are two types of shapes under the same specification drawing number. Both types use the same mounting pitches and other dimensions for mounting.
Specifying shape (1) or (2) is not possible.

Shape (1)

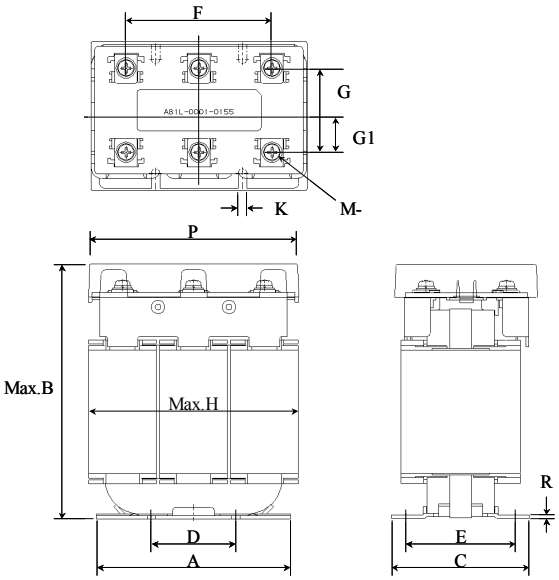

Shape (2)

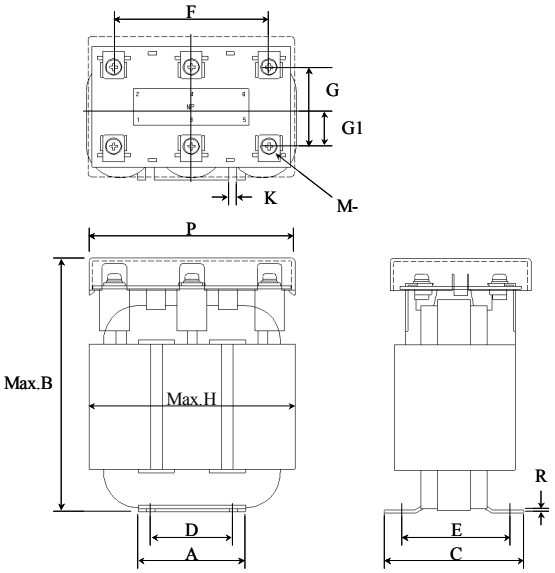

	A	B	C	D	E	F	G	G1	H	K	P	R	M
Shape (1)	115	155	82	50	65	84	48	20.5	135	5	135	2	M5
Shape (2)	65	155	85	50	65	94	48	20.5	127	5	125	2	M5

■ Weight

Model	Weight
A81L-0001-0155	4.5kg

© MyFANUC 2D5504D5BAC945D385F48627D4977F6C

(b) A81L-0001-0156

There are two types of shapes under the same specification drawing number. Both types use the same mounting pitches and other dimensions for mounting.
Specifying shape (1) or (2) is not possible.

Shape (1)

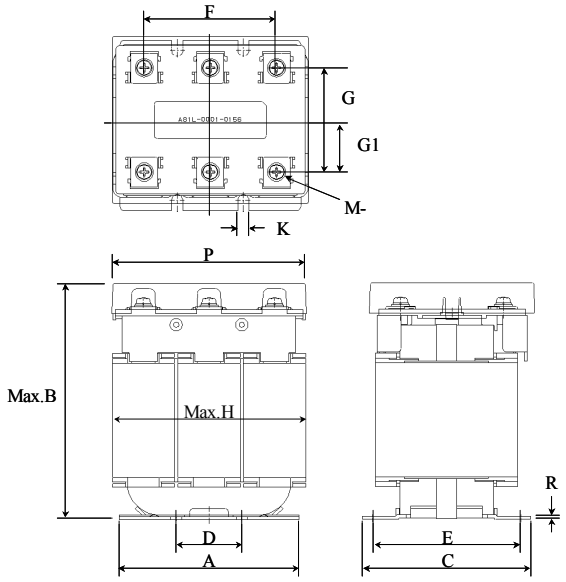

Shape (2)

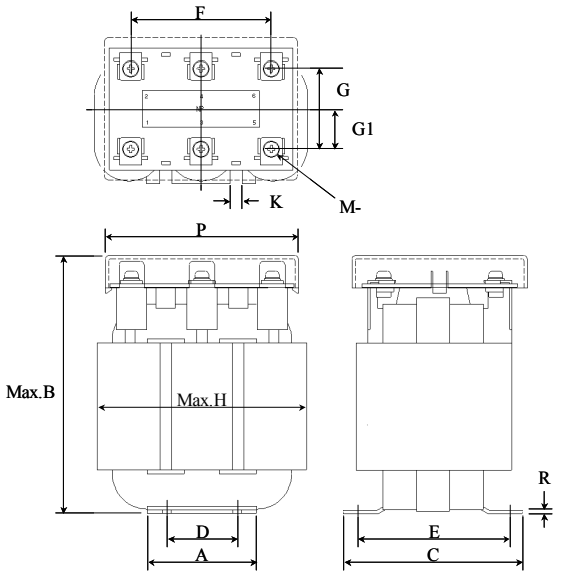

	A	B	C	D	E	F	G	G1	H	K	P	R	M
Shape (1)	115	155	108	42	95	84	66	29.5	135	7.2	135	2	M5
Shape (2)	65	155	107	42	95	84	66	29	131	7.2	115	2	M5

■ Weight

Model	Weight
A81L-0001-0156	6.5kg

© MyFANUC 2D5504D5BAC945D385F48627D4977F6C

(c) A81L-0001-0157

There are two types of shapes under the same specification drawing number. Both types use the same mounting pitches and other dimensions for mounting.
Specifying shape (1) or (2) is not possible.

Shape (1)

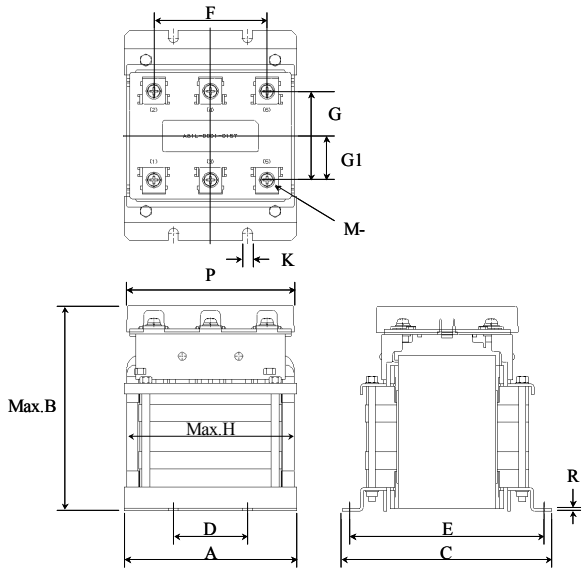

Shape (2)

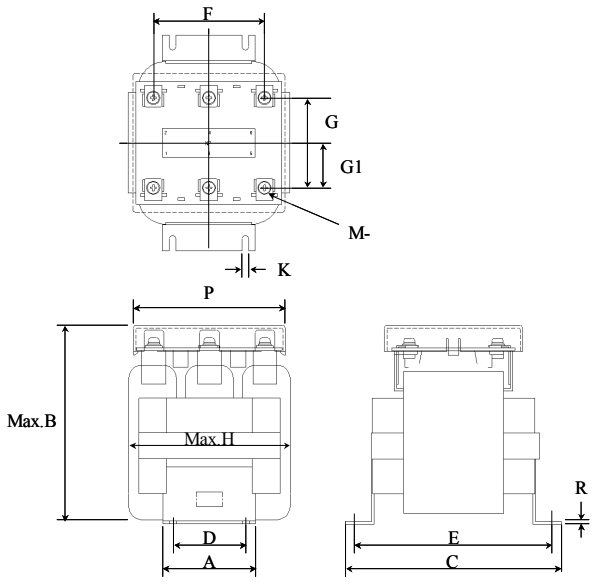

	A	B	C	D	E	F	G	G1	H	K	P	R	M
Shape (1)	128	155	165	55	145	84	66	33	135	7.2	135	2	M5
Shape (2)	70	155	165	55	145	84	66	33	135	7.2	115	2	M5

■ Weight

Model	Weight
A81L-0001-0157	9.5kg

© MyFANUC 2D5504D5BAC945D385F48627D4977F6C

(d) A81L-0001-0158

There are two types of shapes under the same specification drawing number. Both types use the same mounting pitches and other dimensions for mounting.
Specifying shape (1) or (2) is not possible.

Shape (1)

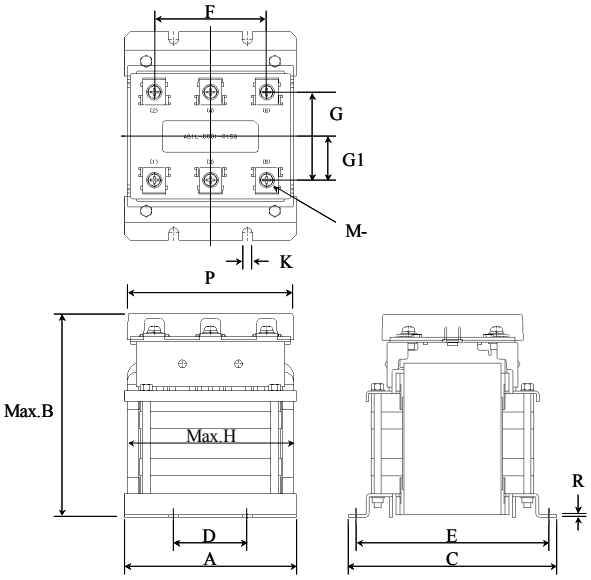

Shape (2)

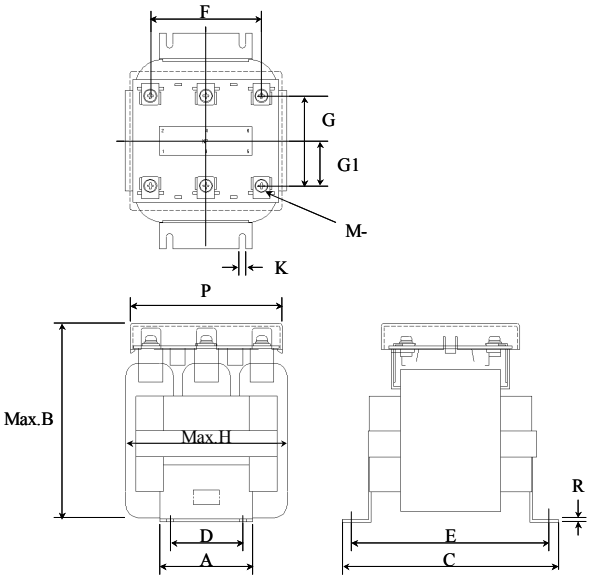

	A	B	C	D	E	F	G	G1	H	K	P	R	M
Shape (1)	128	155	165	55	145	84	66	33	135	7.2	135	2	M5
Shape (2)	70	155	165	55	145	84	66	33	135	7.2	115	2	M5

■ Weight

Model	Weight
A81L-0001-0158	9.2kg

© MyFANUC 2D5504D5BAC945D385F48627D4977F6C

(e) A81L-0001-0159

There are two types of shapes under the same specification drawing number. Both types use the same mounting pitches and other dimensions for mounting.
Specifying shape (1) or (2) is not possible.

Shape (1)

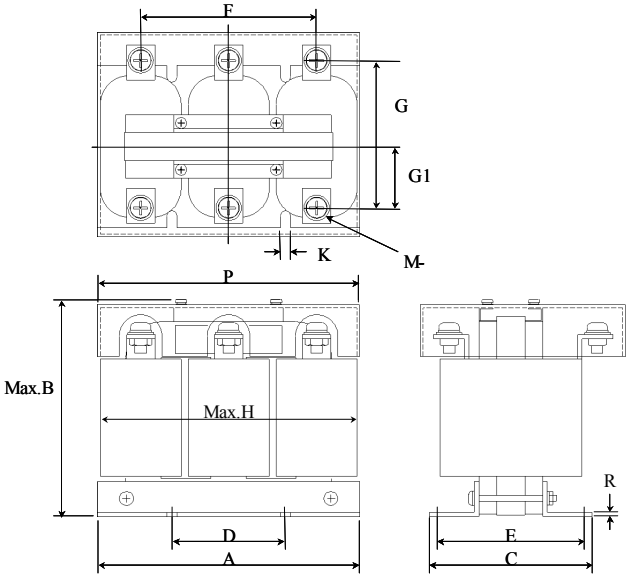

Shape (2)

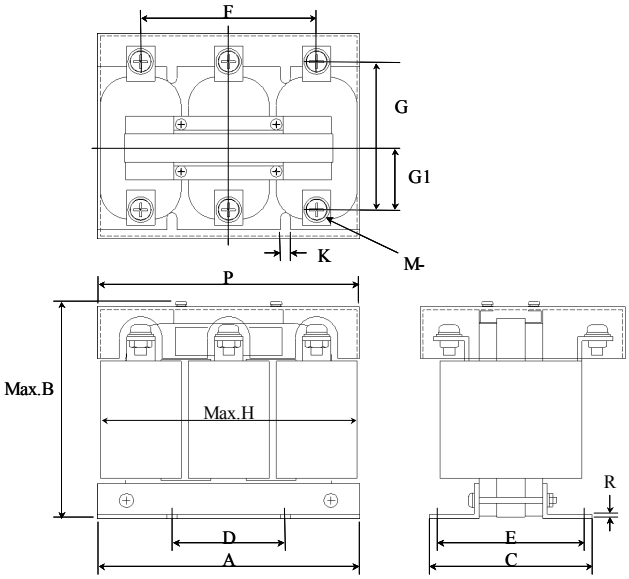

	A	B	C	D	E	F	G	G1	H	K	P	R	M
Shape (1)	185	160	115	80	100	124	105	44	185	7.2	185	2.6	M8
Shape (2)	184	160	115	80	100	124	95	38.5	185	7.2	185	2.6	M8

■ Weight

Model	Weight
A81L-0001-0159	16.5kg

© MyFANUC 2D5504D5BAC945D385F48627D4977F6C

(f) A81L-0001-0160

There are two types of shapes under the same specification drawing number. Both types use the same mounting pitches and other dimensions for mounting.
Specifying shape (1) or (2) is not possible.

Shape (1)

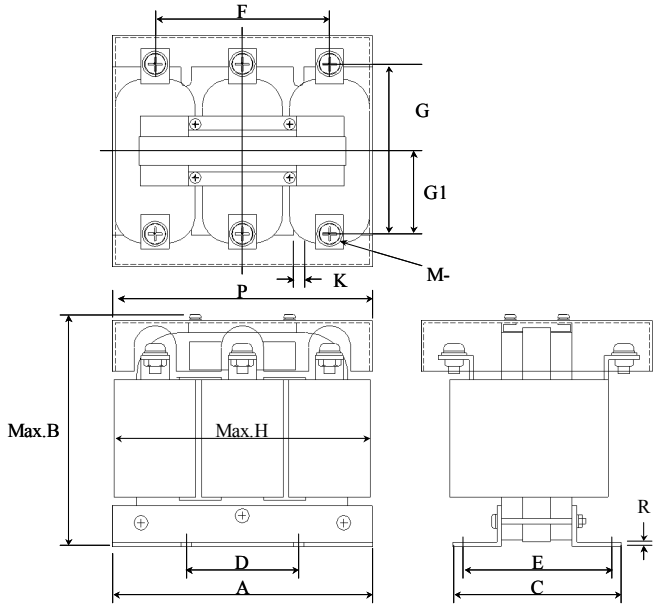

Shape (2)

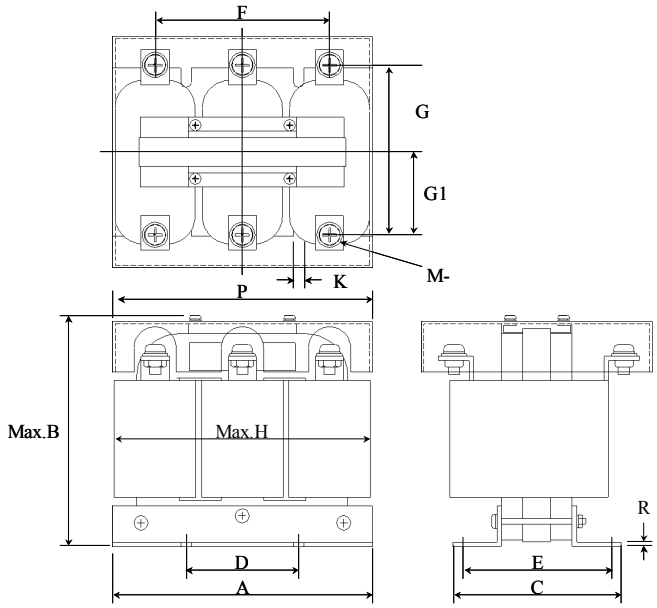

	A	B	C	D	E	F	G	G1	H	K	P	R	M
Shape (1)	185	170	120	80	100	124	125	58	190	7.2	185	2.6	M8
Shape (2)	184	170	120	80	100	124	115	57.5	185	7.2	185	2.6	M8

■ Weight

Model	Weight
A81L-0001-0160	20.0kg

© MyFANUC 2D5504D5BAC945D385F48627D4977F6C

(g) A81L-0001-0163

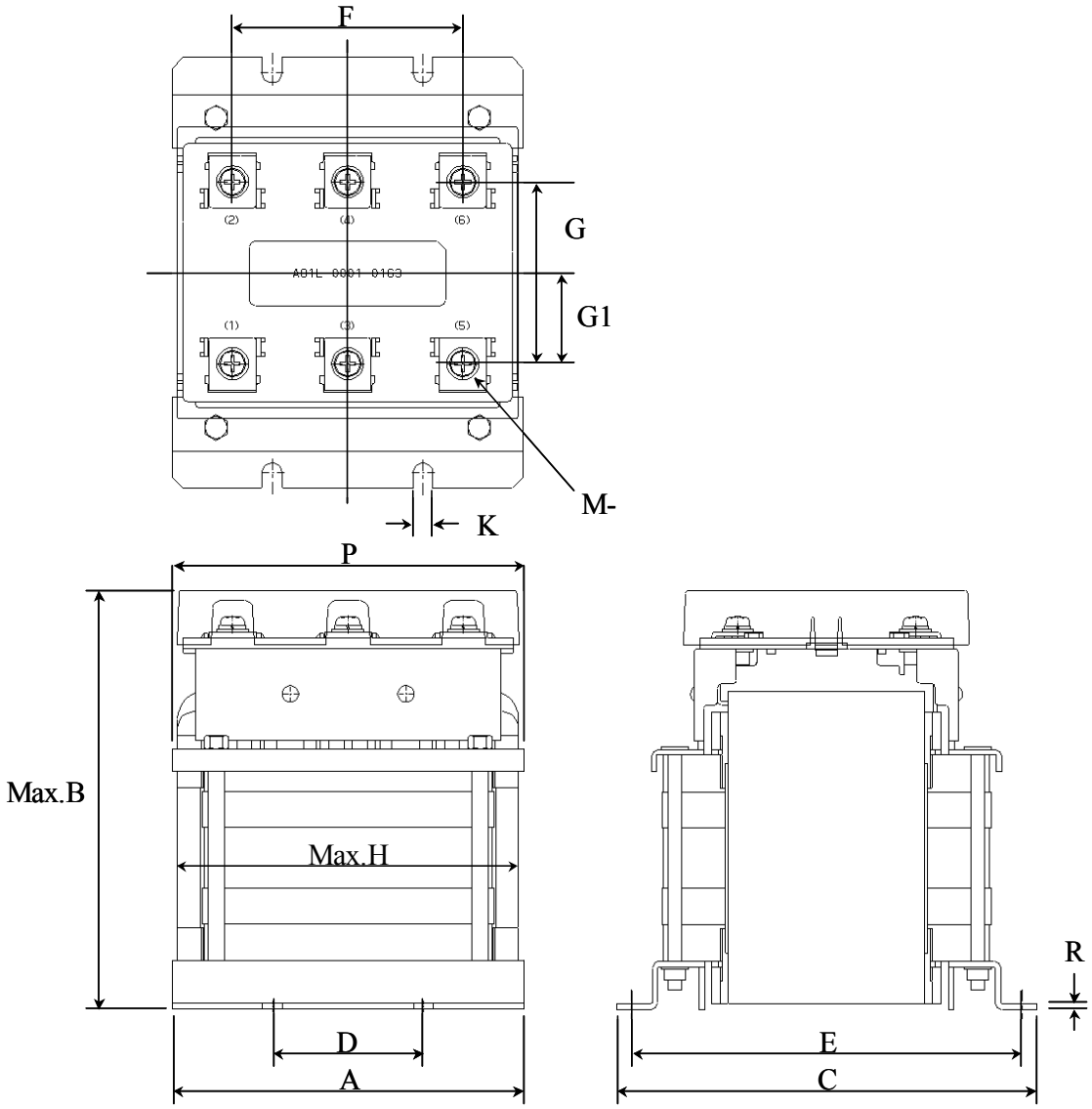

	A	B	C	D	E	F	G	G1	H	K	P	R	M
A81L-0001-0163	135	155	165	55	145	84	66	33	135	7.2	135	2	M5

Model	Weight
A81L-0001-0163	8.0kg

© MyFANUC 2D5504D5BAC945D385F48627D4977F6C

(h) A81L-0001-0164

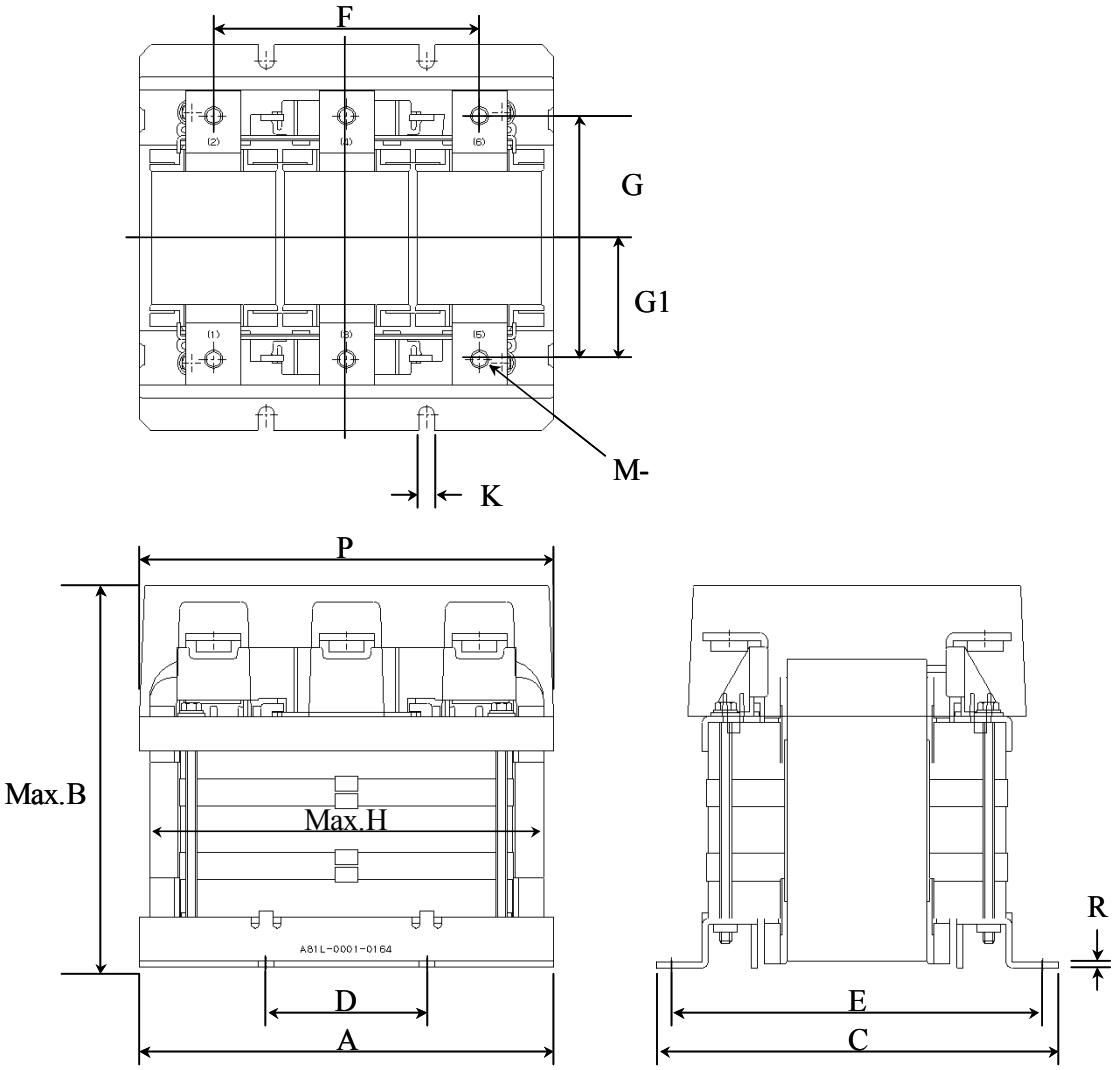

	A	B	C	D	E	F	G	G1	H	K	P	R	M
A81L-0001-0164	185	172	175	70	154	116	106	53	185	7	185	2.6	M8

Model	Weight
A81L-0001-0164	14.0kg

© MyFANUC 2D5504D5BAC945D385F48627D4977F6C

(i) A81L-0001-0179

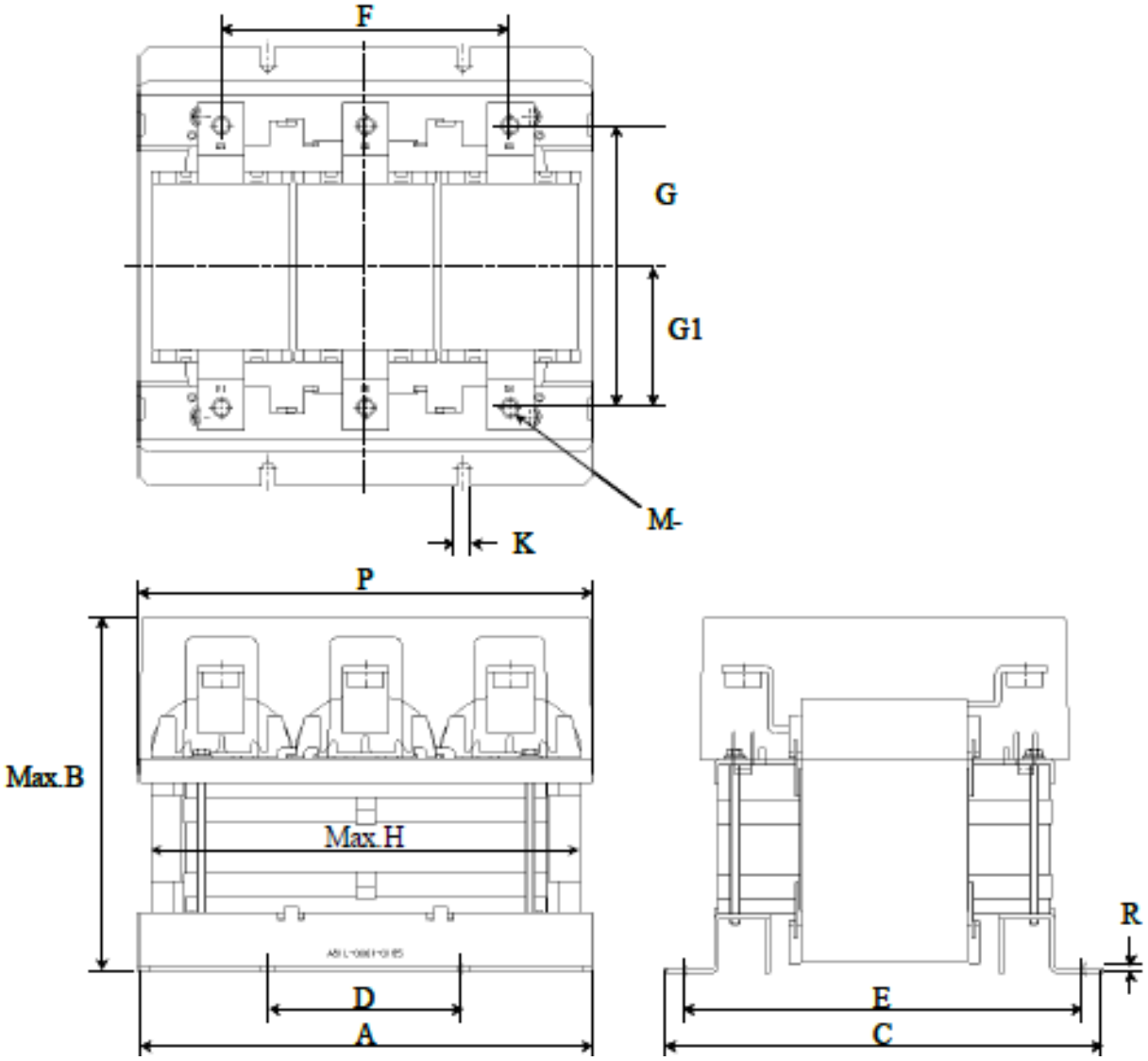

	A	B	C	D	E	F	G	G1	H	K	P	R	M
A81L-0001-0179	248	195	238	105	216	155	151	75.5	248	7	248	2.6	M10

Model	Weight
A81L-0001-0179	24.0kg

© MyFANUC 2D5504D5BAC945D385F48627D4977F6C

(j) A81L-0001-0165

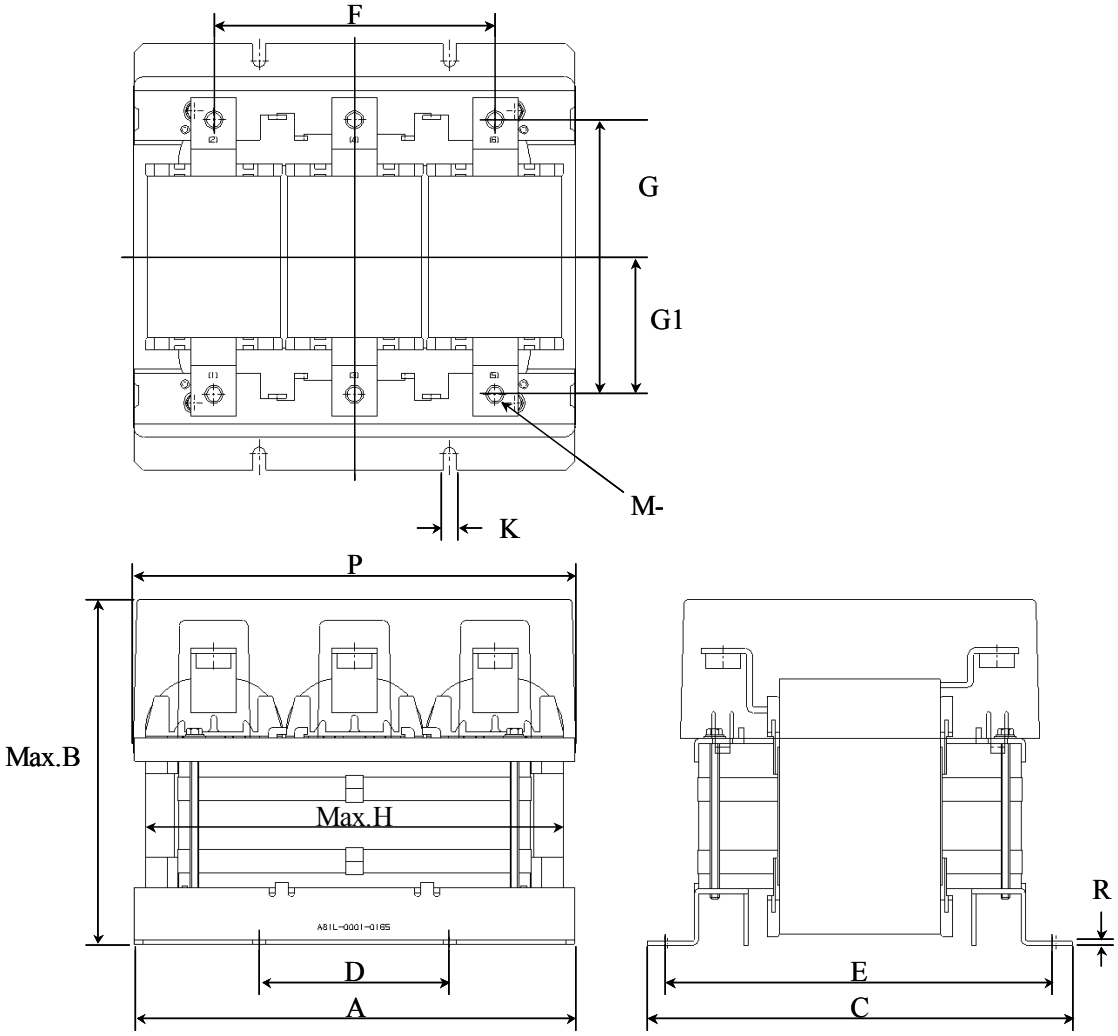

	A	B	C	D	E	F	G	G1	H	K	P	R	M
A81L-0001-0165	248	200	238	105	216	155	151	75.5	248	7	248	2.6	M10

Model	Weight
A81L-0001-0165	26.0kg

© MyFANUC 2D5504D5BAC945D385F48627D4977F6C

(k) A81L-0001-0167
(l) A81L-0001-0170

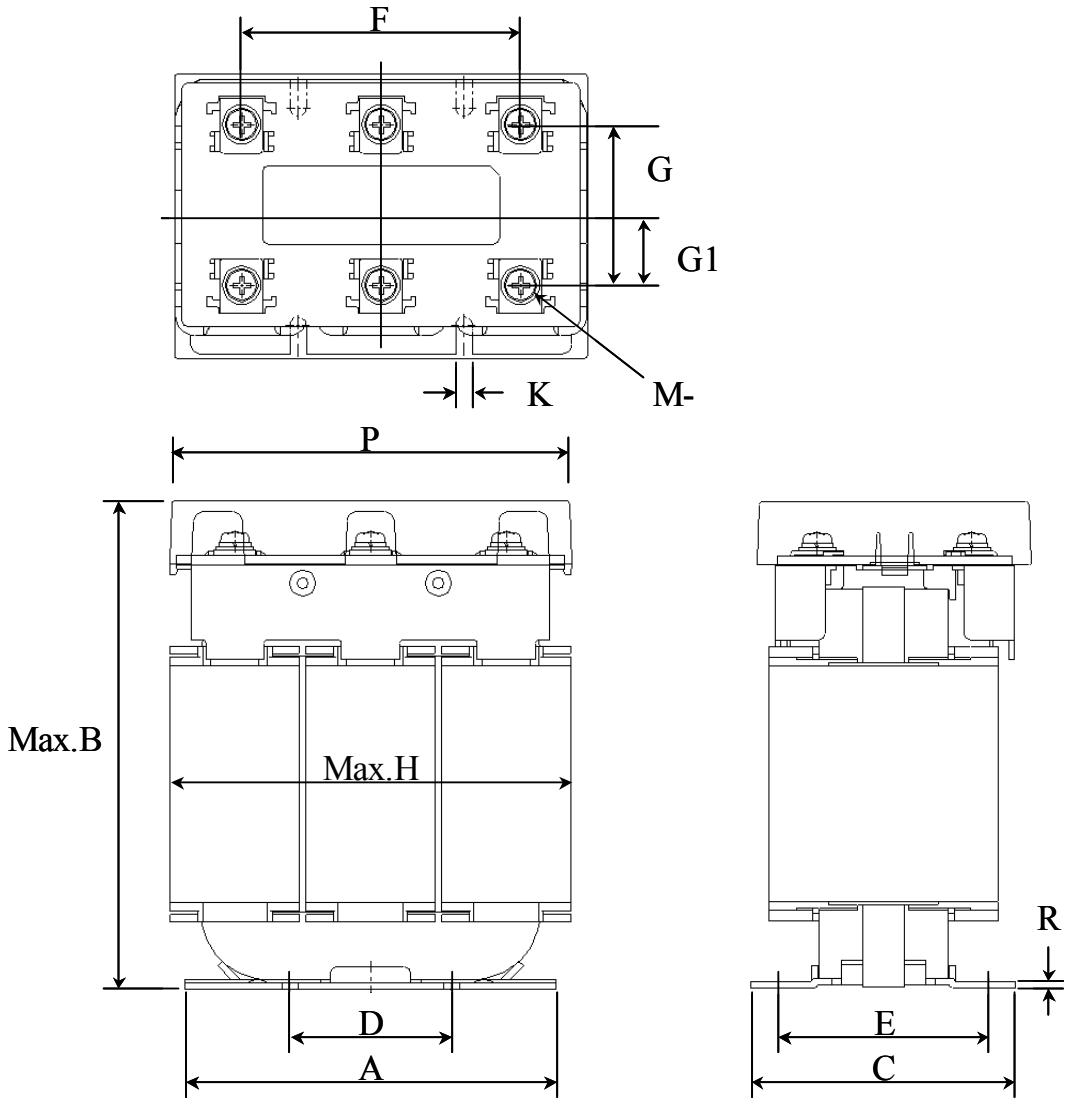

	A	B	C	D	E	F	G	G1	H	K	P	R	M
Shape (1)	115	155	82	50	65	84	48	20.5	135	5	135	2	M5

Model	Weight
A81L-0001-0167	8.2kg
A81L-0001-0170	4.2kg

© MyFANUC 2D5504D5BAC945D385F48627D4977F6C

8.1.3 AC Line Filter

(a) A81L-0001-0171

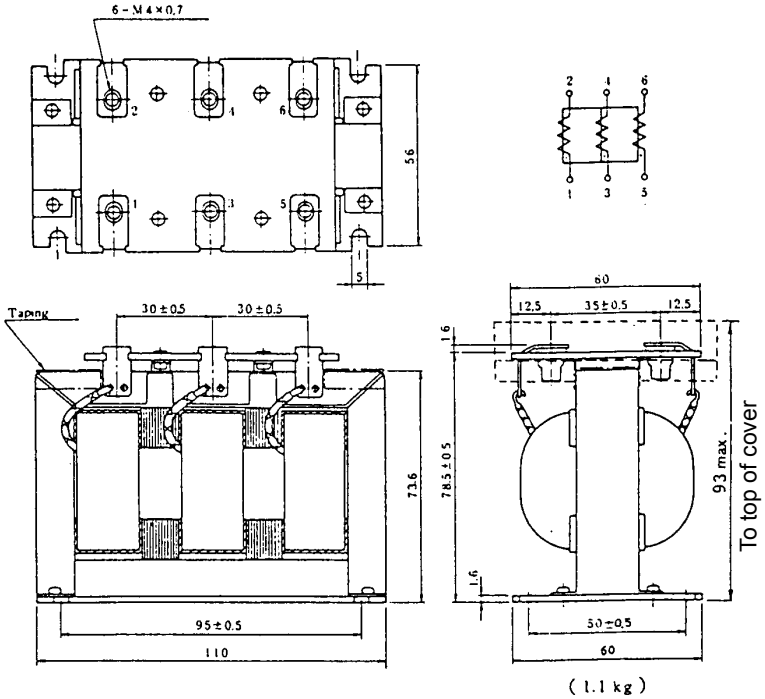

(b) A81L-0001-0101#C

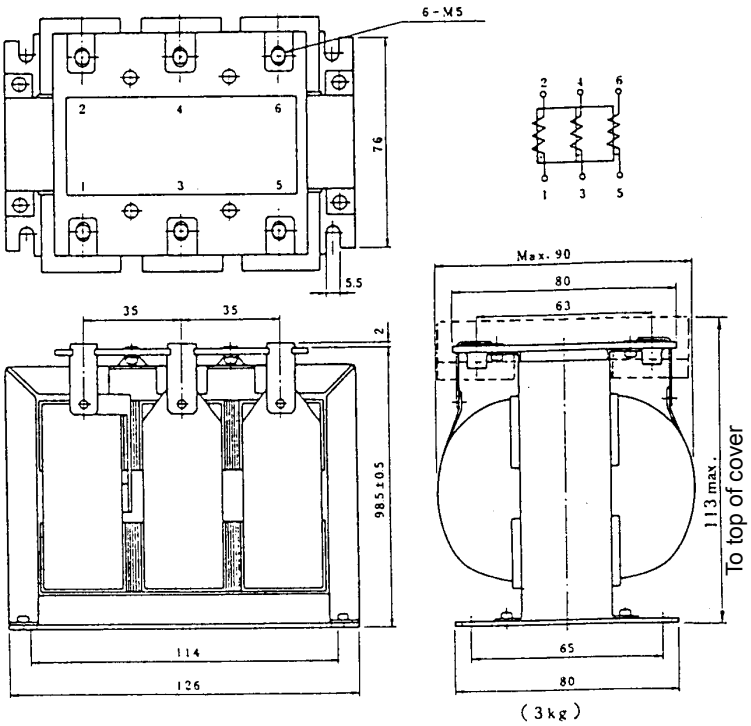

■ Weight

Model	Weight
A81L-0001-0171	1.1kg
A81L-0001-0101#C	3.0kg

© MyFANUC 2D5504D5BAC945D385F48627D4977F6C

8.1.4 Power Transformer

(a) For αi PS 5.5, αi PS_R 5.5 (at 5.5 kW output) (A06B-6052-J001)

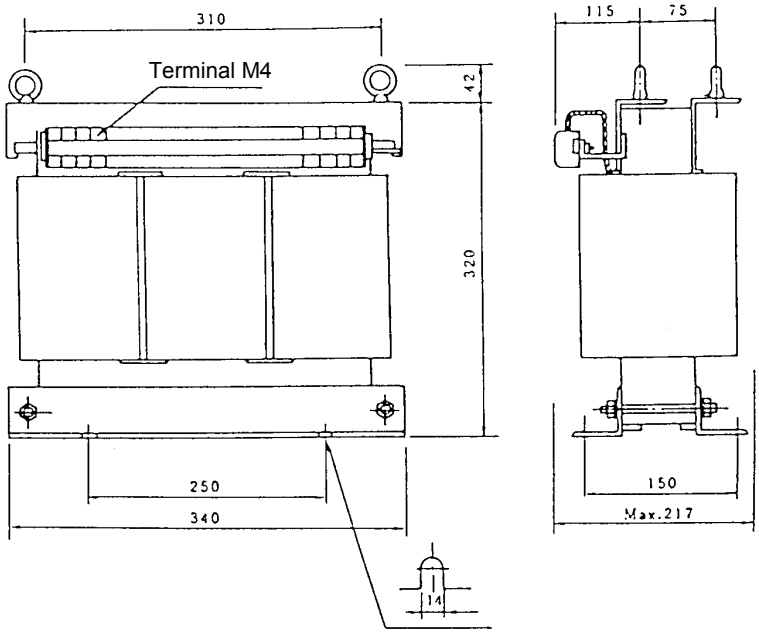

Outline Drawing of Power Transformer with no Cover

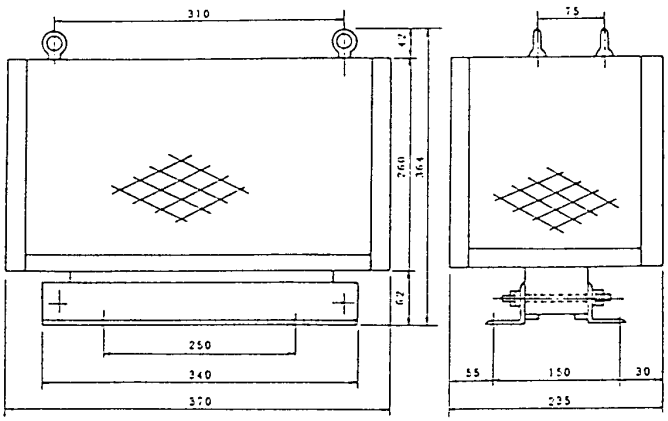

Outline Drawing of Power Transformer with Cover

NOTE
The four side panels are all meshed, while the top is a solid plate.

■ Weight

Model	Weight
A06B-6052-J001	61kg

© MyFANUC 2D5504D5BAC945D385F48627D4977F6C

(b) For αi PS 11 , αi PS_R 5.5 (at 7.5kW output) (A06B-6044-J006)

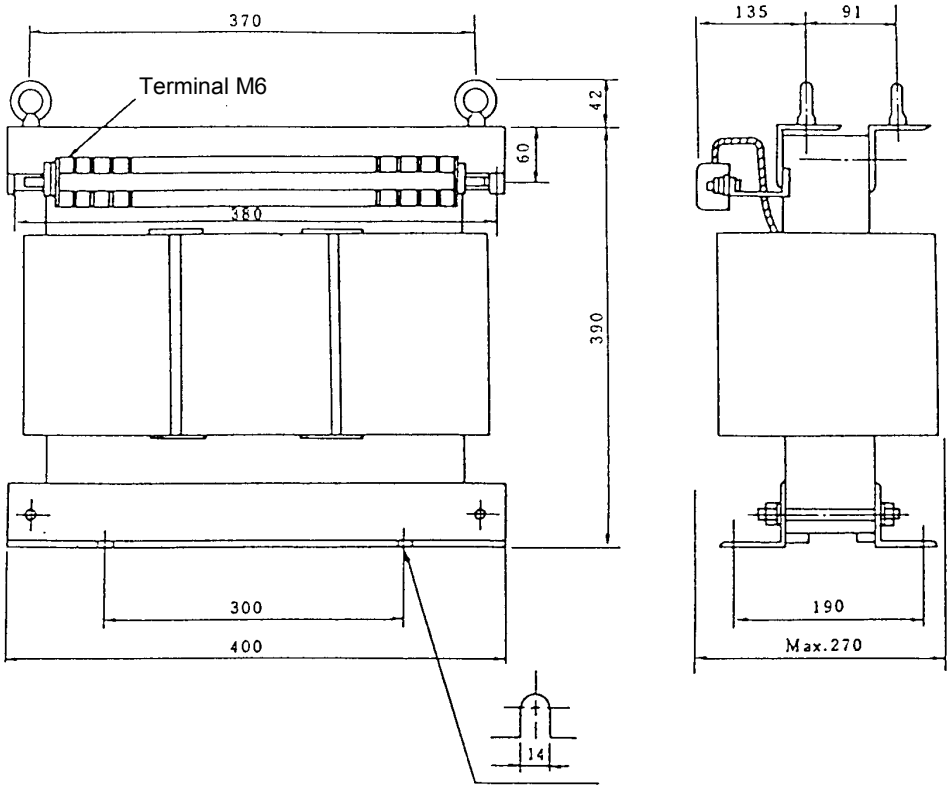

Outline Drawing of Power Transformer with no Cover

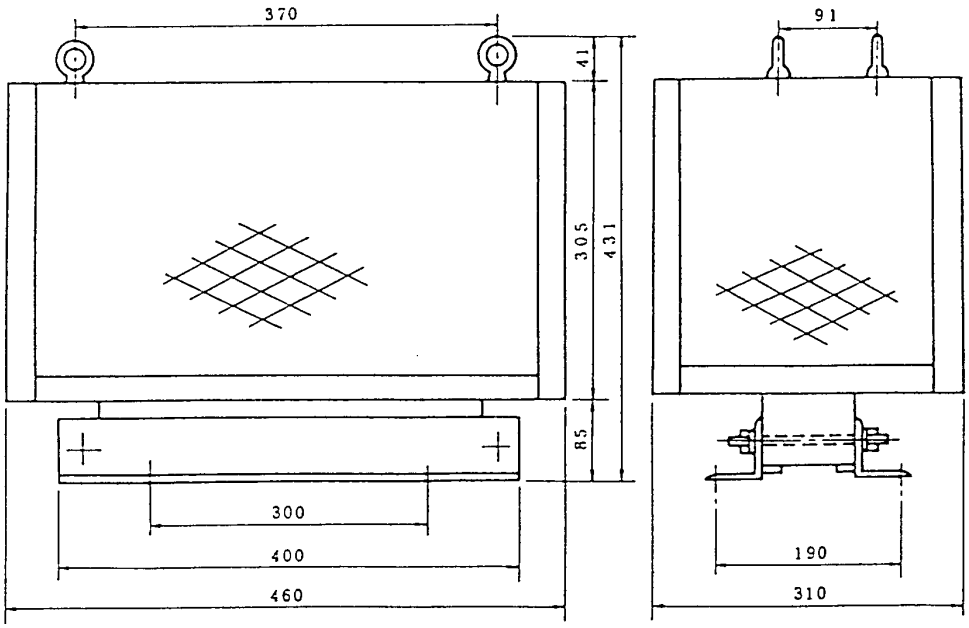

Outline Drawing of Power Transformer with Cover

NOTE
The four side panels are all meshed, while the top is a solid plate.

■ Weight

Model	Weight
A06B-6044-J006	115kg

© MyFANUC 2D5504D5BAC945D385F48627D4977F6C

(c) For αi PS 15 (A06B-6044-J007)

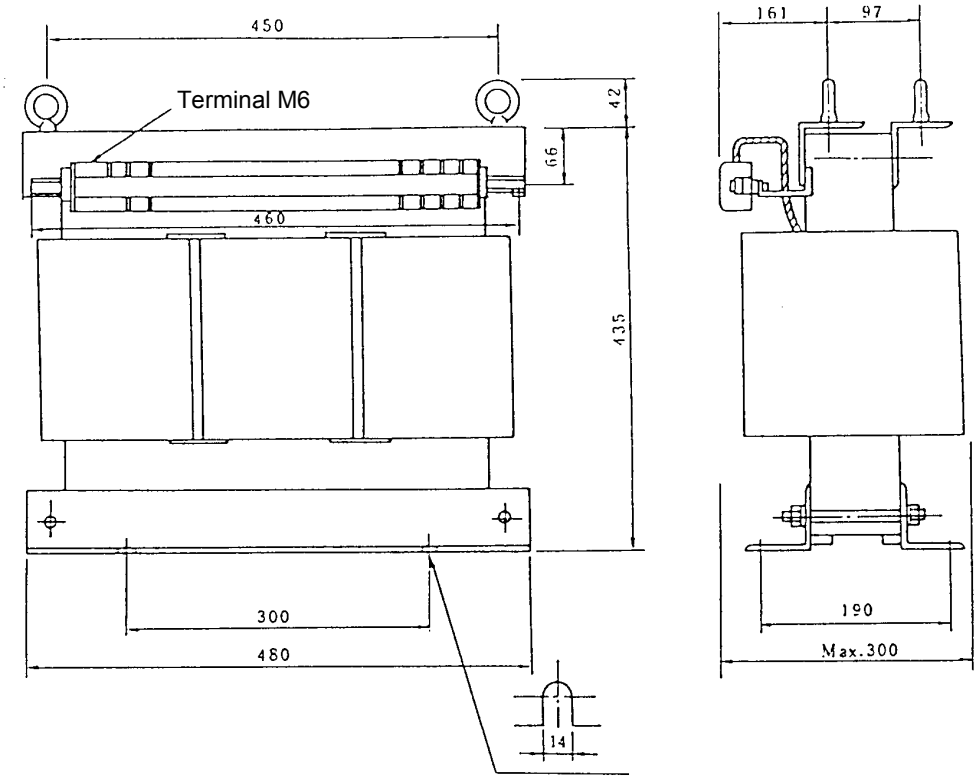

Outline Drawing of Power Transformer with no Cover

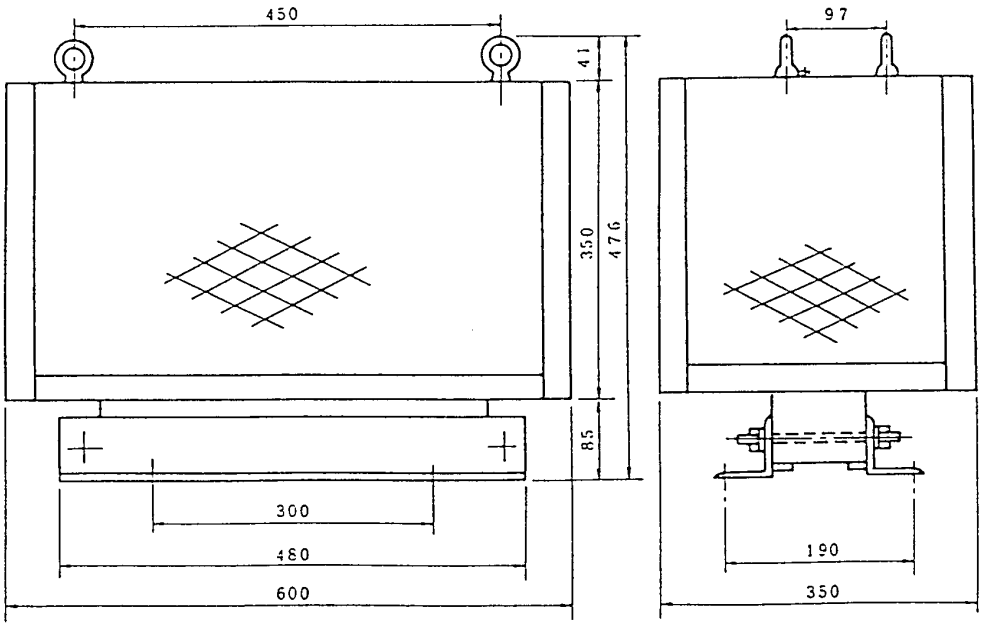

Outline Drawing of Power Transformer with Cover

NOTE
The four side panels are all meshed, while the top is a solid plate.

■ Weight

Model	Weight
A06B-6044-J007	165kg

© MyFANUC 2D5504D5BAC945D385F48627D4977F6C

(d) For αi PS 26, 30(A06B-6044-J010)

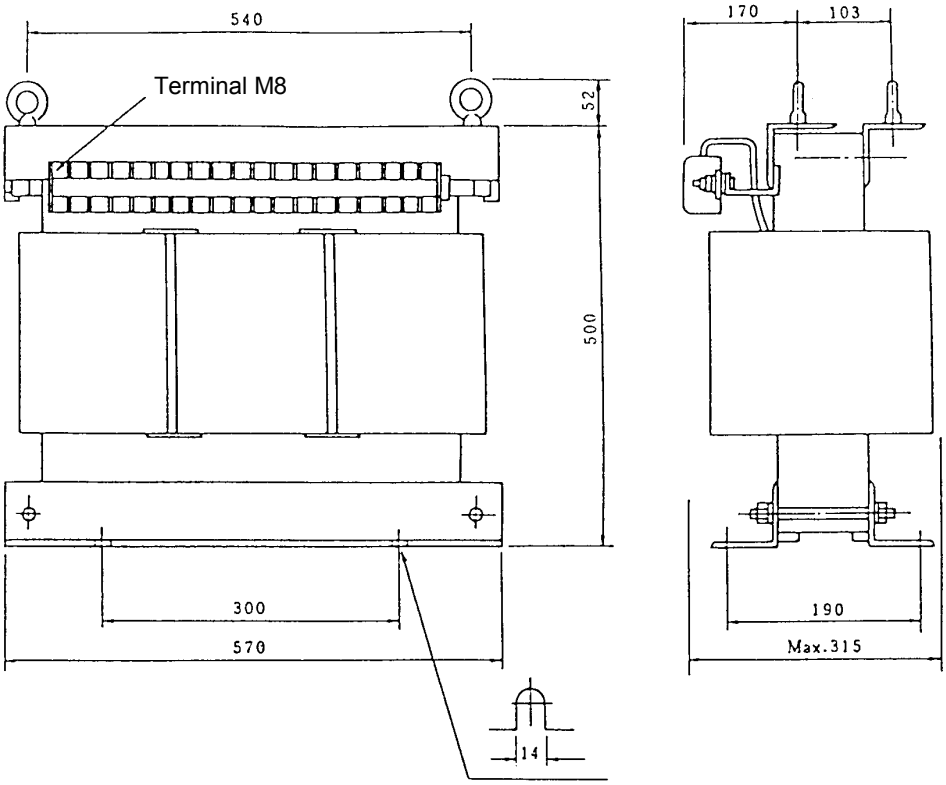

Outline Drawing of Power Transformer with no Cover

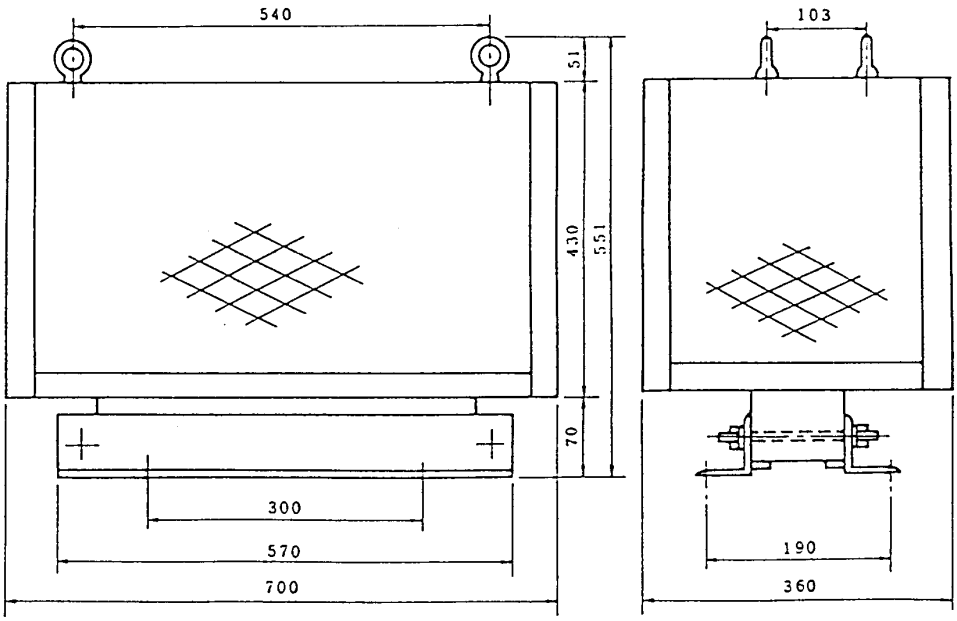

Outline Drawing of Power Transformer with Cover

NOTE
The four side panels are all meshed, while the top is a solid plate.

■ Weight

Model	Weight
A06B-6044-J010	260kg

© MyFANUC 2D5504D5BAC945D385F48627D4977F6C

(e) For αi PS 37, αi PS 55 (at 45kW output) (A06B-6044-J015)

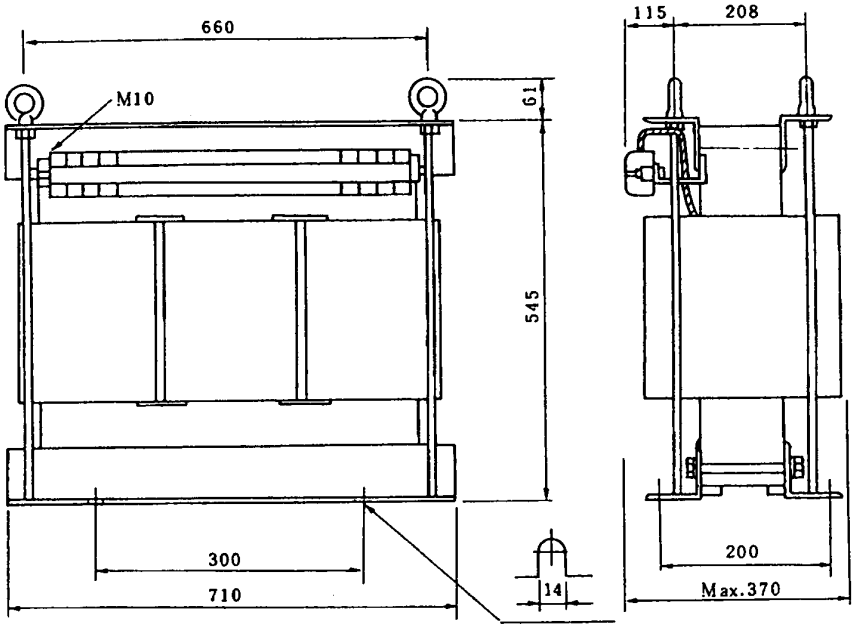

Outline Drawing of Power Transformer with no Cover

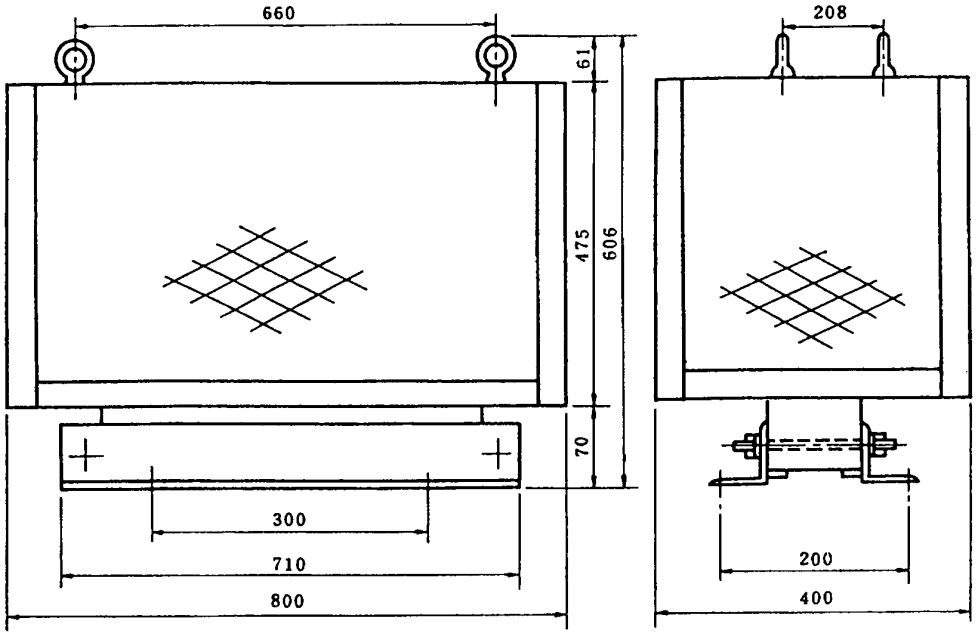

Outline Drawing of Power Transformer with Cover

NOTE
The four side panels are all meshed, while the top is a solid plate.

■ Weight

Model	Weight
A06B-6044-J015	375kg

© MyFANUC 2D5504D5BAC945D385F48627D4977F6C

(f) For αi PS_R 3 (2kW output) (A80L-0024-0006), αi PS_R 3 (3kW output) (A80L-0026-0003)

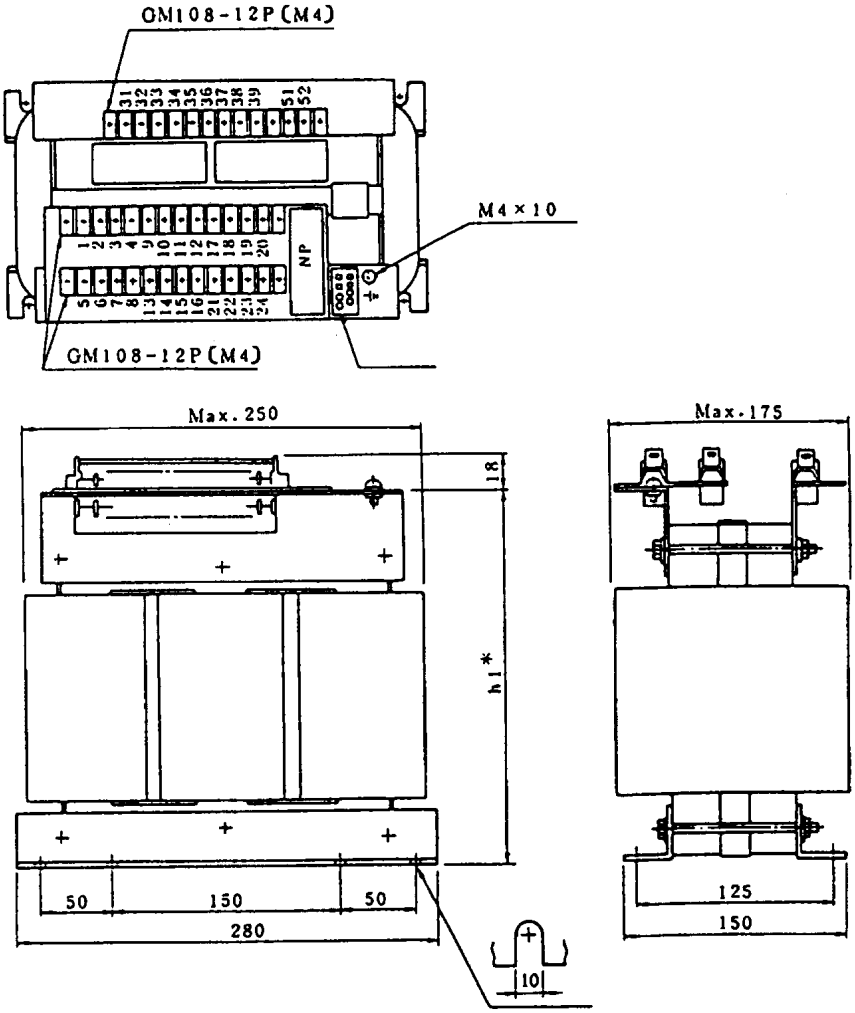

Drawing number	A80L-0024-0006	A80L-0026-0003
Type (name)	SBE	SCE
Weight	27 kg	36 kg
hl* (height of transformer)	217mm max	247mm max

© MyFANUC 2D5504D5BAC945D385F48627D4977F6C

8.1.5 Regenerative Discharge Unit

(a) A06B-6089-H510

For the panel cut-out drawing, see Section 8.2 (e).

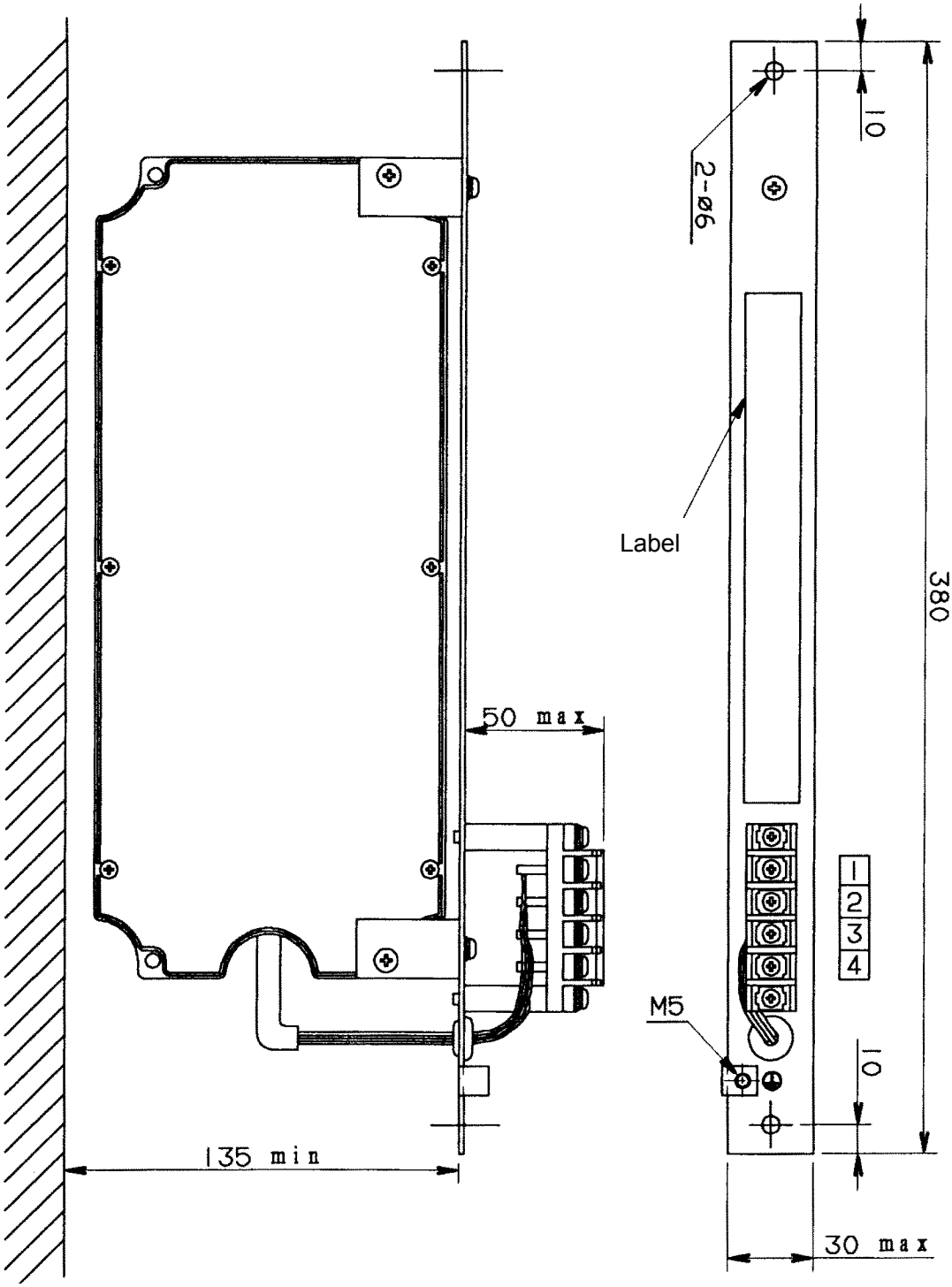

Terminal block:M4 × 4

■ Weight

Model	Weight
A06B-6089-H510	0.8kg

© MyFANUC 2D5504D5BAC945D385F48627D4977F6C

(b) A06B-6089-H500

For the panel cut-out drawing, see Section 8.2 (f).

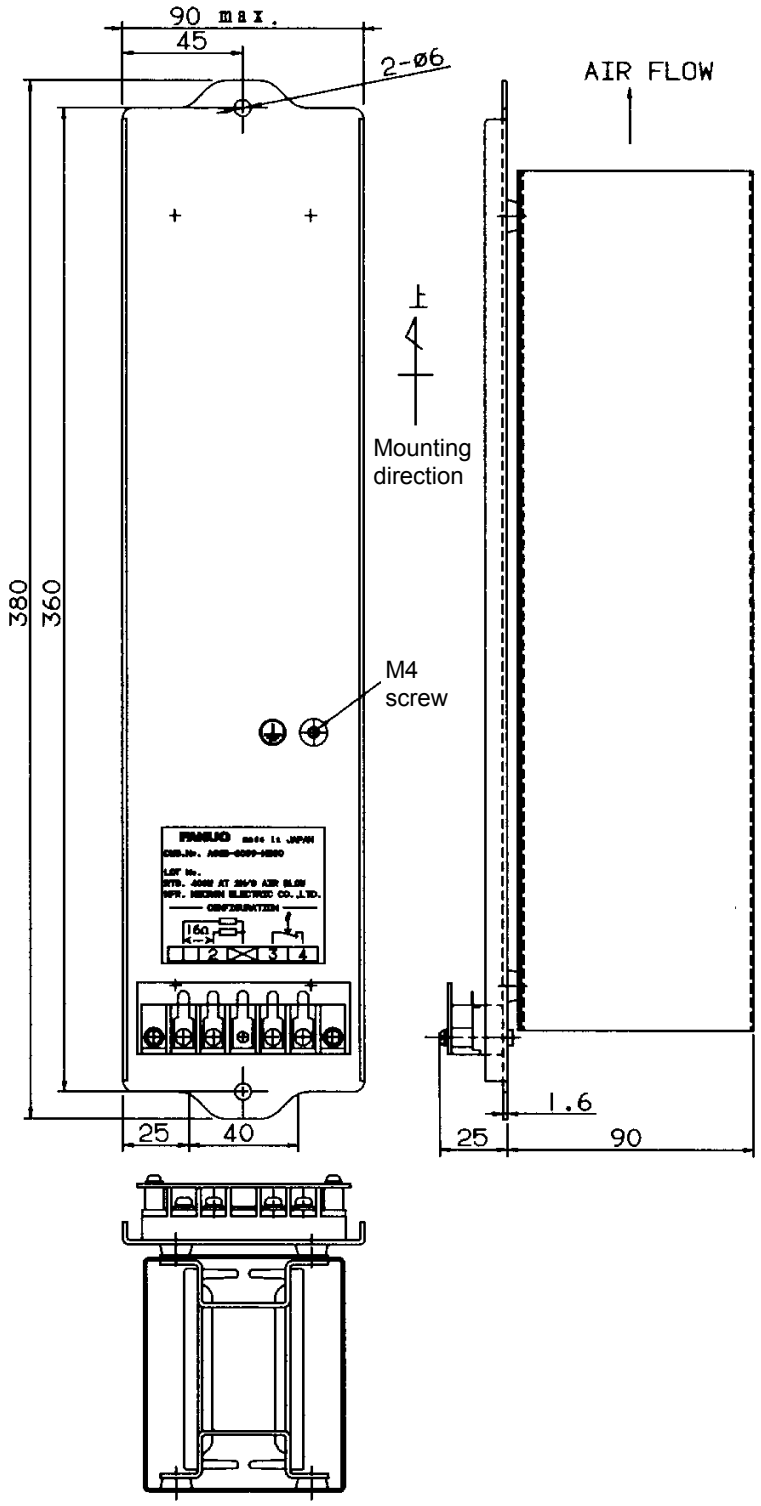

Terminal block:M4 × 4

■ Weight

Model	Weight
A06B-6089-H500	2kg

© MyFANUC 2D5504D5BAC945D385F48627D4977F6C

(c) A06B-6089-H711 to H713

For the panel cut-out drawing, see Section 8.2 (g).

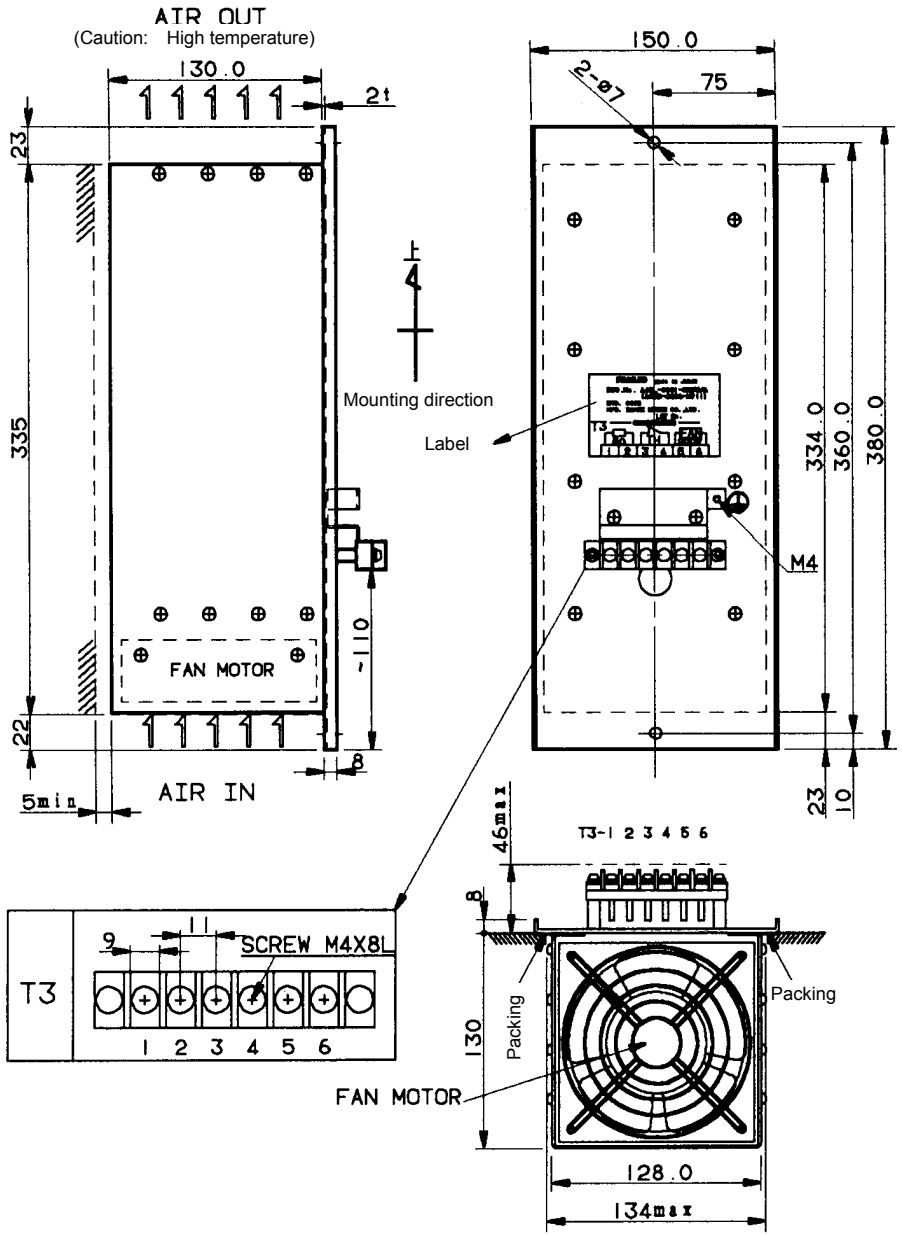

■ Weight

Model	Weight
A06B-6089-H711	5kg
A06B-6089-H712	6kg
A06B-6089-H713	5kg

© MyFANUC 2D5504D5BAC945D385F48627D4977F6C

8.1.6 Dynamic Brake Module (DBM)

For the panel cut-out drawing, see Section 8.2 (j).

(a) A06B-6079-H401, A06B-6079-H403

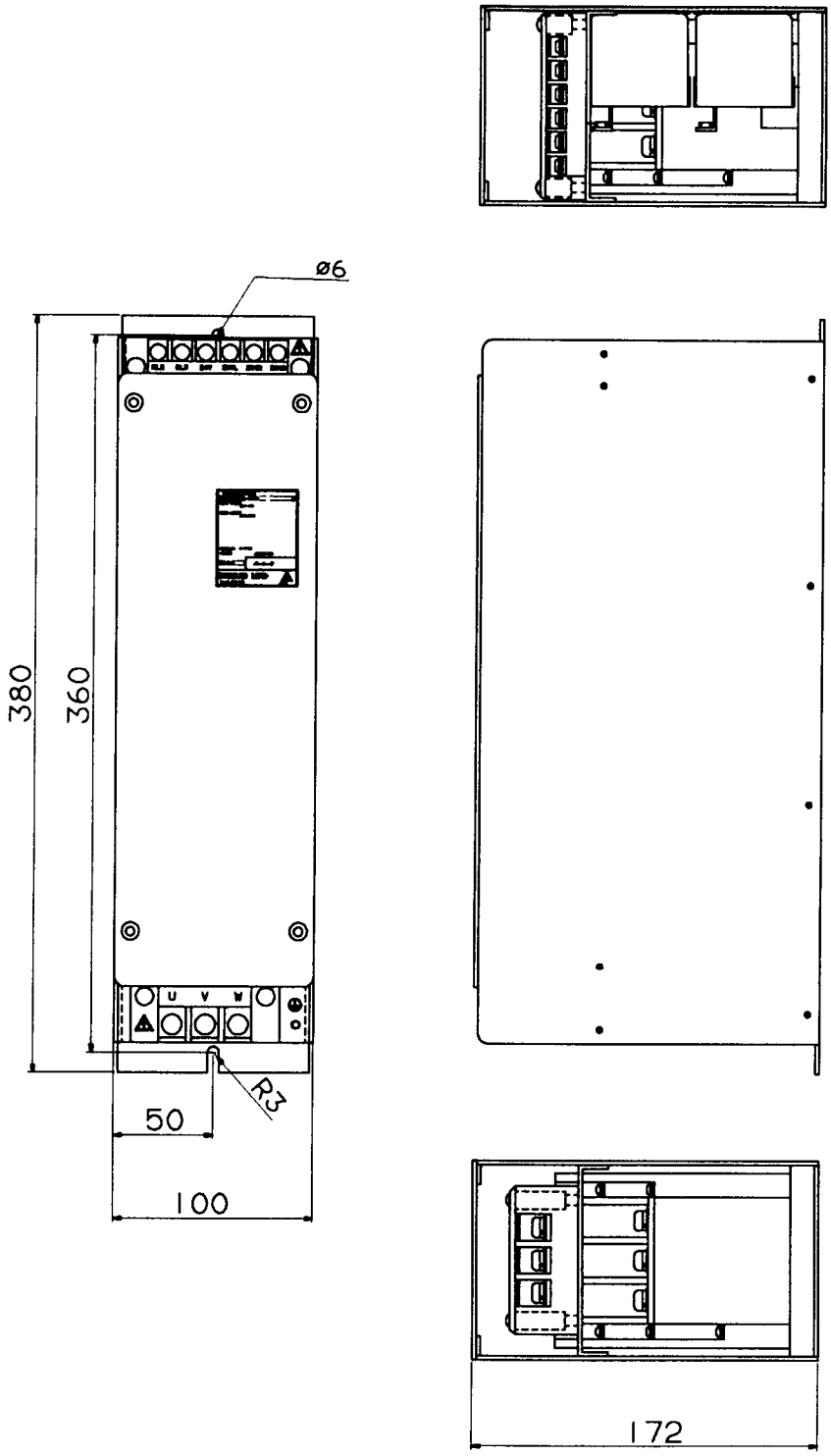

© MyFANUC 2D5504D5BAC945D385F48627D4977F6C

(b) A06B-6069-H300, A06B-6069-H301

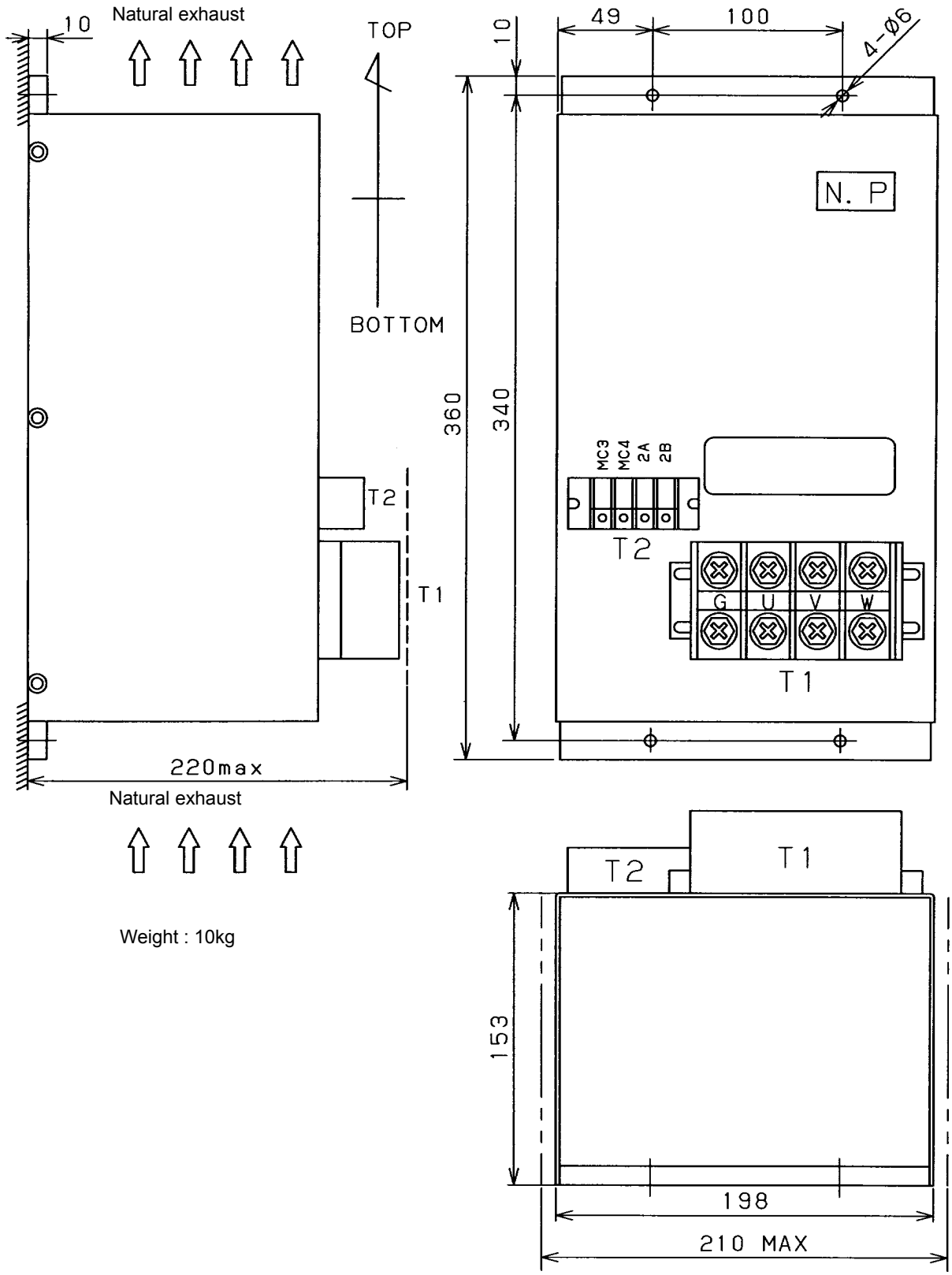

Weight : 10kg

© MyFANUC 2D5504D5BAC945D385F48627D4977F6C

8.1.7 Circuit Breaker

Ordering drawing number	A	B	C	D	E	M_1-	F	G	H	I	J	K	L	M_2-	N	Mounting
A06B-6077-K101	75	50	180	82	100	M5	17	84	51	43	ϕ7.8	ϕ4.9	84	M4	25	2 positions
A06B-6077-K102																
A06B-6077-K103	75	50	180	82	100	M8	17	84	51	43	ϕ7.8	ϕ4.9	84	M4	25	2 positions
A06B-6077-K104																
A06B-6077-K105																
A06B-6077-K108	105	70	265	144	165	M8	25.5	95	64	57	ϕ8.2	ϕ4.5	126	M4	35	4 positions
A06B-6077-K109																
A06B-6077-K110																
A06B-6077-K106	75	50	180	82	100	M5	17	84	51	43	ϕ7.8	ϕ4.9	84	M4	25	2 positions

A06B-6077-K111 is shown on the next page.

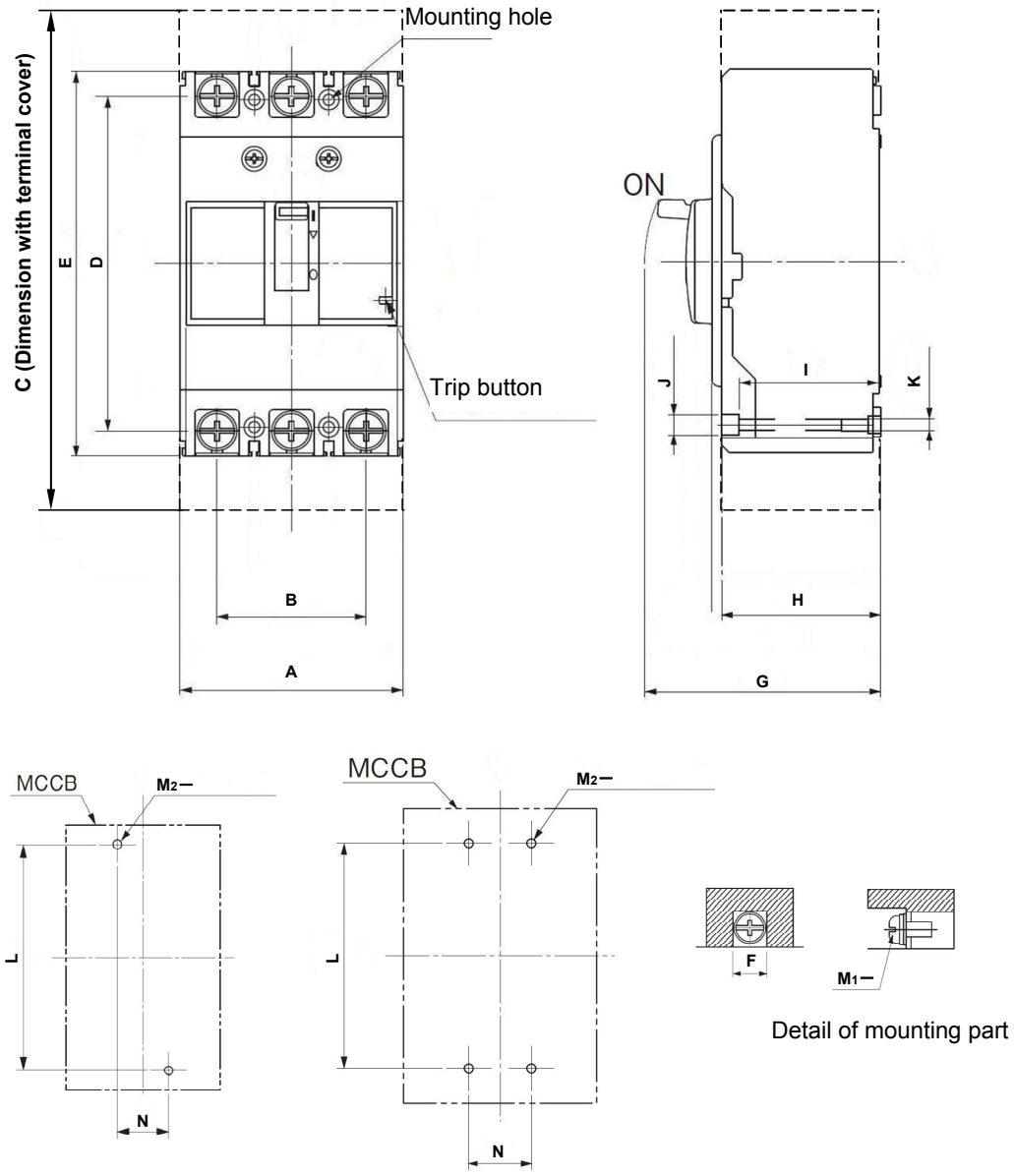

© MyFANUC 2D5504D5BAC945D385F48627D4977F6C

A06B-6077-K111

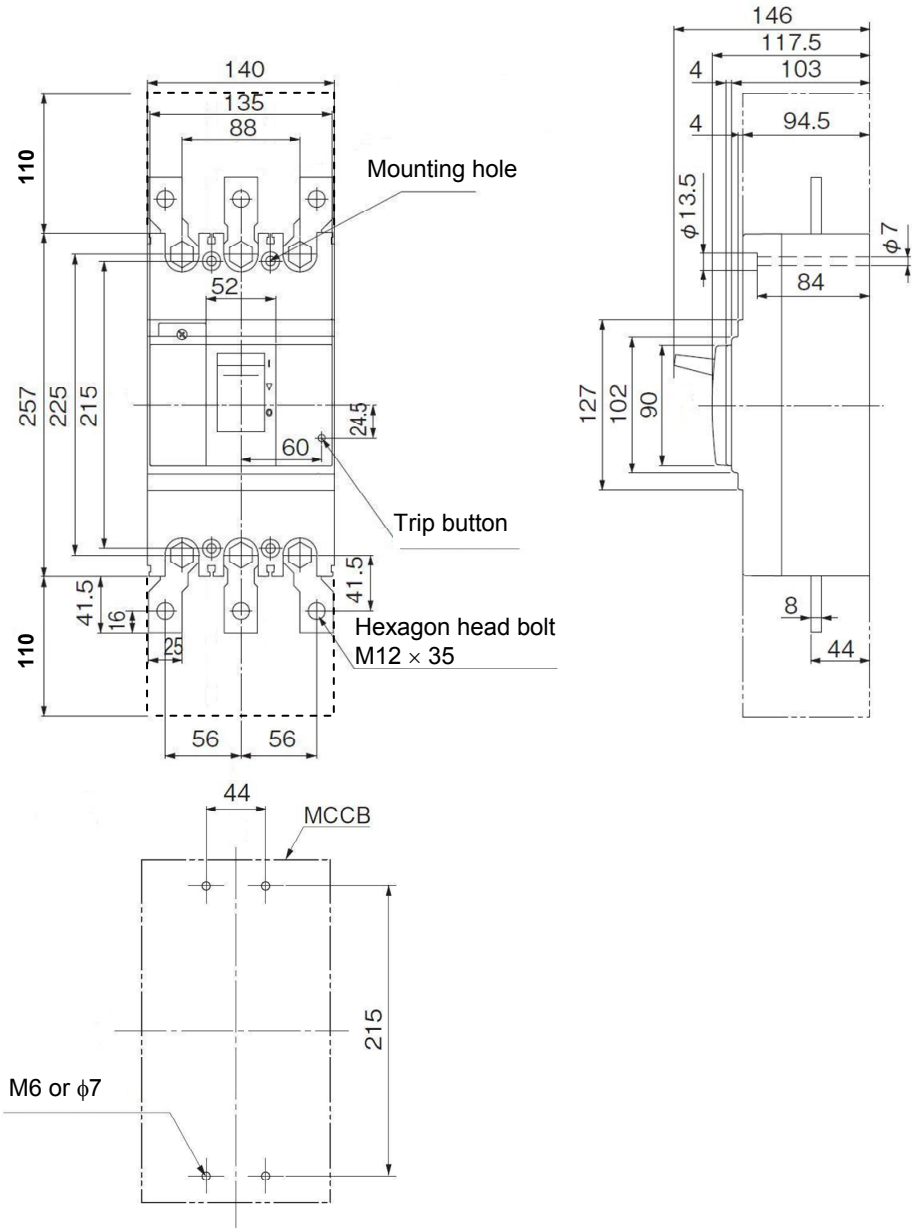

© MyFANUC 2D5504D5BAC945D385F48627D4977F6C

8.1.8 Magnetic Contactors

(a) A06B-6077-K121

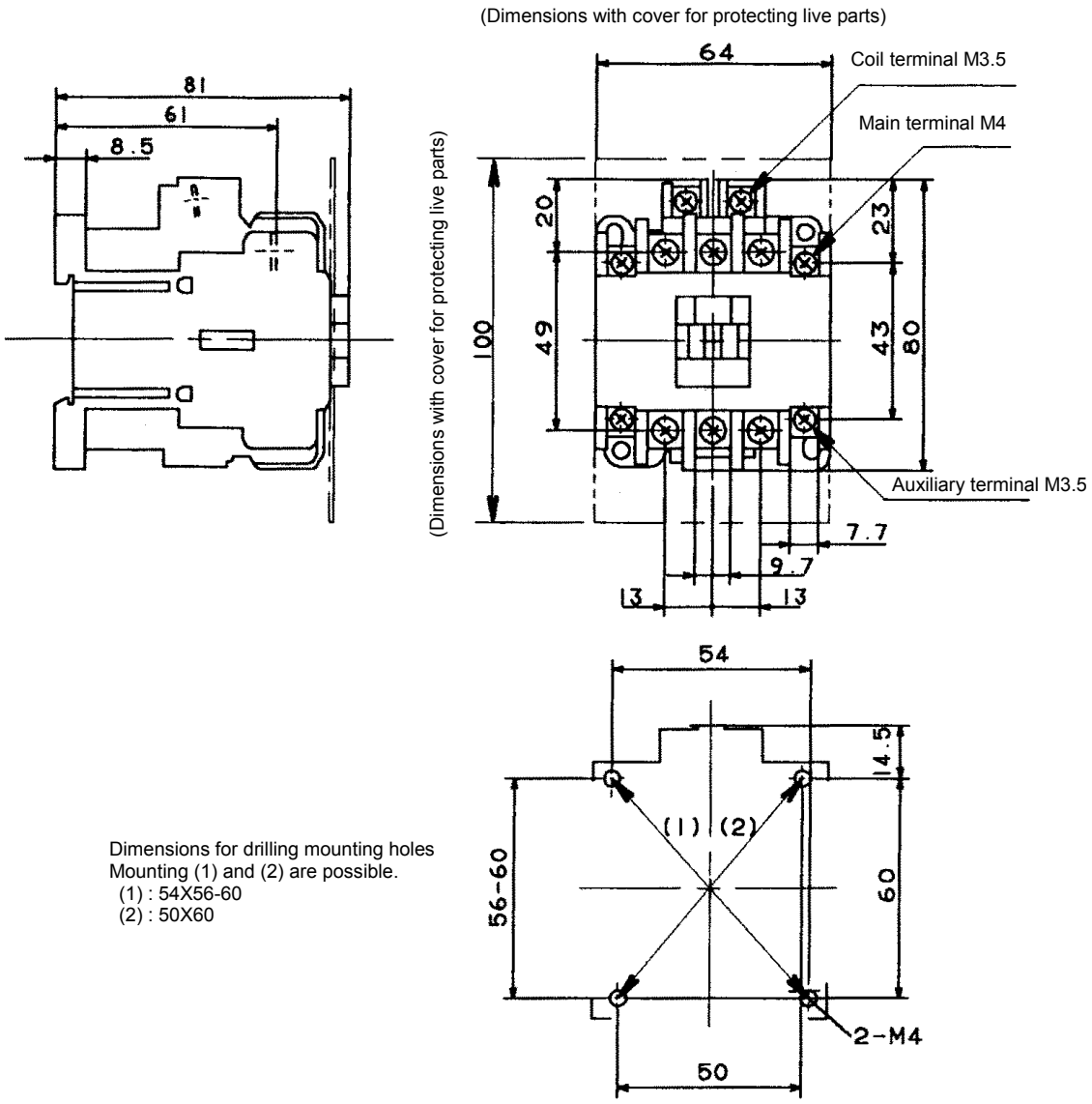

Dimensions for drilling mounting holes
Mounting (1) and (2) are possible.
(1) : 54X56-60
(2) : 50X60

Ordering drawing number	Fuji Electric part number		Operation coil voltage	Auxiliary contact structure	Weight
	Body	Cover			
A06B-6077-K121	SC-5-1	SZ-JC4	200V/50Hz 200 to 220V/60Hz	1a1b	0.38Kg

© MyFANUC 2D5504D5BAC945D385F48627D4977F6C

(b) A06B-6077-K122, A06B-6077-K123

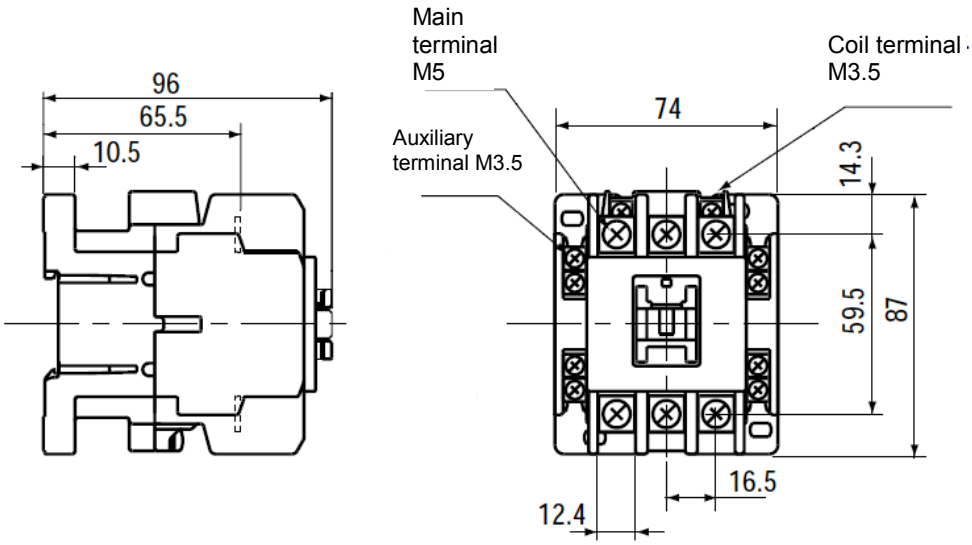

Dimensions for drilling mounting holes

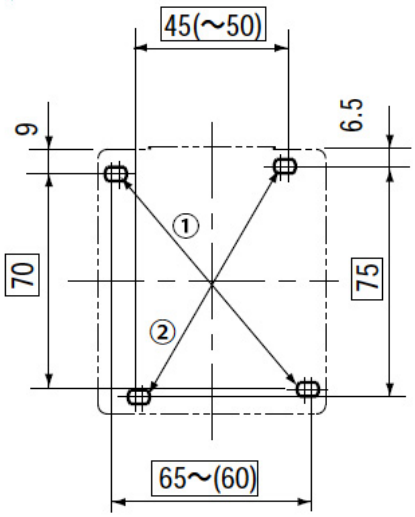

- Mounting dimensions: Holes <1> or <2> can be used for mounting.
  <1>: (60 to) 65 × 70 (compatible with SC-1N and SC-2N)
  <2>: 45 (to 50) × 75
- Mounting screw: 2-M4
  Install a screw at two mounting holes located diagonally.

Ordering drawing number	Fuji Electric part number		Operation coil voltage	Auxiliary contact structure	Weight
	Body	Cover			
A06B-6077-K122	SC-N1	SZ-N1J	200V/50Hz	2a2b	0.59Kg
A06B-6077-K123	SC-N2	SZ-N1J	200 to 220V/60Hz		0.59Kg

© MyFANUC 2D5504D5BAC945D385F48627D4977F6C

(c) A06B-6077-K124

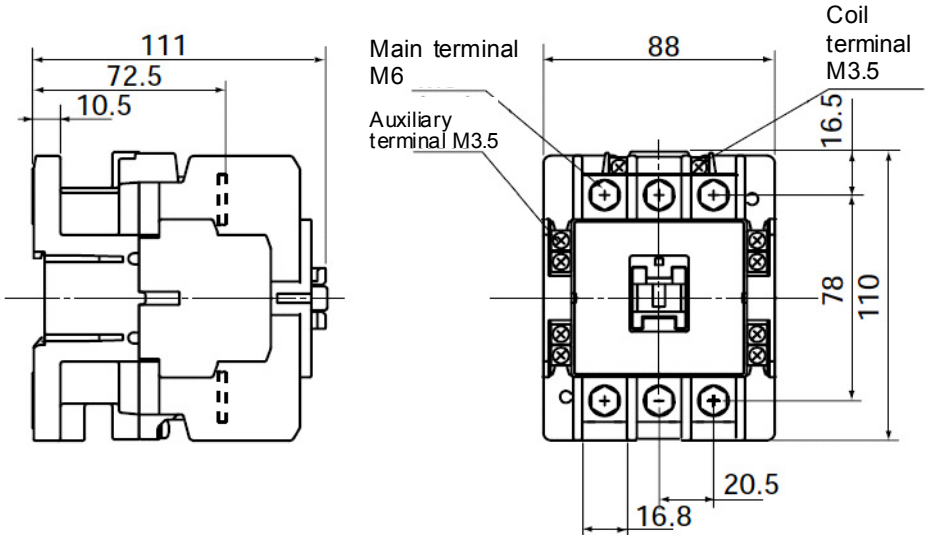

Dimensions for drilling mounting holes

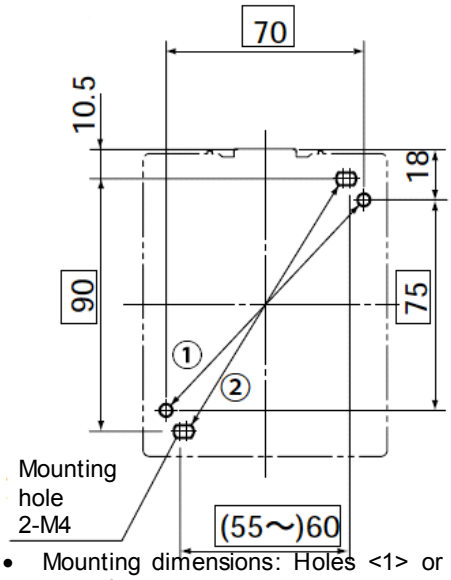

- Mounting dimensions: Holes <1> or <2> can be used for mounting.
  <1>: 70 × 75 (compatible with SC-2SN and SC-3N)
  <2>: (55 to) 60 × 90
- Mounting screw: 2-M4
  Install a screw at two mounting holes located diagonally.

Ordering drawing number	Fuji Electric part number		Operation coil voltage	Auxiliary contact structure	Weight
	Body	Cover			
A06B-6077-K124	SC-N2S	SZ-N2SJ	200V/50Hz 200 to 220V/60Hz	2a2b	1.1Kg

© MyFANUC 2D5504D5BAC945D385F48627D4977F6C

(d) A06B-6077-K125

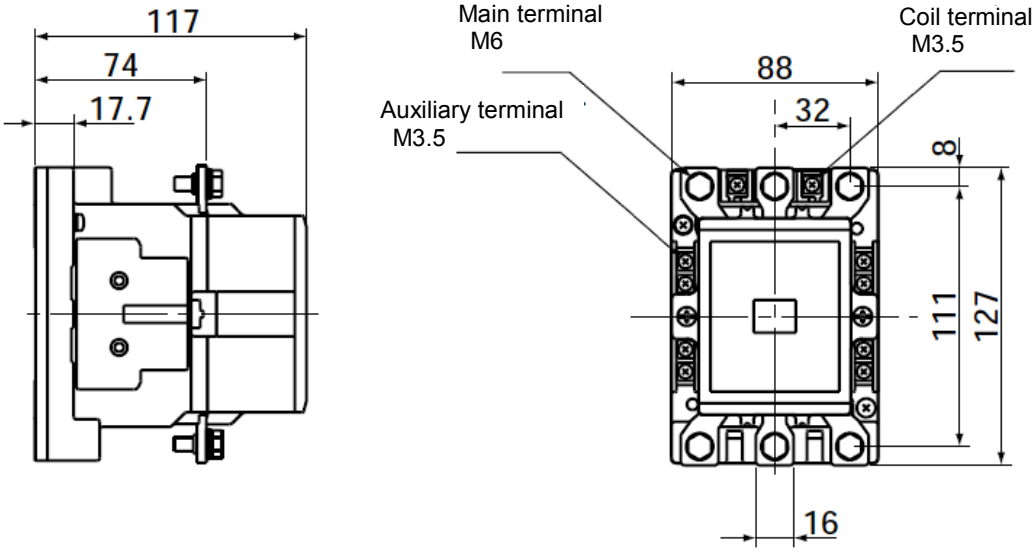

Dimensions for drilling mounting holes

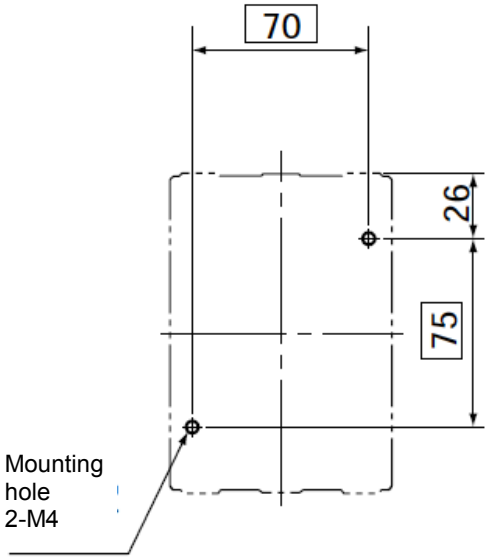

Ordering drawing number	Fuji Electric part number		Operation coil voltage	Auxiliary contact structure	Weight
	Body	Cover			
A06B-6077-K125	SC-N4	SZ-N4J	200V/50Hz 200 to 220V/60Hz	2a2b	1.5Kg

© MyFANUC 2D5504D5BAC945D385F48627D4977F6C

(e) A06B-6077-K126

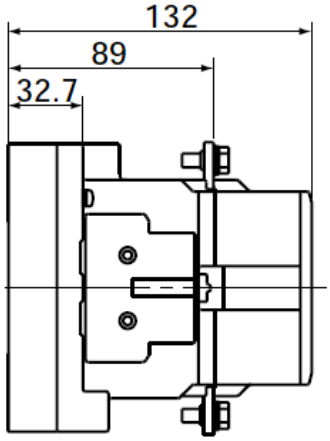

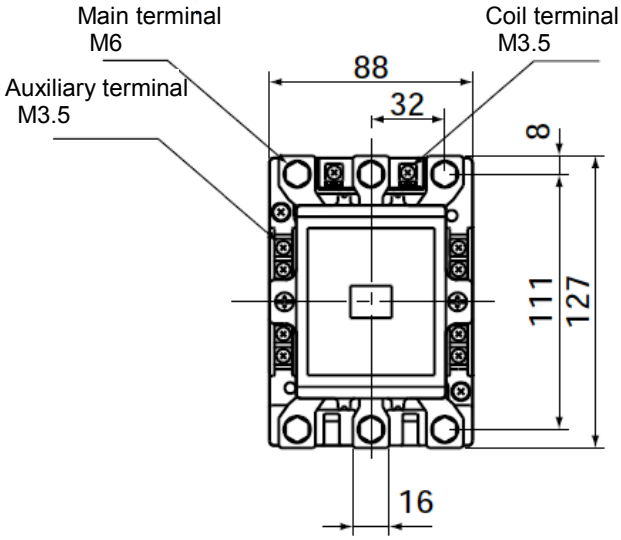

Dimensions for drilling mounting holes

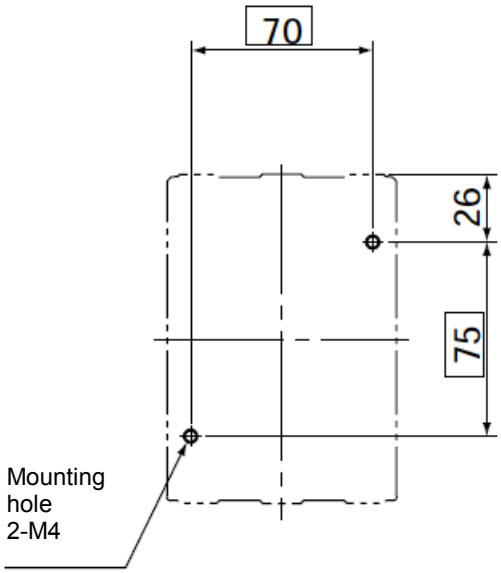

Ordering drawing number	Fuji Electric part number		Operation coil voltage	Auxiliary contact structure	Weight
	Body	Cover			
A06B-6077-K126	SC-N5	SZ-N4J	200V/50Hz 200 to 220V/60Hz	2a2b	1.8Kg

© MyFANUC 2D5504D5BAC945D385F48627D4977F6C

(f) A06B-6077-K127

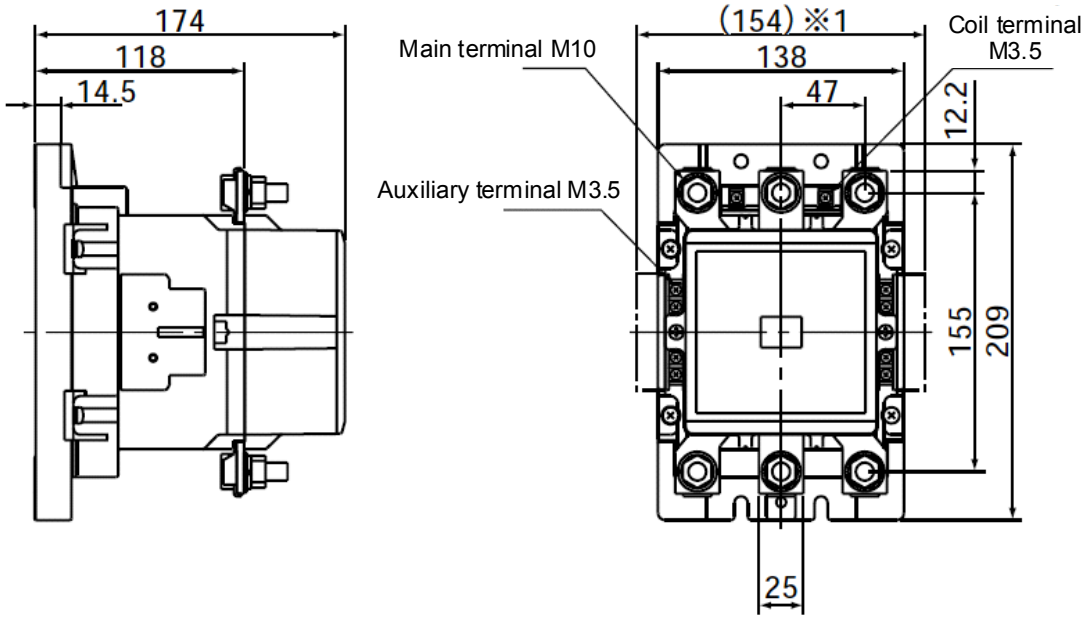

*1 When two side-on auxiliary contact units are installed

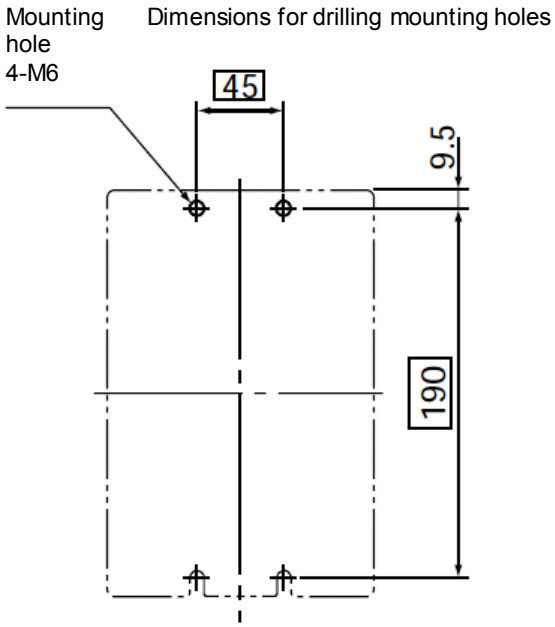

Ordering drawing number	Fuji Electric part number		Operation coil voltage	Auxiliary contact structure	Weight
	Body	Cover			
A06B-6077-K127	SC-N8	SZ-N8J	200V/50Hz 200 to 220V/60Hz	2a2b	4.9Kg

© MyFANUC 2D5504D5BAC945D385F48627D4977F6C

(g) A06B-6077-K128

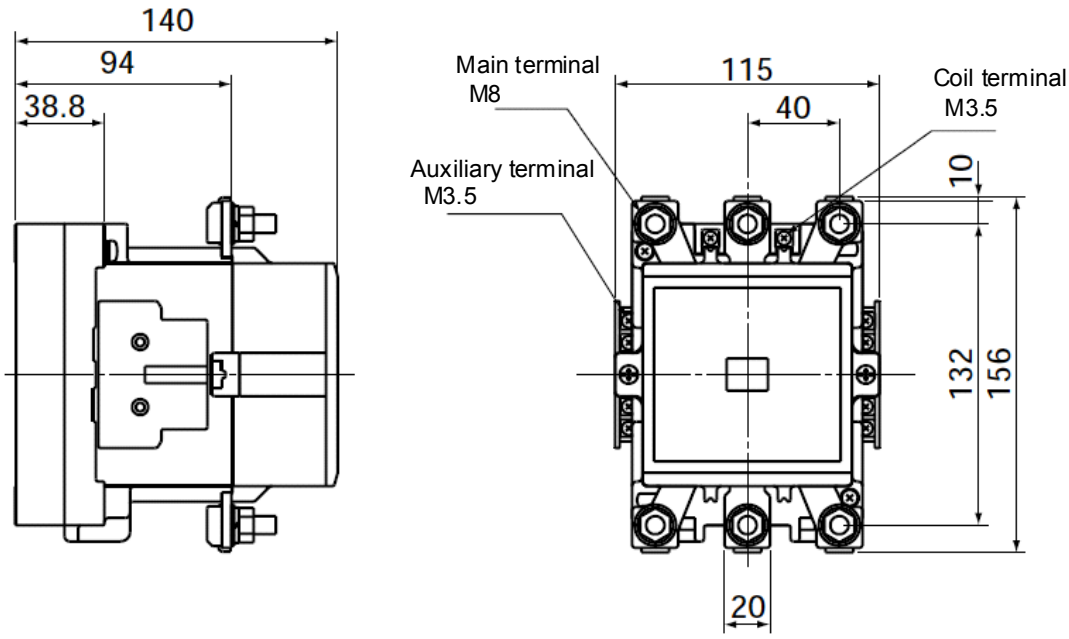

Dimensions for drilling mounting holes

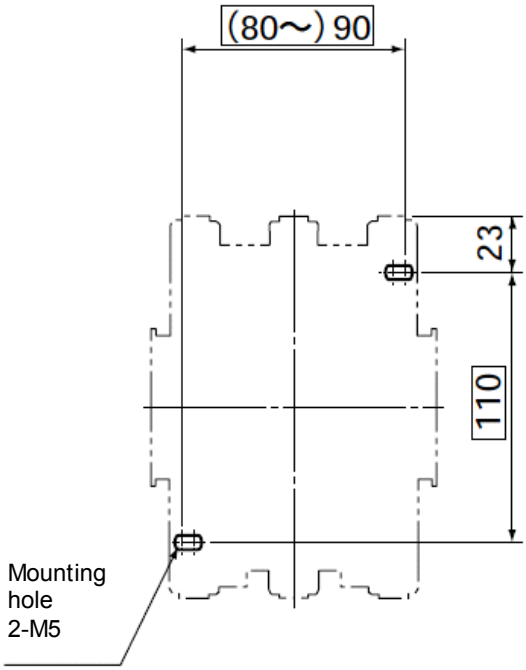

Ordering drawing number	Fuji Electric part number		Operation coil voltage	Auxiliary contact structure	Weight
	Body	Cover			
A06B-6077-K128	SC-N7	SZ-N7J	200V/50Hz 200-220V/60Hz	2a2b	2.7Kg

© MyFANUC 2D5504D5BAC945D385F48627D4977F6C

8.1.9 Lightning Surge Protector

A06B-6200-K140, A06B-6200-K141

Remarks) Same outline as the conventional line-to-line and line-to-ground in one package type A06B-6077-K144

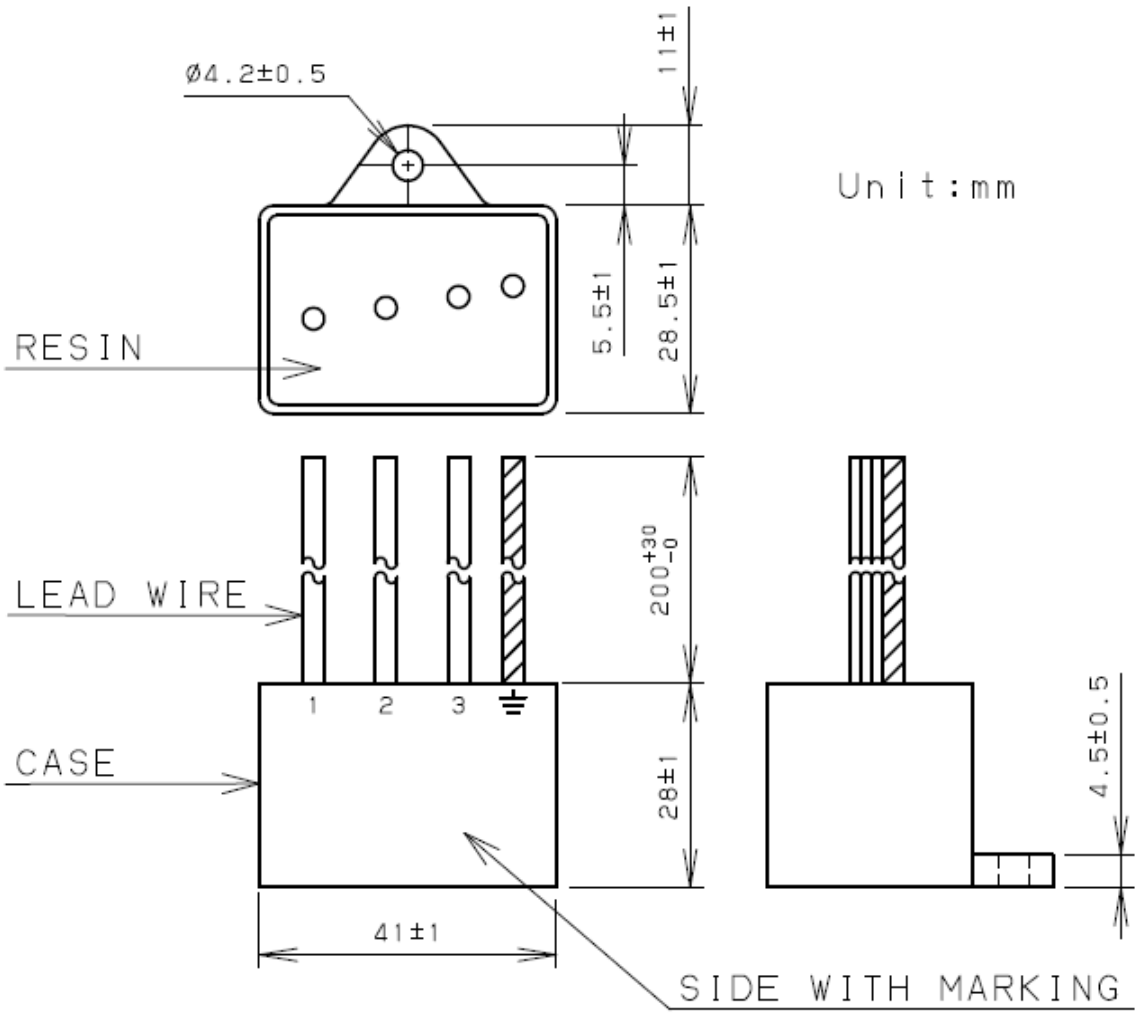

© MyFANUC 2D5504D5BAC945D385F48627D4977F6C

8.1.10 Noise Filter

(a) A06B-6077-K155 to -K158

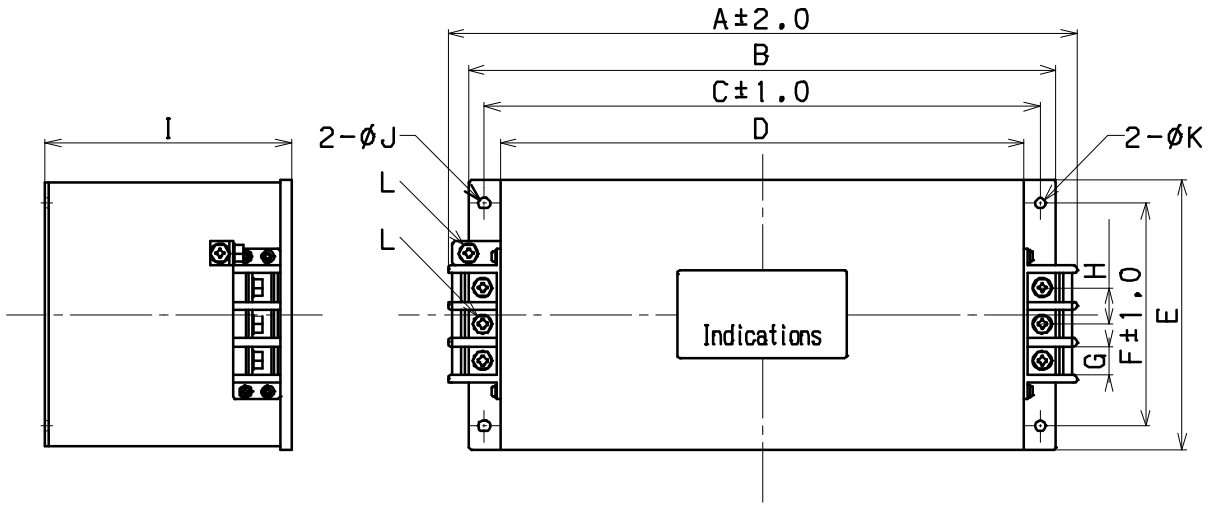

Unit : mm

General tolerance : ±1.5mm

Type	Dimensions (mm)											
	A	B	C	D	E	F	G	H	I	J	K	L
A06B-6077-K155 (3SUP-HL30-ER-6)	246	230	215	200	100	85	13	18	140	4.5×7	4.5	M4
A06B-6077-K156 (3SUP-HL75-ER-6)	396	370	350	330	170	140	18	23	155	6.5×8	6.5	M6
A06B-6077-K157 (3SUP-HL150-ER-6)	484	440	420	400	200	170	30	25	200	6.5×8	6.5	M8
A06B-6077-K158 (3SUP-HL200-ER-6)	484	440	420	400	200	170	30	25	200	6.5×8	6.5	M8

3SUP-HLx-ER-6: External dimensions of noise filter

■ Weight

Model		Weight
A06B-6077-K155	3SUP-HL30-ER-6 : Okaya Electric Industries	5.2kg
A06B-6077-K156	3SUP-HL75-ER-6 : Okaya Electric Industries	12.0kg
A06B-6077-K157	3SUP-HL150-ER-6: Okaya Electric Industries	23.5kg
A06B-6077-K158	3SUP-HL200-ER-6: Okaya Electric Industries	24.5kg

© MyFANUC 2D5504D5BAC945D385F48627D4977F6C

(b) A06B-6110-K160 to -K162

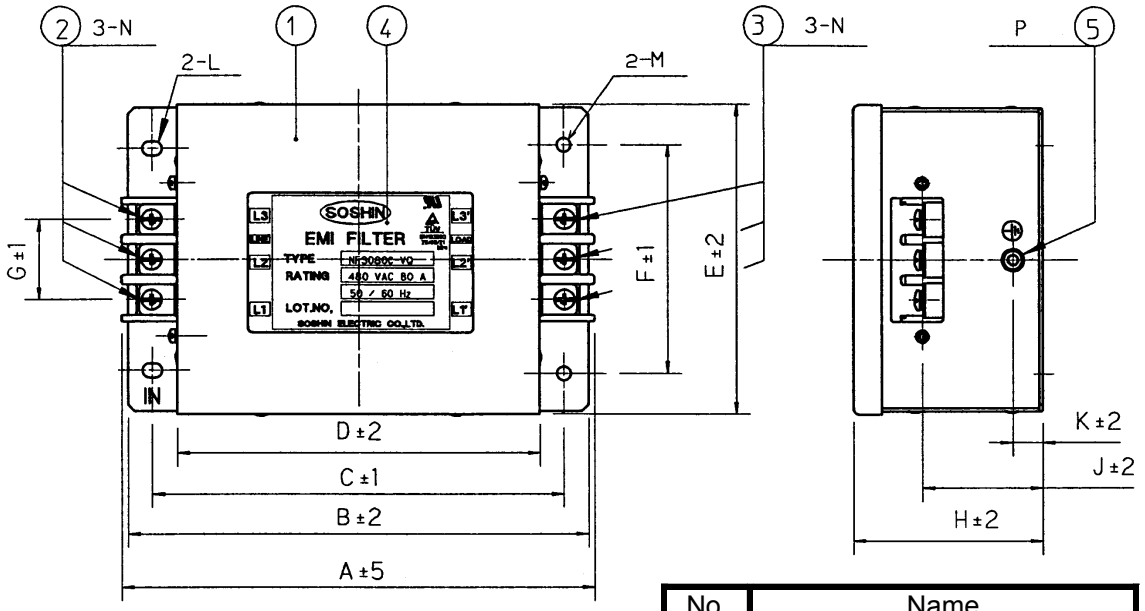

No.	Name
1	Case
2	Input terminal
3	Output terminal
4	Name plate
5	Earth terminal

Type	Dimensions (mm)													
	A	B	C	D	E	F	G	H	J	K	L	M	N	P
A06B-6110-K160 (NF3050C-VQ)	217	200	185	170	120	90	44	115	85	20	5.5×7	ϕ5.5	M6	M4
A06B-6110-K161 (NF3080C-VQ)	217	200	185	170	120	90	44	115	85	20	5.5×7	ϕ5.5	M6	M4
A06B-6110-K162 (NF3150C-VQ)	314	300	280	260	200	170	57	130	90	35	6.5×8	ϕ6.5	M8	M6

NF3050C/3080C/3150C-VQ: External dimensions of noise filter

■ Weight

Model			Weight
A06B-6110-K160	NF3050C-VQ	: Soshin Electric	2.9kg
A06B-6110-K161	NF3080C-VQ	: Soshin Electric	3.6kg
A06B-6110-K162	NF3150C-VQ	: Soshin Electric	9.0kg

© MyFANUC 2D5504D5BAC945D385F48627D4977F6C

(c) A06B-6110-K163,K164

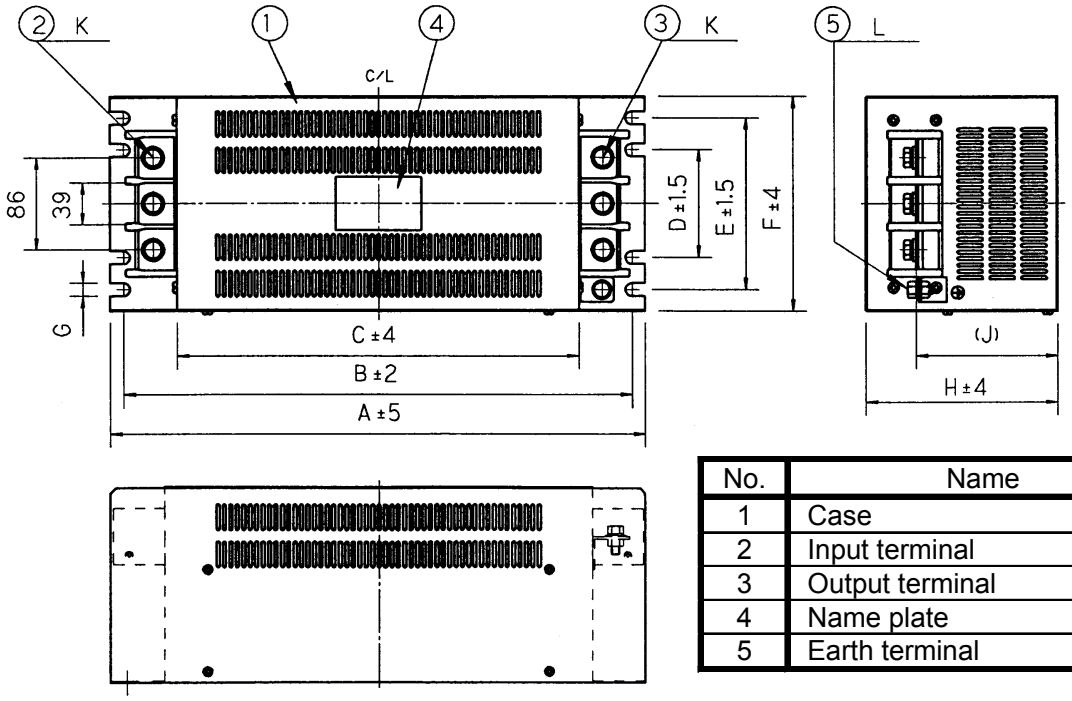

No.	Name
1	Case
2	Input terminal
3	Output terminal
4	Name plate
5	Earth terminal

Type	Dimensions (mm)										
	A	B	C	D	E	F	G	H	J	K	L
A06B-6110-K163 (NF3200C-VQ)	450	430	338	100	190	230	7	180	133	M10	M8
A06B-6110-K164 (NF3250C-VQ)	450	430	338	100	190	230	7	180	133	M10	M8

NF3200C/3250C-VQ: External dimensions of noise filter

■ Weight

Model			Weight
A06B-6110-K163	NF3200C-VQ	: Soshin Electric	16kg
A06B-6110-K164	NF3250C-VQ	: Soshin Electric	16kg

© MyFANUC 2D5504D5BAC945D385F48627D4977F6C

8.2 PANEL CUT-OUT DIAGRAMS

(a) 60-mm-wide amplifier

With no external fin

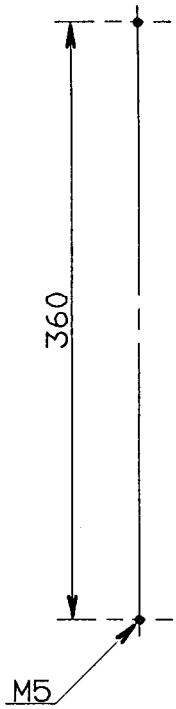

With external fin (when two units are installed side by side)

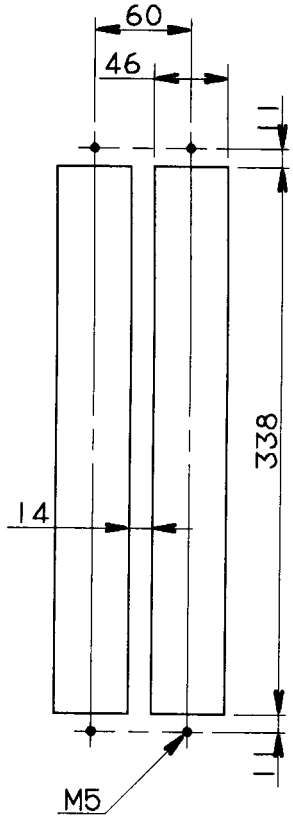

NOTE

1 When an external fin is provided, attach a packing (acrylonitrile-butadiene rubber, NBR [soft type]) to the fin to protect it against oil and dust.

2 Reinforce the right and left sides of the panel cut-out in the power magnetics cabinet by using fittings such as angles to maintain satisfactory contact between the sheet metal of the power magnetics cabinet and the flange of the amplifier.

© MyFANUC 2D5504D5BAC945D385F48627D4977F6C

(b) 90-mm-wide amplifier

With no external fin **With external fin (when two units are installed side by side)**

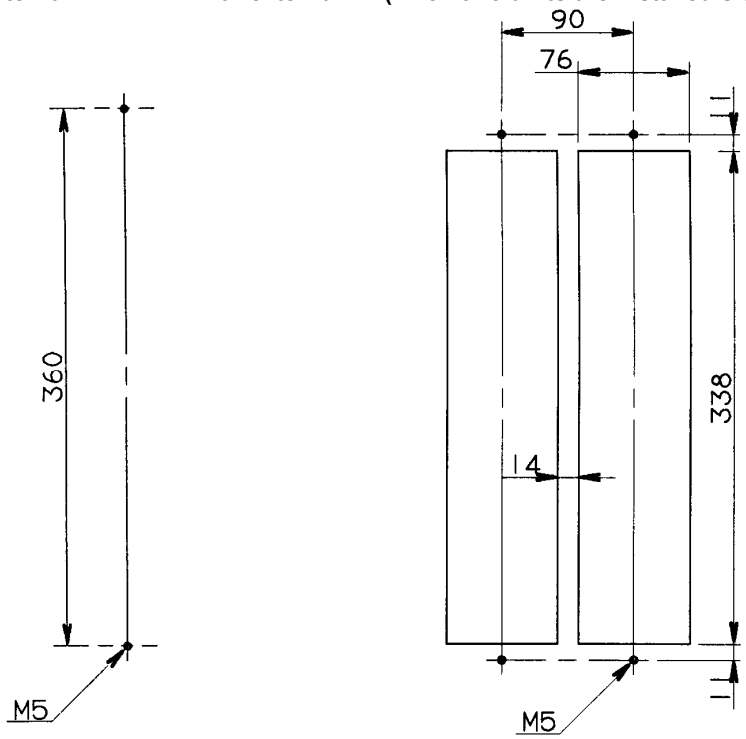

NOTE

1 When an external fin is provided, attach a packing (acrylonitrile-butadiene rubber, NBR [soft type]) to the fin to protect it against oil and dust.

2 Reinforce the right and left sides of the panel cut-out in the power magnetics cabinet by using fittings such as angles to maintain satisfactory contact between the sheet metal of the power magnetics cabinet and the flange of the amplifier.

© MyFANUC 2D5504D5BAC945D385F48627D4977F6C

(c) 150-mm-wide amplifier (when two units are installed side-by-side)

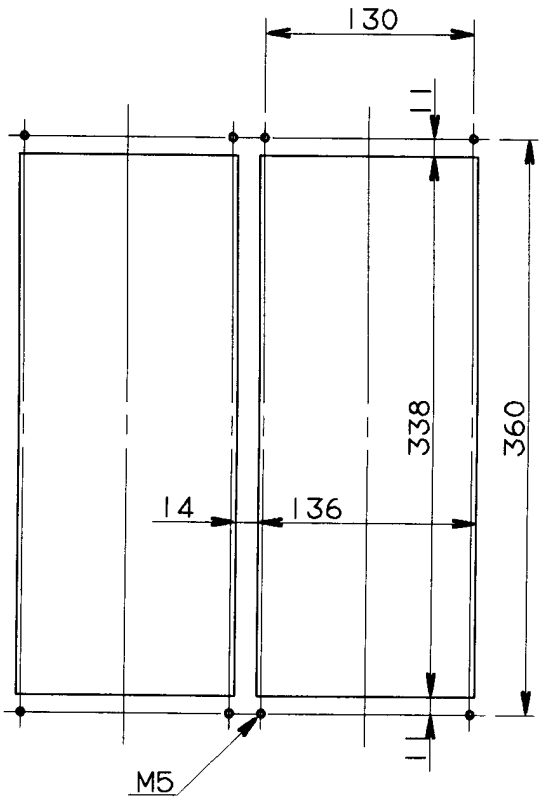

NOTE

1 Attach a packing (acrylonitrile-butadiene rubber, NBR [soft type]) for protection against oil and dust.

2 Reinforce the right and left sides of the panel cut-out in the power magnetics cabinet by using fittings such as angles to maintain satisfactory contact between the sheet metal of the power magnetics cabinet and the flange of the amplifier.

© MyFANUC 2D5504D5BAC945D385F48627D4977F6C

(d) 300-mm-wide amplifier (when two units are installed side-by-side)

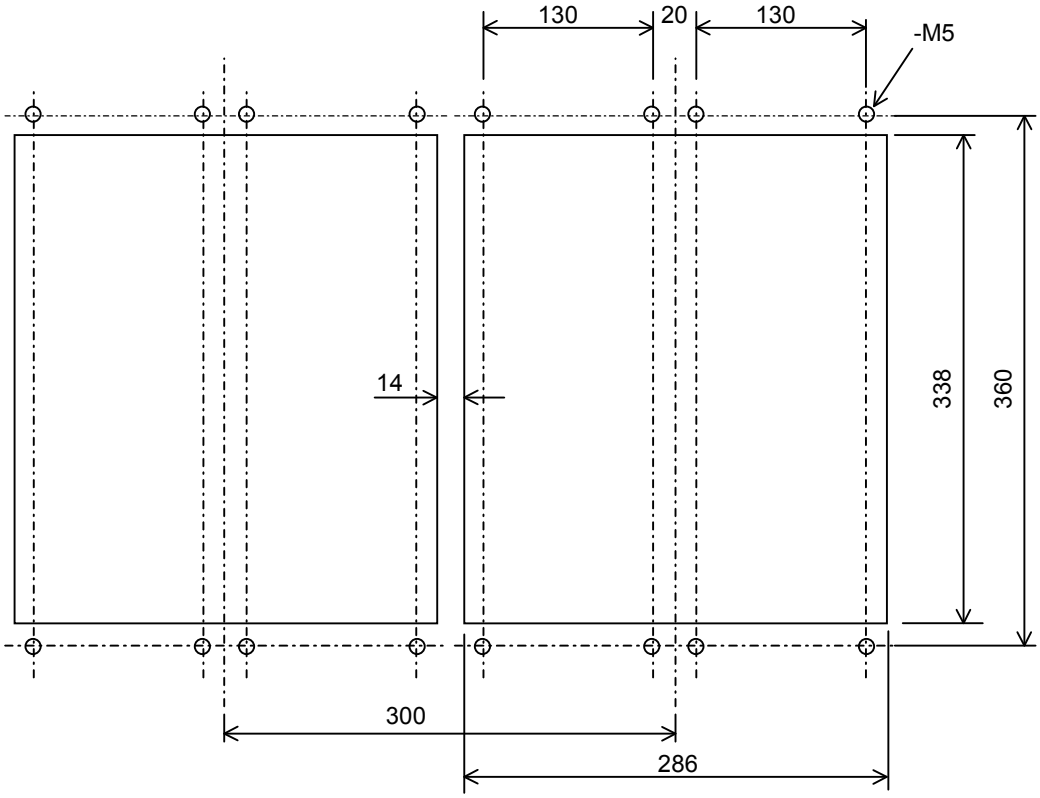

NOTE

1 Attach a packing (acrylonitrile-butadiene rubber, NBR [soft type]) for protection against oil and dust.

2 Reinforce the right and left sides of the panel cut-out in the power magnetics cabinet by using fittings such as angles to maintain satisfactory contact between the sheet metal of the power magnetics cabinet and the flange of the amplifier.

© MyFANUC 2D5504D5BAC945D385F48627D4977F6C

(e) Regenerative discharge unit (A06B-6089-H510)

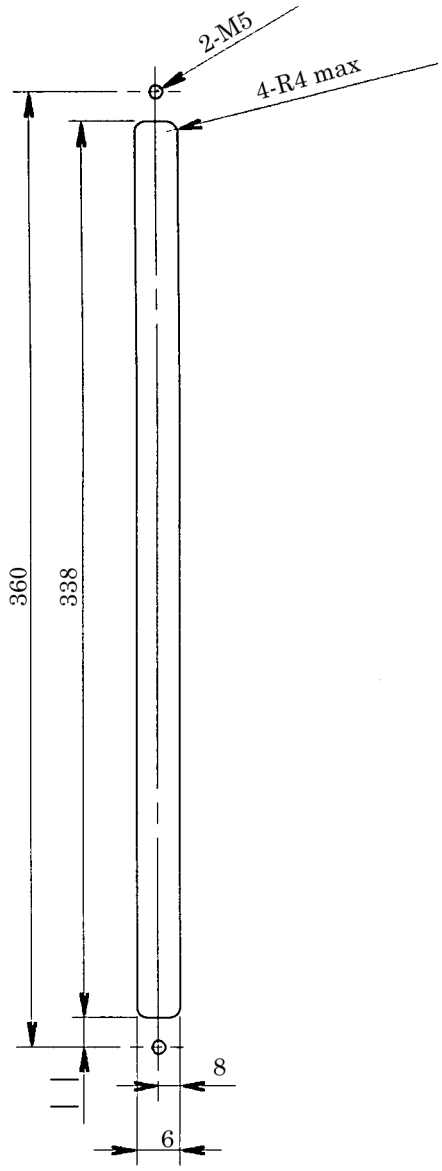

(f) Regenerative discharge unit (A06B-6089-H500)

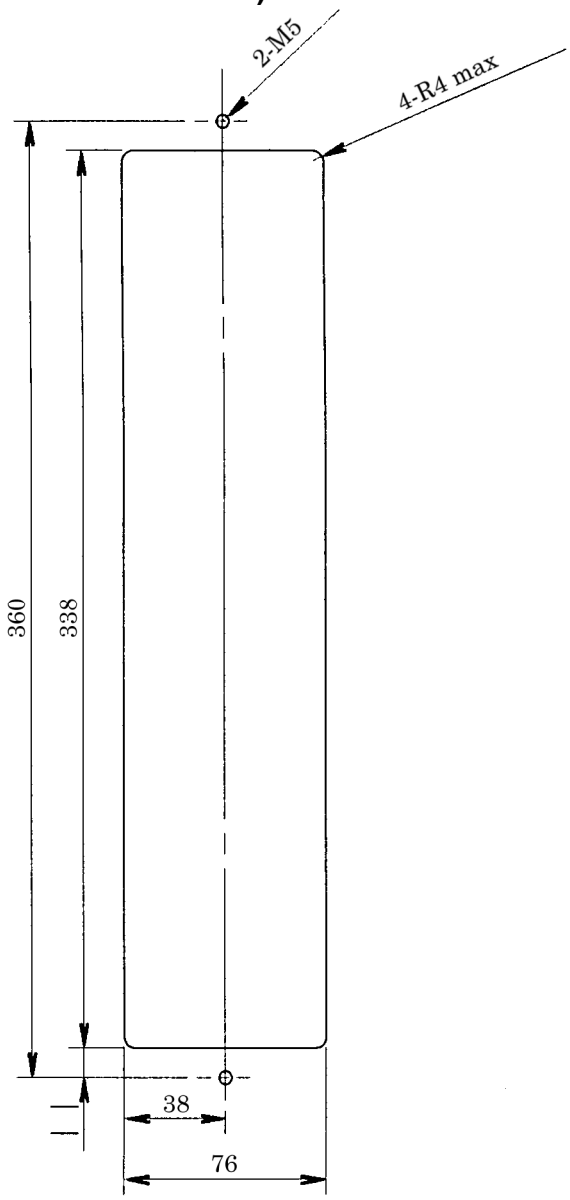

NOTE

Attach a packing (acrylonitrile-butadiene rubber, NBR [soft type]) for protection against oil and dust.

© MyFANUC 2D5504D5BAC945D385F48627D4977F6C

(g) Regenerative discharge unit (A06B-6089-H711 to -H713)

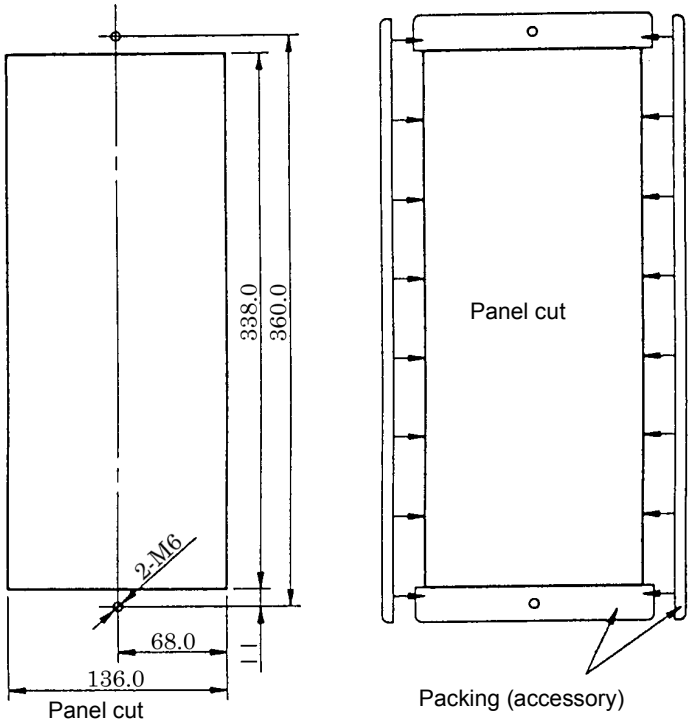

NOTE
Attach a packing (acrylonitrile-butadiene rubber, NBR [soft type]) for protection against oil and dust.

(h) Dynamic brake module

A06B-6079-H401, H403 A06B-6069-H300, H301

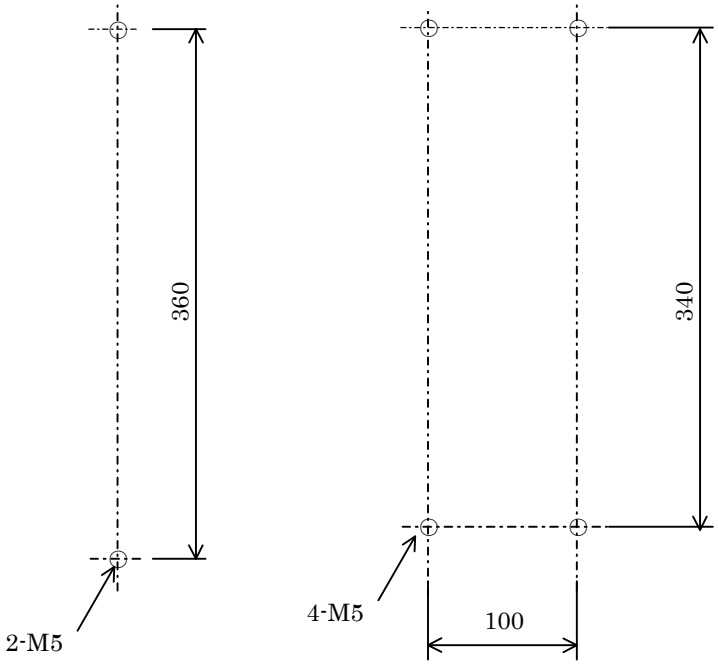

© MyFANUC 2D5504D5BAC945D385F48627D4977F6C

9 CONNECTION

Chapter 9, "CONNECTION", consists of the following sections:

9.1 TOTAL CONNECTION DIAGRAM.....155
9.2 CONNECTOR LOCATION.....157
9.3 CABLE CONNECTION DETAILS.....169
9.4 DETAILS OF CONNECTORS.....243

9.1 TOTAL CONNECTION DIAGRAM

The following connection diagram is an example of combining a αi PS + a αi SP + a 2-axis αi SV. For detailed descriptions about how to connect these amplifiers, see their respective connection diagrams.

(1) 200-V input series

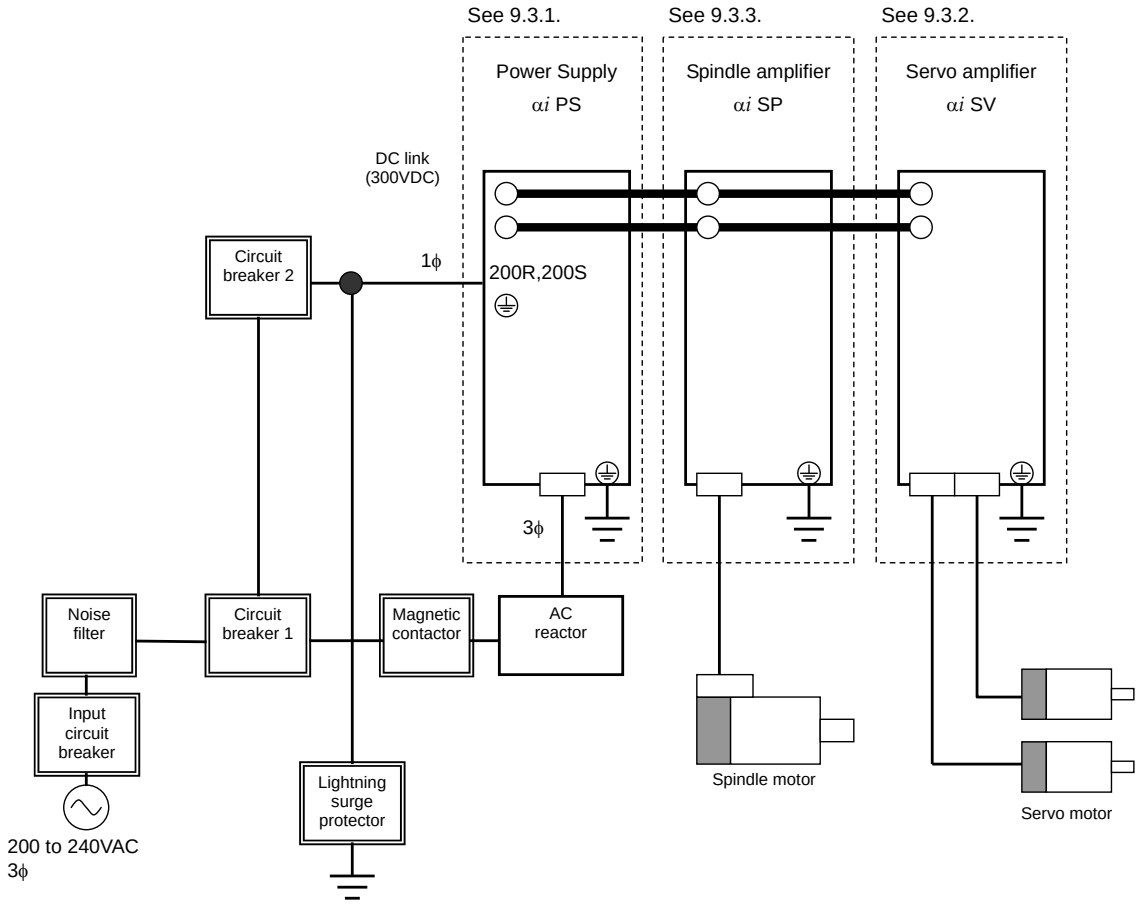

⚠ CAUTION

1 To meet the EMC Directive operating in EU countries, a noise filter must be installed.
2 Install the noise filter more nearer to the power supply than the magnetic contactor.
3 When the circuit breaker trips, the contact of the magnetic contactor may be melted. Before turning on the circuit breaker, make sure that the contact is not melted.

© MyFANUC 2D5504D5BAC945D385F48627D4977F6C

(2) 400-V input series

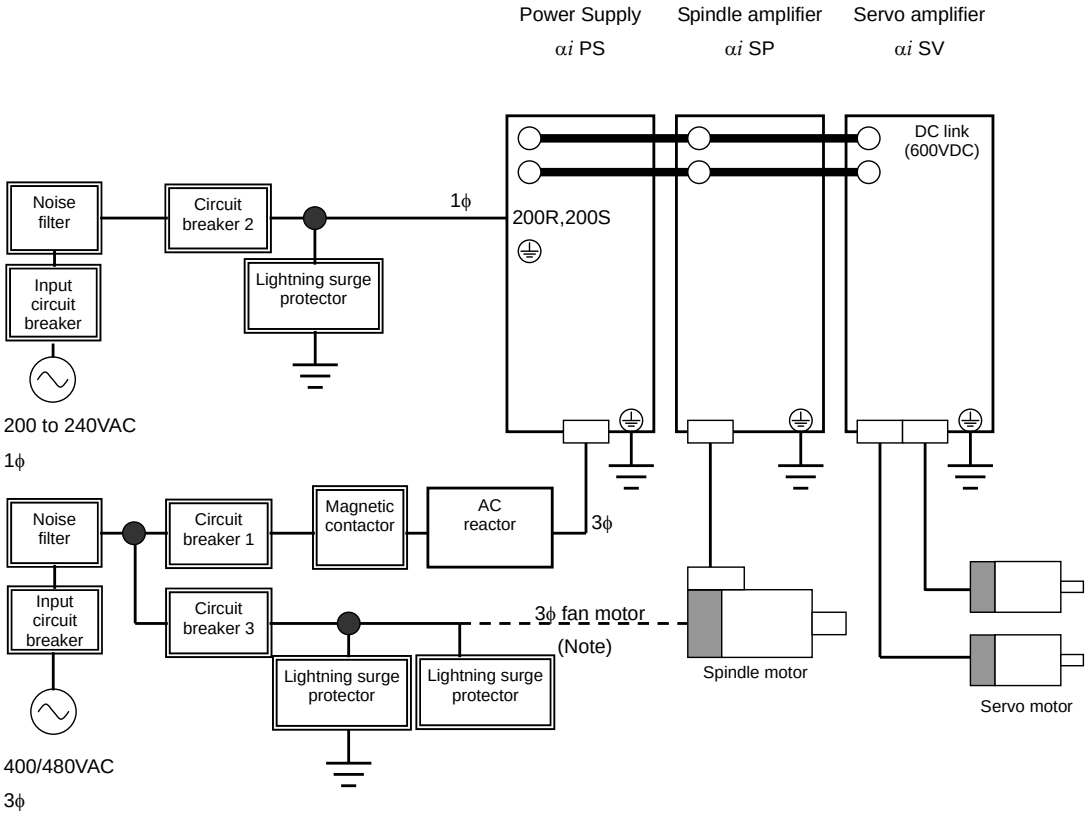

⚠ CAUTION

1 When the spindle motor model αi I 1HV, αi I 1.5HV, αi I 2HVi, αi I 3HV, αi I_T 1HV, αi I_T 2HV, and αi I_T 3HV is used, the specification of the fan motor is below: Single phase, 200/230 VAC
2 To meet the EMC Directive operating in EU countries, a noise filter must be installed.
3 Install the noise filter more nearer to the power supply than the magnetic contactor.
4 When the circuit breaker trips, the contact of the magnetic contactor may be melted. Before turning on the circuit breaker, make sure that the contact is not melted.
5 Breaker 3 is used to interrupt the lightning surge protector. Since the lightning surge protector is disabled if breaker 3 trips, it is necessary to issue a warning during the trip.

NOTE

When the power specification of the fan motor of the spindle motor is 400 V, breaker 3 can also be used for the fan motor.

© MyFANUC 2D5504D5BAC945D385F48627D4977F6C

9.2 CONNECTOR LOCATION

9.2.1 αi PS series

(a) αi PS 5.5

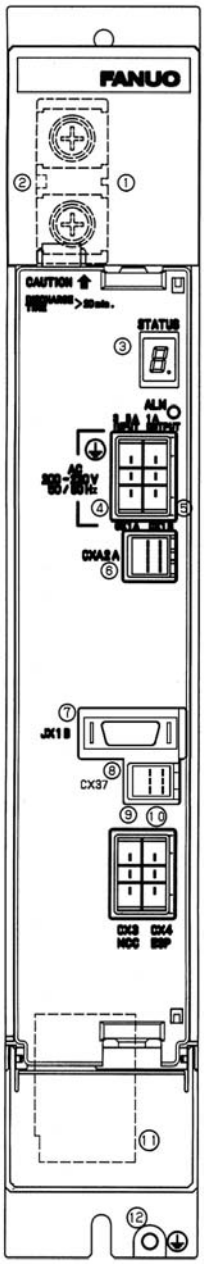

Table.9.2.1(a) Names of connectors and terminal blocks

	Names	Display	Remarks
1	DC link terminal block		Display the terminal block TB1
2	DC link charge LED		(Warning)
3	Status LED	STATUS	
4	200VAC input connector	CX1A	
5	200VAC output connector	CX1B	
6	Output connector for αi PS interface	CXA2A	24VDC power supply
7	Connector for connecting power failure backup module	JX1B	
8	Connector for power failure detection output	CX37	
9	Connector for connecting main Power supply magnetic contactor control signal	CX3	
10	Connector for ESP signal	CX4	
11	Connector for motor power line	CZ1	
12	Tapped hole for grounding the flange	⏚	

⚠ WARNING
When the DC link charge LED is lit, touching parts in the amplifier or cables connected is hazardous; never touch them.

⚠ CAUTION
A06B-6110-H**** and A06B-6120-H**** do not have CX37.

© MyFANUC 2D5504D5BAC945D385F48627D4977F6C

(b) αi PS 11, αi PS 15 , αi PS 11HV, αi PS 18HV

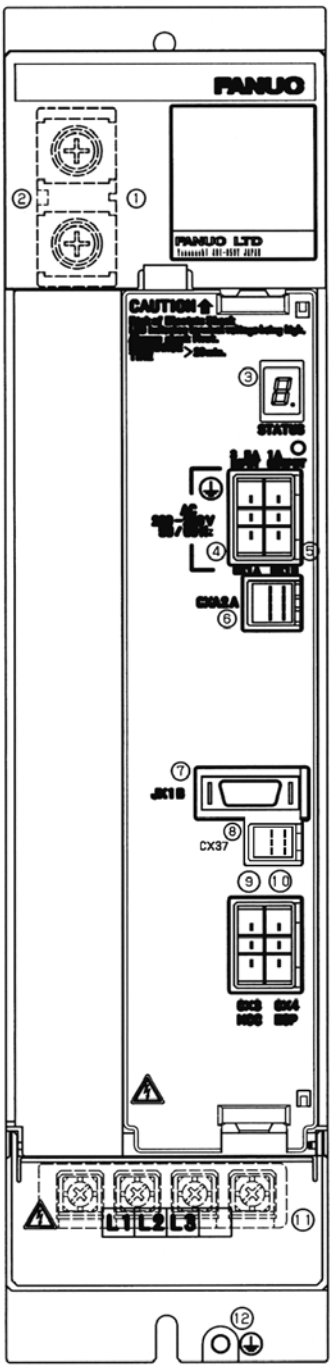

Table.9.2.1(b) Names of connectors and terminal blocks

	Names	Display	Remarks
1	DC link terminal block		Display the terminal block TB1
2	DC link charge LED		(Warning)
3	Status LED	STATUS	
4	200VAC input connector	CX1A	
5	200VAC output connector	CX1B	
6	Output connector for αi PS interface	CXA2A	24VDC power supply
7	Connector for connecting power failure backup module	JX1B	
8	Connector for power failure detection output	CX37	
9	Connector for connecting main Power supply magnetic contactor control signal	CX3	
10	Connector for ESP signal	CX4	
11	Terminal block for motor power line	TB2	
12	Tapped hole for grounding the flange	⏚	

⚠ WARNING
When the DC link charge LED is lit, touching parts in the amplifier or cables connected is hazardous; never touch them.

⚠ CAUTION
A06B-6110-H**** and A06B-6120-H**** do not have CX37.

© MyFANUC 2D5504D5BAC945D385F48627D4977F6C

(c) αi PS 26, αi PS 30, αi PS 37, αi PS 30HV, αi PS 45HV, αi PS 60HV

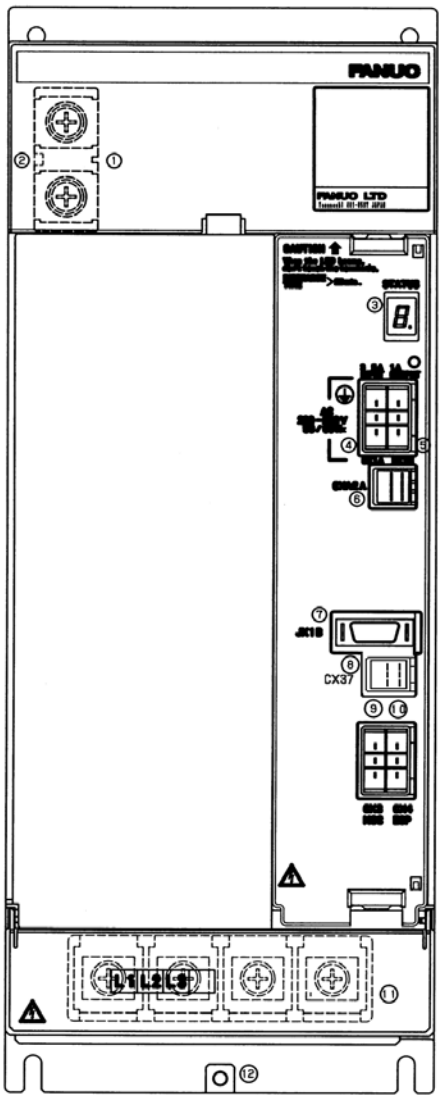

Table.9.2.1(c) Names of connectors and terminal blocks

	Names	Display	Remarks
1	DC link terminal block		Display the terminal block TB1
2	DC link charge LED		(Warning)
3	Status LED	STATUS	
4	200VAC input connector	CX1A	
5	200VAC output connector	CX1B	
6	Output connector for αi PS interface	CXA2A	24VDC power supply
7	Connector for connecting power failure backup module	JX1B	
8	Connector for power failure detection output	CX37	
9	Connector for main power MCC control signal	CX3	
10	Connector for ESP signal	CX4	
11	Terminal block for motor power line	TB2	
12	Tapped hole for grounding the flange	⏚	

⚠ WARNING
When the DC link charge LED is lit, touching parts in the amplifier or cables connected is hazardous; never touch them.

⚠ CAUTION
A06B-6110-H**** and A06B-6120-H**** do not have CX37.

© MyFANUC 2D5504D5BAC945D385F48627D4977F6C

(d) αi PS 55, αi PS 75HV, αi PS 100HV

Table.9.2.1(d) Names of connectors and terminal blocks

	Names	Display	Remarks
1	DC link terminal block		Display the terminal block TB1
2	DC link charge LED		(Warning)
3	Status LED	STATUS	
4	200VAC input connector	CX1A	
5	200VAC output connector	CX1B	
6	Output connector for αi PS interface	CXA2A	24VDC power supply
7	Connector for connecting power failure backup module	JX1B	
8	Connector for power failure detection output	CX37	
9	Connector for main power MCC control signal	CX3	
10	Connector for ESP signal	CX4	
11	Terminal block for motor power line	TB2	
12	Tapped hole for grounding the flange	⏚	

⚠ WARNING
When the DC link charge LED is lit, touching parts in the amplifier or cables connected is hazardous; never touch them.

⚠ CAUTION
A06B-6110-H**** and A06B-6120-H**** do not have CX37.

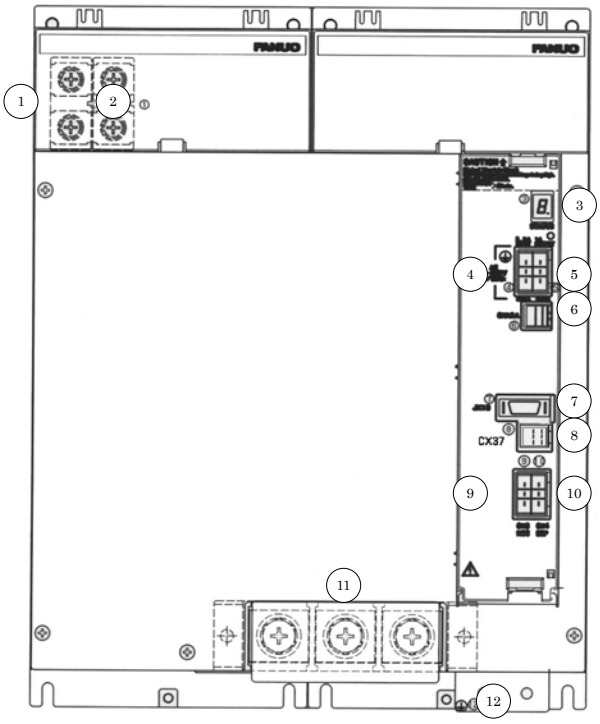

© MyFANUC 2D5504D5BAC945D385F48627D4977F6C

(e) αi PS$_R$ 3 , αi PS$_R$ 5.5

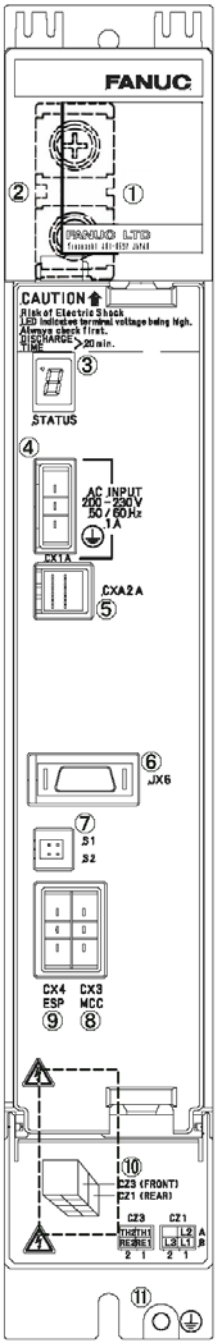

Table.9.2.1(e) Names of connectors and terminal blocks

	Names	Display	Remarks
1	DC link terminal block		Display the terminal block TB1
2	DC link charge LED		(Warning)
3	Status LED	STATUS	
4	200VAC input connector	CX1A	
5	Output connector for αi PS interface	CXA2A	24VDC power supply
6	Not used	JX6	
7	Not used	S1 S2	S1: Connected S2: Open
8	Connector for main power MCC control signal	CX3	
9	Connector for ESP signal	CX4	
10-1	Terminal block for motor power line	CZ1	XX key
10-2	Terminal block for regenerative discharge resistor	CZ3	YY key
11	Tapped hole for grounding the flange	⏚	

⚠ WARNING
When the DC link charge LED is lit, touching parts in the amplifier or cables connected is hazardous; never touch them.

© MyFANUC 2D5504D5BAC945D385F48627D4977F6C

9.2.2 αi SV series

(a) 60/90mm-wide αi SV series

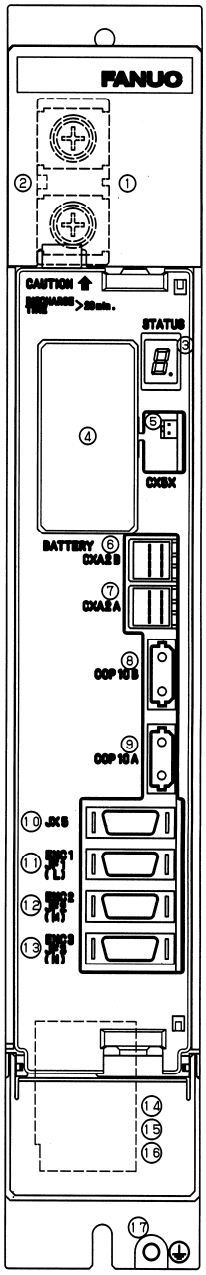

Table.9.2.2(a) Names of connectors and terminal blocks

No.	Names	Display	Remarks
1	DC link terminal block		Display the terminal block TB1
2	DC link charge LED		(Warning)
3	Status LED	STATUS	
4	Location of the batteries for the αi SV built-in-type absolute Pulsecoder	BATTERY	
5	Battery connector for the αi SV built-in-type absolute Pulsecoder	CX5X	
6	Input connector for αi PS interface	CXA2B	24VDC power supply The interface for the absolute Pulsecoder batteries is included.
7	Output connector for αi PS interface	CXA2A	
8	FSSB optical input connector	COP10B	
9	FSSB optical output connector	COP10A	
10	Signal check connector	JX5	Unused
11	Pulsecoder connector : L axis	ENC1/JF1	
12	Pulsecoder connector : M axis	ENC2/JF2	
13	Pulsecoder connector : N axis	ENC3/JF3	
14	Connector for motor power line: L axis	CZ2L	For αi SV 1-axis, CZ2
15	Connector for motor power line: M axis	CZ2M	
16	Connector for motor power line: N axis	CZ2N	
17	Tapped hole for grounding the flange	⏚	

⚠ WARNING
When the DC link charge LED is lit, touching parts in the amplifier or cables connected is hazardous; never touch them.

© MyFANUC 2D5504D5BAC945D385F48627D4977F6C

(b) αi SV 360, αi SV 180HV

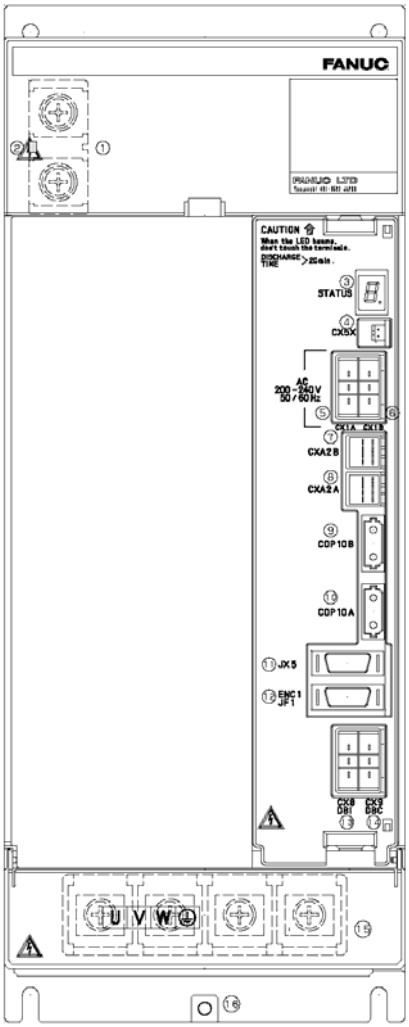

Table.9.2.2(b) Names of connectors and terminal blocks

No.	Names	Display	Remarks
1	DC link terminal block		Display the terminal block TB1
2	DC link charge LED		(Warning)
3	Status LED	STATUS	
4	Battery connector for the αi SV built-in-type absolute Pulsecoder	CX5X	
5	200VAC power supply input connector	CX1A	Power supply for DBM
6	200VAC power supply input connector	CX1B	
7	Input connector for αi PS interface	CXA2B	24VDC power supply The interface for the absolute Pulsecoder batteries is included.
8	Output connector for αi PS interface	CXA2A	
9	FSSB optical input connector	COP10B	
10	FSSB optical output connector	COP10A	
11	Signal check connector	JX5	Unused
12	Pulsecoder connector	ENC1/JF1	
13	Dynamic module interface for connector	CX8	
14	Connector for the magnetic contactor drive coil of the dynamic brake module	CX9	
15	Terminal block for connection to motor power line		Display the terminal block TB2
16	Tapped hole for grounding the flange	⏚	

⚠ **WARNING**
When the DC link charge LED is lit, touching parts in the amplifier or cables connected is hazardous; never touch them.

© MyFANUC 2D5504D5BAC945D385F48627D4977F6C

(c) αi SV 360HV, αi SV 540HV

Table.9.2.2(c) Names of connectors and terminal blocks

No.	Names	Display	Remarks
1	DC link terminal block		Display the terminal block TB1
2	DC link charge LED		(Warning)
3	Status LED	STATUS	
4	Battery connector for the αi SV built-in-type absolute Pulsecoder	CX5X	
5	200VAC power supply input connector	CX1A	power supply for DB
6	200VAC power supply input connector	CX1B	
7	Input connector for αi PS interface	CXA2B	24VDC power supply The interface for the absolute Pulsecoder batteries is included.
8	Output connector for αi PS interface	CXA2A	
9	FSSB optical input connector	COP10B	
10	FSSB optical output connector	COP10A	
11	Signal check connector	JX5	Unused
12	Pulsecoder connector	ENC1/JF1	
13	Dynamic module interface for connector	CX8	
14	Connector for the magnetic contactor drive coil of the dynamic brake module	CX9	
15	Terminal block for connection to motor power line		Display the terminal block TB2
16	Tapped hole for grounding the flange	⏚	

⚠ WARNING
When the DC link charge LED is lit, touching parts in the amplifier or cables connected is hazardous; never touch them.

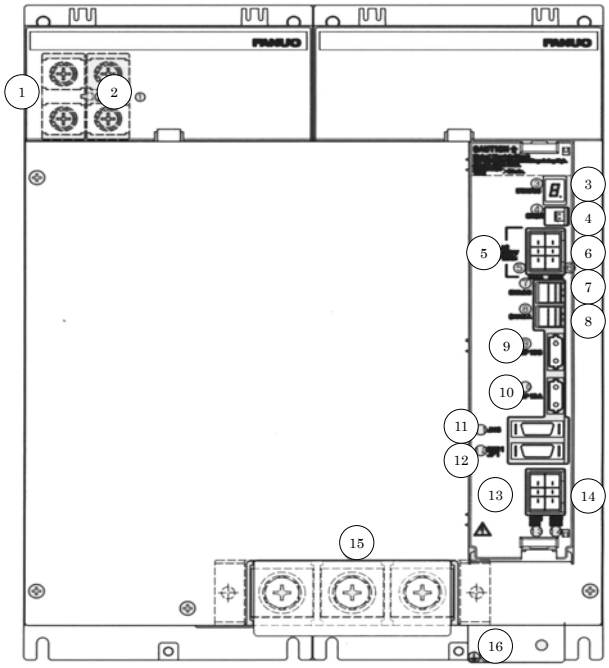

© MyFANUC 2D5504D5BAC945D385F48627D4977F6C

9.2.3 αi SP Series

(a) αi SP 2.2 , αi SP 5.5 , αi SP 5.5HV (TYPE A, B)

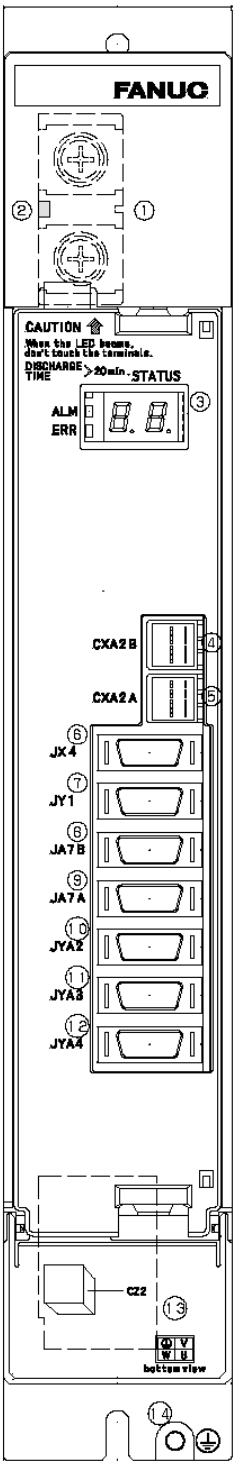

Table.9.2.3(a) Names of connectors and terminal blocks

	Names	Display	Remarks
1	DC link terminal block		Display the terminal block TB1
2	DC link charge LED		(Warning)
3	Status LED	STATUS	
4	Input connector for αi PS interface	CXA2B	24VDC power supply
5	Output connector for αi PS interface	CXA2A	
6	Position coder signal *1 Signal for communication between αi SP units *1 Excitation off signal *2	JX4	*1 TYPE B only
7	Connector for load meter and speedometer	JY1	The signal for the check board is also output.
8	Input connector for electric serial interface	JA7B	
9	Output connector for electric serial interface	JA7A	
10	Connector for spindle sensor for motor	JYA2	αi M, αi MZ, and αi BZ sensors (for built-in spindle motor)
11	Connector for Positioncoder and external single rotation signal	JYA3	αi CZ sensor(for built-in spindle motor or spindle)
12	Connector for separate spindle sensor	JYA4	TYPE B only αi BZ sensor (for spindle)
13	Connector for motor power line		Display the CZ2
14	Tapped hole for grounding the flange	⏚	

*2 Not supported by the A06B-6111, -6112, -6121, and -6122.

> ⚠ **WARNING**
> When the DC link charge LED is lit, touching parts in the amplifier or cables connected is hazardous; never touch them.

© MyFANUC 2D5504D5BAC945D385F48627D4977F6C

(b) αi SP 11 , αi SP 15 , αi SP 11HV , αi SP 15HV (TYPE A, B)

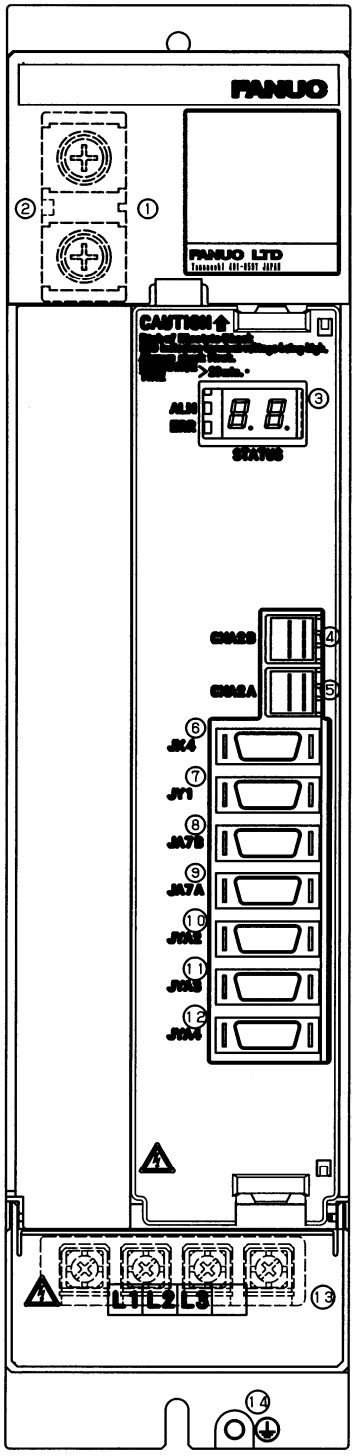

Table.9.2.3 (b) Names of connectors and terminal blocks

	Names	Display	Remarks
1	DC link terminal block		Display the terminal block TB1
2	DC link charge LED		(Warning)
3	Status LED	STATUS	
4	Input connector for αi PS interface	CXA2B	24VDC power supply
5	Output connector for αi PS interface	CXA2A	
6	Position coder signal *1 Signal for communication between αi SP units *1 Excitation off signal *2	JX4	*1 TYPE B only
7	Connector for load meter and speedometer	JY1	The signal for the check board is also output.
8	Input connector for electric serial interface	JA7B	
9	Output connector for electric serial interface	JA7A	
10	Connector for spindle sensor for motor	JYA2	αi M, αi MZ, and αi BZ sensors (for built-in spindle motor)
11	Connector for Positioncoder and external single rotation signal	JYA3	αi CZ sensor(for built-in spindle motor or spindle)
12	Connector for separate spindle sensor	JYA4	TYPE B only αi BZ sensor (for spindle)
13	Connector for motor power line		Display the TB2
14	Tapped hole for grounding the flange	⏚	

*2 Not supported by the A06B-6111, -6112, -6121, and -6122.

> ⚠ **WARNING**
> When the DC link charge LED is lit, touching parts in the amplifier or cables connected is hazardous; never touch them.

© MyFANUC 2D5504D5BAC945D385F48627D4977F6C

(c) αi SP 22, αi SP 26, αi SP 30, αi SP 30HV, αi SP 45HV (TYPE A, B)

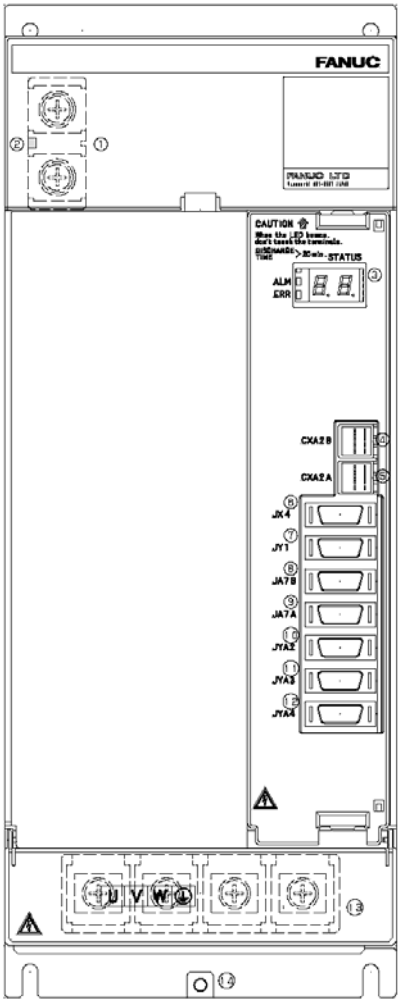

Table.9.2.3 (c) Names of connectors and terminal blocks

	Names	Display	Remarks
1	DC link terminal block		Display the terminal block TB1
2	DC link charge LED		(Warning)
3	Status LED	STATUS	
4	Input connector for αi PS interface	CXA2B	24VDC power supply
5	Output connector for αi PS interface	CXA2A	
6	Position coder signal *1 Signal for communication between αi SP units *1 Excitation off signal *2	JX4	*1 TYPE B only
7	Connector for load meter and speedometer	JY1	The signal for the check board is also output.
8	Input connector for electric serial interface	JA7B	
9	Output connector for electric serial interface	JA7A	
10	Connector for spindle sensor for motor	JYA2	αi M, αi MZ, and αi BZ sensors (for built-in spindle motor)
11	Connector for Positioncoder and external single rotation signal	JYA3	αi CZ sensor(for built-in spindle motor or spindle)
12	Connector for separate spindle sensor	JYA4	TYPE B only αi BZ sensor (for spindle)
13	Connector for motor power line		Display the TB2
14	Tapped hole for grounding the flange	⏚	

*2 Not supported by the A06B-6111, -6112, -6121, and -6122.

> ⚠ **WARNING**
> When the DC link charge LED is lit, touching parts in the amplifier or cables connected is hazardous; never touch them.

© MyFANUC 2D5504D5BAC945D385F48627D4977F6C

(d) αi SP 45, αi SP 55, αi SP 75HV, αi SP 100HV (TYPE A, B)

Table.9.2.3 (d) Names of connectors and terminal blocks

	Names	Display	Remarks
1	DC link terminal block		Display the terminal block TB1
2	DC link charge LED		(Warning)
3	Status LED	STATUS	
4	Input connector for αi PS interface	CXA2B	24VDC power supply
5	Output connector for αi PS interface	CXA2A	
6	Position coder signal *1 Signal for communication between αi SP units *1 Excitation off signal *2	JX4	*1 TYPE B only
7	Connector for load meter and speedometer	JY1	The signal for the check board is also output.
8	Input connector for electric serial interface	JA7B	
9	Output connector for electric serial interface	JA7A	
10	Connector for spindle sensor for motor	JYA2	αi M, αi MZ, and αi BZ sensors (for built-in spindle motor)
11	Connector for Positioncoder and external single rotation signal	JYA3	αi CZ sensor(for built-in spindle motor or spindle)
12	Connector for separate spindle sensor	JYA4	TYPE B only αi BZ sensor (for spindle)
13	Connector for motor power line		Display the TB2
14	Tapped hole for grounding the flange	⏚	

*2 Not supported by the A06B-6111, -6112, -6121, and -6122.

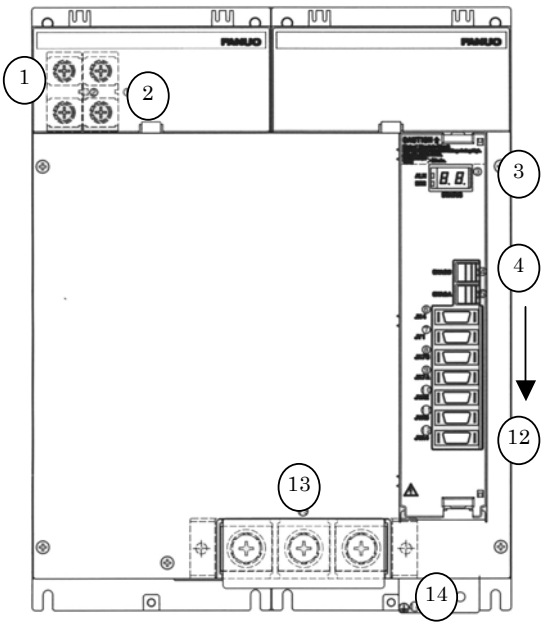

⚠ **WARNING**
When the DC link charge LED is lit, touching parts in the amplifier or cables connected is hazardous; never touch them.

© MyFANUC 2D5504D5BAC945D385F48627D4977F6C

9.3 CABLE CONNECTION DETAILS

9.3.1 αi PS Series Connection Diagram

(a) αi PS (200-V input series)

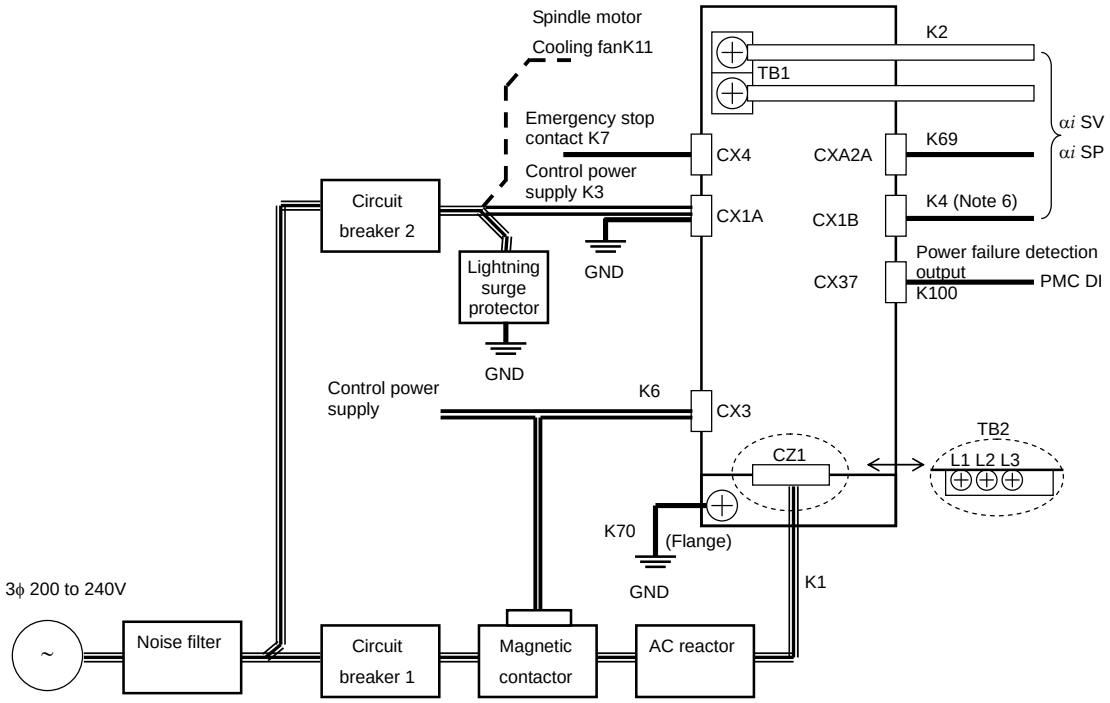

NOTE

1 Always install the circuit breakers, magnetic contactor, and AC reactor.
2 To protect the equipment from lightning surge voltages, install a lightning surge protector across each pair of power lines and across each power line and the grounding line at the power inlet of the power magnetics cabinet. See Appendix A, “FITTING A LIGHTNING SURGE PROTECTION DEVICE” for details.
3 Always connect the control power supply cable to the CX1A. If it is connected to the CX1B, fuses inside the unit may below.
4 See Section 5.2 for the type of the cable to be used for making a connection to a frame ground.
5 Install a noise filter more nearer to the power supply than the magnetic contactor for the αi PS.
6 Power supply for a dynamic brake module (DBM). When a DBM is not used, this power supply is unnecessary.
7 A06B-6110 and A06B-6120 do not have CX37.

© MyFANUC 2D5504D5BAC945D385F48627D4977F6C

(b) αi PS_R (200-V input series)

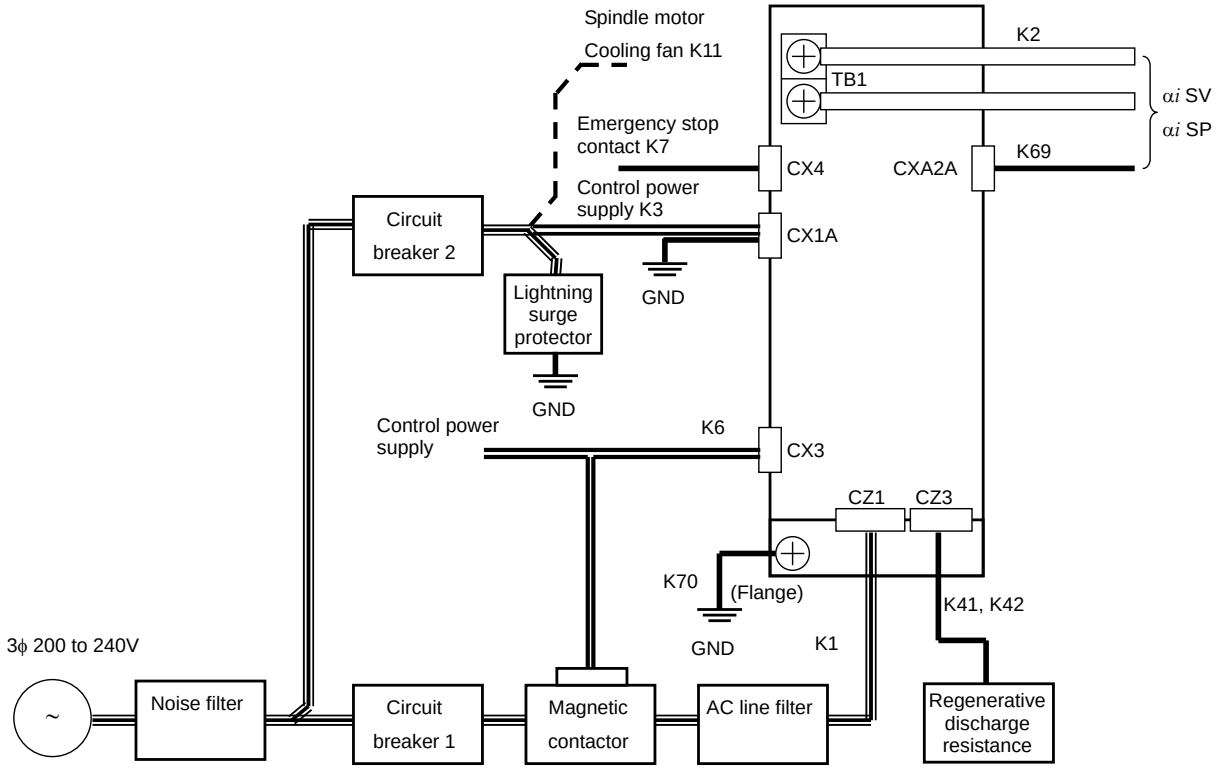

NOTE

1 Always install the circuit breakers, magnetic contactor, and AC reactor.
2 To protect the equipment from lightning surge voltages, install a lightning surge protector across each pair of power lines and across each power line and the grounding line at the power inlet of the power magnetics cabinet. See Appendix A, “FITTING A LIGHTNING SURGE PROTECTION DEVICE” for details.
3 Always connect the control power supply cable to the CX1A. If it is connected to the CX1B, fuses inside the unit may below.
4 See Section 5.2 for the type of the cable to be used for making a connection to a frame ground.
5 Install a noise filter more nearer to the power supply than the magnetic contactor for the αi PS.

© MyFANUC 2D5504D5BAC945D385F48627D4977F6C

(c) αi PS (400-V input series)

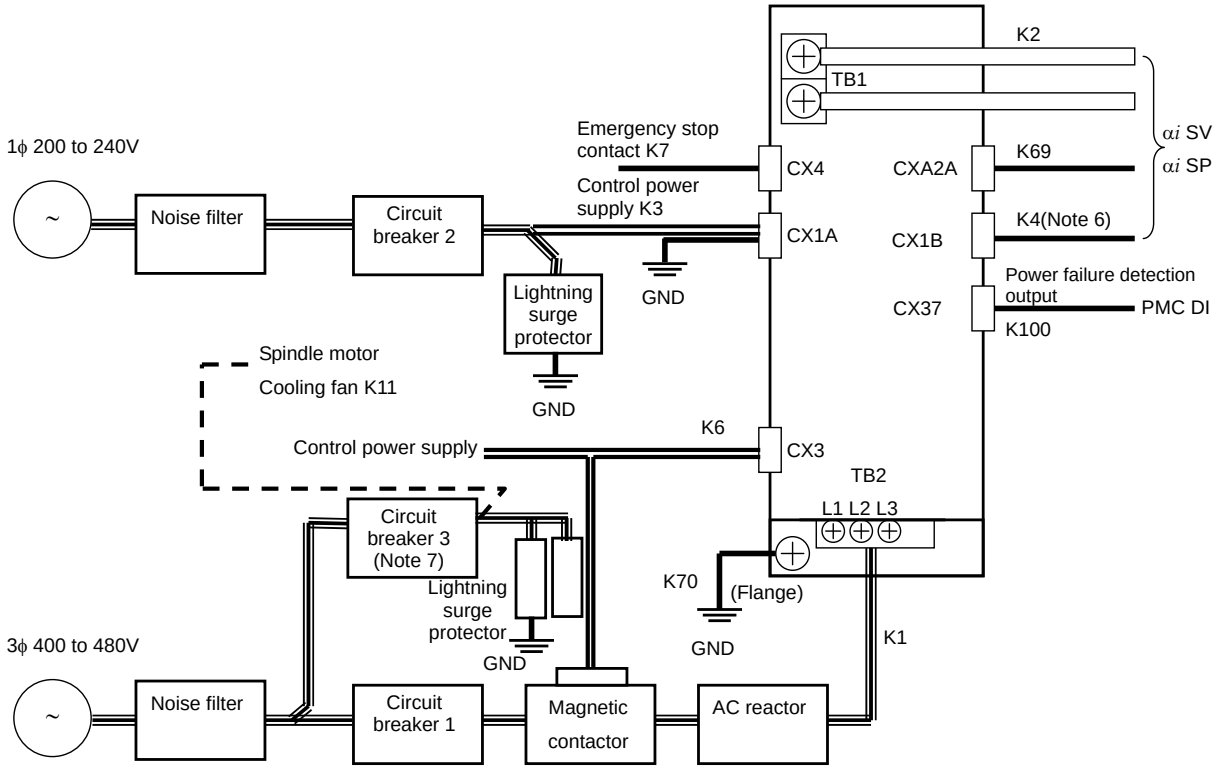

NOTE

1 Always install the circuit breakers, magnetic contactor, and AC reactor.
2 To protect the equipment from lightning surge voltages, install a lightning surge protector across each pair of power lines and across each power line and the grounding line at the power inlet of the power magnetics cabinet. See Appendix A, “FITTING A LIGHTNING SURGE PROTECTION DEVICE” for details.
3 Always connect the control power supply cable to the CX1A. If it is connected to the CX1B, fuses inside the unit may below.
4 See Section 5.2 for the type of the cable to be used for making a connection to a frame ground.
5 Install a noise filter more nearer to Power Supply than the magnetic contactor for the αi PS.
6 Power supply for a dynamic brake module (DBM: driven at 200 VAC). When a DBM is not used, this power supply is unnecessary.
7 Circuit breaker 3 is used to shut off the lightning surge protector. When circuit breaker 3 trips, the lightning surge protector does not function. So, the tripping state needs to be detected, and when it is detected, a warning needs to be issued.
8 A06B-6110 and A06B-6120 do not have CX37.

© MyFANUC 2D5504D5BAC945D385F48627D4977F6C

Connection on using two αi PS series amplifiers (200-V input)

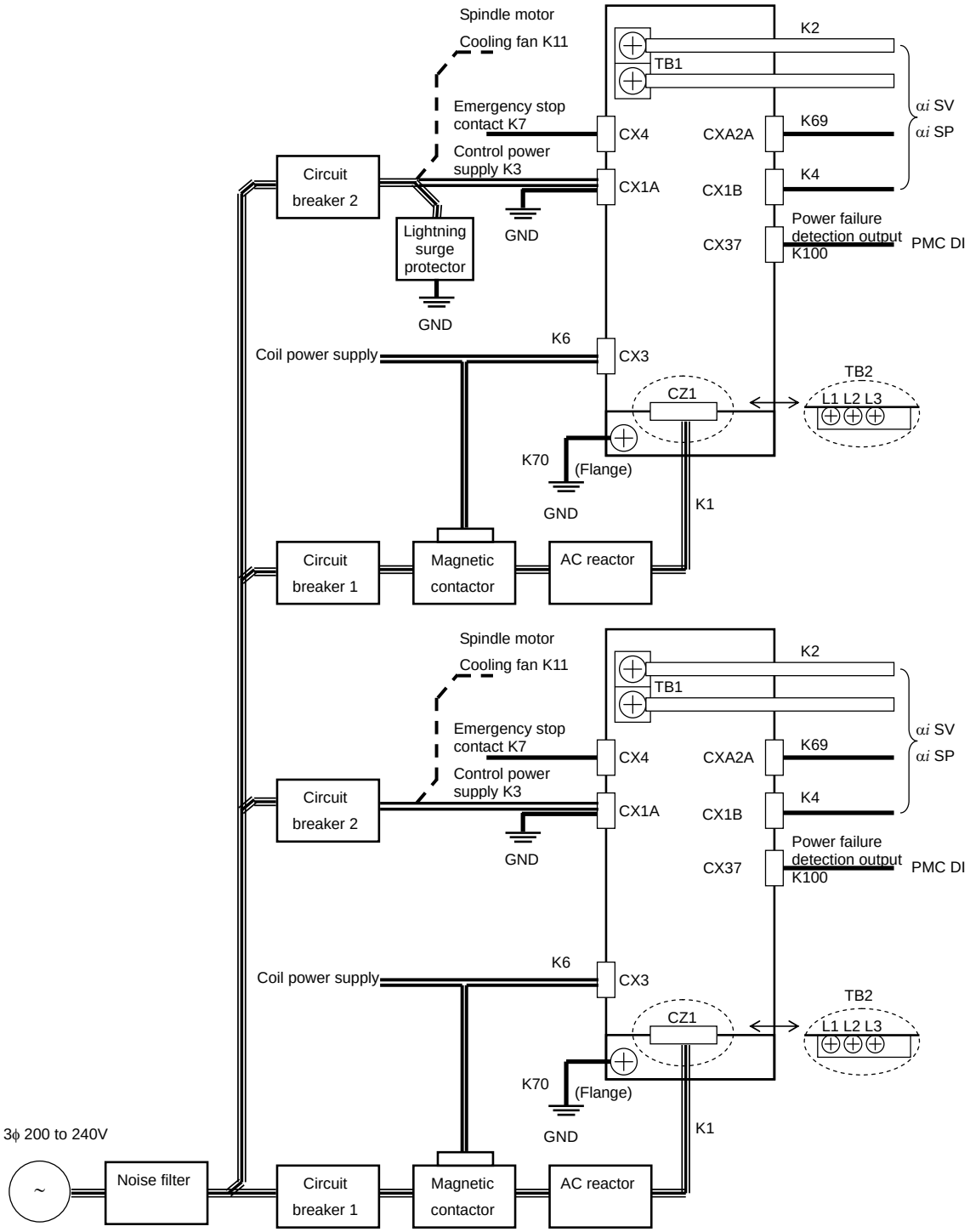

NOTE

1 Circuit breaker 1, circuit breaker 2, the magnetic contactor, and the AC reactor cannot be shared among αi PS units.
For each αi PS, select and use these devices having appropriate capacitance specifications.

2 The lightning surge protection device can be shared. For details, see Appendix A, "FITTING A LIGHTNING SURGE PROTECTION DEVICE".

© MyFANUC 2D5504D5BAC945D385F48627D4977F6C

Notes on using multiple αi PS series and βi series amplifiers

(a) An AC reactor for the αi PS cannot be used as an AC line filter of the βi series amplifier. Connect devices as follows:

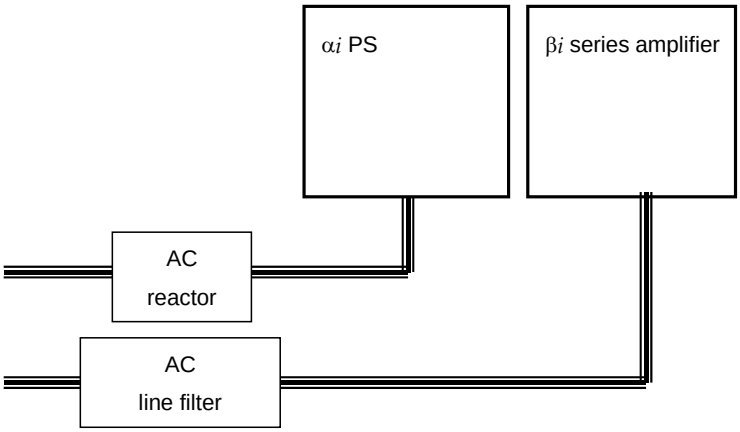

(b) An AC line filter for the αi PS_R cannot be shared with the βi series amplifier. Connect devices as follows:

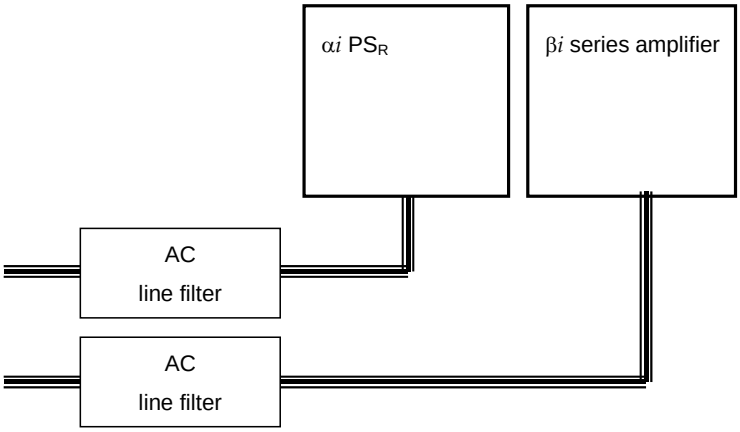

> ⚠ **CAUTION**
> When multiple αi PS series and βi series amplifiers are used, sharing an AC reactor or AC line filter among these amplifiers can result in an alarm or can damage these amplifiers.

© MyFANUC 2D5504D5BAC945D385F48627D4977F6C

Note on using multiple αi PS series and βi series amplifiers 2

(a) Be careful not to connect DC links of multiple PS amplifiers incorrectly.

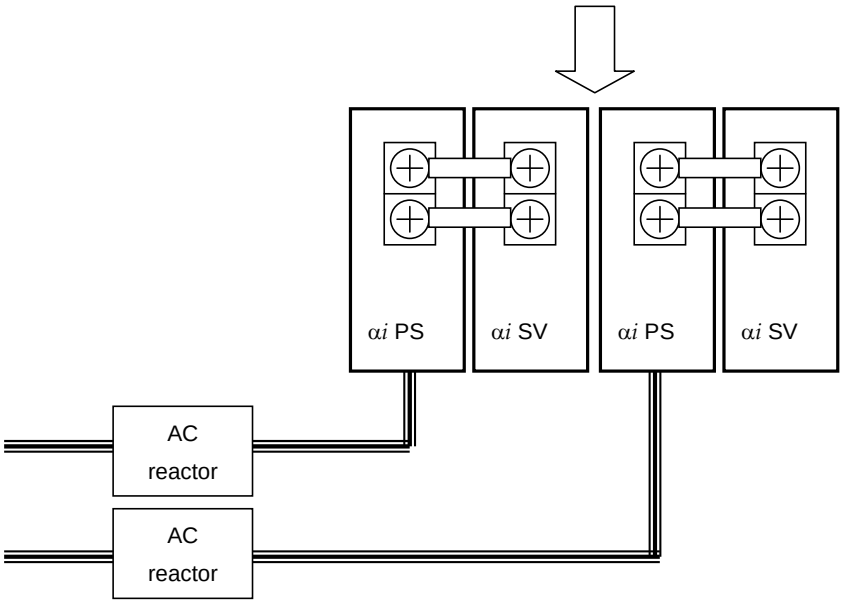

> ⚠ **CAUTION**
> When multiple αi PS series amplifiers are used, connecting their DC links can result in an alarm or can damage these amplifiers.

9.3.1.1 Details of cable K1 (power supply line)

Cable K1 is used to supply main power to the αi PS. Make sure that the cable used between the power supply and αi PS satisfies the requirements listed in Table 9.3.1.1.

(1) For αi PS

- αi PS 5.5

(a) For a power supply voltage of 200 to 240 VAC

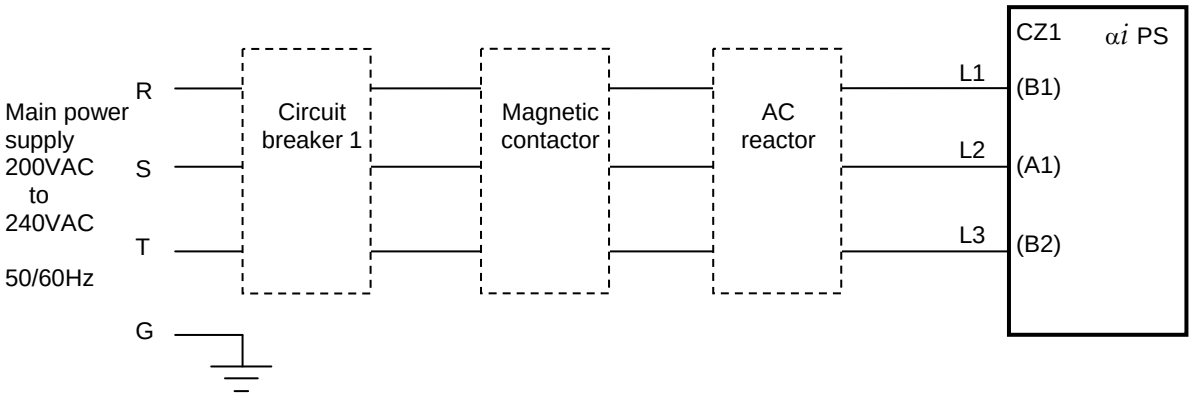

© MyFANUC 2D5504D5BAC945D385F48627D4977F6C

(b) For a power supply voltage of 400 to480 VAC

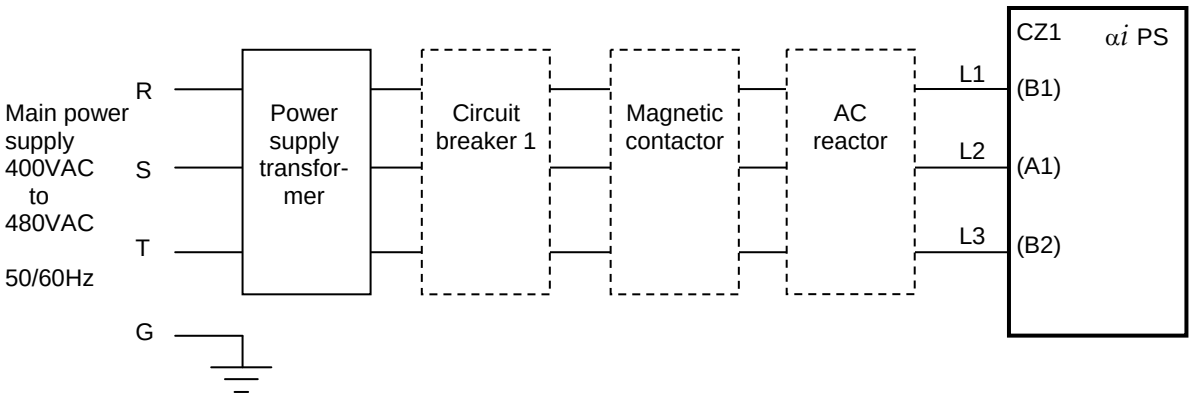

Pin location of CZ1

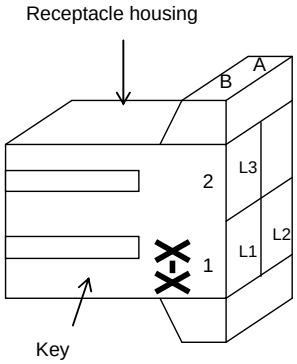

Table 9.3.1.1(a) Cable K1 Specifications (αi PS5.5)

Model	Applicable cable		
	Heavy-duty power cable (Note 1)	Heat-resistant cable (Note 2)	Cable conforming to UL standard
αi PS 5.5	5.5mm^2	5.5mm^2	AWG8 or larger

NOTE

1 Four-conductor polyvinyl heavy-duty power cable (JIS C3312) (VCT : heat-resistant 60°C)

2 Fire-retardant polyflex wire (heat-resistant 105°C) or equivalent to LMFC manufactured by The Furukawa Electric Co., Ltd.

3 The cross-section area of each cable is determined under the following conditions:
(1) At αi PS rated output
(2) Environment temperature of cable : 30°C
(3) Number of harnesses
3 (No current flows through the ground wire during normal operation.)
Select a required cable cross-section area according to the user environment and conditions.

Connector Specifications

Model	Connector key (Note 1)	Applicable contact (Note 1)
αi PS 5.5	XX 1-917807-2	M size 316041-6

See Subsection 9.4 for detailed explanations about the specification of the D-5000.

© MyFANUC 2D5504D5BAC945D385F48627D4977F6C

NOTE
Tyco Electronics Japan GK AMP D-5000 series
Select a contact size according to the cross-section area of the cable.

- αi PS 11 ~ αi PS 55

(a) For a power supply voltage of 200 to 240 VAC

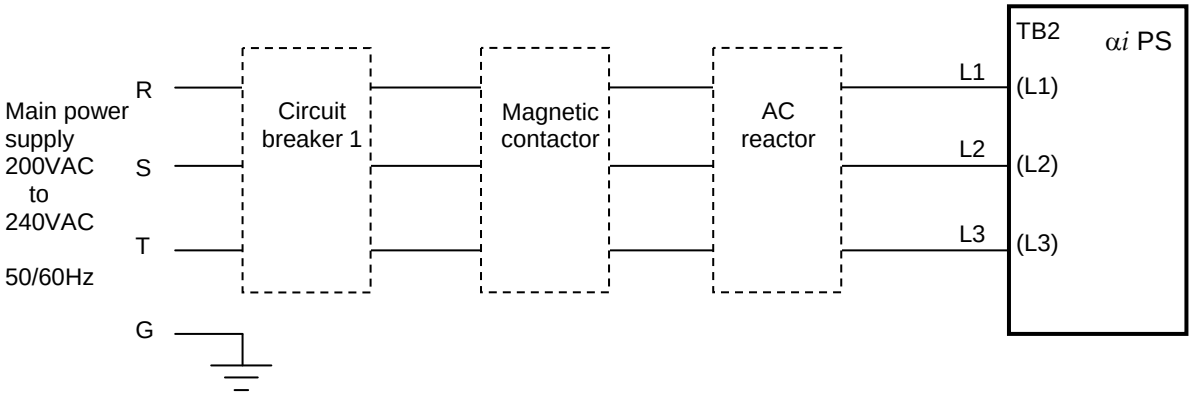

(b) For a power supply voltage other than 200 to 240 VAC

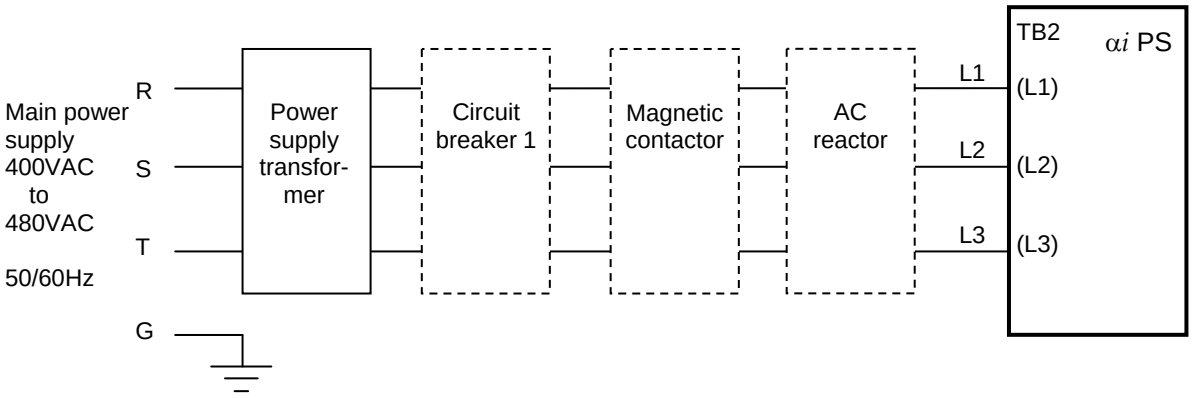

Table.9.3.1.1(b) Cable K1 Specifications, screw tightening torque (αi PS11 to αi PS55)

Model	Applicable cable			αi PS side		Reactor side	
	Heavy-duty power cable (Note 1)	Heat-resistant cable (Note 2)	Cable conforming to UL standard	Terminal screw	Tightening torque	Terminal screw	Tightening torque
αi PS 11	-	8mm^2 or more	AWG8 or more	M4	1.1 to 1.5Nm	M5	2.0 to 2.5Nm
αi PS 15	14 mm^2 or more	14mm^2 or more	AWG4 or more				
αi PS 26	-	22mm^2 or more	AWG2 or more	M6	3.5 to 4.5Nm		
αi PS 30	-	22mm^2 or more	AWG2 or more				
αi PS 37	-	38mm^2 or more	AWG1 or more	M6 (Note 3)		M8	8.5 to 9.5Nm
αi PS 55	-	G: 40mm^2 or more	AWG1 or more	M6	3.5 to 4.5Nm		
		R,S,T: 80mm^2 or more	AWG3/0 or more	M10	15 to 16Nm		

* The AC reactor does not have polarity, so input and output may be connected to either side of the reactor.

© MyFANUC 2D5504D5BAC945D385F48627D4977F6C

NOTE

1 Four-conductor polyvinyl heavy-duty power cable (JIS C3312) (VCT : heat-resistant 60°C)
2 Fire-retardant polyflex wire (heat-resistant 105°C) or equivalent to LMFC manufactured by The Furukawa Electric Co., Ltd.
3 Applicable crimp terminal for αi PS 37 : 38-6S
4 The cross-section area of each cable is determined under the following conditions:
(1) At αi PS rated output
(2) Environment temperature of cable : 30°C
(3) Number of harnesses
3 (No current flows through the ground wire during normal operation.)
Select a required cable cross-section area according to the user environment and conditions.

(2) For αi PS_R

(a) For a power supply voltage of 200 to 240 VAC

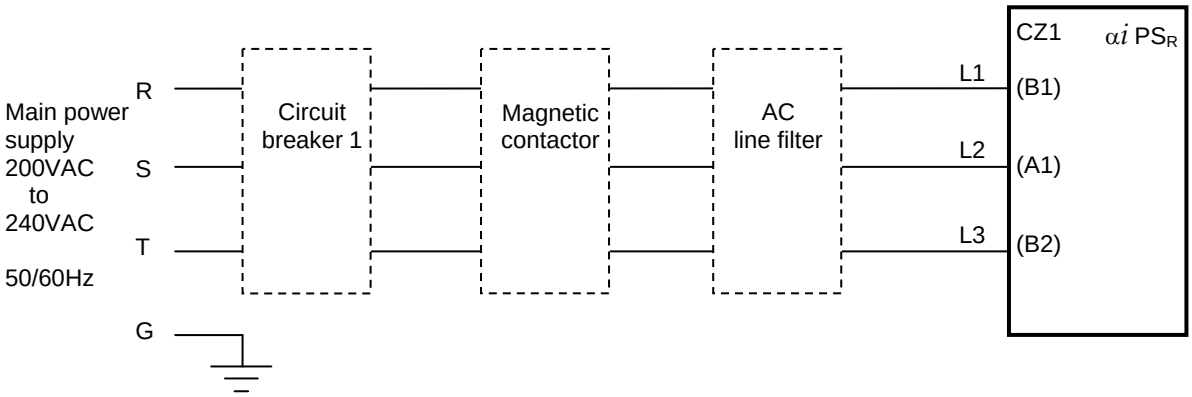

(b) For a power supply voltage other than 200 to 240 VAC

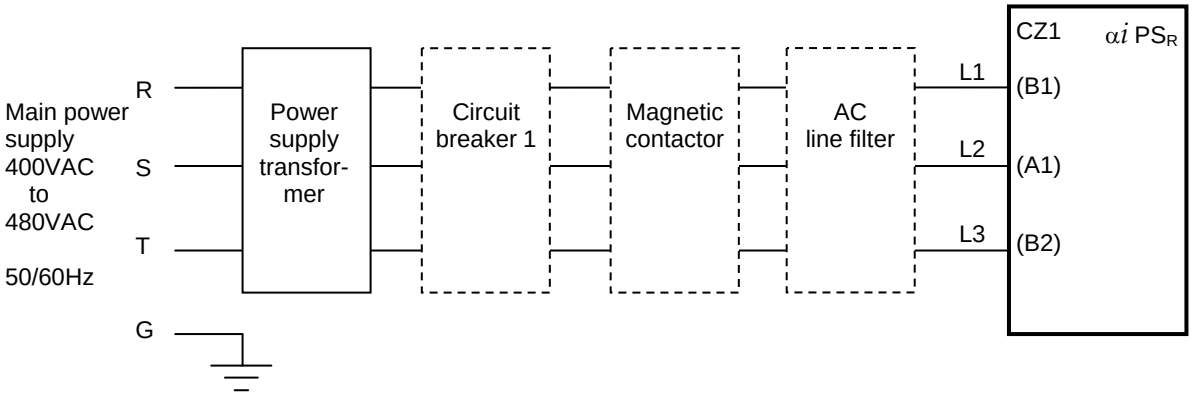

Table 9.3.1.1(c) Cable K1 Specifications, screw tightening torque

Mode	Applicable cable		
	Heavy-duty power cable (Note 1)	Heat-resistant cable (Note 2)	Cable conforming to UL standard
αi PS_R 3	3.5mm^2	3.5mm^2	AWG10
αi PS_R 5.5	5.5mm^2	5.5mm^2	AWG8

© MyFANUC 2D5504D5BAC945D385F48627D4977F6C

NOTE
1 Four-conductor polyvinyl heavy-duty power cable (JIS C3312) (VCT : heat-resistant 60°C)
2 Fire-retardant polyflex wire (heat-resistant 105°C) or equivalent to LMFC manufactured by The Furukawa Electric Co., Ltd.

Connector Specifications

Model	Connector key (Note 1)	Applicable contact (Note 1)
αi PS_R 3, 5.5	XX 1-917807-2	M size 316041-6

See Subsection 9.4 for detailed explanations about the specification of the D-5000.

NOTE
Tyco Electronics Japan GK D-5000 series
Select a contact size according to the cross-section area of the cable.

(3) For αi PS 400-V input type

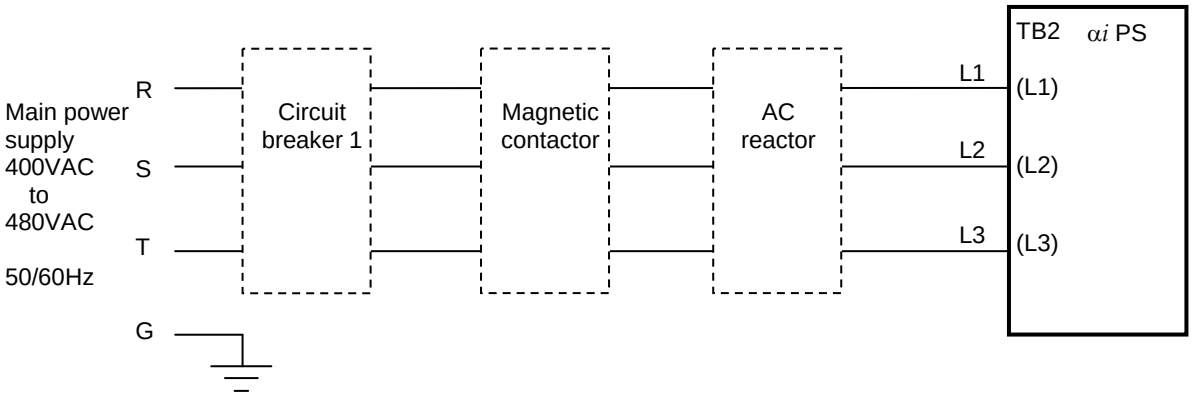

Table.9.3.1.1(d) Cable K1 Specifications

Model	Applicable cable			αi PS side		Reactor side	
	Heavy- duty power cable (Note 1)	Heat-resistant cable (Note 2)	Cable conforming to UL standard	Terminal screw	Tightening torque	Terminal screw	Tightening torque
αi PS 11HV	5.5mm² or more	5.5mm² or more	AWG8 or more	M4	1.1 to 1.5Nm	M5	2.0 to 2.5Nm
αi PS 18HV	-	8mm² or more	AWG8 or more				
αi PS 30HV	-	14mm² or more	AWG4 or more	M6	3.5 to 4.5Nm	M8	8.5 to 9.5Nm
αi PS 45HV	-	38mm² or more	AWG1 or more				
αi PS 60HV	-	38mm² or more	AWG1 or more				
αi PS 75HV	-	G: 22mm² or more	AWG2 or more	M6	3.5 to 4.5Nm	M10	15 to 16Nm
		R, S, T: 38mm² or more	AWG1 or more	M10	15 to 16Nm		
αi PS 100HV	-	G: 40mm² or more	AWG1 or more	M6	3.5 to 4.5Nm		
		R, S, T: 80mm² or more	AWG3/0 or more	M10	15 to 16Nm		

* The AC reactor does not have polarity, so input and output may be connected to either side of the reactor.

© MyFANUC 2D5504D5BAC945D385F48627D4977F6C

NOTE

1 Four-conductor polyvinyl heavy-duty power cable (JIS C3312) (VCT : heat-resistant 60°C)
2 Fire-retardant polyflex wire (heat-resistant 105°C) or equivalent to LMFC manufactured by Furukawa Electric Co., Ltd.
3 The cross-section area of each cable is determined under the following conditions:
(1) At αi PS rated output
(2) Environment temperature of cable : 30°C
(3) Number of harnesses
3 (No current flows through the ground wire during normal operation.)
Select a required cable cross-section area according to the user environment and conditions.

9.3.1.2 Details of short bar K2

Short bar K2 supplies DC link voltage generated by the αi PS to individual modules.
When designing a short bar for connecting modules placed close to each other, refer to the "Specifications of short bars for connecting modules placed close to each other."
To determine the length of a short bar to be used for connecting modules placed separately, refer to "Location of terminal board TB1."
Optional short bars are available from FANUC. Refer to the "DC Link Short Bar Specifications."

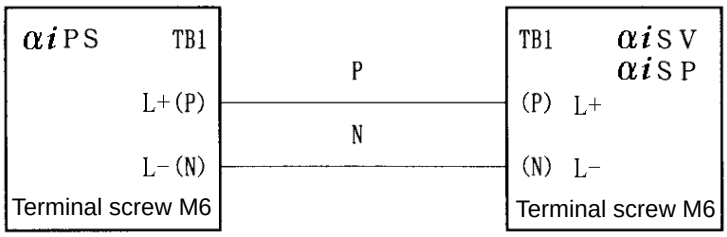

Specifications of short bars for connecting modules placed close to each other

(1) Specifications of short bars for connecting the modules

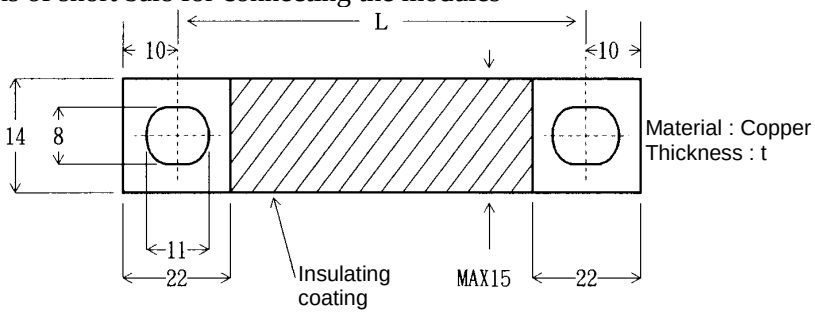

© MyFANUC 2D5504D5BAC945D385F48627D4977F6C

(2) Specifications of short bars for connecting the modules
(Figure example of short bars for connecting 300-mm-wide modules)

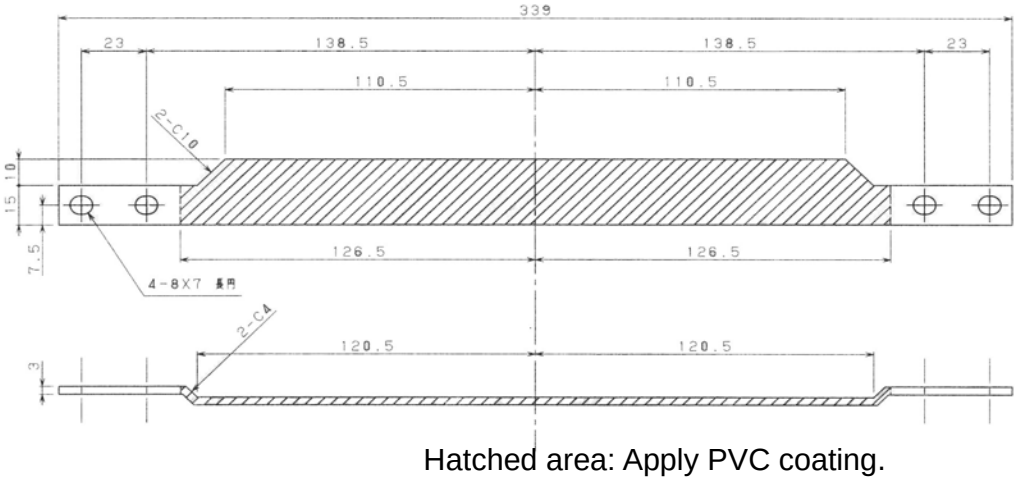

Hatched area: Apply PVC coating.
Thickness : 1t or more

Table.9.3.1.2 Short bar K2 specifications

Module location	Short bar length L	Short bar thickness t	Cross-section area (Note)
Unit of 300mm-wide	300mm	3.0mm	50mm^2
Unit of 150mm-wide	150mm	1.5mm	21mm^2
Unit of 90mm-wide	90mm	1.5mm	21 mm^2
Unit of 60mm-wide	60mm	1.5mm	21 mm^2

NOTE

1 Modules need not necessarily be connected with a short bar (copper plate).
If the modules cannot be placed close to each other, however, they cannot help being separated from each other.
If you connect them with a power cable, however, the cable may not be thinner than indicated above and must be insulated with heat-resistant polyvinyl.

2 When the width is 300 mm ((αi SP 45, αi SP 55, αi PS 55, αi SP 75HV, αi SP 100HV, αi PS 75HV, αi PS 100HV, αi SV 360HV, αi SV 540HV), cabling needs to be performed using the two screws at P and N. So, use a dedicated short bar (A06B-6078-K841, two each per set).

© MyFANUC 2D5504D5BAC945D385F48627D4977F6C

Location of terminal block TB1 on each module

Fig.9.3.1.2(a) and Fig.9.3.1.2(b) show the location of terminal board TB1 on each module.

If you want to install modules at distances not specified herein, design short bars by referring to the dimensions shown below.

When designing a short bar for connecting 300-mm-wide modules in particular, conform to the above figure specifications and apply the above coating.

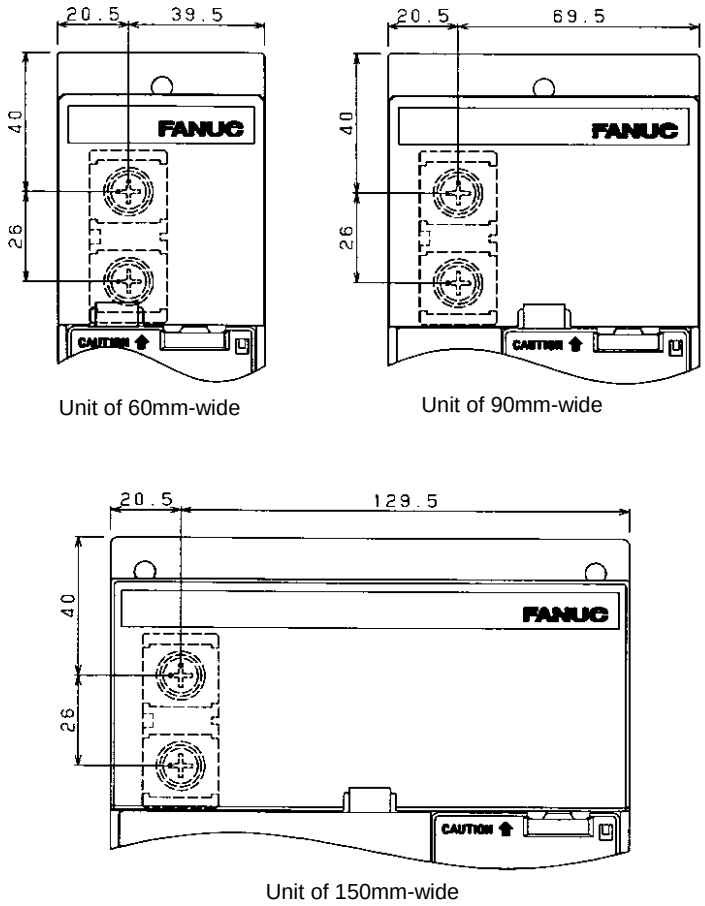

Fig.9.3.1.2(a) Location of Terminal Block TB1 on the units of 60-, 90-, and 150-mm-Wide amplifiers

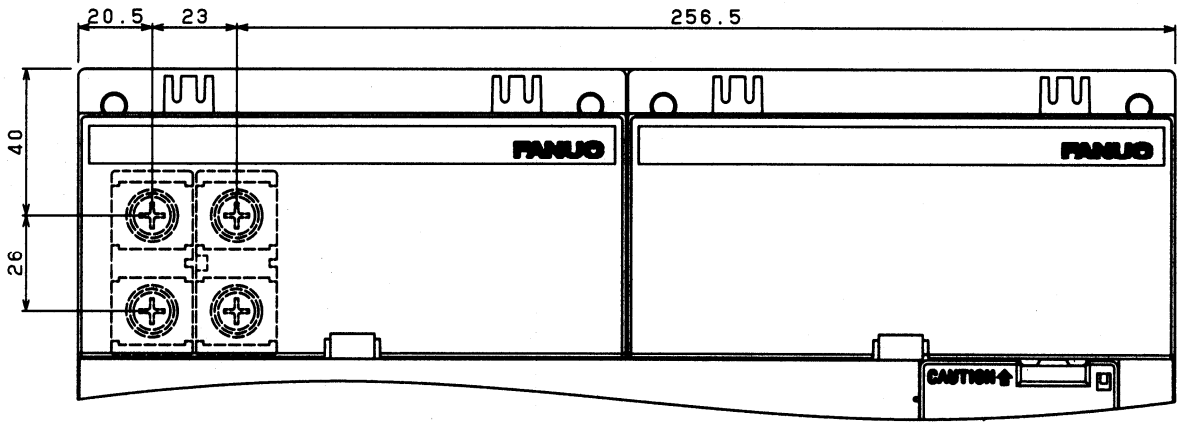

Fig.9.3.1.2(b) Location of Terminal Block TB1 on the units of 300-mm-Wide amplifiers

© MyFANUC 2D5504D5BAC945D385F48627D4977F6C

About the length of the DC link cable

Suppress the length of the DC link cable to within 1.5 m. (See the following diagram.)

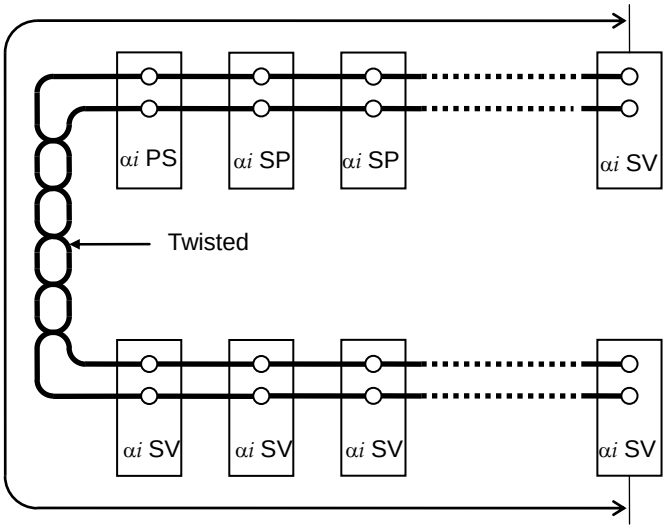

9.3.1.3 Details of cable K3

Cable K3 is used to supply control power to the αi PS.

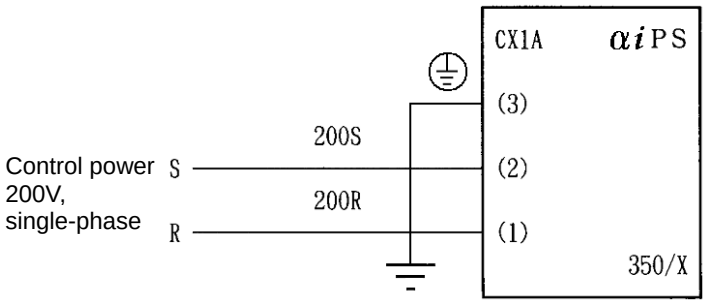

Cable specification:

Two-conductor polyvinyl heavy-duty power cable (JIS C3312), conductor size of 1.25 mm^2 (50/0.18),
PVC sheath 9.6 mm in diameter

Connector specification:

Tyco Electronics Japan GK connector with receptacle housing
1-178128-3 and receptacle contact 1-175218-2

NOTE

Always connect cable K3 to the CX1A. If it is connected to the CX1B, fuses inside the unit may blow.

© MyFANUC 2D5504D5BAC945D385F48627D4977F6C

9.3.1.4 Details of cable K69

The cable K69 is used between the αi PS, αi SP, and αi SV.

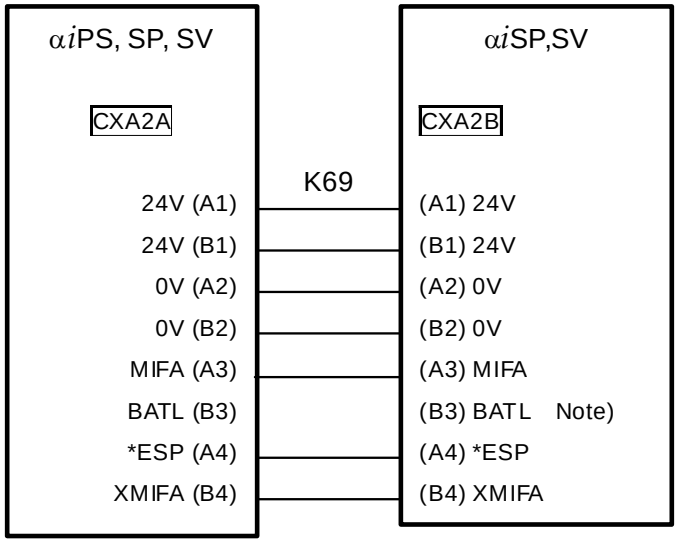

Connector specification

Manufacturer	Tyco Electronics Japan GK
Connector specification	D-2100 series Housing 1-1318119-4 (1 pieces) Contact 1318107-1 (8 pieces) [Ordering information : A06B-6110-K210 connector only]
Conductor size	0.5mm^2, AWG20
Instruction outer diameter	1.08 to 2.83 mm

NOTE

The (B3)BATL is the interface used to connect the batteries for the absolute Pulsecoder. For details, see the description of battery connection in Subsection 9.3.2.10.

⚠ **WARNING**

1 When using the built-in battery (A06B-6114-K504), never connect the BATL(B3) of the connector CXA2A/CXA2B.
Otherwise, a short-circuit will occur between the battery output voltages for different αi SVs, possibly resulting in the batteries becoming very hot, which is dangerous.

2 Do not connect more than one battery to the same BATL(B3) line. Otherwise, a short-circuit will occur between the output voltages of different batteries, possibly resulting in the batteries becoming very hot, which is dangerous.

© MyFANUC 2D5504D5BAC945D385F48627D4977F6C

9.3.1.5 Details of cable K6

Cable K6 is used to control the magnetic contactor if it is installed outside the unit.

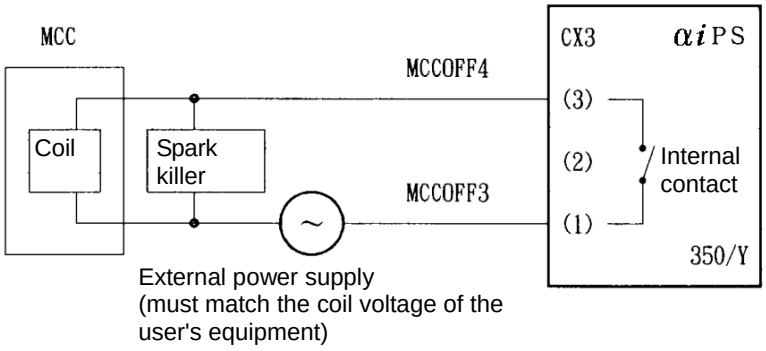

Cable specification:

Two-conductor polyvinyl heavy-duty power cable (JIS C3312), conductor size of 1.25 mm^2 (50/0.18), PVC sheath 9.6 mm in diameter

Connector specification:

Tyco Electronics Japan GK connector with receptacle housing 2-178128-3 and receptacle contact 1-175218-2

Internal-contact specification:

	Resistive load (cosϕ=1)	**Inductive load (cosϕ=0.4, L/R=7msec)**
Rated load	250VAC, 5A / 30VDC, 5A	250VAC, 2A / 30VDC, 2A
Maximum contact rating	5A	5A

NOTE

Always install a spark killer (CR) that matches the magnetic contactor to protect the internal contacts. The following table lists the recommended capacitances and resistances.

Coil voltage	**C**	**R**
24VDC	0.22μF	22Ω
100 to 230VAC	0.1μF	220Ω

9.3.1.6 Details of cable K7

Cable K7 is used to supply an emergency stop signal to the αi PS.

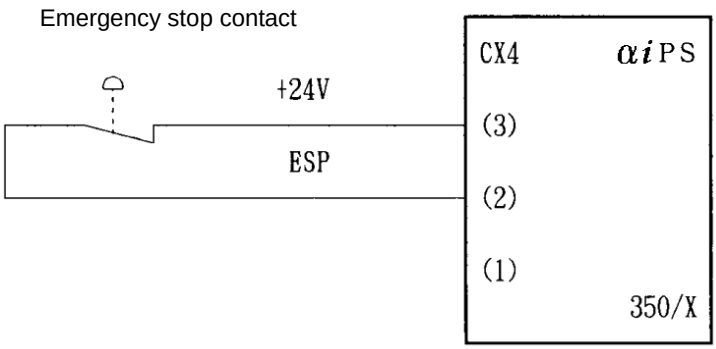

© MyFANUC 2D5504D5BAC945D385F48627D4977F6C

Cable specification:
Two-conductor polyvinyl heavy-duty power cable (JIS C3312),
conductor size of 1.25 mm^2 (50/0.18), PVC sheath 9.6 mm in diameter
Connector specification:
Tyco Electronics Japan GK connector with receptacle housing
1-178128-3 and receptacle contact 1-175218-2

(1) When the contact is ON (closed), the spindle motor and servo motor are enabled.
When the contact is OFF (open), the external magnetic contactor (MCC) is in the off state, and the spindle motor and servo motor do not operate.

(2) When the contact is set to OFF (open) during motor rotation, the spindle motor decelerates, then stops, and the servo motor is stopped by the dynamic brake.

(3) The contact input signal is specified as follows:
<1> As the external contact capacity, a voltage of at least 30 VDC and a current of at least 100 mA are required.
<2> Significant levels (with the voltage between input pins) when the contactless signal input mode is used:
Low level "logic 0": Up to 2 V
High level "logic 1": At least 20 V

(4) When the αi PS main power is turned off for safety in such a case that the machine protection door is open, the contact of the ESP signal (CX4), which is input to the αi PS, must be set to OFF (open) within 200 ms after turn-off of the αi PS main power.
When the contact of the ESP signal (CX4) remains ON (closed) after the αi PS main power is turned off, a DC link low-voltage alarm (alarm No. 4) occurs in the PSM.

⚠ WARNING
1 The spindle free-runs as a result of a power failure, an alarm, or a command from the ladder (MPOFA signal). During free running, the spindle does not stop even when an emergency stop is applied.
2 Note that even when the power is off, the spindle might be free-running.
3 When an amplifier requires an external dynamic brake module, but no dynamic brake module is connected to the amplifier, applying an emergency stop causes the servo axis to coast.
4 The ESP signal receive circuit of the amplifier is implemented by an electronic circuit. This means that input of the ESP signal to the amplifier due to an electronic circuit failure may not stop the motor.

9.3.1.7 Details of cable K70

(a) The cable K70 is used to connect the connector CX1A on the αi PS to the frame ground of the cabinet.
Conductor size : 1.25 mm^2

(b) See Table 4.3.1.7, and determine the cable to be used for connecting the metal frames of the αi PS, αi SP, αi SV, and dynamic brake module (DBM) to the frame ground of the cabinet.

Table 9.3.1.7 Grounding cable conductor diameter

Motor power cable cross-section S (mm^2)	Grounding cable cross-section (mm^2)
$S \leq 5.5$	5.5 or greater

© MyFANUC 2D5504D5BAC945D385F48627D4977F6C

Motor power cable cross-section S (mm^2)	Grounding cable cross-section (mm^2)
5.5 < S ≤ 16	S or greater
16 < S ≤ 35	16 or greater
35 < S	S/2 or greater

NOTE
The following M5 crimp terminal can be used with a cable having a large conductor diameter.
Nichifu Co., Ltd. CB22-5S
Overall conductor size range : 16.78 to 22.66 mm^2

Based on the tables below, select a crimp terminal used for connection to the αi PS.

200-V system

Amplifier model	Terminal screw	Tightening torque
αi PS 5.5, αi PS 11, αi PS 15, αi PS 26, αi PS 30, αi PS 37	M5	2 to 2.5Nm
αi PS 55	M6	3.5 to 4.5Nm

400-V system

Amplifier model	Terminal screw	Tightening torque
αi PS 11HV , αi PS 18HV, αi PS 30HV, αi PS 45HV, αi PS 60HV	M5	2 to 2.5Nm
αi PS 75HV, αi PS 100HV	M6	3.5 to 4.5Nm

9.3.1.8 Detailed description of the connection of cables K41 (for regenerative discharge resistance), K42 (for thermostat), and K43 (for fan motor)

Connection for A06B-6089-H510 and A06B-6089-H500

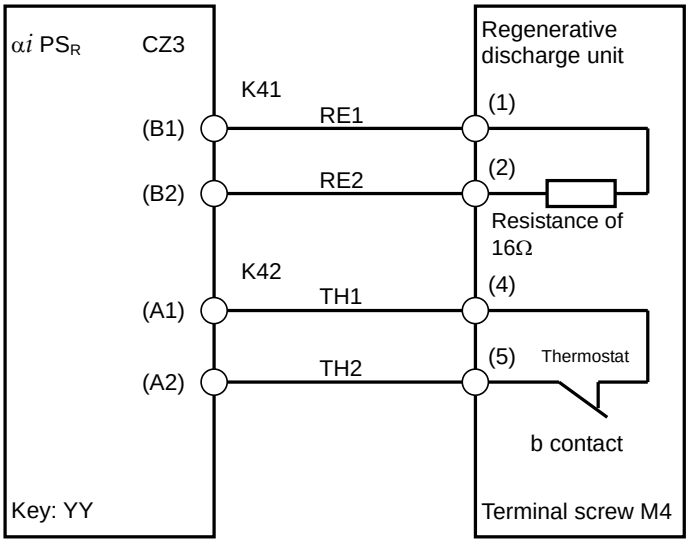

© MyFANUC 2D5504D5BAC945D385F48627D4977F6C

Tyco Electronics Japan GK D-5000

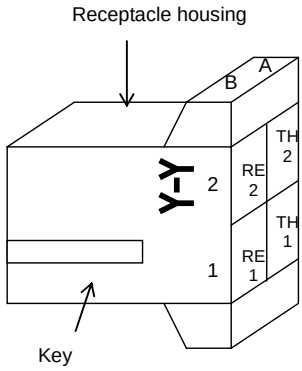

Cable number	Applicable cable VCT(heat resistant 60°C) (Note 1)	Connector key (Note 2)	Applicable contact (Note 2)
K41	2mm^2 Two-conductor polyvinyl heavy-duty power cable (JIS C3312)	YY 2-917807-2	S size 316040-6
K42	1.25mm^2 Two-conductor polyvinyl heavy-duty power cable (JIS C3312)		S size 316040-6

NOTE
1 Run cables K41 and K42 without tying them in a bundle.
2 CZ1 near them is for the power supply. Be careful of the connector key.

Connection for A06B-6089-H711 to -H713

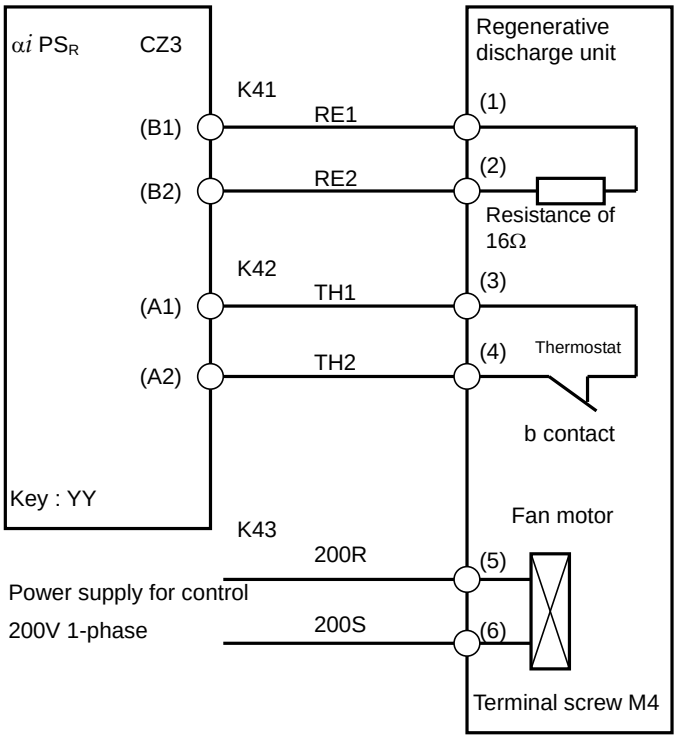

© MyFANUC 2D5504D5BAC945D385F48627D4977F6C

Cable number	Applicable cable VCT(heat resistant 60°C) (Note 1)	Connector key (Note 2)	Applicable contact (Note 2)
K41	2mm^2 Two-conductor polyvinyl heavy-duty power cable (JIS C3312)	YY 2-917807-2	S size 316040-6
K42	1.25mm^2 Two-conductor polyvinyl heavy-duty power cable (JIS C3312)		S size 316040-6
K43	2mm^2 Two-conductor polyvinyl heavy-duty power cable (JIS C3312)		

NOTE
1 Run cables K41, K42, and K43 without tying them in a bundle.
2 CZ1 near them is for the power supply. Be careful of the connector key.

9.3.1.9 Details of cable K100 (for power failure detection output)

Cable K100 is used for the function for preventing the vertical axis from falling at the time of power failure. For details, see Appendix I, "POWER FAILURE DETECTION FUNCTION".

NOTE
A06B-6110-Hxxx and A06B-6120-Hxxx do not have an output for the K100.

© MyFANUC 2D5504D5BAC945D385F48627D4977F6C

9.3.2 αi SV series Connection Diagram

(a) 60mm- or 90mm-wide αi SV (example : αi SV 2-axis)
Without connection to dynamic brake module

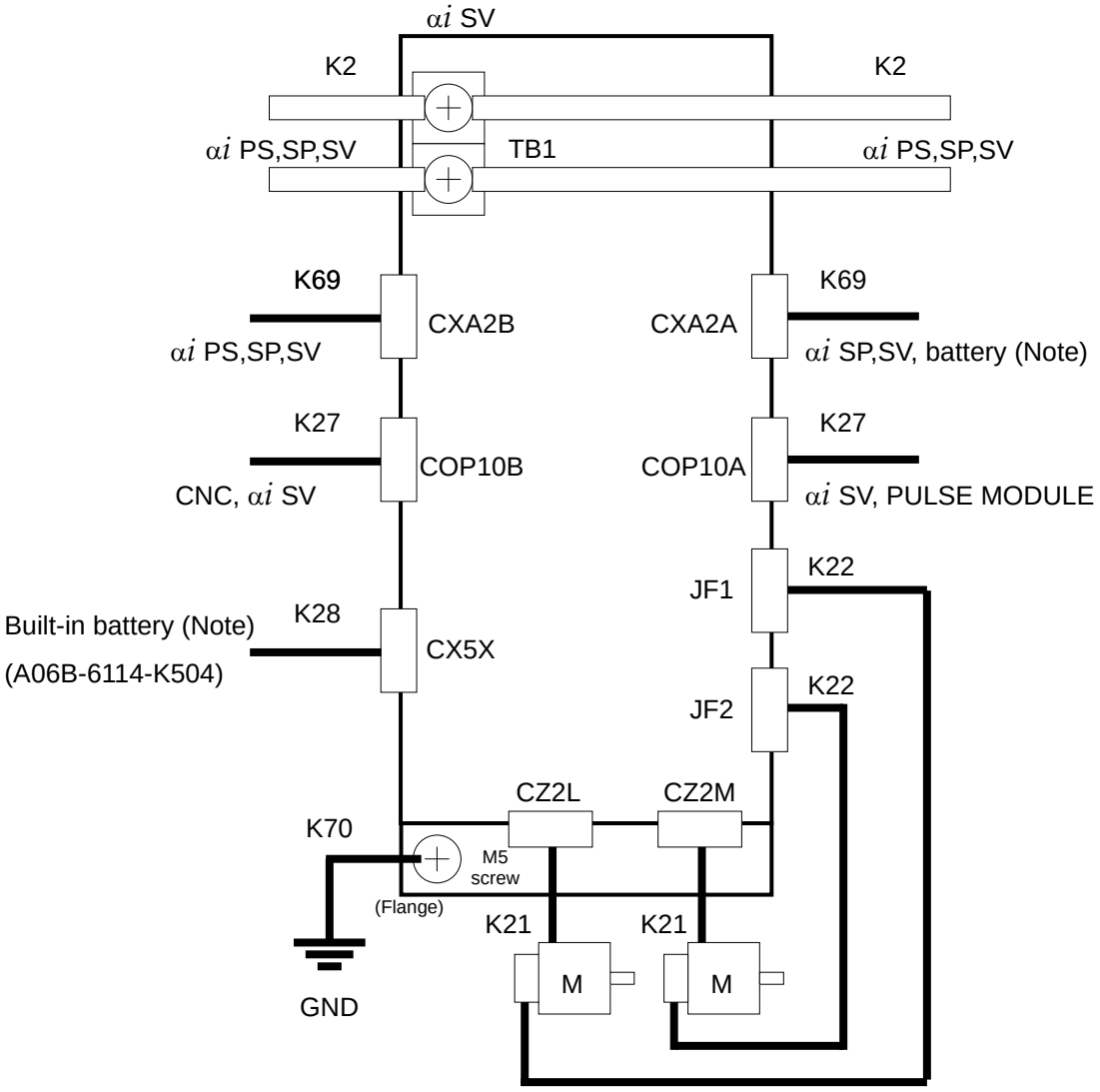

NOTE
See Subsection 9.3.2.10 for connection to the battery or built-in battery.

© MyFANUC 2D5504D5BAC945D385F48627D4977F6C

(b) αi SV 360, αi SV 180HV, αi SV 360HV, αi SV 540HV
(When using a DBM driven at 200 VAC)

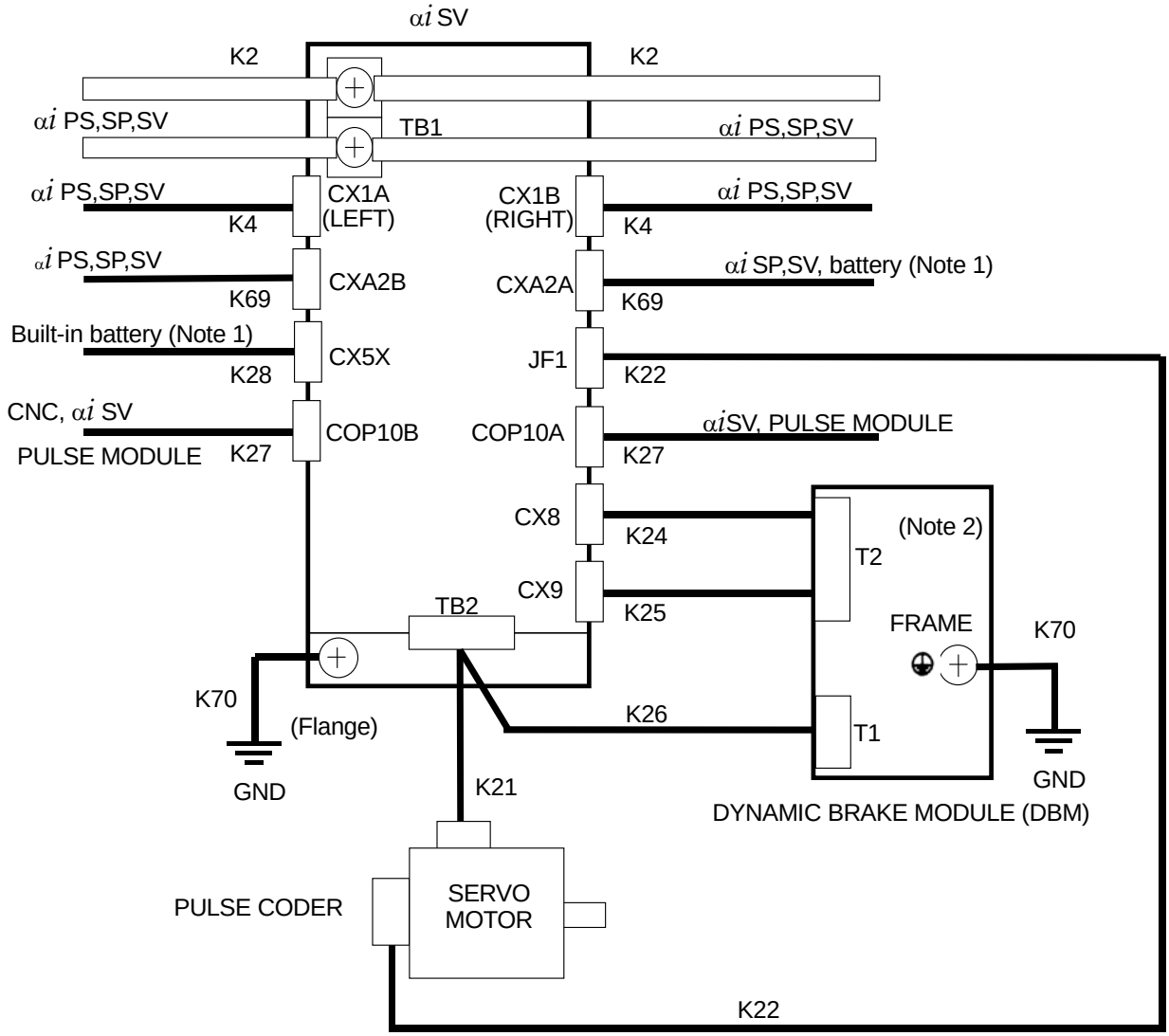

NOTE
1 See Subsection 9.3.2.10 for connection to the battery or built-in battery.
2 Connect one dynamic brake module for each servo amplifier.

© MyFANUC 2D5504D5BAC945D385F48627D4977F6C

(c) αi SV 360, αi SV 180HV, αi SV 360HV, αi SV 540HV
(When using a DBM driven at 24 VDC)

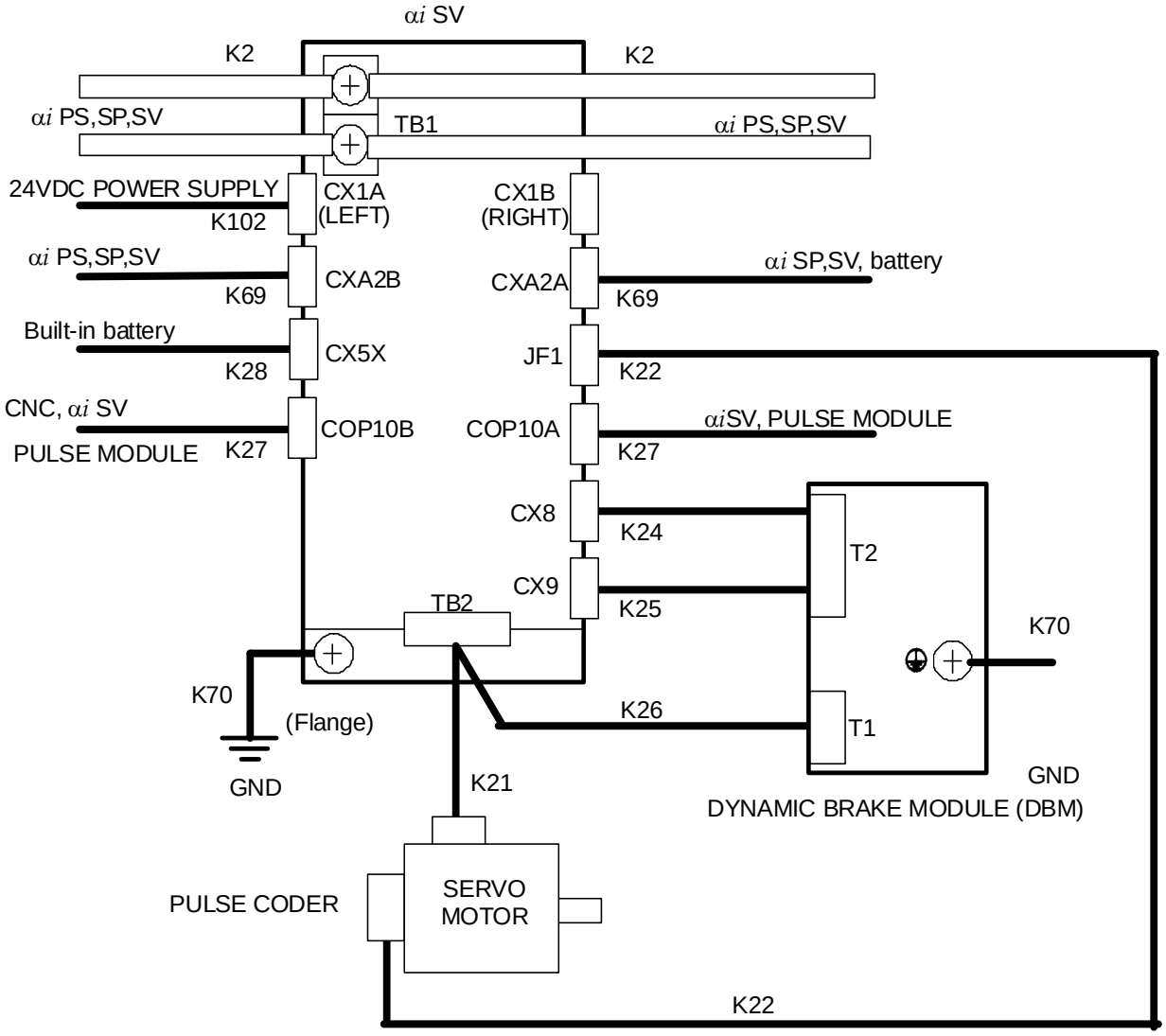

⚠ **CAUTION**
Connect 24 VDC for the DBM to CX1A and CX1B of the servo amplifier via K102. When a DBM driven at 24 VDC is used, the DBM breaks if 200 VAC is input to CX1A or CX1B.

© MyFANUC 2D5504D5BAC945D385F48627D4977F6C

(d) αi SV 360, αi SV 180HV, αi SV 360HV
When a servo motor with two windings is driven by two amplifiers
(When using a DBM driven at 200 VAC)

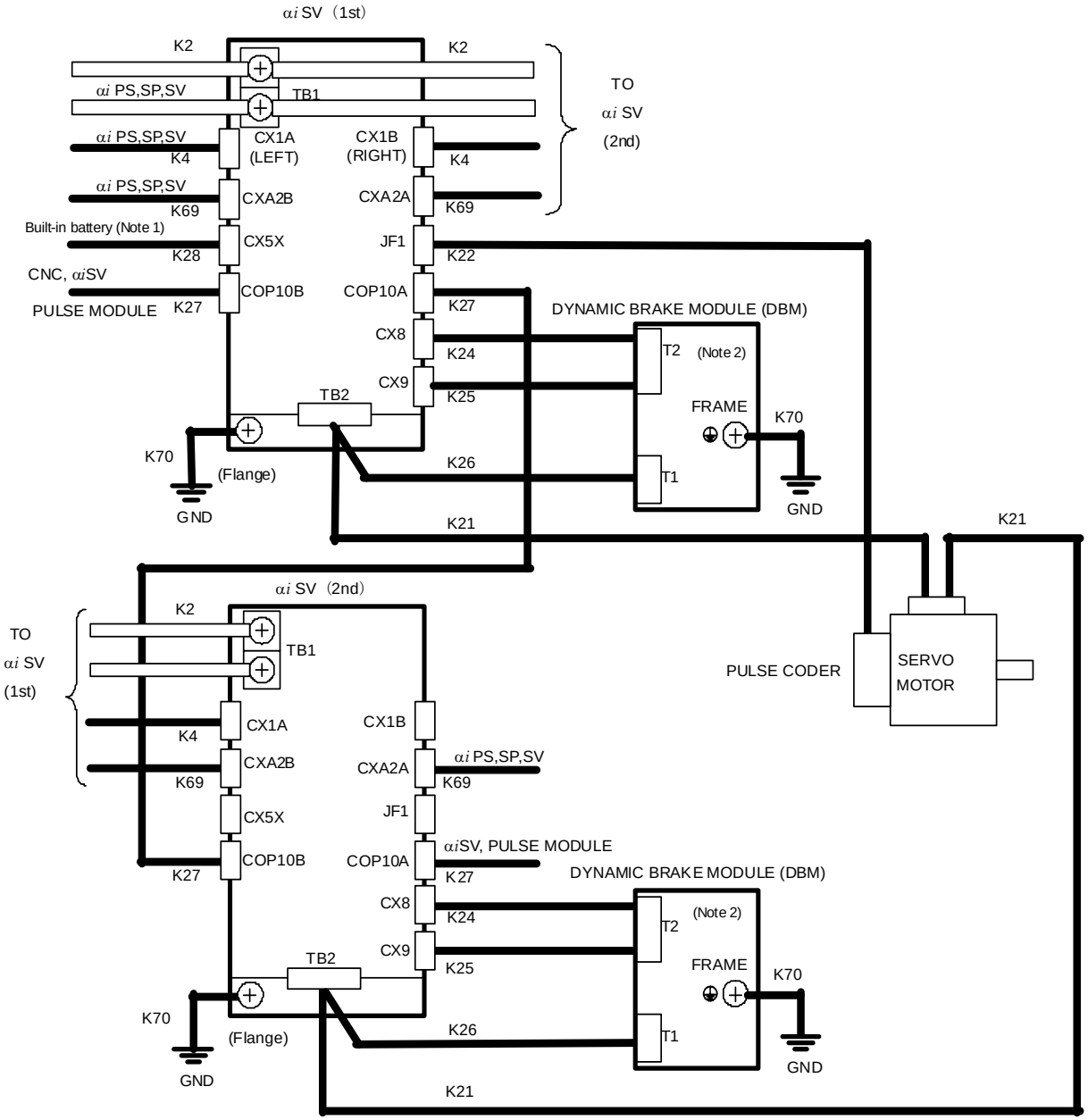

NOTE
1 See Subsection 9.3.2.10 for connection to the battery or built-in battery.
2 Connect one dynamic brake module for each servo amplifier.

© MyFANUC 2D5504D5BAC945D385F48627D4977F6C

9.3.2.1 Details of cable K2

The cable K2 is used to connect the DC link.
See Item 9.3.1.2.

9.3.2.2 Details of cable K4

Cable K4 is a connection cable used to supply power (single phase, 200 VAC) for driving the dynamic brake module to the αi SV.

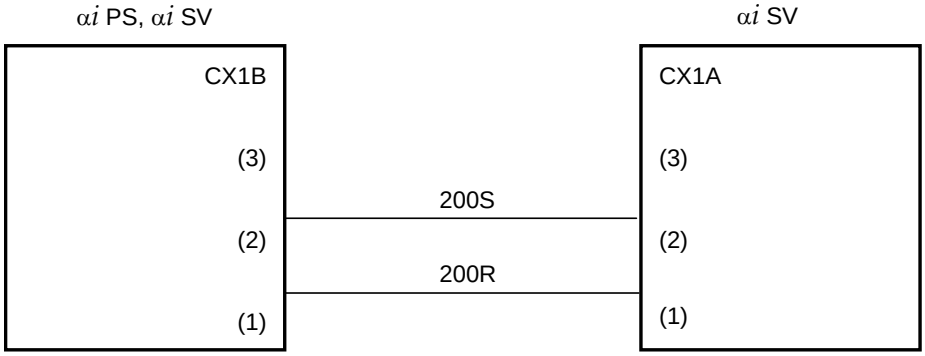

Example cable :
Two-conductor polyvinyl heavy-duty power cable (JIS C3312)
Conductor size of : 1.25mm^2 (50/0.18)
PVC sheath 9.6 mm in diameter
Connector specification:
Tyco Electronics Japan GK connector with receptacle housing
1-178128-3 and receptacle contact 1-175218-2

9.3.2.3 Details of cable K69

The cable K69 is a communication cable used between modules.
See Item 9.3.1.4.

© MyFANUC 2D5504D5BAC945D385F48627D4977F6C

9.3.2.4 Details of cable K21

The cable K21 is a power cable used between the αi SV and motor. The cable is attached to the αi SV through the connector D-5000 excluding αi SV 360, αi SV 180HV and αi SV 360HV.

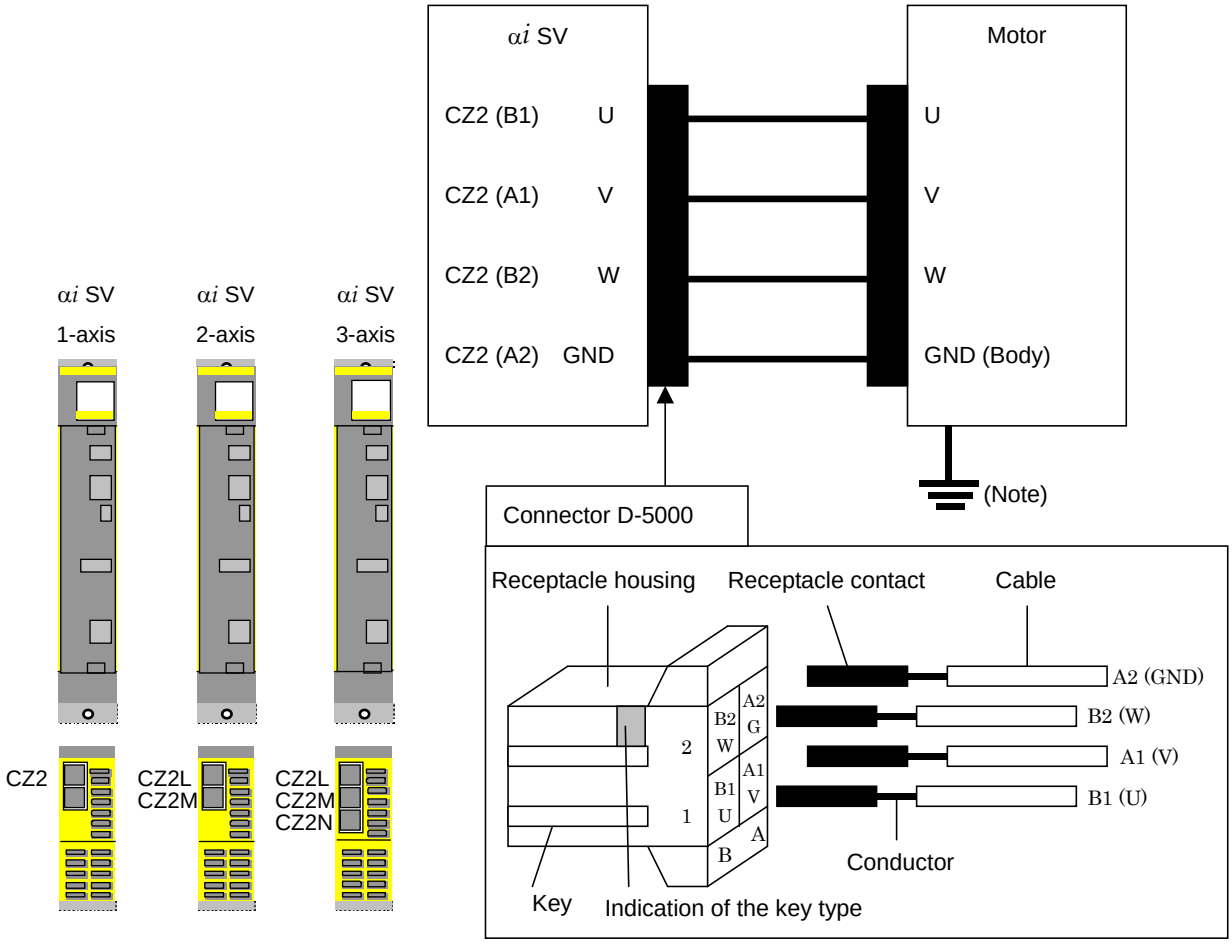

NOTE

When the αi SV 400-V input seies is used, always mount the motor flange on a cabinet (machine) connected to the system ground. It may be difficult to connect the motor flange to a cabinet (machine) connected to the system ground. In this case, connect the motor flange and frame ground (ground plate of the cabinet) using a cable at least 1.25 mm^2 thick. The cable must be separated from the power lines as much as possible.

⚠ WARNING

1 If the phase order of the power lines is incorrect, an unpredictable motor operation may occur.
2 If the power lines are connected to wrong axes (L/M/N), an unpredictable motor operation may occur.

© MyFANUC 2D5504D5BAC945D385F48627D4977F6C

About the receptacle housing of the αi SV-side connector

The αi SV-side connector is a key type. The key is intended to prevent incorrect connection between the axes of multi-axis amplifiers (αi SV2, αi SV3). Select the receptacle housing that matches the αi SV and its axis that are to be used.
See Subsection 9.4.2 for detailed explanations about the specification of the D-5000.

Specification of the key	Applicable SVM
XX	αi SV1, αi SV2(L), αi SV3(L)
XY	αi SV2(M), αi SV3(M)
YY	αi SV3(N)

About the receptacle contact of the αi SV-side connector

Four types receptacle contacts are prepared for the different line diameter of the cable. Please use the receptacle contact which suits the line diameter of the cable.
See Subsection 9.4.2, “Tyco Electronics Japan GK D-5000 Series Connector” for detailed explanations about the specification of the D-5000.

About the cable specification

Select the cable specification by considering the following conditions for use.
<1> Motor current rating or current needed in use on a real machine
<2> Cable type (heat resistance temperature, etc.)
<3> Environment in which the cable is installed (operating ambient temperature, etc.)
<4> Need of water proofing (pay attention to the diameter of the applicable cable clamp)
<5> Certification for CE marking (compliance with various safety standards and EMC standard)
<6> Securing insulation space among the cable pins at the time of cabling

About the motor-side connector

The specification of the motor-side connector varies from one motor model to another.
Refer to "FANUC AC SERVO MOTOR αi series Descriptions (B-65262EN)" for explanations about the specification of the motor-side connector.

αi SV 360, αi SV 180HV, αi SV 360HV, αi SV 540HV

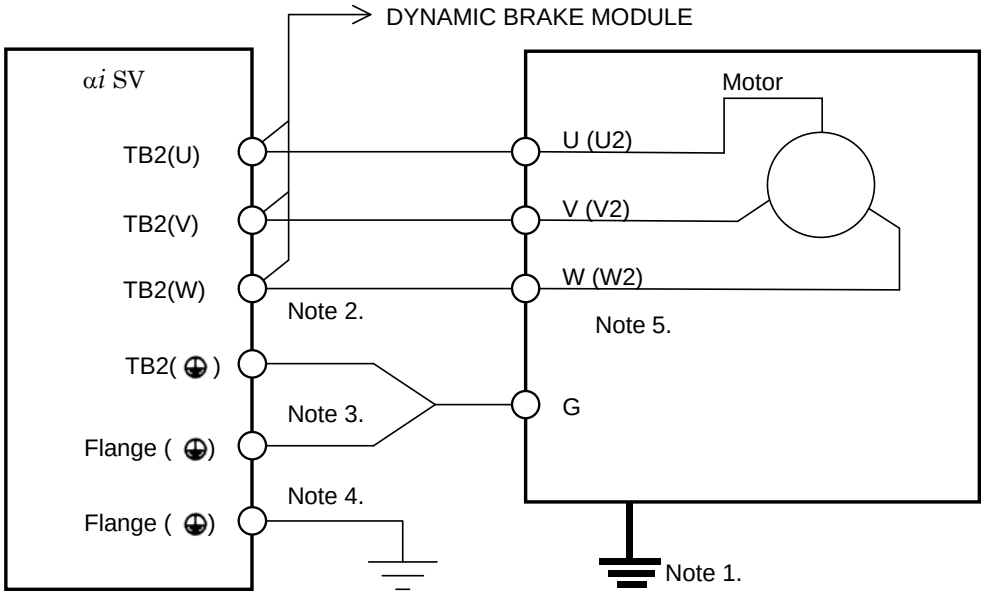

© MyFANUC 2D5504D5BAC945D385F48627D4977F6C

NOTE

1 When the αi SV 400-V input series is used, always mount the motor flange on a cabinet (machine) connected to the system ground. It may be difficult to connect the motor flange to a cabinet (machine) connected to the system ground. In this case, connect the motor flange and frame ground (ground plate of the cabinet) using a cable at least 1.25 mm^2 thick. The cable must be separated from the power lines as much as possible.

2 Size of screw for motor power line TB2(U), TB2(V), and TB2(W)
- For αi SV 360, αi SV 180HV : M6
- For αi SV 360HV, αi SV 540HV : M10

3 Connection for motor ground lead
- For αi SV 360, αi SV 180HV: Connection to TB2(G) (M6)
- For αi SV 360HV, αi SV 540HV : Connection to flange (M6)

4 Size of screws for connection between flange and ground
- For αi SV 360, αi SV 180HV : M5
- For αi SV 360HV, αi SV 540HV : M6

5 To drive a motor with multiple windings by using two αi SV amplifiers, connect motor power lines (U, V, W, and G) to the first αi SV amplifier, and connect motor power lines (U2, V2, W2, and G) to the second αi SV amplifier.

9.3.2.5 Details of cable K22

The cable K22 is used to connect the αi SV and Pulsecoder.

⚠ **WARNING**

If the connector (JF1, 2, or 3) of the pulsecoder is connected incorrectly, an unpredictable motor operation may occur.

© MyFANUC 2D5504D5BAC945D385F48627D4977F6C

For servo motor αiF, αiS series and Servo motor βiS series (βiS 0.4/5000 to βiS 22/2000)

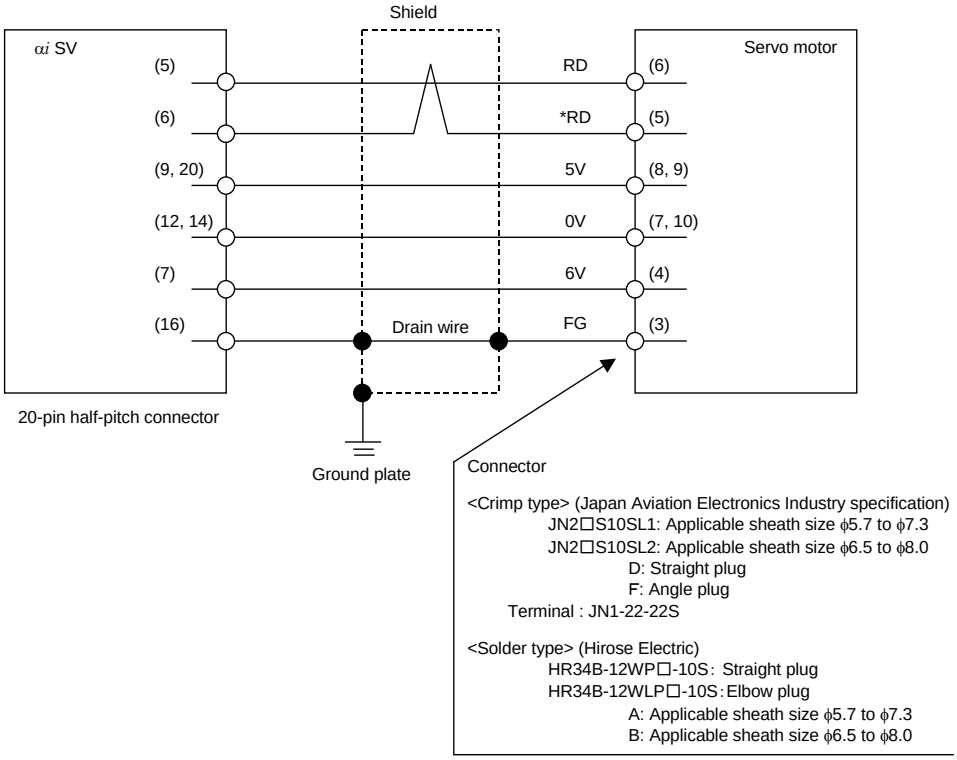

Using cable conductor

Signal name	Cable length : 28m or less	Cable length : 50m or less
5V, 0V, 6V	$0.3mm^2 \times 5$ (Note 4) Strand configuration 12/0.18 or 60/0.08 Insulation outer diameter ϕ0.8 to ϕ1.5	$0.5mm^2 \times 5$ (Note 4) Strand configuration 20/0.18 or 104/0.08 Insulation outer diameter ϕ0.8 to ϕ1.5
RD, *RD	$0.18mm^2$ or more Twisted-pair wire Insulation outer diameter ϕ0.8 to ϕ1.5	$0.18mm^2$ or more Twisted-pair wire Insulation outer diameter ϕ0.8 to ϕ1.5
Drain wire	$0.15mm^2$ or more	$0.15mm^2$ or more

See Subsection 9.4.1 for explanations for αi SV connector that matches the recommended cable.
See Appendix B, "About Cable Conductors," for detailed explanations about the cable.

NOTE

1 The ground plate to which the shield is connected must be placed as close as possible to the servo amplifier so that distance between the ground plate and the servo amplifier becomes shortest.
2 In case that the cable is prepared by MTB, total resistance of 5V and 0V must be less than 2Ω.

© MyFANUC 2D5504D5BAC945D385F48627D4977F6C

NOTE

3 Pulsecoder side connector can accept maximum 0.5mm^2 (wire construction 20/0.18 or 104/0.08, diameter ϕ1.5 or less) wire and sheath diameter is ϕ5.7 to ϕ8.0. In case of using thicker wire or cable, take measures described below.

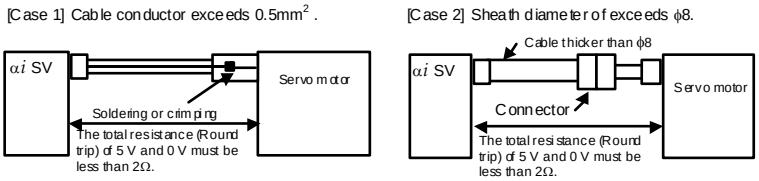

4 In case of incremental Pulsecoder, 6V is not necessary to be connected.

- Crimp tool specification

FANUC specification	Japan Aviation Electronics Industry specification	Applicable cable thickness
A06B-6114-K201#JN1E	CT150-2-JN1-E	21AWG(0.5mm^2:20/0.18) 23AWG(0.3mm^2) 25AWG(0.18mm^2)
A06B-6114-K201#JN1D	CT150-2-JN1-D	20AWG(0.5mm^2:104/0.08) 21AWG(0.5mm^2:20/0.18) 25AWG(0.18mm^2)

- Recommended cable

Recommended cable specification	Description	Crimp tool specification
A66L-0001-0460	Flexible cable 28 m or less	A06B-6114-K201#JN1E (FANUC specification) CT150-2-JN1-E (Japan Aviation Electronics Industry specification)
A66L-0001-0481	Fixed cable 28 m or less	
A66L-0001-0462	Flexible cable 50 m or less	A06B-6114-K201#JN1D (FANUC specification) CT150-2-JN1-D (Japan Aviation Electronics Industry specification)
A66L-0001-0491	Fixed cable 50 m or less	

- Connector kit specification

<Crimp type>

A06B-6114-K204/S : Straight plug (including a contact)
A06B-6114-K204/E : Elbow plug (including a contact)

<Solder type>

A06B-6114-K205/S : Straight plug
A06B-6114-K205/E : Elbow plug

© MyFANUC 2D5504D5BAC945D385F48627D4977F6C

For servo motor βiS series (βiS 0.2/5000, βiS 0.3/5000)

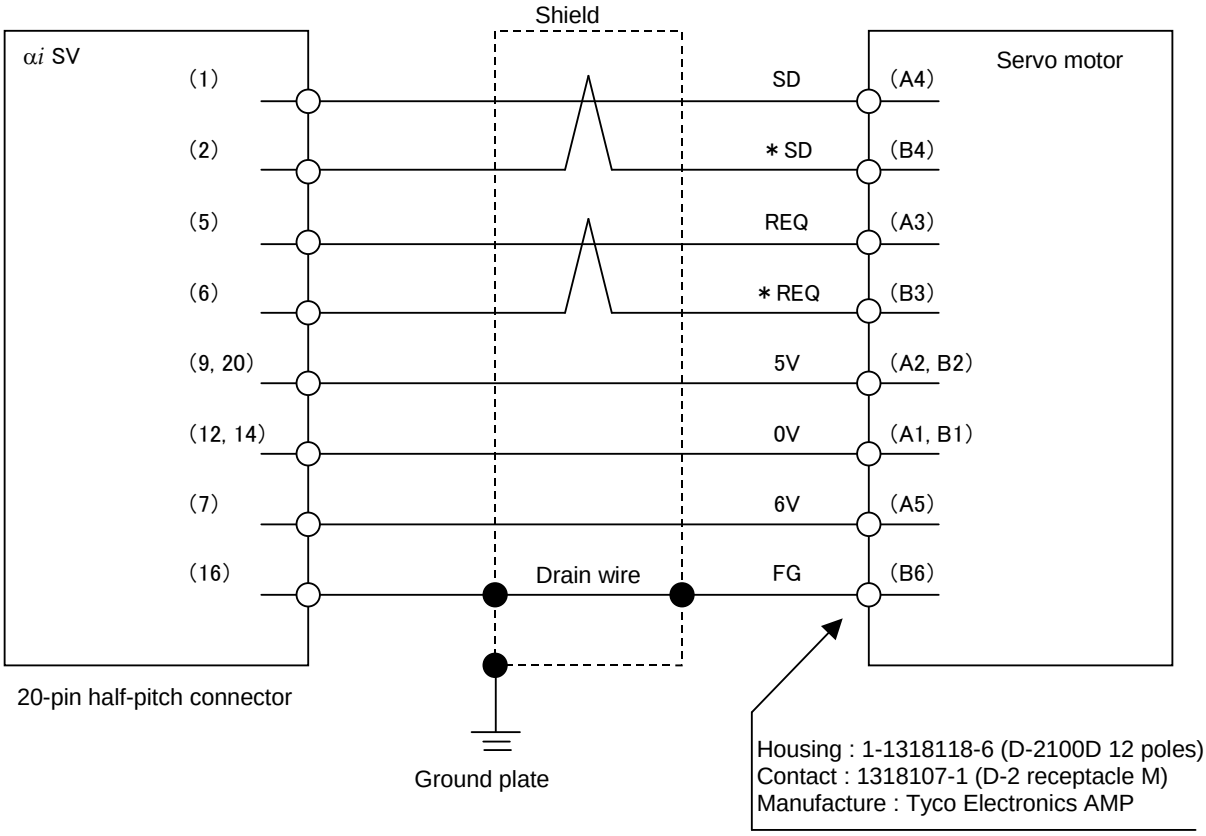

Using cable conductor

Signal name	Cable length : 20m or less
5V, 0V,6V	0.5mm^2 (AWG21) × 5 (Note 4) Strand configuration: 20/0.18 Insulation outer diameter: ϕ0.88 to ϕ1.5
SD, *SD, REQ, *REQ	0.18mm^2 (AWG25) or more Twisted-pair wire Strand configuration: 7/0.18 Insulation outer diameter: ϕ0.88 to ϕ1.5
Drain wire	0.15mm^2 or more
Recommended wire	0.5mm^2 × 5 + 0.18mm^2 × two-pair (For a fixed cable) Hitachi Cable, Ltd. : UL20276-SB(0)5 × 21AWG+2Px25AWG (For a movable cable) Hitachi Cable, Ltd. : UL20276-SB(FLEX)5 × 20AWG+2P × 25AWG

See Subsection 9.4.1 for explanations about the αi SV-side connector that matches the recommended cable.

NOTE

1 The ground plate to which the shield is connected must be placed as close as possible to the servo amplifier so that distance between the ground plate and the servo amplifier becomes shortest.

2 In case that the cable is prepared by the user, the total resistance (round trip) of 5 V and 0 V must be less than 0.8Ω.

© MyFANUC 2D5504D5BAC945D385F48627D4977F6C

NOTE

3 The maximum applicable wire diameter of the cable connector on the motor side is 0.5 mm^2 (when crimping tool 1463475-1 is used) or 0.85 mm^2 (when crimping tool 1276654-1 is used).In case of using thicker wire or cable, take measures described below.

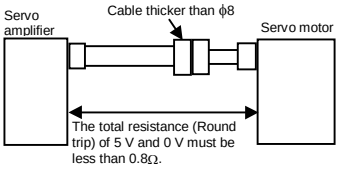

4 In case of incremental Pulsecoder, 6V is not necessary to be connected.

9.3.2.6 Details of cable K24

(1) For A06B-6079-H401, H403

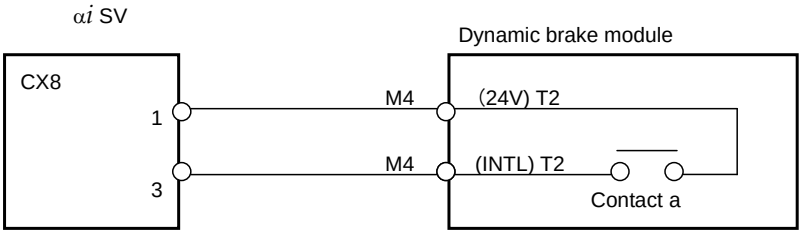

(2) For A06B-6069-H300, H301

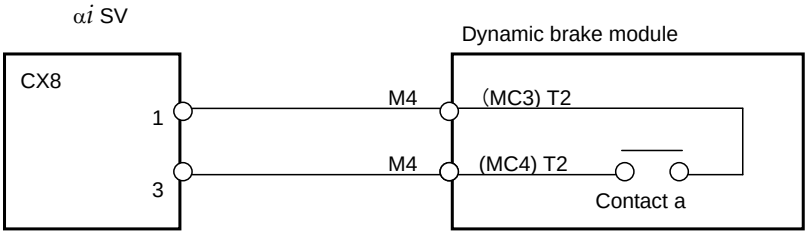

Example cable :

Two-conductor polyvinyl heavy-duty power cable (JIS C3312)
Conductor size of : 1.25mm^2 (50/0.18)
PVC sheath 9.6 mm in diameter

Connector specification:

Tyco Electronics Japan GK connector with receptacle housing 2-178128-3 and receptacle contact 1-175218-2

Crimping terminal :

2-4

9.3.2.7 Details of cable K25

(1) For A06B-6079-H401, H403

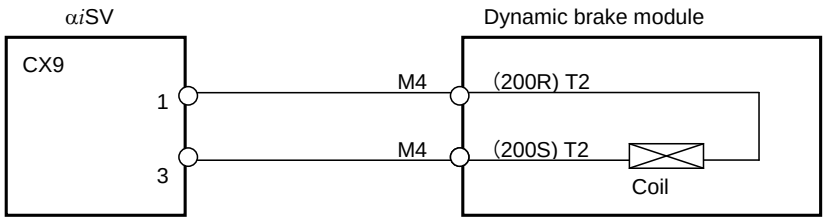

© MyFANUC 2D5504D5BAC945D385F48627D4977F6C

(2) For A06B-6069-H300, H301

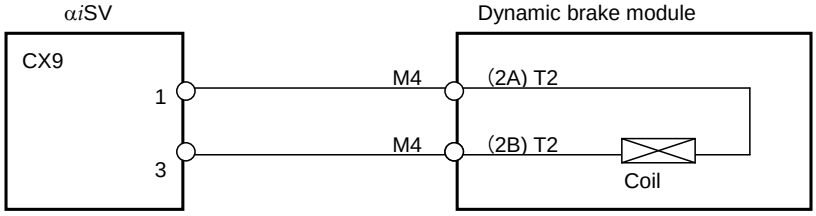

Example cable :

Two-conductor polyvinyl heavy-duty power cable (JIS C3312)
Conductor size of : 1.25mm^2 (50/0.18)
PVC sheath 9.6 mm in diameter

Connector specification:

Tyco Electronics Japan GK connector with receptacle housing
1-178128-3 and receptacle contact 1-175218-2

Crimping terminal :

2-4

9.3.2.8 Details of cable K26

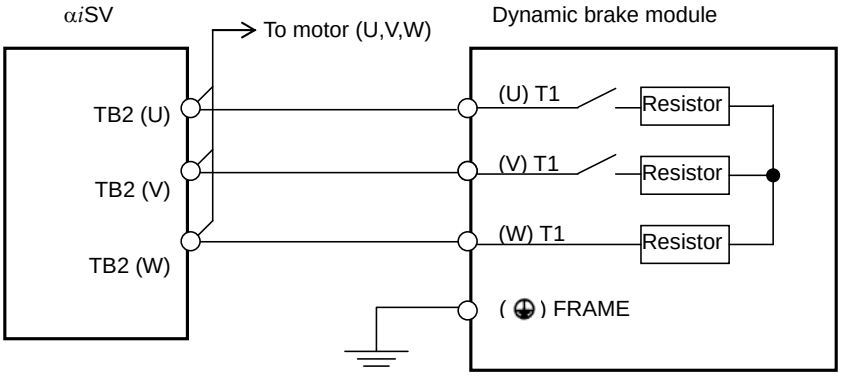

Example cable :

Fire-retardant polyflex wire (maximum conductor temperature 105°C) or equivalent to LMFC manufactured by The Furukawa Electric Co., Ltd., 5.5 mm^2 or larger

Crimping terminal :

DBM side 5.5-5 (A06B-6079-H401)
5.5-8 (A06B-6069-H300)
αiSV side 5.5-6 (αi SV 360, αi SV 180HV)
5.5-10 (αi SV 360HV)

© MyFANUC 2D5504D5BAC945D385F48627D4977F6C

9.3.2.9 Details of cable K102

Cable K102 is used to supply the power (24VDC) for driving a dynamic brake module to the αi SV.

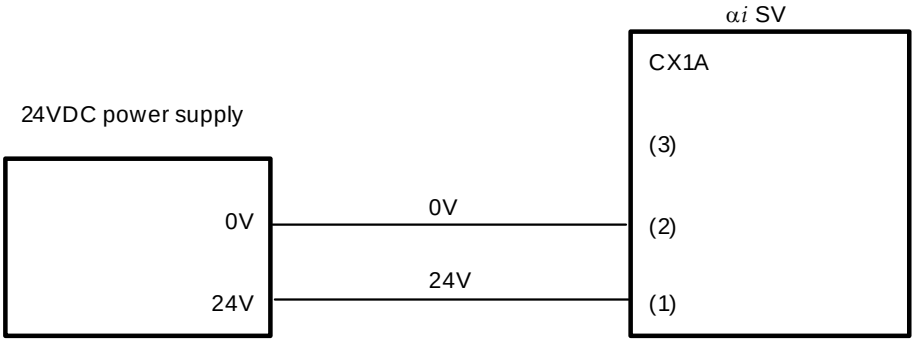

Example cable :

Two-conductor polyvinyl heavy-duty power cable (JIS C3312)
Conductor size of : 1.25mm^2 (50/0.18)
PVC sheath 9.6 mm in diameter

Amplifier side

Connector specification:

Tyco Electronics Japan GK connector with receptacle housing 1-178128-3 and receptacle contact 1-175218-2

> ⚠ **CAUTION**
> When a DBM driven at 24 VDC (A06B-6079-H403 or A06B-6069-H301) is used, the DBM breaks if 200 VAC is input to CX1A or CX1B.

9.3.2.10 Details of cable K27

Cable K27 is an optical fiber cable used in the FSSB interface.

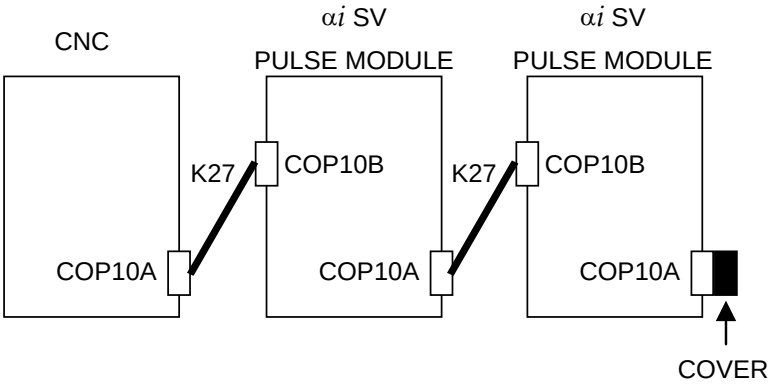

- The cable is run from connector COP10A in the CNC, αi SV, or pulse module to connector COP10B in the αi SV or pulse module.
- Connector COP10A of a module at the end of the cable chain must be covered with the cap supplied with the module.
- Refer to the applicable CNC connection manual for detailed specifications of the optical fiber cable.

© MyFANUC 2D5504D5BAC945D385F48627D4977F6C

9.3.2.11 Connecting the battery (for the absolute Pulsecoder)

The following two methods can be used to connect the batteries for the absolute Pulsecoder: [connection method 1] and [connection method 2]

NOTE

1 Since the battery is a part that is in need of periodic maintenance by nature, it is recommended to use [connection method 1]. In this case, commercial batteries (four R20 alkaline batteries), which are easy to purchase, can be used.
2 The built-in batteries used in [connection method 2] must be purchased directly from FANUC. It is recommended that spare built-in batteries is purchased.
3 Do not use both [connection method 1] and [connection method 2] at the same time. Otherwise, multiple batteries are connected to the same BATL(B3) line, and a short-circuit will occur between the output voltages of different batteries, possibly resulting in the batteries becoming very hot, which is dangerous.

[Connection method 1]

(1) Supplying power from one battery unit to more than one αiSV (1)

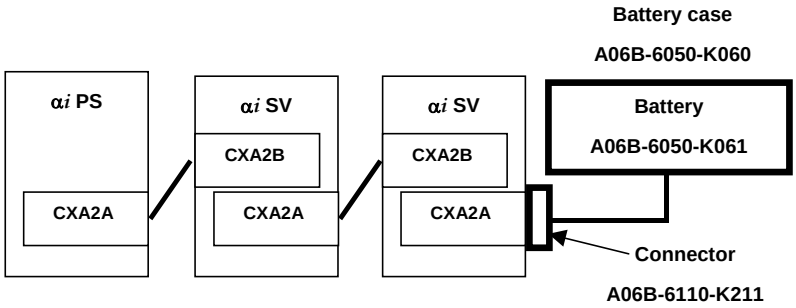

- A battery case (A06B-6050-K060) and four R20 alkaline batteries (A06B-6050-K061) are available as options. Commercial R20 alkaline batteries can also be used.

[Connection between the battery case and amplifier]

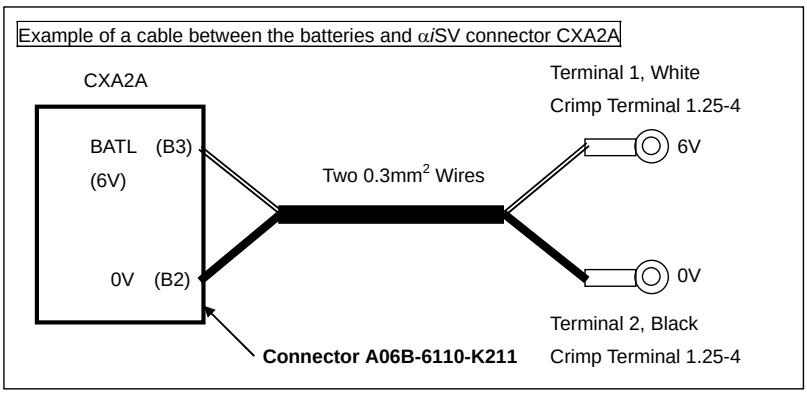

- A connector (A06B-6110-K211) for connecting batteries is available as an option.

© MyFANUC 2D5504D5BAC945D385F48627D4977F6C

[Connection between amplifiers]

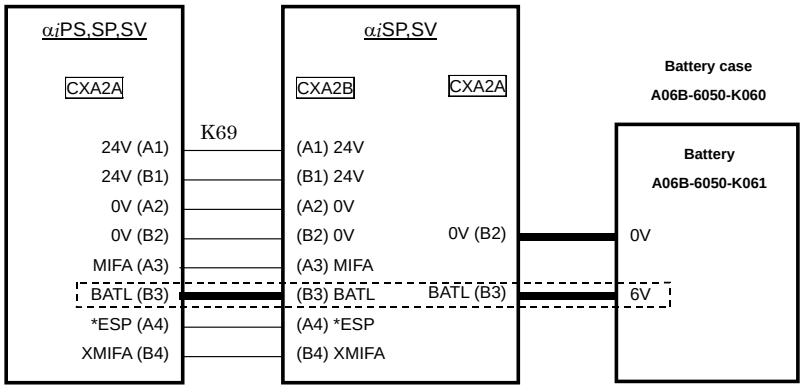

- The BATL(B3) is an interface for supplying power from one absolute Pulsecoder battery unit to more than one αi SV.

- Specification of the connector

Manufacturer	Tyco Electronics Japan GK
Connector specification	D-2100 series Housing 1-1318119-4 (1 pieces) Contact 1318107-1 (4 pieces) [Ordering information : A06B-6110-K210 connector only]
Conductor size	0.5mm^2, AWG20
Instruction outer diameter	1.08 to 2.83 mm

NOTE

1 Up to six servo motors can be connected to one battery.
2 The life of the batteries are about two years if they are used for six αi series servo motors and one year if they are used for six α series servo motors.

⚠ **WARNING**

Do not connect more than one battery to the same BATL(B3) line.
Otherwise, a short-circuit will occur between the output voltages of different batteries, possibly resulting in the batteries becoming very hot, which is dangerous.

© MyFANUC 2D5504D5BAC945D385F48627D4977F6C

(2) Supplying power from one battery unit to more than one αiSV (2)

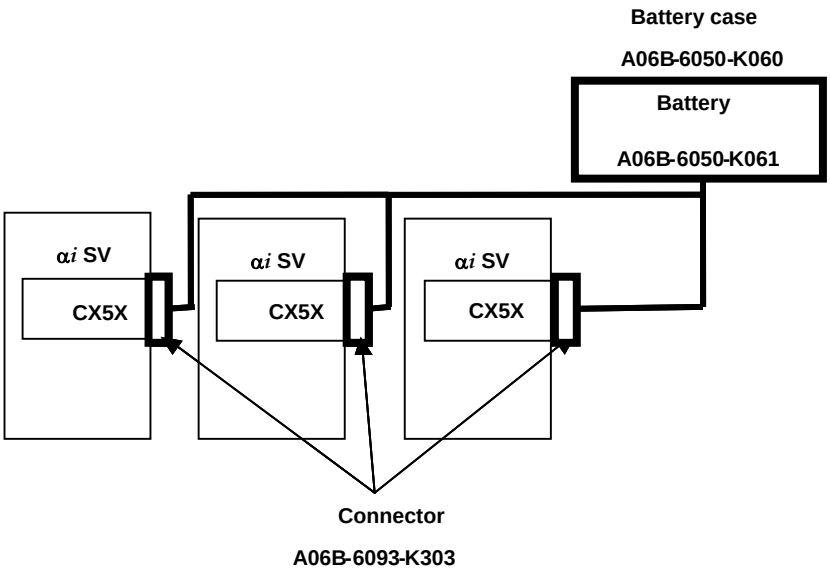

[Connection between the battery case and amplifier]

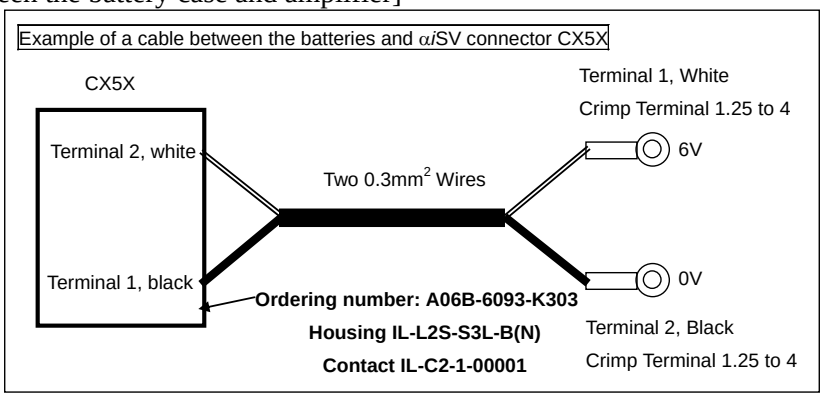

- Specification of the connector

Drawing No.	A06B-6093-K303
Manufacturer	Japan Aviation Electronics Industry
Manufacturer part number	Housing: IL-L2S-S3L-B(N), Quantity: 1 Contact: IL-C2-1-00001, Quantity: 2

To connect the contacts to the cable, a special crimping tool is required. Contact the manufacturer (Japan Aviation Electronics Industry Ltd.).

- A battery case (A06B-6050-K060) and four size-D alkaline dry cells (A06B-6050-K061) are available as options. Size-D alkaline dry cells are commercially available.

© MyFANUC 2D5504D5BAC945D385F48627D4977F6C

[Connection between amplifiers]

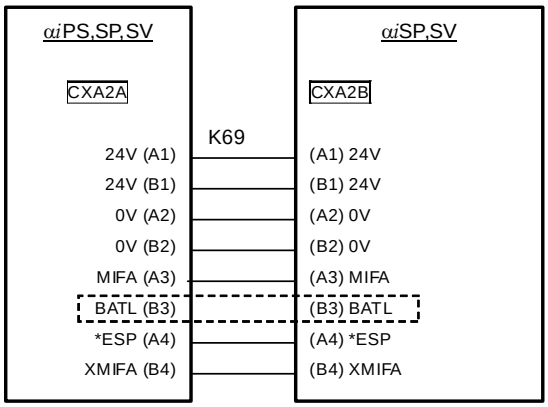

Leave BATL(B3) open.

NOTE
1 Up to six servo motors can be connected to one battery.
2 The battery service life is about two years for the αi series servo motor or about one year for the α series servo motor.

⚠ **WARNING**
Do not connect multiple batteries to the same BATL(B3) line. Otherwise, a short-circuit will occur between the output voltages of different batteries, possibly resulting in the batteries becoming very hot, which is dangerous.

[Connection method 2]

(1) Incorporating built-in batteries in each αi SV
(Models other than αi SV 360, αi SV 180HV, and αi SV 360HV)

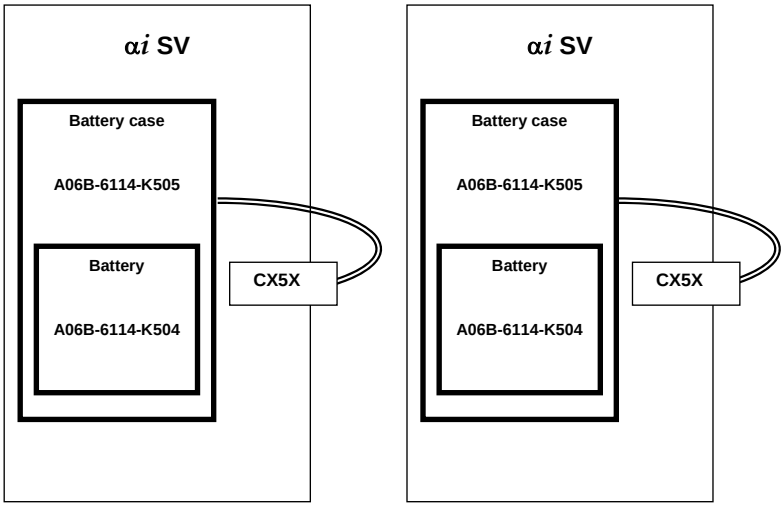

- Using the built-in battery (A06B-6114-K504) requires the battery case (A06B-6114-K505).
A cover originally mounted at the αi SV battery location cannot be used with the battery.

© MyFANUC 2D5504D5BAC945D385F48627D4977F6C

> ⚠ **WARNING**
> 1 When using the built-in battery, never connect the BATL(B3) of the connector CXA2A/CXA2B.
> Otherwise, a short-circuit will occur between the output voltages of different αi SV batteries, possibly resulting in the batteries becoming very hot, which is dangerous.
> 2 Do not connect more than one battery to the same BATL(B3) line.
> Otherwise, a short-circuit will occur between the output voltages of different batteries, possibly resulting in the batteries becoming very hot, which is dangerous.

(2) Incorporating built-in batteries in each αi SV
For the αi SV 360, αi SV 180HV, and αi SV 360HV

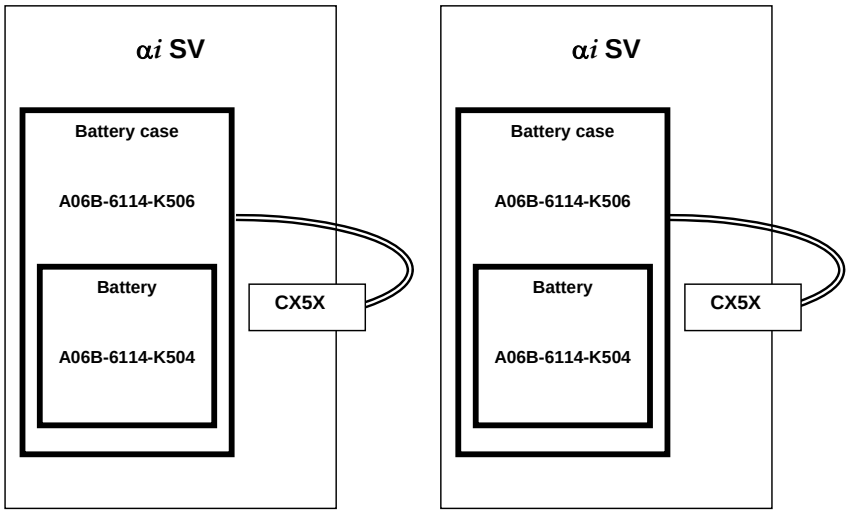

- Using the built-in battery (A06B-6114-K504) requires the battery case (A06B-6114-K505).

> ⚠ **WARNING**
> 1 When using the built-in battery, never connect the BATL(B3) of the connector CXA2A/CXA2B.
> Otherwise, a short-circuit will occur between the output voltages of different αi SV batteries, possibly resulting in the batteries becoming very hot, which is dangerous.
> 2 Do not connect more than one battery to the same BATL(B3) line.
> Otherwise, a short-circuit will occur between the output voltages of different batteries, possibly resulting in the batteries becoming very hot, which is dangerous.

Battery life

When the αi series servo motor is used, the batteries need to be replaced periodically as follows:

Battery ordering specification	Standard backup life	Remark
A06B-6050-K061	2 years/6 axes	Size D alkaline dry cell × 4
A06B-6114-K504	1 year/3 axes	Lithium battery

© MyFANUC 2D5504D5BAC945D385F48627D4977F6C

9.3.2.12 Details of cable K70

Connect the αi SV flange to the grounding plate through a grounding cable. (Protective ground connection)
See Subsection 9.3.1.7 for detailed descriptions about the K70.

9.3.3 αi SP Series Connection Diagram

αi SP series

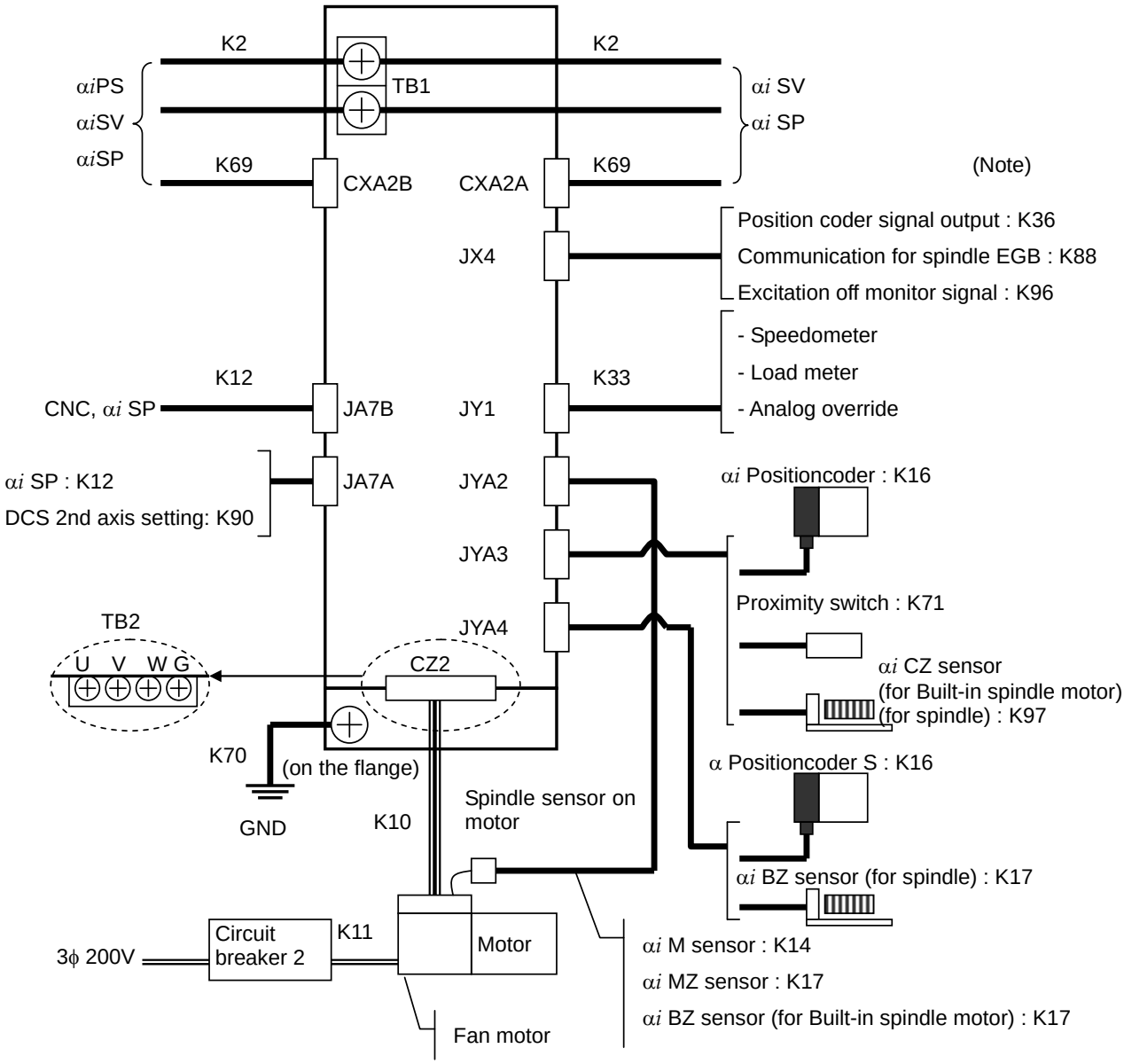

NOTE
This diagram applies to TYPE B. For TYPE A, neither the JYA4 function nor the JX4 function (except the excitation off monitor function) is provided.
The excitation off monitor signal is not used in A06B-6111, -6112, -6121, and -6122.

© MyFANUC 2D5504D5BAC945D385F48627D4977F6C

9.3.3.1 Details of cable K2

See Item 9.3.1.2.

9.3.3.2 Details of cable K69

See Item 9.3.1.4.

9.3.3.3 Details of cable K10 (power cable)

For the αi SP 2.2 and αi SP 5.5, a connector (D-5000) is used to attach the αi SP motor power cable. For other models, a terminal block is used for connection.

This subsection does not include the dimensions of the crimp terminal or the shape of the motor-side connector.
Refer to "AC SPINDLE MOTOR αi series Descriptions (B-65272EN)" for these items.

About the cable specification

Select the cable specification by considering the following conditions for use.
<1> Motor current rating or current needed in use on a real machine
<2> Cable type (heat resistance temperature, etc.)
<3> Environment in which the cable is installed (operating ambient temperature, etc.)
<4> Need of water proofing (pay attention to the diameter of the applicable cable clamp)
<5> Certification for CE marking (compliance with various safety standards and EMC standard)
<6> Securing insulation space among the cable pins at the time of cabling

> ⚠ **CAUTION**
> If the phase order of the power lines is incorrect, an unpredictable motor operation may occur.

Connection through a connector

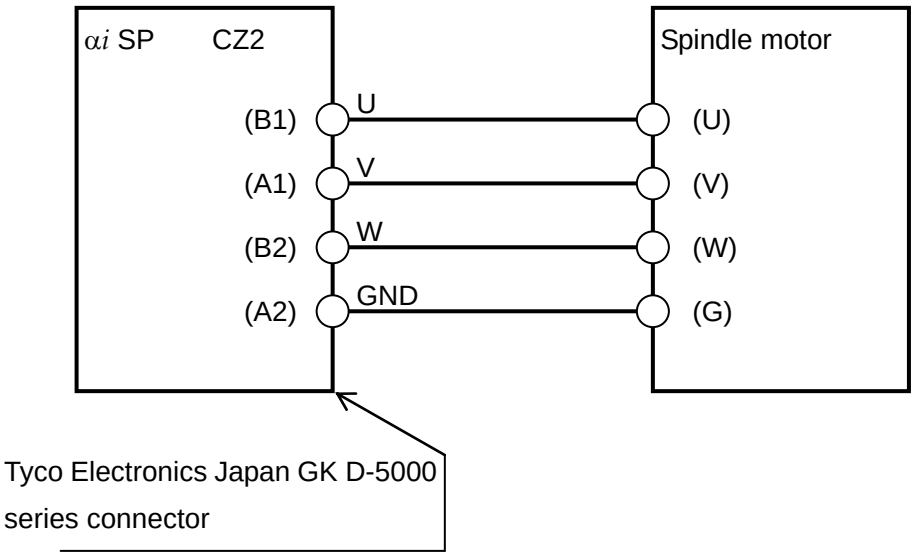

© MyFANUC 2D5504D5BAC945D385F48627D4977F6C

Location of connector pins

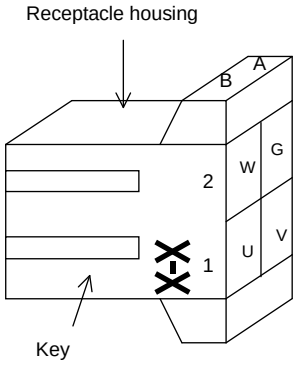

- 200-V input series

Key specification	Applicable models
XX	αi SP 2.2, αi SP 5.5 αi SP 5.5HV

See Subsection 9.4.2, “Tyco Electronics Japan GK D-5000 Series Connector” for details.

Connection through a terminal block

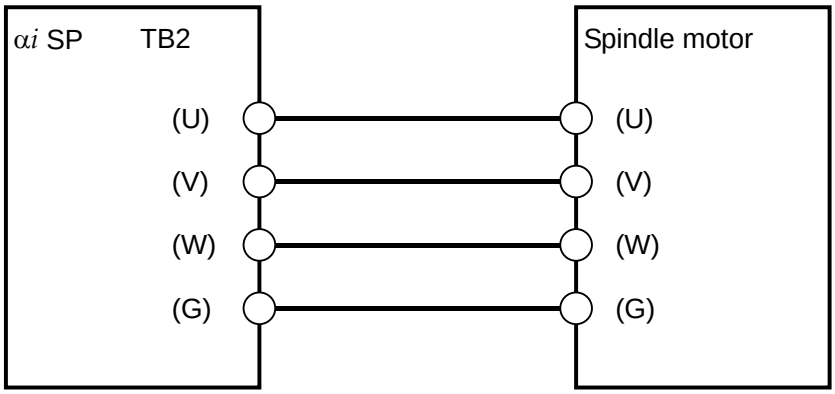

- 200-V input series

Cables should be connected to the αi SP using crimp terminals as listed in the following table.

Amplifier models	Terminal screw	Rigid torque
αi SP 11, αi SP 15	M4	1.1 to 1.5Nm
αi SP 22, αi SP 26, αi SP 30, αi SP 37	M6	3.5 to 4.5Nm
αi SP 45, αi SP 55	U V W : M10	15 to 16Nm
	G : M6	3.5 to 4.5Nm

- 400-V input series

Cables should be connected to the αi SP using crimp terminals as listed in the following table.

Amplifier models	Terminal screw	Rigid torque
αi SP 11HV, αi SP15HV	M4	1.1 to 1.5Nm
αi SP 30HV, αi SP 45HV	M6	3.5 to 4.5Nm
αi SP 75HV , αi SP 100HV	U,V,W : M10	15 to 16Nm
	G : M6	3.5 to 4.5Nm

© MyFANUC 2D5504D5BAC945D385F48627D4977F6C

9.3.3.4 Details of cable K70

Connect the αi SP flange to the grounding plate through a grounding cable. (Protective ground connection)
For connection with the αi SP, use the crimp terminal selected according to the following table.

200-V input series

Amplifier model	Terminal screw	Rigid torque
αi SP 2.2, αi SP 5.5, αi SP 11 αi SP 15, αi SP 22, αi SP 26, αi SP 30, αi SP 37	M5	2 to 2.5Nm
αi SP 45, αi SP 55	M6	3.5 to 4.5Nm

See Subsection 9.3.1.7 for details of the cable K70.

400-V input series

Amplifier model	Terminal screw	Rigid torque
αi SP 5.5HV , αi SP 11HV αi SP 15HV, αi SP 30HV, αi SP 45HV	M5	2 to 2.5Nm
αi SP 75HV, αi SP 100HV	M6	3.5 to 4.5Nm

See Subsection 9.3.1.7 for details of the cable K70.

9.3.3.5 Details of cable K11

See FANUC AC SPINDLE MOTOR αi series DESCRIPTIOPNS (B-65272EN) for details of this Subsection.

9.3.3.6 Details of cable K12

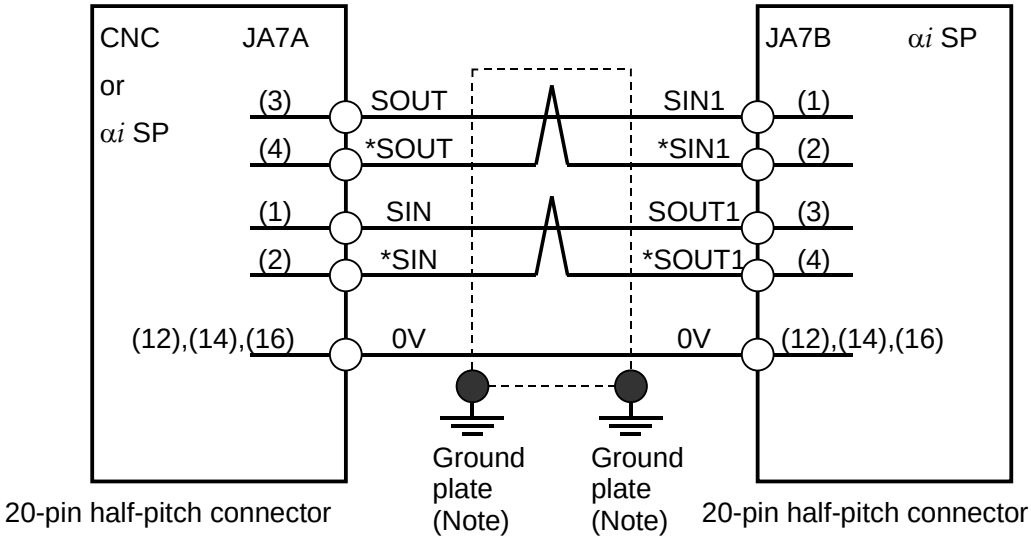

Cable specification: 0.09 mm^2 twisted pair with common shielded
Recommended cable (wire only): A66L-0001-0284#10P
See Section 9.4.1 for details of connectors applied to recommended cable.
See Appendix B for details of cables.

© MyFANUC 2D5504D5BAC945D385F48627D4977F6C

NOTE

If cable K12 is installed near the likes of a power cable, its shielding wire must be connected to a grounding plate. If an αi SP is installed near the CNC or another αi SP, however, it is not necessary to connect the shielding wire to a grounding plate.

Connector pin assignment

JA7A and JA7B

9	5V (Note 1)	10		19		20	5V (Note 1)
7		8		17		18	5V (Note 1)
5		6		15		16	0V
3	SOUT	4	*SOUT	13		14	0V
1	SIN	2	*SIN	11		12	0V

NOTE

1 The +5V pin is intended for optical link transmission based on the optical I/O link adapter. Do not use it when a metal cable is being used; otherwise, the +5 V line of the CNC will be short-circuited with that of the αi SP.

2 αi SP serial interface connection using an optical fiber cable
The use of an optical I/O link adapter with the αi SP serial interface extends the maximum allowable length of the optical fiber cable to up to 200 m.
Use optical fiber cables in the following cases:
- When the required cable length is 20 m or longer.
- When the cable must be extended across multiple cabinets, and the cabinets cannot be connected with a grounding wire 5.5 mm^2 or larger.
- The cable may be affected by noise, for example, if the cable is laid near a strong magnetic noise source like a welding machine or in parallel with a power line over a long distance.

- Electrical interface connection between two αi SP units

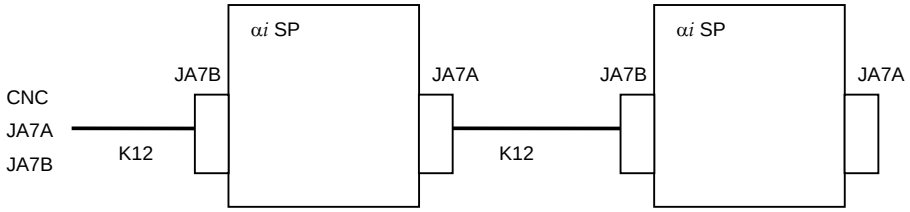

© MyFANUC 2D5504D5BAC945D385F48627D4977F6C

- Electrical interface connection between four αi SP units in i series

Refer to the applicable CNC Connection Manual (Hardware) for a detailed description of the serial spindle connector panel.

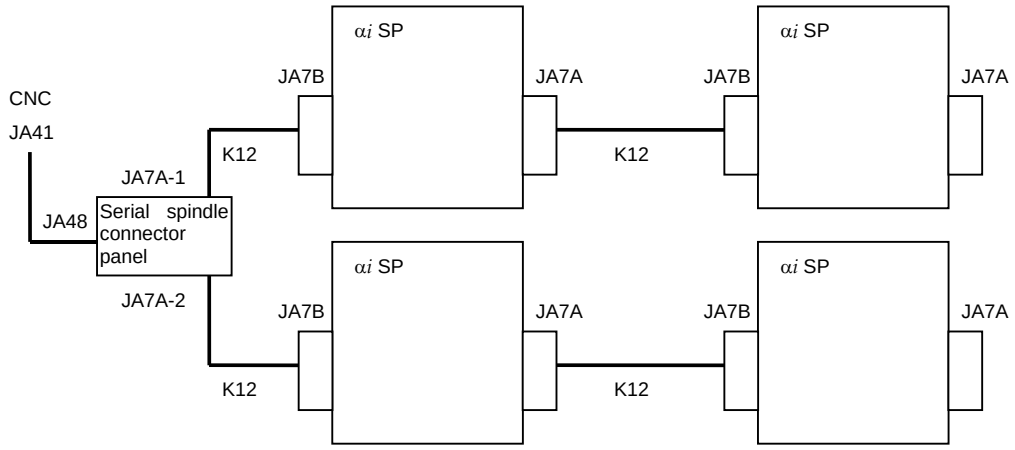

9.3.3.7 Details of cable K14

(1) For the spindle motor with αiM sensor (except for model αiI 0.5)

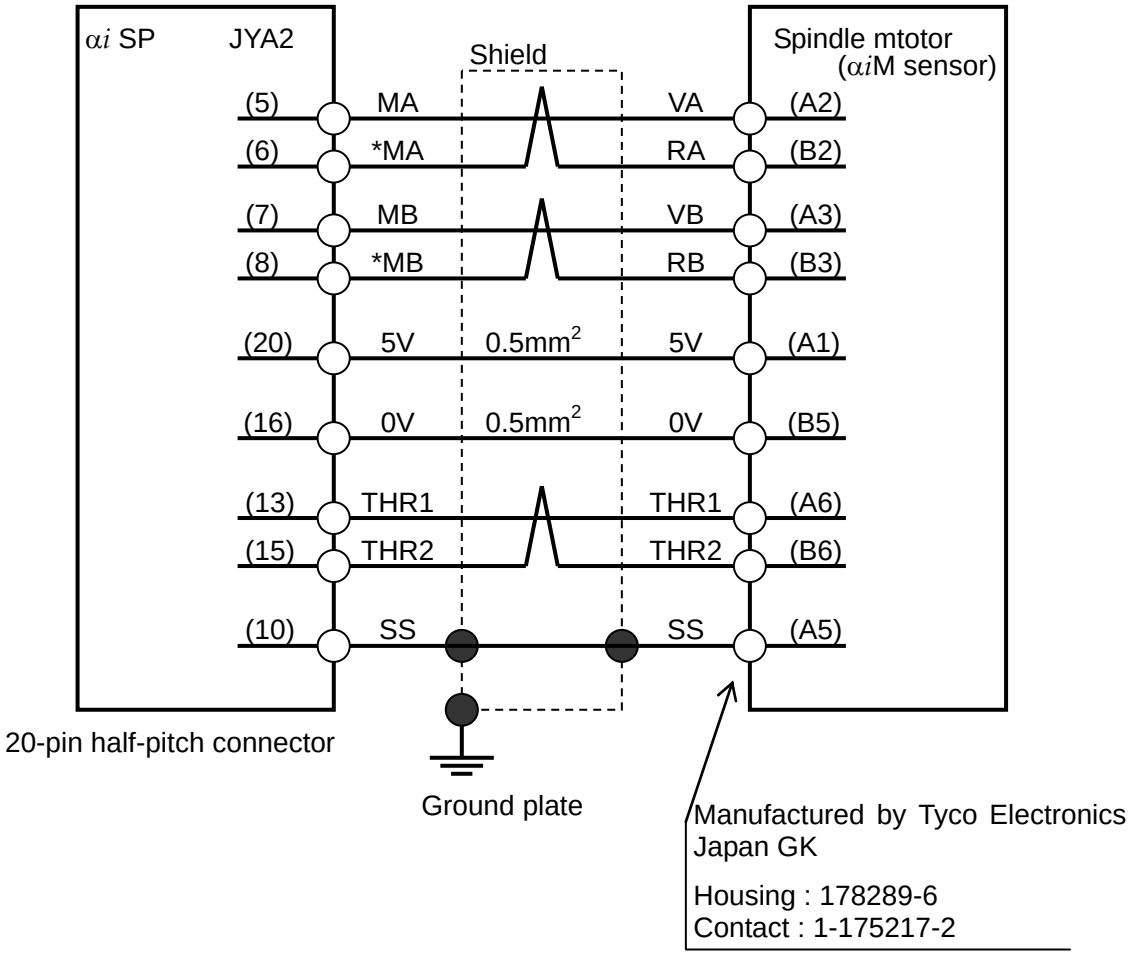

Cable specification : 6 common shielded cable (Three 0.18mm^2 twisted pairs + 0.5mm^2 wires)

© MyFANUC 2D5504D5BAC945D385F48627D4977F6C

Recommended cable conductor : A66L-0001-0368
See Section 9.4.1 for explanations about the JYA2-side connector that matches the recommended cable.
See Appendix B, "About Cable Conductors," for detailed explanations about the cable.

NOTE
If only one 5 V line and only one 0 V line are used, use pins 20 and 16 for them, so that, if the connector is attached the wrong way, the sensor can be prevented from being damaged.

⚠ WARNING
If the feedback signal is connected incorrectly, an unpredictable motor operation may occur.

- Connector pin assignment

JYA2

9	5V	10	SS	19	#	20	5V
7	MB	8	*MB	17	#	18	5V
5	MA	6	*MA	15	THR2	16	0V
3	#	4	#	13	THR1	14	0V
1	MZ	2	*MZ	11	#	12	0V

NOTE
Do not use any pin that is marked #, because they may already be in use for input/output signals for an optional PCB.

Pin arrangement of the connector (manufactured by Tyco Electronics Japan GK) on the motor side

A1	+5V	B1	
A2	PA	B2	RA
A3	PB	B3	RB
A4		B4	
A5	SS	B5	0V
A6	THR1	B6	THR2

© MyFANUC 2D5504D5BAC945D385F48627D4977F6C

(2) For the spindle motor with αiM sensor (model αiI 0.5)

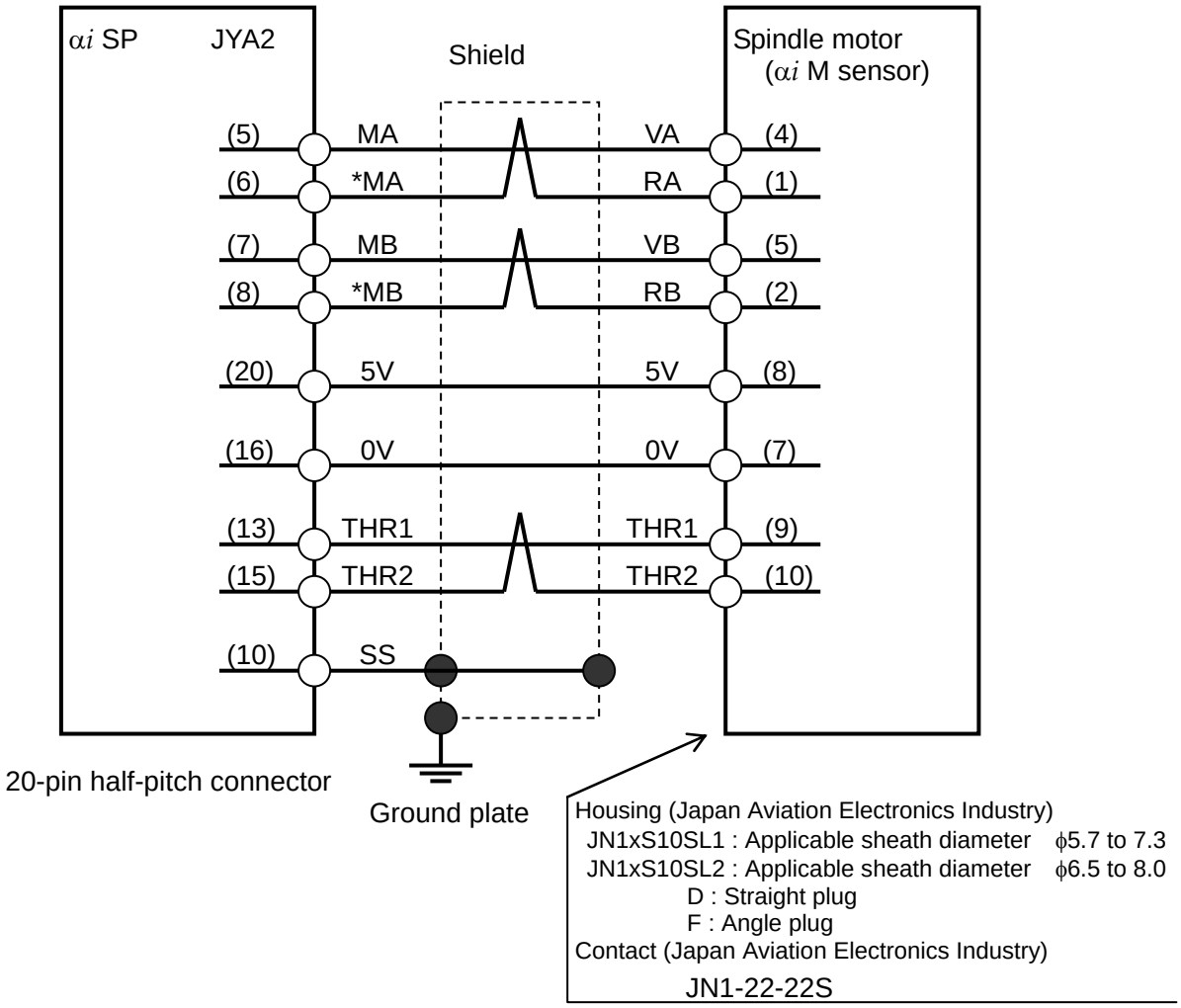

Cable specification : 2 common shielded cable (Three 0.2mm^2 twisted pairs + 0.3mm^2 wires)
Recommended cable conductor : A66L-0001-0482
See Section 9.4.1 for explanations about the JYA2-side connector that matches the recommended cable.
See Appendix B, "About Cable Conductors," for detailed explanations about the cable.

NOTE
Keep the electrical resistance across each of the 5V and 0V lines to within 5.7Ω.
Recommended cable : Up to 41m

© MyFANUC 2D5504D5BAC945D385F48627D4977F6C

Connector pin assignment

Pin arrangement of the connector (manufactured by Japan Aviation Electronics Industry) on the motor side

1	RA
2	RB
3	
4	VA
5	VB
6	
7	0V
8	5V
9	THR1
10	THR2

- Crimp tool specification
  A06B-6114-K201/JN1S
  (Applicable wire diameter : AWG#22 to #24, AWG#26 to #28)

- Connector kit specification
  A06B-6114-K200/S : Straight plug (including a contact)
  A06B-6114-K200/E : Elbow plug (including a contact)

© MyFANUC 2D5504D5BAC945D385F48627D4977F6C

9.3.3.8 Details of cable K16

(1) For αi position coder

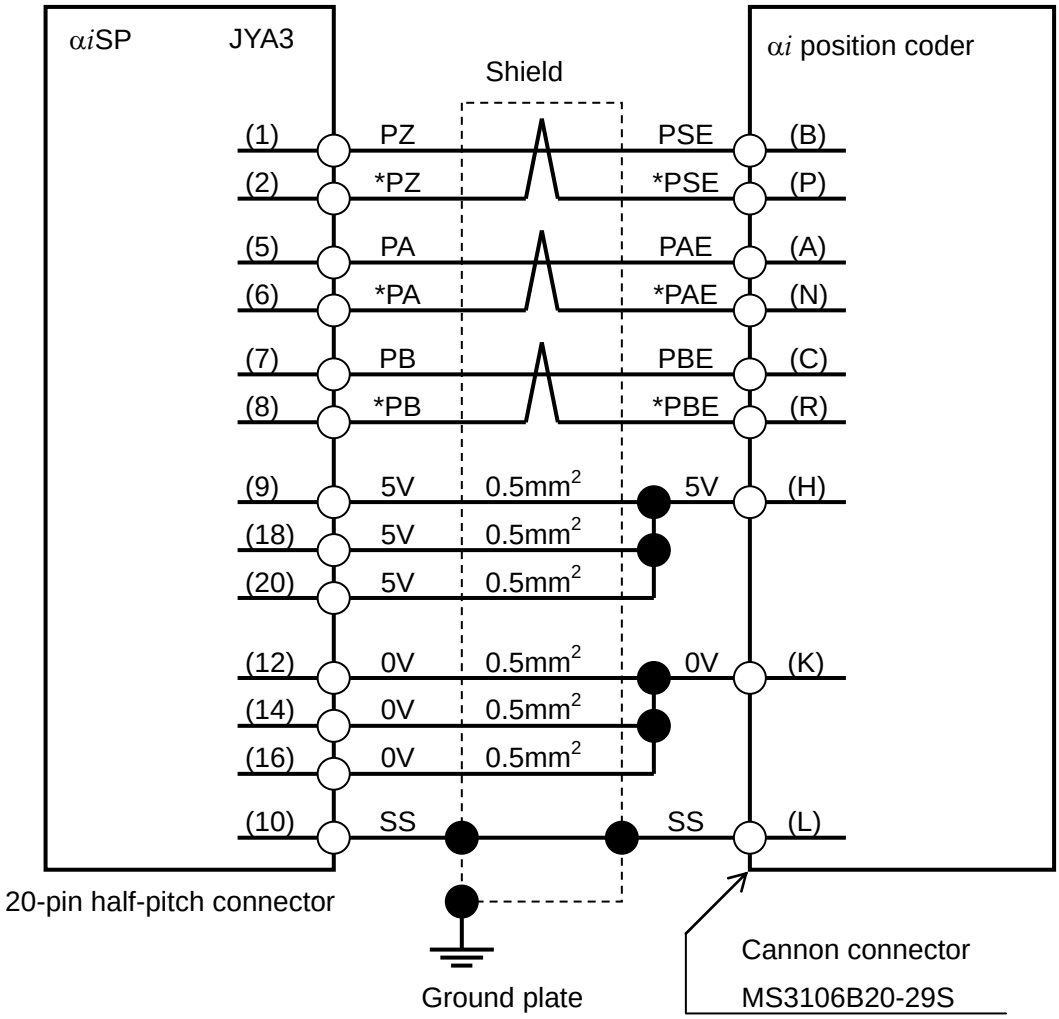

Using cable conductor

Signal name	Configuration	Ordering number
5V, 0V	0.5mm^2 wires × 6	A66L-0001-0286
VA, RA, VB, RB, VZ, RZ	0.18mm^2 twisted pair wires × 3	

NOTE

1 For details of the recommended wire material, see Appendix B, "CABLES".
2 If only one 5 V line and only one 0 V line are used, use pins 20 and 16 for them, so that, if the connector is attached the wrong way, the sensor can be prevented from being damaged.
3 The pins other than those specified herein may be used for other options; do not connect a line to any of these pins.

© MyFANUC 2D5504D5BAC945D385F48627D4977F6C

- Connector pin assignment

JYA3

9	5V	10	SS	19	#	20	5V
7	PB	8	*PB	17	#	18	5V
5	PA	6	*PA	15	EXTSC	16	0V
3	#	4	#	13	SCCOM	14	0V
1	PZ	2	*PZ	11	24V	12	0V

NOTE

Do not use any pin that is marked #, because they may already be in use for input/output signals for an optional PCB.

Pin arrangement of the cannon connector on the position coder side

A	PAE	B	PSE	C	PBE
D		E		F	
G		H	+5V	J	
K	0V	L	SS	M	
N	*PAE	P	*PSE	R	*PBE
S		T			

© MyFANUC 2D5504D5BAC945D385F48627D4977F6C

(2) For α position coder S

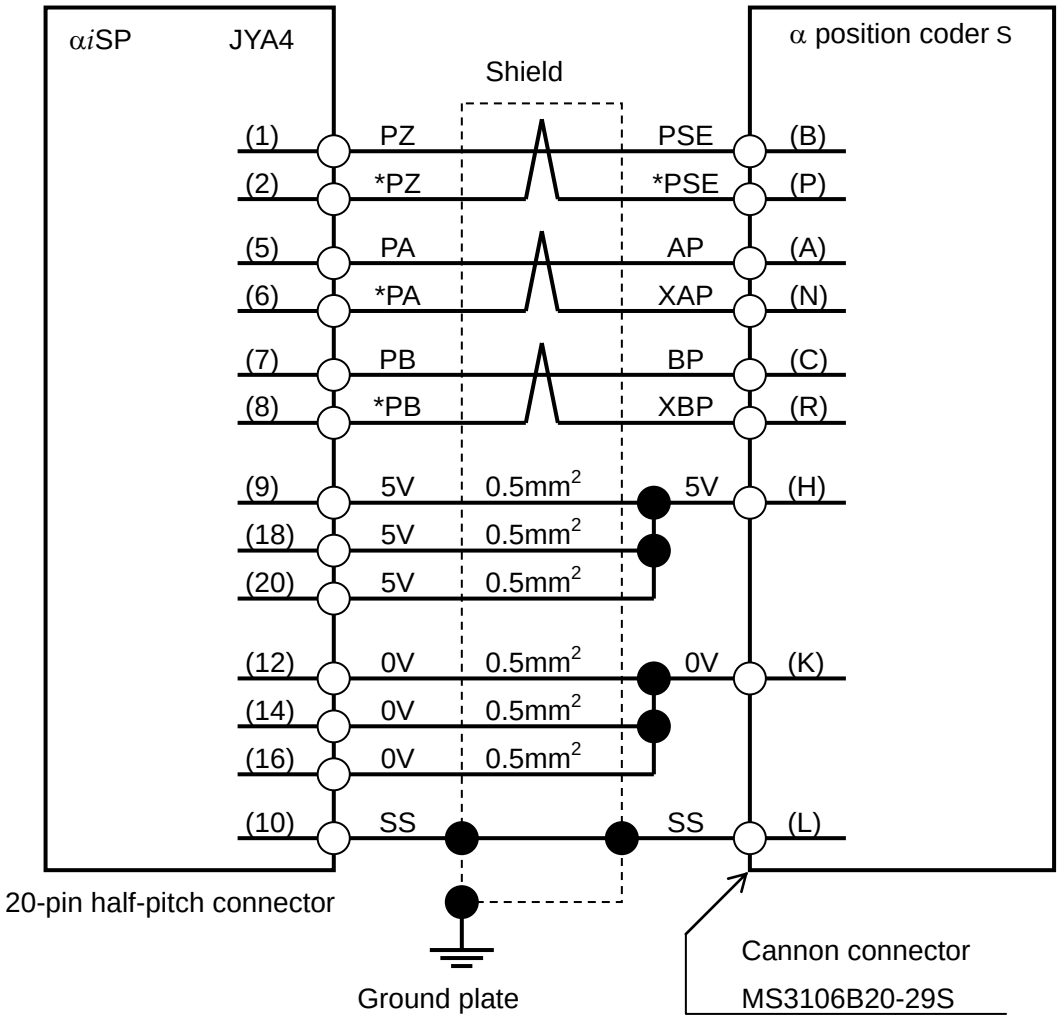

Using cable conductor

Signal name	Configuration	Ordering number
5V, 0V	0.5mm^2 wires × 6	A66L-0001-0286
VA, RA, VB, RB, VZ, RZ	0.18mm^2 twisted pair wires × 3	

NOTE

1 For details of the recommended wire material, see Appendix B, "CABLES".
2 If only one 5 V line and only one 0 V line are used, use pins 20 and 16 for them, so that, if the connector is attached the wrong way, the sensor can be prevented from being damaged.
3 The pins other than those specified herein may be used for other options; do not connect a line to any of these pins.

© MyFANUC 2D5504D5BAC945D385F48627D4977F6C

- Connector pin assignment

JYA4

9	5V	10	SS	19	#	20	5V
7	PB	8	*PB	17	#	18	5V
5	PA	6	*PA	15	#	16	0V
3	#	4	#	13	#	14	0V
1	PZ	2	*PZ	11	#	12	0V

NOTE

Do not use any pin that is marked #, because they may already be in use for input/output signals for an optional PCB.

Pin arrangement of the cannon connector on the position coder side

A	AP	B	PSE	C	BP
D		E		F	
G		H	+5V	J	
K	0V	L	SS	M	
N	XAP	P	*PSE	R	XBP
S		T			

© MyFANUC 2D5504D5BAC945D385F48627D4977F6C

9.3.3.9 Details of cable K17

(1) For the spindle motor with αi MZ sensor (except for model αiI 0.5)

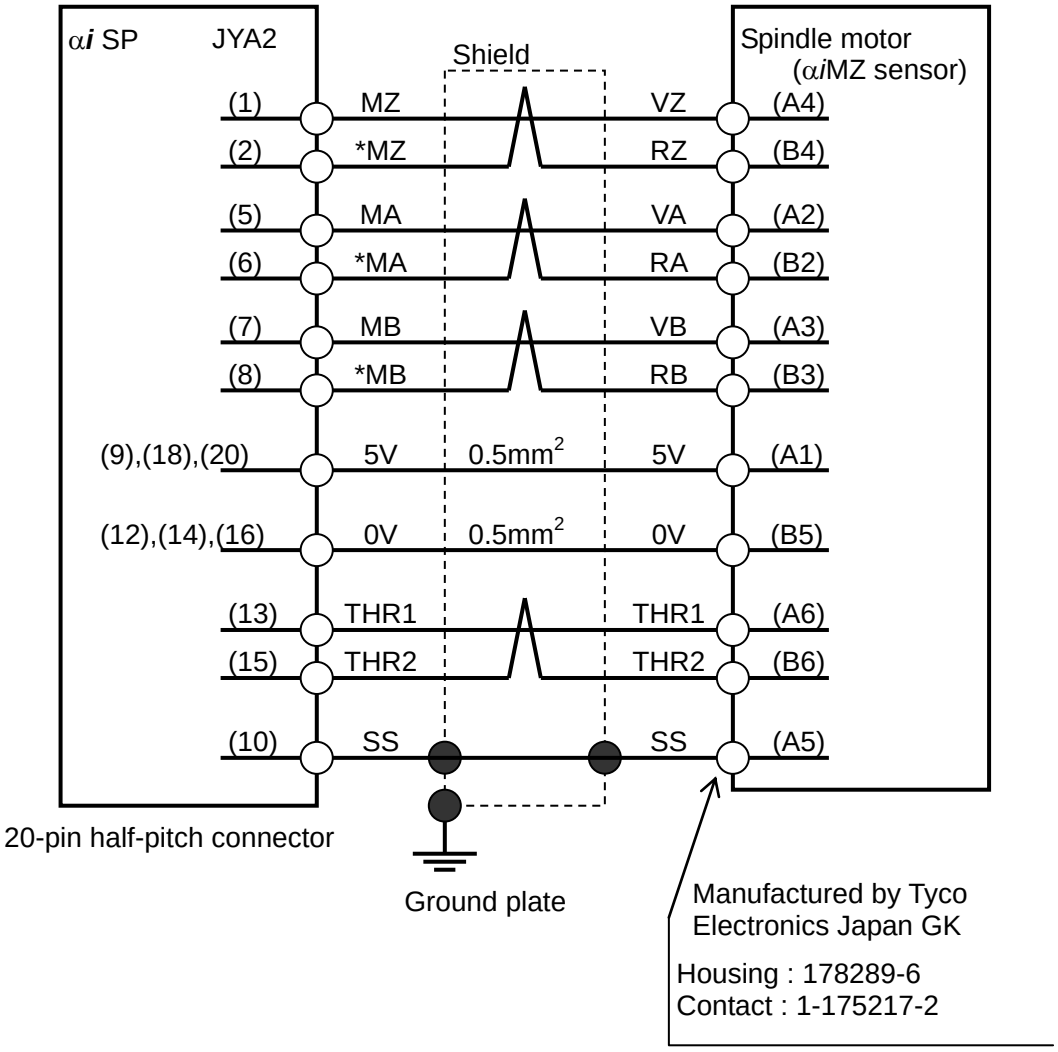

Cable specification : 6 common shielded cable (Four 0.18mm^2 twisted pairs + 0.5mm^2 wires)
Recommended cable conductor : A66L-0001-0368
See Section 9.4.1 for explanations about the JYA2-side connector that matches the recommended cable.
See Appendix B, "About Cable Conductors," for detailed explanations about the cable.

NOTE
If only one 5 V line and only one 0 V line are used, use pins 20 and 16 for them, so that, if the connector is attached the wrong way, the sensor can be prevented from being damaged.

⚠ **WARNING**
If the feedback signal is connected incorrectly, an unpredictable motor operation may occur.

© MyFANUC 2D5504D5BAC945D385F48627D4977F6C

- Connector pin assignment

JYA2

See Subsection for cable K14.

JYA4

9	5V	10	SS	19	#	20	5V
7	MB	8	*MB	17	#	18	5V
5	MA	6	*MA	15		16	0V
3	#	4	#	13		14	0V
1	MZ	2	*MZ	11	#	12	0V

NOTE

Do not use any pin that is marked #, because they may already be in use for input/output signals for an optional PCB.

Pin arrangement of the connector (manufactured by Tyco Electronics Japan GK) on the motor side

A1	+5V	B1	
A2	VA	B2	RA
A3	VB	B3	RB
A4	VZ	B4	RZ
A5	SS	B5	0V
A6	THR1	B6	THR2

© MyFANUC 2D5504D5BAC945D385F48627D4977F6C

(2) For the spindle motor with αi MZ sensor (model αiI0.5)

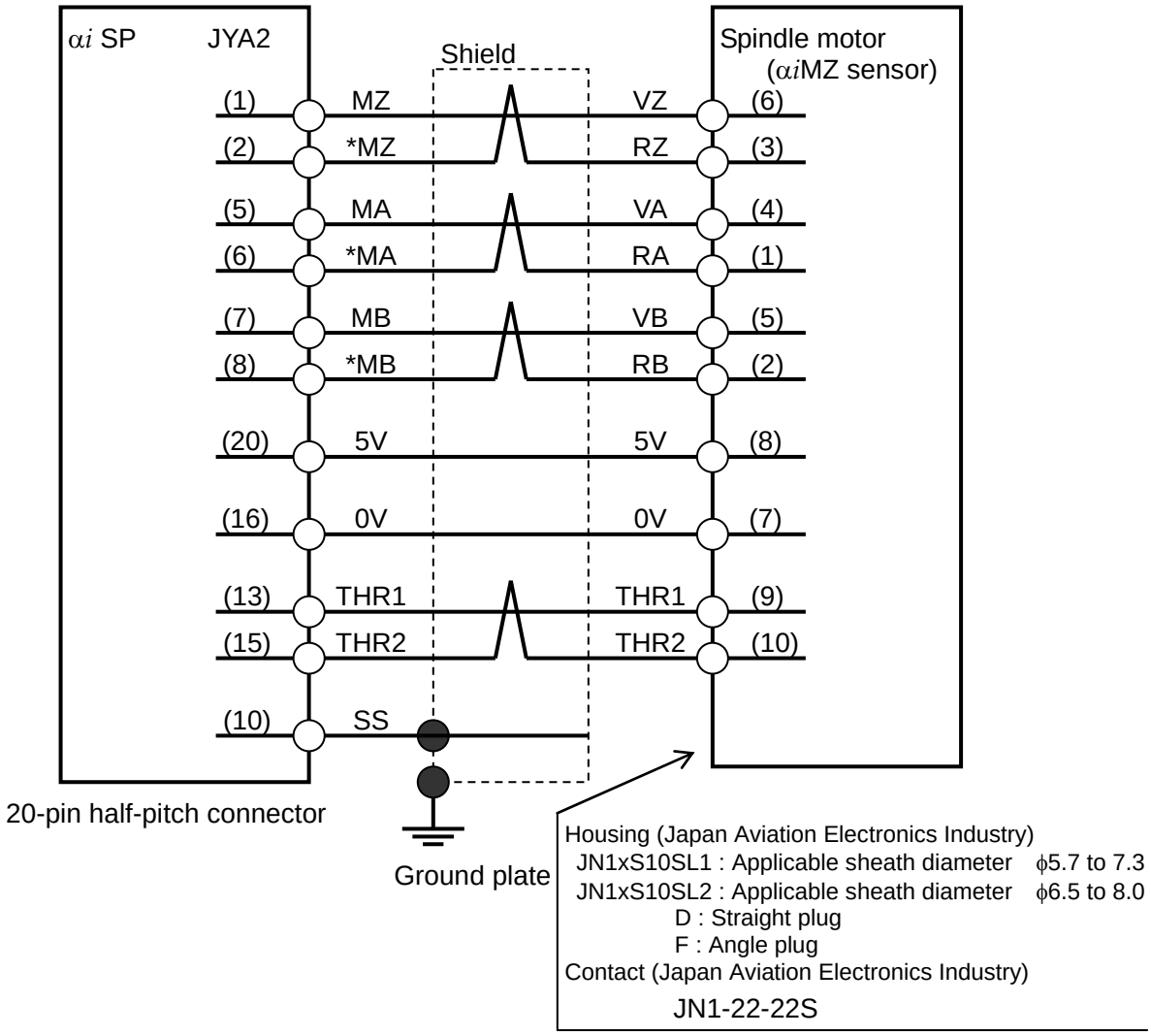

Cable specification : 2 common shielded cable (Four 0.2mm^2 twisted pairs + 0.3mm^2 wires)
Recommended cable conductor : A66L-0001-0482
See Section 9.4.1 for explanations about the JYA2-side connector that matches the recommended cable.
See Appendix B, "About Cable Conductors," for detailed explanations about the cable.

NOTE
Keep the electrical resistance across each of the 5V and 0V lines to within 4Ω.
Recommended cable : Up to 28m

© MyFANUC 2D5504D5BAC945D385F48627D4977F6C

- Connector pin assignment

Pin arrangement of the connector (manufactured by Japan Aviation Electronics Industry) on the motor side

1	RA
2	RB
3	RZ
4	VA
5	VB
6	VZ
7	0V
8	5V
9	THR1
10	THR2

- Crimp tool specification
  A06B-6114-K201#JN1S
  (Applicable wire diameter : AWG#22 to #24, AWG#26 to #28)

- Connector kit specification
  A06B-6114-K200#S : Straight plug (including a contact)
  A06B-6114-K200#E : Elbow plug (including a contact)

© MyFANUC 2D5504D5BAC945D385F48627D4977F6C

(3) For αiBZ Sensor (for spindle) (for A860-2150-Txxx with waterproof connectors)

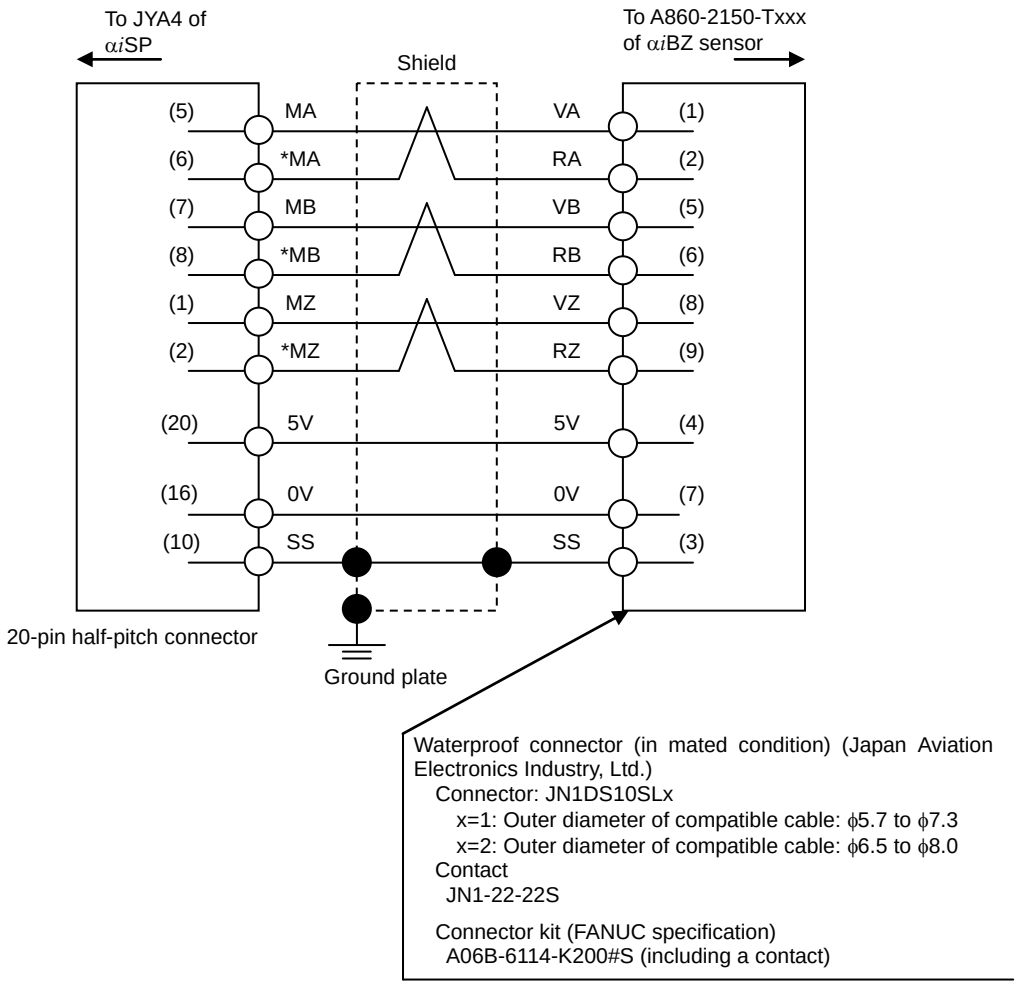

NOTE

1 Cable K17 needs to be prepared by the customer. Also, connectors are not supplied and must be purchased separately.

2 Make sure that the ground plate is placed as close to αiSP as possible.

Using cable conductor

Signal name	Configuration	Ordering number
5V, 0V	Connect one 0.3mm^2 cable each.	A66L-0001-0482
VA, RA, VB, RB, VZ, RZ	0.2mm^2 twisted-pair wire × 3	

Tools for crimp connector assembly on the αiBZ sensor side (manufactured by Japan Aviation Electronics Industry, Ltd.)

Type	Manufacturer specification	Ordering number	Compatible wire diameter
Crimping tool	CT150-2-JN1-E	A06B-6114-K201#JN1E	21AWG(0.5mm^2, 20/0.18) 23AWG(0.3mm^2) 25AWG(0.18mm^2)
Extractor	ET-JN1	A06B-6114-K201#JN1R	----------

© MyFANUC 2D5504D5BAC945D385F48627D4977F6C

(4) For αiBZ Sensor (for built-in spindle motor) (for A860-2150-Txxx with waterproof connectors)

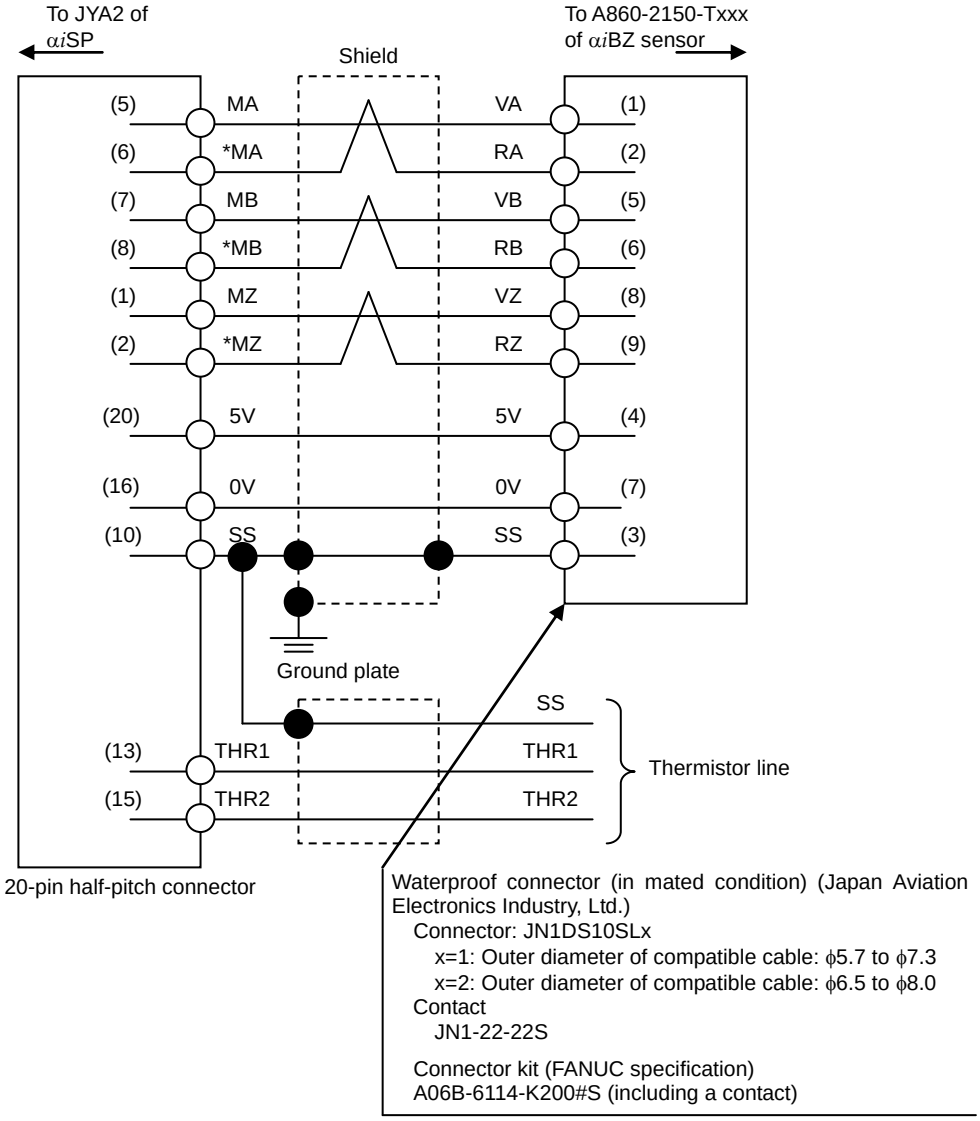

NOTE

1 Cable K17 needs to be prepared by the customer. Also, connectors are not supplied and must be purchased separately.

2 Make sure that the ground plate is placed as close to αiSP as possible.

© MyFANUC 2D5504D5BAC945D385F48627D4977F6C

- **Connector pin assignment**

αiBZ sensor head side: Connector manufactured by Japan Aviation Electronics Industry

1	VA
2	RA
3	SS
4	5V
5	VB
6	RB
7	0V
8	VZ
9	RZ
10	

(5) For αiBZ Sensor (for spindle) (for A860-2155-Txxx with non-waterproof connectors)

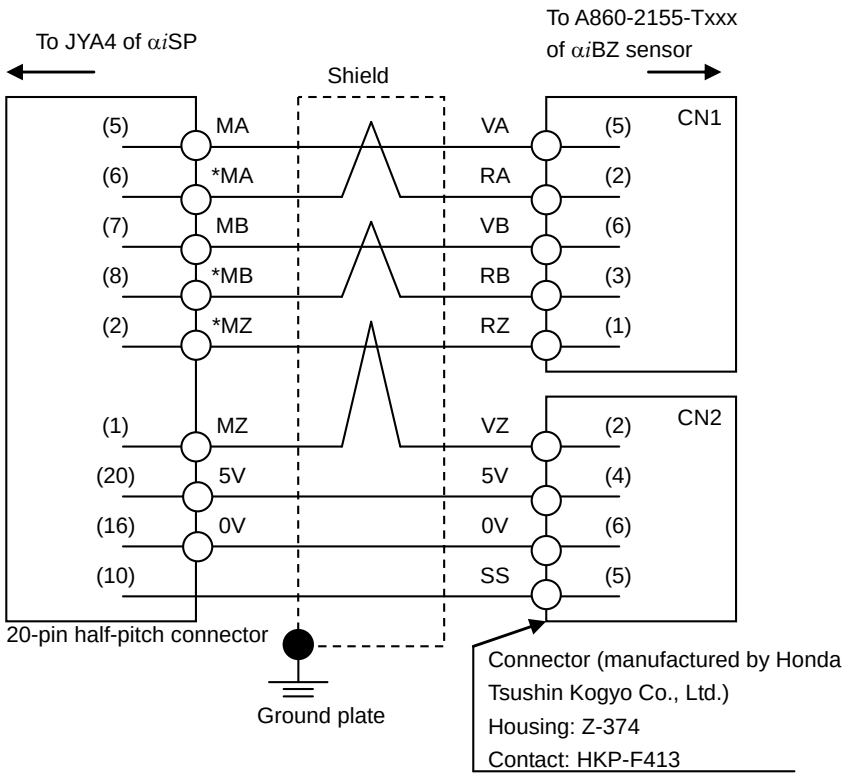

NOTE

1 Cable K17 needs to be prepared by the customer. Also, connectors are not supplied and must be purchased separately.

2 Make sure that the ground plate is placed as close to αiSP as possible.

© MyFANUC 2D5504D5BAC945D385F48627D4977F6C

Using cable conductor

Signal name	Configuration	Ordering number
5V, 0V	0.5mm^2	A66L-0001-0368
VA, RA, VB, RB, VZ, RZ	0.18mm^2 twisted pair wires × 3	

NOTE
1 For details of the recommended wire material, see Appendix B, "CABLES".
2 The pins other than those specified above may be used for other options; do not connect a line to any of these pins.

(6) For αiBZ Sensor (for built-in spindle motor) (for A860-2155-Txxx with non-waterproof connectors)

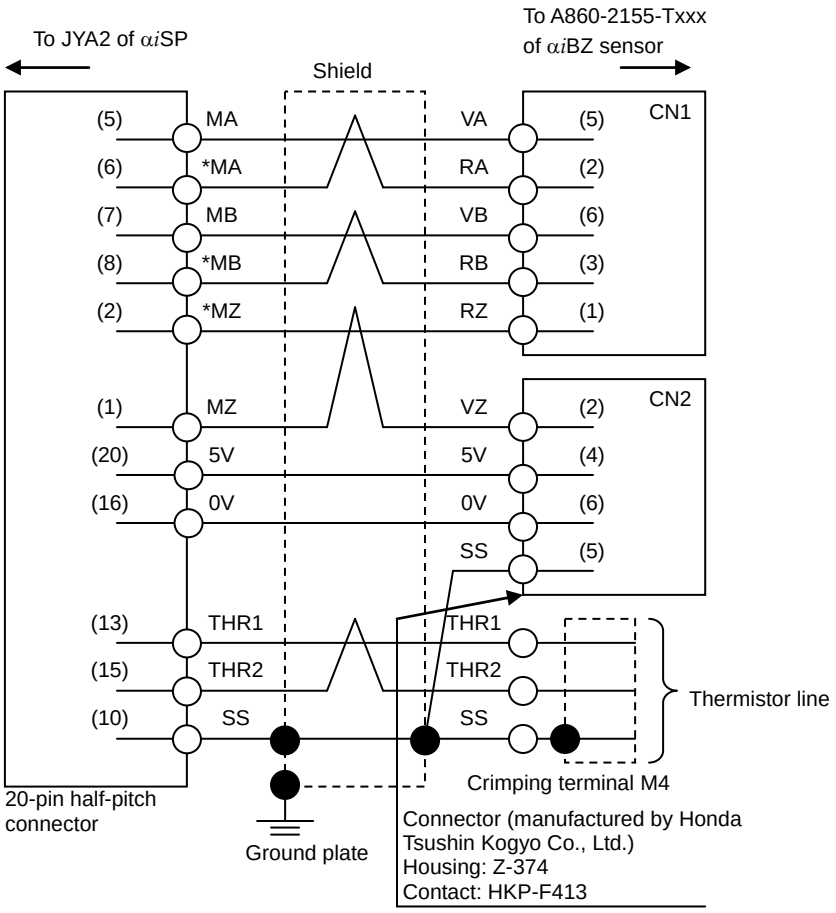

NOTE
1 Cable K17 needs to be prepared by the customer. Also, connectors are not supplied and must be purchased separately.
2 Make sure that the ground plate is placed as close to αiSP as possible.

Using cable conductor

Signal name	Configuration
5V, 0V	0.5mm^2
VA, RA, VB, RB, VZ, RZ THR1, THR2	0.18mm^2 twisted pair wires × 4

Recommended cable conductor: A66L-0001-0368

© MyFANUC 2D5504D5BAC945D385F48627D4977F6C

NOTE
1 For details of the recommended wire material, see Appendix B, "CABLES".
2 The pins other than those specified above may be used for other options; do not connect a line to any of these pins.

Pin arrangement of the connector CN1 (manufactured by Honda Tsushin Kogyo Co., Ltd.) on the motor side

1	RZ	4	
2	RA	5	VA
3	RB	6	VB

Pin arrangement of the connector CN2 (manufactured by Honda Tsushin Kogyo Co., Ltd.) on the motor side

1	5V	4	5V
2	VZ	5	SS
3	0V	6	0V

9.3.3.10 Details of cable K33

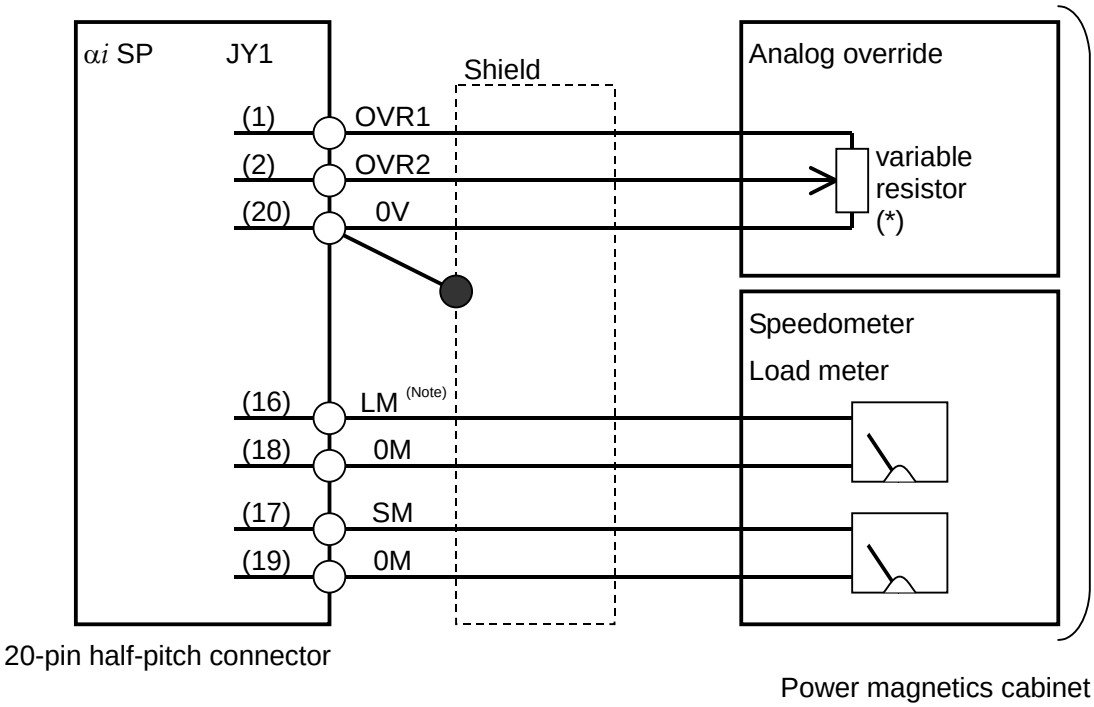

Cable specification : 0.09mm^2 common shielded cable
Recommended cable conductor : A66L-0001-0284#10P
See Section 9.4.1 for explanations about the JY1-side connector that matches the recommended cable. See Appendix B, "About Cable Conductors," for detailed explanations about the cable.

© MyFANUC 2D5504D5BAC945D385F48627D4977F6C

NOTE
Select such an external resistance such that VR+R1 falls within the range between 2 kΩ and 10 kΩ .

Connector pin assignment

JY1

9	#	10	#	19	0M	20	0V
7	#	8	#	17	SM	18	0M
5	#	6	#	15	#	16	LM
3	#	4	#	13	#	14	#
1	OVR1	2	OVR2	11	#	12	#

NOTE
Pins indicated # are intended to input or output signals used on a spindle check board. Do not connect any other signal line to them.

Voltage signal for the speedometer (SM)

By externally connecting a tachometer, the speed of the spindle motor can be indicated. The voltage (DC) proportional to the speed is output, regardless of the rotation direction of the motor. At the maximum motor speed, +10 V is output.

The output voltage of the speedometer in the forward direction and reverse direction is calibrated using a parameter. The precision is ±3% Max.

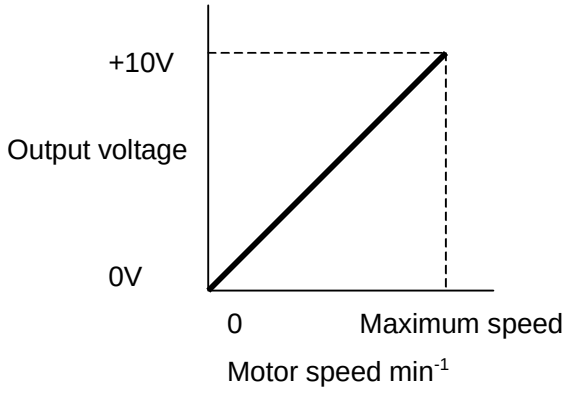

Voltage signal for the load meter (LM)

The load meter indicates a load ratio, that is, the ratio of load on the machine tool spindle during no-load rotation or cutting to the output of the spindle motor. The following two types of load meter indications are available: the new type of load meter which is normalized by continuous rated output and the existing load meter which is normalized by maximum output.
It's possible to select appropriate type in two types.
Existing load meter normalized by max. output shows the character that load meter value becomes constant at maximum output in all speed. It is suited to watch the margin to the maximum output. (The example of this type load meter is shown as Fig.(b) when the motor output character is Fig.(a).)
New load meter normalized by cont. rated output shows the character that load meter value becomes constant at continuous rated output in all speed. It is suited to watch the margin to the continuous rated

© MyFANUC 2D5504D5BAC945D385F48627D4977F6C

output. (The example of this type load meter is shown as Fig.(c) when the motor output character is Fig.(a).)

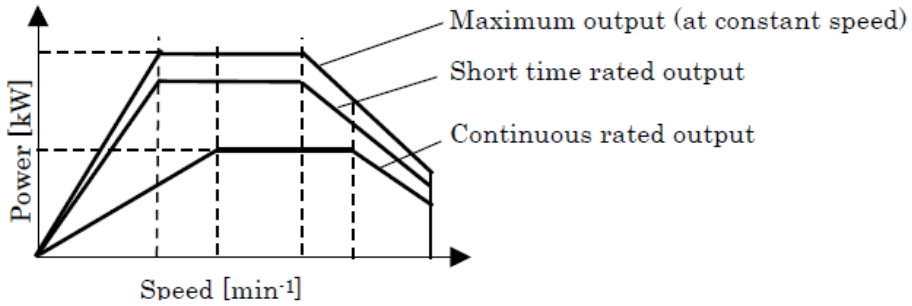

(a) Output power character of spindle motor

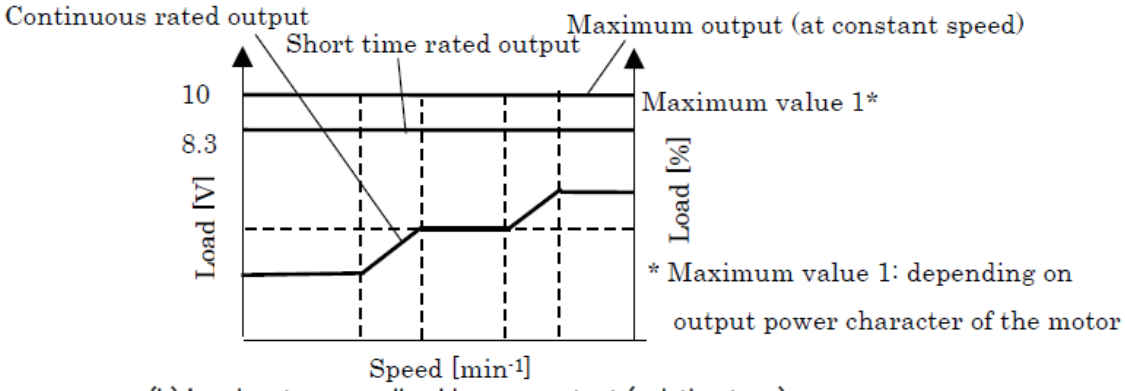

(b) Load meter normalized by max. output (existing type)

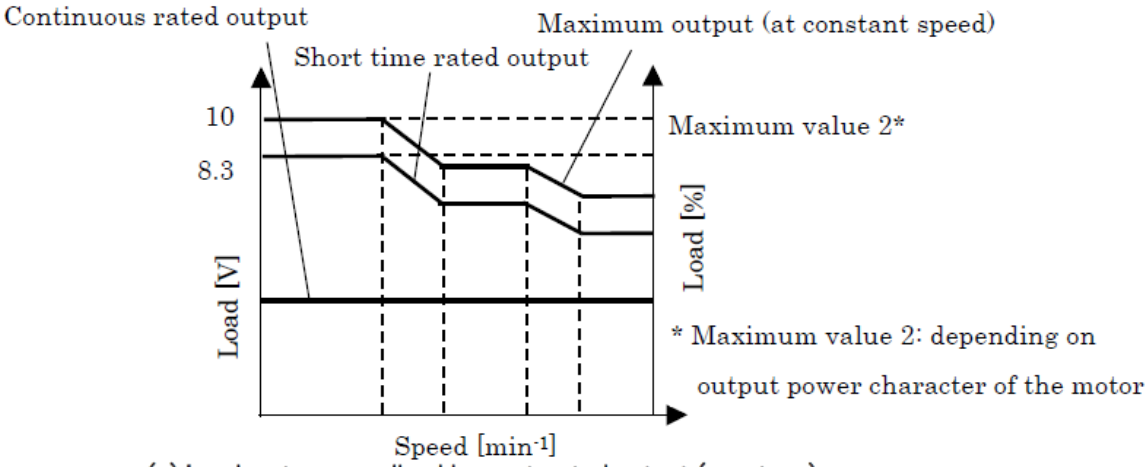

(c) Load meter normalized by cont. rated output (new type)

Fig 1. Output power character and Load meter

© MyFANUC 2D5504D5BAC945D385F48627D4977F6C

Indication for spindle switching and output switching

The speed indication voltage and dynamometer indication voltage may vary between the main spindle and sub-spindle in spindle switching and between the high winding and low winding in output switching. In such a case, switch the tachometer and dynamometer as shown below.

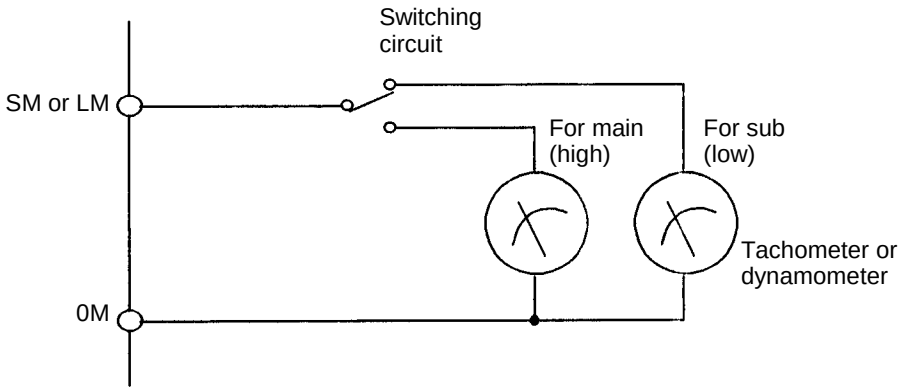

NOTE
1 The maximum output based load meter and continuous output based load meter are mutually exclusive.
2 Different load meter types cannot be selected for the main and sub sides of spindle switching.

9.3.3.11 Details of cable K36

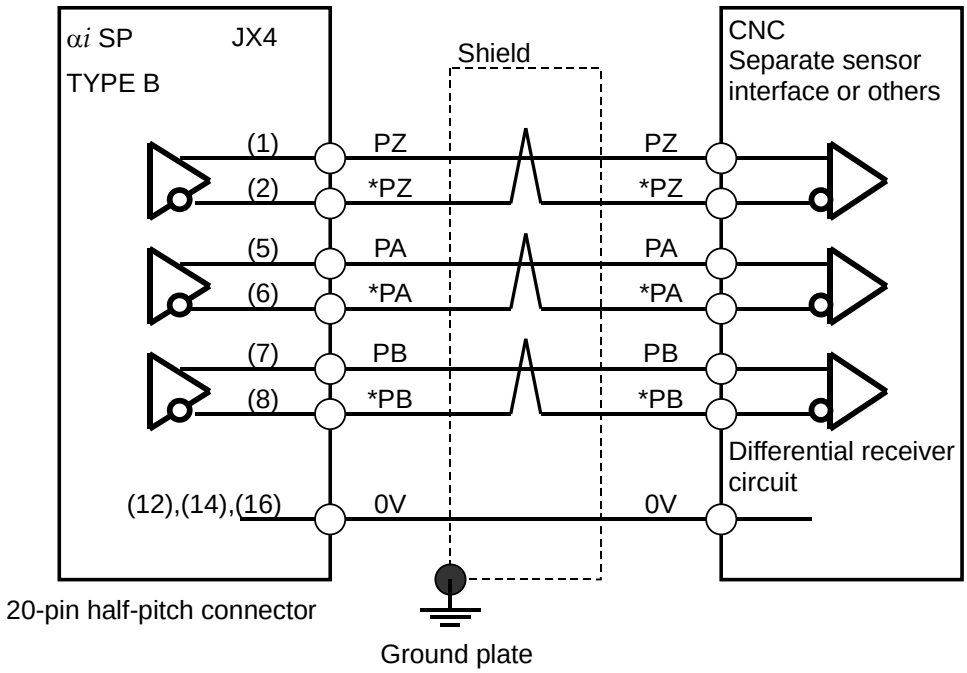

Cable specification: 0.09 mm^2 twisted pair with common shielded
Recommended cable (wire only): A66L-0001-0284#10P
See Section 9.4.1 for details of connectors applied to recommended cable.
See Appendix B for details of cables.

Specification of position coder signal output

© MyFANUC 2D5504D5BAC945D385F48627D4977F6C

Item	Specification
αi SP input sensor	αi position coder α position coder S αi MZ sensor αi BZ sensor
Output signals PA, *PA, PB, *PB	1024 pulses/rotation (*1)
Output signals PZ, *PZ	1 pulse/rotation
Output signal level	Differential driver signal (RS422 compatible)

*1 A resolution of 4096 pulses/rotation can be obtained by counting the edges of phases A and B (× 4 circuit).

Phase A/B signal

Width of phase A/B signal

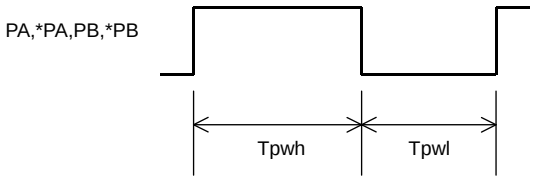

Phase difference between phase A and phase B

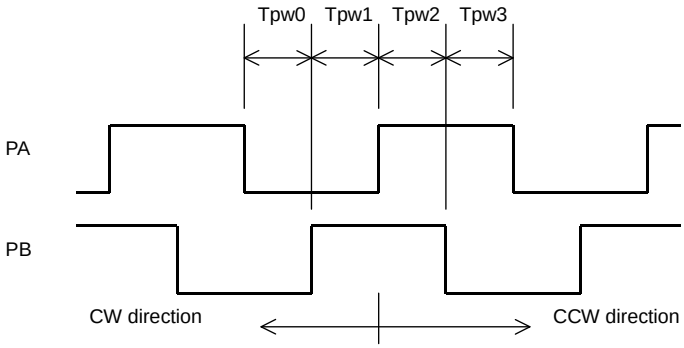

*PA and *PB represent the negative logic signals of PA and PB, respectively.

Symbol	Specification	Remark
Tpwh, Tpwl	Min 636ns	Including a maximum of driver rising/falling delay time skew (30 ns)
Tpw0,1,2,3	Min 636ns	

This specification does not include the effect of the cable capacity and the skew due to delay on the receiver side.

© MyFANUC 2D5504D5BAC945D385F48627D4977F6C

⚠ CAUTION

As shown in state A below, a waveform may be distorted at the edge of phase A or B.
In addition, the edge may be encountered too late or too early as shown in state B or C. Even in these states, the minimum time is defined according to the specifications described on the previous page, such as the pulse width and the difference between phase A and phase B.

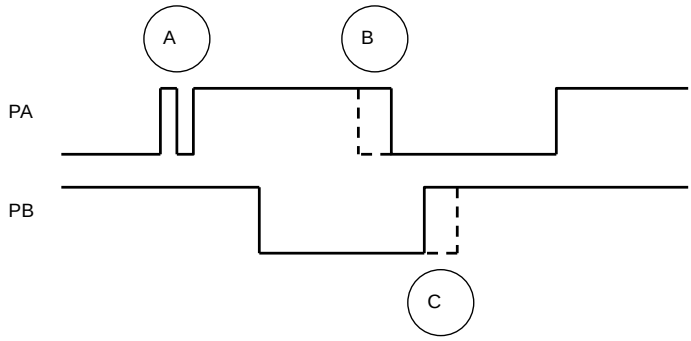

Phase Z signal

Width of phase Z signal

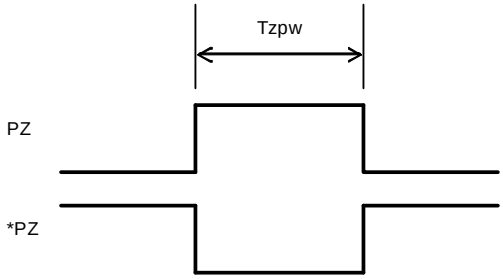

Symbol	Specification
Tzpw	The minimum width is 1/4096 of one rotation.

* Edge distortion of signal Z
Note that the edge of signal Z may be distorted.

* Phase relationship between the phase Z signal and the phase A/B signal
- The phase relationship between the phase Z signal and the phase A/B signal varies with the sensor.
- When the speed changes, the phase relationship between the phase Z signal and the phase A/B signal may vary. The range of variation is approximately (1 p/5000 min-1.

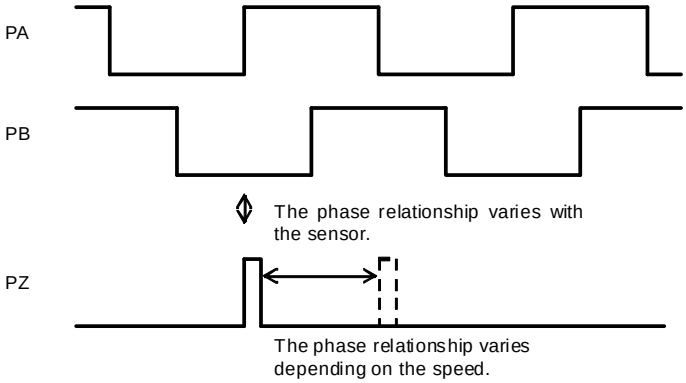

© MyFANUC 2D5504D5BAC945D385F48627D4977F6C

9.3.3.12 Details of cable K71

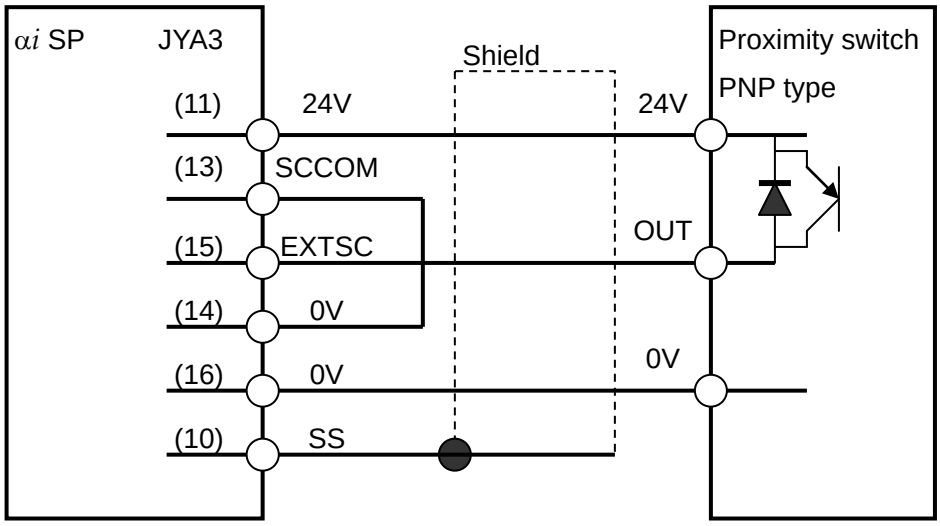

20-pin half-pitch connector

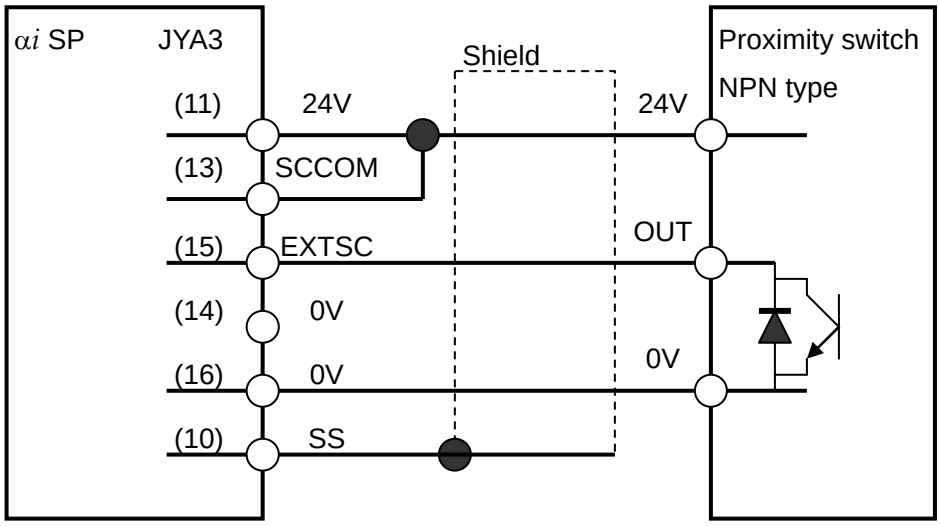

20-pin half-pitch connector

© MyFANUC 2D5504D5BAC945D385F48627D4977F6C

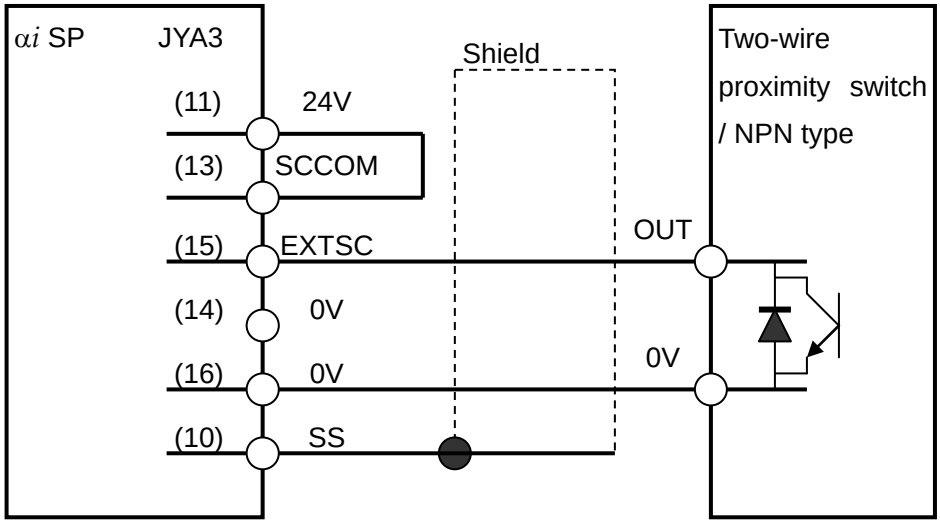

20-pin half-pitch connector

Cable specification : 0.09mm^2 common shielded cable
Recommended cable conductor : A66L-0001-0284#10P
See Section 9.4.1 for explanations about the JYA3-side connector that matches the recommended cable.
See Appendix B, "About Cable Conductors," for detailed explanations about the cable.

Connector pin assignment

See Subsection “- Connector pin assignment” for the K16.

External one-rotation signal switch (proximity switch)

Use an external one-rotation signal switch (proximity switch) that satisfies the specifications indicated below.

(a) DC two-wire proximity switch

Item	Specification
Supply voltage	24 VDC ±1.5 V (24 VDC is fed from the spindle amplifier module.)
Response frequency	400 Hz or higher
Load current	16 mA or higher
Residual voltage	4 V or higher
Supply (leakage) current	1.5 mA or lower

(b) DC three-wire proximity switch

Item	Specification
Supply voltage	24 VDC ±1.5 V (24 VDC is fed from the spindle amplifier module.)
Response frequency	400 Hz or higher
Load current	16 mA or higher
Residual voltage	4 V or higher
Supply current	50mA or lower

NOTE
The location where a proximity switch signal occurs depends on the temperature. So, consider the ambient temperature when selecting a proximity switch.

© MyFANUC 2D5504D5BAC945D385F48627D4977F6C

Input signal specification (EXTSC input section)

Item	Specification
High level	20V or higher
Low level	4V or lower
Minimum signal width	100 us

NOTE
In design, the width of the signal to be detected should have a sufficient margin by considering variations in proximity switch on/off time.

9.3.3.13 Details of cable K86

Cable K86 must be up to 3 m long. To ensure noise resistance, install the αi SP and submodule SM on the same control board.

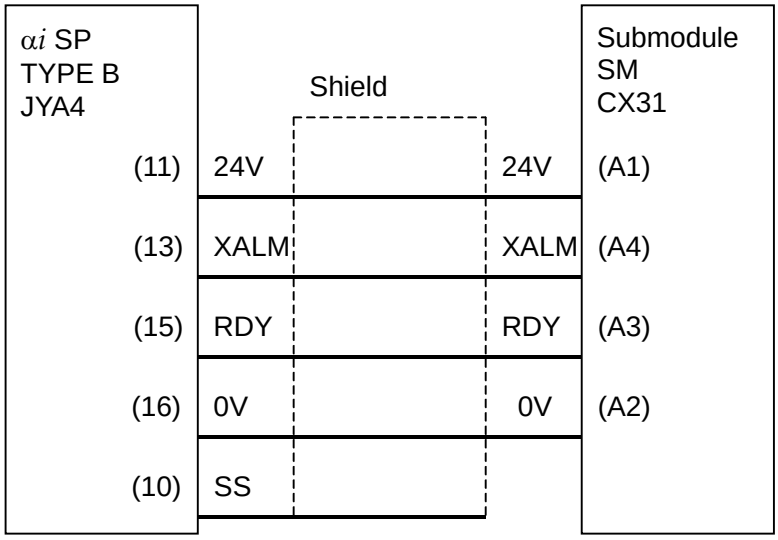

Applicable connector:

JYA4 : Solder type connector: FI40B20S,
Housing: FI-20-CVS5 manufactured by Hirose Electric Co., Ltd.
CX31 : Tyco Electronics Japan GK D2100 series 8 pins
Housing: 1-1318119-4, contact: 1318107-1 (4 contacts required)
Cable specification :
0V, 24V,XALM, RDY: 0.5mmSQ(AWG20 or smaller),Common shield cable

© MyFANUC 2D5504D5BAC945D385F48627D4977F6C

9.3.3.14 Details of cable K88

This cable is required when using the spindle EGB function.

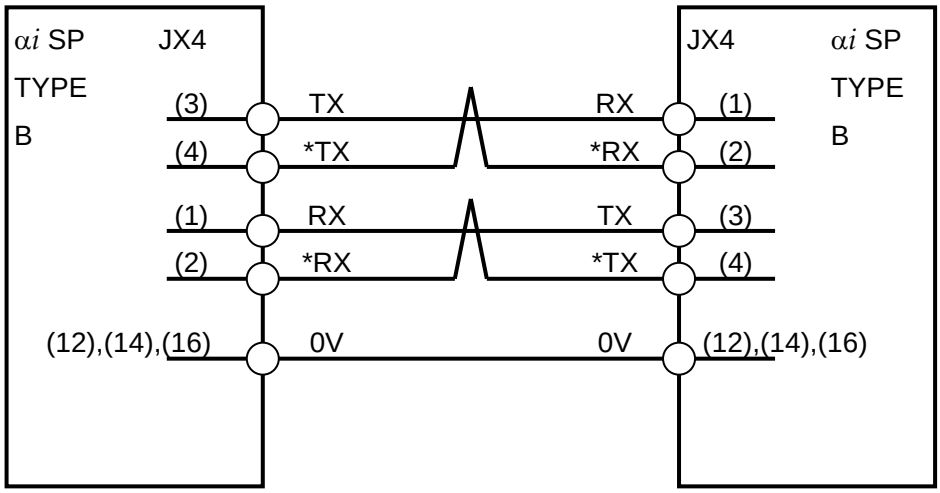

20-pin half-pitch connector 20-pin half-pitch connector

Cable specification: 0.09 mm^2 twisted pair with common shielded
Recommended cable (wire only): A66L-0001-0284#10P
See Section 9.4.1 for details of connectors applied to recommended cable.
See Appendix B for details of cables.

NOTE
1 The length of cable K88 must be 3 m or shorter and run within the same cabinet.
2 The αi SPs that use this connection must be connected to the same CNC as shown below.

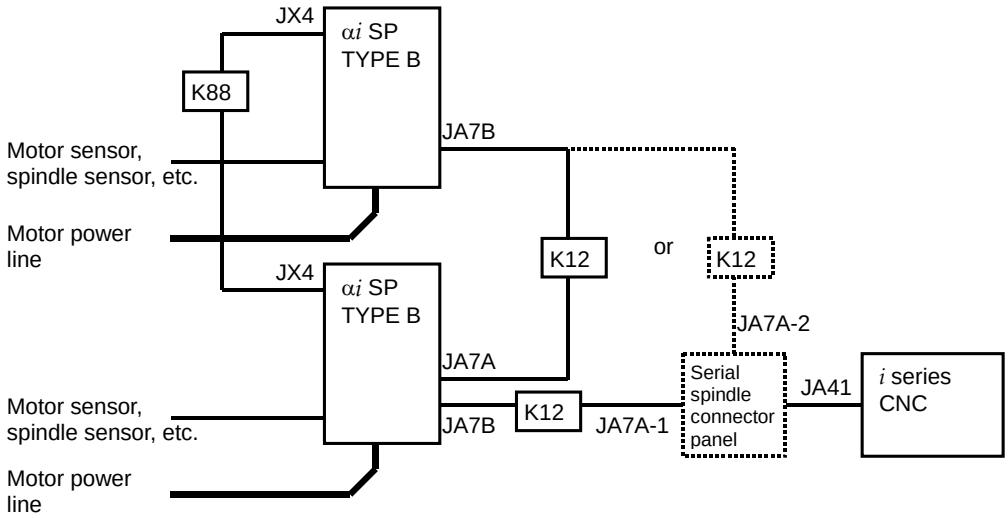

© MyFANUC 2D5504D5BAC945D385F48627D4977F6C

9.3.3.15 Details of cable K90

Only when the dual check safety function is used, this connection is required for the second spindle.

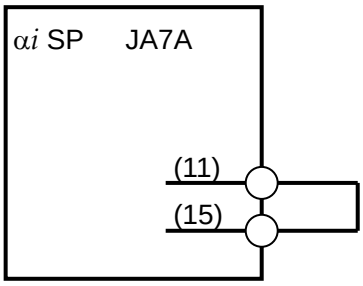

20-pin half-pitch connector

When the dual check safety function is used, connector K90 must be connected to JA7A of the second spindle.

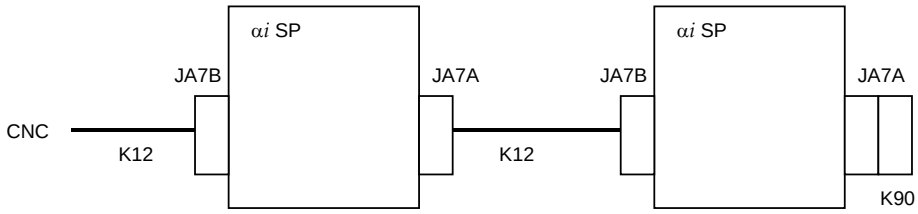

9.3.3.16 Details of cable K96

This signal is used to externally monitor the excitation status of the spindle amplifier and implement a safety circuit for the safety spindle stop function of dual check safety.
For how to configure a safety circuit with this signal, refer to the following documents coming with the "Dual Check Safety Operator's Manual" of your CNC.
"SAFE SPINDLE STOP FUNCTION with protection door open"
For the Series 30*i*/31*i*/32*i*, B-64004EN/03-01
For the Series 16*i*/18*i*/21*i*, B-63494EN/02-01

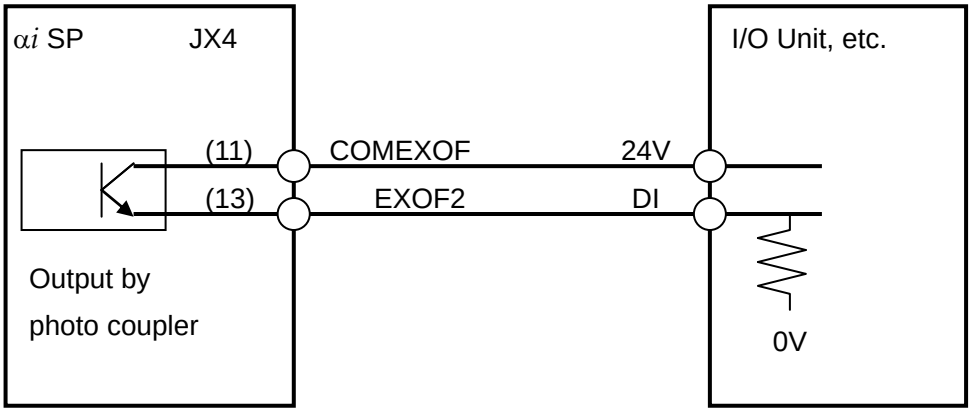

20-pin half-pitch connector

SP contact output specifications
Circuit type: Polar photo coupler
Rated voltage: 30 VDC or less
Output current: DC 40 mA or less
Saturation voltage: 1.5 V or less (at output current of 40 mA)

© MyFANUC 2D5504D5BAC945D385F48627D4977F6C

Open contact: Excitation on
Closed contact: Excitation off

> ⚠ **CAUTION**
> If the connector is connected incorrectly, externally supplied 24 V can damage the internal circuit of the αi SP.
> This function is not provided in A06B-6111, -6112, -6121, and -6122.

9.3.3.17 Details of cable K97

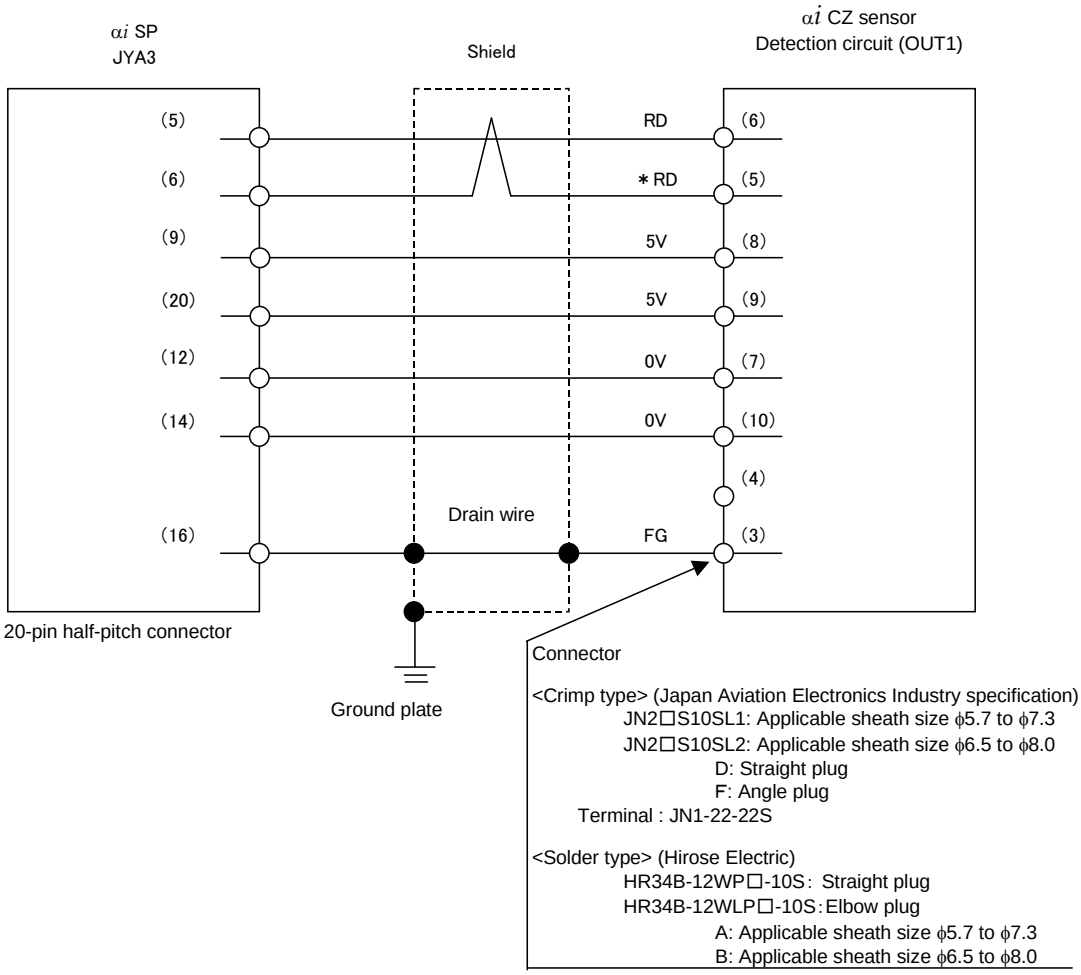

Wires used

Signal name	28 m or less	50 m or less
5V, 0V, 6V	$0.3mm^2 \times 5$ Strand configuration 12/0.18 or 60/0.08 Insulation outer diameter 1.5 or less	$0.5mm^2 \times 5$ Strand configuration 20/0.18 or 104/0.08 Insulation outer diameter 1.5 or less
RD, *RD	$0.18\ mm^2$ or more Twisted-pair wire Insulation outer diameter 1.5 or less	$0.18mm^2$ or larger Twisted-pair wire Insulation outer diameter 1.5 or less
Drain wire	$0.15mm^2$ or larger	$0.15mm^2$ or larger

© MyFANUC 2D5504D5BAC945D385F48627D4977F6C

NOTE

1 The ground plate to which the shield is connected must be placed near the αiSP to minimize the distance between the αiSP and the ground plate.
2 Run the power line and signal line so that they are not in parallel.
3 When the customer prepares the cable, the total wire resistance of 5 V and 0 V must be 2 Ω or less.
4 The maximum wire thickness applicable to the connector on the detection circuit side is 0.5 mm^2 (strand configuration: 20/0.18 or 104/0.08, insulation outer diameter: 15 or less), and the sheath is 5.7 to 8.0 in diameter. When using a wire or cable thicker than the above size is used, take measures as shown below.

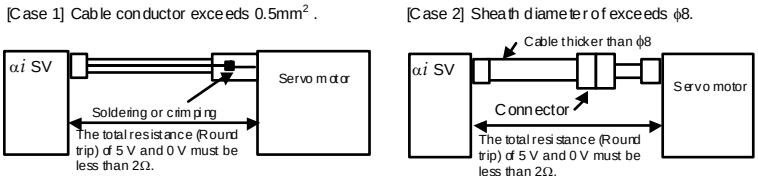

- Crimp tool specification

FANUC specification	Japan Aviation Electronics Industry specification	Applicable cable thickness
A06B-6114-K201#JN1E	CT150-2-JN1-E	21AWG(0.5mm^2:20/0.18) 23AWG(0.3mm^2) 25AWG(0.18mm^2)
A06B-6114-K201#JN1D	CT150-2-JN1-D	20AWG(0.5mm^2:104/0.08) 21AWG(0.5mm^2:20/0.18) 25AWG(0.18mm^2)

- Extractor specification
  A06B-6114-K201/JN1R

- Recommended cable

Recommended cable specification	Description	Crimp tool specification
A66L-0001-0460	Flexible cable 28 m or less	A06B-6114-K201#JN1E (FANUC specification) CT150-2-JN1-E (Japan Aviation Electronics Industry specification)
A66L-0001-0481	Fixed cable 28 m or less	
A66L-0001-0462	Flexible cable 50 m or less	A06B-6114-K201#JN1D (FANUC specification) CT150-2-JN1-D (Japan Aviation Electronics Industry specification)
A66L-0001-0491	Fixed cable 50 m or less	

- Connector kit specification
  <Crimp type>
  A06B-6114-K204#S : Straight plug (including a contact)
  A06B-6114-K204#E : Elbow plug (including a contact)
  <Solder type>
  A06B-6114-K205#S : Straight plug
  A06B-6114-K205#E : Elbow plug

© MyFANUC 2D5504D5BAC945D385F48627D4977F6C

9.3.3.18 Spindle Motor Feedback Cable Connection

The connector of the feedback cable connected to the spindle motor may have the following problems, depending on the wiring in the motor terminal box (transit box for the built-in motor):

- Variations in low speed become large.
- Sensor signal disconnection alarm (alarm 9073) detected incorrectly
- Sensor signal abnormality alarm (alarm 9083) detected incorrectly

Give consideration to wiring so that minimum lengths of non-shielded portions are provided for the connector connecting the cable for αi SP and signals output from the spindle motor. (See the examples below.)

(1) Sample wiring in the motor terminal box

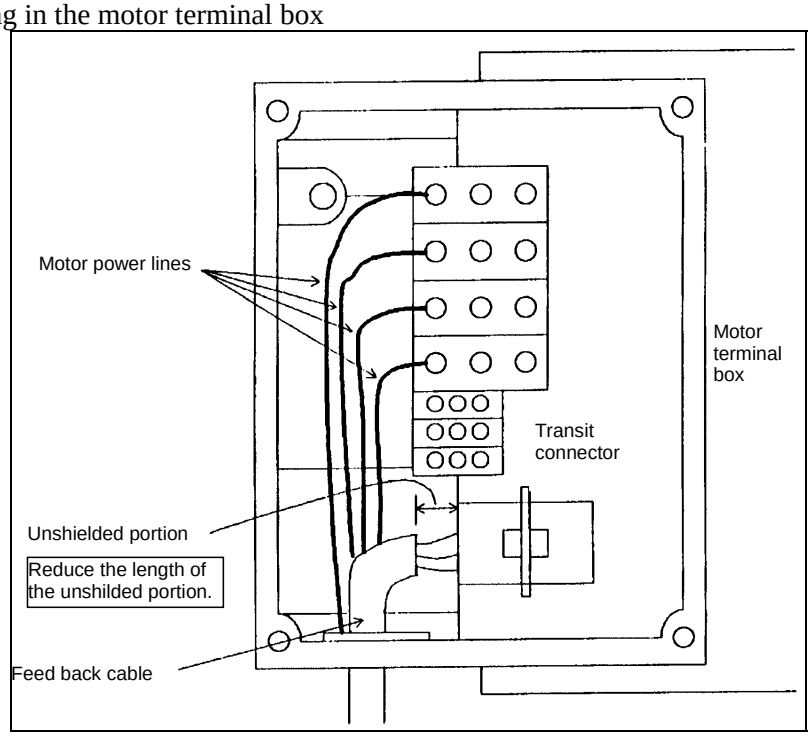

(2) Sample wiring in the relay box for the built-in motor

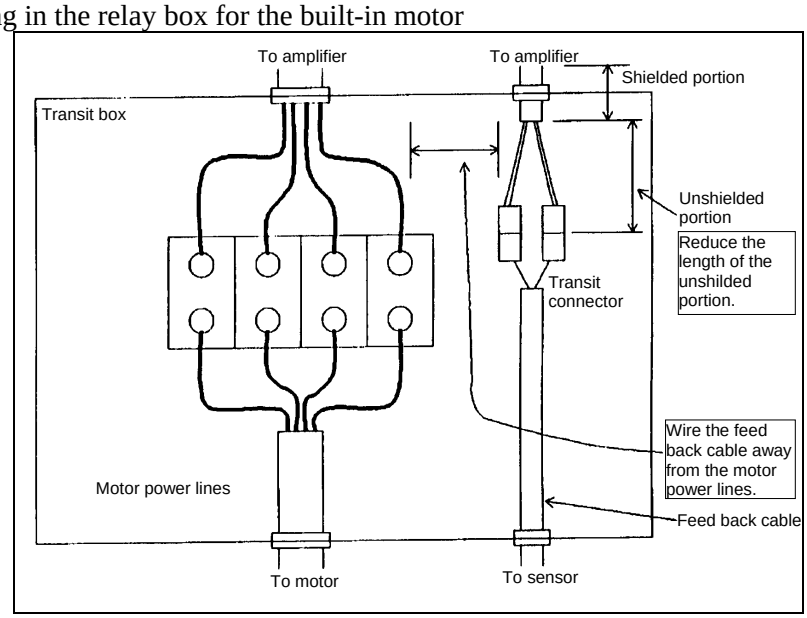

© MyFANUC 2D5504D5BAC945D385F48627D4977F6C

9.4 DETAILS OF CONNECTORS

9.4.1 20-Pin Half-Pitch Connectors

The following table lists the 20-pin half-pitch connectors used for the αi series servo amplifier and the recommended cables for these connectors.
Use connectors that match the recommended cables specified on the applicable connection diagram in detail.

Recommended-cable specification	Applicable connector	Connector model number	Housing model number	Connector + housing
A66L-0001-0284#10P	Crimp type	Hirose Electric Co., Ltd. FI30-20S	Sideways cable slot type FI-20-CVS2	Sideways cable slot type FI30-20S-CVS2
		Honda Tsushin Kogyo Co., Ltd. PCR-E20FA	PCR-V20LA	
	Soldering type	Hirose Electric Co., Ltd. FI40B-20S	Sideways cable slot type FI-20-CVS2	Sideways cable slot type FI40B-20S-CVS2
		Honda Tsushin Kogyo Co., Ltd. PCR-E20FS	PCR-V20LA	
A66L-0001-0286 A66L-0001-0460 A66L-0001-0462 A66L-0001-0481 A66L-0001-0491	Soldering type Note that this connector does not have pin No. 11, 13, 15, 17, or 19.	Hirose Electric Co., Ltd. FI40B-2015S	Sideways cable slot type FI-2015-CVS	Sideways cable slot type FI40B-2015S-CVS
A66L-0001-0368	Soldering type	Hirose Electric Co., Ltd. FI40B-20S	Sideways cable slot type FI-20-CVS5	Sideways cable slot type FI40B-20S-CVS5

9.4.2 Tyco Electronics Japan GK AMP D-5000 Series Connector

The αi series uses the D-5000 series connector (manufactured by Tyco Electronics Japan GK) for the motor power cable.
The connector is provided with three keys that assure it is inserted in the correct direction. In addition, four types of receptacle contacts are available, from which the user can select the suitable one depending on the amount of current to use (size of the conductor).
Connectors and tools can be ordered directly from Tyco Electronics Japan GK. FANUC also furnishes options. For details, see Subsection 3.1.3.5, "Connectors."

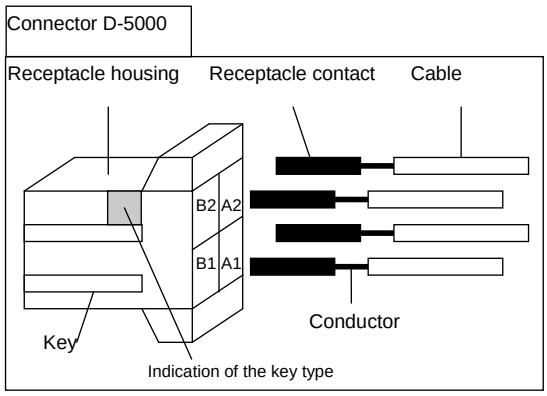

© MyFANUC 2D5504D5BAC945D385F48627D4977F6C

Receptacle housing

There are three different key types for the receptacle housing. Be sure to select the receptacle housing of the key type that matches the servo axis you use.

Receptacle housing model number	Specification of the key	Applicable servo amplifier
1-917807-2	XX	αi PS 5.5, αi SP2.2, αi SP 5.5, αi SV 1-axis, αi SV 2-axis (L), αi SV 3-axis(L)
3-917807-2	XY	αi SV 2-axis (M), αi SV 3-axis (M)
2-917807-2	YY	αi SV 3-axis (N)

(Reference)

There is a cable-end connectors which are inserted no matter what key is used. Contact the connector manufacturer (Tyco Electronics Japan GK) for details.

Receptacle contact

Four receptacle contact types are available, so as to support different conductor diameters. Be sure to select the receptacle contact (silver plating) that matches the servo axis you use.

Rectangle contact model number		Conductor size (mm^2)	Conductor size AWG	Insulation outer diameter (mm)	Manual tool model number
SS size	1318986-6	0.50 to 1.42	20/18	1.08 to 3.23	1366656-1
S size	316040-6	1.23 to 2.27	16/14	3.0 to 3.8	234170-1
M size	316041-6	3.08 to 5.50	12/10	4.0 to 5.2	234171-1
L size	1318697-6	7.27 to 8.92	8	4.9 to 7.8	1366044-1

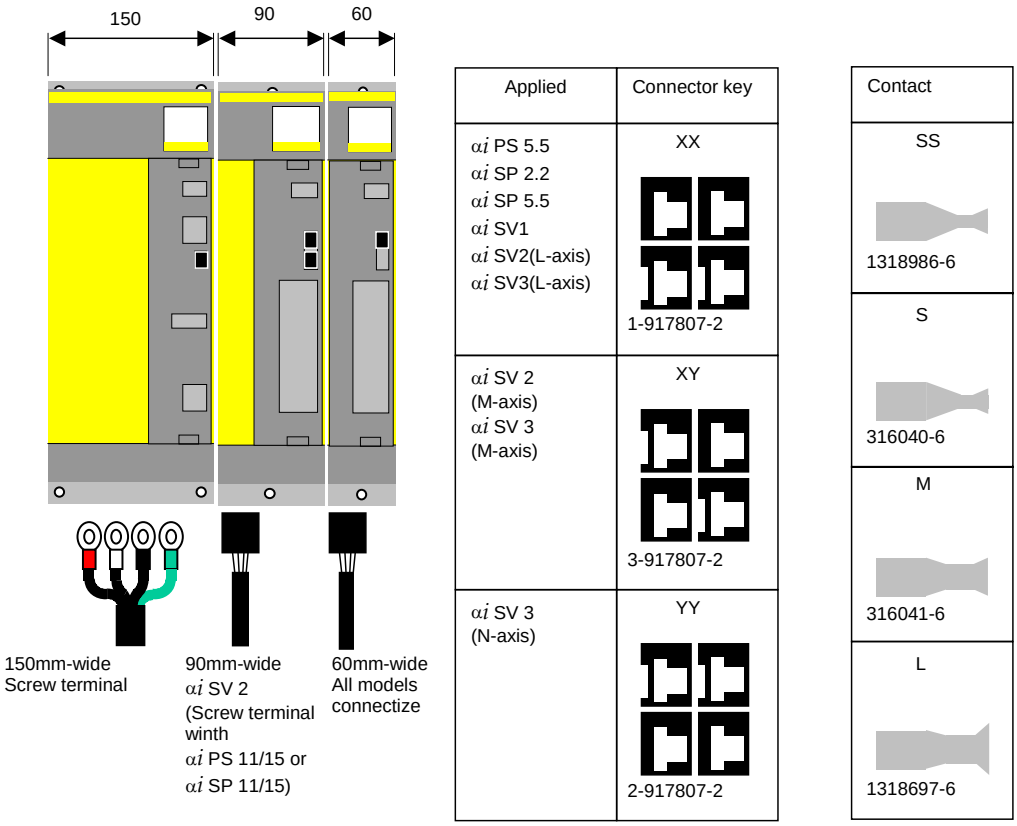

© MyFANUC 2D5504D5BAC945D385F48627D4977F6C

10 SPINDLE-RELATED OPTIONS

Chapter 10, "SPINDLE-RELATED OPTIONS", consists of the following sections:

10.1 SPINDLE ORIENTATION 245
10.2 POWER LINE SWITCH CIRCUIT 245
10.3 SUB MODULE SW 254
10.4 SUB MODULE SM 260

10.1 SPINDLE ORIENTATION

Sensor

Sensor	Description
αi position coder	Connected to the spindle on a 1:1 basis (directly connected by using a gear or timing belt)
α position coder S	Connected to the spindle on a 1:1 basis (directly connected by using a gear or timing belt)
αi MZ sensor αi BZ sensor αi CZ sensor	Directly connected to the spindle on a 1:1 basis
αi M sensor + Proximity switch	Installed on the spindle. The motor is connected with the spindle by using a gear.

Detection unit and repetitive positioning precision

See Section 11.2 "SENSOR FOR THE SPINDLE".

NOTE

1 The error factors on the machine side are excluded.
2 With the αi M sensor plus proximity switch method, stop position control is exercised using the αi M sensor built into the motor, with the proximity switch installed on the spindle used as the reference. So, pay attention to the following mechanical error factors:
- When the gear ratio is higher than 1:1 (on the spindle acceleration side), repetitive positioning precision decreases.
- The stop position can move by a gear backlash.

10.2 POWER LINE SWITCH CIRCUIT

10.2.1 Overview

The power line switch circuit is installed between an αi SP and spindle motor to exercise spindle switch control and output switch control.

(1) Power switching from one motor to another (spindle switch control)
(2) Power line switching between the two different windings of a motor (output switch control)

A power line switch unit for performing power line switching is available.
A switch circuit can also be configured by using magnetic contactors and a relay.

© MyFANUC 2D5504D5BAC945D385F48627D4977F6C

10.2.2 Switch Circuit Configuration

The switch circuit is configured as follows:

- The diagram given below shows connections of the coils of magnetic contactors.
- For the PMC sequence, refer to Section 5.1, "Output Switch Control", or Section 5.2, "Spindle Switch Control", in Chapter 5, "Function Description", in "FANUC AC SPINDLE MOTOR αi Series Parameter Manual" (B-65280EN).
- For the connection of the main contacts in output switch control, refer to the relevant spindle motor descriptions.
- Select magnetic contactors so that the rated contact current of the main contacts is at least the short-time rated current of the spindle motor.

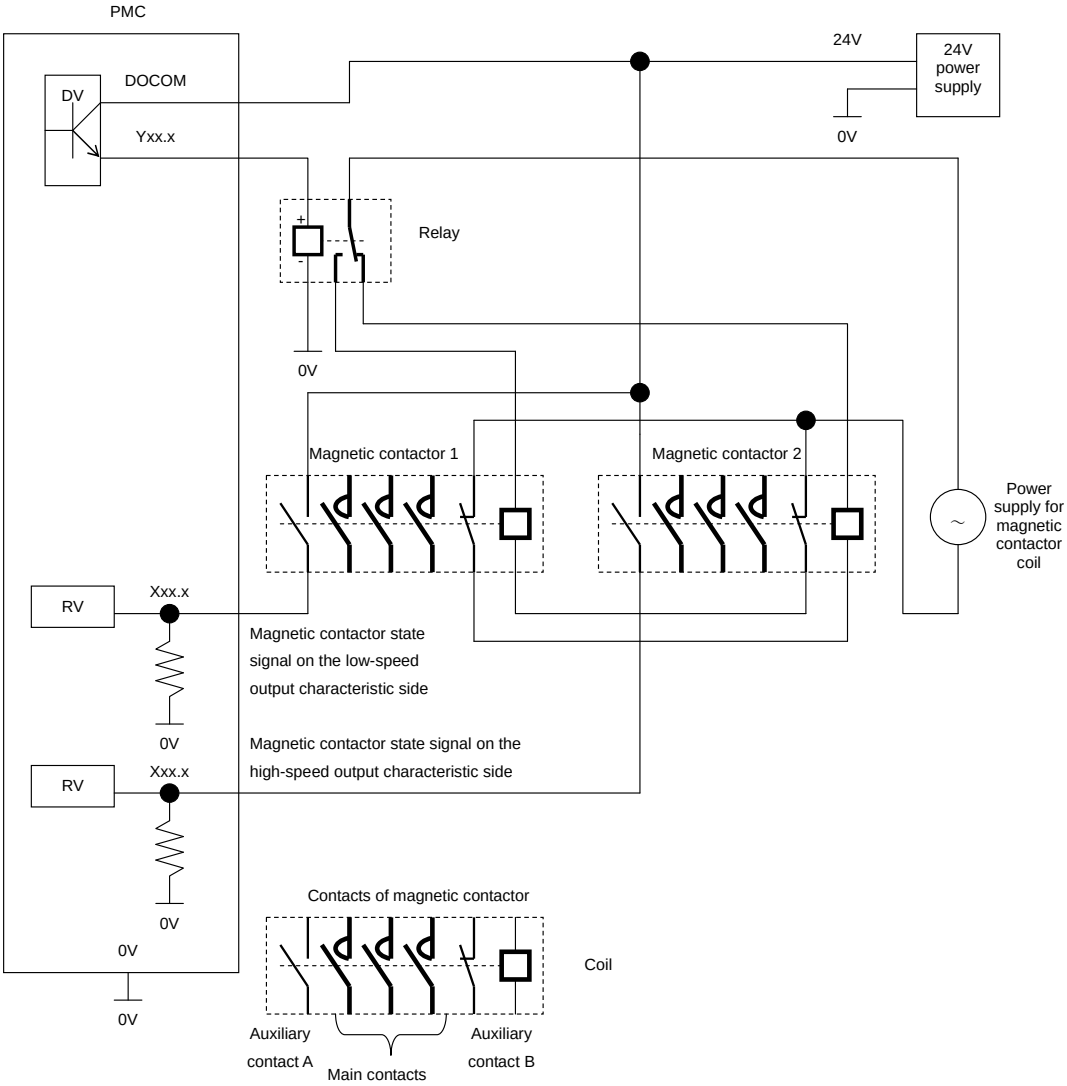

© MyFANUC 2D5504D5BAC945D385F48627D4977F6C

10.2.3 Power Line Switch Unit

10.2.3.1 Specification

Ordering specification drawing number	A06B-6078-K034 (Y/Y connection) A06B-6078-K035 (Y/Δ connection)	A06B-6078-K036 (Y/Y connection) A06B-6078-K037 (Y/Δ connection)
Magnetic contactor specification	A58L-0001-0306 Fuji Electric (SC-3N)	A58L-0001-0312 Fuji Electric (SC-6N)
Rated contact current *1	100A	150A
Rating of operating electromagnetic coil	200V/220V 15% to +10% 50/60Hz ±1Hz	
Relay specification	A58L-0001-0307 OMRON (type LY2-D)	
Rated voltage	24V ±10%	
Rated current	36.9mA	

*1 Select a power line switch unit so that the peak rated current of the spindle motor used is equal to or less than this value.

© MyFANUC 2D5504D5BAC945D385F48627D4977F6C

10.2.3.2 Outside and mounting dimension diagrams

Outside and mounting dimension diagrams of the switch unit for spindle switch control and output switch control (Y/Y connection)

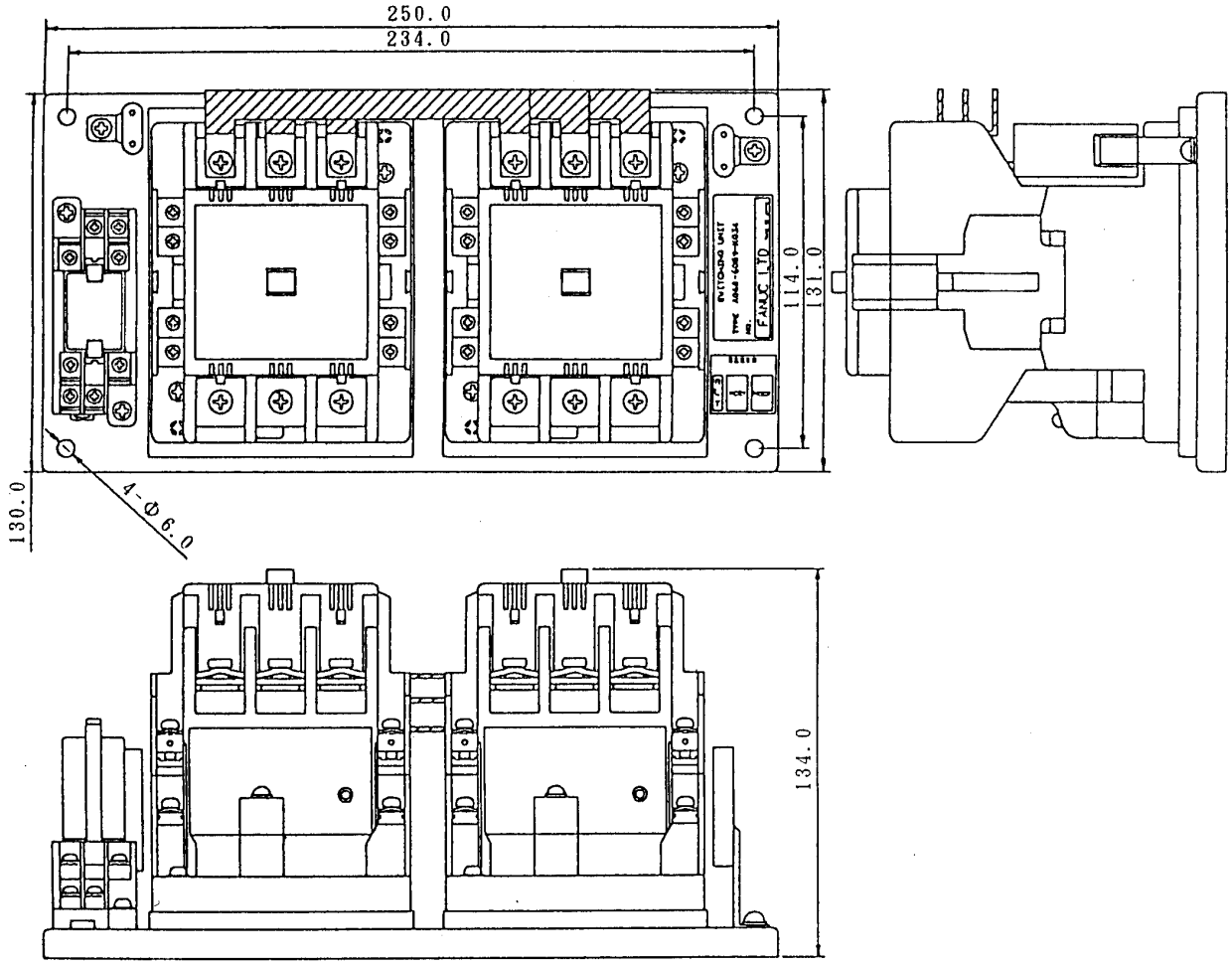

A06B-6078-K034

Fig. A

Mounting diagram

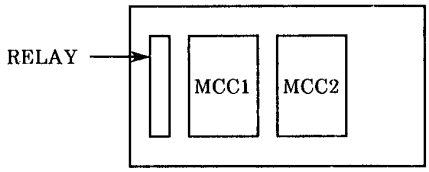

© MyFANUC 2D5504D5BAC945D385F48627D4977F6C

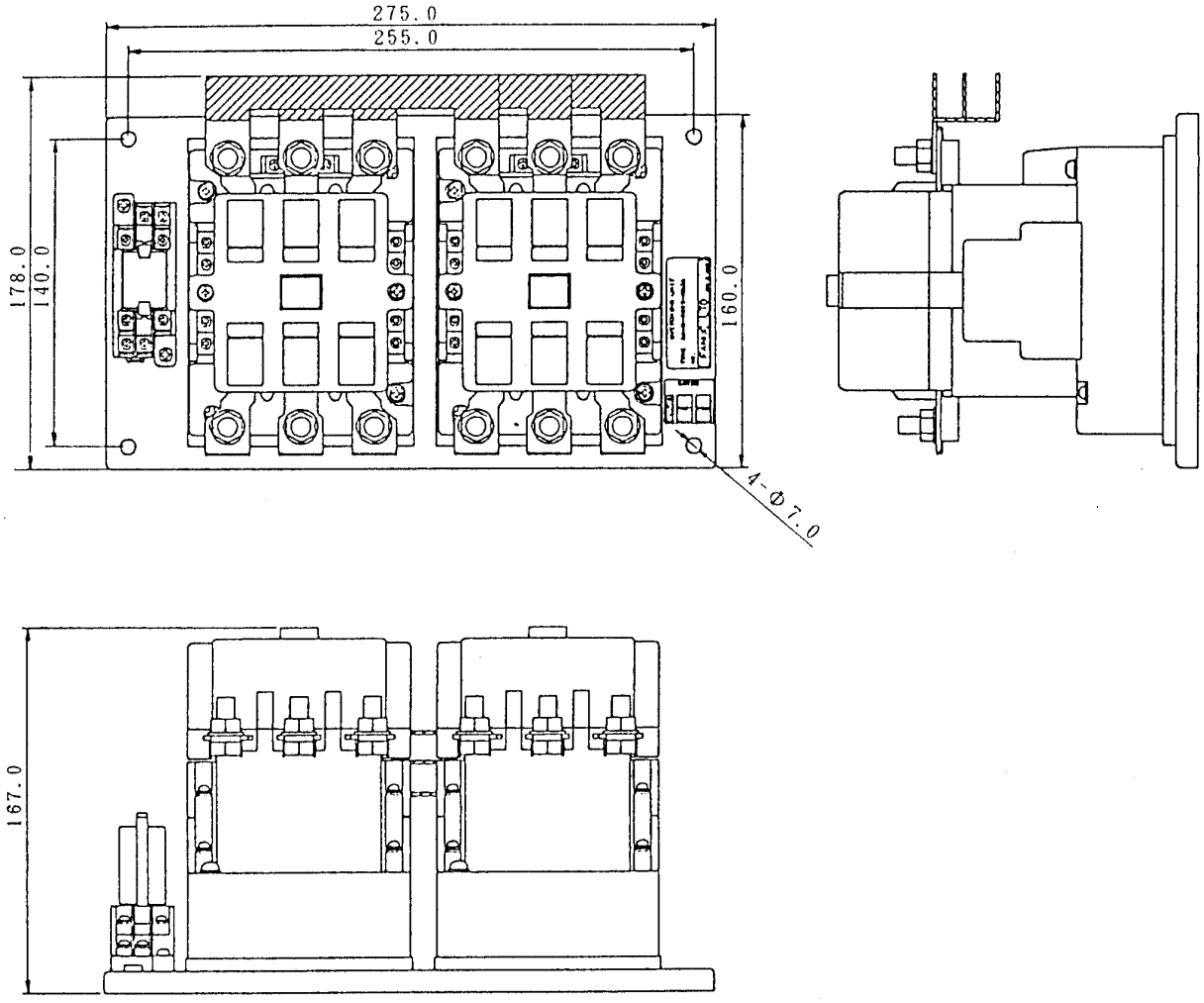

A06B-6078-K036

Fig. B

Mounting diagram

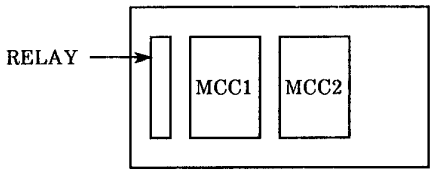

© MyFANUC 2D5504D5BAC945D385F48627D4977F6C

Outside and mounting dimension diagrams of the switch unit for output switch control (Y/Δ connection)

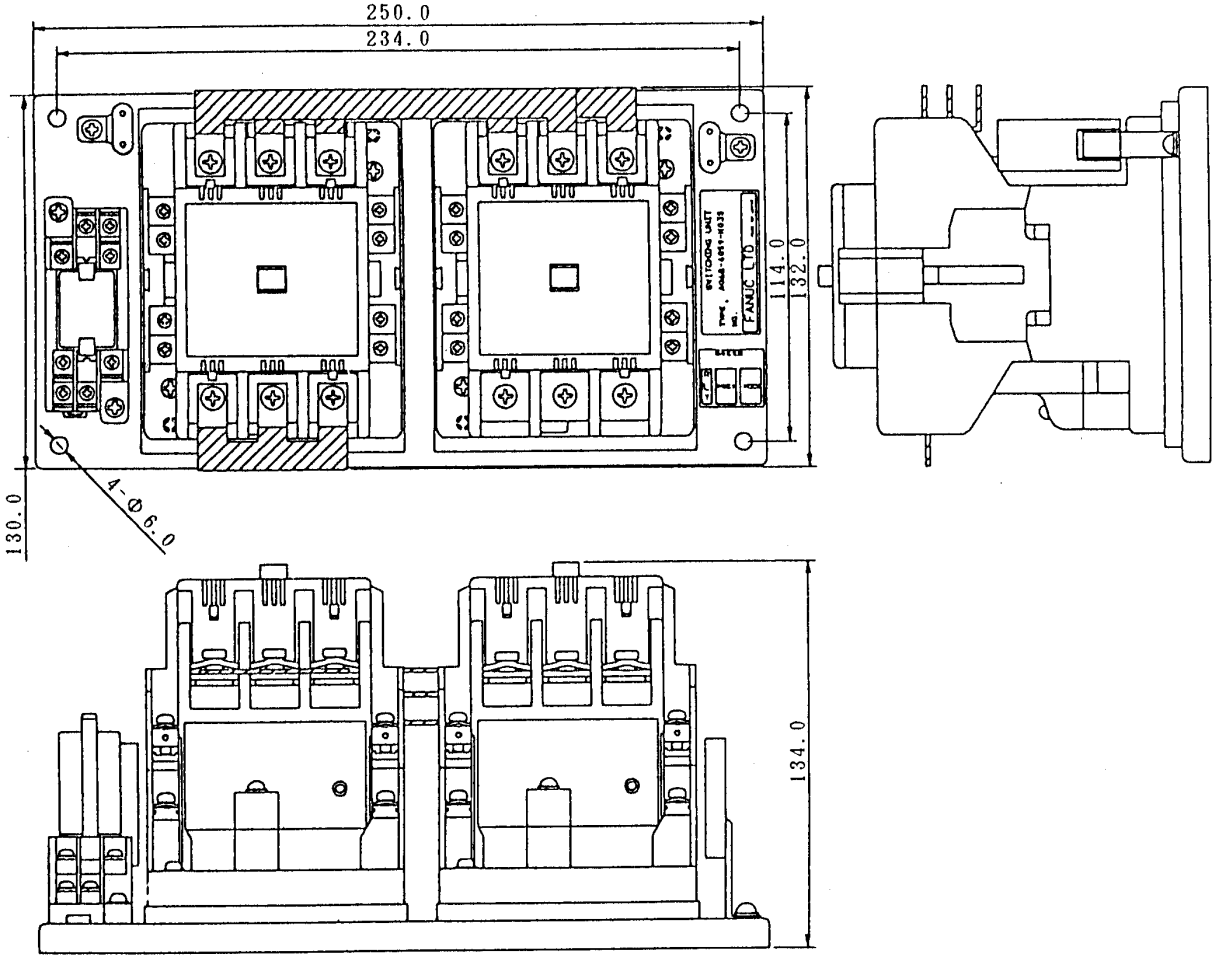

A06B-6078-K035

Fig. A

Mounting diagram

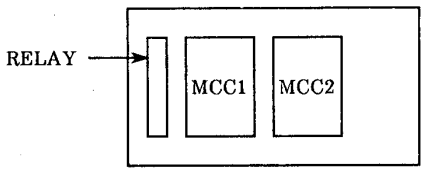

© MyFANUC 2D5504D5BAC945D385F48627D4977F6C

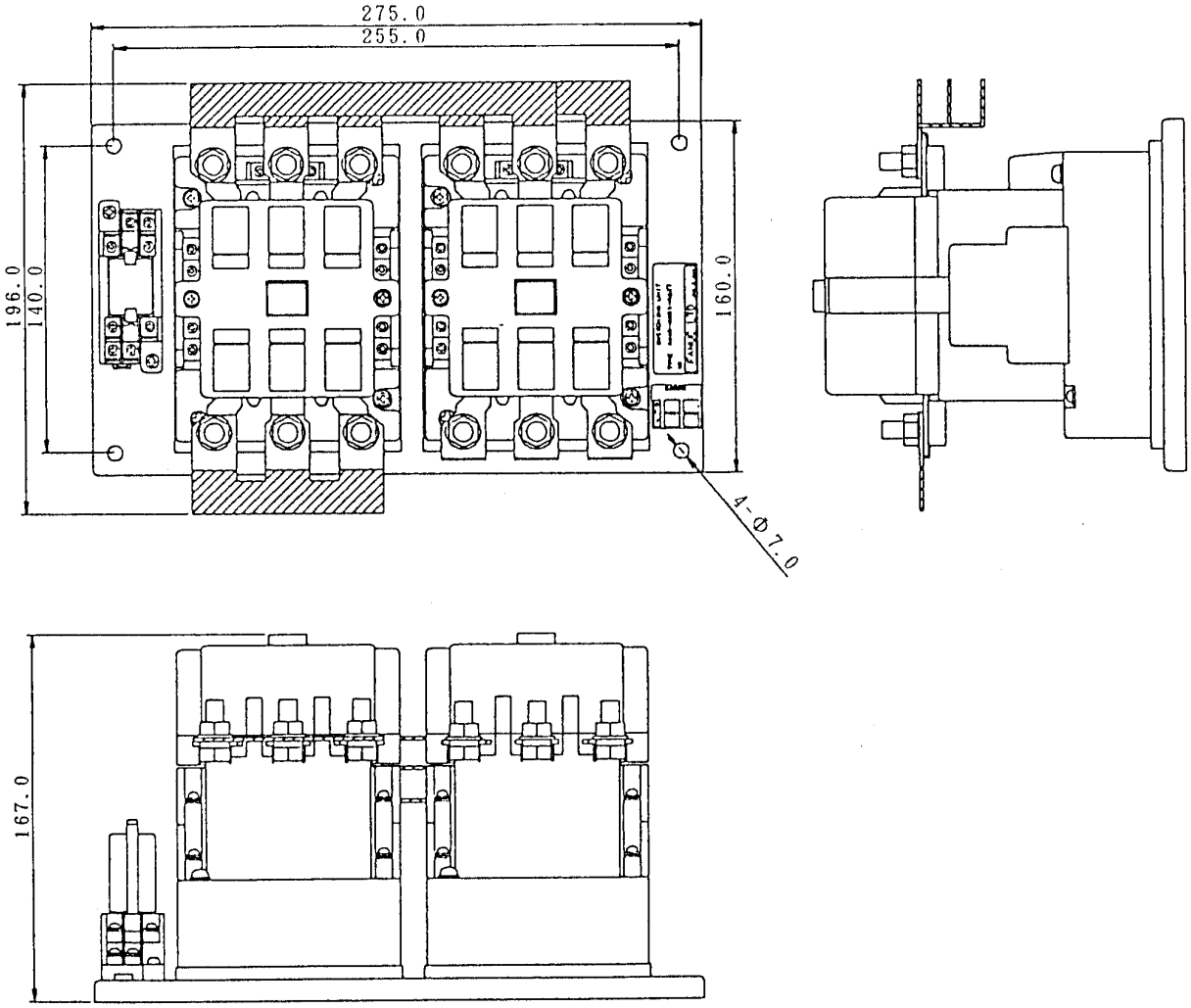

A06B-6078-K037

Fig. B

Mounting diagram

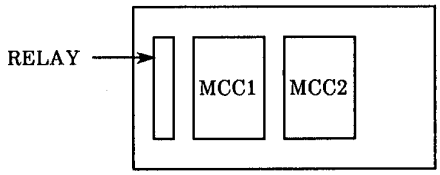

© MyFANUC 2D5504D5BAC945D385F48627D4977F6C

10.2.3.3 Connection

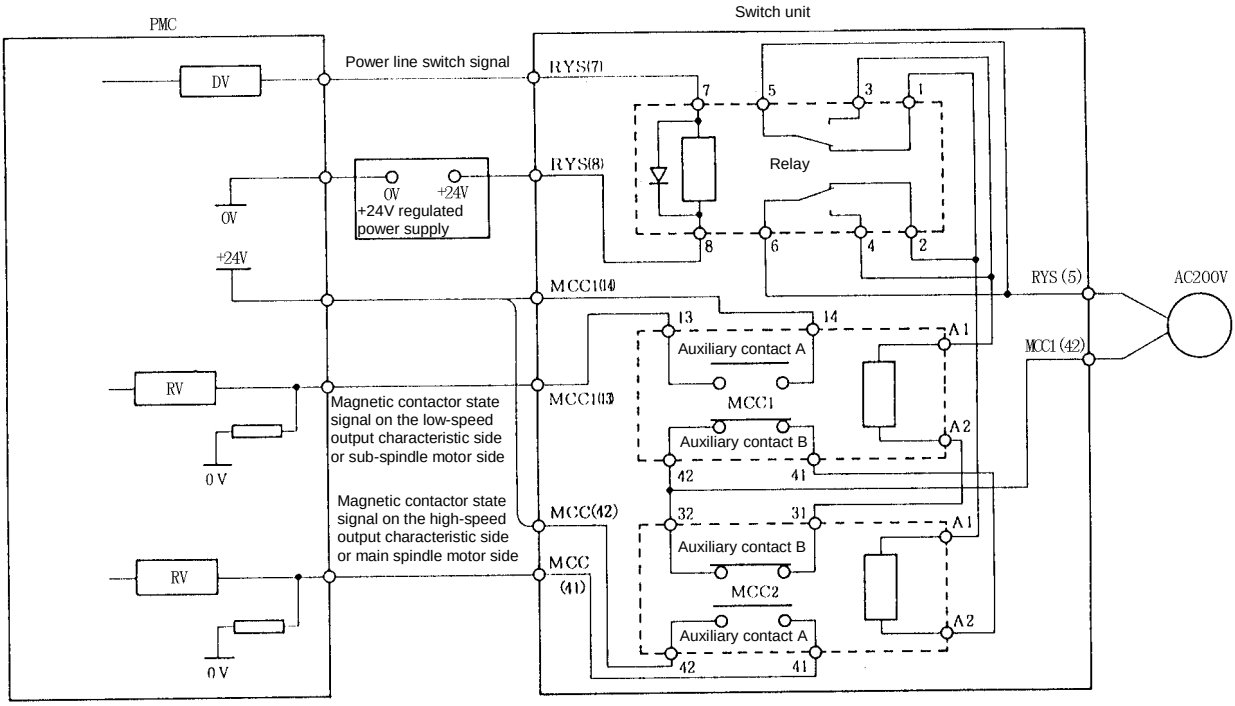

NOTE

Make a connection to the switch unit by direct screwing on the screw terminal of the magnetic contactor and relay socket.

10.2.3.4 Notes

(1) Install the switch unit under the same conditions as for the αi SP.

<u>Installation conditions</u>

- Ambient temperature
  Ambient temperature of the unit :
  0 to 55°C (at operation)
  0 to 45°C (at keeping and transportation)
- Humidity
  Normally 90% RH or below, and condensation-free
- Vibration
  In operation : Below 0.5G
- Atmosphere
  No corrosive or conductive mists or drops should deposit directly on the electronic circuits.

(2) The figure below shows the standard method of installation. However, the switch unit may be tilted up to 15 degrees toward the right or left.

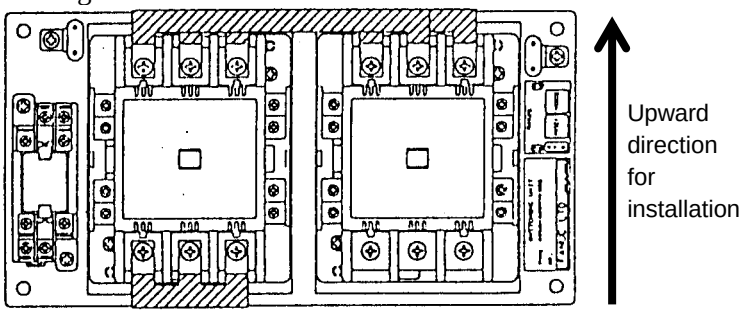

© MyFANUC 2D5504D5BAC945D385F48627D4977F6C

(3) The switch unit may need to be installed horizontally from a viewpoint of cabling or installation (Fig. 11.7.6(b)). In this case, however, the characteristics of the magnetic contactor remain almost the same, but the mechanical life and open/close frequency decrease.

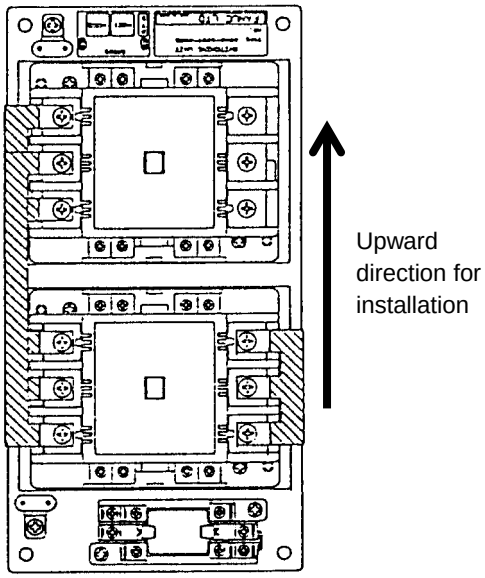

(4) Provide an arc space as shown below.

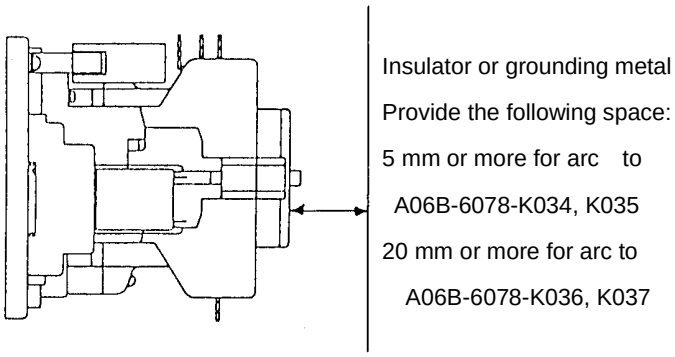

(5) If the main magnetic contactor unit is installed incorrectly or incompletely, the contact can make an abrupt movement due to a shock upon power-up, or its life can be adversely affected. Moreover, if the electric cable to be connected is not tightened sufficiently, an overheat can occur or the electric cable can come off, resulting in a major accident.

(a) Tightening torque

(i) Magnetic contactor

Location	Tightening torque [kg·cm]	
	A06B-6078-K034 A06B-6078-K035	A06B-6078-K036 A06B-6078-K037
MCC main terminal	62.0 (M6.0)	84.0 (M8.0)
MCC auxiliary terminal	14.0 (M3.5)	14.0 (M3.5)

(ii) Relay socket

Location	Tightening torque [kg·cm]
Relay socket	14.0 (M3.5)

© MyFANUC 2D5504D5BAC945D385F48627D4977F6C

10.3 SUB MODULE SW

The sub module SW is 60 mm wide. By being combined with αi SP TYPE A or αi SP TYPE B according to a required function, the sub module SW is used for the spindle switch function to switch between two motors (main and sub) with one spindle amplifier module.

- A cable for connecting the SW module with the αi SP needs to be prepared.
- A metal plate for mounting needs to be prepared.

For the drawing numbers of the sub module SW and connection cable kit, see Chapter 3.

10.3.1 Configuration

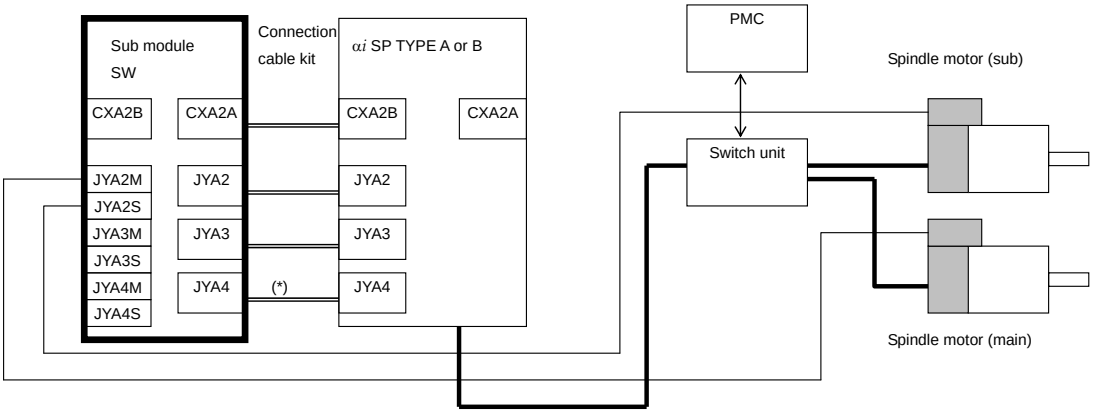

(*) Only when the sub module SW is combined with αi SP TYPE B

10.3.2 Specification

By combining the sub module SW with αi SP TYPE A or αi SP TYPE B, the spindle switch function for switching between two motors (main and sub) with one spindle amplifier module can be used.
The table below indicates allowable combinations of detectors and functions on the main and sub sides of spindle switch control. If the main or sub side of spindle switch control includes a function that requires αi SP TYPE B (organization number 6 or 7 indicated below), select TYPE B as an αi SP to be combined with the sub module SW.

			Organization on main or sub side							Remarks
			1	2	3	4	5	6	7	
αi SP to be combined with sub module SW		αi SP TYPE A	○	○	○	○	○			
		αi SP TYPE B	○	○	○	○	○	○	○	
Spindle system configuration	Sensor on the motor	αi M sensor	○			○	○	○	○	
		αi MZ sensor		○						
		αi BZ sensor (when a built-in motor is used) (*10)			○					
	Sensor on the spindle	αi position coder				○				*3
		External 1-rotation					○			*3
		αi BZ sensor						○		*3
		α position coder S							○	*3

© MyFANUC 2D5504D5BAC945D385F48627D4977F6C

			Organization on main or sub side							Remarks
			1	2	3	4	5	6	7	
Function	Rigid tapping		○*1	○*2	○	○	○*2	○	○	
	Orientation by a position coder			○*6	○	○		○	○	*4
	Orientation by the external one-rotation signal						○*2			*7
	Spindle synchronization	Velocity synchronization	○*2	○*6	○	○	○*2	○	○	*5
		Phase synchronization		○*6	○	○	○*9	○	○	*5
	Threading			○*6	○	○		○	○	
	Cs-axis contour control			○*6	○			○	○	*5

*1 The spindle and motor must be interconnected with a timing belt or gear. No orientation is available to adjust the tapping start position.
*2 The spindle and motor must be interconnected with a timing belt or gear.
*3 The spindle and detector must be interconnected in one-to-one connection mode.
*4 Orientation of external stop position setting type can be used on the main side only.
*5 Two motor amplifiers are required.
*6 Cs contour control can be used on the main side only.
*7 Note that the stop position moves by a backlash between the spindle and motor because of the theory of operation.
*8 The spindle and motor must be interconnected directly or with a timing belt or gear in one-to-one connection mode.
*9 Before specifying spindle synchronization, perform orientation to detect the one-rotation signal (PC1DT=1).
*10 The α*i*CZ analog output type is also applicable.

Other notes

Up to two stages of parameter gear switching can be set on the sub side.
With the Power Mate, only Model D and F can use spindle switch control.

© MyFANUC 2D5504D5BAC945D385F48627D4977F6C

10.3.3 External Dimensions

Sub module SW

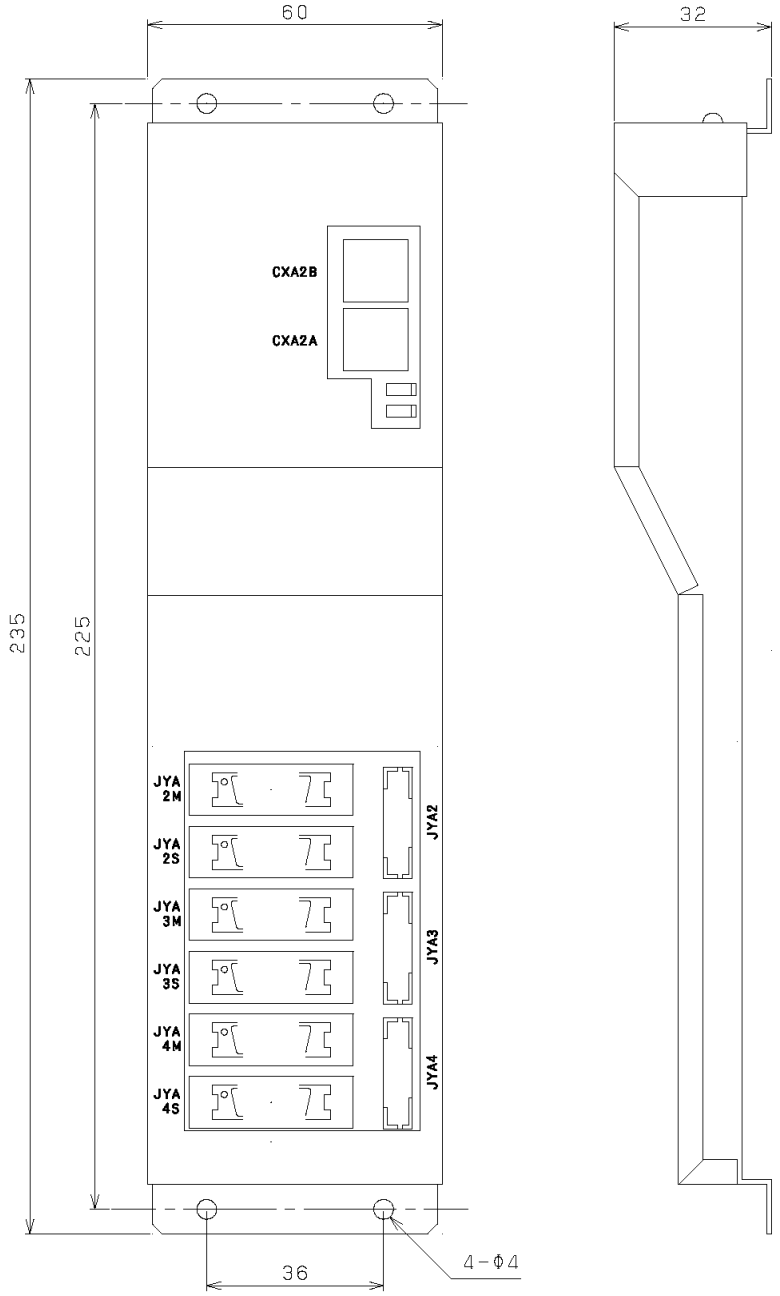

NOTE
A metal plate for mounting the sub module SW needs to be separately prepared.

© MyFANUC 2D5504D5BAC945D385F48627D4977F6C

Installation when the sub module SW is combined with an αi SP 15 (90 mm wide)

Prepare a metal plate for mounting the sub module SW. The dimensions of a metal plate for mounting the sub module SW are specified to avoid interference with the short bar of the DC link section.

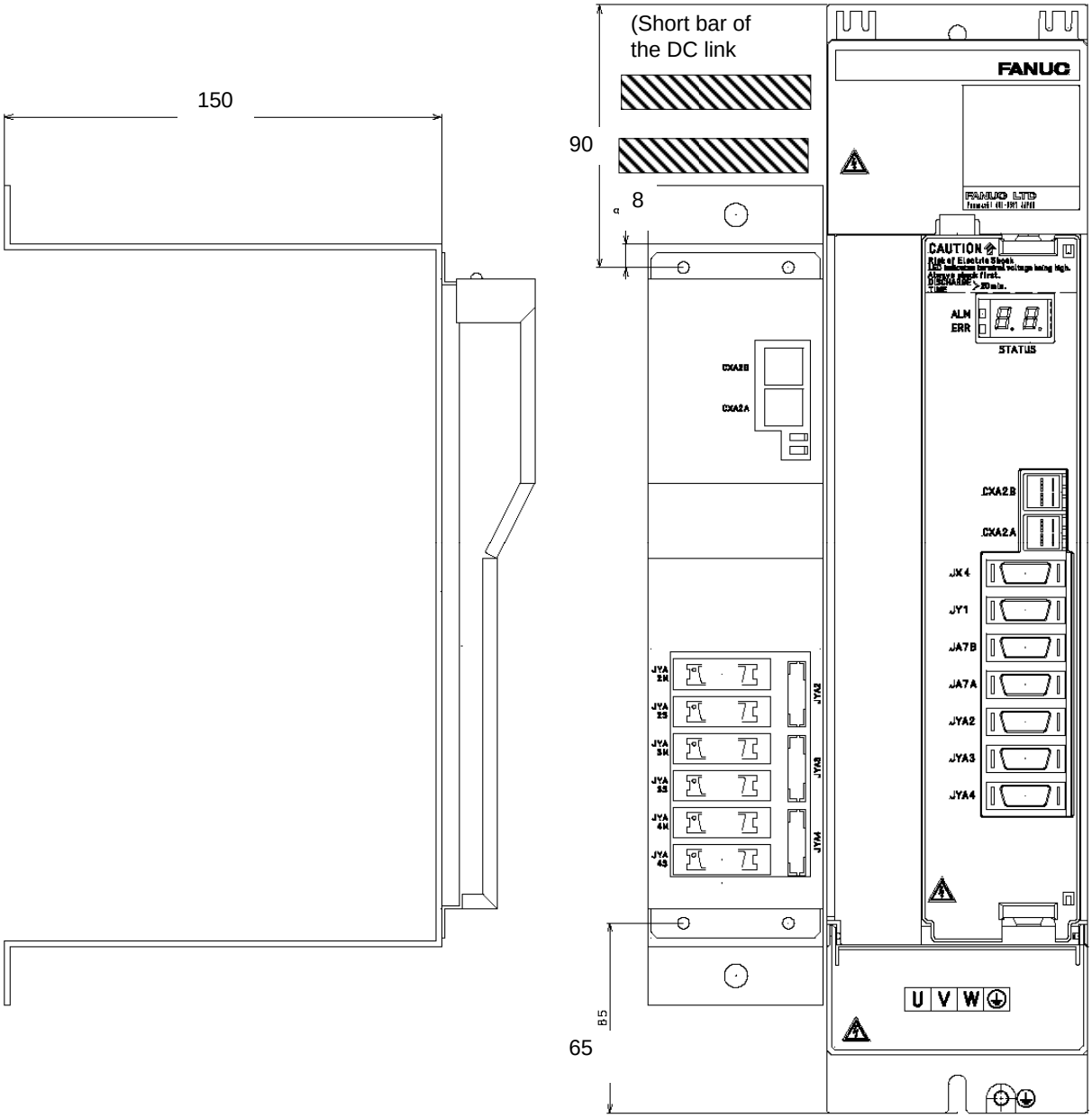

© MyFANUC 2D5504D5BAC945D385F48627D4977F6C

10.3.4 Connector Installation Diagram (for Combination with αi SP 15)

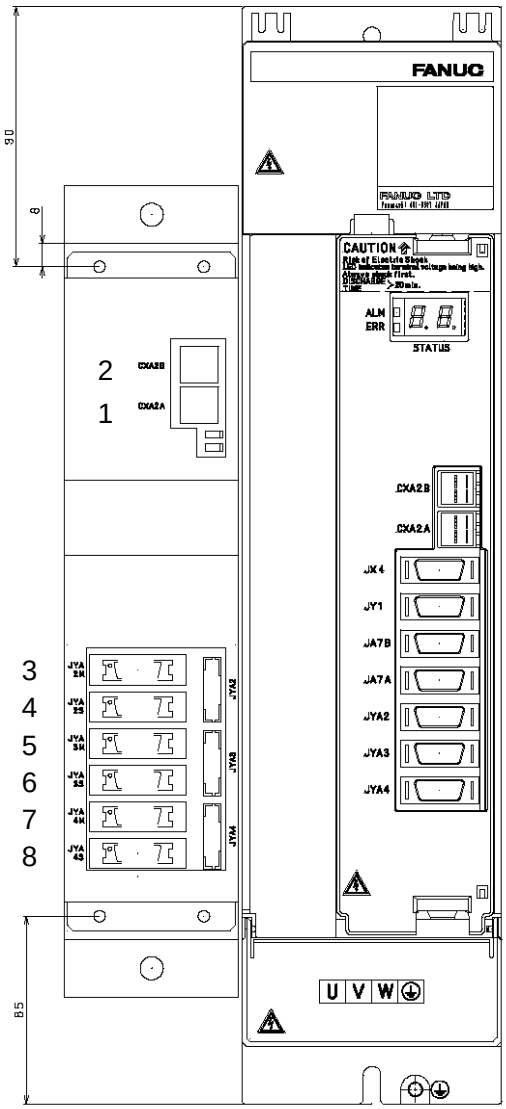

	Name	Indication
1	Connector for αi PS interface output	CXA2A
2	Connector for αi PS interface input	CXA2B
3	Connector (main side) for spindle sensor connection on motor side	JYA2M
4	Connector (sub side) for spindle sensor connection on motor side	JYA2S
5	Connector for position coder connection and external one-rotation signal connection (main side)	JYA3M
6	Connector for position coder connection and external one-rotation signal connection (sub side)	JYA3S
7	Connector for separate spindle sensor connection (main side)	JYA4M
8	Connector for separate spindle sensor connection	JYA4S

NOTE

Install Submodule SW on the right side of the αi SP when width of αi SP is 150mm or 300mm witdth.

© MyFANUC 2D5504D5BAC945D385F48627D4977F6C

10.3.5 Connection

Total connection diagram

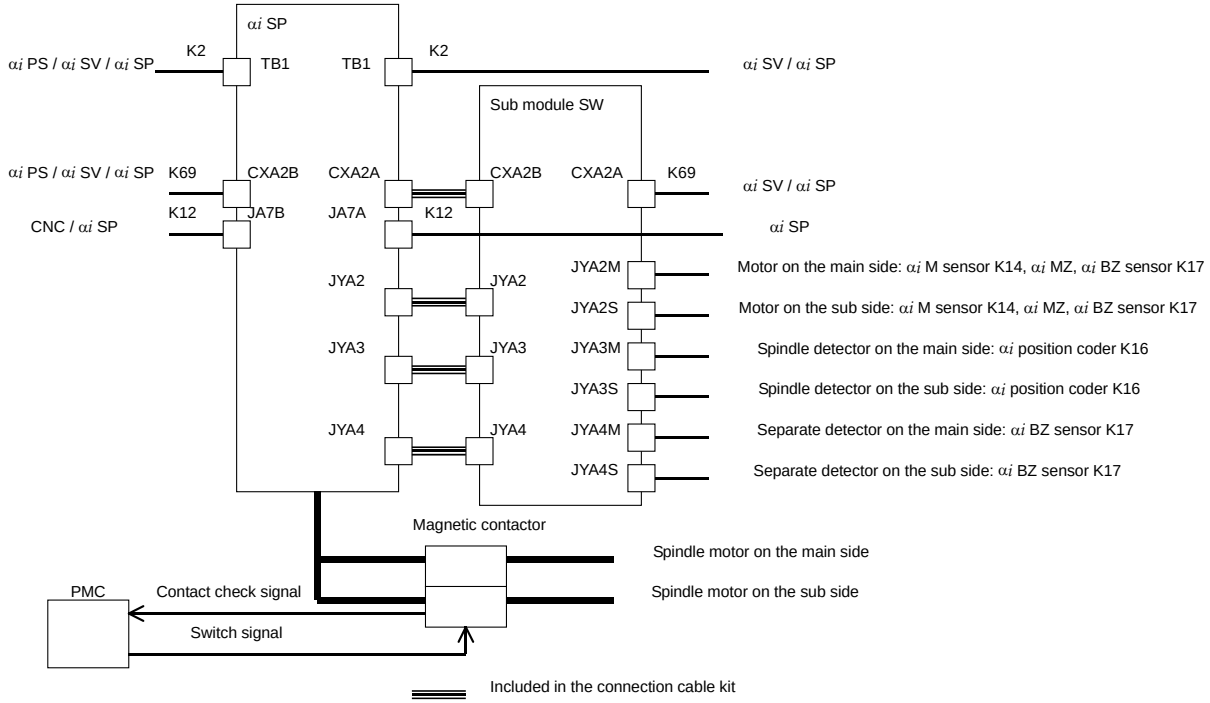

The αiCZ analog output type can be used in the same way as the αiBZ sensor.
For details of the connection cables other than the connection cable kit, see the items of relevant K numbers in Chapter 9.
For the drawing number of the connection cable kit, see Chapter 3.

© MyFANUC 2D5504D5BAC945D385F48627D4977F6C

10.4 SUB MODULE SM

When used with the αi SP TYPE B, the sub module SM is used to drive the synchronous built-in spindle motor Bi S series.

Overall connection

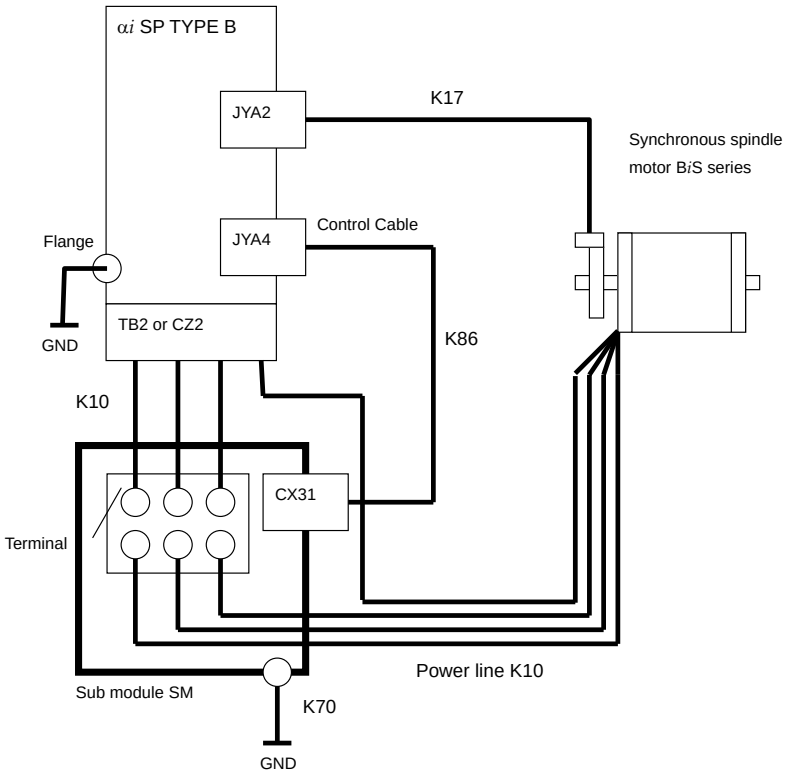

> ⚠ **WARNING**
> To ensure safety, avoid inserting switches to the power lines connected to the αiSP, sub module SM, and motor. If a switch connected to such a power line is turned off during motor rotation, overvoltage generated from the motor cannot be blocked, possibly damaging the motor and sub module SM.

10.4.1 Specifications

Model name	SSM-100	SSM-200
Short-circuit current	100Arms (within 120 sec)	200Arms (within 120 sec)
Rated input voltage	200 to 480VAC	
Applicable spindle amplifier	αi SP TYPE B Software series: 9D53 (#H553) edition B or later 9D70 (#H570) edition A or later 9D80 (#H580) edition A or later	
Weight	6kg	6.5kg
Power consumption (normal operation without alarm)	3W	6W

© MyFANUC 2D5504D5BAC945D385F48627D4977F6C

> ⚠ **CAUTION**
> To latest αiSP series (A06B-6142-Hxxx#H580 and A06B-6152-Hxxx#H580), apply sub module SM unit edition B or later.

10.4.2 Outline Drawing

With the protective cover
Installed with two M4 screws

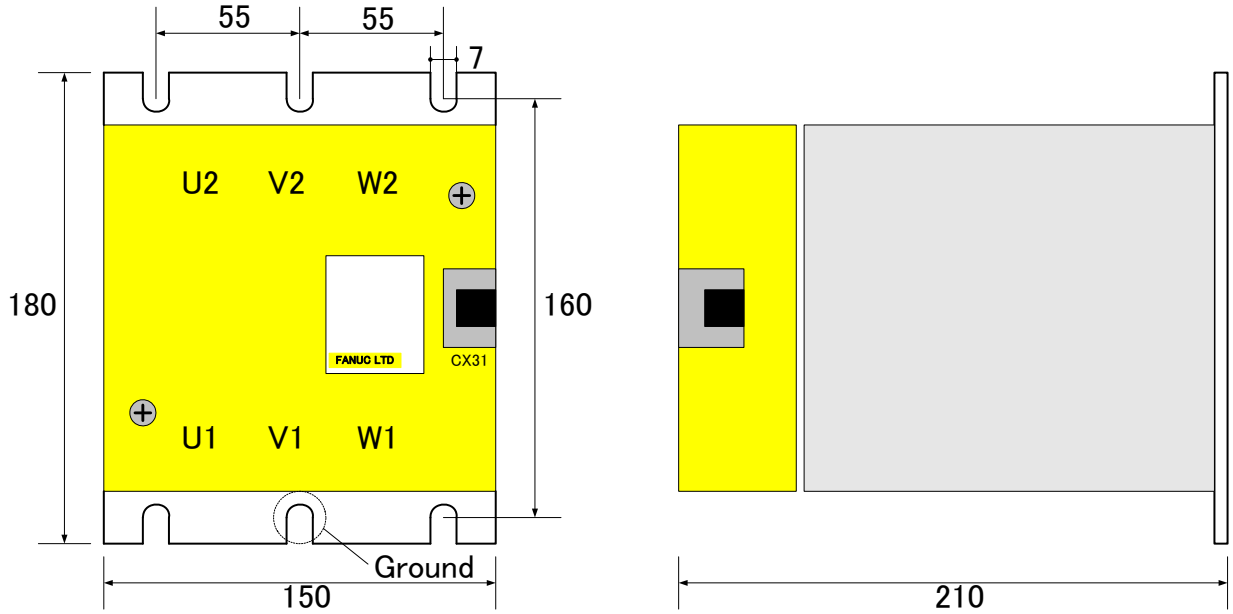

(Unit = mm)

Without the protective cover

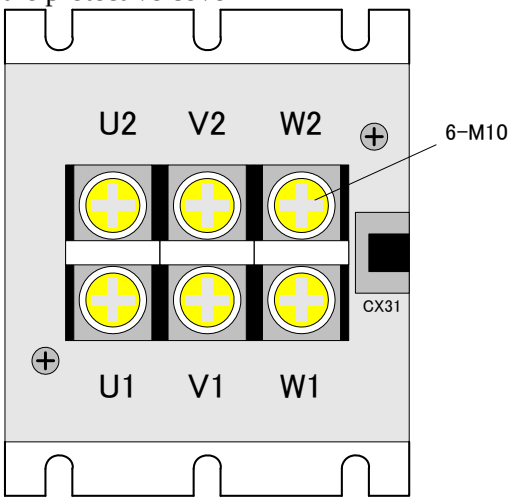

© MyFANUC 2D5504D5BAC945D385F48627D4977F6C

10.4.3 Panel Cut-out

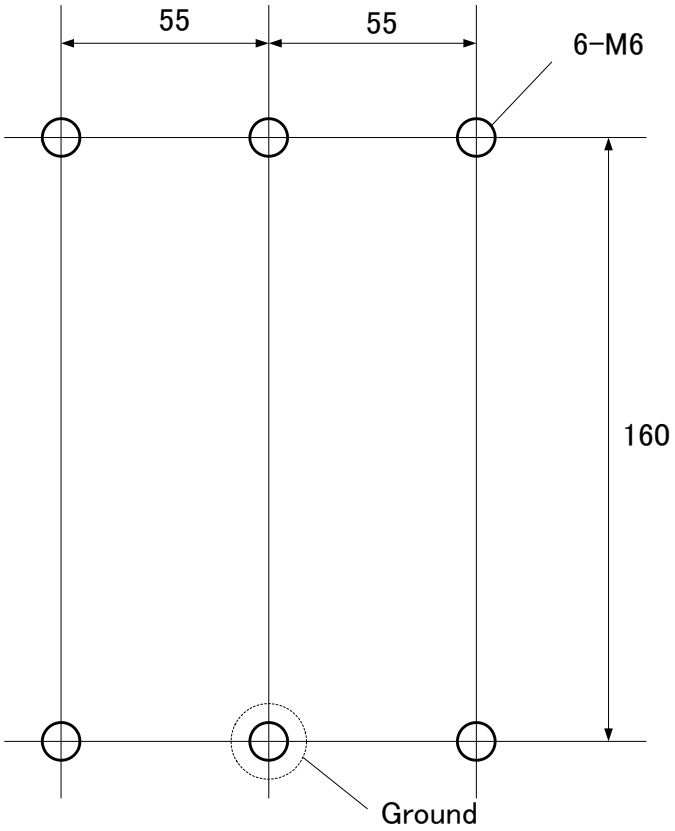

(Unit = mm)

10.4.4 Connection

Details of cables K10, K17, K70, and K86

For details of cables K10, K17, K70, and K86, see Subsection 9.2.3 and Appendix E in this manual.

© MyFANUC 2D5504D5BAC945D385F48627D4977F6C

11 SENSOR

Chapter 11, "SENSOR," consists of the following sections:

11.1 SENSOR FOR THE SERVO SYSTEM 263
11.1.1 αiCZ SENSOR (for Separate Detector Use) 263
11.2 SENSOR FOR THE SPINDLE 283
11.2.1 αi POSITIONCODER 283
11.2.2 α POSITIONCODER S 286
11.2.3 αi BZ SENSOR (for Spindle) 289
11.2.4 αi BZ SENSOR (for built-in spindle motor) 301
11.2.5 αi CZ SENSOR (for Spindle) 314
11.2.6 αi CZ SENSOR (for built-in spindle motor) 327

11.1 SENSOR FOR THE SERVO SYSTEM

11.1.1 αiCZ SENSOR (for Separate Detector Use)

αiCZ SENSOR can be used as a separate sensor when high-accuracy angular displacement detection is required as in the case of a round table configured as a full-closed system using a servo motor and worm gear.
For this sensor, the FANUC serial interface is used. This sensor can be directly connected to the separate detection interface unit.
b

11.1.1.1 Specification

Depending on the detection ring, the following specifications are available. Select the specification that suits the purpose.

Names and specification numbers

Name	Specification number	Remarks	
		Number of teeth	Maximum speed (min^{-1})
αiCZ SENSOR 512 AS	A860-2164-T411	512	3,000
αiCZ SENSOR 768 AS	A860-2164-T511	768	2,000
αiCZ SENSOR 1024 AS	A860-2164-T611	1024	1,500

Operating environmental conditions

Item	Description
Operating temperature range	0 to +70°C
Humidity	95%RH or less

Mechanical and electrical specifications

Item	Description
Power supply voltage	$5V^{+5\%}_{-10\%}$
Current consumption	During normal operation: 150mA During battery backup: 0.3mA (Note)
Water and dust proof class	Equivalent to IP67 (when connector is mated)

© MyFANUC 2D5504D5BAC945D385F48627D4977F6C

NOTE

1 The current consumption at battery backup time is about 3 times larger than that of the αi PULSECODER. So, it is recommended to use 4 pieces of alkaline batteries (size D).

2 Use a battery case (A06B-6050-K060) and 4 alkaline batteries (A06B-6050-K061). Commercially-available size D alkaline batteries may be used.

Resolution and accuracy

Name	Resolution	Positioning accuracy		Repetition accuracy
		Typ.	Max.	Typ.
αiCZ SENSOR 512 AS	3,600,000 / revolution	±4”	±8”	±1”
αiCZ SENSOR 768 AS		±3”	±6”	
αiCZ SENSOR 1024 AS		±2”	±4”	

NOTE

The above is the resolution obtained when the sensor is connected to the 30*i*-B series CNC.

1 When a resolution of 3,600,000/revolution is used as position feedback for the 30*i*-B series CNC, the flexible feed gear (FFG) is to be set as follows.

αiCZ SENSOR 512AS $FFG = \frac{36}{5}$

αiCZ SENSOR 768AS $FFG = \frac{24}{5}$

αiCZ SENSOR 1024AS $FFG = \frac{18}{5}$

For information about the other parameters, refer to B-65270EN/08.

2 When the sensor is connected to a CNC of any earlier model than the 30*i*-B series (including the 0*i*-D series), the resolution of each sensor is as follows.

αiCZ SENSOR 512AS 500,000 / revolution
αiCZ SENSOR 768AS 750,000 / revolution
αiCZ SENSOR 1024AS 1,000,000 / revolution

© MyFANUC 2D5504D5BAC945D385F48627D4977F6C

11.1.1.2 External dimensions

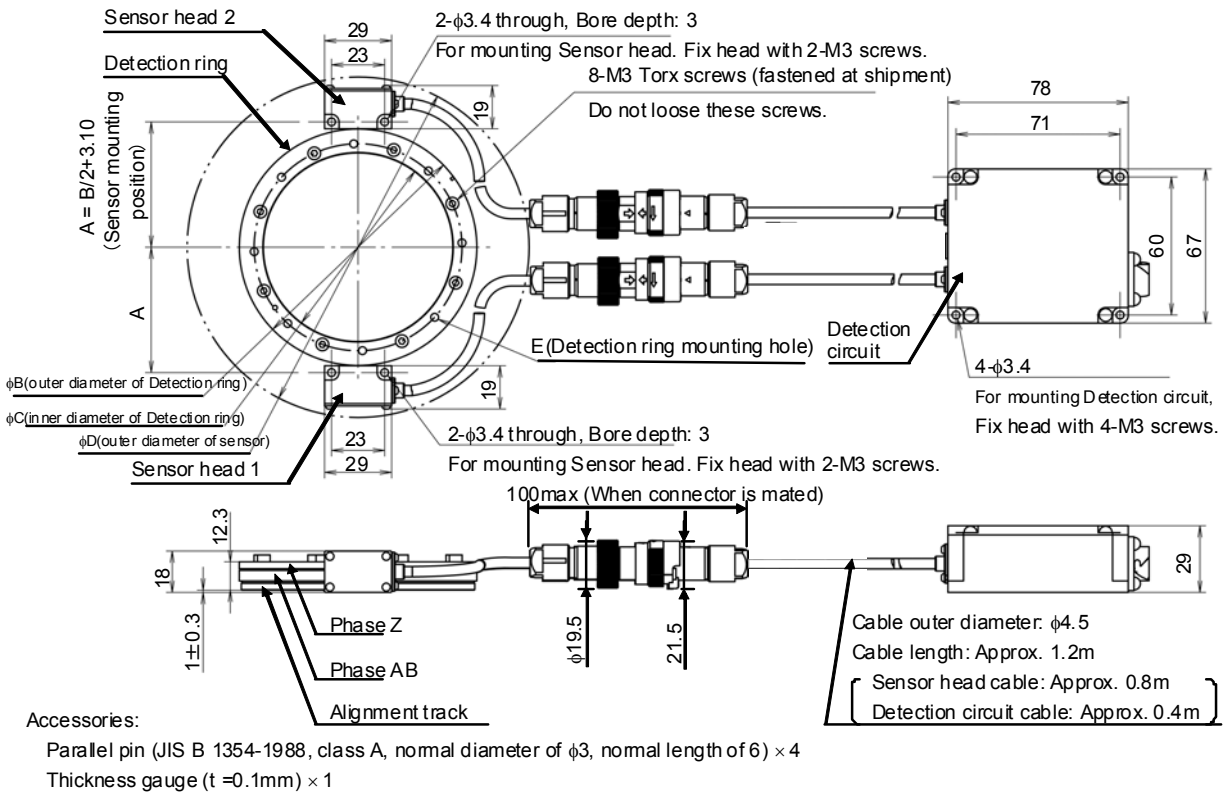

Accessories:
Parallel pin (JIS B 1354-1988, class A, normal diameter of ϕ3, normal length of 6) × 4
Thickness gauge (t =0.1mm) × 1

Unit: mm

Specification number	Number of teeth	Dimensions				
		Sensor mounting position A	Outer diameter of detection ring ϕB	Inner diameter of detection ring ϕC	Outer diameter of sensor ϕD	Detection ring mounting hole E
A860-2164-T411	512	54.5	102.8 +0/-0.02	82 +0.02/-0	148	8-ϕ3.4 through, equally spaced on ϕ90 circumference
A860-2164-T511	768	80.1	154 +0/-0.02	125 +0.02/-0	198	8-ϕ4.5 through, equally spaced on ϕ134 circumference
A860-2164-T611	1024	105.7	205.2 +0/-0.02	160 +0.02/-0	249	8-ϕ5.5 through, equally spaced on ϕ170 circumference

NOTE
1 The sensor is a precision part. Use special care in handling. Particularly, do not apply external force to the Sensor head.
2 Take dust protection measures to prevent foreign matter such as chips from being attached to the sensor.

© MyFANUC 2D5504D5BAC945D385F48627D4977F6C

NOTE

3 The waterproofness of the sensor is equivalent to IP67 when the connector is mated. Note, however, that the waterproofness represented by IP indicates short-time resistance to water only and does not guarantee thorough waterproofness. The sensor may fail if it is kept wet because of exposure to cutting fluid or other kind of liquid. Therefore, take an appropriate measure to prevent the sensor from being exposed to cutting fluid, such as attaching a cover to the machine.
4 For easy maintenance, mount the sensor at a position where it can be replaced easily.
5 Ensure that no vibration greater than 1 G is applied to the Detection circuit.
6 Ground the Detection circuit. The bottom of the Detection circuit is not painted. So, the Detection circuit can be grounded only by screwing.
7 Fix the cable to the machine near the Sensor head, so that stress is not applied directly to the Sensor head.
8 All the cables of sensor is used flexible cables.

11.1.1.3 Installing the sensor

Installation procedure (outline)

Install the sensor according to the procedure below. For details of each step, see the subsequent sections.

- Machine the Sensor head mounting surface as necessary then insert the parallel pins.
- Mount the Detection ring onto the shaft or sleeve of the machine by centering, then fasten the ring with screws.
- Adjust the gap between the Sensor heads and Detection ring then mount the Sensor heads onto the machine.

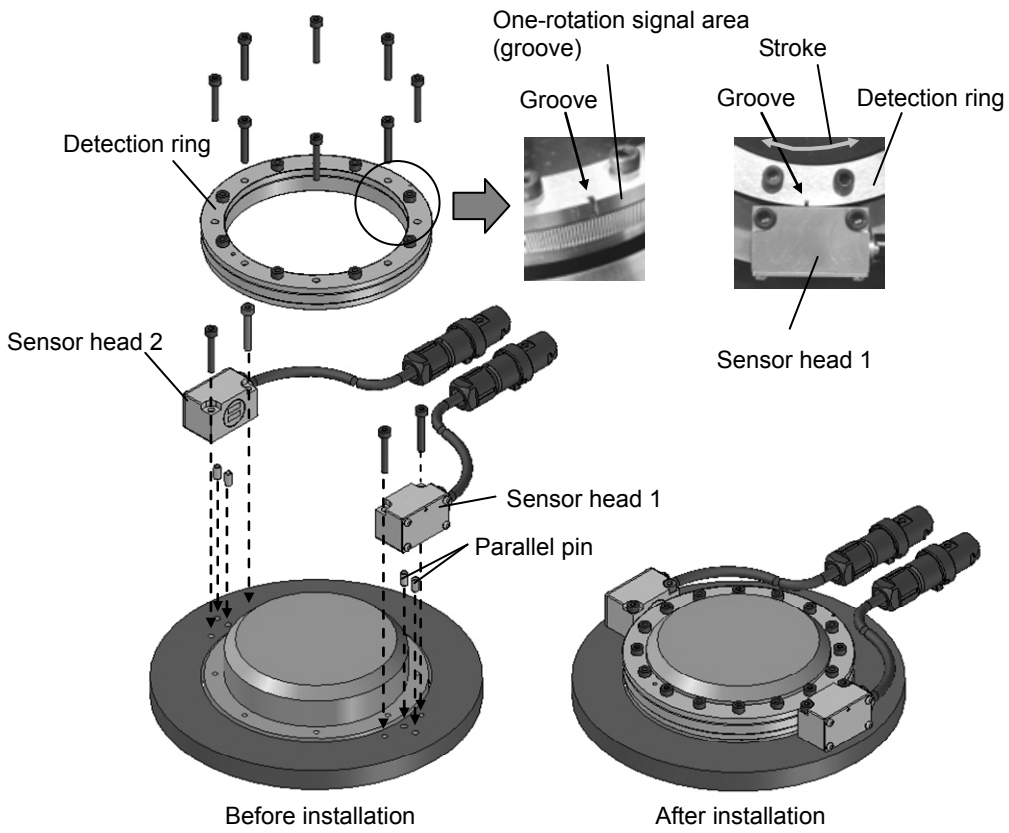

© MyFANUC 2D5504D5BAC945D385F48627D4977F6C

Sensor head mounting surface

Machine the Sensor head mounting surface as shown in the figure below, and insert the supplied parallel pins into the 2-ϕ3H6 holes. The parallel pins serve as guides in adjusting the gap of Sensor heads.

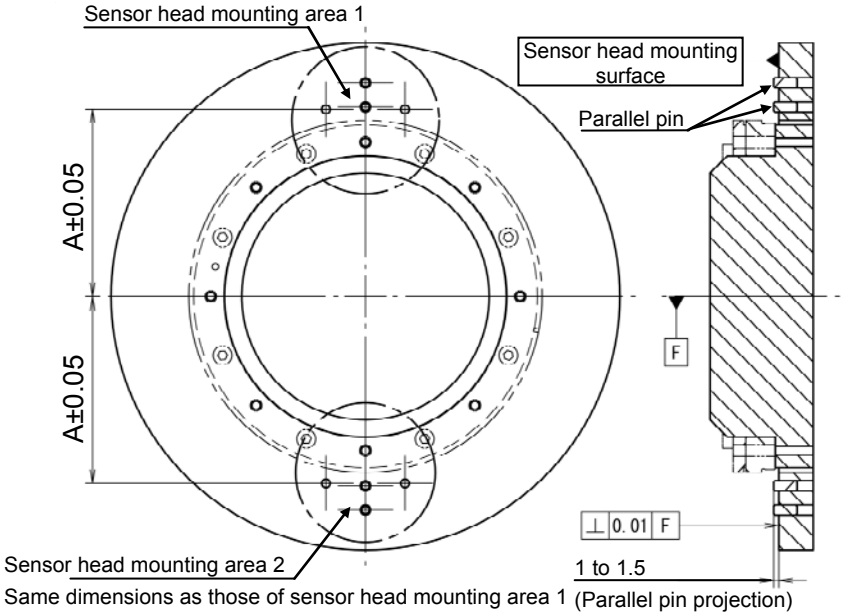

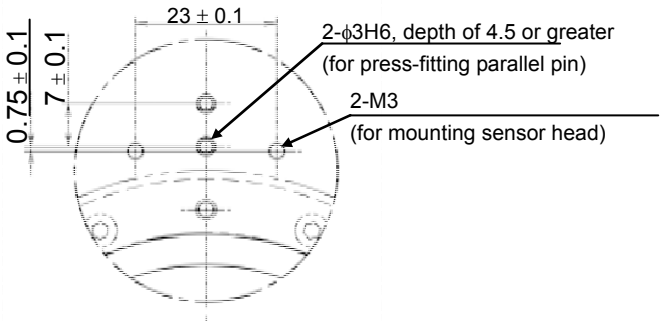

Details of sensor head mounting area 1

NOTE

1 For dimension A, see “External Dimensions”, described earlier.
2 Design so that the positions of the tapped holes for mounting the Sensor head after machine assembly, not the parts having Sensor head mounting surfaces, satisfy the dimensions.

© MyFANUC 2D5504D5BAC945D385F48627D4977F6C

Installing the Detection ring

Adjust the Detection ring so that the runout with respect to the rotation center on the centering track becomes 0.01 mm or less, and mount the Detection ring. Moreover, in designing, ensure that in the direction along the shaft, the Detection ring mounting plane is 1 ±0.3 mm off the Sensor head mounting surface. Ensure also that the perpendicularity of the Detection ring mounting surface is within 0.01 mm from the rotation center. Apply a thread locker or the like to the screws to prevent the screws from becoming loose.

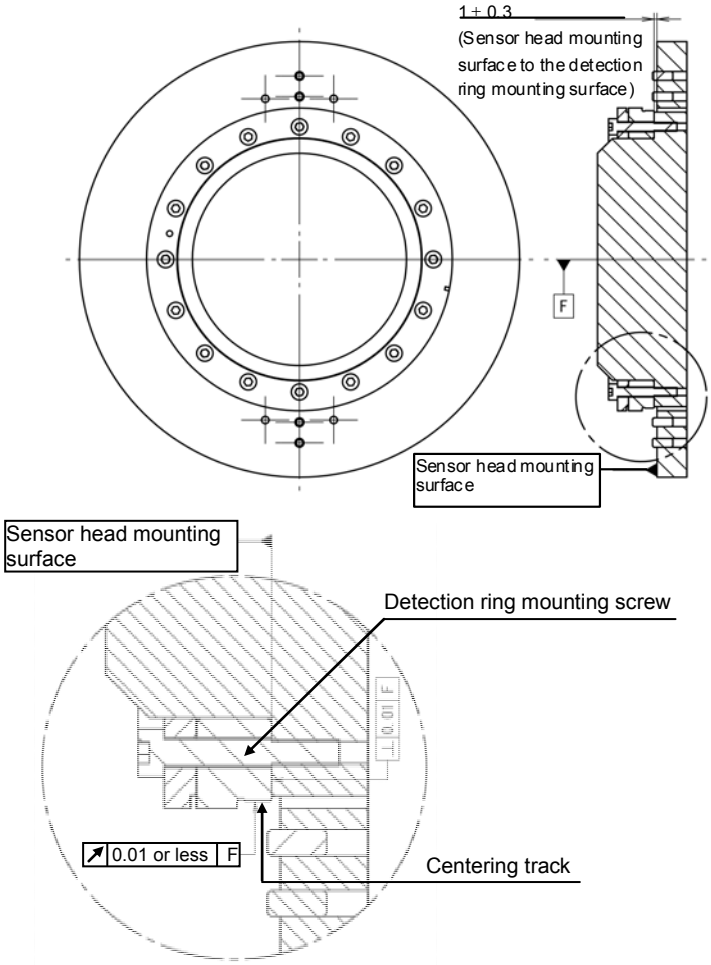

Specification number	Outer diameter of centering track (mm)	Positions of Detection ring mounting holes	Mounting screw	Recommended tightening torque (Nm)
A860-2164-T411	ϕ101	8-ϕ3.4 through, equally spaced on ϕ90 circumference	M3	1.5±5%
A860-2164-T511	ϕ152.2	8-ϕ4.5 through, equally spaced on ϕ134 circumference	M4	3.0±5%
A860-2164-T611	ϕ203.4	8-ϕ5.5 through, equally spaced on ϕ170 circumference	M5	6.0±5%

NOTE

1 For centering purposes, design the outer diameter of the spindle shaft or the sleeve so that that the clearance between it and the inner diameter of the Detection ring is 0.1 mm or greater on both sides.

2 Secure the Detection ring on an end face with screws. Avoid shrink fitting to mount the Detection ring.

© MyFANUC 2D5504D5BAC945D385F48627D4977F6C

NOTE

3 The Detection ring consists of a Z ring and an A/B ring. Before the sensor is shipped, these rings are fastened together with Torx screws; do not remove the screws. The threaded portion of the Detection ring is not counter bored, so during machine design, take care so that the machine does not interfere with the screw head.

4 Perform centering on the centering track. The outer diameter of the Z ring is not assured for coaxiality with the pitch circle of the teeth. When performing centering, use a tool such as a plastic hammer not to damage the gear teeth.

5 Magnetic matter attached to gear teeth can lead to a detection error. After centering is completed, remove such foreign matter by air blowing.

6 If the Detection ring mounting screws are tightened with excessive torque, the Detection ring may be elastically deformed, affecting the sensor detection accuracy. Mount the ring with the recommended screw tightening torque.

Installing the Sensor heads

Install the Sensor heads according to the procedure below. The same procedure is applicable to Sensor head 1 and Sensor head 2.

- Place the Sensor head on the Sensor head mounting surface so that the parallel pins are positioned in the slot on the bottom of the Sensor head, and fasten the Sensor head temporarily. The magnet in the Sensor head and the Detection ring attract each other. When installing the Sensor head, be careful not to hit the Sensor head against the Detection ring. Impact can damage detector elements in the Sensor head.

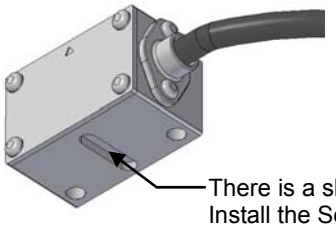

- Insert the thickness gauge (supplied as an accessory, t = 0.1 mm) between the Detection ring and the Sensor head, and while lightly pressing the Sensor head against the thickness gauge, tighten the screws (recommended tightening torque: 1.3N·m±10%). Apply a thread locker or the like to the screws to prevent them from becoming loose.

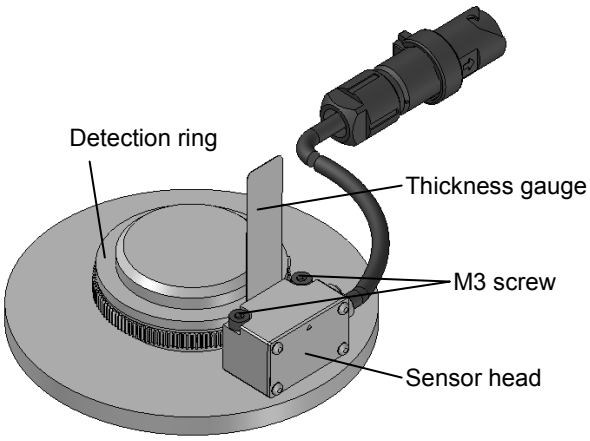

- Pull out the thickness gauge, and slowly turn the shaft to ensure that the Detection ring and the Sensor head do not touch each other.

© MyFANUC 2D5504D5BAC945D385F48627D4977F6C

11.1.1.4 Connection

Connection diagram (outline)

When using the αiCZ SENSOR, connect it as shown in the figure below.

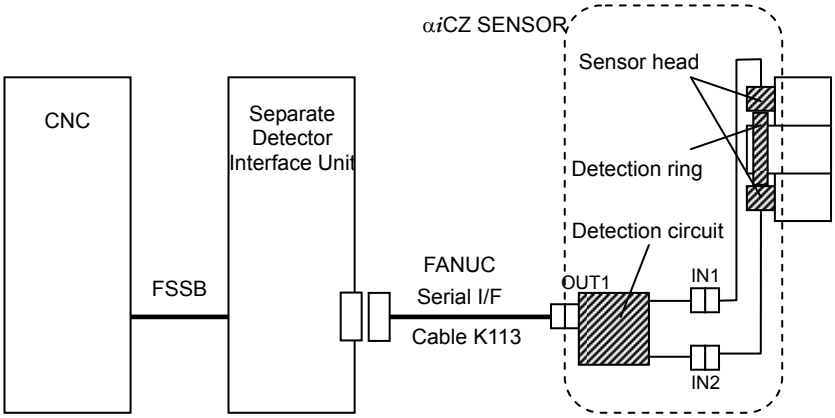

NOTE

The cable K113 needs to be prepared by the customer. The connector is not supplied, and must be purchased separately. For details of connection, see "Details of cable K113", described later.

Extending the sensor cable

The sensor cable from the Sensor head to the Detection circuit can be extended up to 4 m, as shown in the figure below.

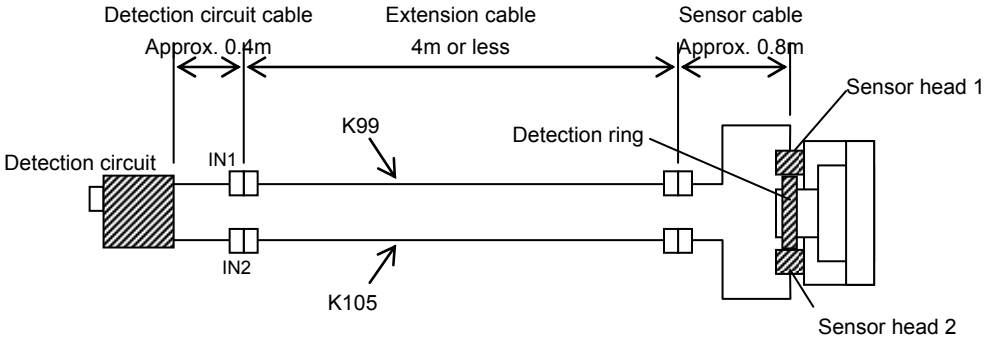

NOTE

The cables K99 and K105 need to be prepared by the customer. The connector is not supplied, and must be purchased separately. For details of connection, see "Details of cable K99" and "Details of cable K105", described later.

© MyFANUC 2D5504D5BAC945D385F48627D4977F6C

Details of cable K113

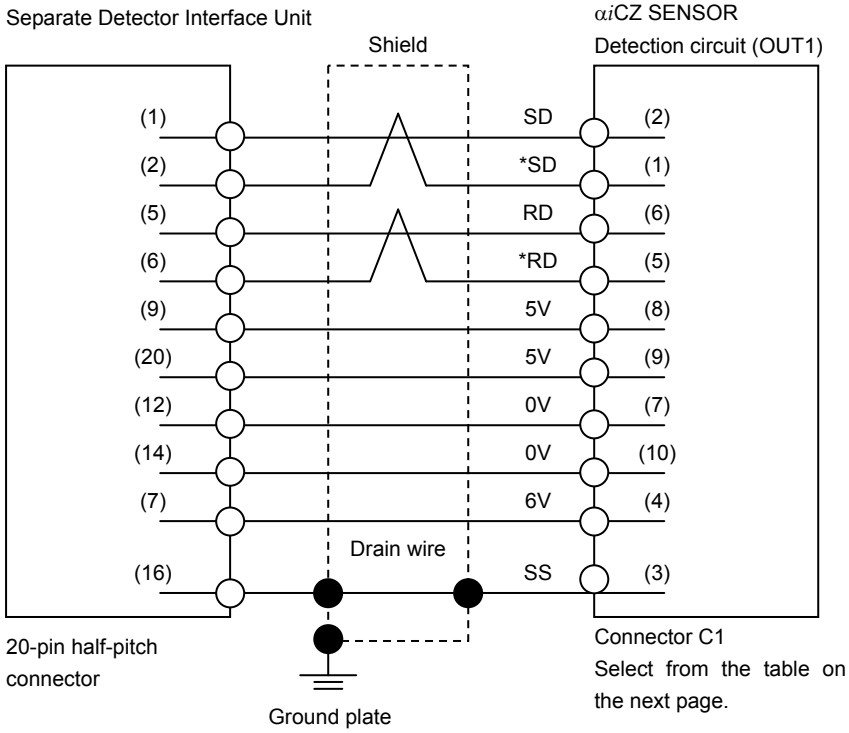

Using cable conductor

Signal name	Cable length : 28m or less	Cable length : 50m or less
5V, 0V,6V	$0.3mm^2$ x 5 Strand configuration: 12/0.18 or 60/0.08/mm Insulation outer diameter: ϕ1.5 or less	$0.5mm^2$ x 5 Strand configuration: 20/0.18 or 104/0.08/mm Insulation outer diameter: ϕ1.5 or less
SD, *SD, RD, *RD	$0.18mm^2$ or more Twisted-pair wire Insulation outer diameter: ϕ1.5 or less	$0.18mm^2$ or more Twisted-pair wire Insulation outer diameter: ϕ1.5 or less
Drain wire	$0.15mm^2$ or more	$0.15mm^2$ or more

Recommended cable conductor

Specification number	Summary
A66L-0001-0479	Flexible cable, Cable length : 28m or less
A66L-0001-0488	Flexible cable, Cable length : 50m or less

NOTE

1 The cable K113 needs to be prepared by the customer. The connector is not supplied, and must be purchased separately.
2 If any cable material other than the recommended ones is used, make sure that the total resistance of the 5V and 0V lines is less than 2Ω.
3 The ground plate to which the shield is connected must be placed as close as possible to the separate detector interface unit so that distance between the ground plate and the separate detector interface unit becomes shortest.
4 Route power lines so that they do not run in parallel with signal lines.
5 For details of recommended cable conductor, see Appendix B, “CABLES”.

© MyFANUC 2D5504D5BAC945D385F48627D4977F6C

NOTE

6 Detection circuit side connector can accept maximum 0.5mm^2 (wire construction 20/0.18 or 104/0.08, diameter ϕ1.5 or less) wire and sheath diameter is ϕ5.7 to ϕ8.0. In case of using thicker wire or cable, take measures described below.

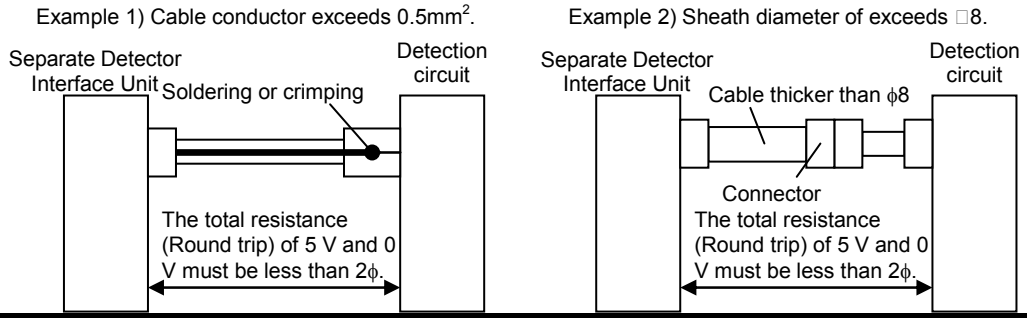

Connector C1

Connection type	Manufacture	Connector type	Connector specification (manufacturer)	Terminal specification (manufacturer)	Connector kit specification (FANUC)
Crimp type	Japan Aviation Electronics Industry, Limited	Straight plug	JN2DS10SL□ (□: 1 or 2; Note 1)	JN1-22-22S	A06B-6114-K204#S (including terminals)
		Angle plug	JN2FS10SL□ (□: 1 or 2; Note 1)		A06B-6114-K204#E (including terminals)
	Hirose Electric Co., Ltd.	Straight plug	HR34B-12WP△-10SC (△: A or B; Note 2)	HR34B-SC1	----------
		Angle plug	HR34B-12WLP△-10SC (△: A or B; Note 2)		----------
Solder type	Hirose Electric Co., Ltd.	Straight plug	HR34B-12WP△-10S (△: A or B; Note 2)	----------	A06B-6114-K205#S
		Angle plug	HR34B-12WLP△-10SC (△: A or B; Note 2)		A06B-6114-K205#E

NOTE

1 The value for □ is determined based on the outer diameter of the cable sheath.
  1: Outer diameter of compatible cable: ϕ5.7 to ϕ7.3
  2: Outer diameter of compatible cable: ϕ6.5 to ϕ8.0

2 The value for △ is determined based on the outer diameter of the cable sheath.
  A: Outer diameter of compatible cable: ϕ5.7 to ϕ7.3
  B: Outer diameter of compatible cable: ϕ6.5 to ϕ8.0

3 Special tools of specific manufacturers are required for crimp connector assembly. See the following table.

Tools for the assembly of crimp connectors

Manufacture		Manufacturer specification	Specification number	Applicable cable thickness
Japan Aviation Electronics Industry, Limited	Crimping tool	CT150-2-JN1-E	A06B-6114-K201#JN1E	21AWG(0.5mm^2,20/0.18) 23AWG(0.3mm^2) 25AWG(0.18mm^2)
		CT150-2-JN1-D	A06B-6114-K201#JN1D	20AWG(0.5mm^2,104/0.08) 21AWG(0.5mm^2, 20/0.18) 25AWG(0.18mm^2)
	Extractor	ET-JN1	A06B-6114-K201#JN1R	----------

© MyFANUC 2D5504D5BAC945D385F48627D4977F6C

Manufacture		Manufacturer specification	Specification number	Applicable cable thickness
Hirose Electric Co., Ltd.	Crimping tool	HT102/HR34B-1	----------	----------
	Extractor	RP6-SC-TP	----------	----------

Details of cable K99

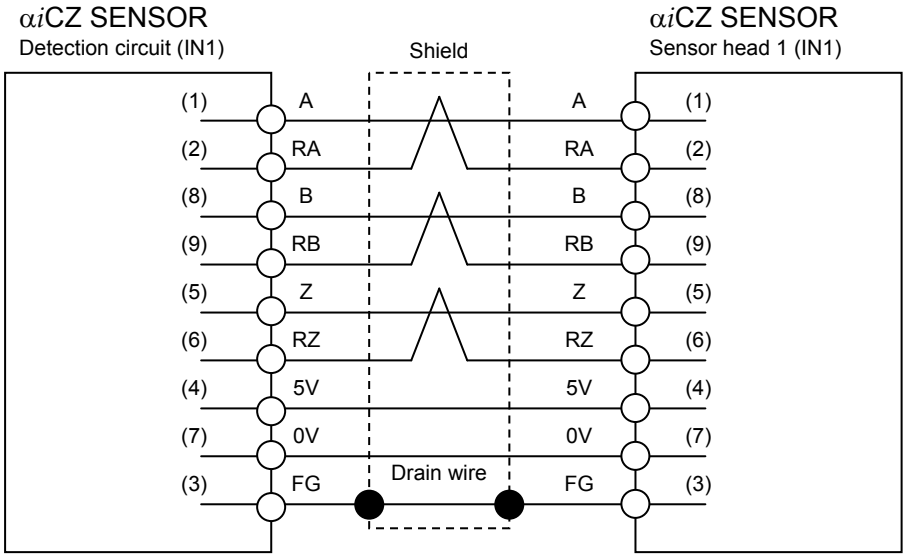

Connector for relay (Crimp type, Manufacture: Japan Aviation Electronics Industry, Limited):
JN1HS10PL□:Relay receptacle
(□: 1 or 2; See NOTE.)
Terminal : JN1-22-22P

Connector kit specification (FANUC):
A06B-6114-K206 (including terminals)

Plug connector (Crimp type, Manufacture: Japan Aviation Electronics Industry, Limited):
JN1DS10SL□: Straight plug
JN1FS10SL□: Angle plug
(□: 1 or 2; See NOTE.)
Terminal : JN1-22-22S

Connector kit specification (FANUC):
A06B-6114-K200#S: Straight plug
A06B-6114-K200#E: Angle plug

Using cable conductor

Signal name	Configuration
5V, 0V	0.5mm^2 or more × 2
A, RA ,B, RB, Z, RZ	0.2mm^2 or more, twisted-pair wire
Drain wire	0.15mm^2 or more

Recommended cable conductor

Specification number	Cable length
A66L-0001-0482	4m or less

© MyFANUC 2D5504D5BAC945D385F48627D4977F6C

NOTE

1 The extension cable K99 needs to be prepared by the customer. The connector is not supplied, and must be purchased separately.
2 The value for □ is determined based on the outer diameter of the cable sheath.
  1: Outer diameter of compatible cable: ϕ5.7 to ϕ7.3
  2: Outer diameter of compatible cable: ϕ6.5 to ϕ8.0
3 If any cable material other than the recommended ones is used, make sure that the total resistance of the 5V and 0V lines is less than 2Ω.
4 For details of recommended cable conductor, see Appendix B, “CABLES”.
5 Make sure that the cable can be distinguished from cable K105.
6 Special tools of specific manufacturers are required for crimp connector assembly. See “Details of cable K113” earlier in this subsection.

Details of cable K105

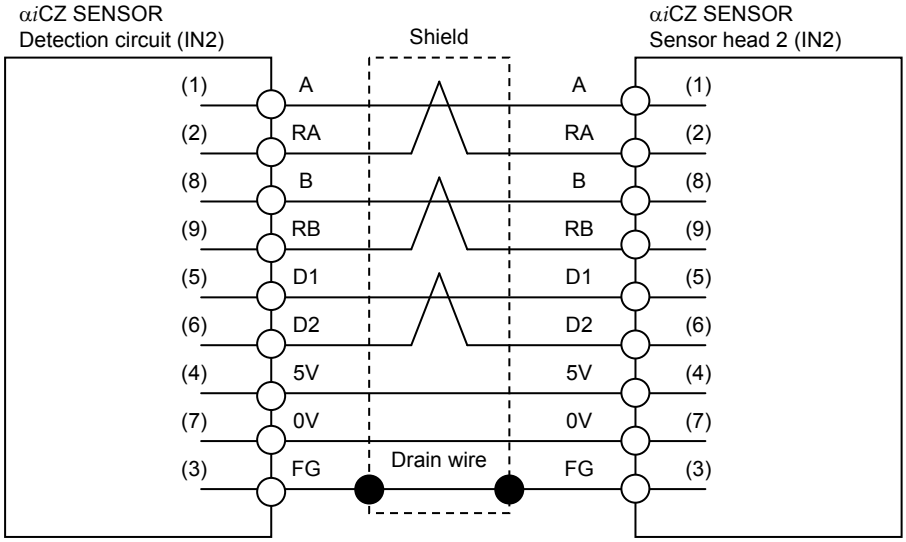

Connector for relay (Crimp type, Manufacture: Japan Aviation Electronics Industry, Limited):
JN1HS10PL□: Relay receptacle
(□: 1 or 2; See NOTE.)
Terminal : JN1-22-22P

Connector kit specification (FANUC):
A06B-6114-K206 (including terminals)

Plug connector (Crimp type, Manufacture: Japan Aviation Electronics Industry, Limited):
JN1DS10SL□: Straight plug
JN1FS10SL□: Angle plug
(□: 1 or 2; See NOTE.)
Terminal : JN1-22-22S

Connector kit specification (FANUC):
A06B-6114-K200#S: Straight plug
A06B-6114-K200#E: Angle plug

Using cable conductor

Signal name	Configuration
5V, 0V	0.5mm^2 or more × 2
A, RA ,B, RB, D1, D2	0.2mm^2 or more, twisted-pair wire
Drain wire	0.15mm^2 or more

Recommended cable conductor

Specification number	Cable length
A66L-0001-0482	4m or less

© MyFANUC 2D5504D5BAC945D385F48627D4977F6C

NOTE

1 The extension cable K105 needs to be prepared by the customer. The connector is not supplied, and must be purchased separately.
2 The value for □ is determined based on the outer diameter of the cable sheath.
  1: Outer diameter of compatible cable: ϕ5.7 to ϕ7.3
  2: Outer diameter of compatible cable: ϕ6.5 to ϕ8.0
3 If any cable material other than the recommended ones is used, make sure that the total resistance of the 5V and 0V lines is less than 2Ω.
4 For details of recommended cable conductor, see Appendix B, “CABLES”.
5 Make sure that the cable can be distinguished from cable K99.
6 Special tools of specific manufacturers are required for crimp connector assembly. See “Details of cable K113” earlier in this subsection.

11.1.1.5 Rotation direction

When the sensor is viewed from the top as shown in the following figure, clockwise rotation of the Detection ring is referred to as forward rotation:

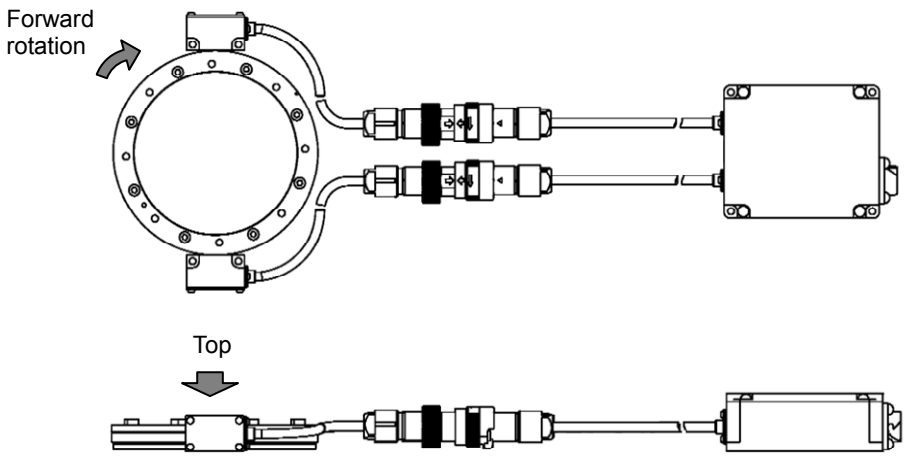

© MyFANUC 2D5504D5BAC945D385F48627D4977F6C

11.1.1.6 Start-up procedure

Overview

The start-up procedure is shown below.

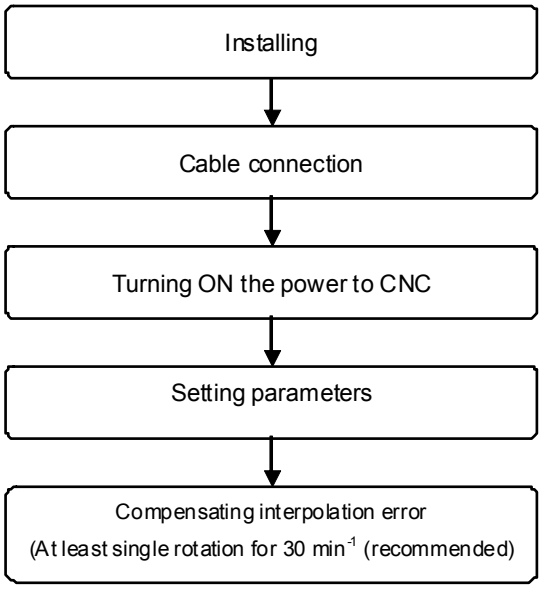

NOTE

1 For information about how to check the output signal, see “Output signal check method”, described later.
2 If the fixed position of the Sensor head is changed after power on, initialize the Detection circuit. For the procedure, see “Procedure for Initializing the Detection Circuit”, described later.
3 If it is difficult to rotate the sensor at least one turn during compensation of interpolation error, repeat forward and reverse rotations under the above rotation condition to achieve at least one turn in total.

11.1.1.7 Interpolation error compensation

The α*i*CZ SENSOR incorporates a circuit that automatically detects an interpolation error and compensates for it. The detection conditions differ with the specification, but a common value to all specifications, 30 min^{-1}, is recommended. After turning on the power, be sure to rotate under the following condition and perform interpolation error compensation.

Interpolation error detection conditions
α*i*CZ SENSOR 512AS: 25 to 105min^{-1}, constant speed, one or more turns
α*i*CZ SENSOR 768AS: 20 to 70min^{-1}, constant speed, one or more turns
α*i*CZ SENSOR 1024AS: 15 to 50min^{-1}, constant speed, one or more turns

Recommended learning conditions
Common to three models: 30min^{-1}, constant speed, one or more turns

© MyFANUC 2D5504D5BAC945D385F48627D4977F6C

NOTE

1 When the αiCZ SENSOR is operated for the first time after installed on the machine or when the Sensor head is moved after power on to initialize the Detection circuit as described below, interpolation error compensation is performed. For interpolation error learning, rotate the sensor under the conditions above.
2 Detected data is backed up in the detection circuit with a battery.
3 If it is difficult to rotate the sensor at least one turn, repeat forward and reverse rotations under the above rotation speed condition to achieve at least one turn in total.
4 Compensation is automatically performed if the above detection conditions are satisfied.

11.1.1.8 Function for detecting the disconnection of the Sensor head cable

The Detection circuit A860-2164-V203 has a function which can detect the disconnection of the Sensor head cable of Sensor head 2 detecting the absolute position during backup operation in the CNC power-off state also when the power to the CNC is off.
To use this function, the following conditions must be satisfied. If this function cannot be used since either of the following conditions is not satisfied, this function can be disabled with the setting switch in the Detection circuit and the sensor can be used.

<Conditions for using the function>
(1) Sensor head 2 of the current specification (A860-2162-V012) is required.
(This function cannot be used with the old specification of Sensor head 2 (A860-2162-V011).)
(2) Using this function by extending the Sensor head cable requires the extension cable mentioned earlier.

<Setting switch>

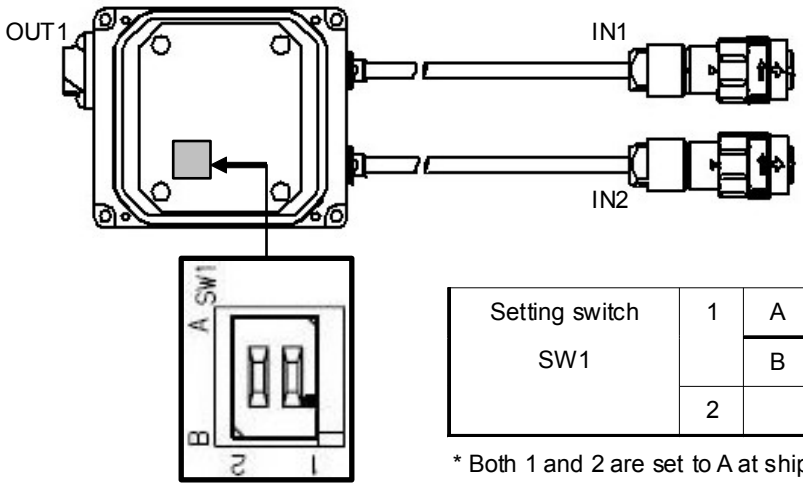

Setting switch			
SW1	1	A	Enable
		B	Disable
	2	Not used	

* Both 1 and 2 are set to A at shipment

© MyFANUC 2D5504D5BAC945D385F48627D4977F6C

11.1.1.9 Procedure for initializing the Detection circuit

If the Sensor head, detection ring, or detection circuit is replaced, or if the Sensor head is moved after the power is turned on, the detection circuit needs to be initialized according to the procedure described below. When the detection circuit is initialized normally, the APC alarm "BATTERY VOLTAGE 0" is issued. After checking that the alarm has been issued, perform reference position return again.

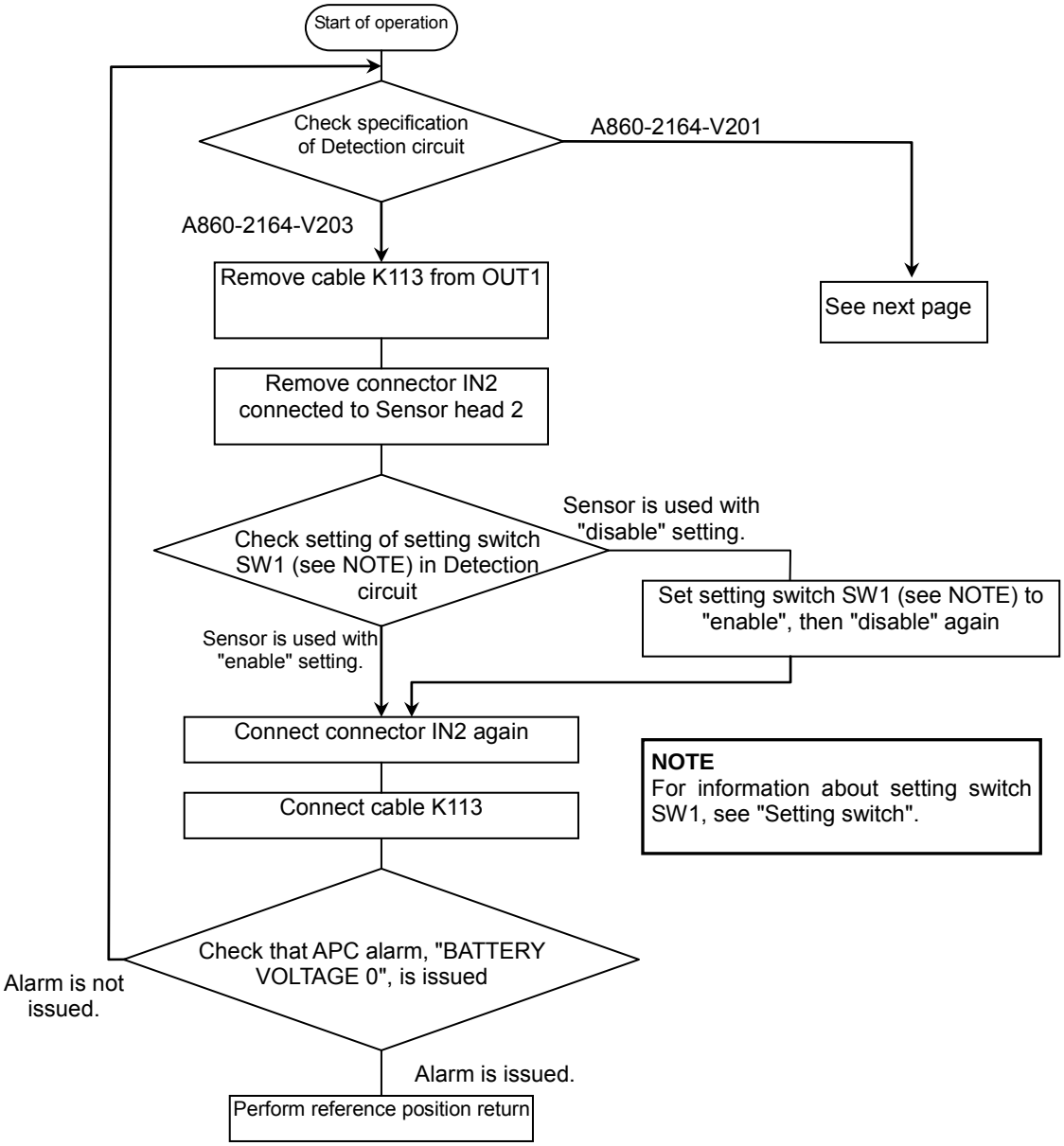

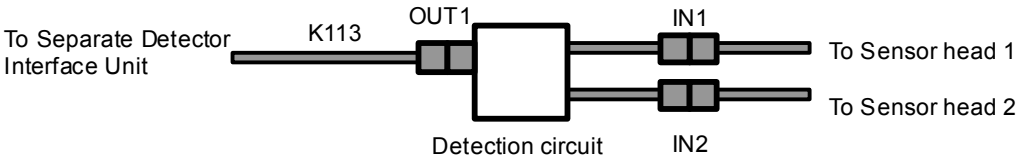

© MyFANUC 2D5504D5BAC945D385F48627D4977F6C

Procedure for initializing the Detection circuit A860-2164-V201

The Sensor head, the Detection ring, and the Detection circuit can be replaced separately. After replacement, generate the "APC ALARM: BATTERY VOLTAGE 0" according to the following procedure. Then perform reference position return operation.

1. Detach cable K113 from connector OUT1.

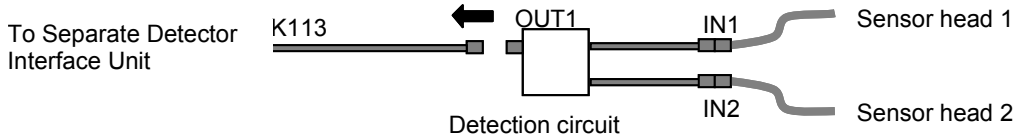

2 Connect connector IN2 to connector OUT1.
(Connector IN1 and connector IN3 may remain connected.)

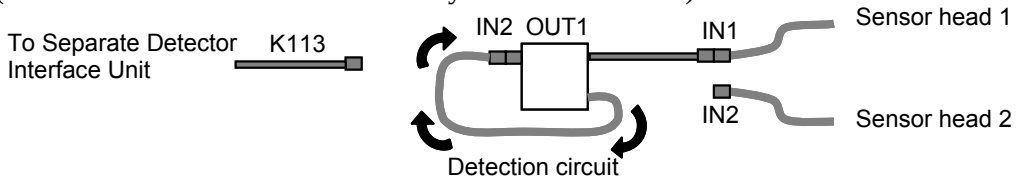

3. Leave the connection for 10 seconds.

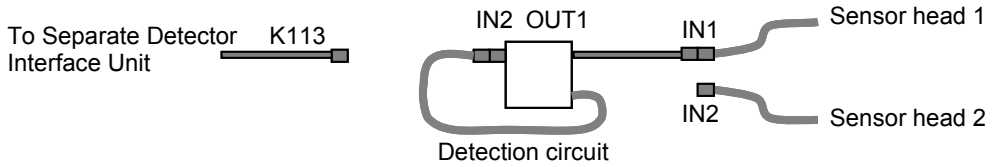

4. Connect the cables other than cable K113 correctly.

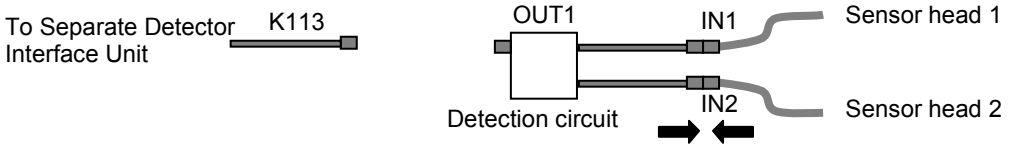

5. Connect cable K113.

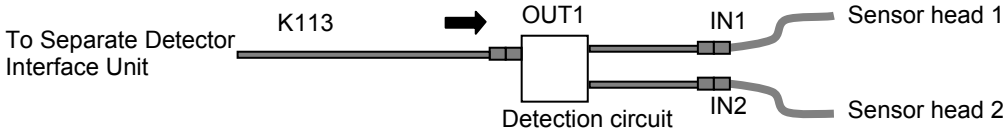

6. Check that an alarm, “APC ALARM: BATTERY VOLTAGE 0” is issued. If the battery zero alarm is not issued, return to step 1.
7. Perform reference position return operation.

© MyFANUC 2D5504D5BAC945D385F48627D4977F6C

11.1.1.10 Notes on use

Sensor head

The Detection circuit memorizes the initial conduction state. So, do not move the Sensor head afterward.
If the Sensor head is moved after the initial conduction state, the reference position may be displaced. Moreover, a pulse error alarm may be issued. If the Sensor head is moved after initial power on, perform reference position return again by generating the "APC ALARM: BATTERY VOLTAGE 0", according to "Procedure for Initializing the Detection Circuit".

Magnetic powder attached to the Detection ring

The α*i*CZ SENSOR detects an angular displacement according to a change in magnetic flux density between the Sensor heads and Detection ring. So, if magnetic powder is attached to any location on the Detection ring, the magnetic flux density at that location changes locally, deteriorating the accuracy of detection. This accuracy deterioration occurs each time the location to which magnetic powder is attached passes Sensor head 1 and 2, that is, at every 180°. This deterioration leads to an increased positioning error, torque command variation, abnormal sound, vibration, and so forth.
After installing the sensor, blow the Detection ring by air. Moreover, to prevent magnetic powder and chips from being attached to the Detection ring and Sensor heads during operation, provide protection against dust and water on the machine side.
If nonmagnetic matter (such as aluminum, austenitic stainless steel, resin, and oil) is attached to the Detection ring or Sensor head, such accuracy deterioration as described above does not occur. However, foreign matter caught between the Detection ring and a Sensor head can mechanically damage the Sensor head. So, prevent foreign matter, even if nonmagnetic, from being attached to the Detection ring.

© MyFANUC 2D5504D5BAC945D385F48627D4977F6C

11.1.1.11 Output signal check method

When checking the signal waveform directly, see the illustration below.

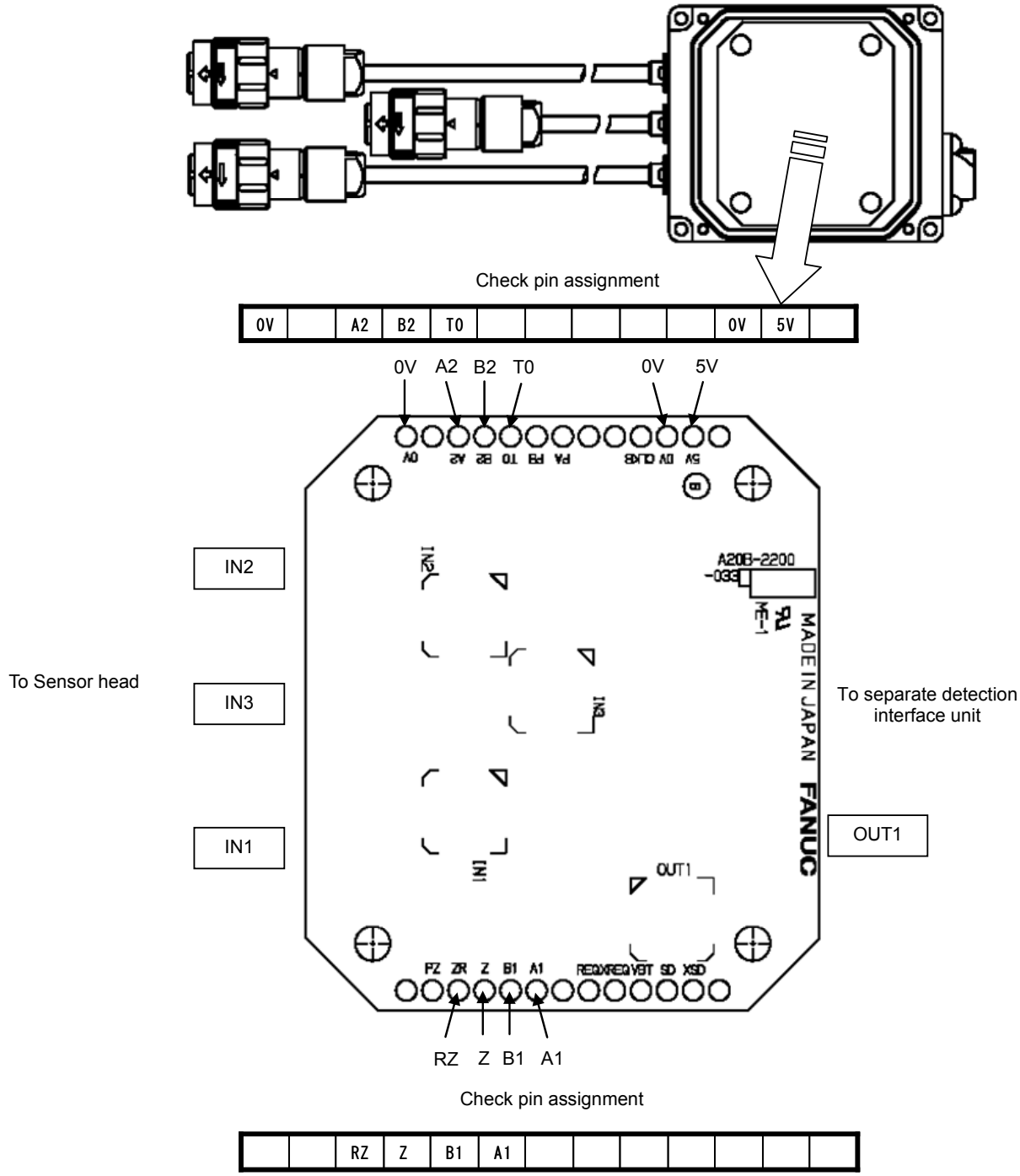

- Supply power to the 0 V and 5 V pins.
- The Lissajous' waveform of the phase A/B output signal is a round.

© MyFANUC 2D5504D5BAC945D385F48627D4977F6C

Phase A/B and phase Z signal waveforms (measured by check pins on the Detection circuit at room temperature and 500 min^{-1})

Signal name	Check pin	Output amplitude	Offset
Phase A of Sensor head 1 (after amplification) Phase B of Sensor head 1 (after amplification)	A1 B1	1,300 to 3,000mVp-p	±180mV
Phase A of Sensor head 2 (after amplification) Phase B of Sensor head 2 (after amplification)	A2 B2	1,300 to 3,000mVp-p	±180mV
Phase Z of Sensor head 1	Z	400 to 900mVp-p	70 to 150mV
RZ of Sensor head 1	RZ		(Measure the DC components of Z and RZ and use the differential as an offset.)

(Measure each signal by connecting the ground of the oscilloscope to T0.)

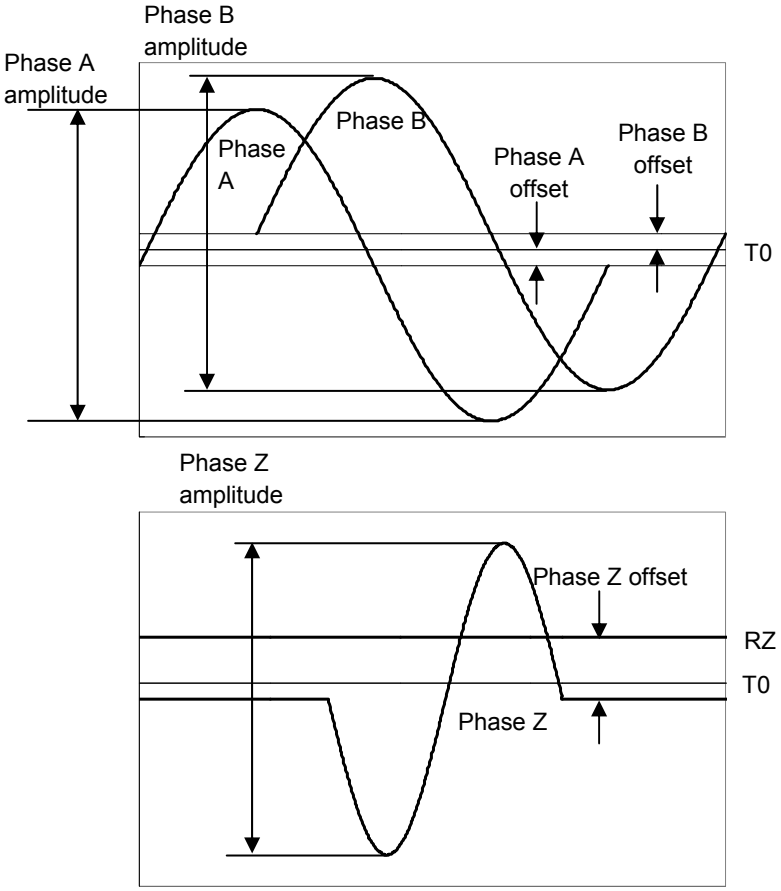

The check pins used with the αiCZ SENSOR fit in the following housing and terminals:

Housing : HKP-13FS01 (Honda Tsushin Kogyo specification)
Terminal : HKP-F113 (Honda Tsushin Kogyo specification), AWG#24 to 28(ϕs1.0 to 1.5mm)
HKP-F213 (Honda Tsushin Kogyo specification), AWG#28 to 32(ϕ0.5 to 0.8mm)
Crimping tool : KP309D (Honda Tsushin Kogyo specification)

© MyFANUC 2D5504D5BAC945D385F48627D4977F6C

11.2 SENSOR FOR THE SPINDLE

11.2.1 αi POSITIONCODER

11.2.1.1 Specification

Names and specification numbers

Name	Specification number	Remarks
αi POSITIONCODER	A860-2109-T302	□68 flange mounting, 10,000min^{-1}

Operating environmental conditions

Item	Description
Operating temperature range	0 to +50°C
Humidity	95%RH or less

Electrical specifications

Item		Description
Power supply voltage		5V$^{+5\%}_{-10\%}$
Current consumption		200mA or less
Output signal	PAE, *PAE, PBE, *PBE	1024 pulses / revolution
	PSE, *PSE	1 pulse / revolution

Mechanical specifications

Item		Description
Input axis inertia		9.8×10^{-3}kg·m^2 or less
Input axis start torque		0.098N·m or less
Allowable input axis load	Radial load (operating)	98N
	Thrust load (operating)	49N
Maximum speed		10,000min^{-1}
Structure		Water and dust proof (equivalent to IP55 when waterproof connector is mated)
Tolerable vibration acceleration		10G
Weight		Approx. 0.75kg

Resolution and accuracy

Name	Resolution	Accuracy (Max.)
αi POSITIONCODER	4,096 / revolution	40/1000° (Note)

NOTE

The accuracy listed in the above table does not include the error due to resolution (360/4096 = 88/1000°). It does not also include the error caused by the pulley or timing belt when the POSITIONCODER is connected to the spindle with a belt.

© MyFANUC 2D5504D5BAC945D385F48627D4977F6C

11.2.1.2 Signal phase relationships (timing chart)

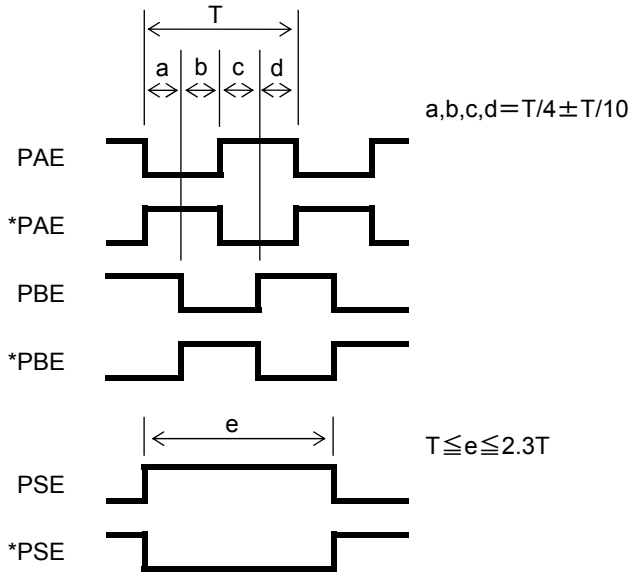

Output pin arrangement

A	B	C	D	E	F	G	H	J
PAE	PSE	PBE					+5V	
K	**L**	**M**	**N**	**P**	**R**	**S**	**T**	
0V			*PAE	*PSE	*PBE			

11.2.1.3 External dimensions

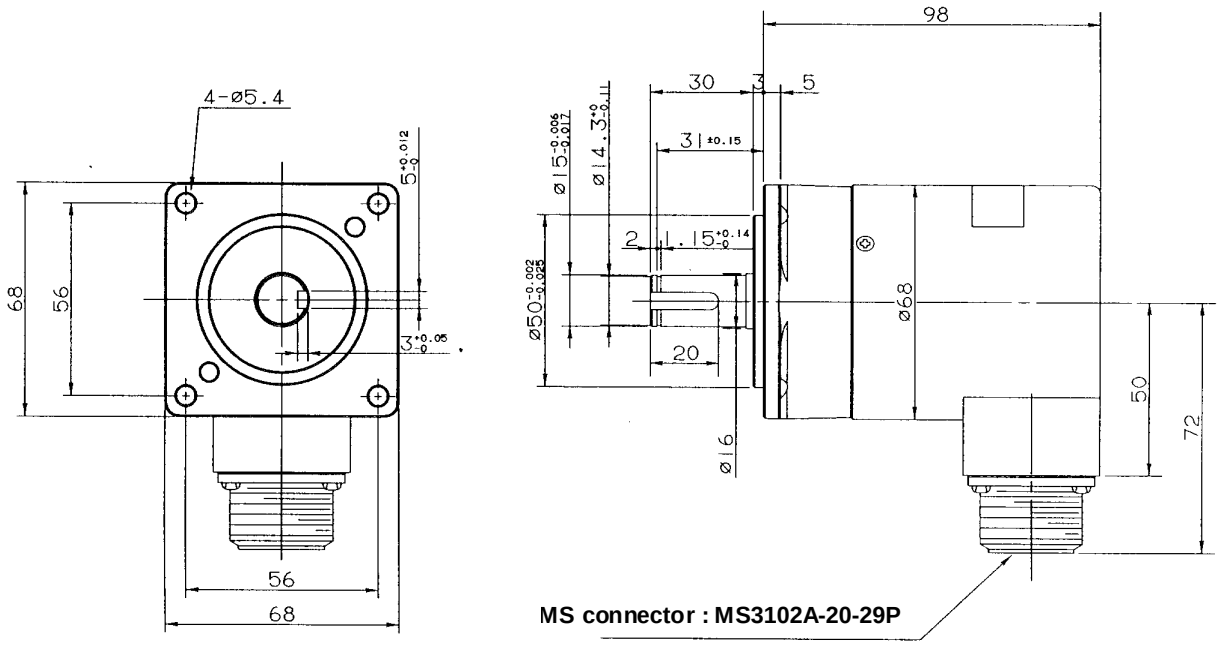

© MyFANUC 2D5504D5BAC945D385F48627D4977F6C

11.2.1.4 Connection

Connection diagram (outline)

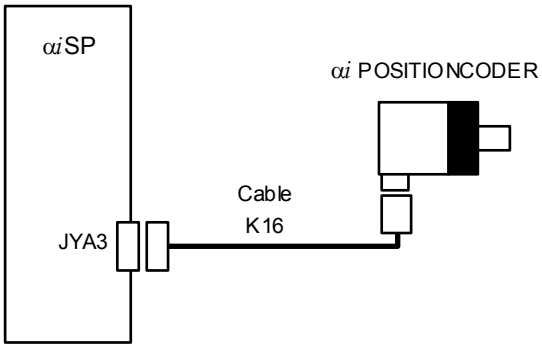

11.2.1.5 Installation conditions and notes

(a) Method of connection
Two methods of connecting the αi POSITIONCODER to the spindle are available as described below.

(1) With one method, the POSITIONCODER is connected to the rear part of the spindle by using a flexible joint
In this case, the rotation of the spindle is transported accurately to the POSITIONCODER, resulting in a higher accuracy in POSITIONCODER positioning. However, the POSITIONCODER installation location is limited, so that the mechanical section may need to be modified.

(2) With the other method, a shaft for holding a pulley is fitted into the shaft of the POSITIONCODER and is held by two bearings as shown below. In this case, a timing belt is used to connect the pulley of the POSITIONCODER to the pulley attached to the spindle.

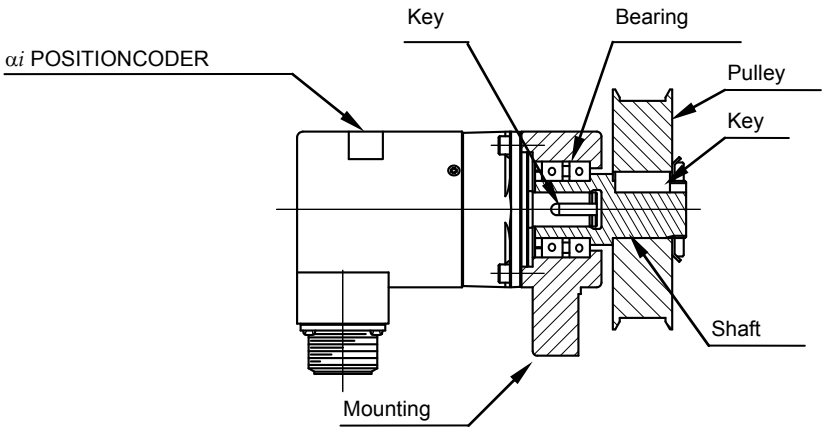

This connection method is generally used to connect a conventional POSITIONCODER to the spindle. When using this method, note the following:

<1> If there is a clearance between the shaft for holding the pulley and the shaft of the POSITIONCODER, the shaft of the POSITIONCODER can suffer from fretting or the key can becomes loose, resulting in a degraded accuracy in POSITIONCODER positioning. So, specify tolerances for good fitting so that there is no clearance between

© MyFANUC 2D5504D5BAC945D385F48627D4977F6C

the shaft of the POSITIONCODER and the shaft for holding the pulley and between the key and key groove.

<2> If the outer diameter center of the pulley of the POSITIONCODER is not aligned with the axis center of the shaft of the POSITIONCODER, or if the outer diameter center of the pulley fitted around the spindle is not aligned with the axis center of the spindle, the spindle positioning accuracy is degraded in proportion to the magnitude of eccentricity. So, minimize these eccentricities.

(b) Shock
The POSITIONCODER is a precision sensor. So, be careful not to apply a shock to the shaft.

(c) Atmosphere
The protection of the POSITIONCODER satisfies class IP55, but the protection is provided on a short-time basis only. So, ensure that the POSITIONCODER is not routinely exposed to coolant and lubricant and is free from buildup of coolant and lubricant. If the POSITIONCODER is exposed to coolant and lubricant, install a protection cover.

11.2.2 α POSITIONCODER S

11.2.2.1 Specification

Names and specification numbers

Name	Specification number	Remarks
α POSITIONCODER S	A860-0309-T352	□68 flange mounting, 10,000min^{-1}

Operating environmental conditions

Item	Description
Operating temperature range	0 to +50°C
Humidity	95%RH or less

Electrical specifications

Item		Description
Power supply voltage		$5V^{+5\%}_{-10\%}$
Current consumption		200mA or less
Output signal	AP, BP	1024λ / revolution
	PSE, *PSE	1 pulses / revolution

Mechanical specifications

Item		Description
Input axis inertia		9.8×10^{-3}kg·m^2 or less
Input axis start torque		0.098N·m or less
Allowable input axis load	Radial load (operating)	98N
	Thrust load (operating)	49N
Maximum speed		10,000min^{-1}
Structure		Water and dust proof (equivalent to IP55 when waterproof connector is mated)
Tolerable vibration acceleration		10G
Weight		Approx. 0.75kg

Resolution and accuracy

Name	Resolution	Accuracy (Max.)
α POSITIONCODER S	360,000 / revolution	40/1000° (Note)

© MyFANUC 2D5504D5BAC945D385F48627D4977F6C

NOTE

The accuracy listed in the above table does not include the error due to resolution (360/360000 = 1/1000°). It does not also include the error caused by the pulley or timing belt when the POSITIONCODER is connected to the spindle with a belt.

11.2.2.2 Signal phase relationships (timing chart)

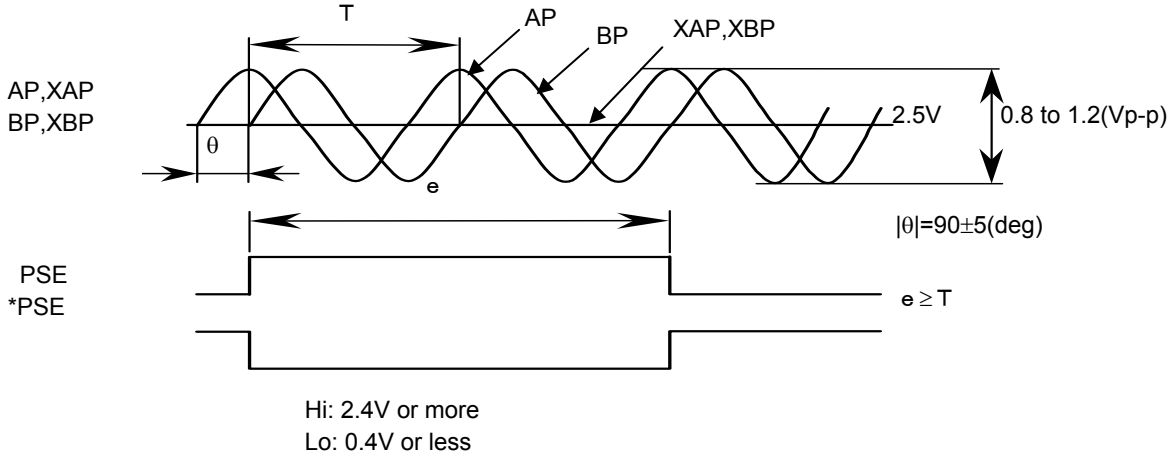

11.2.2.3 External dimensions

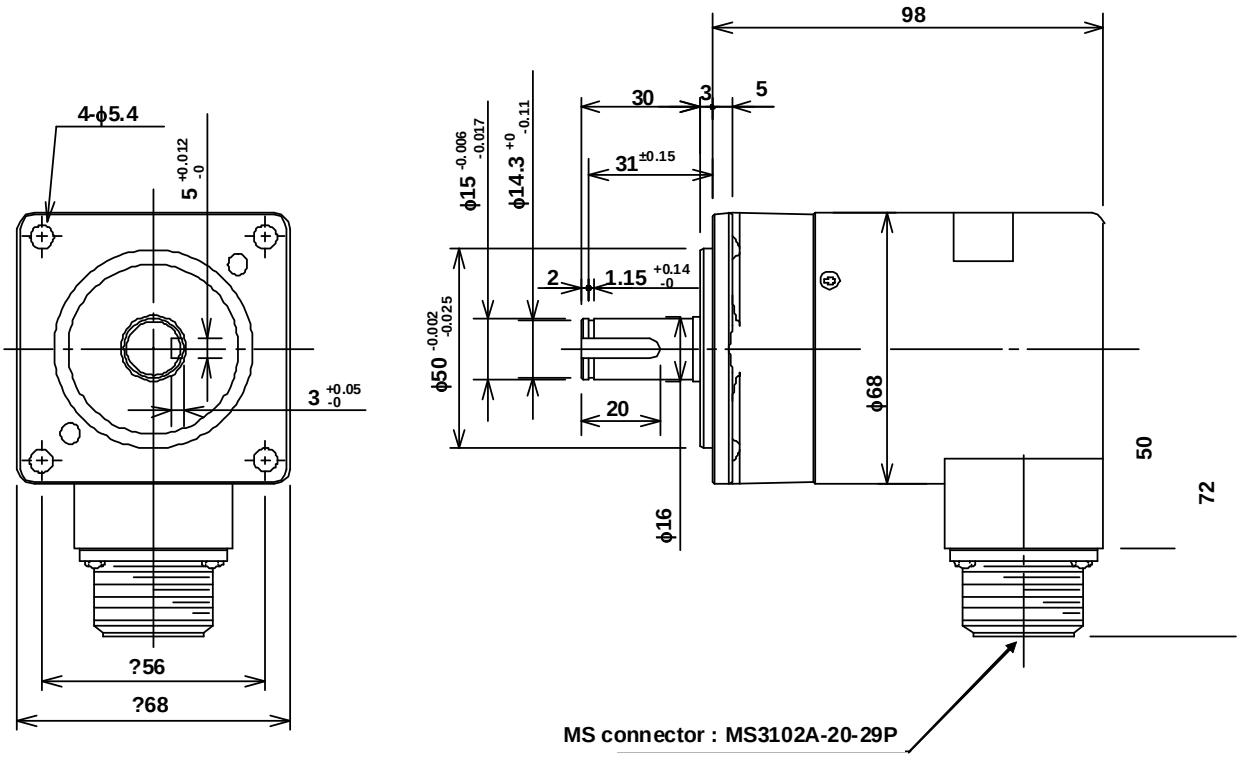

© MyFANUC 2D5504D5BAC945D385F48627D4977F6C

11.2.2.4 Connection

Connection diagram (outline)

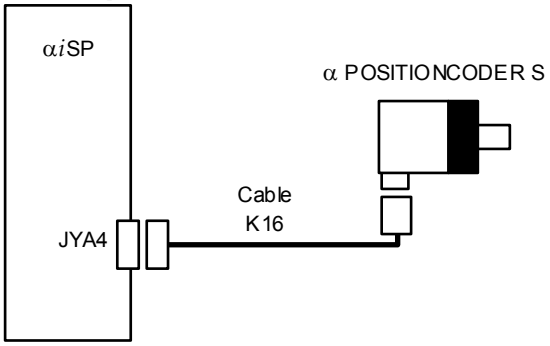

11.2.2.5 Installation conditions and notes

(a) Method of connection
Two methods of connecting the α POSITIONCODER S to the spindle are available as described below.

(1) With one method, the POSITIONCODER is connected to the rear part of the spindle by using a flexible joint
In this case, the rotation of the spindle is transported accurately to the POSITIONCODER, resulting in a higher accuracy in POSITIONCODER positioning. However, the POSITIONCODER installation location is limited, so that the mechanical section may need to be modified.

(2) With the other method, a shaft for holding a pulley is fitted into the shaft of the POSITIONCODER and is held by two bearings as shown below. In this case, a timing belt is used to connect the pulley of the POSITIONCODER to the pulley attached to the spindle.

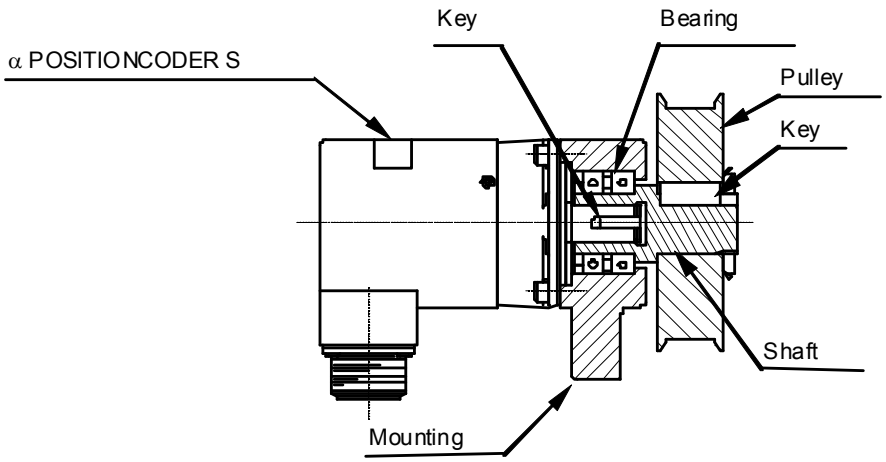

This connection method is generally used to connect a conventional POSITIONCODER to the spindle. When using this method, note the following:

<1> If there is a clearance between the shaft for holding the pulley and the shaft of the POSITIONCODER, the shaft of the POSITIONCODER can suffer from fretting or the key can becomes loose, resulting in a degraded accuracy in POSITIONCODER positioning. So, specify tolerances for good fitting so that there is no clearance between

© MyFANUC 2D5504D5BAC945D385F48627D4977F6C

the shaft of the POSITIONCODER and the shaft for holding the pulley and between the key and key groove.

<2> If the outer diameter center of the pulley of the POSITIONCODER is not aligned with the axis center of the shaft of the POSITIONCODER, or if the outer diameter center of the pulley fitted around the spindle is not aligned with the axis center of the spindle, the spindle positioning accuracy is degraded in proportion to the magnitude of eccentricity. So, minimize these eccentricities.

(b) Shock
The POSITIONCODER is a precision sensor. So, be careful not to apply a shock to the shaft.

(c) Atmosphere
The protection of the POSITIONCODER satisfies class IP55, but the protection is provided on a short-time basis only. So, ensure that the POSITIONCODER is not routinely exposed to coolant and lubricant and is free from buildup of coolant and lubricant. If the POSITIONCODER is exposed to coolant and lubricant, install a protection cover.

11.2.3 αiBZ SENSOR (for Spindle)

The αiBZ SENSOR can be used for the spindle.

11.2.3.1 Specification

Depending on the detection ring or connector, the following specifications are available. Select the specification that suits the purpose.

Names and specification numbers

Name	Specification number (A860-)		Remarks				
				Detection ring			
	Waterproof connector type	Non-waterproof connector type	Number of teeth	Maximum speed (min^{-1})	Inner diameter (mm)	Outer diameter (mm)	Installation
αiBZ SENSOR 96	2150-T111	2155-T111	96	80,000	ϕ30	ϕ39.2	Heat shrink fitting
αiBZ SENSOR 128	2150-T201	2155-T201	128	20,000	ϕ40	ϕ52	
αiBZ SENSOR 128H	2150-T211	2155-T211		70,000			
αiBZ SENSOR 192	2150-T301	2155-T301	192	20,000	ϕ60	ϕ77.6	
αiBZ SENSOR 192H	2150-T311	2155-T311		40,000			
αiBZ SENSOR 256	2150-T401	2155-T401	256	15,000	ϕ82	ϕ103.2	
αiBZ SENSOR 256S	2150-T404	2155-T404			ϕ88		
αiBZ SENSOR 256H	2150-T411	2155-T411		30,000	ϕ82		
αiBZ SENSOR 384	2150-T511	2155-T511	384	15,000	ϕ125	ϕ154.4	
αiBZ SENSOR 512	2150-T611	2155-T611	512	10,000	ϕ160	ϕ205.6	
αiBZ SENSOR 640	2150-T711	2155-T711	640	6,000	ϕ220	ϕ256.8	
αiBZ SENSOR 768	2150-T811	2155-T811	768	5,000	ϕ250	ϕ308	Heat shrink fitting or Screw cramp
αiBZ SENSOR 1024	2150-T911	2155-T911	1024	3,000	ϕ360	ϕ410.4	

Operating environmental conditions

Item	Description
Operating temperature range	0 to +80°C
Humidity	95%RH or less

© MyFANUC 2D5504D5BAC945D385F48627D4977F6C

Electrical specifications

Item			Description
Power supply voltage			$5V^{+5\%}_{-10\%}$
Current consumption			0.05A or less
Output signal	VA,VB	αiBZ SENSOR 96	96λ / revolution
		αiBZ SENSOR 128/128H	128λ / revolution
		αiBZ SENSOR 192/192H	192λ / revolution
		αiBZ SENSOR 256/256S/256H	256λ / revolution
		αiBZ SENSOR 384	384λ / revolution
		αiBZ SENSOR 512	512λ / revolution
		αiBZ SENSOR 640	640λ / revolution
		αiBZ SENSOR 768	768λ / revolution
		αiBZ SENSOR 1024	1024λ / revolution
	VZ	Common to all models	1λ / revolution

Resolution and accuracy

Name	Resolution in Cs contour control	Accuracy (typ.)
αiBZ SENSOR 96	360,000 / revolution	50/1000°
αiBZ SENSOR 128/128H		30/1000°
αiBZ SENSOR 192/192H		25/1000°
αiBZ SENSOR 256/256S/256H		20/1000°
αiBZ SENSOR 384		15/1000°
αiBZ SENSOR 512		10/1000°
αiBZ SENSOR 640		10/1000°
αiBZ SENSOR 768		8/1000°
αiBZ SENSOR 1024		6/1000°

NOTE

1 Accuracy indicated in the above table is not a guaranteed value but a typical value.

2 Accuracy indicated in the above table does not consider the effect of an error due to runout in Detection ring installation. The influence of runout in Detection ring installation on precision can be calculated as follows:

Error (°) = A (mm) × 360/B (mm)

A : Axis runout of the machine spindle or sleeve on the Detection ring mounting surface

B : Perimeter of the Detection ring

Example : If the axis runout on the mounting surface is 0.005 mm when a 256λ Detection ring (103.2 in diameter) is used, the error is:
0.005 × 360/(103.2 × π) = 0.0055(°)

© MyFANUC 2D5504D5BAC945D385F48627D4977F6C

NOTE

1 Use the sensor under 80°C.
2 The sensor is a precision part. Use special care in handling. In particular, do not apply force to the Sensor head. Fasten the sensor cable to the machine at an appropriate position not to apply the force to the Sensor head directly.
3 The waterproofness of the waterproof connector type sensor is equivalent to IP67 when the connector is mated. Note, however, that the waterproofness represented by IP indicates short-time resistance to water only and does not guarantee thorough waterproofness. Therefore, protect the Sensor against direct splash of coolant and so on by taking appropriate measures, for example, by installing a cover.
4 For the detection ring of αiBZ SENSOR 768 or αiBZ SENSOR 1024, it is possible to installed by a screw crimp not only heat shrink fitting. For details, see "Installing the detection ring", described later.
5 When installing the sensor to the machine, make sure that the requirements described in "Installing the sensor", described later are met.
6 For easy maintenance, mount the sensor at a position where it can be replaced easily.
7 Detection rings with the same specification number can be replaced with each other.

11.2.3.2 External dimensions

Dimensions of waterproof connector type A860-2150-Txxx

Specification with 96 to 640 teeth

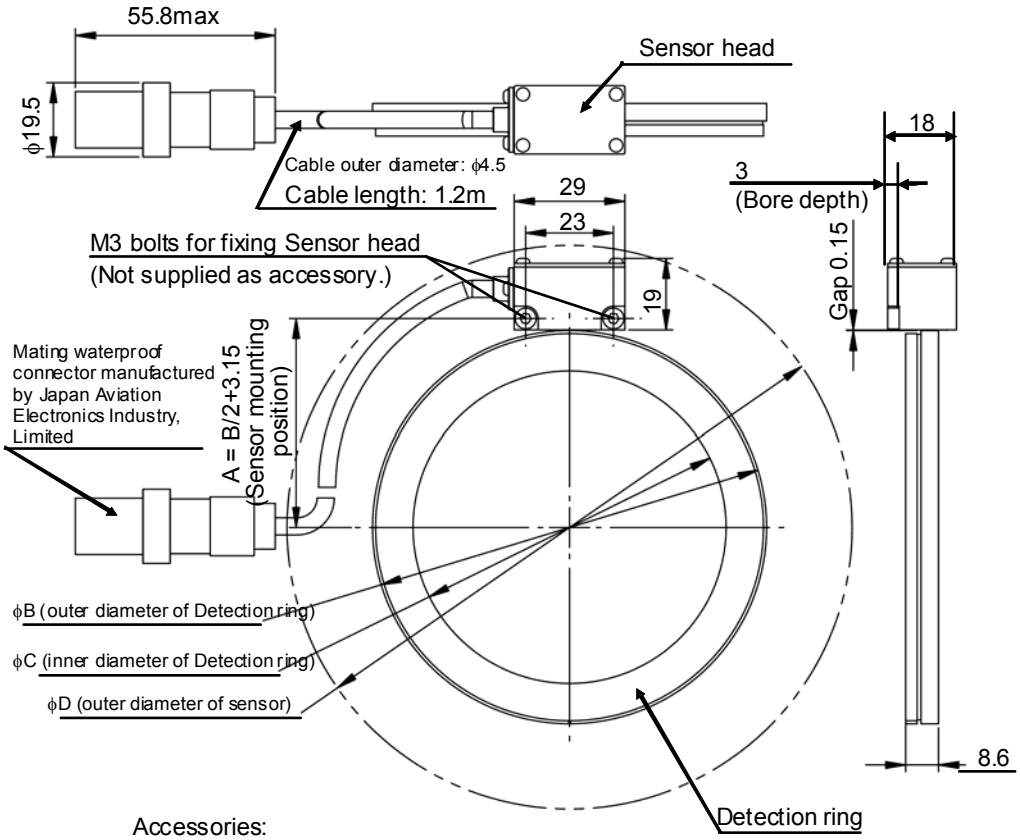

Accessories:
Parallel pin (JIS B 1354-1988, class A, normal diameter of ϕ3, normal length of 6) × 2,
Thickness gauge (t=0.15mm) × 1

© MyFANUC 2D5504D5BAC945D385F48627D4977F6C

Unit: mm

Specification number	Number of teeth	Dimensions			
		Sensor mounting position A	Outer diameter of Detection ring ϕB	Inner diameter of Detection ring ϕC	Outer diameter of sensor ϕD
A860-2150-T111	96	22.75	39.2+0/-0.02	30+0/-0.016	92
A860-2150-T201	128	29.15	52+0/-0.02	40+0.016/-0	98
A860-2150-T211					
A860-2150-T301	192	41.95	77.6+0/-0.02	60+0/-0.018	122
A860-2150-T311					
A860-2150-T401	256	54.75	103.2+0/-0.02	82+0/-0.018	148
A860-2150-T404				88+0/-0.018	
A860-2150-T411				82+0/-0.018	
A860-2150-T511	384	80.35	154.4+0/-0.02	125+0.025/-0	198
A860-2150-T611	512	105.95	205.6+0/-0.02	160+0.02/-0.005	249
A860-2150-T711	640	131.55	256.8+0/-0.02	220+0/-0.025	300

Specification with 768 to 1024 teeth

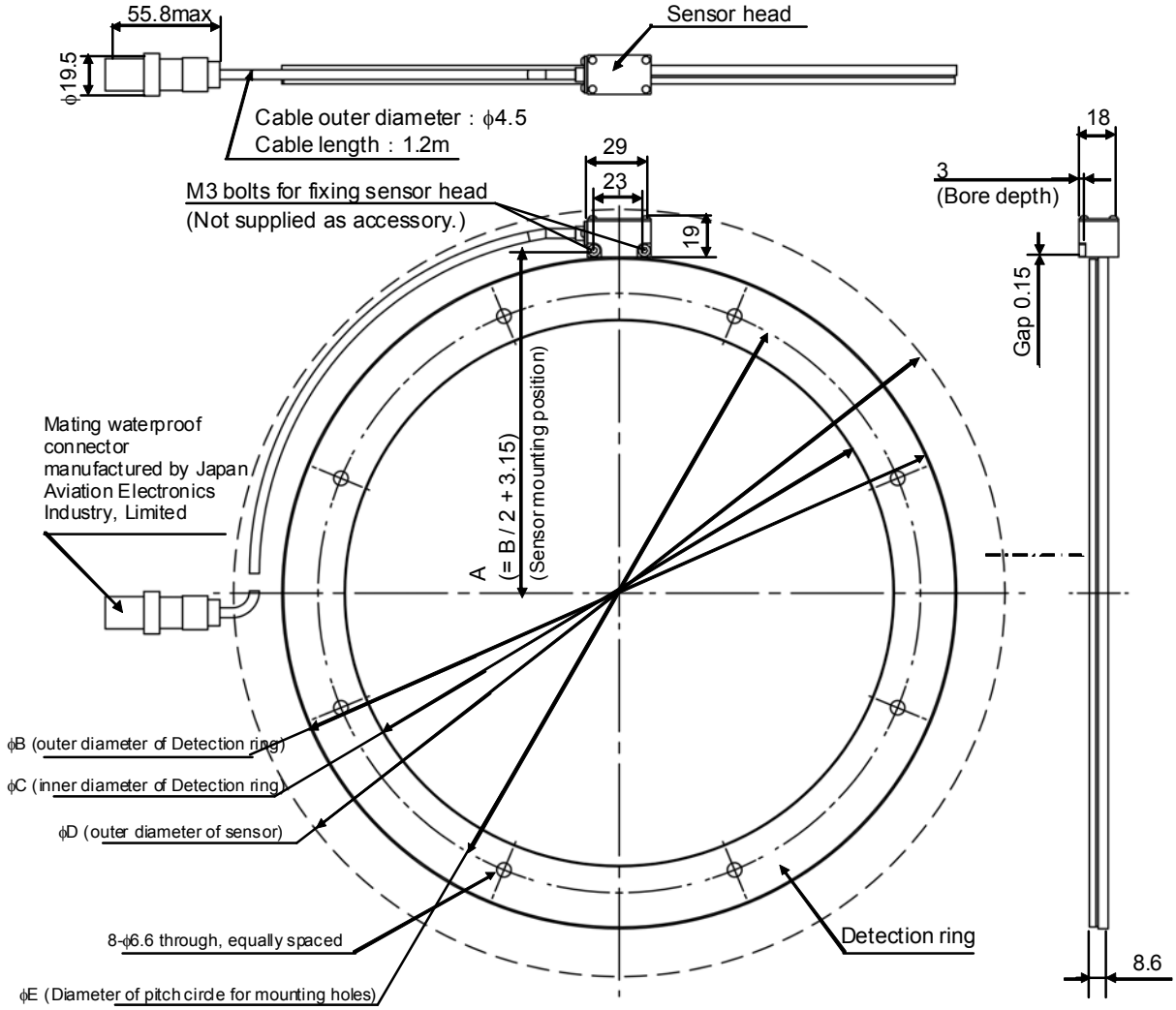

Accessories:

Parallel pin (JIS B 1354-1988, class A, normal diameter of ϕ3, normal length of 6) × 2,
Thickness gauge (t = 0.15 mm) × 1

© MyFANUC 2D5504D5BAC945D385F48627D4977F6C

Unit: mm

Specification number	Number of teeth	Dimensions				
		Sensor mounting position A	Outer diameter of detection ring ϕB	Inner diameter of detection ring ϕC	Outer diameter of sensor ϕD	Diameter of pitch circle for mounting holes ϕE
A860-2150-T811	768	157.15	308+0/-0.02	250+0/-0.025	352	275
A860-2150-T911	1024	208.35	410.4+0/-0.02	360+0/-0.025	454	380

Dimensions of non-waterproof connector type A860-2155-Txxx

Only the connector of the Sensor head is different between non-waterproof and waterproof connector specifications.

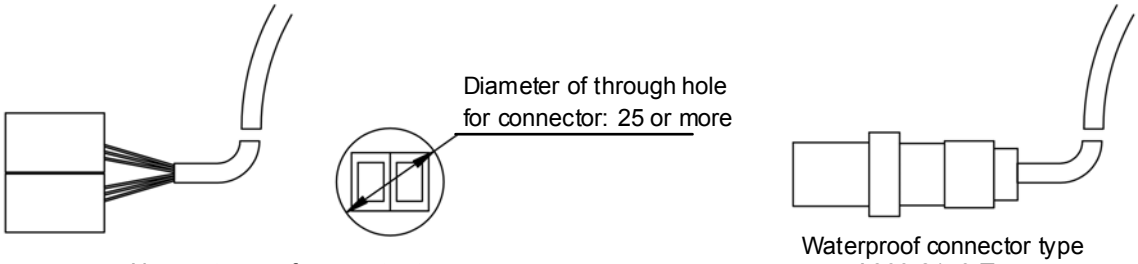

Non-waterproof connector type
A860-2155-Txxx
(Manufactured by Honda Tsushin Kogyo Co., LTD.)

Waterproof connector type
A860-2150-Txxx
(Manufactured by Japan Aviation Electronics Industry, Limited)

NOTE

1 Use the sensor under 80°C.
2 The sensor is a precision part. Use special care in handling. In particular, do not apply force to the Sensor head. Fasten the sensor cable to the machine at an appropriate position not to apply the force to the Sensor head directly.
3 For the detection ring of αiBZ SENSOR 768 or αiBZ SENSOR 1024, it is possible to installed by a screw crimp not only heat shrink fitting. For details, see “Installing the Detection ring”, described later.
4 When installing the sensor to the machine, make sure that the requirements described in “Installing the sensor” described later are met.
5 For easy maintenance, mount the sensor at a position where it can be replaced easily.
6 Detection rings with the same specification number can be replaced with each other.

© MyFANUC 2D5504D5BAC945D385F48627D4977F6C

11.2.3.3 Interference of the Detection ring

The following table lists the interference for heat shrink fitting for the Detection ring (difference between the inner diameter of the Detection ring and the diameter of a shaft) at each maximum speed. Determine the suitable interference according to the maximum speed and the type of Detection ring.

Unit: μm

Maximum speed (min^{-1})	Sensor specification number: A860-2150- / A860-2155-									
	T111	T201	T211	T301	T311	T401	T404	T411	T511	T611
3,000	6 to 32	6 to 32	6 to 32	6 to 34	6 to 34	7 to 35	7 to 35	7 to 35	8 to 43	11 to 41
3,500	↓	↓	↓	↓	↓	↓	↓	↓	9 to 44	13 to 43
4,500	↓	↓	↓	↓	↓	↓	↓	↓	11 to 46	19 to 49
6,000	↓	↓	↓	7 to 35	7 to 35	9 to 37	9 to 37	9 to 37	15 to 50	29 to 59
8,000	↓	↓	↓	8 to 36	8 to 36	11 to 39	11 to 39	11 to 39	24 to 59	47 to 77
10,000	↓	↓	↓	9 to 37	9 to 37	14 to 42	15 to 43	14 to 42	35 to 70	71 to 101
12,000	↓	7 to 33	7 to 33	11 to 39	11 to 39	18 to 46	19 to 47	18 to 46	47 to 82	
15,000	↓	8 to 34	8 to 34	13 to 41	13 to 41	26 to 54	28 to 56	26 to 54	71 to 106	
20,000	7 to 33	10 to 36	10 to 36	19 to 47	19 to 47			41 to 69		
25,000	8 to 34		12 to 38		27 to 55			62 to 90		
30,000	10 to 36		15 to 41		37 to 65			87 to 115		
40,000	13 to 39		23 to 49		61 to 89					
50,000	17 to 43		33 to 59							
60,000	22 to 48		43 to 69							
70,000	27 to 53		57 to 83							
80,000	34 to 60									

Unit: μm

Maximum speed (min^{-1})	Sensor specification number: A860-2150- / A860-2155-		
	T711	T811	T911
500	16 to 51	16 to 51	27 to 62
1,000	17 to 52	19 to 54	33 to 68
1,500	20 to 55	22 to 57	43 to 78
2,000	23 to 58	28 to 63	57 to 92
2,500	27 to 62	34 to 69	75 to 110
3,000	32 to 67	43 to 78	96 to 131
3,500	38 to 73	53 to 88	
4,000	45 to 80	64 to 99	
4,500	53 to 88	77 to 112	
5,000	62 to 97	91 to 126	
5,500	72 to 107		
6,000	83 to 118		

NOTE

1 The Detection ring cannot be used with a speed higher than the maximum speed listed in the table above. An interference not listed in the table above may damage the Detection ring or cause it to spin free.

2 For the detection ring of αiBZ SENSOR 768 or αiBZ SENSOR 1024, it is possible to installed by a screw crimp not only heat shrink fitting. For details, see “Installing the detection ring” described later.

© MyFANUC 2D5504D5BAC945D385F48627D4977F6C

11.2.3.4 Installing the sensor

Installation procedure (outline)

Install the sensor according to the procedure below. For details of each step, see the subsequent sections.

- Machine the sensor mounting surface as necessary then insert the parallel pins.
- Fit the Detection ring around the machine shaft or sleeve by heat shrink fitting.
- Adjust the gap between the Sensor head and Detection ring then mount the sensor on the machine.

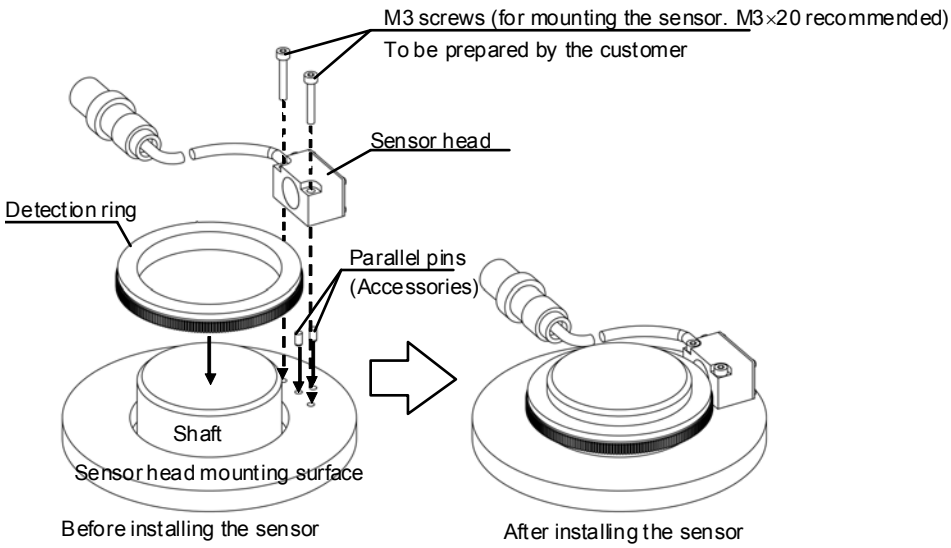

Machining the sensor mounting surface and inserting parallel pins

Machine the sensor mounting surface as shown in the figure below and insert the supplied parallel pins in the 2-ϕ3H6 holes. These pins are used as the guide for the gap adjustment of the Sensor head.

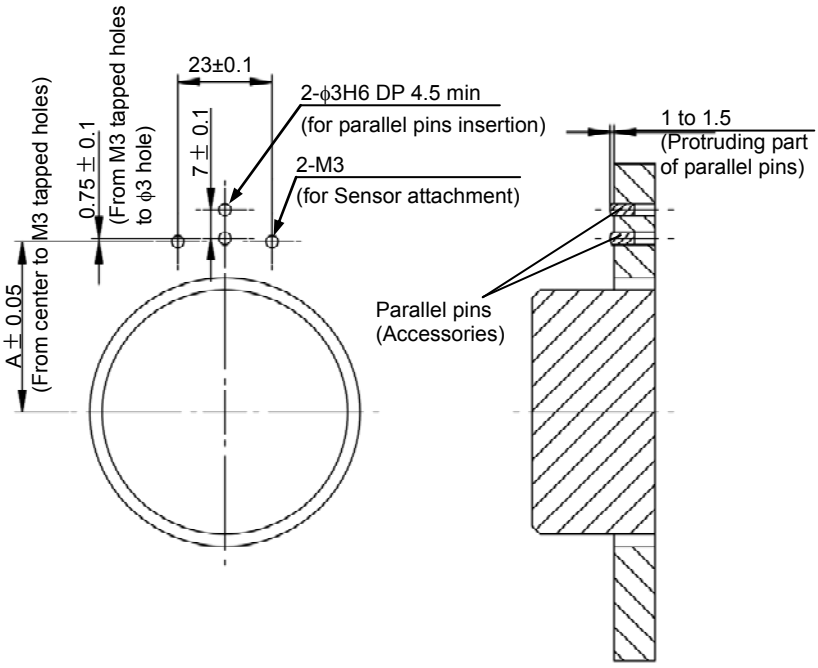

NOTE

For dimension A, see “External Dimensions”, described earlier.

© MyFANUC 2D5504D5BAC945D385F48627D4977F6C

Installing the Detection ring

The detection ring is fitting by heat shrink fitting into the shaft or sleeve of the machine.
For the Detection ring of αiBZ SENSOR 768 or αiBZ SENSOR 1024, it is possible to installed by a screw crimp not only heat shrink fitting.

Installing the Detection ring by heat shrink fitting

Fit the Detection ring around the shaft or sleeve by heat shrink fitting so that the bottom of the phase A/B signal generation section (gear) is 4.7 ±0.2 mm off the sensor mounting surface. The runout of the shaft or sleeve part around which the Detection ring is fit by heat shrink fitting must be 0.005 mm or less.

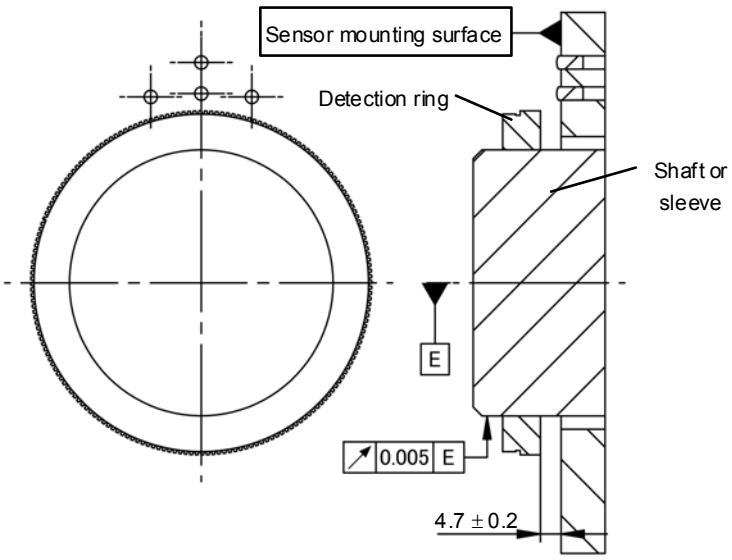

NOTE

1 The maximum temperature for heat shrink fitting of the Detection ring is 200°C as a general rule. Unless there is a compelling reason, the heating below 180°C is recommended. Although the Detection ring may tarnish when heated at high temperature, the heating below 200°C will cause no performance problem.
2 For information about the interference of heat shrink fitting at each maximum speed, see "Interference of the detection ring", described earlier.

Installing the Detection ring by a screw crimp

For the Detection ring of αiBZ SENSOR 768 or αiBZ SENSOR 1024, it is possible to installed by a screw crimp not only heat shrink fitting. The Detection ring is installed so that the height between the Detection ring mounting surface and the Sensor head mounting surface is 4.7 ± 0.2 mm.
And the runout of the inner diameter of the Detection ring is as small as possible.

© MyFANUC 2D5504D5BAC945D385F48627D4977F6C

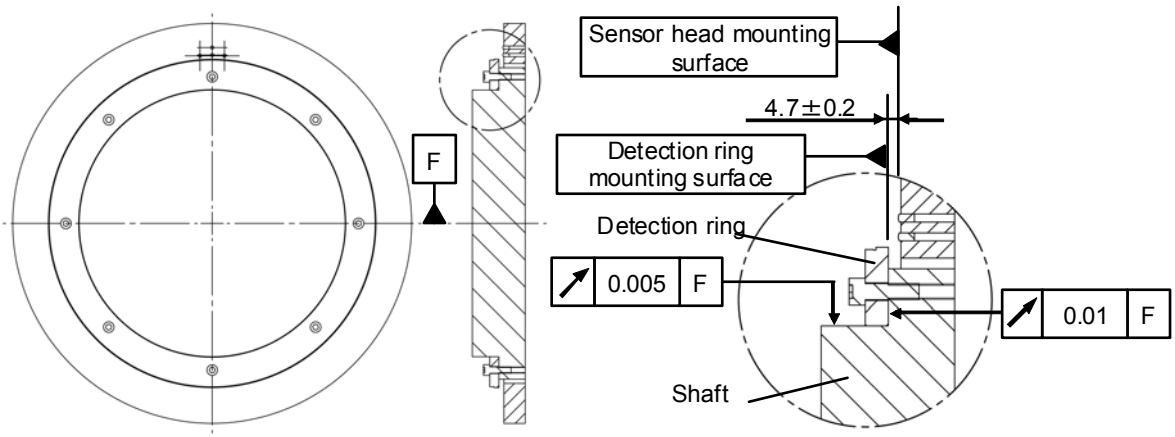

Sensor	Hole for Detection ring attachment	Screw	Recommended tightening torque
αiBZ SENSOR 768	8-ϕ6.6 through, equally spaced on ϕ275 circumference	Hexagon socket head cap screws (steel) M6	10.5N·m ± 0.5N·m
αiBZ SENSOR 1024	8-ϕ6.6 through, equally spaced on ϕ380 circumference	Hexagon socket head cap screws (steel) M6	10.5N·m ± 0.5N·m

The shaft described below is recommended.
The insertion part of the shaft is a taper, and the Detection ring mounting part is designed so that the clearance between the diameter of the shaft and the inner diameter of the Detection ring is as small as possible.

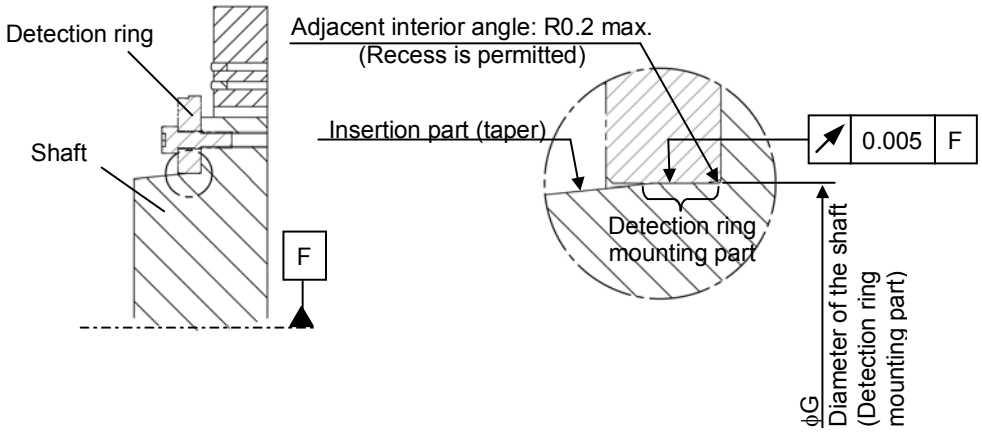

Sensor	Diameter of Detection ring mounting part (recommended) ϕG
αiBZ SENSOR 768	$250^{+0}_{-0.025}$
αiBZ SENSOR 1024	$360^{+0}_{-0.025}$

Installing the Sensor heads

Install the Sensor heads according to the procedure below.

- Place the Sensor head on the sensor mounting surface so that the parallel pins are positioned in the slot on the bottom of the Sensor head, and fasten the Sensor head temporarily. The magnet in the Sensor head and the Detection ring attract each other. When installing the Sensor head, be careful not to hit the Sensor head against the Detection ring. Impact can damage detector elements in the Sensor head.

© MyFANUC 2D5504D5BAC945D385F48627D4977F6C

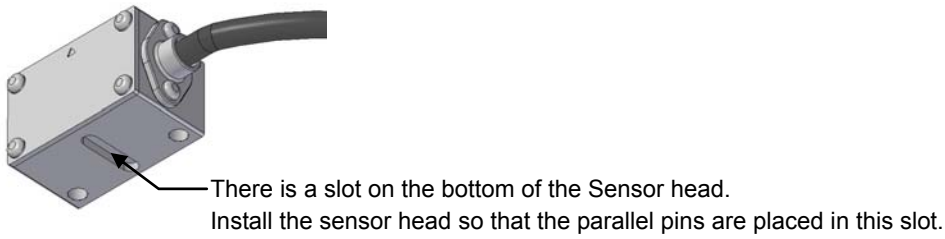

- Insert the thickness gauge (supplied as an accessory, t = 0.15 mm) between the Detection ring and the Sensor head, and while lightly pressing the Sensor head against the thickness gauge, tighten the screws (recommended tightening torque: 1.3 Nm ±10%). Apply a thread locker or the like to the screws to prevent them from becoming loose.

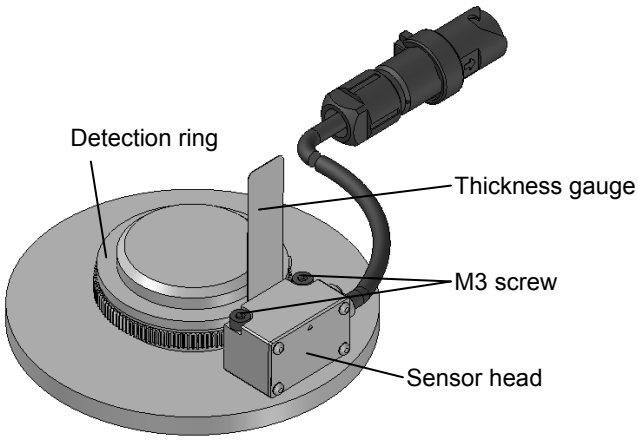

- Pull out the thickness gauge, and slowly turn the spindle to ensure that the Detection ring and the Sensor head do not touch each other. Check that the gap between the Detection ring and the Sensor head is at least 0.1 mm (adequate gap: 0.15 mm).

11.2.3.5 Connection

Connection diagram (outline)

The αiBZ SENSOR is connected to the αiSP as shown in the figure below.

Connection of waterproof connector type A860-2150-Txxx

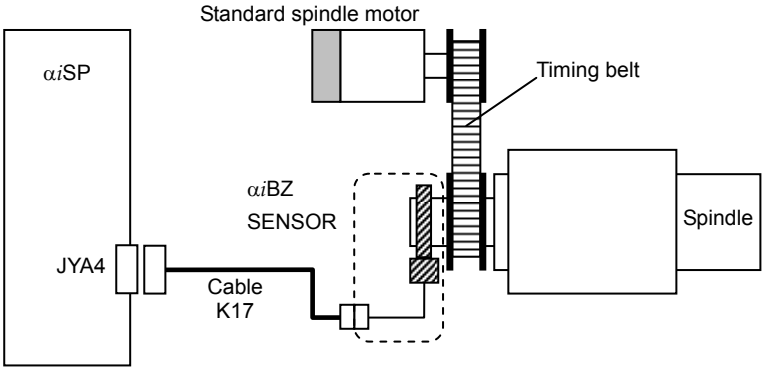

© MyFANUC 2D5504D5BAC945D385F48627D4977F6C

Connection of non-waterproof connector type A860-2155-Txxx

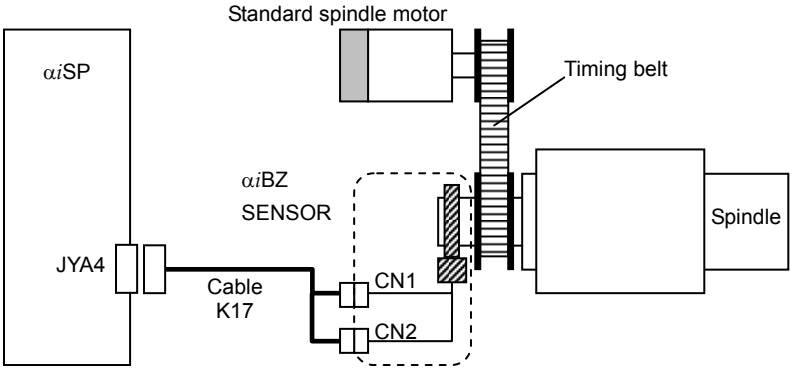

NOTE
1 The cable K17 needs to be prepared by the customer. Connectors for the cable also need to be prepared because of not accessories. For details of the connection, see Subsection 9.3.3.9, "Details of cable K17".
2 Cable K17 can be relayed. The connector or the terminal box with above IP54 is recommended to be used for the relay point.

11.2.3.6 Notes on the Detection ring

The Detection ring consists of the phase Z signal generation section and the phase A/B signal generation section. For the αiBZ SENSOR (A860-2150-Txxx and A860-2155-Txxx), the phase A/B signal generation section and the phase Z signal generation section are integrated into one piece and the phase Z signal generation section has a convex shape. When handling the Detection ring, be very careful not to deform or damage the teeth on the outer surface of the Detection ring.

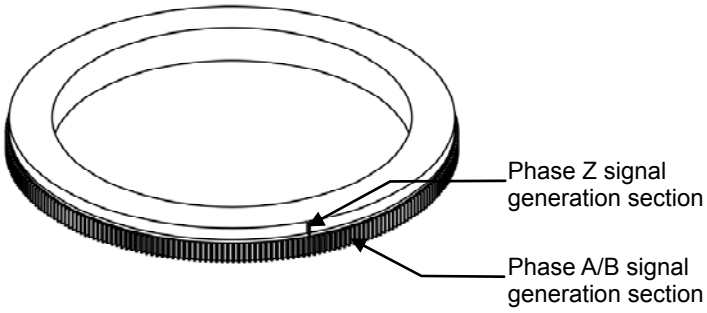

11.2.3.7 Usage with consideration of environmental resistance

Since the sensor is an electric part, if it is used in an environment in which it is exposed to the cutting fluid or lubricant, the cutting fluid or lubricant may enter the inside of the sensor, adversely affecting the sensor. In particular, if the cutting fluid adheres to the sensor, it can cause the deterioration of the resin or rubber sealing parts or cables and the degradation of sealing performance of the sensor, which may allow a large amount of cutting fluid to enter the inside of the sensor, resulting in damage to the sensor. When using the sensor, note the points described below.

Sensor installation conditions

If the sensor is used in an environment in which it is exposed to the cutting fluid or lubricant, the cutting fluid or lubricant may adversely affect the sensor sealing parts or cables and enter the inside of the sensor, resulting in damage to these sensor. When using the sensor, note the points described below.

© MyFANUC 2D5504D5BAC945D385F48627D4977F6C

- Make sure that the sensor surface is never wet with the cutting fluid or lubricant, also make sure that no cutting fluid or lubricant builds up around the sensor. If there is a possibility of the surface being wet, a cover is required.

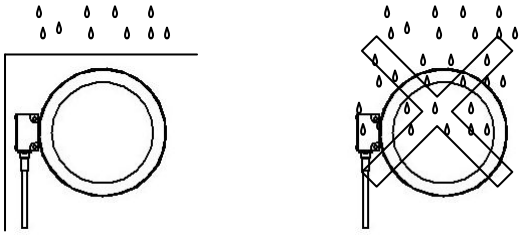

- If the cutting fluid or lubricant is misted, it may form condensation in the inside of the cover and fall on the sensor. Make sure that no dew drops of the cutting fluid or lubricant fall on the sensor.
- Completely separate the sensor area from the machining area.

Cable layout

When using the sensor, note the points described below.

- Make sure that no cutting fluid or lubricant is led to the sensor via any cable. When a horizontal cable outlet is used, a slack can be formed in the cable to prevent the cutting fluid or lubricant from being led to the sensor.

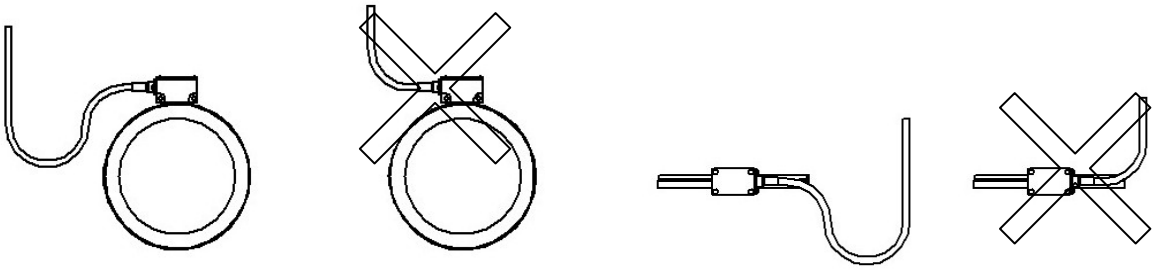

- When an upward cable outlet is used, the cutting fluid or lubricant collects around the sensor connector. Use a horizontal or downward cable outlet whenever possible.

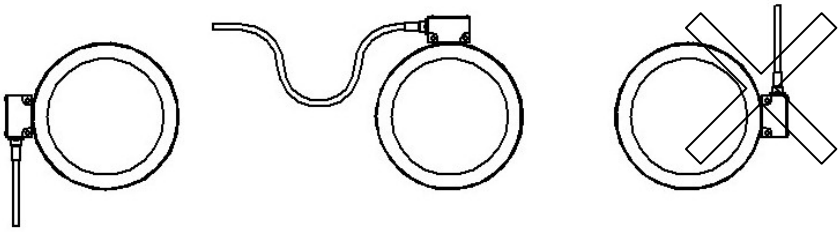

© MyFANUC 2D5504D5BAC945D385F48627D4977F6C

11.2.4 αiBZ SENSOR (for built-in spindle motor)

The αiBZ SENSOR is used in combination with the built-in spindle motor of the BiI series.

11.2.4.1 Specification

Depending on the detection ring or connector, the following specifications are available. Select the specification that suits the purpose.

Names and specification numbers

Name	Specification number (A860-)		Remarks				
				Detection ring			
	Waterproof connector type	Non-waterproof connector type	Number of teeth	Maximum speed (min^{-1})	Inner diameter (mm)	Outer diameter (mm)	Installation
αiBZ SENSOR 96	2150-T111	2155-T111	96	80,000	ϕ30	ϕ39.2	Heat shrink fitting
αiBZ SENSOR 128	2150-T201	2155-T201	128	20,000	ϕ40	ϕ52	
αiBZ SENSOR 128H	2150-T211	2155-T211		70,000			
αiBZ SENSOR 192	2150-T301	2155-T301	192	20,000	ϕ60	ϕ77.6	
αiBZ SENSOR 192H	2150-T311	2155-T311		40,000			
αiBZ SENSOR 256	2150-T401	2155-T401	256	15,000	ϕ82	ϕ103.2	
αiBZ SENSOR 256S	2150-T404	2155-T404			ϕ88		
αiBZ SENSOR 256H	2150-T411	2155-T411		30,000	ϕ82		
αiBZ SENSOR 384	2150-T511	2155-T511	384	15,000	ϕ125	ϕ154.4	
αiBZ SENSOR 512	2150-T611	2155-T611	512	10,000	ϕ160	ϕ205.6	
αiBZ SENSOR 640	2150-T711	2155-T711	640	6,000	ϕ220	ϕ256.8	
αiBZ SENSOR 768	2150-T811	2155-T811	768	5,000	ϕ250	ϕ308	Heat shrink fitting or Screw cramp
αiBZ SENSOR 1024	2150-T911	2155-T911	1024	3,000	ϕ360	ϕ410.4	

Operating environmental conditions

Item	Description
Operating temperature range	0 to +80°C
Humidity	95%RH or less

Electrical specifications

Item			Description
Power supply voltage			$5V^{+5\%}_{-10\%}$
Current consumption			0.05A or less
Output signal	VA,VB	αiBZ SENSOR 96	96λ / revolution
		αiBZ SENSOR 128/128H	128λ / revolution
		αiBZ SENSOR 192/192H	192λ / revolution
		αiBZ SENSOR 256/256S/256H	256λ / revolution
		αiBZ SENSOR 384	384λ / revolution
		αiBZ SENSOR 512	512λ / revolution
		αiBZ SENSOR 640	640λ / revolution
		αiBZ SENSOR 768	768λ / revolution
		αiBZ SENSOR 1024	1024λ / revolution
	VZ	Common to all models	1λ / revolution

© MyFANUC 2D5504D5BAC945D385F48627D4977F6C

Resolution and accuracy

Name	Resolution in Cs contour control	Accuracy (typ.)
αiBZ SENSOR 96	360,000 / revolution	50/1000°
αiBZ SENSOR 128/128H		30/1000°
αiBZ SENSOR 92/192H		25/1000°
αiBZ SENSOR 56/256S/256H		20/1000°
αiBZ SENSOR 384		15/1000°
αiBZ SENSOR 512		10/1000°
αiBZ SENSOR 640		10/1000°
αiBZ SENSOR 768		8/1000°
αiBZ SENSOR 1024		6/1000°

NOTE

1 Accuracy indicated in the above table is not a guaranteed value but a typical value.

2 Accuracy indicated in the above table does not consider the effect of an error due to runout in Detection ring installation. The influence of runout in Detection ring installation on precision can be calculated as follows:

Error (°) = A (mm) × 360/B (mm)

A : Axis runout of the machine spindle or sleeve on the Detection ring mounting surface

B : Perimeter of the Detection ring

Example : If the axis runout on the mounting surface is 0.005 mm when a 256λ Detection ring (103.2 in diameter) is used, the error is:
0.005 × 360/(103.2 × π) = 0.0055(°)

NOTE

1 Use the sensor under 80°C.

2 The sensor is a precision part. Use special care in handling. In particular, do not apply force to the Sensor head. Fasten the sensor cable to the machine at an appropriate position not to apply the force to the Sensor head directly.

3 The waterproofness of the waterproof connector type sensor is equivalent to IP67 when the connector is mated. Note, however, that the waterproofness represented by IP indicates short-time resistance to water only and does not guarantee thorough waterproofness. Therefore, protect the Sensor against direct splash of coolant and so on by taking appropriate measures, for example, by installing a cover.

4 For the detection ring of αiBZ SENSOR 768 or αiBZ SENSOR 1024, it is possible to installed by a screw crimp not only heat shrink fitting. For details, see “Installing the detection ring” described later.

5 When installing the sensor to the machine, make sure that the requirements described in “Installing the sensor” described later are met.

6 For easy maintenance, mount the sensor at a position where it can be replaced easily.

7 Detection rings with the same specification number can be replaced with each other.

© MyFANUC 2D5504D5BAC945D385F48627D4977F6C

11.2.4.2 External dimensions

Dimensions of waterproof connector type A860-2150-Txxx
Specification with 96 to 640 teeth

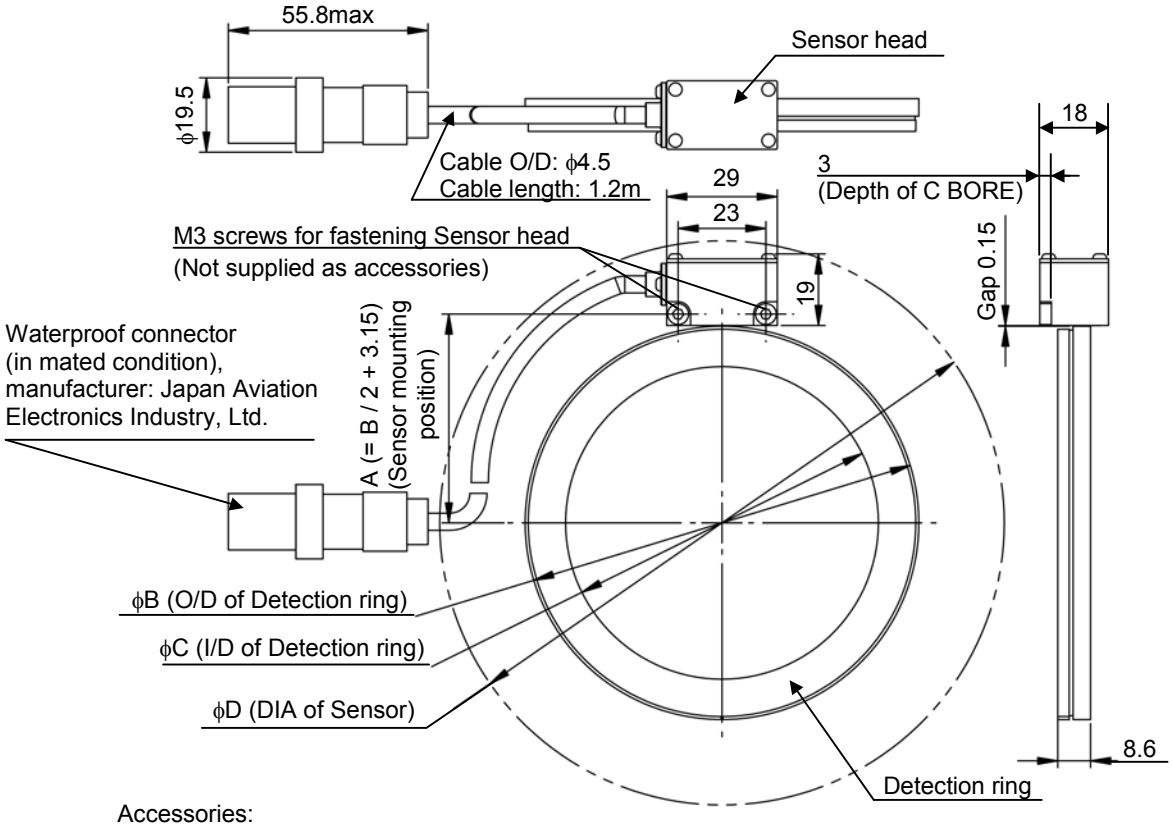

Accessories:
Parallel pin (JIS B 1354-1988,class A, nominal diameter ϕ3 mm, nominal length 6 mm) × 2
Feeler gauge (t = 0.15 mm) × 1

Unit: mm

Specification number	Number of teeth	Dimensions			
		Sensor mounting position A	Outer diameter of Detection ring ϕB	Inner diameter of Detection ring ϕC	Outer diameter of sensor ϕD
A860-2150-T111	96	22.75	39.2+0/-0.02	30+0/-0.016	92
A860-2150-T201	128	29.15	52+0/-0.02	40+0.016/-0	98
A860-2150-T211					
A860-2150-T301	192	41.95	77.6+0/-0.02	60+0/-0.018	122
A860-2150-T311					
A860-2150-T401	256	54.75	103.2+0/-0.02	82+0/-0.018	148
A860-2150-T404				88+0/-0.018	
A860-2150-T411				82+0/-0.018	
A860-2150-T511	384	80.35	154.4+0/-0.02	125+0.025/-0	198
A860-2150-T611	512	105.95	205.6+0/-0.02	160+0.02/-0.005	249
A860-2150-T711	640	131.55	256.8+0/-0.02	220+0/-0.025	300

© MyFANUC 2D5504D5BAC945D385F48627D4977F6C

Specification with 768 to 1024 teeth

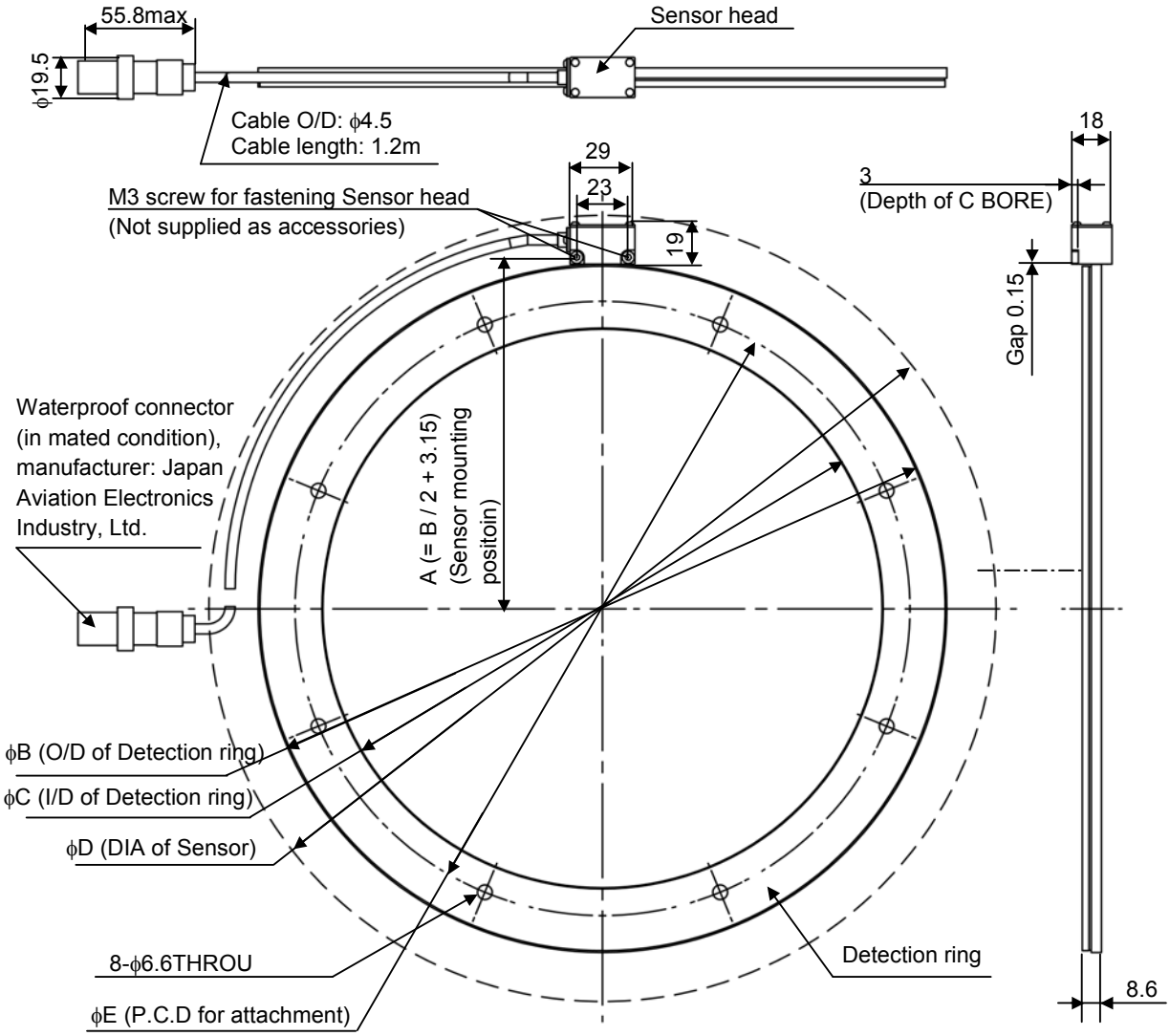

Accessories:

Parallel pin (JIS B 1354-1988, class A, nominal diameter ϕ3 mm, nominal length 6 mm) ×2

Feeler gauge (t = 0.15 mm) ×1

Unit: mm

Specification number	Number of teeth	Dimensions				
		Sensor mounting position A	Outer diameter of detection ring ϕB	Inner diameter of detection ring ϕC	Outer diameter of sensor ϕD	Pitch circle diameter for attachment ϕE
A860-2150-T811	768	157.15	308+0/-0.02	250+0/-0.025	352	275
A860-2150-T911	1024	208.35	410.4+0/-0.02	360+0/-0.025	454	380

© MyFANUC 2D5504D5BAC945D385F48627D4977F6C

Dimensions of non-waterproof connector type A860-2155-Txxx

Only the connector of the Sensor head is different between non-waterproof and waterproof connector specifications.

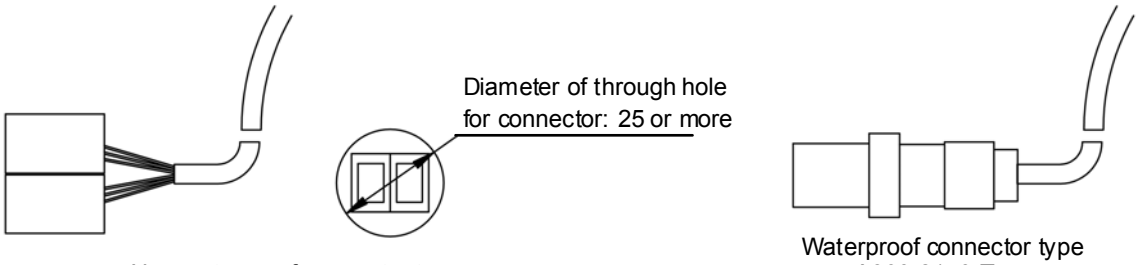

Non-waterproof connector type
A860-2155-Txxx
(Manufactured by Honda Tsushin Kogyo Co., LTD.)

Waterproof connector type
A860-2150-Txxx
(Manufactured by Japan Aviation Electronics Industry, Limited)

NOTE

1 Use the sensor under 80°C.
2 The sensor is a precision part. Use special care in handling. In particular, do not apply force to the Sensor head. Fasten the sensor cable to the machine at an appropriate position not to apply the force to the Sensor head directly.
3 For the detection ring of αiBZ SENSOR 768 or αiBZ SENSOR 1024, it is possible to installed by a screw crimp not only heat shrink fitting. For details, see “Installing the detection ring”, described later.
4 When installing the sensor to the machine, make sure that the requirements described in “Installing the sensor”, described later are met.
5 For easy maintenance, mount the sensor at a position where it can be replaced easily.
6 Detection rings with the same specification number can be replaced with each other.

11.2.4.3 Notes on the Detection ring

The Detection ring consists of the phase Z signal generation section and the phase A/B signal generation section. For the αiBZ SENSOR (A860-2150-Txxx and A860-2155-Txxx), the phase A/B signal generation section and the phase Z signal generation section are integrated into one piece and the phase Z signal generation section has a convex shape. When handling the Detection ring, be very careful not to deform or damage the teeth on the outer surface of the Detection ring.

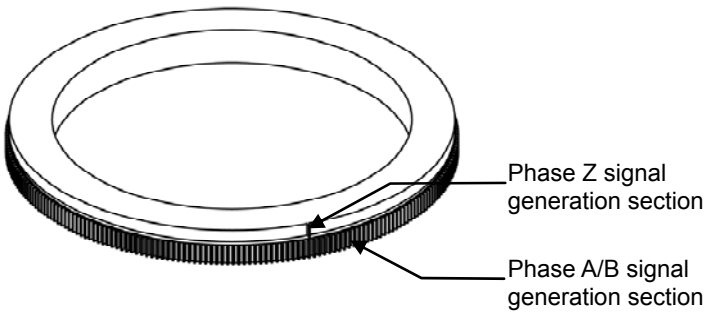

© MyFANUC 2D5504D5BAC945D385F48627D4977F6C

11.2.4.4 Usage with consideration of environmental resistance

Since the sensor is an electric part, if it is used in an environment in which it is exposed to the cutting fluid or lubricant, the cutting fluid or lubricant may enter the inside of the sensor, adversely affecting the sensor. In particular, if the cutting fluid adheres to the sensor, it can cause the deterioration of the resin or rubber sealing parts or cables and the degradation of sealing performance of the sensor, which may allow a large amount of cutting fluid to enter the inside of the sensor, resulting in damage to the sensor. When using the sensor, note the points described below.

Sensor installation conditions

If the sensor is used in an environment in which it is exposed to the cutting fluid or lubricant, the cutting fluid or lubricant may adversely affect the sensor sealing parts or cables and enter the inside of the sensor, resulting in damage to these sensor. When using the sensor, note the points described below.

- Make sure that the sensor surface is never wet with the cutting fluid or lubricant, also make sure that no cutting fluid or lubricant builds up around the sensor. If there is a possibility of the surface being wet, a cover is required.

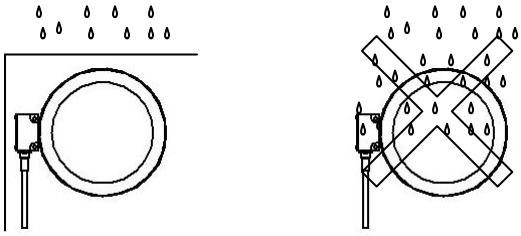

- If the cutting fluid or lubricant is misted, it may form condensation in the inside of the cover and fall on the sensor. Make sure that no dew drops of the cutting fluid or lubricant fall on the sensor.
- Completely separate the sensor area from the machining area.

Cable layout

When using the sensor, note the points described below.

- Make sure that no cutting fluid or lubricant is led to the sensor via any cable. When a horizontal cable outlet is used, a slack can be formed in the cable to prevent the cutting fluid or lubricant from being led to the sensor.

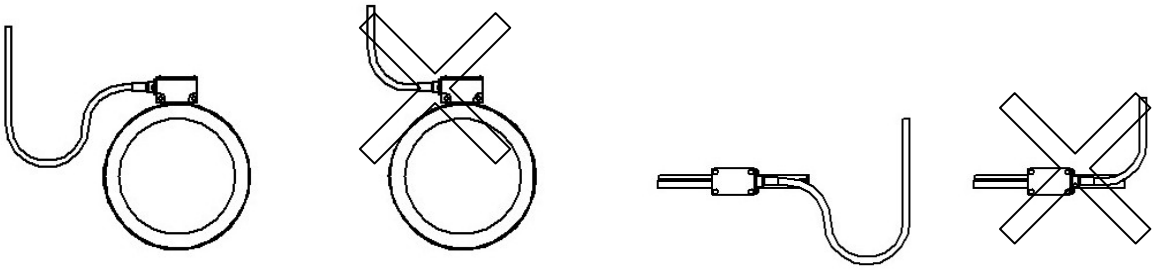

© MyFANUC 2D5504D5BAC945D385F48627D4977F6C

- When an upward cable outlet is used, the cutting fluid or lubricant collects around the sensor connector. Use a horizontal or downward cable outlet whenever possible.

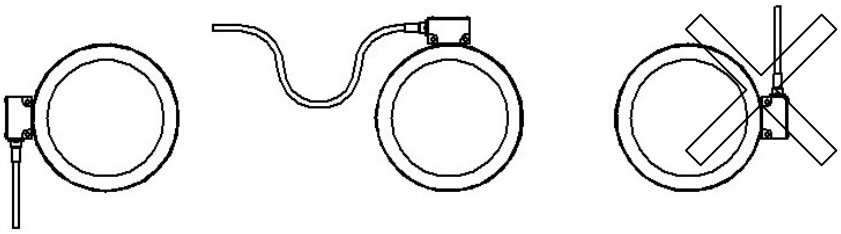

© MyFANUC 2D5504D5BAC945D385F48627D4977F6C

11.2.4.5 Interference of the Detection ring

The following table lists the interference for heat shrink fitting for the Detection ring (difference between the inner diameter of the Detection ring and the diameter of a shaft) at each maximum speed. Determine the suitable interference according to the maximum speed and the type of Detection ring.

Unit: μm

Maximum speed (min^{-1})	Sensor specification number: A860-2150- / A860-2155-									
	T111	T201	T211	T301	T311	T401	T404	T411	T511	T611
3,000	6 to 32	6 to 32	6 to 32	6 to 34	6 to 34	7 to 35	7 to 35	7 to 35	8 to 43	11 to 41
3,500	↓	↓	↓	↓	↓	↓	↓	↓	9 to 44	13 to 43
4,500	↓	↓	↓	↓	↓	↓	↓	↓	11 to 46	19 to 49
6,000	↓	↓	↓	7 to 35	7 to 35	9 to 37	9 to 37	9 to 37	15 to 50	29 to 59
8,000	↓	↓	↓	8 to 36	8 to 36	11 to 39	11 to 39	11 to 39	24 to 59	47 to 77
10,000	↓	↓	↓	9 to 37	9 to 37	14 to 42	15 to 43	14 to 42	35 to 70	71 to 101
12,000	↓	7 to 33	7 to 33	11 to 39	11 to 39	18 to 46	19 to 47	18 to 46	47 to 82	
15,000	↓	8 to 34	8 to 34	13 to 41	13 to 41	26 to 54	28 to 56	26 to 54	71 to 106	
20,000	7 to 33	10 to 36	10 to 36	19 to 47	19 to 47			41 to 69		
25,000	8 to 34		12 to 38		27 to 55			62 to 90		
30,000	10 to 36		15 to 41		37 to 65			87 to 115		
40,000	13 to 39		23 to 49		61 to 89					
50,000	17 to 43		33 to 59							
60,000	22 to 48		43 to 69							
70,000	27 to 53		57 to 83							
80,000	34 to 60									

Unit: μm

Maximum speed (min^{-1})	Sensor specification number: A860-2150- / A860-2155-		
	T711	T811	T911
500	16 to 51	16 to 51	27 to 62
1,000	17 to 52	19 to 54	33 to 68
1,500	20 to 55	22 to 57	43 to 78
2,000	23 to 58	28 to 63	57 to 92
2,500	27 to 62	34 to 69	75 to 110
3,000	32 to 67	43 to 78	96 to 131
3,500	38 to 73	53 to 88	
4,000	45 to 80	64 to 99	
4,500	53 to 88	77 to 112	
5,000	62 to 97	91 to 126	
5,500	72 to 107		
6,000	83 to 118		

NOTE

1 The Detection ring cannot be used with a speed higher than the maximum speed listed in the table above. An interference not listed in the table above may damage the Detection ring or cause it to spin free.

2 For the detection ring of αiBZ SENSOR 768 or αiBZ SENSOR 1024, it is possible to installed by a screw crimp not only heat shrink fitting. For details, see “Installing the detection ring” described later.

© MyFANUC 2D5504D5BAC945D385F48627D4977F6C

11.2.4.6 Installing the sensor

Installation procedure (outline)

Install the sensor according to the procedure below. For details of each step, see the subsequent sections.

- Machine the sensor mounting surface as necessary then insert the parallel pins.
- Fit the Detection ring around the machine shaft or sleeve by heat shrink fitting.
- Adjust the gap between the Sensor head and Detection ring then mount the sensor on the machine.

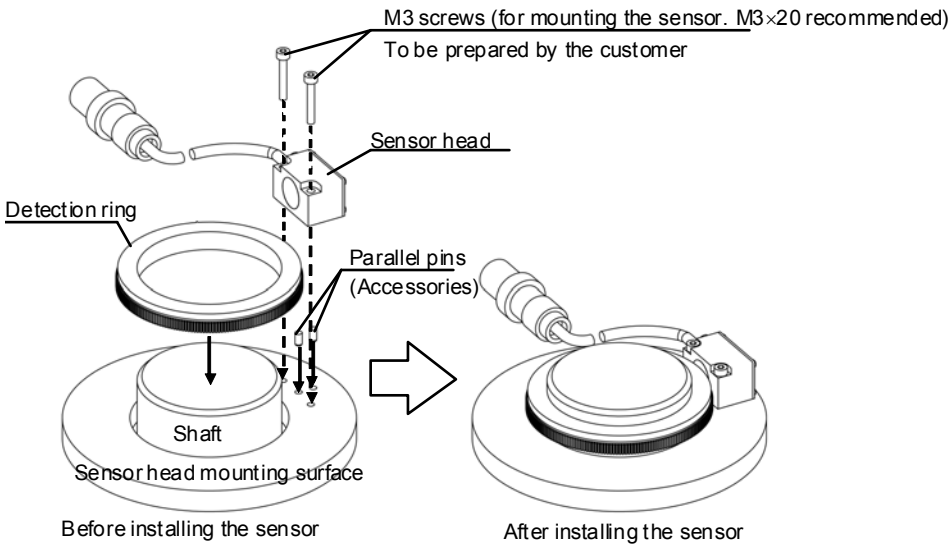

Machining the sensor mounting surface and inserting parallel pins

Machine the sensor mounting surface as shown in the figure below and insert the supplied parallel pins in the 2-ϕ3H6 holes. These pins are used as the guide for the gap adjustment of the Sensor head.

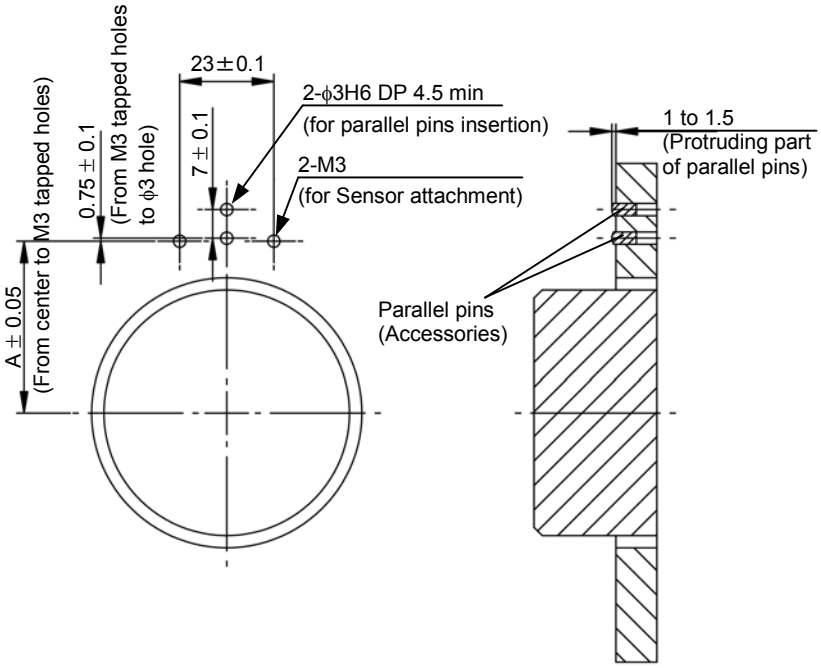

© MyFANUC 2D5504D5BAC945D385F48627D4977F6C

NOTE
For dimension A, see “External Dimensions”, described earlier.

Installing the detection ring

The detection ring is fitting by heat shrink fitting into the shaft or sleeve of the machine.
For the detection ring of αiBZ SENSOR 768 or αiBZ SENSOR 1024, it is possible to installed by a screw crimp not only heat shrink fitting.

Installing the detection ring by heat shrink fitting

Fit the Detection ring around the shaft or sleeve by heat shrink fitting so that the bottom of the phase A/B signal generation section (gear) is 4.7 ±0.2 mm off the sensor mounting surface. The runout of the shaft or sleeve part around which the Detection ring is fit by heat shrink fitting must be 0.005 mm or less.

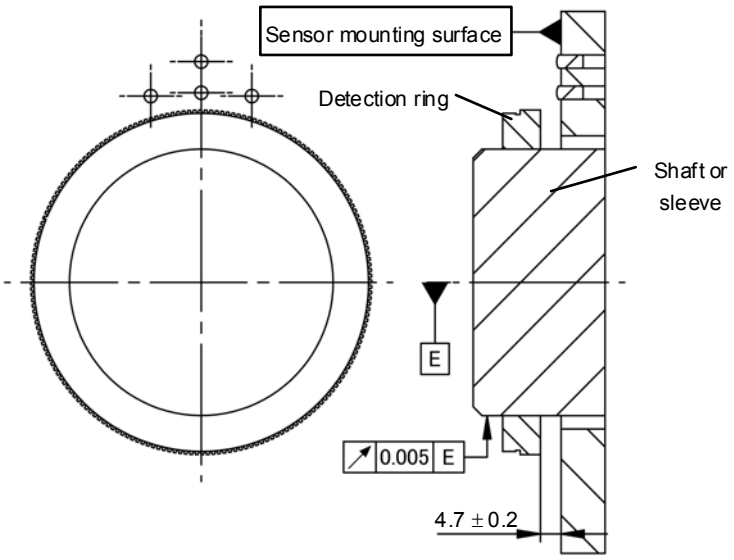

NOTE
1 The maximum temperature for heat shrink fitting of the Detection ring is 200°C as a general rule. Unless there is a compelling reason, the heating below 180°C is recommended. Although the Detection ring may tarnish when heated at high temperature, the heating below 200°C will cause no performance problem.
2 For information about the interference of heat shrink fitting at each maximum speed, see "Interference of the Detection ring", described earlier.

© MyFANUC 2D5504D5BAC945D385F48627D4977F6C

Installing the detection ring by a screw crimp

For the detection ring of αiBZ SENSOR 768 or αiBZ SENSOR 1024, it is possible to installed by a screw crimp not only heat shrink fitting. The Detection ring is installed so that the height between the Detection ring mounting surface and the Sensor head mounting surface is 4.7 ± 0.2 mm.
And the runout of the inner diameter of the Detection ring is as small as possible.

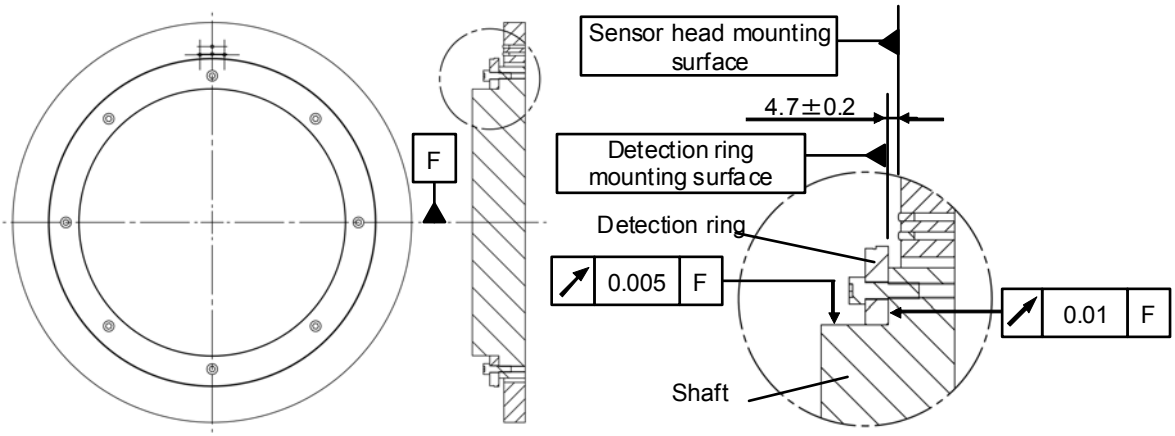

Sensor	Hole for Detection ring attachment	Screw	Recommended tightening torque
αiBZ SENSOR 768	8-ϕ6.6 through, equally spaced on ϕ275 circumference	Hexagon socket head cap screws (steel) M6	10.5N·m ± 0.5N·m
αiBZ SENSOR 1024	8-ϕ6.6 through, equally spaced on ϕ380 circumference	Hexagon socket head cap screws (steel) M6	10.5N·m ± 0.5N·m

The shaft described below is recommended.
The insertion part of the shaft is a taper, and the Detection ring mounting part is designed so that the clearance between the diameter of the shaft and the inner diameter of the Detection ring is as small as possible.

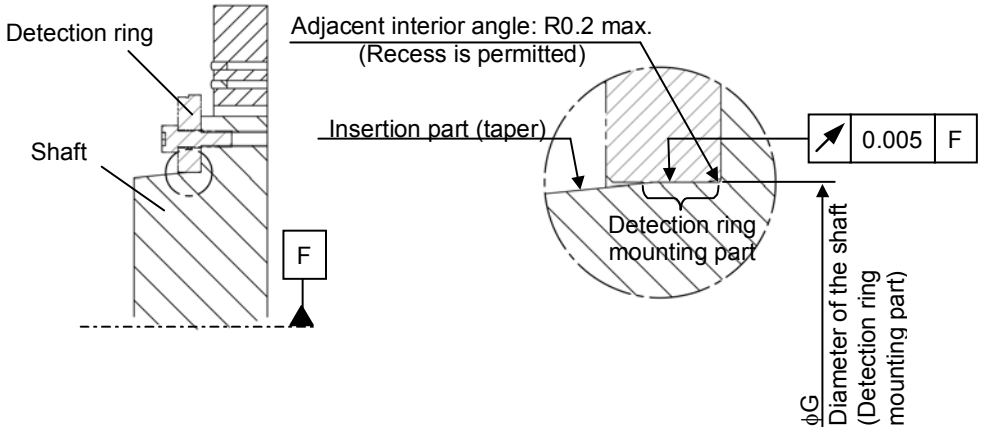

Sensor	Diameter of Detection ring mounting part (recommended) ϕG
αiBZ SENSOR 768	$250^{+0}_{-0.025}$
αiBZ SENSOR 1024	$360^{+0}_{-0.025}$

© MyFANUC 2D5504D5BAC945D385F48627D4977F6C

Installing the Sensor heads

Install the Sensor heads according to the procedure below.

- Place the Sensor head on the sensor mounting surface so that the parallel pins are positioned in the slot on the bottom of the Sensor head, and fasten the Sensor head temporarily. The magnet in the Sensor head and the Detection ring attract each other. When installing the Sensor head, be careful not to hit the Sensor head against the Detection ring. Impact can damage detector elements in the Sensor head.

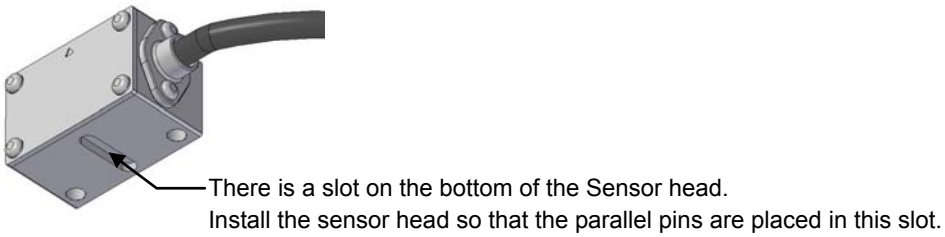

- Insert the thickness gauge (supplied as an accessory, t = 0.15 mm) between the Detection ring and the Sensor head, and while lightly pressing the Sensor head against the thickness gauge, tighten the screws (recommended tightening torque: 1.3 Nm ±10%). Apply a thread locker or the like to the screws to prevent them from becoming loose.

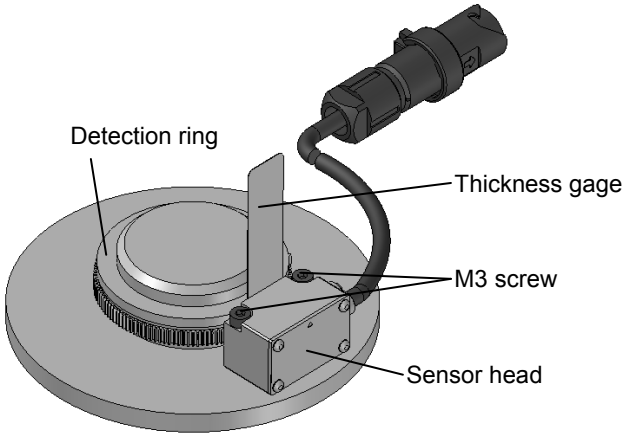

- Pull out the thickness gauge, and slowly turn the spindle to ensure that the Detection ring and the Sensor head do not touch each other. Check that the gap between the Detection ring and the Sensor head is at least 0.1 mm (adequate gap: 0.15 mm).

© MyFANUC 2D5504D5BAC945D385F48627D4977F6C

11.2.4.7 Connection

Connection diagram (outline)

The αiBZ SENSOR is connected to the αiSP as shown in the figure below.

Connection of waterproof connector type A860-2150-Txxx

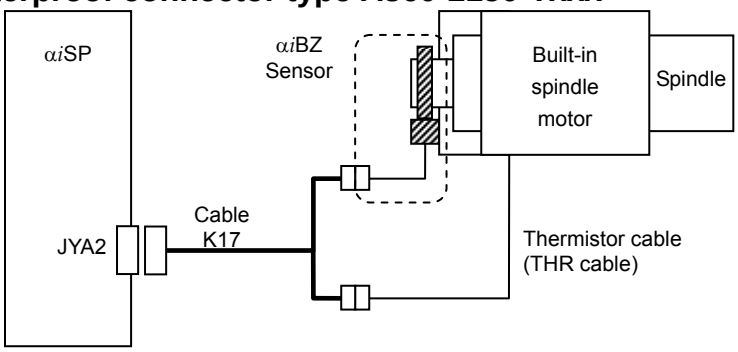

Connection of non-waterproof connector type A860-2155-Txxx

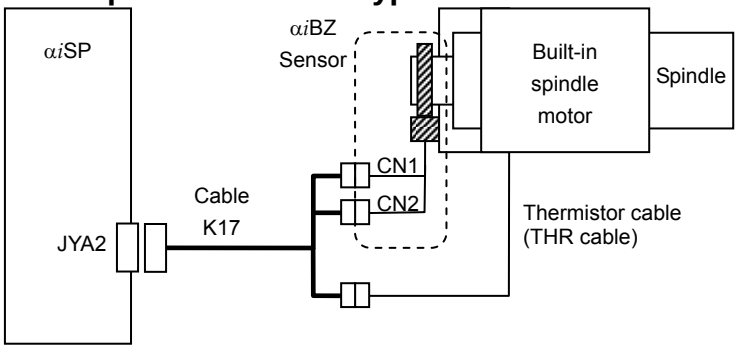

NOTE

1 The cable K17 needs to be prepared by the customer. Connectors for the cable also need to be prepared because of not accessories. For details of the connection, see Subsection 9.3.3.9, "Details of cable K17".
2 Cable K17 can be relayed. The connector or the terminal box with above IP54 is recommended to be used for the relay point.
3 Thermister line is equipped to the built-in spindle motor at shipment.

Using cable conductor

Signal name	Configuration	Specification number
5V, 0V	0.3mm^2, each 1 wire	A66L-0001-0482
VA, RA, VB, RB, VZ, RZ	0.2mm^2 twisted pair, 3pairs	

Tools for the assembly of crimp type connectors for αiBZ SENSOR (Manufacturer: Japan Aviation Electronics Industry Ltd.)

Type	Manufacturer specification	Specification number	Applicable cable thickness
Crimping tool	CT150-2-JN1-E	A06B-6114-K201#JN1E	21AWG(0.5mm^2,20/0.18) 23AWG(0.3mm^2) 25AWG(0.18mm^2)
Extractor	ET-JN1	A06B-6114-K201#JN1R	----------

© MyFANUC 2D5504D5BAC945D385F48627D4977F6C

NOTE
For details of recommended cable conductor, see Appendix B, “CABLES”.
Do not use any pins except the specified, because they may use for other option.

11.2.5 αiCZ SENSOR (for Spindle)

The αiCZ SENSOR is used for highly accurate Cs axis contour control.

11.2.5.1 Specification

Depending on the detection ring, the following specifications are available. Select the specification that suits the purpose.

Names and specification numbers

Name	Specification number	Remarks	
		Number of teeth	Maximum speed (min^{-1})
αiCZ SENSOR 512 IS	A860-2163-T411	512	15,000
αiCZ SENSOR 768 IS	A860-2163-T511	768	10,000
αiCZ SENSOR 1024 IS	A860-2163-T611	1024	8,000

Operating environmental conditions

Item	Description
Operating temperature range	0 to +70°C
Humidity	95%RH or less

Mechanical and electrical specifications

Item	Description
Power supply voltage	$5V^{+5\%}_{-10\%}$
Current consumption	150mA
Water and dust proof class	Equivalent to IP67

Resolution and accuracy

Name	Resolution in Cs contour control	Positioning accuracy		Repetition accuracy
		Typ.	Max.	Typ.
αiCZ SENSOR 512 IS	3,600,000 / revolution	±4”	±8”	±1”
αiCZ SENSOR 768 IS		±3”	±6”	
αiCZ SENSOR 1024 IS		±2”	±4”	

© MyFANUC 2D5504D5BAC945D385F48627D4977F6C

Applicable system requirements

The following table lists the spindle amplifiers and spindle software products that support the αiCZ SENSOR (A860-2163-Txxx).

Spindle amplifiers and spindle software products that support the sensor

Spindle amplifier				Spindle software	
Model	**Specification number**		**Unit version**	**Series**	**Edition**
αiSP TYPE A for 30i-A series CNC	200-V input series	A06B-6141-H002#H580 A06B-6141-H006#H580 A06B-6141-H011#H580 A06B-6141-H015#H580 A06B-6141-H030#H580 A06B-6141-H037#H580 A06B-6141-H055#H580	Version B and later	9D80	H(08) and subsequent editions
	400-V input series	A06B-6151-H006#H580 A06B-6151-H011#H580 A06B-6151-H015#H580 A06B-6151-H045#H580 A06B-6151-H075#H580 A06B-6151-H100#H580			
	200-V input series	A06B-6141-H022#H580 A06B-6141-H026#H580 A06B-6141-H045#H580	Version C and later		
	400-V input series	A06B-6151-H030#H580			
αiSP TYPE B for 30i-A series CNC	200-V input series 400-V input series	A06B-6142-Hxxx#H580 A06B-6152-Hxxx#H580	Version A and later		
αiSP for 30i-B series CNC	200-V input series 400-V input series	A06B-6220-Hxxx#H600 A06B-6270-Hxxx#H600	Version A and later	9DA0	A(01)
αiSP for 30i-B series CNC	200-V input series 400-V input series	A06B-6230-H001#H600 A06B-6280-H001#H600	Version A and later		

NOTE
The TYPE A model of the spindle amplifier is used for a spindle sensor with one input, and the TYPE B model is used for a spindle sensor with two inputs.

Available functions and hardware components

- The following functions are not available.
  Spindle switching control, Differential spindle speed control, Positioncoder signal output
- The following function is not currently supported.
  Disconnection detection disable signal (DSCNA signal)
- The following spindle software products support torque tandem control.

Series	Edition
9D90	G(07) and subsequent editions
9DA0	I(09) and subsequent editions

- The following spindle software products support dual check safety.

Series	Edition
9D80	K(11) and subsequent editions
9D8A	A(01) and subsequent editions
9D90	A(01) and subsequent editions
9DA0	A(01) and subsequent editions

© MyFANUC 2D5504D5BAC945D385F48627D4977F6C

11.2.5.2 External dimensions

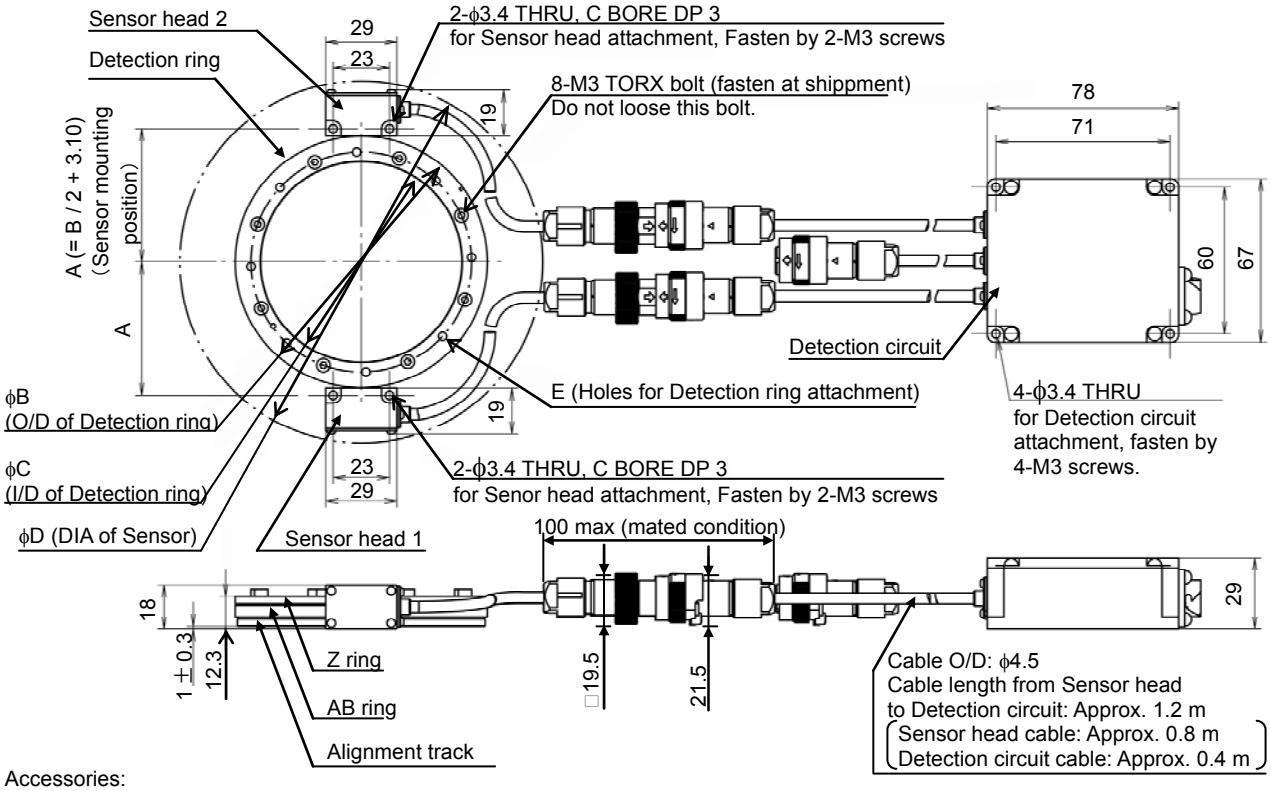

Accessories:

Parallel pin (JIS B 1354-1988, class A, nominal diameter ϕ3 mm, nominal length 6 mm) × 4

Feeler gauge (t = 0.1 mm) × 1

Unit: mm

Specification number	Number of teeth	Dimensions				
		Sensor mounting position A	Outer diameter of detection ring ϕB	Inner diameter of detection ring ϕC	Outer diameter of sensor ϕD	Detection ring mounting hole E
A860-2163-T411	512	54.5	102.8 +0/-0.02	82 +0.02/-0	148	8-ϕ3.4 through, equally spaced on ϕ90 circumference
A860-2163-T511	768	80.1	154 +0/-0.02	125 +0.02/-0	198	8-ϕ4.5 through, equally spaced on ϕ134 circumference
A860-2163-T611	1024	105.7	205.2 +0/-0.02	160 +0.02/-0	249	8-ϕ5.5 through, equally spaced on ϕ170 circumference

© MyFANUC 2D5504D5BAC945D385F48627D4977F6C

NOTE

1 The sensor is a precision part. Use special care in handling. Particularly, do not apply external force to the Sensor head.
2 Take dust protection measures to prevent foreign matter such as chips from being attached to the sensor.
3 The waterproofness of the sensor is equivalent to IP67 when the connector is mated. Note, however, that the waterproofness represented by IP indicates short-time resistance to water only and does not guarantee thorough waterproofness. The sensor may fail if it is kept wet because of exposure to cutting fluid or other kind of liquid. Therefore, take an appropriate measure to prevent the sensor from being exposed to cutting fluid, such as attaching a cover to the machine.
4 For easy maintenance, mount the sensor at a position where it can be replaced easily.
5 Ensure that no vibration greater than 1 G is applied to the Detection circuit.
6 Ground the Detection circuit. The bottom of the Detection circuit is not painted. So, the Detection circuit can be grounded only by screwing.
7 Fix the cable to the machine near the Sensor head, so that stress is not applied directly to the Sensor head.
8 All the cables of sensor is used flexible cables.

11.2.5.3 Installing the sensor

Installation procedure (outline)

Install the sensor according to the procedure below. For details of each step, see the subsequent sections.

- Machine the sensor-head-mounting surface as necessary then insert the parallel pins.
- Mount the Detection ring onto the shaft or sleeve of the machine by centering, then fasten the ring with screws.
- Adjust the gap between the Sensor heads and Detection ring then mount the Sensor heads onto the machine.

© MyFANUC 2D5504D5BAC945D385F48627D4977F6C

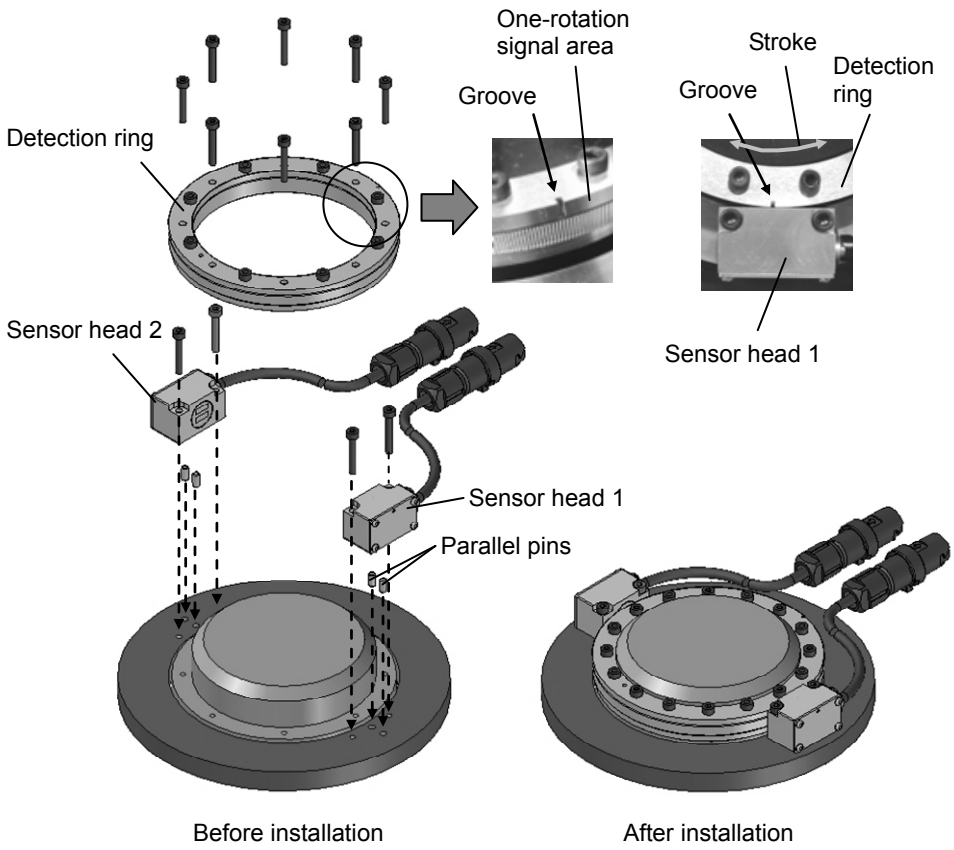

Sensor head mounting surface

Machine the Sensor head mounting surface as shown in the figure below, and insert the supplied parallel pins into the 2-ϕ3H6 holes. The parallel pins serve as guides in adjusting the gap of the Sensor head.

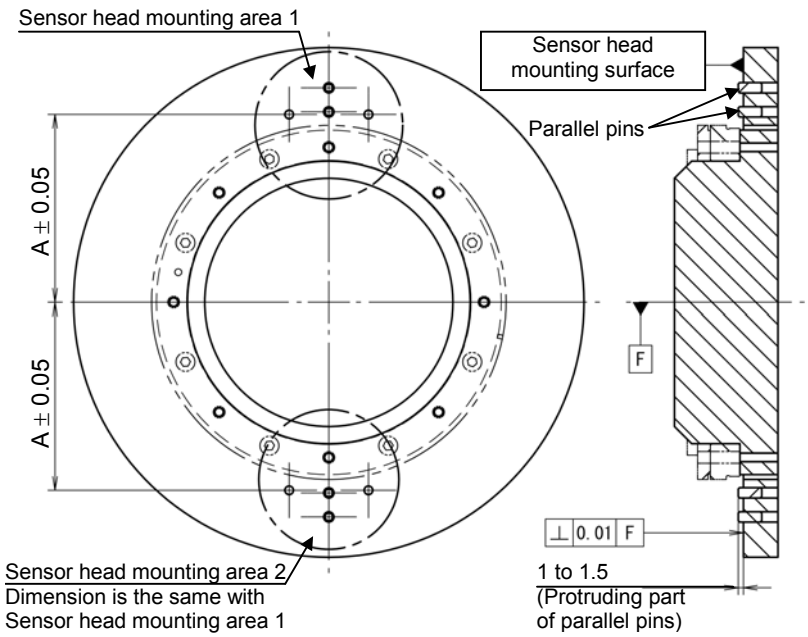

© MyFANUC 2D5504D5BAC945D385F48627D4977F6C

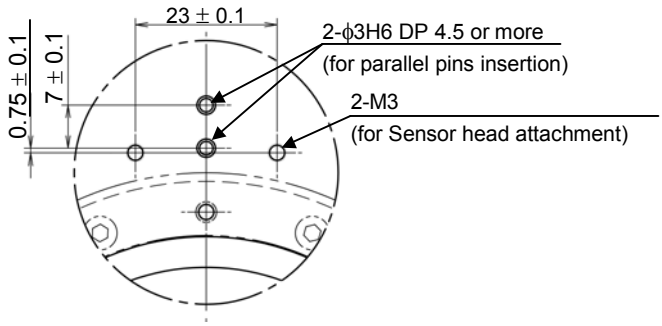

The details of Sensor head mounting area 1

NOTE

1 For dimension A, see “External Dimensions”, described earlier.
2 Design so that the positions of the tapped holes for mounting the Sensor head after machine assembly, not the parts having Sensor head mounting surfaces, satisfy the dimensions.

Installing the detection ring

Adjust the detection ring so that the runout with respect to the rotation center on the centering track becomes 0.01 mm or less, and mount the detection ring. Moreover, in designing, ensure that in the direction along the shaft, the Detection ring mounting plane is 1 ±0.3 mm off the Sensor head mounting surface. Ensure also that the perpendicularity of the Detection ring mounting surface is within 0.01 mm from the rotation center. Apply a thread locker or the like to the screws to prevent the screws from becoming loose.

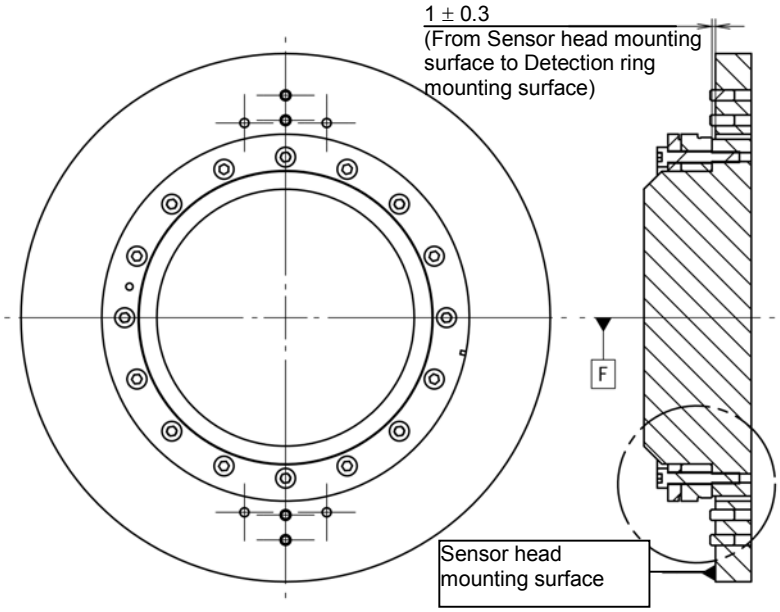

© MyFANUC 2D5504D5BAC945D385F48627D4977F6C

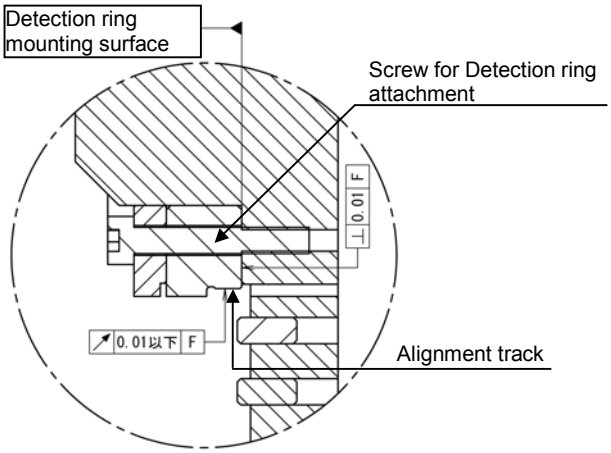

Specification number	Outer diameter of centering track (mm)	Positions of Detection ring mounting holes	Mounting screw	Recommended tightening torque (Nm)
A860-2163-T411	ϕ101	8-ϕ3.4 through, equally spaced on ϕ90 circumference	M3	1.5±5%
A860-2163-T511	ϕ152.2	8-ϕ4.5 through, equally spaced on ϕ134 circumference	M4	3.0±5%
A860-2163-T611	ϕ203.4	8-ϕ5.5 through, equally spaced on ϕ170 circumference	M5	6.0±5%

NOTE

1 For centering purposes, design the outer diameter of the spindle shaft or the sleeve so that that the clearance between it and the inner diameter of the detection ring is 0.1 mm or greater on both sides.
2 Secure the Detection ring on an end face with screws. Avoid shrink fitting to mount the Detection ring.
3 The detection ring consists of a Z ring and an A/B ring. Before the sensor is shipped, these rings are fastened together with Torx screws; do not remove the screws. The threaded portion of the Detection ring is not counter bored, so during machine design, take care so that the machine does not interfere with the screw head.
4 Perform centering on the centering track. The outer diameter of the Z ring is not assured for coaxiality with the pitch circle of the teeth. When performing centering, use a tool such as a plastic hammer not to damage the gear teeth.
5 Magnetic matter attached to gear teeth can lead to a detection error. After centering is completed, remove such foreign matter by air blowing.
6 If the Detection ring mounting screws are tightened with excessive torque, the Detection ring may be elastically deformed, affecting the sensor detection accuracy. Mount the ring with the recommended screw tightening torque.

Installing the Sensor heads

Install the Sensor heads according to the procedure below. The same procedure is applicable to Sensor head 1 and Sensor head 2.

- Place the Sensor head on the sensor mounting surface so that the parallel pins are positioned in the slot on the bottom of the Sensor head, and fasten the Sensor head temporarily. The magnet in the Sensor head and the Detection ring attract each other. When installing the Sensor head, be careful

© MyFANUC 2D5504D5BAC945D385F48627D4977F6C

not to hit the Sensor head against the Detection ring. Impact can damage detector elements in the Sensor head.

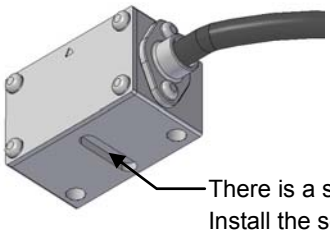

- Insert the thickness gauge (supplied as an accessory, t = 0.1 mm) between the Detection ring and the Sensor head, and while lightly pressing the Sensor head against the thickness gauge, tighten the screws (recommended tightening torque: 1.3N·m±10%). Apply a thread locker or the like to the screws to prevent them from becoming loose.

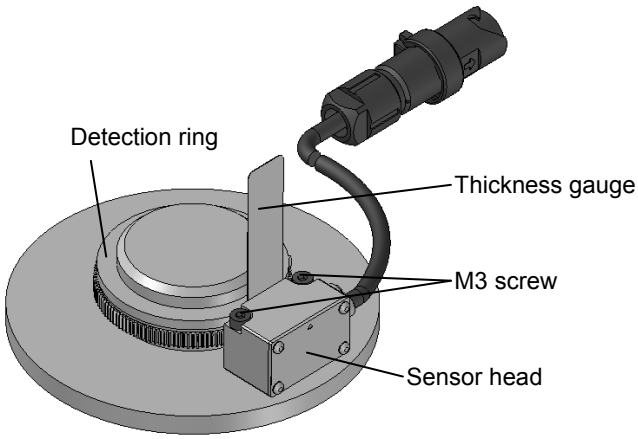

- Pull out the thickness gauge, and slowly turn the shaft to ensure that the Detection ring and the Sensor head do not touch each other.

11.2.5.4 Connection

Connection diagram (outline)

Connect the αiSP and αiCZ SENSOR as shown in the figure below.

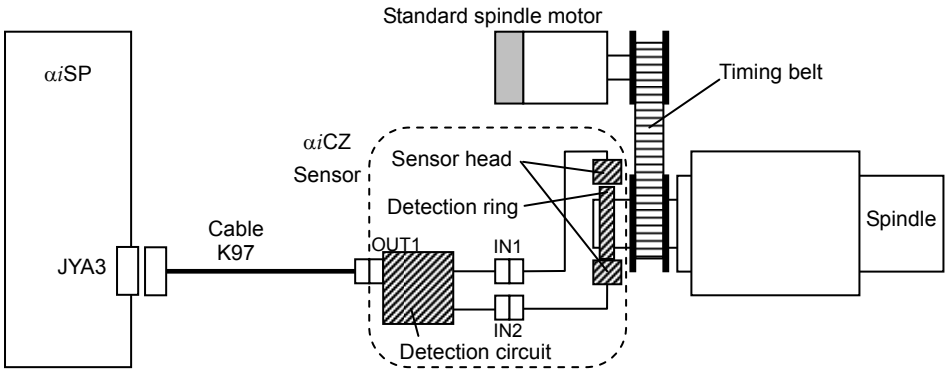

© MyFANUC 2D5504D5BAC945D385F48627D4977F6C

NOTE
The cable K97 needs to be prepared by the customerThe connector is not supplied, and must be purchased separately. For details of connection, see Subsection 9.3.3.17, “Details of cable K97”, described later.

Extending the sensor cable

The sensor cable from the Sensor head to the detection circuit can be extended up to 4 m, as shown in the figure below.

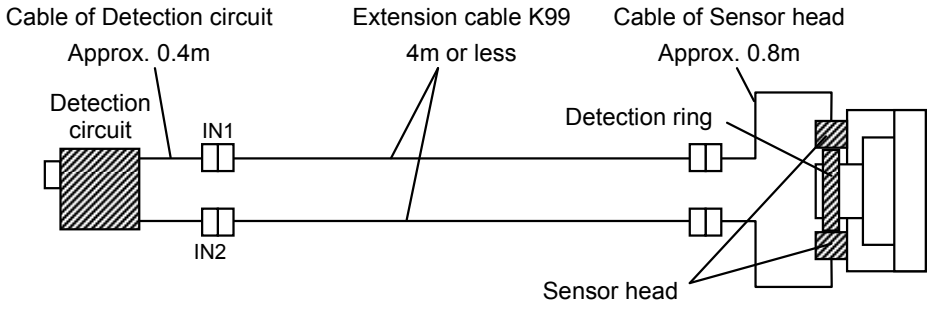

NOTE
The extension cable K99 needs to be prepared by the customerThe connector is not supplied, and must be purchased separately. For details of connection, see “Details of cable K99”, described later.

Details of cable K99

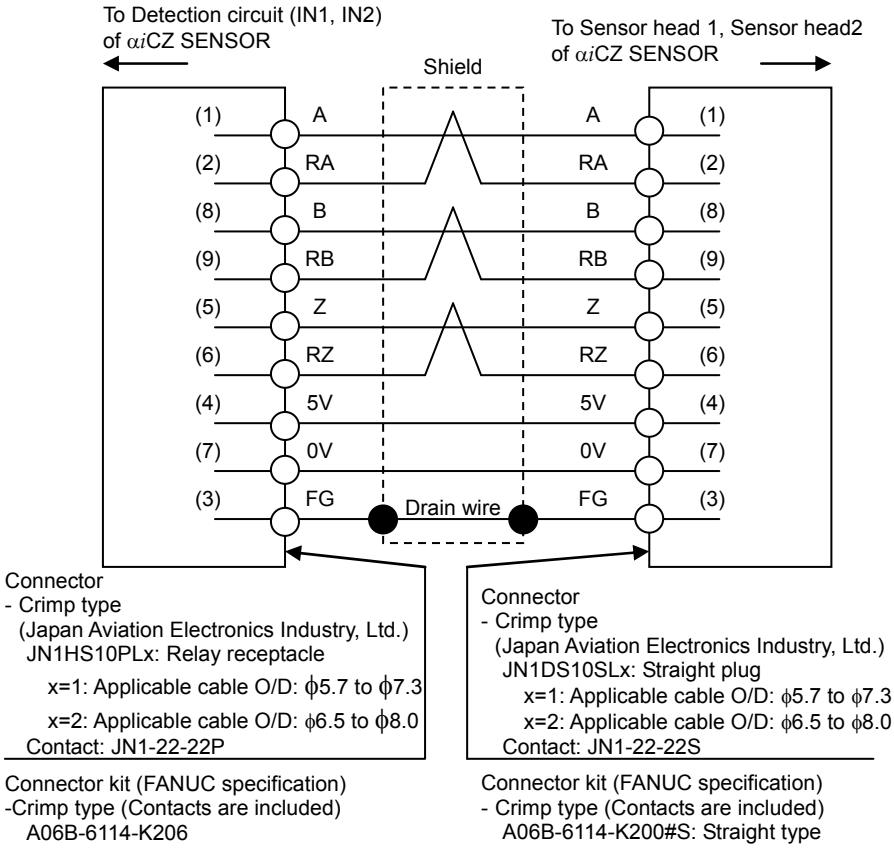

© MyFANUC 2D5504D5BAC945D385F48627D4977F6C

Using cable conductor

Signal name	Configuration
5V, 0V	0.5mm^2 or more × 2
A, RA, B, RB, Z, RZ	0.2mm^2 or more, twisted-pair wire
Drain wire	0.15mm^2 or more

Recommended cable conductor

Cable material specification	Cable length
A66L-0001-0482	4m or less

NOTE

1 The extension cable K99 needs to be prepared by the customer. The connector is not supplied, and must be purchased separately.
2 While the Z and RZ signals are not output from Sensor head 2, no problem arises if the sensor is used with the cable connected.
3 Make sure that the total resistance of the 5V and 0V lines is less than 2Ω.
4 Route power lines so that they do not run in parallel with signal lines.
5 For details of recommended cable conductor, see Appendix B, “CABLES”.
6 For information about the crimping tool for the connector, see "Details of cable K97", described earlier.

11.2.5.5 Rotation direction

When the sensor is viewed from the top as shown in the following figure, clockwise rotation of the Detection ring is referred to as forward rotation:

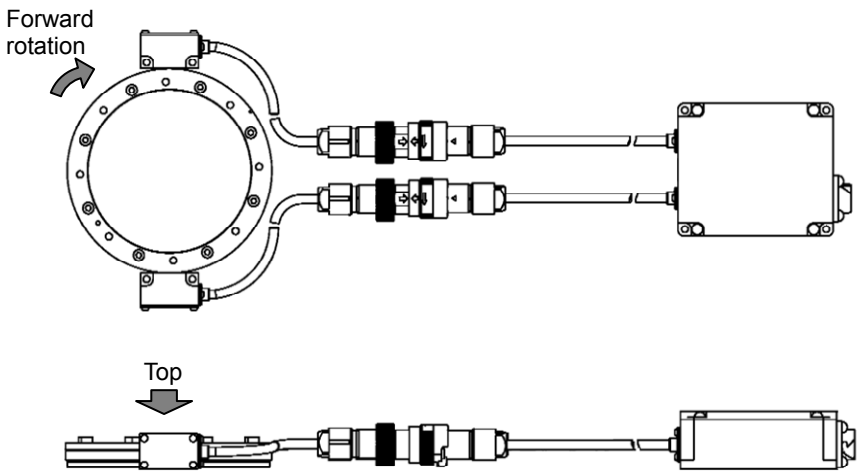

© MyFANUC 2D5504D5BAC945D385F48627D4977F6C

11.2.5.6 Start-up procedure

Overview

The start-up procedure is shown below.

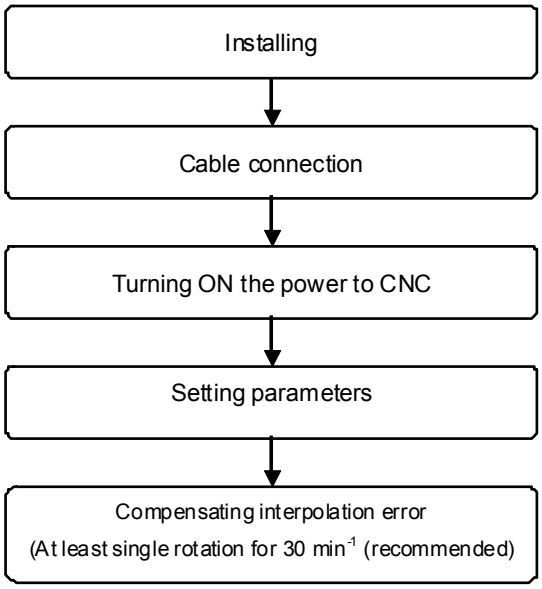

NOTE

1 For information about how to check the output signal, see "Output signal check method", described later.

2 If it is difficult to rotate the sensor at least one turn during compensation of interpolation error, repeat forward and reverse rotations under the above rotation condition to achieve at least one turn in total.

11.2.5.7 Interpolation error compensation

The αiCZ SENSOR incorporates a circuit that automatically detects an interpolation error and compensates for it. The detection conditions differ with the specification, but a common value to all specifications, 30 min^{-1}, is recommended.After turning on the power, be sure to rotate under the following condition and perform interpolation error compensation.

Interpolation error detection conditions
A860-2163-T411 : 25 to 105min^{-1}, constant speed, one or more turns
A860-2163-T511 : 20 to 70min^{-1}, constant speed, one or more turns
A860-2163-T611 : 15 to 50min^{-1}, constant speed, one or more turns

Recommended learning conditions
Common to three models : 30min^{-1}, constant speed, one or more turns

© MyFANUC 2D5504D5BAC945D385F48627D4977F6C

NOTE

1 The interpolation error compensation data is retained in the αiCZ SENSOR while power is supplied to the sensor. When the power is shut down, however, the data is not retained. To ensure accuracy, perform interpolation error compensation by rotating the sensor at a rotation speed that meets the detection conditions each time the sensor is powered on after powering off.
2 If learning is not completed, the detection accuracy of the αiCZ SENSOR may degrade.
3 If it is difficult to rotate the sensor more than one turn, repeat forward and reverse rotations under the above rotation speed conditions to achieve at least one turn in total.

11.2.5.8 Notes on use

Sensor head

The Detection circuit memorizes the initial conduction state. So, do not move the Sensor head afterward. If the Sensor head is moved after the initial conduction state, the reference position may be displaced. Moreover, a pulse error alarm may be issued. If the Sensor head is moved after initial power on, perform reference position return again by generating the “APC ALARM: BATTERY VOLTAGE 0”, according to “Procedure for Initializing the Detection Circuit”.

Magnetic powder attached to the Detection ring

The αiCZ SENSOR detects an angular displacement according to a change in magnetic flux density between the Sensor heads and Detection ring. So, if magnetic powder is attached to any location on the Detection ring, the magnetic flux density at that location changes locally, deteriorating the accuracy of detection. This accuracy deterioration occurs each time the location to which magnetic powder is attached passes Sensor head 1 and 2, that is, at every 180°. This deterioration leads to an increased positioning error, torque command variation, abnormal sound, vibration, and so forth.
After installing the sensor, blow the Detection ring by air. Moreover, to prevent magnetic powder and chips from being attached to the Detection ring and Sensor heads during operation, provide protection against dust and water on the machine side.
If nonmagnetic matter (such as aluminum, austenitic stainless steel, resin, and oil) is attached to the Detection ring or Sensor head, such accuracy deterioration as described above does not occur. However, foreign matter caught between the Detection ring and a Sensor head can mechanically damage the Sensor head. So, prevent foreign matter, even if nonmagnetic, from being attached to the Detection ring.

11.2.5.9 Displaying the sensor amplitude and offset information

The amplitude and offset information of the αiCZ SENSOR output signal can be viewed on the CNC diagnosis screen according to the procedure described below. After installing the sensor, check that its output signal is correct.

- Set “9” in parameter No. 4532.

30i-A/B	0i-D	
4532	4532	Arbitrary data output function number (for displaying the diagnosis screen)

NOTE
This parameter setting is valid with spindle software 9D80 series M (13) edition or later.

- In the case of the 1st spindle, check the values of Nos. 720 and 722 on the diagnosis screen.

© MyFANUC 2D5504D5BAC945D385F48627D4977F6C

720	Sensor head 1 A/B phase amplitude and offset information

Thousands place: Indicates the Sensor head number. 1: Sensor head 1, 2: Sensor head 2
Hundreds place: Indicates the amplitude value with a level of 1 to 9. 3 to 7 are standard values.
Tens place: Indicates the A phase offset value with a level of 1 to 9. 3 to 7 are standard values.
Ones place: Indicates the B phase offset value with a level of 1 to 9. 3 to 7 are standard values.

722	Sensor head 2 A/B phase amplitude and offset information

Thousands place: Indicates the Sensor head number. 1: Sensor head 1, 2: Sensor head 2
Hundreds place: Indicates the amplitude value with a level of 1 to 9. 3 to 7 are standard values.
Tens place: Indicates the A phase offset value with a level of 1 to 9. 3 to 7 are standard values.
Ones place: Indicates the B phase offset value with a level of 1 to 9. 3 to 7 are standard values.

NOTE
1 When No. 4532 is not set to 9, other information is displayed.
2 It is recommended to check the values on the diagnosis screen while the sensor is rotating.

(Display example)

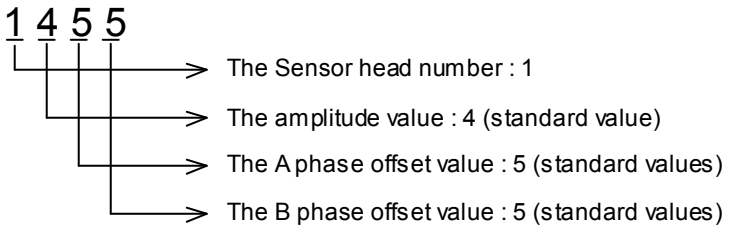

Diagnosis No.

	FS30*i*-A/B		FS0*i*-D	
	Sensor head 1	Sensor head 2	Sensor head 1	Sensor head 2
First spindle	720 (each spindle)	722 (each spindle)	720 (each spindle)	722 (each spindle)
Second spindle				
Third spindle			---	---
Fourth spindle				

11.2.5.10 Maintenance target parts

The absolute α*i*CZ SENSOR consists of four parts: detection ring (A/B phase ring and Z phase ring fastened with screws), Sensor head 1, Sensor head 2, and detection circuit. Each part can be replaced separately in maintenance. When purchasing, refer to the following specifications.

© MyFANUC 2D5504D5BAC945D385F48627D4977F6C

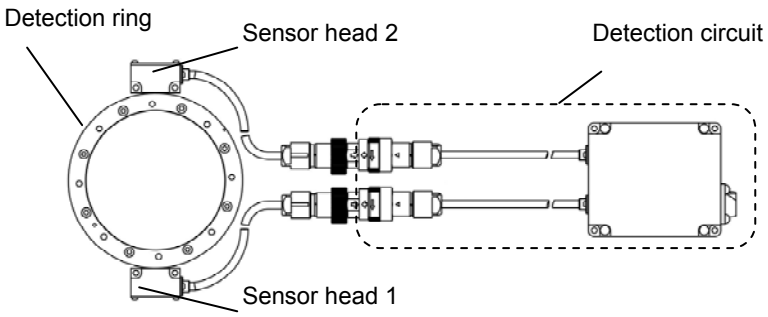

Maintenance target parts specifications

Specification number / Part specification	αiCZ SENSOR 512 IS A860-2163-T411	αiCZ SENSOR 768 IS A860-2163-T511	αiCZ SENSOR 1024 IS A860-2163-T611
Detection ring	A860-2160-V901	A860-2160-V902	A860-2160-V903
Sensor head 1	A860-2162-V001 (applicable to all specifications)		
Sensor head 2	A860-2162-V012 (applicable to all specifications)		
Detection circuit	A860-2163-V201 (applicable to all specifications)		

11.2.5.11 Spindle alarms

Alarm No.			LED indication	Alarm name	Alarm description
15*i*	16*i*	30*i*	SP		
SP0132	9132	SP9132	d2	Serial data error	Communication between the sensor and spindle amplifier is not performed.
SP0133	9133	SP9133	d3	Data transfer error	Serial data transmission/reception is not performed normally.
SP0134	9134	SP9134	d4	Soft phase alarm	An abnormal acceleration rate was detected.
SP0139	9139	SP9139	d9	Pulse error alarm	An error occurred in the interpolation circuit.
SP0140	9140	SP9140	E0	Count error alarm	The number of pulses between one phase Z and another is shifted by 4λ or more.
SP0141	9141	SP9141	E1	Sensor one-rotation signal undetected	No absolute position is established within 5 turns immediately after communication between the spindle amplifier and sensor is started.

11.2.6 αiCZ SENSOR (for built-in spindle motor)

The αiCZ SENSOR is used in combination with the built-in spindle motor BiI series/BiI series for highly accurate Cs axis contour control.

11.2.6.1 Specification

Depending on the detection ring, the following specifications are available. Select the specification that suits the purpose.

Names and specification numbers

Name	Specification number	Remarks	
		Number of teeth	Maximum speed (min^{-1})
αiCZ SENSOR 512 I	A860-2161-T411	512	15,000
αiCZ SENSOR 768 I	A860-2161-T511	768	10,000
αiCZ SENSOR 1024 I	A860-2161-T611	1024	8,000

© MyFANUC 2D5504D5BAC945D385F48627D4977F6C

Operating environmental conditions

Item	Description
Operating temperature range	0 to +70°C
Humidity	95%RH or less

Mechanical and electrical specifications

Item	Description
Power supply voltage	$5V^{+5\%}_{-10\%}$
Current consumption	150mA
Water and dust proof class	Equivalent to IP67

Resolution and accuracy

Name	Resolution in Cs contour control	Positioning accuracy		Repetition accuracy
		Typ.	Max.	Typ.
αiCZ SENSOR 512 I	3,600,000 / revolution	±4”	±8”	±1”
αiCZ SENSOR 768 I		±3”	±6”	
αiCZ SENSOR 1024 I		±2”	±4”	

Applicable system requirements

The following table lists the spindle amplifiers and spindle software products that support the αiCZ SENSOR (A860-2161-Txxx).

Spindle amplifiers and spindle software products that support the sensor

Spindle amplifier				Spindle software	
Model	Specification number		Unit version	Series	Edition
αiSP TYPE A for 30i-A series CNC	200-V input series	A06B-6141-H002#H580 A06B-6141-H006#H580 A06B-6141-H011#H580 A06B-6141-H015#H580 A06B-6141-H030#H580 A06B-6141-H037#H580 A06B-6141-H055#H580	Version B and later	9D80	H(08) and subsequent editions
	400-V input series	A06B-6151-H006#H580 A06B-6151-H011#H580 A06B-6151-H015#H580 A06B-6151-H045#H580 A06B-6151-H075#H580 A06B-6151-H100#H580			
	200-V input series	A06B-6141-H022#H580 A06B-6141-H026#H580 A06B-6141-H045#H580	Version C and later		
	400-V input series	A06B-6151-H030#H580			
αiSP TYPE B for 30i-A series CNC	200-V input series 400-V input series	A06B-6142-Hxxx#H580 A06B-6152-Hxxx#H580	Version A and later		
αiSP for 30i-B series CNC	200-V input series 400-V input series	A06B-6220-Hxxx#H600 A06B-6270-Hxxx#H600	Version A and later	9DA0	A(01)
αiSVP for 30i-B series CNC	200-V input series 400-V input series	A06B-6230-H001#H600 A06B-6280-H001#H600	Version A and later		

NOTE

The TYPE A model of the spindle amplifier is used for a spindle sensor with one input, and the TYPE B model is used for a spindle sensor with two inputs.

© MyFANUC 2D5504D5BAC945D385F48627D4977F6C

Available functions and hardware components

- The following functions are not available.
  Spindle switching control, Differential spindle speed control, Positioncoder signal output
- The following function is not currently supported.
  Disconnection detection disable signal (DSCNA signal)
- The following spindle software products support torque tandem control.

Series	Edition
9D90	G(07) and subsequent editions
9DA0	I(09) and subsequent editions

- The following spindle software products support dual check safety.

Series	Edition
9D80	K(11) and subsequent editions
9D8A	A(01) and subsequent editions
9D90	A(01) and subsequent editions
9DA0	A(01) and subsequent editions

11.2.6.2 External dimensions

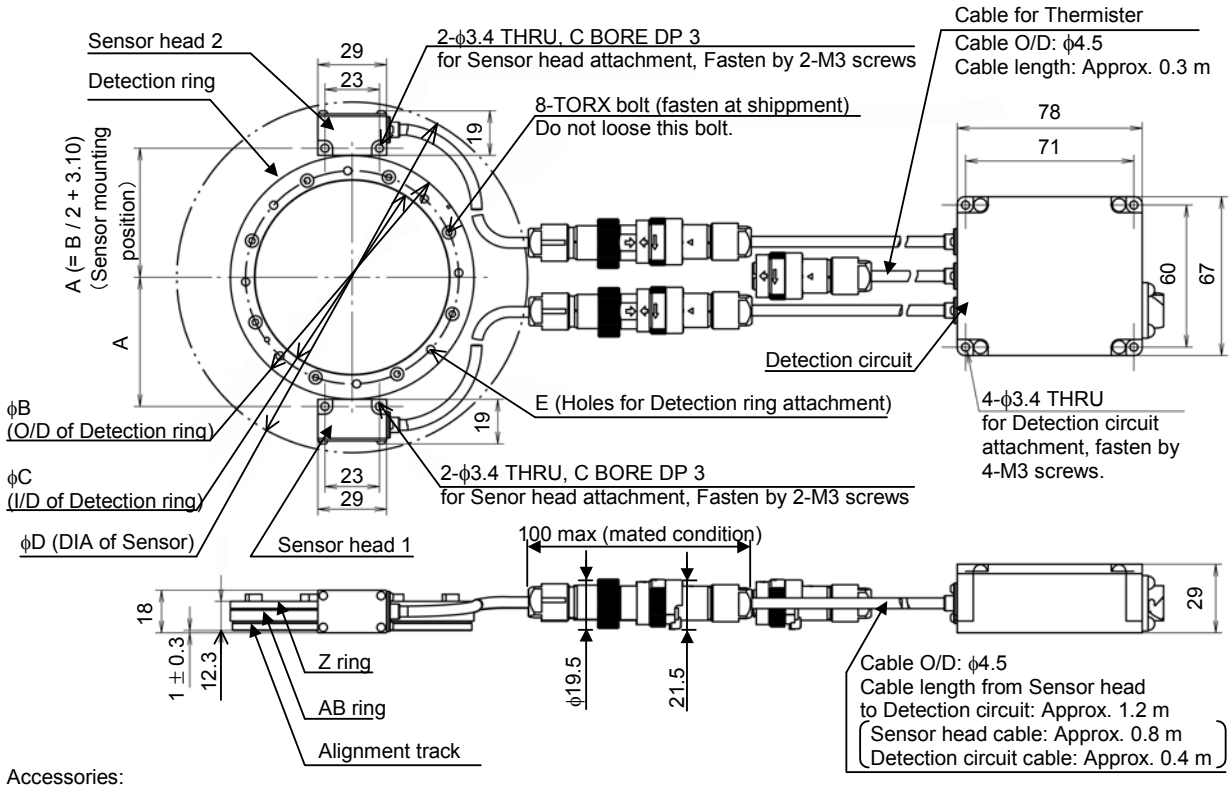

Accessories:
Parallel pin (JIS B 1354-1988, class A, nominal diameter ϕ3 mm, nominal length 6 mm) × 4
Feeler gauge (t = 0.1 mm) × 1

© MyFANUC 2D5504D5BAC945D385F48627D4977F6C

Unit: mm

Specification number	Number of teeth	Dimensions				
		Sensor mounting position A	Outer diameter of detection ring ϕB	Inner diameter of detection ring ϕC	Outer diameter of sensor ϕD	Detection ring mounting hole E
A860-2161-T411	512	54.5	102.8 +0/-0.02	82 +0.02/-0	148	8-ϕ3.4 through, equally spaced on ϕ90 circumference
A860-2161-T511	768	80.1	154 +0/-0.02	125 +0.02/-0	198	8-ϕ4.5 through, equally spaced on ϕ134 circumference
A860-2161-T611	1024	105.7	205.2 +0/-0.02	160 +0.02/-0	249	8-ϕ5.5 through, equally spaced on ϕ170 circumference

NOTE

1 The sensor is a precision part. Use special care in handling. Particularly, do not apply external force to the Sensor head.
2 Take dust protection measures to prevent foreign matter such as chips from being attached to the sensor.
3 The waterproofness of the sensor is equivalent to IP67 when the connector is mated. Note, however, that the waterproofness represented by IP indicates short-time resistance to water only and does not guarantee thorough waterproofness. The sensor may fail if it is kept wet because of exposure to cutting fluid or other kind of liquid. Therefore, take an appropriate measure to prevent the sensor from being exposed to cutting fluid, such as attaching a cover to the machine.
4 For easy maintenance, mount the sensor at a position where it can be replaced easily.
5 Ensure that no vibration greater than 1 G is applied to the Detection circuit.
6 Ground the Detection circuit. The bottom of the Detection circuit is not painted. So, the Detection circuit can be grounded only by screwing.
7 Fix the cable to the machine near the Sensor head, so that stress is not applied directly to the Sensor head.
8 All the cables of sensor is used flexible cables.

11.2.6.3 Installing the sensor

Installation procedure (outline)

Install the sensor according to the procedure below. For details of each step, see the subsequent sections.

- Machine the sensor-head-mounting surface as necessary then insert the parallel pins.
- Mount the Detection ring onto the shaft or sleeve of the machine by centering, then fasten the ring with screws.
- Adjust the gap between the Sensor heads and Detection ring then mount the Sensor heads onto the machine.

© MyFANUC 2D5504D5BAC945D385F48627D4977F6C

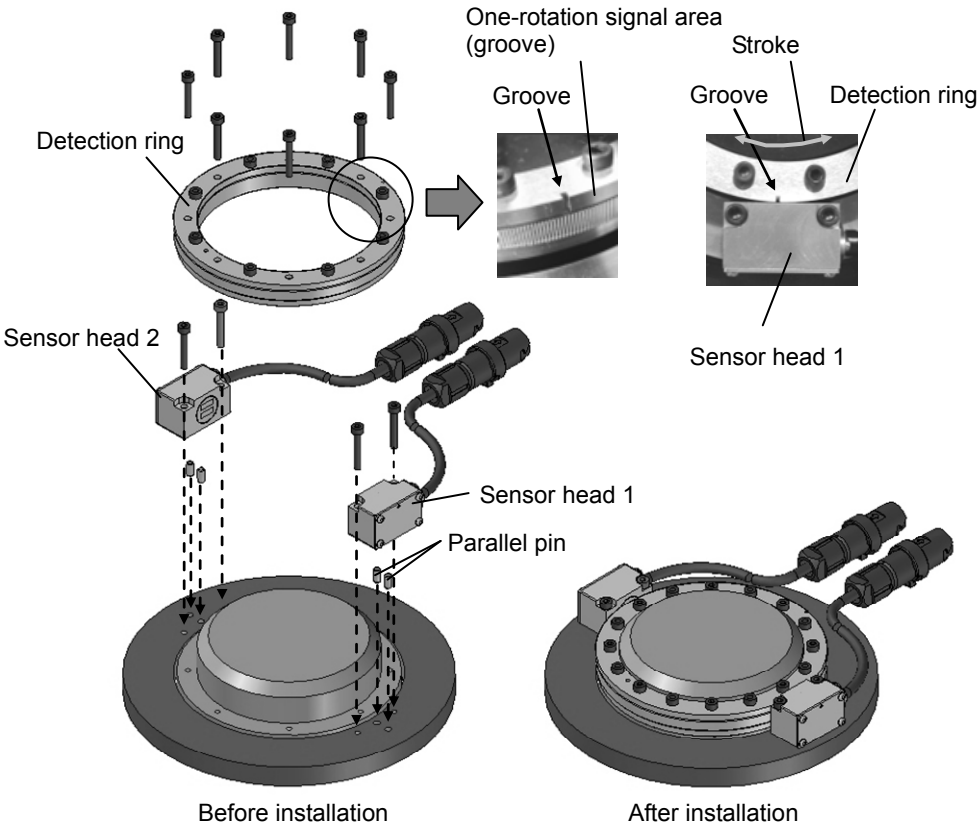

Sensor head mounting surface

Machine the Sensor head mounting surface as shown in the figure below, and insert the supplied parallel pins into the 2-ϕ3H6 holes. The parallel pins serve as guides in adjusting the gap of the Sensor head.

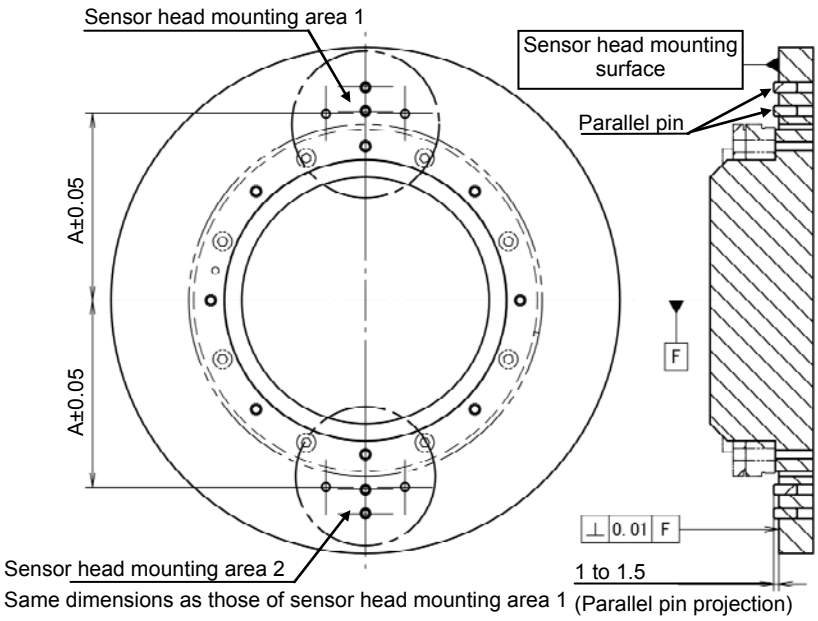

© MyFANUC 2D5504D5BAC945D385F48627D4977F6C

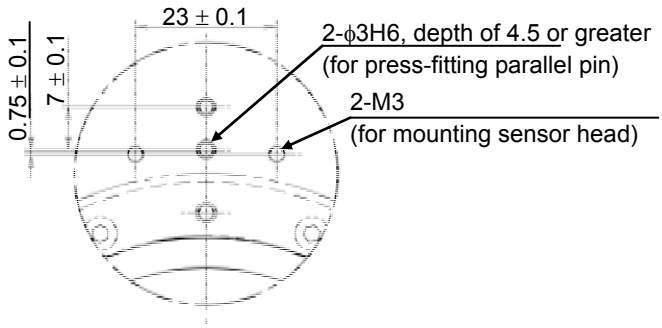

Details of sensor head mounting area 1

NOTE
1 For dimension A, see “External Dimensions”, described earlier.
2 Design so that the positions of the tapped holes for mounting the Sensor head after machine assembly, not the parts having Sensor head mounting surfaces, satisfy the dimensions.

Installing the detection ring

Adjust the detection ring so that the runout with respect to the rotation center on the centering track becomes 0.01 mm or less, and mount the Detection ring. Moreover, in designing, ensure that in the direction along the shaft, the Detection ring mounting plane is 1 ±0.3 mm off the Sensor head mounting surface. Ensure also that the perpendicularity of the Detection ring mounting surface is within 0.01 mm from the rotation center. Apply a thread locker or the like to the screws to prevent the screws from becoming loose.

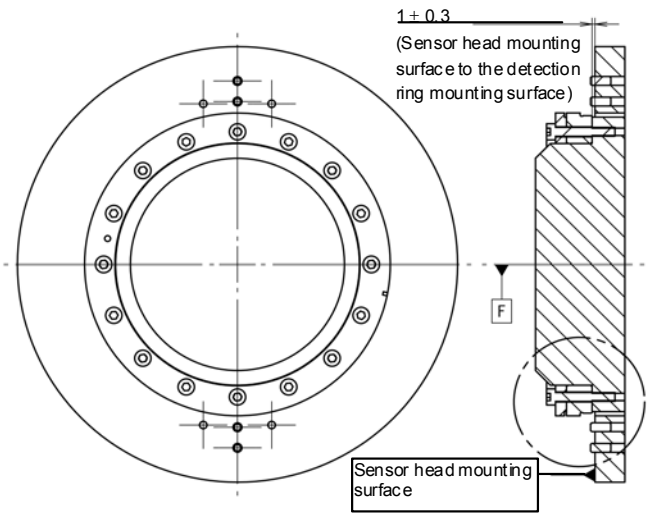

© MyFANUC 2D5504D5BAC945D385F48627D4977F6C

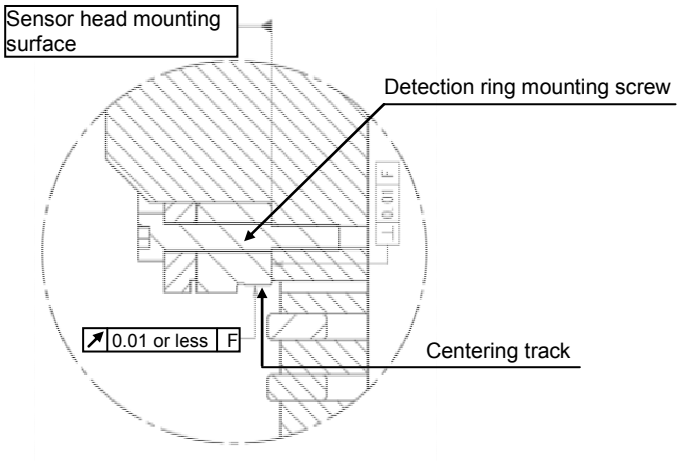

Specification number	Outer diameter of centering track (mm)	Positions of Detection ring mounting holes	Mounting screw	Recommended tightening torque (Nm)
A860-2161-T411	ϕ101	8-ϕ3.4 through, equally spaced on ϕ90 circumference	M3	1.5±5%
A860-2161-T511	ϕ152.2	8-ϕ4.5 through, equally spaced on ϕ134 circumference	M4	3.0±5%
A860-2161-T611	ϕ203.4	8-ϕ5.5 through, equally spaced on ϕ170 circumference	M5	6.0±5%

NOTE

1 Secure the Detection ring on an end face with screws. Avoid shrink fitting to mount the Detection ring.
2 Secure the Detection ring on an end face with screws. Avoid shrink fitting to mount the Detection ring.
3 The detection ring consists of a Z ring and an A/B ring. Before the sensor is shipped, these rings are fastened together with Torx screws; do not remove the screws. The threaded portion of the Detection ring is not counter bored, so during machine design, take care so that the machine does not interfere with the screw head.
4 Perform centering on the centering track. The outer diameter of the Z ring is not assured for coaxiality with the pitch circle of the teeth. When performing centering, use a tool such as a plastic hammer not to damage the gear teeth.
5 Magnetic matter attached to gear teeth can lead to a detection error. After centering is completed, remove such foreign matter by air blowing.
6 If the Detection ring mounting screws are tightened with excessive torque, the Detection ring may be elastically deformed, affecting the sensor detection accuracy. Mount the ring with the recommended screw tightening torque.

Installing the Sensor heads

Install the Sensor heads according to the procedure below. The same procedure is applicable to Sensor head 1 and Sensor head 2.

- Place the Sensor head on the sensor mounting surface so that the parallel pins are positioned in the slot on the bottom of the Sensor head, and fasten the Sensor head temporarily. The magnet in the Sensor head and the Detection ring attract each other. When installing the Sensor head, be careful not to hit the Sensor head against the Detection ring. Impact can damage detector elements in the Sensor head.

© MyFANUC 2D5504D5BAC945D385F48627D4977F6C

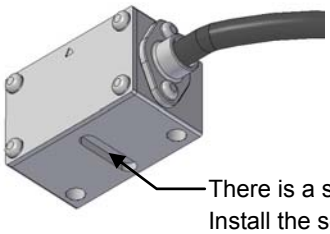

There is a slot on the bottom of the Sensor head.
Install the sensor head so that the parallel pins are placed in this slot.

- Insert the thickness gauge (supplied as an accessory, t = 0.1 mm) between the Detection ring and the Sensor head, and while lightly pressing the Sensor head against the thickness gauge, tighten the screws (recommended tightening torque: 1.3N·m±10%). Apply a thread locker or the like to the screws to prevent them from becoming loose.

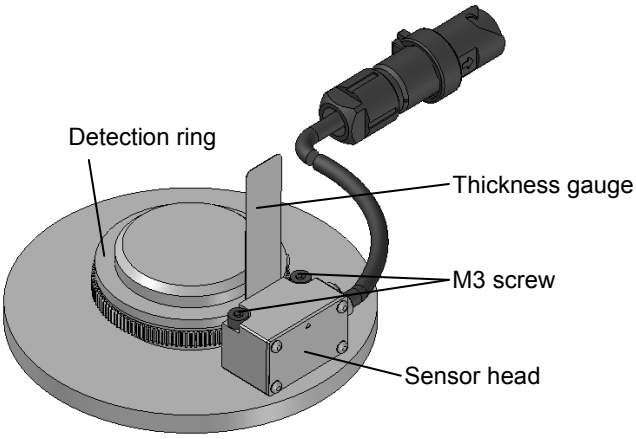

- Pull out the thickness gauge, and slowly turn the shaft to ensure that the Detection ring and the Sensor head do not touch each other.

11.2.6.4 Connection

Connection diagram (outline)

Connect the αiSP and αiCZ SENSORs as shown in the figure below.

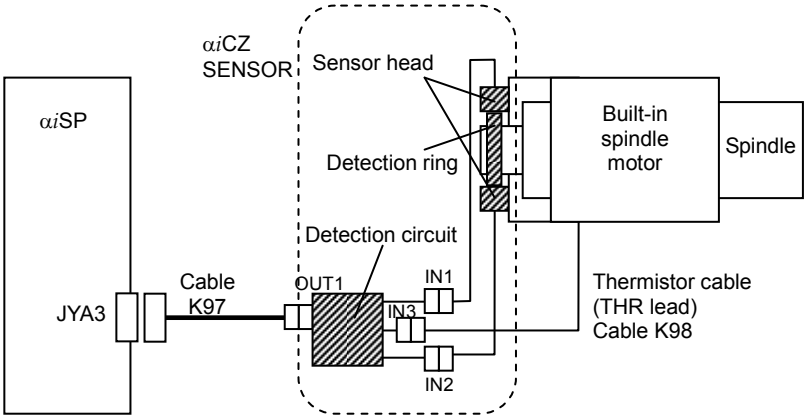

© MyFANUC 2D5504D5BAC945D385F48627D4977F6C

NOTE
1 The cable K97 needs to be prepared by the customer. The connector is not supplied, and must be purchased separately. For details of connection, see Subsection 9.3.3.17, “Details of cable K97”, described later.
2 Thermistor cable K98 comes with the built-in spindle motor. Connectors are not supplied and must be purchased separately. For details, see “Treatment of thermistor cable K98” below.

Treatment of thermistor cable K98 of the built-in spindle motor

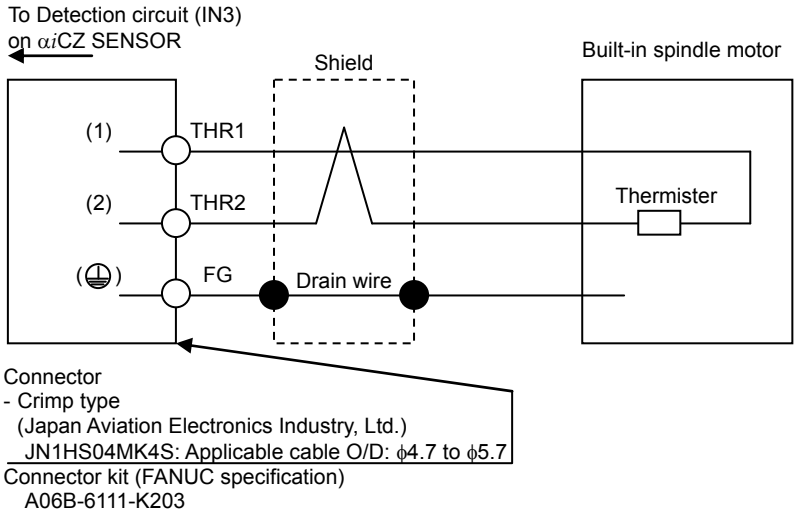

NOTE
Connectors do not come with the thermistor cable of the built-in spindle motor and must be purchased separately.

Extending the sensor cable and thermistor cable

The sensor cable and thermistor cable from the Sensor head to the detection circuit can be extended by up to 4 meters, as shown in the figure below.

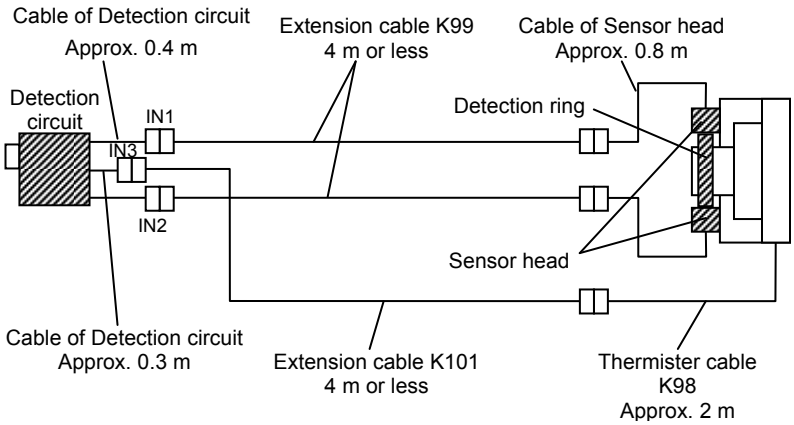

NOTE
The extension cables K99 and K101 need to be prepared by the customer. The connector is not supplied, and must be purchased separately. For details of connection, see “Details of cable K99”, described later.

© MyFANUC 2D5504D5BAC945D385F48627D4977F6C

Details of cable K99

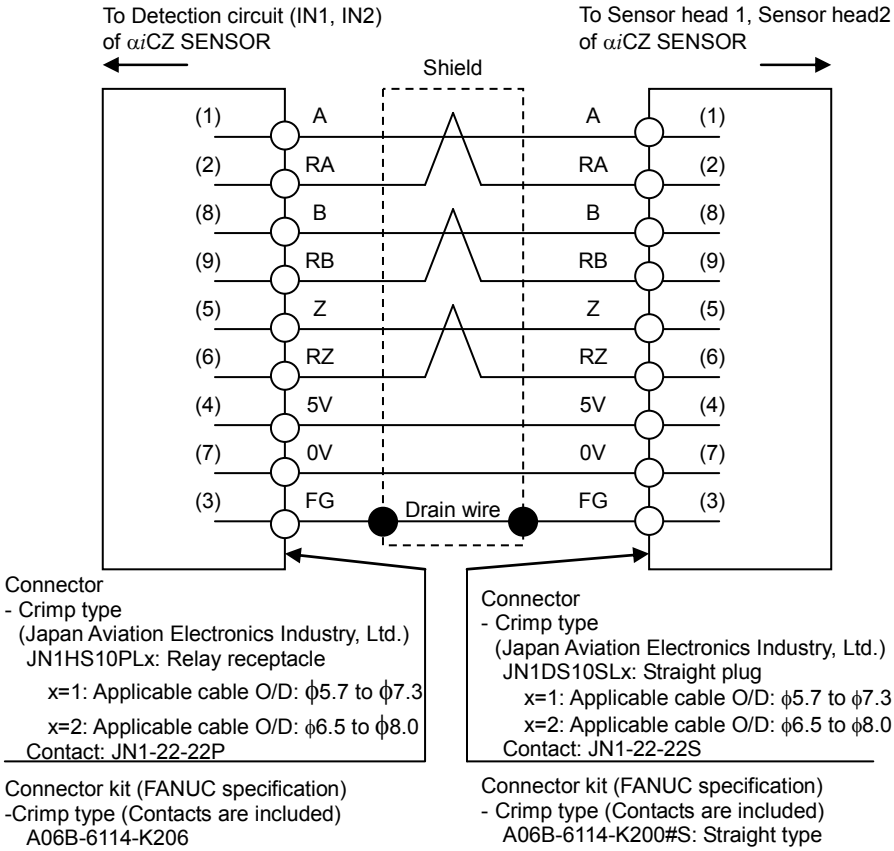

Using cable conductor

Signal name	Configuration
5V, 0V	0.5mm^2 or more × 2
A, RA, B, RB, Z, RZ	0.2mm^2 or more, twisted-pair wire
Drain wire	0.15mm^2 or more

Recommended cable conductor

Cable material specification	Cable length
A66L-0001-0482	4m or less

NOTE

1 The extension cable K98 needs to be prepared by the customer. The connector is not supplied, and must be purchased separately.
2 While the Z and RZ signals are not output from Sensor head 2, no problem arises if the sensor is used with the cable connected.
3 Make sure that the total resistance of the 5V and 0V lines is less than 2Ω.
4 Route power lines so that they do not run in parallel with signal lines.
5 For details of recommended cable conductor, see Appendix B, “CABLES”.
6 For information about the crimping tool for the connector, see "Details of cable K97", described earlier.

© MyFANUC 2D5504D5BAC945D385F48627D4977F6C

Details of extension cable K101 for the thermistor cable

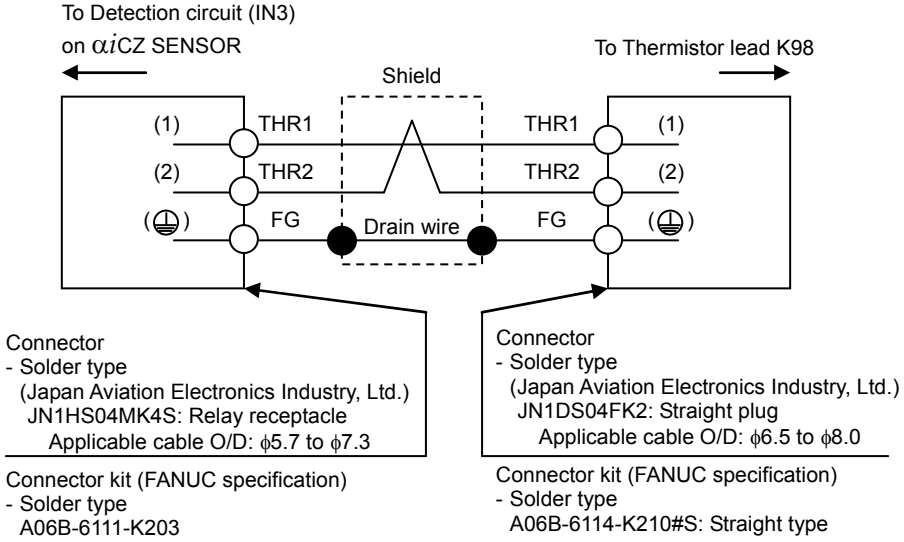

Using cable conductor

Signal name	Configuration
THR1, THR2	0.2mm^2 or more, twisted-pair wire
Drain wire	0.15mm^2 or more

Recommended cable conductor

Specification number	Cable length
A66L-0001-0482	4m or less

NOTE
1 The extension cable K101 needs to be prepared by the customer. The connector is not supplied, and must be purchased separately.
Route power lines so that they do not run in parallel with signal lines.
2 For details of recommended cable conductor, see Appendix B, “CABLES”.

11.2.6.5 Rotation direction

When the sensor is viewed from the top as shown in the following figure, clockwise rotation of the Detection ring is referred to as forward rotation:

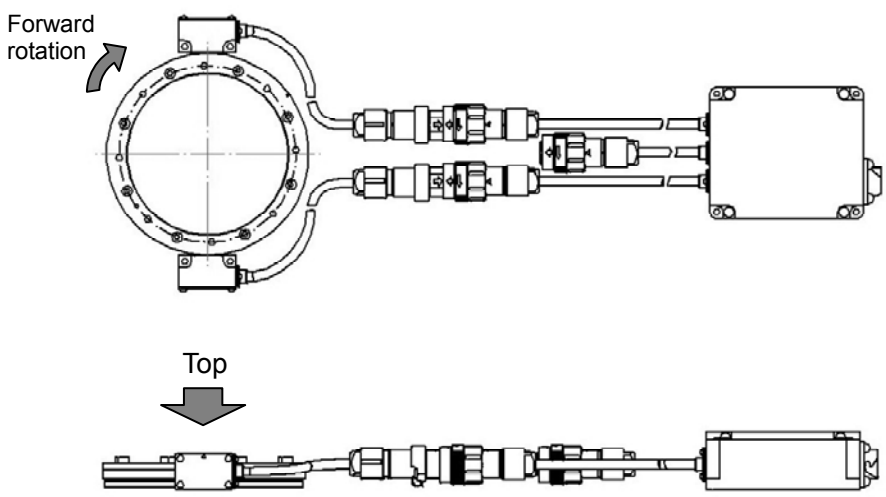

© MyFANUC 2D5504D5BAC945D385F48627D4977F6C

11.2.6.6 Start-up procedure

Overview

The start-up procedure is shown below.

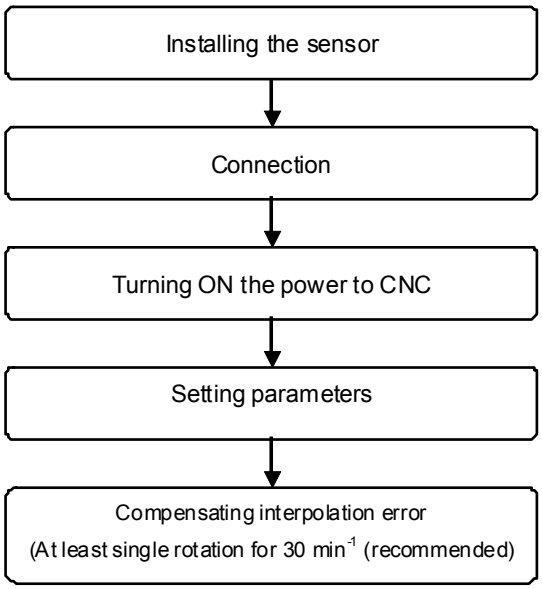

NOTE

1 For information about how to check the output signal, see "Output signal check method" described later.
2 If the fixed position of the Sensor head is changed after power on, initialize the Detection circuit. For the procedure, see “Procedure for Initializing the Detection Circuit”, described later.
3 If it is difficult to rotate the sensor at least one turn during compensation of interpolation error, repeat forward and reverse rotations under the above rotation condition to achieve at least one turn in total.

11.2.6.7 Interpolation error compensation

The αiCZ SENSOR incorporates a circuit that automatically detects an interpolation error and compensates for it. The detection conditions differ with the specification, but a common value to all specifications, 30 min^{-1}, is recommended. After turning on the power, be sure to rotate under the following condition and perform interpolation error compensation.

Interpolation error detection conditions
A860-2161-T411 : 25 to 105min^{-1}, constant speed, one or more turns
A860-2161-T511 : 20 to 70min^{-1}, constant speed, one or more turns
A860-2161-T611 : 15 to 50min^{-1}, constant speed, one or more turns

Recommended learning conditions
Common to three models : 30min^{-1}, constant speed, one or more turns

© MyFANUC 2D5504D5BAC945D385F48627D4977F6C

NOTE

1 The interpolation error compensation data is retained in the αiCZ SENSOR while power is supplied to the sensor. When the power is shut down, however, the data is not retained. To ensure accuracy, perform interpolation error compensation by rotating the sensor at a rotation speed that meets the detection conditions each time the sensor is powered on after powering off.
2 If learning is not completed, the detection accuracy of the αiCZ SENSOR may degrade.
3 If it is difficult to rotate the sensor more than one turn, repeat forward and reverse rotations under the above rotation speed conditions to achieve at least one turn in total.

11.2.6.8 Notes on use

Sensor head

The Detection circuit memorizes the initial conduction state. So, do not move the Sensor head afterward. If the Sensor head is moved after the initial conduction state, the reference position may be displaced. Moreover, a pulse error alarm may be issued. If the Sensor head is moved after initial power on, perform reference position return again by generating the “APC ALARM: BATTERY VOLTAGE 0”, according to “Procedure for Initializing the Detection Circuit”.

Magnetic powder attached to the Detection ring

The αiCZ SENSOR detects an angular displacement according to a change in magnetic flux density between the Sensor heads and Detection ring. So, if magnetic powder is attached to any location on the Detection ring, the magnetic flux density at that location changes locally, deteriorating the accuracy of detection. This accuracy deterioration occurs each time the location to which magnetic powder is attached passes Sensor head 1 and 2, that is, at every 180°. This deterioration leads to an increased positioning error, torque command variation, abnormal sound, vibration, and so forth.
After installing the sensor, blow the Detection ring by air. Moreover, to prevent magnetic powder and chips from being attached to the Detection ring and Sensor heads during operation, provide protection against dust and water on the machine side.
If nonmagnetic matter (such as aluminum, austenitic stainless steel, resin, and oil) is attached to the Detection ring or Sensor head, such accuracy deterioration as described above does not occur. However, foreign matter caught between the Detection ring and a Sensor head can mechanically damage the Sensor head. So, prevent foreign matter, even if nonmagnetic, from being attached to the Detection ring.

11.2.6.9 Displaying the sensor amplitude and offset information

The amplitude and offset information of the αiCZ SENSOR output signal can be viewed on the CNC diagnosis screen according to the procedure described below. After installing the sensor, check that its output signal is correct.

- Set “9” in parameter No. 4532.

30i-A/B	0i-D	
4532	4532	Arbitrary data output function number (for displaying the diagnosis screen)

NOTE

This parameter setting is valid with spindle software 9D80 series M (13) edition or later.

© MyFANUC 2D5504D5BAC945D385F48627D4977F6C

- In the case of the 1st spindle, check the values of Nos. 720 and 722 on the diagnosis screen.

720	Sensor head 1 A/B phase amplitude and offset information

Thousands place: Indicates the Sensor head number. 1: Sensor head 1, 2: Sensor head 2
Hundreds place: Indicates the amplitude value with a level of 1 to 9. 3 to 7 are standard values.
Tens place: Indicates the A phase offset value with a level of 1 to 9. 3 to 7 are standard values.
Ones place: Indicates the B phase offset value with a level of 1 to 9. 3 to 7 are standard values.

722	Sensor head 2 A/B phase amplitude and offset information

Thousands place: Indicates the Sensor head number. 1: Sensor head 1, 2: Sensor head 2
Hundreds place: Indicates the amplitude value with a level of 1 to 9. 3 to 7 are standard values.
Tens place: Indicates the A phase offset value with a level of 1 to 9. 3 to 7 are standard values.
Ones place: Indicates the B phase offset value with a level of 1 to 9. 3 to 7 are standard values.

NOTE
1 When No. 4532 is not set to 9, other information is displayed.
2 It is recommended to check the values on the diagnosis screen while the sensor is rotating.

(Display example)

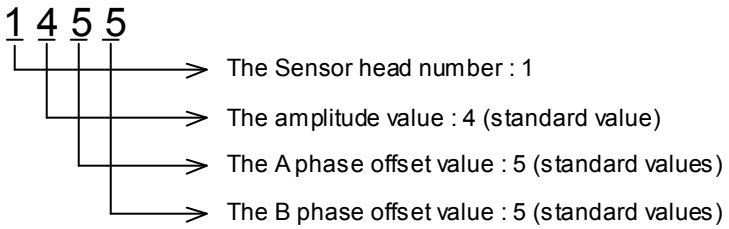

Diagnosis No.

	FS30*i*-A/B		FS0*i*-D	
	Sensor head 1	Sensor head 2	Sensor head 1	Sensor head 2
First spindle	720 (each spindle)	722 (each spindle)	720 (each spindle)	722 (each spindle)
Second spindle				
Third spindle			---	---
Fourth spindle				

© MyFANUC 2D5504D5BAC945D385F48627D4977F6C

11.2.6.10 Maintenance target parts

The absolute αiCZ SENSOR consists of four parts: detection ring (A/B ring and Z ring fastened with screws), Sensor head 1, Sensor head 2, and detection circuit. Each part can be replaced separately in maintenance. When purchasing, refer to the following specifications.

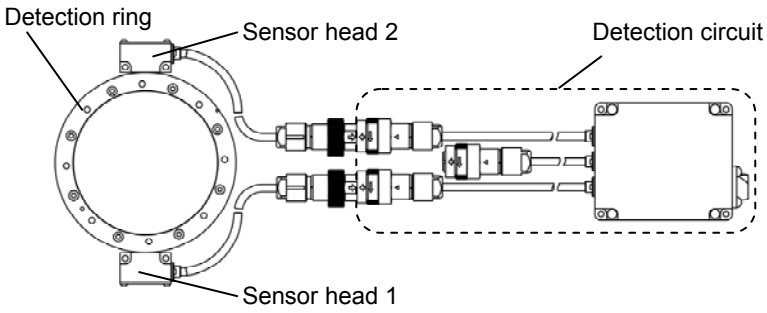

Maintenance target parts specifications

Specification number / Part specification	αiCZ SENSOR 512 I A860-2161-T411	αiCZ SENSOR 768 I A860-2161-T511	αiCZ SENSOR 1024 I A860-2161-T611
Detection ring	A860-2160-V901	A860-2160-V902	A860-2160-V903
Sensor head 1	A860-2162-V001 (applicable to all specifications)		
Sensor head 2	A860-2162-V012 (applicable to all specifications)		
Detection circuit	A860-2161-V201 (applicable to all specifications)		

© MyFANUC 2D5504D5BAC945D385F48627D4977F6C

© MyFANUC 2D5504D5BAC945D385F48627D4977F6C

APPENDIX

© MyFANUC 2D5504D5BAC945D385F48627D4977F6C

© MyFANUC 2D5504D5BAC945D385F48627D4977F6C

A FITTING A LIGHTNING SURGE PROTECTION DEVICE

This appendix describes how to install a lightning surge protector and provides notes on installation.

Appendix A, "FITTING A LIGHTNING SURGE PROTECTION DEVICE", consists of the following sections:

A.1 200-V INPUT SERIES POWER SUPPLY 345
A.2 400-V INPUT SERIES POWER SUPPLY 346
A.3 CAUTIONS 346

A.1 200-V INPUT SERIES POWER SUPPLY

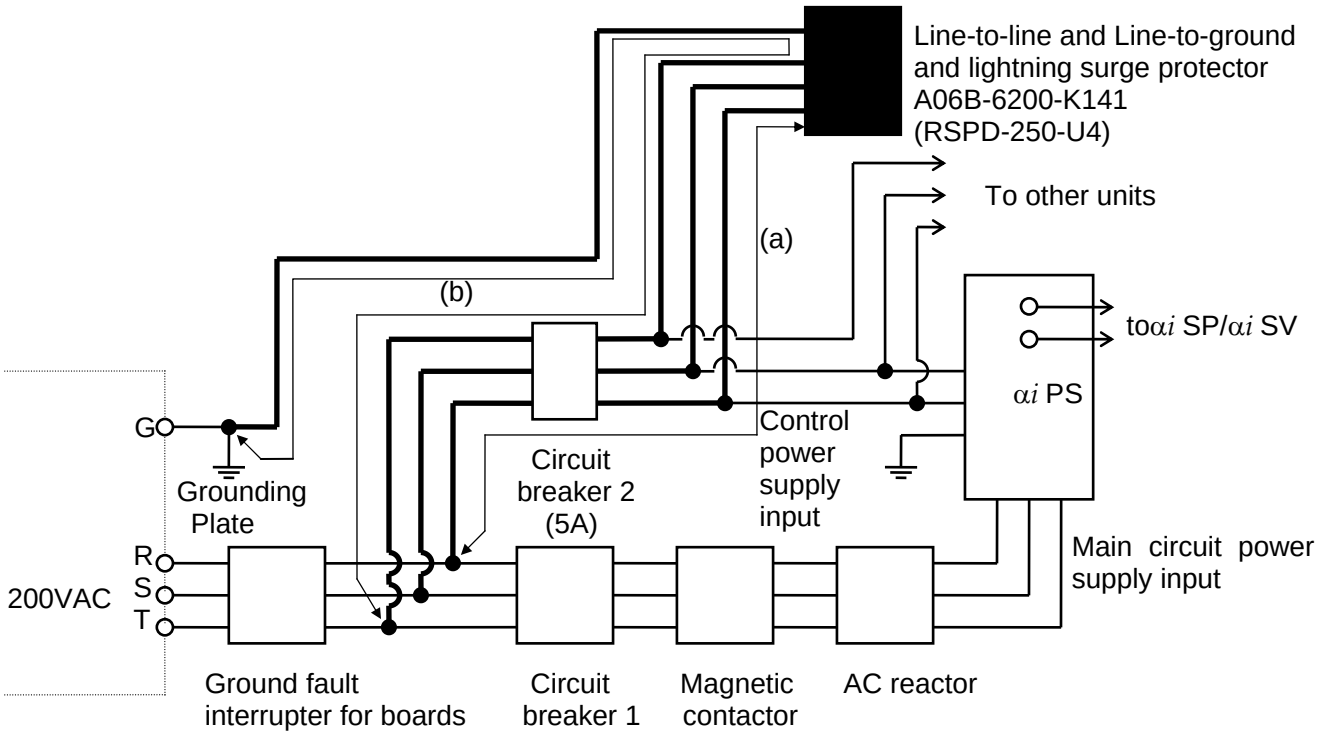

© MyFANUC 2D5504D5BAC945D385F48627D4977F6C

A.2 400-V INPUT SERIES POWER SUPPLY

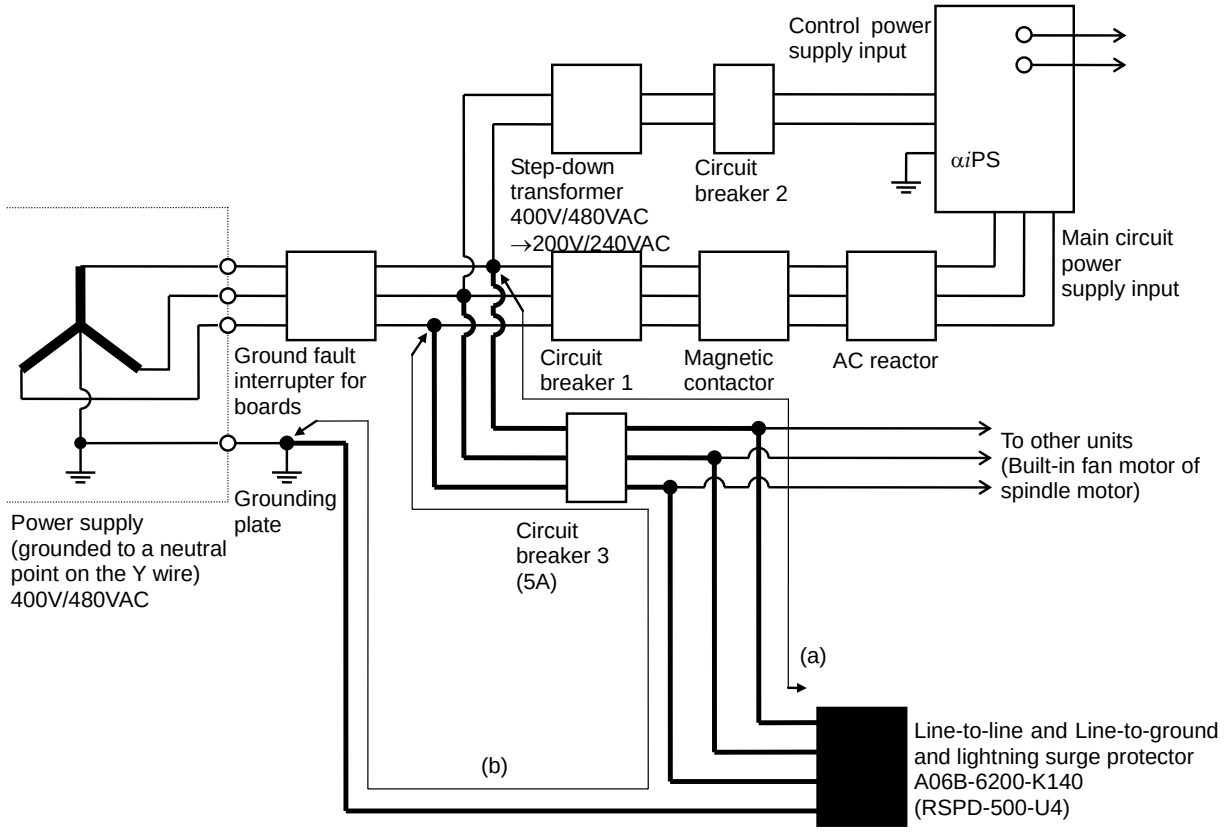

⚠ CAUTION

When the spindle motor αiI 1HV, αiI 1.5HV, αiI 2HV, or αiI 3HV is used, specification of the fan motor for αiI$_T$ 1HV, αiI$_T$ 2HV, and αiI$_T$ 3HV is below : 1ϕ 200/230VAC

2 If a voltage of 200 V is supplied from a 400-V power supply (with a neutral point used), a lightning surge protector should be used for 400 V; no lightning surge protector is needed for 200 V.

A.3 CAUTIONS

(1) To increase the efficiency of lightning surge absorption, the wires indicated by bold lines should be as short as possible.
Wire cross-sectional area : 2 mm^2 or more
Wire length :
The total length of the cables used for line-to-line lightning surge protector (a) and that used for line-to-ground lightning surge protector (b) must not exceed 2 m.

(2) When performing a dielectric strength test by applying an overvoltage to the power line, line-to-ground lightning surge protector must be removed to enable the applied voltage to be maintained.

(3) The circuit breaker 2 (5A) or circuit breaker 3 (5A) works for line protection when the lightning surge absorber is short-circuited because of a surge higher than its rating being applied.

(4) Because current does not flow through lightning surge protector in a normal state, the circuit breaker 2 (5A) or circuit breaker 3 (5A) can be used together with the surge absorbers as well as with other equipment.

© MyFANUC 2D5504D5BAC945D385F48627D4977F6C

B CABLES

This appendix describes cables.

Appendix B, "CABLES", consists of the following sections:

B.1 10-PAIR CABLE 348
B.2 COMPOSITE 7-CORE CABLE 350
B.3 COMPOSITE 10-CORE CABLE 358
B.4 COMPOSITE 12-CORE CABLE 360
B.5 COMPOSITE 16-CORE CABLE 362
B.6 10-PAIR CABLE (WITH 20 PAIRS) 363

This appendix describes the cables used for the 20-pin interface connectors.
The cables are basically the same as those used for the FS16/18.
The table below lists the cables we have developed for interface connectors.
Contact the manufacturers as required.

Cable name	Purpose		Configuration	Ordering number	Manufacturer	Manufacturer specification
10-pair cable	For general use		0.09mm^2 10 pairs	A66L-0001-0284#10P	Hitachi Electric Cable Co., Ltd.	UL20276-SB(0) 10P×28AWG(7/0.127)
					Oki Electric Cable Co., Ltd.	7/0.127 10P VX10-SV
Composite 7-core cable	For Pulsecoder	28m or less Flexible	0.3mm^2 5 cables 0.20mm^2 1 pairs	A66L-0001-0460	Hitachi Electric Cable Co., Ltd.	UL20276-SB(FLEX) 5×23AWG+1P×25AWG
		50m or less Flexible	0.5mm^2 5 cables 0.20mm^2 1 pairs	A66L-0001-0462	Hitachi Electric Cable Co., Ltd.	UL20276-SB(FLEX) 5×20AWG+1P×25AWG
		28m or less Fixed	0.3mm^2 5 cables 0.18mm^2 1 pairs	A66L-0001-0481	Hitachi Electric Cable Co., Ltd.	UL20276-SB(0) 5×23AWG+1P×25AWG
		50m or less Fixed	0.5mm^2 5 cables 0.18mm^2 1 pairs	A66L-0001-0491	Hitachi Electric Cable Co., Ltd.	UL20276-SB(0) 5×20AWG+1P×25AWG
Composite 10-core cable	For αiM sensor (for αiI 0.5) For αiMZ sensor (for αiI 0.5) For αiBZ sensor (small type)		0.3mm^2 2 cables 0.2mm^2 4 pairs	A66L-0001-0482	Hitachi Electric Cable Co., Ltd.	UL20276-SB(FLEX) 2×23AWG+4P×25AWG
Composite 12-core cable	For αi position coder For α position coder S		0.5mm^2 6 cables 0.18mm^2 3 pairs	A66L-0001-0286	Hitachi Electric Cable Co., Ltd.	F-CO-VV(0)-SB 6×0.5SQ+3P×0.18SQ
					Oki Electric Cable Co., Ltd.	MIX12C(7/0.18, 20/0.18)HRS-SV
10-pair cable	For αi CZ sensor For αiBZ sensor (conventional type)		0.18mm^2 10 pairs	A66L-0001-0367	Shinko Electric Industries Co., Ltd.	FNC-019
Composite 16-core cable	For αi M sensor For αi MZ sensor		0.5mm^2 6 cables 0.18mm^2 5 pairs	A66L-0001-0368	Shinko Electric Industries Co., Ltd.	FNC-021

© MyFANUC 2D5504D5BAC945D385F48627D4977F6C

B.1 10-PAIR CABLE

(a) Specifications

Item		Unit	Specifications
Product No.		–	A66L-0001-0284#10P
Manufacturer		–	Hitachi Cable,Ltd. Oki Electric Cable, Co.,Ltd.
Rating		–	60°C, 30V:UL2789 80°C, 30V:UL80276
Material	Conductor	–	Stranded wire of tinned annealed copper (ASTM B-286)
	Insulator	–	Cross-linked vinyl
	Shield braid	–	Tinned annealed copper wire
	Sheath	–	Heat-resistant oilproof vinyl
Number of pairs		Pairs	10
Conductor	Size	AWG	28
	Structure	Conductors/mm	7/0.127
	Outside diameter	mm	0.38
Insulator	Thickness	mm	0.1 (Thinnest portion : 0.08(3. 1mils))
	Outside diameter (approx.)	mm	0.58
	Core style (rating)	mm	UL15157(80°C, 30V)
Twisted pair	Outside diameter (approx.)	mm	1.16
	Pitch	mm	20 or less
Lay		–	Collect the required number of twisted pairs into a cable, then wrap binding tape around the cable. To make the cable round, apply a cable separator as required.
Lay diameter (approx.)		mm	3.5
Drain wire		Conductors/mm	Hitachi Cable : Not available Oki Electric Cable : Available,10/0.12
Shield braid	Element wire diameter	mm	0.12
	Braid density	%	85 or more
Sheath	Color	–	Black
	Thickness	mm	1.0
	Outside diameter (approx.)	mm	6.2
Standard length		mm	200
Packing method		mm	Bundle
Electrical performance	Resistance of conductor (20°C)	Ω/km	233 or less
	Insulation resistance (20°C)	MΩ-km	10 or less
	Dielectric strength (AC)	V/min	300
Flame resistance		–	Shall pass flame resistance test VW-1SC of UL standards.

© MyFANUC 2D5504D5BAC945D385F48627D4977F6C

(b) Cable structure

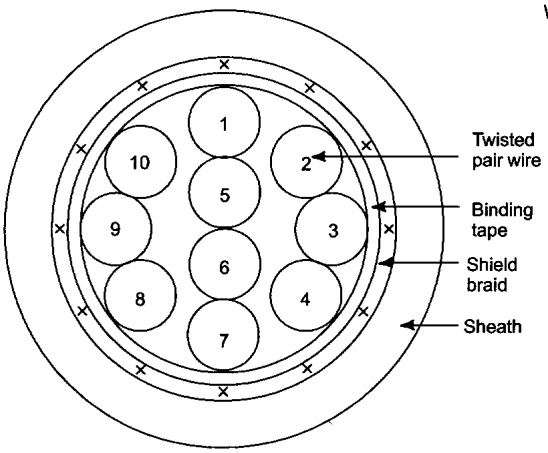

Wire identification table (Hitachi)

Wire No.	Insulator color	
	First wire	Second wire
1	Blue	White
2	Yellow	White
3	Green	White
4	Red	White
5	Purple	White
6	Blue	Brown
7	Yellow	Brown
8	Green	Brown
9	Red	Brown
10	Purple	Brown

The numbers assigned to the wires correspond to the numbers in the table at right.

Fig.B.1(a) Cable made by Hitachi Electric Cable

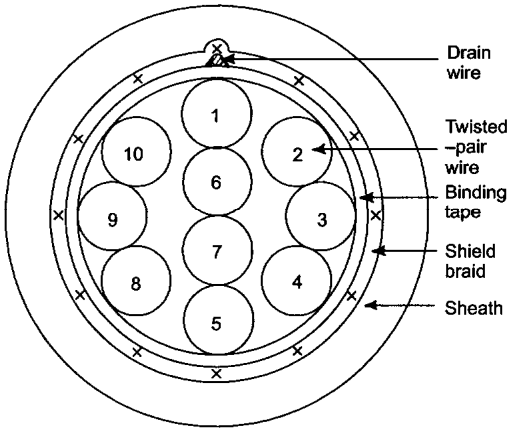

Wire identification table (Oki)

Pair No.	Insulator color	Dot mark (1 pitch)	Dot mark color	
			First wire	Second wire
1	Orange	–	Red	Black
2	Gray	–	Red	Black
3	White	–	Red	Black
4	Yellow	–	Red	Black
5	Pink	–	Red	Black
6	Orange	– –	Red	Black
7	Gray	– –	Red	Black
8	White	– –	Red	Black
9	Yellow	– –	Red	Black
10	Pink	– –	Red	Black

The numbers assigned to the wires correspond to the numbers in the table at right.

Fig.B.1(b) Cable made by Oki Electric Cable

© MyFANUC 2D5504D5BAC945D385F48627D4977F6C

B.2 COMPOSITE 7-CORE CABLE

(a) A66L-0001-0460

- Specifications

Item		Unit	Specifications	
Product No.		–	A66L-0001-0460	
Manufacturer		–	Hitachi Electric Cable Co., Ltd.	
Rating		–	80°C, 30V	
Material	Conductor,braid-shielded wire,drain wire	–	Strand wire of tinned annealed copper (JIS C3152)	
	Insulator	–	Fluorine plastics (ETFE)	
	Sheath	–	Oilproof, heat-resistant vinyl	
Number of wires (wire nos.)		Cores	5 (1 to 5)	2 (one pair) (6 to 7)
Conductor	Size	mm^2	0.3	0.20
	Structure	Conductors/mm	60/0.08	40/0.08
	Conductors	mm	0.72	0.58
Insulator	Standard thickness	mm	0.15	0.15
	Outside diameter	mm	1.02	0.88
Twisted pair	Outside diameter	mm	–	1.76
	Pitch (approx.)	mm	–	13
Lay diameter (approx.)		mm	3.4	
Drain wire	Size	mm^2	0.15	
	Structure	Wires/mm	30/0.08	
	Outside diameter	mm	0.51	
Shield braid	Element wire diameter	mm	0.12	
	Thickness	mm	0.3	
	Braid density	%	85 or more	
	Outside diameter (approx.)	mm	4.2	
Sheath Sheath	Color	–	Black	
	Standard thickness	mm	1.0	
	Standard outside diameter (approx.)	mm	6.2	
	Outside diameter allowance	mm	5.7 to 7.3 (Note)	
Standard length		m	200	
Packing method		–	Bundle	
Electrical performance	Resistance of conductor (at 20°C) (wire nos.)	Ω/km	69.5 or less (1 to 5)	109 or less (6 to 7)
	Insulation resistance (20°C)	MΩ-km	100 or more	
	Dielectric strength (AC)	–	500VAC for 5 minutes	
Flame resistance		–	Shall pass flame resistance test VW-1 of UL standards.	

NOTE
The maximum outside diameter applies to portions other than the drain wire.

© MyFANUC 2D5504D5BAC945D385F48627D4977F6C

(b) A66L-0001-0460

- Cable structure

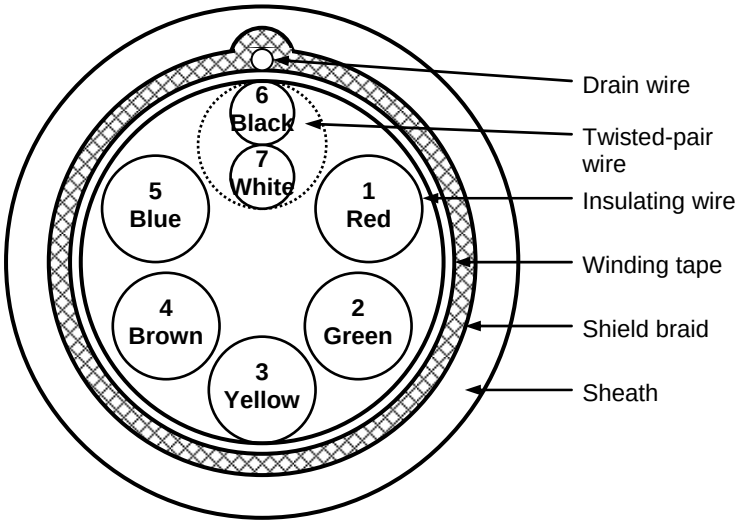

The colors in the figure indicate the colors of insulators.

© MyFANUC 2D5504D5BAC945D385F48627D4977F6C

(c) A66L-0001-0462

- Specifications

Item		Unit	Specifications	
Product No.		–	A66L-0001-0462	
Manufacturer		–	Hitachi Electric Cable Co., Ltd.	
Rating		–	80°C, 30V	
Material	Conductor,braid-shielded wire,drain wire	–	Strand wire of tinned annealed copper (JIS C3152)	
	Insulator	–	Fluorine plastics (ETFE)	
	Sheath	–	Oilproof, heat-resistant vinyl	
Number of wires (wire nos.)		Cores	5 (1 to 5)	2 (one pair) (6 to 7)
Conductor	Size	mm^2	0.5	0.20
	Structure	Conductors/mm	104/0.08	40/0.08
	Conductors	mm	0.94	0.58
Insulator	Standard thickness	mm	0.2	0.15
	Outside diameter	mm	1.34	0.88
Twisted pair	Outside diameter	mm	–	1.76
	Pitch (approx.)	mm	–	13
Lay diameter (approx.)		mm	4.2	
Drain wire	Size	mm^2	0.15	
	Structure	Wires/mm	30/0.08	
	Outside diameter	mm	0.51	
Shield braid	Element wire diameter	mm	0.12	
	Thickness	mm	0.3	
	Braid density	%	85 or more	
	Outside diameter (approx.)	mm	5.0	
Sheath	Color	–	Black	
	Standard thickness	mm	1.0	
	Standard outside diameter (approx.)	mm	7.0	
	Outside diameter allowance	mm	6.5 to 8.0 (Note)	
Standard length		m	200	
Packing method		–	Bundle	
Electrical performance	Resistance of conductor (at 20°C) (wire nos.)	Ω/km	40.1 or less (1 to 5)	109 or less (6 to 7)
	Insulation resistance (20°C)	MΩ-km	100 or more	
	Dielectric strength (AC)	–	500VAC for 5 minutes	
Flame resistance		–	Shall pass flame resistance test VW-1 of UL standards.	

NOTE
The maximum outside diameter applies to portions other than the drain wire.

© MyFANUC 2D5504D5BAC945D385F48627D4977F6C

(d) A66L-0001-0462

- Cable structure

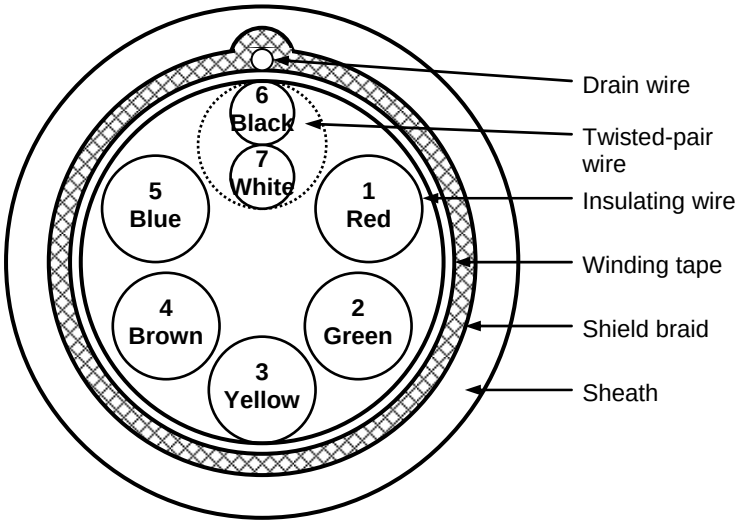

The colors in the figure indicate the colors of insulators.

© MyFANUC 2D5504D5BAC945D385F48627D4977F6C

(e) A66L-0001-0481

- Specifications

Item		Unit	Specifications	
Product No.		–	A66L-0001-0481	
Manufacturer		–	Hitachi Electric Cable Co., Ltd.	
Rating		–	80°C, 30V	
Material	Conductor,braid-shielded wire,drain wire	–	Strand wire of tinned annealed copper (JIS C3152)	
	Insulator	–	Heat-resistant vinyl	
	Sheath	–	Oilproof, heat-resistant vinyl	
Number of wires (wire nos.)		Cores	5 (1 to 5)	2 (one pair) (6 to 7)
Conductor	Size	mm^2	0.3	0.18
	Structure	Conductors/mm	12/0.18	7/0.18
	Conductors	mm	0.72	0.54
Insulator	Standard thickness	mm	0.25	0.25
	Outside diameter	mm	1.22	0.94
Twisted pair	Outside diameter	mm	–	1.88
	Pitch (approx.)	mm	–	20
Lay diameter (approx.)		mm	3.9	
Drain wire	Size	mm^2	0.18	
	Structure	Wires/mm	7/0.18	
	Outside diameter	mm	0.54	
Shield braid	Element wire diameter	mm	0.12	
	Thickness	mm	0.3	
	Braid density	%	85 or more	
	Outside diameter (approx.)	mm	4.6	
Sheath	Color	–	Black	
	Standard thickness	mm	0.8	
	Standard outside diameter (approx.)	mm	6.2	
	Outside diameter allowance	mm	5.7 to 7.3 (Note)	
Standard length		m	200	
Packing method		–	Bundle	
Electrical performance	Resistance of conductor (at 20°C) (wire nos.)	Ω/km	65.7 or less (1 to 5)	113 or less (6 to 7)
	Insulation resistance (20°C)	MΩ-km	15 or more	
	Dielectric strength (AC)	–	500VAC for 5 minutes	
Flame resistance		–	Shall pass flame resistance test VW-1 of UL standards.	

NOTE
The maximum outside diameter applies to portions other than the drain wire.

© MyFANUC 2D5504D5BAC945D385F48627D4977F6C

(f) A66L-0001-0481

- Cable structure

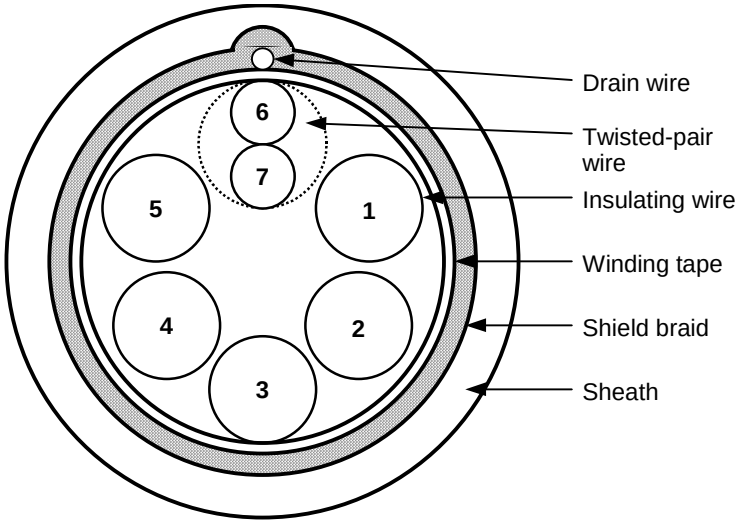

The numbers assigned to the wires correspond to the numbers in the table below.

Wire No.	Insulator color	Dot mark color
1	Yellow	--
2	Yellow	Black
3	Yellow	Red
4	Bright green	Black
5	Bright green	Red
6	Light brown	Black
7	Light brown	Red

© MyFANUC 2D5504D5BAC945D385F48627D4977F6C

(g) A66L-0001-0491

- Specifications

Item		Unit	Specifications	
Product No.		–	A66L-0001-0491	
Manufacturer		–	Hitachi Electric Cable Co., Ltd.	
Rating		–	80°C, 30V	
Material	Conductor,braid-shielded wire,drain wire	–	Strand wire of tinned annealed copper (JIS C3152)	
	Insulator	–	Heat-resistant vinyl	
	Sheath	–	Oilproof, heat-resistant vinyl	
Number of wires (wire nos.)		Cores	5 (1 to 5)	2 (one pair) (6 to 7)
Conductor	Size	mm^2	0.5	0.18
	Structure	Conductors/mm	20/0.18	7/0.18
	Conductors	mm	0.93	0.54
Insulator	Standard thickness	mm	0.25	0.25
	Outside diameter	mm	1.43	0.94
Twisted pair	Outside diameter	mm	–	1.88
	Pitch (approx.)	mm	–	23
Lay diameter (approx.)		mm	4.4	
Drain wire	Size	mm^2	0.18	
	Structure	Wires/mm	7/0.18	
	Outside diameter	mm	0.54	
Shield braid	Element wire diameter	mm	0.12	
	Thickness	mm	0.3	
	Braid density	%	85 or more	
	Outside diameter (approx.)	mm	5.1	
Sheath	Color	–	Black	
	Standard thickness	mm	0.55	
	Standard outside diameter (approx.)	mm	6.2	
	Outside diameter allowance	mm	5.7 to 7.3 (Note)	
Standard length		m	200	
Packing method		–	Bundle	
Electrical performance	Resistance of conductor (at 20°C) (wire nos.)	Ω/km	39.4 or less (1 to 5)	113 or less (6 to 7)
	Insulation resistance (20°C)	MΩ-km	15 or more	
	Dielectric strength (AC)	–	500VAC for 5 minutes	
Flame resistance		–	Shall pass flame resistance test VW-1 of UL standards.	

NOTE
The maximum outside diameter applies to portions other than the drain wire.

© MyFANUC 2D5504D5BAC945D385F48627D4977F6C

(h) A66L-0001-0491

- Cable structure

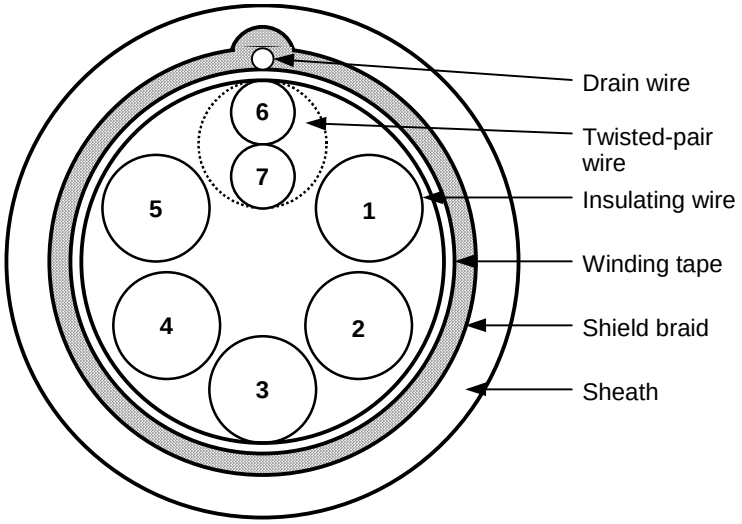

The numbers assigned to the wires correspond to the numbers in the table below.

Wire No.	Insulator color	Dot mark color
1	Light brown	--
2	Yellow	--
3	Yellow	Black
4	Yellow	Red
5	Bright green	--
6	Light brown	Black
7	Light brown	Red

© MyFANUC 2D5504D5BAC945D385F48627D4977F6C

B.3 COMPOSITE 10-CORE CABLE

(a) A66L-0001-0482

Specifications

Item		Unit	Specifications	
Product No.		–	A66L-0001-0482	
Manufacturer		–	Hitachi Electric Cable Co., Ltd.	
Rating		–	80°C, 30V	
Material	Conductor, braid-shielded wire, drain wire	–	Strand wire of tinned annealed copper (JIS C3152)	
	Insulator	–	Heat-resistant vinyl	
	Sheath	–	Oilproof, heat-resistant vinyl	
Number of wires (wire nos.)		Cores	2	8 (four pairs)
Conductor	Size	mm^2	0.3	0.2
	Structure	Conductors/mm	60/0.08	40/0.08
	Conductors	mm	0.72	0.58
Insulator	Standard thickness	mm	0.25	0.2
	Outside diameter	mm	1.22	0.98
Twisted pair	Outside diameter	mm	–	1.96
	Pitch (approx.)	mm	–	
Lay diameter		mm	5.0	
Drain wire	Size	mm^2	0.15	
	Structure	Wires/mm	30/0.08	
	Outside diameter	mm	0.51	
Shield braid	Element wire diameter	mm	0.12	
	Thickness	mm	0.3	
	Braid density	%	85 or more	
	Outside diameter (approx.)	mm	5.7	
Sheath	Color	–	Black	
	Standard thickness	mm	0.65	
	Standard outside diameter (approx.)	mm	7.0	
	Outside diameter allowance	mm	6.5 to 8.0 (Note)	
Standard length		m	200	
Packing method		–	Bundle	
Electrical performance	Resistance of conductor (at 20°C) (wire nos.)	Ω/km	69.5 or less	109 or less
	Insulation resistance (20°C)	MΩ-km	15 or more	
	Dielectric strength (AC)	–	500VAC for 5 minutes	
Flame resistance		–	Shall pass flame resistance test VW-1 of UL standards.	

NOTE
The maximum outside diameter applies to portions other than the drain wire.

© MyFANUC 2D5504D5BAC945D385F48627D4977F6C

(b) A66L-0001-0482

Cable structure

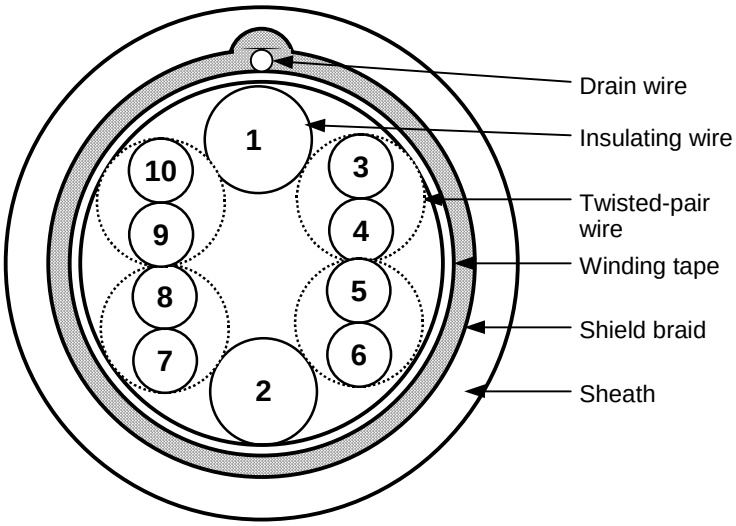

The numbers assigned to the wires correspond to the numbers in the table below.

Wire No.	Insulator color	Dot mark color
1	Light brown	--
2	Yellow	--
3	Light brown	Black
4	Light brown	Red
5	Yellow	Black
6	Yellow	Red
7	Bright green	Black
8	Bright green	Red
9	Gray	Black
10	Gray	Red

© MyFANUC 2D5504D5BAC945D385F48627D4977F6C

B.4 COMPOSITE 12-CORE CABLE

(a) Specifications

Item		Unit	Specifications	
Product No.		–	A66L-0001-0286	
Manufacturer		–	Hitachi Electric Cable Co., Ltd. Oki Cable, Ltd.	
Rating		–	80°C, 30V	
Material	Conductor, braid-shielded wire, drain wire	–	Strand wire of tinned annealed copper (JIS C3152)	
	Insulator	–	Heat-resistant flame-retardant vinyl	
	Sheath	–	Oilproof, heat-resistant, flame-retardant vinyl	
Number of wires (wire nos.)		Cores	6 (1 to 6)	6 (three pairs) (7 to 9)
Conductor	Size	mm^2	0.5	0.18
	Structure	Conductors/mm	20/0.18	7/0.18
	Conductors	mm	0.94	0.54
Insulator	Standard thickness (The minimum thickness is at least 80% of the standard thickness.)	mm	0.25	0.2
	Outside diameter	mm	1.50	0.94
Twisted pair	Outside diameter	mm		1.88
	Direction of lay	–		Left
	Pitch	mm		20 or less
Lay		–	Twist the wires at an appropriate pitch so the outermost layer is right-twisted, and wrap tape around the outermost layer. Apply a cable separator as required.	
Lay diameter		mm	5.7	
Drain wire	Size	mm^2	0.3	
	Structure	Wires/mm	12/0.18	
	Outside diameter	mm	0.72	
Shield braid	Element wire diameter	mm	0.12	
	Thickness	mm	0.3	
	Braid density	%	70	
	Outside diameter	mm	6.3	
Sheath	Color	–	Black	
	Standard thickness (The minimum thickness is at least 85% of the standard thickness.)	mm	1.1	
	Outside diameter	mm	8.5Max.9.0(1)	
Standard length		m	100	
Packing method		–	Bundle	
Electrical performance	Resistance of conductor (at 20°C) (wire nos.)	Ω/km	39.4 (1 to 6)	113 (7 to 9)
	Insulation resistance (20°C)	MΩ-km	15	
	Dielectric strength (AC)	V/min	500	
Flame resistance		–	Shall pass flame resistance test VW-1SC of UL standards.	

NOTE
The maximum outside diameter applies to portions other than the drain wire.

© MyFANUC 2D5504D5BAC945D385F48627D4977F6C

(b) Markings on cable

(i) Name or symbol of the manufacturer
(ii) Manufacturing year

(C) Cable structure

The cable structure is shown below.

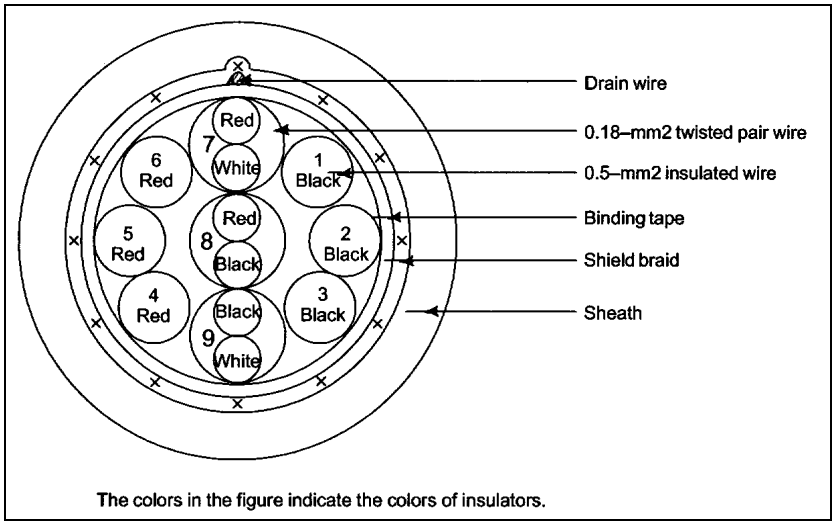

© MyFANUC 2D5504D5BAC945D385F48627D4977F6C

B.5 COMPOSITE 16-CORE CABLE

(a) Specifications

Item			Unit	Specifications	
Product No.				A66L-0001-0368(FNC-021)	
Manufacturer				Shinko Electric Industries Co., Ltd.	
Rating				80°C, 60V	
Material	Conductor			Stranded wire of tinned annealed copper (JIS C 3152)	
	Insulator			Heat-resistant polivinyl chioride	
	Shield braid			Tinned annealed copper wire	
	Sheath			Heat-resistant, oil-resistance, flame-retardent polivinyl chioride (S-3)	
Number of pairs			Pairs	6	10 (5-pair)
Conductor	Nominal cross-sectional area		mm^2	0.5	0.18
	Structure		Conductors/mm	20/0.18	7/0.18
	Outside diameter (approx.)		mm	0.9	0.54
Insulator	Thickness		mm	0.25 (Average thickness : 90% or more)	0.2 (Average thickness : 90% or more)
	Outside diameter (approx.)		mm	1.5	0.94
Twisted pair	Outside diameter (approx.)		mm	–	1.88 (pitch : 20 mm or less)
Lay	Diameter (approx.)		mm	6.5	
Tape-wound wire	Diameter (approx.)		mm	6.6	
Drain wire	Structure		Conductors/mm	12/0.18	
Shield	Element wire diameter		mm	0.12 (Braid density : 70% or more)	
Sheath	Color			Black	
	Thickness		mm	1.0 (Average thickness : 90% or more)	
	Outside diameter		mm	9.2 ± 0.3	
Electrical performance	Electric resistance	$0.18mm^2$	Ω/km	113 or less (20°C JIS C 3005 6)	
		$0.5mm^2$		39.4 or less (20°C JIS C 3005 6)	
	Dielectricstrength		V/min	AC500(JIS C 3005 8 (2))	
	Insulation resistance		MΩ-km	15 or more (20°C JIS C 3005 9.1)	

(b) Cable structure

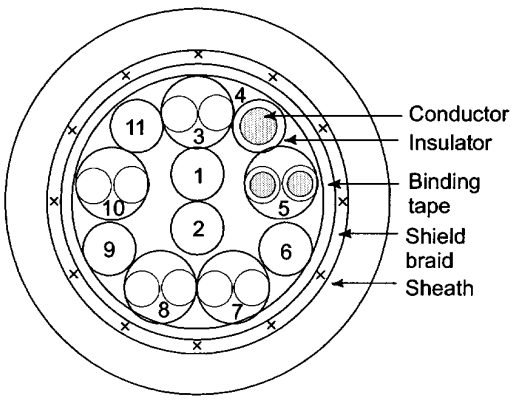

Pair No.	Dot mark color	Size mm^2
1	Red	0.5
2	Red	0.5
3	White/Yellow	0.18
4	Black	0.5
5	White/Green	0.18
6	Black	0.5
7	White/Gray	0.18
8	Black/Orange	0.18
9	Black	0.5
10	Black/Brown	0.18
11	Red	0.5

© MyFANUC 2D5504D5BAC945D385F48627D4977F6C

B.6 10-PAIR CABLE (WITH 20 PAIRS)

(a) Specifications

Item		Unit	Specifications
Product No.			A66L-0001-0367(FNC-019)
Manufacturer			Shinko Electric Industries Co., Ltd.
Rating			80°C, 60V
Material	Conductor		Stranded wire of tinned annealed copper (JIS C 3152)
	Insulator		Heat-resistant polivinyl chioride
	Shield braid		Tinned annealed copper wire
	Sheath		Heat-resistant, oil-resistance, flame-retardent polivinyl chioride (S-3)
Number of pairs		Pairs	20 (10-pair)
Conductor	Nominal cross-sectional area	mm^2	0.18
	Structure	Conductors/mm	7/0.18
	Outside diameter (approx.)	mm	0.54
Insulator	Thickness	mm	0.25 (Average thickness : 90% or more)
	Outside diameter (approx.)	mm	1.04
Twisted pair	Outside diameter (approx.)	mm	2.08 (pitch : 25 mm or less)
Lay	Diameter (approx.)	mm	6.5
Tape-wound wire	Diameter (approx.)	mm	6.6
Shield	Element wire diameter	mm	0.12 (Braid density : 70% or more)
Sheath	Color		Black
	Thickness	mm	1.0 (Average thickness : 90% or more)
	Outside diameter	mm	9.2 ± 0.3
Electrical performance	Electric resistance	Ω/km	110 or less (20°C JIS C 3005 6)
	Dielectricstrength	V/min	AC500(JIS C 3005 8 (2))
	Insulation resistance	MΩ-km	15 or more (20°C JIS C 3005 9.1)

(b) Cable structure

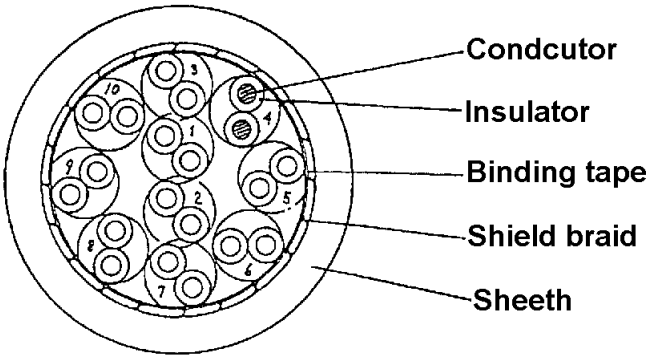

Pair number	Dot mark color
1	Black/Orange
2	Black/Gray
3	White/Yellow
4	White/Green
5	White/Brown
6	White/Orange
7	White/Gray
8	Black/Yellow
9	Black/Green
10	Black/Brown

© MyFANUC 2D5504D5BAC945D385F48627D4977F6C

C EXTERNAL DIMENSIONS OF EACH CONNECTOR

Appendix C, " EXTERNAL DIMENSIONS OF EACH CONNECTOR ", consists of the following sections:

C.1 EXTERNAL DIMENSIONS AND MANUFACTURE OF EACH CONNECTOR 364

C.1 EXTERNAL DIMENSIONS AND MANUFACTURE OF EACH CONNECTOR

Manufacture : Tyco Electronics AMP
Type : 1-178128-3

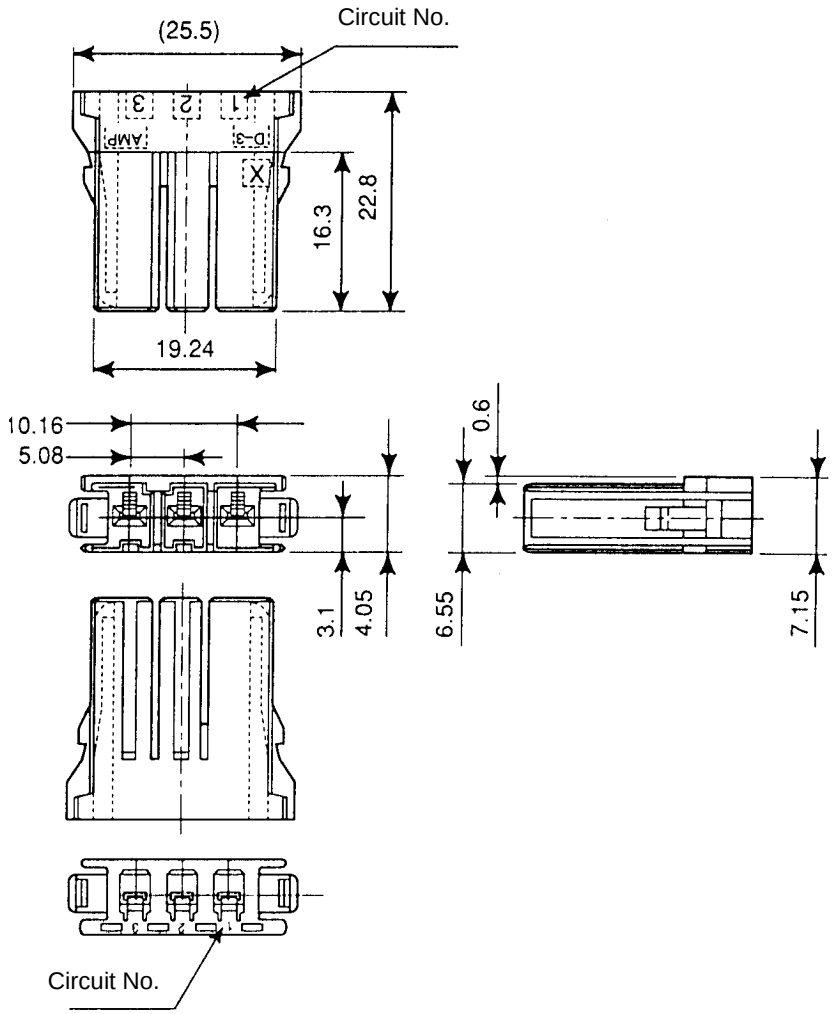

Fig.C(a) Tyco Electronics AMP connector (1)

© MyFANUC 2D5504D5BAC945D385F48627D4977F6C

Manufacture : Tyco Electronics AMP
Type : 2-178128-3

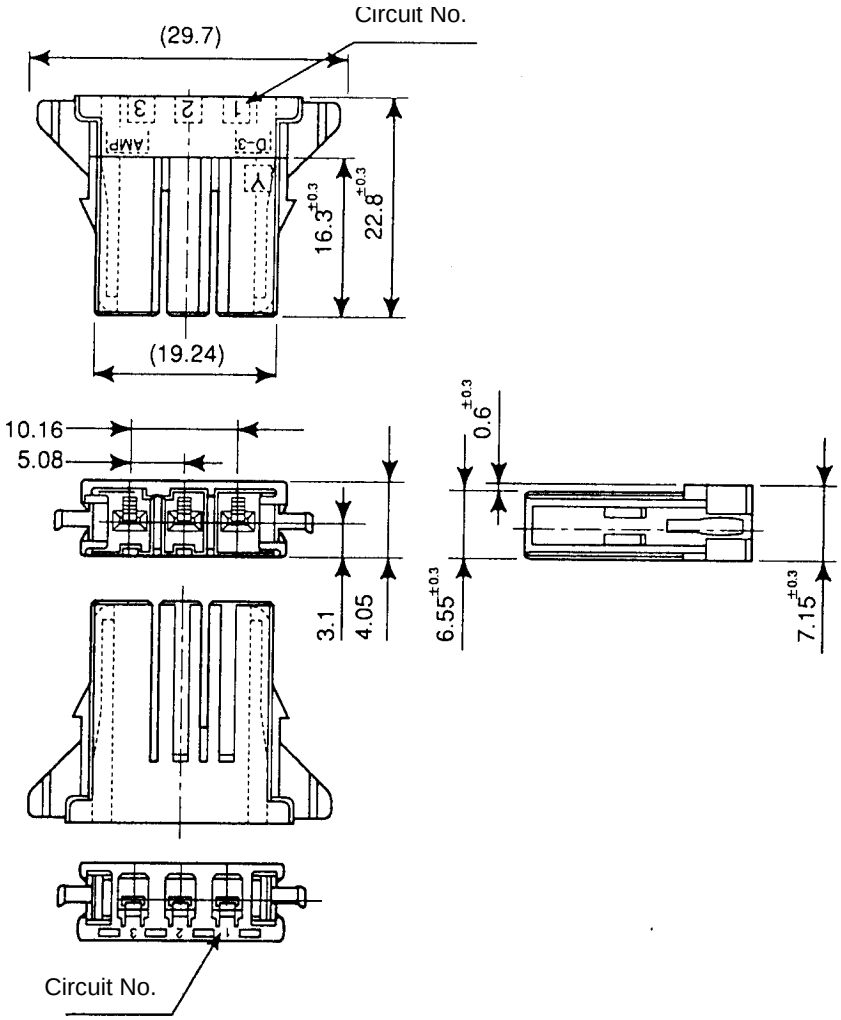

Fig.C(b) Tyco Electronics AMP connector (2)

© MyFANUC 2D5504D5BAC945D385F48627D4977F6C

Manufacture : Tyco Electronics AMP
Type : 1-175218-2
Cable : AWG16, 18, 20

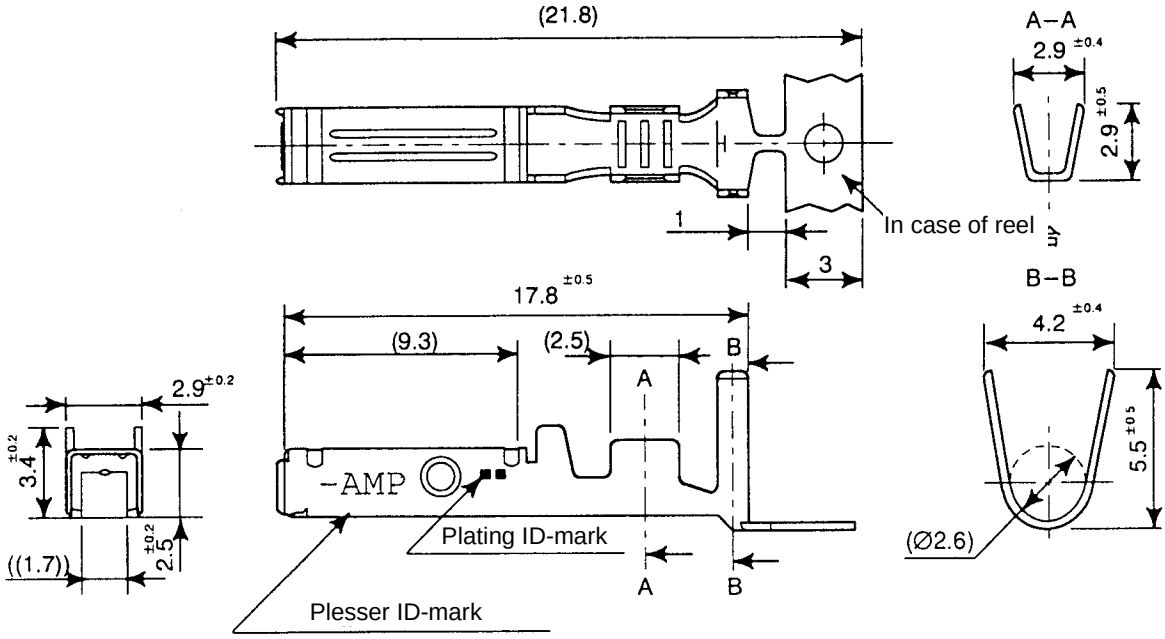

Fig.C(c) Contact for Tyco Electronics AMP connector

© MyFANUC 2D5504D5BAC945D385F48627D4977F6C

Manufacture : Tyco Electronics AMP
Type : 1-1318119-4

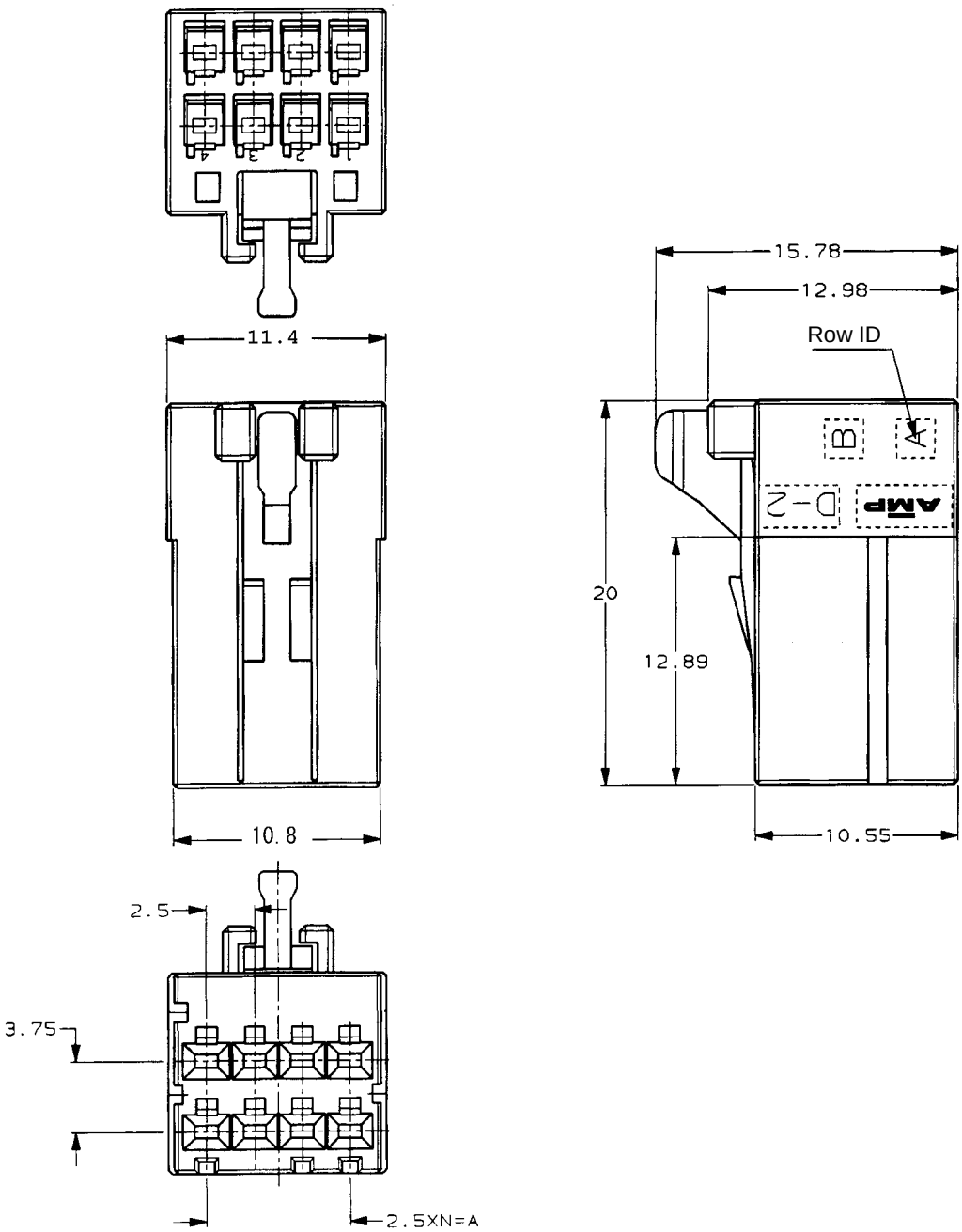

Fig.C(d) Contact for Tyco Electronics AMP connector

© MyFANUC 2D5504D5BAC945D385F48627D4977F6C

Manufacture : HIROSE ELECTRIC CO., LTD.
Type : FI30-20S (crimp type)
Housing : FI-20-CVS2 (plastic)

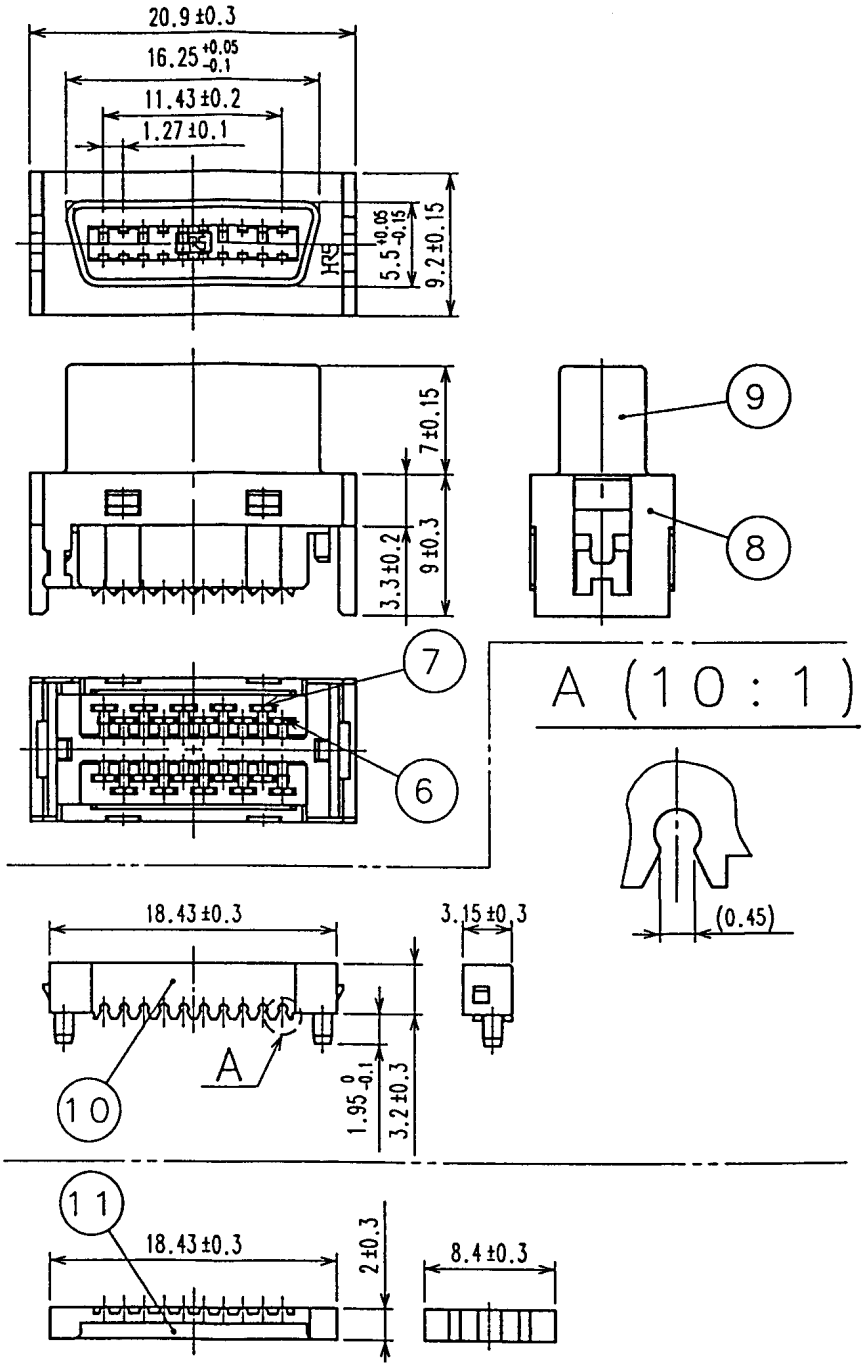

Fig.C(e) Connector for interface (Crimp type)

© MyFANUC 2D5504D5BAC945D385F48627D4977F6C

Manufacture : HIROSE ELECTRIC CO., LTD.
Type : FI40-20S (solder type)
Housing : FI-20-CVS5 (plastic)

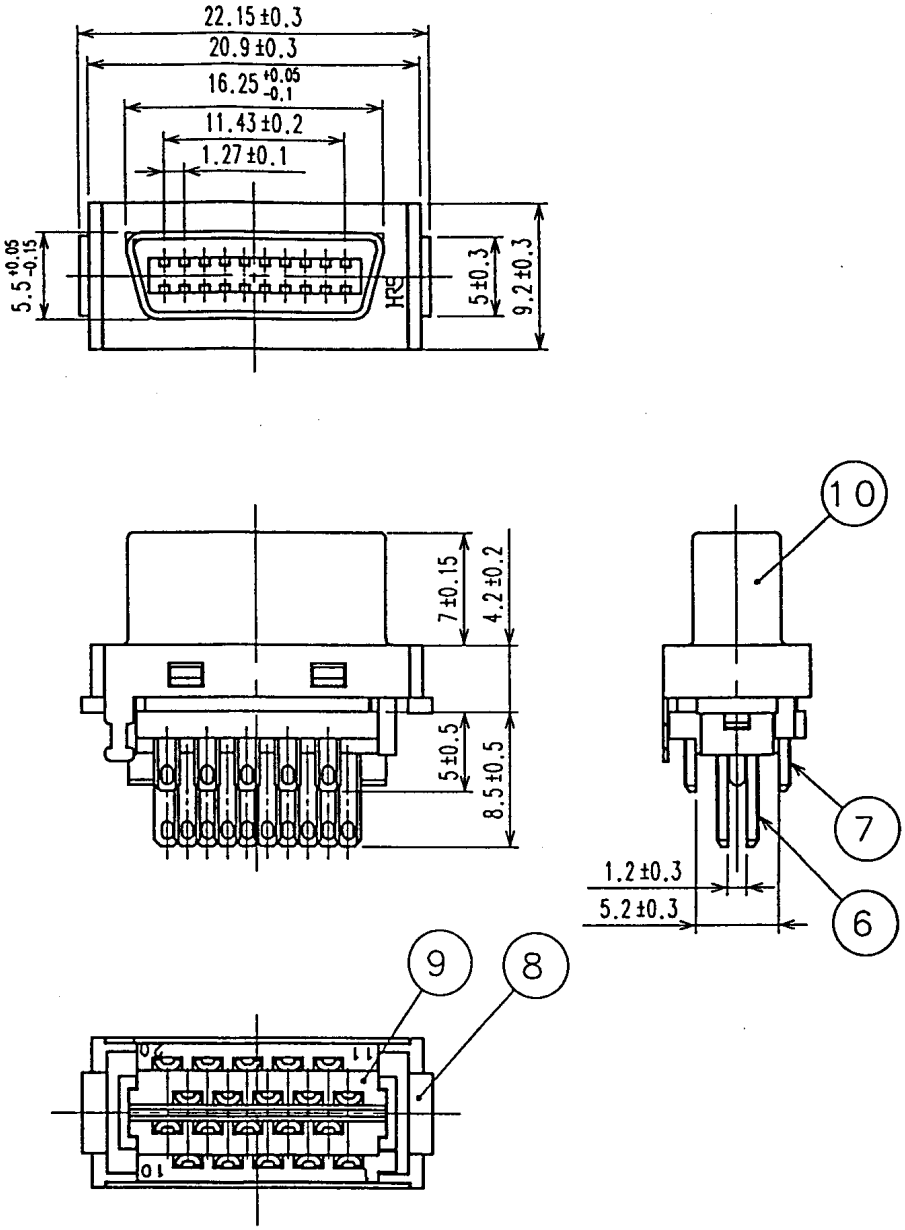

Fig.C(f) Connector for interface (Solder type)

© MyFANUC 2D5504D5BAC945D385F48627D4977F6C

Manufacture : HIROSE ELECTRIC CO., LTD.
Type : FI40B-2015S (solder type)
Housing : FI-2015-CVS (plastic)

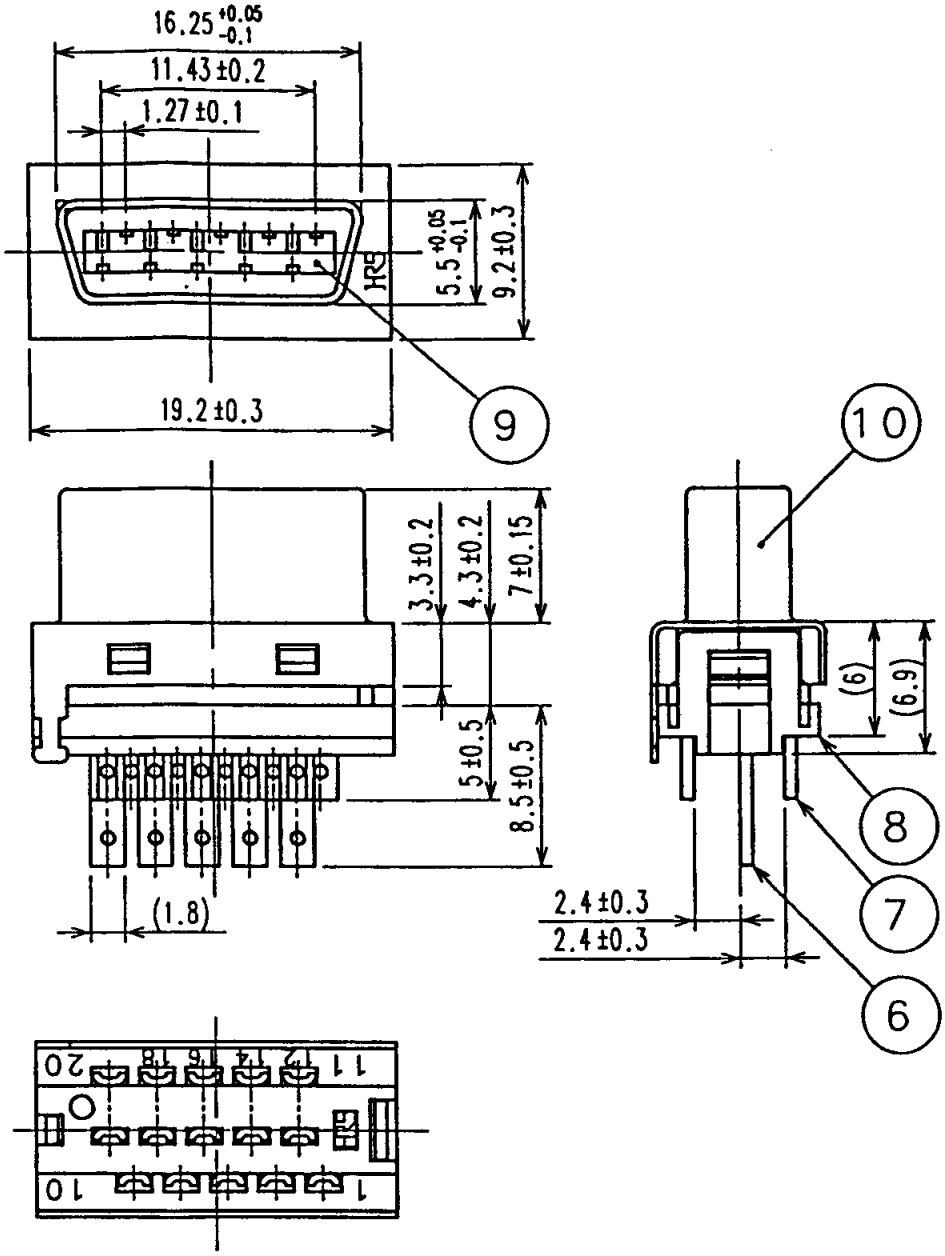

Fig.C(g) Connector for interface (Solder type)

NOTE
This connector does not contact locations 11, 13, 15, 17, and 19.

© MyFANUC 2D5504D5BAC945D385F48627D4977F6C

Manufacture : HIROSE ELECTRIC CO., LTD.
Type : FI-20-CVS2
Connector : FI30-20S

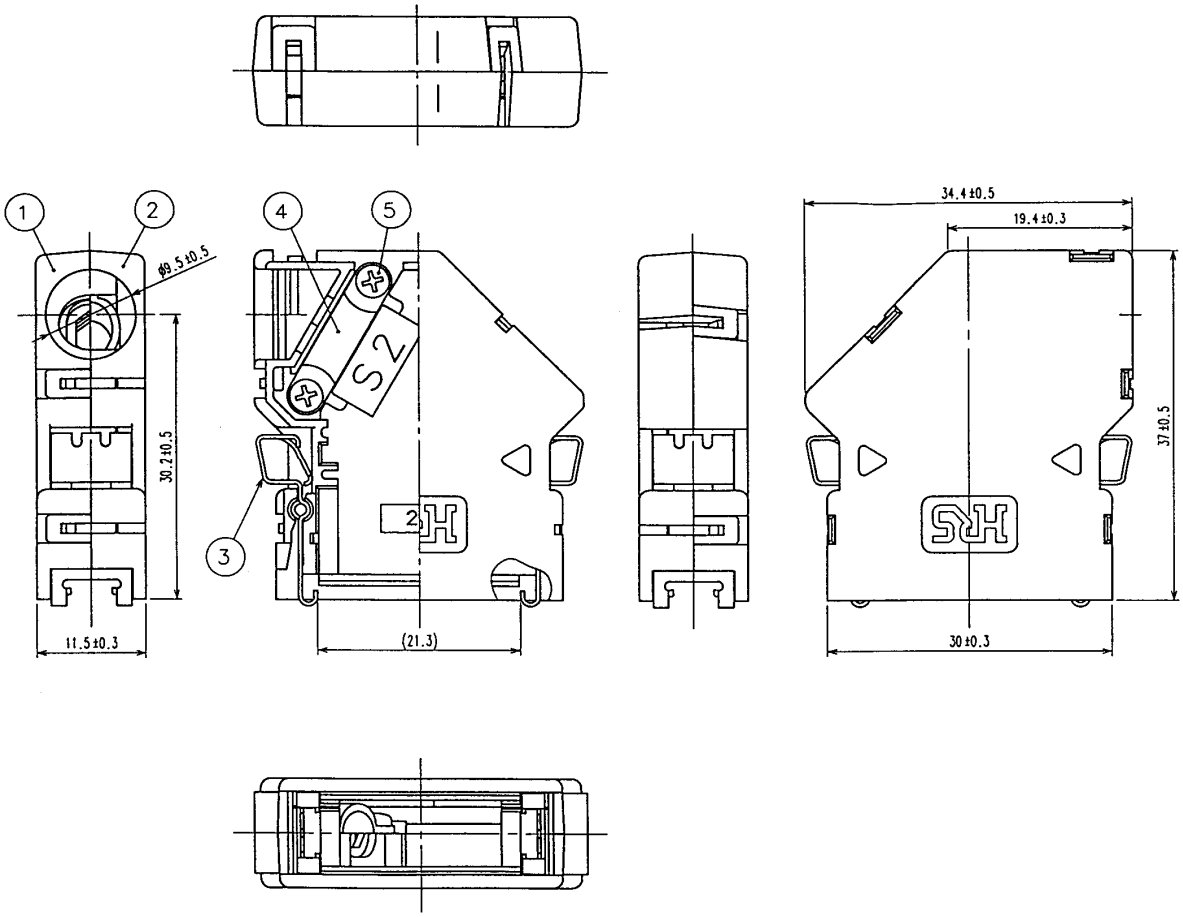

Fig.C(h) Connector housing (Side cable type)

© MyFANUC 2D5504D5BAC945D385F48627D4977F6C

Manufacture : HIROSE ELECTRIC CO., LTD.
Type : FI-20-CVS5
Connector : FI40B-20S

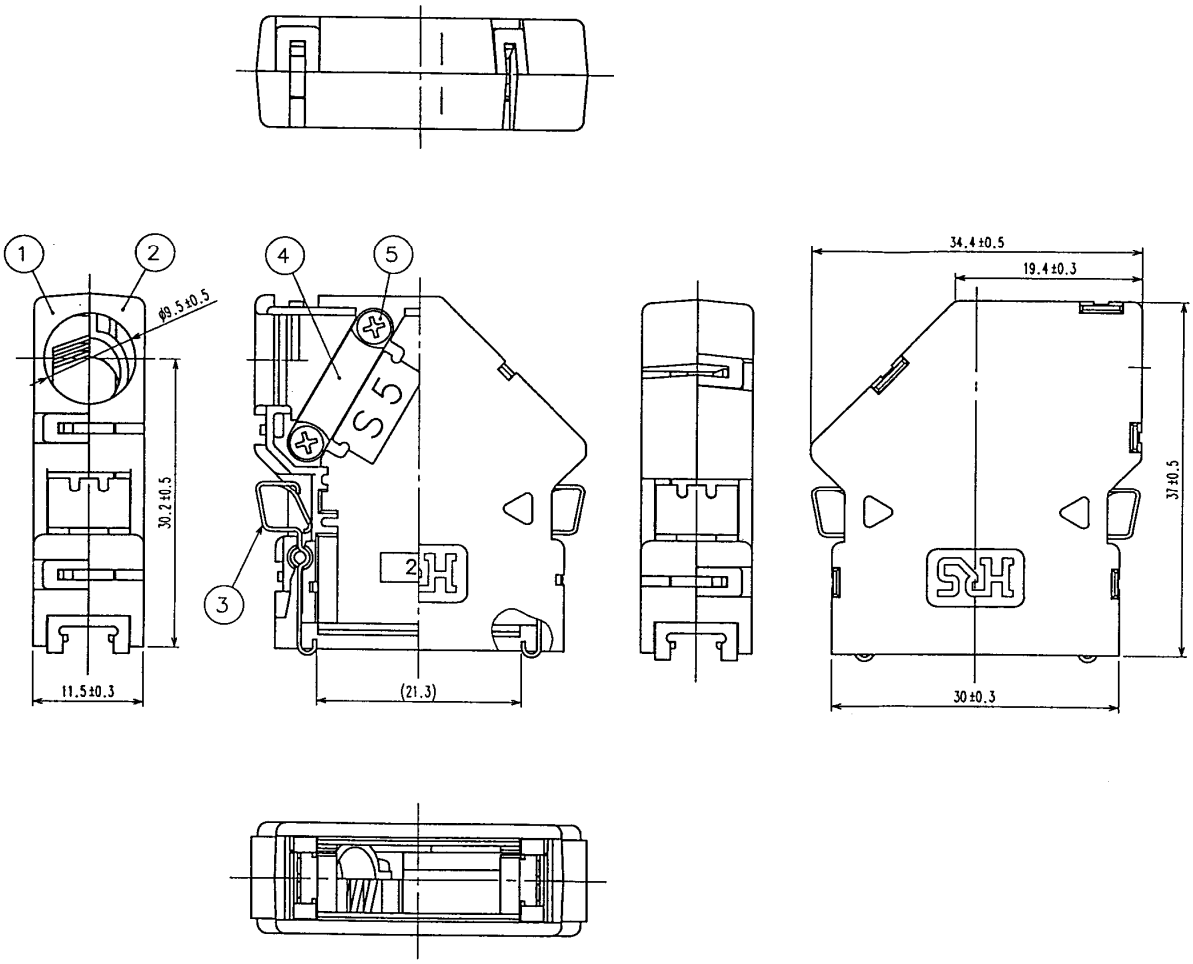

Fig.C(i) Connector housing (Side cable type)

© MyFANUC 2D5504D5BAC945D385F48627D4977F6C

Manufacture : HIROSE ELECTRIC CO., LTD.
Type : FI-2015-CVS
Connector : FI40B-2015S

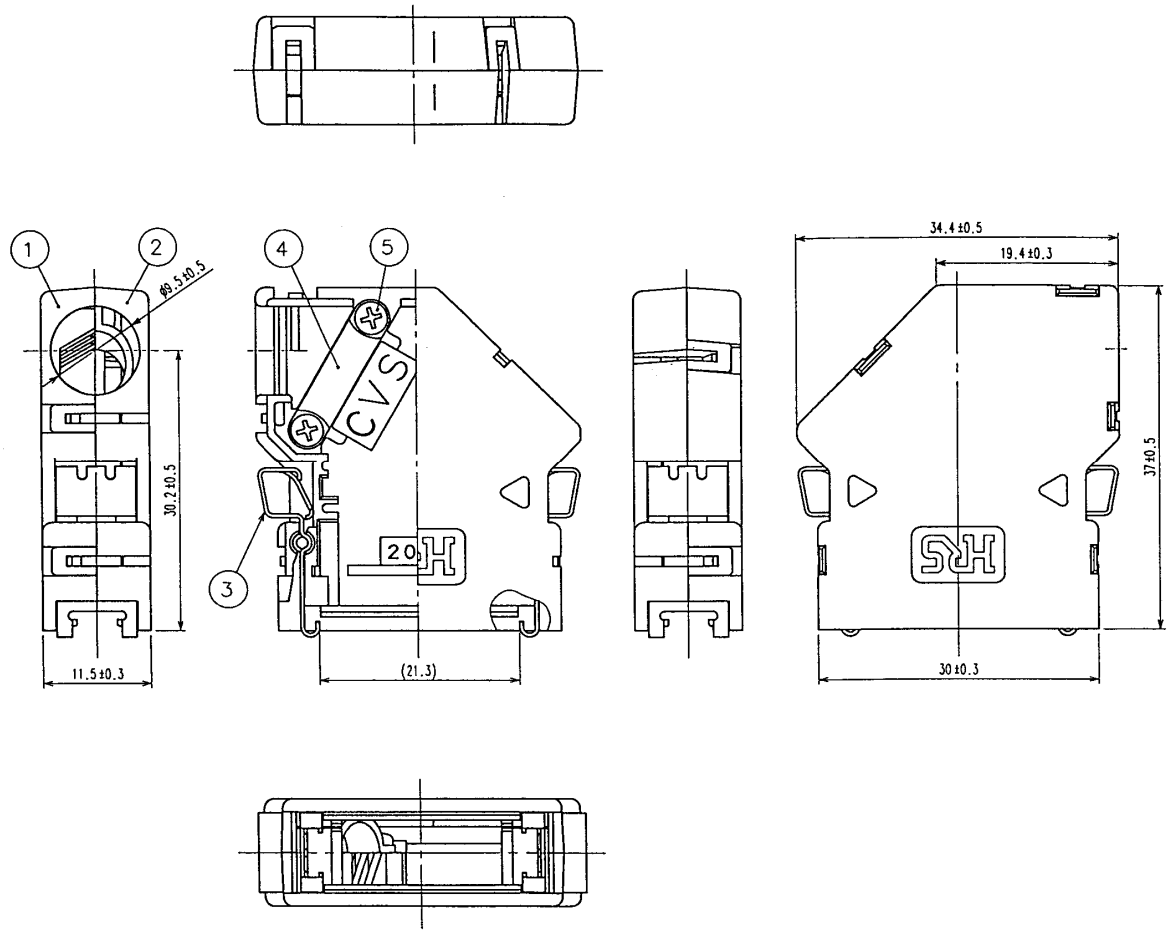

Fig.C(j) Connector housing (Side cable type)

© MyFANUC 2D5504D5BAC945D385F48627D4977F6C

D FEEDBACK CABLE LENGTH

Appendix D, "FEEDBACK CABLE LENGTH", consists of the following sections:

D.1 SPINDLE CABLE LENGTH (WHEN RECOMMENDED CABLES ARE USED)..... 374
D.2 PULSECODER CABLE LENGTH (WHEN RECOMMENDED CABLES ARE USED)..... 375

D.1 SPINDLE CABLE LENGTH (WHEN RECOMMENDED CABLES ARE USED)

Detector	Recommended cable	Cable structure	Maximum cable length
αiM Sensor	A66L-0001-0368	0.5 mm^2, 2 of 6 pairs used (for power supply) 0.18mm^2, 5 pairs (for signals)	72m (Note 1)
αiMZ Sensor	A66L-0001-0368	0.5 mm^2 2 of 6 pairs used (for power supply) 0.18mm^2, 5 pairs (for signals)	50m (Note 1)
αiM Sensor (for αiI 0.5)	A66L-0001-0482	0.3 mm^2, 2 conductors (for power supply) 0.2mm^2, 3 pairs (for signals)	41m
αiMZ Sensor (for αiI 0.5) αiBZ Sensor (compact)	A66L-0001-0482	0.3 mm^2, 2 conductors (for power supply) 0.2mm^2, 4 pairs (for signals)	28m
αiCZ Sensor (serial output)	A66L-0001-0460 A66L-0001-0481	0.3mm^2, 5 conductors (for power supply) 0.2mm^2, 1 pair (for signals)	28m
	A66L-0001-0462 A66L-0001-0491	0.5mm^2, 5 conductors (for power supply) 0.2mm^2, 1 pair (for signals)	50m
αi Positioncoder	A66L-0001-0286	0.5 mm^2, 6 conductors (for power supply) 0.18mm^2, 3 pairs (for signals)	50m
α Positioncoder S	A66L-0001-0286	0.5 mm^2, 6 conductors (for power supply) 0.18mm^2, 3 pairs (for signals)	50m

When using any cable other than the recommended ones, select a cable for which the total resistance of the +5V and 0V lines is less than the corresponding value shown in the table below.

Detector	Total resistance of 5V and 0V
αi M Sensor	5Ω
αiMZ Sensor, αiBZ Sensor	4Ω
αi CZ Sensor (serial output)	2Ω
αi Positioncoder	2Ω
α Positioncoder S	2Ω

© MyFANUC 2D5504D5BAC945D385F48627D4977F6C

NOTE 1

A cable longer than the maximum length shown in the table may be used as long as its length does not exceed 100 meters and the rotation speed limit based on the number of teeth shown below is not exceeded. In the case of a model that exceeds the rotation speed limit, it is necessary to limit the maximum rotation speed.

Number of sensor teeth	Rotation speed limit when the maximum cable length is exceeded (up to 100 m)	Motor model examples
128 λ	12000 min^{-1}	αi I 1, αi I 1.5, αi I 2, αi I 3
256 λ	6000 min^{-1}	αi I 6, αi I 8, αi I 12, αi I 15, αi I 18, αi I 22, αi I 30, αi I 40, αi I 50 ,αi I 6HV, αi I 8HV, αi I 12HV, αi I 15HV, αi I 22HV αi I 40HV αi I 50HV ,αi I 60HV

D.2 PULSECODER CABLE LENGTH (WHEN RECOMMENDED CABLES ARE USED)

Recommended cable	Cable structure	Maximum cable length
A66L-0001-0460	$0.3mm^2$, 5 conductors (for power supply) $0.20mm^2$, 1 pair (for signals)	28m
A66L-0001-0462	$0.5mm^2$, 5 conductors (for power supply) $0.20mm^2$, 1 pair (for signals)	50m
A66L-0001-0481	$0.3mm^2$, 5 conductors (for power supply) $0.18mm^2$, 1 pair (for signals)	28m
A66L-0001-0491	$0.5mm^2$, 5 conductors (for power supply) $0.18mm^2$, 1 pair (for signals)	50m

When a cable other than recommended cable is used, ensure that the sum of the resistances of 0 V and 5 V is 2 ohms or less.

© MyFANUC 2D5504D5BAC945D385F48627D4977F6C

E POWER LINE FOR SERVO MOTOR AND AMPLIFIER

Appendix E, "POWER LINE FOR SERVO MOTOR AND AMPLIFIER", consists of the following sections:

E.1 SELECTING A POWER CABLE 376

E.1 SELECTING A POWER CABLE

Select the cable specification by considering the following conditions for use:
<1> Motor current rating or current needed in use on a real machine
<2> Cable type (heat resistance temperature, etc.)
<3> Environment in which the cable is installed (operating ambient temperature, etc.)
<4> Need of water proofing (pay attention to the diameter of the applicable cable clamp)
<5> Certification for CE marking (compliance with various safety standards and EMC standard)
<6> Insulation distance between the cable and terminal is secured at the time of wiring.

Examples of selecting a heavy-duty power cable are shown below. Fully check the cable specifications based on the actual use conditions and use an example below.
The cable diameters are determined based on JCS No. 168 D (1980), "Allowable Currents for Power Cables (1)."

Selection example of power line (reference)

[Selection example 1]

- Heavy-duty power cable specification :
  Maximum allowable conductor temperature 60°C

Cable diameter [mm^2]	Environment temperature 30°C Allowable current value [Arms]	Receptacle contact specification
0.75	Up to 11	SS size 1318986-6
1.25	Up to 15	S size 316040-6
2	Up to 19	S size 316040-6
3.5	Up to 27	M size 316041-6
5.5	Up to 35	M size 316041-6
8	Up to 43	L size 1318697-6
14	Up to 56	Crimp terminal only

[Selection example 2]

- Heavy-duty power cable specification :
  Maximum allowable conductor temperature 80°C

Cable diameter [mm^2]	Environment temperature 55°C Allowable current value [Arms]	Receptacle contact specification
0.75	Up to 9.2	SS size 1318986-6
1.25	Up to 12.7	S size 316040-6
2	Up to 16.3	S size 316040-6
3.5	Up to 23.4	M size 316041-6
5.5	Up to 31.2	M size 316041-6
8	Up to 38.3	L size 1318697-6

© MyFANUC 2D5504D5BAC945D385F48627D4977F6C

[Selection example 3]

- Fire-retardant polyflex wire or equivalent to LMFC manufactured by The Furukawa Electric Co., Ltd.:
  3 wire bundles
  Maximum allowable conductor temperature 105°C

Cable diameter [mm^2]	Environment temperature 30°C Allowable current value [Arms]	Environment temperature 55°C Allowable current value [Arms]
0.75	Up to 12	Up to 10
1.25	Up to 16	Up to 13
2	Up to 21	Up to 17
3.5	Up to 32	Up to 26
5.5	Up to 43	Up to 35
8	Up to 55	Up to 44
14	Up to 79	Up to 64
22	Up to 113	Up to 92
30	Up to 137	Up to 112
38	Up to 160	Up to 131
50	Up to 190	Up to 155
60	Up to 220	Up to 180
80	Up to 269	Up to 219

Wire diameter versus AWG number table (reference)

Cable diameter [mm^2]	AWG number
0.8226	AWG18
1.307	AWG16
2.082	AWG14
3.309	AWG12
5.262	AWG10
8.368	AWG8
13.30	AWG6
21.15	AWG4
33.62	AWG2
42.41	AWG1
53.49	AWG1/0
67.42	AWG2/0
85.03	AWG3/0
107.2	AWG4/0

Selection example of servo motor power line (reference)

Example 1)

A heavy-duty power cable is used for the αi F22/3000 when the ambient temperature is 55°C.

- Check the continuous current rating of the servo motor with the applicable servo motor specification.
  (See descriptions about the stall current of the servo motor.)
  In this example, it is 18.4 Arms.
- Select a cable wire diameter from [Selection example 2] in this section.
  In this example, it is 3.5 mm^2.

© MyFANUC 2D5504D5BAC945D385F48627D4977F6C

Selection example of spindle motor power line (reference)

Example 1)

A polyflex wire is used for the αi I 8/8000 when the ambient temperature is 55°C.

- Check the continuous current rating of the spindle motor with the applicable spindle motor specification.
  (See descriptions about the stall current of the servo motor.)
  In this example, it is 43 Arms.
- Select a cable wire diameter from [Selection example 3] in this section.
  In this example, it is 8 mm^2.

E.2 ADDING A POWER CABLE OF THE SERVO AMPLIFIER

A cable with reduced ground line inductance has been added as the power cable of the servo amplifier. By reducing the inductance of the ground line, the PWM noise due to servo amplifier switching returns to the amplifier efficiently.

Manufacturer specification (OKI ELECTRIC CABLE)	Wire diameter (U/V/W)	Ground wire diameter	FANUC specification	Rating	Standard length
SYM3X0.75SQ	0.75 mm^2	0.25mm^2x3	A66L-0001-0607	105℃/600V	100m
SYM3X1.25SQ	1.25 mm^2	0.43mm^2x3	A66L-0001-0608	105℃/600V	100m
SYM3X2SQ	2.0 mm^2	0.75mm^2x3	A66L-0001-0609	105℃/600V	100m
SYM3X3.5SQ	3.5 mm^2	1.25mm^2x3	A66L-0001-0610	105℃/600V	100m
SYM3X5.5SQ	5.5 mm^2	2.0mm^2x3	A66L-0001-0611	105℃/600V	100m
SYM3X8SQ	8 mm^2	2.7mm^2x3	A66L-0001-0612	105℃/600V	100m

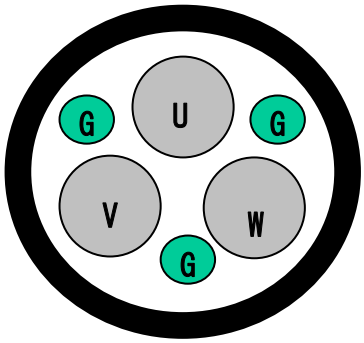

Fig. 1 Structure outline of the cable

Details of cable specification

(1) SYM 3X0.75SQ

Item		Specifications	
Core wire classification		Power line	Ground line
Nominal conductor cross-section area (mm^2)		0.75	0.25
Conductor	Material	Stranded wire of annealed copper	Stranded wire of annealed copper
	Structure: Number of conductors/ mm	30/0.18	10/0.18
	Outside diameter: Standard mm	1.2	0.66

© MyFANUC 2D5504D5BAC945D385F48627D4977F6C

Item		Specifications	
Insulator	Material	Heat-resistant PVC	
	Color	Red, white, and black	
	Thickness: Standard mm	0.81	
	Outside diameter: Standard mm	2.82	
Lay	Structure	See Fig. 2.	
	Binder tape	Plastic tape	
Sheath	Material	Heat-resistant, oilproof PVC	
	Color	Black (OKI symbol K)	
	Display	OKI ELECTRIC CABLE AWG19 AWM 2501 105C 600V VW-1 SYM 3×0.75SQ or OKI ELECTRIC CABLE(G) AWG19 AWM 2501 105C 600V VW-1 SYM 3×0.75SQ	
	Outside diameter: v	10.3	
Finished assembly	Standard length m	100	
	Packing method	Bundle	
	Estimated weight: kg/km	115	
Electrical performance	Conductor resistance: Ω/km	24.4 or less (20℃)	73.4 or less (20℃)
	Insulation resistance: MΩkm	10 or larger (20℃)	—
	Dielectric strength: V-min	AC2000	—
	Inductance: μH/m	Standard: 0.31	
	Capacitance: pF/m	Standard: 100	

(2) SYM 3X1.25SQ

Item		Specifications	
Core wire classification		Power line	Ground line
Nominal conductor cross-section area(mm^2)		1.25	0.43
Conductor	Material	Stranded wire of annealed copper	Stranded wire of annealed copper
	Structure: Number of conductors/ mm	50/0.18	17/0.18
	Outside diameter: Standard mm	1.5	0.86
Insulator	Material	Heat-resistant PVC	
	Color	Red, white, and black	
	Thickness: Standard mm	0.81	
	Outside diameter: Standard mm	3.12	
Lay	Structure	See Fig. 2	
	Binder tape	Plastic tape	
Sheath	Material	Heat-resistant, oilproof PVC	
	Color	Black (OKI symbol K)	
	Display	OKI ELECTRIC CABLE AWG17 AWM 2501 105C 600V VW-1 SYM 3×1.25SQ or OKI ELECTRIC CABLE(G) AWG17 AWM 2501 105C 600V VW-1 SYM 3×1.25SQ	
	Outside diameter: Standard mm	11.0	
Finished assembly	Standard length m	100	
	Packing method	Bundle	

© MyFANUC 2D5504D5BAC945D385F48627D4977F6C

Item		Specifications	
	Estimated weight: kg/km	140	
Electrical performance	Conductor resistance: Ω/km	14.7 or less (20℃)	43.2 or less (20℃)
	Insulation resistance: MΩkm	10 or larger (20℃)	—
	Dielectric strength: V-min	AC2000	—
	Inductance: μH/m	Standard: 0.28	
	Capacitance: pF/m	Standard: 110	

(3) SYM 3X2SQ

Item		Specifications	
Core wire classification		Power line	Ground line
Nominal conductor cross-section area(mm^2)		2.0	0.75
Conductor	Material	Stranded wire of annealed copper	Stranded wire of annealed copper
	Structure: Number of conductors/ mm	37/0.26	30/0.18
	Outside diameter: Standard mm	1.8	1.2
Insulator	Material	Heat-resistant PVC	
	Color	Red, white, and black	
	Thickness: Standard mm	0.81	
	Outside diameter: Standard mm	3.42	
Lay	Structure	See Fig. 2	
	Binder tape	Plastic tape	
Sheath	Material	Heat-resistant, oilproof PVC	
	Color	Black (OKI symbol K)	
	Display	OKI ELECTRIC CABLE AWG15 AWM 2501 105C 600V VW-1 SYM 3×2SQ or OKI ELECTRIC CABLE(G) AWG15 AWM 2501 105C 600V VW-1 SYM 3×2SQ	
	Outside diameter: Standard mm	11.6	
Finished assembly	Standard length m	100	
	Packing method	Bundle	
	Estimated weight: kg/km	180	
Electrical performance	Conductor resistance: Ω/km	9.5 or less (20℃)	24.4 or less (20℃)
	Insulation resistance: MΩkm	10 or larger (20℃)	—
	Dielectric strength: V-min	AC2000	—
	Inductance: μH/m	Standard: 0.25	
	Capacitance: pF/m	Standard: 130	

(4) SYM 3X3.5SQ

Item	Specifications	
Core wire classification	Power line	Ground line
Nominal conductor cross-section area(mm^2)	3.5	1.25

© MyFANUC 2D5504D5BAC945D385F48627D4977F6C

Item		Specifications	
Conductor	Material	Stranded wire of annealed copper	Stranded wire of annealed copper
	Structure: Number of conductors/ mm	45/0.32	50/0.18
	Outside diameter: Standard mm	2.6	1.5
Insulator	Material	Heat-resistant PVC	
	Color	Red, white, and black	
	Thickness: Standard mm	0.81	
	Outside diameter: Standard mm	4.22	
Lay	Structure	See Fig. 2	
	Binder tape	Plastic tape	
Sheath	Material	Heat-resistant, oilproof PVC	
	Color	Black (OKI symbol K)	
	Display	OKI ELECTRIC CABLE AWG12 AWM 2501 105C 600V VW-1 SYM 3×3.5SQ or OKI ELECTRIC CABLE(G) AWG12 AWM 2501 105C 600V VW-1 SYM 3×3.5SQ	
	Outside diameter: Standard mm	13.2	
Finished assembly	Standard length m	100	
	Packing method	Drum	
	Estimated weight: kg/km	350	
Electrical performance	Conductor resistance: Ω/km	5.1 or less (20℃)	14.7 or less (20℃)
	Insulation resistance: MΩkm	10 or larger (20℃)	—
	Dielectric strength: V-min	AC2000	—
	Inductance: μH/m	Standard: 0.24	
	Capacitance: pF/m	Standard: 160	

(5) SYM 3X5.5SQ

Item		Specifications	
Core wire classification		Power line	Ground line
Nominal conductor cross-section area(mm^2)		5.5	2.0
Conductor	Material	Stranded wire of annealed copper	Stranded wire of annealed copper
	Structure: Number of conductors/ mm	70/0.32	37/0.26
	Outside diameter: Standard mm	3.1	1.8
Insulator	Material	Heat-resistant PVC	
	Color	Red, white, and black	
	Thickness: Standard mm	1.0	
	Outside diameter: Standard mm	5.1	
Lay	Structure	See Fig. 2	
	Binder tape	Plastic tape	

© MyFANUC 2D5504D5BAC945D385F48627D4977F6C

Item		Specifications	
Sheath	Material	Heat-resistant, oilproof PVC	
	Color	Black (OKI symbol K)	
	Display	OKI ELECTRIC CABLE AWG10 AWM 2501 105C 600V VW-1 SYM 3×5.5SQ or OKI ELECTRIC CABLE(G) AWG10 AWM 2501 105C 600V VW-1 SYM 3×5.5SQ	
	Outside diameter: Standard mm	15.2	
Finished assembly	Standard length m	100	
	Packing method	Drum	
	Estimated weight: kg/km	520	
Electrical performance	Conductor resistance: Ω/km	3.4 or less (20℃)	9.5 or less (20℃)
	Insulation resistance: MΩkm	10 or larger (20℃)	—
	Dielectric strength: V-min	AC2000	—
	Inductance: μH/m	Standard: 0.24	
	Capacitance: pF/m	Standard: 160	

(6) SYM 3X8SQ

Item		Specifications	
Core wire classification		Power line	Ground line
Nominal conductor cross-section area(mm^2)		8.0	2.7
Conductor	Material	Stranded wire of annealed copper	Stranded wire of annealed copper
	Structure: Number of conductors/ mm	50/0.45	50/0.26
	Outside diameter: Standard mm	3.7	2.1
Insulator	Material	Heat-resistant PVC	
	Color	Red, white, and black	
	Thickness: Standard mm	1.2	
	Outside diameter: Standard mm	6.1	
Lay	Structure	See Fig. 2	
	Binder tape	Plastic tape	
Sheath	Material	Heat-resistant, oilproof PVC	
	Color	Black (OKI symbol K)	
	Display	OKI ELECTRIC CABLE AWG9 AWM 2501 105C 600V VW-1 SYM 3×8SQ or OKI ELECTRIC CABLE(G) AWG9 AWM 2501 105C 600V VW-1 SYM 3×8SQ	
	Outside diameter: Standard mm	17.6	
Finished assembly	Standard length m	100	
	Packing method	Drum	
	Estimated weight: kg/km	650	

© MyFANUC 2D5504D5BAC945D385F48627D4977F6C

Item		Specifications	
Electrical performance	Conductor resistance: Ω/km	2.4 or less (20℃)	7.1 or less (20℃)
	Insulation resistance: MΩkm	10 or larger (20℃)	—
	Dielectric strength: V-min	AC2000	—
	Inductance: μH/m	Standard: 0.24	
	Capacitance: pF/m	Standard: 160	

Contact information

Manufacturer : Oki Electric Cable Co., Ltd.

2-12-8, Shimokodanaka, Nakahara-Ku, Kawasaki-shi, Kanagawa 211-8585, Japan
Oki Electric Cable Co., Ltd Overseas Sales Department

Phone :81-44-754-4369
FAX :81-44-754-0012

© MyFANUC 2D5504D5BAC945D385F48627D4977F6C

F MEASURES AGAINST NOISE FROM SERVO AMPLIFIERS

This appendix describes what causes noise when servo amplifiers are used to drive motors. It also explains measures that can be taken to protect equipment from noise.
When installing machines, the user is kindly requested to previously arrange measures against noise that may occur in the machines.

Appendix F, “MEASURES AGAINST NOISE FROM SERVO AMPLIFIERS,” consists of:

F.1 NOISE GENERATION MECHANISM OF A SERVO AMPLIFIER 384
F.2 NOISE TYPES 385
F.3 ANTI-NOISE MEASURES 386
F.4 MISCELLANEOUS 392

F.1 NOISE GENERATION MECHANISM OF A SERVO AMPLIFIER

Shown below is an outlined configuration of a servo amplifier.

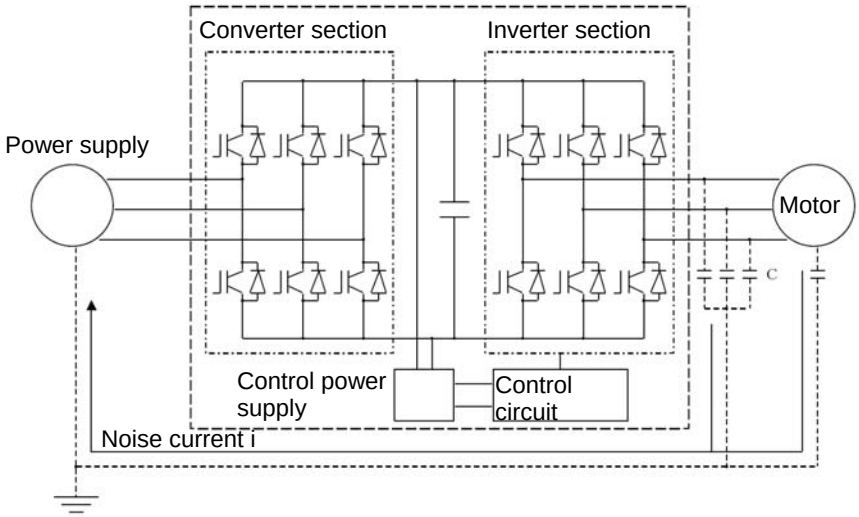

Fig. F.1 Outlined servo amplifier configuration

The servo amplifier shown above converts AC to DC with its converter section and controls the rotation speed of the motor under PWM control by turning ON/OFF the 6 transistors in the inverter section.
Turning the 6 transistors ON/OFF at high speed results in switching noise occurring. This high-speed ON/OFF switching releases noise current (i) to the ground through the stray capacitance (C) between the cable and motor on every switching cycle. The magnitude of the noise current (i) is represented by:
$i = C \times dV/dt$
As the expression tells, the noise current is proportional to the stray capacitance (C) and the transistor switching speed (dV/dt). Because the frequency band of this noise is below about 30 to 40 MHz, it affects equipment (such as AM radio) that uses a low-frequency band. But it hardly affects equipment (such as FM radio and TV) that uses higher frequency bands.
Described so far is how noise occurs in switching transistors to drive motors.

© MyFANUC 2D5504D5BAC945D385F48627D4977F6C

Meanwhile, if a servo amplifier regenerates power (recirculates motor rotation energy to the power supply during deceleration) when a motor driven by it decelerates, the operation of devices that share the power supply may be affected by voltage fluctuations resulting from current phase commutation for power regeneration.

F.2 NOISE TYPES

Noise that occurs in servo amplifiers can be roughly grouped into any of the following three types.

(1) Conduction noise

Conduction noise occurs in a servo amplifier, passes through a conductor, such as wire, and enters a device connected to the same power line as the servo amplifier, thus affecting the device.

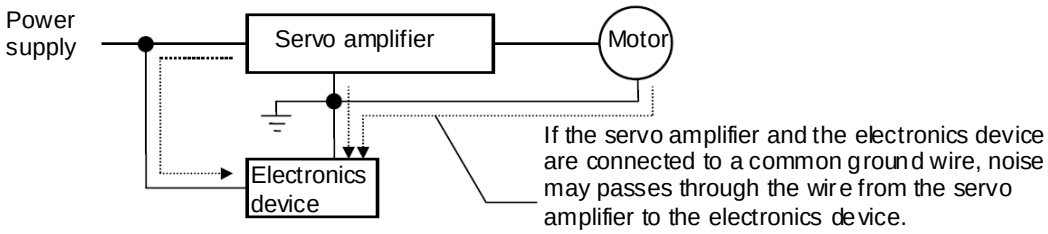

Fig. F.2 (a) Conduction noise

(2) Induction noise

Induction noise is caused on the power line or signal line of a peripheral device through induction by putting the line close to an electric line through which noise current is flowing.

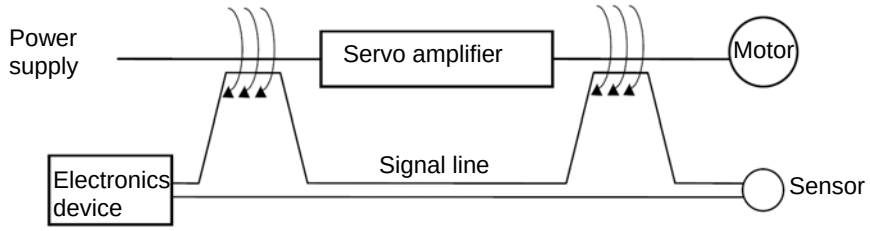

Fig. F.2 (b) Electromagnetically induced noise

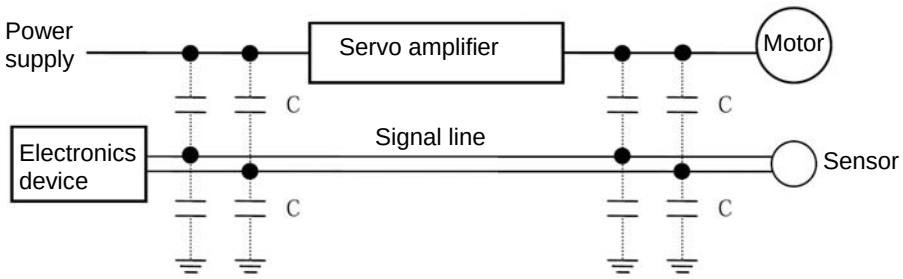

Fig. F.2 (c) Electrostatically induced noise

(3) Radiation noise

Radiation noise occurs in a servo amplifier and is radiated into the air from that power supply line or power line connected to the servo amplifier which acts as an antenna.

© MyFANUC 2D5504D5BAC945D385F48627D4977F6C

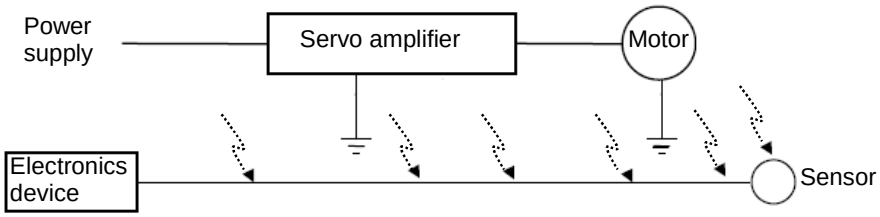

Fig F.2 (d) Radiation noise

Noise can propagate in diverse ways. In addition, its effect varies depending on how the system is configured.

F.3 ANTI-NOISE MEASURES

It is difficult for the present technology level to prevent noise occurrence completely. So, it is necessary to arrange economic anti-noise measures according to the level of the noise of interest and the situations of equipment installation.

F.3.1 Pre-Installation Arrangement

If a noise problem occurs after equipment has been installed, it may cost a lot of money to solve the problem. So, it is necessary to take the following measures previously.

<1> Separate signal lines from power supply and motor power lines.
<2> Put power supply and motor power lines in metal conduits.
<3> Carry out adequate grounding work, and lay down proper grounding wires (for preventing leakage-caused hazard shocks as well).
<4> Use as thick and short grounding wires as possible.

The “Electrical Equipment Technical Standards” stipulates grounding methods as listed below.

Grounding type	Applicable equipment	Grounding resistance
Class-3 grounding	300 VAC or lower	100 Ω or lower
Special class-3 grounding	300 VAC to 600 VAC	10 Ω or lower

F.3.2 Anti-Noise Measures

Suppressing noise from equipment effectively requires applying system-wide anti-noise measures by cooperating with devices that may be affected by the noise.

(1) Anti-measures that can be taken in noise-affected devices
<1> Separate signal lines for noise-affected devices from power supply and motor power lines to reduce effect by noise.
<2> Separate power supplies between noise-generating and noise-affected devices to block off noise paths.
<3> Increase the impedance of signal lines to noise, for example, by passing the signal lines through ferrite core beads.
<4> Use line filters or shielded wires for signal lines to prevent noise from entering the signal lines.

(2) Anti-measures that can be taken in noise-generating devices
<1> Lower noise levels by installing anti-noise devices such as noise filters.
<2> Isolate noise, using metal conduits or shielded wires.
<3> Block off noise paths, using isolation transformers.

© MyFANUC 2D5504D5BAC945D385F48627D4977F6C

(3) Noise type-specific anti-noise measures
Noise types are described in F.2. Which anti-noise measure is effective varies depending on the noise type of interest. In addition, which anti-noise measure is effective and how effective it is also vary depending on the environment (such as power supply and radio wave strength) in which the machine is used, the situations of machine operation, and the noise immunity level of the equipment involved.
Take the most effective measure by referencing Table F.3.2.

Table F.3.2 Noise type-specific anti-noise measures

	Measure	Noise type		
		Conduction noise	Induction noise	Radiation noise
Wiring and grounding	Separate signal lines from power supply and power lines	o	o	
	Use metal conduits		o	o
	Avoid parallel wiring		o	
	Shied power supply and power lines			o
	Ground securely		o	
Anti-noise device (noise source side)	Line filter	o		o
	Isolating transformer	o		o
Anti-noise device (noise receiving side)	Ferrite core used with signal lines		o	o
	Signal line shielding		o	o
Others	Separating power supplies	o		

F.3.3 Concrete Examples of Anti-Noise Measures

(1) AM radio

<<Symptom>>
When a motor at a factory was energized, radios at the factory sounded bzzz, making voice and music inaudible.
<<Probable cause>>
The radios received radiation noise from the power line of the motor, which is connected to a servo amplifier.
<<Measure>>
<1> Installed a noise filter (LC filter) on the power supply side.
<2> Installed a capacitor across each input phase line and ground.
<<Caution>>
- These measures may not be effective in weak-wave areas, such as residential areas and mountain-ringed regions.
- If a noise filter is used, make the wiring between the filter and servo amplifier as short as possible.

(2) AM radio

<<Symptom>>
When a machine at a factory was operated, radios in neighboring houses and cars parked outside the factory received noise.
<<Probable cause>>
The factory and the neighboring houses shared a pole-mounted transformer, and radiation noise from the wiring on the power supply side affected the radios. Alternatively, it was likely that conduction noise from the power supply line might affect the radios.
<<Measure>>
<1> Installed a noise filter (LC filter) on the power supply side.
<2> Supplied the neighboring houses with power from another pole-mounted transformer.

© MyFANUC 2D5504D5BAC945D385F48627D4977F6C

<<Caution>>

- If a noise filter is used, make the wiring between the filter and servo amplifier as short as possible.

(3) Refrigerator

<<Symptom>>

Refrigerator motors in neighboring houses growled when a spindle at a factory decelerated.

<<Probable cause>>

The factory and the neighboring houses shared a pole-mounted transformer, causing voltage distortion resulting from power regeneration at spindle deceleration to make the refrigerator motors growl.

<<Measure>>

<1> Supplied the neighboring houses with power from another pole-mounted transformer.
<2> Readjusted the capacity of power supply equipment.

<<Caution>>

- In many cases, factories in residential areas receive power from pole-mounted transformers for their equipment and share power with residential buildings, leading to an insufficient power capacity for the factory equipment. In these cases, power distortion become large, being likely to affect home electrical power.

(4) Telephone

<<Symptom>>

When a machine at a factory was operated, the telephone in a house across the road received noise.

<<Probable cause>>

When high-frequency current from a servo amplifier or motor returned through the grounding of a pole-mounted transformer, it shunted to the shielded ground of the telephone line, inducing noise electrostatically.

<<Measure>>

<1> Supplied the house with power from another pole-mounted transformer.
<2> Inserted a capacitor between the servo amplifier power supply and its grounding.

<<Caution>>

- Noise filters (LC filters) may not be effective to suppress noise having audio frequency components.
- Inserting a capacitor between the servo amplifier power supply and its grounding may cause a ground-fault circuit interrupter to trip because of an increasing leakage current.

(5) FAX

<<Symptom>>

When a machine at a factory was operated, a fax machine in a neighboring firm failed in transmission and also noise entered the telephone at the factory. The telephone uses a 100 V power source. Disconnecting the 100 V power source from the telephone resumed normal communication.

<<Probable cause>>

A pole-mounted transformer was shared, and conduction noise from the power line caused the malfunction.

In addition, it was likely that induction noise might also occur on wiring as in (4).

<<Measure>>

<1> Supplied the residential building with power from another pole-mounted transformer.
<2> Inserted an insulating transformer (noise-cut transformer) in the power supply circuitry.

<<Caution>>

- LC filters may not be effective for low-frequency noise as in (4).

© MyFANUC 2D5504D5BAC945D385F48627D4977F6C

F.3.4 Anti-Noise Measures for Power Supply Equipment and Grounding

If a noise problem still occurs in a machine already having general anti-noise measures, it may be solved by enhancing the grounding of the machine or installing a noise filter in it as stated below.

(1) Separating grounds

To prevent noise-related trouble from a machine, it is recommended to isolate the ground of the machine from other equipment when the machine is installed.

- What to do
  Isolate the ground of the machine's power transformer from the ground of the power supply transformer for equipment that may malfunction because of noise from the machine.
- Effect
  Isolating the grounds prevents noise from going from the machine to other equipment via a "common ground" so that the equipment will not be affected.

See Material 1 for a practical example.

(2) Enhancing machine grounding

If the impedance of an existing power supply grounding line for a machine (a large multi-axis machine in particular) is high and generates a noise voltage across the machine housing and the ground of the factory, it is recommended to enhance grounding.

- What to do
  Enhance grounding by adding a grounding wire or a ground.
- Effect
  If the impedance of the power supply grounding line is high and it is impossible for the existing power supply grounding wires to provide a good electrical ground, lower the grounding impedance of the machine by adding grounding wires.

See Material 2 for a practical example.

(3) Installing noise filters

If noise from a machine affects other devices through power supply lines adversely, it is recommended to install a noise filter.

- What to do
  Install a noise filter in the input power supply of the machine.
- Effect
  The noise filter prevents noise going from the machine to other devices through power supply lines to affect them adversely.

See Subsection 3.1.3.12 for the noise filters we recommend.

© MyFANUC 2D5504D5BAC945D385F48627D4977F6C

Material 1: Example of Separating Grounds

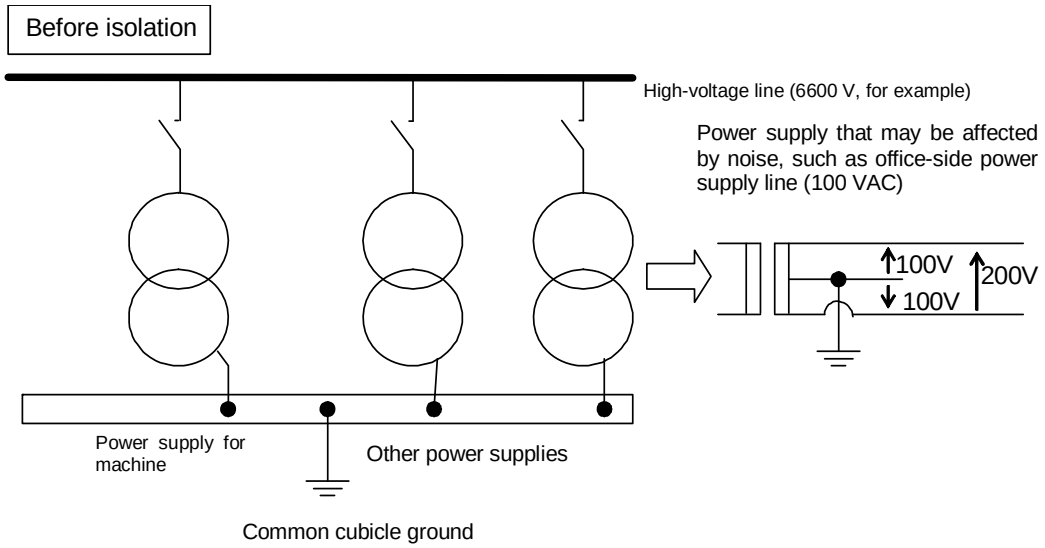

Isolation from common ground

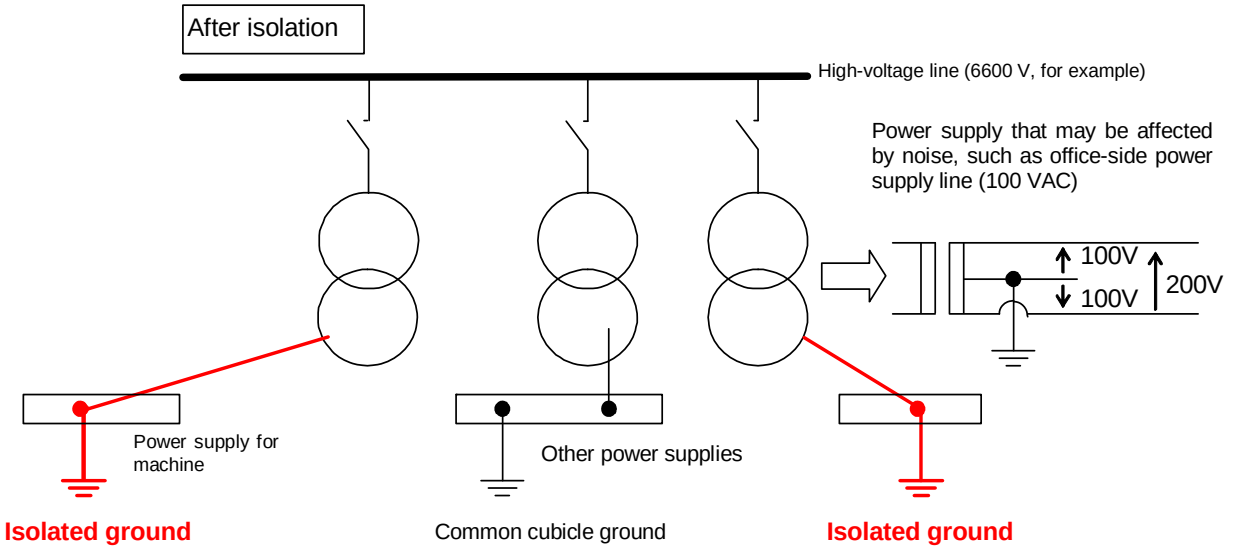

© MyFANUC 2D5504D5BAC945D385F48627D4977F6C

Material 2: Example of Enhancing Grounding

If the impedance of a power supply grounding line is high and it is impossible for the grounding of the power supply to provide a good electrical ground, enhance grounding by adding a grounding line or a ground so that the grounding impedance of the machine is lowered to suppress a noise voltage.

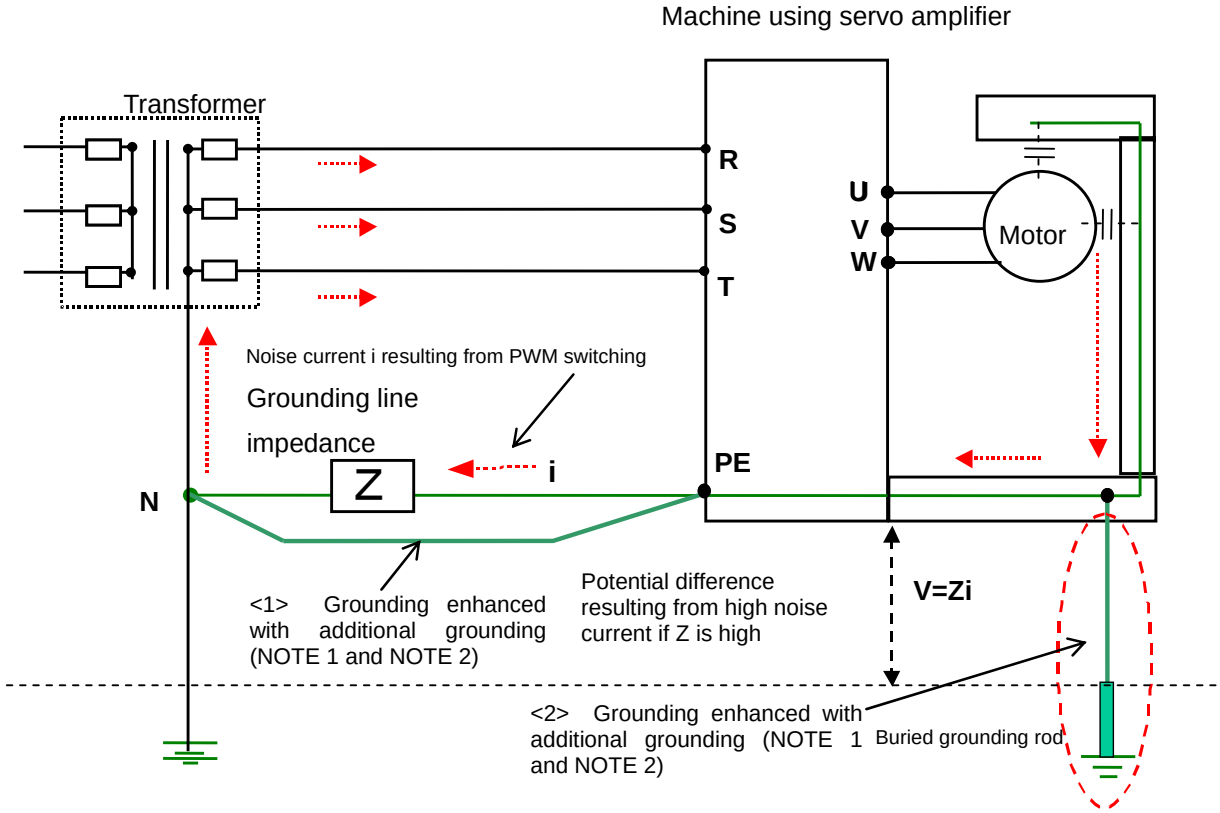

NOTE

1 It is recommended to use mesh cables having a satisfactory high-frequency property for the additional grounding of a machine.

2 For TN connections, use additional grounding <1> shown above.
For TT connections, use additional grounding <2> by, for example, burying a grounding rod near the machine.

F.3.5 Anti-Noise Devices

As described earlier, what anti-noise measure to take and what anti-noise device to use vary depending on the type of the noise of interest, where the noise occurs, and how large the effect of the noise is. This subsection briefly describes some anti-noise devices. They should be used to take an appropriate measure according to the situations.

(1) Noise filter

A noise filter can be inserted between a power supply and a servo amplifier to reduce high-frequency noise (noise voltage across terminals) superimposed on a supply voltage. Noise filters are effective on the AM radio frequency band.

Example products:
3SUP-H/3SUP-D Series from Okaya Electric Industries Co., Ltd.
NF3000/HF3000 Series from Soshin Electric Co., Ltd.

© MyFANUC 2D5504D5BAC945D385F48627D4977F6C

ZRCT/ZRGT Series from TDK
LH-3/LH-4 Series from Tokin

(2) Capacitor

A capacitor can be connected directly to a servo amplifier to reduce radiation noise from electrical power lines. Capacitors have a low attenuation property, compared with noise filters. However, they may be effective depending on the situation of radio waves. Select a ground-fault circuit interrupter by giving consideration to leakage current.
Example products:
3XYB-105・104 from Okaya Electric Industries Co., Ltd.
LW3/LY3 Series from Soshin Electric Co., Ltd.

(3) Zero-phase reactor

A zero-phase reactor can be inserted between a power supply and servo amplifier to reduce radiation noise from electrical power lines.
Example products:
RC Series from Soshin Electric Co., Ltd.

(4) Noise-cut transformer

A noise-cut transformer can be inserted between a power supply and device to reduce conduction noise (low frequency) passing through electrical power lines or grounding lines.
Example products:
FFT Series from Fuji Electric

F.4 MISCELLANEOUS

(1) Harmonics and noise

A harmonic is a sinusoidal wave having a frequency that is an integral multiple of the fundamental frequency (50/60 Hz). Usually, harmonics having a frequency of several tens of kHz or higher are specifically called noise, while those having a frequency of up to several kHz are referred to, using the same term (harmonics).
In many cases, noise occurs in inverter sections, and harmonics, in converter sections. What problem occurs and what measure to take differ between noise and harmonics.
For harmonics, the “Harmonics Suppression Measure Guideline” is available.

(2) References

“Skillful Use of Inverters (Electrical Noise),” The Japan Electrical Manufacturers’ Association

© MyFANUC 2D5504D5BAC945D385F48627D4977F6C

G EXAMPLES OF RECOMMENDED POWER MAGNETICS CABINETS FOR SERVO AMPLIFIER INSTALLATION

Appendix G, "EXAMPLES OF RECOMMENDED POWER MAGNETICS CABINETS FOR SERVO AMPLIFIER INSTALLATION," consists of:

G.1 OVERVIEW 393
G.2 DESCRIPTIONS..... 393

G.1 OVERVIEW

In order to prevent the reliability of servo amplifiers from lowering because of their environments, it is important to seal up the power magnetics cabinet for the servo amplifiers and to give consideration to the environment of the inside of the cabinet.
This document presents cautions to be observed when designing power magnetics cabinets. They should be useful to those who are going to design power magnetics cabinets.

Subsection No.	Subsection heading	Summary
G-2-1	Power Magnetics Cabinet Seal-up	Explains how to seal up power magnetics cabinets. Protecting electronics circuits in servo amplifiers requires installing them in a sealed power magnetics cabinet.
G-2-2	Environments for Amplifier Heat Sink Sections	Explains how to reduce extraneous materials, such as cutting fluid, oil mist, and cutting chips, that may get on heat sink sections. Those extraneous materials can lower the cooling efficiency of the servo amplifiers (leading to a lowered amplifier performance) and reduce the operating life of electronics components (power semiconductor devices, fan motors, etc).
G-2-3	Environments for Amplifier Installation	Describes cautions regarding environments in which amplifiers are installed. An environment impeding heat dissipation can lower the performance of the amplifiers and shorten the operating life of electronics components (power semiconductor devices, fan motors, etc).

G.2 DESCRIPTIONS

G.2.1 Power Magnetics Cabinet Seal-up

This subsection explains how to seal up power magnetics cabinets.
In order to protect servo amplifier electronics circuits, it is necessary to house the servo amplifier in a sealed power magnetics cabinet.

<1> Keep the power magnetics cabinet free of any hole or gap through which external air can enter the cabinet (Fig. G.2.1 (a)). Do not make any hole in a cabinet wall panel; fitting air filters in holes cannot necessarily seal up the cabinet.
<2> Do not make any hole in the cabinet wall panel to install a fan motor in the hole (Fig. G.2.1 (a)). In order to release heat from the cabinet to the outside, use a device (such as a heat exchanger or cooler) having a structure that will not hamper seal-up of the cabinet.

© MyFANUC 2D5504D5BAC945D385F48627D4977F6C

<3> Keep all joining areas of cabinet wall panels free of gaps. If cabinet wall panels are partly bonded (for example, spot-welded), fill any gaps between bonded areas with sealant, for example, in order to seal up the cabinet.

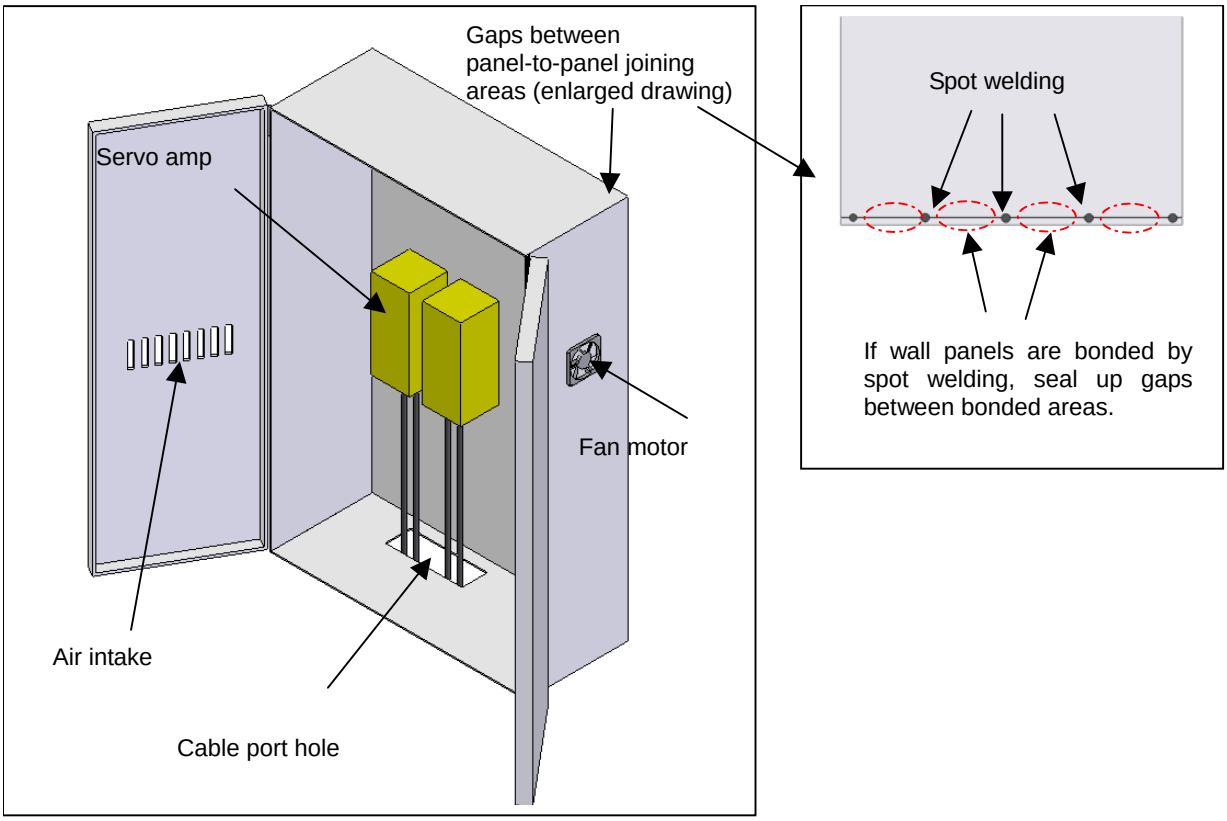

Fig. G.2.1 (a) Example of power magnetics cabinet not sealed well (example of poor work)

<4> Keep the cable port free of gaps (Fig. G.2.1 (a)).
(Concrete method)

1) Fit a conduit in the cable port hole (Fig. G.2.1 (b)).
2) If it is impossible to fit a conduit by any means, at least keep the cable port free of gaps. Shown below is an example of sealing by fitting sponge around cables (Fig. G.2.1 (c)). Do not allow cables to overlap with one on another; otherwise, gaps will occur around the cables. If there are many cables, separate them into several places.
3) If a cable duct is used as a cable port, be sure to seal up the duct. When leading cables into the duct, observe items 1) and 2).

Fig. G.2.1 (b) Fitting a conduit

Fig. G.2.1 (c) Sealing with sponge

<5> In order to prevent external air from entering through screw holes, observe the following:

© MyFANUC 2D5504D5BAC945D385F48627D4977F6C

1) Avoid making holes in cabinet wall panels as far as possible; for example, weld male screws (studs) to cabinet wall panels and use nuts with them (Fig. G.2.1 (d)). Using cap nuts and applying sealant around them is also effective (Fig. G.2.1 (e)). When using cap nuts, give consideration to the length of screws used with the cap nuts.
2) For the top panel in particular, be sure to observe item 1), because extraneous materials, such as cutting fluid, can easily get on the panel.
3) If a screw hole is left unused (open) because of no screw being inserted (for example, a grounding terminal screw hole left unused), be sure to block it up.

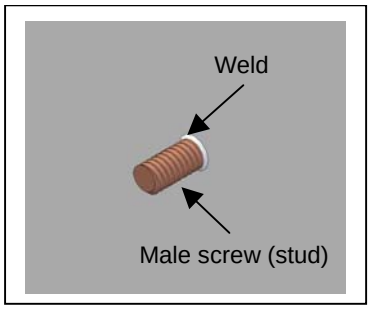

Fig .G.2.1 (d) Welding male screw

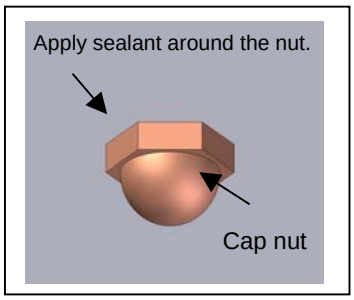

Fig. G.2.1 (e) Using cap nut

<6> Avoid allowing gaps in the portions where the door meets the door frame.
1) Seal the door, for example, by attaching gaskets to the inside edges of the door (Fig. G.2.1 (f)).
2) When attaching gaskets, do not leave gaps between the gaskets, especially those at the corner of the door (Fig. G.2.1 (f)).
3) If the cabinet has a double-door structure, use a gasket between the doors (Fig. G.2.1 (g)).
4) If a hole is made in a door panel to fit a component in it, seal the hole with a gasket to secure seal-up.
5) To seal up the cabinet, be sure to lock the door.

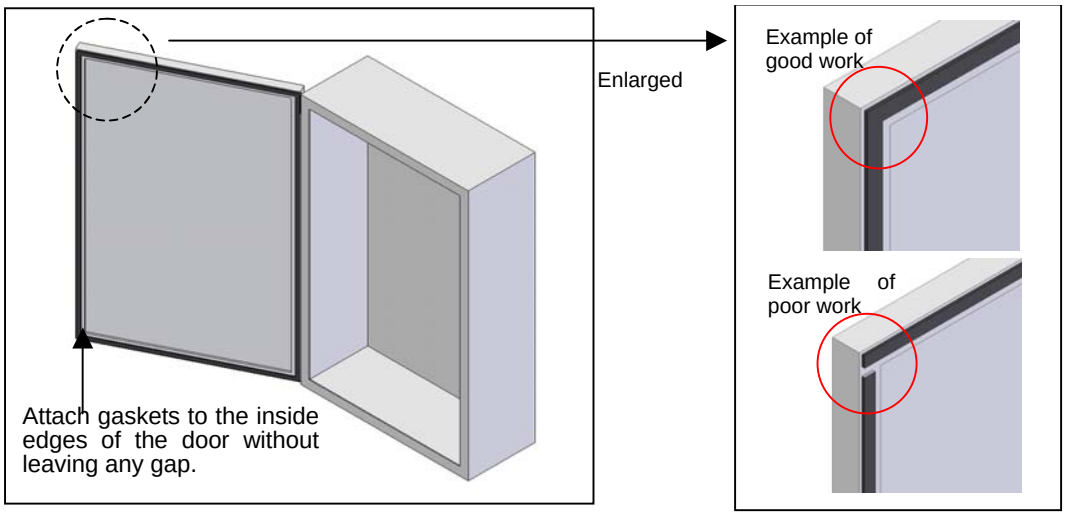

Fig. G.2.1 (f) Sealing doors

© MyFANUC 2D5504D5BAC945D385F48627D4977F6C

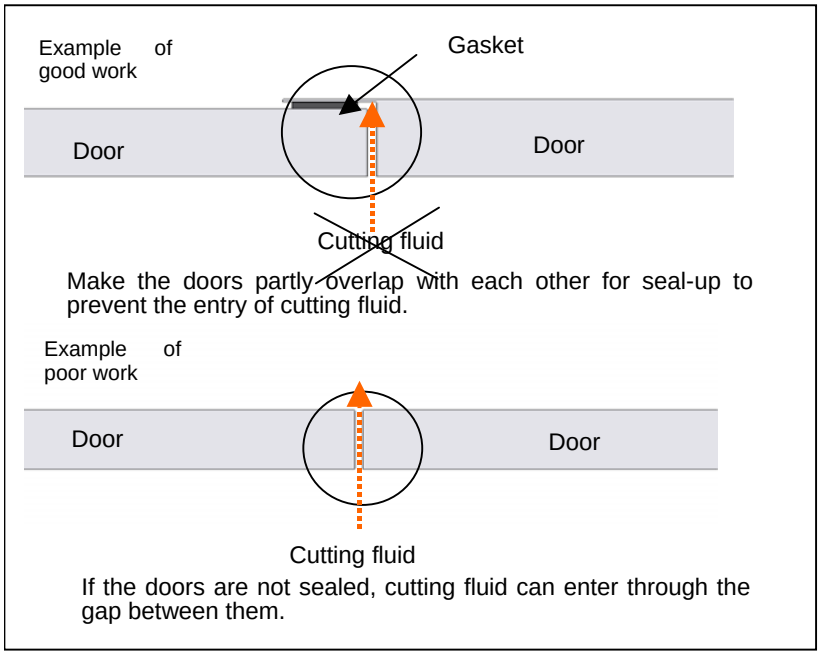

Fig. G.2.1 (g) Double-door structure seal-up (cross-section view of portion where the doors meet)

<7> Provide an underthroating at the portion where the power magnetics cabinet frame meets the door (Fig. G.2.1 (h)) to prevent the entry of cutting fluid.

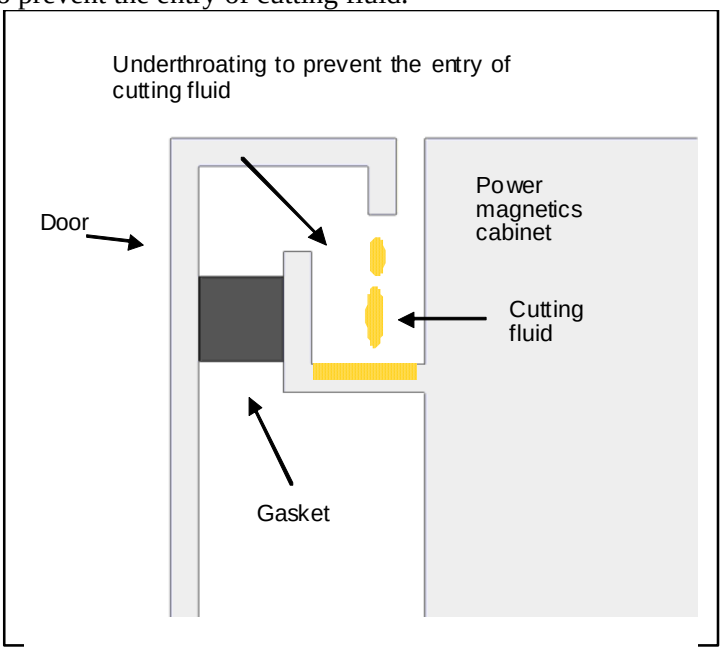

Fig. G.2.1 (h) Explanation of underthroating

© MyFANUC 2D5504D5BAC945D385F48627D4977F6C

<8> Lead cables into the power magnetics cabinet from below the cable port. This is intended to try to prevent cutting fluid entering the cabinet along cables (Fig. G.2.1 (i)).

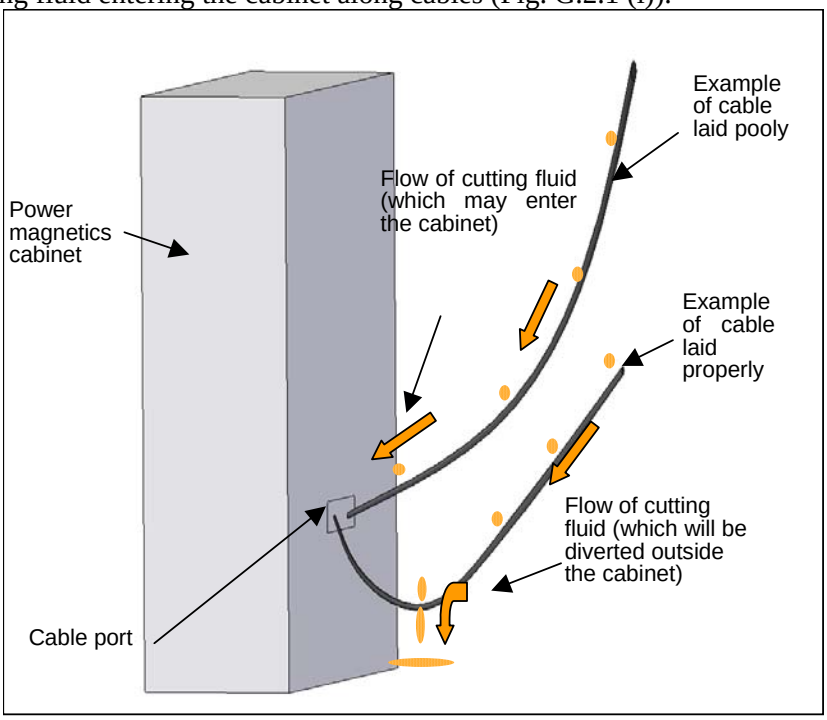

Fig. G.2.1 (i) How to lead in cables

<9> If holes are made in a power magnetics cabinet wall panel to install an amplifier, attach the supplied gaskets to the holes to seal up the cabinet. At each corner of the amplifier, make gaskets overlap with each other. If not (for example, gaskets are cut short), a gap may occur, leading to leakage (Fig. G.2.1 (j)).

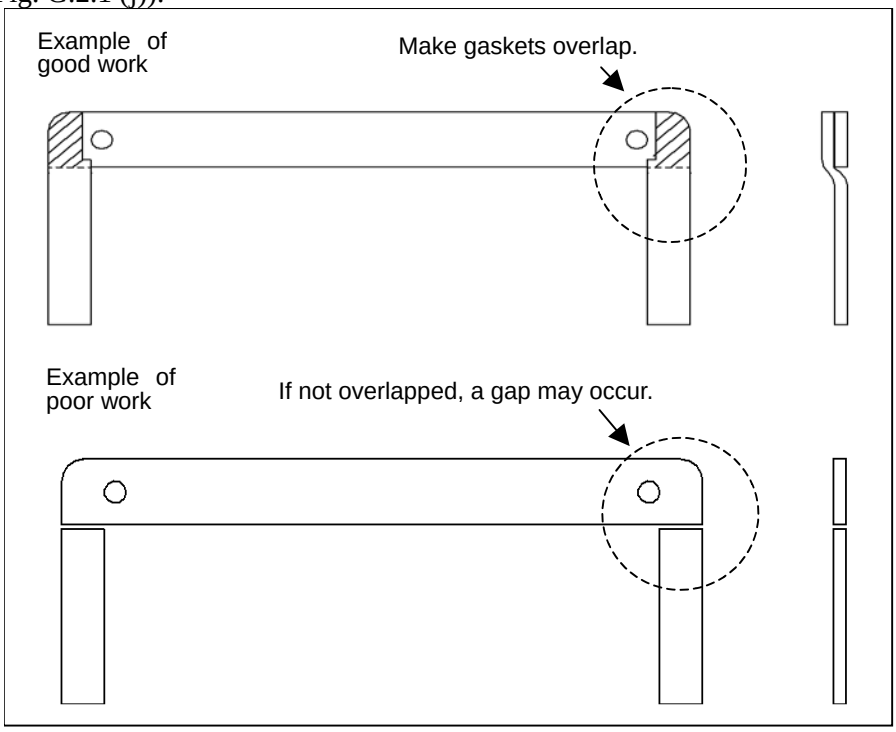

Fig. G.2.1 (j) How to attach gaskets

© MyFANUC 2D5504D5BAC945D385F48627D4977F6C

G.2.2 Environments for Amplifier Heat Sink Sections

This subsection explains how to prevent extraneous materials, such as cutting fluid, oil mist, and cutting chips, from getting on amplifier heat sink sections.
If extraneous materials, such as cutting fluid, oil mist, and cutting chips, get on servo amplifier heat sink sections or fan motors, they can lower the cooling efficiency (performance) of the servo amplifiers and shorten the operating life of electronics components (such as power semiconductor devices and fan motors).

<1> If a structure that takes in fresh air to cool a heat sink section is employed, be sure to enclose the heat sink section in a box having vent holes and cover the vent holes (both intake and discharge holes) with air filters to prevent the entry of cutting fluid mist (Fig. G.2.2 (a)).
Select vent holes and air filters designed to release heat properly by giving consideration to the heat release property of the structure. Replace air filters at regular intervals; dirty air filters can lower the cooling efficiency.
Do not provide vent holes in the top panel; cutting fluid would accumulate in the air filter of any vent hole in the top panel and later drop into the box.

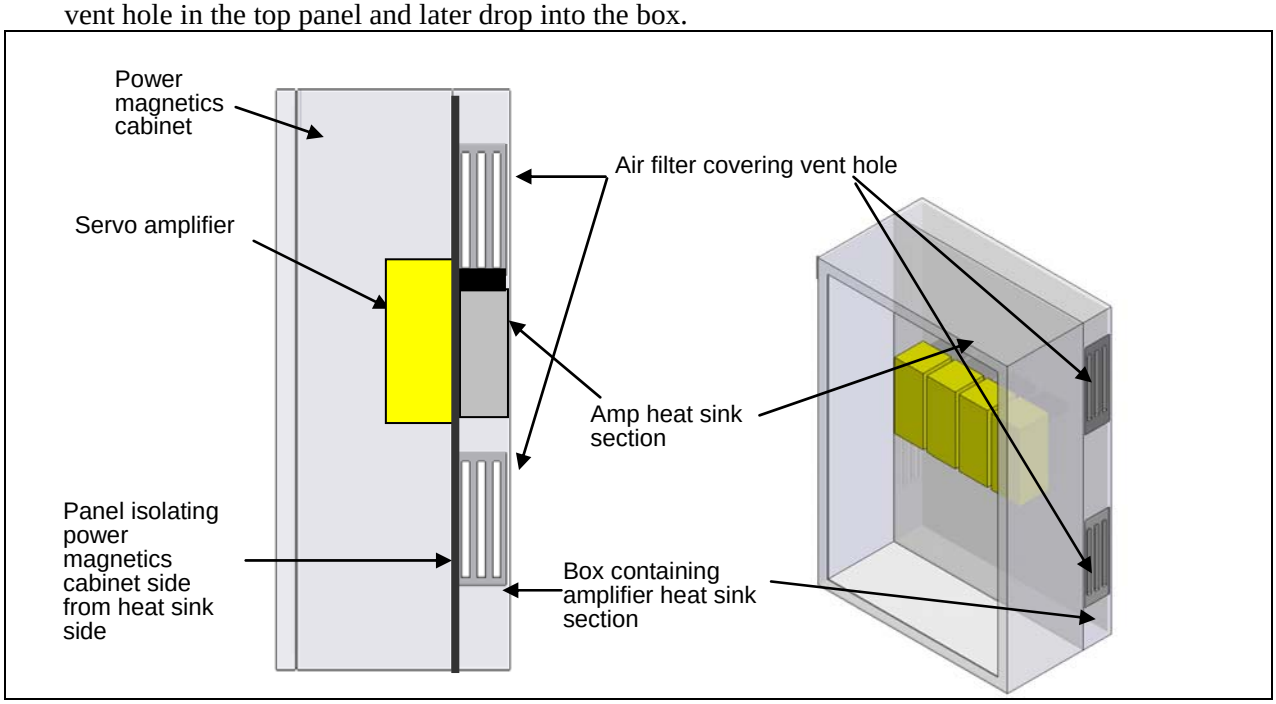

Fig. G.2.2 (a) Air filter locations

<2> Be sure to isolate the machining area from the amplifier heat sink section (Fig. G.2.2 (b)); if cutting fluid or cutting chips get in direct contact with an amplifier heat sink section, its heat release property gets lowered (Fig. G.2.2 (c)).

© MyFANUC 2D5504D5BAC945D385F48627D4977F6C

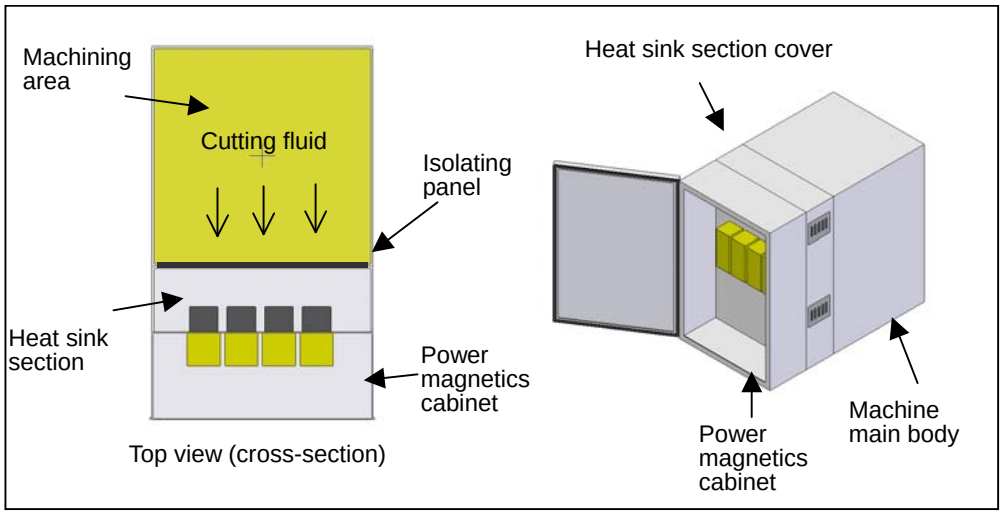

Fig. G.2.2 (b) Machining area isolated from amp heat sink section (example of good work)

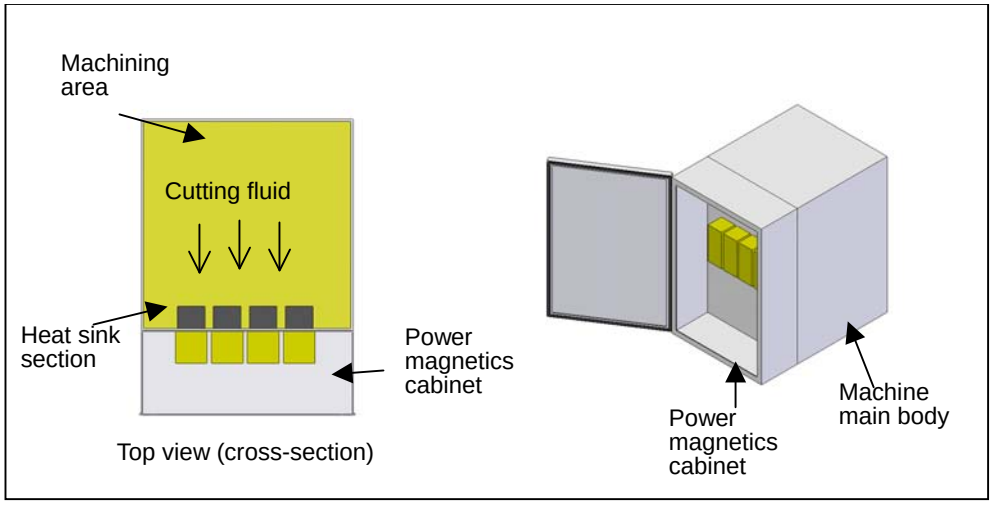

Fig. G.2.2 (c) Machining area and amp heat sink section sharing the same place (example of poor work)

G.2.3 Environments for Amplifier Installation

This subsection describes cautions to be observed with regard to environments for amplifier installation.
If the heat release property of the heat sink section of a servo amplifier gets lowered because of the servo amplifier installation environment being improper, it is likely that the amplifier performance may be lowered and the operating life of electronics components (such as power semiconductor devices and fan motors) may be shortened.

<1> Mounting heat exchangers

If the temperature inside the power magnetics cabinet is at least 10°C higher than the ambient temperature, use heat exchangers to cool the inside of the cabinet.

*1: When attaching a heat exchanger, fit gaskets around it to seal up the cabinet.

*2: Prevent air from heat exchangers from flowing directly onto amplifiers or electronics products; otherwise, it is likely that any dust and dirt in the cabinet may be blown to them.

<2> Installing a cooling fan for agitating air inside

Installing a cooling fan inside the power magnetics cabinet can homogenize the temperature and increase the heat release efficiency of the power magnetics cabinet (Fig. G.2.3 (a)).

*1: Do not place any cable that may hamper air agitation near the cooling fan air outlet.

*2: Prevent air blowing from a cooling fan directly onto amplifiers or electronics products; otherwise, it is likely that dust and dirt in the cabinet may be blown to them.

© MyFANUC 2D5504D5BAC945D385F48627D4977F6C

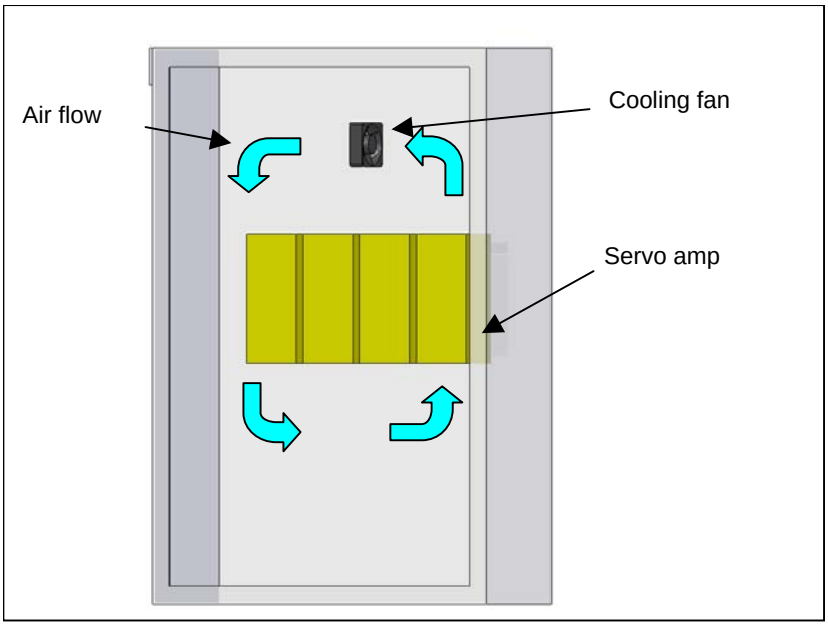

Fig. G.2.3 (a) Example of installing motor-driven fan for agitating air inside

<3> Using dehumidifying agent inside the power magnetics cabinet

Placing dehumidifying agent, such as dehumidifying sheets, in the power magnetics cabinet can prevent the reliability of servo amplifiers from lowering.

<4> How to install servo amplifiers

It is assumed that, when servo amplifiers are installed, they will be arranged in a row. If you cannot help but arrange them in a column, observe the following (Fig. G.2.3 (b)):

*1: Keep cooling air for the lower amplifier from flowing directly onto the upper amplifier; otherwise, the heat release property of the upper amplifier gets lowered, being likely to result in the upper amplifier failing to deliver its rated output.

*2: Keep the upper amplifier from blocking up the cooling air flow for the lower amplifier.

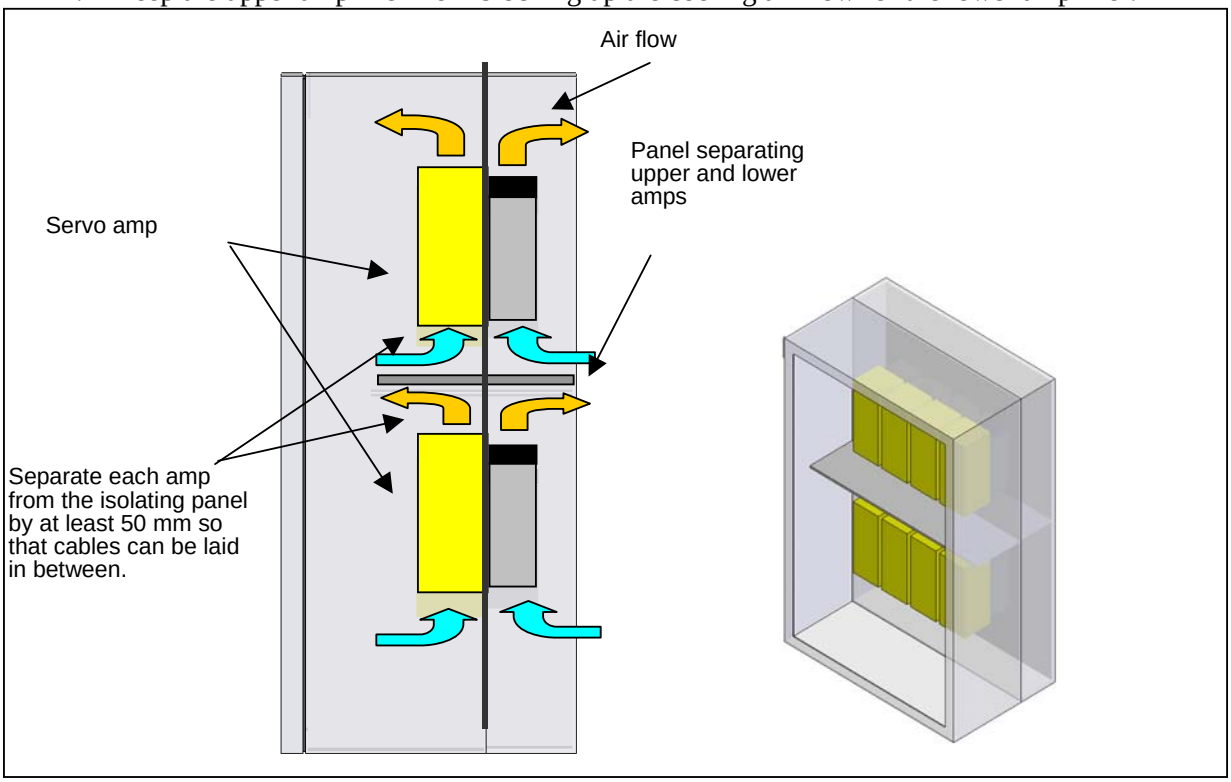

Fig. G.2.3 (b) Example of arranging amps in a column

© MyFANUC 2D5504D5BAC945D385F48627D4977F6C

H DC LINK TERMINAL BLOCK SECTION PROTECTIVE COVER

Appendix H, “DC LINK TERMINAL BLOCK SECTION PROTECTIVE COVER,” consists of:

H.1 OVERVIEW 399
H.2 HOW TO MOUNT 400

H.1 OVERVIEW

Protective covers are available for the DC link terminal block section of the α*i* series servo amplifier unit. They can be used if necessary.

Ordering number: A06B-6110-K502
Quantity: 1 (4 required)

© MyFANUC 2D5504D5BAC945D385F48627D4977F6C

H.2 HOW TO MOUNT

Mount protective covers to the DC link terminal block as shown below.
Screw each protective cover with a tightening torqure of 3.5 to 4.5 Nm.

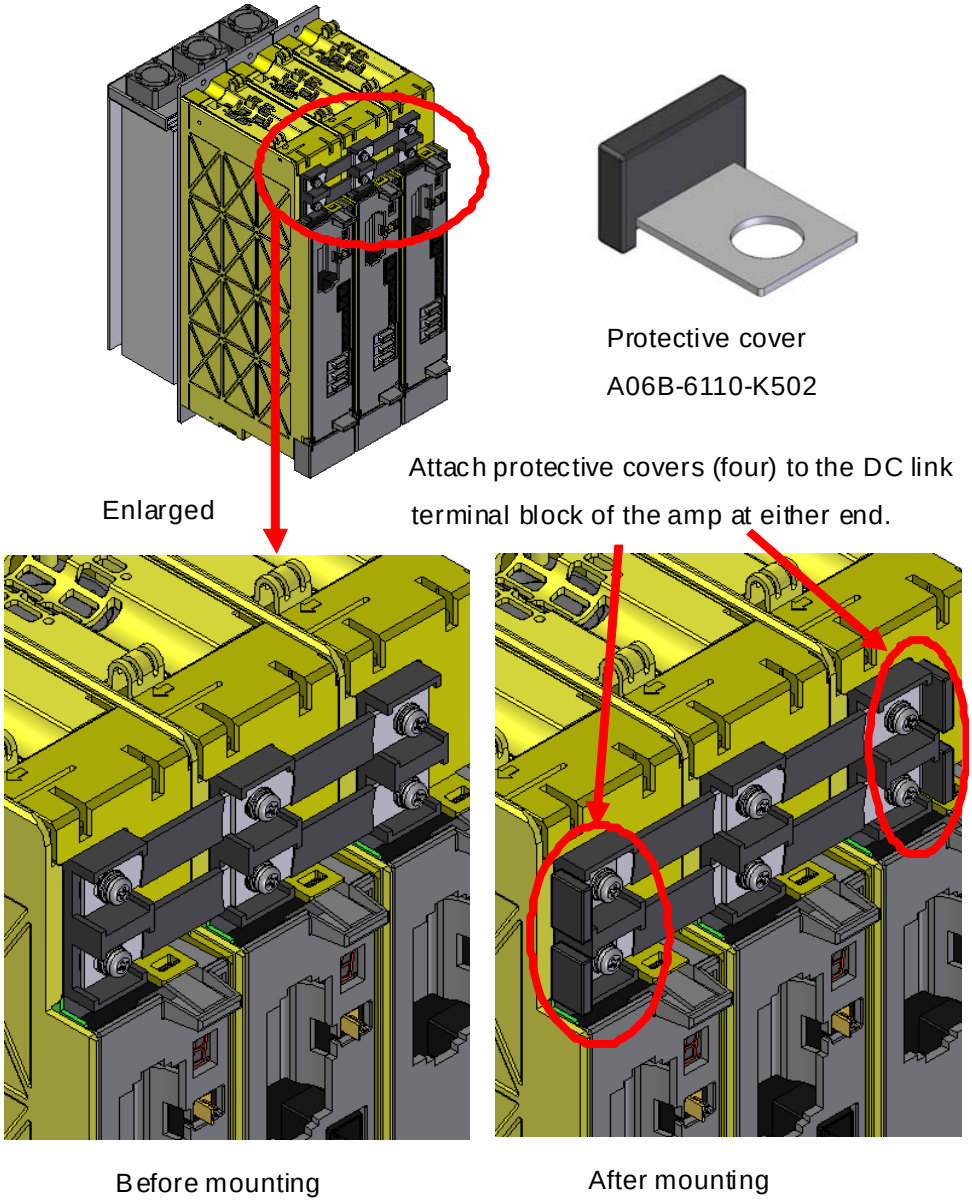

© MyFANUC 2D5504D5BAC945D385F48627D4977F6C

I POWER FAILURE DETECTION FUNCTION

Appendix I, “POWER FAILURE DETECTION FUNCTION,” consists of:

I.1 OVERVIEW 403
I.2 POWER FAILURE DETECTION SPECIFICATION 403
I.3 APPLICATION TO PREVENTION OF VERTICAL AXES FROM FALLING AT POWER FAILURE 405
I.4 USE IN COMBINATION WITH THE DUAL CHECK SAFETY FUNCTION 413

I.1 OVERVIEW

The upgraded version of αi servo amplifier incorporates a power failure detection function.
This function can prevent a vertical axis from falling by applying the brake to the vertical axis promptly as directed by a power failure detection signal output from the αi PS after a power failure.

I.2 POWER FAILURE DETECTION SPECIFICATION

- The following voltage drops are detected as power failures:

(1) Drop of a 3-phase voltage (L1, L2, or L3) input to the main circuitry of the αi PS
(2) DC link voltage drop
(3) Drop of a voltage (between pins 1 and 2 of connector CX1A) input to the control power supply of the αi PS

- Power failure signals are output through a photo MOS relay (Fig. I.2 (a)).
- There are two power failure detection output channels, which operate the same way.

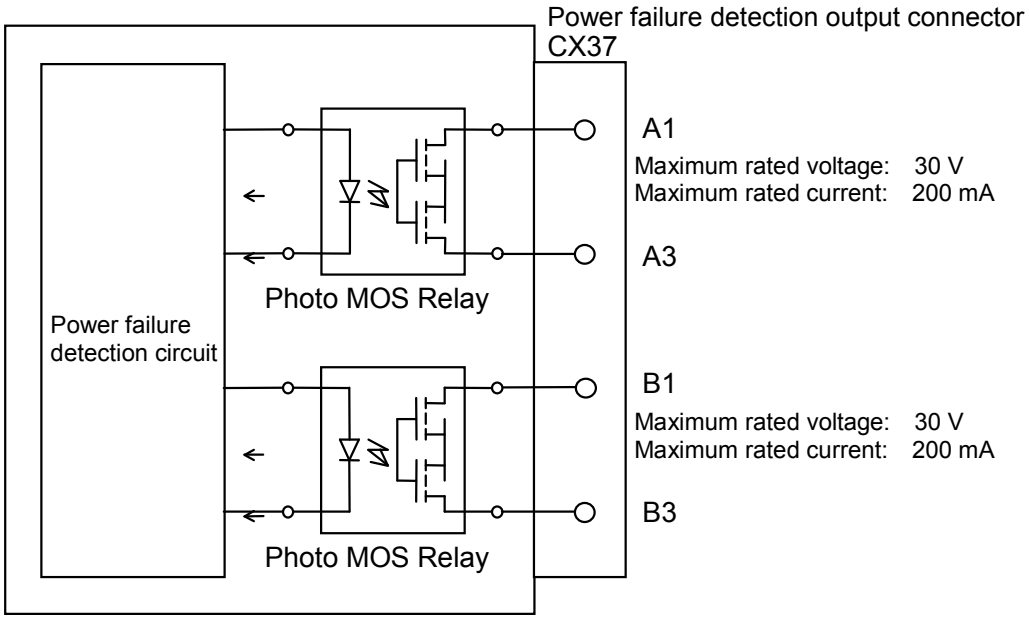

Connector specification:	AMP connector
Housing :	1-1318119-3
Contact :	1318107-1

Fig. I.2 (a) Output circuit

© MyFANUC 2D5504D5BAC945D385F48627D4977F6C

- The power failure detection output is closed normally and becomes open at power failure (Fig. I.2 (b)).
- The power failure detection output becomes open 10 msec after a power failure occurs. It becomes closed 15 msec after the power is resumed (Fig. I.2 (b)).
- If an alarm condition occurs in the αi PS, the power failure detection output becomes open (in the same condition as for the detection of a power failure) (Fig. I.2 (b)).

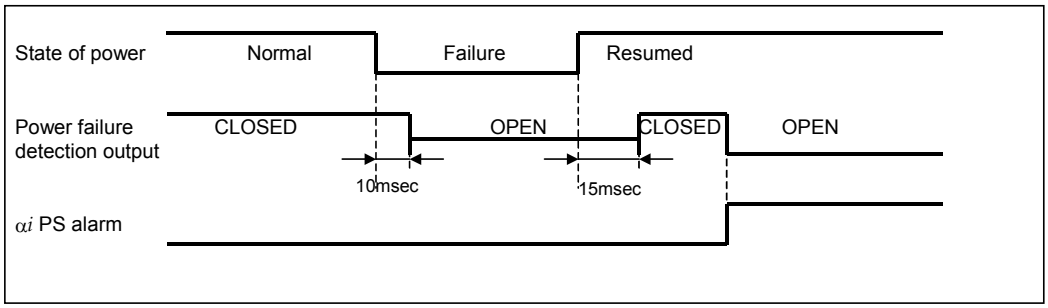

Fig. I.2 (b) Power failure detection output

- The power failure detection output becomes closed within 1.5 sec after the control power (200 VAC) is applied to the αi PS, enabling power failures to be detected after the αi PS becomes ready (the LED display on the αi PS becomes "0").
- If the αi PS is not ready (the LED display on the αi PS is "-"), the power failure detection output remains closed.

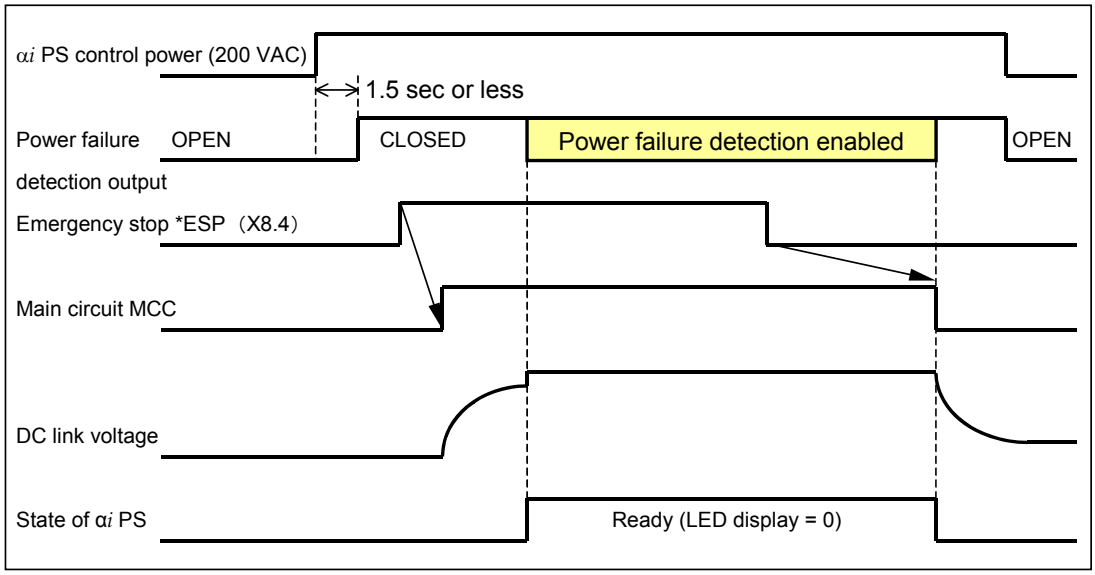

Fig. I.2 (c) Conditions enabling power failure detection

© MyFANUC 2D5504D5BAC945D385F48627D4977F6C

I.3 APPLICATION TO PREVENTION OF VERTICAL AXES FROM FALLING AT POWER FAILURE

Preventing a vertical axis from falling at power failure requires applying the brake to the vertical axis before its motor is deenergized. To put it another way, it is necessary to perform the following:

(1) Apply the brake promptly after the occurrence of a power failure.
(2) Keep the vertical axis motor energized since the occurrence of the power failure until the brake works.

Timing chart

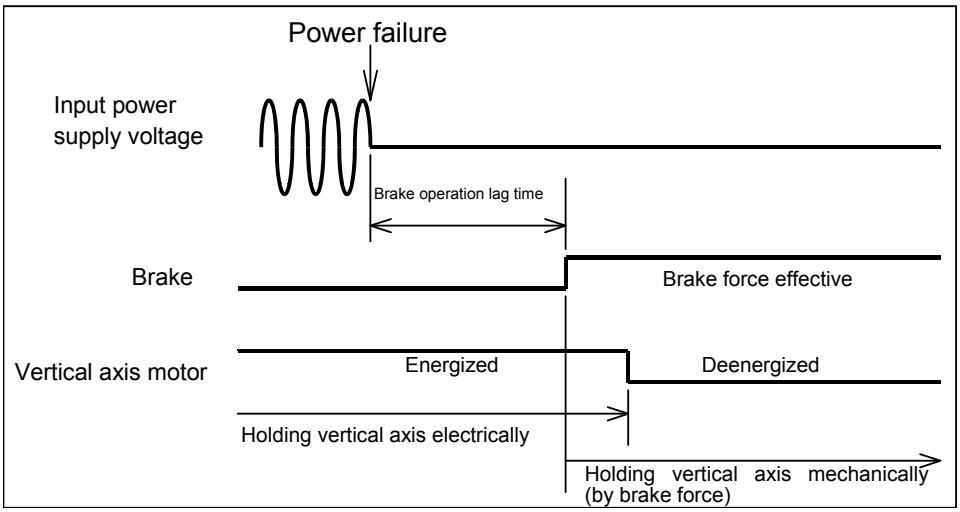

I.3.1 Procedure

(1) Configure a brake circuit that operates promptly after the occurrence of a power failure (Subsection I.3.2).
(2) Keep the vertical axis motor energized until the brake comes into operation (Subsection I. 3. 3).
- Check the control power supply hold time.
- Set parameters.

(3) Confirm the effect of the measure taken (Subsection I.3.5).

© MyFANUC 2D5504D5BAC945D385F48627D4977F6C

I.3.2 Brake Circuit

The emergency stop signal (*ESP) and the brake operation relay must be operated together on a power failure detection output from the αi PS.
Configure a brake circuit as shown below.

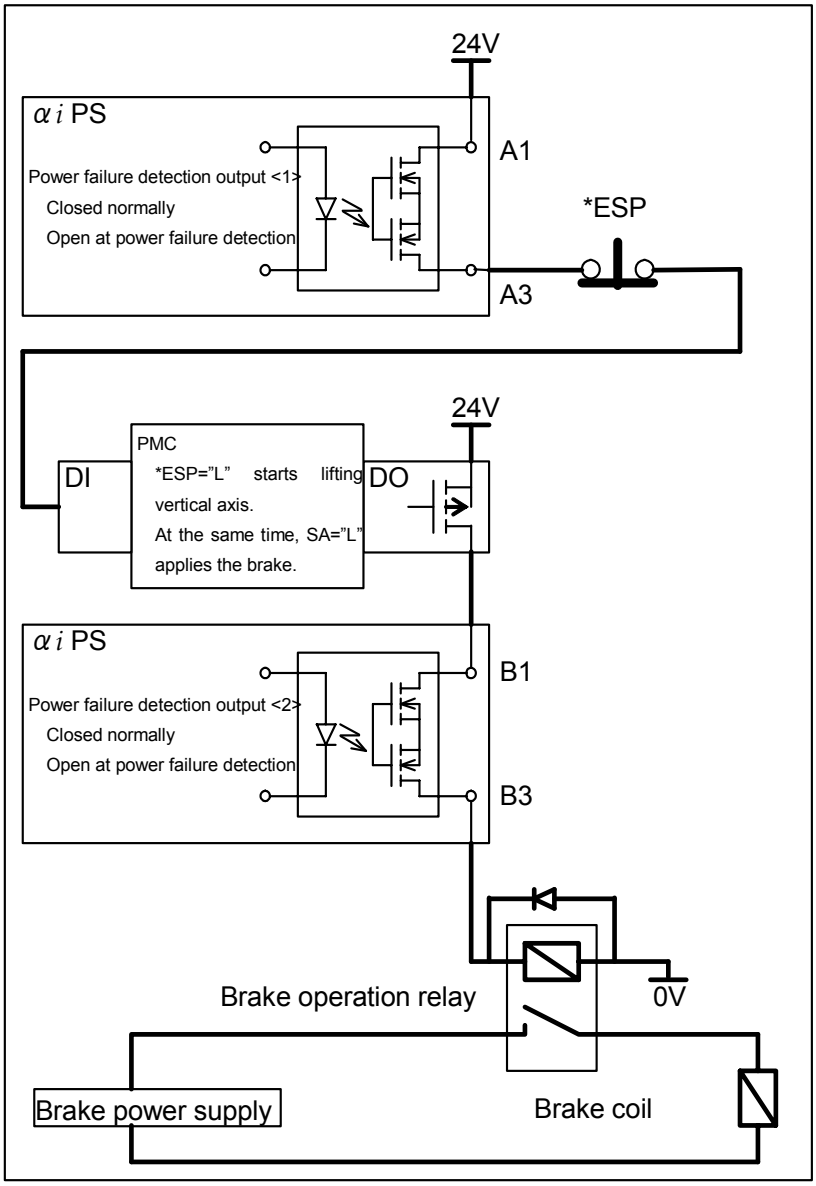

Refer to "FANUC AC SERVO MOTOR αi series Descriptions" (B-65262EN) for explanations about the specification of the brake operation relay contacts. Connect a surge suppression element (such as a diode) in parallel to the relay coil in order to suppress voltage surges that may occur when the relay is deenergized.

© MyFANUC 2D5504D5BAC945D385F48627D4977F6C

Time since the occurrence of a power failure until the brake operates

The “brake operation lag time” since the occurrence of a power failure is the sum of the “power failure detection delay time,” “relay release time,” and “brake response time.”

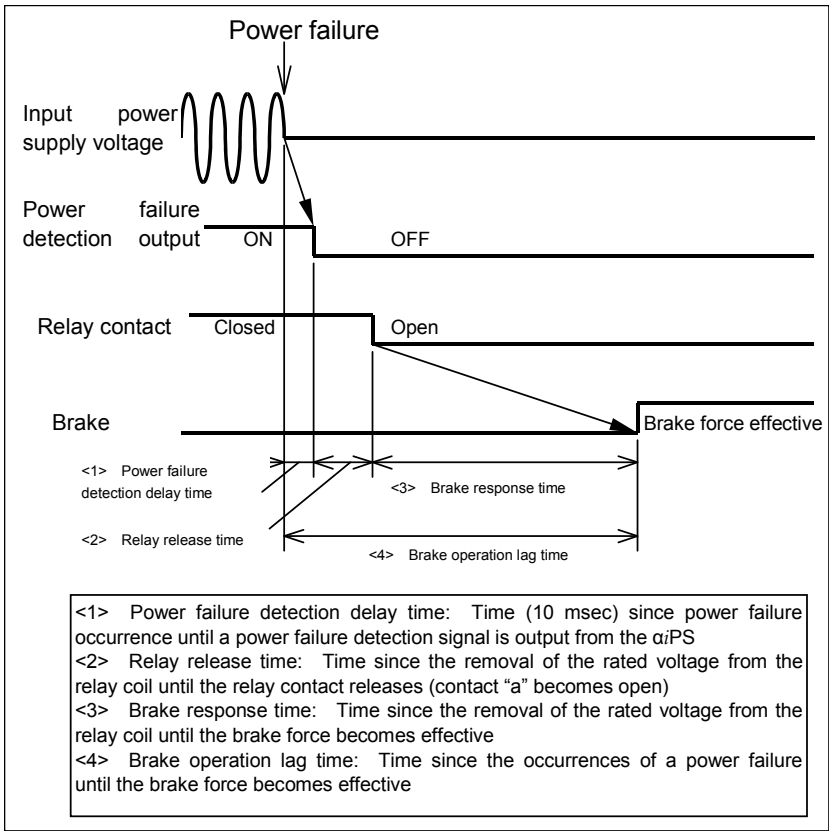

Relay release time

Select a relay with a short contact release time.

Example:

Omron G2R (coil voltage of 24 VDC, with a built-in diode): Release time of 20 msec or less

Brake response time

Listed below are the specifications of the built-in brake of each motor model.

Motor model	αi F1, αi F2 αiS2, αiS3 αiS2HV αiS3HV	αi F4, αi F8 αiS8, αiS12 βi S4, βi S 8 αi F4HV, αi F8HV αiS8HV, αiS12HV	αi F12 to αi F40 αiS22 to αiS50 βi S 12 to βi S 30 αi F12HV, αi F20HV αiS22HV, αiS50HV	αiS100 αiS200 αiS100HV αiS200HV
Response time (max)	10msec	30msec	30msec	60msec

Brake operation lag time

Given below is an example of calculating the time that elapses since the occurrence of a power failure until the brake operates.

Conditions

<1> Power failure detection delay time → 10 msec

<2> Relay (Omron G2R) release time → 20 msec

<3> Brake (incorporated in the αi F8) response time → 30 msec

Result 10 msec + 20 msec + 30 msec = 60 msec

© MyFANUC 2D5504D5BAC945D385F48627D4977F6C

I.3.3 Method for Keeping Vertical Axis Motors Energized

The following conditions are required to keep a vertical axis motor energized after the occurrence of a power failure.

(1) The control power supply for the NC and amplifier remains normal.
(2) Parameters for enabling brake control are set.

Keeping control power on

Keeping a vertical axis motor energized even after the occurrence of a power failure requires keeping the control power for the NC and amplifier on for longer than the "brake operation lag time."

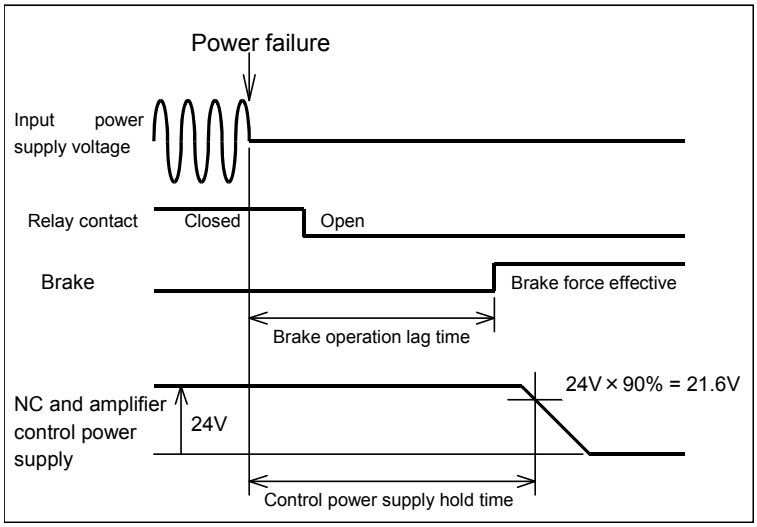

* See Subsection 5.2.2 for descriptions of the brake operation lag time.

(1) NC control power supply
Check the specification of an external power supply for supplying a control power voltage of 24 V.
The hold time of external power supplies varies depending on their load ratio (ratio of load current to power supply current rating). The lower the load ratio, the longer is the hold time after power failure occurrence. Using a power supply having a somewhat high current rating compared with the load current is effective in keeping the hold time long.
If a switching power supply with a 200 VAC single-phase input is used as a control power supply for the NC, use the same power supply voltage phase as for the control power inputs (pins 1 and 2 of connector CX1A) of the αi PS so that a drop in the 200 VAC control power supply input can be detected promptly.

(2) Amplifier control power supply
The hold time of the amplifier control power supply is determined according to how many αi SP and αi SV units are connected to the αi PS.
The rough hold time of the amplifier control power supply can be determined from the sum (N) of the constants n (Table I.3.3 (a)) for each αi SP and αi SV connected to the αi PS according to Table I.3.3 (b).

Example: Assume the following SP and SV units are connected to one PS.
One αi SP 22 unit/one αi SV 360 unit/one αi SV 160 unit/one αi SV 80/80 unit
(According to Table I.3.3 (a))
n = 1 n = 1.5 n = 1 n = 1.5
N = 1 × 1 unit + 1.5 × 1 unit + 1 × 1 unit + 1.5 × 1 unit = 5
→ Hold time 40 msec (according to Table I.3.3 (b))

© MyFANUC 2D5504D5BAC945D385F48627D4977F6C

Table I.3.3 (a) Constant n for SP/SV

	Amplifier model	n
SP	αi SP 2.2 to 30, 5.5HV to 45HV (60 mm-wide/90 mm-wide/150 mm-wide type)	1
	αi SP 45, 55, 75HV, 100HV (300 mm-wide type)	1.5
SV (1 axis)	αi SV 20 to 160, 10HV to 80HV (60 mm-wide/90 mm-wide type)	1
	αi SV 360, 180HV (150 mm-wide type)	1.5
	αi SV 360HV, 540HV (300 mm-wide type)	2
SV (2 axes)	All models	1.5
SV (3 axes)	All models	2

Table I.3.3 (b) Relationships between the amplifier control power supply hold time and N (sum of constants n)

Amplifier control power supply hold time	N
20 msec	8
30 msec	6.5
40 msec	5
50 msec	4
60 msec	3
70 msec	2

* The input voltage is 200 VAC.

Confirmation on the real machine

The amplifier control power supply hold time obtained using the expression given above is a mere rough estimate. The exact hold time of the amplifier and NC control power supplies must be confirmed on the real machine.
See Subsection 5.2.5 for explanations about a confirmation method.

Measure for an insufficient amplifier control power supply hold time

(1) If the hold time of the amplifier control power supply is insufficient (shorter than the brake operation lag time), it can be prolonged by supplying control power to some of the αi SP and αi SV units from the outside to reduce the load of the power supply in the αi PS. See Subsection I.3.6 for explanations about how to supply control power to αi SP or αi SV units from the outside.

(2) If the hold time of the NC and amplifier control power supplies is insufficient and it is difficult to add control power supplies or increase the capacity of existing control power supplies, connecting an UPS (uninterruptible power supply unit) can prolong the hold time.

Parameter setting

Set parameters for brake control.

(1) Brake control bit (BRKC): To be set to enable brake control.
(2) Brake control timer: To be set to a value not less than the brake operation lag time (100 msec or so).
(3) Emergency stop timer incorporated in the αi amplifier (ESPTM1, ESPTM0): To be set to a value longer than the brake control timer.

CNC	Parameter No.			
	BRKC	Brake control timer	ESPTM1	ESPTM0
FS15i	No.1883 #6	No.1976	No.1750 #6	No.1750 #5
FS16i, 18i, 21i, 30i, 31i, 32i, 0i	No.2005 #6	No.2083	No.2210 #6	No.2210 #5
Example setting	1	100	0	1

© MyFANUC 2D5504D5BAC945D385F48627D4977F6C

Refer to the "FANUC AC SERVO MOTOR αi series Parameter Manual" (B-65270EN) for detailed descriptions.

NOTE
If a multiaxis amplifier (such as a 2- or 3-axis amplifier) is used for vertical axes, set the above parameters for all axes on the multiaxis amplifier.

I.3.4 Cautions

(1) If a power failure occurs during heavy cutting, it is likely that it may be impossible to prevent a vertical axis from falling. This is because a DC link low voltage alarm occurs before the brake operates. Preventing vertical axes from falling in these situations requires connecting a power failure backup module to submodule C.

(2) Even if a measure is taken to prevent a vertical axis from falling, it falls through a distance corresponding to the backlash of the brake (for a ball screw pitch of 10 mm, up to 20 μm). If this distance cannot be ignored, the lifting function against gravity at emergency stop can be used to lift the vertical axis through that distance before a complete stop. Refer to the parameter manual (B-65270EN) for detailed descriptions of this function and parameter setting.

(3) If the connected drive power supply is a 200 VAC dynamic brake module DBM (A06B-6079-H401 or A06B-6069-H300), an UPS (uninterruptible power supply unit) having a 200 VAC output is needed to drive the DBM. Connect the servo amplifier connector CX1A with an UPS having the following specifications:
- Output voltage: 200 VAC single-phase sine wave
- Output frequency: 50 or 60 Hz
- Changeover time: No instantaneous break
- Output hold time: Brake operation lag time (see Subsection 4.2.2)
- Rated output (continuous rating): Number of DBM units × 22 [VA]
- Overload strength (20 msec): Number of DBM units × 220 [VA]

If this UPS is used also as an amplifier control power supply (input to the CX1A of the PS), it must have an output rating (continuous rating) of 700 VA. If a DBM (A06B-6079-H403) driven on 24 VDC is used and the 24 VDC power supply can remain on for the brake operation lag time or longer, no UPS is needed.

I.3.5 Confirming Effect

The following procedure can be used to check whether a measure taken to prevent a vertical axis from falling is effective.
(1) Keep the vertical axis at a halt, and write down its absolute coordinates.
(2) Turn off the machine's main circuit breaker to cause a power failure condition.
(3) Restart the machine, and check the absolute coordinates of the vertical axis to see whether it has fallen.
* The vertical axis will fall through a distance corresponding to the backlash of the brake (for a ball screw pitch of 10 mm, up to 20 μm).

[Measure for a vertical axis falling when the circuit breaker is turned off]
If a vertical axis falls when the circuit breaker is turned off, observe the waveforms described below to find causes.
(1) Brake coil voltage → Observe the voltage across the brake coil.
(2) Amplifier control power supply voltage → Observe the voltages at pins A1 (24 V) and A2 (0 V) of connector CXA2B of the last amplifier.

© MyFANUC 2D5504D5BAC945D385F48627D4977F6C

(3) Control power supply voltage supplied to the NC → Observe the output voltage of the 24 V power supply for the NC.

(4) Input power source voltage → Observe the voltage of the input AC power source, using an insulated probe.

If the control power of the amplifier or NC drops before the brake operates, take an action stated below and see how it works.

- Exchange the power failure detection relay for operating the brake coil (have another look at the specification of the release time).
- Prolong the hold time of the control power supplies by increasing their capacity (reducing their load ratio).

Shown below are examples of waveforms observed when a measure taken to prevent a vertical axis from falling works normally.

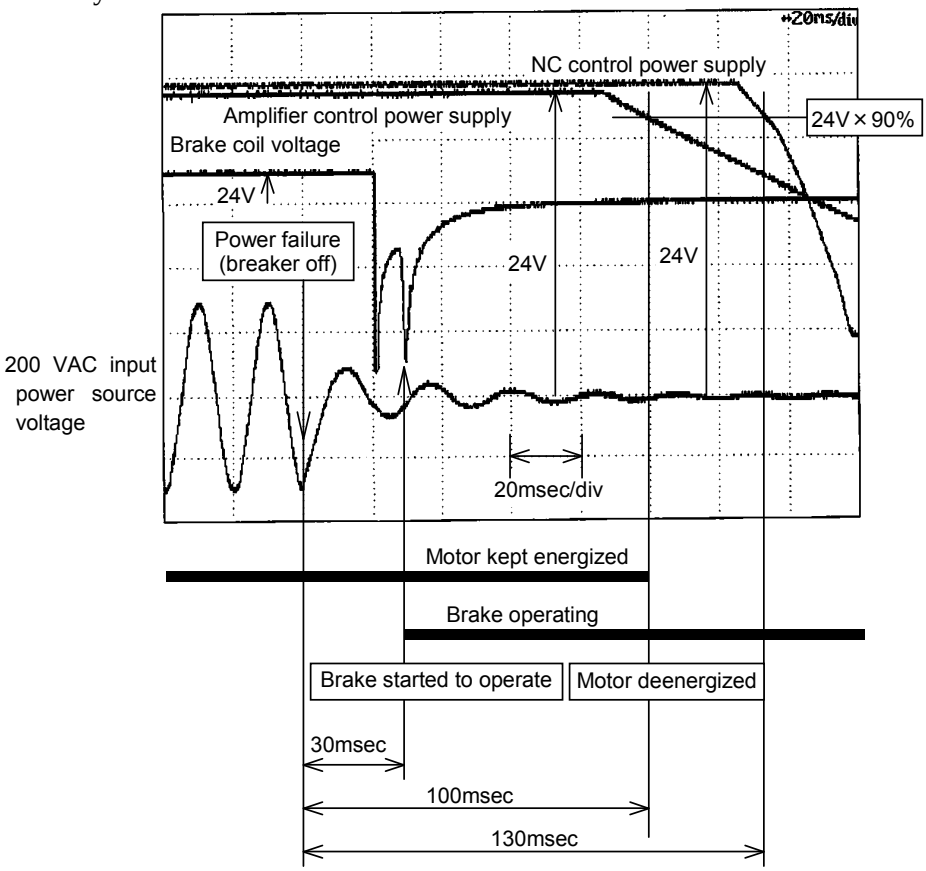

© MyFANUC 2D5504D5BAC945D385F48627D4977F6C

I.3.6 Method for Supplying External Power to the Amplifier

Connection diagram

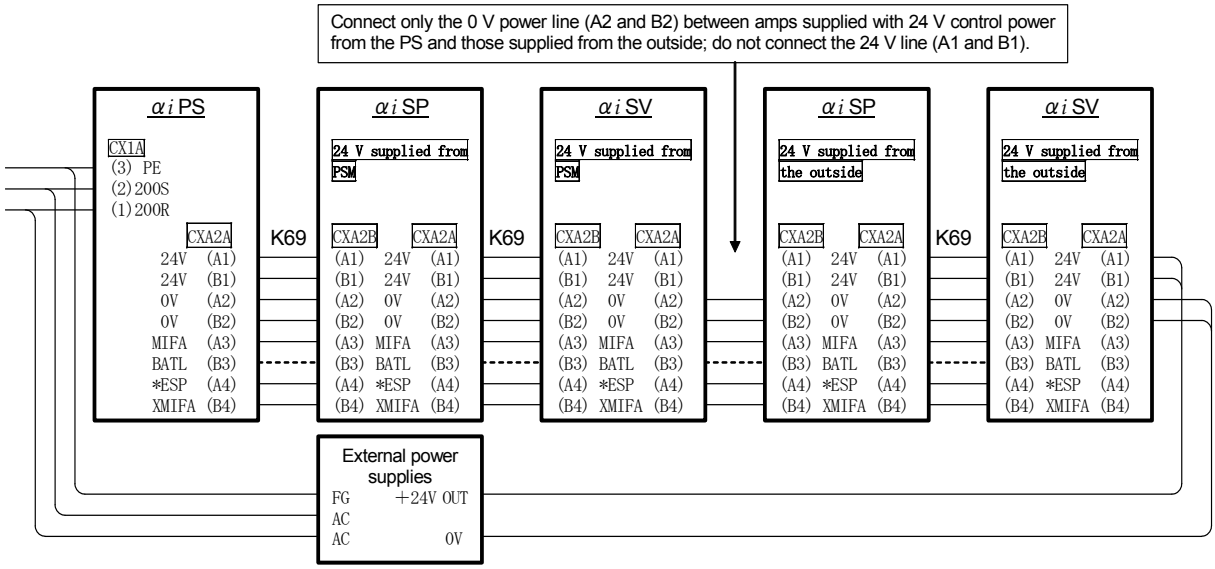

Power supply capacity

(1) αi SV (3-axes), αi SV 360, 180HV (150 mm-wide SV), αi SP 45, 55, 75HV, 100HV (300 mm-wide SP) → 1.5A

(2) αi SV 360HV, 540HV (300 mm-wide SV) → 2A

(3) Others → 1A

Timing to turn off power supplies

Configure connections of the αi PS, external power supplies A, and B (see the figure below) so that they will be turned on simultaneously and their output voltages will satisfy the timing requirements shown on the following timing chart. Generally, turning on these power supplies simultaneously would satisfy the timing requirements. If a timing requirement is not satisfied, however, attach a delay timer to the power line in order to satisfy it.

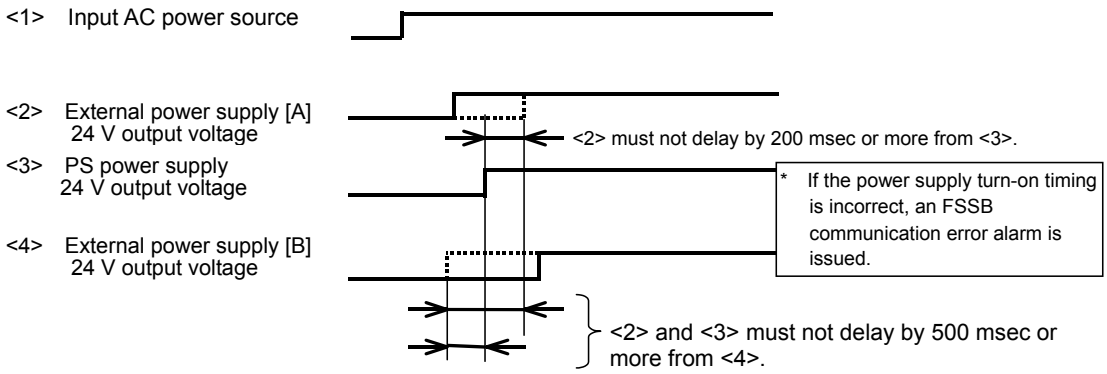

© MyFANUC 2D5504D5BAC945D385F48627D4977F6C

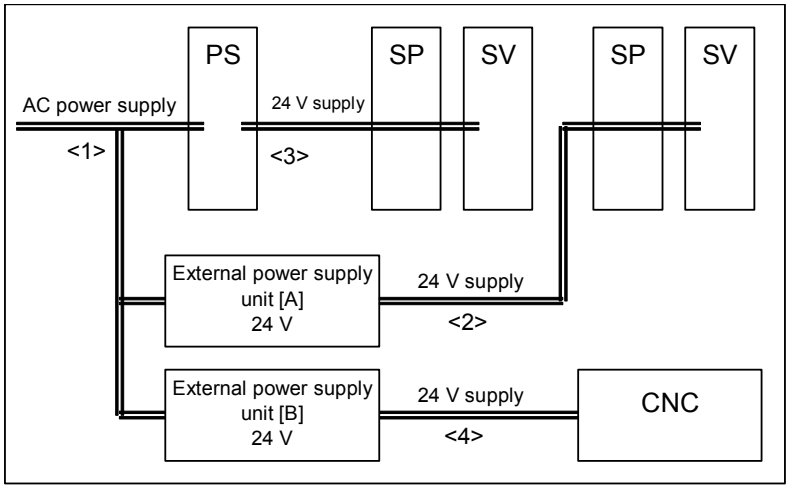

⚠ CAUTION

1 If an external power supply (24 V) is shared between a servo amplifier and another unit, any fluctuation in the load current of the non-servo amplifier unit affects the 24 V voltage adversely, leading to a possible servo amplifier or CNC alarm.

2 Keep voltage fluctuations of the external power supply (24 V) within a tolerable range (24 V ±10%) any time (including momentarily). No 24 V power can be supplied to the PS from the outside. Be sure to supply 200 VAC to the PS (through connector CX1A).

I.4 USE IN COMBINATION WITH THE DUAL CHECK SAFETY FUNCTION

When using the following functions at the same time, add a relay between A1 and A3 of the connector (CX37) of the α*i*PS.

- When using the dual check safety function
- When using α*i*PS power failure detection output for the function of preventing vertical axes from falling at power failure

© MyFANUC 2D5504D5BAC945D385F48627D4977F6C

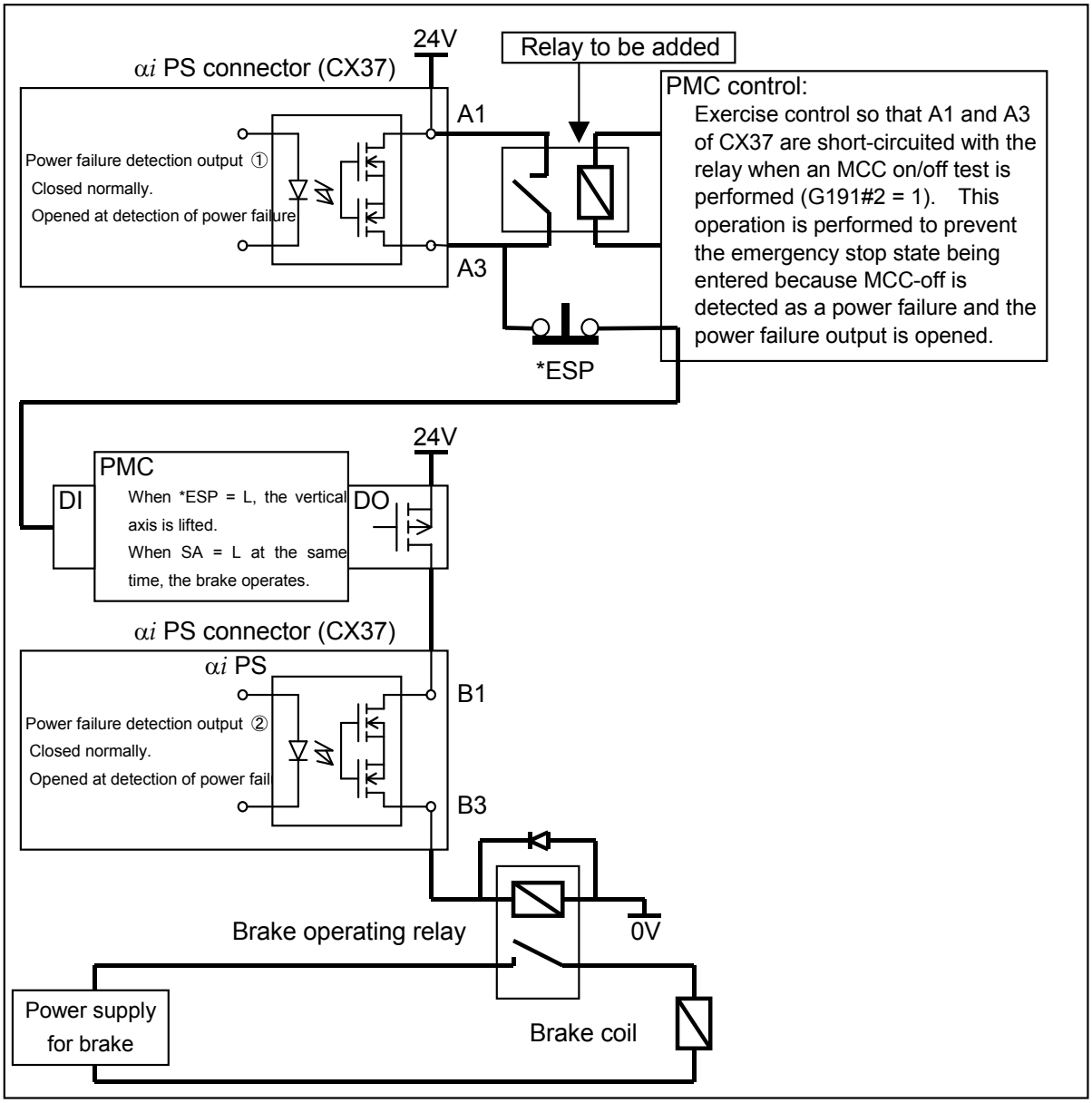

© MyFANUC 2D5504D5BAC945D385F48627D4977F6C

J SENSOR (OLD SPECIFICATIONS)

Appendix J, "SENSOR (OLD SPECIFICATIONS)," consists of the following sections:

J.1 SENSOR FOR THE SYNCHRONOUS BUILT-IN SERVO MOTOR AND SEPARATE SENSOR 415
J.2 SENSOR FOR THE SPINDLE..... 428

J.1 SENSOR FOR THE SYNCHRONOUS BUILT-IN SERVO MOTOR AND SEPARATE SENSOR

J.1.1 Absolute αiCZ Sensor (Serial Output, A860-2142-T***)

The absolute αiCZ SENSOR is used as an angular displacement sensor for the SYNCHRONOUS BUILT-IN SERVO MOTOR DiS series or as a separate sensor. For this sensor, the FANUC serial interface is used. This sensor can be directly connected to the αi series servo amplifier or the separate detection interface unit.

Names and specification numbers

Name	Specification number	Resolution [rotation]	Repetitive positioning precision (Typ.)	Absolute precision (Typ.)	Remarks				
					Number of teeth	Maximum speed [min^{-1}]	Detection ring		Function
							Inner diameter	Outer diameter	
Absolute αiCZ SENSOR 512S	A860-2142-T411 (Cable length: 1.2 m) A860-2142-T412 (Cable length: 0.4 m)	1/3,600,000	±1”	±7”	512	600	ϕ82	ϕ102.8	Absolute
Absolute αiCZ SENSOR 768S	A860-2142-T511 (Cable length: 1.2 m) A860-2142-T512 (Cable length: 0.4 m)	1/3,600,000	±1”	±5”	768	400	ϕ125	ϕ154	Absolute
Absolute αiCZ SENSOR 1024S	A860-2142-T611 (Cable length: 1.2 m) A860-2142-T612 (Cable length: 0.4 m)	1/3,600,000	±1”	±3.5”	1024	300	ϕ160	ϕ205.2	Absolute

NOTE
When the absolute αiCZ SENSOR 768S is used as a position sensor for the SYNCHRONOUS BUILT-IN SERVO MOTOR DiS series, the sensor can be used only for a application of finite rotations (10 rotations or less in total).

Absolute maximum ratings

Item	Specification
Power supply voltage	-0.5 V to +6.0 V
Operating temperature range	0°C to +50°C
Humidity	95%RH or less

Electrical specifications

Item	Specification
Power supply voltage	5 V ±5%

© MyFANUC 2D5504D5BAC945D385F48627D4977F6C

Item	Specification
Current consumption	250 mA or less
Current consumption at battery backup time	400 μA (Typ.)

Dimensions

Absolute αiCZ Sensor 512S

A860-2142-T411(cable length: 1.2m)

A860-2142-T412(cable length: 0.4m)

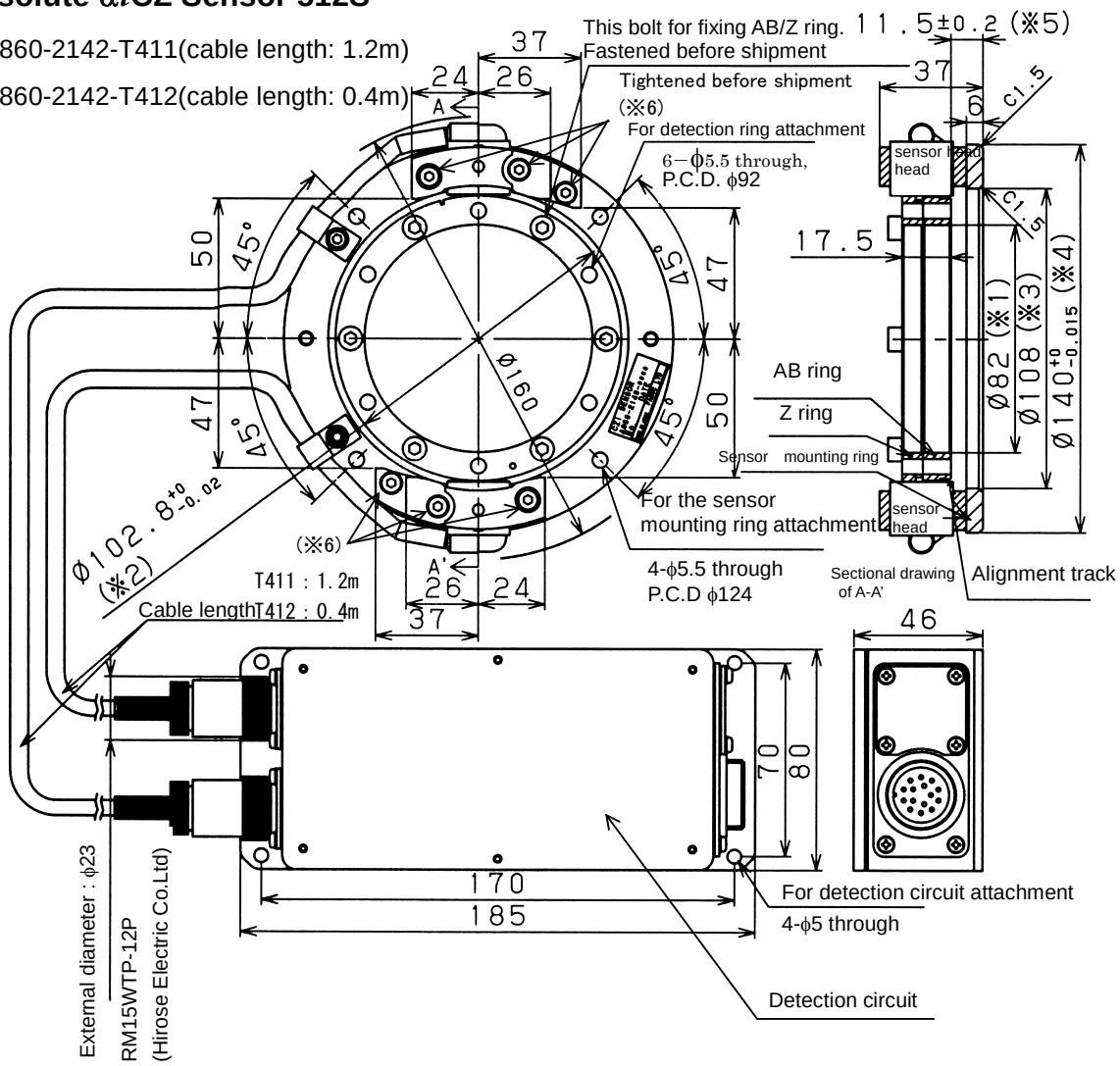

For details of installation, see "Installation" described later.

NOTE

- The inner diameter(*1) of the Detection ring is set with a plus tolerance. (*2) indicates the outer diameter of the tooth surface of the Detection ring.
- The inner diameter(*3) of the sensor mounting ring is set with a plus tolerance. (*4) indicates the outer diameter of the sensor mounting ring.
- (*5) indicates the distance from the bottom of the sensor mounting ring to the bottom of the Detection ring.
- The Sensor head cannot be adjusted mechanically. So, do not loosen the screws marked (*6).
- Use the sensor at a temperature not higher than 50°C.

© MyFANUC 2D5504D5BAC945D385F48627D4977F6C

NOTE

- Because the absolute αiCZ SENSOR is adjusted as a combination of the Detection ring, sensor, and Detection circuit in advance, they must be used as a set.
- The sensor is a precision part. Use special care in handling. Particularly, do not apply external force to the sensor element.
- The sensor is an electronic part. To prevent chips, oil, water, and other harmful materials from being attached to the sensor, take dust-proof and water-proof measures on the machine side.
- The waterproofness of the Detection circuit box is equivalent to IP55. However, if the Detection circuit box is continuously exposed to coolant, for example, the sensor can fail. Provide highest-level water protection to prevent the Detection circuit box from being exposed to coolant or the like.
- Ensure that no vibration greater than 1 G is applied to the Detection circuit box.
- For easy maintenance, mount the sensor at a position where it can be replaced easily.
- Ground the Detection circuit box. The bottom of the Detection circuit box is not painted. So, the Detection circuit box can be grounded only by screwing.

© MyFANUC 2D5504D5BAC945D385F48627D4977F6C

Absolute αiCZ sensor 768S

A860-2142-T511 (Cable length 1.2 m)
A860-2142-T512 (Cable length 0.4 m)

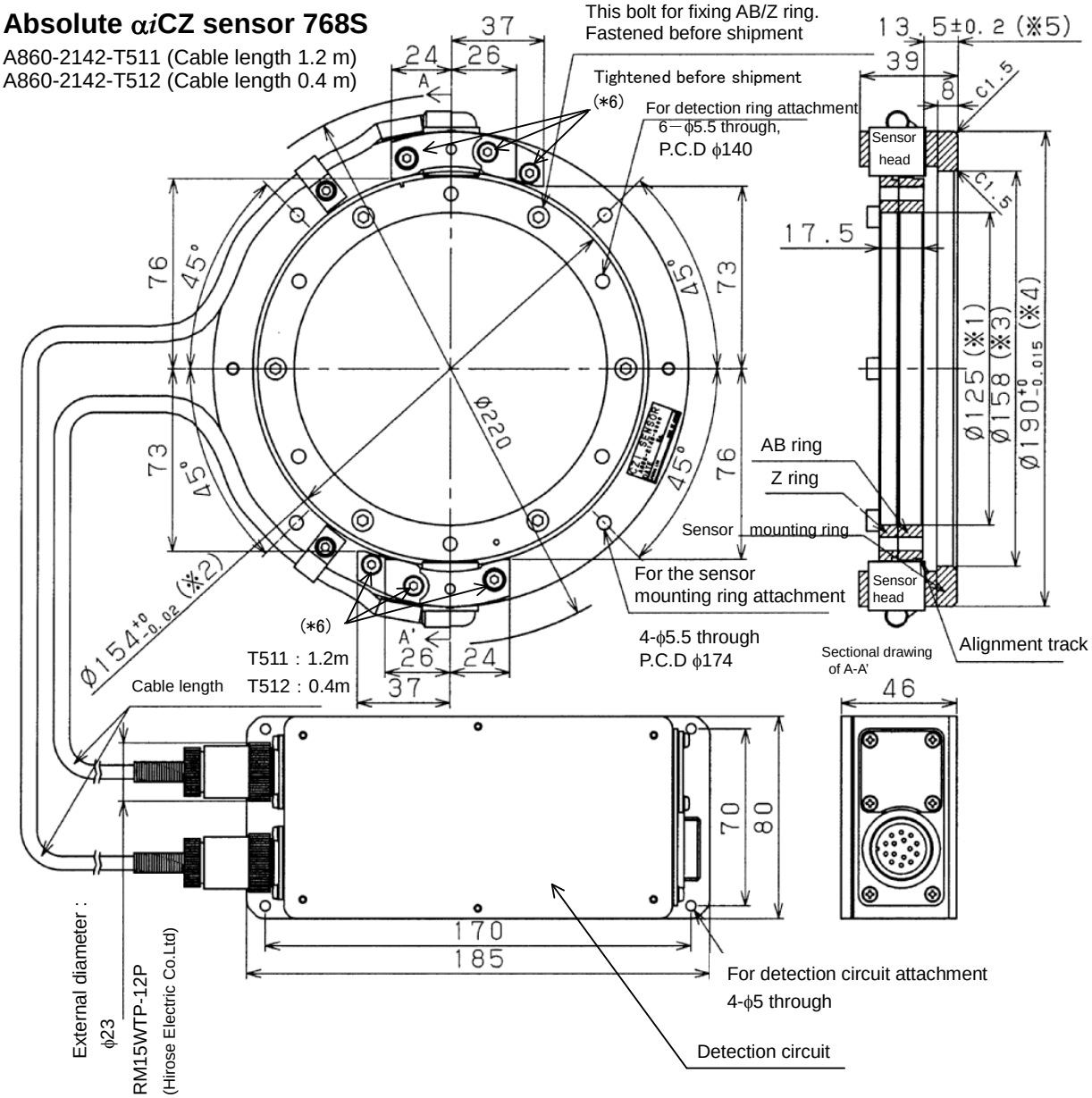

For details of installation, see "Installation" described later.

NOTE

- The inner diameter(*1) of the Detection ring is set with a plus tolerance. (*2) indicates the outer diameter of the tooth surface of the Detection ring.
- The inner diameter(*3) of the sensor mounting ring is set with a plus tolerance. (*4) indicates the outer diameter of the sensor mounting ring.
- (*5) indicates the distance from the bottom of the sensor mounting ring to the bottom of the Detection ring.
- The Sensor head cannot be adjusted mechanically. So, do not loosen the screws marked (*6).
- Use the sensor at a temperature not higher than 50°C.
- Because the absolute αiCZ SENSOR is adjusted as a combination of the Detection ring, sensor, and Detection circuit in advance, they must be used as a set.
- The sensor is a precision part. Use special care in handling. Particularly, do not apply external force to the sensor element.

© MyFANUC 2D5504D5BAC945D385F48627D4977F6C

NOTE

- The sensor is an electronic part. To prevent chips, oil, water, and other harmful materials from being attached to the sensor, take dust-proof and water-proof measures on the machine side.
- The waterproofness of the Detection circuit box is equivalent to IP55. However, if the Detection circuit box is continuously exposed to coolant, for example, the sensor can fail. Provide highest-level water protection to prevent the Detection circuit box from being exposed to coolant or the like.
- Ensure that no vibration greater than 1 G is applied to the Detection circuit box.
- For easy maintenance, mount the sensor at a position where it can be replaced easily.
- Ground the Detection circuit box. The bottom of the Detection circuit box is not painted. So, the Detection circuit box can be grounded only by screwing.

© MyFANUC 2D5504D5BAC945D385F48627D4977F6C

Absolute αiCZ sensor 1024S

A860-2142-T611 (Cable length 1.2 m)
A860-2142-T612 (Cable length 0.4 m)

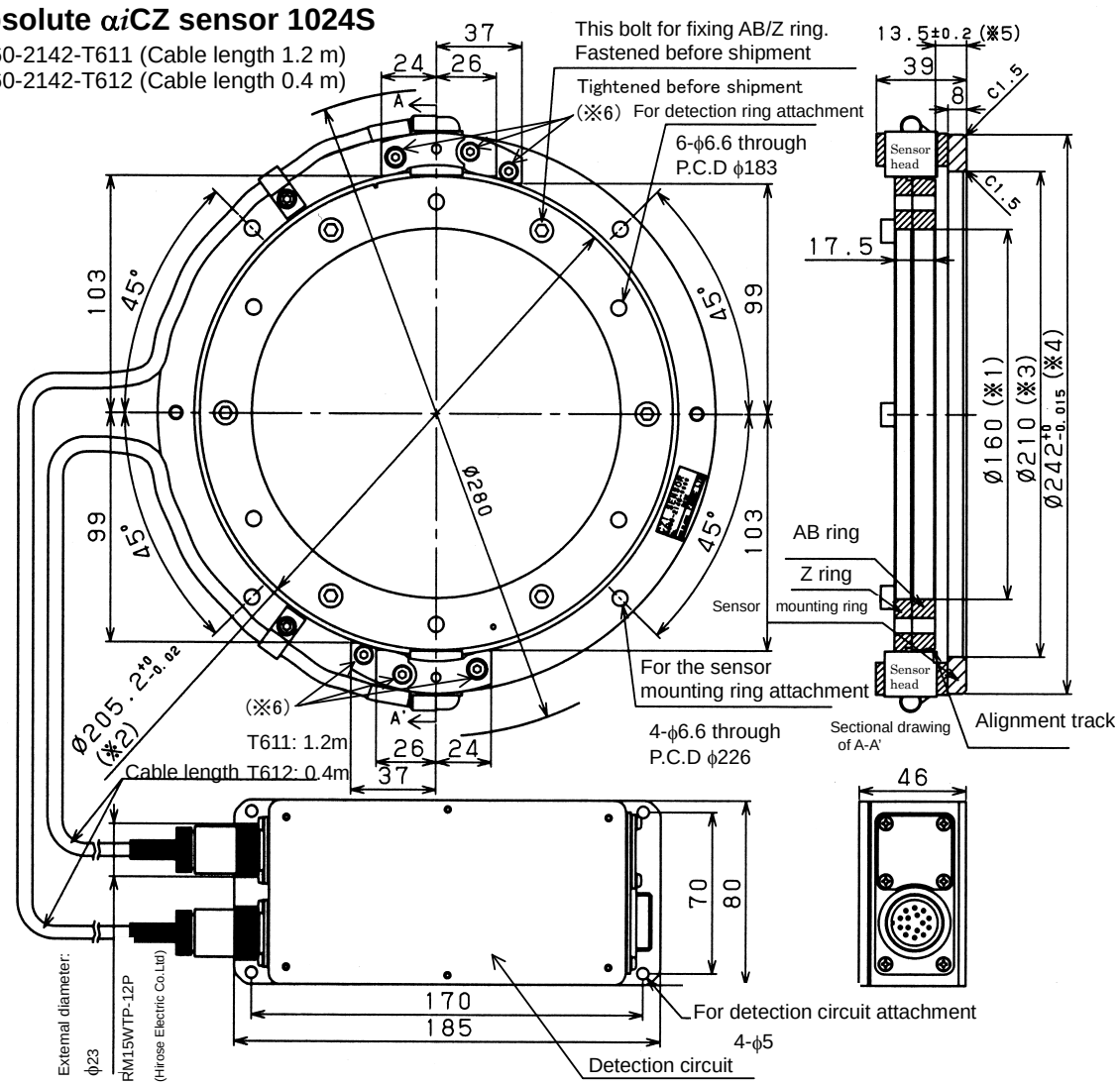

For details of installation, see "Installation" described later.

NOTE

- The inner diameter(*1) of the Detection ring is set with a plus tolerance. (*2) indicates the outer diameter of the tooth surface of the Detection ring.
- The inner diameter(*3) of the sensor mounting ring is set with a plus tolerance. (*4) indicates the outer diameter of the sensor mounting ring.
- (*5) indicates the distance from the bottom of the sensor mounting ring to the bottom of the Detection ring.
- The Sensor head cannot be adjusted mechanically. So, do not loosen the screws marked (*6).
- Use the sensor at a temperature not higher than 50°C.
- Because the absolute αiCZ SENSOR is adjusted as a combination of the Detection ring, sensor, and Detection circuit in advance, they must be used as a set.
- The sensor is a precision part. Use special care in handling. Particularly, do not apply external force to the sensor element.

© MyFANUC 2D5504D5BAC945D385F48627D4977F6C

NOTE

- The sensor is an electronic part. To prevent chips, oil, water, and other harmful materials from being attached to the sensor, take dust-proof and water-proof measures on the machine side.
- The waterproofness of the Detection circuit box is equivalent to IP55. However, if the Detection circuit box is continuously exposed to coolant, for example, the sensor can fail. Provide highest-level water protection to prevent the Detection circuit box from being exposed to coolant or the like.
- Ensure that no vibration greater than 1 G is applied to the Detection circuit box.
- For easy maintenance, mount the sensor at a position where it can be replaced easily.
- Ground the Detection circuit box. The bottom of the Detection circuit box is not painted. So, the Detection circuit box can be grounded only by screwing.

Installation

Installing the Detection ring

Install the flange on the shaft side and screw it in the axis direction by using the Detection ring mounting hole. In assembly, perform centering using the centering track so that the swing from the center of rotation is 10 μm or less.

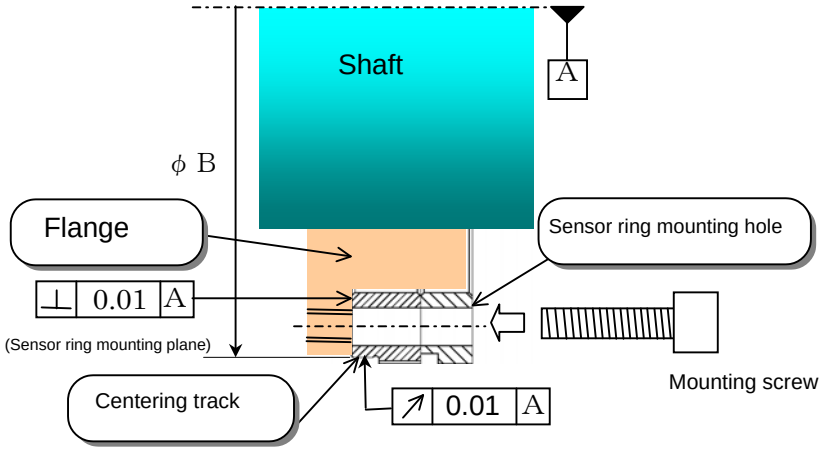

Specification	Outer diameter of centering track (ϕB)	Positions of Detection ring mounting holes	Mounting screw	Recommended tightening torque (Nm)
A860-2142-T411 A860-2142-T412	ϕ101	6-ϕ5.5 through, equally spaced on ϕ92 circumference	M5	2.4 to 3.4
A860-2142-T511 A860-2142-T512	ϕ152.2	6-ϕ5.5 through, equally spaced on ϕ140 circumference	M5	2.4 to 3.4
A860-2142-T611 A860-2142-T612	ϕ203.4	6-ϕ6.6 through, equally spaced on ϕ183 circumference	M6	4.1 to 5.8

© MyFANUC 2D5504D5BAC945D385F48627D4977F6C

NOTE

- For centering, the outer diameter of the flange must be designed so that there is a gap of about 0.1 mm between the flange and the inner surface of the Detection ring.
- Secure the Detection ring on the end face with screws (avoid heat shrink fitting to mount the Detection ring).
- The Detection ring consists of a phase Z ring and phase A/B ring, which are fastened together by using screws in advance. Never detach these screws. Spot facing is not provided. So, at the time of machine design, be careful not to cause interference with the screw heads.
- Centering must be performed with the centering track (the outer surface of the phase Z ring and the teeth pitch circle are not coaxial). When performing centering, use a tool such as a plastic hammer not to damage the gear teeth.
- Magnetic matter attached to gear teeth can lead to a detection error. After centering is completed, remove such foreign matter by air blowing.

Installing the sensor mounting ring

When installing the sensor mounting ring, provide a socket on the machine side, and fit the sensor mounting ring into the socket. (The dimensions of the socket on the machine side must satisfy the accuracy indicated in the table below. Otherwise, detection precision may deteriorate.) When fastening the mounting ring with the screws, press the mounting ring against the socket from the CN1 sensor side as shown in the figure below. After the installation, check that the gap between the Detection ring and sensor is 0.08 mm or more by using a thickness gauge.

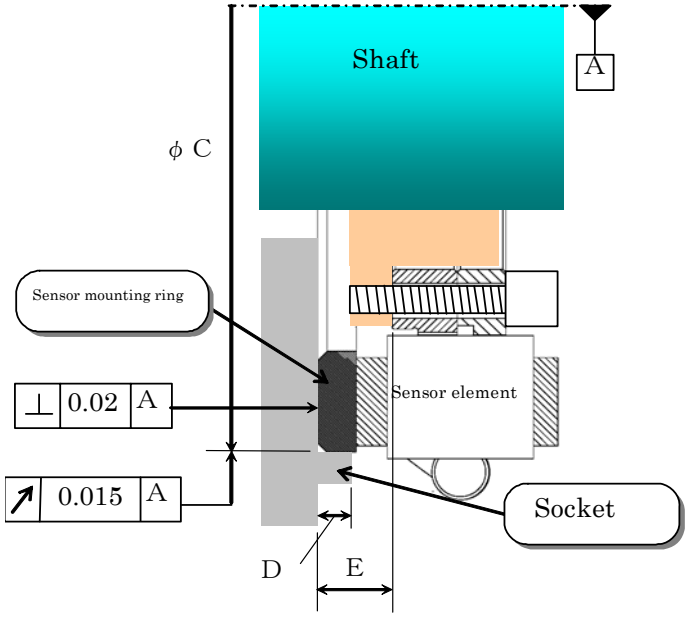

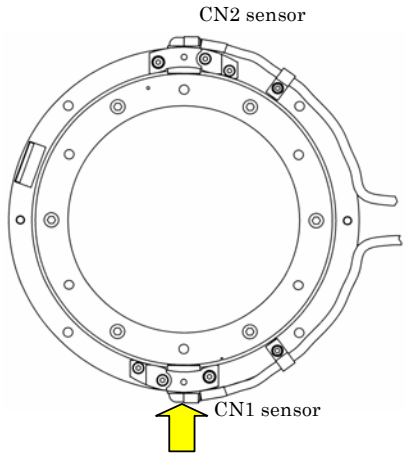

Fasten the sensor mounting ring while pressing it in the arrow direction.

Specification	Outer diameter of sensor mounting ring	Inner diameter of socket (ϕC)	Socket height (D)	Distance between bottom of sensor mounting ring and bottom of Detection ring (E)
A860-2142-T411 A860-2142-T412	$\phi 140^{+0}_{-0.015}$	$\phi 140^{+0.015}_{-0}$	5.5 or less	11.5±0.2
A860-2142-T511 A860-2142-T512	$\phi 190^{+0}_{-0.015}$	$\phi 190^{+0.015}_{-0}$	7.5 or less	13.5±0.2
A860-2142-T611	$\phi 242^{+0}_{-0.015}$	$\phi 242^{+0.015}_{-0}$	7.5 or less	13.5±0.2

© MyFANUC 2D5504D5BAC945D385F48627D4977F6C

A860-2142-T612				

NOTE

- Provide a sock on the machine side where possible, and fit the sensor mounting ring into the socket. Avoid making centering adjustments by tapping the outer surface of the sensor mounting ring.

When checking the signal waveforms

When checking the signal waveforms, see the description below. (The signals need not be adjusted.)
Supply power to the 0 V and 5 V pins.
The Lissajous figure of phase A/B output signal is a complete circle.

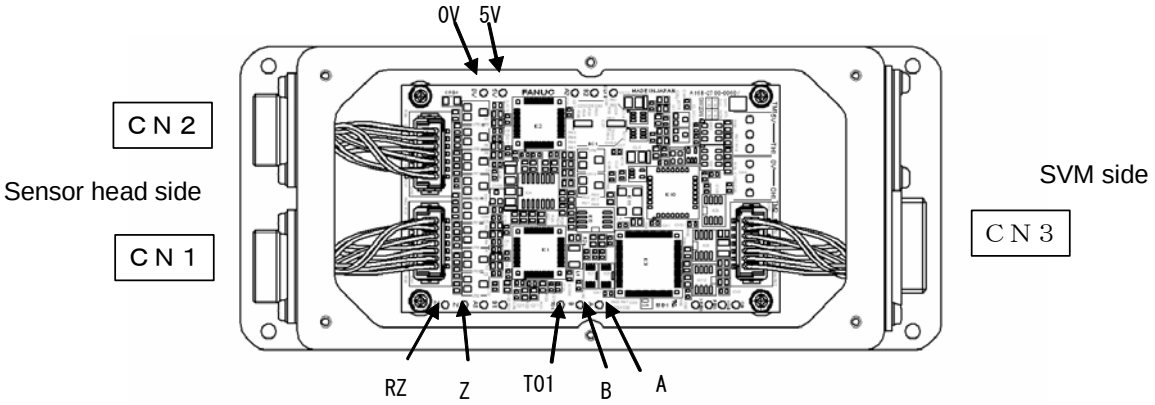

Phase A/B and phase Z signal waveforms (measured on the Detection circuit check pins at room temperature and 500 min^{-1})

Signal name	Check pin	Output amplitude	Offset
Phase A Phase B	A (Relative to T01) B (Relative to T01)	3200 ±300 mVp-p	±50 mV
Phase Z	Z (Relative to RZ)	660 to 1,650 mVp-p	100 to 250 mV

For connector pins, see "Details of cable (K89) for connection with the αiSP series" described later.

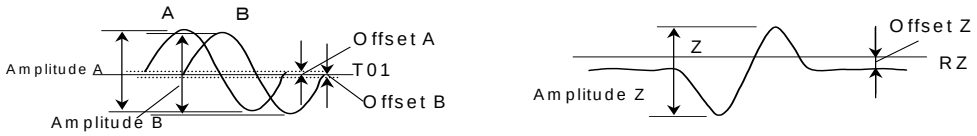

NOTE

Adjustments have been made for the sensor, Detection circuit, and Detection ring at the same time. Therefore, use them as a set. The variable resistor on the printed circuit board of the Detection circuit is also adjusted in advance. So, do not readjust the variable resistor. Furthermore, the sensors cannot be adjusted mechanically. So, do not loosen the screws fastening the CN1 and CN2 sensors.

The connectors on the sensor side are labeled "CN1" (in black) and "CN2" (in blue). Make connections according to the figure above.

Rotation direction of the absolute αiCZ SENSOR

When the sensor is viewed from the top as shown in the following figure, clockwise rotation of the Detection ring is referred to as forward rotation:

© MyFANUC 2D5504D5BAC945D385F48627D4977F6C

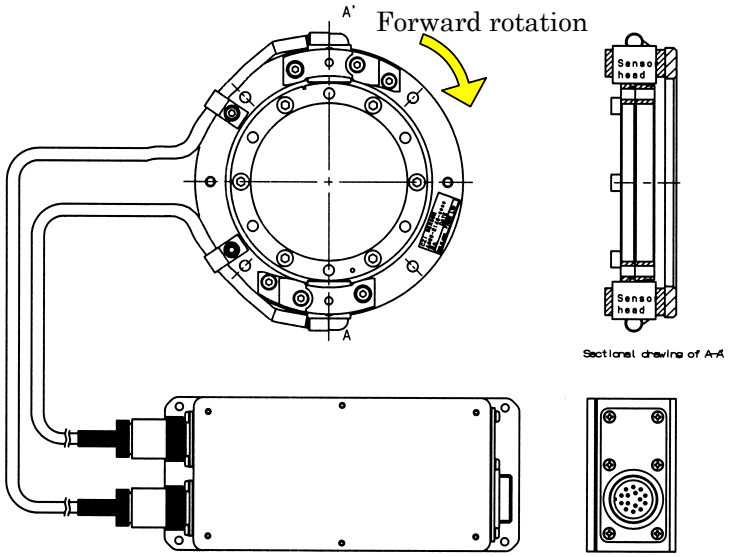

Check the rotation directions of the encoder and motor according to "Synchronous Servo Built-in Motor D*i*S Series Descriptions (B-65332EN)." If their rotation directions are opposite to each other, connect U-W-V of the motor to U-V-W of the amplifier.

Notes

Do not detach the connectors of the absolute α*i*CZ SENSOR heads from the Detection circuit. If the connectors are detached, the reference position may be displaced. In such a case, be sure to perform reference position return operation (magnetic pole position detection and reference position return operation when using the sensor with the synchronous built-in servo motor).

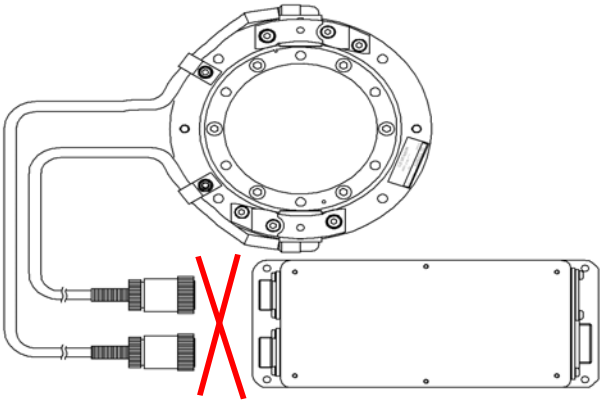

When the absolute α*i*CZ SENSOR is used as a sensor with the synchronous built-in servo motor, the magnetic pole position detection function (option) is needed. For the magnetic pole position detection function, refer to the specifications (A-77769).

Extending the sensor cables

The sensor cable from each Sensor head to the Detection circuit can be extended until the total length becomes 5.2 m.

© MyFANUC 2D5504D5BAC945D385F48627D4977F6C

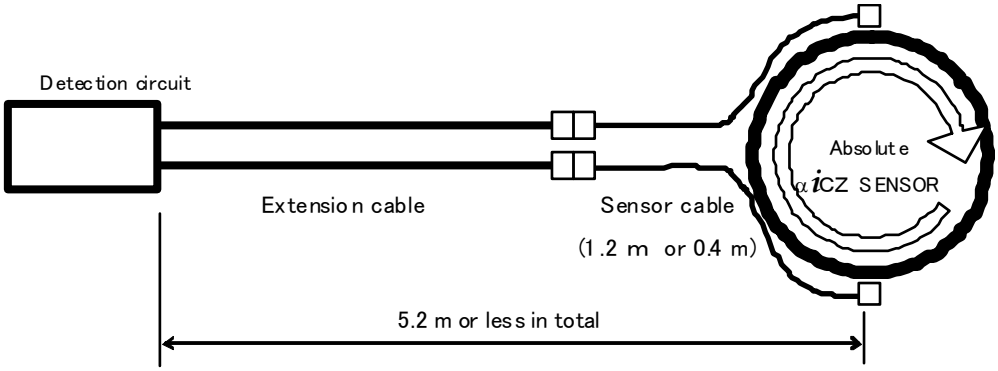

The connection specifications of an extension cable are as follows:

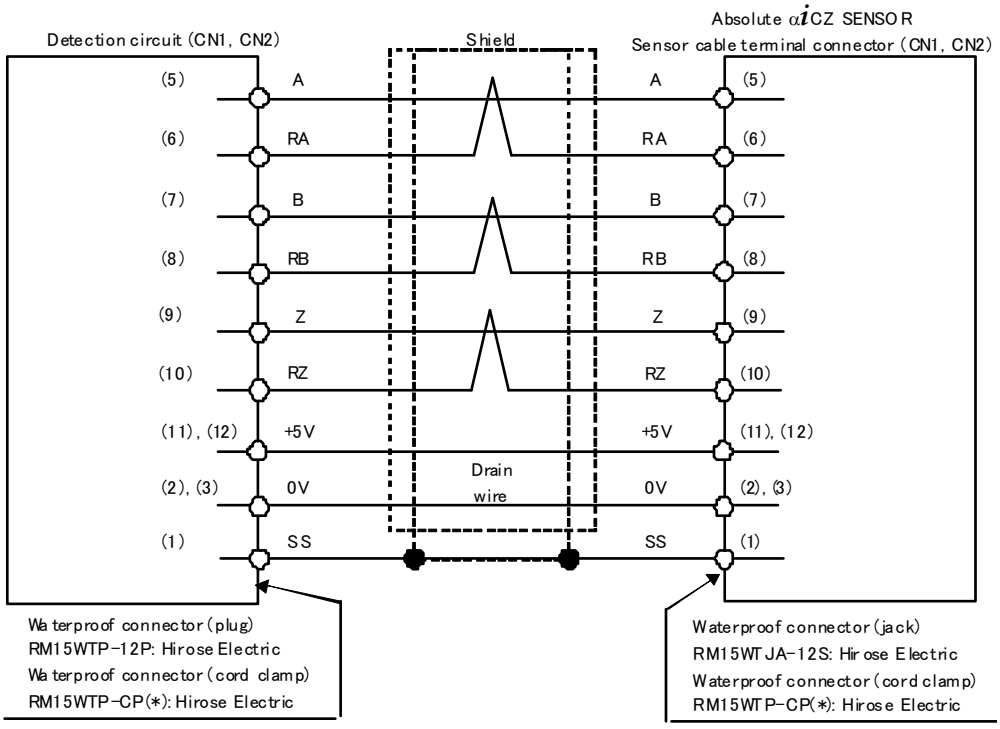

When ordering the cord clamp marked with *, specify the outer diameter of the cable sheath.

* Z and RZ are not output from the Sensor head on the CN2 side but may be connected.

Signal name	
5V, 0V	0.5 $mm^2 \times 2$
A, RA, B, RB, Z, RZ	0.2 mm^2 or more Twisted pair
Drain wire	0.15 mm^2 or more

Recommended cable A66L-0001-0317

Parameter setting

With the absolute αiCZ SENSOR, the number of feedback pulses per rotation varies, depending on the number of teeth. Make parameter settings according the absolute αiCZ SENSOR used.

When using the absolute αiCZ SENSOR as a sensor for the synchronous built-in servo motor, perform magnetic pole position detection by using the magnetic pole position detection function (option). For the magnetic pole position detection function, refer to the specifications (A-77769).

© MyFANUC 2D5504D5BAC945D385F48627D4977F6C

[When using the absolute αiCZ SENSOR as a position sensor for the SYNCHRONOUS BUILT-IN SERVO MOTOR DiS series]

(Supported servo software)

The supported servo software depends on the specifications of the NC and sensor used (see the table below). For AMR offset setting, the magnetic pole position detection function needs to be used. The absolute αiCZ SENSOR 768S can be used only for an application of finite rotations.

NC / Sensor specification	Series-0*i*	Series-15*i*,16*i*,18*i*,21*i*	Series-30*i*,31*i*,32*i*
Absolute αiCZ SENSOR 512S		Series 90B1/Edition A (01) or later	Series 90D0/Edition A (01) or later Series 90E0/Edition A (01) or later
Absolute αiCZ SENSOR 768S		**Applicable only to finite rotations (less than 10 rotations in total)** Series 90B1/Edition C (03) or later	**Applicable only to finite rotations (less than 10 rotations in total)** Series 90D0/Edition J (10) or later Series 90E0/Edition J (10) or later
Absolute αiCZ SENSOR 1024S		Series 90B1/Edition A (01) or later	Series 90D0/Edition A (01) or later Series 90E0/Edition A (01) or later

(Absolute αiCZ SENSOR 1024S)

Make parameter settings as a 1,000,000-pulse coder as with the αi pulse coder.

F·FG	(Number of position pulses needed per motor rotation)/1,000,000
Number of velocity pulses	8192
Number of position pulses	12500
AMR	Set (number of poles)/2 in binary.
Reference counter	Number of position pulses needed per motor rotation or that number divided by an integer

Example of setting: 88-pole DD motor, rotation axis, gear ratio of 1:1, 1/1000° detection

F·FG = 360000/1,000,000 = 36/100

Number of velocity pulses = 8192

Number of position pulses = 12500

AMR = 00101100 (44)

Reference counter = 360000 (or this number divided by an integer)

(Absolute αiCZ SENSOR 768S)

Make parameter settings as a 750,000-pulse coder as described below.

Note that parameter settings different from those for 512S and 1024S need to be made.

The absolute αiCZ SENSOR 768S can be used only for an application of finite rotations (less than 10 rotations in total).

F·FG	(Number of position pulses needed per motor rotation)/750,000
Number of velocity pulses	6144
Number of position pulses	9375
Bit 0 of No. 2608 (FS15i)/Bit 0 of No. 2220 (FS16i, 30i) = 1	
AMR	00000000
AMR conversion coefficient 1	No. 1705 (FS15i)/No. 2112 (FS16i, 30i) = 768
AMR conversion coefficient 2	No. 1768 (FS15i)/No. 2138 (FS16i, 30i) = (Number of poles)/2
Reference counter	Number of pulses per 120° or that number divided by an integer

Example of setting: 88-pole DD motor, rotation axis, gear ratio of 1:1, 1/1000° detection

F·FG = 360000/750,000 = 36/75

© MyFANUC 2D5504D5BAC945D385F48627D4977F6C

Number of velocity pulses = 6144
Number of position pulses = 9375
Bit 0 of No. 2608 or bit 0 of No. 2220 = 1
AMR = 00000000
AMR conversion coefficient 1 (No. 1705 or No. 2112) = 768
AMR conversion coefficient 2 (No. 1768 or No. 2138) = 44
(= 88/2)
Reference counter = 120000 (or this number divided by an integer)

(Absolute αiCZ SENSOR 512S)

Make parameter settings as a 500,000-pulse coder as described below.

F·FG	(Number of position pulses needed per motor rotation)/500,000
Number of velocity pulses	4096
Number of position pulses	6250
AMR	Set the number of poles in binary.
Reference counter	Number of position pulses needed per motor rotation or that number divided by an integer

Example of setting: 88-pole DD motor, rotation axis, gear ratio of 1:1, 1/1000° detection
F·FG = 360000/500,000 = 36/50
Number of velocity pulses = 4096
Number of position pulses = 6250
AMR = 01011000 (88)
Reference counter = 360000 (or this number divided by an integer)

[When using the absolute αiCZ SENSOR as a separate sensor]

(Supported servo software)

No version restriction is imposed. Any version of servo software may be used.

(Absolute αiCZ SENSOR 1024S)

Make parameter settings as with a FANUC rotary encoder of serial output type.

F·FG	(Number of position pulses needed per sensor rotation)/1,000,000
Number of position pulses	12500 × (gear reduction ratio from motor to table)
Reference counter	Number of position pulses needed per sensor rotation or that number divided by an integer

Example of setting: Rotation axis, gear ratio of 1:1, 1/1000° detection
F·FG = 360000/1000000 = 36/100
Number of position pulses = 12500
Reference counter = 360000 (or this number divided by an integer)

(Absolute αiCZ SENSOR 768S)

Make parameter settings as a rotary encoder of 750,000 pulses per rotation as described below.
* Note that parameter settings different from those for 512S and 1024S are made.

F·FG	(Number of position pulses needed per sensor rotation)/750,000
Number of position pulses	9375 × (gear reduction ratio from motor to table)
Reference counter	Number of pulses per 120° or that number divided by an integer

Example of setting: Rotation axis, gear ratio of 1:1, 1/1000° detection
F·FG = 360000/750000 = 36/75
Number of position pulses = 9375
Reference counter = 120000 (or this number divided by an integer)

© MyFANUC 2D5504D5BAC945D385F48627D4977F6C

(Absolute αiCZ SENSOR 512S)

Make parameter settings as a rotary encoder of 500,000 pulses per rotation as described below.

F·FG	(Number of position pulses needed per sensor rotation)/1,000,000
Number of position pulses	12500 × (gear reduction ratio from motor to table)
Reference counter	Number of position pulses needed per sensor rotation or that number divided by an integer

Example of setting: Rotation axis, gear ratio of 1:1, 1/1000° detection

F·FG = 360000/500000 = 36/50

Number of position pulses = 6250

Reference counter = 360000 (or this number divided by an integer)

J.2 SENSOR FOR THE SPINDLE

J.2.1 αiBZ SENSOR (Conventional Dimensions, A860-2120-T***)

Two types of αiBZ SENSORs are available: αiBZ SENSORs of the conventional dimensions (A860-2120-T***) and compact-size αiBZ SENSORs (A860-2150-T*** and A860-2155-T***). The αiBZ SENSORs of the conventional dimensions and compact-size αiBZ SENSORs are not compatible with each other from the viewpoint of installation. If the number of Detection ring teeth of an αiBZ SENSOR of the conventional dimensions is the same as that of a compact-size αiBZ SENSOR, the Detection rings of the two sensors have the same inner and outer diameters. The αiBZ SENSORs of the conventional dimensions and compact-size αiBZ SENSORs have the same output signal specifications. So, when a sensor of one type is replaced with a sensor of the other type, no parameter modification is needed.

Names and ordering numbers

Name	Ordering number	Remarks			
		Number of teeth	Maximum speed	Detection ring	
				Inner diameter	Outer diameter
αiBZ SENSOR 128	A860-2120-T201	128	20,000min^{-1}	ϕ40	ϕ52
αiBZ SENSOR 128H	A860-2120-T211		70,000min^{-1}		
αiBZ SENSOR 256	A860-2120-T401	256	15,000min^{-1}	ϕ82	ϕ103.2
αiBZ SENSOR 256H	A860-2120-T411		30,000min^{-1}		
αiBZ SENSOR 384	A860-2120-T511	384	15,000min^{-1}	ϕ125	ϕ154.4
αiBZ SENSOR 512	A860-2120-T611	512	10,000min^{-1}	ϕ160	ϕ205.6

Absolute maximum ratings

Item	Specification
Power supply voltage	-0.5 V to +7.0 V
Operating temperature range	0°C to +80°C
Humidity	95%RH or less

Electrical specifications

Item	Specification
Power supply voltage	5 V ±5%

© MyFANUC 2D5504D5BAC945D385F48627D4977F6C

Item			Specification
Current consumption			0.05 A
Output signal	VA, VB	αiBZ SENSOR 128/128H	128λ/rotation
		αiBZ SENSOR 256/256H	256λ/rotation
		αiBZ SENSOR 384	384λ/rotation
		αiBZ SENSOR 512	512λ/rotation
	VZ	Common to all models	1λ/rotation

Dimensions
[αiBZ SENSOR (conventional dimensions, with mounting ring)]

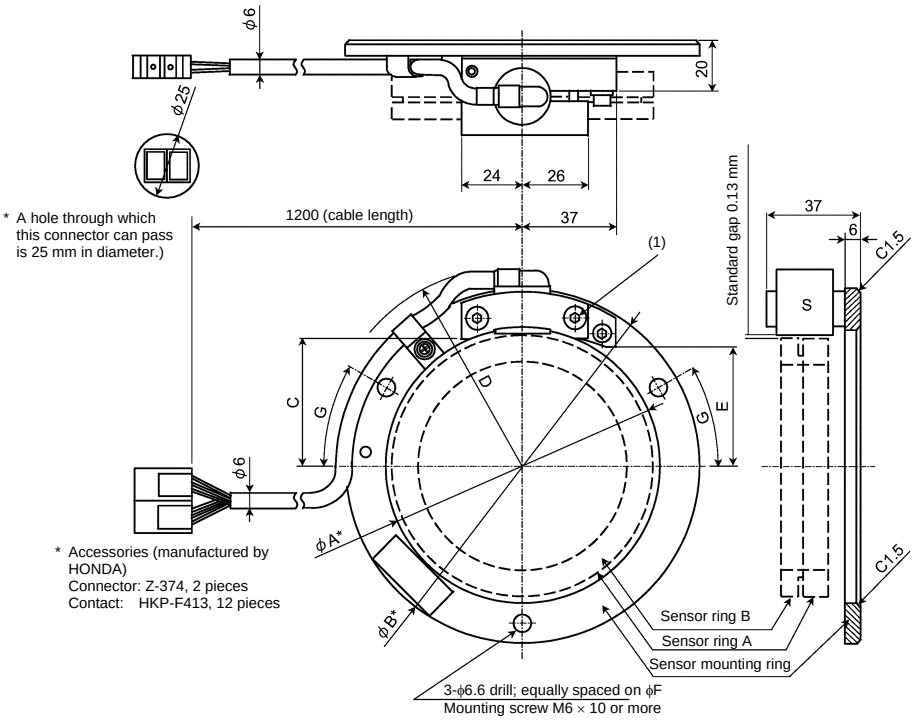

Sensor specification number	Detection ring	Number of teeth	φA *	φB *	C	D	E	φF	G
A860-2120-T201	Ring 1	128	56H6 $^{+0.019}_{-0.0}$	100h6 $^{+0.0}_{-0.022}$	25	R57	20	78	10°
A860-2120-T211	Ring 2								
A860-2120-T401	Ring 3	256	108 $^{+0.040}_{+0.020}$	140h6 $^{+0.0}_{-0.025}$	51	R80	46	124	30°
A860-2120-T411	Ring 4								

For the dimensions of the Detection rings, see "Detection rings" described later.

© MyFANUC 2D5504D5BAC945D385F48627D4977F6C

NOTE

- Use the sensor at a temperature not higher than 80°C.
- The sensor is a precision part. Use special care in handling. Particularly, do not apply external force to the S section.
- The sensor is an electronic part. To prevent chips, oil, water, and other harmful materials from being attached to the sensor, take dust-proof and water-proof measures on the machine side.
- The dimensions marked with an asterisk (*) are the dimensions of the sensor mounting ring. The socket on the machine side must be designed according to these dimensions. If the socket on the machine side is not made properly, the sensor may output an incorrect signal.
- The gap between the sensor and Detection ring is preadjusted. Because of a dimensional error in the mounting socket and so on, the output signal may not satisfy the specified level. Therefore, when mounting the sensor, check the output signal. If the output signal does not satisfy the specified level, loosen the screws(*1) and adjust the gap. Tighten the screws(*1) with a torque of 1.2 Nm (12 kgfcm) ±10%. After tightening the screws, insert a 0.1-mm thickness gauge to check that there is a gap of at least 0.1 mm between the sensor and Detection ring. For the output signal level in gap adjustment, refer to Part II, "INSTALLATION," of "FANUC BUILT-IN AC SPINDLE MOTOR αi series DESCRIPTIONS (B-65292EN)."
- Make a shield wire connection.
- For easy maintenance, mount the sensor at a position where it can be replaced easily.
- Detection rings with the same specification number can be replaced with each other.
- Detection rings with different specification numbers cannot be used in combination.
- Mating connectors (accessories) are provided.

© MyFANUC 2D5504D5BAC945D385F48627D4977F6C

[αiBZ SENSOR (conventional dimensions, without mounting ring)]

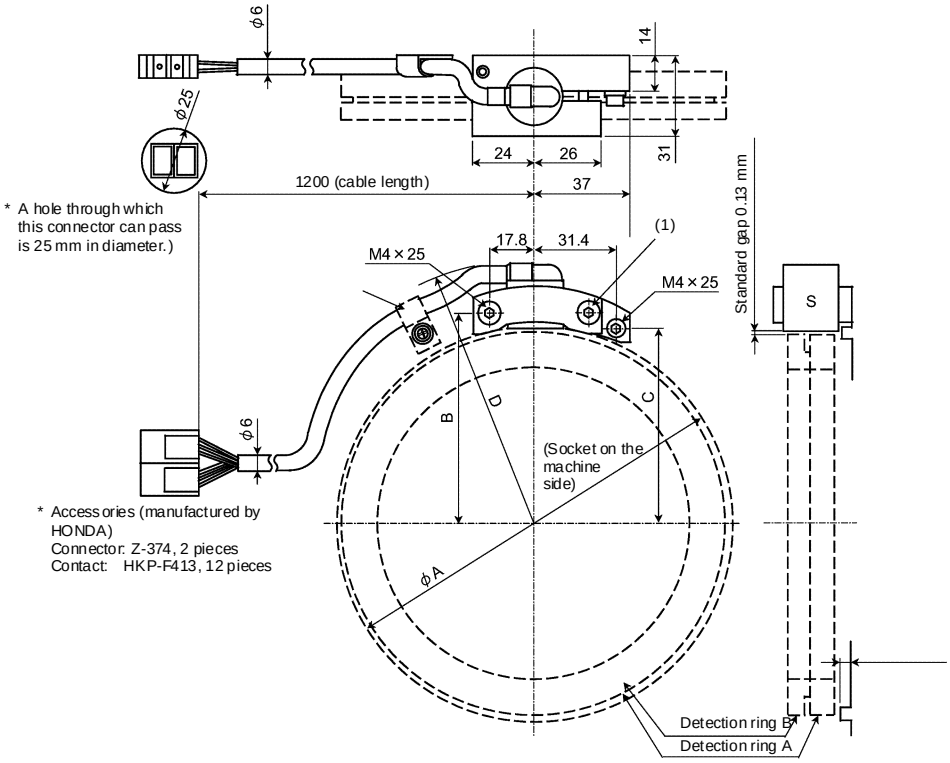

Sensor specification number	Detection ring	Number of teeth	φA *	φB *	C	D
A860-2120-T511	Ring 5	384	158 $^{+0.0}_{-0.025}$	84.3	78.3	R110
A860-2120-T611	Ring 6	512	210 $^{+0.0}_{-0.030}$	110.8	104.8	R140

For the dimensions of the Detection rings, see "Detection rings" described later.

NOTE

- Use the sensor at a temperature not higher than 80°C.
- The sensor is a precision part. Use special care in handling. Particularly, do not apply external force to the S section.
- The sensor is an electronic part. To prevent chips, oil, water, and other harmful materials from being attached to the sensor, take dust-proof and water-proof measures on the machine side.
- Mount the sensor while pressing it against the socket (dimension φA) on the machine side (the height of the socket on the machine is 4.5 mm or less).

© MyFANUC 2D5504D5BAC945D385F48627D4977F6C

NOTE

- The gap between the sensor and Detection ring is preadjusted. Because of a dimensional error in the mounting socket and so on, the output signal may not satisfy the specified level. Therefore, when mounting the sensor, check the output signal. If the output signal does not satisfy the specified level, loosen the screws(*1) and adjust the gap. Tighten the screws(*1) with a torque of 1.2 Nm (12 kgfcm) ±10%. After tightening the screws, insert a 0.1-mm thickness gauge to check that there is a gap of at least 0.1 mm between the sensor and Detection ring. For the output signal level in gap adjustment, refer to Part II, "INSTALLATION," of "FANUC BUILT-IN AC SPINDLE MOTOR αi series DESCRIPTIONS (B-65292EN)."
- Use M4 x 20 mm and M4 x 25 mm screws for mounting.
- Fasten the cable at a proper position so that no direct force is applied to the sensor when the cable is pulled.
- Make a shield wire connection.
- For easy maintenance, mount the sensor at a position where it can be replaced easily.
- Detection rings with the same specification number can be replaced with each other.
- Detection rings with different specification numbers cannot be used in combination.
- Mating connectors (accessories) are provided.

Detection rings

Detection ring (Phase A/B ring)

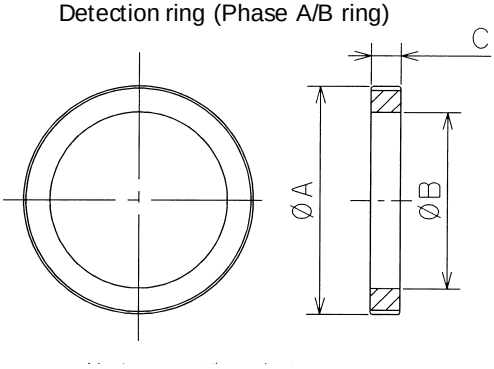

Detection ring (Phase Z ring)

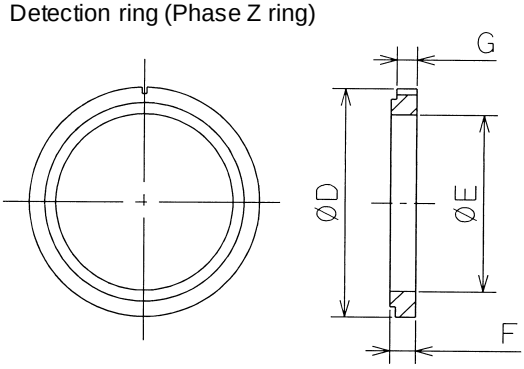

Dimensions of Detection rings

	Phase A/B ring			Phase Z ring			
	ϕA	ϕB	C	ϕD	ϕE	F	G
Ring 1, 2	52 $^{+0.0}_{-0.020}$	40 $^{+0.016}_{-0.0}$	10±0.1	52 $^{+0.0}_{-0.020}$	40 $^{+0.016}_{-0.0}$	8.6±0.1	6.7
Ring 3, 4	103.2 $^{+0.0}_{-0.020}$	82 $^{+0.0}_{-0.018}$	10±0.1	103.2 $^{+0.0}_{-0.020}$	82 $^{+0.0}_{-0.018}$	8.6±0.1	6.7
Ring 5	154.4 $^{+0.0}_{-0.020}$	125 $^{+0.025}_{-0.0}$	10±0.1	154.4 $^{+0.0}_{-0.020}$	125 $^{+0.025}_{-0.0}$	8.6±0.1	6.7
Ring 6	205.6 $^{+0.0}_{-0.020}$	160 $^{+0.020}_{-0.005}$	10±0.1	205.6 $^{+0.0}_{-0.020}$	160 $^{+0.020}_{-0.005}$	8.6±0.1	6.7

For the dimensions of sensors, see "[αiBZ SENSOR]" above.

© MyFANUC 2D5504D5BAC945D385F48627D4977F6C

NOTE
- Press fit the rings around a sleeve then assemble the sleeve with the spindle.
- A used ring can be reused only once.
- The circumference of a ring has special teeth. Therefore, be careful not to deform or chip the circumference by external force.
- Check the sensor output signal. For the adjustment of the output signal, refer to Part II, "INSTALLATION," of "FANUC BUILT-IN AC SPINDLE MOTOR αi series DESCRIPTIONS (B-65292EN)."

Maximum speed of Detection rings

Ring	Ring 1	Ring 2	Ring 3	Ring 4	Ring 5	Ring 6
Sensor specification number	T201	T211	T401	T411	T511	T611
Number of teeth	128	128	256	256	384	512
Max. speed (min^{-1})	20,000	70,000	15,000	30,000	15,000	10,000

NOTE
- The interference for shrink fitting varies, depending on the maximum speed used. When designing Detection rings, see " Installing the αiBZ SENSOR"

Installing the αiBZ SENSOR (conventional dimensions)

Install ring A and ring B as shown below.

- Press fit the rings around the sleeve then press fit the sleeve around the shaft. Contact the phase A/B ring with phase Z ring.
- Mount the sensor so that the distance between the mid point of the thickness of the stack of the phase A/B ring and phase Z ring (9.3 mm) and the center of the sensor is within ±0.5 mm.
- The runout of the sleeve to the center of the shaft must be within 0.005 mm.
- The runout of the mounting ring to the center of the shaft must be within 0.02 mm.

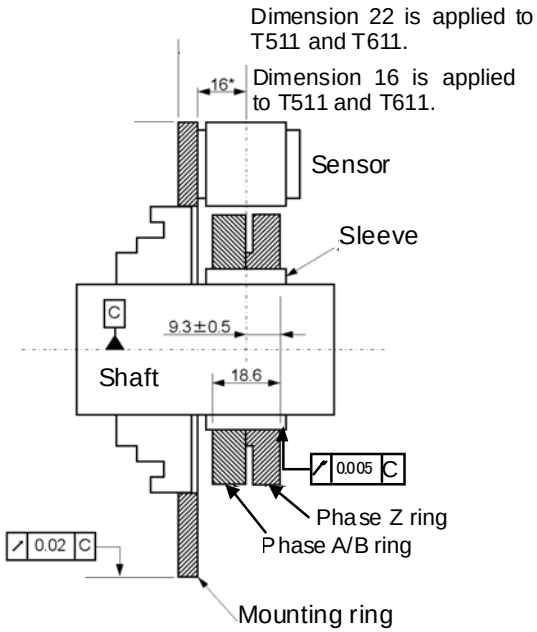

© MyFANUC 2D5504D5BAC945D385F48627D4977F6C

Interference

The table below indicates the interference of the Detection rings at each maximum speed.

Unit: μm

Maximum speed (min^{-1})	T201 Ring 1	T211 Ring 2	T401 Ring 3	T411 Ring 4	T511 Ring 5	T611 Ring 6
3000	ϕ6 to ϕ32	ϕ6 to ϕ32	ϕ7 to ϕ35	ϕ7 to ϕ35	ϕ8 to ϕ43	ϕ11 to ϕ41
3500	↓	↓	↓	↓	ϕ9 to ϕ44	ϕ13 to ϕ43
4500	↓	↓	↓	↓	ϕ11 to ϕ46	ϕ19 to ϕ49
6000	↓	↓	ϕ9 to ϕ37	ϕ9 to ϕ37	ϕ15 to ϕ50	ϕ29 to ϕ59
8000	↓	↓	ϕ11 to ϕ39	ϕ11 to ϕ39	ϕ24 to ϕ59	ϕ47 to ϕ77
10000	↓	↓	ϕ14 to ϕ42	ϕ14 to ϕ42	ϕ35 to ϕ70	ϕ71 to ϕ101
12000	ϕ7 to ϕ33	ϕ7 to ϕ33	ϕ18 to ϕ46	ϕ18 to ϕ46	ϕ47 to ϕ82	
15000	ϕ8 to ϕ34	ϕ8 to ϕ34	ϕ26 to ϕ54	ϕ26 to ϕ54	ϕ71 to ϕ106	
20000	ϕ10 to ϕ36	ϕ10 to ϕ36		ϕ41 to ϕ69		
25000		ϕ12 to ϕ38		ϕ62 to ϕ90		
30000		ϕ15 to ϕ41		ϕ87 to ϕ115		
40000		ϕ23 to ϕ49				
50000		ϕ33 to ϕ59				
60000		ϕ43 to ϕ69				
70000		ϕ57 to ϕ83				

NOTE

- From the table above, select the suitable interference according to the maximum speed and the type of ring used. If an interference not listed above is applied, the ring will be damaged or loosen while the spindle rotates.
- These rings cannot be used at a speed higher than the speeds specified in the above table.

J.2.2 αiCZ SENSOR (Analog Output, A860-2140-T***)

The αiCZ SENSOR (analog output, A860-2140-T***) is a sensor of analog output type used for the spindle or used as a separate sensor. Note that the interface and system configuration of this sensor differ from those of the absolute αiCZ SENSOR (A860-2142-T***) described later.

Names and ordering numbers

Name	Ordering number	Remarks			
		Number of teeth	Maximum speed	Detection ring	
				Inner diameter	Outer diameter
αiCZ SENSOR 512	A860-2140-T411	512	15,000min^{-1}	ϕ82	ϕ102.8
αiCZ SENSOR 768	A860-2140-T511	768	10,000min^{-1}	ϕ125	ϕ154
αiCZ SENSOR 1024	A860-2140-T611	1024	8,000min^{-1}	ϕ160	ϕ205.2

Absolute maximum ratings

Item	Specification
Power supply voltage	-0.5 V to +7.0 V
Operating temperature range	0°C to +50°C
Humidity	95%RH or less

© MyFANUC 2D5504D5BAC945D385F48627D4977F6C

Electrical specifications

Item			Specification
Power supply voltage			5 V ±5%
Current consumption			150 mA or less
Output signal	VA, VB	αiCZ SENSOR 512	512λ/rotation
		αiCZ SENSOR 768	768λ/rotation
		αiCZ SENSOR 1024	1024λ/rotation
	VZ	Common to all models	1λ/rotation

Signal name	Check pin	Output amplitude	Offset
Phase A Phase B	A (Relative to T01) B (Relative to T01)	1000±100mVp-p	±50mV
Phase Z	Z (Relative to RZ)	660 to 1650 mVp-p	±50mV

(Preamplifier output at room temperature and 500 min^{-1})

For connector pins, see "Details of cable (K89) for connection with the αiSP series" described later.

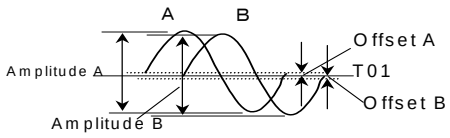

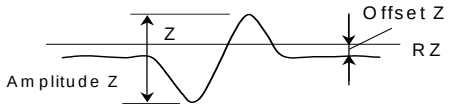

© MyFANUC 2D5504D5BAC945D385F48627D4977F6C

Dimensions

αiCZ SENSOR 512
A860-2140-T411

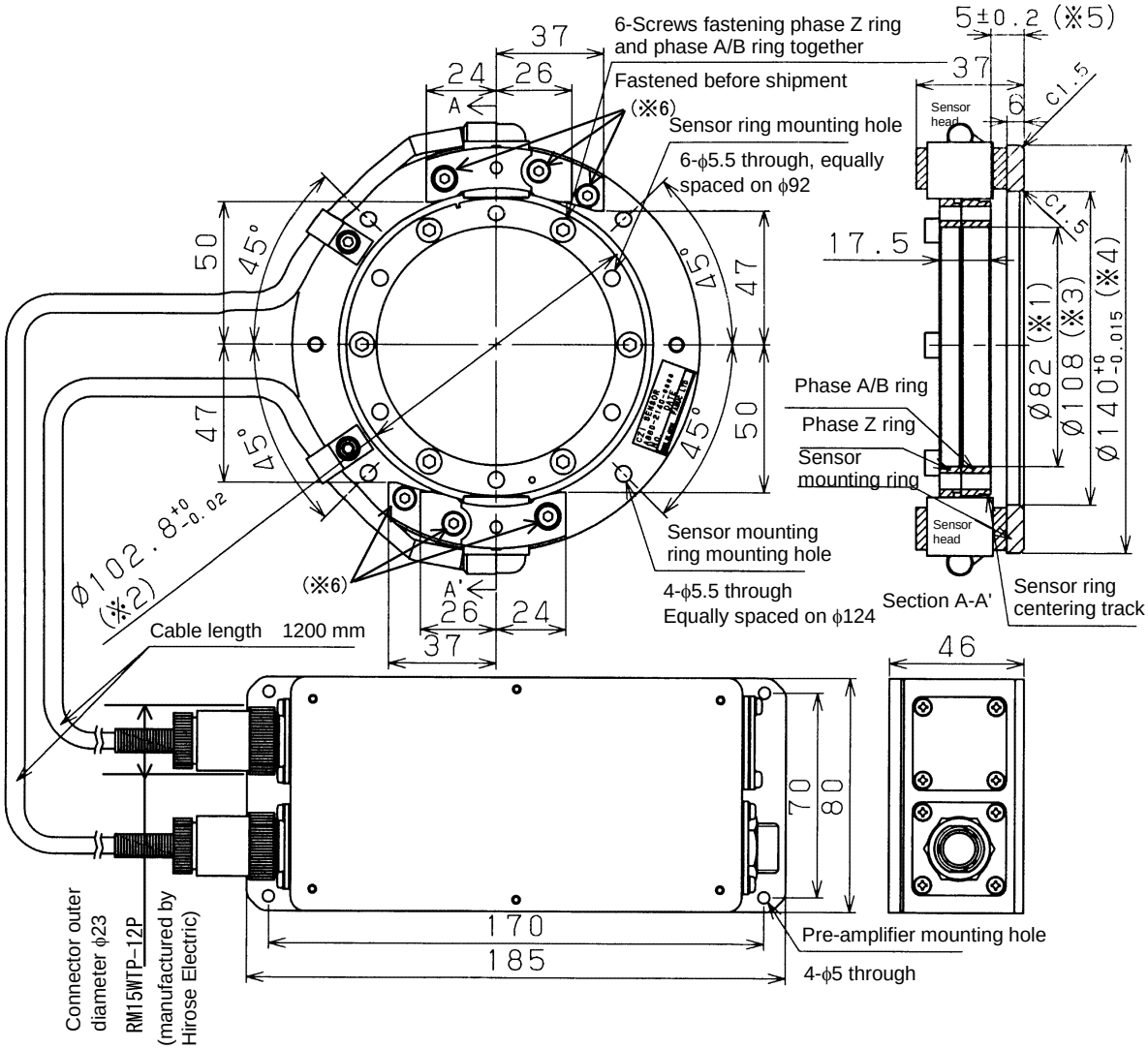

For details of installation, see "Installation."

NOTE

- The inner diameter(*1) of the Detection ring is set with a plus tolerance. (*2) indicates the outer diameter of the tooth surface of the Detection ring.
- The inner diameter(*3) of the sensor mounting ring is set with a plus tolerance. (*4) indicates the outer diameter of the sensor mounting ring.
- (*5) indicates the distance from the bottom of the sensor mounting ring to the bottom of the Detection ring.
- The Sensor head cannot be adjusted mechanically. So, do not loosen the screws marked (*6).
- Use the sensor at a temperature not higher than 50°C.
- Because the αiCZ SENSOR is adjusted as a combination of the Detection ring, sensor, and preamplifier in advance, they must be used as a set.
- The sensor is a precision part. Use special care in handling. Particularly, do not apply external force to the sensor element.

© MyFANUC 2D5504D5BAC945D385F48627D4977F6C

NOTE

- The sensor is an electronic part. To prevent chips, oil, water, and other harmful materials from being attached to the sensor, take dust-proof and water-proof measures on the machine side.
- The waterproofness of the preamplifier box is equivalent to IP55. However, if the preamplifier box is continuously exposed to coolant, for example, the sensor can fail. Provide highest-level water protection to prevent the preamplifier box from being exposed to coolant or the like.
- Ensure that no vibration greater than 1 G is applied to the preamplifier box.
- Make a shield wire connection. Connect the preamplifier box to ground or to the machine cabinet.
- For easy maintenance, mount the sensor at a position where it can be replaced easily.

© MyFANUC 2D5504D5BAC945D385F48627D4977F6C

αiCZ SENSOR 768
A860-2140-T511

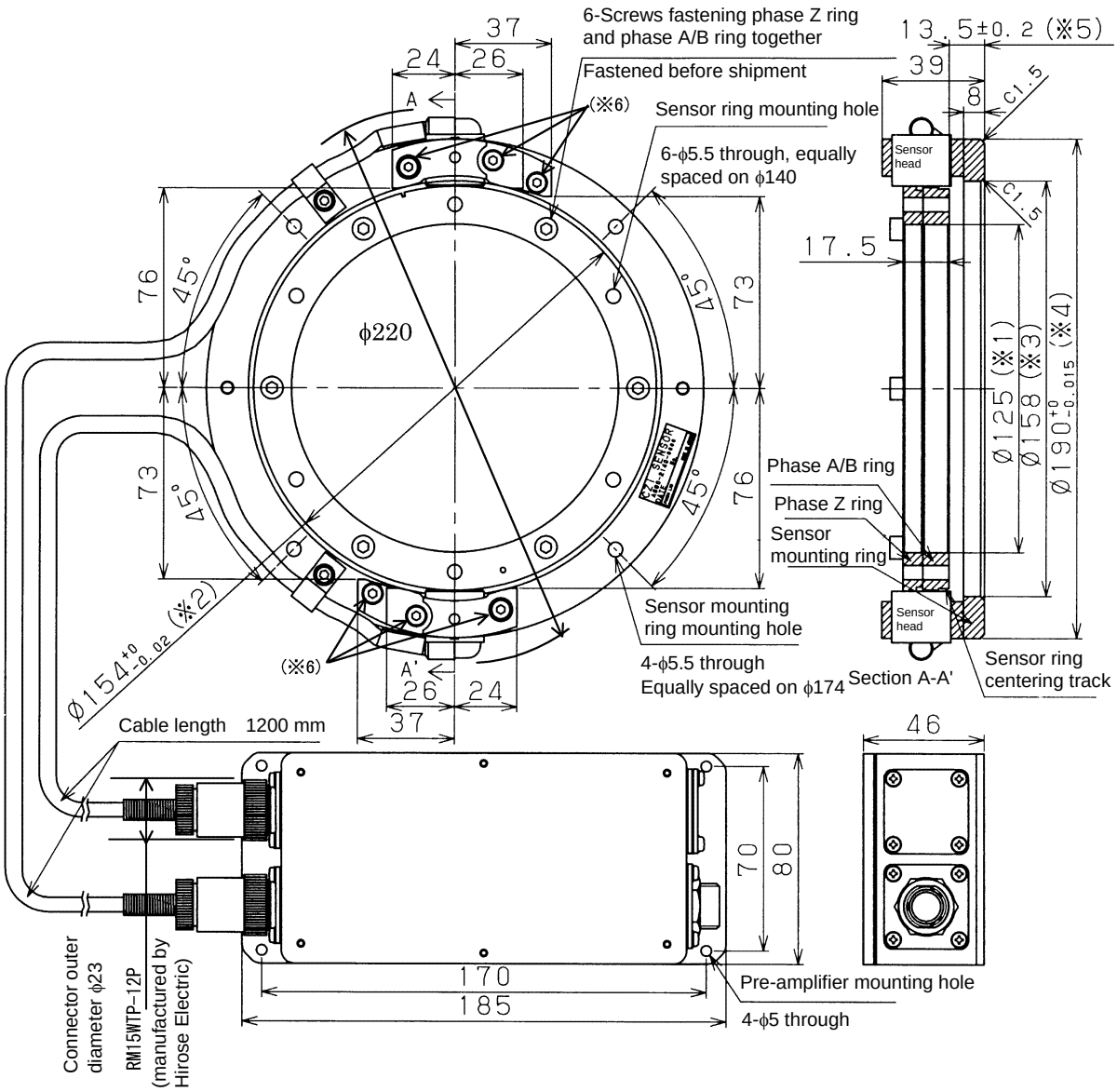

For details of installation, see "Installation."

NOTE

- The inner diameter(*1) of the Detection ring is set with a plus tolerance. (*2) indicates the outer diameter of the tooth surface of the Detection ring.
- The inner diameter(*3) of the sensor mounting ring is set with a plus tolerance. (*4) indicates the outer diameter of the sensor mounting ring.
- (*5) indicates the distance from the bottom of the sensor mounting ring to the bottom of the Detection ring.
- The Sensor head cannot be adjusted mechanically. So, do not loosen the screws marked (*6).
- Use the sensor at a temperature not higher than 50°C.
- Because the αiCZ SENSOR is adjusted as a combination of the Detection ring, sensor, and preamplifier in advance, they must be used as a set.

© MyFANUC 2D5504D5BAC945D385F48627D4977F6C

NOTE

- The sensor is a precision part. Use special care in handling. Particularly, do not apply external force to the sensor element.
- The sensor is an electronic part. To prevent chips, oil, water, and other harmful materials from being attached to the sensor, take dust-proof and water-proof measures on the machine side.
- The waterproofness of the preamplifier box is equivalent to IP55. However, if the preamplifier box is continuously exposed to coolant, for example, the sensor can fail. Provide highest-level water protection to prevent the preamplifier box from being exposed to coolant or the like.
- Ensure that no vibration greater than 1 G is applied to the preamplifier box.
- Make a shield wire connection. Connect the preamplifier box to ground or to the machine cabinet.
- For easy maintenance, mount the sensor at a position where it can be replaced easily.

© MyFANUC 2D5504D5BAC945D385F48627D4977F6C

αiCZ SENSOR 1024
A860-2140-T611

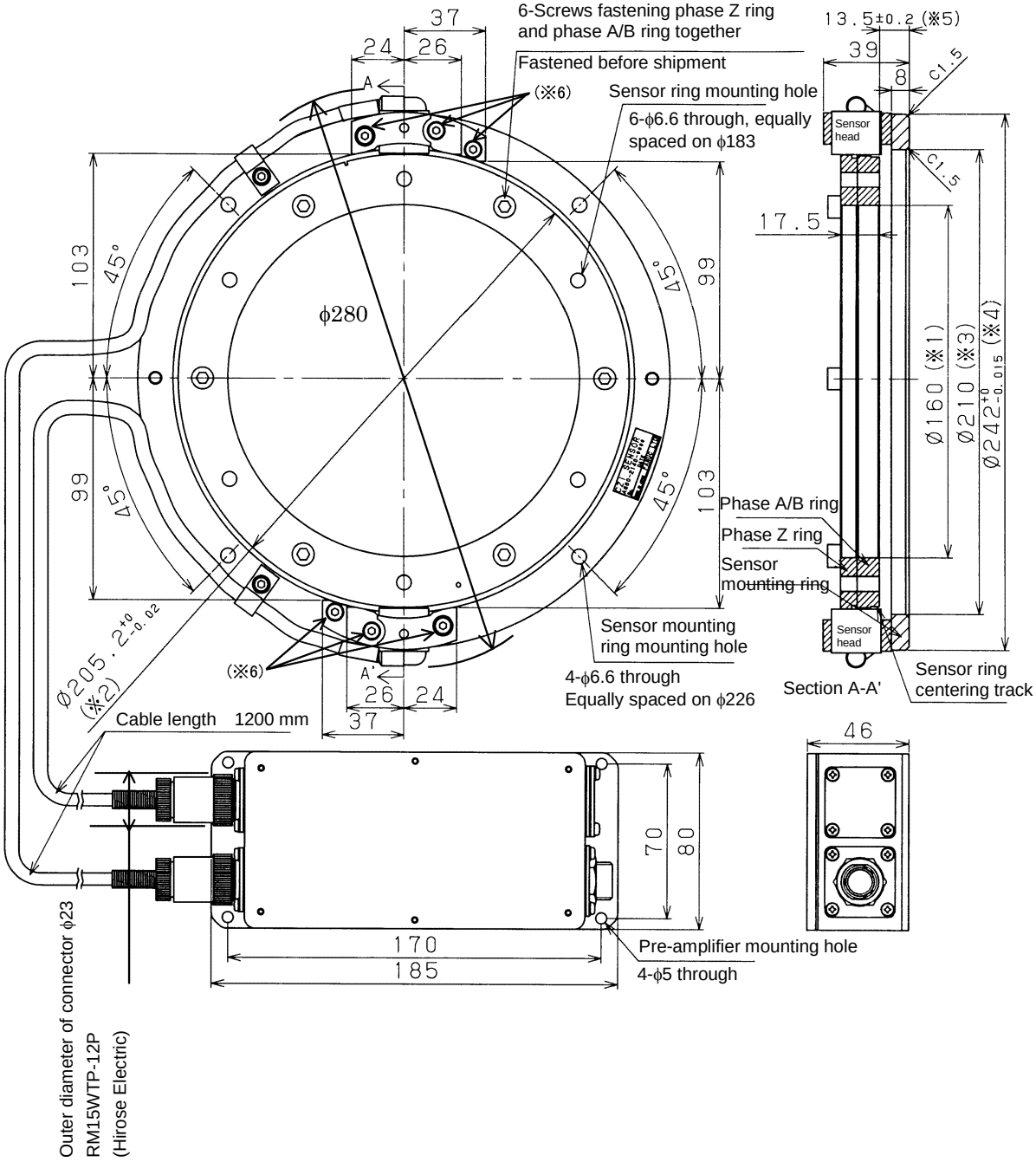

For details of installation, see "Installation."

NOTE

- The inner diameter(*1) of the Detection ring is set with a plus tolerance. (*2) indicates the outer diameter of the tooth surface of the Detection ring.
- The inner diameter(*3) of the sensor mounting ring is set with a plus tolerance. (*4) indicates the outer diameter of the sensor mounting ring.

© MyFANUC 2D5504D5BAC945D385F48627D4977F6C

NOTE

- (*5) indicates the distance from the bottom of the sensor mounting ring to the bottom of the Detection ring.
- The Sensor head cannot be adjusted mechanically. So, do not loosen the screws marked (*6).
- Use the sensor at a temperature not higher than 50°C.
- Because the αiCZ SENSOR is adjusted as a combination of the Detection ring, sensor, and preamplifier in advance, they must be used as a set.
- The sensor is a precision part. Use special care in handling. Particularly, do not apply external force to the sensor element.
- The sensor is an electronic part. To prevent chips, oil, water, and other harmful materials from being attached to the sensor, take dust-proof and water-proof measures on the machine side.
- The waterproofness of the preamplifier box is equivalent to IP55. However, if the preamplifier box is continuously exposed to coolant, for example, the sensor can fail. Provide highest-level water protection to prevent the preamplifier box from being exposed to coolant or the like.
- Ensure that no vibration greater than 1 G is applied to the preamplifier box.
- Make a shield wire connection. Connect the preamplifier box to ground or to the machine cabinet.
- For easy maintenance, mount the sensor at a position where it can be replaced easily.

Installation

Installing the Detection ring

Install the flange on the shaft side and screw it in the axis direction by using the Detection ring mounting hole. In assembly, perform centering using the centering track so that the swing from the center of rotation is 10 μm or less.

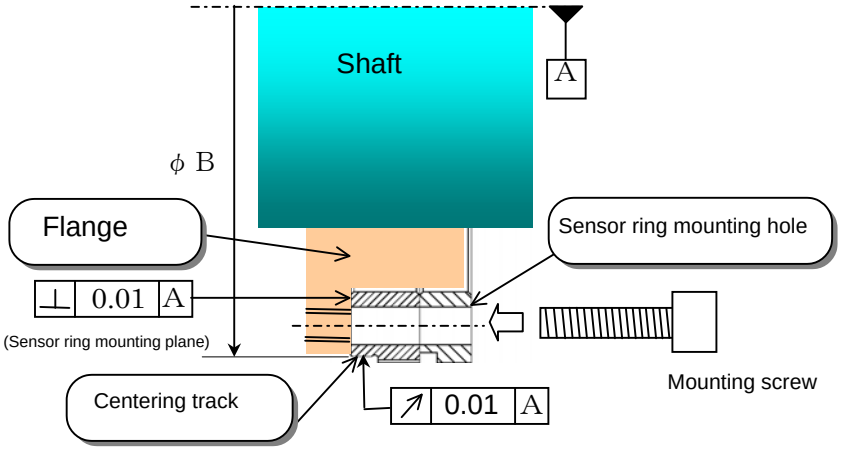

Specification	Outer diameter of centering track (ϕB)	Positions of Detection ring mounting holes	Mounting screw	Recommended tightening torque (Nm)
A860-2140-T411	ϕ101	6-ϕ5.5 through, equally spaced on ϕ92 circumference	M5	2.4 to 3.4
A860-2140-T511	ϕ152.2	6-ϕ5.5 through, equally spaced on ϕ140 circumference	M5	2.4 to 3.4
A860-2140-T611	ϕ203.4	6-ϕ6.6 through, equally spaced on ϕ183 circumference	M6	4.1 to 5.8

© MyFANUC 2D5504D5BAC945D385F48627D4977F6C

NOTE

- For centering, the outer diameter of the flange must be designed so that there is a gap of about 0.1 mm between the flange and the inner surface of the Detection ring.
- Secure the Detection ring on the end face with screws (avoid heat shrink fitting to mount the Detection ring).
- The Detection ring consists of a phase Z ring and phase A/B ring, which are fastened together by using screws in advance. Never detach these screws. Spot facing is not provided. So, at the time of machine design, be careful not to cause interference with the screw heads.
- Centering must be performed with the centering track (the outer surface of the phase Z ring and the teeth pitch circle are not coaxial). When performing centering, use a tool such as a plastic hammer not to damage the gear teeth.
- Magnetic matter attached to gear teeth can lead to a detection error. After centering is completed, remove such foreign matter by air blowing.

Installing the sensor mounting ring

When installing the sensor mounting ring, provide a socket on the machine side, and fit the sensor mounting ring into the socket. (The dimensions of the socket on the machine side must satisfy the accuracy indicated in the table below. Otherwise, detection precision may deteriorate.) When fastening the mounting ring with the screws, press the mounting ring against the socket from the CN1 sensor side as shown in the figure below. After the installation, check that the gap between the Detection ring and sensor is 0.08 mm or more by using a thickness gauge.

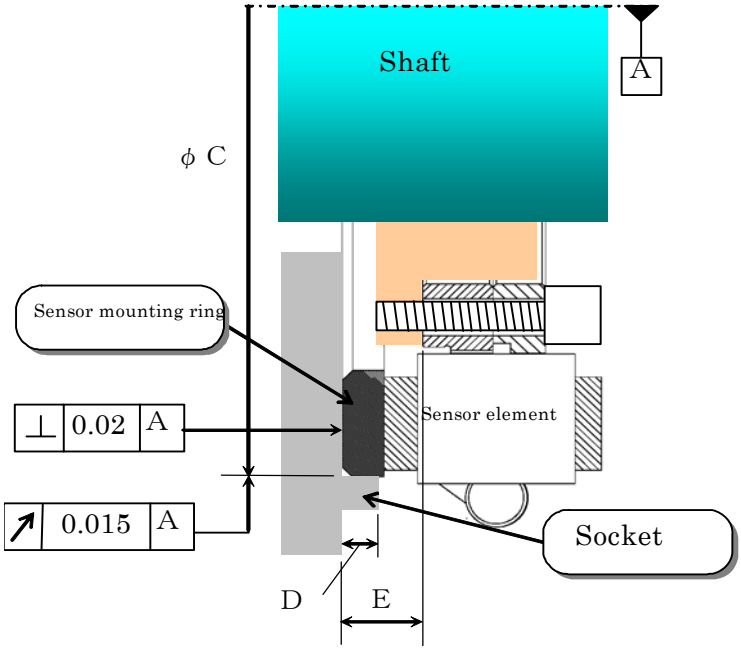

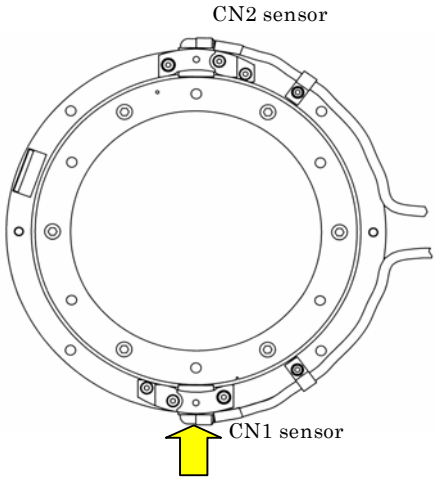

Fasten the sensor mounting ring while pressing it in the arrow direction.

Specification	Outer diameter of sensor mounting ring	Inner diameter of socket (ϕC)	Socket height (D)	Distance between bottom of sensor mounting ring and bottom of Detection ring (E)
A860-2140-T411	$\phi 140^{+0}_{-0.015}$	$\phi 140^{+0.015}_{-0}$	5.5 or less	11.5±0.2
A860-2140-T511	$\phi 190^{+0}_{-0.015}$	$\phi 190^{+0.015}_{-0}$	7.5 or less	13.5±0.2
A860-2140-T611	$\phi 242^{+0}_{-0.015}$	$\phi 242^{+0.015}_{-0}$	7.5 or less	13.5±0.2

© MyFANUC 2D5504D5BAC945D385F48627D4977F6C

NOTE

- Provide a sock on the machine side where possible, and fit the sensor mounting ring into the socket. Avoid making centering adjustments by tapping the outer surface of the sensor mounting ring.

Installing the OH line

Open the lid of the preamplifier box, and remove the connector cover on the CN4 side. Draw the OH line from CN4 and connect the line to the terminal block on the printed circuit board.

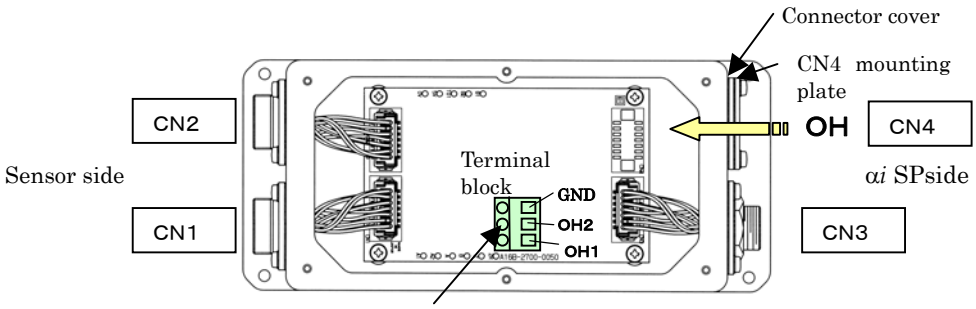

Tighten with flat-blade screwdriver (tightening torque: 0.3 Nm).

A cable clamp for the OH line is to be prepared by the user. Use the attached CN4 connector mounting plate to secure the cable clamp.
Recommended cable clamp: SKINTOP ST-7 from Lapp Kabel
Outer diameter of the OH cable: ϕ5.2±0.3
Hole diameter on the CN4 connector mounting plate: ϕ13

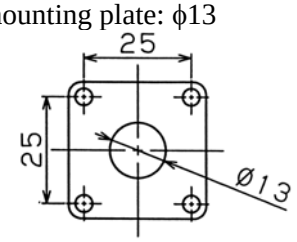

CN4 connector mounting plate

NOTE

- Adjustments have been made for the sensor, preamplifier, and Detection ring at the same time. Therefore, use them as a set. The variable resistor on the printed circuit board in the preamplifier is also adjusted in advance. So, do not readjust the variable resistor. Furthermore, the sensors cannot be adjusted mechanically. So, do not loosen the screws fastening the CN1 and CN2 sensors.
- The connectors on the sensor side are labeled "CN1" (in black) and "CN2" (in blue). Make connections according to the figure above.

Checking the output signals

When checking the output signals, see "Electrical specifications." (The output signals need not be adjusted.)

- Supply power to the 0 V and 5 V pins when checking the waveforms without making a connection to the αi SP.
- The Lissajous figure of the phase A/B output signal is a complete circle.

© MyFANUC 2D5504D5BAC945D385F48627D4977F6C

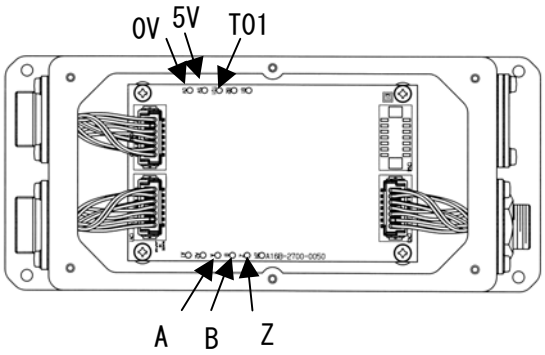

Details of cable (K89) for connection with the αiSP series

When the αiCZ SENSOR is used as a separate sensor (connected to connector JYA4), THR1 and THR2 need not be wired.

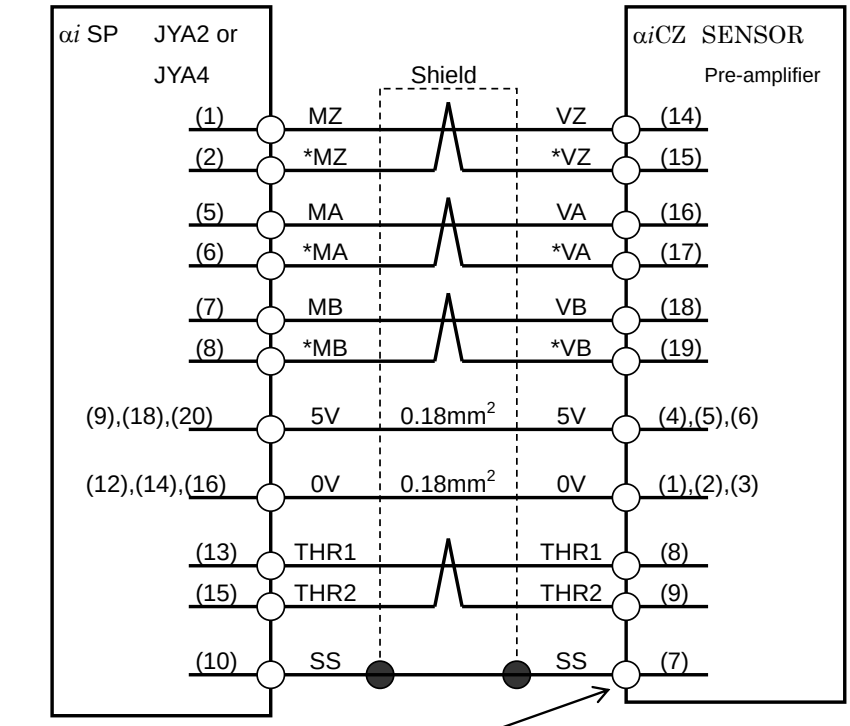

Hirose Electric
Crimp type
Crimp pin: HR22-SC-122 (15 pins required per connector)
Housing: HR22-12WTPA-20SC
Crimping tool: HR22-TA-2428HC (Hirose Electric)
Solder type
HR22-12WTPA-20S

Cable specification: 0.18-mm^2 twisted pair 4 pairs + 0.18-mm^2 6 common shielded cable
Recommended wire: A66L-0001-0367
For the connector conforming to the recommended wire on the JYA2 side, see Subsection 9.4.1.
For cable details, see Appendix B, "CABLES."

© MyFANUC 2D5504D5BAC945D385F48627D4977F6C

K MAGNETIC SENSOR SIGNAL CONVERSION ADAPTER

By using a magnetic sensor signal conversion adapter for compatibility with the α series, orientation based on the magnetic sensor method can be used with the α*i* SP series.
In the case of new design, however, employment of a standard spindle sensor of the αi series (such as the α*i* BZ sensor) is recommended.

Appendix E, "POWER LINE FOR SERVO MOTOR AND AMPLIFIER", consists of the following sections:

K.1 ORDERING INFORMATION 445
K.2 SPECIFICATIONS 445
K.3 DIMENSIONS 446
K.4 CONNECTION 447
K.5 METHOD OF ADJUSTMENT 448

K.1 ORDERING INFORMATION

- Magnetic sensor signal conversion adapter

Ordering number	
A06B-6111-H402	With no cable

- This adapter needs to be used in combination with the α*i* SP series TYPE B.
- For details of the magnetic sensor, refer to "FANUC SERVO AMPLIFIER a series DESCRIPTIONS (B-65162EN)."

K.2 SPECIFICATIONS

Example of configuration

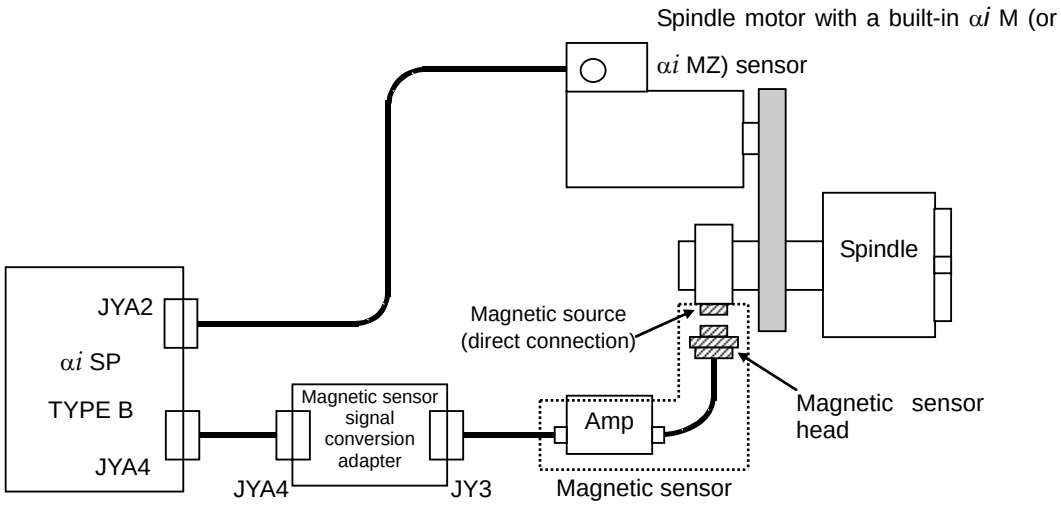

© MyFANUC 2D5504D5BAC945D385F48627D4977F6C

Applicable αiSP series

Specification number	Model
A06B-6142-Hxxx#H580	TYPE B, 200 V input
A06B-6152-Hxxx#H580	TYPE B, 400 V input

Notes

- A cable for connection between the αi SP and magnetic sensor signal conversion adapter needs to be prepared by the user.
- Operating temperature range: 0°C to 55°C
- The design of this adapter assumes that this adapter is housed in a cabinet such as a power magnetics cabinet, and no waterproof measures are taken.

K.3 DIMENSIONS

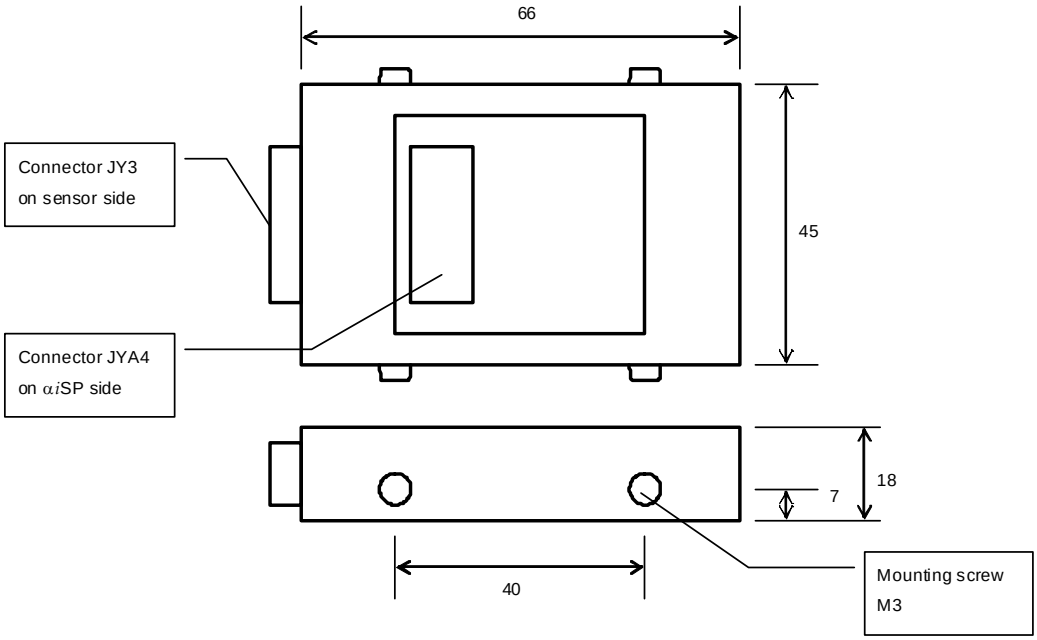

NOTE
When installing this adapter in a cabinet, use the M3 mounting screws on the side with an L-shaped mounting hardware.

© MyFANUC 2D5504D5BAC945D385F48627D4977F6C

K.4 CONNECTION

Overall connection

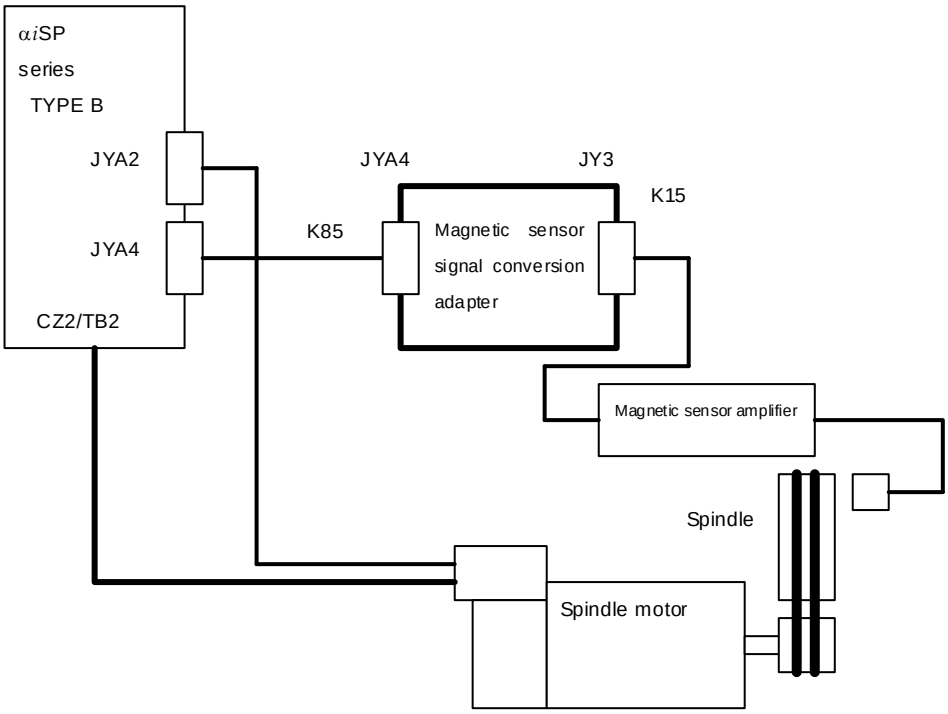

Details of K85 connection

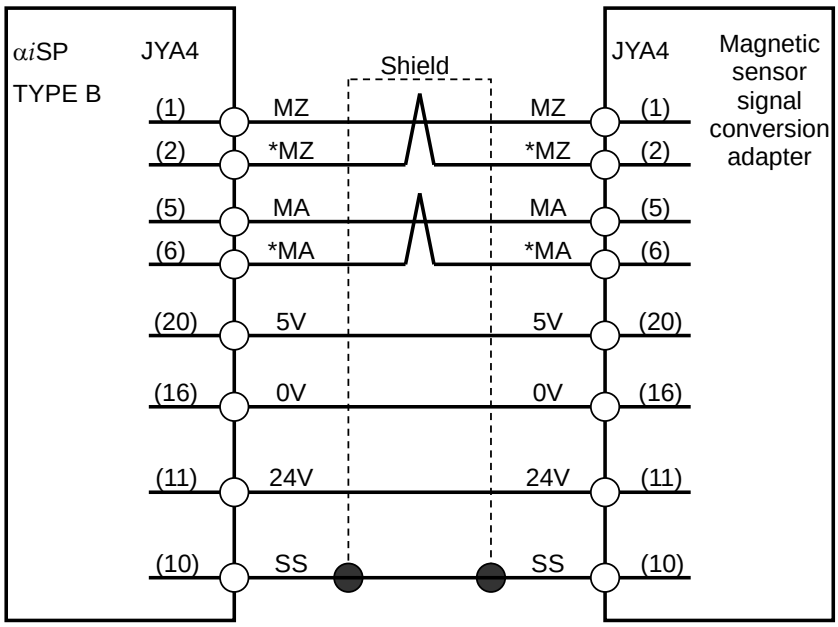

Cable specification

0.18-mm^2 twisted pair 2 pairs + 0.5-mm^2 3 common shielded cable
Recommended wire: A66L-0001-0368
Maximum cable length: 3 m

Connector to be used

Connector: FI40A-20S, Housing: FI-20-CV5, Manufacturer: Hirose Electric

© MyFANUC 2D5504D5BAC945D385F48627D4977F6C

Details of K15 connection

Refer to "FANUC SERVO AMPLIFIER a series DESCRIPTIONS (B-65162EN)."

K.5 METHOD OF ADJUSTMENT

While rotating the spindle at a speed of about 100 min^{-1}, check that the following waveforms can be obtained from the check pins PA2 and PS2 on the spindle check board (A06B-6078-H001). The waveforms below are obtained when the spindle is rotated in the reverse direction (SRV direction).

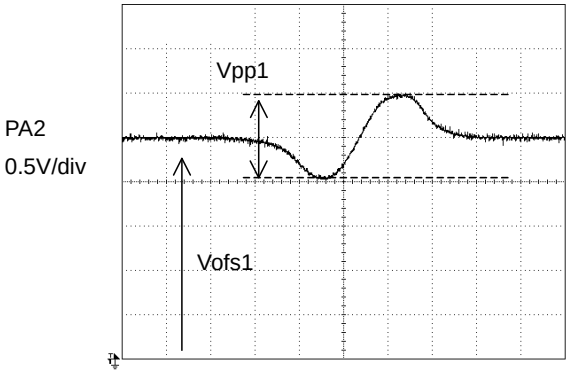

Specification: Vpp1 = 0.5 V to 1.2 V, Vofs1 = 2.5 V ± 100 mV

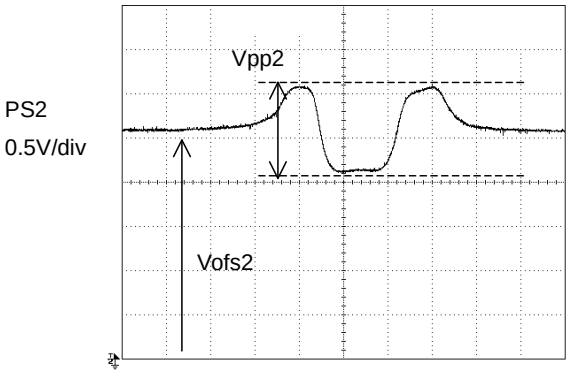

Specification: Vpp2 = 0.5 V to 1.2 V, Vofs2 = 2.6 V ± 100 mV

(Tip) Combining PA2 and PS2

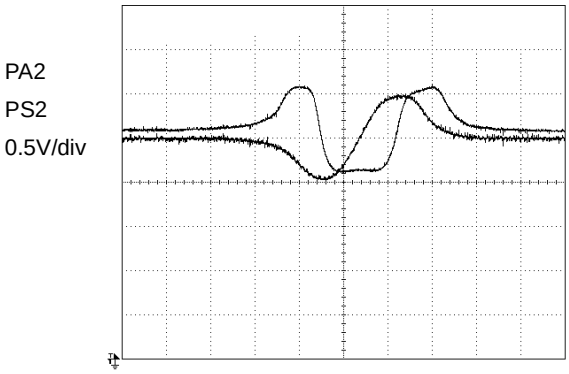

© MyFANUC 2D5504D5BAC945D385F48627D4977F6C

L HARMONIC LEAKAGE CURRENT

Method of filling the harmonic leakage current calculation sheet according to the harmonics suppression measure guideline

This appendix provides the method of filling "Calculation sheet of harmonic leakage current from harmonic emission devices (No. 1)" by the user in connection with "Harmonics suppression measure guideline for users who receive power at high or specially high voltages" issued from Agency for JAPAN Natural Resources and Energy of the Ministry of Economy, Trade, and Industry.
Servo amplifier data needed for filling the calculation sheet is provided below.

Servo amplifier data

Device name: Servo amplifier for velocity control
Manufacturer: FANUC LTD.
Model: Enter the drawing number of the servo amplifier.
Rated capacity: Refer to the descriptions of each servo amplifier.

- For rated capacity calculation, see "How to calculate the power equipment capacity" in Subsection 2.3.1.
  For "Minor circuit classification No." and "Conversion coefficient Ki," use the values on the table provided below.

- This appendix describes the method of filling the calculation sheet when no device for harmonic leakage current suppression is installed.
  If a device for harmonic leakage current suppression is already installed, "Calculation sheet of harmonic leakage current from harmonic emission devices (No. 2)" needs to be submitted.

- The circuit classification of a servo amplifier is 1 or 3. So, "Application of harmonic emission device manufacturers," which is required for circuit classification 10, need not be prepared.

- For details of the guideline, calculation method, and so forth, the user is requested to contact its electric power company.

Name	Target amplifier drawing number	Minor circuit classification No.	Conversion coefficient Ki	Remarks
Power supply (αiPS)	A06B-6110-Hxxx	32	1.8	NOTE
Power supply (αiPS HV)	A06B-6120-Hxxx	32	1.8	NOTE
Power supply (αiPSR)	A06B-6115-Hxxx	32	1.8	NOTE
Power supply (αiPS, Upgraded Version)	A06B-6140-Hxxx	32	1.8	NOTE
Power supply (αiPS HV, Upgraded Version)	A06B-6150-Hxxx	32	1.8	NOTE

NOTE
When the αi series amplifier is used, no separate calculation is needed for each of the servo amplifier (αiSV) and spindle amplifier (αiSP). A calculation may be made for the αiPS or αiPSR.

© MyFANUC 2D5504D5BAC945D385F48627D4977F6C

M MULTIPLE LANGUAGE SUPPORT FOR WARNINGS

Appendix M, " MULTIPLE LANGUAGE SUPPORT FOR WARNINGS ", consists of the following sections:

M.1 OVERVIEW 450
M.2 ORDERING NUMBER 452

M.1 OVERVIEW

Warning labels for the αi series servo amplifier unit are available in different languages. If required by the law or standard of the country concerned, use the labels translated into the relevant language.

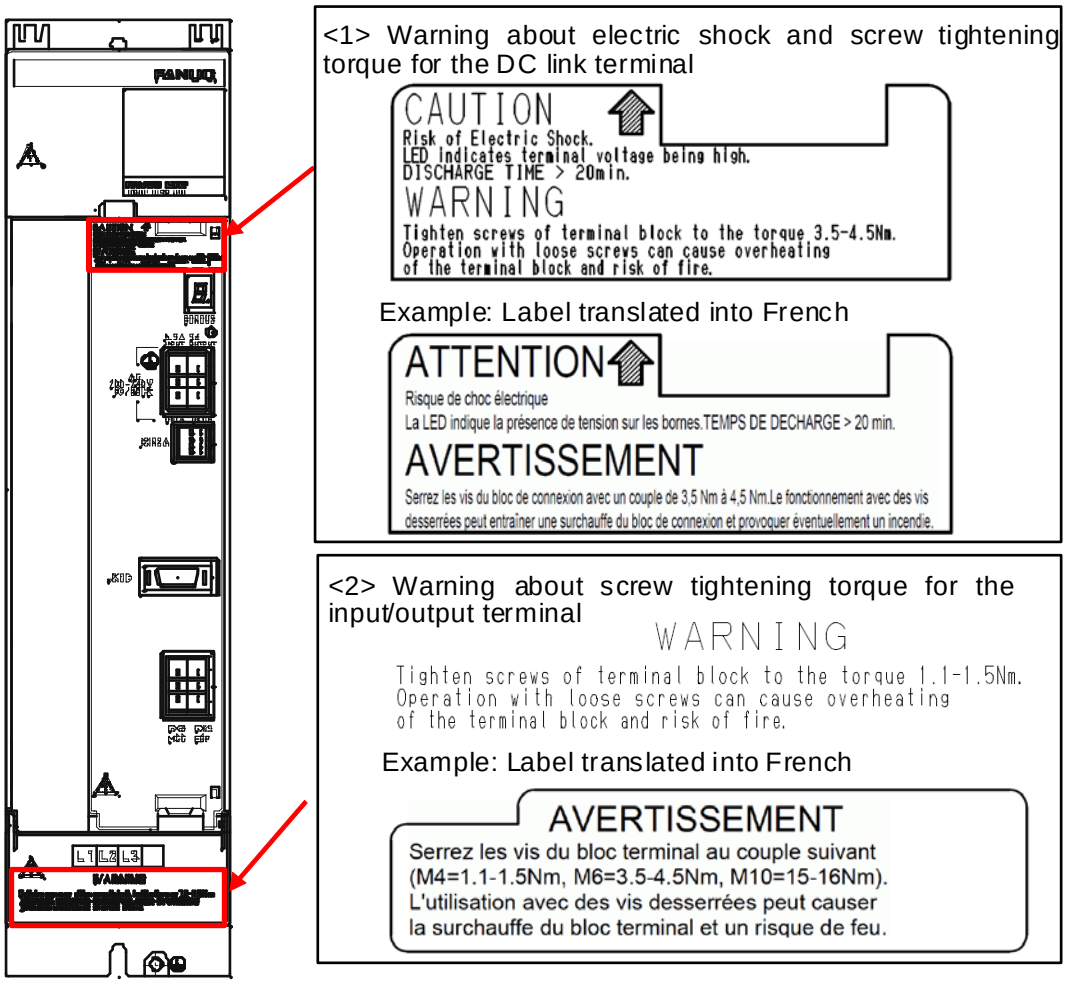

© MyFANUC 2D5504D5BAC945D385F48627D4977F6C

NOTE

Since the input and output terminals are connected by connectors in the amplifiers mentioned below, the warning about screw tightening torque of <2> is not used.

- 60mm-wide amplifier
- 90mm-wide SV (except for αiSV160L)

© MyFANUC 2D5504D5BAC945D385F48627D4977F6C

M.2 ORDERING NUMBER

The following table lists the ordering numbers.

Ordering numbers for the label sets of <1> and <2>

Language	Ordering number	Number of labels
French	A06B-6110-K513#FR	100 labels/set
German	A06B-6110-K513#GE	100 labels/set
Italian	A06B-6110-K513#IT	100 labels/set
Turkish	A06B-6110-K513#TU	100 labels/set
Dutch	A06B-6110-K513#DU	100 labels/set
Danish	A06B-6110-K513#DA	100 labels/set
Portuguese	A06B-6110-K513#POR	100 labels/set
Polish	A06B-6110-K513#POL	100 labels/set
Hungarian	A06B-6110-K513#HU	100 labels/set
Swedish	A06B-6110-K513#SW	100 labels/set
Czech	A06B-6110-K513#CZ	100 labels/set
Spanish	A06B-6110-K513#SP	100 labels/set
Russian	A06B-6110-K513#RU	100 labels/set
Finnish	A06B-6110-K513#FI	100 labels/set
Chinese	A06B-6110-K513#CH	100 labels/set
Japanese	A06B-6110-K513#JP	100 labels/set
Korean	A06B-6110-K513#KO	100 labels/set

© MyFANUC 2D5504D5BAC945D385F48627D4977F6C

N ENERGY CHARGE MODULE (ECM)

Appendix N, "ENERGY CHARGE MODULE (ECM)", consists of the following sections:

N.1 OVERVIEW 454
N.2 CONFIGURATION AND ORDERING NUMBERS....455
N.2.1 Configuration....455
N.2.2 Ordering Numbers 456
N.3 SPECIFICATIONS....457
N.3.1 Behavior of the Energy Charge Module (ECM)....457
N.3.2 Application 458
N.3.3 Control Module....458
N.3.4 Capacitor Module (for Smoothing)....459
N.3.5 Capacitor Module (for Charge)....459
N.3.6 Resistor Module....459
N.3.7 DC Reactor 459
N.3.8 Selection of the Power Supply....459
N.3.9 Servo Control....459
N.3.10 Environmental Conditions for the EMC....460
N.3.11 Ambient Temperature of the Power Supply and Servo Amplifier....460
N.3.12 Number of Servo Amplifiers and ECM Units To Be Connected 460
N.3.13 Amount of Heat Dissipation 460
N.4 SELECTION....461
N.4.1 Maximum Instantaneous Power and Power Pattern of the Machine 461
N.4.2 Permissible Maximum Instantaneous Power of the Machine....462
N.4.3 Check of the Maximum Output, Supply Energy, and Cycle Speed....464
N.4.4 Selection of the ECM System....466
N.5 FUNCTIONS AND INTERFACES....473
N.5.1 Interfaces with the Servo Amplifier....473
N.5.2 Interface with the PMC (I/O)....474
N.5.3 Function Setting Switches of the Control Module....476
N.5.4 Alarms and Status Display....477
N.5.5 Troubleshooting and Action 480
N.6 OUTLINE DRAWINGS AND PANEL CUT-OUT DIAGRAMS....487
N.6.1 Control Module (A06B-6158-H010)....487
N.6.2 Capacitor Module 488
N.6.3 Resistor Module (A06B-6158-H030) 490
N.6.4 DC Reactor 491
N.7 CONNECTION....493
N.7.1 Total Connection Diagram....493
N.7.2 Cable Connection Details 494
N.8 REPLACEMENT OF MAINTENANCE PARTS....504
N.8.1 Replacement of a Fan Motor 504
N.8.2 How to Replace the Fuses....505
N.9 (REFERENCE) LIFE OF THE CAPACITOR MODULE 506
N.10 PERIODIC MAINTENANCE 507

© MyFANUC 2D5504D5BAC945D385F48627D4977F6C

N.1 OVERVIEW

The use of servo motors for driving industrial machines reduces the average electric power consumption compared with hydraulic driving, thereby contributing to energy savings. On the other hand, however, the peak power consumption increases at acceleration and deceleration, causing larger fluctuations in supply voltage and, in some cases, making it necessary to increase the capacity of power supply facilities.
The energy charge module lowers the large supply current that flows at the peak of electric power consumption in order to reduce voltage fluctuations of power supply facilities.

Features

- The energy charge module supplies power running energy during motor acceleration and stores regenerative energy during motor deceleration to reduce voltage fluctuations of power supply facilities.
- During acceleration, the energy charge module supplies electric power only when power consumption exceeds the capacity of power supply facilities. During regeneration, the module works in conjunction with the power regeneration function to keep the required capacity of the capacitor to a minimum.
- Since a large amount of energy is stored in the capacitor, various types of alarm detection functions and capacitor discharging and protection circuits are added to secure safety.

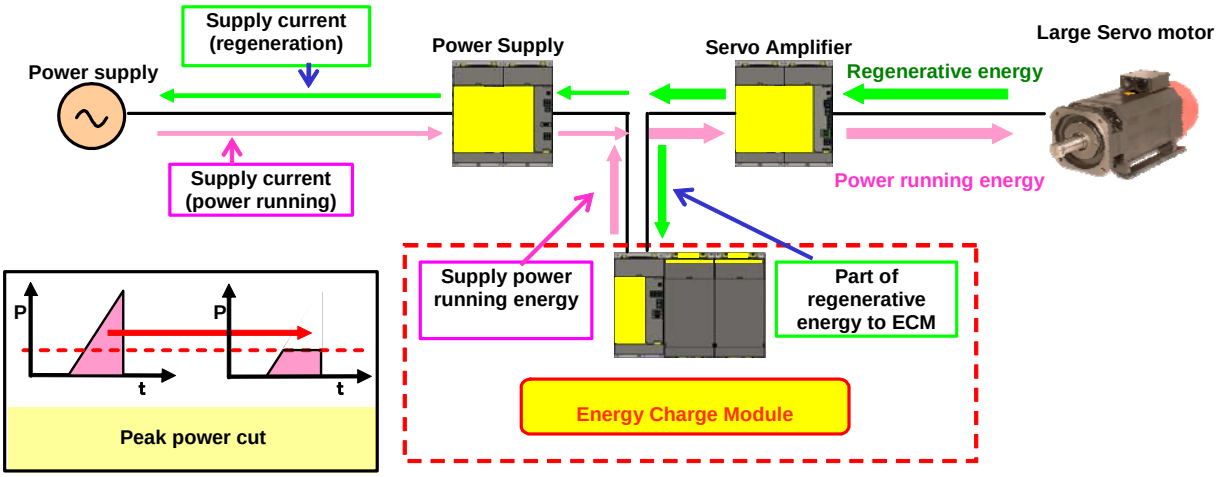

© MyFANUC 2D5504D5BAC945D385F48627D4977F6C

N.2 CONFIGURATION AND ORDERING NUMBERS

N.2.1 Configuration

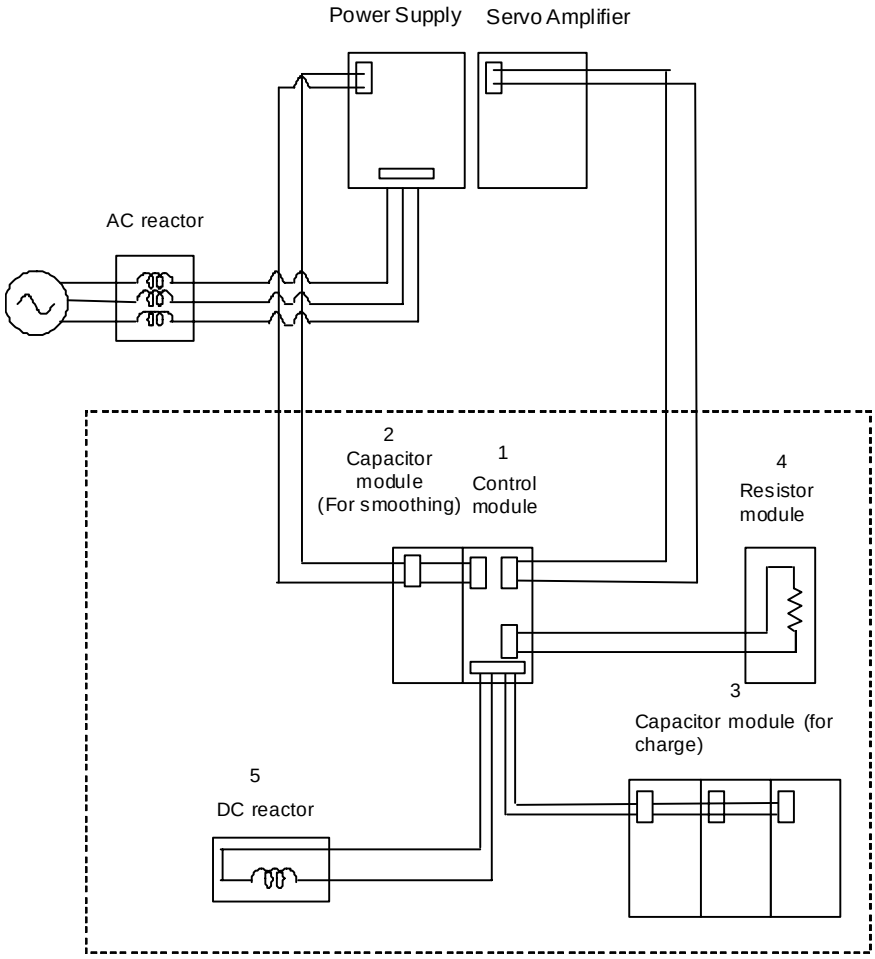

No.	Name	Function
1	Control module	Controls the charging and discharging of the capacitor module.
2	Capacitor module (for smoothing)	Smoothes the input/output current of the control module.
3	Capacitor module (for charge)	Stores energy.
4	Resistor module	Discharges the energy of the capacitor module at emergency stop.
5	DC reactor	Controls the charge/discharge current.

© MyFANUC 2D5504D5BAC945D385F48627D4977F6C

N.2.2 Ordering Numbers

N.2.2.1 Standard

Category	Name	Ordering number	Remarks
Standard	Control module	A06B-6158-H010	
Standard	Capacitor module	A06B-6158-H020	Size: 150 mm wide
Standard	Capacitor module	A06B-6158-H021	Size: 300mm wide
Standard	Resistor module	A06B-6158-H030	
Standard	DC reactor 1	A06B-6158-H040	Rated current: 100A (Note)
Standard	DC reactor 2	A06B-6158-H041	Rated current: 60A (Note)

NOTE
Either DC reactor 1 or 2 is used.

N.2.2.2 Short Bar, Connector, and Cover

For details, see Section N.7, "CONNECTION".

Short bar

Category	Name	Ordering number	Remarks	
Optional	Short bar	A06B-6110-K504	K2A K2B	Short bar to be attached to the 300-mm-wide Power Supply and the DC link terminal block of the Servo Amplifier
Optional	Short bar	A06B-6078-K804	K2C	Connection between the "DC link of the control module" and "capacitor module (for smoothing)"
Optional	Short bar	A06B-6078-K800	K2E	Connection between "capacitor modules (for charge)" For A06B-6158-H020
Optional	Short bar	A06B-6110-K507	K2E	Connection between "capacitor modules (for charge)" For A06B-6158-H021

Connector

Category	Name	Ordering number	Remarks	
Optional	Connector	A06B-6110-K505	K116 K117	Connection between the resistor module and control module
Optional	Connector	A06B-6110-K210	K69	Connection between the interface signal between the Servo Amplifier and control module
Optional	Connector	A06B-6110-K506	K118	Fuse disconnection signal of the capacitor module
Optional	Connector	A06B-6130-K202	K119	Terminating connector for the fuse disconnection signal of the capacitor module
Optional	Connector	A06B-6110-K508	K120	Connection between the I/O and control module

Cover

Category	Name	Ordering number	Remarks
Optional	Cover	A06B-6110-K509	Cover for the 300-mm-wide Power Supply and the DC link terminal block of the Servo Amplifier

© MyFANUC 2D5504D5BAC945D385F48627D4977F6C

N.3 SPECIFICATIONS

N.3.1 Behavior of the Energy Charge Module (ECM)

<1> When the Power Supply becomes ready, energy is supplied to the capacitor module of the ECM from the power supply (initial charge).
<2> If the power required by the Servo Amplifier exceeds the level set in the ECM, power running energy is supplied from the ECM.
<3> The regenerative energy is stored in the capacitor module of the ECM. When the capacitor module is fully charged, the regenerative energy is returned to the power supply.

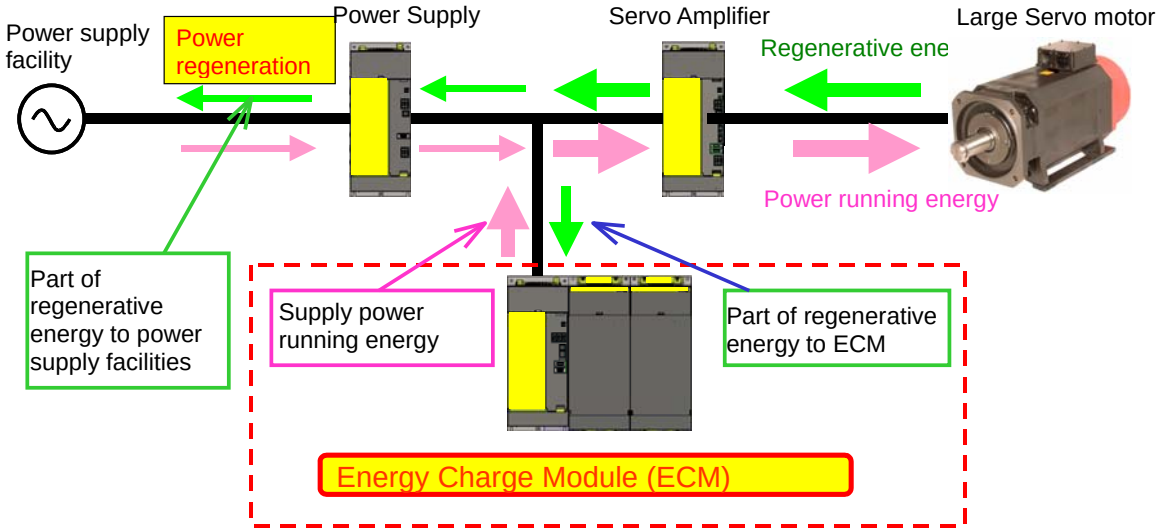

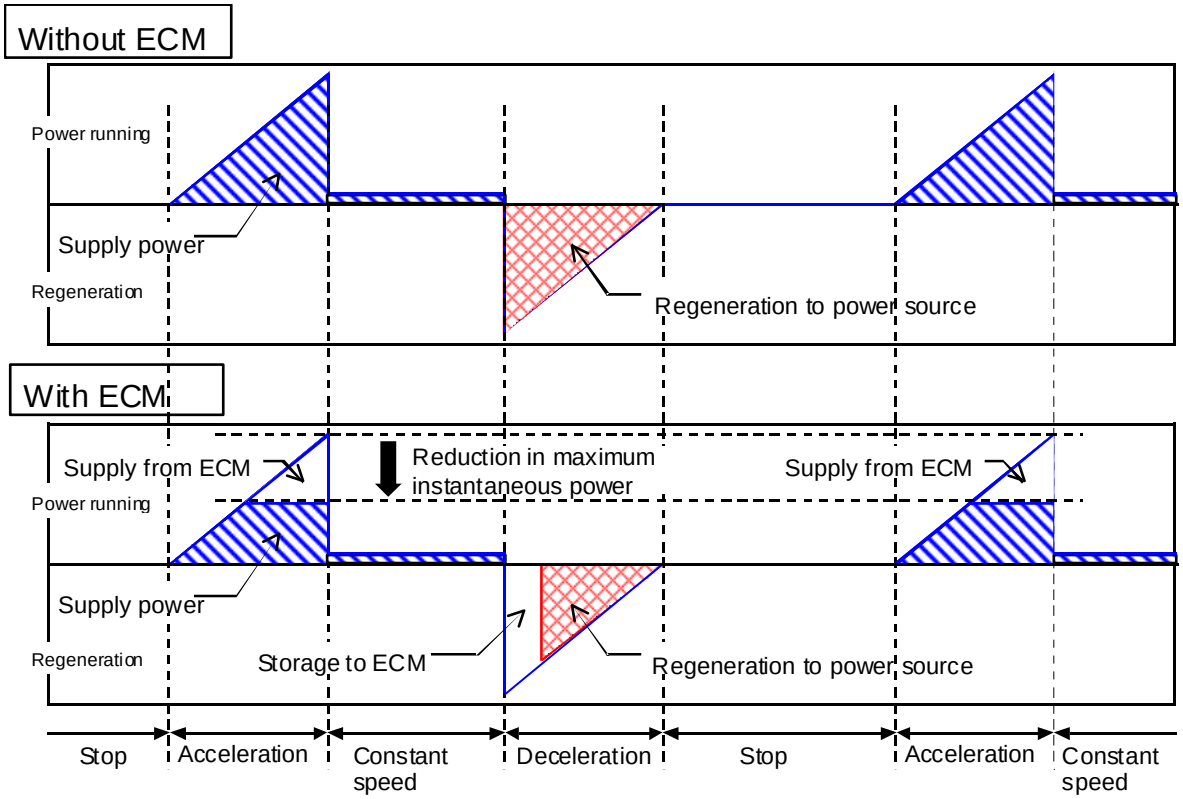

© MyFANUC 2D5504D5BAC945D385F48627D4977F6C

N.3.2 Application

This ECM is applicable to the αi series Servo Amplifier of the 400-V input series.
The specifications of the unit are described below.

Subsection	Name	Function
N.3.3	Control module	Controls the charging and discharging of the capacitor module.
N.3.4	Capacitor module (for smoothing)	Smoothes the input/output current of the control module.
N.3.5	Capacitor module (for charge)	Stores energy.
N.3.6	Resistor module	Discharges the energy of the capacitor module at emergency stop.
N.3.7	DC reactor	Controls the charge/discharge current.

N.3.3 Control Module

This module controls the charge current and discharge current of the capacitor module.

Item	Specifications
Maximum output	120kW or less (Note 1)
Maximum supply energy	11kJ or less (Note 2)
Maximum number of connectable capacitor module (for charge)	Up to 10 (Note 2, Note 3)
Continuous output of motor	55kW or less
Limit of input power supply current	See Appendix N.4.4.
Protection functions	See Appendix N.5.3. (overcurrent detection, overvoltage detection, etc.)

NOTE

1 The maximum output depends on the operating condition of the ECM. See Subsection N.4.4. The rising time of the output may be delayed by half of the cycle of the power supply.

2 The maximum supply energy also depends on the amount of energy that can be stored per capacitor module and the maximum number of connectable capacitor modules (10). See Subsection N.4.4.

3 The number of connectable capacitor modules shown here assumes the use of the capacitor module A06B-6158-H020 (0.011F). When using the capacitor module A06B-6158-H021 (0.022F), count each A06B-6158-H021 module as two units, because it can store twice as much energy.
Example)
A06B-6158-H020 (1 unit) + A06B-6158-H021 (2 units): The number of capacitor modules is 5.
Example of the output pattern when the maximum output is 120kW

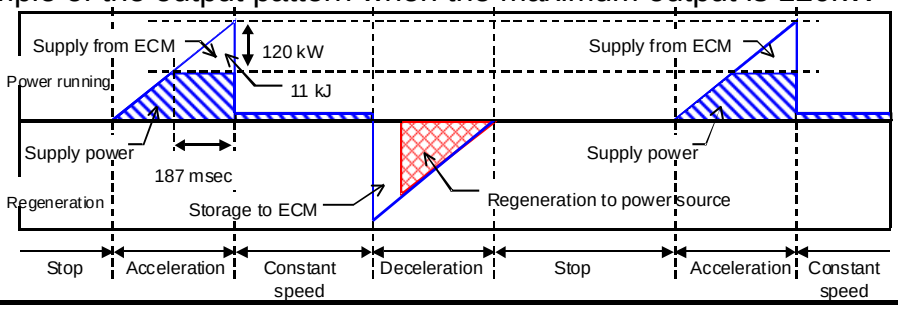

© MyFANUC 2D5504D5BAC945D385F48627D4977F6C

N.3.4 Capacitor Module (for Smoothing)

This module is a capacitor that smoothes the current. It is installed between the control module and Power Supply.

Item	Specifications
Capacitance	A06B-6158-H020: 0.011F
Protection method	A built-in fuse breaks the circuit when the capacitor is short-circuited.
Number of units used	1

N.3.5 Capacitor Module (for Charge)

This module is a capacitor used to store energy. When the motor decelerates, the capacitor stores regenerative energy. When the motor accelerates, it supplies power running energy. For information about how to determine the number of modules, see Section N.4.

Item	Specifications
Capacitance	A06B-6158-H020: 0.011F A06B-6158-H021: 0.022F
Protection method	A built-in fuse breaks the circuit when the capacitor is short-circuited.
Life	See Section N.9. Number of full discharges: 1 million
Discharge duty cycle	5 minutes/time or more

N.3.6 Resistor Module

This module is a resistor that discharges the energy of the capacitor module in case of an emergency stop or alarm.

Item	Specifications
Resistance	30Ω
Discharge time	5 minutes or less (when 10 capacitor modules are connected)
Charge time	Approx. 5 seconds (when 10 capacitor modules are connected)
Protection method	The thermostat inside the resistor module detects abnormal heat generation.
Number of units connected	1
Life	Number of discharges: 1 million
Discharge duty cycle	5 minutes/time or more

N.3.7 DC Reactor

The DC reactor controls the charge/discharge current. Two types of DC reactor shown below are available. Select the DC reactor to be used, based on the number of capacitor modules to be connected, cycle speed, and maximum power.

(1) A06B-6158-H040 (rated current: 100A)
(2) A06B-6158-H041 (rated current: 60A)

N.3.8 Selection of the Power Supply

Even when the ECM is used, select the Power Supply in the same way as when the ECM is not used.

N.3.9 Servo Control

Use HRV2.
The actual characteristic of the axis that is using PDM becomes an equivalent for HRV2.
PDM becomes an equivalent for HRV2

© MyFANUC 2D5504D5BAC945D385F48627D4977F6C

N.3.10 Environmental Conditions for the EMC

See Appendix N.2.2.

N.3.11 Ambient Temperature of the Power Supply and Servo Amplifier

Ambient temperature of the Power Supply and Servo Amplifier using the ECM: 0 to 45°C

N.3.12 Number of Servo Amplifiers and ECM Units To Be Connected

For information about the number of Servo Amplifiers and spindle amplifiers to be connected, see Subsection N.4.3.4.
Connect one ECM unit per α*i*SV 3-axis Servo Amplifier.

N.3.13 Amount of Heat Dissipation

The following table shows the amount of heat to be dissipated when the ECM is used at its maximum rating. Use this information for the heat dissipation design of the cabinet.

Name	Ordering numbers	Total amount of heat dissipation	Residual amount of heat in the cabinet (Note 1)
Control module	A06B-6158-H010	233W	38W
Capacitor module	A06B-6158-H020	22W	-
Capacitor module	A06B-6158-H021	44W	-
Resistor module（Note 2)	A06B-6158-H030	84W	-
DC reactor 1	A06B-6158-H040	190W	-
DC reactor 2	A06B-6158-H041	100W	-

NOTE

1 The residual amount of heat in the cabinet refers to the amount of heat that remains in the cabinet when the heat sink of the control module is put outside the cabinet.

2 The values in the table assume that the number of capacitor modules is 10 and that the discharge duty cycle is 5 minutes/time.
Under other conditions, the amount of heat dissipation can be calculated by the following formula:
Total amount of heat dissipation =84W×(N/10)×(5/M)
Number of capacitor modules : N
Discharge duty cycle : M minutes/time

© MyFANUC 2D5504D5BAC945D385F48627D4977F6C

N.4 SELECTION

This section describes how to select the ECM.

ECM selection procedure

No.	Descriptions	Reference item
<1>	Calculate the maximum instantaneous power required by the machine and the power pattern.	N.4.1
<2>	Determine the permissible maximum instantaneous power of the machine, based on the maximum instantaneous power defined in the machine specifications or permitted by the capacity of the power supply facilities.	N.4.2
<3>	Calculate the maximum output and supply energy of the ECM so that the power from the power supply is less than the permissible maximum instantaneous power. Check the cycle speed of the repetition operation.	N.4.3
<4>	Select the ECM based on the maximum output, supply energy, and cycle speed.	N.4.4

NOTE

When more than one ECM is used for a machine, divide the permissible maximum instantaneous power of the machine into the maximum instantaneous power of each individual ECM.

N.4.1 Maximum Instantaneous Power and Power Pattern of the Machine

- The output of the motor can be calculated by multiplying the motor torque by the motor speed.
  In an existing machine, it can be obtained by measuring the motor torque and speed. In the machine design process, it can be calculated from the specifications of the motor and the inertia and operating conditions of the machine.
  Motor output (W) = Motor rotation speed (rad/s) × Torque (Nm)
- Since the output of the motor does not include the loss of the amplifier and motor, multiply the motor output by 1.2 when calculating the power supplied from the power supply and ECM.
  Power from the power supply (W) = Motor output (W) × 1.2
- The maximum instantaneous power required by the machine is the sum of the maximum instantaneous power required by the motor and the power of the other equipment installed in the machine.

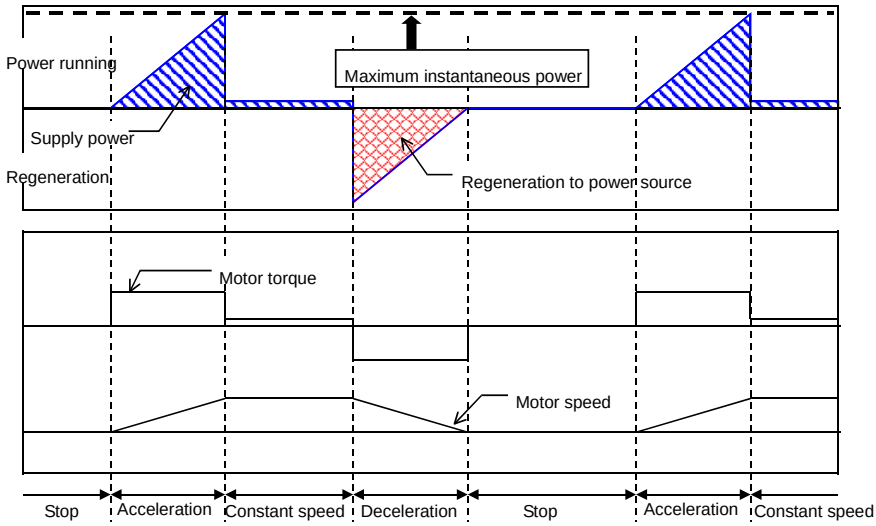

© MyFANUC 2D5504D5BAC945D385F48627D4977F6C

N.4.2 Permissible Maximum Instantaneous Power of the Machine

Determine the permissible maximum instantaneous power of the machine, based on the maximum instantaneous power defined in the machine specifications or permitted by the capacity of the power supply facilities.

How to calculate the permissible maximum instantaneous power of power supply facilities

- The power company regulates the voltage drop ratio at the receiving point of the power supply system because the voltage of the receiving point may drop when the customer uses the maximum instantaneous power, affecting neighboring equipment.
  * The voltage drop ratio is determined individually by each power company. For information, contact your local power company.
- Calculate the voltage drop ratio at the receiving point that can occur when the customer uses the maximum instantaneous power. If it exceeds the voltage drop ratio specified by the power company, the customer needs to improve the voltage drop ratio.
- The methods of calculating the voltage drop ratio at the receiving point and the permissible maximum instantaneous power of power supply facilities.

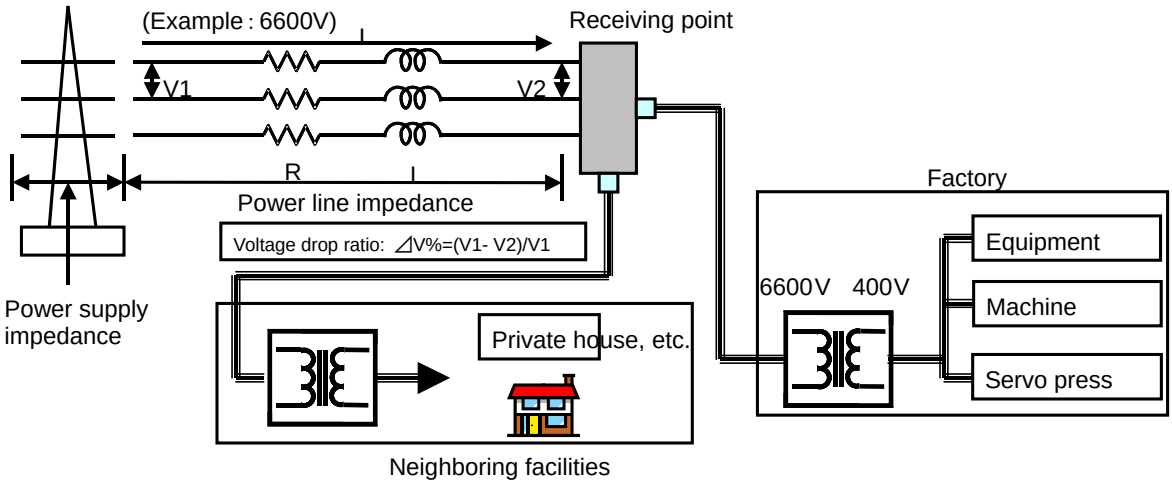

NOTE

1 For information about the impedance of the power line, contact the power company.

2 Generally, a drop in voltage depends on the impedance from the power supply of the power company to the power line of the receiving point. If the impedance of the power supply of the power company cannot be ignored, add the impedance of the power supply to that of the power line.

Calculation method 1

Symbol	Item	Unit	Remarks
V1	Line voltage	Vrms	Power line voltage without load
V2	Voltage at receiving point	Vrms	Receiving point voltage with load
I	Maximum current	Arms	Supply current at the maximum output of the machine
R	Resistance	ohm	Power line resistance
X	Reactance	ohm	Power line reactance (X [ohm]=jωL [H])
cos ϕ	Power factor	-	When unknown, use the standard value of 0.9.
Sin ϕ	-	-	When unknown, use the standard value of 0.44.
⊿V%	Ratio of voltage drop	%	Calculated voltage drop ratio

© MyFANUC 2D5504D5BAC945D385F48627D4977F6C

Symbol	Item	Unit	Remarks
⊿Va%	Permissible voltage drop ratio	%	Specified voltage drop ratio

- Calculate the voltage drop ratio ⊿V% from the values shown in the table above.
  ⊿V%= (V1-V2)/V1＝{I × (R × cos ϕ+X × sin ϕ) / (V1/√3)} × 100 [%]
- If the voltage drop ratio ⊿V% is below the threshold specified by the power company (permissible voltage drop ratio ⊿Va%), no action needs to be taken.
- If the voltage drop ratio ⊿V% exceeds the threshold specified by the power company (permissible voltage drop ratio ⊿Va%), calculate the permissible maximum instantaneous power using the formula below:
  Permissible maximum instantaneous power = $V1^2$ ×⊿Va% / {(R × cos ϕ+X × sin ϕ) × 100} [VA]
- The maximum instantaneous power of the machine needs to be reduced to below the permissible maximum instantaneous power.

Calculation example)
Conditions

Symbol	Item	Values
V1	Line voltage	6600Vrms
I	Maximum current	306Arms
R	Resistance	0.87ohm
X	Reactance	2.18ohm
cos ϕ	Power factor	0.9
sin ϕ	-	0.44

(1) Calculation of the voltage drop ratio ⊿V%
⊿V% = {306 × (0.87 × 0.9+2.18 × 0.44) / (6600/√3)} × 100 [%] =14.0[%]

(2) Permissible maximum instantaneous power
If the permissible voltage drop ratio ⊿Va% is 4.2%
Permissible maximum instantaneous power
= 6600^2 × 4.2 / {(0.87 × 0.9+2.18 × 0.44) × 100} [VA]
= 1050[kVA] (945[kW], Power factor:0.9)

Calculation method 2

Symbol	Item	Unit	Remarks
Po	Maximum output	kVA	Maximum output of the machine
%R	%Resistance	%	%Resistance of the power line
%X	%Reactance	%	%Reactance of the power line
P	Reference capacity of the power supply	MVA	%L and %R reference capacity
cos ϕ	Power factor	-	When unknown, use the standard value of 0.9.
sin ϕ	-	-	When unknown, use the standard value of 0.44.
⊿V%	Ratio of voltage drop	%	Calculated voltage drop ratio
⊿Va%	Permissible voltage drop ratio	%	Specified voltage drop ratio

- Calculate the voltage drop ratio ⊿V% from the values shown in the table above.
  ⊿V%= Po × (%R × cos ϕ+%X × sin ϕ) × 10^{-4} [%] (Condition:P=10MVA)
- If the voltage drop ratio ⊿V% is below the threshold specified by the power company (permissible voltage drop ratio ⊿Va%), no action needs to be taken.
- If the voltage drop ratio ⊿V% exceeds the threshold specified by the power company (permissible voltage drop ratio ⊿Va%), calculate the permissible maximum instantaneous power using the formula below:
  Permissible maximum instantaneous power =⊿Va% / {(%R × cos ϕ+%X × sin ϕ) × 10^{-4}} [kVA]

© MyFANUC 2D5504D5BAC945D385F48627D4977F6C

- The maximum instantaneous power of the machine needs to be reduced to below the permissible maximum instantaneous power.

  Calculation example)
  Condition

Symbol	Item	Values
Po	Maximum output	3500kVA
%R	%Resistance	20%
%X	%Reactance	50%
P	Reference capacity of the power supply	10MVA
cos ϕ	Power factor	0.9
sin ϕ	-	0.44

(1) Calculation of the voltage drop ratio ⊿V%
Ratio of voltage drop⊿V%= $3500\times(20\times0.9+50\times0.44)\times10^{-4}$ [%] = 14.0[%]

(2) Permissible maximum instantaneous power
If the permissible voltage drop ratio ⊿Va% is 4.2%
Permissible maximum instantaneous power = $4.2\div\{(20\times0.9+50\times0.44)\times10^{-4}\}$
= 1050[kVA] (945[kW] Power factor:0.9)

N.4.3 Check of the Maximum Output, Supply Energy, and Cycle Speed

Calculate the maximum output and supply energy of the ECM so that the power from the power supply is less than the permissible maximum instantaneous power.

Check the cycle speed of the repetition operation.

1 Calculate the maximum power (kW) that needs to be supplied from the ECM, based on the maximum instantaneous power (N.4.1) and permissible maximum instantaneous power (N.4.2) of the machine.

  Maximum power that needs to be supplied from the ECM (kW) = Maximum instantaneous power of the machine – Permissible maximum instantaneous power of the machine

2 Calculate the amount of energy (J) to be supplied from the ECM, based on the area of the portion in excess of the permissible maximum instantaneous power.
3 Check the cycle speed.
  The cycle speed is the repetition cycle of the machine acceleration/deceleration pattern per minute. Since the cycle speed (unit: times/minute) is used for later calculations, calculate it based on the operating conditions of the machine.
  In the case of a press machine, the cycle speed is generally expressed in SPM (shots per minute).
4 If the regeneration (deceleration) of the motor does not occur after power is supplied from the ECM, energy is not stored in the ECM. In this case, contact FANUC.

© MyFANUC 2D5504D5BAC945D385F48627D4977F6C

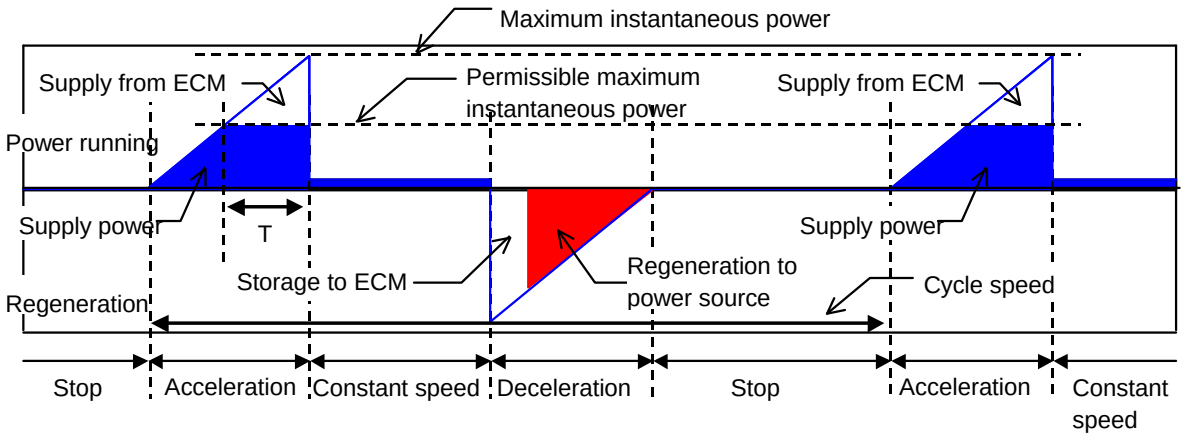

© MyFANUC 2D5504D5BAC945D385F48627D4977F6C

N.4.4 Selection of the ECM System

Select the ECM based on the maximum output, supply energy, and cycle speed.

1. Number of capacitor modules (for charge)
2. DC reactor
3. ECM setting switch (when the machine is installed)

No.	Item	Descriptions	Reference item
1	Maximum supply energy check	The maximum supply energy of the ECM is 11kJ. If the "energy to be supplied from the ECM (J)" calculated in Subsection N.4.3 exceeds 11kJ, it is necessary to add Power Supply and ECM units. For details, contact FANUC.	
2	Check of the amount of energy that can be stored per capacitor module	The relationship among the "amount of energy that can be stored per capacitor module (J)", "maximum power to be supplied from the ECM", and "cycle speed" is illustrated in a figure. See Fig. N.4.4.1 (a, b, c). Estimate the amount of energy that can be stored per capacitor module, based on this figure.	N.4.4.1
3	Calculation of the number of capacitor modules to be connected	Obtain the number of capacitor modules to be connected from the "energy to be supplied from the ECM (J)" calculated in Subsection N.4.3 and the "amount of energy that can be stored per capacitor module" calculated in Subsection N.4.4.1.	N.4.4.2
4	Check of the maximum number of connectable capacitor modules	The maximum number of connectable capacitor modules is 10. If the number of capacitor modules exceeds 10, it is necessary to divide Power Supply and ECM units. For details, contact FANUC.	
5	DC reactor selection	Select the DC reactor to be used, based on the number of capacitor modules to be connected, cycle speed, and maximum power.	N.4.4.3
6	ECM switch setting	Set the start level for energy supply from the ECM, using the setting switch on the ECM, so that the power from the power supply is less than the permissible maximum instantaneous power.	N.4.4.4

© MyFANUC 2D5504D5BAC945D385F48627D4977F6C

N.4.4.1 Check of the amount of energy that can be stored per capacitor module

- The relationship among the "amount of energy that can be stored per capacitor module (J)", maximum power to be supplied from the ECM, and cycle speed is illustrated in a figure. See Fig. N.4.4.1 (a, b, c, d).
  Estimate the amount of energy that can be stored per capacitor module, based on this figure.
- Several selection conditions are given in which the supply voltage is 380V, 400V, 440V, and 480V, respectively.
  If the intended voltage is somewhere between the given voltages, use the selection condition with the lower voltage.
  For example, if the supply voltage is 460V, then use the selection condition of 440V.

A: When the supply voltage is 380V

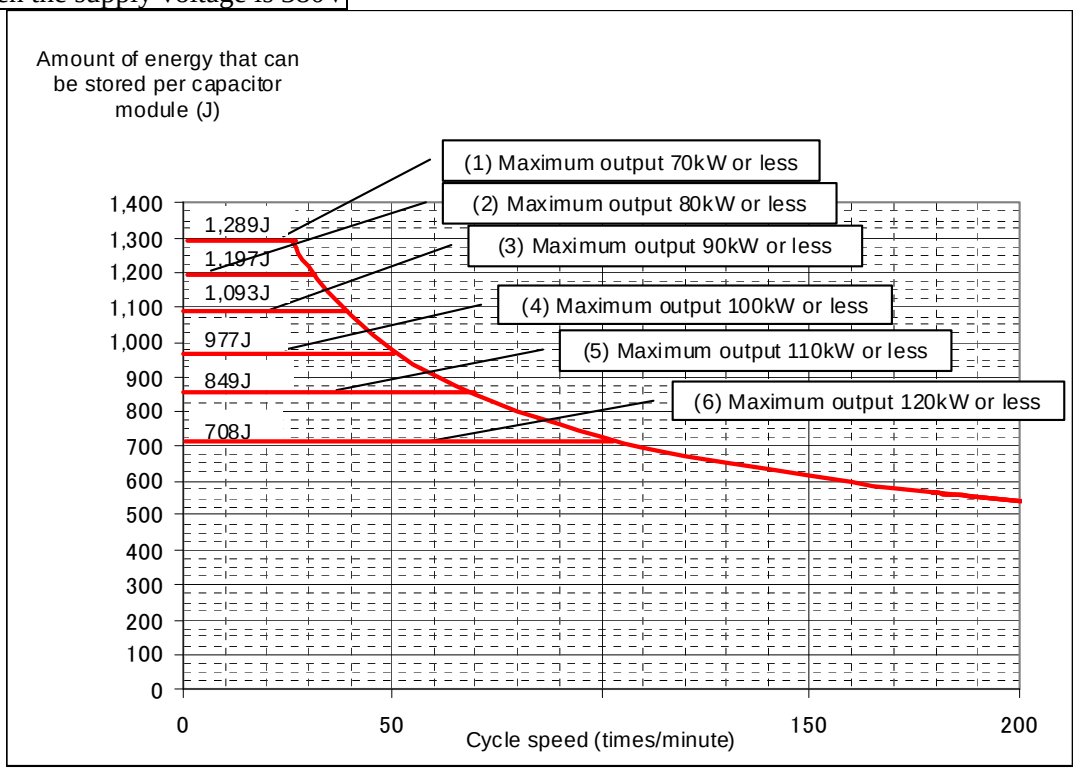

Fig. N.4.4.1 (a) Amount of energy that can be stored per capacitor module (when the supply voltage is 380V)

© MyFANUC 2D5504D5BAC945D385F48627D4977F6C

B : When the supply voltage is 400V

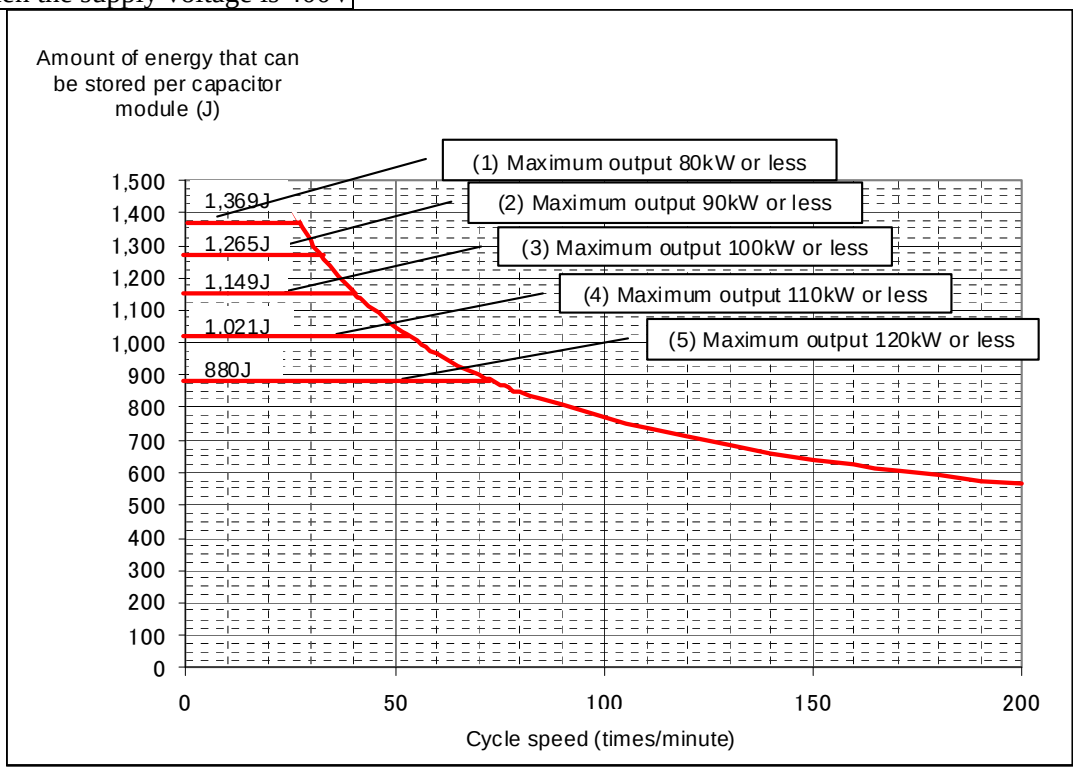

Fig. N.4.4.1 (b) Amount of energy that can be stored per capacitor module (when the supply voltage is 400V)

C : When the supply voltage is 440V

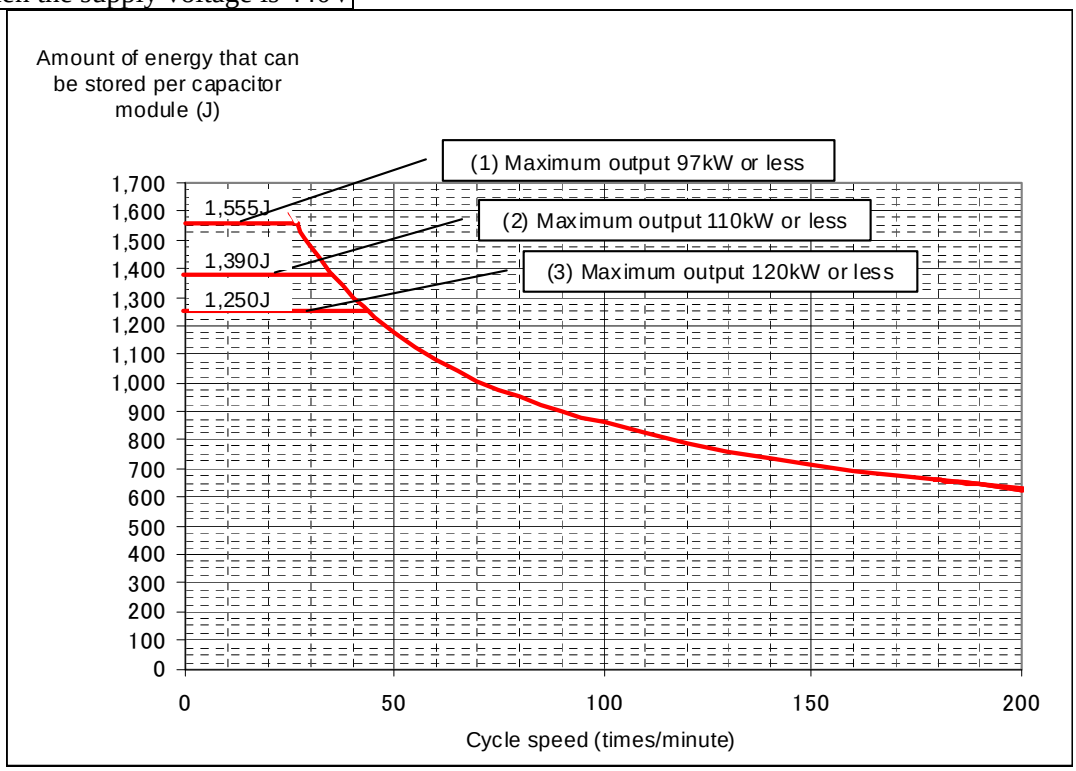

Fig. N.4.4.1 (c) Amount of energy that can be stored per capacitor module (when the supply voltage is 440V)

© MyFANUC 2D5504D5BAC945D385F48627D4977F6C

D : When the supply voltage is 480V

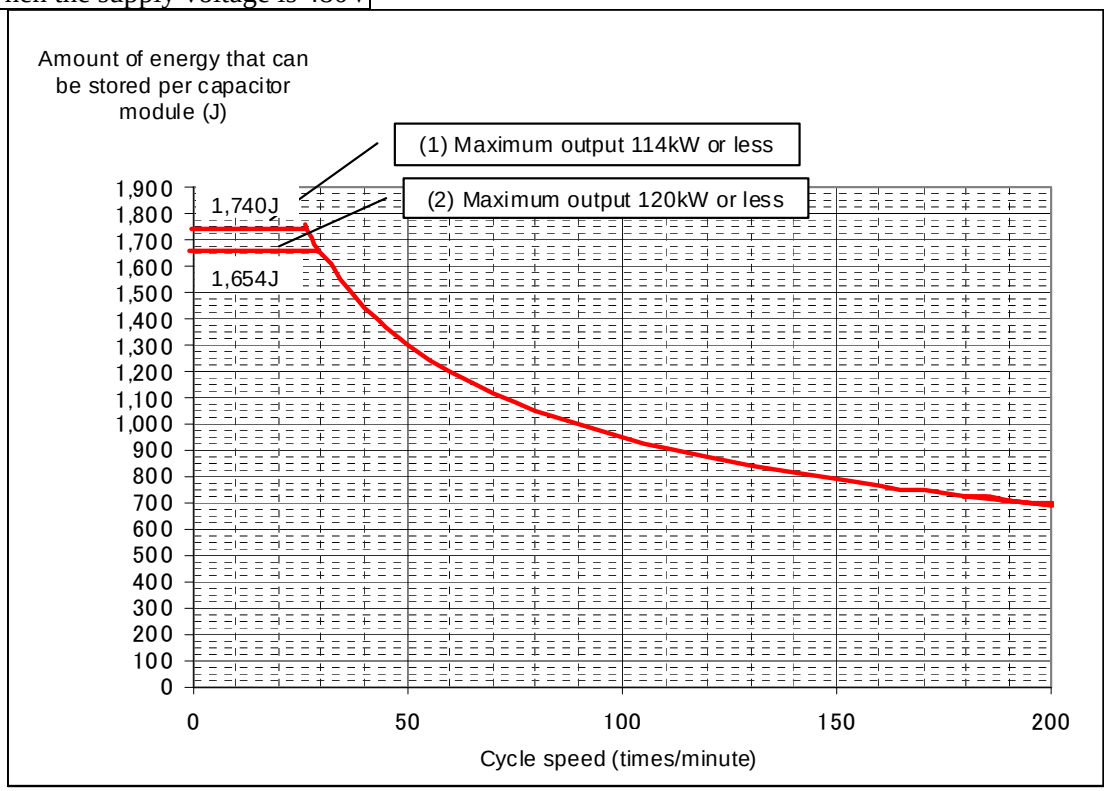

Fig. N.4.4.1 (d) Amount of energy that can be stored per capacitor module (when the supply voltage is 480V)

N.4.4.2 Calculation of the number of capacitor modules to be connected

- Calculate the number of capacitor modules to be connected, based on the "energy to be supplied from the ECM (J)" mentioned in Subsection N.4.3 and the "amount of energy that can be stored per capacitor module" mentioned in Subsection N.4.4.1.

  Energy from the ECM (J) ≤ Energy stored per capacitor module (J) × N
  N: Number of capacitor modules (N ≤10)

- The number of capacitor modules to be connected presented herein assumes the use of the capacitor module A06B-6158-H020 (0.011F). When using the capacitor module A06B-6158-H021 (0.022F), count each A06B-6158-H021 module as two units, because it can store twice as much energy.

  Example) A06B-6158-H020 (1 unit) + A06B-6158-H021 (2 units): The number of capacitor modules is 5.

© MyFANUC 2D5504D5BAC945D385F48627D4977F6C

N.4.4.3 Selection of the DC reactor

- Select the DC reactor based on the number of capacitor modules to be connected, cycle speed, and maximum power.
- The following two types of DC reactor are available:
  (1)A06B-6158-H040 (2)A06B-6158-H041
- If the number of capacitor modules to be connected is less than the values shown in the table below, A06B-6158-H041 can be used. Otherwise, use A06B-6158-H040.

A: When the supply voltage is 380V

Maximum power / Cycle speed (times/minute)	≤ 90kW	90kW to 100kW	101kW to 110kW	111k to 120kW
Up to 20	10	10	10	10
21 to 30	10	10	10	10
31 to 40	9	8	8	10
41 to 50	6	6	5	8
51 to 60	6	6	5	6
61 to 70	5	5	5	5
71 to 80	5	5	4	5
81 to 90	4	5	4	4
91 to 100	4	5	3	4
101 to 140	4	4	3	3
151 to 200	3	4	3	3

B: When the supply voltage is 400V

Maximum power / Cycle speed (times/minute)	≤ 90kW	90kW to 100kW	101kW to 110kW	111k to 120kW
Up to 20	10	10	10	10
21 to 30	8	9	9	10
31 to 40	7	6	7	9
41 to 50	7	6	5	7
51 to 60	7	6	5	6
61 to 70	6	5	5	5
71 to 80	6	5	5	4
81 to 90	5	5	4	4
91 to 100	5	5	4	4
101 to 140	5	4	4	3
151 to 200	4	4	3	3

C: When the supply voltage is 440V

Maximum power / Cycle speed (times/minute)	≤ 90kW	90kW to 100kW	101kW to 110kW	111k to 120kW
Up to 20	10	10	10	10
21 to 30	9	8	8	9
31 to 40	9	8	7	6
41 to 50	8	7	6	6
51 to 60	8	7	6	6
61 to 70	6	6	5	5
71 to 80	6	6	5	5
81 to 90	6	5	5	4
91 to 100	6	5	5	4
101 to 140	5	5	4	4
151 to 200	4	4	3	3

© MyFANUC 2D5504D5BAC945D385F48627D4977F6C

D: When the supply voltage is 480V

Cycle speed (times/minute) \ Maximum power	≤ 90kW	90kW to 100kW	101kW to 110kW	111k to 120kW
Up to 20	10	10	10	10
21 to 30	9	8	8	7
31 to 40	9	8	7	7
41 to 50	8	7	6	6
51 to 60	8	7	6	6
61 to 70	7	7	6	5
71 to 80	7	7	6	5
81 to 90	7	7	6	5
91 to 100	7	6	5	5
101 to 140	5	5	4	4
151 to 200	5	4	4	3

N.4.4.4 ECM switch setting

- Set the start level for energy supply from the ECM, using the setting switch (SW1) on the ECM, so that the power from the power supply is less than the permissible maximum instantaneous power.
- If the power required by the motor exceeds the set level, energy is supplied from the ECM and the supply of power from the power supply is limited.
- The table below shows the limit on the supply of power from the power supply at each level.
- There are two patterns of setting the supply start levels. In one pattern, the maximum value is 110kW (pattern 1, 400Vrms); in the other pattern, the maximum value is 185kW (pattern 2, 400Vrms). For information about the setting method, see Subsection N.5.3.

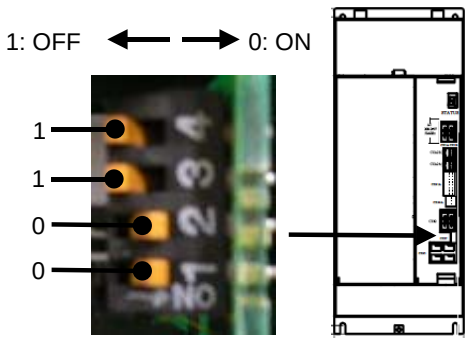

Pattern 1

Limits on the supply of power from the power supply (kW)

Setting	4	3	2	1	Supply current (Arms)	Supply voltage 380Vrms	Supply voltage 400Vrms	Supply voltage 440Vrms	Supply voltage 480Vrms
0000	ON	ON	ON	ON	Note 2)				
0001	ON	ON	ON	OFF	42	25 kW	26 kW	29 kW	31 kW
0010	ON	ON	OFF	ON	45	27 kW	28 kW	31 kW	34 kW
0011	ON	ON	OFF	OFF	50	30 kW	31 kW	34 kW	38 kW
0100	ON	OFF	ON	ON	54	33 kW	34 kW	37 kW	40 kW
0101	ON	OFF	ON	OFF	57	33 kW	35 kW	39 kW	42 kW
0110	ON	OFF	OFF	ON	66	39 kW	41 kW	45 kW	49 kW
0111	ON	OFF	OFF	OFF	73	43 kW	45 kW	50 kW	54 kW
1000	OFF	ON	ON	ON	82	49 kW	51 kW	56 kW	62 kW
1001	OFF	ON	ON	OFF	88	52 kW	55 kW	61 kW	66 kW
1010	OFF	ON	OFF	ON	99	59 kW	62 kW	68 kW	74 kW
1011	OFF	ON	OFF	OFF	113	67 kW	70 kW	77 kW	85 kW

© MyFANUC 2D5504D5BAC945D385F48627D4977F6C

Setting	4	3	2	1	Supply current (Arms)	Supply voltage 380Vrms	Supply voltage 400Vrms	Supply voltage 440Vrms	Supply voltage 480Vrms
1100	OFF	OFF	ON	ON	128	76 kW	80 kW	88 kW	96 kW
1101	OFF	OFF	ON	OFF	143	84 kW	89 kW	98 kW	107 kW
1110	OFF	OFF	OFF	ON	161	95 kW	100 kW	110 kW	120 kW
1111	OFF	OFF	OFF	OFF	176	105 kW	110 kW	121 kW	131 kW

NOTE
1 The values in this table are typical values, not guaranteed values.
2 If the motor output exceeds approximately 15kW (supply voltage 400Vrms), the power from the power supply is brought close to zero.

Pattern 2

Limits on the supply of power from the power supply (kW)

Setting	4	3	2	1	Supply current (Arms)	Supply voltage 380Vrms	Supply voltage 400Vrms	Supply voltage 440Vrms	Supply voltage 480Vrms
0000	ON	ON	ON	ON	Note 2)				
0001	ON	ON	ON	OFF	42	25 kW	26 kW	29 kW	31 kW
0010	ON	ON	OFF	ON	48	29 kW	30 kW	33 kW	36 kW
0011	ON	ON	OFF	OFF	54	33 kW	34 kW	37 kW	41 kW
0100	ON	OFF	ON	ON	62	38 kW	39 kW	42 kW	46 kW
0101	ON	OFF	ON	OFF	70	42 kW	44 kW	48 kW	53 kW
0110	ON	OFF	OFF	ON	80	48 kW	50 kW	55 kW	60 kW
0111	ON	OFF	OFF	OFF	92	56 kW	58 kW	63 kW	69 kW
1000	OFF	ON	ON	ON	106	63 kW	66 kW	73 kW	79 kW
1001	OFF	ON	ON	OFF	122	72 kW	76 kW	84 kW	91 kW
1010	OFF	ON	OFF	ON	140	84 kW	88 kW	96 kW	105 kW
1011	OFF	ON	OFF	OFF	161	96 kW	101 kW	111 kW	121 kW
1100	OFF	OFF	ON	ON	187	112 kW	117 kW	128 kW	140 kW
1101	OFF	OFF	ON	OFF	217	128 kW	135 kW	149 kW	163 kW
1110	OFF	OFF	OFF	ON	254	152 kW	159 kW	174 kW	190 kW
1111	OFF	OFF	OFF	OFF	297	176 kW	185 kW	204 kW	223 kW

NOTE
1 The values in this table are typical values, not guaranteed values.
2 If the motor output exceeds approximately 15kW (supply voltage 400Vrms), the power from the power supply is brought close to zero.

© MyFANUC 2D5504D5BAC945D385F48627D4977F6C

N.5 FUNCTIONS AND INTERFACES

N.5.1 Interfaces with the Servo Amplifier

The ECM receives the emergency stop signal and the ready signal of the Power Supply through inter-module communication.

ECM behavior

- When the Power Supply becomes ready
  <1> The ECM becomes ready after the charging of the capacitor module ends (charge time: approx. 5 seconds).
- In the case of "NC-input emergency stop"
  <1> The ECM stops functioning (the current between the ECM and Servo Amplifier is shut down).
  <2> The energy of the capacitor module (for charge) is discharged.
- In the case of "emergency stop due to an emergency stop signal (connector: CX4) input to the Power Supply"
  <1> The ECM stops functioning (the current between the ECM and Servo Amplifier is shut down).
  <2> The energy of the capacitor modules (for charge and smoothing) and the capacitor of the Servo Amplifier is discharged.

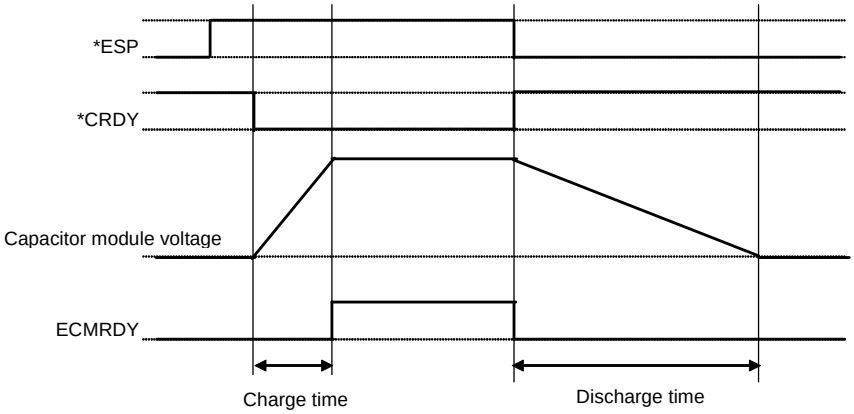

Signal name	Remarks
*ESP	Emergency stop signal (L: Emergency stop, H: Emergency stop release)
*CRDY	Ready signal of the Power Supply (L: Ready, H: Not ready)
ECMRDY	Ready signal of the ECM (L: Not ready, H: Ready) NOTE) When ECMRDY is set to "L", energy is not supplied from the ECM.

NOTE
The charge and discharge times assume that 10 capacitor modules are connected.

© MyFANUC 2D5504D5BAC945D385F48627D4977F6C

⚠ **CAUTION**

1 If the discharge circuit of the control module is faulty, the capacitor modules for charge and smoothing are not discharged.
2 The capacitor modules for charge and smoothing take about 20 minutes to discharge.
3 Be sure to shut down the contactor for the Power Supply during an emergency stop.
Otherwise, the current from the power supply flows to the resistor module via the Power Supply, making the resistor module very hot and consequently causing the resistor module overheat alarm.

⚠ **WARNING**

Before replacing the control module, capacitor modules (for smoothing and charge), DC reactor, resistor module, Power Supply, or Servo Amplifier or perform wiring for any of these units, check that the power supply is disconnected, even if the charge LED (red) is off. Also, measure the voltage of the DC link terminal block using a voltmeter (e.g., tester) to ensure that the DC link voltage has lowered.

N.5.2 Interface with the PMC (I/O)

- Connect the control signal (CX41) of the control module to the I/O.
  For details of the connection, see Subsection N.7.2.10, "Details of cable K120".
- The ECM status is communicated from the ECM to the PMC via the I/O. The signals that control the ECM are sent from the PMC to the ECM via the I/O.

Signals for communicating the ECM status from the ECM to the PMC

(1) Ready signal (ECMRDY)
This signal indicates that the ECM is ready.
The ECM becomes ready within 10 seconds after emergency stop release.

(2) Status signal (ST1B, ST2B)
This is a 2-bit signal indicating the ECM status. (See Subsection N.5.4, "Alarms and Status Display".)

(3) Alarm code (ALM*B)
This is a 4-bit signal indicating the alarm type. (See Subsection N.5.4, "Alarms and Status Display".)

Signals sent from the PMC to the ECM for ECM control

(1) Discharge mask signal (DCMASK)
The discharge mask signal prevents the resistor module from discharging the capacitor module. Use this signal when an emergency stop occurs frequently.

(2) Charge mask signal (CGMASK)
The charge mask signal causes the regenerative energy to be regenerated only to the power supply without being stored in the ECM. Use this signal when you want to use more regenerative energy for another device connected to the same power supply system.

(3) Supply mask signal (SPSTP)
The supply mask signal prevents the ECM from supplying energy.
By retaining the energy stored in the ECM when energy supply from the ECM is not necessary, it may be possible to reduce the number of capacitor modules (for charge).

© MyFANUC 2D5504D5BAC945D385F48627D4977F6C

Signal name	Meaning of the signal	State of the signal *	
		L	H
ECMRDY	Ready signal	Not ready	Ready
ST1B、ST2B	Status signal	See Subsection N.5.4, "Alarms and Status Display".	
ALM*B	Alarm code	See Subsection N.5.4, "Alarms and Status Display".	
DCMASK	Discharge mask signal	Discharge enabled	Discharge masked
CGMASK	Charge mask signal	Charge	Charge masked
SPSTP	Supply mask signal	Supply	Supply masked

NOTE

1 The output signals of the ECM use a high side switch. As the input circuit of the I/O, use one that has a pull-down resistor connected to it so that the signal level becomes L when the high side switch turns off.

2 Use the output circuit of the high side switch for the I/O of DCMASK, CGMASK, and STSTP.

3 If an emergency stop is caused by an emergency stop signal that is input to the Power Supply, the capacitor module is discharged even when the discharge mask signal is input.

© MyFANUC 2D5504D5BAC945D385F48627D4977F6C

N.5.3 Function Setting Switches of the Control Module

- The control module of the ECM has the setting switches shown below to switch functions.
- These setting switches are located on the printed-circuit board of the control module and cannot be checked from the outside during maintenance. If you change the setting of any the switches, therefore, record the new value on the face plate label with an indelible marker or other kind of pen.

Functions switched by the setting switches

Switch	Function	State	Setting
SW2, No1	Switching of the energy charge method for the capacitor module of the ECM	OFF (Factory setting)	Charge the regenerative power from the motor.
		ON	Charge from the power supply. (To be used when regenerative power is not generated.)
SW2, No2	Switching of the regenerative power charge method	OFF (Factory setting)	Charge all energy generated after power supply regeneration starts.
		ON	Charge only the power supply regenerative energy in excess of the peak cut level.
SW2, No3	Switching of the energy supply start level pattern	OFF (Factory setting)	Pattern 1, maximum value 110kW (supply voltage 400Vrms)
		ON	Pattern 2, maximum value 185kW (supply voltage 400Vrms)

Setting method

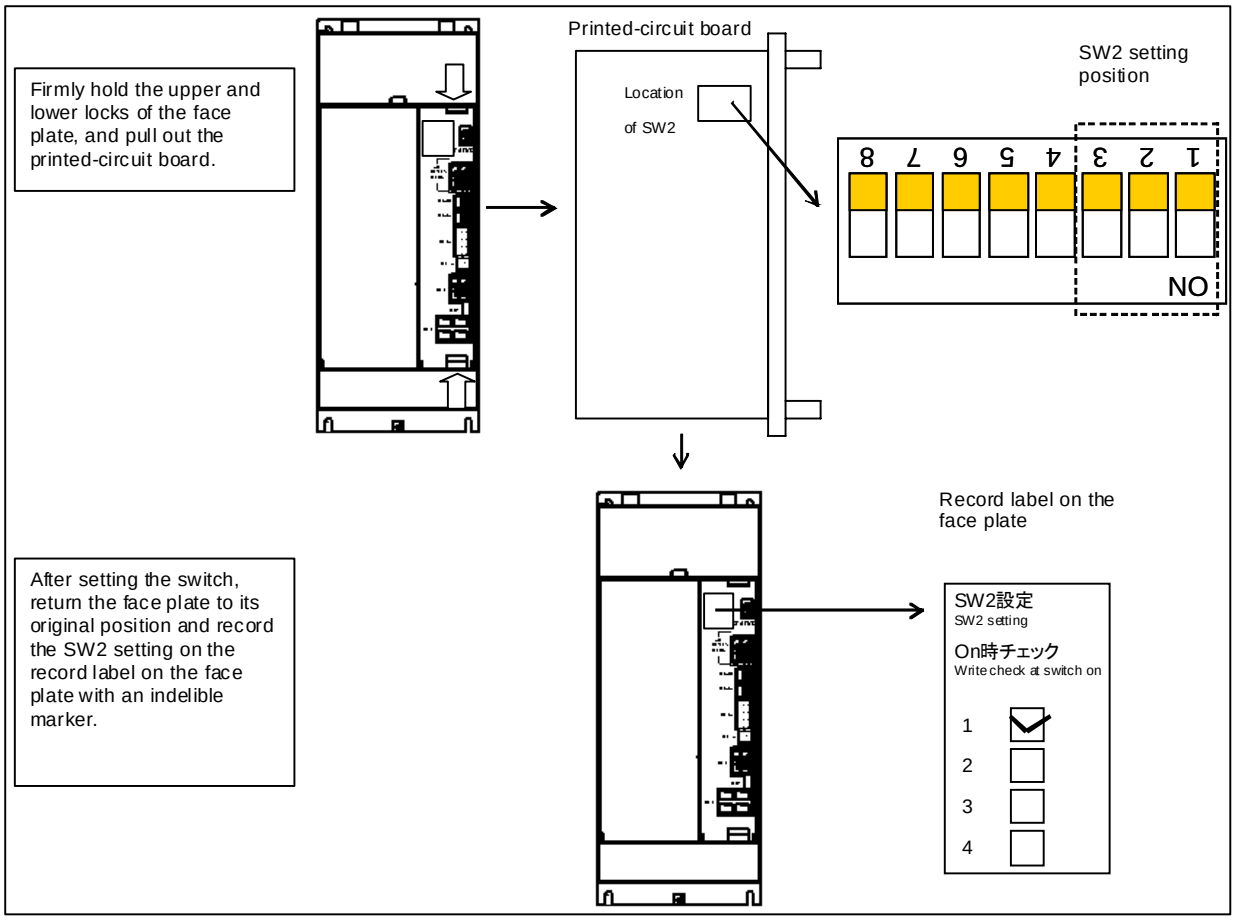

© MyFANUC 2D5504D5BAC945D385F48627D4977F6C

N.5.4 Alarms and Status Display

- If an alarm occurs in the ECM, the ECM stops functioning. (The current between the ECM and Servo Amplifier is shut down.)
- However, even if an alarm occurs in the ECM, the ECM does not directly stop the Servo Amplifier or motor. Therefore, create a PMC ladder program to stop the machine, based on the status signal that the ECM sends to the I/O.

ECM status display

The ECM status is displayed on the LED of the ECM.

Category	LED display	Status	Remarks
Normal (For details, see the following pages.)	-	Not ready	
	0	Ready	
Alarm	1	Overcurrent at power running	Overcurrent of the DC link current at power running
	2	Overcurrent at regeneration	Overcurrent of the DC link current at regeneration
	3	Overcurrent of charge current	Overcurrent of the charge current to the capacitor module
	4	Overcurrent of discharge current	Overcurrent of the discharge current from the capacitor module
	5	Control power supply drop	Drop in the control power supply voltage 24V
	6	DC link overvoltage	Overvoltage of the DC link of the Servo Amplifier
	7	Capacitor module overvoltage	
	8	Capacitor module undervoltage	
	9	Control module overheat	Detected by the thermostat of the heat sink.
	C	Power Supply alarm	An alarm occurs in the Power Supply.
	E	Capacitor module charge alarm	The capacitor module is not charged.
	F	Resistor module discharge alarm (1)	The capacitor module is not discharged.
	H	Resistor module discharge alarm (2)	Abnormal discharge occurs due to a fault in the discharge circuit.
	J	Resistor module overheat	Detected by the built-in thermostat.
	P	Inter-module communication alarm	
	b	ECM current control circuit alarm	An alarm occurs in the ECM current control circuit.
	h	Fuse blowout Note 1)	The capacitor module fuse blows.
Warning	A	Cooling fan stop Note 2)	The heat sink cooling fan of the control module stops.
	U	Energy supply stop	The supply of energy stops due to a drop in the voltage of the capacitor module (for charge).

© MyFANUC 2D5504D5BAC945D385F48627D4977F6C

NOTE

1 If the capacitor module fuse blowout alarm occurs, the LED (D2) on the front side of the capacitor module with the blown fuse is turned off. This lets you identify which capacitor module has the blown fuse. During the check, keep the control power supply of the ECM on.

2 The ECM continues to operate even if the heat sink cooling fan stops. However, you still need to replace the cooling fan. Depending on the ambient temperature and ECM operating conditions, the life of the parts of the control module may become shorter or the control module may overheat.

Details of the LED display in the normal status

Display in the not ready state (ECMRDY=L)

Status	LED display
Not ready state (*1)	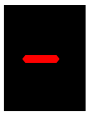
Initial charge state	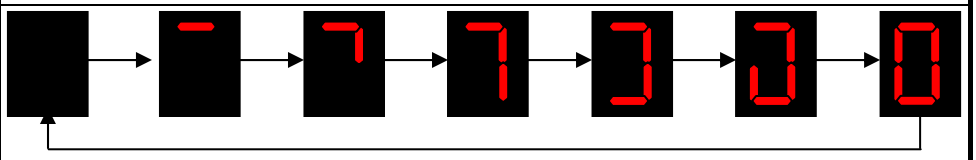

Display in the ready state (ECMRDY=H)

Status	LED display
Standby state	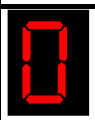
Charge mask state (CGMASK=H)	
Supply state	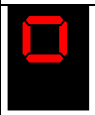 or 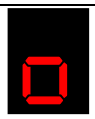
Supply mask state (SPSTP=H)	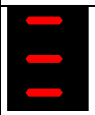
Forced discharge state (CNC off, emergency stop) (*2)	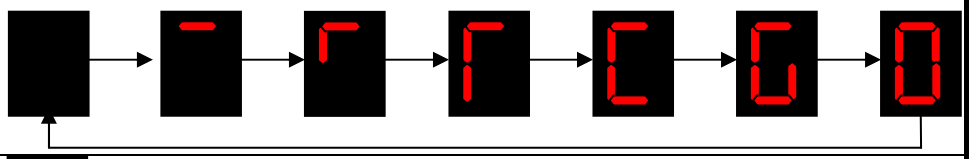
Forced discharge mask state (DCMASK=H)	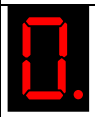 (Blink)

(*1) If the emergency stop signal (CX4) input to the Power Supply is not reset, a dot appears at the lower right.

(*2) When the energy of the capacitor module (for charge) and the capacitor of the Servo Amplifier is discharged, a dot appears at the lower right.

© MyFANUC 2D5504D5BAC945D385F48627D4977F6C

Alarm handling procedure

- If an alarm occurs in the ECM, a status signal is sent from the ECM to the I/O.
- If an alarm occurs, the level of the status signal ST1B changes from "H" to "L". After the level of ST1B changes from "H" to "L", check the status signals ST1B and ST2B.
- Stop the machine according to the status signals.

- How to stop the machine in the event of an alarm

Status signal		Status	How to stop the machine
ST2B	ST1B		
H	H	Normal	-
H	L	An alarm occurs in the ECM.	<1> Stop the machine at a safe position. <2> After moving and stopping the machine, perform an emergency stop and shut down the external MCC of the PS.
L	L	An alarm occurs in the ECM requiring immediate power supply shutdown.	<1> Perform an emergency stop immediately and shut down the external MCC of the PS.

* If the cable is disconnected, the level of the input signal to the I/O becomes "L".

- ECM status signals

Category	LED display	Status	Status signal	
			ST2B	ST1B
Normal	-	Not ready	H	H
	0	Ready	H	H
	Clockwise	Charging	H	H
	Counterclockwise	Discharging	H	H
Alarm	1	Overcurrent at power running	L	L
	2	Overcurrent at regeneration	L	L
	3	Overcurrent of ECM charge current	L	L
	4	Overcurrent of ECM discharge current	L	L
	5	Control power supply drop	L	L
	6	DC link overvoltage	L	L
	7	Capacitor module overvoltage	L	L
	8	Capacitor module undervoltage	H	L
	9	Overheat	H	L
	C	Power Supply alarm	H	L
	E	Capacitor module charge alarm	H	L
	F	Resistor module discharge alarm (1)	H	L
	H	Resistor module discharge alarm (2)	H	L
	J	Resistor module overload	H	L
	P	Inter-amplifier communication alarm	H	L
	b	ECM current control circuit alarm	H	L
	h	Capacitor module fuse blowout	H	L
Warning	A	Heat sink cooling fan stop	H	L
	U	Energy supply stop	H	L

© MyFANUC 2D5504D5BAC945D385F48627D4977F6C

Alarm code

- If an alarm occurs in the ECM, an alarm code is sent from the ECM to the I/O.
- If an alarm occurs, the level of the status signal ST1B changes from "H" to "L". After the level of ST1B changes from "H" to "L", check the alarm code.
- Use alarm codes for the alarm display on the monitor or other device. It will facilitate maintenance.

Alarm code				Alarm
ALM8B	ALM4B	ALM2B	ALM1B	
L	L	L	L	No alarm
L	L	L	H	Overcurrent at power running Overcurrent at regeneration
L	L	H	L	Overcurrent of ECM charge current Overcurrent of ECM discharge current
L	L	H	H	Control power supply drop
L	H	L	L	DC link overvoltage
L	H	L	H	Capacitor module overvoltage
L	H	H	L	Capacitor module undervoltage
L	H	H	H	Overheat
H	L	L	L	Power Supply alarm
H	L	L	H	Capacitor module charge alarm
H	L	H	L	Resistor module discharge alarm (1) Resistor module discharge alarm (2) Resistor module overload
H	L	H	H	Inter-amplifier communication alarm
H	H	L	L	Energy supply stop
H	H	L	H	ECM current control circuit alarm
H	H	H	L	Capacitor module fuse blowout
H	H	H	H	Heat sink cooling fan stop

N.5.5 Troubleshooting and Action

LED display 1 : Overcurrent at power running

An excessive current flowed into the direct-current circuit (DC link) between the control module and Servo Amplifier in the direction of the Servo Amplifier.

(1) When the alarm occurs during motor acceleration
  (a) Excessive motor output during power running
    Check the operating conditions of the motor.
  (b) Input supply voltage imbalance
    Check the supply voltage.
  (c) Supply voltage drop
    Check the supply voltage.
(2) Cable defect in the direct-current circuit (DC link) between the control module and Servo Amplifier
  Check the cable of the direct-current circuit (DC link) between the control module and Servo Amplifier for a short circuit or ground fault.
(3) Loose mounting of the control printed-circuit board
  Make sure the face plate is pushed in securely.
  The alarm may be displayed if the connector connecting the control printed-circuit board and power printed-circuit board is disconnected.
(4) Unit defect
  The Servo Amplifier or control module may be defective.
  (a) Servo Amplifier defect
    The excessive current may be due to the defect of the Servo Amplifier.
    Replace the Servo Amplifier.

© MyFANUC 2D5504D5BAC945D385F48627D4977F6C

(b) Control module defect
The excessive current may be due to the defect of the control module.
Replace the control module.

LED display 2 : Overcurrent at regeneration

An excessive current flowed into the direct-current circuit (DC link) between the control module and Servo Amplifier in the direction of the control module.

(1) When the alarm occurs during motor deceleration
Check the operating conditions of the motor to see whether the output is not excessive during motor deceleration.
(2) Cable defect in the direct-current circuit (DC link) between the Power Supply and smoothing capacitor module
Check the cable of the direct-current circuit (DC link) between the Power Supply and smoothing capacitor module for a short circuit or ground fault.
(3) Unit defect
The Power Supply or control module may be defective.
(a) Power Supply defect
The excessive current may be due to the defect of the common power.
Replace the Power Supply.
(b) Control module defect
The excessive current may be due to the defect of the control module.
Replace the control module.

LED display 3 : Overcurrent of charge current

An excessive current flowed into the main circuit of the control module in the direction of capacitor module (for charge).

(1) DC reactor cable defect
Check the DC reactor cable for a short circuit or ground fault.
(2) Loose mounting of the control printed-circuit board
Make sure the face plate is pushed in securely.
The alarm may be displayed if the connector connecting the control printed-circuit board and power printed-circuit board is disconnected.
(3) Control module defect
The excessive current may be due to the defect of the control module.
Replace the control module.

LED display 4 : Overcurrent of discharge current

An excessive current flowed into the main circuit of the control module in the direction of the smoothing capacitor module.

(1) DC reactor cable defect
Check the DC reactor cable for a short circuit or ground fault.
(2) Loose mounting of the control printed-circuit board
Make sure the face plate is pushed in securely.
The alarm may be displayed if the connector connecting the control printed-circuit board and power printed-circuit board is disconnected.
(3) Control module defect
The excessive current may be due to the defect of the control module.
Replace the control module.

© MyFANUC 2D5504D5BAC945D385F48627D4977F6C

LED display 5 : Control power supply drop

The 24V control power supply voltage has dropped.

(1) Drop in the three-phase input voltage
Check that the three-phase input voltage of 200V for the control power supply that is input to the Power Supply is above the rated input voltage range.
(2) Power Supply defect (Cable K69: See N.7.2.7)
Check the 24V power supply (Cable K69) output from the Power Supply.
If the voltage drops by 5% or more, replace the control printed-circuit board of the Power Supply.
(3) Long cable (Cable K69)
Check that the length of Cable K69 is 5 m or less.
(4) Cable defect (Cable K69)
Check the pin number of Cable K69.
The connection of the cable may be loose, in which case replace the cable.
(5) Control module defect
Replace the control module.

LED display 6 : DC link overvoltage

The voltage of the direct-current circuit (DC link) between the control module and Servo Amplifier is abnormally high.

(1) When the alarm occurs during motor deceleration
(a) Excessive regenerative power
Check the operating conditions of the motor.
(b) High power supply impedance
Check the power supply impedance. It is normal if the voltage variation at the maximum output is 7% or less.
(c) Sequence check
Check whether the power supply of the main circuit is not disconnected with the emergency stop released.
(2) Control module defect
The voltage detection circuit of the control module is defective.
Replace the control module.

LED display 7 : Capacitor module overvoltage

The voltage of the capacitor module (for charge) is abnormally high.

(1) When the alarm occurs during motor deceleration
(a) Excessive regenerative power
Check the operating conditions of the motor.
(b) High power supply impedance
Check the power supply impedance. It is normal if the voltage variation at the maximum output is 7% or less.
(c) Sequence check
Check whether the power supply of the main circuit is not disconnected by the contactor (MCC) with the emergency stop released.
(2) When the alarm occurs at the start of the initial charge of the capacitor module (for charge)
Check whether the capacitor module (for charge) is connected.
(3) Control module defect
The voltage detection circuit of the control module is defective.
Replace the control module.

© MyFANUC 2D5504D5BAC945D385F48627D4977F6C

LED display 8 : Capacitor module undervoltage

The voltage of the capacitor module (for charge) is abnormally low.

(1) When the alarm occurs during motor acceleration
  (a) Supply voltage drop
    Check the supply voltage.
  (b) High power supply impedance
    Check the power supply impedance. It is normal if the voltage variation at the maximum output is 7% or less.
  (c) Capacitor module (for charge) defect
    There may be a decrease in the capacity of the capacitor module (for charge).
    Replace the capacitor module (for charge).
(2) Charge mask signal
  Check the charge mask signal.
  It may be that the charge mask signal is keeping the capacitor module (for charge) from being fully charged.
(3) Control module defect
  Replace the control module.

LED display 9 : Control module overheat

The temperature of the heat sink of the control module is abnormally high.

(1) High temperature of the heat sink
  (a) Overload
    Check whether the selected ECM is appropriate.
  (b) Heat sink cooling fan stop
    If the cooling fan has stopped, replace it.
  (c) Ambient temperature
    Check whether the ambient temperature of the ECM is above 55°C.
(2) Loose mounting of the control printed-circuit board
  Make sure the face plate is pushed in securely.
  The alarm may be displayed if the connector connecting the control printed-circuit board and power printed-circuit board is disconnected.
(3) When the alarm occurs while the temperature of the heat sink is low
  Replace the control module.

LED display C : Power Supply alarm

An alarm occurred in the Power Supply.

(1) When the alarm occurs in the Power Supply
  Identify the cause of the Power Supply alarm and take necessary action.
(2) When the alarm is not associated with the Power Supply
  (a) Location of Cable K69 (See N.7.2.7)
    Check whether the power cable is not routed near this cable.
  (b) Cable K69 defect
    Check the pin number of Cable K69.
    The connection of the cable may be loose, in which case replace the cable.
  (c) Control module defect
    Replace the control printed-circuit board of the control module.

© MyFANUC 2D5504D5BAC945D385F48627D4977F6C

LED display E : Capacitor module charge alarm

The initial charge of the capacitor module (for charge) failed.

(1) Connection check
Check whether the DC reactor and capacitor module (for charge) are properly connected.
(2) Cable defect
Check the power cable for a short circuit.
(3) Control module defect
The initial charge may have not been performed due to a control module defect.
Replace the control module.
(4) Capacitor module (for charge) defect
The initial charge may have not been performed due to a defect in the capacitor module (for charge).
Replace the capacitor module (for charge).

LED display F : Resistor module discharge alarm (1)

The forced discharge of the capacitor module (for charge) failed.

(1) Connection check for the resistor module
Check whether the resistor module is properly connected.
(2) Resistor module defect
Check the resistance (30Ω) of the resistor module.
(The resistance between connectors B1 and B2 must be 30Ω ±5%.)
If the resistance is abnormal, replace the resistor module.
(3) Cable defect (Cable K69)
Alarm No. 5 occurs in the Power Supply at the same time.
Check the pin number of Cable K69.
The connection of the cable may be loose, in which case replace the cable.
(4) Control module defect
If the alarm continues to occur after the resistor module is replaced, the control module may be defective.Replace the control module.

LED display H : Resistor module discharge alarm (2)

The discharge circuit of the control module is abnormal.

(1) Loose mounting of the control printed-circuit board
Make sure the face plate is pushed in securely.
The alarm may be displayed if the connector connecting the control printed-circuit board and power printed-circuit board is disconnected.
(2) Control module defect
Replace the control module.

LED display J : Resistor module overheat

The temperature of the resistor module is abnormally high.

(1) Resistor module defect
(a) Thermostat defect
Check the contact of the thermostat of the resistor module.
If resistor module overheat occurs while the machine is in operation, check the contact of the thermostat of the resistor module 20 minutes after the machine stops.
If the temperature of the resistor module is low and the contact of the thermostat is open, the thermostat is defective. Replace the resistor module.
(b) Resistor defect
Check the resistance (30Ω) of the resistor module.
If the resistance is abnormal, replace the resistor module.

© MyFANUC 2D5504D5BAC945D385F48627D4977F6C

If the alarm continues to occur after the resistor module is replaced, the control module may be defective. Replace the control module.

(2) Thermostat connection
Check the connection of the thermostat of the resistor module (connectors and cable).
(Cable K116, K117: See N.7.2.4.)

(3) Control module defect
If any of the problems mentioned in (1) and (2) does not apply, the control module is defective.
Replace the control module.

LED display P : Inter-module communication alarm

Communication between amplifiers failed.

(1) Location of Cable K69 (See N.7.2.7)
Check whether the power cable is not routed near this cable.

(2) Cable K69 defect
Check the pin number of Cable K69.
The connection of the cable may be loose, in which case replace the cable.

(3) Control module defect
Replace the control printed-circuit board of the control module.

LED display b : ECM current control circuit alarm

The current control circuit of the control module is defective.

(1) Control printed-circuit board defect in the control module
If this alarm occurs again during operation after the alarm is reset by turning on and off the control power supply, replace the control printed-circuit board of the control module.

LED display h : Fuse blowout

The fuse of the capacitor module has blown.

(1) Fuse blowout
The fuse of a capacitor module has blown if its LED (D2) is off when the control power supply 24V is input to the control module. Replace the capacitor module.

(2) Cable defect
(a) Cable K118 defect
Check the pin number of Cable K118. (See N.7.2.8)
The connection of the cable may be loose, in which case replace the cable.
(b) Dummy connector K119 defect
Check the pin number of Dummy connector K119. (See N.7.2.8)
The connection may be loose, in which case replace the dummy connector.

LED display A : Cooling fan stop

The heat sink cooling fan stopped.

(1) Heat sink cooling fan stop
If the cooling fan has stopped, replace it.

(2) Loose mounting of the control printed-circuit board
Make sure the face plate is pushed in securely.
The alarm may be displayed if the connector connecting the control printed-circuit board and power printed-circuit board is disconnected.

© MyFANUC 2D5504D5BAC945D385F48627D4977F6C

LED display U : Energy supply stop

The supply of energy stopped due to a drop in the voltage of the capacitor module (for charge).

(1) When the alarm occurs during motor acceleration
  (a) Insufficient capacity of the capacitor module (for charge)
    The capacity of the capacitor module (for charge) may be insufficient. Check whether the selected capacitor module is appropriate.
  (b) Capacitor module (for charge) defect
    There may be a decrease in the capacity of the capacitor module (for charge).
    Replace the capacitor module (for charge).
(2) Charge mask signal
  Check the charge mask signal.
  It may be that the charge mask signal is keeping the capacitor module (for charge) from being fully charged.
(3) Control module defect
  Replace the control module.

If the ECM does not bring the intended effect

If voltage fluctuations in the supply voltage are not reduced even when the ECM is installed, the possible causes are as follows.

(1) Setting of the ECM
  Check whether the setting switch (SW1) of the control module is set correctly.
(2) Connection
  Check the connection points of the cables, cable disconnection, terminal block screws, etc.
(3) Supply mask signal
  Check the supply mask signal.
  It may be that the supply mask signal is preventing the ECM from supplying energy.
(4) ECM defect
  If any of the problems mentioned in (1), (2), and (3) does not apply, the control module or capacitor module may be defective.

© MyFANUC 2D5504D5BAC945D385F48627D4977F6C

N.6 OUTLINE DRAWINGS AND PANEL CUT-OUT DIAGRAMS

N.6.1 Control Module (A06B-6158-H010)

Weight: 7.5 kg

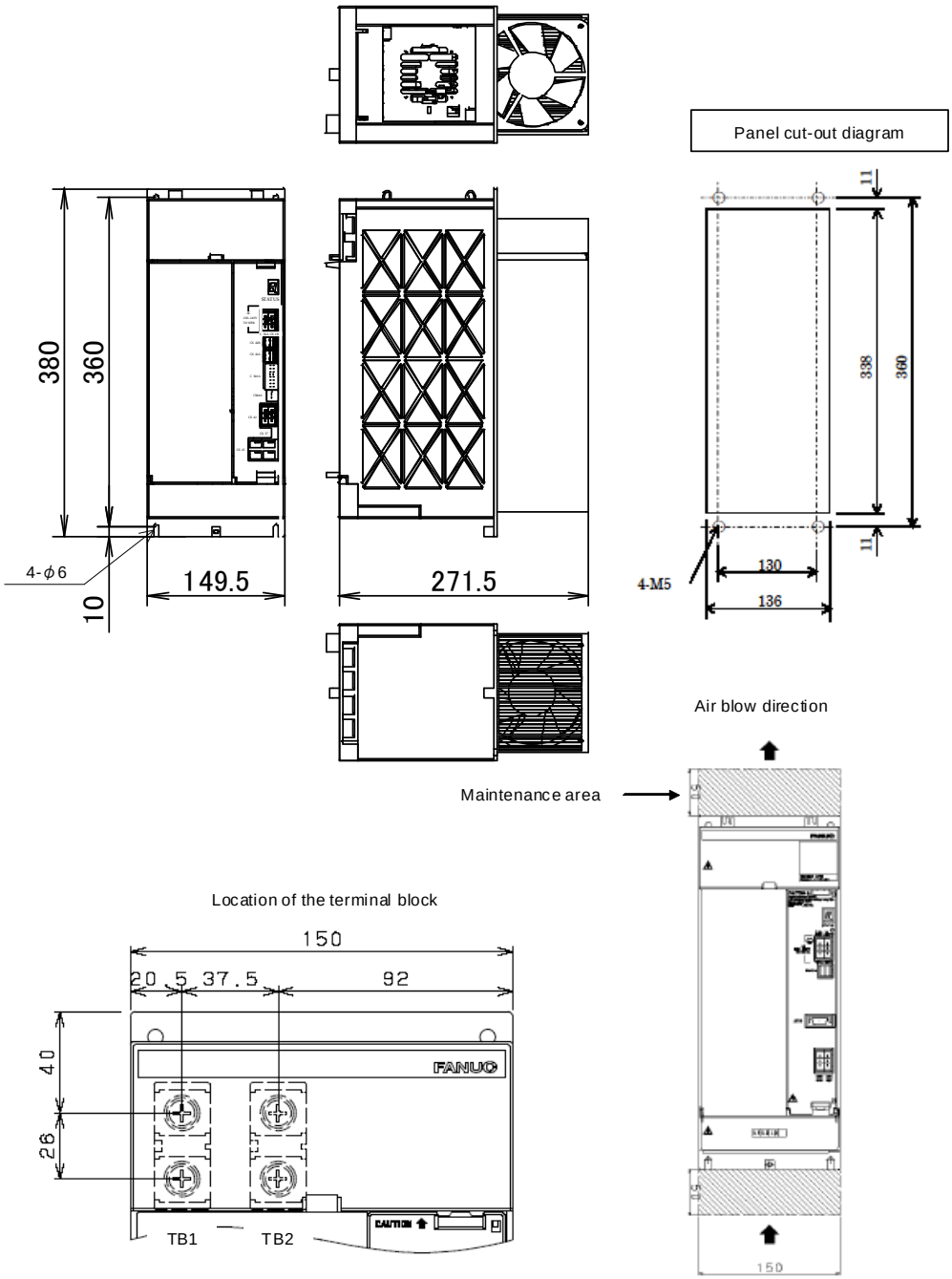

© MyFANUC 2D5504D5BAC945D385F48627D4977F6C

N.6.2 Capacitor Module

N.6.2.1 Capacitor module 0.011F (A06B-6158-H020)

Weight: 11.4 kg

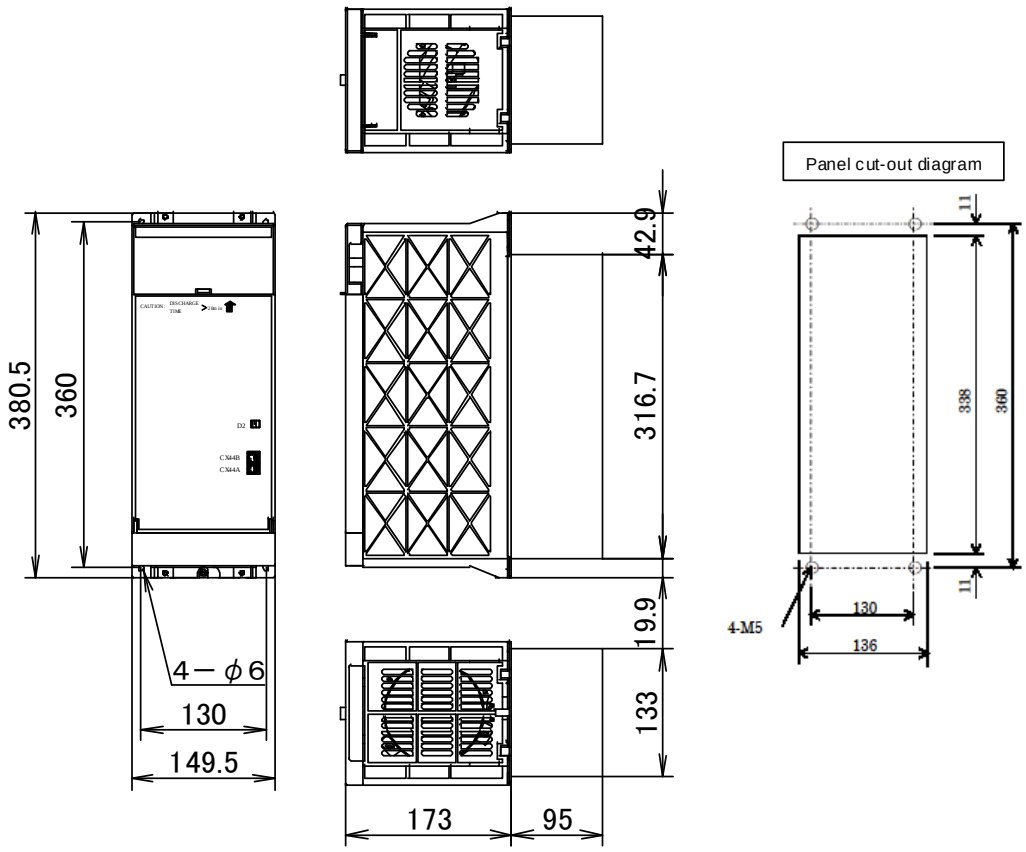

Location of the terminal block

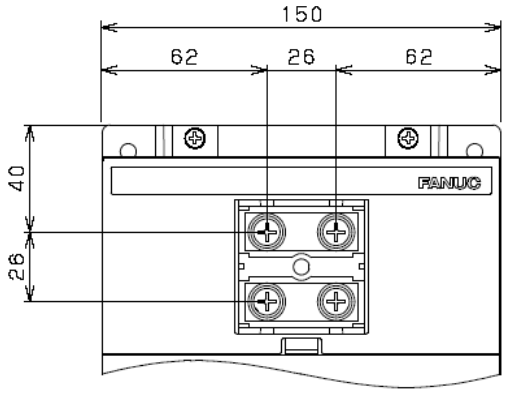

NOTE

Make sure that the capacitor module (for smoothing) is attached to the left side of the control module without any space between them.

© MyFANUC 2D5504D5BAC945D385F48627D4977F6C

N.6.2.2 Capacitor module 0.022F (A06B-6158-H021)

Weight: 20.5 kg

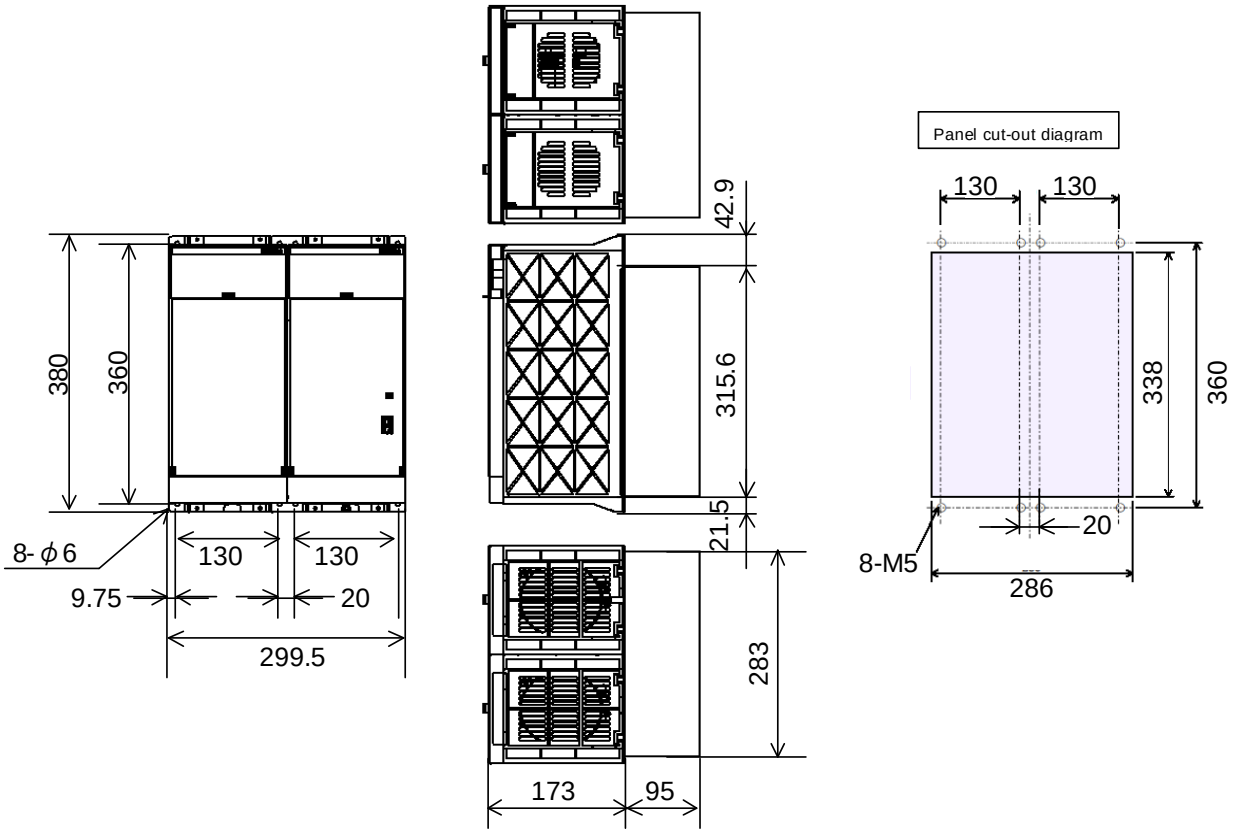

Location of the terminal block

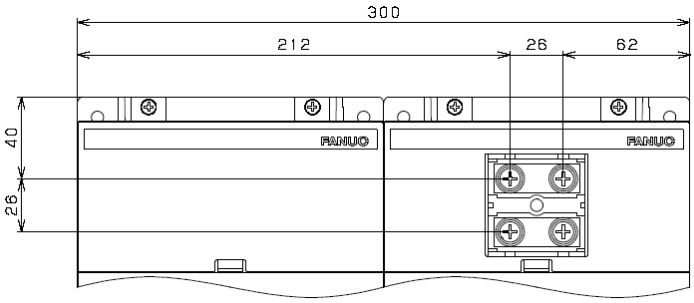

NOTE

Make sure that the capacitor module (for smoothing) is attached to the left side of the control module without any space between them.

© MyFANUC 2D5504D5BAC945D385F48627D4977F6C

N.6.3 Resistor Module (A06B-6158-H030)

Weight: 7.1 kg

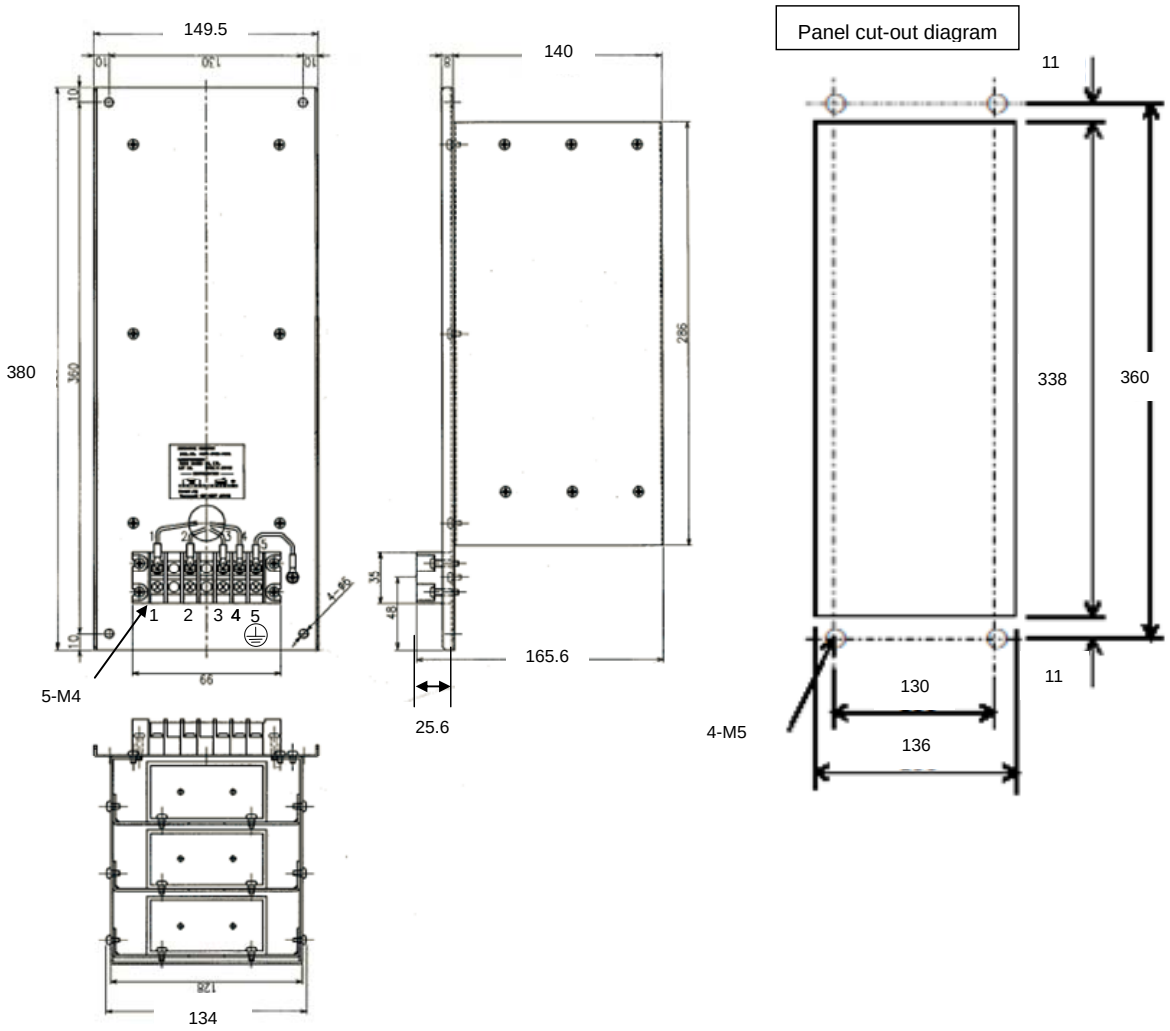

© MyFANUC 2D5504D5BAC945D385F48627D4977F6C

N.6.4 DC Reactor

N.6.4.1 DC reactor 100A (A06B-6158-H040)

Weight: 32 kg

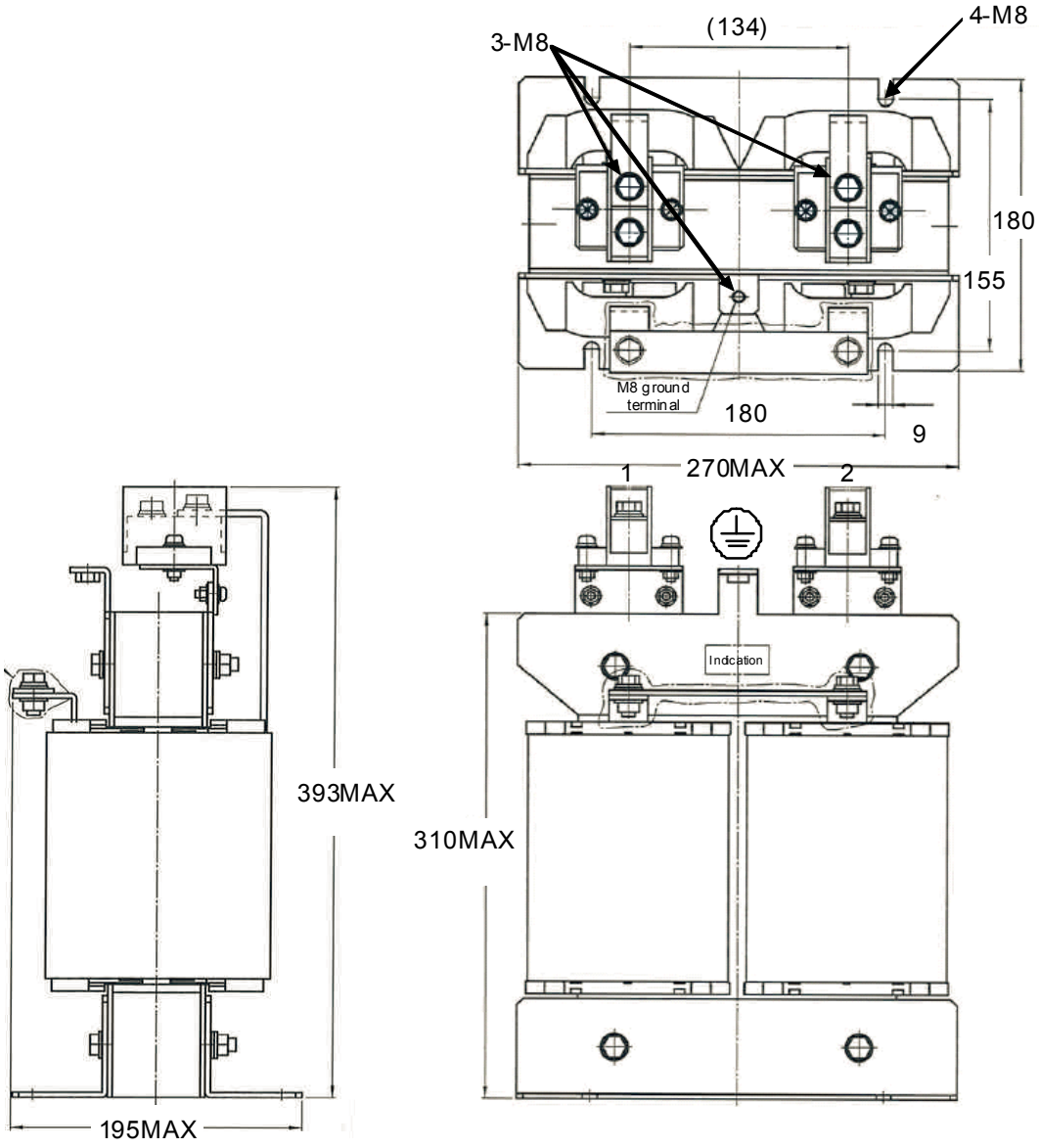

© MyFANUC 2D5504D5BAC945D385F48627D4977F6C

N.6.4.2 DC reactor 60A (A06B-6158-H041)

Weight: 27 kg

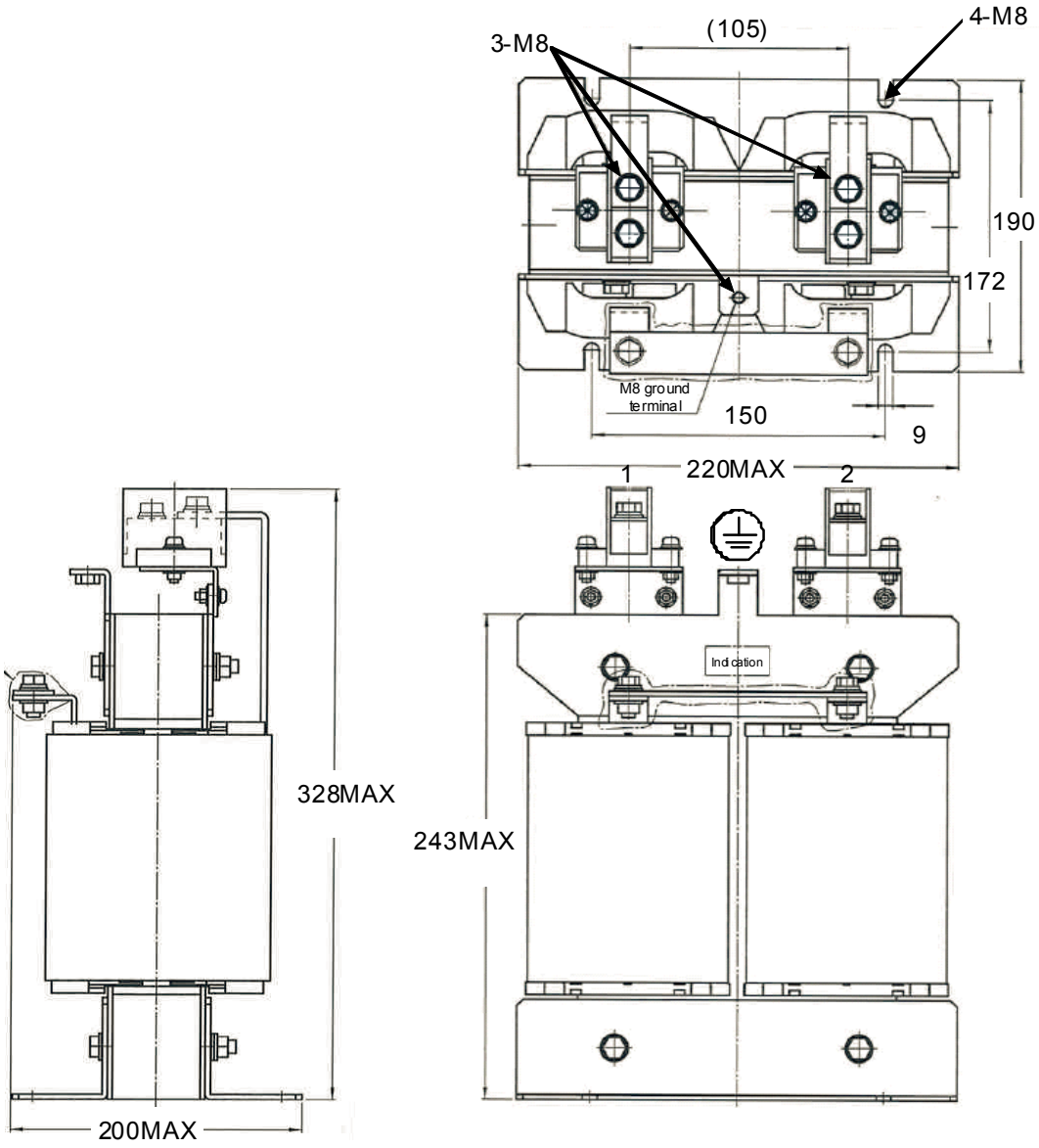

© MyFANUC 2D5504D5BAC945D385F48627D4977F6C

N.7 CONNECTION

N.7.1 Total Connection Diagram

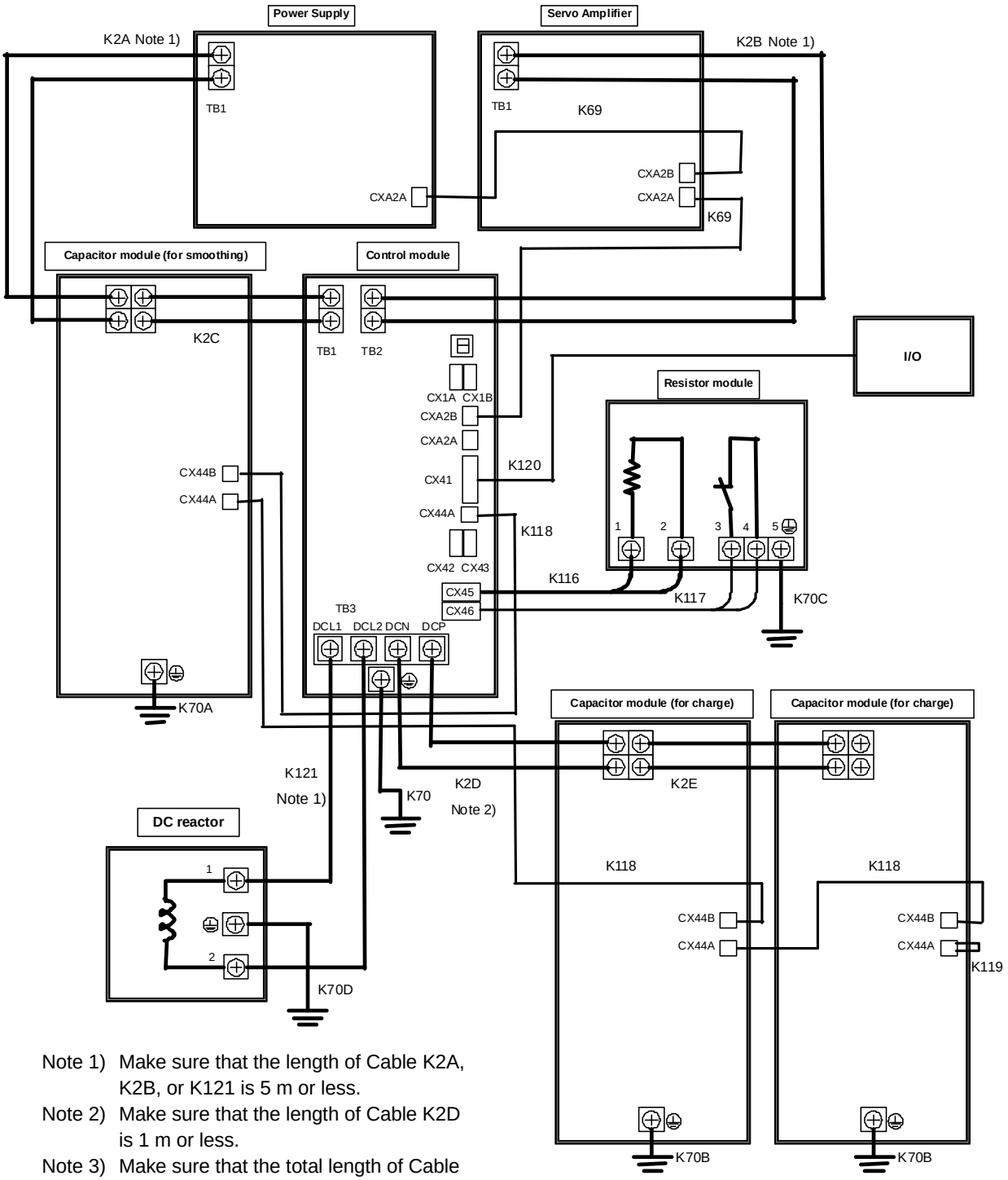

Note 1) Make sure that the length of Cable K2A, K2B, or K121 is 5 m or less.

Note 2) Make sure that the length of Cable K2D is 1 m or less.

Note 3) Make sure that the total length of Cable K69 does not exceed 6 m.

© MyFANUC 2D5504D5BAC945D385F48627D4977F6C

N.7.2 Cable Connection Details

N.7.2.1 Details of cables K2A and K2B (DC link connection)

- Cable K2A : Connection between the "Power Supply" and "capacitor module (for smoothing)"
- Cable K2B : Connection between the "Servo Amplifier" and "control module"

<table>
<tr><th>Item</th><th colspan="4">Descriptions</th></tr>
<tr><td rowspan="5">Wire size</td><td>Root-mean-square value of the motor output (Note 1)</td><td>Effective current of the DC link</td><td>Heat-resistant cable (Note 2)</td><td>AWG</td></tr>
<tr><td>40kW or less</td><td>92Arms or less</td><td>22mm^2</td><td>AWG4</td></tr>
<tr><td>48kW or less</td><td>112Arms or less</td><td>30mm^2</td><td>AWG2</td></tr>
<tr><td>55kW or less</td><td>131Arms or less</td><td>38mm^2</td><td>AWG1</td></tr>
<tr><td colspan="4">NOTE 1 Calculate the root-mean-square value of the output per machining cycle from the output pattern.
NOTE 2 Fire-retardant polyflex wire (heat-resistant 105°C) or equivalent to LMFC manufactured by The Furukawa Electric Co., Ltd.
NOTE 3 Select the cable size according to your operating environment and requirements.</td></tr>
<tr><td>Screw size</td><td colspan="4">M6</td></tr>
<tr><td>Tightening torque</td><td colspan="4">3.5 to 4.5Nm</td></tr>
<tr><td>Precaution</td><td colspan="4">[Connection of K2A and K2B]
Make sure that the cable length is 5 m or less.
Use the two cables as a twisted pair.
Separate the cables from the signal line.
When installing the cables, attach a metal plate (A06B-6110-K504) to the DC link terminal block of the 300-mm-wide Power Supply and Servo Amplifier.
NOTE Procure two A06B-6110-K504 plates.
⚠WARNING
Tighten all of the four screws securely. A loose screw can cause overheat, potentially resulting in a fire.
 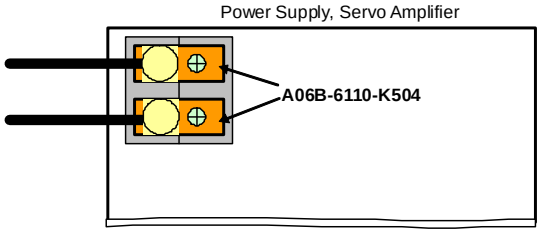
</td></tr>
</table>

© MyFANUC 2D5504D5BAC945D385F48627D4977F6C

N.7.2.2 Details of cable K2C (DC link connection)

- Cable K2C : Connection between the "control module" and "capacitor module (for smoothing)"
  Attach the capacitor module (for smoothing) to the left side of the control module without any space between them by using the short bar A06B-6078-K804.

DC link cover (option)

This is the cover (A06B-6110-K509) of the DC link terminal block for the 300-mm-wide Power Supply and Servo Amplifier.
Cables can be routed as shown below.

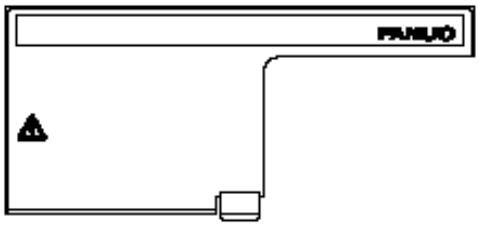

A06B-6110-K509

NOTE
Make sure that the wire size of the cable is 38 mm^2 or less and that the height of the crimp terminal is 11.5 mm or less. Otherwise, the DC link terminal block cover (A06B-6110-K509) cannot be closed due to interference.

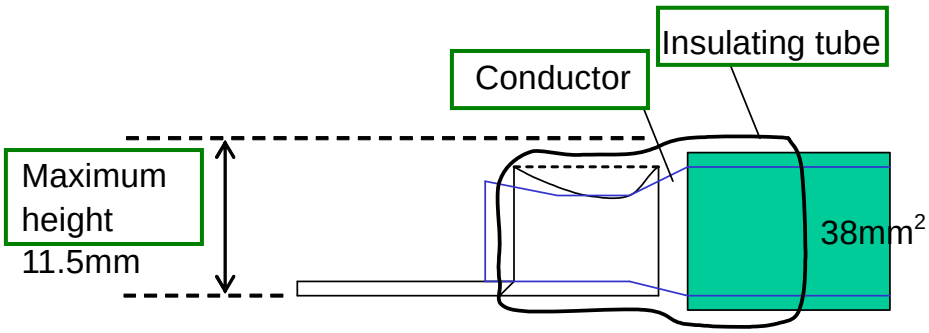

N.7.2.3 Details of cable K2D

- Cable K2D: Connection between the "control module" and "capacitor module (for charge)"

Item	Descriptions	
Wire size	Heat-resistant cable (Note 1)	AWG
	22mm^2 or larger	AWG4 or larger
	NOTE 1 Fire-retardant polyflex wire (heat-resistant 105°C) or equivalent to LMFC manufactured by The Furukawa Electric Co., Ltd.	
Screw size	M6	

© MyFANUC 2D5504D5BAC945D385F48627D4977F6C

Item	Descriptions
Tightening torque	3.5 to 4.5Nm
Precaution	Make sure that the cable length is 1 m or less. Use the two cables as a twisted pair.

N.7.2.4 Details of cable K2E

- Cable K2E: Connection between the "capacitor modules (for charge)"

Item	Descriptions		
Wire size	Short bar (Note 1)	Heat-resistant cable (Note 2)	AWG
	A06B-6078-K800 A06B-6110-K507	22mm^2 or larger	AWG4 or larger
	NOTE 1 When capacitor modules are connected without space, the short bar A06B-6078-K800 or A06B-6110-K507 can be used. NOTE 2 Fire-retardant polyflex wire (heat-resistant 105°C) or equivalent to LMFC manufactured by The Furukawa Electric Co., Ltd.		
Screw size	M6		
Tightening torque	3.5 to 4.5Nm		
Precaution	If capacitor modules (for charge) cannot be connected without space, use cables whose length is 1 m or less and bundle the two cables into a twisted pair.		

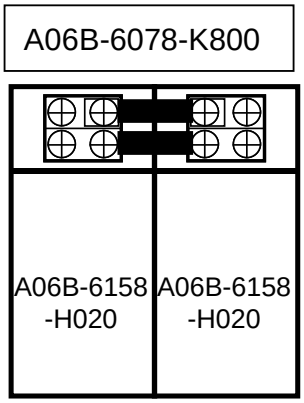

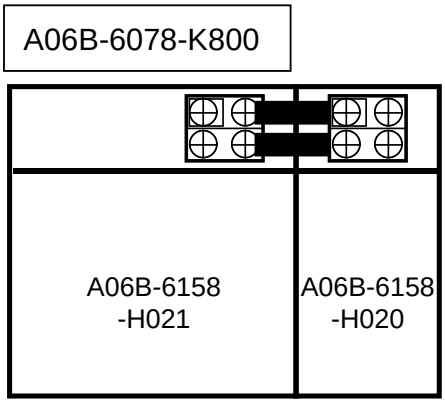

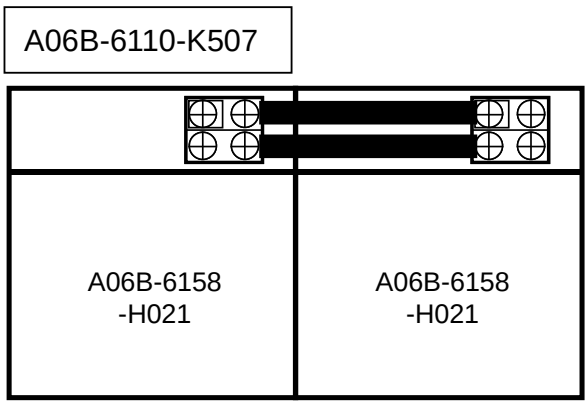

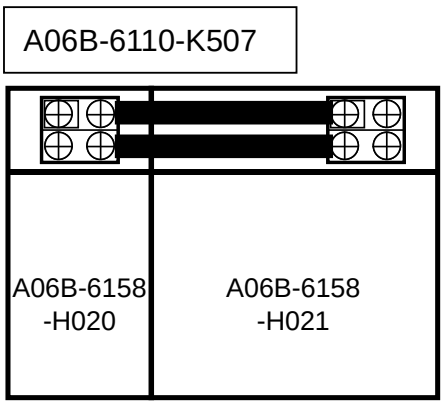

© MyFANUC 2D5504D5BAC945D385F48627D4977F6C

N.7.2.5 Details of cables K116 and K117

- Cable K116: Connection between the "control module" and "resistor built in the resistor module"
- Cable K117: Connection between the "control module" and "contact signal of the thermostat built in the resistor module"

Cable name	Applicable cable	Housing (Note 1)	Contact (Note 1)	Crimp tool (Note 1)
K116 (Note 2)	5.5mm^2 (Note 3)	Key:Y-Y 2-917807-2	M size 316041-6	M size 234171-1
K117 (Note 2)	1.25mm^2 (Note 3)		S size 316040-6	S size 234170-1

NOTE

1 The housing and contact of the connector are those of the D-5000 series of Tyco Electronics AMP.
2 Do not bundle Cable K116 and K117 when routing them.
3 Fire-retardant polyflex wire (heat-resistant 105°C), equivalent to LMFC manufactured by The Furukawa Electric Co., Ltd., or two-conductor polyvinyl heavy-duty power cable (JIS C 3312) (heat-resistant 60°C)

⚠ WARNING

1 Connecting the resistor of the resistor module to the thermostat in the opposite direction can damage the control module.
2 Before inserting the connector to the control module during routing, check the following with a tester:
(1) The resistance between connectors B1 and B2 is 30Ω ±5%.
(2) The resistance between connectors A1 and A2 is 0.5Ω or less.

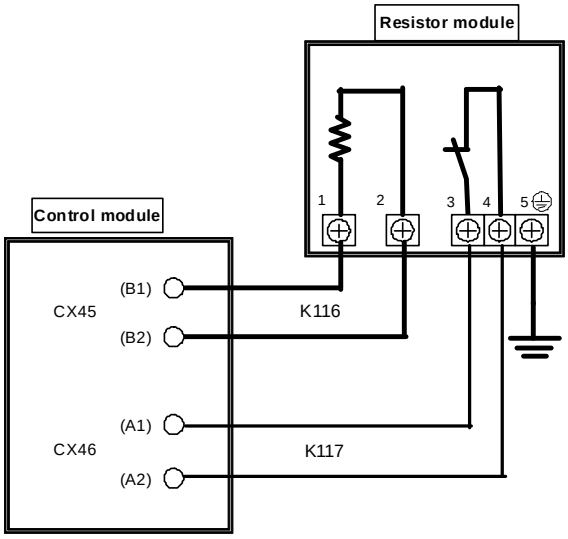

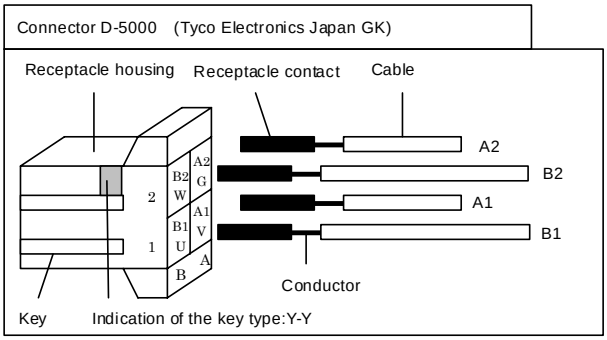

© MyFANUC 2D5504D5BAC945D385F48627D4977F6C

N.7.2.6 Details of cable K121

- Cable K121 : Connection between the "control module" and "DC reactor"

Item	Descriptions	
Wire size	Heat-resistant cable (Note 1)	AWG
	22mm^2 or larger	AWG2 or larger
	NOTE 1 Fire-retardant polyflex wire (heat-resistant 105°C) or equivalent to LMFC manufactured by The Furukawa Electric Co., Ltd.	
Screw size	Control module side : M6	DC reactor side : M8
Tightening torque	Control module side : 3.5 to 4.5Nm	DC reactor side : 8.5 to 9.5 Nm
Precaution	• Make sure that the cable length is 5 m or less. • Use the two cables as a twisted pair.	

N.7.2.7 Details of cables K70 and K70A-D

- Cables K70 and K70A-D : Ground connection

Cable	Ground connection point	Wire size (Note 1)	Screw size	Tightening torque
K70	Control module	16mm^2 or larger (K2A:22mm^2)	M5	2.0 to 2.5Nm
K70A	Capacitor module (for smoothing)	16mm^2 or larger (K2A:22mm^2)	M5	2.0 to 2.5Nm
K70B	Capacitor module (for charge)	16mm^2 or larger (K2D:22mm^2)	M5	2.0 to 2.5Nm
K70C	Resistor module	5.5mm^2 or larger	M4	1.1 to 1.5Nm
K70D	DC reactor	16mm^2 or larger (K121:22mm^2)	M8	8.5 to 9.5 Nm

NOTE

1 The wire size of the ground connection cable depends on that of the power line (K2A, K2D, or K121).
When the wire size of the power line (K2A, K2D, or K121) is 22 mm^2, the wire size of the ground connection cable is 16 mm^2 or more. When the wire size of the power line is other than 22 mm^2, determine the cable wire size according to the table below.

Motor power cable cross-section S (mm^2)	Grounding cable cross-section (mm^2)
S≤5.5	5.5 or larger
5.5<S≤16	S or larger
16<S≤35	16 or larger
35<S	S/2 or larger

© MyFANUC 2D5504D5BAC945D385F48627D4977F6C

N.7.2.8 Details of cable K69

- Cable K69: Connection of interface signals between the "Servo Amplifier" and "control module"

Cable name	Applicable cable	Insulation outer diameter	Housing (Note 1)	Contact (Note 1)	Crimp tool (Note 1)
K69 (Note 2)	$0.5mm^2$ or AWG20	1.08 to 2.83 mm	1-1318119-4	1318107-1	91595-1

NOTE

1 The housing and contact of the connector are those of the D-2100 series of Tyco Electronics AMP. Two connectors and 16 contacts are necessary.
2 (B3) BATL is for the connection of the battery (for the absolute pulsecoder). Refer to "FANUC SERVO AMPLIFIER αi series DESCRIPTIONS (B-65282EN)" for details.
3 Do not bundle Cable K69 with the power line when routing it.
4 Make sure that the total length of Cable K69 does not exceed 6 m.

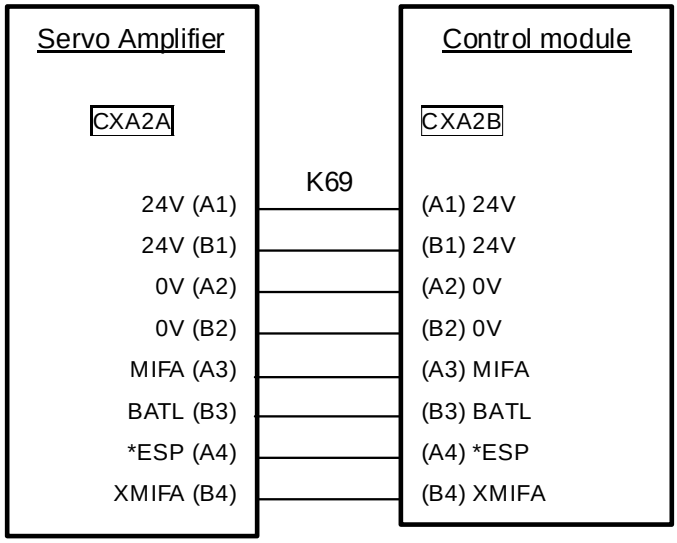

© MyFANUC 2D5504D5BAC945D385F48627D4977F6C

N.7.2.9 Details of cables K118 and K119

- Cable K118: Connection between the "control module" and "signal for detecting the blowout of the fuse built in the capacitor module"
- Cable K119: Dummy connector for terminating the "fuse blowout detection signal"

Cable name	Applicable cable	Insulation outer diameter	Housing (Note 1)	Contact (Note 1)	Crimp tool (Note 1)
K118 K119 (Note 2)	0.5mm^2 or AWG20	1.11 to 1.87mm	1-1318120-3	1318107-1	91595-1

NOTE
1 The housing and contact of the connector are those of the D-2100 series of Tyco Electronics AMP.
K118 requires two connectors and six contacts.
K119 requires one connector and two contacts.
2 Do not bundle Cable K118 with the power line when routing it.

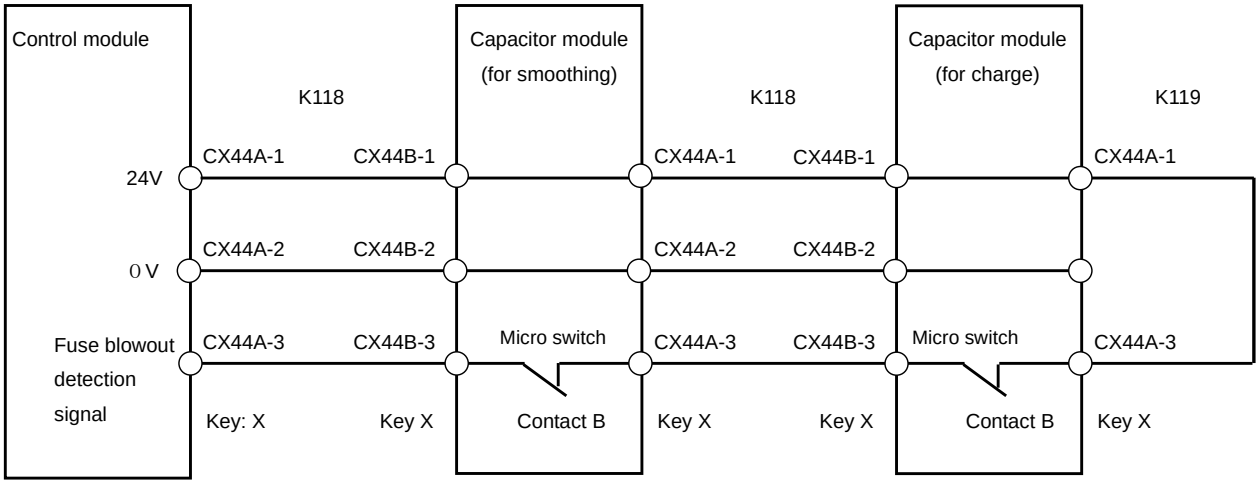

N.7.2.10 Details of cable K120

- Cable K120 : Connection of interface signals between the "control module" and "I/O"

Cable name	Applicable cable	Insulation outer diameter	Connector (Note 1)	Contact (Note 1)	Crimp tool (Note 1)
K120 (Note 2)	0.5mm^2 or AWG20	1.11 to 1.87mm	1-1318118-9	1318107-1	91595-1

NOTE
1 The housing and contact of the connector are those of the D-2100 series of Tyco Electronics AMP. One connector is necessary. Procure as many contacts as necessary.
2 Do not bundle Cable K120 with the power line when routing it.
3 If the Servo Amplifier, control module, and I/O reside some distance away from one another because they are not on the same control board or for some other reason, the use of the insulated-type FANUC I/O Unit-Model A is recommended to prevent noise from causing signals to malfunction.

© MyFANUC 2D5504D5BAC945D385F48627D4977F6C

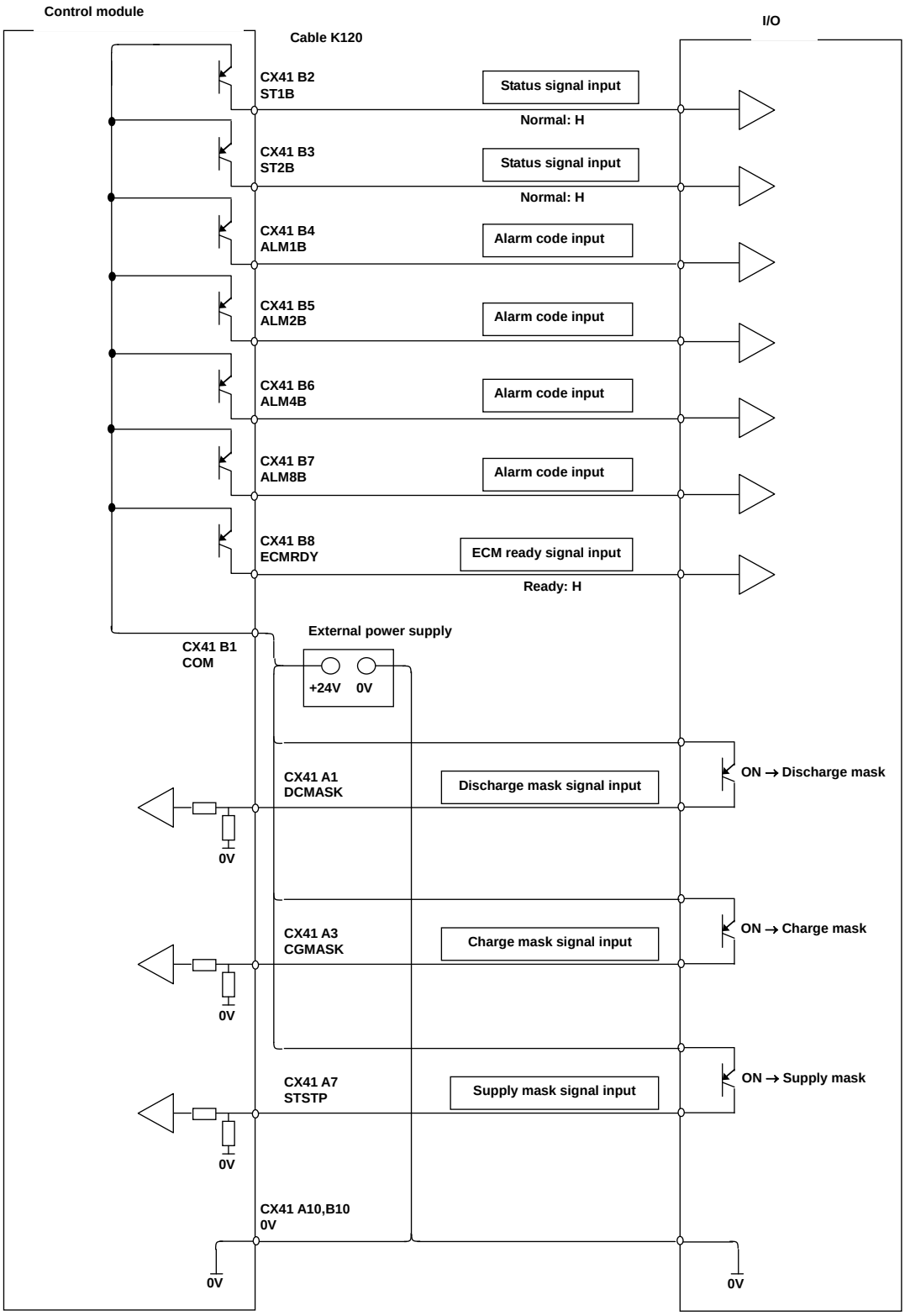

© MyFANUC 2D5504D5BAC945D385F48627D4977F6C

[Input signal specifications (DCMASK, CGMASK, STSTP)]

Contact capacity	24VDC +10% 10mA
Voltage drop between closed contacts	2V or less (including cable voltage drop)

[Output signal specifications (ST*B, ALM*B, ECMRDY)]

Maximum current	200mA or less
Maximum voltage	24V+20% or less
Saturation voltage when on	1V or less(load current 200mA)
Leak current when off	20μA or less

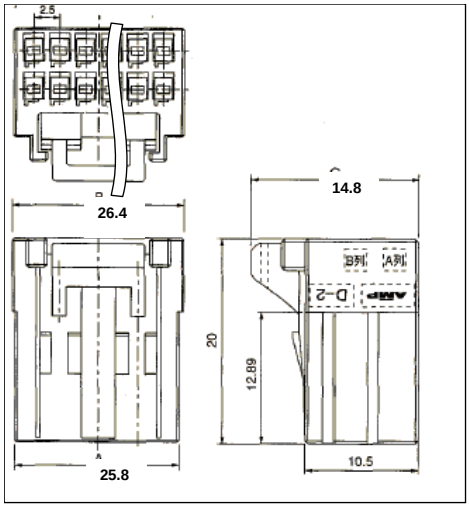

N.7.2.11 Separation of the power line and signal line

To prevent noise of the power line from affecting the signal line, do not bundle these lines when routing them.

Line name	Cable name
Power line	K2A, K2B, K2C, K2D, K2E , K116,K121
Signal cable	K117, K69, K118, K120

N.7.2.12 Connectors and short bars

Connector

Cable name	Remarks	Specifications	Descriptions
K116, K117	Connection between the resistor module and control module	A06B-6110-K505	Housing: 1 Contact(M): 2 Contact(S) : 2
K69	Connection of interface signals between the Servo Amplifier and control module	A06B-6110-K210	Housing: 1 Contact: 8
K118	Fuse disconnection signal of the capacitor module	A06B-6110-K506	Housing: 1 Contact: 3
K119	Terminating connector for the fuse disconnection signal of the capacitor module	A06B-6130-K202	Housing: 1 Contact: 2
K120	Connection between the I/O and control module	A06B-6110-K508	Housing: 1 Contact: 13

Short bar

Cable name	Remarks	Specifications	Descriptions
K2A, K2B	Plate to be attached to the DC link terminal block of the 300-mm-wide Power Supply and Servo Amplifier	A06B-6110-K504 (Note)	Plate: 1
K2C	Connection between the "DC link of the control module" and "capacitor module (for smoothing)"	A06B-6078-K804	Short bar: 2
K2E	Connection between the "capacitor modules (for charge)"	A06B-6078-K800	Short bar: 2
K2E	Connection between the "capacitor modules (for charge)"	A06B-6110-K507	Short bar: 2

NOTE
Use two plates per DC link terminal block.

© MyFANUC 2D5504D5BAC945D385F48627D4977F6C

- **Shape of the short bar**

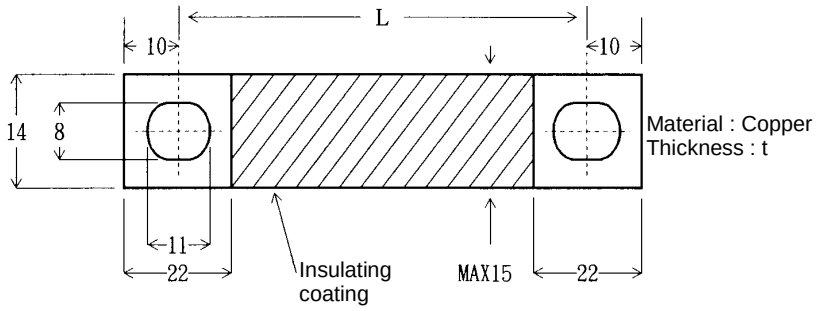

Specifications	Short bar length L	Short bar thickness t	Cross-section area
A06B-6078-K804	85mm	1.5mm	21 mm^2
A06B-6078-K800	124mm	1.5mm	21 mm^2
A06B-6110-K507	274mm	1.5mm	21 mm^2

NOTE

Modules need not necessarily be connected with a short bar (copper plate).
If the modules cannot be placed close to each other, however, they cannot help being separated from each other.
If you connect them with a power cable, however, the cable may not be thinner than indicated below and must be insulated with heat-resistant polyvinyl.

© MyFANUC 2D5504D5BAC945D385F48627D4977F6C

N.8 REPLACEMENT OF MAINTENANCE PARTS

N.8.1 Replacement of a Fan Motor

Model name	Heat sink cooling fan motor
Control module	A90L-0001-0509
Capacitor module	-

How to replace the external heat sink cooling fan motor

(1) Remove the two fan motor mounting screws.
(2) Remove the two connector mounting screws. When replacing the fan motor, pay attention to the direction of the main unit (air blow direction) and connector of the fan motor.

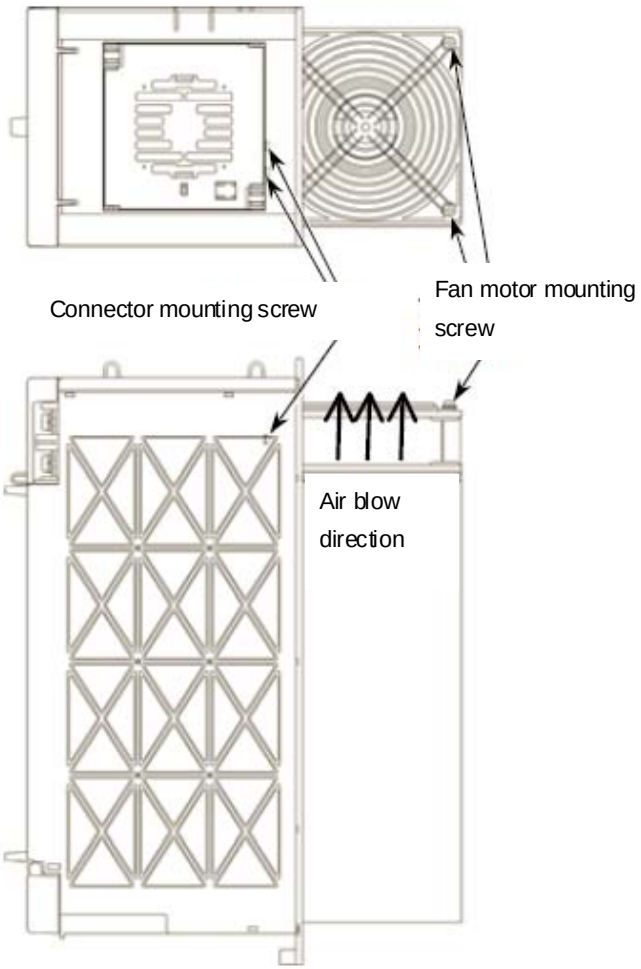

© MyFANUC 2D5504D5BAC945D385F48627D4977F6C

N.8.2 How to Replace the Fuses

To replace the fuses, take out the printed-circuit board.
In the case of the control module, the printed-circuit board can be pulled out and in from the front side of the amplifier.

NOTE

1 If a fuse blows, it is likely that there is a short-circuit in the power supply for a device (such as a sensor) connected to the Servo Amplifier.
After checking that all devices connected to the Servo Amplifier are normal, replace the fuse.
If you do not remove the cause, it is very much likely that the fuse will blow again.
2 Do not use any fuse not supplied from FANUC.
3 Before replacing a fuse, check a marking on it with that on the printed-circuit board. Be careful not to mount a fuse with an incorrect rating.

Procedure

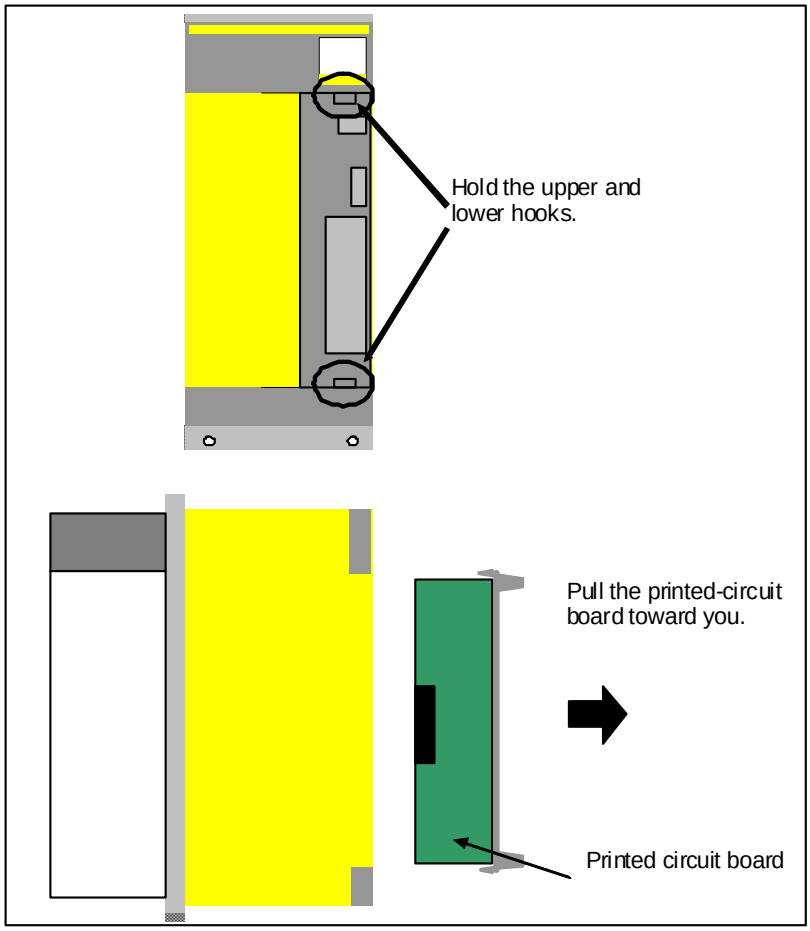

To insert the printed-circuit board, reverse the above procedure.
Ensure that the upper and lower hooks snap into the housing.
If the printed-circuit board is not inserted completely, the housing remains lifted. Pull out the printed-circuit board and insert it again.

© MyFANUC 2D5504D5BAC945D385F48627D4977F6C

N.8.2.1 Replacement of the fuse on the printed-circuit board

Model	Ordering number
Control module	A20B-2101-0600

Control module

Mounting position on the printed-circuit board A20B-2101-0600

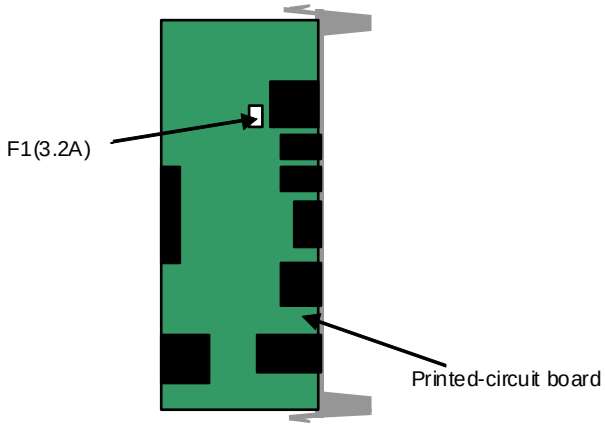

Fuse specification

Symbol	Ordering number
F1	A60L-0001-0290/LM32C

The capacitor module does not require fuse replacement.

N.9 (REFERENCE) LIFE OF THE CAPACITOR MODULE

The life of the capacitor module (for charge) of the ECM assumes a period of continuous operation exceeding 30,000 hours at an ambient temperature of 55°C with the rated load.

If the ambient temperature and load conditions are derated, the expected life may be extended as follows.

Equation for calculating the expected life
Expected life = 30000h × K1 × K2 (The upper limit of K1 × K2 is 3.)

K1(Derating conditions for the ambient temperature)

Ambient temperature	55°C	50°C	45°C	40°C
K1	1.0	1.4	2.0	2.8

K2(Derating conditions for the load)

Load reduction ratio	100%	80%	60%	40%
K2	1.0	1.4	2.0	2.8

For information about the maximum load of the capacitor module, see Fig. N.4.4.1 (a) to (c) "Amount of energy that can be stored per capacitor module" in Subsection N.4.4.1.

As for the number of full charges due to power supply off or emergency stop, the upper limit is assumed to be 1 million.

© MyFANUC 2D5504D5BAC945D385F48627D4977F6C

N.10 PERIODIC MAINTENANCE

- Inspect and maintain the module in the same way as the Servo Amplifier, as instructed in Section 5.2 of "FANUC AC SERVO AMPLIFIER αi series MAINTENANCE MANUAL (B-65285EN)".
- Measure the voltage between terminals of the capacitor module (for charge) during motor operation using a device capable of waveform checking, and make sure that the voltage between terminals does not fall below (input voltage × √2 - 300V). If the voltage between terminals is below (input voltage × √2 - 300V), the capacity of the capacitor module (for charge) may have decreased.
  Since the measuring point is a high voltage area, care must be exercised not to cause an electric shock or other accident.

© MyFANUC 2D5504D5BAC945D385F48627D4977F6C

O POWER FAILURE BACKUP MODULE

Appendix O, "POWER FAILURE BACKUP MODULE", consists of the following sections:

O.1 OVERVIEW 509
O.2 CONFIGURATION AND ORDERING NUMBERS.....511
O.2.1 Configuration 511
O.2.1.1 200-V input type.....511
O.2.1.2 400-V input type.....512
O.2.1.3 Required modules.....513
O.2.1.4 Dynamic brake module for the servo amplifier.....513
O.2.2 Ordering Number 514
O.2.2.1 Power failure backup module.....514
O.2.2.2 Sub module C 514
O.2.2.3 Sub module R 514
O.2.2.4 Supplement capacitor unit 514
O.2.2.5 Connectors.....514
O.2.2.6 Fuses.....514
O.2.2.7 Circuit breaker.....515
O.2.2.8 Cables 515
O.3 SPECIFICATIONS.....515
O.4 OUTLINE DRAWINGS AND PANEL CUT-OUT 520
O.4.1 OUTLINE DRAWINGS AND PANEL CUT-OUT DIAGRAM 520
O.4.1.1 Power failure backup module.....520
O.4.1.2 Sub module C and supplement capacitor unit 522
O.4.1.3 Sub module R 523
O.4.2 Panel Cut-out Diagram.....524
O.5 CONNECTION.....525
O.5.1 Total Connection Diagram 525
O.5.2 Details of Cable Connections 527
O.5.3 Cable Lead-in Diagrams and Connector Positions.....536
O.5.3.1 Power failure backup module 536
O.5.3.2 Sub module C and supplement capacitor unit 538
O.5.3.3 Sub module R 538
O.5.4 Connector Location 539
O.5.4.1 Power failure backup module.....539
O.5.4.2 Sub module C and supplement capacitor unit 540
O.5.4.3 Sub module R 540
O.5.5 Grounding.....541
O.5.5.1 Power failure backup module.....541
O.5.5.2 Sub module C and supplement capacitor unit 542
O.5.5.3 Sub module R 544
O.6 FUNCTIONS 545
O.6.1 Function Description 545
O.6.2 Control Sequences 549
O.6.2.1 Power-on sequence.....549
O.6.2.2 Magnetic contactor (MCC) shutdown sequence.....551
O.6.2.3 Power failure sequence (control of DC link voltage supply to the control power) 551
O.6.2.4 Power failure sequence (control of energy supply from the sub module C) 553
O.6.2.5 Power failure sequence (resistance regeneration control) 554
O.6.2.6 Sequence to be performed if an alarm or error occurs in the power failure backup module 555
O.6.3 Status Display 555

© MyFANUC 2D5504D5BAC945D385F48627D4977F6C

O.6.4 Alarm....508
O.6.5 Status Signals....557
O.6.6 Control Signals....557
O.6.7 Setting of the Power Failure Detection Delay Time....558
O.7 SIGNAL PROCESSING AND PARAMETER SETTING....558
O.7.1 Retract Function at Power Failure....558
O.7.1.1 When using the electronic gear box function, simple electronic gear box function, or hobbing machine function....559
O.7.1.2 When using the 559
O.7.1.3 Power failure retract on a machining center or a lathe....560
O.7.1.4 Note on the setting of the parameter of the 561
O.7.2 Stop Distance Reduction Function at Power Failure....561
O.7.2.1 Feed axis deceleration and stop....561
O.7.2.2 Deceleration and stop of the spindle....563
O.7.3 Gravity-axis Drop Prevention Function at Power Failure....564
O.8 SUB MODULE SELECTION....564
O.8.1 Selecting a Sub Module R....564
O.8.2 Selecting a Sub Module C....566
O.8.2.1 Calculating the amount of energy....566
O.8.2.2 Calculating the amount of energy required for power failure retraction....567
O.8.2.3 Example of selecting a sub module C....568
O.9 LIMIT ON THE NUMBER OF AMPLIFIERS TO BE CONNECTED....570
O.9.1 Condition when Control Power Needs to be Supplied from the Outside....570
O.9.2 Connection when Control Power is Supplied from the Outside....571
O.10 OPERATION CHECK....573
O.10.1 Retract Function at Power Failure....573
O.10.2 Stop Distance Reduction Function at Power Failure....574
O.10.3 Gravity-Axis Drop Prevention Function at Power Failure....574

O.1 OVERVIEW

The Power Failure Backup Module prevents the machine from being damaged in the event of a power failure by controlling the power needed for motor control until the status of the machine becomes stable after the power failure. It consists of the modules listed below.

Module name	Function
Power Failure Backup Module	This module detects a power failure, exerts charge and discharge control for the sub module C, controls resistance regeneration during a power failure, and supplies control power to the amplifier and CNC.
Sub module C	This module houses a capacitor that stores the energy for driving the motor in the event of power failure.
Sub module R	This module serves as a regenerative resistor that consumes the energy generated when a power failure causes motor deceleration.
Supplement capacitor unit	This module is used as an energy source for maintaining the control power of the amplifier and CNC during a power failure. It is built to the same specification as the sub module C.

These modules are used for the following functions that protect the machine in the event of a power failure.

(1) Retract function at power failure
If a power failure occurs during synchronous operation, this function retracts the workpiece and tool to a position where they do not interfere with each other while maintaining synchronization.

© MyFANUC 2D5504D5BAC945D385F48627D4977F6C

The function uses the Power Failure Backup Module in combination with the Sub module C and Supplement capacitor unit. After a power failure occurs, the Power Failure Backup Module exerts control so that the energy needed to drive the servo motor of the retraction axis is supplied from the capacitor inside the Sub module C.

(2) Stop distance reduction function at power failure
If a power failure occurs during rapid traverse, this function decelerates and stops the motor at a speed lower than the time constant under the normal control, thus preventing the machine from overrunning and being damaged. It can also decelerate and stop the spindle in the event of a power failure.
The function uses the Power Failure Backup Module in combination with the Sub module R. After a power failure occurs, the Power Failure Backup Module exerts control so that the regenerative energy resulting from motor deceleration is consumed by the resistor inside the Sub module R (resistance regeneration control). When a linear motor, synchronous built-in motor, or large-inertia, low-speed motor is used, the Sub module C and Supplement capacitor unit are required.

© MyFANUC 2D5504D5BAC945D385F48627D4977F6C

O.2 CONFIGURATION AND ORDERING NUMBERS

O.2.1 Configuration

O.2.1.1 200-V input type

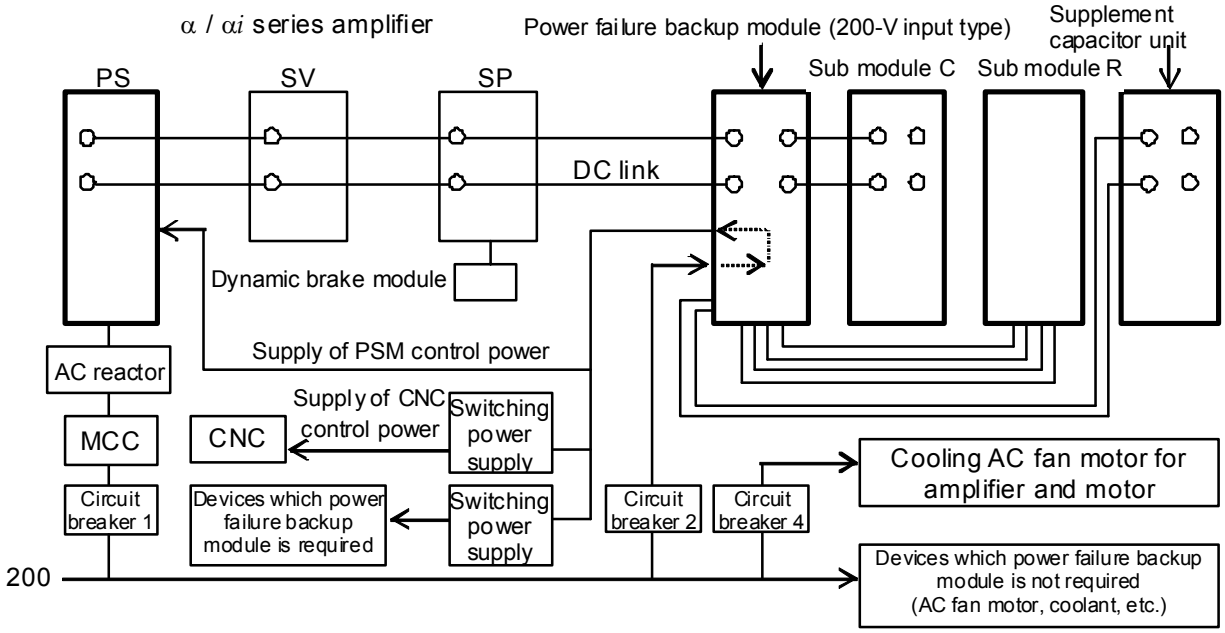

(1) The Power Failure Backup Module (200-V input type) is used in combination with the 200-V input αi series amplifier.
(2) When more than one Power Supply is used, a Power Failure Backup Module is necessary for each Power Supply.
(3) The Sub module C and Supplement capacitor unit are required to use the retract function at power failure. The number of required Sub module C depend on the machine configuration. For information about how to select the number of sub module C units to connect, see Subsection O.8.2. The number of Supplement capacitors unit to connect is always 1.
(4) The Sub module R is required to use the Stop distance reduction function at power failure. Connect one or two sub module R units according to the machine configuration. For information about how to select the number of sub module R units to connect, see Subsection O.8.1.
(5) After a power failure occurs, DC link voltage (DC voltage) is supplied as the power input to the device that supplies control power via the Power Failure Backup Module. The device that backs up control power using the Power Failure Backup Module is limited to one that can apply DC voltage as power input.
(6) Depending on the number of amplifiers connected, control power (24VDC) may need to be supplied to some of the amplifiers from the outside. For details, see Section O.9.
(7) Use a dynamic brake module of the 24-V input type.
(8) When the vertical axis is retracted in the event of a power failure, keep the brake powered on to prevent it from operating in response to the power failure.
(9) When output switch control is exerted to control the spindle so that it stops in the event of a power failure, back up the control power of the switching unit (magnetic contact) using an UPS. If the control power is not backed up, a power failure separates the spindle amplifier from the spindle motor, causing the spindle motor to coast.

© MyFANUC 2D5504D5BAC945D385F48627D4977F6C

O.2.1.2 400-V input type

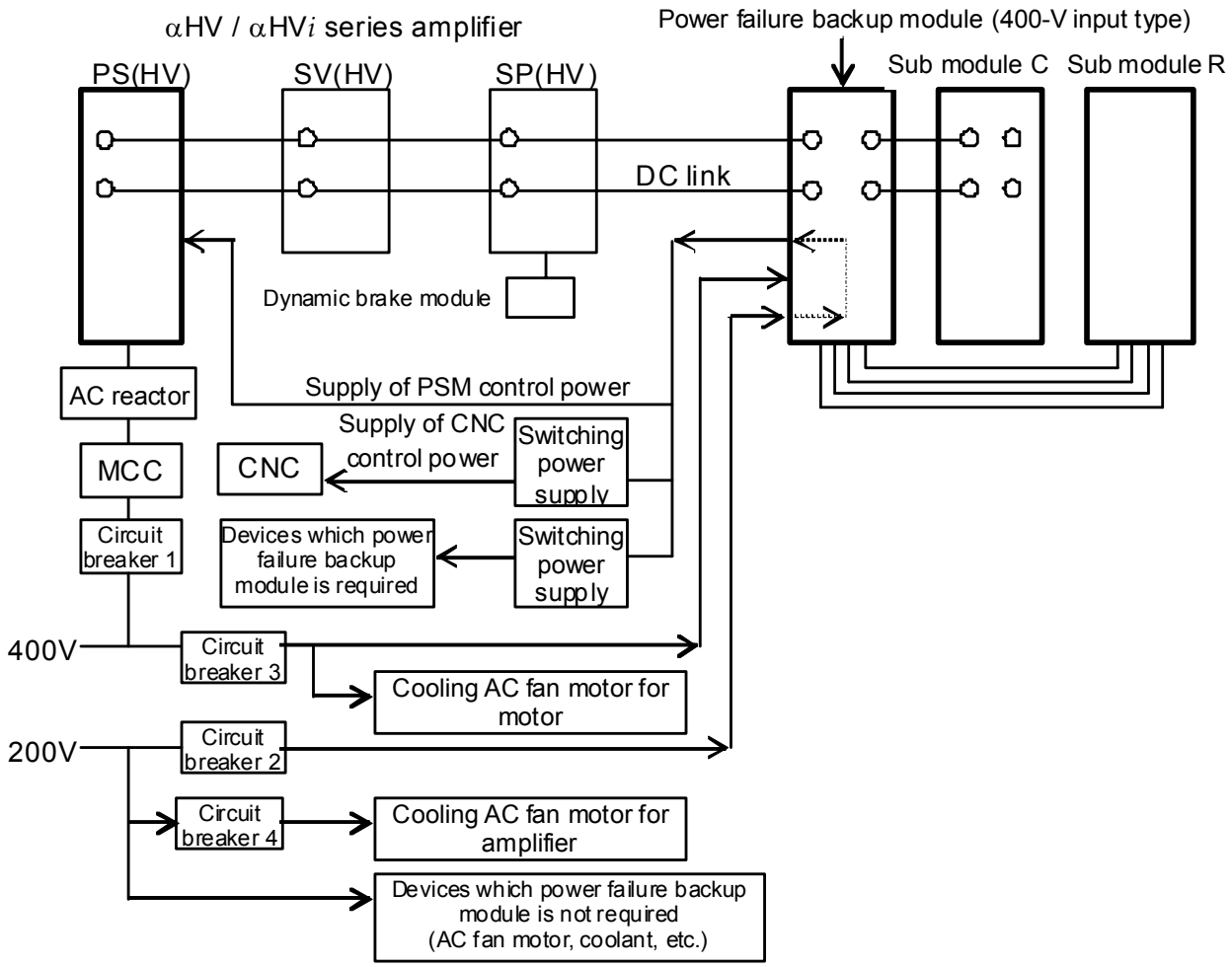

(1) The Power Failure Backup Module (400-V input type) is used in combination with the 400-V input αi series amplifier.
(2) When more than one Power Supply is used, a Power Failure Backup Module is necessary for each Power Supply.
(3) The sub module C is required to use the Retract function at power failure. The number of required Sub module C depends on the machine configuration. For information about how to select the number of sub module C units to connect, see Subsection O.8.2.
(4) The sub module R is required to use the stop distance reduction function at power failure. For details, see Appendix O.8.1.
(5) After a power failure occurs, 300VDC is supplied as the power input to the device that supplies control power via the Power Failure Backup Module. The device that backs up control power using the Power Failure Backup Module is limited to one that can apply DC voltage as power input.
(6) Depending on the number of amplifiers connected, control power (24VDC) may need to be supplied to some of the amplifiers from the outside. For details, see Section O.9.
(7) Use a dynamic brake module of the 24-V input type.
(8) When the vertical axis is retracted in the event of a power failure, keep the brake powered on to prevent it from operating in response to the power failure.
(9) When output switch control is exerted to control the spindle so that it stops in the event of a power failure, back up the control power of the switching unit (magnetic contact) using an UPS. If the control power is not backed up, a power failure separates the spindle amplifier from the spindle motor, causing the spindle motor to coast.

© MyFANUC 2D5504D5BAC945D385F48627D4977F6C

O.2.1.3 Required modules

The power failure machine protection functions require the modules shown below.
(1) Retract function at power failure
(2) Stop distance reduction function at power failure
(3) Gravity-axis drop prevention function at power failure

○: Required, －: Not required

Function	Required module			
	Power Failure Backup Module	Sub module C	Sub module R	Supplement capacitor unit (Note 5)
(1)	○	○	–	○
(2)	○	– (Note 2, 4)	○	– (Note 2)
(3)	– (Note 1)	– (Note 1)	–	–
(1)+(2)	○	○	○	○
(1)+(3)	○	○	–	○
(2)+(3)	○	– (Note 2, 3, 4)	○	– (Note 2)
(1)+(2)+(3)	○	○	○	○

NOTE
1 The Gravity-axis drop prevention function at power failure can be implemented without the power failure backup module. However, if a power failure occurs during heavy cutting, a DC link low voltage alarm occurs before the brake operates, potentially making it impossible to prevent the vertical axis from dropping. To provide protection in such a case requires connecting the power failure backup module to the sub module C.
2 To decelerate and stop the linear motor, synchronous built-in motor, or large-inertia, low-speed motor in the event of a power failure requires the sub module C and supplement capacitor unit.
3 If a power failure occurs during heavy cutting, a DC link low voltage alarm occurs before the brake operates, potentially making it impossible to prevent the vertical axis from dropping. To prevent the vertical axis from dropping in such a case requires connecting the sub module C.
4 If a power failure occurs while the spindle is accelerated or all axes are simultaneously accelerated, a DC link low voltage alarm occurs, potentially making it impossible to sufficiently reduce the stop distance. To achieve the intended effect of stop distance reduction requires connecting the sub module C.
5 When the Power Failure Backup Module of the 400-V input type (A06B-6091-H002) is used, the supplement capacitor unit is not required.

O.2.1.4 Dynamic brake module for the servo amplifier

Maintain the coil power supply of the dynamic brake module to prevent the dynamic brake from being actuated by a power failure.

Model	Dynamic brake module	
	Ordering number	Coil power supply voltage
αi SV 360, αi SV 180HV, αi SV 360HV	A06B-6079-H403	24VDC
αi SV 360HV, αi SV 540HV	A06B-6069-H301	

© MyFANUC 2D5504D5BAC945D385F48627D4977F6C

O.2.1.5 Retraction of the gravity-axis

When the gravity-axis is retracted in the event of a power failure, back up the switching power supply unit for the brake (24VDC output) by using the power failure backup module so as to prevent the brake from operating in response to the power failure.

O.2.2 Ordering Number

O.2.2.1 Power failure backup module

Category	Name	Ordering number	Remarks
Standard	Power Failure Backup Module	A06B-6077-H002	200-V input type
Standard	Power Failure Backup Module	A06B-6091-H002	400-V input type

O.2.2.2 Sub module C

Category	Name	Ordering number	Remarks
Standard	Sub module C	A06B-6077-H010	25000μF / 400V
Standard	Sub module C	A06B-6083-H245	4500μF / 800V

O.2.2.3 Sub module R

Category	Name	Ordering number	Remarks
Standard	Sub module R (Regenerative discharge unit)	A06B-6089-H712	8Ω / 100kJ 200-V input type
		A06B-6077-H020	4Ω / 80kJ 200-V input type
		A06B-6091-H020	16Ω / 80kJ 400-V input type

O.2.2.4 Supplement capacitor unit

Category	Name	Ordering number	Remarks
Standard	Supplement capacitor unit	A06B-6077-H010	Same ordering number as the sub module C (200-V input type)

O.2.2.5 Connectors

Category	Name	Ordering number	Configuration (connector number)
Standard	Connectors	A06B-6077-K212	For 200V: CX12,CX13,CX14,CX15,CX16,CX17,CX24, JX1A,JX1B (Crimp type)
		A06B-6077-K213	For 200V:CX12,CX13,CX14,CX15,CX16,CX17,CX24, JX1A,JX1B (Soldering type)
		A06B-6091-K212	For 400V: CX14,CX15,CX16,CX17,CX26,CX27, JX1A,JX1B (Crimp type)
		A06B-6091-K213	For 400V: CX14,CX15,CX16,CX17,CX26,CX27, JX1A,JX1B (Soldering type)
		A06B-6110-K211	For 200V/400V: CXA2A

For the 200-V input series, specify either A06B-6077-K212 or A06B-6077-K213 and A06B-6110-K211.
For the 400-V input series, specify either A06B-6091-K212 or A06B-6091-K213 and A06B-6110-K211.

O.2.2.6 Fuses

Category	Name	Ordering number	Remarks
Standard	Fuses	A06B-6077-K255	FU1,FU2(10A), FU3(3.2A)

© MyFANUC 2D5504D5BAC945D385F48627D4977F6C

O.2.2.7 Circuit breaker

Category	Name	Ordering number	Rated output
Optional	Circuit breaker 1	See Subsection 3.1.3.7.	
	Circuit breaker 2	A06B-6077-K106	5A
	Circuit breaker 3	–	3A
	Circuit breaker 4	–	3A

O.2.2.8 Cables

DC link short bar

Category	Name	Ordering number	Applicable terminal-to-terminal distance
Optional	DC link short bar	A06B-6078-K800	124mm (120mm to 128mm)
		A06B-6078-K801	90mm (86mm to 94mm)
		A06B-6078-K802	131mm (127mm to 135mm)
		A06B-6078-K803	64mm (60mm to 68mm)
		A06B-6078-K804	85mm (81mm to 89mm)
		A06B-6078-K805	102mm (98mm to 106mm)
		A06B-6078-K840	154mm (150mm to 158mm)

O.3 SPECIFICATIONS

(1) Power supply

(a) Control power

24VDC ±5% 0.35A (Supplied from the Power Supply to connector CX14)

(b) Main circuit (DC link voltage)

→ A06B-6077-H002 (200-V input type)
283 to 339VDC +10% -15%
(200 to 240VAC +10% -15% in the main circuit input of α*i*PS)

→ A06B-6091-H002 (400-V input type)
566 to 679VDC +10% -15%
(400 to 480VAC +10% -15% in the main circuit input of α*i*PS)

(2) Power failure detection part

The three lines below are used for power failure detection. If one of these three lines detects a power failure, the power failure detection signal is output from connector CX16 and power control necessary for motor control is started at the same time.

Line 1: This line checks for a drop in the three-phase AC voltage input to the Power Failure Backup Module.

→ A06B-6077-H002 (200-V input type)
This line checks for a drop in the three-phase 200VAC voltage input to connector CX12.
CX12 input voltage range: 0 to 240VAC+10% 3ϕ 50Hz/60Hz±1Hz
CX12 power failure detection voltage: 140VAC±10V

→ A06B-6091-H002 (400-V input type)
This line checks for a drop in the three-phase 400VAC voltage input to connector CX26.
CX26 input voltage range: 0 to 480VAC+10% 3ϕ 50Hz/60Hz±1Hz
CX26 power failure detection voltage: 260VAC±20V

A detection delay time is set to prevent the line from becoming too sensitive to an instantaneous power interruption.

© MyFANUC 2D5504D5BAC945D385F48627D4977F6C

The detection delay time can be set in 1-msec steps within the range of 0 to 15 msec. The factory-set default is 7 msec.

Line 2: This line checks for a drop in the DC link voltage caused by a power failure.

→ A06B-6077-H002 (200-V input type)
Power failure detection voltage: 220VDC±15V

→ A06B-6091-H002 (400-V input type)
Power failure detection voltage: 400VDC±20V
Power failure detection for the DC link voltage can be disabled by connecting pin A3 (*SYNC) of connector CX16 to 24V.

Line 3: This line checks for an external power failure signal input to connector CX15.
When 24V is input to pin 3 (EXPFL) of connector CX15, the line enters the power failure detection state. When this line is not used, leave EXPFL open.
The maximum current allowed to flow to EXPFL is 10mA.

NOTE

1 A power failure that occurs on any line other than those meant for power failure detection (lines connected to connector CX12 or connector CX26) cannot be detected (e.g., a power failure caused by a failure of the magnetic contactor (MCC) connected to the αiPS main circuit input or the disconnection of the cable connected to the MCC).

2 To perform the backup operation even for a power failure occurring on a line other than those connected to connector CX12 or connector CX26, install a power failure detector on the target line and have the external power failure signal (Line 3 above) of the power failure backup module operated by the power failure signal output from the detector.

Operation in the event of an instantaneous power interruption

→ In the case of an instantaneous power interruption not exceeding the instantaneous power interruption guarantee time of the amplifier (3 msec), a power failure is not detected and the operation continues.

→ An instantaneous power interruption exceeding 7 msec (detection delay time set for Line 1) is detected as a power failure by Line 1.

→ In the case of an instantaneous power interruption exceeding 3 msec but not exceeding 7 msec, the operation may continue or a power failure may be detected depending on the load status of the motor. If the DC link voltage drops to the power failure detection level of Line 2 during an instantaneous power interruption of 3 to 7 msec, a power failure is detected. Otherwise, the operation continues.

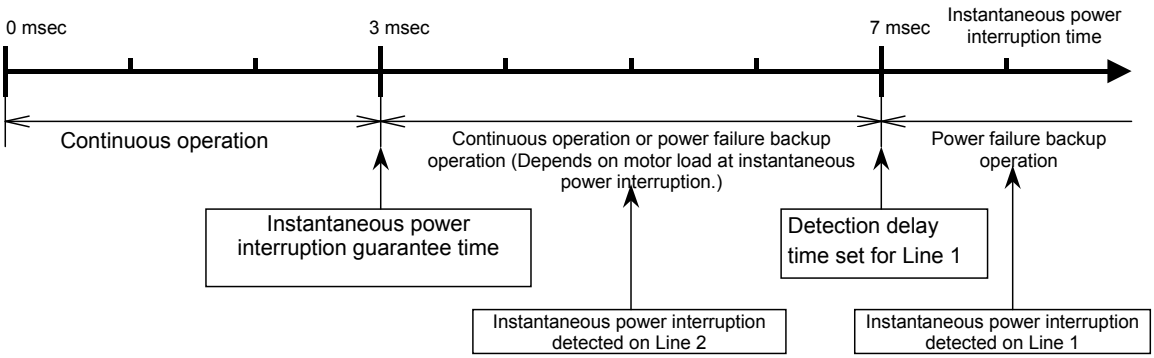

(3) Energy supply capacity at power failure: Depends on the input power voltage of the αiPS and the number of connected sub module C units.

© MyFANUC 2D5504D5BAC945D385F48627D4977F6C

Amount of energy per sub module C

A06B-6077-H010 (for 200V)	
αiPS input voltage V1	Amount of energy W1
170VAC	478J
200VAC	755J
240VAC	1195J

A06B-6083-H245 (for 400V)	
αiPS input voltage V1	Amount of energy W1
340VAC	330J
400VAC	530J
480VAC	850J

Up to eight sub module C units can be connected. For information about selection, see Subsection O.8.2.

(4) Maximum generation capacity (resistance regeneration): Depends on the sub module R specifications and the number of connected sub module R units.

→ 200-V input type

Sub module R specifications	Number of connected units	Generation capacity (1)	Generation capacity (2)	Remarks
A06B-6089-H712	1	20kW	100kJ	
A06B-6089-H712	2	40kW	200kJ	Parallel connection
A06B-6077-H020	1	40kW	80kJ	

* The maximum number of units that can be connected is 2 for A06B-6089-H712 and 1 for A06B-6077-H020.

→ 400-V input type

Sub module R specifications	Number of connected units	Generation capacity (1)	Generation capacity (2)	Remarks
A06B-6091-H020	1	40kW	80kJ	

* The maximum number of units that can be connected is 1.

- Generation capacity (1): Maximum output of the motor that can be decelerated at power failure
- Generation capacity (2): Product of the motor output at deceleration [kW] and deceleration time [sec]

(5) Control power supply part

In the event of a power failure, power is supplied to the control power input of the amplifier and CNC.

→ A06B-6077-H002 (200-V input type)
Power is supplied from connector CX13 to the control power input of the amplifier and CNC.
Normal operation: The 200VAC input to connector CX12 is output to connector CX13.
Power failure: DC link voltage is output from connector CX13.

→ A06B-6091-H002 (400-V input type)
Power is supplied from connector CX28 to the control power input of the amplifier and CNC.
Normal operation: The 200VAC input to connector CX27 is output to connector CX28
Power failure: 300VDC (voltage generated by decreasing the DC link voltage) is output from connector CX28.

<u>Power supply capacity of connectors CX13 and CX28</u>

Max. 1000VA

<u>Power changeover time</u>

When the output of connector CX13 or CX28 switches from 200VAC to a DC voltage after a power failure, an instantaneous power interruption of up to 30 msec (a state in which the output of connector CX13 or CX28 becomes 0V) occurs.
For connectors CX13 and CX28, connect a device that tolerates an instantaneous power interruption of 30 msec.

© MyFANUC 2D5504D5BAC945D385F48627D4977F6C

Power supply capacity calculation

When the power supply capacity of the device connected to connector CX13 or CX28 is expressed in any unit other than VA, calculate the power supply capacity as follows.

→ When the power supply capacity is expressed as power consumption "W"
The power supply capacity is obtained by dividing the power consumption by the power factor.
When the power factor is unknown, assume that the power factor is 0.5.

→ When the power supply capacity is expressed as current consumption "A"
The power supply capacity is obtained by multiplying the current consumption by the operating voltage of 200V.

→ When the output current of the switching power supply is known
Power supply capacity (VA) = Output voltage (V) × Output current (A) ÷ Power supply efficiency ÷ Power factor
When the power supply efficiency and power factor are unknown, assume that efficiency is 0.85 and that the power factor is 0.5.

→ When the dynamic brake module for the servo amplifier is used
When the dynamic brake module (24VDC model) is used, assume that the load capacity is 50VA per unit (supply voltage: 24V; supply current: 1.05A; power factor: 0.5).

Measure to take if the power supply capacity of the device connected to connector CX13 or CX28 exceeds 1000VA

If the power supply capacity of the device connected to connector CX13 or CX28 exceeds 1000VA, supply power to the device in question from a UPS (uninterruptible power supply).
Even when a UPS is used, make sure that the control power of the α*i*PS is supplied from the Power Failure Backup Module.

Specifications of the switching power supply connected to connectors CX13 and CX28

(1) Input voltage range
→ 170 to 264VAC (Continuous)
→ 240 to 373VDC (Up to 1 minute during the power failure backup operation)
* Some types of switching power supply cannot be driven continuously by a DC power supply, and their specifications may state that "the switching power supply cannot be driven by a DC power supply." Even such switching power supplies can be driven by a DC power supply for a period required for power failure backup (max. 1 minute).

(2) Output current
Depends on the current consumption of the connected device.

(3) Operation below the specified input voltage
There may be cases in which the input voltage remains within the range of 0 to 240VDC for up to one minute. Even in these cases, the switching power supply should not be damaged and no voltage exceeding the specified range (24V+10%) tolerated by the CNC and other components should be output.

(4) Hold time during an instantaneous power interruption
30 msec or more
* The hold time mentioned in the catalog is generally one calculated assuming that the load factor is 100%. If the hold time is shorter than 30 msec, it can be increased by lowering the load factor.

⚠ **CAUTION**
During a power failure, CX13 and CX28 output a DC voltage instead of 200VAC. A device that uses an AC fan motor, AC-driven magnetic contactor, etc. may be burned if a direct current is applied to it. Therefore, do not connect any such device to CX13 or CX28.

© MyFANUC 2D5504D5BAC945D385F48627D4977F6C

(8) I/O specifications

The specifications for the control signals input to the Power Failure Backup Module (EXPFL and *SYNC) and the status signals output from it (RDY,*PFL, and *ALM) are as follows.

Input signal specifications

Connector CX15 pin 3 (EXPFL), connector CX16 pin A3(*SYNC)

Contact capacity	24VDC+10% 10mA
Closed circuit voltage drop between contacts	2V or less (including the voltage drop of the cable)

Output signal specifications

Connector CX16 pin B1 (*ALM), pin B2(*PFL), pin B3(RDY)

Maximum load current in the on state	200mA or less, including during an instantaneous power interruption
Saturation voltage in the on state	1V or less (at load current of 200mA)
Withstand voltage	24V+20%, including during an instantaneous power interruption
Leak current in the off state	20μA or less
Delay time	50μsec
Protection function	If the load current increases abnormally due to cable grounding or some other cause, the protection function keeps all outputs off until the cause is eliminated.

(7) Alarm processing

If any error occurs in the Power Failure Backup Module, the alarm number corresponding to that error is displayed on the LED and pin B1 of connector CX16 outputs *ALM=0.

Even if an alarm occurs, the Power Failure Backup Module does not turn off the power forcibly and the machine continues to operate normally. However, if an alarm occurs in the Power Failure Backup Module, the power failure backup operation is not performed in the event of a power failure. Therefore, if *ALM=0 is output from the Power Failure Backup Module, stop the machine immediately. Also, to protect the Power Failure Backup Module, shut down the magnetic contactor (MCC) of the Power Supply input part at the same time you stop the machine.

If RDY=1 changes to RDY=0 during the machine operation when there is no alarm signal output from the Power Failure Backup Module (*ALM=1), the Power Failure Backup Module is experiencing an error.

If RDY=1 changes to RDY=0 during the machine operation, perform the same processing that is carried out if an alarm occurs in the Power Failure Backup Module.

(8) Total amount of heat generation

Power failure backup module

A06B-6077-H002: 12W

A06B-6091-H002: 25W

Sub module C

A06B-6077-H010: 5W

A06B-6083-H245: 4W

Sub module R: No constant heat generation

(9) Environmental conditions

The environmental conditions of the α*i* series amplifier apply.

© MyFANUC 2D5504D5BAC945D385F48627D4977F6C

O.4 OUTLINE DRAWINGS AND PANEL CUT-OUT DIAGRAM

O.4.1 Outline Drawings

O.4.1.1 Power failure backup module

(1) A06B-6077-H002 (200-V input type)

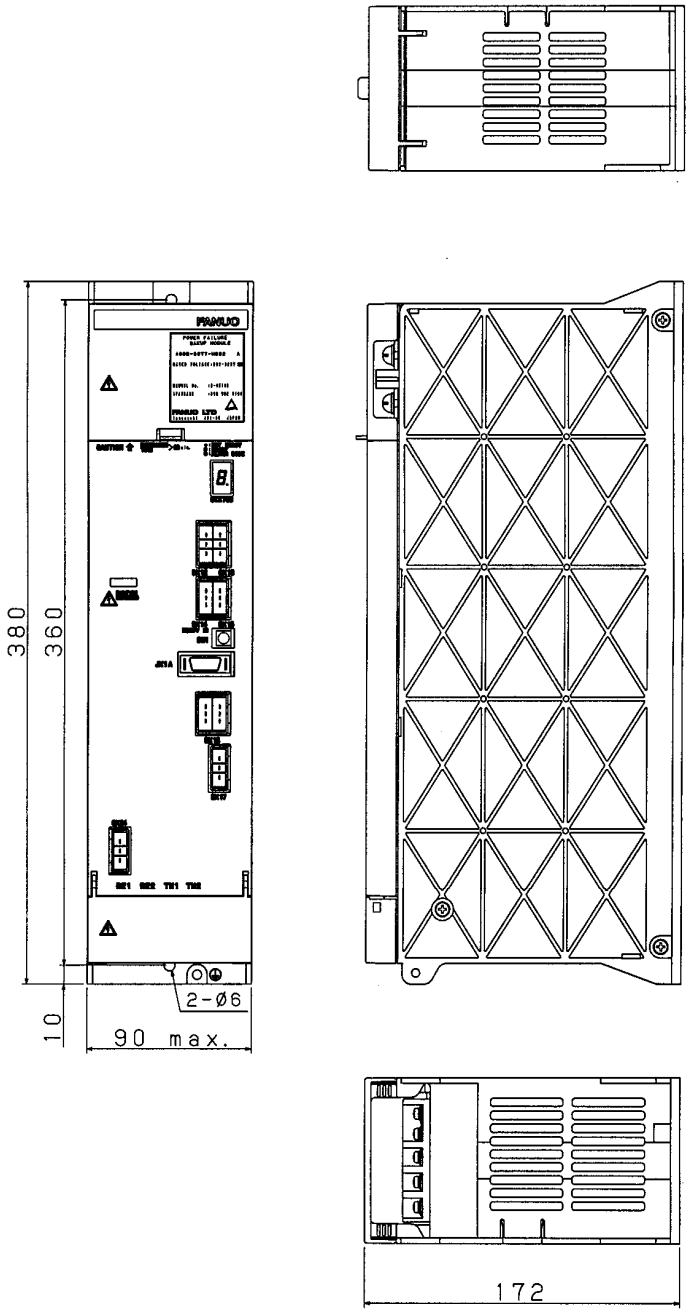

Weight: 2.7kg

© MyFANUC 2D5504D5BAC945D385F48627D4977F6C

(2) A06B-6091-H002 (400-V input type)

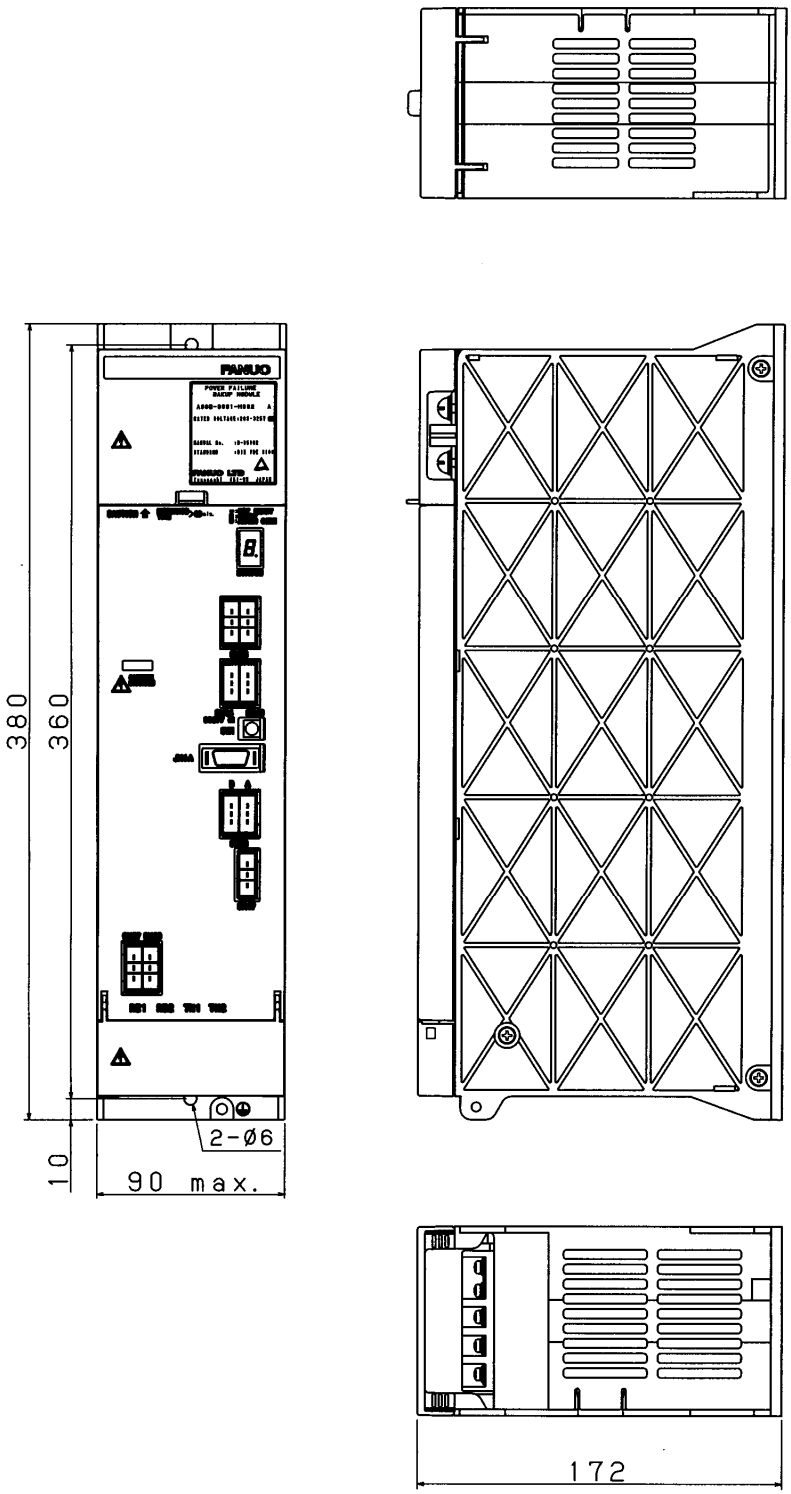

Weight: 3.3kg

© MyFANUC 2D5504D5BAC945D385F48627D4977F6C

O.4.1.2 Sub module C and supplement capacitor unit

200-V input series: A06B-6077-H010
400-V input series: A06B-6083-H245

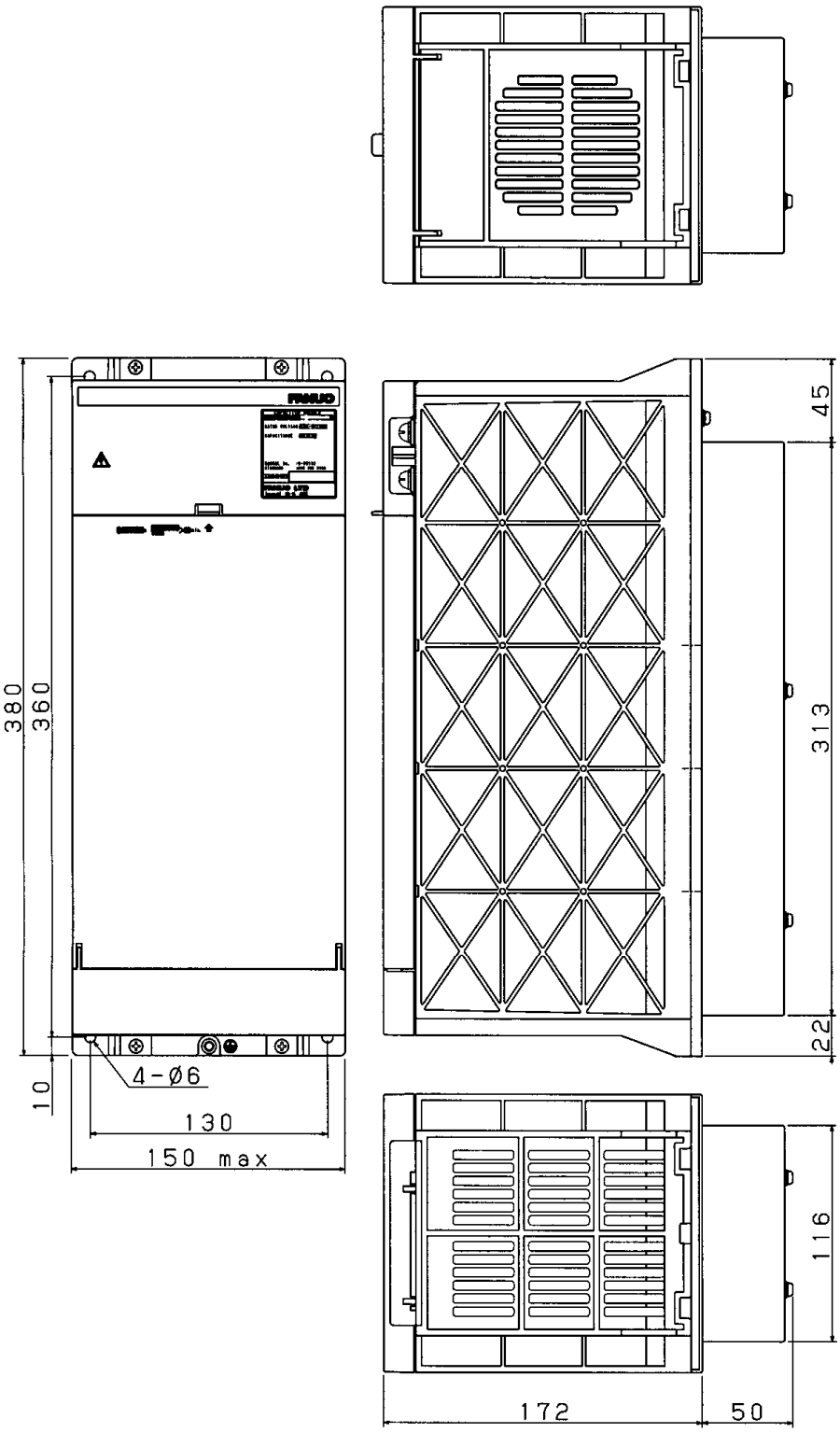

Weight: 6.5kg

© MyFANUC 2D5504D5BAC945D385F48627D4977F6C

O.4.1.3 Sub module R

(1) A06B-6077-H020 (for 200V)

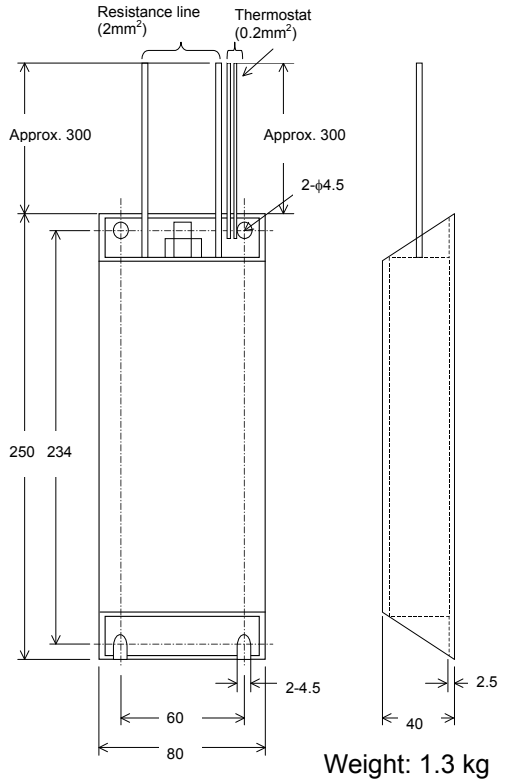

Weight: 1.3 kg

(2) A06B-6089-H712 (for 200V)

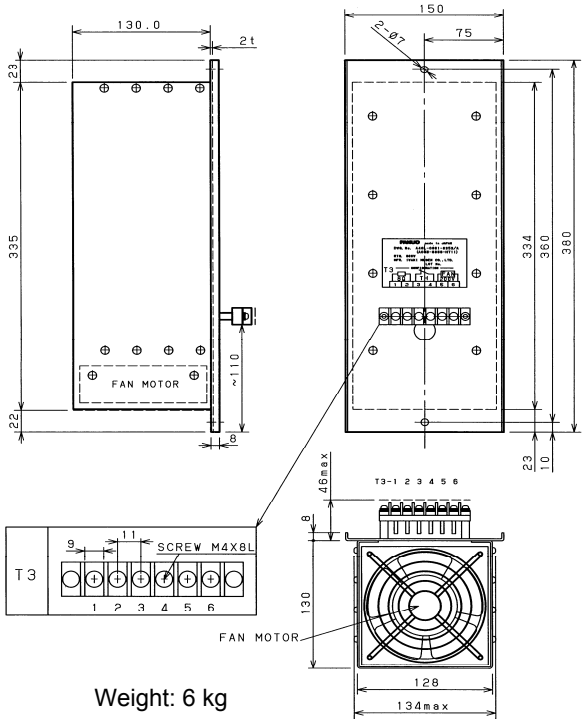

Weight: 6 kg

(3) A06B-6091-H020 (for 400V)

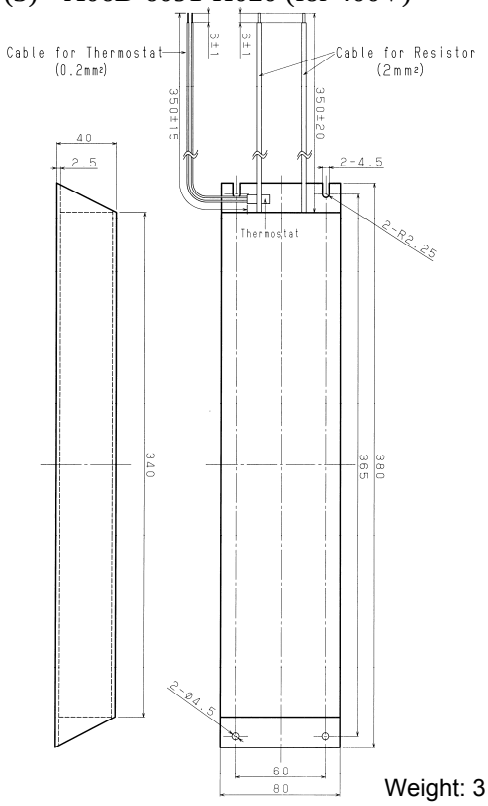

Weight: 3 kg

© MyFANUC 2D5504D5BAC945D385F48627D4977F6C

> ⚠ **WARNING**
> After the power failure backup operation, the surface temperature can become very high. Make sure that the sub module R is installed in a place where it cannot be contacted directly by hand.

> **NOTE**
> 1 Install A06B-6077-H020 and A06B-6091-H020 so that no oil mist adheres to them.
> 2 The sub module R is powered only in the event of a power failure and therefore does not generate heat during normal operation.

O.4.2 Panel Cut-out Diagram

The following figure shows a panel cut-out diagram in which one Power Failure Backup Module, two sub module C units, and one sub module R unit (A06B-6089-H712) are installed from left to right.
For protection against oil and dust, reinforce the left and right sides of the panel cut-out in the power magnetics cabinet by using fittings such as L-shaped angles to maintain satisfactory contact with the module and attach the accompanying packing (acrylonitrile-butadiene rubber, NBR [soft type]).

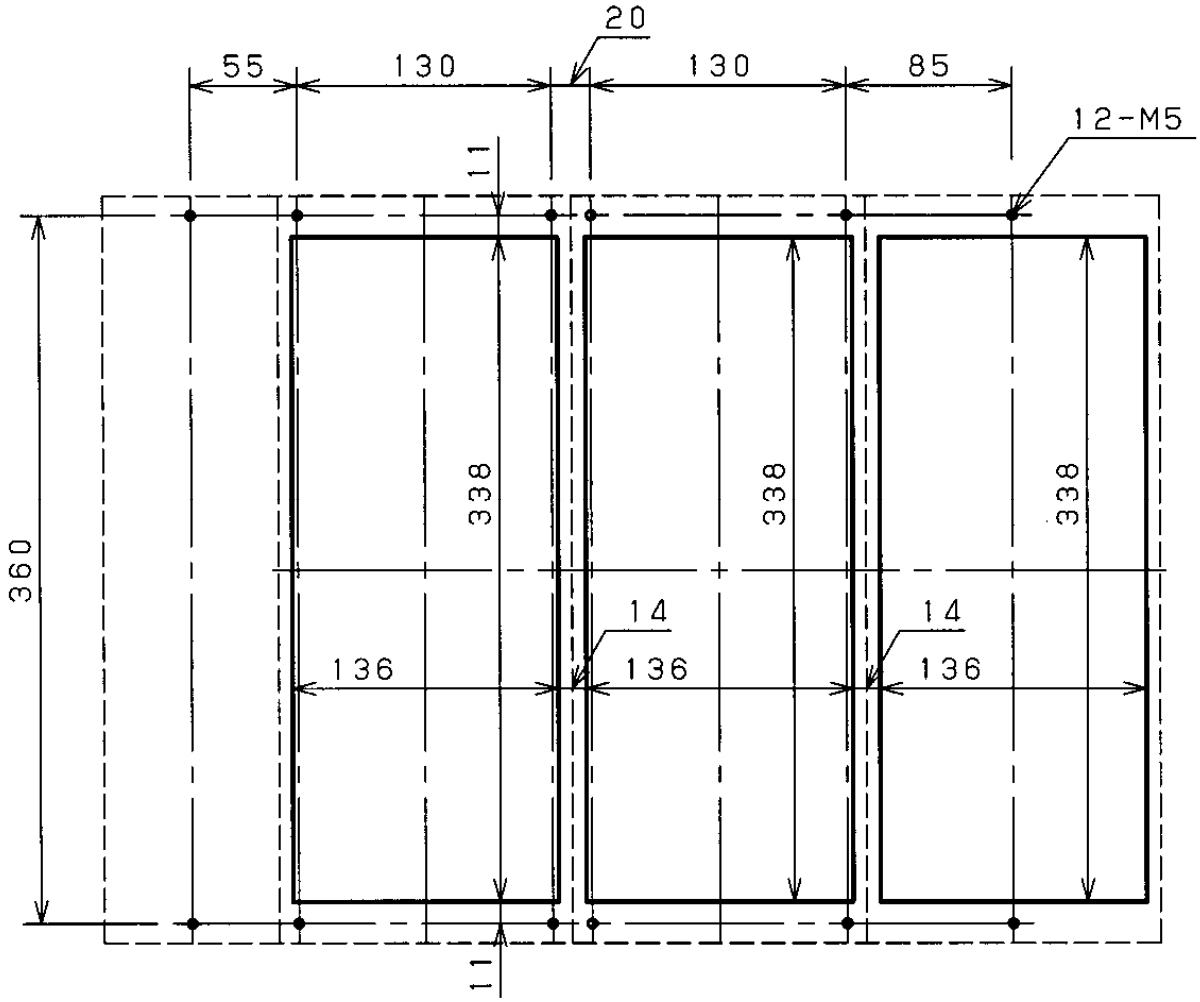

© MyFANUC 2D5504D5BAC945D385F48627D4977F6C

O.5 CONNECTION

O.5.1 Total Connection Diagram

(1) 200-V input type

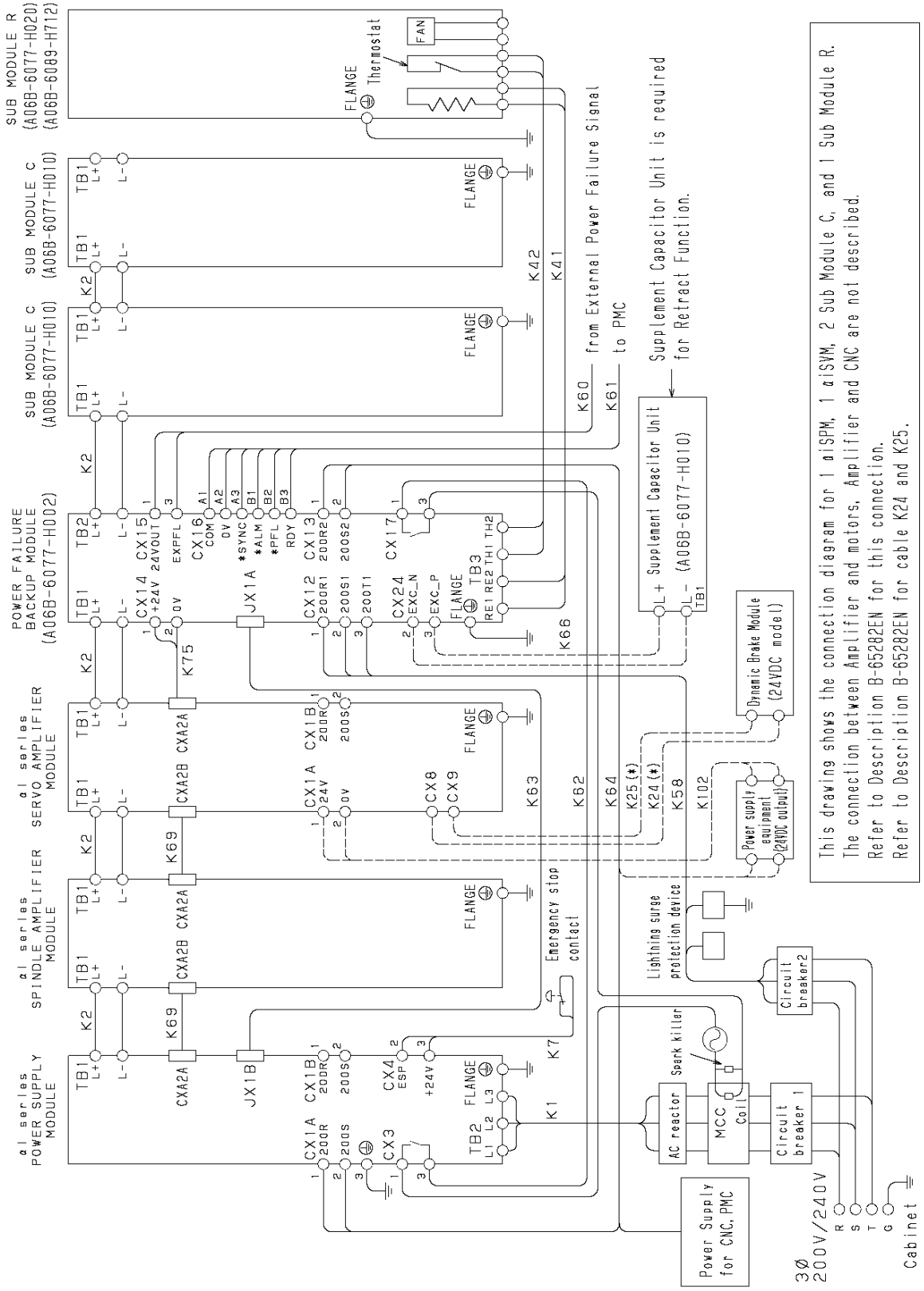

© MyFANUC 2D5504D5BAC945D385F48627D4977F6C

(2) 400-V input type

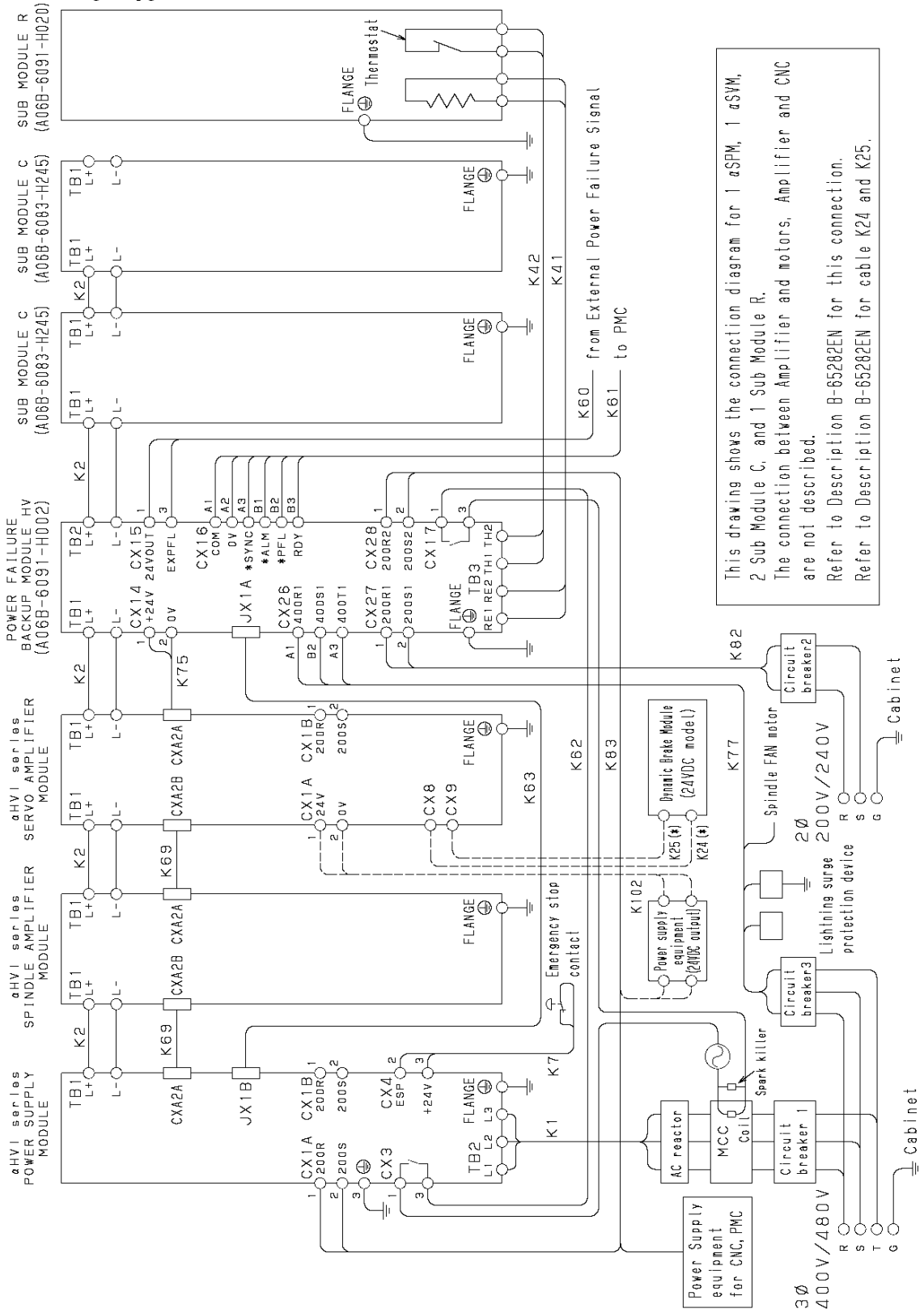

© MyFANUC 2D5504D5BAC945D385F48627D4977F6C

O.5.2 Details of Cable Connections

This subsection details the cables to be connected to the Power Failure Backup Module.
For details of the cable connections between amplifier and NC as well as between amplifier and motor, see the main body of the subsection.

(1) Details of the short bar K2 connection
This is a short bar (cable) to connect the DC link.

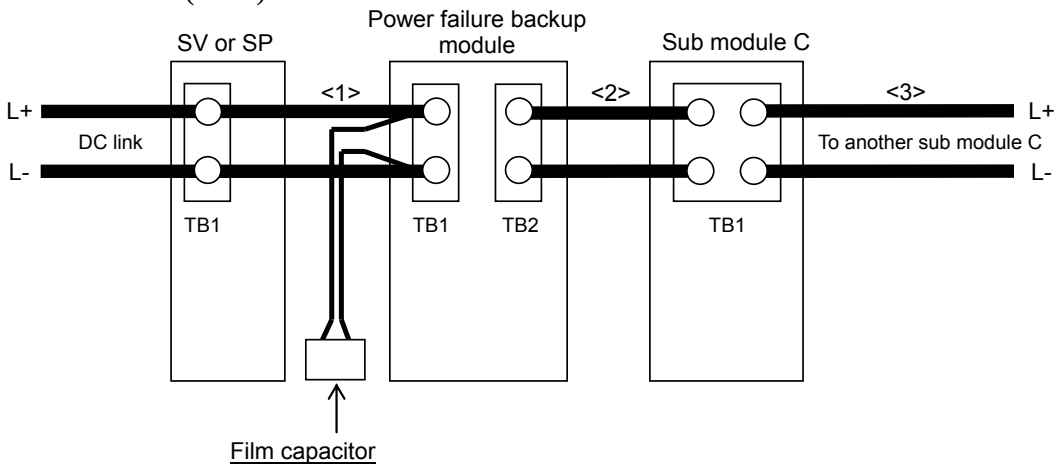

Required when the sub module R is connected to the power failure backup module A06B-6077-H002 (200-V input type) and cable <1> is longer than 1.5m.

<1> Connection between Power Failure Backup Module and amplifier
Connect terminal block TB1 of the Power Failure Backup Module to terminal block TB1 of the αiSV or αiSP using a short bar or cable.

Maximum length of cable (1)

1. For Power Failure Backup Module A06B-6077-H002 (200-V input type)
   When the sub module R is not connected: Max. 5 m
   When the sub module R is connected: Max. 1.5m (Note)

2. For Power Failure Backup Module A06B-6091-H002 (400-V input type)
   Regardless of whether the sub module R is connected or not, the maximum length is 5 m.

NOTE
The cable length can be extended by up to 5 m by connecting a 3.3μF 630V film capacitor to TB1 of the Power Failure Backup Module.

Recommended film capacitor

Manufacturer	Product name	Specification
Okaya Electric Industries Co., Ltd.	CF99MPP2J335K	3.3μF／630V

Note on film capacitor connection
The cable from the film capacitor can be 30 cm in length and should be twisted or laid in parallel.

© MyFANUC 2D5504D5BAC945D385F48627D4977F6C

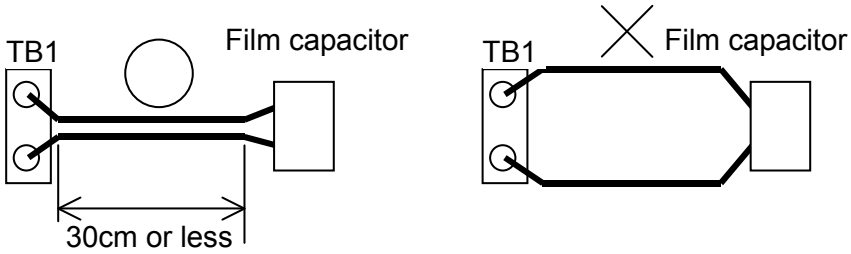

<2> Connection between Power Failure Backup Module and sub module C
Connect terminal block TB2 of the Power Failure Backup Module to terminal block TB1 of the sub module C using a short bar or cable. When the sub module C is not used, terminal block TB2 of the Power Failure Backup Module does not need to be connected.

> ⚠ **CAUTION**
> Connecting the sub module C wrongly to TB1 of the power failure backup module may damage the Power Supply.

<3> Connection between sub module C units
Connect terminal block TB1 of one sub module C to that of the other sub module C using a short bar or cable.
If the terminals are connected using a cable and if the cable becomes long, twist the cable.

(2) Details of cables K41 and K42
These are the cables to connect to the sub module R.

Cable K41 specifications:
Two-conductor polyvinyl heavy-duty power cable (JIS C3312)
Conductor size of 2.0mm^2 (37/0.26), PVC sheath 10.5 mm in diameter

Cable K42 specifications:
Two-conductor polyvinyl heavy-duty power cable (JIS C3312)
Conductor size of 0.75mm^2 (30/0.18), PVC sheath 8.8 mm in diameter

→ Connect cable K42 after removing the short bar between TH1 and TH2 of TB3.
→ The sub module R (A06B-6089-H712) does not need to be connected to the terminal for fan motor.
→ The sub module R (A06B-6077-H020/A06B-6091-H020) has a cable sticking out from its main body. Relay the cable using a terminal block or other device as necessary.
→ To connect two sub module R units (A06B-6089-H712), do as follows.

Method to use two sub module R units (A06B-6089-H712)

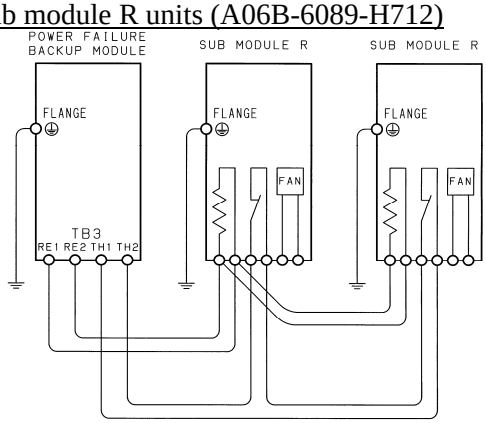

© MyFANUC 2D5504D5BAC945D385F48627D4977F6C

(3) Details of cable K58

This cable is intended to supply control power (200VAC) to the αiPS and CNC and detect a power failure.

It is used for the Power Failure Backup Module A06B-6077-H002.

Until a power failure is detected, the 200VAC supplied to (1)200R1/(2)200S1 of CX12 is output to (1)200R2/(2)200S2 of CX13 via the internal circuit of the Power Failure Backup Module.

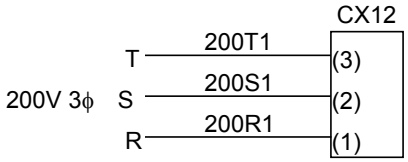

Cable specification: Three-conductor polyvinyl heavy-duty power cable (JIS C3312)
Conductor size of 1.25mm^2 (50/0.18), PVC sheath 10.5 mm in diameter

Connector specification: Manufactured by Tyco Electronics AMP
Receptacle housing :1-178128-3
Receptacle contact :1-175218-2

(4) Details of cable K60

This cable is used to perform the power failure backup operation in response to an external power failure signal.

When an external power failure signal is not used, CX15 does not need to be connected.

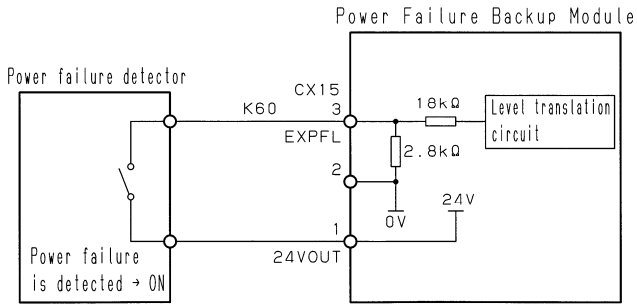

EXPFL input current: Max. 10mA

Cable specification: Two-conductor polyvinyl heavy-duty power cable (JIS C3312)
Conductor size of 1.25mm^2 (50/0.18), PVC sheath 9.6mm in diameter

Connector specification: Manufactured by Tyco Electronics AMP
Receptacle housing :1-178288-3
Receptacle contact :1-175218-2

© MyFANUC 2D5504D5BAC945D385F48627D4977F6C

(5) Details of cable K61

This cable is used to transfer status signals and control signals between Power Failure Backup Module and PMC. The 24-V external power supply shown in the figure below and the control power of the PMC should be backed up by the Power Failure Backup Module so that they can be maintained during a power failure, as with the control power of the CNC.

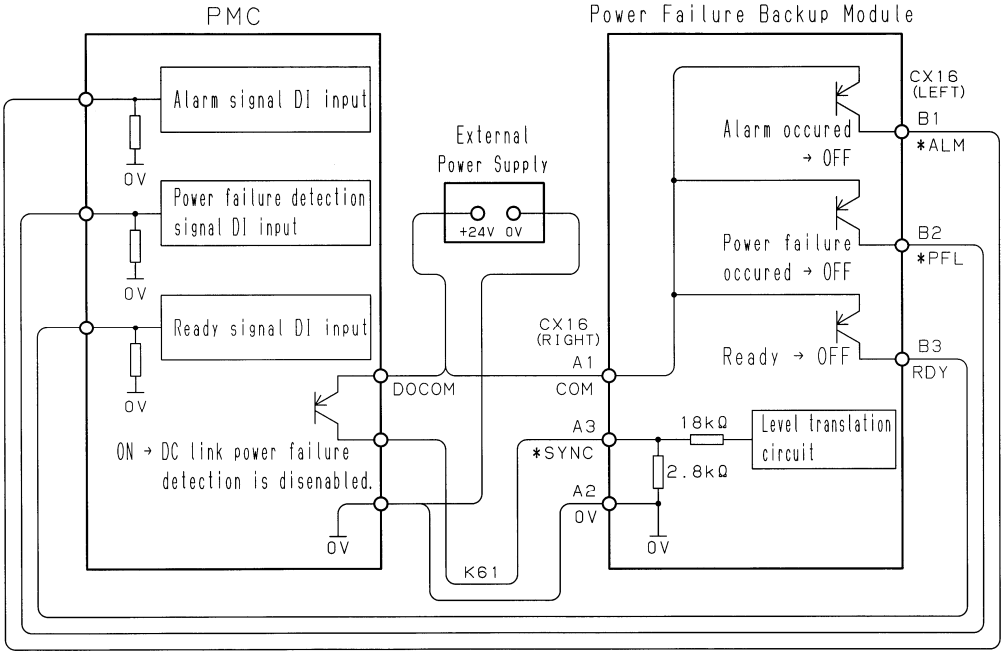

Cable specification: Conductor polyvinyl heavy-duty power cable (JIS C 3307)
Conductor size of 1.25mm^2 (50/0.18)

Connector specification: Manufactured by Tyco Electronics AMP
Receptacle housing :1-178127-6
Receptacle contact :1-175218-2

Input signal specifications (*SYNC)

Contact capacity	24VDC+10% 10mA
Closed circuit voltage drop between contacts	2V or less (including the voltage drop of the cable)

Output signal specifications (RDY,*PFL,*ALM)

Maximum load current in the on state	200mA or less, including during an instantaneous power interruption
Saturation voltage in the on state	1V or less (at load current of 200mA)
Withstand voltage	24V+20%, including during an instantaneous power interruption
Leak current in the off state	20μA or less
Delay time	50μsec
Protection function	If the load current increases abnormally due to cable grounding or some other cause, the protection function keeps all outputs off until the cause is eliminated.

© MyFANUC 2D5504D5BAC945D385F48627D4977F6C

(6) Details of cable K62
This is a cable for magnetic contactor (MCC) control.

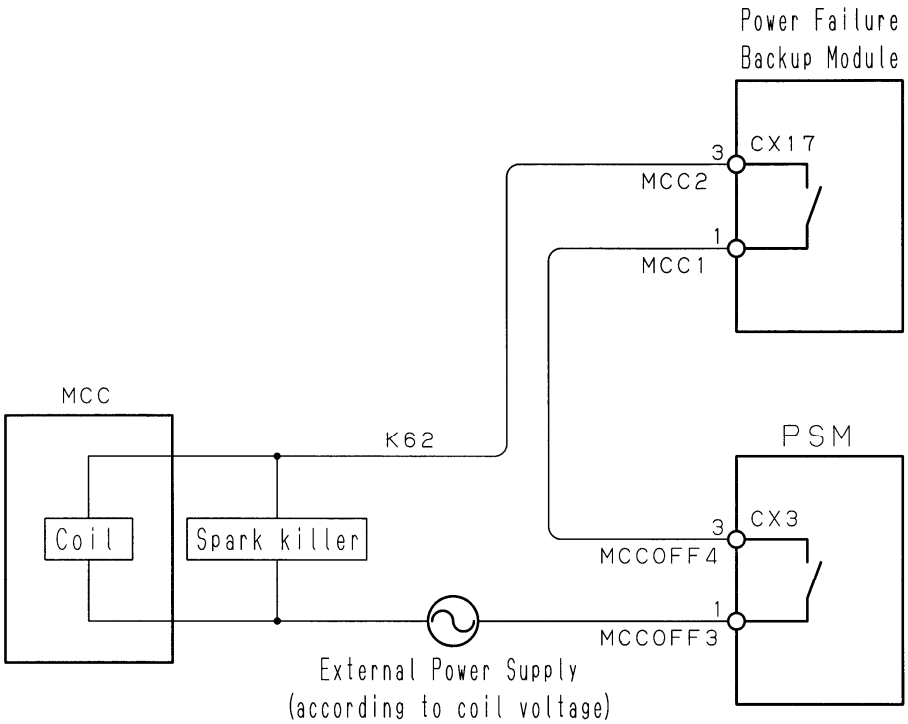

Cable specification: Two-conductor polyvinyl heavy-duty power cable (JIS C3312)
Conductor size of 1.25mm^2 (50/0.18), PVC sheath 9.6mm in diameter
Connector specification: Manufactured by Tyco Electronics AMP
Receptacle housing :2-178128-3
Receptacle contact :1-175218-2

Internal-contact specification:

	Resistive load (cosϕ=1)	**Inductive load (cosϕ=0.4, L/R=7msec)**
Rated load	250VAC,5A / 30VDC,5A	250VAC,2A / 30VDC,2A
Maximum contact rating	5A	5A

Spark killer:
Be sure to use a spark killer (CR) that matches the magnetic contactor (MCC) in use to protect the internal contacts.
The following table shows the reference values for the CR.

Coil voltage	**C**	**R**
24VDC	0.22μF	22Ω
100 to 240VAC	0.1μF	220Ω

© MyFANUC 2D5504D5BAC945D385F48627D4977F6C

(7) Details of cable K63

This is an interface cable between amplifier and Power Failure Backup Module

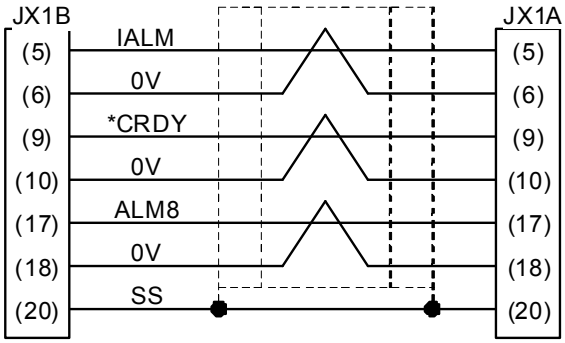

Connector used (HONDA)
Connector: PCR-E20FA
Housing: PCR-V20LA

Cable specification: 0.09 mm^2 twisted pair with common shielded
Recommended cable (cable only): A66L-0001-0284#10P

Pin arrangement of the connectors JX1B and JX1A

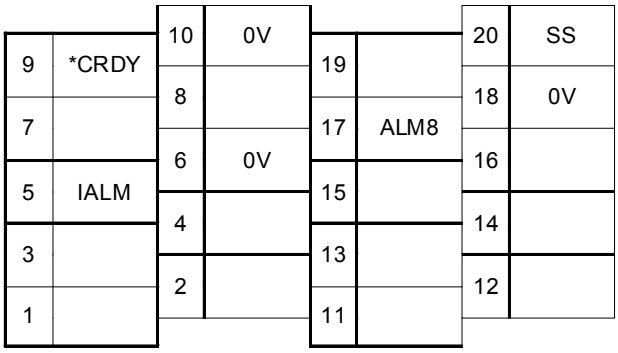

(8) Details of cable K64

This cable is used to supply the 200VAC or DC link voltage output from CX13 to the control power.
It is used for Power Failure Backup Module A06B-6077-H002.
For a note on the device to be connected to CX13, see Item 3.

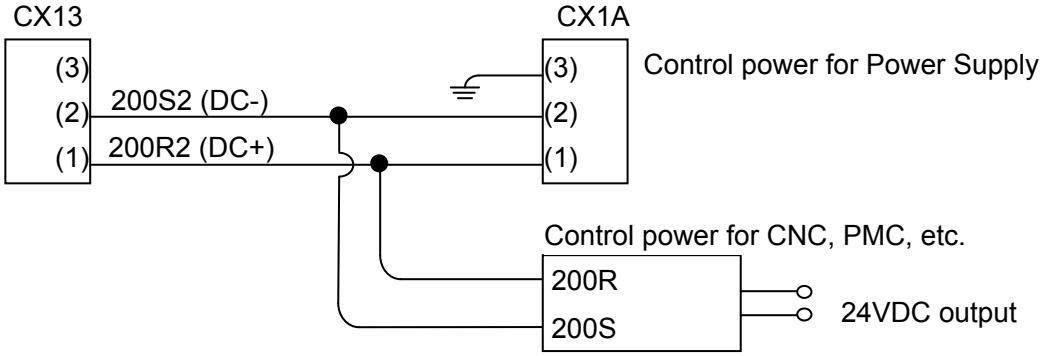

Cable specification: Two-conductor polyvinyl heavy-duty power cable (JIS C3312)
Conductor size of 1.25mm^2 (50/0.18), PVC sheath 9.6mm in diameter
Connector specification: Manufactured by Tyco Electronics AMP
Receptacle housing : 2-178128-3 (CX13)
1-178128-3 (CX1A)
Receptacle contact : 1-175218-2

© MyFANUC 2D5504D5BAC945D385F48627D4977F6C

> ⚠ **CAUTION**
> The maximum power supply capacity of CX13 is 1000VA. Do not connect a load exceeding 1000VA.
> In the event of a power failure, DC link voltage is output from CX13. The device that can be connected to CX13 is limited to one that can operate on direct current. A device that uses an AC fan motor, AC-driven magnetic contactor, or transformer may be burned if DC voltage is applied to it. Therefore, do not connect any such device to CX13.

(9) Details of cable K66
This cable is used for the connection to the supplement capacitor unit.

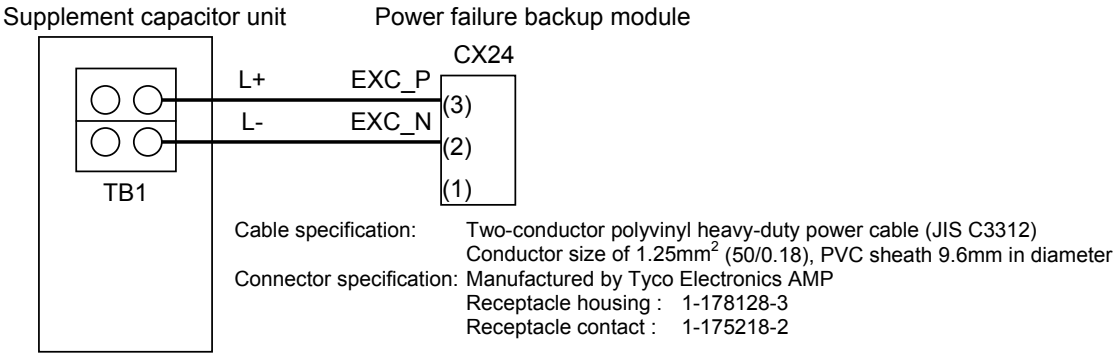

> ⚠ **CAUTION**
> Before connecting CX24, make sure that the DC link voltage of the power failure backup module is fully discharged (DC link charge LED is off). Connecting CX24 with the DC link voltage charged causes rush current to the supplement capacitor unit, potentially damaging the internal circuit of the power failure backup module.

(10) Details of cable K75
This cable is used to supply the control power (24VDC) of the Power Failure Backup Module.

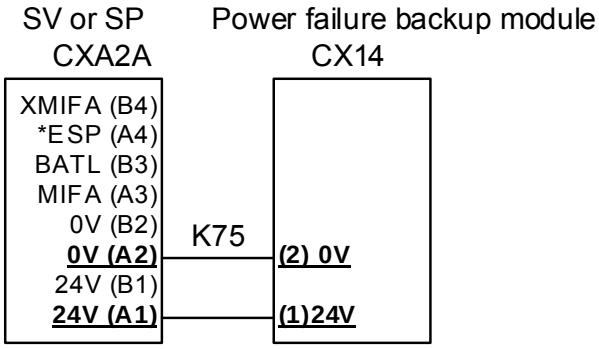

Connector specification

	CXA2B	CX14
Manufacturer	Tyco Electronics AMP	
Connector specification	D-2100 series Housing 1-1318119-4 Contact 1318107-1	D-3100 series Housing 1-178288-3 Contact 1-175218-1
Conductor size	0.5mm^2, AWG20	
Instruction outer diameter	1.08 to 2.83 mm	

© MyFANUC 2D5504D5BAC945D385F48627D4977F6C

(11) Details of cable K77

This cable is intended for power failure detection. It is used for Power Failure Backup Module A06B-6091-H002.

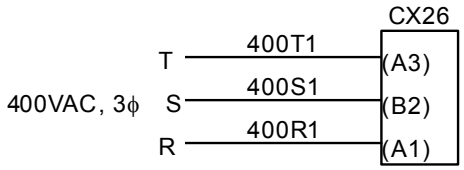

Cable specification: Three-conductor polyvinyl heavy-duty power cable (JIS C3312)
Conductor size of 1.25mm^2 (50/0.18), PVC sheath 10.5mm in diameter

Connector specification: Manufactured by Tyco Electronics AMP
Receptacle housing : 1-178129-6
Receptacle contact : 1-175218-2

(12) Details of cable K82

This cable is intended to supply 200VAC for the control power.
It is used for power failure backup module A06B-6091-H002.

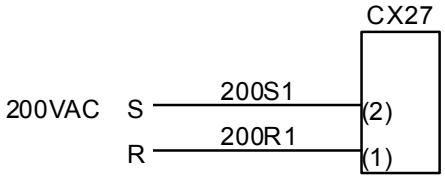

Cable specification: Three-conductor polyvinyl heavy-duty power cable (JIS C3312)
Conductor size of 1.25mm^2 (50/0.18), PVC sheath 9.6mm in diameter

Connector specification: Manufactured by Tyco Electronics AMP
Receptacle housing : 1-178128-3
Receptacle contact : 1-175218-2

(13) Details of cable K83

This cable is intended to supply the 200VAC output from CX28 or the voltage (300VDC) generated by decreasing the DC link voltage to the control power. It is used for Power Failure Backup Module A06B-6091-H002.
For a note on the device to be connected to CX28, see Item 3.

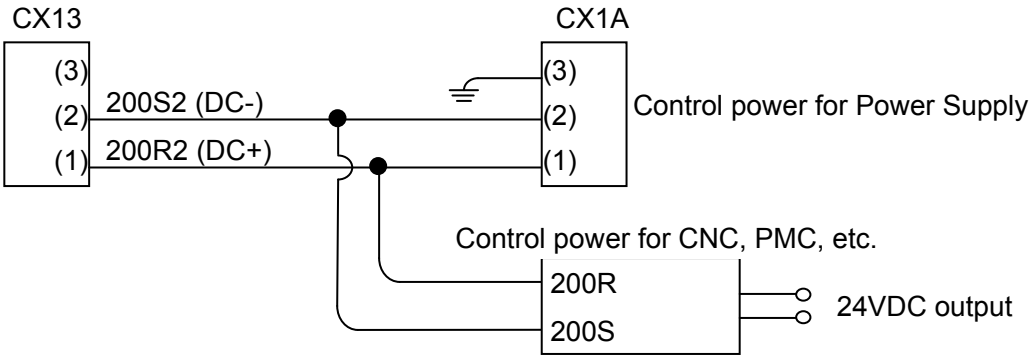

Cable specification: Two-conductor polyvinyl heavy-duty power cable (JIS C3312)
Conductor size of 1.25mm^2 (50/0.18), PVC sheath 9.6mm in diameter

Connector specification: Manufactured by Tyco Electronics AMP
Receptacle housing : 2-178128-3 (CX13)
1-178128-3 (CX1A)
Receptacle contact : 1-175218-2

© MyFANUC 2D5504D5BAC945D385F48627D4977F6C

> ⚠ **CAUTION**
> The maximum power supply capacity of CX13 is 1000VA. Do not connect a load exceeding 1000VA.
> In the event of a power failure, the voltage (300VDC) generated by decreasing the DC link voltage is output from CX28. The device that can be connected to CX28 is limited to one that can operate on direct current. A device that uses an AC fan motor, AC-driven magnetic contactor, or transformer may be burned if DC voltage is applied to it. Therefore, do not connect any such device to CX13.

(14) Details of cable K102

This cable is used to supply the 24VDC power for driving the dynamic brake module (24VDC model).

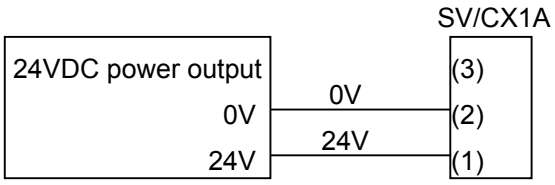

Cable specification: Two-conductor polyvinyl heavy-duty power cable (JIS C3312)
Conductor size of 1.25mm^2 (50/0.18), PVC sheath 9.6mm in diameter

Connector specification: Manufactured by Tyco Electronics AMP
Receptacle housing : 1-178128-3
Receptacle contact : 1-175218-2

> ⚠ **CAUTION**
> For the servo amplifier (αiSV) that uses the dynamic brake module (24VDC model), make sure that the 24VDC power output is input to CX1A. Inputting 200VAC to CX1A damages the dynamic brake module (24VDC model).

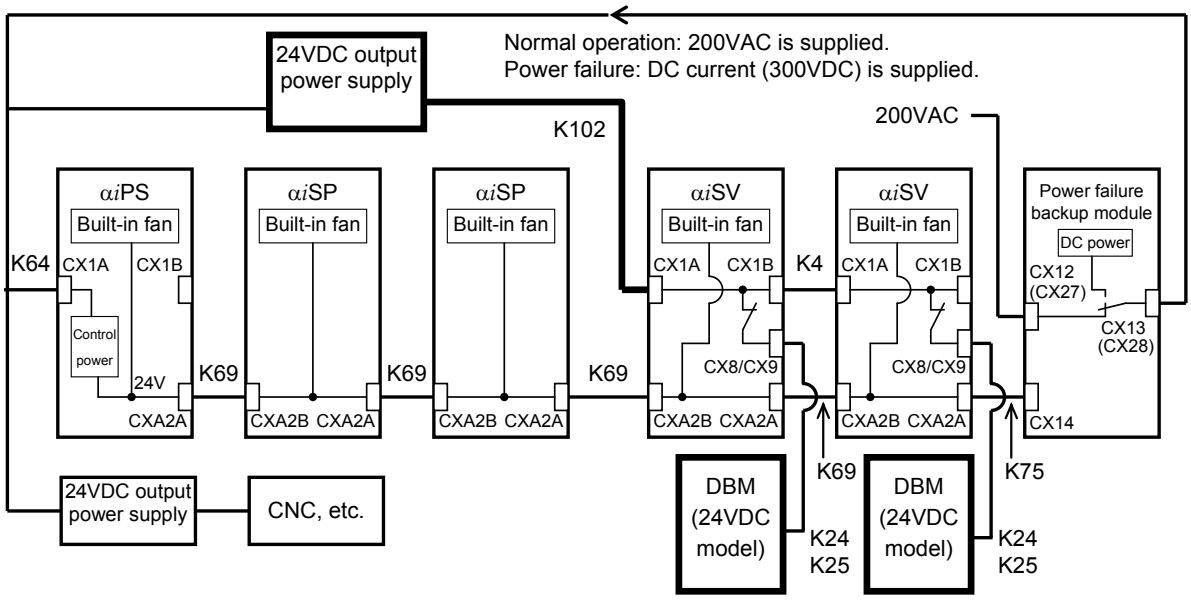

© MyFANUC 2D5504D5BAC945D385F48627D4977F6C

O.5.3 Cable Lead-in Diagrams and Connector Positions

O.5.3.1 Power failure backup module

(1) A06B-6077-H002 (200-V input type)

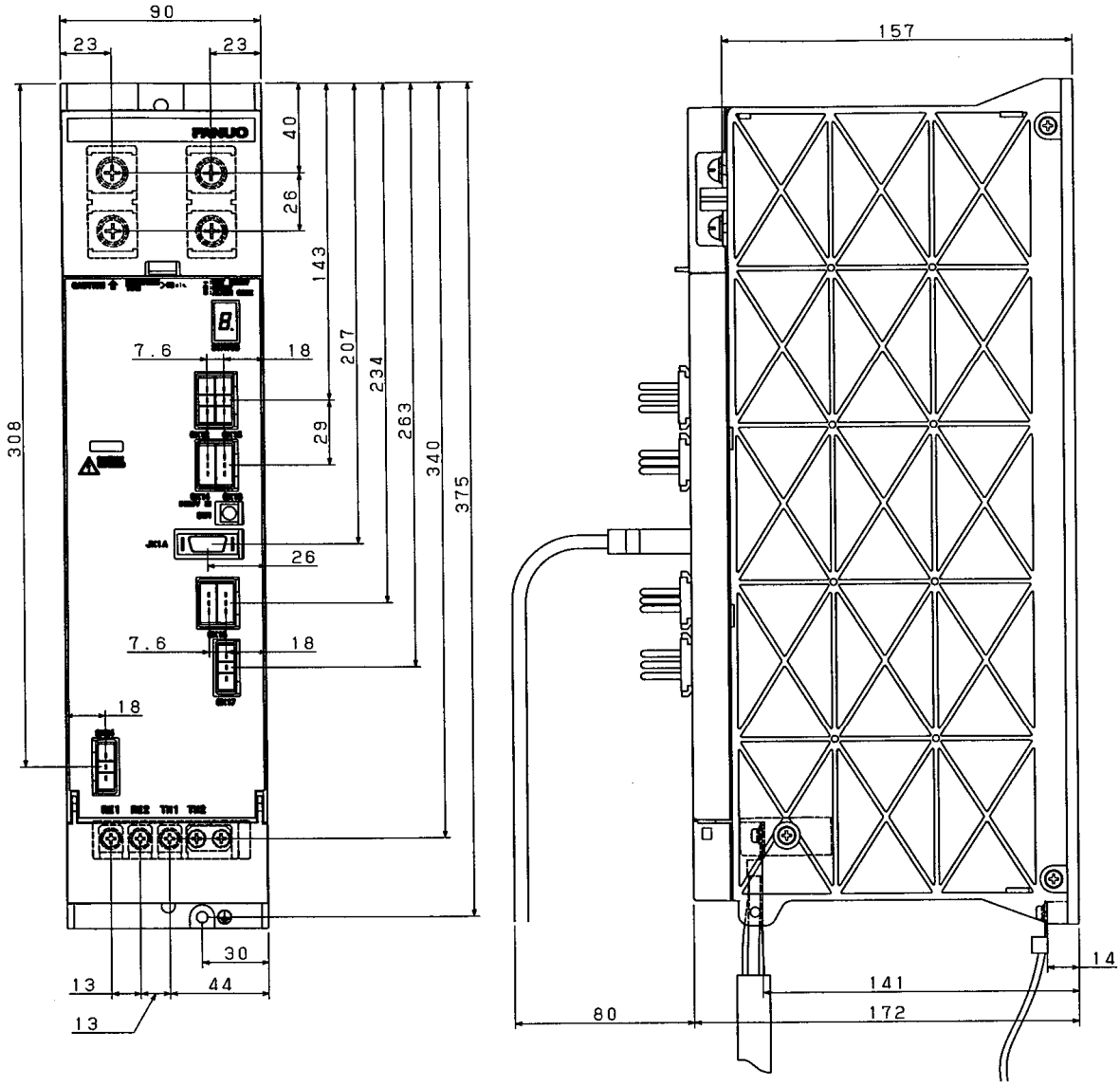

© MyFANUC 2D5504D5BAC945D385F48627D4977F6C

(2) A06B-6091-H002 (400-V input type)

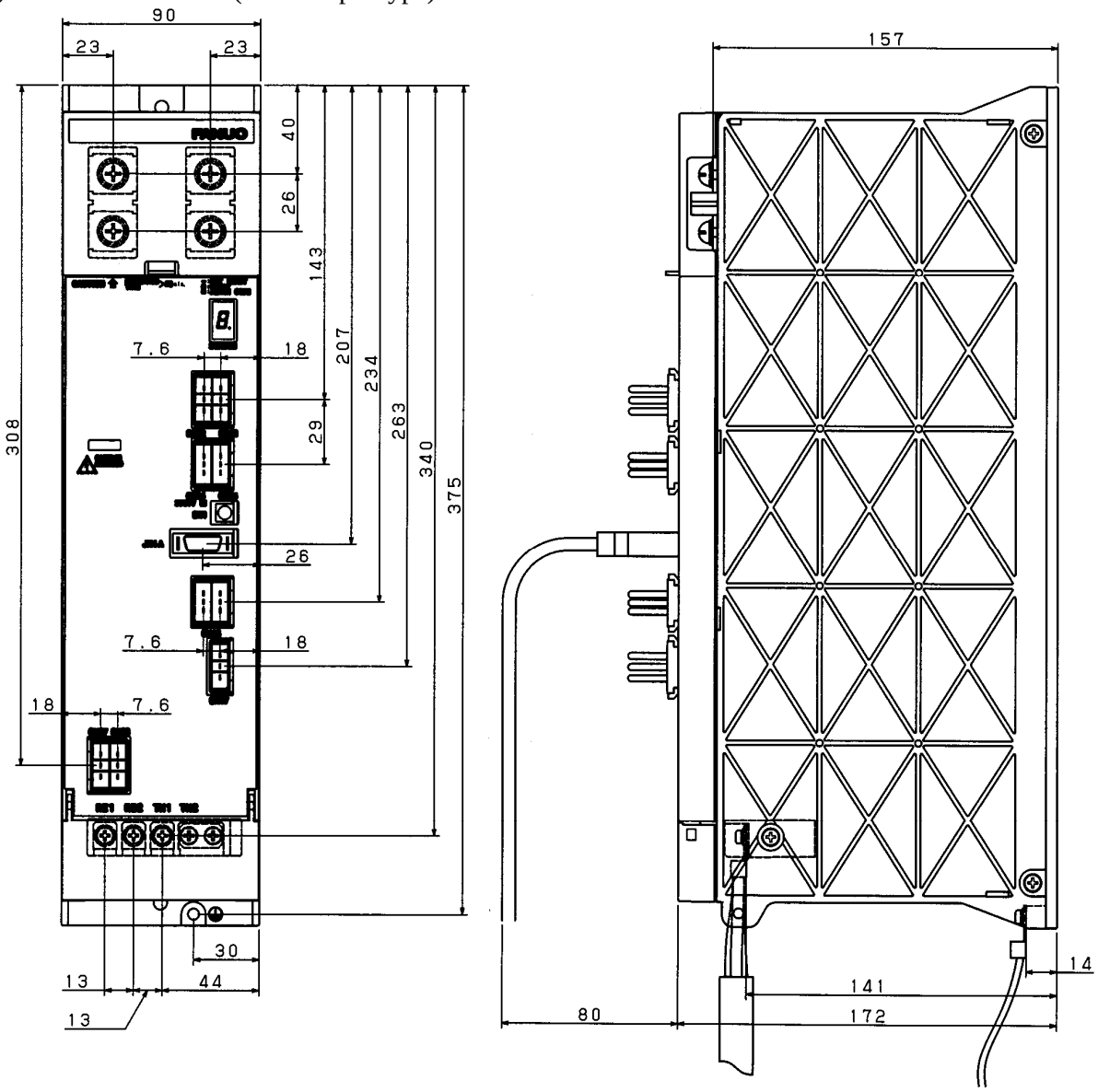

© MyFANUC 2D5504D5BAC945D385F48627D4977F6C

O.5.3.2 Sub module C and supplement capacitor unit

A06B-6077-H010
A06B-6083-H245

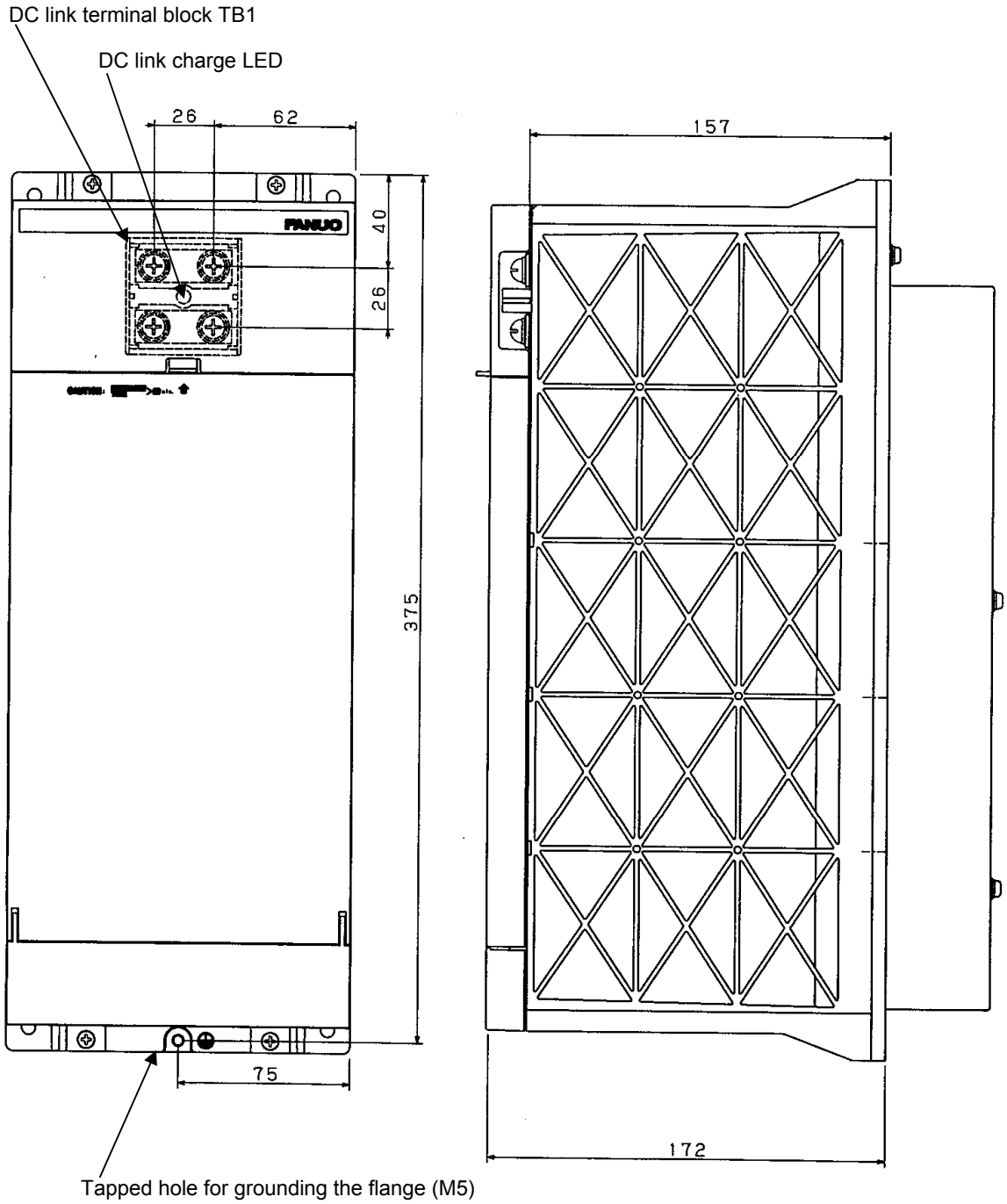

O.5.3.3 Sub module R

See Appendix O.4.1.3.

© MyFANUC 2D5504D5BAC945D385F48627D4977F6C

O.5.4 Connector Location

O.5.4.1 Power failure backup module

(1) A06B-6077-H002 (200-V input type)

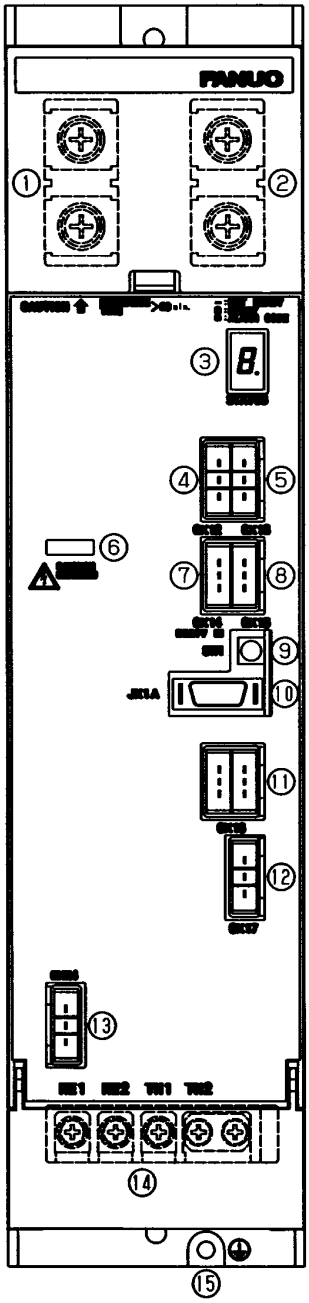

Names of connectors and terminal blocks

	Name	Display	Remarks
①	DC link terminal block	TB1	M6 screw
②	Terminal block for Sub Module C	TB2	M6 screw
③	Status LED	STATUS	
④	AC200V input connector	CX12	
⑤	AC200V/DC link voltage output connector	CX13	
⑥	DC link charge LED		(Note)
⑦	DC24V input connector	CX14	
⑧	External power failure signal input	CX15	
⑨	Delay time set up switch for AC200V power failure detection	SW1	
⑩	Interface connector between modules	JX1A	
⑪	Signal I/O connector	CX16	
⑫	connector for MCC control	CX17	
⑬	Connector for Supplement Capacitor Unit	CX24	
⑭	Terminal block for Sub Modul R	TB3	M4 screw
⑮	Tapped hole for grounding the flange		M5 Screw

(Note) Don't touch the module components or connected cables while this LED is lit. There is a danger of electric shock.

© MyFANUC 2D5504D5BAC945D385F48627D4977F6C

(2) A06B-6091-H002 (400-V input type)

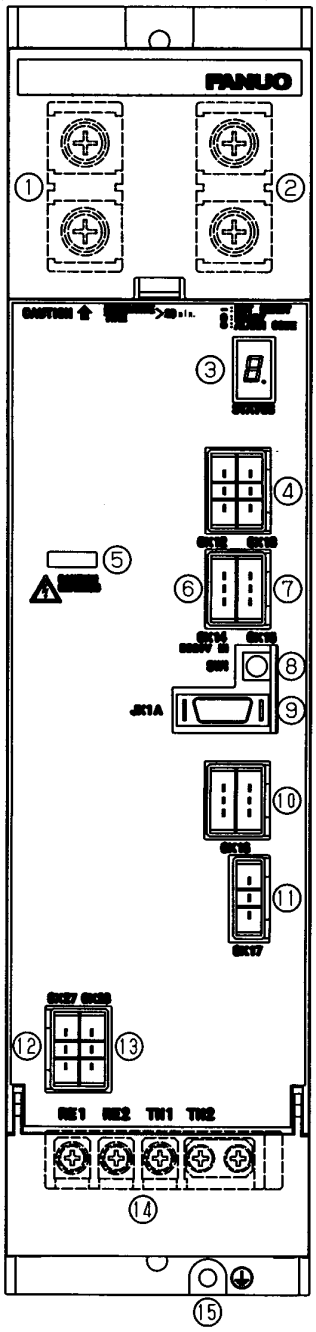

Names of connectors and terminal blocks

	Name	Display	Remarks
①	DC link terminal block	TB1	M6 screw
②	Terminal block for Sub Module C	TB2	M6 screw
③	Status LED	STATUS	
④	AC400V power failure detection	CX26	
⑤	DC link charge LED		(Note)
⑥	DC24V input connector	CX14	
⑦	External power failure signal input	CX15	
⑧	Delay time set up switch for AC400V power failure detection	SW1	
⑨	Interface connector between modules	JX1A	
⑩	Signal I/O connector	CX16	
⑪	connector for MCC control	CX17	
⑫	AC200V input connector	CX27	
⑬	AC200V/DC300V output connector	CX28	
⑭	Terminal block for Sub Modul R	TB3	M4 screw
⑮	Tapped hole for grounding the flange		M5 Screw

(Note) Don't touch the module components or connected cables while this LED is lit. There is a danger of electric shock.

O.5.4.2 Sub module C and supplement capacitor unit

See Appendix O.5.3.2.

O.5.4.3 Sub module R

See Appendix O.4.1.3.

© MyFANUC 2D5504D5BAC945D385F48627D4977F6C

O.5.5 Grounding

Connect the metal frames of the Power Failure Backup Module, sub module C, and sub module R to the ground plate of the cabinet. Make sure that the diameter of the ground cable is the same as that of the Power Supply.

O.5.5.1 Power failure backup module

(1) A06B-6077-H002 (200-V input type)

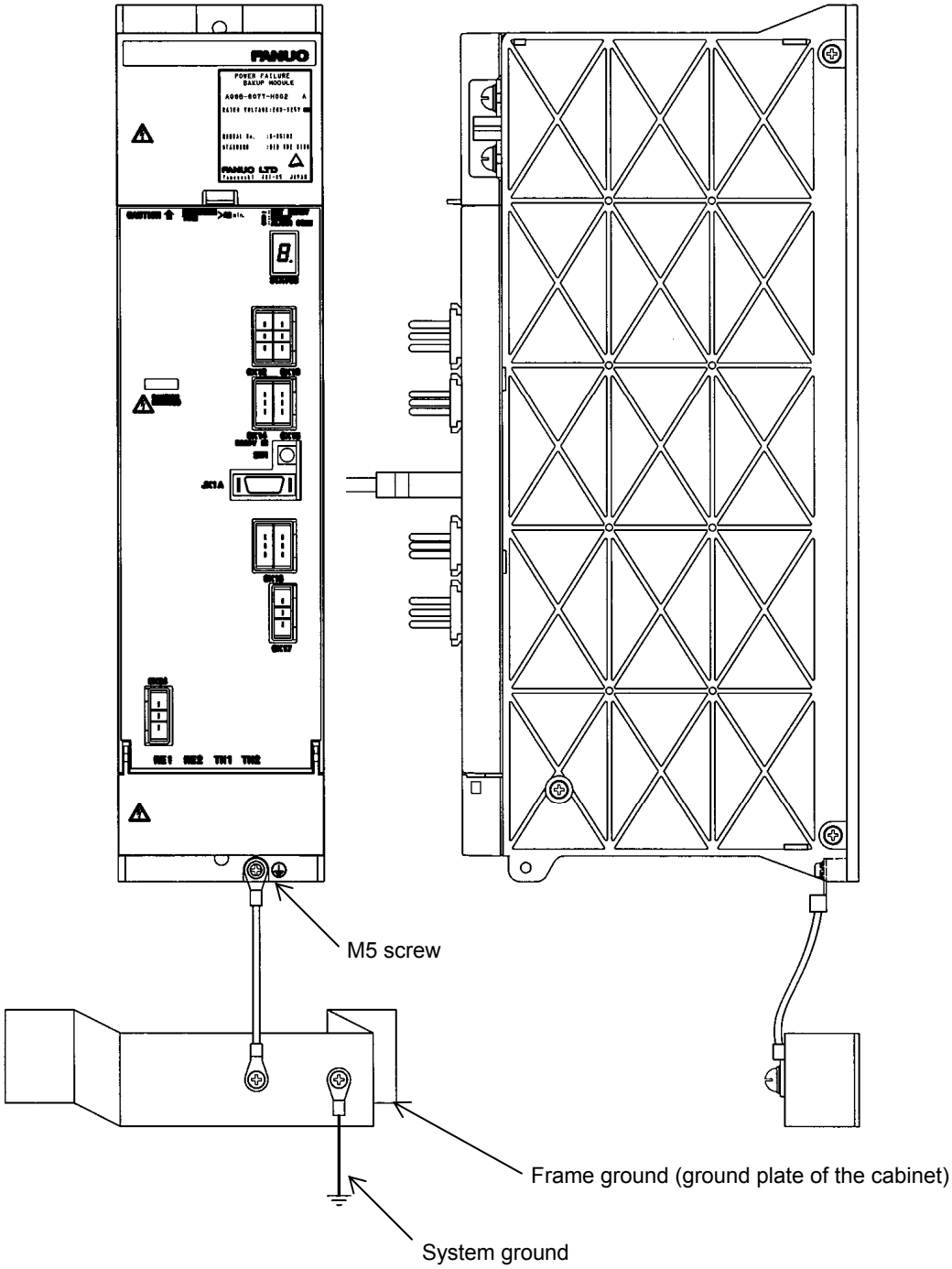

© MyFANUC 2D5504D5BAC945D385F48627D4977F6C

(2) A06B-6091-H002 (400-V input type)

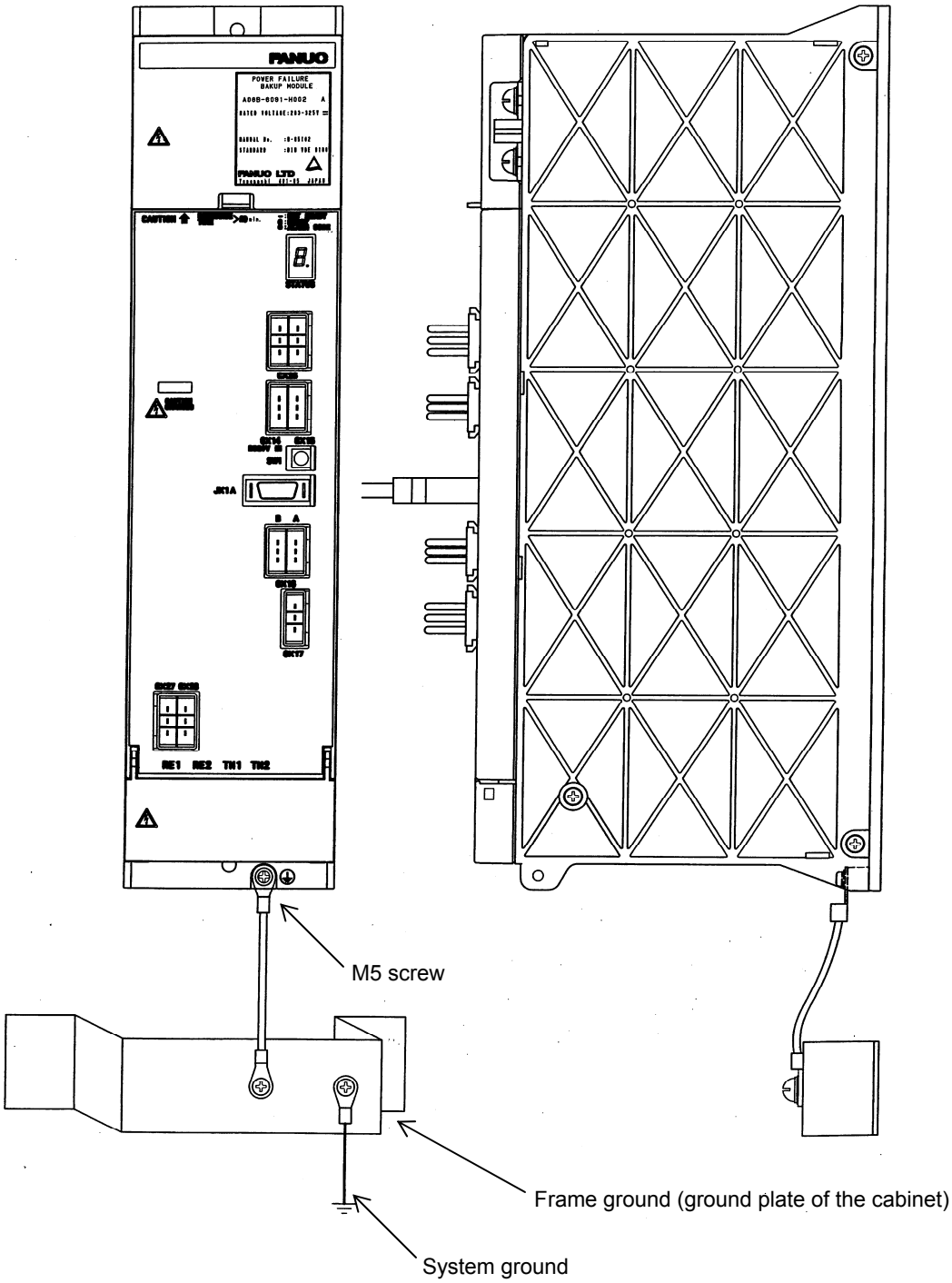

© MyFANUC 2D5504D5BAC945D385F48627D4977F6C

O.5.5.2 Sub module C and supplement capacitor unit

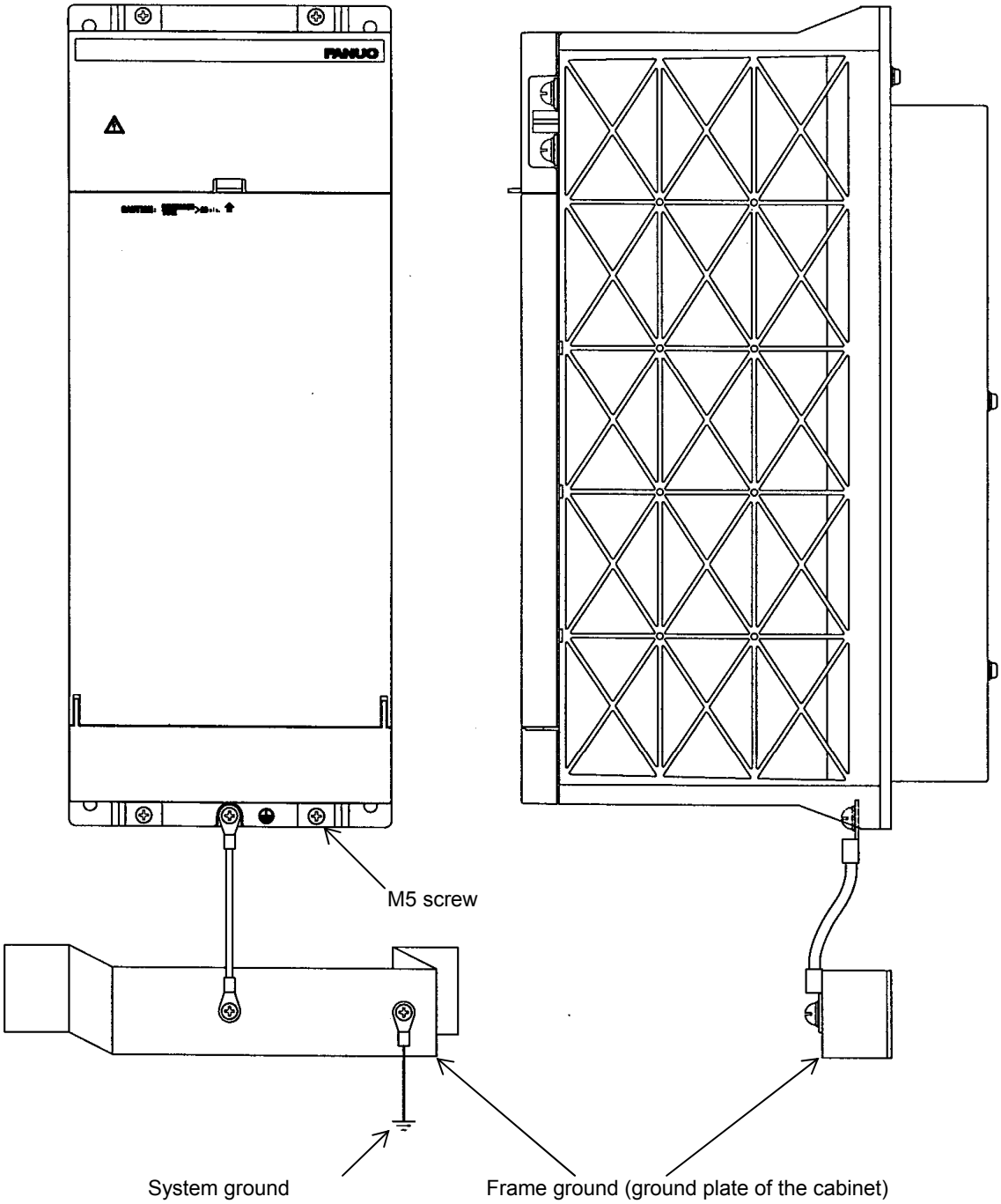

© MyFANUC 2D5504D5BAC945D385F48627D4977F6C

O.5.5.3 Sub module R

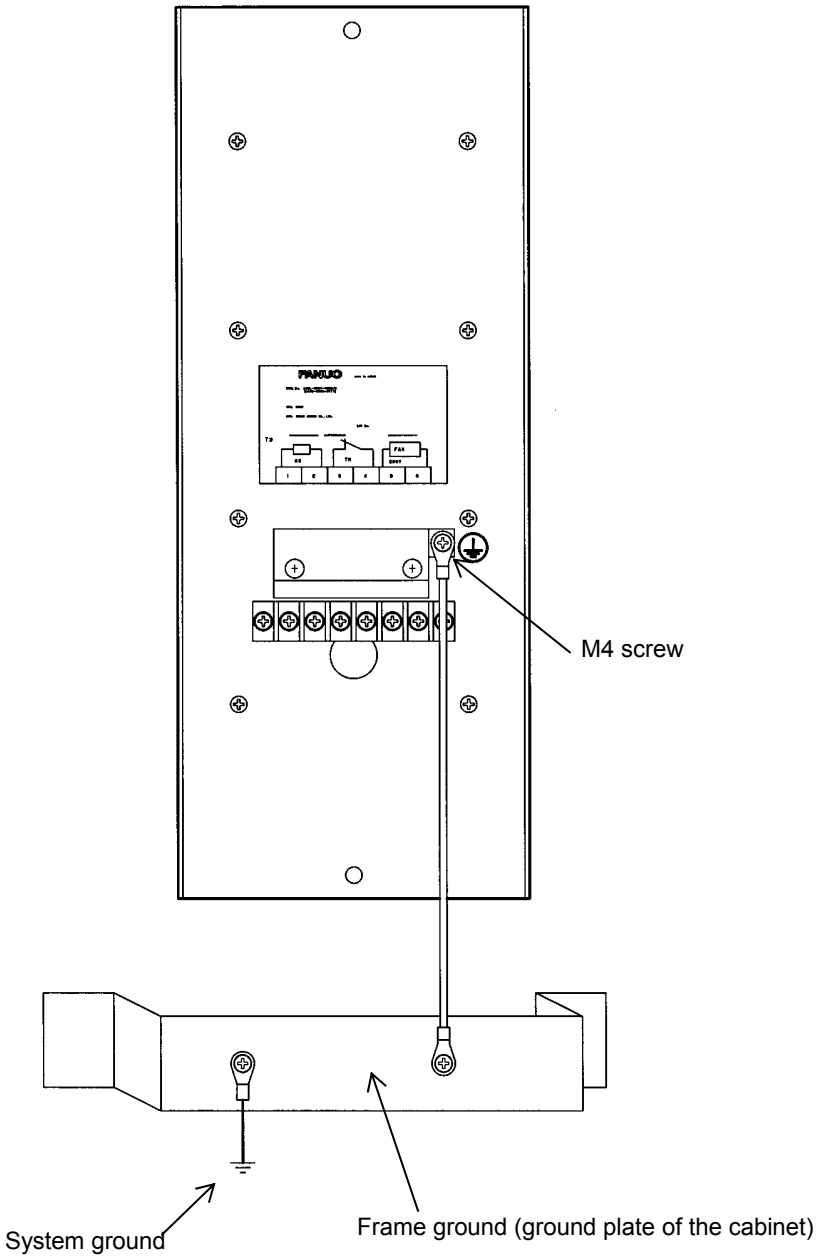

© MyFANUC 2D5504D5BAC945D385F48627D4977F6C

O.6 FUNCTIONS

O.6.1 Function Description

The Power Failure Backup Module exerts the following types of control.

(1) Power failure detection
Upon detection of a power failure, the module outputs the power failure detection signal. Perform the operations for machine protection (such as retraction and feed axis stop) based on this signal. The three lines described below are provided for power failure detection. If one of these three lines detects a power failure, power control necessary for motor control is started.

Line 1 : This line checks for a drop in the three-phase AC power supply voltage input to connector CX12 or CX26. A detection delay time is set to prevent the line from detecting an instantaneous power interruption improperly. The detection delay time can be set within the range of 0 to 15 msec. The factory-set default is 7 msec.

Line 2 : This line checks for a drop in the DC link voltage caused by a power failure.
Power failure detection for the DC link voltage can be disabled by connecting pin A3 of connector CX16 to 24V.

Line 3 : This line checks for an external power failure signal input to connector CX15.
When 24V is input to EXPFL of connector CX15, the line enters the power failure detection state. When this line is not used, leave EXPFL open.

(2) Charge control for the capacitor inside the sub module
The module exerts charge control for the capacitor inside the sub module C. The charging of the sub module C starts when the charging of the DC link is completed and the αiPS is set in the ready state (*CRDY=0) after the magnetic contactor (MCC) is turned on.
The charge time depends on the number of sub module C units connected. Up to one minute is required before the charging is completed (90% of the DC link voltage is reached). When the charging is completed, CX16 outputs the ready signal RDY=1. Before changing to a mode that requires the power failure backup operation, check that RDY is set to 1.

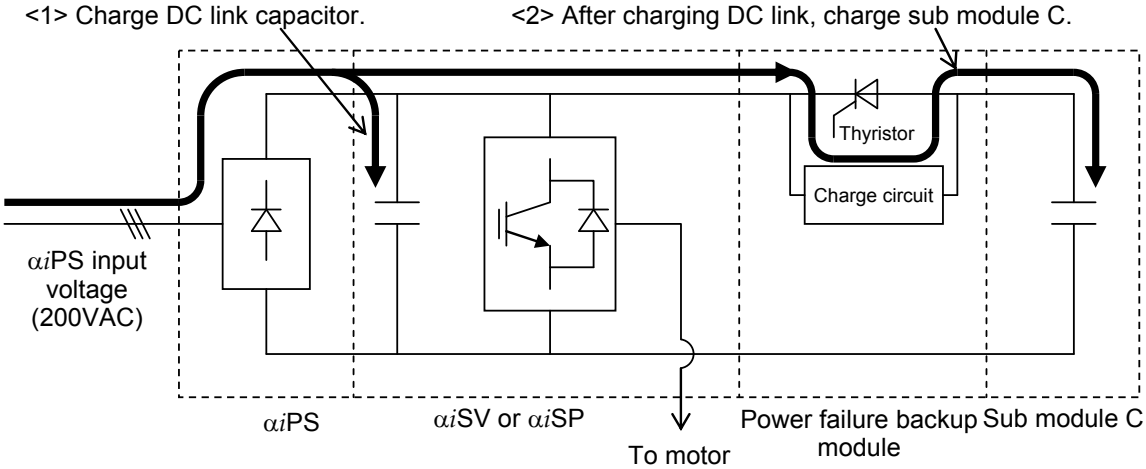

© MyFANUC 2D5504D5BAC945D385F48627D4977F6C

(3) Control of energy supply to the DC link
If a power failure is detected, the thyristor inside the Power Failure Backup Module is turned on and the energy accumulated in the capacitor inside the sub module C is discharged to the DC link. The servo motor is driven by this energy.

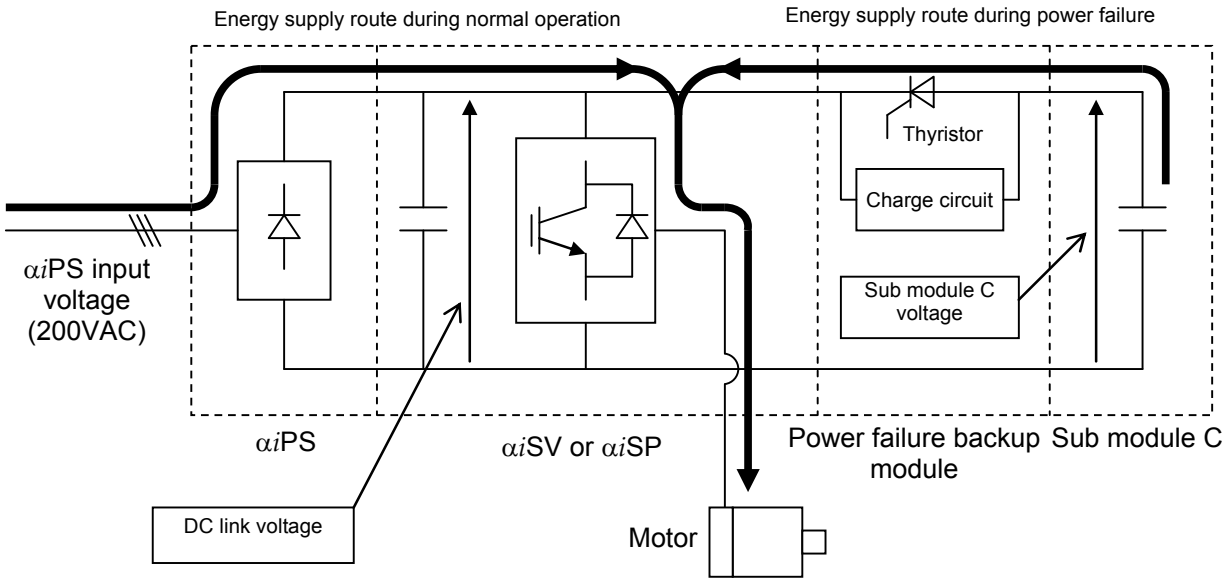

(4) Resistance regeneration control
After a power failure occurs, this control arranges that the energy generated by motor deceleration is consumed by the resistor inside the sub module R.
During normal operation, the energy generated by motor deceleration is regenerated to the power supply and does not flow to the resistor inside the sub module R.
Therefore, the sub module R does not generate heat during normal operation.

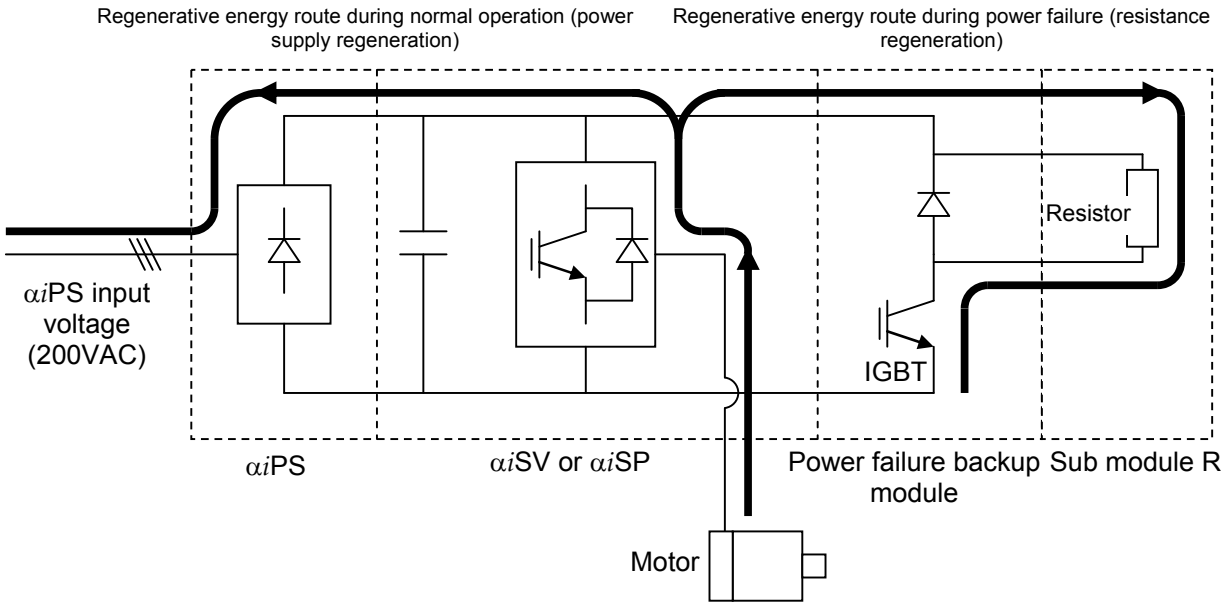

© MyFANUC 2D5504D5BAC945D385F48627D4977F6C

(5) Control power supply control

(a) For A06B-6077-H002 (200-V input type)

After a power failure occurs, control is exerted to supply DC link voltage to the control power of the Power Supply and CNC.

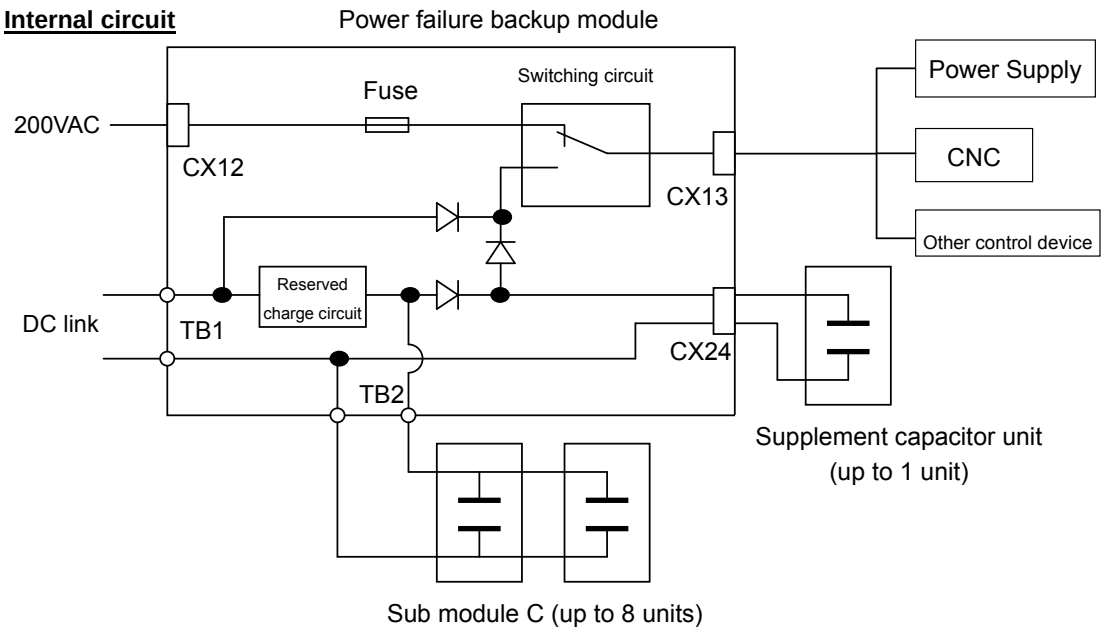

During normal operation, the 200VAC input to CX12 is output to CX13. If a power failure occurs, DC link voltage is output to CX13, instead of the 200VAC, to maintain the power of the αiPS, CNC, and other control devices.

(b) For A06B-6091-H002 (400-V input type)

After a power failure occurs, control is exerted to supply the voltage (300VDC) generated by decreasing the DC link voltage to the control power of the Power Supply and CNC.

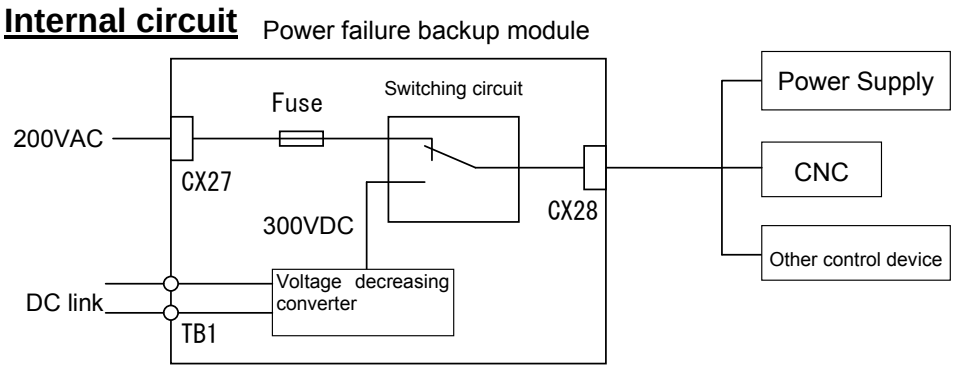

During normal operation, the 200VAC input to CX27 is output to CX28. If a power failure occurs, the voltage (300VDC) generated by decreasing the DC link voltage is output to CX28, instead of the 200VAC, to maintain the power of the αiPS, CNC, and other control devices.

About the supplement capacitor unit

The supplement capacitor unit is used for Power Failure Backup Module A06B-6077-H002 (200-V input type) to maintain the control power in the range in which the DC link voltage is 200V or lower.

© MyFANUC 2D5504D5BAC945D385F48627D4977F6C

After a power failure occurs, the DC link voltage is used as the energy source to maintain the control power (24V) and drive the motor. After the occurrence of a power failure, the DC link voltage lowers gradually. When the DC link voltage drops to about 120V, the DC link low voltage alarm occurs and the motor cannot be driven anymore.
On the other hand, if the module is designed to stop the output of 24VDC if the control power is 120VDC or more, the motor becomes unable to be driven before the DC link low voltage alarm occurs. To avoid this situation, the supplement capacitor unit is used as an independent energy source for the control power.
When the output of 24VDC can be maintained even if the control power is 120VDC or lower, the supplement capacitor unit is not necessary.

The following figure shows an example in which the output of 24VDC is stopped if the control power is 200VDC.

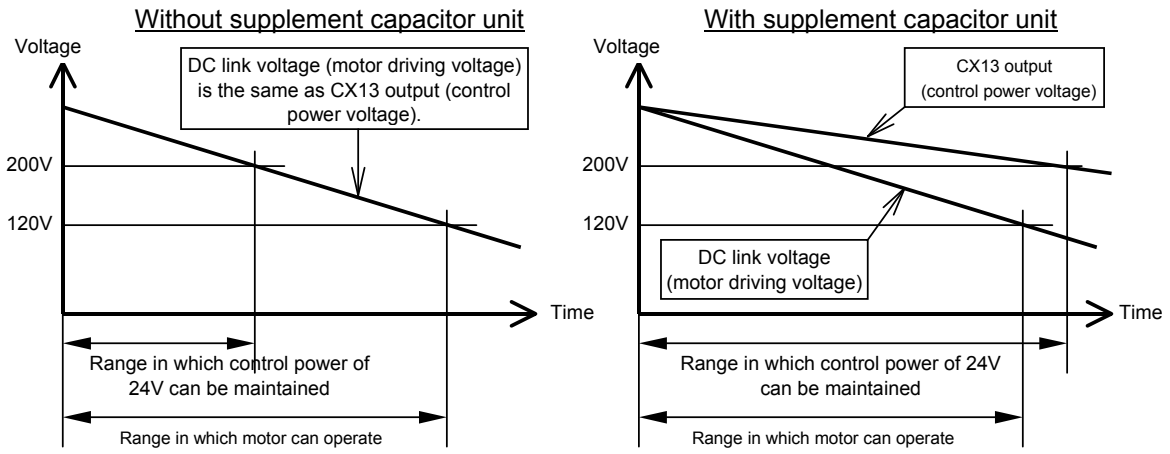

The supplement capacitor unit is necessary for the Retract function at power failure that may use the range in which the DC link voltage is 200V or lower in order to drive the motor.
The stop distance reduction function at power failure does not need the supplement capacitor unit, because the regenerative energy keeps the DC link voltage at a level higher than the voltage shown in the figure above during motor deceleration. Note, however, that when the linear motor, synchronous built-in motor, or large-inertia, low-speed motor is decelerated and stopped, the DC link voltage does not rise and the supplement capacitor unit is therefore necessary, as with the Retract function at power failure.
The maximum number of supplement capacitor units that can be connected is 1.

NOTE

If the DC link voltage drops to 120VDC or lower, the DC link low voltage alarm occurs and the motor cannot be driven anymore.
Also, as the DC link voltage lowers, the motor output lowers as well. This may cause excessive error or other alarm depending on the operating conditions. Make a check using the actual machine.

© MyFANUC 2D5504D5BAC945D385F48627D4977F6C

O.6.2 Control Sequences

O.6.2.1 Power-on sequence

(1) For A06B-6077-H002 (200-V input type)

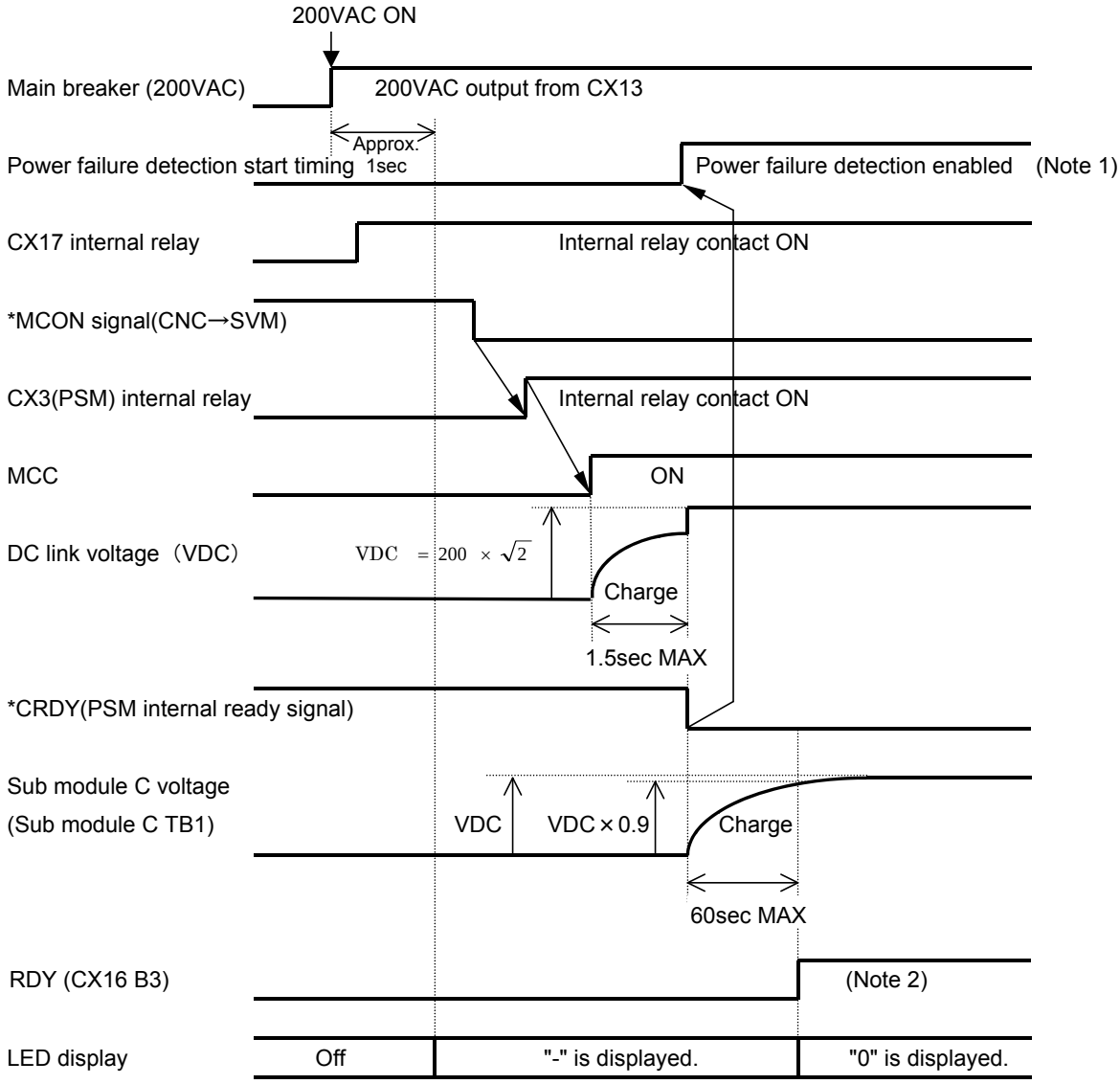

NOTE

1 Power failure detection is enabled after the αiPS becomes ready (*CRDY=0). When the external power failure detection signal is used, make sure that EXPFL is set to 0 (CX15) before the αiPS becomes ready.

2 When RDY is set to 1, the power failure backup operation is enabled. Before changing to a mode that requires the power failure backup operation, check that RDY is set to 1. In a system that uses the sub module C, RDY is set to 1 after the charging of the sub module C is completed. In a system that does not use the sub module C, RDY is set to 1 at the same time that the αiPS becomes ready (*CRDY=0).

© MyFANUC 2D5504D5BAC945D385F48627D4977F6C

(2) For A06B-6091-H002 (400-V input type)

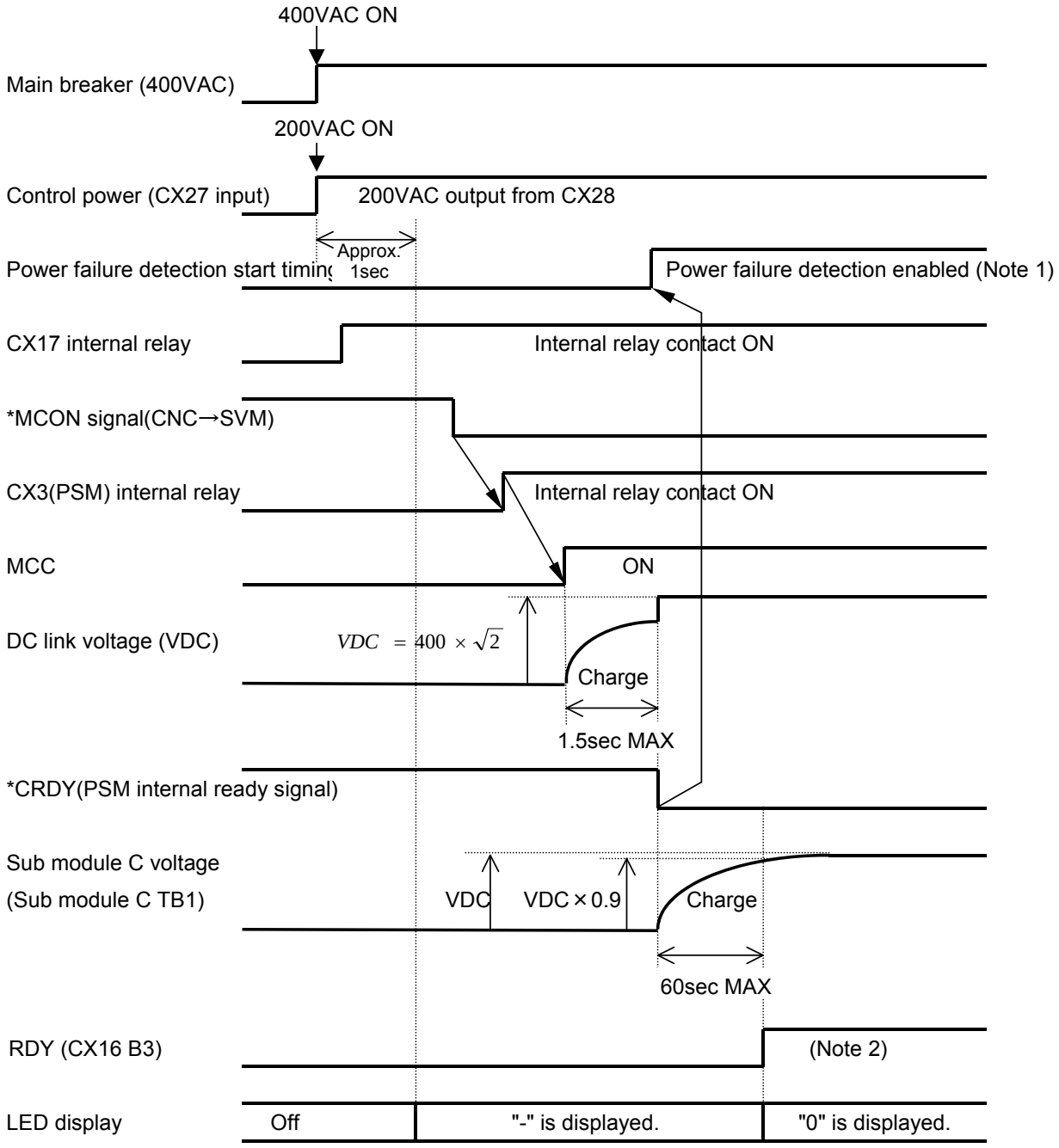

NOTE

1 Power failure detection is enabled after the αiPS becomes ready (*CRDY=0). When the external power failure detection signal is used, make sure that EXPFL is set to 0 (CX15) before the αiPS becomes ready.

2 When RDY is set to 1, the power failure backup operation is enabled. Before changing to a mode that requires the power failure backup operation, check that RDY is set to 1. In a system that uses the sub module C, RDY is set to 1 after the charging of the sub module C is completed. In a system that does not use the sub module C, RDY is set to 1 at the same time that the αiPS becomes ready (*CRDY=0).

© MyFANUC 2D5504D5BAC945D385F48627D4977F6C

O.6.2.2 Magnetic contactor (MCC) shutdown sequence

This specification is common to both A06B-6077-H002 (200-V input type) and A06B-6091-H002 (400-V input type).

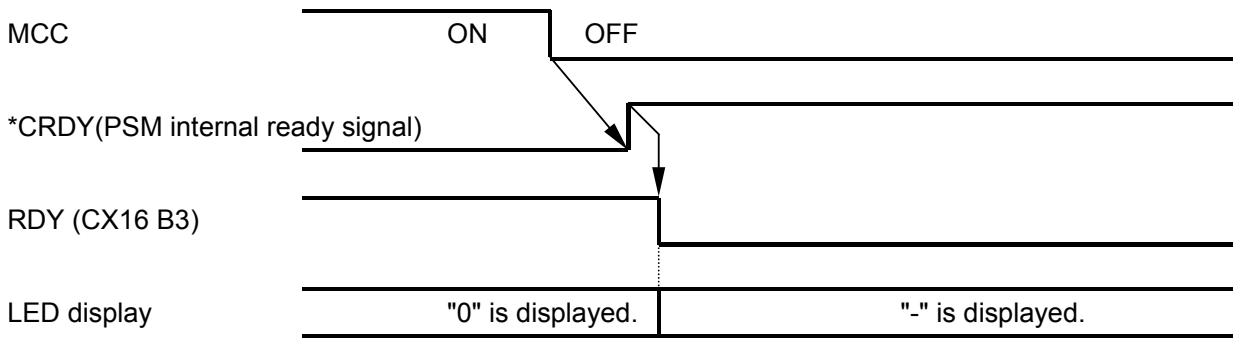

When the MCC is shut down, RDY is set to 0. At the same time, the LED indication changes from "0" to "-".

O.6.2.3 Power failure sequence (control of DC link voltage supply to the control power)

(1) For A06B-6077-H002 (200-V input type)

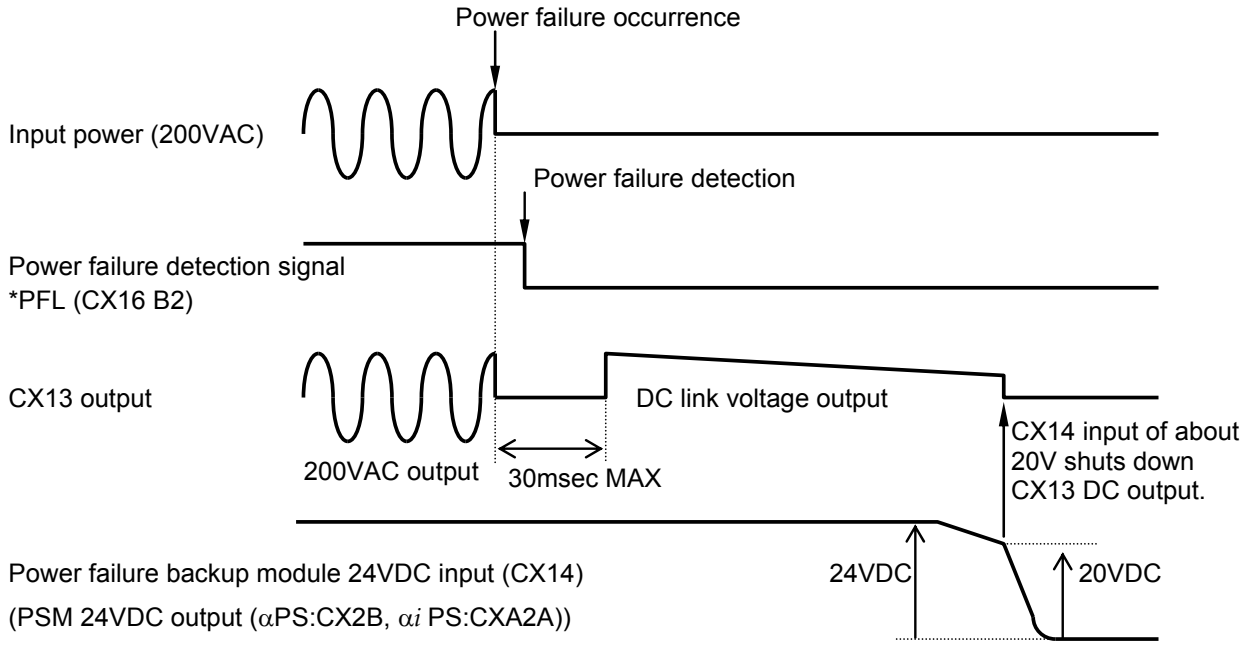

© MyFANUC 2D5504D5BAC945D385F48627D4977F6C

(2) For A06B-6091-H002 (400-V input type)

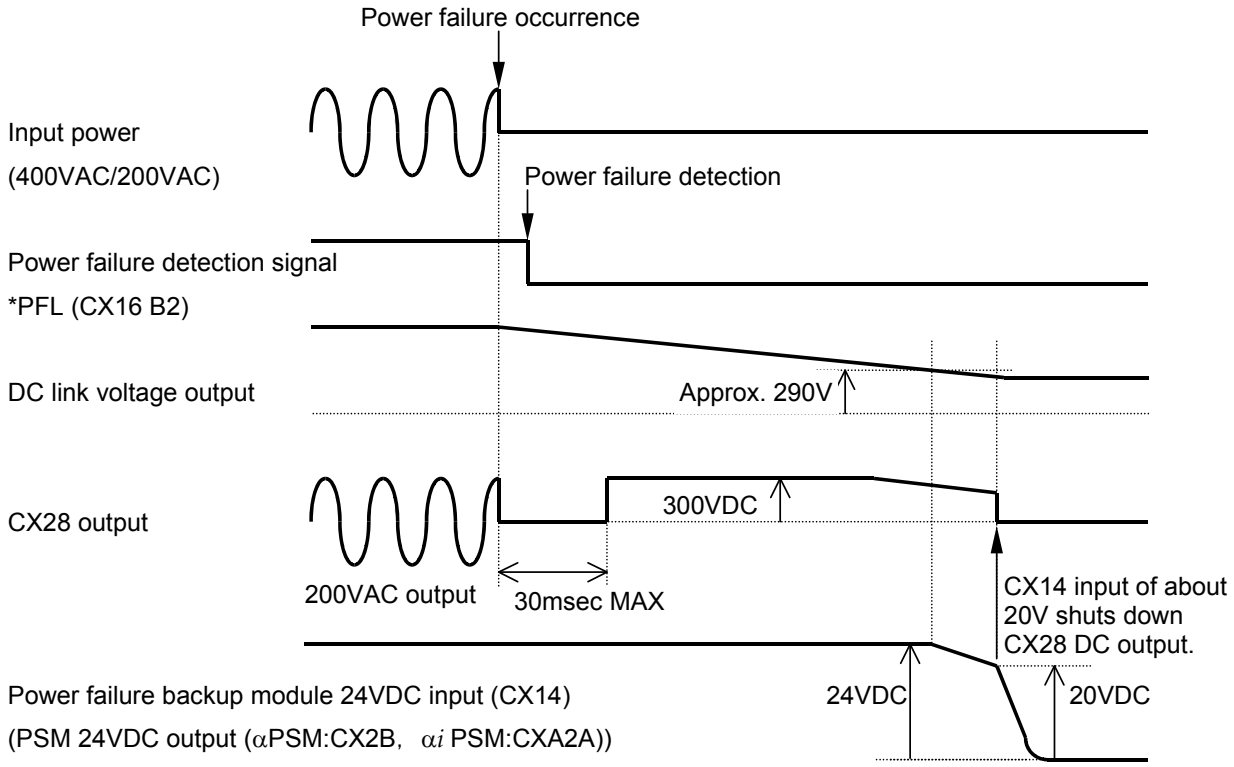

© MyFANUC 2D5504D5BAC945D385F48627D4977F6C

O.6.2.4 Power failure sequence (control of energy supply from the sub module C)

This specification is common to both A06B-6077-H002 (200-V input type) and A06B-6091-H002 (400-V input type).

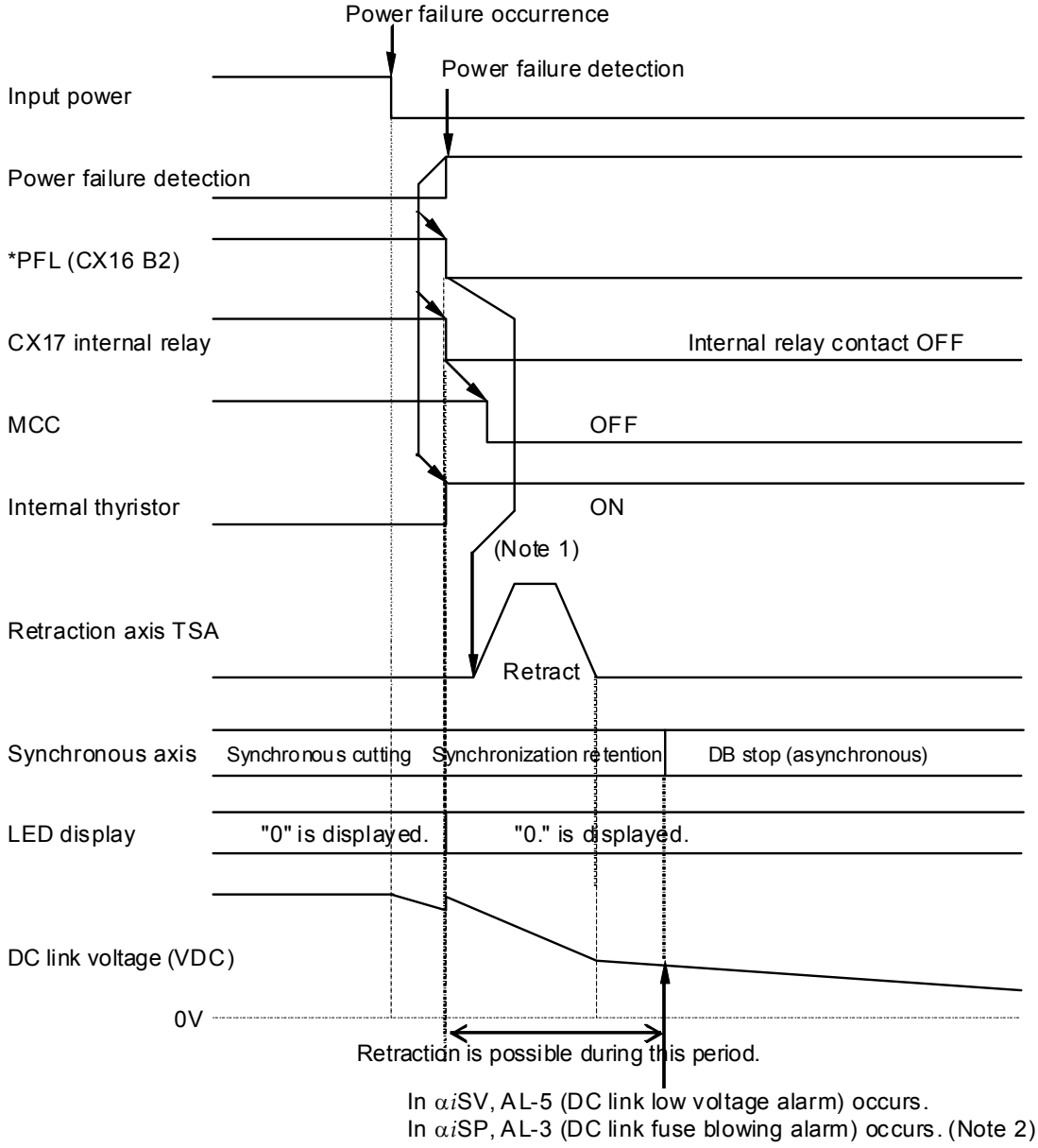

NOTE

1 If a power failure is detected, the power failure detection signal *PFL having a value of 0 is output. Perform ladder processing that starts retraction immediately in response to this signal.

2 After a power failure, the motor is driven by the energy of the sub module C. As the energy is consumed, the DC link voltage gradually lowers, ultimately resulting in AL-5 (DC link low voltage alarm) for the servo amplifier and AL-3 (DC link fuse blowing alarm) for the spindle amplifier. This causes the servo motor to stop the DB and the spindle motor to coast, making it impossible to maintain synchronization. It is therefore necessary to select the number of sub module C units so that retraction ends before these alarms occur.

© MyFANUC 2D5504D5BAC945D385F48627D4977F6C

O.6.2.5 Power failure sequence (resistance regeneration control)

This specification is common to both A06B-6077-H002 (200-V input type) and A06B-6091-H002 (400-V input type).

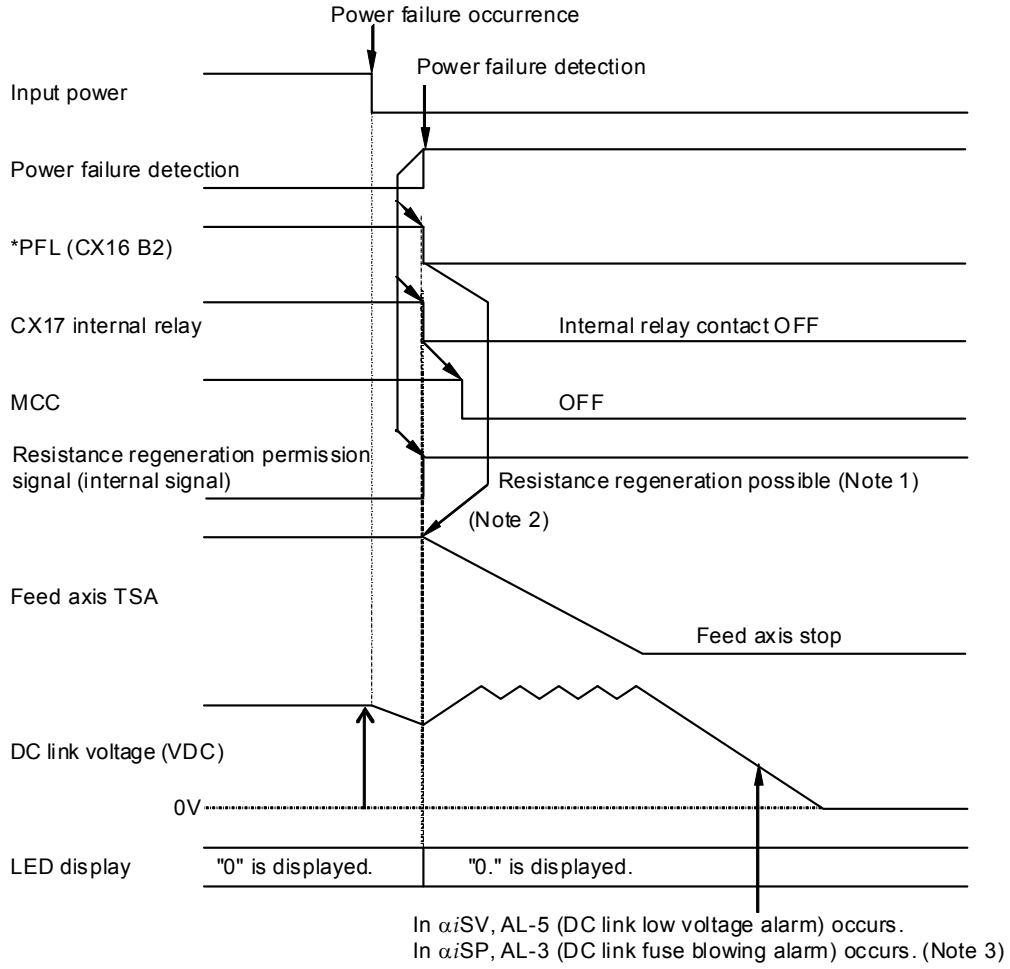

NOTE

1 After a power failure is detected, resistance regeneration becomes possible. During normal operation, power regeneration is performed, while resistance regeneration is not performed.

2-1 If a power failure is detected, the power failure detection signal *PFL having the value of 0 is output. Perform ladder processing that gives a stop command (emergency stop signal, automatic operation suspension signal, etc.) to the feed axis in response to this signal. Note that, when the automatic operation suspension signal is used to stop the feed axis, the stop distance may be extended because sufficient energy (regenerative energy from deceleration) cannot be obtained for control after the power failure, if a long acceleration/deceleration time constant is set.

2-2 To stop the spindle, give the emergency stop signal (spindle control signal ESPA, ESPB, ESPC, or ESPD).

2-3 To reduce the stop distance, the relevant parameters need to be set.

3 After the feed axis and spindle stop, the DC link voltage lowers, thus resulting in AL-5 (DC link low voltage alarm) for the servo amplifier and AL-3 (DC link fuse blowing alarm) for the spindle amplifier.

© MyFANUC 2D5504D5BAC945D385F48627D4977F6C

O.6.2.6 Sequence to be performed if an alarm or error occurs in the power failure backup module

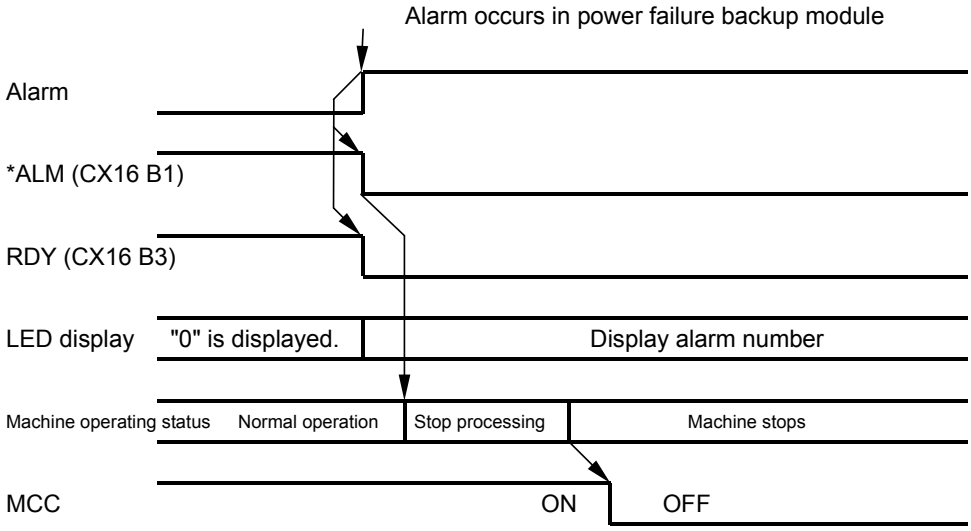

If any error occurs in the Power Failure Backup Module, the alarm number corresponding to that error is displayed on the LED and CX16 outputs *ALM=0.
Even if an alarm occurs, the Power Failure Backup Module does not turn off the power forcibly and the machine continues to operate normally. However, if an alarm occurs in the Power Failure Backup Module, the power failure backup operation is not performed in the event of a power failure. Therefore, if *ALM=0 is output from the Power Failure Backup Module, stop the machine immediately. Also, to protect the Power Failure Backup Module, shut down the magnetic contactor (MCC) of the Power Supply input part at the same time you stop the machine.
For information about alarms and their causes, see Subsection O.6.4.

About the RDY signal

If RDY=1 changes to RDY=0 during the machine operation (*CRDY=0) when there is no alarm signal output from the Power Failure Backup Module (*ALM=1), the Power Failure Backup Module is experiencing an error.
If RDY=1 changes to RDY=0 during the machine operation, perform the same processing that is carried out if an alarm occurs in the Power Failure Backup Module.

Condition for RDY=0 to change to RDY=1
→ The charging of the sub module C is completed.
Condition for RDY=1 to change to RDY=0 (when one of the following conditions is met)
→ An alarm occurs in the Power Failure Backup Module.
→ The Power Supply enters the Not Ready state (*CRDY=1) (MCC is shut down).

O.6.3 Status Display

The status of the Power Failure Backup Module is displayed on a 7-segment LED.

Display	Name	Description
-	NOT READY	Indicates that the Power Failure Backup Module is not ready.

© MyFANUC 2D5504D5BAC945D385F48627D4977F6C

Display	Name	Description
0	READY	Indicates that the charging of the sub module C is completed and that the power failure backup operation is possible. The Power Supply is in the READY state (0 is displayed for the Power Supply) and the charging of the sub module C is completed. While the charging of the sub module is in progress, NOT READY (- is displayed) is used. In a system without the sub module C, the Power Failure Backup Module enters the READY state (0 is displayed) at the same time the Power Supply enters the READY state (0 is displayed for the Power Supply).
-. (Note)	NOT READY Power failure detection	Indicates that a power failure has been detected when the Power Failure Backup Module is in the NOT READY state. In this case, the power failure backup operation is not performed normally.
0. (Note)	READY Power failure detection	Indicates that a power failure has been detected when the Power Failure Backup Module is in the READY state.
# (#:1 to 6)	Alarm	Displays the alarm number. For information about alarms and how to identify their causes, see Subsection O.6.4.
#. (#:1 to 6) (Note)	Alarm Power failure detection	Indicates that an alarm has occurred during the power failure backup operation or that a power failure has been detected after the occurrence of an alarm. In this case, the power failure backup operation is not performed normally.

NOTE
A dot (.) indicates that a power failure has been detected.

O.6.4 Alarm

The Power Failure Backup Module has the error detection functions and protection functions listed in the table below to protect the machine and the module main body in the event of an error.
If an error occurs in the Power Failure Backup Module, the power failure backup operation cannot be performed, so as to protect the module main body. If an alarm occurs in the Power Failure Backup Module, *ALM=0 is output. Based on this signal, stop the machine immediately. Also, be sure to shut down the magnetic contactor (MCC) at the same time you stop the machine.

No.	Name	Contents	Cause and action
1	Charge error alarm	The sub module C cannot be charged.	(1) TB1 and TB2 are improperly connected. → L+ and L- of the sub module C are connected the other way round. → L+ and L- of the sub module C are short-circuited. (2) Charge circuit error in the Power Failure Backup Module → Replace the Power Failure Backup Module.
2	Insufficient charge alarm	After the charging of the sub module C was completed, the voltage dropped.	Charge circuit error in the Power Failure Backup Module → Replace the Power Failure Backup Module.
3	Excessive regeneration alarm	An abnormal current flowed through the regenerative resistor.	(1) Regenerative power became excessive. → When one sub module R A06B-6089-H712 is used and the total of the maximum motor outputs is 20kW or more and 40kW or less, the capacity of the sub module R is insufficient. Install two A06B-6089-H712 units, or replace the sub module with A06B-6077-H020. (2) Regeneration circuit error → Replace the Power Failure Backup Module.

© MyFANUC 2D5504D5BAC945D385F48627D4977F6C

No.	Name	Contents	Cause and action
4	Regenerative resistor overheat alarm	The regenerative resistor in the sub module R overheated.	(1) Because of a regeneration circuit error, the sub module R was kept powered on. → Replace the Power Failure Backup Module. (1) The short bar between TH1 and TH2 of terminal block TB3 is missing. (The sub module R is not connected.) → Put the short bar back in place.
5	Thyristor drive power error alarm	The voltage of the thyristor drive power dropped.	An error occurred in the thyristor drive power circuit of the Power Failure Backup Module. → Replace the Power Failure Backup Module.
6 (Note)	Step-down converter low voltage alarm	The voltage output from the step-down converter dropped.	An error occurred in the step-down converter circuit of the Power Failure Backup Module. → Replace the Power Failure Backup Module.

NOTE
Alarms for A06B-6091-H002 (400-V input type) only

O.6.5 Status Signals

The status of the Power Failure Backup Module is output from connector CX16 through an open drain wire (24V common).

Status signal	Pin number	Function
*ALM	B1	Turns off the output transistor in the event of an alarm. If an alarm occurs, the power failure backup function stops.
*PFL	B2	Turns off the output transistor upon detection of a power failure. Use this signal to start retraction, stop the feed axis, and perform other operations.
RDY	B3	Turns on the output transistor when the charging of the sub module C is completed and the power failure backup operation becomes possible. After this signal is output, change to a more that requires power failure backup operation.

O.6.6 Control Signals

The following table lists the control signals input to the Power Failure Backup Module.

Control signal	Connector	Pin number	Function
*SYNC	CX16	A3	This signal is input to disable power failure detection of the DC link. Setting this signal to 24V disables power failure detection of the DC link. (Note)
EXPFL	CX15	3	This is the input of the external power failure signal. Setting this signal to 24V starts the power failure backup operation. When the external power failure signal is not used, leave this pin open.

© MyFANUC 2D5504D5BAC945D385F48627D4977F6C

NOTE

The DC link voltage changes according to the load condition of the motor. Particularly, if the motor output becomes large when the motor is connected to a line with a high power impedance (e.g., when all axes are accelerated simultaneously), the DC link voltage may drop greatly. To prevent such a drop in the DC link voltage from being detected as a power failure, power failure detection of the DC link can be disabled by using this signal.

O.6.7 Setting of the Power Failure Detection Delay Time

For the power failure detection circuit, the detection delay time is set to prevent an instantaneous power interruption in the input voltage from being detected as a power failure. The detection delay time can be changed within the range of 0 to 15 msec by using rotary switch SW1 in the front of the Power Failure Backup Module. While reducing the detection delay time increases the detection sensitivity, doing so makes an instantaneous power interruption more prone to be detected as a power failure. At shipment from the factory, the detection delay time is set to 7 msec (value of 7). Do not change this setting under normal circumstances.

Detection delay time [msec]	0	1	2	3	4	5	6	7	8	9	10	11	12	13	14	15
SW1 value	0	1	2	3	4	5	6	7	8	9	A	B	C	D	E	F

O.7 SIGNAL PROCESSING AND PARAMETER SETTING

The power failure machine protection functions control the machine protection operations in the CNC as necessary, based on the power failure detection signal, which is output from the Power Failure Backup Module at the same time that a power failure occurs. This section outlines the signal processing for the machine protection operations, as well as the parameters to be set.
For details of the parameters to be set, see the connection manual (functions) and parameter manual of the CNC in use.

O.7.1 Retract Function at Power Failure

The retract function at power failure performs the retraction operation by manipulating the retract signal of the CNC based on the power failure detection signal (*PFL) output from the Power Failure Backup Module. To minimize the energy consumption during the period from the occurrence of a power failure to the start of retraction, make sure that the PMC processing is performed at the first level (at 8-msec intervals).

© MyFANUC 2D5504D5BAC945D385F48627D4977F6C

O.7.1.1 When using the electronic gear box function, simple electronic gear box function, or hobbing machine function

Perform retraction in response to the retract signal (RTRCT).
When the value of the power failure detection signal (*PFL) changes from "1" to "0", change the value of the retract signal (RTRCT) from "0" to "1".

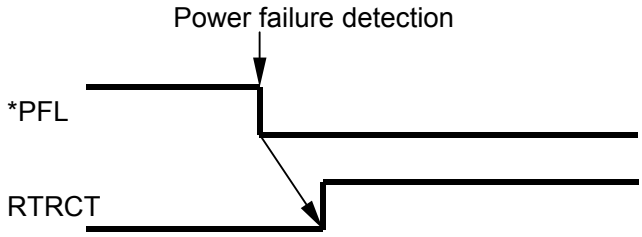

*PFL: Power failure detection signal
This signal is output from connector CX16 of the Power Failure Backup Module.

RTRCT: Retract signal
When the value changes from "0" to "1", this signal retracts the axis preset in the relevant parameter. The retract amount and speed are equivalent to the values preset in the relevant parameters.

CNC	Signal address	Parameter No.	
	RTRCT	Feedrate during retraction	Retract amount
FS15*i*	G042 #4	No.7795	No.7796
FS16*i*/18*i*/30*i*/31*i*	G066 #4	No.7740	No.7741

For details, see the connection manual (functions) and parameter manual of the CNC in use.

O.7.1.2 When using the high-speed cycle machining retraction function

The option for the high-speed cycle machining retraction function is required.
Perform retraction in high-speed cycle machining retraction signal (HSRT).
When the value of the power failure detection signal (*PFL) changes from "1" to "0", change the value of the high-speed cycle machining retraction signal (HSRT) from "0" to "1".

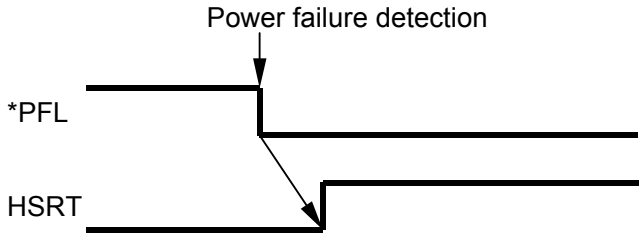

*PFL: Power failure detection signal
This signal is output from connector CX16 of the Power Failure Backup Module.

HSRT: High-speed cycle machining retraction signal
The high-speed cycle machining is in progress. If the retraction operation is enabled for the cycle currently executed (the retraction operation selection flag RT in the 7th bit of the "data type specification variable" in the header is set to "1"), the high-speed cycle machining retraction is started when HSRT is "1".

© MyFANUC 2D5504D5BAC945D385F48627D4977F6C

The retract amount, direction, and speed of each axis are equivalent to the values preset in the relevant parameters. After the retraction operation is completed, the machine switches to the automatic operation suspension or retraction cycle.

CNC	Signal address	Parameter No.	
	HSRT	Retract speed and direction	Retract amount (Note)
FS16*i*/18*i*/30*i*/31*i*	G065 #3	No.7514	No.7515

NOTE
Specify the retraction operation distribution count for the high-speed cycle machining retraction operation.
If the cycle currently executed ends before the distribution count specified in this parameter is reached, the retraction operation ends at that point of time. If 0 is set in this parameter, the retraction operation distribution count is considered infinite and the retraction operation continues until the end of the cycle currently executed.

For details, see the connection manual (functions) and parameter manual of the CNC in use.

O.7.1.3 Power failure retract on a machining center or a lathe

The option for the general-purpose retract function is required.
(In Series 0*i*-C, this is the standard function.)

As with the electronic gear box function, retraction is performed in response to the retract signal (RTRCT).
When the value of the power failure detection signal (*PFL) changes from "1" to "0", change the value of the retract signal (RTRCT) from "0" to "1".

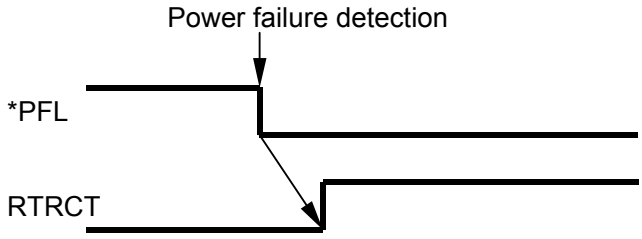

*PFL: Power failure detection signal
This signal is output from connector CX16 of the Power Failure Backup Module.

RTRCT: Retract signal
When the value changes from "0" to "1", this signal retracts the axis preset in the relevant parameter.
The retract amount and speed are equivalent to the values preset in the relevant parameters.

CNC	Signal address	Parameter No,	
	RTRCT	Feedrate during retraction	Retract amount
FS16*i*/18*i*/21*i*/30*i*/31*i*/32*i* FS0*i*-C	G066 #4	No.7740	No.7741

For details, see the connection manual (functions) and parameter manual of the CNC in use.

© MyFANUC 2D5504D5BAC945D385F48627D4977F6C

O.7.1.4 Note on the setting of the parameter of the retract function at power failure

In the retract amount parameter, set a value that is more than twice the travel distance needed to prevent the workpiece and tool from interfering with each other.

Supplementary information

The changes in the retraction axis travel speed that occur from the start of retraction until the end can be divided into the three ranges shown in the figure below.

Range 1 Range in which the retraction axis reaches the retract speed after the start of retraction
Range 2 Range in which the axis moves at the retract speed (constant rotation).
Range 3 Range in which the retraction axis decelerates

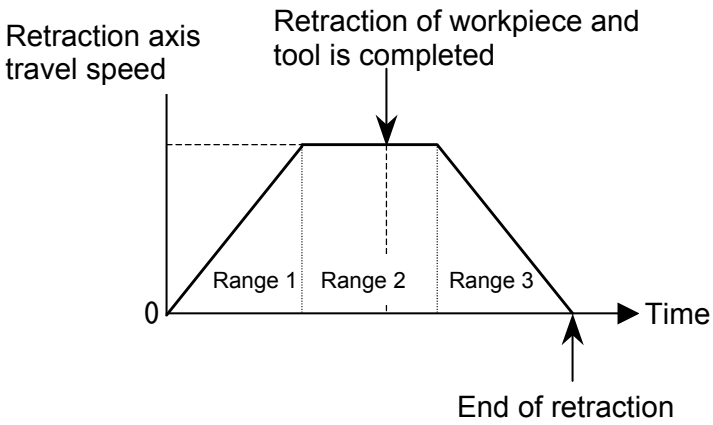

In Ranges 1 and 2, energy is supplied from the sub module C to move the retraction axis. In Range 3, the energy resulting from retraction axis deceleration returned to the amplifier as electric energy. During normal operation, the energy resulting from motor deceleration is regenerated to the power supply. However, during a power failure, there is no route for regenerating energy to the power supply and therefore the DC link voltage rises, potentially causing the DC link overvoltage alarm depending on circumstances. If this alarm occurs, synchronization cannot be maintained and there is the risk that the workpiece and tool may be damaged. For this reason, the workpiece and tool need to have been retracted to a position where they do not interfere with each other before the axis enters Range 3.
When the sub module R is connected, the DC link overvoltage alarm does not occur in Range 3, because the energy resulting from retraction axis deceleration is handled by the sub module R. Therefore, when the sub module R is connected, a value that is the same as the travel distance needed to prevent the workpiece and tool from interfering with each other may be set in the retract amount parameter.

O.7.2 Stop Distance Reduction Function at Power Failure

O.7.2.1 Feed axis deceleration and stop

When the value of the power failure detection signal (*PFL) changes from "1" to "0", perform the emergency stop by using *ESP signal or perform the feed hold stop by automatic operation suspension signal (*SP) of the CNC.

(1) When stopping the axis by using the emergency stop signal
The axis decelerates and stops at the maximum torque of the motor. While the stop distance is minimal, the path during deceleration is not maintained.
When the value of the power failure detection signal (*PFL) changes from "1" to "0", set the emergency stop (*ESP) of the CNC to "0".
When stopping the axis by using the emergency stop signal, it is necessary to set the parameters described later.

© MyFANUC 2D5504D5BAC945D385F48627D4977F6C

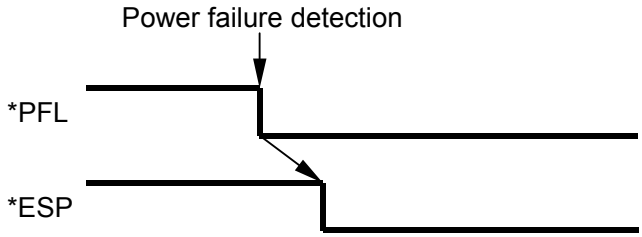

Power failure detection signal (*PFL):
This signal is output from connector CX16 of the Power Failure Backup Module.

*ESP: Emergency stop signal of the CNC

CNC	Signal address
	*ESP
FS15*i*	X000 #4
FS0*i*/16*i*/18*i*/21*i*	X008 #4
FS30*i*/31*i*/FS32*i*	X008 #4 (For the 1st machine group) X008 #0 (For the 2nd machine group) X008 #1 (For the 3rd machine group)

Parameters to be set

(1) DBST: Use the quick stop function → Set Use ("1").

(2) BRKC: Use the brake control function → Set Use ("1").

(3) Brake control timer → Set a value greater than the rapid traverse time constant (unit: msec).

CNC	Parameter No,		
	DBST	BRKC	Brake control timer
FS15*i*	No.1959 #0	No.1883 #6	No.1976
FS0*i*/16*i*/18*i*/21*i*/30*i*/31*i*/32*i*	No.2017 #0	No.2005 #6	No.2083
Example of settings	1	1	500

Set the above parameters for all the axes for which the stop distance reduction function at power failure is to be used. For details, see PARAMETER MANUAL.

(2) When performing feed hold stop

The axis is controlled and stopped based on the acceleration/deceleration time constant set in the parameter.

When the power failure detection signal (*PFL) changes from "1" to "0", set the automatic operation suspension signal (*SP) to "0".

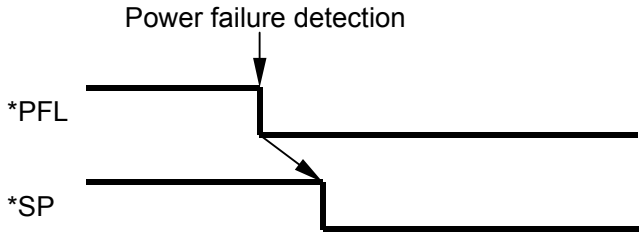

Power failure detection signal (*PFL):
This signal is output from connector CX16 of the Power Failure Backup Module.

CNC	Signal address (*SP)
FS0*i*/16*i*/18*i*/21*i*/30*i*/31*i*/32*i*	Gn008.5

(3) Note (on the handling of the emergency stop contact (Power Supply: CX4) of the amplifier)

© MyFANUC 2D5504D5BAC945D385F48627D4977F6C

If an emergency stop of the amplifier is performed during motor deceleration after a power failure, the regenerative brake switches to the dynamic brake, resulting in a longer stop distance. Therefore, the emergency stop of the amplifier needs to be delayed until the feed axis comes to a stop.
By setting the parameters below, it is possible to delay the time from the moment when the emergency stop contact (Power Supply: CX4) of the amplifier opens until the emergency stop takes effect (the dynamic brake operates) by up to 400 msec.
If it takes 400 msec or more to decelerate and stop the motor, arrange so that an external circuit keeps the emergency stop contact (Power Supply: CX4) of the amplifier closed until the feed axis comes to a stop.

Setting of the emergency stop timer built in the αi amplifier

CNC	Parameter No.	
	ESPTM1	ESPTM0
FS15*i*	No.1750 #6	No.1750 #5
FS0*i*/16*i*/18*i*/21*i*/30*i*/31*i*/32*i*	No.2210 #6	No.2210 #5
Example of settings	1	1

ESPTM1	ESPTM0	Delay time
0	0	50msec
0	1	100msec
1	0	200msec
1	1	400msec

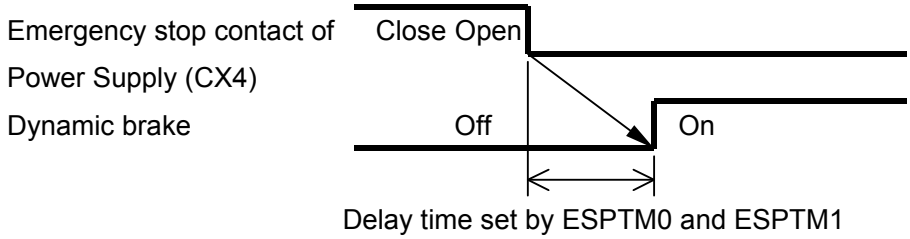

For details, see PARAMETER MANUAL (B-65270EN).

O.7.2.2 Deceleration and stop of the spindle

When the power failure detection signal (*PFL) changes from "1" to "0", set the spindle control input signal *ESPA (*ESPB, *ESPC, and *ESPD) to "0".

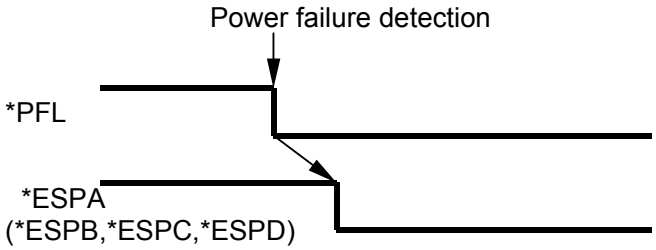

*PFL: Power failure detection signal
This signal is output from connector CX16 of the Power Failure Backup Module.

CNC	Signal address(Note 1)			
	*ESPA	*ESPB	*ESPC	*ESPD
FS30*i*/31*i*/32*i*	Gn071 #1	Gn075 #1	Gn205 #1	Gn267 #1
FS15*i*	G226 #1	G234 #1	-	-
1 FS16*i*/18*i* system, FS0*i*/21*i*	G071 #1	G075 #1	G0205 #1	G0267 #1

© MyFANUC 2D5504D5BAC945D385F48627D4977F6C

CNC	Signal address(Note 1)			
	*ESPA	*ESPB	*ESPC	*ESPD
2 FS16*i*/18*i* system	G1071 #1	G1075 #1	G1205 #1	G1267 #1
3 FS16*i*T system (Note 2)	G2071 #1	G2075 #1	-	-

NOTE
1 The maximum number of spindles differs with the CNC.
2 This is applicable to control of two CPUs and three systems.

O.7.3 Gravity-axis Drop Prevention Function at Power Failure

The gravity-axis drop prevention function at power failure can be implemented without the Power Failure Backup Module.
However, if a power failure occurs during heavy cutting, a DC link low voltage alarm occurs before the brake operates, potentially making it impossible to prevent the vertical axis from falling. To provide protection in such a case requires connecting the Power Failure Backup Module to the sub module C.
The following describes how to handle signals in that case.

When the power failure detection signal (*PFL) changes from "1" to "0", apply the brake and set the emergency stop (*ESP) of the CNC to "0". For information about the points to note, see Appendix I, “POWER FAILURE DETECTION FUNCTION.”

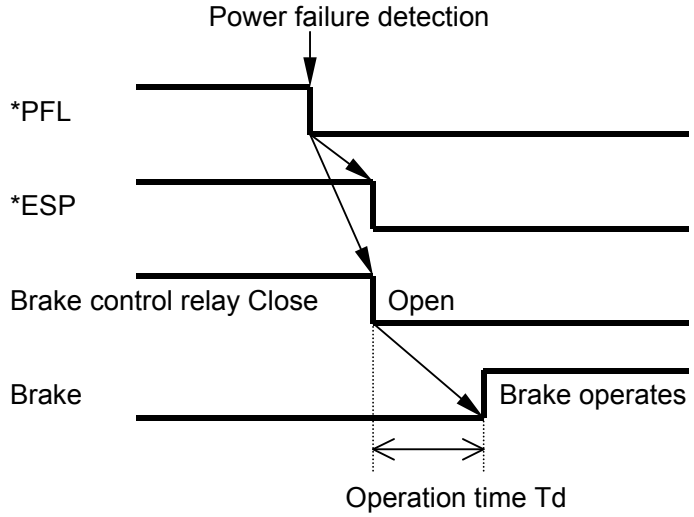

Power failure detection signal (*PFL):
This signal is output from connector CX16 of the Power Failure Backup Module.

O.8 SUB MODULE SELECTION

O.8.1 Selecting a Sub Module R

The following two conditions determine the applicable sub module R specification and the number of units to connect.
Condition (1): Total of the maximum outputs of the motors to be decelerated simultaneously in the event of a power failure (Note 1)
Condition (2): Total of the maximum outputs of the motors to be decelerated in the event of a power failure multiplied by the deceleration time

© MyFANUC 2D5504D5BAC945D385F48627D4977F6C

From the following table, select the sub module R that meets Conditions (1) and (2).

Sub module R specification	Number of units to connect	Condition (1)	Condition (2)	Applicable Power Failure Backup Module
A06B-6089-H712	1 unit	20kW or less	100 kJ or less	A06B-6077-H002
A06B-6089-H712	2 units in parallel (Note 2)	40kW or less	200 kJ or less	
A06B-6077-H020	1 unit	40kW or less	80 kJ or less	
A06B-6091-H020	1 unit	40kW or less	80 kJ or less	A06B-6091-H002

NOTE

1 The "total of maximum motor outputs" refers to the total of the maximum outputs of the motors to be decelerated simultaneously.
When both the servo motor and spindle motor are to be decelerated and stopped in the event of a power failure, the "total of maximum motor outputs" can be reduced by decelerating the spindle motor after decelerating and stopping the servo motor.

2 For the connection method, see (2) in Subsection O.5.2.

Selection example

Selecting a sub module R when decelerating and stopping the motors shown below simultaneously in the event of a power failure

Axis	Motor model	Maximum output	Deceleration time	Maximum output × deceleration time
X axis	α8/3000*i*	5.7 kW	0.2sec	1.14
Y axis	α8/3000*i*	5.7 kW	0.2sec	1.14
Z axis	α12/3000*i*	7.6 kW	0.2sec	1.54
Spindle	α8/8000*i*	13.2 kW	1.5sec	19.8
	Condition (1) →	Total 32.2 kW	Condition (2) →	Total 23.62 kJ

* Since the motors shown above are driven by 200VAC, use A06B-6077-H002 as the Power Failure Backup Module.

→ The total of the maximum outputs of the motors to be decelerated simultaneously in the event of a power failure is 32.2 kW (Condition (1)).

→ The total of the maximum outputs of the motors to be decelerated in the event of a power failure multiplied by the deceleration time is 23.62 kW·sec (Condition (2)).

Selection result

It is possible to select either A06B-6077-H020 or to use two A06B-6089-H712 units connected in parallel.

* If the spindle motor is decelerated after the servo motor is decelerated, the total of the maximum outputs of the motors to be decelerated simultaneously is below 20 kW. In this case, therefore, it is also possible to connect only one A06B-6089-H712 unit.

NOTE

1 The total of the maximum outputs of the motors to be decelerated and stopped simultaneously after a power failure must not exceed 40 kW.

2 As for sub module R A06B-6077-H020 and A06B-6091-H020, only one unit can be used. It is not possible to use two or more units connected in parallel.

3 The maximum number of sub module R A06B-6089-H712 units that can be connected in parallel is 2.

© MyFANUC 2D5504D5BAC945D385F48627D4977F6C

O.8.2 Selecting a Sub Module C

When the retract function at power failure is used, the sub module C is needed as an energy source for driving the motor after a power failure. Since the amount of energy required for retraction varies depending on the machine configuration, connect as many sub module C units as necessary for the machine configuration.
Here, the method is described to calculate the number of sub module C units to connect for a gear cutting machine.

Calculating the number of sub module C units to connect requires the following data.

V1[V]	:	αiPS input voltage before the power failure (3-phase AC input voltage during normal operation)
P2[kW]	:	Maximum cutting output before the power failure
Jm[kg·m^2]	:	Rotor inertia of the motor
JL[kg·m^2]	:	Motor axis-converted inertia of the load
Vm[min^{-1}]	:	Motor speed during retraction
TL[N·m]	:	Friction torque of the machine in the case of the horizontal axis (motor-converted value) Torque required during rapid traverse rising in the case of the vertical axis (motor-converted value)
d[mm]	:	Distance over which the workpiece and tool need to travel to reach a position whether they do not interfere (required retraction amount)
L[mm/rev]	:	Travel distance per motor rotation

The number of sub module C units to connect is calculated by equation (1).

$$\text{Number of sub module C units to connect} \geq \frac{\text{Amount of energy required for power failure retraction}}{\text{Amount of energy that can be supplied per sub module C} \times 0.7} \quad \text{------ Equation (1)}$$

→ The amount of energy that can be supplied per sub module C is calculated by equation (2) in Subsection O.8.2.1.
→ The amount of energy required for power failure retraction is calculated by equations (3) and (4) in Subsection O.8.2.2.

O.8.2.1 Calculating the amount of energy that can be supplied per sub module C

The sub module C is always kept charged to a voltage nearly equivalent to the DC link voltage via the charge circuit inside the Power Failure Backup Module. The amount of energy per sub module C is dependent on the sub module C voltage before the occurrence of a power failure (≈ αiPS input voltage × √2) and calculated by equation (2).

- For A06B-6077-H010 (for 200V)

$$W1 = 2.5 \times 10^{-2} \times (V1^2 - 9.8 \times 10^3) \quad \cdots\cdots \text{Equation (2)}$$

- For A06B-6083-H245 (for 400V)

$$W1 = 4.5 \times 10^{-3} \times (V1^2 - 4.2 \times 10^4) \quad \cdots\cdots \text{Equation (2)}$$

W1[J]: Amount of energy per sub module C
V1[V]: αiPS input voltage before a power failure

© MyFANUC 2D5504D5BAC945D385F48627D4977F6C

As examples, the relationships between the αiPS input voltage and the amount of energy that can be supplied per sub module C (W1) are shown in the tables below.

A06B-6077-H010 (for 200V)	
αiPS input voltage V1	Amount of energy W1
170VAC	478J
200VAC	755J
240VAC	1195J

A06B-6083-H245 (for 400V)	
αiPS input voltage V1	Amount of energy W1
340VAC	330J
400VAC	530J
480VAC	850J

The above tables show that the amount of energy that can be supplied from the sub module C greatly changes depending on the αiPS input voltage. This indicates that the lower the αiPS input voltage before the occurrence of a power failure is, the more sub module C units need to be connected to obtain the same amount of energy.
The scope of input voltage variation should be assumed taking power supply conditions into consideration.

O.8.2.2 Calculating the amount of energy required for power failure retraction

The amount of energy required after a power failure is the sum of (1) and (2) below.
(1) Energy required for cutting until retraction starts after the power failure (Equation (3))
(2) Energy required to move the retraction axis (Equation (4))

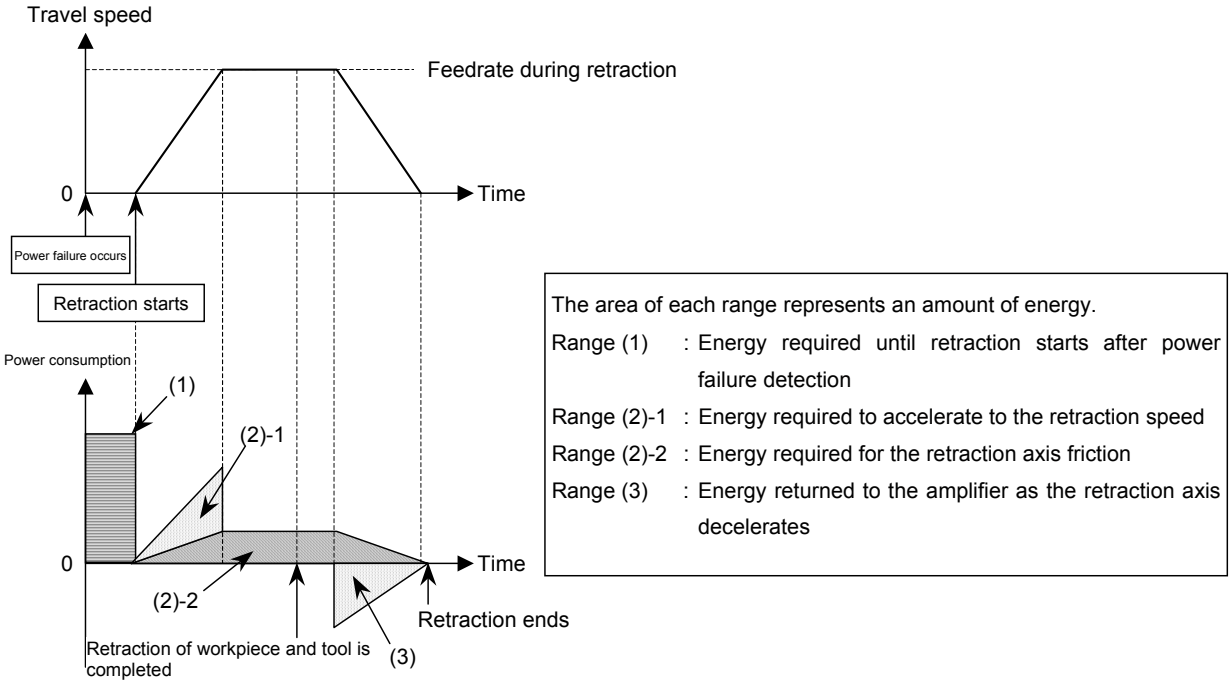

* In Range (3), the deceleration energy of the motor returns to the amplifier.
Depending on the conditions, the energy generated in Range (3) may cause the DC link overvoltage alarm. Therefore, the retraction of the workpiece and tool needs to be completed before the retraction axis starts to decelerate. See Subsection O.8.1.4.

(1) Calculation of the energy W2 [J] required for cutting until retraction starts after a power failure
When the maximum cutting output before the power failure is P2 [kW], the energy W2 [J] required for cutting until retraction starts is calculated by equation (3).

$$W2 = 32 \times P2 \cdots\cdots \text{Equation (3)}$$

© MyFANUC 2D5504D5BAC945D385F48627D4977F6C

The maximum cutting output P2 [kW] in equation (3) can be calculated by the following equation, based on the motor-converted axis torque Tm [Nm] at maximum cutting output and the motor speed n [min^{-1}].

$$P2 = 1.047 \times 10^{-4} \times n \times Tm$$

(2) Calculation of the energy W3 [J] required to move the retraction axis
The energy required to move the retraction axis is the sum of the energy required to accelerate to the retraction speed (Range (2)-1) and the energy required with respect to friction (Range (2)-2).

(a) SI unit system

$$W3 = 5.48 \times 10^{-3} \cdot (Jm + JL) \cdot Vm^2 + 6.28 \cdot TL \cdot \frac{d}{L} \cdot \cdot \cdot \cdot \cdot \cdot \text{Equation (4)}$$

W3 : Energy required to move the retraction axis [J]
Jm : Rotor inertia of the motor [$kg \cdot m^2$]
JL : Motor axis-converted inertia of the load [$kg \cdot m^2$]
Vm : Motor speed during retraction [min^{-1}]
TL : Friction torque of the machine in the case of the horizontal axis (motor-converted value) [N·m]
Torque required during rapid traverse rising in the case of the vertical axis (motor-converted value) [N·m]
d : Distance over which the workpiece and tool need to travel to reach a position whether they do not interfere [mm]
L : Travel distance per motor rotation [mm/rev]

(b) CGS unit system

$$W3 = 5.37 \times 10^{-4} \cdot (Jm + JL) \cdot Vm^2 + 6.16 \times 10^{-1} \cdot TL \cdot \frac{d}{L} \cdot \cdot \cdot \cdot \cdot \cdot \text{Equation (4)'}$$

W3 : Energy required to move the retraction axis [J]
Jm : Rotor inertia of the motor [$kgf \cdot cm \cdot sec^2$]
JL : Motor axis-converted inertia of the load [$kgf \cdot cm \cdot sec^2$]
Vm : Motor speed during retraction [min^{-1}]
TL : Friction torque of the machine in the case of the horizontal axis (motor-converted value) [kg·cm]
Torque required during rapid traverse rising in the case of the vertical axis (motor-converted value) [kg·cm]
d : Distance over which the workpiece and tool need to travel to reach a position whether they do not interfere [mm]
L : Travel distance per motor rotation [mm/rev]

O.8.2.3 Example of selecting a sub module C

Selection example: When power failure retraction is performed in a gear cutting machine

Conditions
The sub module C is A06B-6077-H010 (200-V input type).
Maximum cutting output of the synchronous axis
P2=10[kW] (spindle 7 [kW] servo axis 3 [kW])

© MyFANUC 2D5504D5BAC945D385F48627D4977F6C

Retraction axis

Rotor inertia of the motor Jm = 0.0062[kg·m^2]

Motor axis-converted inertia of the load JL = 0.012[kg·m^2]

Motor speed during retraction Vm = 1000[min^{-1}]

Friction torque of the machine (motor-converted value) TL = 1.6[N·m]

Distance over which the workpiece and tool need to travel to reach a position whether they do not interfere d = 20[mm]

Travel distance per motor rotation L = 2.5[mm/rev]

Selection

1. Calculate the energy W2 [J] required for cutting until retraction starts after a power failure.
   From equation (3):
   W2 = 32 × 10 = 320[J]
2. Calculate the energy W3 [J] required to move the retraction axis. From equation (4):
   W3 = 5.48 × 10^{-3} × (0.0062 + 0.012) × 1000^2 + 6.28 × 1.6 × 20 ÷ 2.5 = 180[J]
3 The amount of energy required for power failure retraction is:
   W2 + W3 = 320[J] + 180[J] = 500[J]
4. Calculate the amount of energy W1 [J] that can be supplied per sub module. From equation (2):
   1) When the input voltage before the power failure is 200VAC
      W1 = 2.5 × 10^{-2} × (200^2–9.8 × 10^3) = 755[J]
   2) When the input voltage before the power failure is 170VAC
      W1 = 2.5 × 10^{-2} × (170^2–9.8 × 10^3) = 478[J]
5. Calculate the number of sub module C units. From equation (1):
   1) When the input voltage before the power failure is 200VAC
      (W2 + W3) ÷ (W1 × 0.7)= 500 ÷ (755 × 0.7) = 0.94 → 1 unit
   2) When the input voltage before the power failure is 170VAC
      (W2 + W3) ÷ (W1 × 0.7)= 500 ÷ (478 × 0.7) = 1.49 → 2 units

© MyFANUC 2D5504D5BAC945D385F48627D4977F6C

O.9 LIMIT ON THE NUMBER OF AMPLIFIERS TO BE CONNECTED

Depending on the number of amplifiers connected to the power failure backup module, control power may need to be supplied to some of the amplifiers from the outside.

O.9.1 Condition when Control Power Needs to be Supplied from the Outside

If the sum N of the constants n (Table O.9.1 (a)) of individual amplifiers exceeds 7 (N > 7), control power needs to be supplied from the outside. (If N is equal to or less than 7, an external power supply is not necessary.)
Supply control power to desired αiSP and αiSV amplifiers from an external power supply, and make sure that the constants n (Table O.9.1 (a)) of the αiSP and αiSV amplifiers to which control power is supplied from the αiPS is less than 7.

Table O.9.1 (a) Constant n

	Amplifier model	n
αiPS	αiPS 5.5 to 37, 11HV to 45HV (60mm-wide, 90mm-wide, and 150mm-wide types)	1
	αiPS 55, 75HV, 100HV (300mm-wide type)	1.5
αiSP	αiSP 2.2 to 30, 5.5HV to 45HV (60mm-wide, 90mm-wide, and 150mm-wide types)	1.5
	αiSP 45, 55, 75HV, 100HV (300mm-wide type)	2.5
1-axis αiSV	αiSV 20 to 80 (except 80L), 10HV to 40HV (except 40HVL)	1
	αiSV 80L 160, 160L, 40HVL, 80HV, 80HVL	1.5
	αiSV 360, 180HV (150mm-wide type)	2
	αiSV 360HV (300mm-wide type)	2.5
2-axis αiSV	All models	1.5
3-axis αiSV	All models	2

[Example]

Amplifier model	Number of amplifiers	Corresponding value of n	n × number of amplifiers	n × number of amplifiers	n × number of amplifiers
αiPS 55	1	1.5	1.5	1.5	1.5
αiSP 26	2	1.5	3	External power supply	3
αiSV 80	1	1	1	1	1
αiSV 80/160	1	1.5	1.5	1.5	1.5
αiSV 160/160	2	1.5	3	3	External power supply
		Sum N	10	7	7

If N > 7, an external power supply is

Example 1: Supply power to two αiSP26 amplifiers from the outside.

Example 2: Supply power to two αiSV160/160 amplifiers from the outside.

© MyFANUC 2D5504D5BAC945D385F48627D4977F6C

O.9.2 Connection when Control Power is Supplied from the Outside

If the number of αiSV amplifies connected to αiPS exceeds the number shown above, supply control power of 24V from an external power supply as described below.

(1) Connection

An example of supplying control power of 24V to two αiSP amplifies from an external power supply is given here.

A module to which control power of 24V is supplied from αiPS must not be connected to a module to which control power of 24V is supplied from the outside via the 24V line (A1 and A2). (Cable K69 cannot be used.)

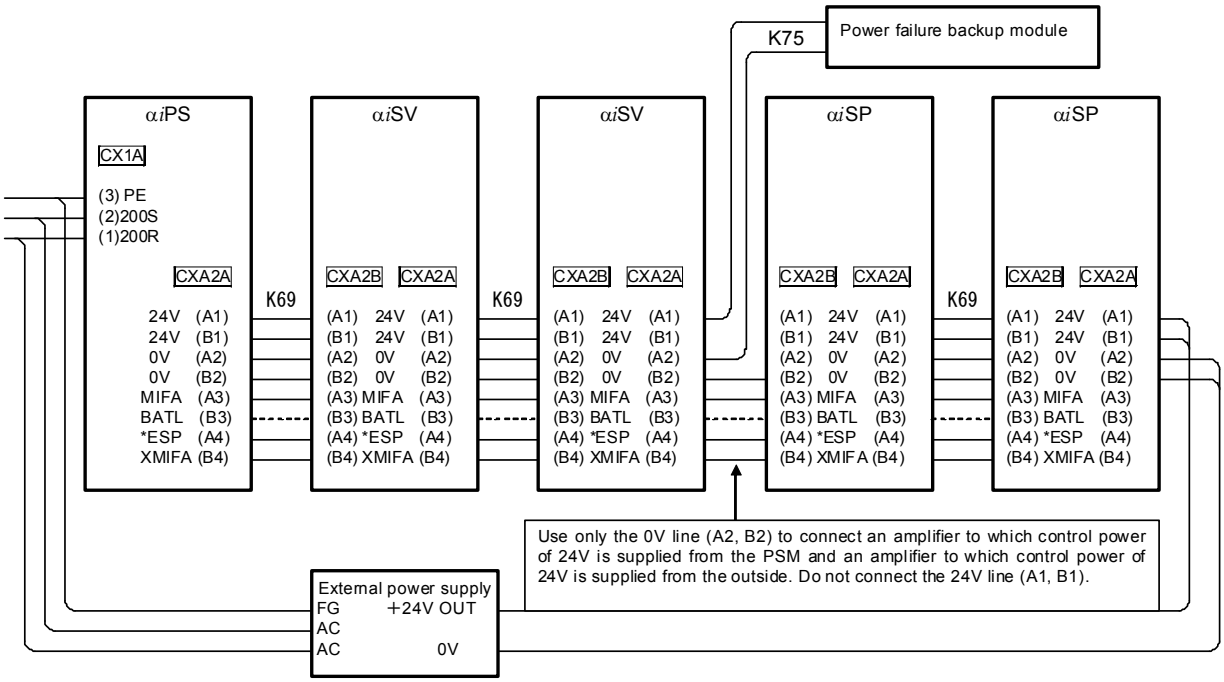

NOTE

1 The control circuit of αiPS is driven by 200VAC connected to connector CX1A and cannot be driven by 24V from an external power supply. Do not connect 24V of the external power supply to connector CXA2A of αiPS.

2 It is possible to supply control power of 24V to all αiSP and αiSV amplifiers. In this case, however, control power of 24V of power failure backup module must be supplied from αiPS (connect cable K75 to CXA2A of αiPS).

© MyFANUC 2D5504D5BAC945D385F48627D4977F6C

(2) Power-on sequence

The supply of 24V to CNC/αiSP from an external power supply must be started and control power of 200VAC (CX1A) of αiPS must be turned on according to the timing chart shown below.

Normally, if control power of 200VAC (CX1A) of αiPS is turned on at the same time the supply of 24V to CNC/αiSP from an external power supply is started, the timing requirements shown below are met. If this is not the case, install a delay timer or other appropriate device on the power line to meet the timing requirements.

If power is turned on at the wrong timing, the FSSB communication alarm or other relevant alarm is issued.

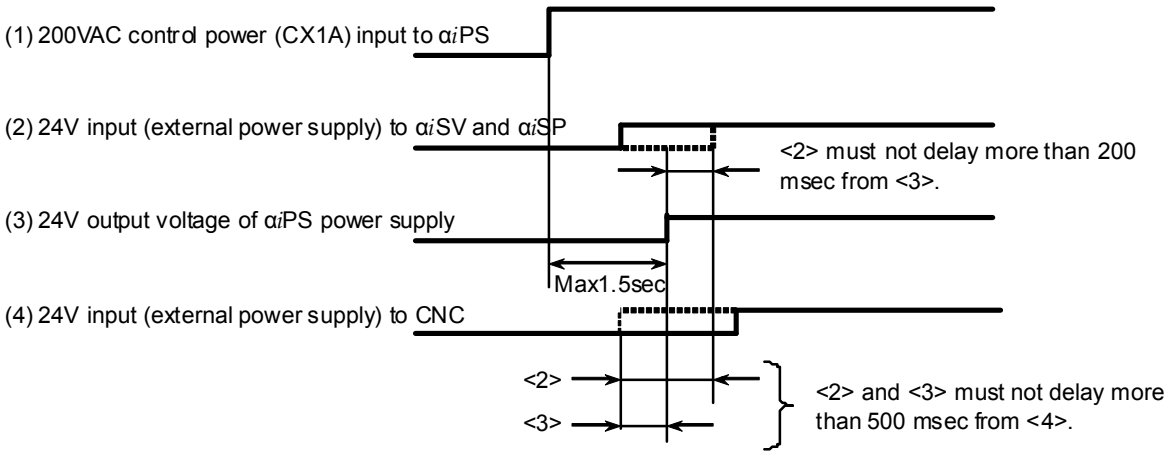

(3) External power supply specifications

The specifications must be as described in Specifications of the switching power supply connected to connectors CX13 and CX28 in (5) of Section O.3.

The required current capacity is as follows.

	Amplifier model	Current
αiSP	αiSP 2.2 to 30, 5.5HV to 45HV (60mm-wide, 90mm-wide, and 150mm-wide types)	1A
	αiSP 45, 55, 75HV, 100HV (300mm-wide type)	1.5A
1-axis αiSV	αiSV 20 to 160, 10HV to 80HV (60mm-wide and 90mm-wide types)	1A
	αiSV 360, 180HV (150mm-wide type)	1.5A
	αiSV 360HV (300mm-wide type)	2A
2-axis αiSV	All models	1A
3-axis αiSV	All models	1.5A

© MyFANUC 2D5504D5BAC945D385F48627D4977F6C

O.10 OPERATION CHECK

O.10.1 Retract Function at Power Failure

This subsection describes how to check the operation when the retract function at power failure is applied for a gear cutting machine.

(1) Checking the sequence
Check that the retraction operation is performed when the main breaker of the power magnetics cabinet is turned off (power failure) with the machine running idle.

(2) Checking the retraction operation during cutting
Check that a level of synchronization high enough to prevent the workpiece and tool from being damaged is maintained during the retraction operation. Using the servo guide, monitor the following waveforms.
Waveforms to monitor: Position (POSF) and speed (SPEED) of the retraction axis
Amount of error of the synchronous axis
DC link voltage

When checking the retraction operation, do not use the maximum cutting load first, but start with a small cutting load and increase the cutting load gradually so as to prevent the workpiece and tool from being damaged. The amount of energy accumulated in the sub module C depends on the input voltage before the power failure. When checking the operation, use the lowest possible αiPS input voltage.

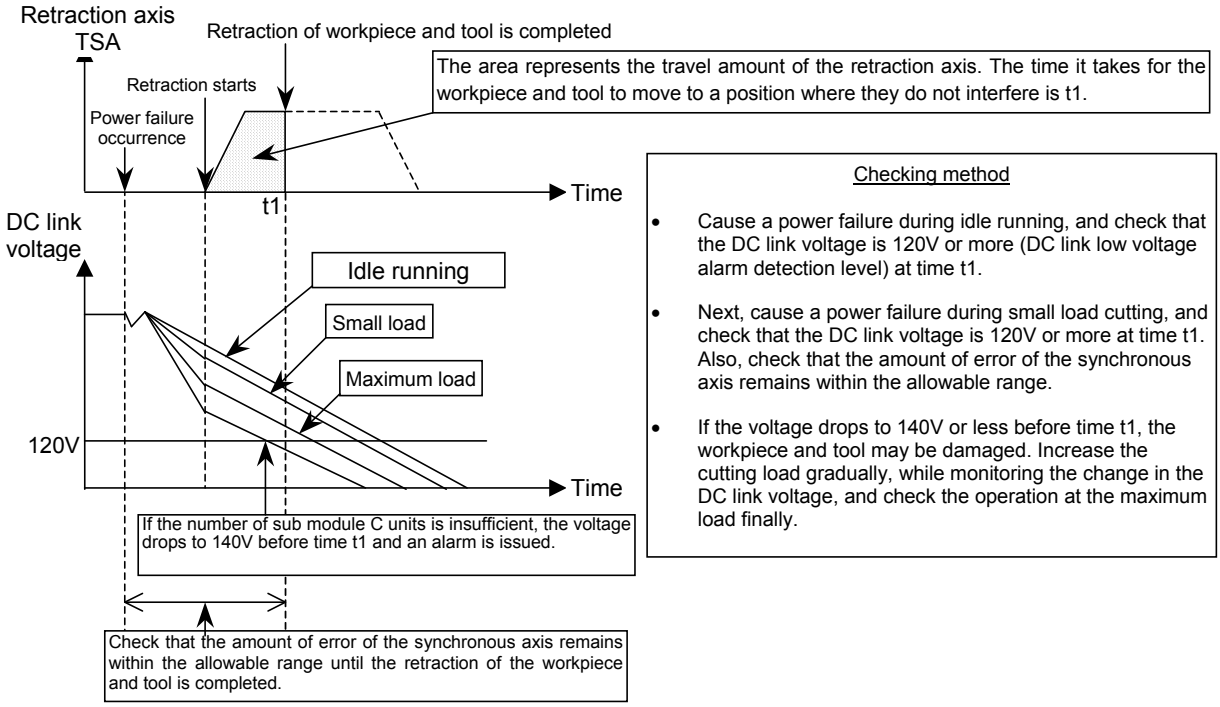

(3) Measure to be taken if the retraction operation is incomplete in the event of a power failure
One of the possible reasons why power failure retraction cannot be performed is that an emergency stop is initiated before retraction is completed. Check whether the relay on the emergency stop line does not turn off before retraction is completed and whether an emergency stop is not initiated by an alarm output from another device in the event of a power failure.

© MyFANUC 2D5504D5BAC945D385F48627D4977F6C

O.10.2 Stop Distance Reduction Function at Power Failure

(1) Checking the control power backup operation
Check that the control power is maintained by the Power Failure Backup Module, by using the following method.
Turn off the main breaker (power failure) with the motor stopped, and check that the following conditions are observed:
→ The NC screen remains on for several seconds.
→ The LED of the Power Supply keeps blinking at "0" for several seconds.
→ The display of the Power Failure Backup Module changes from "0" to "0." (with a dot) and remains in this condition for several seconds.

(2) Checking the effect of quick stop function
Monitor the speed change (SPEED) that occurs when the main breaker is turned off (power failure) during rapid traverse, by using the servo guide. Check that the deceleration time is below the rapid traverse time constant.

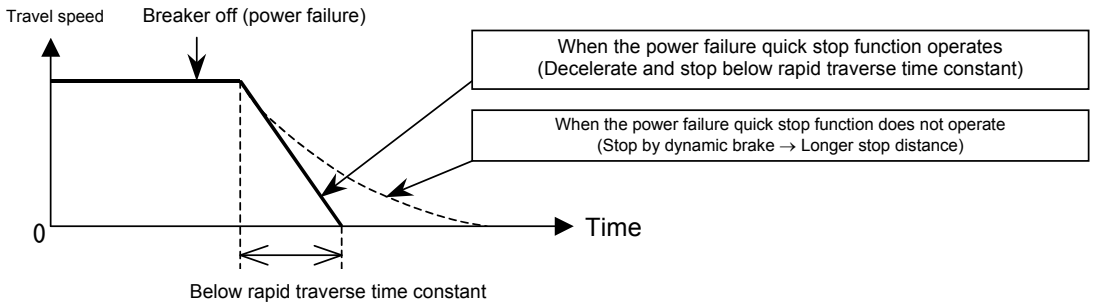

Turn off the main breaker (power failure) at a position where there is sufficient space to prevent the axis from colliding against the stroke end even if the stop distance reduction function at power failure does not operate and the axis is stopped by the dynamic brake.

(3) Checking that the spindle stops
Turn off the main breaker (power failure) during constant spindle motor rotation, and check that the spindle decelerates and stops. If the stop distance reduction function at power failure does not operate, the spindle coasts.

O.10.3 Gravity-Axis Drop Prevention Function at Power Failure

Make a check by using the following method.
(1) Stop the vertical axis, and record its absolute coordinates.
(2) Turn off the main breaker of the machine (power failure).
(3) After restarting the machine, examine the absolute coordinates of the vertical axis and check that the vertical axis has not fallen more than the backlash of the brake or machine.
See Appendix I, “POWER FAILURE DETECTION FUNCTION” for details.

© MyFANUC 2D5504D5BAC945D385F48627D4977F6C

P VARIATION IN THE ONE-ROTATION SIGNAL DETECTION POSITION OF THE SPINDLE SENSOR

This appendix describes the variation related to the one-rotation signal that occurs when a spindle sensor (αiMZ SENSOR, αiBZ SENSOR, or αiCZ SENSOR (analog)) is used.

Appendix P, "VARIATION IN THE ONE-ROTATION SIGNAL DETECTION POSITION OF THE SPINDLE SENSOR", consists of the following sections:

P.1 POSITION VARIATION LIST BY SENSOR 575

P.1 POSITION VARIATION LIST BY SENSOR

Overview

If the one-rotation signal needs to be detected at $10min^{-1}$ or less when αiMZ SENSOR, αiBZ SENSOR, or αiCZ SENSOR (analog) is used, it is necessary to set the relevant parameters. (For the parameters, see FANUC AC SPINDLE MOTOR αi series PARAMETER MANUAL (B-65280EN).)

If the above parameters are set, there is a possibility that the detected position of the one-rotation signal may vary due to the effect of offset drift caused by the temperature change at the sensor. The list on the next page shows the degrees of variation in the one-rotation signal detection position.

* As for the αi POSITIONCODER and α POSITIONCODER S, the one-rotation signal detection position does not vary due to a temperature change.

Position variation list by sensor

Sensor specification		Maximum position variation of the sensor when the temperature changes by 10 °C
αiMZ SENSOR (64λ)		30°/1000
αiMZ SENSOR (128λ)		15°/1000
αiMZ SENSOR (256λ)		8°/1000
αiBZ SENSOR 128 αiBZ SENSOR 128H	A860-2120-T201 A860-2120-T211	15°/1000
αiBZ SENSOR 256 αiBZ SENSOR 256H	A860-2120-T401 A860-2120-T411	8°/1000
αiBZ SENSOR 384	A860-2120-T511	5°/1000
αiBZ SENSOR 512	A860-2120-T611	4°/1000
αiBZ SENSOR 128 αiBZ SENSOR 128H	A860-2150-T201, A860-2155-T201 A860-2150-T211, A860-2155-T211	12°/1000
αiBZ SENSOR 192 αiBZ SENSOR 192H	A860-2150-T301, A860-2155-T301 A860-2150-T311, A860-2155-T311	8°/1000
αiBZ SENSOR 256 αiBZ SENSOR 256S αiBZ SENSOR 256H	A860-2150-T401, A860-2155-T401 A860-2150-T404, A860-2155-T404 A860-2150-T411, A860-2155-T411	6°/1000
αiBZ SENSOR 384	A860-2150-T511, A860-2155-T511	4°/1000
αiBZ SENSOR 512	A860-2150-T611, A860-2155-T611	3°/1000
αiCZ SENSOR 512 (analog)	A860-2140-T411	4°/1000
αiCZ SENSOR 768 (analog)	A860-2140-T511	3°/1000
αiCZ SENSOR 1024 (analog)	A860-2140-T611	2°/1000

© MyFANUC 2D5504D5BAC945D385F48627D4977F6C

Q CONNECTION OF A THIRD-PARTY SPINDLE SENSOR

This appendix describes how to set and adjust a third-party spindle sensor.

Appendix Q, "CONNECTION OF A THIRD-PARTY SPINDLE SENSOR", consists of the following sections:

Q.1 APPLIED UNIT 576
Q.2 ELECTRICAL SPECIFICATIONS OF SPINDLE SENSOR SIGNALS 577
Q.2.1 Connectors Supporting Sensor Signals 577
Q.2.2 Input Values of JYA2 and JYA4 578
Q.2.2.1 A, B, and Z phase unprocessed signals 578
Q.2.2.2 1Vpp sine wave A and B phases (differential signal waveforms) 579
Q.2.2.3 Driver-type Z phase (differential signal waveform) 580
Q.2.2.4 Sine wave Z phase (αiMZ/αiBZ sensor compatible type: differential signal waveform) 581
Q.2.2.5 Order of A and B phase signals 582
Q.2.2.6 Notes 582
Q.2.3 Signals Input to JYA3 583
Q.2.3.1 Square wave signal waveforms (A, B, and Z phase signals) 583
Q.2.3.2 Spindle sensor for the serial interface 583
Q.3 PARAMETERS 585
Q.3.1 Overview 585
Q.3.2 List of Parameters for Sensor Setting 585
Q.3.3 Setting Motor Sensor Parameters 586
Q.3.3.1 Setting of the motor sensor type 586
Q.3.3.2 Setting the number of motor sensor teeth 587
Q.3.3.3 Thermal sensor settings used for motor overheat detection 587
Q.3.4 Setting the Spindle Sensor Parameters 588
Q.3.4.1 Setting the spindle sensor type 588
Q.3.4.2 Setting the number of spindle sensor teeth 590

Q.1 APPLIED UNIT

This appendix applies when one of the amplifiers listed below is used with a third-party sensor.

Model name	Ordering number
αiSP TYPE A (200V)	A06B-6141-Hxxx#H580
(400V)	A06B-6151-Hxxx#H580
αiSP TYPE B (200V)	A06B-6142-Hxxx#H580 A06B-6144-Hxxx#H590
(400V)	A06B-6152-Hxxx#H580 A06B-6154-Hxxx#H590

© MyFANUC 2D5504D5BAC945D385F48627D4977F6C

Q.2 ELECTRICAL SPECIFICATIONS OF SPINDLE SENSOR SIGNALS

Q.2.1 Connectors Supporting Sensor Signals

αiSP supports the spindle sensor signals mentioned below.

- 1Vpp sine wave signal (supporting connector: JYA2、JYA4)
- Square wave signal (supporting connector: JYA3)
- Serial output signal (supporting connector: JYA3)

(a) αiSP amplifier

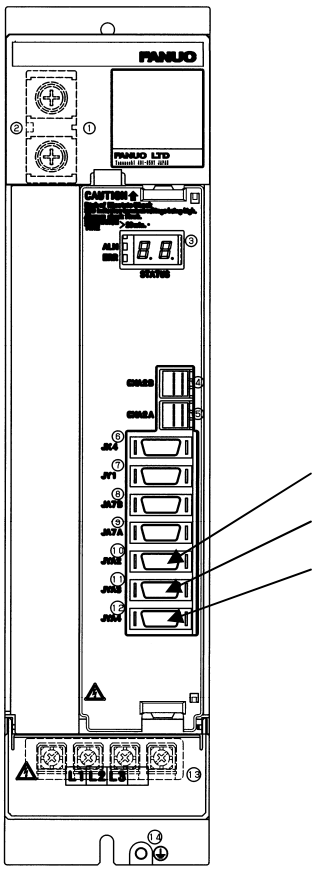

© MyFANUC 2D5504D5BAC945D385F48627D4977F6C

Q.2.2 Input Values of JYA2 and JYA4

Q.2.2.1 A, B, and Z phase unprocessed signals

Waveform 1 (A and B signals)

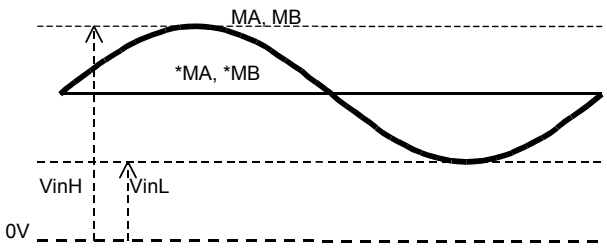

Waveform 2 (A and B signals)

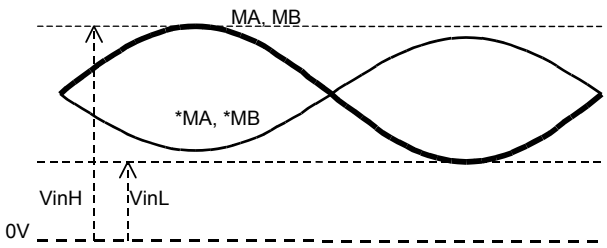

Waveform 3 (Z signal)

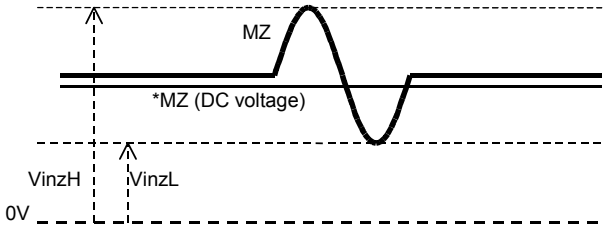

Waveform 4 (Z signal)

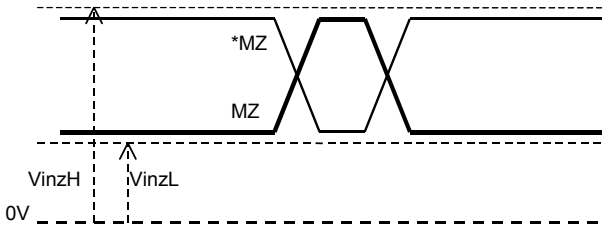

		Symbol	Waveform check point	Defined value
1	Input impedance	Rin		100kΩ
2	5V power supply to the sensor	Vcc (Vdd = 0V)	JYA2-pin9,18,20 JYA4-pin9,18,20	5Vdc±5%, 300mA Max
3	Input voltage range (MA,*MA, MB, *MB)	VinL VinH	MA JYA2-pin5, JYA4-pin5 *MA JYA2-pin6, JYA4-pin6 MB JYA2-pin7, JYA4-pin7 *MB JYA2-pin8, JYA4-pin8	VinH = 3.5V Max VinL = 1.5V Min
4	Input voltage range (MZ, *MZ)	VinzL VinzH	MZ JYA2-pin1, JYA4-pin1 *MZ JYA2-pin2, JYA4-pin2	VinzH = Vcc Max VinzL = 0V Min
5	Number of sine waves per revolution			128~32767, 32768~65534(excluding odd numbers)
6	Maximum input frequency	Fmax		205kHz in Spec A*1 256kHz in Spec B *1

*1 The signal amplitude must meet Spec A or B until the frequency in use reaches its maximum value. For details of the specifications, see Subsection 2.2.2.

© MyFANUC 2D5504D5BAC945D385F48627D4977F6C

Q.2.2.2 1Vpp sine wave A and B phases (differential signal waveforms)

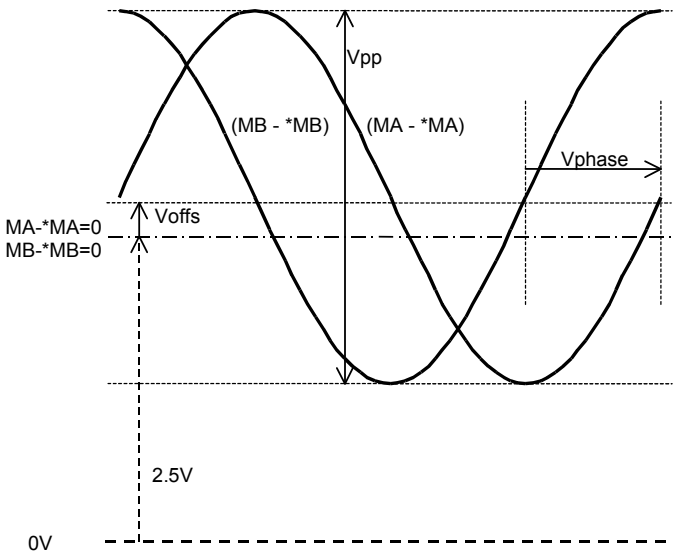

		Symbol	Waveform check point	Defined value
1	Signal amplitude (MA - *MA, MB - *MB)	Vpp Spec A	(from JYA2) PA1,PB1	0.50Vpp Min, 1.2Vpp Max
		Vpp Spec B	(from JYA4) PA2,PB2	0.60Vpp Min, 1.2Vpp Max
2	Signal offset (MA - *MA, MB - *MB)	Voffs		±100mV Max
3	Signal amplitude difference (MA - *MA) / (MB - *MB)	Vppdef		1.00±0.10 Max
4	Phase difference (MA - *MA, MB - *MB)	Vphase		90±3deg

⚠ **CAUTION**
When using the sensor, first check that the amplitude of the analog wave output (A and B phases) is within the specified range, with the sensor connected to the spindle amplifier.

© MyFANUC 2D5504D5BAC945D385F48627D4977F6C

Q.2.2.3 Driver-type Z phase (differential signal waveform)

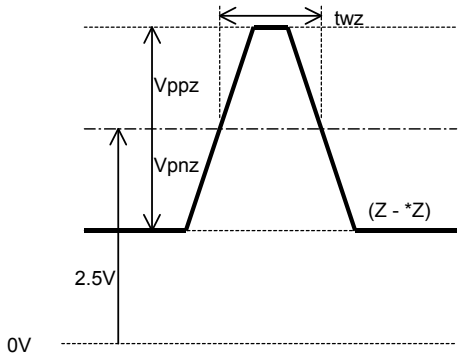

		Symbol	Waveform check point	Defined value
1	Z phase signal width (MZ - *MZ)	twz	(from JYA2) PS1 (from JYA4) PS2	2.5 μsec Min
2	Z phase signal amplitude	Vppz		0.23V Min
	(MZ - *MZ)	Vpnz		0.23V Min

⚠ **CAUTION**

Only one Z phase signal may be generated per revolution.
When using a sensor with a distance-coded reference mark, refer to B-65280EN/08-26 for details.
The following amplifiers do not support a sensor with a distance-coded reference mark.

- αiSP TYPE A: A06B-6141-Hxxx#H580, A06B-6151-Hxxx#H580
- αiSP TYPE B: A06B-6142-Hxxx#H580, A06B-6152-Hxxx#H580

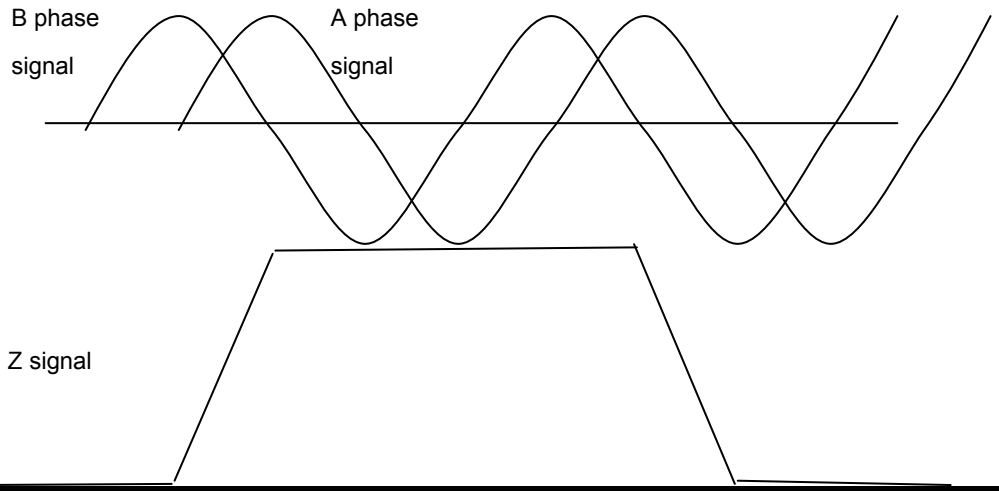

© MyFANUC 2D5504D5BAC945D385F48627D4977F6C

Q.2.2.4 Sine wave Z phase (αiMZ/αiBZ sensor compatible type: differential signal waveform)

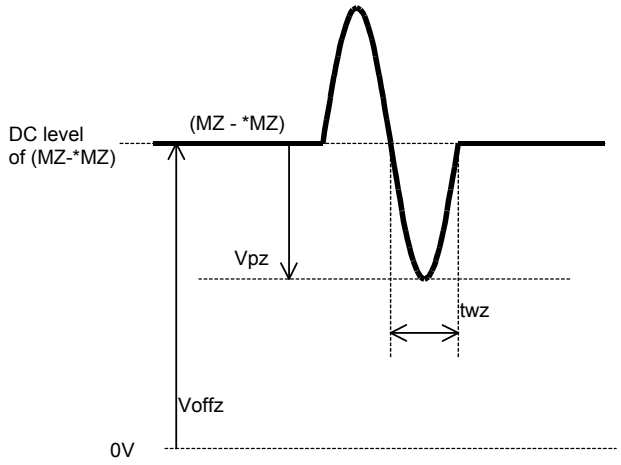

		Symbol	Waveform check point	Defined value
1	Z phase signal width (MZ - *MZ)	twz	(from JYA2) PS1	2.5 μsec Min
2	Z phase signal amplitude (MZ - *MZ)	Vpz	(from JYA4) PS2	0.23V Min
3	Z phase signal offset (Z - *Z)	Voffz		3.5V Max 2V Min

⚠ **CAUTION**

Only one Z phase signal may be generated per revolution.
When using a sensor with a distance-coded reference mark, refer to B-65280EN/08-26 for details.
The following amplifiers do not support a sensor with a distance-coded reference mark.

- αiSP TYPE A : A06B-6141-Hxxx#H580, A06B-6151-Hxxx#H580
- αiSP TYPE B : A06B-6142-Hxxx#H580, A06B-6152-Hxxx#H580

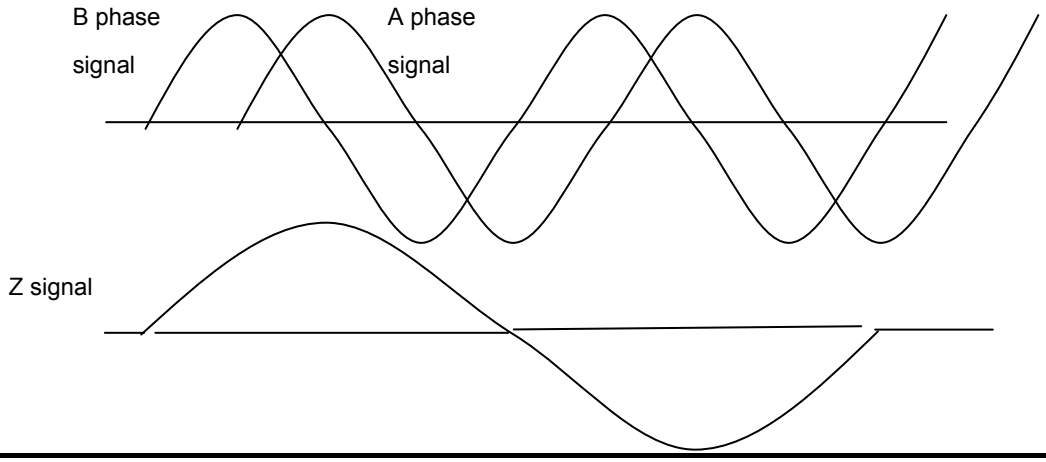

© MyFANUC 2D5504D5BAC945D385F48627D4977F6C

Q.2.2.5 Order of A and B phase signals

The following figure shows the relation between the direction of rotation and the A and B phases of the sensor in our circuitry.

NOTE

If a sensor whose phase order is opposite to that shown below is used, our circuitry regards the rotation as counterclockwise.

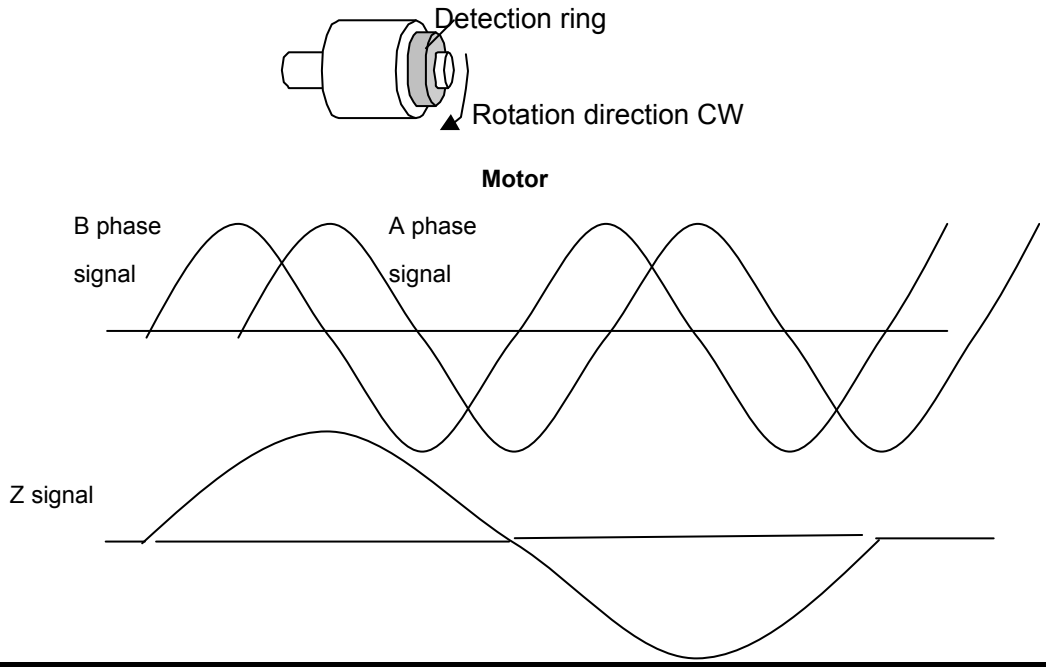

Q.2.2.6 Notes

A. The spindle amplifier does not have a terminating resistor (120Ω) built in it.
The terminating resistor needs to be taken into consideration when harmonizing the specifications for the sensor output and spindle amplifier input. If a terminating resistor is required because the input waveform corresponds to the maximum rating mentioned in Subsection 2.2.1 or differential signal waveform mentioned in Subsection 2.2.2, install the required terminating resistor outside the spindle amplifier.

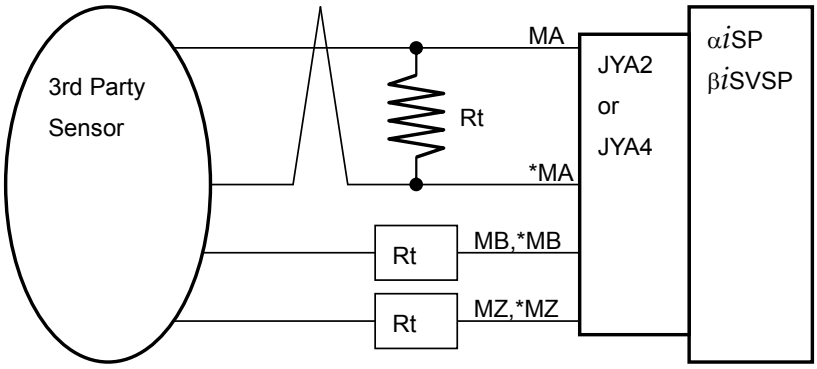

Rt is defind in specification of 3rd party sensor.

B. Setting of the one-rotation signal
Set the driver type when not using the αiMZ sensor/αiBZ sensor compatible type.

© MyFANUC 2D5504D5BAC945D385F48627D4977F6C

Q.2.3 Signals Input to JYA3

Q.2.3.1 Square wave signal waveforms (A, B, and Z phase signals)

		Symbol	Check pin	Value
1	Input impedance	Rin		150Ω
2	5V power supply to the sensor	Vcc (Vdd=0V)	JYA3-pin9,18,20	5Vdc±5%, 350mA Max
3	Phase A, B input signals (PAC,*PAC, PBC, *PBC)	VinL VinH	PAC JYA3-pin5 *PAC JYA3-pin6 PBC JYA3-pin7 *PBC JYA3-pin8	VinH = 2.5V Min VinL = 0.5V Max (RS422 compliant)
4	Phase difference (PAC,*PAC, PBC, *PBC)	Vphase		90±3deg
5	Phase Z input signal (PSC, *PSC)	VinzL VinzH	PSC JYA3-pin1 *PSC JYA3-pin2	VinH = 2.5V Min VinL = 0.5V Max (RS422 compliant)
6	Z phase signal width (PSC, *PSC)	Twz	PSC JYA3-pin1 *PSC JYA3-pin2	2.5 μsec Min
7	Number of square waves per revolution			128 to 32767 32768 to 65534 (even number only)
8	Maximum input frequency	Fmax		256kHz

Square wave Z phase of the standard width

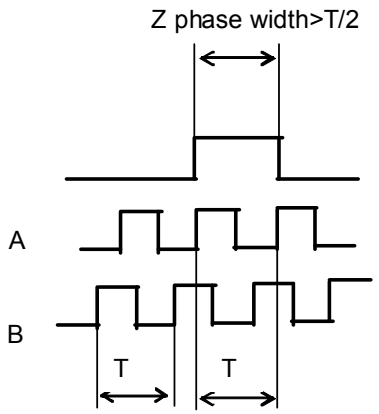

Square wave Z phase of a narrow width

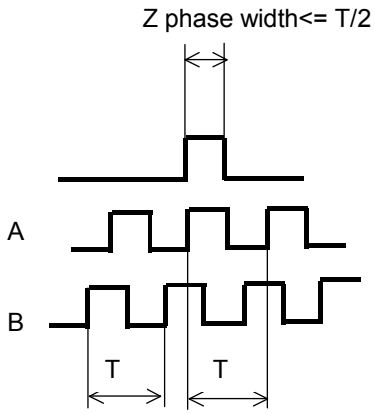

Q.2.3.2 Spindle sensor for the serial interface

Use a sensor compatible with the α*i* interface or α interface.

<u>α*i* interface</u>

<u>Target</u>

Model name	Ordering number
α*i*SP TYPE B	A06B-6144-Hxxx#H590 ,A06B-6154-Hxxx#H590

© MyFANUC 2D5504D5BAC945D385F48627D4977F6C

Connection

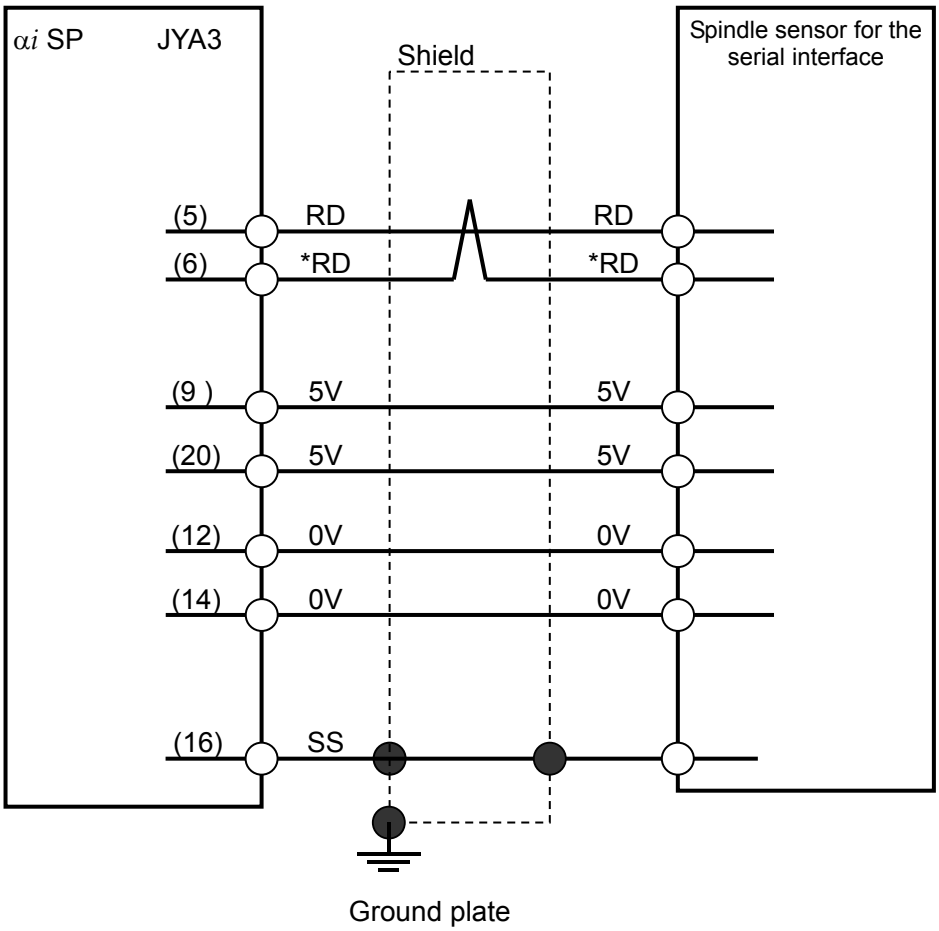

α interface

Target

Model name	Ordering number
αiSP TYPE A	A06B-6141-Hxxx#H580, A06B-6151-Hxxx#H580
αiSP TYPE B	A06B-6142-Hxxx#H580,A06B-6144-Hxxx#H590 A06B-6152-Hxxx#H580,A06B-6154-Hxxx#H590

© MyFANUC 2D5504D5BAC945D385F48627D4977F6C

Connection

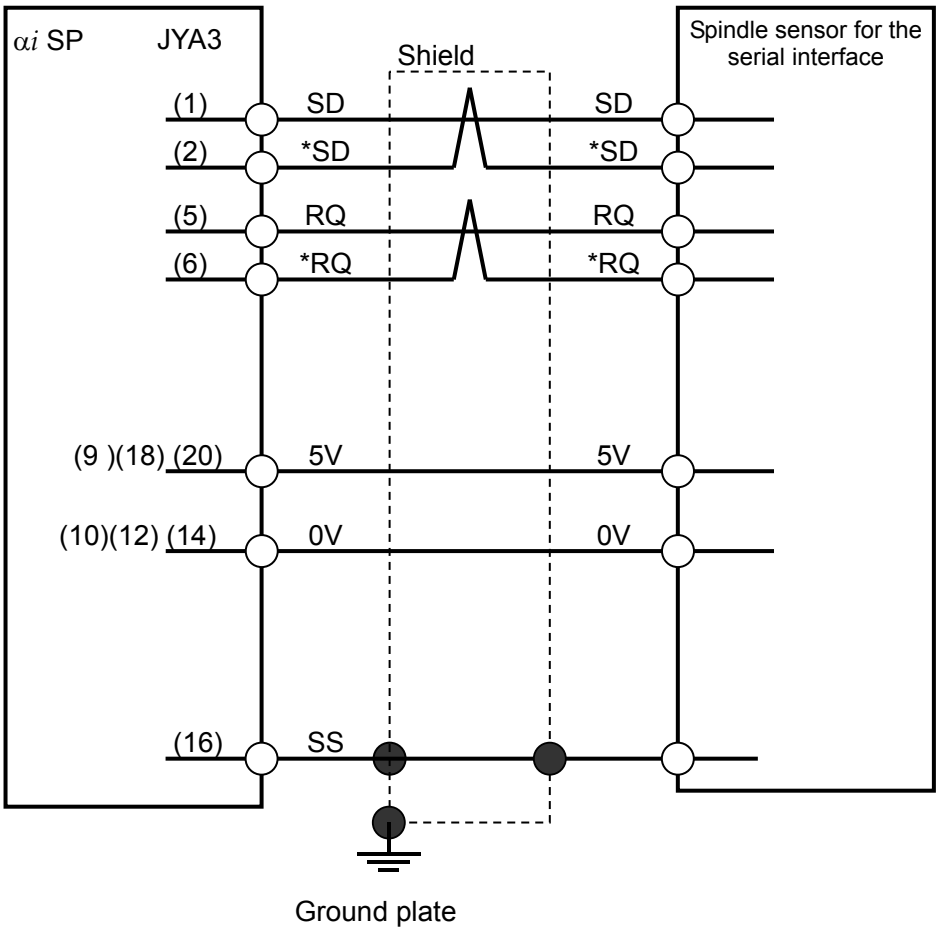

Q.3 PARAMETERS

Q.3.1 Overview

This section describes the parameters available for the spindle sensor (including third-party sensors).

NOTE

These names are used in the following descriptions.

- Motor sensor:
  This sensor is attached to the edge of the motor and outputs the signals used for motor speed and spindle position control.
- Spindle sensor:
  This sensor is attached to the edge of the spindle and outputs the signals used for spindle position control.

Q.3.2 List of Parameters for Sensor Setting

The following parameters concern the setting of the sensor.

Parameter No.	Description	Related subsection
Bits 2,1, and 0 of No.4010	Motor sensor type	3.3.1

© MyFANUC 2D5504D5BAC945D385F48627D4977F6C

Parameter No.	Description	Related subsection
Bits 2,1, and 0 of No.4011	Setting of the number of motor sensor teeth	3.3.2
No.4334	Setting of an arbitrary number of motor sensor teeth	3.3.2
Bit 4 of No.4397	Thermal sensor type	3.3.3
No.4134	Setting of the motor overheat level	3.3.3
Bits 3, 2,1, and 0 of No.4002	Spindle sensor type	3.4.1
Bits 7, 6, 5, and 4 of No.4002	Setting of the number of spindle sensor teeth	3.4.2
No.4361	Setting of an arbitrary number of spindle sensor teeth	3.4.2
Bit 2 of No.4394	Setting for one-rotation signal detection at $10min^{-1}$ or less	3.3.1, 3.4.1

NOTE

When a sensor with a distance-coded reference mark is used, there are other parameters to be set. For details, refer to B-65280EN/08-26.
The following amplifiers do not support a sensor with a distance-coded reference mark.

- αiSP TYPE A: A06B-6141-Hxxx#H580, A06B-6151-Hxxx#H580
- αiSP TYPE B: A06B-6142-Hxxx#H580, A06B-6152-Hxxx#H580

Q.3.3 Setting Motor Sensor Parameters

Q.3.3.1 Setting of the motor sensor type

	Motor sensor type	Connector	Motor sensor type setting No.4010			Remarks
			Bit 2	Bit 1	Bit 0	
(a)	αiM Sensor	JYA2	0	0	0	
(b)	αiMZ Sensor, αiBZ Sensor, αiCZ Sensor (analog)		0	0	1	For information about one-rotation signal detection at $10min^{-1}$ or less, see Note 1.
(c)	αiCZ Sensor (serial)	JYA3	0	1	1	For information about the software series and editions for which this sensor is applicable, see Note 2.
(d)	3rd party sensor (1) 1Vpp sine wave A/B phase, sine wave Z phase (compatible with αiBZ sensor Z phase) (See Appendix 5-1.)	JYA2	1	1	0	For information about one-rotation signal detection at $10min^{-1}$ or less, see Note 1.
(e)	3rd party sensor (2) 1Vpp sine wave A/B phase, driver-type Z phase (See Appendix 5-1.)		1	1	1	For information about one-rotation signal detection at $10min^{-1}$ or less, see Note 1. In the case of a sensor with a distance-coded reference mark, parameters other than those shown at left need to be set. For details, refer to B-65280EN/08-26. (Not supported for the βiSVSP series for the 0i-D series.)

© MyFANUC 2D5504D5BAC945D385F48627D4977F6C

NOTE

1 The target sensor normally cannot detect the one-rotation signal at speed lower than $10min^{-1}$. However, the sensor can detect this signal when the following parameter is set.

	#7	#6	#5	#4	#3	#2	#1	#0
4394						ZPHDTC		

ZPHDTC The detection of the one-rotation signal at $10min^{-1}$ or less is:
0: Not performed
1: Performed

When using this setting for the sensor (b) or (d) above, note the following:

- Bits 2, 1, and 0 of parameter No. 4010 need to be set to 1, 1, and 1, respectively.
- The one-rotation signal detection position may vary due to the effect of offset drift caused by the temperature change at the sensor.

2 The target sensor can be used with the software series and editions listed below.

Series	Edition
9D80	H(08) and subsequent editions
9D8A	A(01) and subsequent editions
9D90	A(01) and subsequent editions

Q.3.3.2 Setting the number of motor sensor teeth

Number of teeth (λ/rev)	Setting of the number of teeth by word parameter No. 4334	Setting of the number of teeth by bit parameter No. 4011		
		#2	#1	#0
64	=0	0	0	0
128		0	0	1
256		0	1	0
512		0	1	1
192		1	0	0
384		1	0	1
Arbitrary number of teeth	>0 Unit of data:1λ/rev Valid data range:32 to 32767	*	*	*
	<0 Unit of data: -2λ/rev Valid data range:-16 to -32767 Example: When the number of teeth is 36000λ/rev, set "-18000".	*	*	*

Q.3.3.3 Thermal sensor settings used for motor overheat detection

Sensor type	Thermal sensor type selection Bit 4 of No.4397	Motor overheat level setting No.4134
Thermostat	0	0
FANUC standard thermistor	0	≠0 (90 to 180℃)
KTY84-130 (Philips) (Note3)	1	≠0 (90 to 180℃)

© MyFANUC 2D5504D5BAC945D385F48627D4977F6C

Q.3.4 Setting the Spindle Sensor Parameters

Q.3.4.1 Setting the spindle sensor type

	Spindle sensor	Connector	Sensor type No.4002				Remarks
			#3	#2	#1	#0	
(a)	None (Position control not performed)	--	0	0	0	0	
(b)	Motor sensor used (Motor sensor used for both speed control and position control)	JYA2	0	0	0	1	For information about the parameters to be set about the sensor type and the number of teeth, see Subsection Q.3.3.2.
(c)	αi Position coder	JYA3	0	0	1	0	• Since the number of teeth is fixed to 1024, bits 7, 6, 5, and 4 of parameter No. 4003 for setting the number of teeth and parameter No. 4361 become invalid. • For information about one-rotation signal detection at $10min^{-1}$ or less, see Note 1.
(d)	αi BZ Sensor, αi CZ Sensor(analog)	JYA4	0	0	1	1	• Set bits 7, 6, 5, and 4 of parameter No. 4003 for setting the number of spindle sensor teeth or parameter No. 4361. • For information about one-rotation signal detection at $10min^{-1}$ or less, see Note 1.
(e)	αi CZ Sensor(serial)	JYA3	0	1	1	0	For the software series and editions for which this sensor is applicable, see Note 3.
(f)	α Position coder S	JYA4	0	1	0	0	• Since the number of teeth is fixed to 1024, bits 7, 6, 5, and 4 of parameter No. 4003 for setting the number of teeth and parameter No. 4361 become invalid. • For information about one-rotation signal detection at $10min^{-1}$ or less, see Note 1.
(g)	3rd party sensor (1) 1Vpp sine wave A/B phase, sine wave Z phase (compatible with αi BZ sensor Z phase) (See Appendix 5-1.)	JYA4	1	1	0	1	• Set bits 7, 6, 5, and 4 of parameter No. 4003 for setting the number of spindle sensor teeth or parameter No. 4361. • For information about one-rotation signal detection at $10min^{-1}$ or less, see Note 1.
(h)	3rd party sensor (2) 1Vpp sine wave A/B phase, driver-type Z phase (See Appendix 5-1.)	JYA4	1	1	1	0	• Set bits 7, 6, 5, and 4 of parameter No. 4003 for setting the number of spindle sensor teeth or parameter No. 4361. • For information about one-rotation signal detection at $10min^{-1}$ or less, see Note 1. • In the case of a sensor with a distance-coded reference mark, parameters other than those shown at left need to be set. For details, refer to B-65280EN/08-26. (Not supported for the βiSVSP series for the 0i-D series.)
(i)	3rd party sensor (3) Square wave A/B phase, normal width square wave Z phase (See Appendix 5-2.)	JYA3	1	1	1	1	• Set bits 7, 6, 5, and 4 of parameter No. 4003 for setting the number of spindle sensor teeth or parameter No. 4361. • For information about one-rotation signal detection at $10min^{-1}$ or less, see Note 1.

© MyFANUC 2D5504D5BAC945D385F48627D4977F6C

	Spindle sensor	Connector	Sensor type No.4002				Remarks
			#3	#2	#1	#0	
(j)	3rd party sensor (4) Square wave A/B phase, narrow width square wave Z phase (See Appendix 5-2.)	JYA3	1	1	0	0	• Set bits 7, 6, 5, and 4 of parameter No. 4003 for setting the number of spindle sensor teeth or parameter No. 4361. • For the software series and editions for which this parameter is applicable, see Note 2. • For information about one-rotation signal detection at $10min^{-1}$ or less, see Note 1.
(k)	3rd party sensor (5) α interface (2-pair communication)	JYA3	0	1	0	1	For the software series and editions for which this parameter is applicable, see Note 4.
(l)	3rd party sensor (6) αi interface (1-pair communication)	JYA3	0	1	1	0	For the software series and editions for which this parameter is applicable, see Note 5.

NOTE

1 The target sensor normally cannot detect the one-rotation signal at speed lower than $10min^{-1}$. However, the sensor can detect this signal when the following parameter is set.

	#7	#6	#5	#4	#3	#2	#1	#0
4394						ZPHDTC		

ZPHDTC The detection of the one-rotation signal at $10min^{-1}$ or less is:
0: Not performed
1: Performed

When using this setting for the sensor (d) or (g) above, note the following:

- Bits 3, 2, 1, and 0 of parameter No. 4002 need to be set to 1, 1, 1, and 0, respectively.
- The one-rotation signal detection position may vary due to the effect of offset drift caused by the temperature change at the sensor.

2 Using the software series and editions listed below, it is possible to set third-party sensor (4) (1Vpp square wave A/B phase and narrow width square wave Z phase) as well as to set bits 3, 2, 1, and 0 of parameter No. 4002 to 1, 1, 0, and 0 and bit 2 of parameter No. 4394.

Series	Edition
9D5A	E(05) and subsequent editions
9D53	S(19) and subsequent editions
9D5D	A(01) and subsequent editions
9D70	S(19) and subsequent editions
9D7A	A(01) and subsequent editions
9D80	O(15) and subsequent editions
9D8A	A(01) and subsequent editions
9D90	B(02) and subsequent editions

© MyFANUC 2D5504D5BAC945D385F48627D4977F6C

3 Using the software series and editions listed below, it is possible to use the target sensor.

Series	Edition
9D80	H(08) and subsequent editions
9D8A	A(01) and subsequent editions
9D90	A(01) and subsequent editions

4 Using the software series and editions listed below, it is possible to use the target sensor.

Series	Edition
9D80	H(08) and subsequent editions
9D8A	A(01) and subsequent editions
9D90	A(01) and subsequent editions

5 Using the software series and editions listed below, it is possible to use the target sensor.

Series	Edition
9D90	H(08) and subsequent editions

Q.3.4.2 Setting the number of spindle sensor teeth

(1) When the spindle sensor is (a) to (j)

Number of teeth (λ/rev)	Setting of the number of teeth by word parameter No. 4361	Setting of the number of teeth by bit parameter No. 4003			
		Bit 7	Bit 6	Bit 5	Bit 4
256	=0	0	0	0	0
128		0	0	0	1
512		0	1	0	0
64		0	1	0	1
768		1	0	0	0
1024		1	0	0	1
384		1	1	0	0
Arbitrary number of teeth	>0 Unit of data:1 λ/rev Valid data range:64 to 32767	*	*	*	*
	<0 Unit of data: -2 λ/rev Valid data range:-32 to –32767 Example: When the number of sensor teeth is 36,000, set "-18,000".	*	*	*	*

(2) When the spindle sensor is (k)

Resolution format	Setting of bit parameter No. 4003			
	#7	#6	#5	#4
Normal resolution format	0	0	0	0
High resolution format A	0	0	0	1
High resolution format B	0	0	1	0

© MyFANUC 2D5504D5BAC945D385F48627D4977F6C

(3) When the spindle sensor is (I)

Format	Setting of word parameter No. 4361
Binary line counts type	8192

© MyFANUC 2D5504D5BAC945D385F48627D4977F6C

© MyFANUC 2D5504D5BAC945D385F48627D4977F6C

ADDITIONAL INFORMATION

© MyFANUC 2D5504D5BAC945D385F48627D4977F6C

© MyFANUC 2D5504D5BAC945D385F48627D4977F6C

αiBZ SENSOR 384, 512, 640 / Change of form of Detection ring

1. Type of applied technical documents

Title	FANUC SERVO AMPLIFIER αi series DESCRIPTIONS FANUC BUILT-IN SPINDLE MOTOR BiI series DESCRIPTIONS FANUC SERVO AMPLIFIER αi series DESCRIPTIONS (for 30i-B series CNC)
Spec. No./Ver.	B-65282EN/07 B-65292EN/06 B-65412EN/01

2. Summary of change

Group	Name／Outline	New･Add Correct･Del	Applicable Date
Basic Function			
Optional Function			
Unit			
Maintenance Parts			
Notice			
Correction			
Another	αiBZ SENSOR 384, 512, 640 / Change of form of Detection ring	Correct	Nov., 2013

				Title	αiBZ SENSOR 384, 512, 640/ Change of form of Detection ring	
				Draw. No.	B-65282EN/07-01, B-65292EN/06-01 B-65412EN/01-09	
01	13.07.17	A. Nishioka	New design	FANUC CORPORATION	PAGE	1／3
Edit	Date	Design	Description			

© MyFANUC 2D5504D5BAC945D385F48627D4977F6C

3. Outline

The Detection ring of αiBZ SENSOR 384, 512, 640 can be installed by screw clamp by the addition of the holes in the Detection ring. Following the addition of the holes, the material of the Detection ring is changed from a carbon steel to a chromium molybdenum steel.

NOTE
1 For other teeth numbers, the forms of the Detection ring are not changed.
2 Resolusion and accuracy, the installing method of Sensor head, the connection with a spindle amplifier, and the setting of the parameter are not changed.

4. Specifications

Sensor name	Spec. No. (x=0or5)	No. of teeth	Max. speed	Installing method of Detection ring
αiBZ SENSOR 384	A860-215x-T511	384	15,000 min^{-1}	(Before) Heat shrink fitting (After) Heat shrink fitting or Screw clamp
αiBZ SENSOR 512	A860-215x-T611	512	10,000 min^{-1}	
αiBZ SENSOR 640	A860-215x-T711	640	6,000 min^{-1}	

5. Dimensions

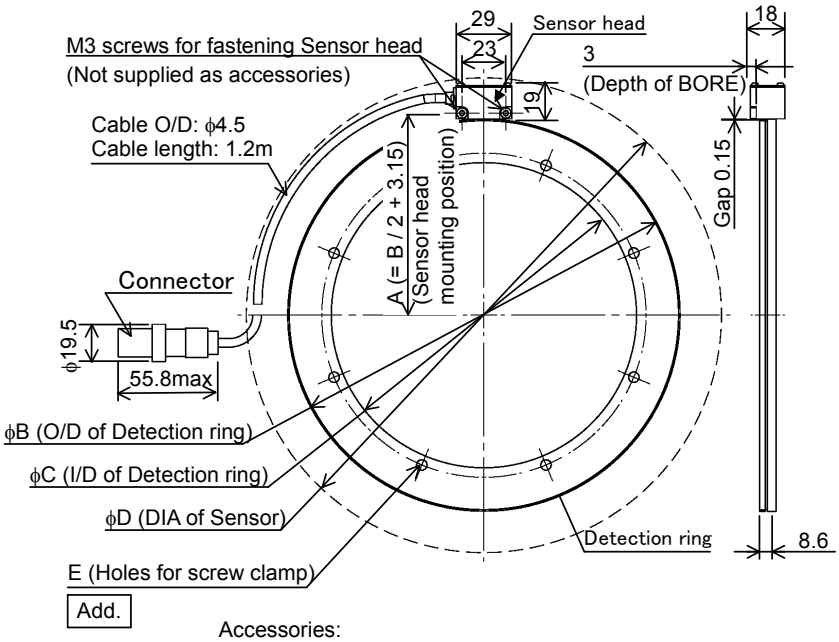

Accessories:
Parallel pin (JIS B 1354-1988, class A, normal diameter ϕ3, normal length 6) × 2
Feeler gauge (t = 0.15 mm) × 1

Sensor Spec.	No. of teeth	Dimensions (mm)				
		Sensor head mounting position A	Outer diameter of Detection ring ϕB	Inner diameter of Detection ring ϕC	Outer diameter of sensor ϕD	Holes for screw clamp E (Addition)
A860-215x-T511	384	80.35	154.4+0/-0.02	125+0.025/-0	198	8-ϕ4.5 through, ϕ134 P.C.D.
A860-215x-T611	512	105.95	205.6+0/-0.02	160+0.02/-0.005	249	8-ϕ5.5 through, ϕ170 P.C.D.
A860-215x-T711	640	131.55	256.8+0/-0.02	220+0/-0.025	300	8-ϕ5.5 through, ϕ230 P.C.D.

Edit	Date	Design	Description
01	13.07.17	A. Nishioka	New design

Title	αiBZ SENSOR 384, 512, 640/ Change of form of Detection ring
Draw. No.	B-65282EN/07-01, B-65292EN/06-01 B-65412EN/01-09
FANUC CORPORATION	PAGE 2／3

© MyFANUC 2D5504D5BAC945D385F48627D4977F6C

6. Installing the Detection ring

6-1. Installing the Detection ring by heat shrink fitting
The method of heat shrink fitting is not changed.

6-2. Installing the Detection ring by screw clamp
The Detection ring can be installed by screw clamp except by heat shrink fitting. The Detection ring is installed so that the height between the Detection ring mounting surface and the Sensor head mounting surface is 4.7 ± 0.2 mm.
And the runout of the inner diameter of the Detection ring is as small as possible.

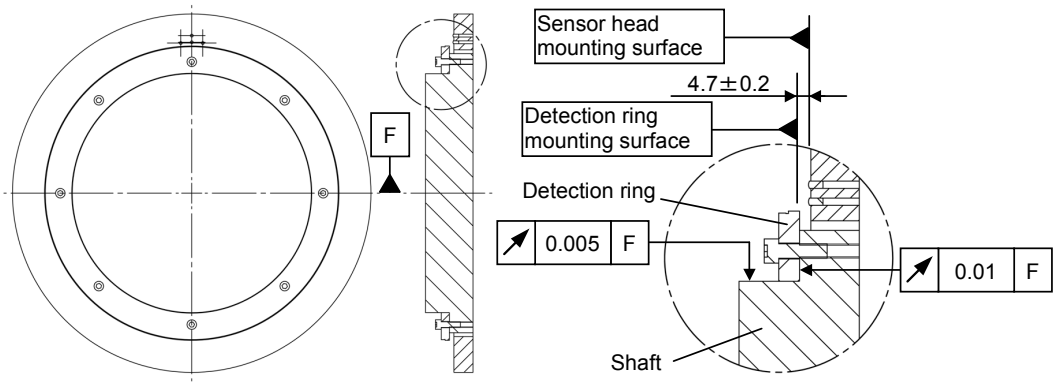

Sensor	Holes for screw clamp	Screw	Recommended torque to tighten screw
αiBZ SENSOR 384	8-ϕ4.5 through, ϕ134 P.C.D.	Hexagon socket head cap screw (Steel) M4	3.0Nm ± 5%
αiBZ SENSOR 512	8-ϕ5.5 through, ϕ170 P.C.D.	Hexagon socket head cap screw (Steel) M5	6.0Nm ± 5%
αiBZ SENSOR 640	8-ϕ5.5 through, ϕ230 P.C.D	Hexagon socket head cap screw (Steel) M5	6.0Nm ± 5%

The shaft described below is recommended.
The insertion part of the shaft is a taper, and the detection ring fitting part is designed so that the clearance between the diameter of the shaft and the inner diameter of the Detection ring is as small as possible.

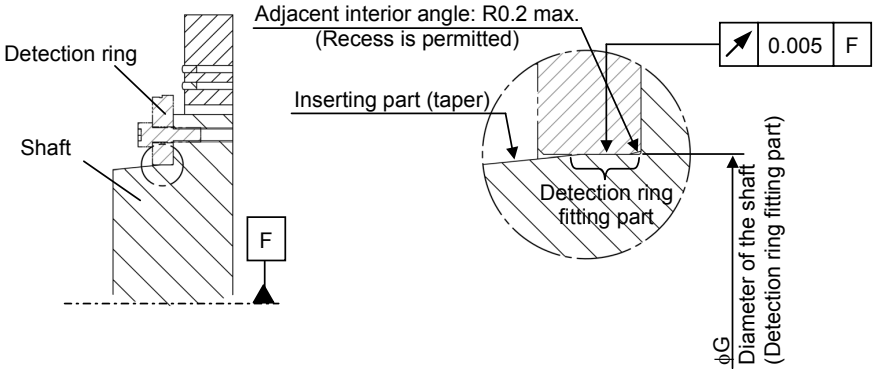

Sensor	Diameter of Detection ring fitting part (recommended) ϕG
αiBZ SENSOR 384	250+0.025/-0
αiBZ SENSOR 512	160+0.020/-0.005
αiBZ SENSOR 640	220+0/-0.025

Edit	Date	Design	Description
01	13.07.17	A. Nishioka	New design

Title	αiBZ SENSOR 384, 512, 640/ Change of form of Detection ring
Draw. No.	B-65282EN/07-01, B-65292EN/06-01 B-65412EN/01-09
FANUC CORPORATION	PAGE 3／3

© MyFANUC 2D5504D5BAC945D385F48627D4977F6C

© MyFANUC 2D5504D5BAC945D385F48627D4977F6C

An addition to
FANUC SERVO AMPLIFIER αi series DESCRIPTIONS

1. Type of applied technical documents

Name	FANUC SERVO AMPLIFIER αi series DESCRIPTIONS
Spec.No./Version	B-65282EN/06

2. Summary of change

Group	Name / Outline	New, Add, Correct, Delete	Applicable Date
Basic Function			
Optional Function			
Unit			
Maintenance parts			
Notice	Item of “NOTE REGARDING KOREAN KC MARK” is added to the end of “NOTE” of “WARNING AND CAUTIONS RELATING TO MOUNTING” in the section of “SAFETY PRECAUTIONS”.	Add	Immediately
Correction			
Another			

				TITLE An addition to FANUC SERVO AMPLIFIER αi series DESCRIPTIONS	
01	13.08.15	Ushiyama	First issue	DRAW. NO. B-65282EN/06-32	CUST.
EDIT.	DATE	DESIG.	DESCRIPTION	FANUC CORPORATION	SHEET 1/2

© MyFANUC 2D5504D5BAC945D385F48627D4977F6C

NOTE REGARDING KOREAN KC MARK

NOTE

This equipment is industrial (Class A) electromagnetic wave suitability equipment and seller or user should take notice of it, and this equipment is to be used in the places except for home.

이 기기는 업무용(A 급) 전자파적합기기로서 판 매자 또는 사용자는 이 점을 주의하시기 바라며, 가정외의 지역에서 사용하는 것을 목적으로 합니다.

				TITLE	
				DRAW. NO. B-65282EN/06-32	CUST.
EDIT.	DATE	DESIG.	DESCRIPTION	FANUC CORPORATION	SHEET 2/2

© MyFANUC 2D5504D5BAC945D385F48627D4977F6C

Revision of Energy Charge Module (ECM)

1. Type of applied documents

Name	FANUC SERVO AMPLIFIER αi series DESCRIPTIONS
Spec. No./Ver.	B-65282EN/07-03

2. Summary of Change

Group	Name / Outline	New, Add Correct, Del	Applicable Date
Basic Function	Revision of Energy Charge Module (ECM)	Add	2014.3
Optional Function			
Unit			
Maintenance Parts			
Notice			
Correction			
Another			

				TITLE Revision of Energy charge module (ECM)	
01	14.03.25	K.SAKAI	Newly added S.Horikoshi	DRAW. No. B-65282EN/07-03	CUST.
Ed.	Date	Design.		FANUC CORPORATION	SHEET 1/8

© MyFANUC 2D5504D5BAC945D385F48627D4977F6C

1. Outline

From the Control module unit edition number C shipped from March 2014 of energy charge module (ECM), the position of the setting switch (SW2) and connector are changed. How to set the switch and how to connect to the connector is equivalent to the conventional.
Unit edition number can be confirmed by the following nameplate.

[Unit Edition number]
Control module (A06B-6158-H010) unit edition number C

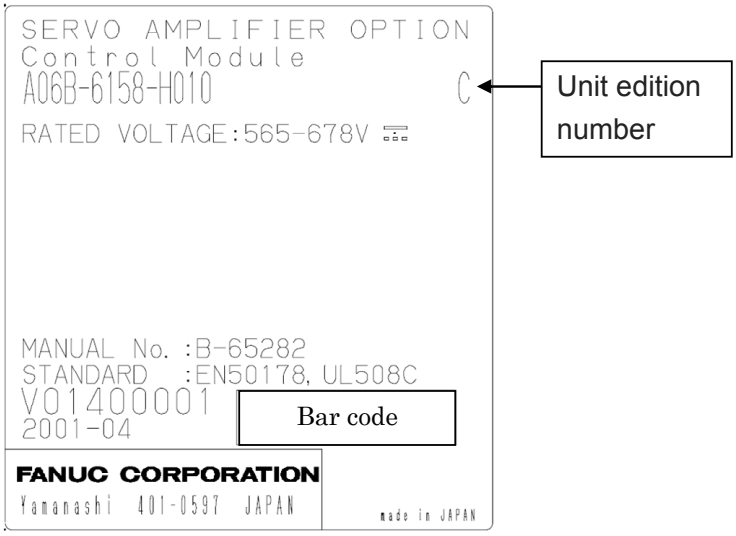

Unit edition number ~ B : Shipment until February 2014
C~ : Shipment from March 2014

[Change a contents of the unit edition number C]
The setting switch SW2 is moved to front of face

Note)
This report describes the items that have been added by the revision.
About specifications description, please refer to FANUC SERVO AMPLIFIER αi series DESCRIPTIONS B-65282JA/07.

© MyFANUC 2D5504D5BAC945D385F48627D4977F6C

2. Position of switch and connector

[In the case of unit edition number ~ B (Shipment until February 2014)]

Control module

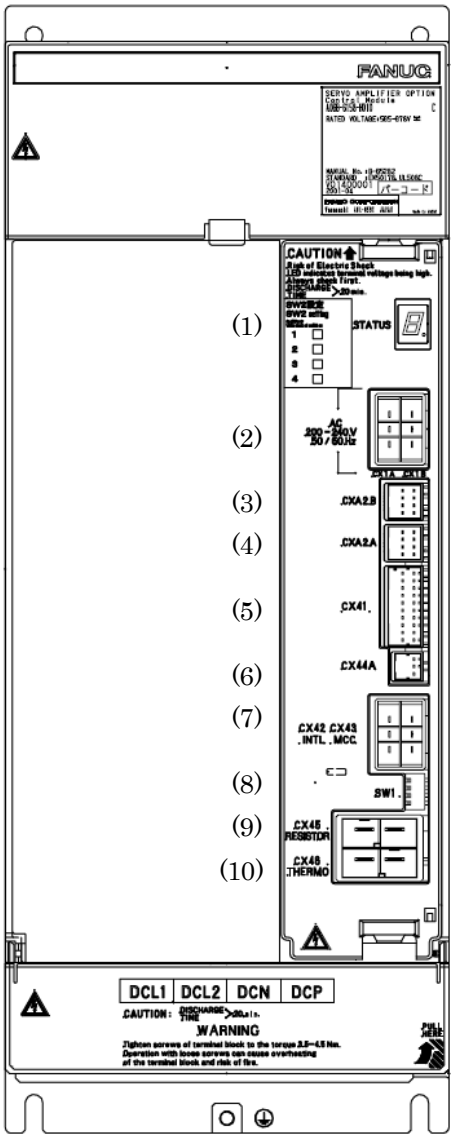

No.	Name	Display	Remarks
1	LED status display	STATUS	
2	Unused	CX1	
3	Connector for αiPS interface Input	CXA2B	
4	Connector for αiPS interface Input	CXA2A	
5	Connector for DI/DO	CX41	
6	Connector for Fuse disconnection detection	CX44A	
7	Not used	CX42・43	
8	Setting switch (SW1)	SW1	
9	Connector for Discharge Resistor	CX45	
10	Connector for Thermostat	CX46	

© MyFANUC 2D5504D5BAC945D385F48627D4977F6C

[In the case of unit edition number C~ (Shipment from March 2014)]

Control module

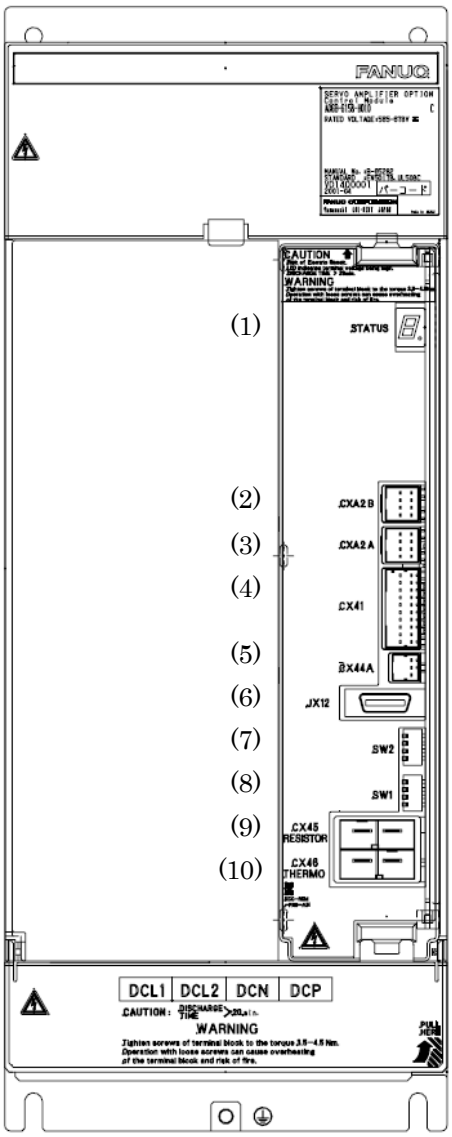

No.	Name	Display	Remarks
1	LED status display	STATUS	
2	Connector for αiPS interface Input	CXA2B	
3	Connector for αiPS interface Input	CXA2A	
4	Connector for DI/DO	CX41	
5	Connector for Fuse disconnection detection	CX44A	
6	Not used	JX12	Do not Connect
7	Setting switch (SW2)	SW2	
8	Setting switch (SW1)	SW1	
9	Connector for Discharge Resistor	CX45	
10	Connector for Thermostat	CX46	

© MyFANUC 2D5504D5BAC945D385F48627D4977F6C

3. Function setting switch in Control Module

- There is a setting switch (SW2) for changing the following functions in the control module of ECM.

[Function by setting switch]

Switch	Function	Position	Setting
SW2, No1	Select of charge method to capacitor module of ECM	OFF (Factory setting)	Charge energy from motor
		ON	Charge energy from power source (used when regenerative energy from the motor is not expected)
SW2, No2	Charge method of regenerative braking energy	OFF (Factory setting)	All the regenerative braking energy is charged to capacitor from the start of motor deceleration
		ON	Regenerative energy which excess the energy supply start level is charged to capacitor.
SW2, No3	Select pattern of energy supply start level	OFF (Factory setting)	Pattern1, maximum value 110kW (source voltage 400Vrms)
		ON	Pattern1, maximum value 185kW (source voltage 400Vrms)
SW2, No.4	Not used	-	-

[Setting method]

- The position of setting switch (SW2) is different by the unit edition number.

[In the case of unit edition number ~ B (Shipment until February 2014)]

- A setting switch is on the print board of a control module. Since the position of the switch cannot check from the outside at the time of maintenance, when a switch is changed form factory setting, please record the position of the switch on the sheet of face plate with pen etc.

© MyFANUC 2D5504D5BAC945D385F48627D4977F6C

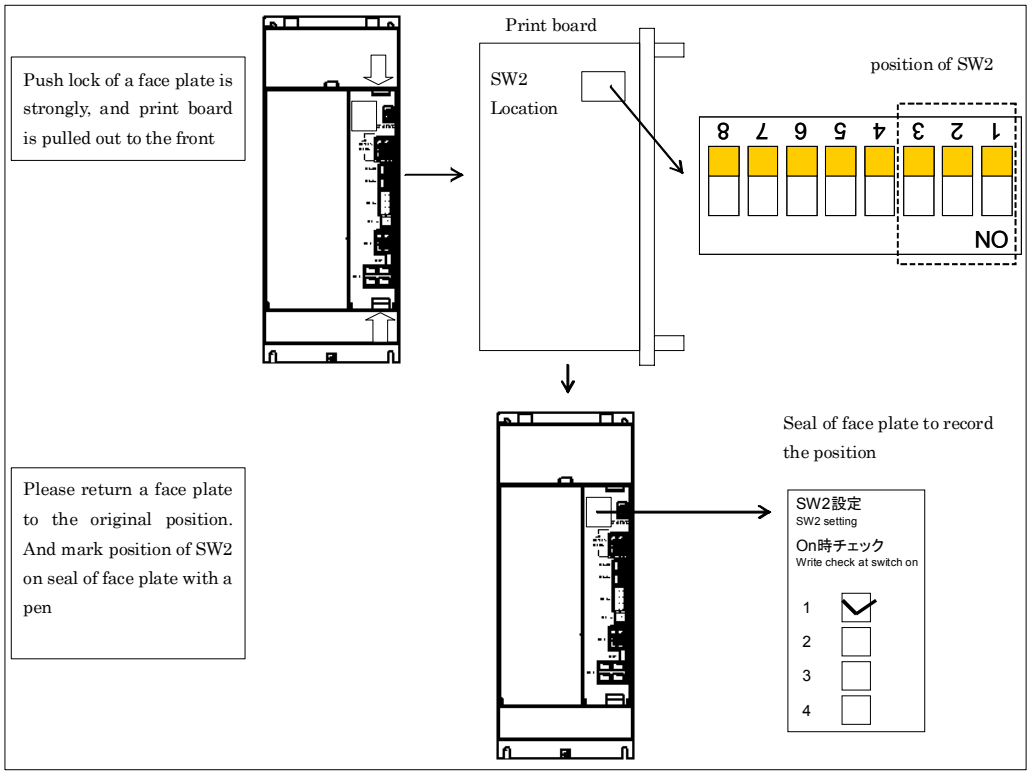

				TITLE	Revision of Energy charge module (ECM)
				DRAW. No.	B-65282EN/07-03	CUST.
Ed.	Date	Design.		FANUC CORPORATION	SHEET 6/8

© MyFANUC 2D5504D5BAC945D385F48627D4977F6C

[In the case of unit edition number C~ (Shipment from March 2014)]

- Setting switch (SW2), located on the front of the control module.

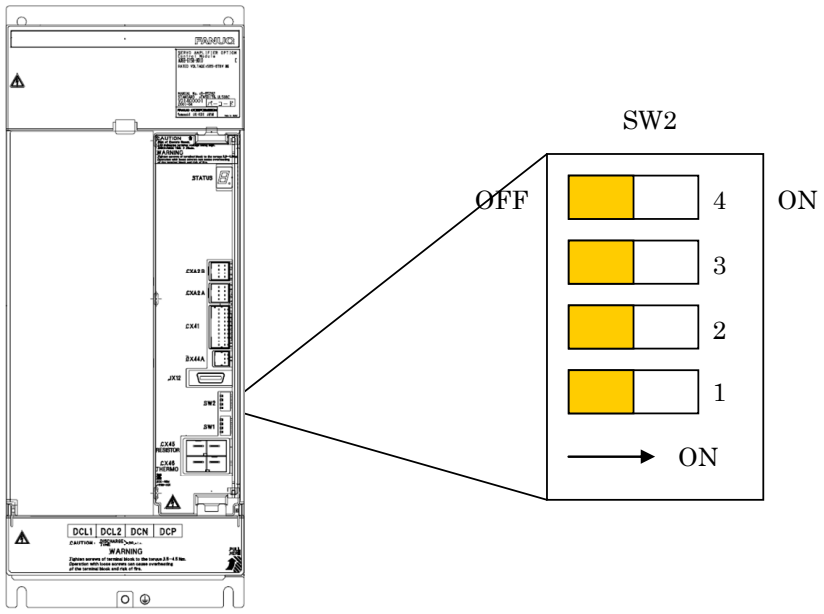

				TITLE Revision of Energy charge module (ECM)	
				DRAW. No. B-65282EN/07-03	CUST.
Ed.	Date	Design.		FANUC CORPORATION	SHEET 7/8

© MyFANUC 2D5504D5BAC945D385F48627D4977F6C

4. Replacement of Fuse on printed circuit board

Position of the fuse on the printed circuit board is different. Fuse specifications are the same.

[In the case of unit edition number ~ B (Shipment until February 2014)]

Model	Specification number
Control Module	A20B-2101-0600

Control Module
Fuse on printed circuit board A20B-2101-0600

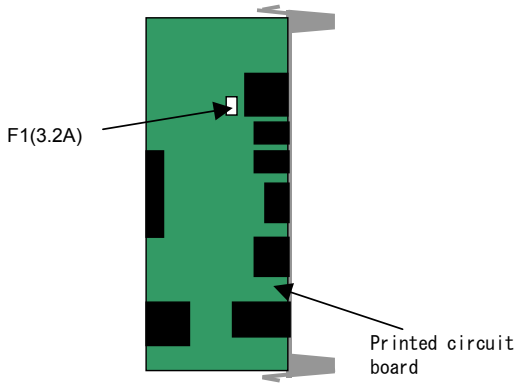

[In the case of unit edition number C~ (Shipment from March 2014)]

Model	Specification number
Control Module	A20B-2102-0460

Control Module
Fuse on printed circuit board A20B-2102-0460

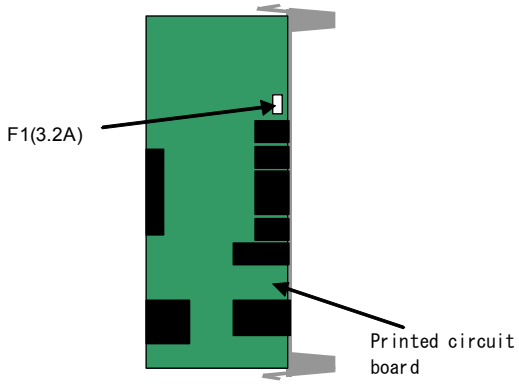

Fuse specification

Symbol	Specification number
F1	A60L-0001-0290/LM32C

© MyFANUC 2D5504D5BAC945D385F48627D4977F6C

UL standard of the Dynamic Brake Module (DBM)

1. Type of applied technical documents

Name	FANUC SERVO AMPLIFIER αi series DESCRIPTIONS FANUC SERVO AMPLIFIER αi-B series DESCRIPTIONS
Spec.No./Version	B-65282EN/07-04 B-65412EN/02-02

2. Summary of change

Group	Name / Outline	New, Add, Correct, Delete	Applicable Date
Basic Function			
Optional Function			
Unit			
Maintenance parts			
Notice			
Correction			
Another			

© MyFANUC 2D5504D5BAC945D385F48627D4977F6C

1. Summary

Dynamic Brake Module (DBM) has been applied to UL standard by changing terminal blocks.

2. Target DBM models

The manufacture dates of the target DBM are as follow.

Specifications	The dates of manufacture (Serial number)	Remarks
A06B-6079-H401	After Jun/2015 (V15698275~)	For 200V type
A06B-6069-H300	After Mar/2016 (V16397447~)	
A06B-6079-H403	After May/2015 (V15597337~)	For 24V type
A06B-6069-H301	After Mar/2016 (V16397706~)	

© MyFANUC 2D5504D5BAC945D385F48627D4977F6C

3. Changed contents

- UL mark is added
- Shapes of terminal blocks are changed

3.1. UL mark is added

UL mark added to the labels.
[Target models]
- A06B-6079-H401
- A06B-6079-H403

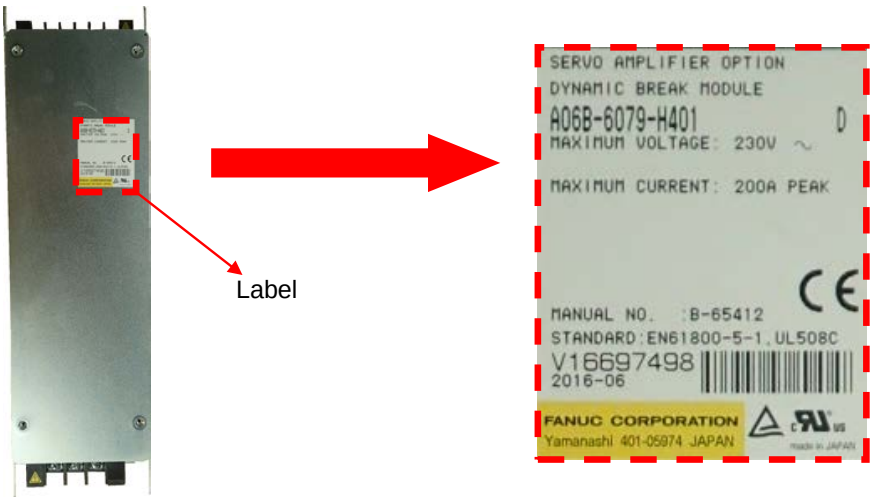

[Target models]
- A06B-6069-H300
- A06B-6069-H301

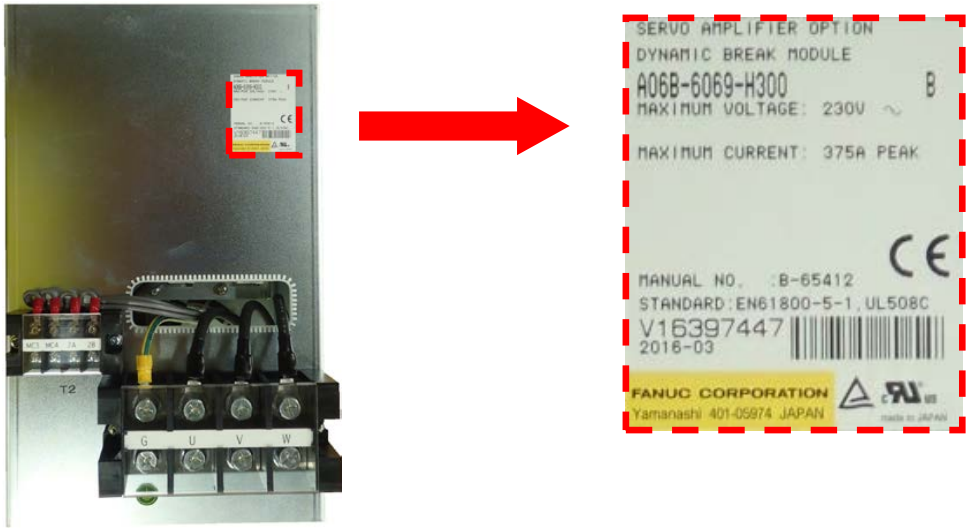

© MyFANUC 2D5504D5BAC945D385F48627D4977F6C

3.2. Shapes of terminal blocks are changed

Shapes of terminal blocks are changed for UL standard.

[Target models]

- A06B-6079-H401
- A06B-6079-H403

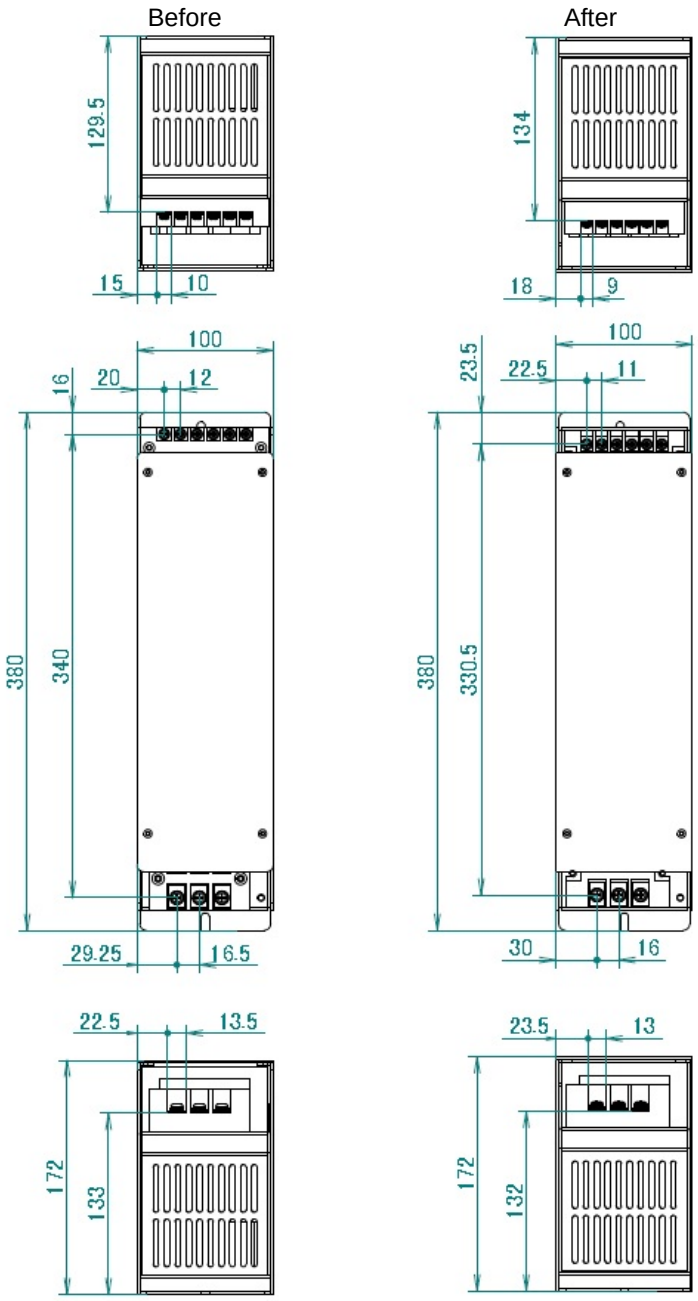

It is not necessary to change crimping terminals.

*The unit is “mm”

				TITLE UL standard of the Dynamic Brake Module (DBM)		
				DRAW. NO. B-65282EN/07-04 B-65412EN/02-02	Cust.	
EDIT.	DATE	DESIG	DESCRIPTION	FANUC CORPORATION	Page	4/6

© MyFANUC 2D5504D5BAC945D385F48627D4977F6C

[Target models]

- A06B-6069-H300
- A06B-6069-H301

Before

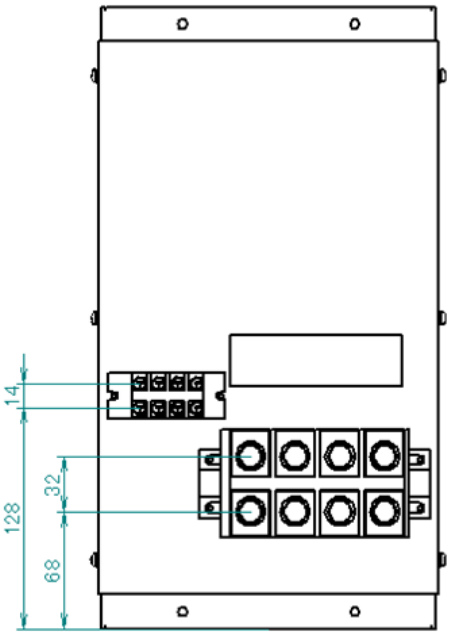

After

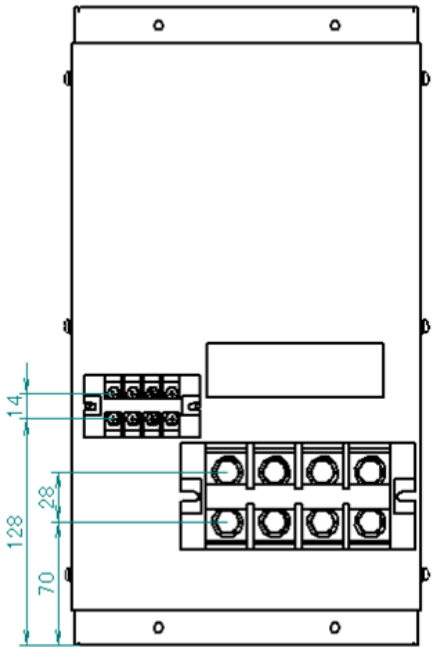

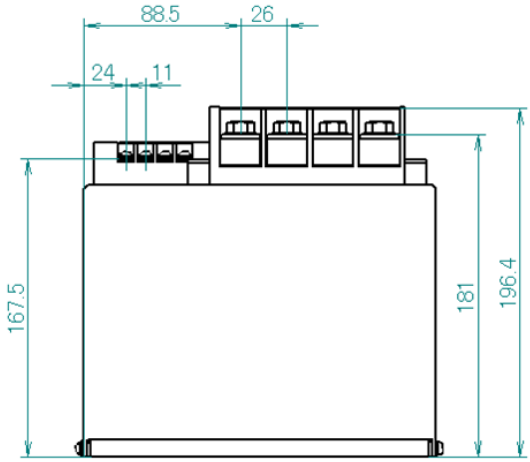

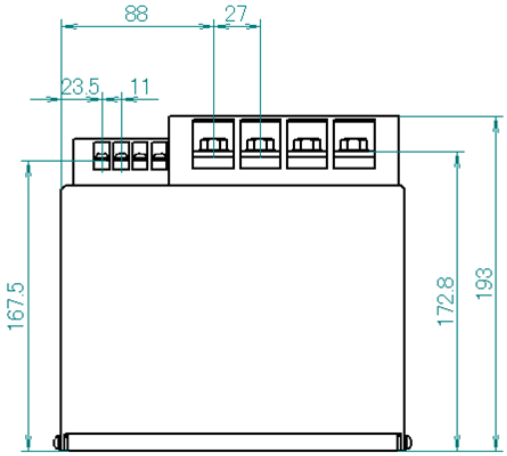

It is not necessary to change crimping terminals.

*The unit is “mm”

				TITLE UL standard of the Dynamic Brake Module (DBM)		
				DRAW. NO. B-65282EN/07-04 B-65412EN/02-02	Cust.	
EDIT.	DATE	DESIG	DESCRIPTION	FANUC CORPORATION	Page	5/6

© MyFANUC 2D5504D5BAC945D385F48627D4977F6C

4. Others

Please refer to the following descriptions for connection of cable.

- B-65282JA " FANUC SERVO AMPLIFIER αi series DESCRIPTIONS".
- B-65412JA " FANUC SERVO AMPLIFIER αi -B series DESCRIPTIONS".

© MyFANUC 2D5504D5BAC945D385F48627D4977F6C

Multiple language support for warnings

1. Type of applied technical documents

Name	FANUC SERVO AMPLIFIER αi series DESCRIPTIONS FANUC SERVO AMPLIFIER αi-B series DESCRIPTIONS
Spec. No./Version	B-65282EN/07 B-65412EN/02

2. Summary of Change

Group	Name/Outline	New, Add Correct, Delete	Applicable Date
Basic Function			
Optional Function	Multiple language support for warnings	Add	Dec. 2016
Unit			
Maintenance Parts			
Notice			
Correction			
Another			

Ed.	Date	Design	Description

Date	16.11.29	Desig.	Yamamoto	Check		Apprv.	Takeshita

Title	Multiple language support for warnings
Draw No.	B-65282EN/07-05 B-65412EN/02-04

FANUC CORPORATION

© MyFANUC 2D5504D5BAC945D385F48627D4977F6C

Multiple language support for warnings

1. Summary

Warning labels for the αi series servo amplifier and αi-B series servo amplifier are available in different languages.
If required by the law or standard of the country concerned, use the labels translated into the relevant language.
This time, Romanian label was added.

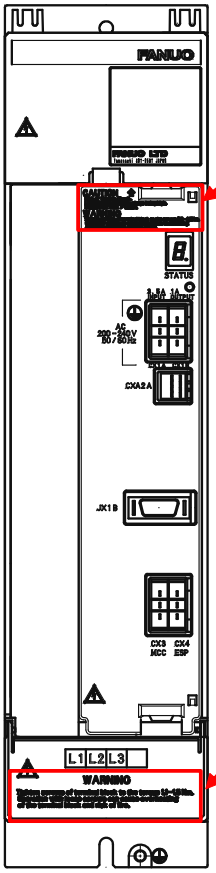

<1> Warning about electric shock and screw tightening torque for the DC link terminal

CAUTION
Risk of Electric Shock.
LED indicates terminal voltage being high.
DISCHARGE TIME > 20min.
WARNING
Tighten screws of terminal block to the torque 3.5-4.5Nm.
Operation with loose screws can cause overheating of the terminal block and risk of fire.

Example: Label translated into French

ATTENTION
Risque de choc électrique
La LED indique la présence de tension sur les bornes.TEMPS DE DECHARGE > 20 min.
AVERTISSEMENT
Serrez les vis du bloc de connexion avec un couple de 3,5 Nm à 4,5 Nm.Le fonctionnement avec des vis desserrées peut entraîner une surchauffe du bloc de connexion et provoquer éventuellement un incendie.

<2> Warning about screw tightening torque for the input/output terminal

WARNING
Tighten screws of terminal block to the torque 1.1-1.5Nm.
Operation with loose screws can cause overheating of the terminal block and risk of fire.

Example: Label translated into French

AVERTISSEMENT
Serrez les vis du bloc terminal au couple suivant (M4=1.1-1.5Nm, M6=3.5-4.5Nm, M10=15-16Nm).
L'utilisation avec des vis desserrées peut causer la surchauffe du bloc terminal et un risque de feu.

Ed.	Date	Design	Description

Date	16.11.29	Desig.	Yamamoto	Check		Apprv.	Takeshita

Title	Multiple language support for warnings
Draw No.	B-65282EN/07-05 B-65412EN/02-04
FANUC CORPORATION	Page 2/3

© MyFANUC 2D5504D5BAC945D385F48627D4977F6C

2. Ordering number

The following table lists the ordering numbers.

Ordering numbers for the label sets of <1> and <2>

Language	Label for a set of <1>and <2>	Number of label
French	A06B-6110-K513#FR	Set of 100
German	A06B-6110-K513#GE	Set of 100
Italian	A06B-6110-K513#IT	Set of 100
Turkish	A06B-6110-K513#TU	Set of 100
Dutch	A06B-6110-K513#DU	Set of 100
Danish	A06B-6110-K513#DA	Set of 100
Portuguese	A06B-6110-K513#POR	Set of 100
Polish	A06B-6110-K513#POL	Set of 100
Hungarian	A06B-6110-K513#HU	Set of 100
Swedish	A06B-6110-K513#SW	Set of 100
Czech	A06B-6110-K513#CZ	Set of 100
Spanish	A06B-6110-K513#SP	Set of 100
Russian	A06B-6110-K513#RU	Set of 100
Finnish	A06B-6110-K513#FI	Set of 100
Chinese	A06B-6110-K513#CH	Set of 100
Japanese	A06B-6110-K513#JP	Set of 100
Korean	A06B-6110-K513#KO	Set of 100
Romanian	A06B-6110-K513#RO	Set of 100

←added

© MyFANUC 2D5504D5BAC945D385F48627D4977F6C

© MyFANUC 2D5504D5BAC945D385F48627D4977F6C

Connection of 3rd party spindle sensor

1. Type of applied documents

Name	FANUC SERVO AMPLIFIER αi series DESCRIPTIONS FANUC SERVO AMPLIFIER αi-B series DESCRIPTIONS FANUC SERVO AMPLIFIER βi series DESCRIPTIONS FANUC SERVO AMPLIFIER βi-B series DESCRIPTIONS
Spec.No./Ver.	B-65282EN/07 B-65412EN/02 B-65322EN/03 B-65422EN/02

2. Summary of Change

Group	Name / Outline	New,Add Correct,Del	Applicable Date
Basic Function			
Optional Function			
Unit			
Maintenance Parts			
Notice			
Correction	Correction of supported interface (Non-support to α interface)	Correct	Immediate
Another	Addition of applied amplifiers Update of supported thermal sensors	Add	Immediate

Edit	Date	Design	Description
03	2017.03.10	Tsuchida	1,2,9,11-13,15,16,18-20/20 T.Sasaki
02	2014.04.17	Hirayama	1,13,15/18 T.Sasaki

Date	2013.03.07	Desig.	Makita	Apprv.	M.Taniguchi

Title	Connection of 3rd party spindle sensor
Draw No.	B-65282EN/07-06, B-65412EN/02-06 B-65322EN/03-10, B-65422EN/02-03

FANUC CORPORATION

© MyFANUC 2D5504D5BAC945D385F48627D4977F6C

Connection of 3rd party spindle sensor

1.Applied Unit

This manual is applied to following amplifier, when 3rd party spindle sensor is used.

03

Model name	Specification
αiSP TYPE A (200V)	A06B-6141-Hxxx#H580
(400V)	A06B-6151-Hxxx#H580
αiSP TYPE B (200V)	A06B-6142-Hxxx#H580 A06B-6144-Hxxx#H590
(400V)	A06B-6152-Hxxx#H580 A06B-6154-Hxxx#H590
αiSP-B (200V)	A06B-6220-Hxxx#H600
(400V)	A06B-6270-Hxxx#H600
Level-up αiSP-B (200V)	A06B-6222-Hxxx#H610
(400V)	A06B-6272-Hxxx#H610
αiSVP-B (200V)	A06B-6230-H001#H600
(400V)	A06B-6280-H001#H600
Level-up αiSVP-B (200V)	A06B-6232-H00x#H610
(400V)	A06B-6282-H001#H610
βiSVSP for 0i-D series	A06B-6164-Hxxx#H580
βiSVSP-B (200V)	A06B-6320-Hxxx A06B-6321-Hxxx
βiSVSP-B (400V)	A06B-6330-Hxxx A06B-6331-Hxxx

© MyFANUC 2D5504D5BAC945D385F48627D4977F6C

2. Electrical Specification of the spindle sensor signal

2.1. Connectors Supporting Sensor Signals

Spindle amplifier supports the following spindle sensor signal.

- 1Vpp sine wave signal（Connector of Spindle Amplifier：JYA2、JYA4）
- Square wave signal（Connector of Spindle Amplifier：JYA3）
- Serial output signal（Connector of Spindle Amplifier：JYA3）

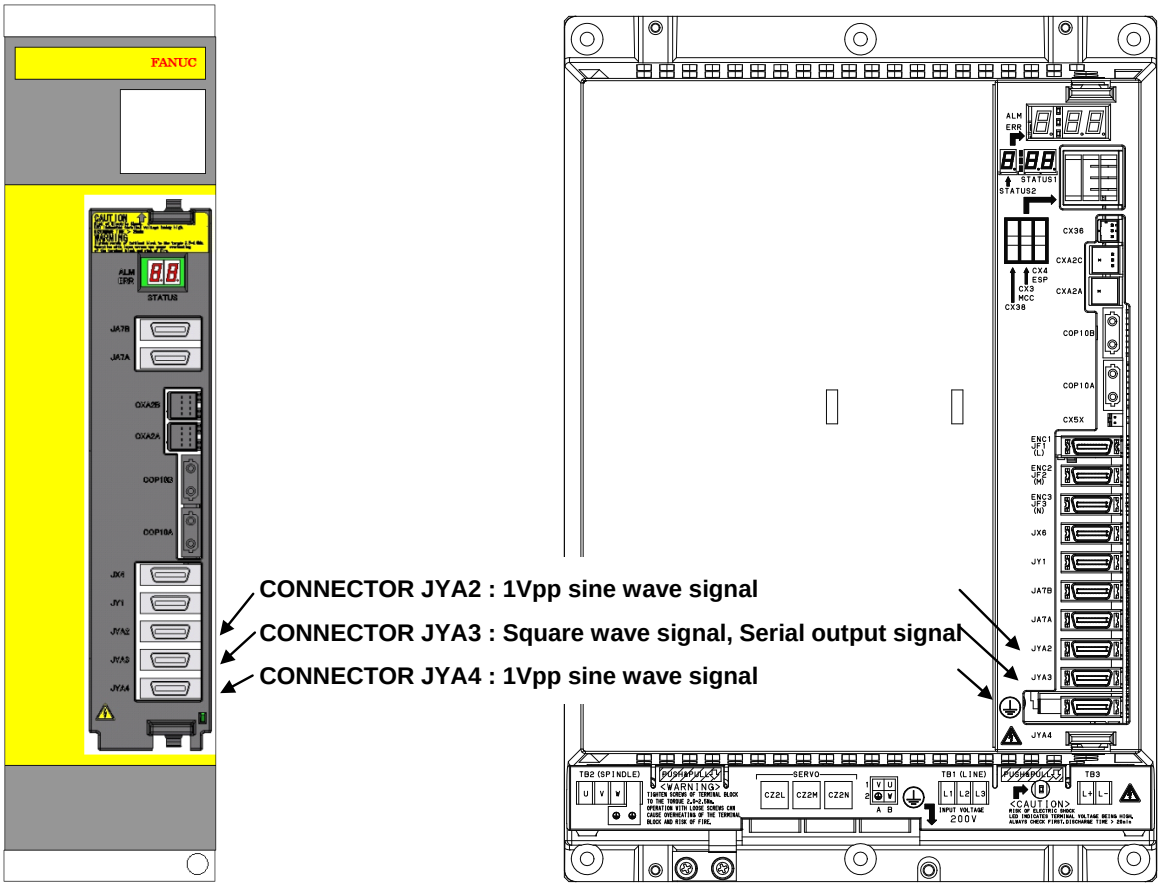

（a） αiSP-B amplifier
(αiSP is same as αiSP-B)

（b） βiSVSP amplifier

Edit	Date	Design	Description
Date		Desig.	Apprv.

Title	Connection of 3rd party spindle sensor
Draw No.	B-65282EN/07-06, B-65412EN/02-06 B-65322EN/03-10, B-65422EN/02-03

FANUC CORPORATION

© MyFANUC 2D5504D5BAC945D385F48627D4977F6C

2.2. Signals for JYA2 and JYA4 inputs

2.2.1 A,B,Z phase unprocessed signals

Waveform 1 (A, B phase signal)

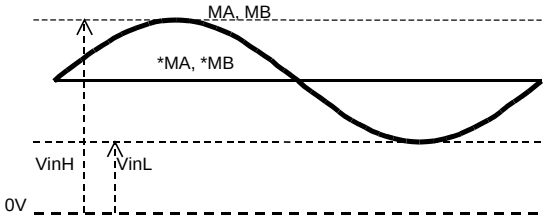

Waveform 2 (A, B phase signal)

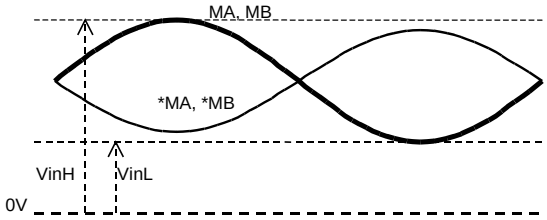

Waveform 3 (Z phase signal)

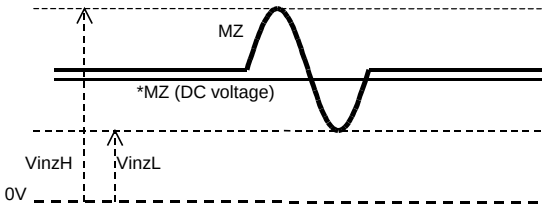

Waveform 4 (Z phase signal)

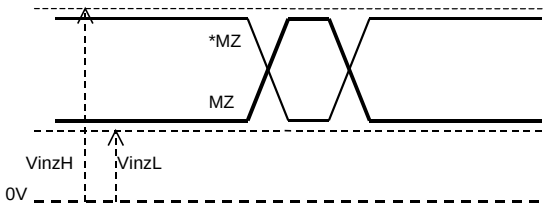

		Symbol	Related check point	Value
1	Input impedance	Rin		100kΩ typ.
2	Power Supply to Sensor	Vcc (Vdd = 0V)	JYA2-pin9,18,20 JYA4-pin9,18,20	5Vdc±5%, 300mA Max
3	Input voltage (MA,*MA, MB, *MB)	VinL VinH	MA JYA2-pin5, JYA4-pin5 *MA JYA2-pin6, JYA4-pin6 MB JYA2-pin7, JYA4-pin7 *MB JYA2-pin8, JYA4-pin8	VinH = 3.5V Max VinL = 1.5V Min
4	Input voltage (MZ, *MZ)	VinzL VinzH	MZ JYA2-pin1, JYA4-pin1 *MZ JYA2-pin2, JYA4-pin2	VinzH = Vcc Max VinzL = 0V Min
5	Sine wave counts per one revolution			128~32767, 32768~65534 (only even number is acceptable)
6	Maximum frequency	Fmax		400kHz

© MyFANUC 2D5504D5BAC945D385F48627D4977F6C

2.2.2 1Vpp sine wave signals A,B phase (differential signals)

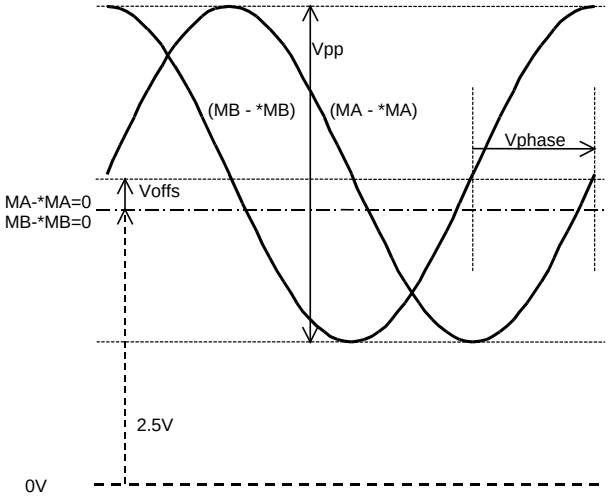

		Symbol	Related Check Point	Value
1	Signal Amplitude (MA - *MA, MB - *MB)	Vpp	(from JYA2) PA1,PB1 (from JYA4) PA2,PB2	0.60Vpp Min, 1.2Vpp Max (including acceptable error)
2	Signal Offset (MA - *MA, MB - *MB)	Voffs		±100mV Max
3	Signal Amplitude Difference (MA - *MA) / (MB - *MB)	Vppdef		1.00±0.10 Max
4	Phase Offset (MA - *MA, MB - *MB)	Vphase		90±3deg

Note)
After connecting to spindle amplifier, please check that the amplitude of the signal is within the specified value.

© MyFANUC 2D5504D5BAC945D385F48627D4977F6C

2.2.3 Driver type Z phase signals (differential signals)

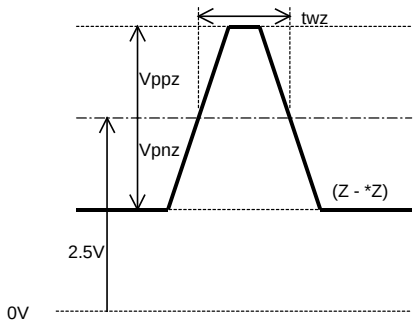

		Symbol	Check Terminal	Value
1	Pulse Width (MZ - *MZ)	twz	(from JYA2) PS1 (from JYA4) PS2	2.5 micro sec Min
2	Signal Amplitude of Reference signal (MZ - *MZ)	Vppz		0.23V Min
		Vpnz		0.23V Min

Note)
Z phase signal is generated only one per rotation.
When a spindle sensor with distance-coded reference mark is used, please refer to B-65280EN/08-26.
The following amplifier cannot be used with a spindle sensor with distance-coded reference mark .

- βiSVSP for 0i-D series: A06B-6164-Hxxx#H580
- αiSP TYPE A: A06B-6141-Hxxx#H580, A06B-6151-Hxxx#H580
- αiSP TYPE B: A06B-6142-Hxxx#H580, A06B-6152-Hxxx#H580

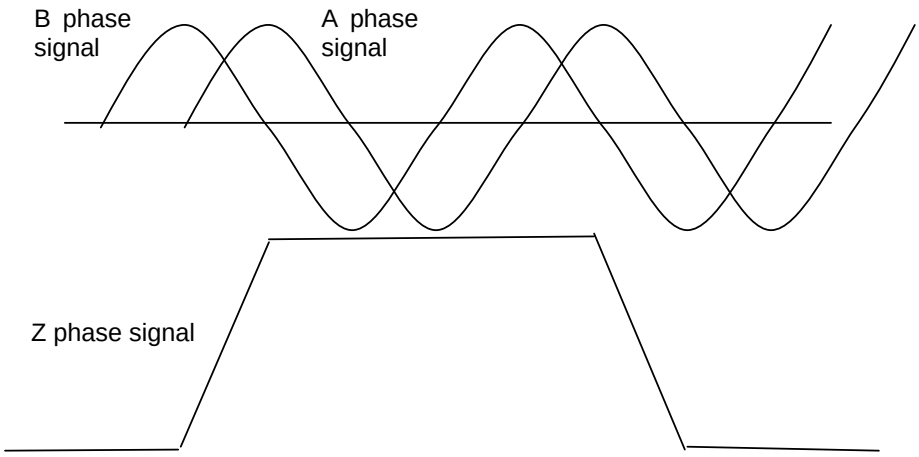

© MyFANUC 2D5504D5BAC945D385F48627D4977F6C

2.2.4 Sine wave signals Z phase (αiMZ /αiBZ sensor compatible: differential signal)

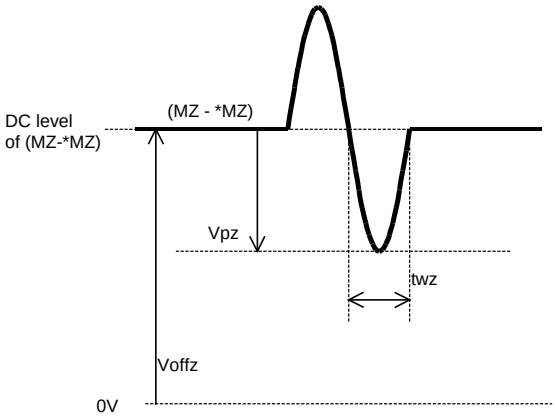

		Symbol	Check Terminal	Value
1	Pulse Width (MZ - *MZ)	twz	(from JYA2) PS1	2.5 μsec min
2	Signal Amplitude of Reference signal (MZ - *MZ)	Vpz	(from JYA4) PS2	0.23V min
3	DC Signal Offset (Z - *Z)	Voffz		3.5V Max 2V Min

Note)

Z phase signal is generated only one per rotation.

When a spindle sensor with distance-coded reference mark is used, please refer to B-65280EN/08-26.

The following amplifier cannot be used with a spindle sensor with distance-coded reference mark .

- βiSVSP for 0i-D series: A06B-6164-Hxxx#H580
- αiSP TYPE A: A06B-6141-Hxxx#H580, A06B-6151-Hxxx#H580
- αiSP TYPE B: A06B-6142-Hxxx#H580, A06B-6152-Hxxx#H580

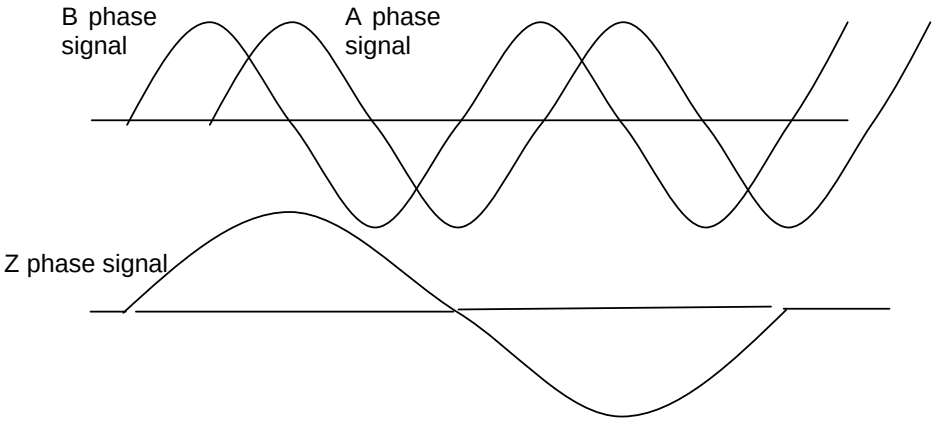

© MyFANUC 2D5504D5BAC945D385F48627D4977F6C

2.2.5 Turn of A/B phase signals

The relation between A/B phase signal and the direction of rotation is as follows.
Note) If the turn of A/B phase signals are the reverse, our circuit distinguishes CCW .

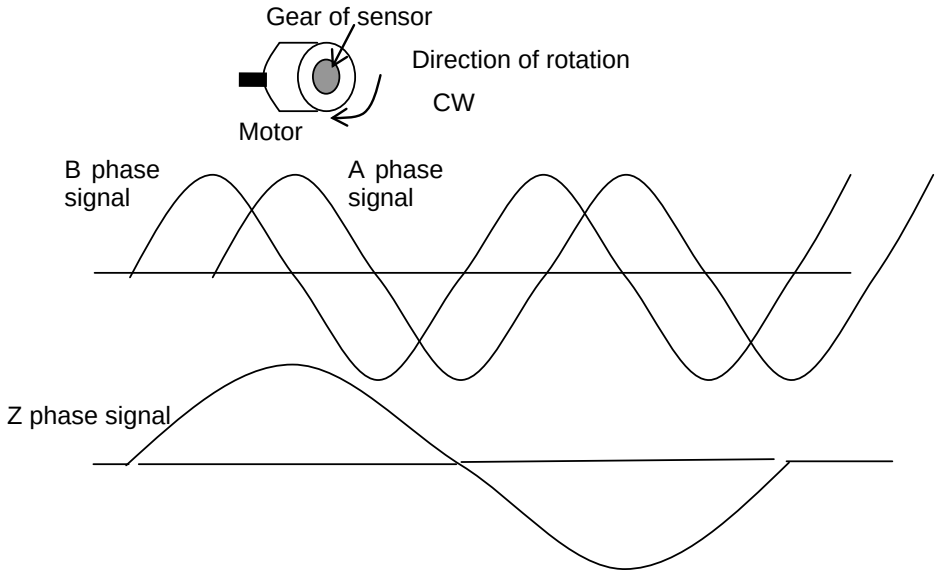

2.2.6 Notes

A. αiSP, αiSP-B and βiSVSP do not include terminating resistor. Matching of specification between sensor outputs and αiSP, αiSP-B and βiSVSP inputs should be considered terminating resistor. If terminating resistor is required to match the input range (2.2.1 absolute value and 2,2.2 differential value), please insert it outside of the αiSP, αiSP-B and βiSVSP.

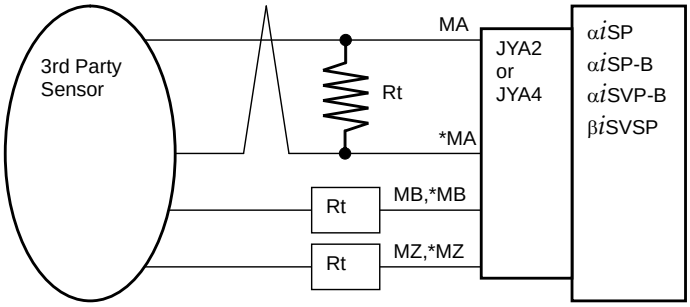

Rt is defind in specification of 3rd party sensor.

Edit	Date	Design	Description

Date		Desig.		Apprv.	

Title	Connection of 3rd party spindle sensor
Draw No.	B-65282EN/07-06, B-65412EN/02-06 B-65322EN/03-10, B-65422EN/02-03

FANUC CORPORATION

© MyFANUC 2D5504D5BAC945D385F48627D4977F6C

(03) Level-up αiSP-B and Level-up αiSVP-B include a terminating resistor (120 Ω), and terminating resistors (120 Ω) can be set by using the following parameters.

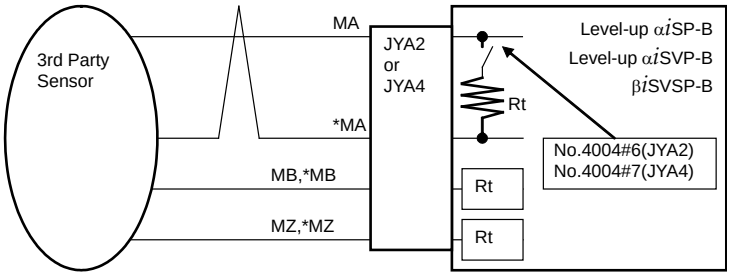

Rt is defind in specification of 3rd party sensor.

[JYA2]	No.4004#6=0 : (Disables 120Ω terminating resistor),
	No.4004#6=1 : (Enables 120 Ω terminating resistor)
[JYA4]	No.4004#7=0 : (Disables 120Ω terminating resistor),
	No.4004#7=1 : (Enables 120 Ω terminating resistor)

B. Setting for reference signal.

When αiMZ or αiBZ sensor compatible type is not used, please select driver type setting.

© MyFANUC 2D5504D5BAC945D385F48627D4977F6C

2.3. Signals for JYA3 inputs

2.3.1 Square wave A, B, Z phase (unprocessed signal)

		Symbol	Check terminal	Value
1	Input impedance	Rin		150Ω typ.
2	Power supply to sensor	Vcc (Vdd = 0V)	JYA3-pin9,18,20	5Vdc±5%, 350mAMax
3	Input voltage of A,B phase (PAC,*PAC, PBC,*PBC)	VinL VinH	PAC JYA3-pin5 *PAC JYA3-pin6 PBC JYA3-pin7 *PBC JYA3-pin8	VinH = 2.5V Min VinL = 0.5V Max (In accordance with RS422)
4	A,B phase offset (PAC,*PAC, PBC,*PBC)	Vphase		90±3deg
5	Input voltage of Z phase (PSC, *PSC)	VinzL VinzH	PSC JYA3-pin1 *PSC JYA3-pin2	VinH = 2.5V Min VinL = 0.5V Max (In accordance with RS422)
6	Z phase width (PSC, *PSC)	Twz	PSC JYA3-pin1 *PSC JYA3-pin2	2.5 micro sec Min
7	Square wave counts per one revolution			128~32767, 32768~65534 (Only even number is acceptable.)
8	Maximum frequency	Fmax		400kHz

normal width Z phase signal

Z phase width>T/2

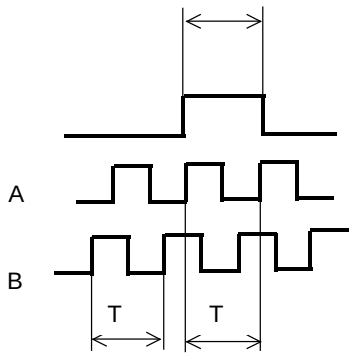

narrow width Z phase signal

Z phase width<= T/2

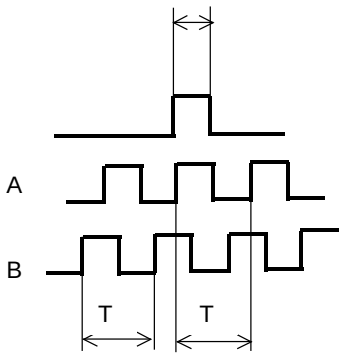

© MyFANUC 2D5504D5BAC945D385F48627D4977F6C

2.3.2 Spindle sensor of Serial interface (03)

Please use a sensor adapted to αi interface ~~or α interface~~.

Note)

HEIDENHAIN has two types of serial sensors which adopt αi interface. One is “single-turn” sensor and the other is “multi-turn” sensor. FANUC’s Spindle Amplifiers support only “single-turn” sensor.

αi interface

Applied Unit

	Model name	Specification
	αiSP TYPE B	A06B-6144-Hxxx#H590 ,A06B-6154-Hxxx#H590
(03)	αiSP-B	A06B-6220-Hxxx#H600, A06B-6270-Hxxx#H600 A06B-6222-Hxxx#H610, A06B-6272-Hxxx#H610
(03)	αiSVP-B	A06B-6230-H001#H600, A06B-6280-H001#H600 A06B-6232-H00x#H610, A06B-6282-H001#H610
(03)	βiSVSP-B	A06B-6320-Hxxx, A06B-6321-Hxxx A06B-6330-Hxxx, A06B-6331-Hxxx

Connection

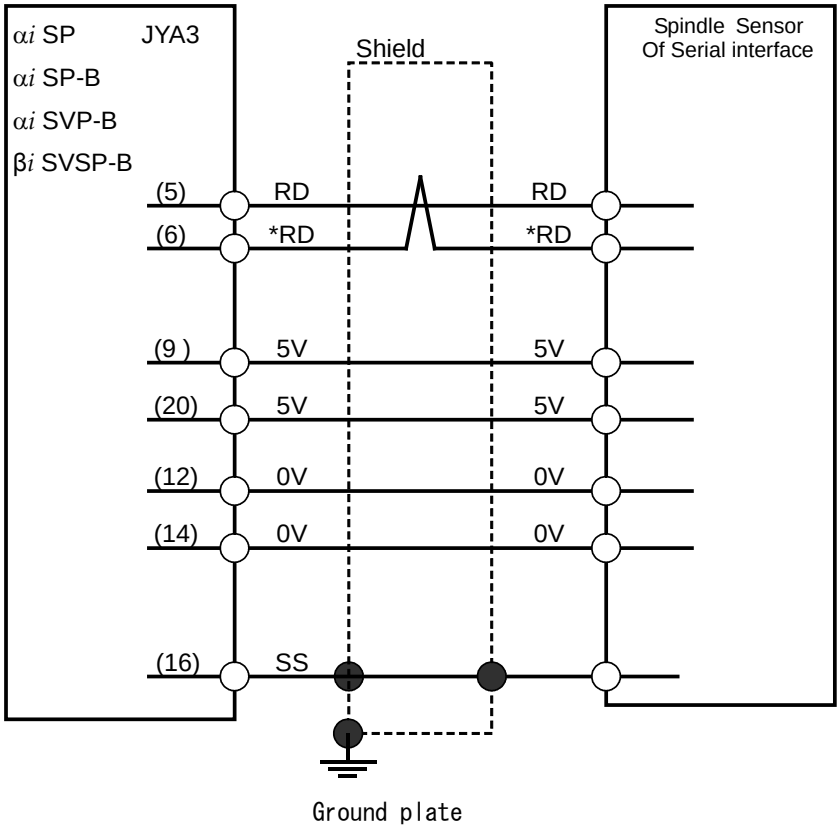

				Title	Connection of 3rd party spindle sensor
				Draw No.	B-65282EN/07-06, B-65412EN/02-06 B-65322EN/03-10, B-65422EN/02-03
03	2017.03.10	Tsuchida	Correction of erros, addition of a note	FANUC CORPORATION	11/20
Edit	Date	Design	Description		
Date		Desig.	Apprv.		

© MyFANUC 2D5504D5BAC945D385F48627D4977F6C

03

α interface.

Applied Unit

Model name	Specification
αiSP TYPE A	A06B-6141-Hxxx#H580, A06B-6151-Hxxx#H580
αiSP TYPE B	A06B-6142-Hxxx#H580,A06B-6144-Hxxx#H590 A06B-6152-Hxxx#H580,A06B-6154-Hxxx#H590
αiSP-B	A06B-6220-Hxxx#H600, A06B-6270-Hxxx#H600
αiSVP-B	A06B-6230-H001#H600, A06B-6280-H001#H600
βiSVSP for 0i-D series	A06B-6164-Hxxx#H580

Connection

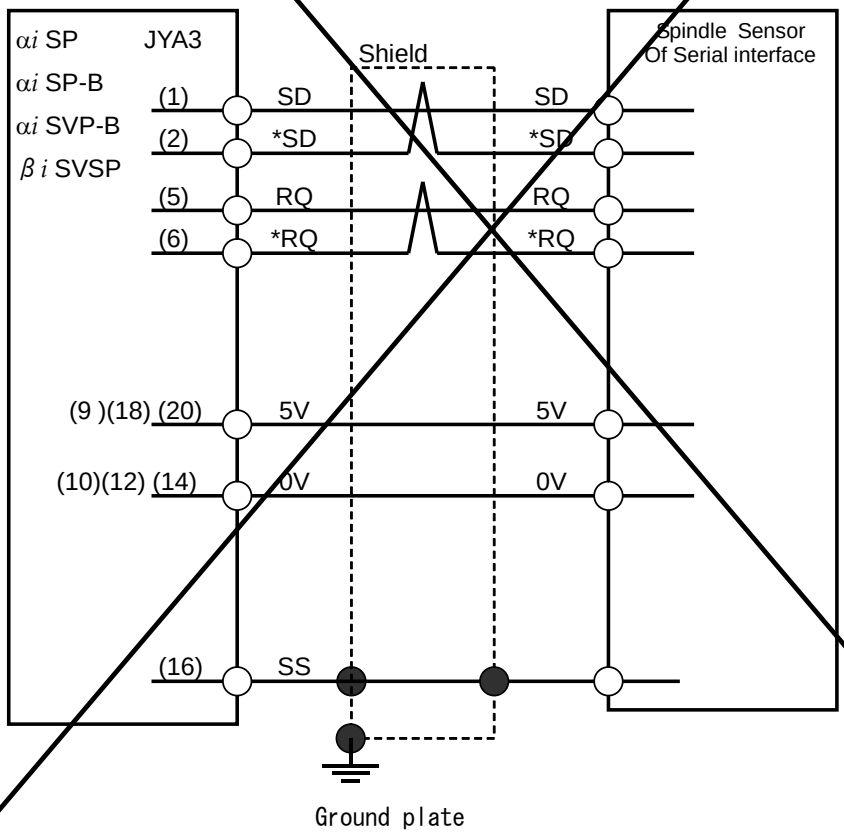

03	2017.03.10	Tsuchida	Correction of errors		
Edit	Date	Design	Description		
Date		Desig.		Apprv.	

Title	Connection of 3rd party spindle sensor
Draw No.	B-65282EN/07-06, B-65412EN/02-06 B-65322EN/03-10, B-65422EN/02-03

FANUC CORPORATION

© MyFANUC 2D5504D5BAC945D385F48627D4977F6C

3. Parameters

3.1. Outline

Parameter settings for all kinds of supported spindle sensor are described in this document and it includes the information for the parameter settings of third party sensors.

Note) We use the following name in the explanation below.

- Motor sensor : The sensor which is attached on a motor and used to control the motor speed or used to control the spindle position.
- Spindle sensor : The sensor which is attached on a spindle and used to control the spindle position

3.2. Parameter settings for spindle motor sensors

There are following parameters regarding sensor settings.

Parameter number	Contents	Related paragraph
No.4010#2,1,0	Kind of motor sensor type	3.3.1
No.4011#2,1,0	Number of teeth setting by bit parameter for motor sensor	3.3.2
No.4334	Number of teeth setting by word parameter for motor sensor	3.3.2
No.4397#4	Thermal sensor type selection	3.3.3
(03) No.4587	Thermal sensor type selection	3.3.3
No.4134	Setting for motor overheat level	3.3.3
No.4002#3,2,1,0	Spindle position feedback sensor type	3.4.1
No.4003#7,6,5,4	Number of teeth setting by bit parameter for spindle position feedback sensor	3.4.2
No.4361	Number of teeth setting by word parameter for spindle position feedback sensor	3.4.2
No.4394#2	One-rotation signal detection setting at less than $10min^{-1}$	3.3.1, 3.4.1

Note)

If you use a sensor with distance-coded reference mark, you should set some other parameters related to the sensor. Please refer to B-65280EN/08-26 about the detail information.

The following amplifier cannot be used with a spindle sensor with distance-coded reference mark .

- βiSVSP for 0i-D series: A06B-6164-Hxxx#H580
- αiSP TYPE A: A06B-6141-Hxxx#H580, A06B-6151-Hxxx#H580
- αiSP TYPE B: A06B-6142-Hxxx#H580, A06B-6152-Hxxx#H580

© MyFANUC 2D5504D5BAC945D385F48627D4977F6C

3.3. Parameter settings for spindle motor sensors

3.3.1 Settings for motor sensor type

	Motor sensor	Connector	Kind of sensor type No.4010			Remarks
			#2	#1	#0	
(a)	αiM sensor	JYA2	0	0	~~(a)~~ 0	αiM sensor
(b)	αiMZ sensor ,αiBZ sensor, αiCZ sensor (Analog)	JYA2	0	0	~~(b)~~ 1	αiMZ sensor ,αiBZ sensor, αiCZ sensor (Analog)
(c)	αiCZ sensor (Serial)	JYA3	0	1	~~(c)~~ 1	αiCZ sensor (Serial)
(d)	3rd party sensor(1) 1Vpp sine wave A,B phase, sine wave Z phase (αiBZ sensor Z phase compatible) (refer to ~~"Appendix 5-1"~~ 2.2.1)	JYA2	1	1	~~(d)~~ 0	For one-rotation detection at less than 10min^{-1}, refer to (Note 1).
(e) 02	3rd party sensor(2) 1Vpp sine wave A,B phase, Driver type Z phase (refer to ~~"Appendix 5-1"~~ 2.2.1)	JYA2	1	1	~~(e)~~ 1	For one-rotation detection at less than 10min^{-1}, refer to (Note 1). It's necessary to set some other parameters, when a sensor with distance-coded reference mark is used. Please refer to B-65280EN/08-26 about them. (not adaptable with βiSVSP for 0i-D series)

(Note 1) It's impossible to detect one-rotation signal at less than 10min^{-1} normally. But if we set following parameter, it becomes possible.

	#7	#6	#5	#4	#3	#2	#1	#0
4394						ZPHDTC		

ZPHDTC The detection of one-rotation signal at less than 10min^{-1} is
0: not performed
1: performed

When you use this setting for above sensor (b) and (d), you should pay attention below.

- You should set the parameter No.4010#2,1,0 to "1,1,1".
- There is a possibility that the detected position of one-rotation signal may be varied by the effect of offset drift due to the temperature change at the sensor.

© MyFANUC 2D5504D5BAC945D385F48627D4977F6C

(Note 2) The target sensor is available with following software edition.

Software	Edition
9D80 series	H(08)edition or later
9D8A series	A(01) edition or later
9D90 series	A(01)edition or later
9D9A series	A(01)edition or later
9DA0 series	A(01)edition or later
9DAA series	A(01)edition or later
9DB0 series	A(01)edition or later

03

Edit	Date	Design	Description
03	2017.03.10	Tsuchida	Addition of software series

Date		Desig.		Apprv.	

Title	Connection of 3rd party spindle sensor
Draw No.	B-65282EN/07-06, B-65412EN/02-06 B-65322EN/03-10, B-65422EN/02-03

FANUC CORPORATION

© MyFANUC 2D5504D5BAC945D385F48627D4977F6C

3.3.2 Settings for number of motor sensor gear teeth

Teeth (λ/rev)	Number of teeth setting by word parameter in No.4334	Number of teeth setting by bit parameter in No.4011		
		#2	#1	#0
64	=0	0	0	0
128		0	0	1
256		0	1	0
512		0	1	1
192		1	0	0
384		1	0	1
Arbitrary number of teeth	>0 Unit:1□λ/rev Range:32 to 32767	*	*	*
	<0 Unit: -2□λ/rev Range:-16 to –32767 Example: When number of teeth is 36,000 λ/rev, it should be set to”-18,000”.	*	*	*

3.3.3 Setting for thermal sensor to detect motor overheat

03

Kind of sensor	Thermal sensor type selection		Setting for motor overheat level	
	No.4397 #4	No.4587	No.4134	
Thermostat	0	0	0	
FANUC standard thermistor	0	0	≠0 (90 to 180 degree C)	
KTY84-130 (NXP) (Note3)	1	0(or 1)	≠0 (90 to 180 degree C)	
Pt1000(Hayashi) (Note4)	0	2	≠0 (1 to 180 degree C)	Software edition 9DAA series: H(08) edition or later 9DB0 series: H(08) edition or later

(Note3) βiSVSP series is non-compliant.

(Note4) α iSP and βiSVSP series are non-compliant.

© MyFANUC 2D5504D5BAC945D385F48627D4977F6C

3.4. Parameter settings for spindle position feedback sensors

3.4.1 Settings for spindle position feedback sensor type

	Sensor for position feedback	Connector	Kind of sensor type No.4002				Remarks
			#3	#2	#1	#0	
(a)	None (Position control is not used.)	None	0	0	0	0	
(b)	Motor sensor (Both velocity control and position control are performed by motor sensor.)	JYA2	0	0	0	1	For the detail of sensor type and sensor gear teeth settings, refer to item 2.
(c)	αi position coder	JYA3	0	0	1	0	- Because the number of teeth setting is fixed at 1024λ/rev, number of gear teeth setting parameters No.4003#7,6,5,4 and No.4361 are neglected. - Regarding one-rotation detection at less than $10min^{-1}$, refer to (Note 1).
(d)	αi BZ sensor, αi CZ sensor(Analog)	JYA4	0	0	1	1	- Number of gear teeth setting parameters No.4003#7,6,5,4 or 4361 should be set . - Regarding one-rotation detection at less than $10min^{-1}$, refer to (Note 1).
(e)	αi CZ sensor(Serial)	JYA3	0	1	1	0	Regarding applicable spindle software, refer to (Note3)
(f)	α position coder S	JYA4	0	1	0	0	- Because the number of teeth setting is fixed at 1024λ/rev, number of gear teeth setting parameters No.4003#7,6,5,4 and No.4361 are neglected. - For one-rotation detection at less than $10min^{-1}$, refer to (Note 1).
(g)	Third party sensor(1) 1Vpp sine wave A,B phase sine wave Z phase (αi BZ sensor Z phase compatible) (refer to ~~"Appendix 5-1"~~ 2.2.1)	JYA4	1	1	0	1	Number of gear teeth setting parameters No.4003#7,6,5,4 or 4361 should be set. Regarding one-rotation detection at less than $10min^{-1}$, refer to (Note 1).
(h)	Third party sensor(2) 1Vpp sine wave A,B phase, Driver type Z phase (refer to ~~"Appendix 5-1"~~ 2.2.1)	JYA4	1	1	1	0	Number of gear teeth setting parameters No.4003#7,6,5,4 or 4361 should be set. Regarding one-rotation detection at less than $10min^{-1}$, refer to (Note 1). It's necessary to set some other parameters, when a sensor with distance-coded reference mark is used. Please refer to B-65280EN/08-26 about them. (not adaptable with βiSVSP for 0i-D series)
(i)	Third party sensor(3) square-wave A,B phase, normal width square phase Z phase (refer to ~~"Appendix 5-2"~~ 2.3.1)	JYA3	1	1	1	1	Number of gear teeth number setting parameters No.4003#7,6,5,4 or 4361 should be set. Regarding one-rotation detection at less than $10min^{-1}$, refer to (Note 1).
(j) 02	Third party sensor(4) square-wave A,B phase, narrow width square-wave Z phase (refer to ~~"Appendix 5-2"~~ 2.3.1)	JYA3	1	1	0	0	- Number of gear teeth setting parameters No.4003#7,6,5,4 or 4361 should be set. - Regarding applicable spindle software, refer to (Note 2) - For one-rotation detection at less than $10min^{-1}$, refer to (Note 1).

© MyFANUC 2D5504D5BAC945D385F48627D4977F6C

03

~~(k)~~	~~Third party sensor(5)~~ ~~α interface~~ ~~(two pairs transmission)~~	~~JYA3~~	~~0~~	~~1~~	~~0~~	~~1~~	~~Regarding applicable spindle software, refer to (Note4).~~
(l)	Third party sensor(6) αi interface (one-pair transmission)	JYA3	0	1	1	0	Regarding applicable spindle software, refer to (Note5).

(Note 1) It's impossible to detect one-rotation signal at less than 10min^{-1} normally. But if we set following parameter, it becomes possible.

	#7	#6	#5	#4	#3	#2	#1	#0
4394						ZPHDTC		

ZPHDTC The detection of one-rotation signal at less than 10min^{-1} is
0: not performed
1: performed

When you use this setting for above sensor (d) and (g), you should pay attention below.
- You should set the parameter No.4002#3,2,1,0 to "1,1,1,0".
- There is a possibility that the detected position of one-rotation signal may be varied by the effect of offset drift due to the temperature change at the sensor.

(Note 2) Regarding third party sensor(4)(square-wave A,B phase, narrow width square-wave Z phase), No.4002#3,2,1,0=1,1,0,0 and No.4394#2 is available with following software edition.

03

Software	Edition
~~9D5A series~~	~~E(05) edition or later~~
~~9D53 series~~	~~S(10) edition or later~~
~~9D5D series~~	~~A(01) edition or later~~
~~9D70 series~~	~~S (10) edition or later~~
~~9D7A series~~	~~A(01) edition or later~~
9D80 series	O(15) edition or later
9D8A series	A(01) edition or later
9D90 series	B(02) edition or later
9D9A series	A(01) edition or later
9DA0 series	A(01) edition or later
9DAA series	A(01) edition or later
9DB0 series	A(01) edition or later

© MyFANUC 2D5504D5BAC945D385F48627D4977F6C

(Note 3) The target sensor is available with following software edition.

03

Software	Edition
9D80 series	H(08)edition or later
9D8A series	A(01) edition or later
9D90 series	A(01)edition or later
9D9A series	A(01)edition or later
9DA0 series	A(01)edition or later
9DAA series	A(01)edition or later
9DB0 series	A(01)edition or later

03

~~(Note 4) The target sensor is available with following software edition.~~

~~Software~~	~~Edition~~
~~9D80 series~~	~~H(08)edition or later~~
~~9D8A series~~	~~A(01) edition or later~~
~~9D90 series~~	~~A(01)edition or later~~
~~9DA0 series~~	~~A(01)edition or later~~

(Note 5) The target sensor is available with following software edition.

03

Software	Edition
9D90 series	H(08)edition or later
9D9A series	A(01)edition or later
9DA0 series	K(11)edition or later
9DAA series	A(01)edition or later
9DB0 series	A(01)edition or later

© MyFANUC 2D5504D5BAC945D385F48627D4977F6C

3.4.2 Settings for number of spindle position feedback sensor gear teeth

3.4.2.1 In case that spindle position feedback sensor is (a)~(j) :

Teeth (λ/rev)	Number of teeth setting by word parameter in No.4361	Number of teeth selection by bits in No.4003			
		#7	#6	#5	#4
256	=0	0	0	0	0
128		0	0	0	1
512		0	1	0	0
64		0	1	0	1
768		1	0	0	0
1024		1	0	0	1
384		1	1	0	0
Arbitrary number of teeth	>0 Unit:1□λ/rev Range:64 to 32767	*	*	*	*
	<0 Unit: -2□λ/rev Range:-32 to –32767 Example: When number of teeth is 36,000, it should be set to”-18,000”.	*	*	*	*

03

~~3.4.2.2 In case that position feedback sensor is (k) :~~

~~Resolution format~~	~~Number of teeth selection by bits in No.4003~~			
	~~#7~~	~~#6~~	~~#5~~	~~#4~~
~~Normal resolution format~~	~~0~~	~~0~~	~~0~~	~~0~~
~~High resolution format A~~	~~0~~	~~0~~	~~0~~	~~1~~
~~High resolution format B~~	~~0~~	~~0~~	~~1~~	~~0~~

3.4.2.3 In case that position feedback sensor is (l) :

Format	Number of teeth setting by word parameter in No.4361
Binary line counts type	8192

03	2017.03.10	Tsuchida	Correction of errors
Edit	Date	Design	Description
Date		Desig.	Apprv.

Title	Connection of 3rd party spindle sensor
Draw No.	B-65282EN/07-06, B-65412EN/02-06 B-65322EN/03-10, B-65422EN/02-03

FANUC CORPORATION

© MyFANUC 2D5504D5BAC945D385F48627D4977F6C

Grounding of AC Reactor

1.Type of applied technical documents

Name	**FANUC SERVO AMPLIFIER αi series DESCRIPTIONS** **FANUC SERVO AMPLIFIER αi –B series DESCRIPTIONS**
Spec.No./Ed.	B-65282EN/07 B-65412EN/02

2.Summary of Change

Group	Name/Outline	New, Add, Correct, Delete	Applicable Date
Basic	Grounding of AC Reactor	Add	2017-12
Optional Function			
Unit			
Maintenance Parts			
Notice			
Correction			
Another			

Ed.	Date	Design	Description
Date	17.11.14	Desig. Y. Nakagawa	Check / Apprv.

Title	Grounding of AC Reactor
Draw No.	B-65282EN/07-06 B-65412EN/02-08
FANUC CORPORATION	1/2

© MyFANUC 2D5504D5BAC945D385F48627D4977F6C

1. Abstract

In this document, how to connect ground wire to following AC Reactor is shown, as it is not included in the current manual for amplifier (note1).

- A81L-0001-0155
- A81L-0001-0156
- A81L-0001-0157
- A81L-0001-0158
- A81L-0001-0159
- A81L-0001-0160
- A81L-0001-0163
- A81L-0001-0164
- A81L-0001-0165
- A81L-0001-0167
- A81L-0001-0170
- A81L-0001-0179

Note1) For α*i*-B series amplifier, IP2X compliant AC reactors (A81L-0001-018*, -019*), which have grounding terminal, are recommended.

2. Grounding of AC Reactor

AC Reactor has 4 U-shaped notches on bottom frame, and grounding point of AC Reactor is one of the notches between No. 3 and No. 5 terminals. Please connect grounding cable with the grounding point.

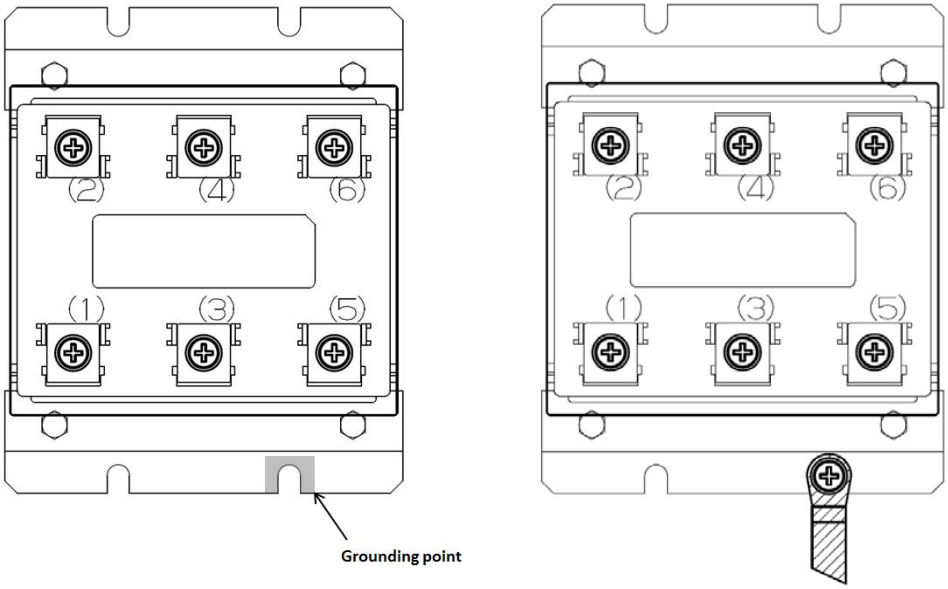

				Title. Grounding of AC Reactor	
				Draw.No.. B-65282EN/07-06 B-65412EN/02-08	CUST.
Edit	Date	Design	Description	FANUC CORPORATION	Sheet. 2/2

© MyFANUC 2D5504D5BAC945D385F48627D4977F6C

Absolute αiCZ SENSOR (for separate detector use) / Correction of extension cable K105

1. Type of applied technical documents

Title	FANUC SERVO AMPLIFIER αi series DESCRIPTIONS FANUC SERVO AMPLIFIER αi-B series DESCRIPTIONS FANUC SERVO AMPLIFIER βi-B series DESCRIPTIONS
Spec. No./Ver.	B-65282EN/07 B-65412EN/02 B-65422EN/02

2. Summary of change

Group	Name／Outline	New・Add Correct・Del	Applicable Date
Basic Function			
Optional Function			
Unit			
Maintenance Parts			
Notice			
Correction	Absolute αiCZ SENSOR (for separate detector use) / Correction of extension cable K105	Correct	May, 2018
Another			

				Title	Absolute αiCZ SENSOR (for separate detector use) / Correction of extension cable K105
				Draw.	B-65282EN/07-08, B-65412EN/02-10, B-65422EN/02-09
01	18.05.18	A. Nishioka	New design	FANUC CORPORATION	PAGE 1／2
Edit	Date	Design	Description		

© MyFANUC 2D5504D5BAC945D385F48627D4977F6C

3. Outline

This document is described about the correction of the pin assignment of the extension cable K105 for αiCZ SENSOR (for separate detector use) which is described in the following document.

- FANUC SERVO AMPLIFIER αi series DESCRIPTIONS B-65282EN/07 Subsection 11.1.1.4 “Connection”
- FANUC SERVO AMPLIFIER αi-B series DESCRIPTIONS B-65412EN/02 Subsection 11.1.1.5 “Connection”
- FANUC SERVO AMPLIFIER βi-B series DESCRIPTIONS B-65422EN/02 Subsection 11.2.3.2 “Connection” in Chapter II “βiSVSP-B”

4. Details of correction

Pin assignment of the connection diagram of Cable K105 described in the following figure.

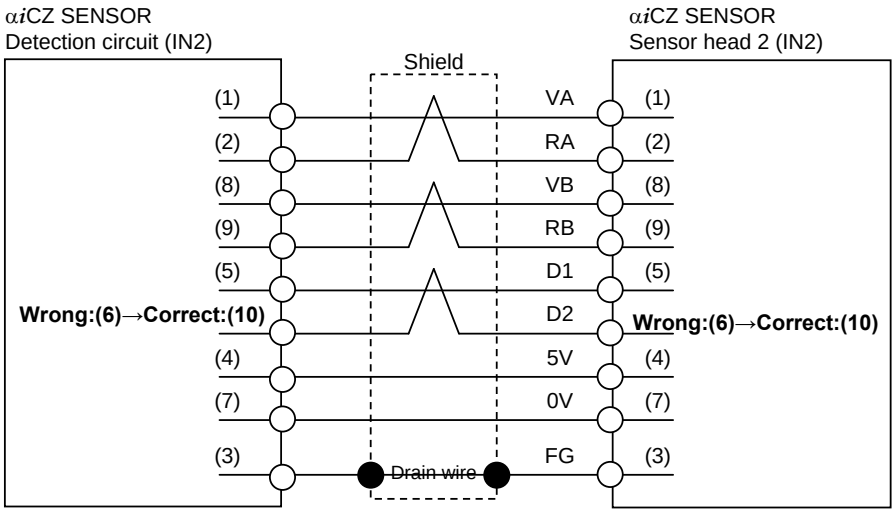

Connector for relay (Crimp type, Manufacture: Japan Aviation Electronics Industry, Limited):
JN1HS10PL☐: Replay type
(☐: 1 or 2; See NOTE.)
Contact: JN1-22-22P

Connector kit (FANUC specification)
A06B-6114-K206 (including contacts)

Plug connector (Crimp type, Manufacture: Japan Aviation Electronics Industry, Limited):
JN1DS10SL☐: Straight plug type
JN1FS10SL☐: Right angle plug type
(☐: 1 or 2; See NOTE.)
Contact: JN1-22-22S

Connector kit (FANUC specification)
A06B-6114-K200#S: Straight plug type
A06B-6114-K200#E: Right angle plug type

Edit	Date	Design	Description
01	18.05.18	A. Nishioka	New design

Title	Absolute αiCZ SENSOR (for separate detector use) / Correction of extension cable K105
Draw.	B-65282EN/07-08, B-65412EN/02-10, B-65422EN/02-09
FANUC CORPORATION	PAGE 2／2

© MyFANUC 2D5504D5BAC945D385F48627D4977F6C

INDEX

<Number>

10-PAIR CABLE 348
10-PAIR CABLE (WITH 20 PAIRS) 363
1Vpp sine wave A and B phases (differential signal waveforms)....579
200-V Input Series 2,37,62,65
200-V INPUT SERIES....96
200-V INPUT SERIES POWER SUPPLY 345
200-V input type 511
20-Pin Half-Pitch Connectors 243
24-V power supply....91,95
400-V Input Series 4,40,63,65
400-V INPUT SERIES....101
400-V INPUT SERIES POWER SUPPLY 346
400-V input type 512

<A>

A, B, and Z phase unprocessed signals 578
Absolute α*i*CZ Sensor (Serial Output, A860-2142-T***)....415
AC line filter 44
AC Line Filter 124
AC reactor 42
AC Reactor Unit....113
ADDING A POWER CABLE OF THE SERVO AMPLIFIER....378
Alarm 556
Alarms and Status Display 477
Ambient Temperature of the Power Supply and Servo Amplifier 460
Amount of Heat Dissipation....460
AMPLIFIER INSTALLATION....88
AMPLIFIER INSTALLATION NOTES RELATING TO SAFETY STANDARDS....88
Anti-Noise Devices 391
Anti-Noise Measures....386
ANTI-NOISE MEASURES 386
Anti-Noise Measures for Power Supply Equipment and Grounding....389
Application....458
APPLICATION TO PREVENTION OF VERTICAL AXES FROM FALLING AT POWER FAILURE...405
APPLIED UNIT....576

<B>

Battery for absolute Pulsecoder....58
Behavior of the Energy Charge Module (ECM) 457
Brake Circuit....406

<C>

Cabinet 85
Cable Clamp and Shield Processing....83
CABLE CONNECTION DETAILS 169
Cable Connection Details....494
Cable Lead-in Diagrams and Connector Positions....536
Cables....54
CABLES 347
Cables....515
Calculating the amount of energy required for power failure retraction 567
Calculating the amount of energy that can be supplied per sub module C....566
Calculation of the number of capacitor modules to be connected....469
Capacitor Module....488
Capacitor Module (for Charge)....459
Capacitor Module (for Smoothing)....459
Capacitor module 0.011F (A06B-6158-H020)....488
Capacitor module 0.022F (A06B-6158-H021)....489
Caution.... s-3,s-5,s-6
CAUTIONS 346
Cautions 410
Check of the amount of energy that can be stored per capacitor module 467
Check of the Maximum Output, Supply Energy, and Cycle Speed....464
Circuit Breaker....136
Circuit breaker 515
Circuit breaker and magnetic contactor 54
Classification in standards on insulation design....88,93
COMPOSITE 10-CORE CABLE 358
COMPOSITE 12-CORE CABLE 360
COMPOSITE 16-CORE CABLE 362
COMPOSITE 7-CORE CABLE 350
Concrete Examples of Anti-Noise Measures 387
Condition when Control Power Needs to be Supplied from the Outside....570
CONFIGURATION....1,2
Configuration 254,455,511
CONFIGURATION AND ORDERING NUMBERS 455,511
Confirming Effect 410
Connecting the battery (for the absolute Pulsecoder)...203
CONNECTION....155
Connection 252,259,262,270,285,288,298,313,321,334
CONNECTION....447,493,525
CONNECTION OF A THIRD-PARTY SPINDLE SENSOR 576
Connection when Control Power is Supplied from the Outside 571
Connector Installation Diagram (for Combination with α*i* SP 15) 258
CONNECTOR LOCATION 157
Connector Location....539
Connectors 44,514
Connectors and short bars 502
Connectors Supporting Sensor Signals 577
Control Module....458
Control Module (A06B-6158-H010)....487

© MyFANUC 2D5504D5BAC945D385F48627D4977F6C

Control Sequences.....549
Control Signals.....557
COOLING.....105

<D>

DC LINK TERMINAL BLOCK SECTION PROTECTIVE COVER 401
DC Reactor.....459,491
DC reactor 100A (A06B-6158-H040).....491
DC reactor 60A (A06B-6158-H041).....492
Deceleration and stop of the spindle 563
DEFINITION OF WARNING, CAUTION, AND NOTE s-1
DESCRIPTIONS.....393
Detailed description of the connection of cables K41 (for regenerative discharge resistance), K42 (for thermostat), and K43 (for fan motor) 186
Details of Cable Connections.....527
Details of cable K1 (power supply line).....174
Details of cable K10 (power cable).....209
Details of cable K100 (for power failure detection output) 188
Details of cable K102.....202
Details of cable K11.....211
Details of cable K12.....211
Details of cable K120.....500
Details of cable K121.....498
Details of cable K14.....213
Details of cable K16.....217
Details of cable K17.....221
Details of cable K2.....193,209
Details of cable K21.....194
Details of cable K22.....196
Details of cable K24.....200
Details of cable K25.....200
Details of cable K26.....201
Details of cable K27.....202
Details of cable K2C (DC link connection) 495
Details of cable K2D.....495
Details of cable K2E 496
Details of cable K3.....182
Details of cable K33.....229
Details of cable K36.....232
Details of cable K4.....193
Details of cable K6.....184
Details of cable K69.....183,193,209,499
Details of cable K7.....184
Details of cable K70.....185,208,211
Details of cable K71.....235
Details of cable K86.....237
Details of cable K88.....238
Details of cable K90.....239
Details of cable K96.....239
Details of cable K97.....240
Details of cables K116 and K117.....497
Details of cables K118 and K119.....500
Details of cables K2A and K2B (DC link connection).494
Details of cables K70 and K70A-D.....498
DETAILS OF CONNECTORS.....243
Details of short bar K2 179
DIMENSIONS 446
Displaying the sensor amplitude and offset information 325,339
Driver-type Z phase (differential signal waveform).....580
Dynamic Brake Module (DBM) 134
Dynamic brake module for the servo amplifier.....513

<E>

ECM switch setting.....471
ELECTRICAL SPECIFICATIONS OF SPINDLE SENSOR SIGNALS.....577
EMC.....90
ENERGY CHARGE MODULE (ECM).....453
ENVIRONMENTAL CONDITIONS.....20
Environmental Conditions for the EMC 460
Environments for Amplifier Heat Sink Sections.....398
Environments for Amplifier Installation 399
Example of selecting a sub module C 568
EXAMPLES OF RECOMMENDED POWER MAGNETICS CABINETS FOR SERVO AMPLIFIER INSTALLATION 393
External Dimensions 256
External dimensions..... 265,284,287,291,303,316,329
EXTERNAL DIMENSIONS AND MAINTENANCE AREA.....106
EXTERNAL DIMENSIONS AND MANUFACTURE OF EACH CONNECTOR.....364
EXTERNAL DIMENSIONS OF EACH CONNECTOR 364
External overload protection device.....91,94

<F>

FEATURES OF THE SERVO AMPLIFIER αi SERIES 1
Feed axis deceleration and stop.....561
FEEDBACK CABLE LENGTH.....374
FITTING A LIGHTNING SURGE PROTECTION DEVICE 345
Function Description.....545
Function for detecting the disconnection of the Sensor head cable.....277
Function Setting Switches of the Control Module 476
FUNCTIONS 545
FUNCTIONS AND INTERFACES.....473
Fuses 50,514

<G>

Gravity-axis Drop Prevention Function at Power Failure 564
Gravity-Axis Drop Prevention Function at Power Failure 574
GROUND 79
Ground Systems 79
Grounding 541
Grounding Method.....79

© MyFANUC 2D5504D5BAC945D385F48627D4977F6C

<H>

HARMONIC LEAKAGE CURRENT.....449
HEAT DISSIPATION.....96
HOW TO MOUNT 402
How to Obtain the αi PS series Maximum Output Capability 67
How to Obtain the αi PS series Peak Maximum Output Capability 67
How to Obtain the αi PS series Rated Output Capability 66
How to Obtain the αi PS_R series Maximum Output Capability 69
How to Obtain the αi PS_R series Rated Output Capability 69
How to Replace the Fuses 505
HOW TO SELECT THE αi PS series (POWER SUPPLY).....66
HOW TO SELECT THE αi PSR series (POWER SUPPLY, RESISTANCE DISCHARGE TYPE) 68
HOW TO SELECT THE αi SP series(SPINDLE AMPLIFIER).....64
HOW TO SELECT THE αi SV SERIES (SERVO AMPLIFIER).....61
HOW TO SELECT THE AMPLIFIER.....61
How to Select the Dynamic Brake Module (DBM) 64

<I>

αi POSITIONCODER 283
αi PS series 28,37,40,96,101,157
αi PS Series Connection Diagram.....169
αi PS_R series.....38
αi SP series 34,39,41,100,104
αi SP Series.....165
αi SP Series Connection Diagram.....208
αi SV series.....30,38,40,97,101,162
αi SV series Connection Diagram.....189
αiBZ SENSOR (Conventional Dimensions, A860-2120-T***).....428
αiBZ SENSOR (for built-in spindle motor).....301
αiBZ SENSOR (for Spindle) 289
αiCZ SENSOR (Analog Output, A860-2140-T***)....434
αiCZ SENSOR (for built-in spindle motor).....327
αiCZ SENSOR (for Separate Detector Use).....263
αiCZ SENSOR (for Spindle) 314
INPUT POWER 7
Input Values of JYA2 and JYA4.....578
INSTALLATION.....78
Installation conditions and notes 285,288
Installing the sensor.....266,295,309,317,330
Interface with the PMC (I/O) 474
Interfaces with the Servo Amplifier 473
Interference of the Detection ring 294,308
Interpolation error compensation 276,324,338

<L>

LEAKAGE CURRENT 78
Lightning surge protector.....57
Lightning Surge Protector 145
LIMIT ON THE NUMBER OF AMPLIFIERS TO BE CONNECTED.....570
LINEUP 6
LIST OF MOTOR OUTPUT CAPACITIES FOR αi PS AND αi PSR series SELECTION.....72
List of Parameters for Sensor Setting.....585

<M>

Magnetic contactor (MCC) shutdown sequence 551
Magnetic Contactors 138
MAGNETIC SENSOR SIGNAL CONVERSION ADAPTER 445
Maintenance target parts 326,341
Maximum Instantaneous Power and Power Pattern of the Machine.....461
MEASURES AGAINST NOISE FROM SERVO AMPLIFIERS.....384
Method for Keeping Vertical Axis Motors Energized .408
Method for Supplying External Power to the Amplifier412
METHOD OF ADJUSTMENT.....448
MISCELLANEOUS 392
MULTIPLE LANGUAGE SUPPORT FOR WARNINGS 450

<N>

Noise filter 57
Noise Filter 146
NOISE GENERATION MECHANISM OF A SERVO AMPLIFIER.....384
NOISE PREVENTION.....82
NOISE TYPES.....385
Note..... s-4,s-7
Note on the setting of the parameter of the retract function at power failure 561
Notes 252,582
Notes on 400-V Input αi PS series selection.....68
Notes on Connecting.....81
Notes on connecting.....93
NOTES ON COOLANT (REFERENCE).....95
Notes on ground degree of protection 92
Notes on the Detection ring.....299,305
Notes on the emergency stop circuit configuration.....91
Notes on use 280,325,339
Number of Connected αi SV series and αi SP Series 68
Number of Connected αi SV series and αi SP series.....69
Number of Servo Amplifiers and ECM Units To Be Connected.....460

<O>

OPERATION CHECK.....573
Order of A and B phase signals.....582
ORDERING INFORMATION 37,445
ORDERING NUMBER 452
Ordering Number 514
Ordering Numbers.....456
Others.....42,87
Outline Drawing.....261
OUTLINE DRAWINGS 106

© MyFANUC 2D5504D5BAC945D385F48627D4977F6C

Outline Drawings 520
OUTLINE DRAWINGS AND PANEL CUT-OUT DIAGRAM 520
OUTLINE DRAWINGS AND PANEL CUT-OUT DIAGRAMS 487
Outline Drawings, Weight, Panel Cut-out, and Maintenance Area of Amplifiers 106
Output signal check method 281
Outside and mounting dimension diagrams 248
Overload protection 91,94
Over-speed protection 91,94
Overview 245
OVERVIEW 393,401,403,450,454,509
Overview 585

<P>

Panel Cut-out 262
Panel Cut-out Diagram 524
PANEL CUT-OUT DIAGRAMS 149
PARAMETERS 585
PERIODIC MAINTENANCE 507
Permissible Maximum Instantaneous Power of the Machine 462
POSITION VARIATION LIST BY SENSOR 575
α POSITIONCODER S 286
POWER FAILURE BACKUP MODULE 508
Power failure backup module 514,520,536,539,541
POWER FAILURE DETECTION FUNCTION 403
POWER FAILURE DETECTION SPECIFICATION .403
Power failure retract on a machining center or a lathe .560
Power failure sequence (control of DC link voltage supply to the control power) 551
Power failure sequence (control of energy supply from the sub module C) 553
Power failure sequence (resistance regeneration control) 554
POWER LINE FOR SERVO MOTOR AND AMPLIFIER 376
POWER LINE SWITCH CIRCUIT 245
Power line switch unit 60
Power Line Switch Unit 247
Power Magnetics Cabinet Seal-up 393
Power transformer 50
Power Transformer 125
Power-on sequence 549
Pre-Installation Arrangement 386
Procedure 405
Procedure for initializing the Detection circuit 278
Protection against electric shock 89,94
Protective grounding 90,94
PULSECODER CABLE LENGTH (WHEN RECOMMENDED CABLES ARE USED) 375

<R>

Reduction of load ratio to ambient temperature 91
(REFERENCE) LIFE OF THE CAPACITOR MODULE 506
Regenerative discharge unit 53
Regenerative Discharge Unit 131
Replacement of a Fan Motor 504
REPLACEMENT OF MAINTENANCE PARTS 504
Replacement of the fuse on the printed-circuit board ..506
Required modules 513
Requirements of EN and IEC Standards 88
Requirements of UL Standards 93
Resistor Module 459
Resistor Module (A06B-6158-H030) 490
Retract Function at Power Failure 558,573
Retraction of the gravity-axis 514
Rotation direction 275,323,337

<S>

SAFETY PRECAUTIONS s-1
Screw tightening torque 92,95
SELECTING A POWER CABLE 376
Selecting a Regenerative Discharge Unit 70
Selecting a Sub Module C 566
Selecting a Sub Module R 564
SELECTION 461
Selection of the DC reactor 470
Selection of the ECM System 466
Selection of the Power Supply 459
SENSOR 263
SENSOR (OLD SPECIFICATIONS) 415
SENSOR FOR THE SERVO SYSTEM 263
SENSOR FOR THE SPINDLE 283,428
SENSOR FOR THE SYNCHRONOUS BUILT-IN SERVO MOTOR AND SEPARATE SENSOR 415
Sensors for servo 58
Sensors for spindle 59
Separation of Signal Lines 82
Separation of the power line and signal line 502
Sequence to be performed if an alarm or error occurs in the power failure backup module 555
SERVO AMPLIFIER 37
SERVO AMPLIFIERS 5
Servo Control 459
Servo Motor 72
Setting Motor Sensor Parameters 586
Setting of the motor sensor type 586
Setting of the Power Failure Detection Delay Time 558
Setting the number of motor sensor teeth 587
Setting the number of spindle sensor teeth 590
Setting the Spindle Sensor Parameters 588
Setting the spindle sensor type 588
Short Bar, Connector, and Cover 456
Short-circuit protection 92,94
Signal phase relationships (timing chart) 284,287
SIGNAL PROCESSING AND PARAMETER SETTING 558
Signals Input to JYA3 583
Sine wave Z phase (αiMZ/αiBZ sensor compatible type: differential signal waveform) 581
Specification 247,254,263,283,286,289,301,314,327
SPECIFICATIONS 7
Specifications 260

© MyFANUC 2D5504D5BAC945D385F48627D4977F6C

SPECIFICATIONS 445,457,515
SPECIFICATIONS OF THE MODULES 28
Spindle alarms.....327
SPINDLE CABLE LENGTH (WHEN RECOMMENDED CABLES ARE USED) 374
Spindle Motor Continuous Rated Outputs and Maximum Outputs at Acceleration.....75
Spindle Motor Feedback Cable Connection.....242
SPINDLE ORIENTATION 245
Spindle sensor for the serial interface 583
SPINDLE-RELATED OPTIONS 245
Square wave signal waveforms (A, B, and Z phase signals) 583
Standard 456
Start-up procedure.....276,324,338
Status Display 555
Status Signals 557
Stop Distance Reduction Function at Power Failure 561,574
Sub module C.....514
Sub module C and supplement capacitor unit 522,538,540,543
Sub module R.....514,523,538,540,544
SUB MODULE SELECTION 564
Sub module SM.....44
SUB MODULE SM 260
Sub module SW.....44
SUB MODULE SW 254
Supplement capacitor unit.....514
Switch Circuit Configuration 246

<T>

Thermal sensor settings used for motor overheat detection 587
TOTAL CONNECTION DIAGRAM 155
Total Connection Diagram 493,525
Troubleshooting and Action.....480
Tyco Electronics Japan GK AMP D-5000 Series Connector 243

<U>

Usage with consideration of environmental resistance 299,306
USE IN COMBINATION WITH THE DUAL CHECK SAFETY FUNCTION.....413

<V>

VARIATION IN THE ONE-ROTATION SIGNAL DETECTION POSITION OF THE SPINDLE SENSOR.....575

<W>

Warning..... s-2,s-4,s-5
Warning label.....92
WARNINGS AND CAUTIONS RELATING TO A PILOT RUN s-4
WARNINGS AND CAUTIONS RELATING TO MAINTENANCE.....s-5
WARNINGS AND CAUTIONS RELATING TO MOUNTING s-2
When using the electronic gear box function, simple electronic gear box function, or hobbing machine function 559
When using the high-speed cycle machining retraction function 559

© MyFANUC 2D5504D5BAC945D385F48627D4977F6C

© MyFANUC 2D5504D5BAC945D385F48627D4977F6C

REVISION RECORD

Edition	Date	Contents
07	Mar., 2014	• Addition of an output-enhanced spindle motor model • Update of sensor-related information to the latest version • Correction of errors • Format change • Addition of following items Appendix M, “MULTIPLE LANGUAGE SUPPORT FOR WARNINGS” Appendix N, “ENERGY CHARGE MODULE (ECM)” Appendix O, “POWER FAILURE BACKUP MODULE” Appendix P, “VARIATION IN THE ONE-ROTATION SIGNAL DETECTION POSITION OF THE SPINDLE SENSOR” Appendix Q, “CONNECTION OF A THIRD-PARTY SPINDLE SENSOR”
06	Dec., 2008	• Changing of model names • Switching level-up amplifiers • Deletion of SPMC • Reflection of technical reports of edition 05 to this edition
05	Mar., 2003	• Addition and correction of following contents in the Chapter 9 CONNECTION Pulsecoder connection and cables around SPM • Addition of CZ*i* sensor • Addition and Correction of αiS,βi,αiP,αiT series
04	Sep., 2002	• Addition of following chapter Chapter 10 SPINDLE-RELATED OPTIONS Chapter 11 SPINDLE-RELATED DETECTORS • Addition of data in the Chapter 6 HEAT DISSIPATION • Correction of errors
03	Dec., 2001	• Correction of errors
02	Nov., 2001	• Addition of a(HV)*i* series Amplifier • Addition of PSMR(register discharge type) • Addition of Spindle Amplifier Module (SPMC) for αC*i* series • Addition of Models (PSM-55*i*, SPM-45/55*i*,SVM1-360*i*, SVM2-4/4*i*, SVM3-4/4/4*i*)
01	Apr., 2001	

© MyFANUC 2D5504D5BAC945D385F48627D4977F6C

B-65282EN/07

© MyFANUC 2D5504D5BAC945D385F48627D4977F6C