ANALISIS TEKNIS SISTEM INFORMASI ATTENDANCE

1. Arsitektur Sistem

Sistem menggunakan arsitektur 3-tier:
1) Presentation Layer (Client)
2) Application Layer (Business Logic)
3) Data Layer (Database)

Client → Application Server → Database Server

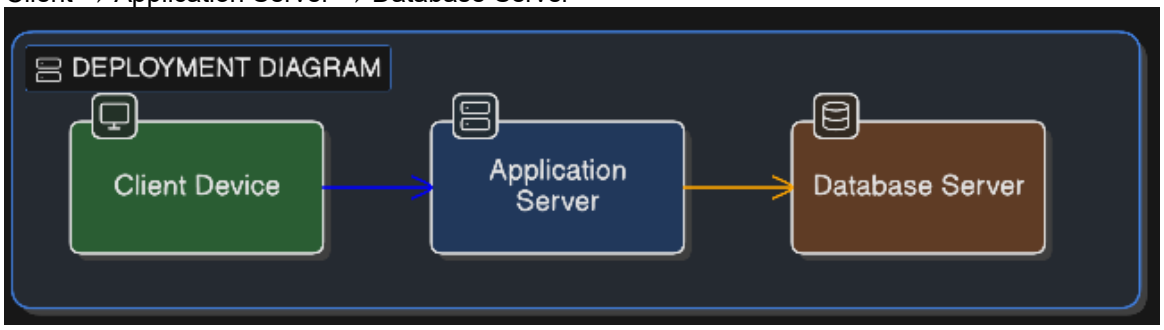

2. Aktor Sistem

Mahasiswa:
- Login
- Check-in Attendance
- View Attendance History
- View Class Schedule

Dosen:
- Login
- Verify Attendance
- View Attendance Report

Admin:
- Manage Users
- Manage Classes

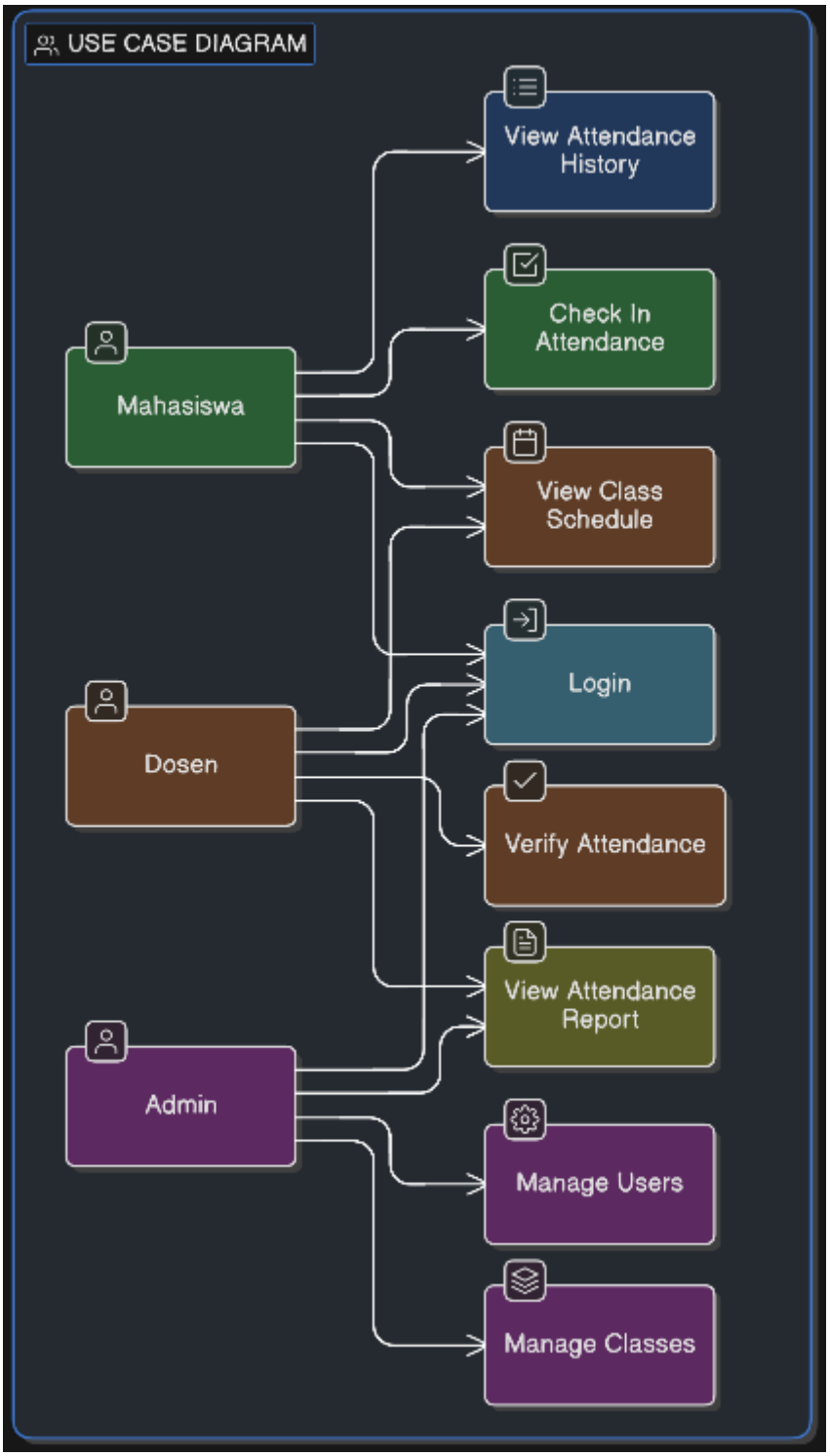

3. Proses Login

Proses login mencakup:
- Input credentials
- Validasi user di database
- Verifikasi password (hashed)
- Generate session/JWT

Validasi dilakukan pada server side untuk keamanan.

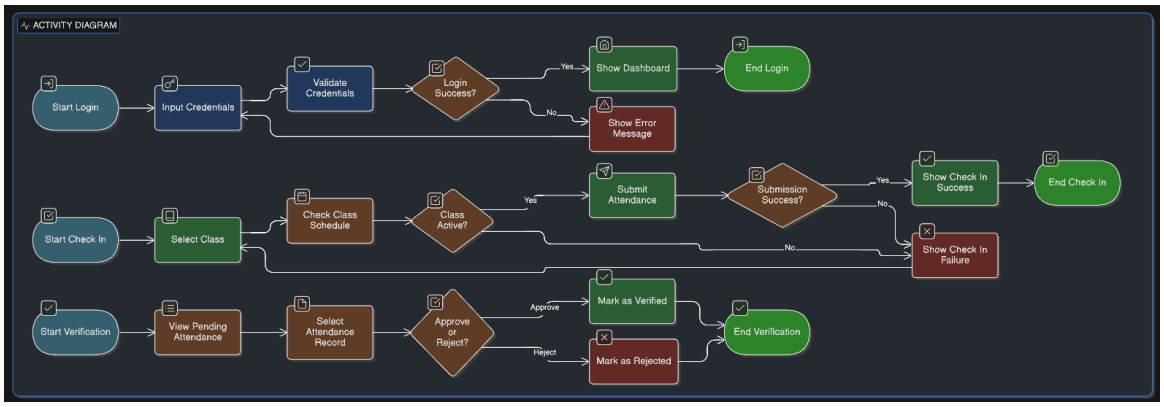
ACTIVITY DIAGRAM
Start Login
Input Credentials
Validate Credentials
Login Success?
Yes
No
Show Dashboard
End Login
Show Error Message
Start Check In
Select Class
Check Class Schedule
Class Active?
Yes
No
Submit Attendance
Submission Success?
Yes
No
Show Check In Success
End Check In
Show Check In Failure
Start Verification
View Pending Attendance
Select Attendance Record
Approve or Reject?
Approve
Reject
Mark as Verified
Mark as Rejected
End Verification

4. Proses Check-in Attendance

Saat mahasiswa melakukan check-in, sistem melakukan validasi:
- Apakah kelas aktif
- Apakah mahasiswa terdaftar
- Apakah belum pernah check-in
- Apakah waktu sesuai jadwal

Jika valid, data disimpan dengan status 'Pending'.

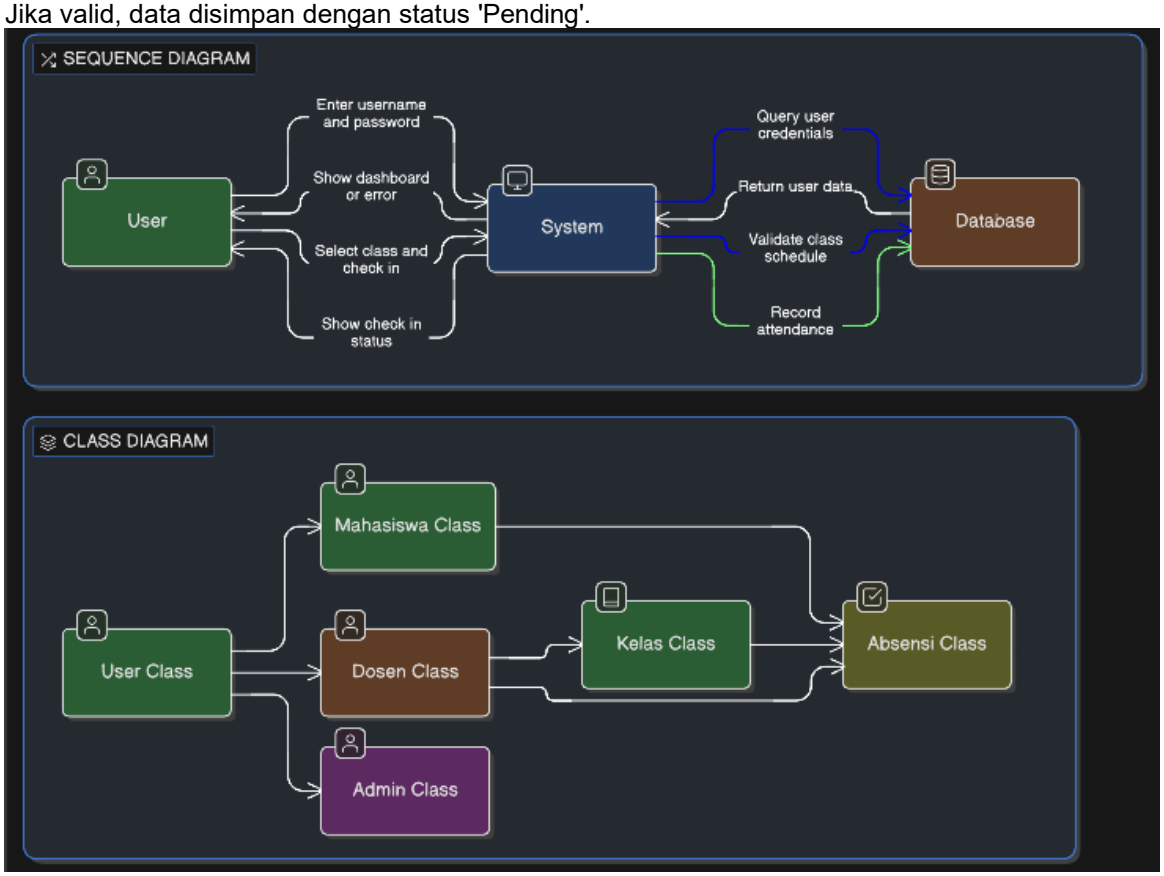

5. Lifecycle Attendance (State Diagram)

Status Attendance:
- Pending
- Verified
- Rejected

Alur:
Submit → Pending → Verified / Rejected

Hanya dosen pemilik kelas yang dapat melakukan verifikasi.

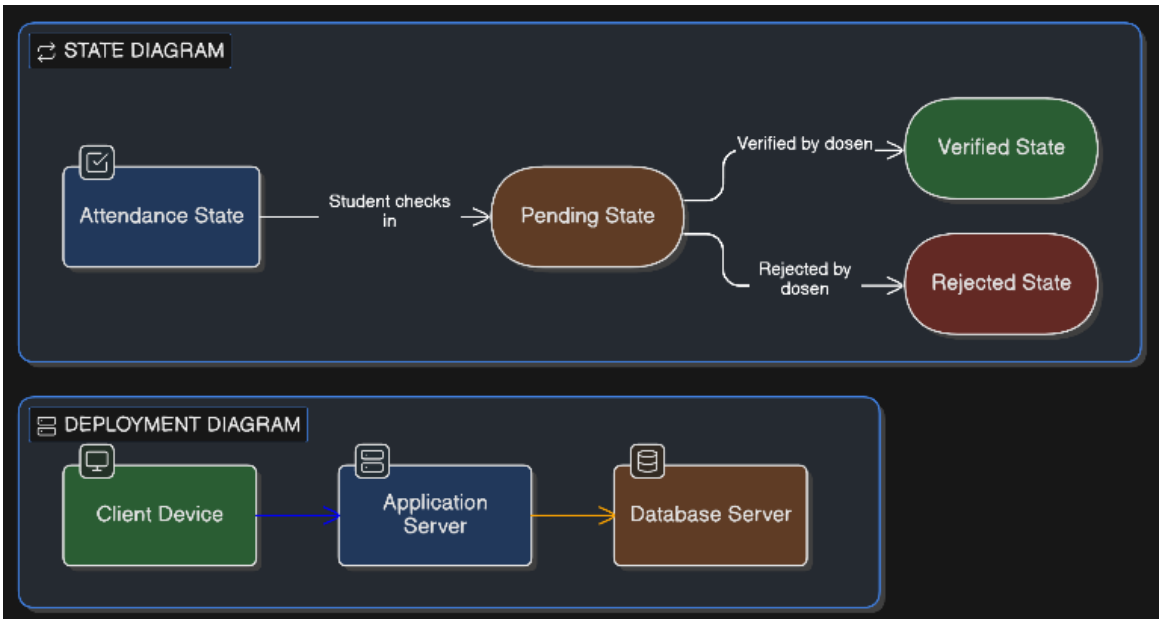

6. Struktur Data (Class Diagram)

Entitas utama:
- User (id, name, email, password_hash, role)
- Student
- Lecturer
- Admin
- Class
- Attendance (student_id, class_id, date, status, verified_by)

Relasi:
Student 1..* Attendance
Class 1..* Attendance
Lecturer 1..* Class

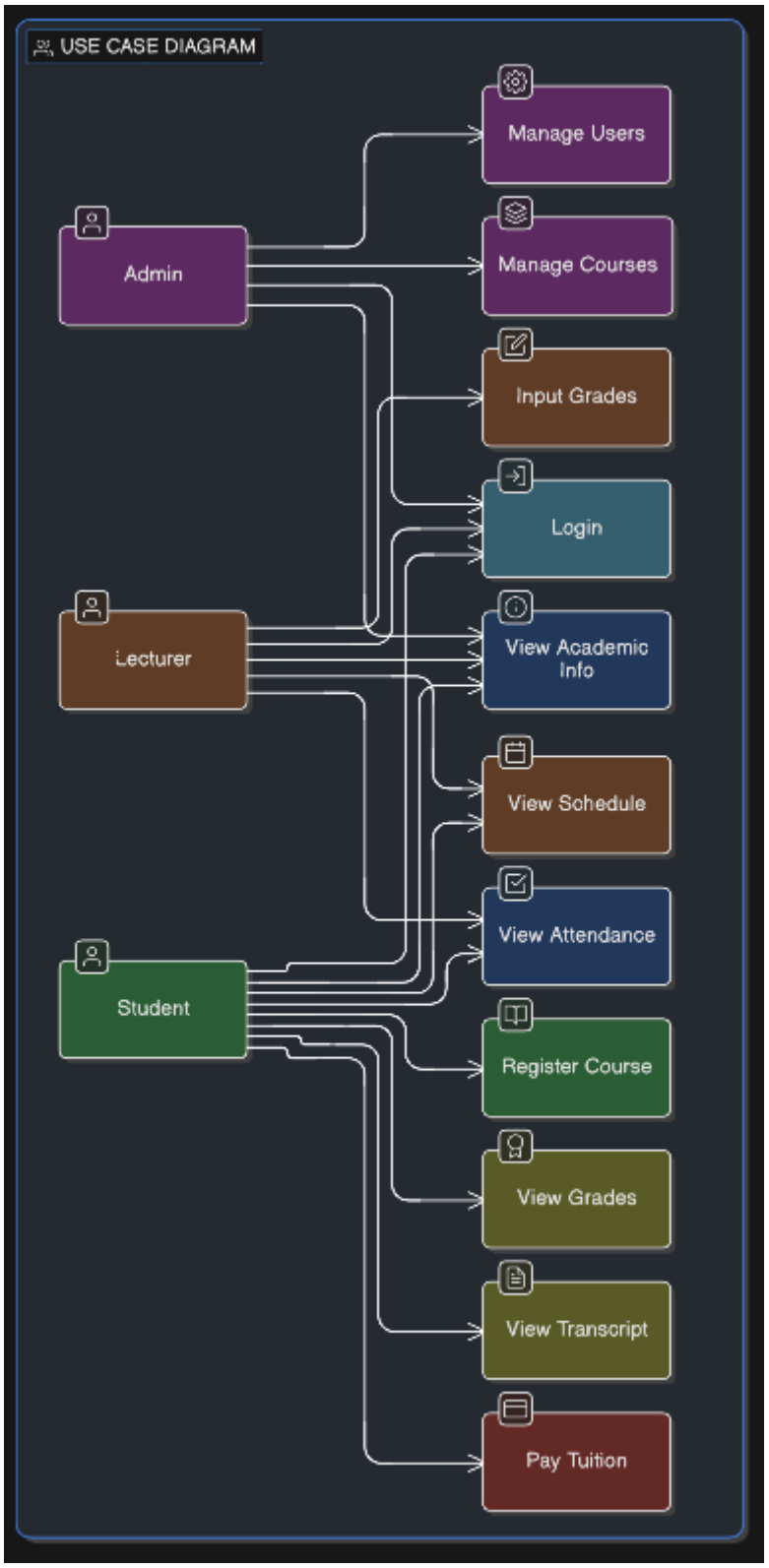
USE CASE DIAGRAM
Admin
Lecturer
Student
Manage Users
Manage Courses
Input Grades
Login
View Academic Info
View Schedule
View Attendance
Register Course
View Grades
View Transcript
Pay Tuition

7. Keamanan Sistem

- Role-Based Access Control (RBAC)
- Unique constraint untuk mencegah duplikasi attendance
- Server-side timestamp
- Audit log perubahan status

8. Kesimpulan

Sistem merupakan Web-Based Role-Driven Attendance System
dengan manual verification dan arsitektur terpusat.

Attendance memiliki lifecycle state yang jelas dan
dipisahkan berdasarkan peran (student submit, lecturer verify).