ESP32-ROVER-E/IE IC

Boot & Enable, Volt. Supervisor

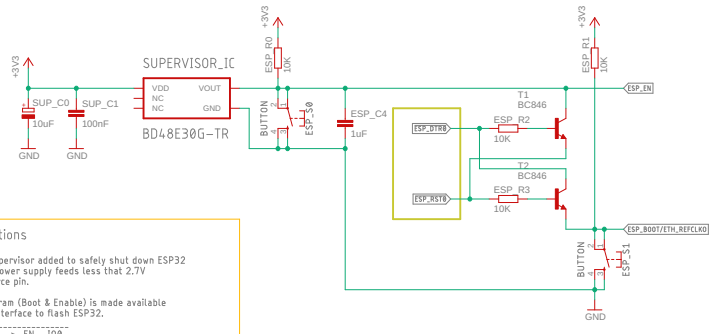

Observations

Voltage supervisor added to safely shut down ESP32 when the power supply feeds less that 2.7V to the source pin.

Auto-program (Boot & Enable) is made available via UART interface to flash ESP32.

DTR	RTS	-> EN	IO0
1	1	1	1
0	0	1	1
1	0	0	1
0	1	1	0

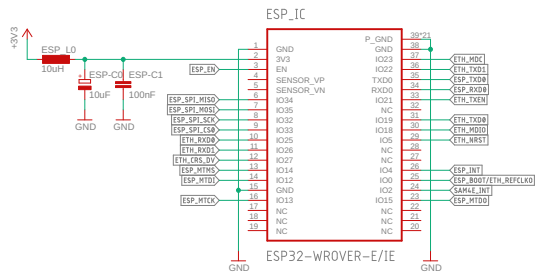

Test Pins

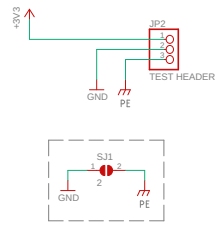

JTAG Interface

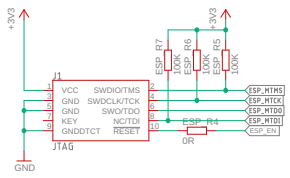

Observations

The 0Ohm resistor may be removed in order to isolate the JTAG port from this system reset signal.

SPI, UART Interfaces

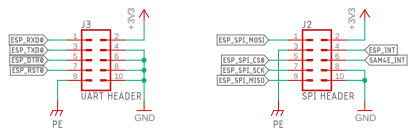

LAN8720A Ethernet IC

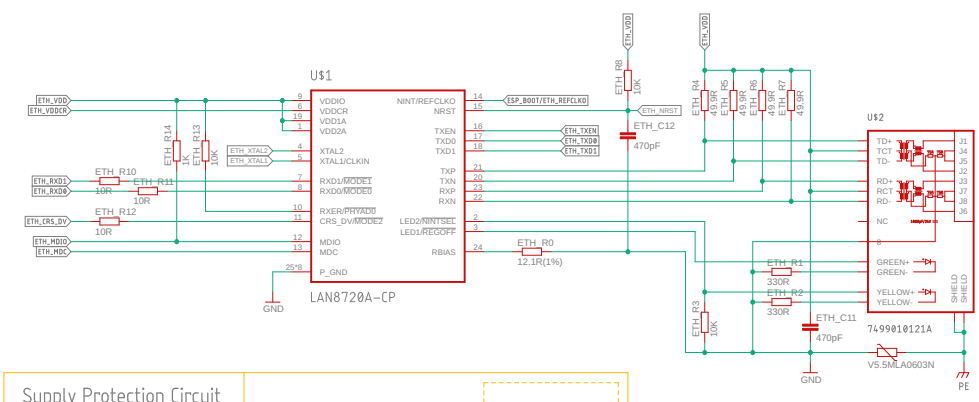

Supply Protection Circuit

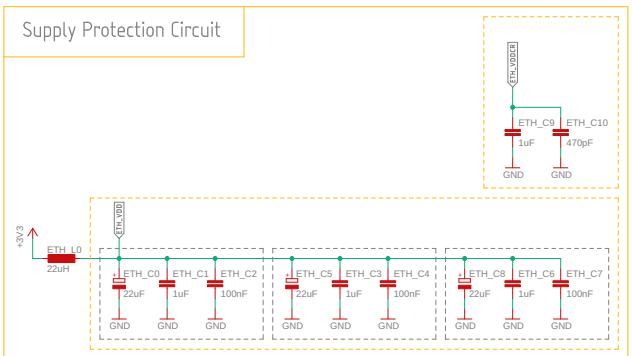

25MHz External Clock

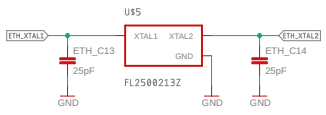

TITLE: plc_esp32	
Document Number:	REV:
Date: 15.08.2023 20:17	Sheet: 1/1