ENEE2360 Project

Temperature Controlled LEDs using LM35DZ

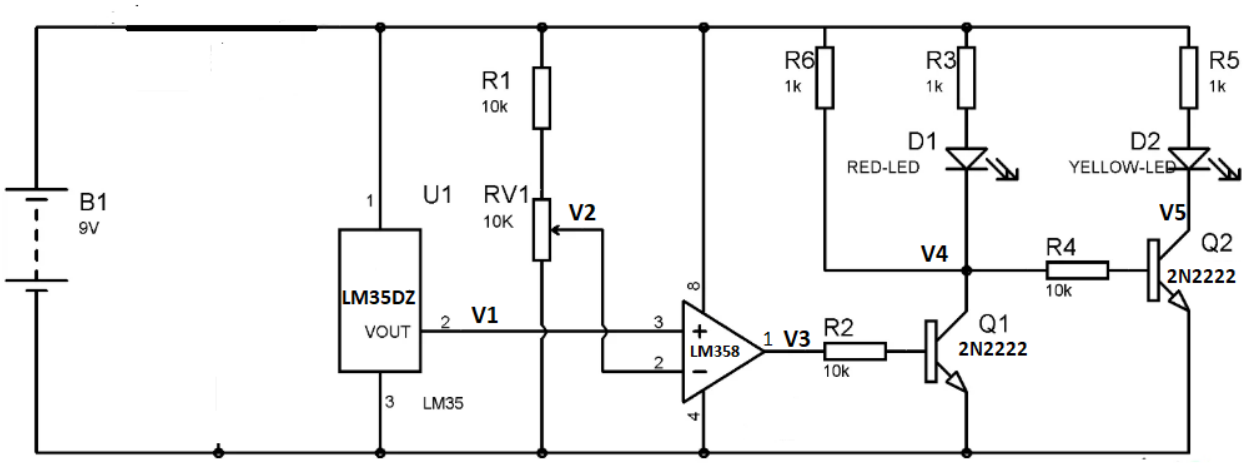

Fig.(1)

Part 1: Practical Part

a) **Construct the circuit shown in Fig.(1) and adjust (RV1) the 10k potentiometer so that the RED LED turns on and the Yellow LED is off.**
b) **Measure the node voltages: V1, V2, V3, V4, and V5**
c) **Adjust (RV1) the 10k potentiometer so that the RED LED turns off and the Yellow LED is on.**
d) **Measure the node voltages: V1, V2, V3, V4, and V5**

Part2 :(Simulation and reporting)

a) Replace each LED in the circuit of Fig.(1) with 3 diodes D1N4148.
b) Replace the LM35DZ sensor with a DC voltage source V1.
c) Replace LM358 IC with µA741IC
d) Change the set parameter of RV1 to 0.90.
e) Sweep the output voltage of the sensor V1 from 200mV to 600mV with 1mV increments and plot V3,V4,and V5.
f) From the plot of V4 in step (d), determine the range of V1 when the RED LED is on and the range of V1 when the RED LED is off.
g) Set V1 to a value that turns the RED LED on, then simulate the circuit and determine the nodal voltages V2, V3, V4, and V5.
h) Set V1 to a value that turns the RED LED OFF, then simulate the circuit and determine the nodal voltages V2, V3, V4, and V5.
i) Write a simple report which includes:

1 – Explanation of the function of the circuit of Fig.(1) .
2 - Simulation circuits and results.
3 - Comparison of simulation results to Practical results.
3 – Conclusion.

GOOD LUCK

LM35DZ Pinout

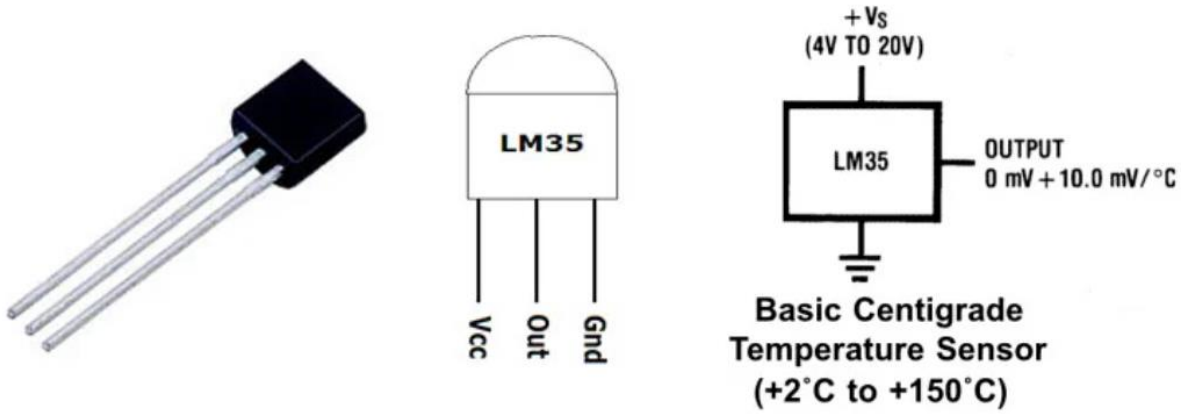
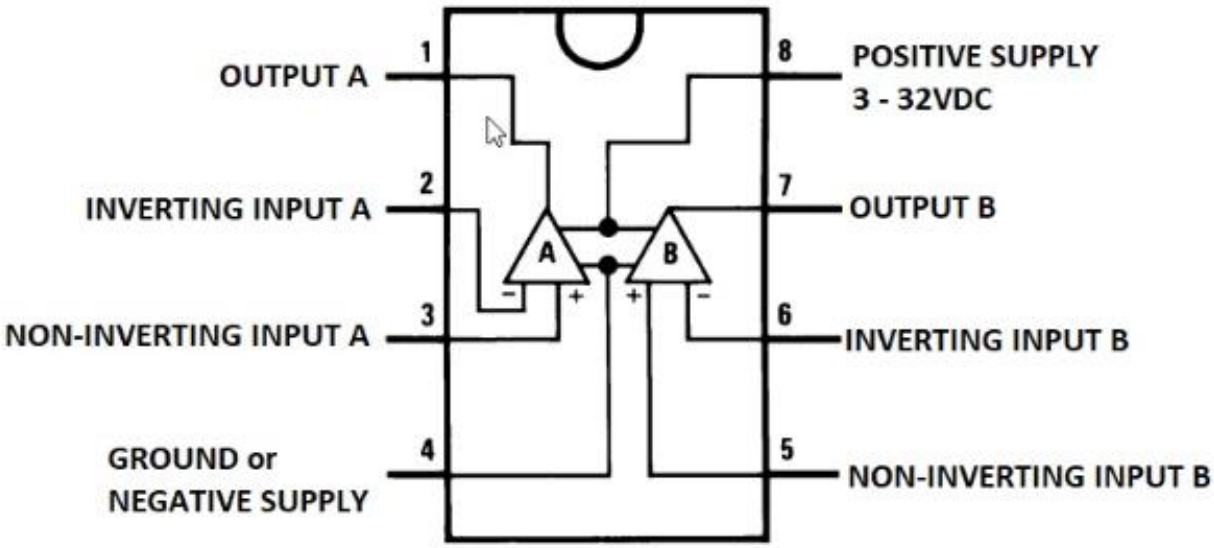
LM358 Pinout