جامعة بيرزيت

BIRZEIT UNIVERSITY

Faculty of Engineering and Technology
Electrical and Computer Engineering Department

ANALOG ELECTRONICS
ENEE2360

Project Report

"Temperature Controlled LEDs using LM35DZ"

Prepared by:	**ID:**
Noor Shawamreh	1232243
Nidal Abu Hammad	1231481
Ahmad khdair	1230500

Instructor:

Dr. Nasser Ismail

Section: 2

Abstract

This project presents the design, implementation, and analysis of a temperature-controlled LED system using the LM35DZ temperature sensor. The circuit converts temperature variations into a proportional voltage signal, which is then compared to a reference voltage using an operational amplifier configured as a comparator. Based on the comparison result, the circuit activates either a red or a yellow LED through transistor switching, indicating whether the measured temperature is below or above a predefined threshold. The project includes both practical implementation and simulation analysis, where the temperature sensor is replaced by a DC voltage source and a voltage sweep is performed to study circuit behavior under varying input conditions. Measured node voltages from the practical setup are compared with simulation results to evaluate circuit performance and verify correct operation. The results demonstrate reliable temperature-dependent switching and highlight the effectiveness of using simple analog components for temperature monitoring and indication.

Table of Contents

Abstract.....2

Table of Contents.....3

List of figures.....4

Overview.....5

1. Explanation of the function of the circuit.....6

2. Simulation circuits and results.....8

3. Comparison of simulation results to practical results.....17

Conclusion.....18

List of figures

Figure 1: LM35DZ Sensor..... 5
Figure 2: LM358 Op-Amp.....5
Figure 3: 2N2222 Transistor..... 5
Figure 4: Circuit.....7
Figure 5: Schematic circuit.....8
Figure 6: DC sweep plot.....9
Figure 7: Circuit if red on.....12
Figure 8: Circuit if red off..... 13
Figure 9: Practical work..... 14

Overview

In this project, several electronic components are used to design a circuit that controls LEDs based on temperature variations. The circuit converts changes in temperature into a corresponding voltage signal and compares it with a reference voltage to determine the operating state of the LEDs.

- **Temperature Sensor (LM35DZ):**

The LM35DZ is a temperature sensor that produces an output voltage linearly proportional to the measured temperature. It provides a scale factor of **10 mV/°C**, allowing accurate conversion of temperature changes into voltage levels. This voltage serves as the primary input to the circuit.

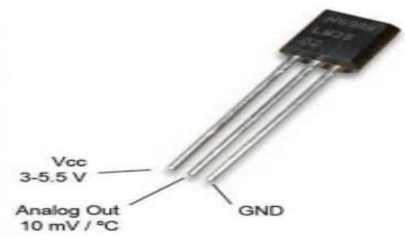

Figure 1: LM35DZ Sensor

- **Operationl Amplifier**

The LM358 operational amplifier is configured as a comparator. It compares the voltage generated by the LM35DZ sensor with a reference voltage set by a potentiometer. The output of the comparator changes its state depending on which input voltage is higher, enabling control of the LED switching mechanism.

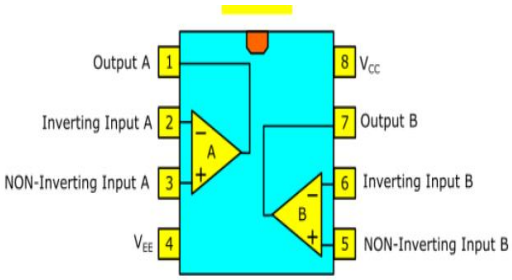

Figure 2: LM358 Op-Amp

- **Transistors (2N2222):**

Two NPN transistors are used as electronic switches to drive the LEDs. Since the operational amplifier cannot supply sufficient current to power the LEDs directly, the transistors provide the required current amplification.

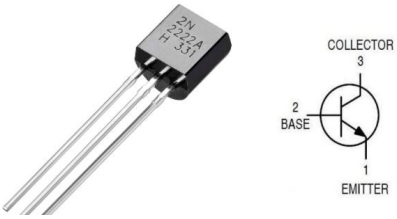

Figure 3: 2N2222 Transistor

- **Potentiometer (RV1 – 10 kΩ):**

The potentiometer is used to adjust the reference voltage, which defines the temperature threshold for LED switching. By varying the potentiometer setting, the temperature level at which the circuit changes its output can be controlled.

- **LEDs (Red and Yellow):**

The LEDs provide a visual indication of the temperature condition. The red LED and yellow LED turn on alternately depending on whether the sensed temperature is below or above the preset threshold value.

- **Power Supply:**

A DC power supply is used to provide the required operating voltages for the temperature sensor, operational amplifier, and transistor stages of the circuit.

1. Explanation of the function of the circuit:

The circuit shown in Fig 4 is a temperature-controlled LED indicator designed to monitor temperature variations and provide a visual output using two LEDs. The LM35DZ temperature sensor produces an output voltage (V1) that is directly proportional to the ambient temperature, with a sensitivity of 10 mV/°C. As the temperature changes, the sensor output voltage varies accordingly.

A reference voltage (V2) is generated using a resistor and potentiometer network. By adjusting the potentiometer, the user can set the desired temperature threshold at which the circuit changes its output state. The LM358 operational amplifier is configured as a comparator that compares the sensor voltage V1 with the reference voltage V2. When the sensor voltage is lower than the reference voltage, the comparator output (V3) remains at a low level, and when the sensor voltage exceeds the reference voltage, the comparator output switches to a high level.

The comparator output controls two NPN transistors (2N2222), which operate as electronic switches. These transistors provide the necessary current to drive the LEDs, as the operational amplifier cannot supply sufficient current directly. Depending on the state of the comparator output, either the red LED or the yellow LED turns on, indicating whether the measured temperature is below or above the preset threshold. Current-limiting resistors are included to protect the LEDs and ensure safe operation of the circuit.

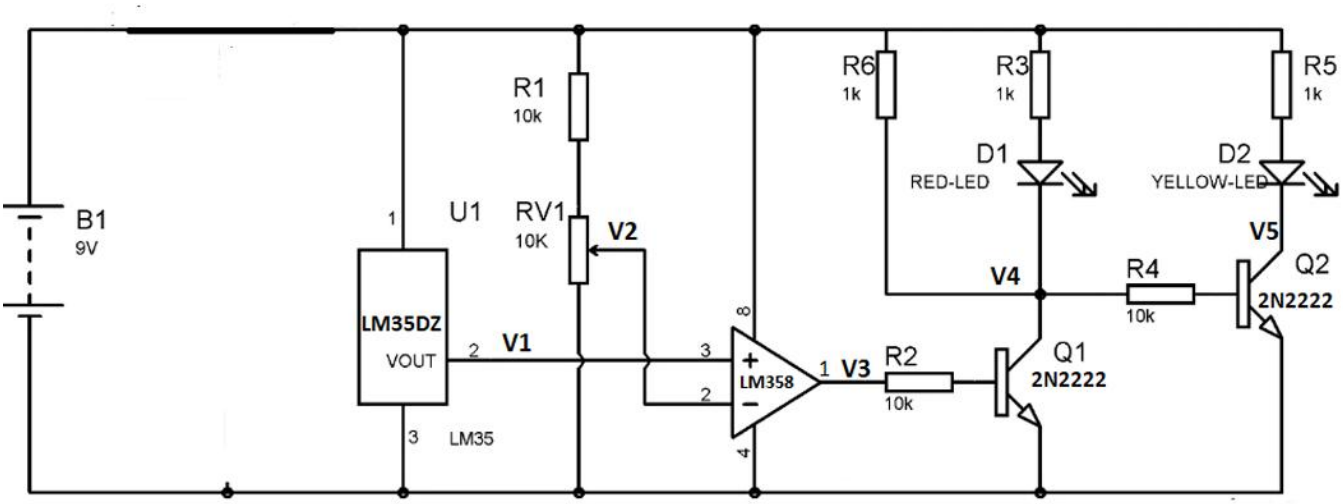

Figure 4: circuit

2. Simulation circuits and results.

For the simulation part, the circuit was modified as follows:

a) **Replace each LED in the circuit of Fig.(1) with 3 diodes D1N4148.**

b) **Replace the LM35DZ sensor with a DC voltage source V1.**

c) **Replace LM358 IC with µA741IC**

d) **Change the set parameter of RV1 to 0.90.**

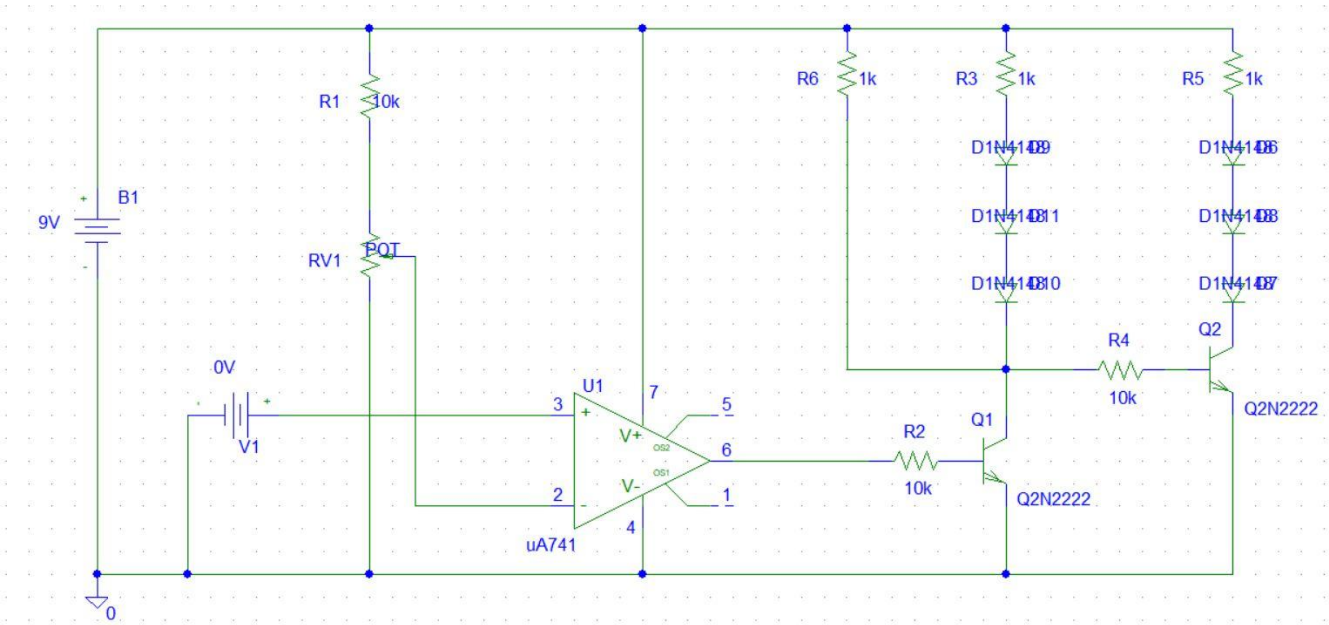

Figure 5: Schematic circuit

Note:

Although the original circuit in Fig. (4) uses a 9 V battery, the practical measurements in the laboratory were evaluated by the instructor based on a 6 V supply. Therefore, to ensure consistency between the practical measurements and the simulation results, the supply voltage in the simulation and the reported results was adjusted to 6 V.

E) Sweep the output voltage of the sensor V1 from 200mV to 600mV with 1mV increments and plot V3,V4,and V5.

A DC sweep analysis was performed by sweeping the input voltage **V1** from **200 mV to 600 mV** with **1 mV increments**. During the sweep, the node voltages **V3**, **V4**, and **V5** were plotted on the same graph. The plot shows a clear switching behavior around the reference voltage, where the comparator output changes state and the active LED branch switches accordingly.

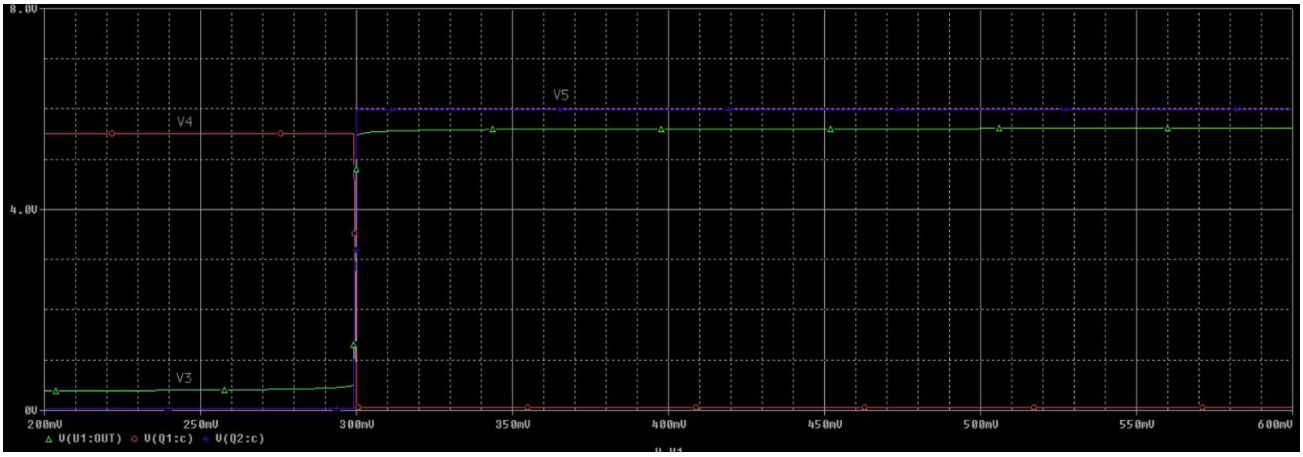

Figure 6: DC sweep plot

The sensor voltage (V1) was swept from 200 mV to 600 mV, and the corresponding node voltages V3, V4, and V5 were recorded. As illustrated in Figure 6, a clear switching point is observed at approximately 300 mV, which represents the threshold level of the circuit.

From the plot of V4, it can be observed that when V4 remains at a low voltage level, current flows through the red LED branch, causing the red LED to turn ON, while the yellow LED remains OFF. As the input voltage increases and the circuit reaches the threshold level, V4 abruptly transitions to a high voltage level. In this condition, current flow through the red LED branch is interrupted, and the high voltage at V4 drives transistor Q2, resulting in the red LED turning OFF and the yellow LED turning ON.

The sharp and well-defined transition observed in the V4 waveform confirms proper switching behavior and reliable operation of the LED control circuit based on the sensor input voltage.

F)From the plot of V4 in step (d), determine the range of V1 when the RED LED is on and the range of V1 when the RED LED is off.

From the DC sweep plot of V4, the operating ranges of the red LED were determined. It is observed that when the voltage at node V4 is at a high level, the red LED is OFF while the yellow LED is ON. When V4 drops to a low voltage level, current flows through the red LED branch, causing the red LED to turn ON and the yellow LED to turn OFF.

The transition in the voltage level of V4 occurs at an input voltage of approximately 300 mV, which represents the threshold of the circuit.

Accordingly:

- RED LED ON range: V1 ≈ 300 mV to 600 mV (V4 low)
- RED LED OFF range: V1 ≈ 200 mV to 300 mV (V4 high)

G)Set V1 to a value that turns the RED LED on, then simulate the circuit and determine the nodal voltages V2, V3, V4, and V5.

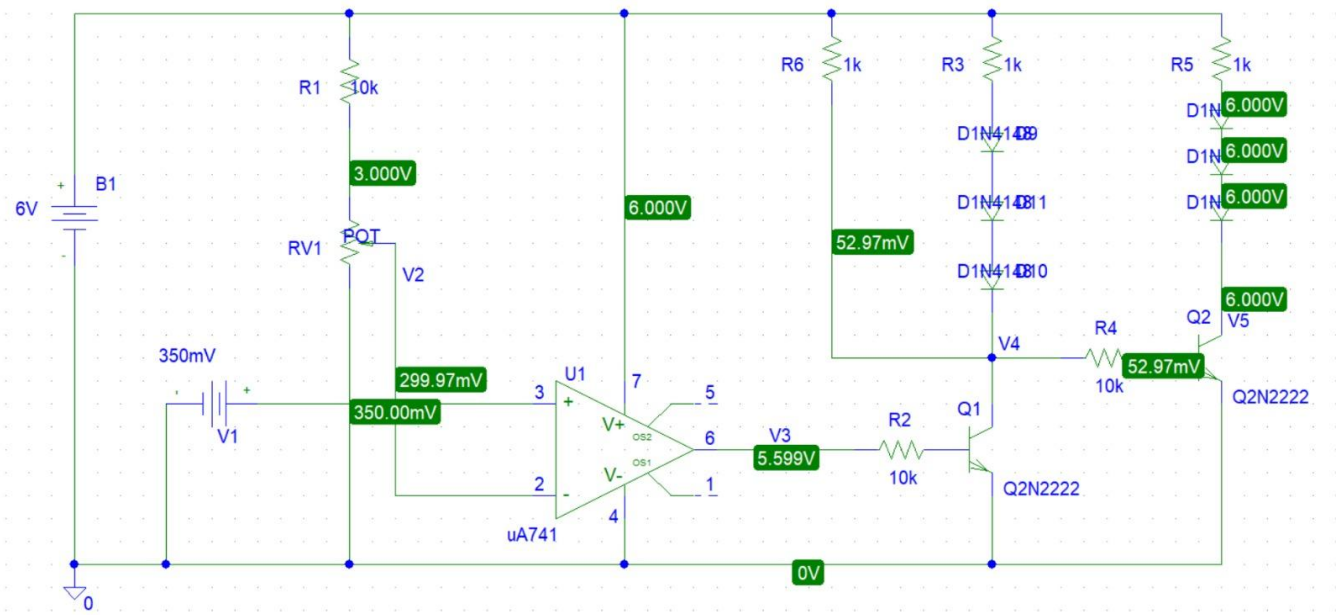

Figure 7: circuit if red on

In this simulation, the input voltage was set to V1 = 350 mV, which is greater than the threshold voltage. The following exact nodal voltages were obtained from the simulation:

- V2 = 299.97 mV
- V3 = 5.599 V
- V4 = 52.97 mV
- V5 = 6.00V

Since V1 > 300 mV, the comparator output (V3) switches to a high level, turning transistor Q1 ON. As a result, node V4 is pulled down to a very low voltage level, allowing current to flow through the red LED branch. Therefore, when V1 exceeds 300 mV, V4 becomes very small, which directly causes the red LED to turn ON, while the yellow LED remains OFF due to insufficient base drive at Q2.

H) Set V1 to a value that turns the RED LED OFF, then simulate the circuit and determine the nodal voltages V2, V3, V4, and V5.

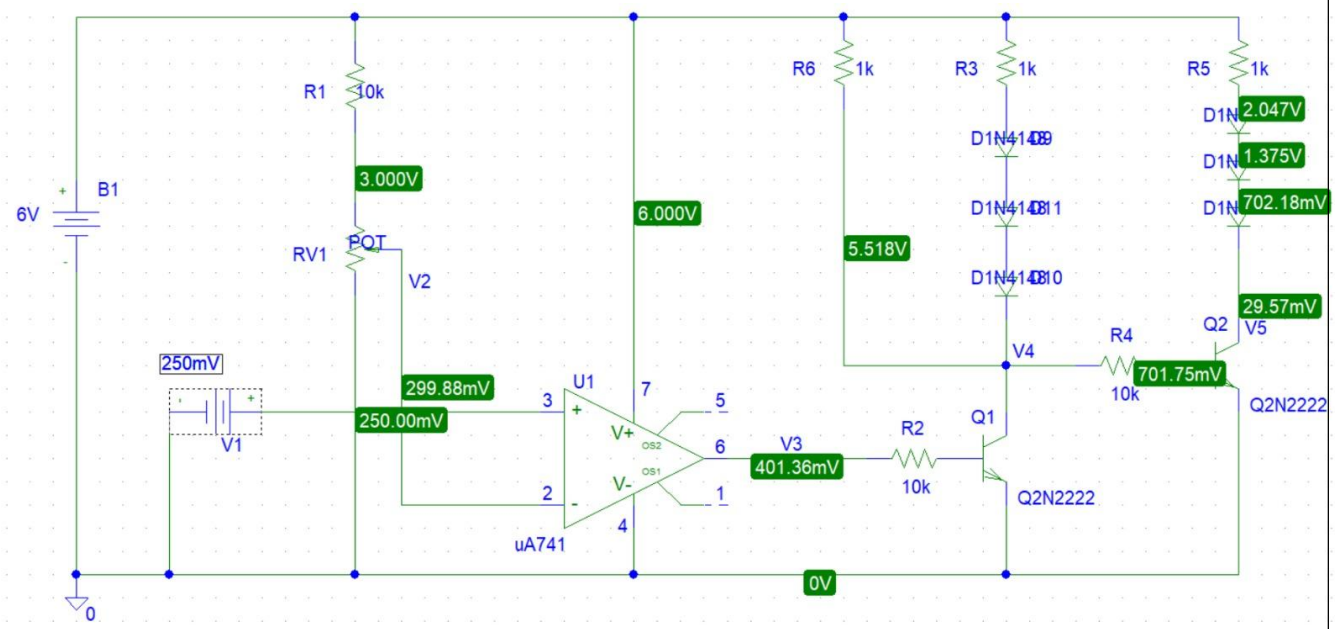

Figure 8: circuit if red off

To analyze the circuit operation when the red LED is OFF, the input voltage was set to V1 = 250 mV, which is below the threshold voltage (300 mV). A DC operating point simulation was performed, and the nodal voltages V2, V3, V4, and V5 were measured as shown in the figure.

Exact nodal voltages from the simulation:

- V2 = 299.88 mV
- V3 = 401.36 mV
- V4 = 5.518 V
- V5 = 29.57mV

Since V1 < 300 mV, the comparator output V3 remains at a low level, keeping transistor Q1 OFF. As a result, node V4 is pulled up to a relatively high voltage level, which interrupts current flow through the red LED branch, causing the red LED to turn OFF. At the same time, the high voltage at V4 drives the base of Q2, turning it ON and allowing current to flow through the yellow LED branch. Therefore, when V1 is less than 300 mV, V4 becomes relatively high, resulting in the red LED being OFF and the yellow LED being ON.

3. Comparison of simulation results to Practical results.

Practical work

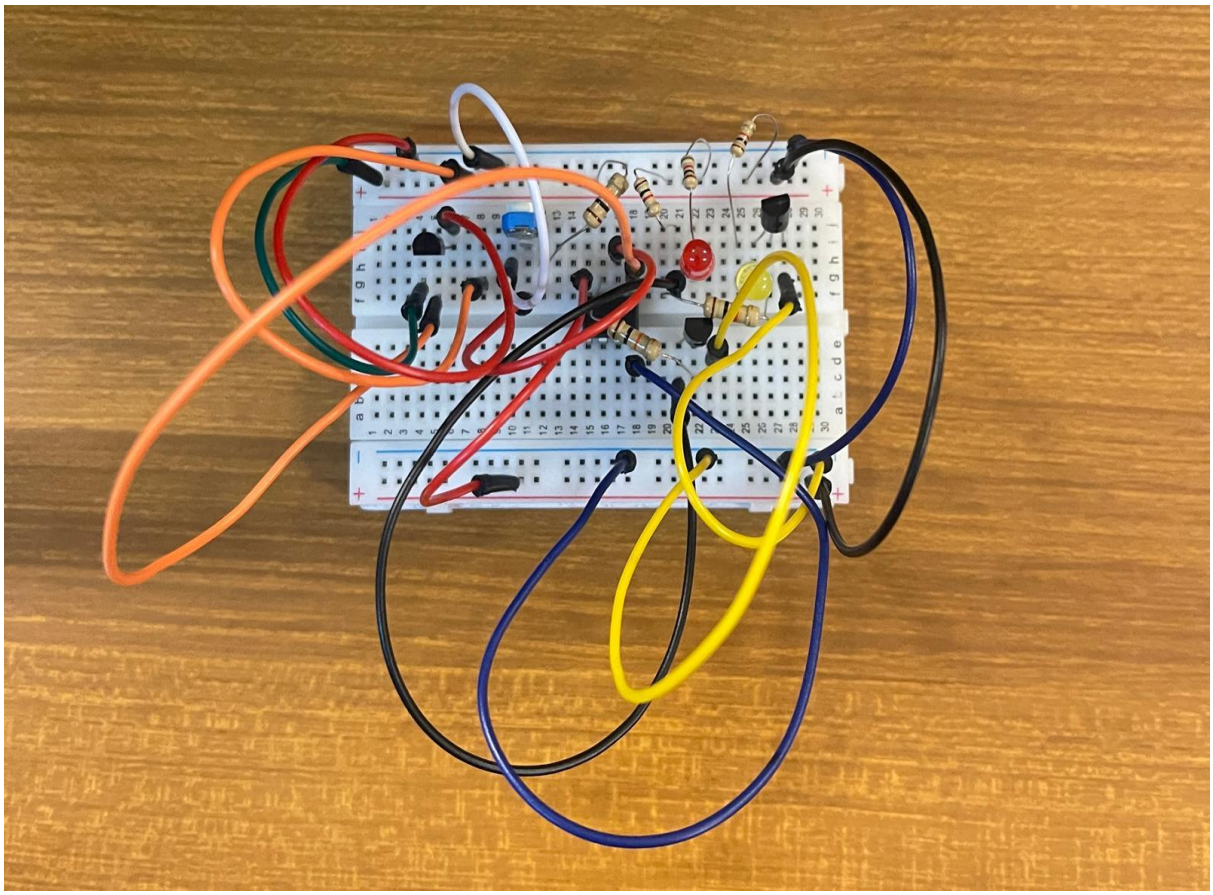

Figure 9: practical work

Case 1: RED LED ON, YELLOW LED OFF

The potentiometer RV1 was adjusted until the red LED turned ON and the yellow LED turned OFF. The measured nodal voltages are listed below.

Node	Measured Voltage (V)
V1	0.60
V2	0.00
V3	4.70
V4	0.03
V5	4.48

Case 2: RED LED OFF, YELLOW LED ON

The potentiometer RV1 was adjusted until the red LED turned OFF and the yellow LED turned ON. The measured nodal voltages are listed below.

Node	Measured Voltage (V)
V1	0.62
V2	2.37
V3	0.00
V4	5.50
V5	0.02

Practical and Simulation Results Comparison

Case 1: RED LED ON, YELLOW LED OFF

Node	Practical (V)	Simulation (V)
V1	0.60	0.35
V2	0.00	0.299
V3	4.70	5.59
V4	0.03	0.53
V5	4.48	6.00

Case 2: RED LED OFF, YELLOW LED ON

Node	Practical (V)	Simulation (V)
V1	0.62	0.250
V2	2.37	0.298
V3	0	0.40
V4	5.5	5.518
V5	0.02	0.29

The practical measurements were compared with the simulation results in order to evaluate the accuracy and validity of the circuit model. In both operating cases, the simulation and experimental results demonstrate the same functional behavior and switching logic, confirming the correctness of the circuit design.

In Case 1 (RED LED ON, YELLOW LED OFF), both the practical and simulation results indicate that the red LED is activated when node V4 is at a low voltage level. In the practical measurements, V4 ≈ 0.03 V, which indicates that transistor Q1 is strongly saturated, allowing current to flow through the red LED branch. In the simulation, V4 ≈ 0.53 V, which is higher than the measured value. This difference is mainly due to non-ideal transistor modeling and the fact that the simulation does not always represent full transistor saturation exactly as in the real circuit. Despite this numerical difference, the simulation correctly reflects the operating condition, with the red LED ON and the yellow LED OFF.

In Case 2 (RED LED OFF, YELLOW LED ON), a very close agreement between the practical and simulation results is observed. In both cases, node V4 rises to a high voltage level (approximately 5.5 V), which interrupts current flow through the red LED branch and drives transistor Q2 into conduction, turning the yellow LED ON. Minor differences at nodes V3 and V5 are expected and can be attributed to diode forward voltage drops, base–emitter junction thresholds, and measurement tolerances in the practical setup.

Overall, the simulation results are consistent with the practical measurements in terms of circuit operation and switching behavior. The small differences between simulated and measured voltages are acceptable and result from real-world non-idealities such as component tolerances, transistor saturation effects, diode voltage drops, and simplifications in the simulation models. Therefore, the simulation can be considered a reliable and accurate representation of the practical circuit behavior.

Conclusion

A temperature-controlled LED indicator circuit using the LM35DZ temperature sensor was successfully designed, simulated, and implemented. The circuit converts temperature variations into a proportional voltage and compares it with a reference voltage to control the switching of red and yellow LEDs. Simulation results showed a clear switching threshold at approximately 300 mV, which was confirmed by practical measurements. Minor differences between simulation and experimental results were observed due to component tolerances and non-ideal device behavior. Overall, the close agreement between simulation and practical results verifies the correct operation and reliability of the proposed circuit.