“COMPARATIVE ANALYSIS OF SINGLE CYCLE AND 5-STAGE PIPELINED PROCESSOR USING RISC-V”

Submitted by

NIDA PARVEEN

SANA NASRIN

THESNEEM V T

MUHAMMED SINAN V T

in partial fulfilment for the award of the degree

of

BACHELOR OF TECHNOLOGY

in

COMPUTER SCIENCE AND ENGINEERING

ROYAL COLLEGE OF ENGINEERING & TECHNOLOGY

AKKIKAVU

APJ ABDUL KALAM TECHNOLOGICAL UNIVERSITY

MARCH 2026

ABSTRACT

This project presents a comparison between a Single Cycle Processor and a 5-Stage Pipelined Processor using the RISC-V architecture in the Ripes simulator. The objective of the project is to understand how different processor designs execute instructions and how pipelining improves processor performance. A simple RISC-V assembly program was implemented and executed on both processor architectures. The execution process was observed using simulation screenshots, including datapath views, pipeline stages, and register outputs.

The results obtained from the simulation show that processors correctly executed the given instructions and produced the expected register values. However, the pipelined processor demonstrated improved efficiency by allowing multiple instructions to be processed simultaneously in different stages of the pipeline. This project highlights the advantages of pipelining in modern processor design and provides a practical understanding of instruction execution and processor performance.

CONTENTS

		Page No.
	ABSTRACT	**i**
	LIST OF FIGURES	**3**
1	**INTRODUCTION**	
	1.1 Background of the study	**4**
	1.2 Single cycle processor concept	
	1.3 Pipeline processor concept	**4**
	1.4 Objective of the project	
2	**LITERATURE REVIEW**	**5**
3	**SYSTEM OVERVIEW**	
	2.1 RISC V architectures	**7**
	2.2 Ripes simulator	
	2.3 Instruction set used	
4	**SINGLE CYCLE PROCESSOR**	
	3.1 Architecture of Single Cycle Processor	**8**
	3.2 Working of single cycle processor	
	3.3 Data path of single cycle processor	**9**
	3.4 Observation	
5	**FIVE STAGE PIPELINED PROCESSOR**	
	4.1 Pipeline concept	**10**
	4.2 Five pipeline stage	
	4.3 Pipeline datapath	**11**
	4.4 Observation	
6	**PROGRAM EXECUTION**	
	5.1 Program used	**12**
	5.2 Program explanation	
	5.3 Register output	**13**
	5.4 Execution analysis	

7 COMPARISON AND PERFORMANCE ANALYSIS **14**

6.1 Comparison b/w single cycle and pipeline processor

6.2 Performance analysis **15**

6.3 Result

CONCLUSION **16**

REFERENCE **17**

APPENDIX **18**

Appendix A - RISC V program **19**

Appendix B - simulation screenshot

LIST OF FIGURES

Fig No	Title	Page No
3.1	**Single cycle processor**	**8**
3.2	**Register of single cycle**	**9**
4.1	**pipeline processor**	**11**
4.2	**Register of pipeline processor**	**11**
5.1	**Register value**	**13**
B.1	**Single processor**	**18**
B.2	**RISC V processor**	**19**
B.3	**Register value**	**19**

CHAPTER 1

INTRODUCTION

1.1 Background of the Study

A processor executes instructions stored in memory, and its performance depends on how efficiently these instructions are processed. A Single Cycle Processor executes each instruction in one clock cycle, making it simple but inefficient due to long cycle time. To improve performance, modern processors use pipelining, which allows multiple instructions to be executed simultaneously.

1.2 Single Cycle Processor Concept

A Single Cycle Processor completes all stages of instruction execution in one clock cycle. It is simple and does not require complex control, but performance is limited because the cycle must match the slowest instruction. It is mainly used for learning purposes.

1.3 Pipelined Processor Concept

A Pipelined Processor divides instruction execution into stages such as fetch, decode, execute, memory access, and write back. This allows multiple instructions to run simultaneously, improving performance. However, it can introduce hazards like data and control hazards.

1.4 Objective of the Project

The objective is to compare a Single Cycle Processor and a 5-Stage Pipelined Processor using RISC-V in the Ripes simulator, analyzing their execution and performance differences.

CHAPTER 2

LITERATURE REVIEW

R. F. Olanrewaju et al., [1] In this work, the authors designed and implemented a simulator for a five-stage pipelined processor architecture based on the RiSC-16 instruction set. The study focuses on demonstrating how pipelining improves processor performance by allowing multiple instructions to be processed simultaneously in different stages of the pipeline. The architecture divides instruction execution into stages and simulates their operation to analyze instruction flow and execution timing. The results show that pipelined architecture significantly improves instruction throughput compared to non-pipelined processors while maintaining correct program execution. The work highlights the advantages of pipelining in improving processor efficiency and provides a useful framework for understanding RISC processor design.

A. Samanta, S. Goswami, K. Pal, and M. S. Das, [2] In this study, the authors presented a comprehensive survey and comparison of different pipelined RISC processor architectures. The research discusses how pipelining improves processor throughput by overlapping instruction execution. The study also compares simpler pipelines such as three-stage pipelines with deeper pipelines like five-stage architectures. Their analysis shows that three-stage pipelines provide lower hardware complexity and power consumption, making them suitable for embedded systems, whereas five-stage pipelines provide better performance and higher clock frequencies. The work also highlights the challenges introduced by deeper pipelines, such as pipeline hazards and increased design complexity.

Y. Chang, Y. Liu, C. Peng, J. Guo, and Y. Zhao, [3] In this work, the authors designed a configurable five-stage pipeline processor core based on the RISC-V RV32IM architecture. The processor divides instruction execution into five stages: instruction fetch, decode, execute, memory access, and write back. The design allows optional extensions such as multiplication and division units to be enabled or disabled depending on application requirements. The study demonstrates that configurable processor cores can effectively balance performance and power efficiency for embedded and IoT systems. The results indicate that the five-stage pipeline architecture provides a good trade-off between hardware complexity and instruction throughput.

J. Mach, L. Kohútka, and P. Čičák, [4] In this study, the authors proposed a fault-tolerant pipelined processor architecture to protect against soft errors such as single-event transients and single-event upsets. The proposed approach integrates redundancy directly within the pipeline to detect faults quickly during instruction execution. The pipeline is divided into sections where redundant computations help identify errors and allow recovery through pipeline flushing. The architecture also includes proactive register file scrubbing to prevent error accumulation. Experimental results on a RISC-V processor core show that the approach provides strong fault detection capabilities while maintaining acceptable performance overhead, making it an efficient alternative to traditional fault-tolerance techniques such as triple modular redundancy.

CHAPTER 3

SYSTEM OVERVIEW

2.1 RISC-V Architecture

RISC-V is an open-source Reduced Instruction Set Computer (RISC) architecture known for its simplicity and flexibility. It follows a load-store design, where arithmetic and logical operations are performed on registers, while memory is accessed using load and store instructions. In this project, the RV32I base instruction set is used, which supports basic arithmetic, logical, and control operations. Its simple and modular structure makes it suitable for studying processor design concepts like single-cycle execution and pipelining.

2.2 Ripes Simulator

Ripes is a graphical RISC-V simulator designed for educational purposes. It allows users to visualize how instructions are executed inside a processor. The simulator provides different processor models, including single-cycle and pipelined processors. It also displays register values, memory contents, and datapath diagrams, making it easier to understand and analyze processor behavior and performance.

2.3 Instruction Set Used

In this project, a simple RISC-V assembly program using the RV32I instruction set was executed. The main instructions used are ADDI (Add Immediate) and ADD (Add). ADDI adds an immediate value to a register, while ADD performs addition between two registers. These instructions were used to perform basic arithmetic operations, and the same program was run on both processors to compare their execution behavior.

CHAPTER 4

SINGLE CYCLE PROCESSOR

3.1 Architecture of Single Cycle Processor

A Single Cycle Processor is a processor architecture in which each instruction is executed completely within one clock cycle. In this design, all stages of instruction execution such as instruction fetch, instruction decode, execution, memory access, and write back are performed within a single clock cycle. The datapath of a single cycle processor includes components such as the Program Counter (PC), Instruction Memory, Register File, Arithmetic Logic Unit (ALU), Data Memory, and Control Unit.

The Program Counter stores the address of the next instruction to be executed. The instruction memory contains the program instructions. The register file stores temporary data used during program execution, while the ALU performs arithmetic and logical operations.

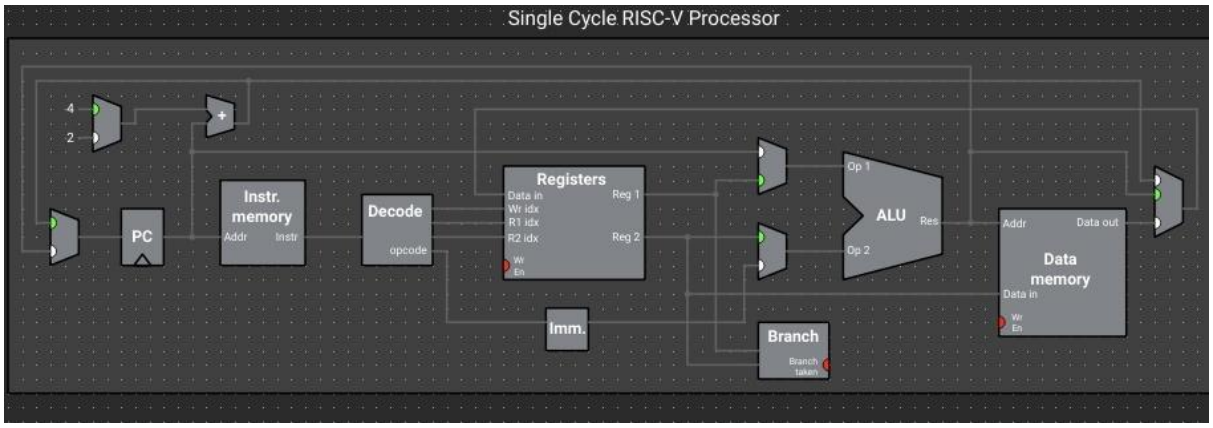

Fig3.1. Single cycle processor

3.2 Working of Single Cycle Processor

In a single cycle processor, the execution of an instruction takes place in a single clock cycle. First, the instruction is fetched from the instruction memory using the program counter. Next, the instruction is decoded to determine the operation to be performed and the registers involved. The ALU then performs the required arithmetic or logical operation. If the instruction requires memory access, the processor reads from or writes to the data memory. Finally, the result of the instruction is written back to the register file.

Since all these steps occur within one clock cycle, the clock period must be long enough to accommodate the slowest instruction.

3.3 Datapath of Single Cycle Processor

The datapath of a single cycle processor represents the flow of data between different hardware components during instruction execution. It includes connections between the program counter, instruction memory, register file, ALU, data memory, and write-back path. The control unit generates control signals that determine how data moves through the datapath.

This datapath structure ensures that every instruction completes all required stages within a single clock cycle.

3.4 Observation

From the simulation in the Ripes simulator, the single cycle processor successfully executed the given RISC-V program. The instructions were processed sequentially, and the results were stored in the corresponding registers. The register outputs confirmed that the program executed correctly.

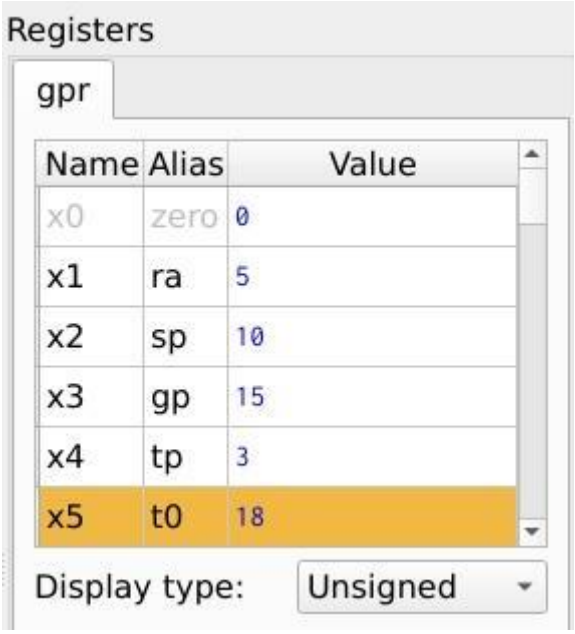

Fig3.2. Register of single cycle

CHAPTER 5

FIVE-STAGE PIPELINED PROCESSOR

4.1 Pipeline Concept

Pipelining is a technique used in processor design to improve performance by allowing multiple instructions to be executed simultaneously. Instead of completing one instruction before starting the next, pipelining divides the instruction execution process into several stages. Each stage performs a specific part of the instruction execution, and different instructions can be processed at different stages at the same time. This overlapping of instruction execution increases the instruction throughput and improves the overall efficiency of the processor.

4.2 Five Pipeline Stages

A typical five-stage pipelined processor consists of the following stages: Instruction Fetch (IF), Instruction Decode (ID), Execute (EX), Memory Access (MEM), and Write Back (WB). In the Instruction Fetch stage, the processor retrieves the instruction from memory using the program counter. In the Instruction Decode stage, the instruction is decoded and the required registers are identified. In the Execute stage, the Arithmetic Logic Unit (ALU) performs the required arithmetic or logical operation. During the Memory Access stage, the processor reads data from memory or writes data to memory if required by the instruction. Finally, in the Write Back stage, the result of the instruction is written back to the register file.

4.3 Pipeline Datapath

The datapath of a pipelined processor is similar to that of a single cycle processor but includes pipeline registers between stages. These registers store intermediate results and allow multiple instructions to move through the pipeline simultaneously. The main pipeline registers include IF/ID, ID/EX, EX/MEM, and MEM/WB. These registers help maintain the flow of instructions through the pipeline stages and ensure correct execution.

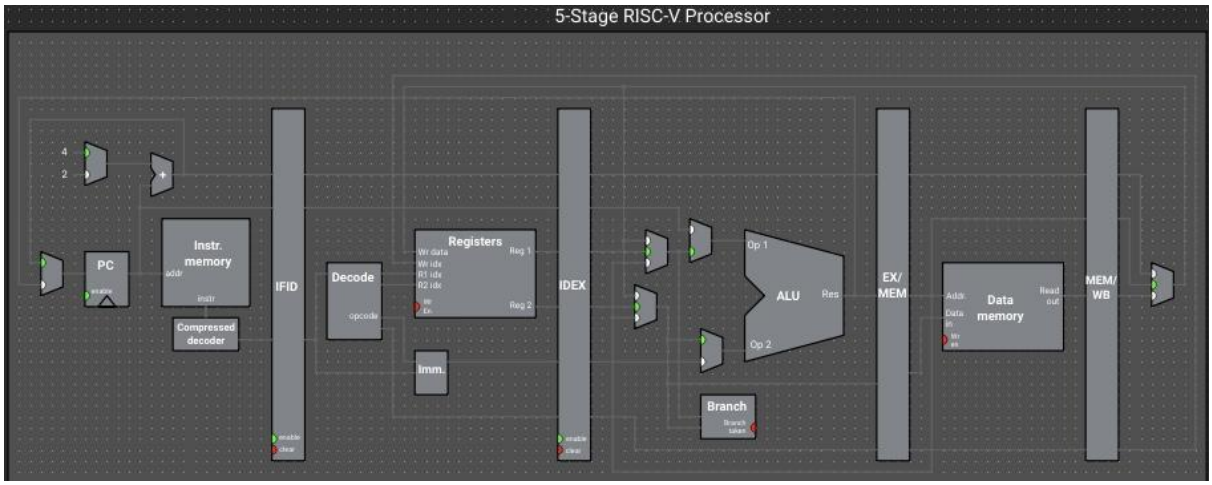

Fig 4.1. Pipeline processor

4.4 Observation

From the simulation performed using the Ripes simulator, the five-stage pipelined processor successfully executed the given RISC-V program. The instructions moved through different pipeline stages simultaneously, demonstrating the concept of pipelining. The register outputs obtained after execution confirmed that the program produced the correct results.

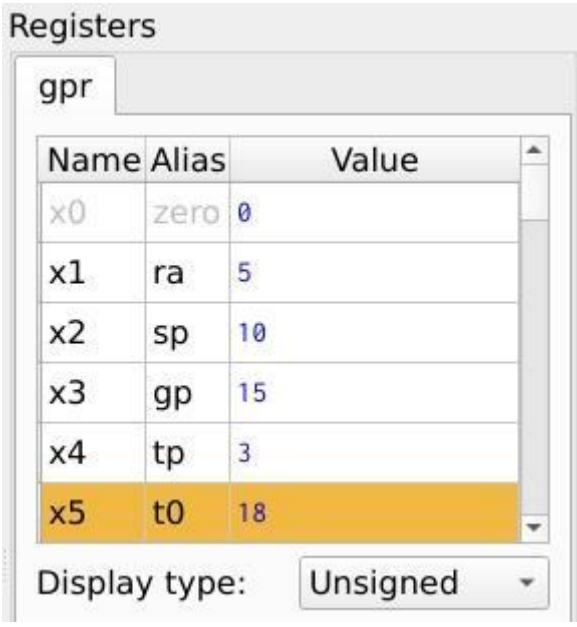

Fig 4.2. Register of pipeline processor

CHAPTER 6

PROGRAM EXECUTION

5.1 Program Used

In this project, a simple RISC-V assembly program was used to demonstrate the execution of instructions in both the Single Cycle Processor and the 5-Stage Pipelined Processor using the Ripes simulator. The program used for execution is shown below:

```
addi x1, x0, 5

addi x2, x0, 10

add  x3, x1, x2

addi x4, x0, 3

add  x5, x3, x4
```

This program performs basic arithmetic operations and stores the results in different registers.

5.2 Program Explanation

The program begins by assigning values to registers using the ADDI instruction. The first instruction stores the value 5 in register x1, and the second instruction stores the value 10 in register x2. The ADD instruction is then used to add the values stored in registers x1 and x2, and the result is stored in register x3.

Next, the value 3 is stored in register x4 using the ADDI instruction. Finally, the values stored in registers x3 and x4 are added using another ADD instruction, and the result is stored in register x5.

5.3 Register Output

After executing the program in the Ripes simulator, the following register values were obtained:

x1 = 5

x2 = 10

x3 = 15

x4 = 3

x5 = 18

These results confirm that the arithmetic operations in the program were executed correctly.

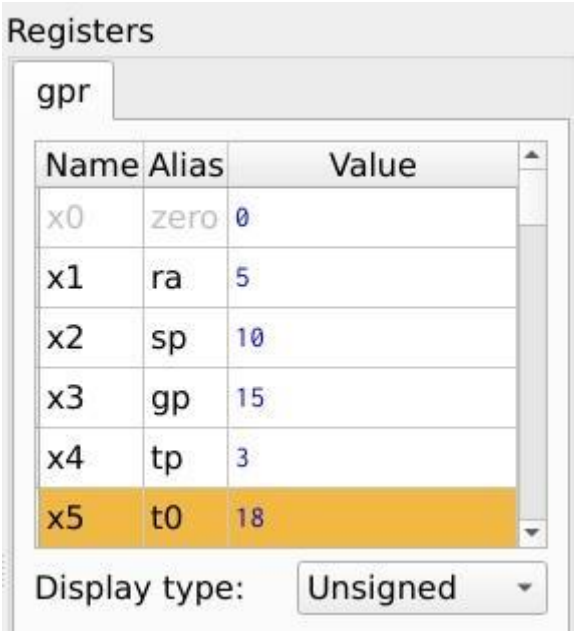

Fig 5.1.Register of single and pipeline

5.4 Execution Analysis

The same program was executed on both the Single Cycle Processor and the 5-Stage Pipelined Processor. In the single cycle processor, each instruction completed execution within a single clock cycle. In the pipelined processor, the instructions moved through different pipeline stages simultaneously.

Although both processors produced the same final register outputs, the pipelined processor demonstrated more efficient instruction execution due to the overlapping of instruction stages.

CHAPTER 7

COMPARISON AND PERFORMANCE ANALYSIS

6.1 Comparison between Single Cycle and Pipelined Processor

Both the Single Cycle Processor and the 5-Stage Pipelined Processor were used to execute the same RISC-V program in the Ripes simulator. Although both processors produced the correct register outputs, their methods of instruction execution are different.

In a Single Cycle Processor, each instruction is completed in one clock cycle, and all stages of instruction execution occur within that single cycle. This design is simple but results in a longer clock cycle because the processor must wait for the slowest instruction to finish.

In contrast, a Pipelined Processor divides the instruction execution process into multiple stages. Each stage performs a specific task, such as instruction fetch, decode, execute, memory access, and write back. Multiple instructions can be processed simultaneously in different stages of the pipeline. This overlapping of instruction execution increases overall efficiency and improves processor performance.

6.2 Performance Analysis

The Single Cycle Processor executes instructions sequentially, meaning that the next instruction cannot start until the current instruction has completely finished. Because of this, the processor may not fully utilize its resources, which leads to lower efficiency.

On the other hand, the Pipelined Processor allows multiple instructions to be processed at the same time in different stages of the pipeline. This significantly improves instruction throughput and reduces the total execution time required for a set of instructions.

However, pipelined processors may experience pipeline hazards, such as data hazards, control hazards, and structural hazards. These hazards can affect the smooth execution of instructions and may require additional techniques such as forwarding or stalling to maintain correct execution.

6.3 Result

The RISC-V program was successfully executed using both the Single Cycle Processor and the 5-Stage Pipelined Processor in the Ripes simulator. The same program was run on both processor architectures to observe their behavior and compare their performance.

After execution, the register values obtained were x1 = 5, x2 = 10, x3 = 15, x4 = 3, and x5 = 18. These results confirm that the arithmetic operations in the program were performed correctly and that the instructions executed successfully in both processor architectures.

Although both processors produced the same register values, the 5-Stage Pipelined Processor demonstrated more efficient instruction execution. By processing multiple instructions simultaneously in different pipeline stages, it improves instruction throughput and overall processor performance.

This experiment shows that while the Single Cycle Processor has a simpler design, the Pipelined Processor provides better performance and efficiency through overlapping instruction execution.

CONCLUSION

This project presented a comparison between the Single Cycle Processor and the 5-Stage Pipelined Processor using the RISC-V architecture in the Ripes simulator. The same program was executed on both processor designs to observe their behavior, instruction flow, and performance characteristics.

From the experiment, it was observed that both processors correctly executed the instructions and produced the expected register values, confirming the correctness of the implementations. However, the method of execution differs significantly between the two architectures. In the single cycle processor, each instruction completes all stages of execution within one clock cycle. Although this makes the design simple and easy to understand, it results in a longer clock period because every instruction must wait for the slowest operation to complete within that single cycle.

In contrast, the 5-stage pipelined processor divides instruction execution into separate stages such as instruction fetch, instruction decode, execute, memory access, and write back. These stages allow multiple instructions to be processed simultaneously in different stages of the pipeline. This overlapping of instruction execution increases instruction throughput and improves the overall efficiency of the processor. However, pipelining also introduces challenges such as data hazards, control hazards, and the need for additional hardware mechanisms to handle them.

Therefore, the study concludes that while the single cycle processor is easier to design, implement, and understand, the pipelined processor provides better performance and higher instruction throughput. Due to these advantages, pipelining is widely used in modern processor architectures to achieve faster and more efficient computation.

REFERENCE

[1] R. F. Olanrewaju, F. E. Fajingbesi, S. B. Junaid, R. Alahudin, F. Anwar, and B. R. Pampori, "Design and Implementation of a Five Stage Pipelining Architecture Simulator for RiSC-16 Instruction Set," Indian Journal of Science and Technology, vol. 10, no. 3, Jan. 2017.

[2] A. Samanta, S. Goswami, K. Pal, and M. S. Das, "A Comprehensive Survey and Comparison on Pipelined RISC System Architectures," Journal of Electrical Systems, vol. 20, no. 3, pp. 2817–2825, 2024.

[3] Y. Chang, Y. Liu, C. Peng, J. Guo, and Y. Zhao, "Design of a configurable five-stage pipeline processor core based on RV32IM," Electronics, vol. 13, no. 1, p. 120, 2024.

[4] J. Mach, L. Kohútka, and P. Čičák, "In-pipeline processor protection against soft errors," Journal of Low Power Electronics and Applications, vol. 13, no. 2, p. 33, May 2023.

APPENDIX

The appendix section includes additional information related to the project, such as the RISC-V program used in the simulation and screenshots from the Ripes simulator. These materials provide supporting evidence for the execution and comparison of the Single Cycle Processor and the 5-Stage Pipelined Processor.

Appendix A – RISC-V Program

addi x1, x0, 5

addi x2, x0, 10

add x3, x1, x2

addi x4, x0, 3

add x5, x3, x4

Appendix B – Simulation Screenshots

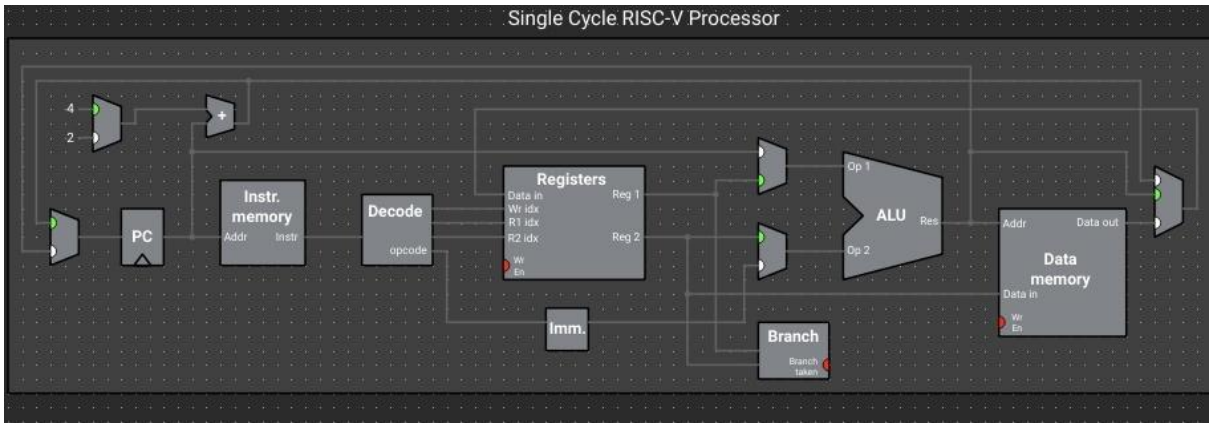

Fig B.1 Single cycle processor

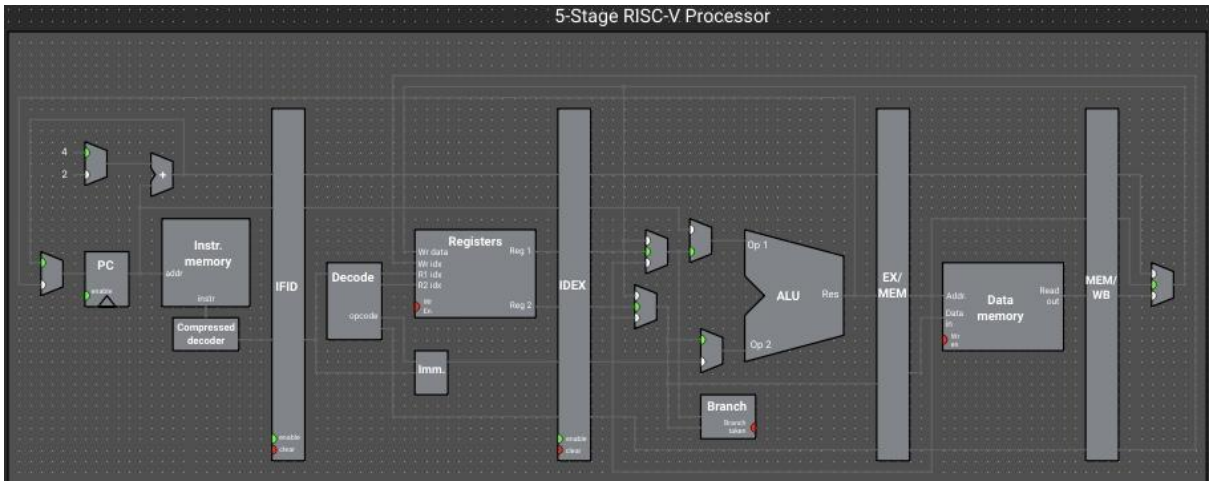

Fig B.2 RISC-V Processor

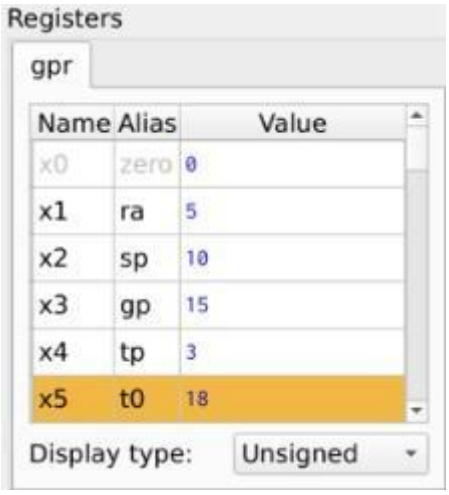

Fig B.3 Register value of Single cycle and pipeline