CIRCUIT DIAGRAM:-

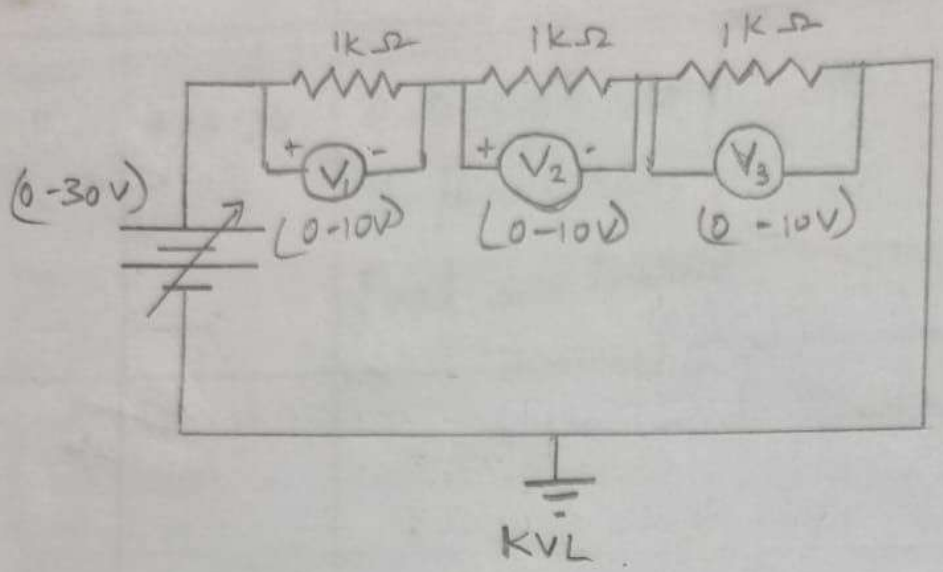

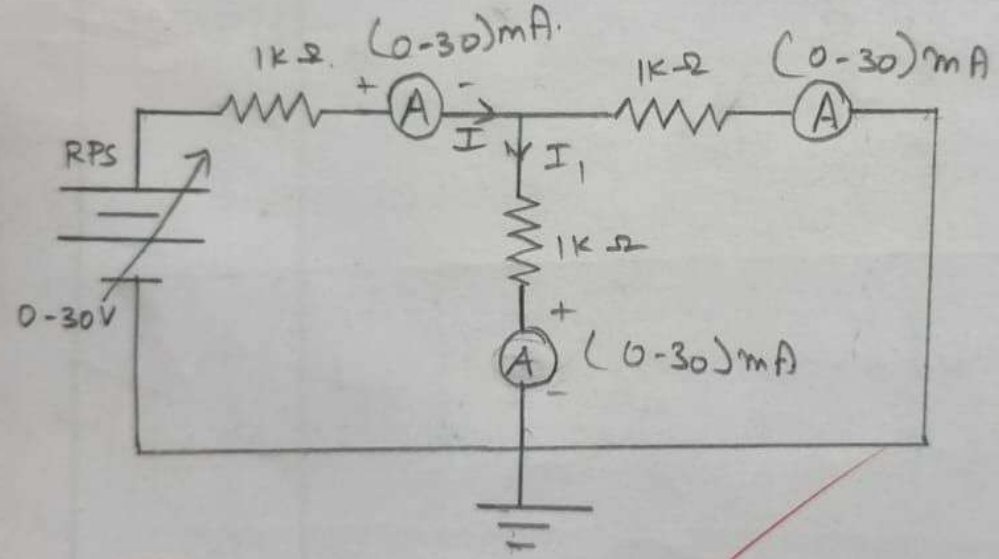

TABULAR COLUMN:-

V (volts)	V_1	V_2	V_3	$V = V_1 + V_2 + V_3$	I (amps)	I_1 (amps)	I_2 (amps)	$I = I_1 + I_2$ (amps)
12	3.3	3.3	3.3	9.9	3.3	10	10	20
15	5	5	5	15	15	15	15	30
20	6.6	6.6	6.6	19.8	20	20	20	40.

Calculation:-

KVL : supply 10V.

$V_1 = 10/3.3 = 3.33V$

$V_2 = 3.3V$

$V_3 = 3.3V$.

supply = 20V.

$V_1 = 20/3 = 6.67V$

$V_2 = 6.67V$.

$V_3 = 6.67V$.

$V_1 + V_2 + V_3 = 19.8V$.

supply : 15V.

$V_1 = 15/3 = 5V$.

$V_2 = 5V$

$V_3 = 5V$.

$V_1 + V_2 + V_3 = 15V$.

Calculations:-

Practical verifications:-

$V/I \rightarrow$ constant.

$V = V_1 + V_2 + V_3$.

$I = I_2 + I_3$

KCL:-

supply = 10V.

$I = \frac{10}{3000} = 3.33mA$

supply = 15V.

$I = \frac{15}{3000} = 5mA$

supply = 20V.

$I = \frac{20}{3000} = 6.67.mA$.

supply = 10V.

$I_1 = 10/1000 = 10mA$.

$I_2 = 10/1000 = 10mA$.

$I = 10 + 10 = 20mA$.

supply = 15V.

$I_1 = 15mA$.

$I_2 = 15mA$.

$I = 15 + 15 = 15mA$.

supply = 20V

$I_1 = 20mA$

$I_2 = 20mA$.

$I = 20 + 20$

$= 40mA$.

Exp No :- 01

DATE :- 03/02/25.

VERIFICATION OF KIRCHHOFF'S LAWS

AIM:-

To verify Kirchhoff's voltage law and kirchhoff's current law both theoretically and Practically for a given DC circuit.

APPARATUS REQUIRED:-

SL.NO	APPARATUS	SPECIFICATION	QUANTITY
1.	Regulated Power supply (RPS)	(0-30V)	1
2.	Voltmeter	(0-30V) MC	3
3.	Ammeter	(0-10mA) MC	3
4.	Resistors	1KΩ	3
5.	Bread Board	-"-	1

PROCEDURE:-

1. Give connections as per the circuit diagram.
2. Switch ON the supply, vary the RPS (Regulated Power supply) and set a Particular input voltage.
3. Note down the readings of ammeters and voltmeters and tabulate them.

5. Reduce the RPS to its minimum value and switch off the supply. using tabulated values, verify Kirchoff's law Practically and verify its theoretically.

MARKS SPLIT UP:-

S.NO	DESCRIPTION	MARKS ALLOTED	OBTAINED
1.	Experimental setup.	20	20
2.	Observation.	20	20
3.	calculation.	20	20
4.	Viva.	20	20
5.	Record.	20	20
		Total.	100

10

4/2/26

RESULT :-

Thus, Kirchoff's current and voltage law are verified Practically and