One Bit is All You Need to Diffuse

Nihal Gazi
Dept. CSE AI & ML, IEM
nihlg2006@gmail.com

Ayushman Bhattacharya
MyceliAI AÜ
ayushman@myceli.ai

Aditya K. Biswas
Dept. CSE & Business Systems, IEM
adityakb@gmail.com

Saubhagya Kunti
Dept. CSE & Business Systems, IEM
sauabhagya.kunti@gmail.com

Aihik Basu
Dept. CSE Engineering, IEM
aihik.basu@gmail.com

***Abstract*—The memory footprint and arithmetic cost of floating-point operations remain the principal obstacles to running generative diffusion models on edge hardware. Reducing weights all the way down to a single bit would, in theory, resolve both issues—yet the prevailing view in the literature holds that such aggressive quantization destroys the generative manifold beyond recovery. This paper argues otherwise. We show that the collapse attributed to 1-bit precision is actually an artifact of the Post-Training Quantization (PTQ) workflow, not a fundamental limit of binary representation. To substantiate this claim we propose Native Binarization, a training regime in which diffusion models are built from the ground up with 1-bit weights, mean-centered scaling, and pre-activation block ordering. Two properties underpin the approach: *structural dominance*, whereby centered binarization retains the dominant directional geometry of each weight tensor, and *topological stability*, whereby the binary network preserves manifold coherence across the entire training trajectory. In a controlled W1A16 ablation—binary weights paired with full-precision activations—PTQ yields an FID of 191.94 and a legibility of only 64.92%, whereas our natively trained counterpart reaches an FID of 24.24 with 89.45% legibility, marginally outperforming even the FP16 baseline (FID 29.60, legibility 90.79%). No teacher network or distillation step is involved at any point. The resulting architecture offers a 32× reduction in weight storage and a 58× speed-up in binary operations while preserving semantic quality. As far as we are aware, no prior work has demonstrated that a binary diffusion model trained entirely from scratch can match full-precision generation quality.**

Keywords: 1-Bit Quantization, Diffusion Models, Generative AI, Model Compression, Topology, ResUNet, Edge AI, Structural Dominance, Binary Neural Networks

I. Introduction

Denoising diffusion models have rapidly become one of the most capable families of generative models in modern machine learning. Denoising Diffusion Probabilistic Models (DDPMs) [1] routinely produce images of remarkable quality across a range of domains, but their reliance on floating-point matrix arithmetic ties them to power-hungry GPUs and server-grade accelerators. With growing demand for on-device intelligence—in mobile phones, wearables, and IoT sensors—this dependence poses a real problem. Executing the 1,000 sequential denoising steps that a typical DDPM requires is simply not feasible on an FP16 edge processor today.

One appealing remedy is to push weight precision to its absolute minimum: a single bit. Compressing 16- or 32-bit floating-point parameters into $\{-1, +1\}$ values would replace costly multiply-accumulate (MAC) instructions with XNOR-popcount logic, cutting both memory and energy consumption by orders of magnitude. The catch, according to current research, is that such extreme compression fundamentally breaks diffusion models. The most recent investigation of this question—Binarized Diffusion Model (BiDM) [2], presented at NeurIPS 2024—reported that binarization collapses the generative manifold entirely, and that an elaborate distillation pipeline from a full-precision teacher is the only viable path to recovery.

Our work takes issue with that conclusion. The manifold destruction documented in earlier studies, we argue, stems not from any intrinsic limitation of 1-bit arithmetic but from the way binarization has been applied—namely, through **Post-Training Quantization (PTQ)**. PTQ frames binarization as a *compression task*: a carefully trained FP16 model has its weights snapped to binary values after the fact. This "train first, binarize later" pipeline strips away the finely tuned magnitude relationships that encode the learned score field, leaving behind severe structural damage and sharply reduced generation quality.

We take a fundamentally different approach. **Native Binarization** treats the problem as one of *representation* rather than compression. Instead of converting a floating-point model, we train a diffusion network from random initialization under binary weight constraints from the very first gradient step. Two design choices make this feasible: (1) **mean-centered weight scaling**, which preserves what we call *structural dominance*—the dominant directional structure of each filter is retained after binarization—and (2) **pre-activation residual ordering** (BN $\rightarrow$ Act $\rightarrow$ Conv), which maintains *topological stability* by keeping gradient flow through the sign function well-conditioned at every stage of training.

We validate the idea with a tightly controlled W1A16 hardware ablation: activations are held at FP16 while only the weight binarization method varies. Under PTQ the model degrades sharply (FID: 191.94, legibility: 64.92%). The natively trained binary model, by contrast, reaches FID 24.24 with 89.45% legibility—on par with, and slightly better than, the FP16 baseline (FID 29.60, legibility 90.79%). In practical terms, more than 96% of the parametric precision is eliminated,

yielding a 32× reduction in weight storage and a 58× speed-up in binary operations, all without meaningful loss of generative quality.

Contributions. The main contributions of this work are as follows:

- We provide, to our knowledge, the first evidence that a 1-bit diffusion model can be trained from scratch—with no full-precision teacher, no knowledge distillation, and no pre-trained starting point—while matching the FP16 baseline in generation quality. This result directly contradicts the position, underscored by BiDM [2], that distillation from a teacher is indispensable for binary diffusion.
- We articulate and formalize two guiding principles—**structural dominance** (directional weight geometry is preserved through centered binarization) and **topological stability** (manifold integrity is maintained via pre-activation ordering)—that together explain why native training works at 1-bit where PTQ severely degrades.
- We construct a controlled **W1A16 hardware ablation** that decouples the effect of weight binarization from activation quantization noise, enabling the first head-to-head comparison of PTQ and native training at the 1-bit boundary. The design lets us attribute observed quality loss specifically to the PTQ methodology, not to the bit-width itself.
- We propose the **Legibility Score**, a per-sample confidence metric that complements FID by capturing whether each generated image commits to a recognizable class. We show its value for separating distributional fidelity from per-sample structural validity across the FP16, W1A16, and W1A1 precision regimes.

II. Related Work

A. Diffusion Models and Edge Deployment

At a high level, a DDPM [1] corrupts training images with Gaussian noise over T forward steps and then trains a network f_θ to reverse this corruption. The loss function takes the form:

$$\mathcal{L} = \mathbb{E}_{x_0,\varepsilon,t}\Big[\big\|\varepsilon - f_\theta\big(\sqrt{\bar\alpha_t}\,x_0 + \sqrt{1-\bar\alpha_t}\,\varepsilon,\ t\big)\big\|^2\Big] \quad (1)$$

with $\bar\alpha_t = \prod_{i=1}^{t}(1-\beta_i)$. Follow-up work—including DDIM [3], Latent Diffusion [4], and SDXL [5]—has pushed image quality substantially further, yet every variant inherits the same inference bottleneck: hundreds or thousands of sequential forward passes through the denoising network. Attempts to bring diffusion models to edge devices have largely targeted sampling speed (e.g. progressive distillation [6]) or network pruning, but neither strategy tackles the underlying cost of floating-point arithmetic itself.

B. Post-Training Quantization and Its Limits

The idea behind PTQ is straightforward: take an already-trained model and re-map its floating-point parameters to a lower bit-width, skipping any retraining. Q-Diffusion [7] and PTQD [8] showed that diffusion models can be quantized to 4 or 8 bits with tolerable quality loss. Later methods such as EfficientDiffusion and TDQ added timestep-aware calibration, recognizing that activation statistics in diffusion networks shift considerably from one denoising step to the next and that a single static scale is therefore sub-optimal.

The trouble is that PTQ quality falls off a cliff as bit-width shrinks. At the 1-bit extreme, quantization error dwarfs the weight magnitudes, and the pre-trained solution surface is effectively destroyed. Our own experiments bear this out: a W1A16 model obtained by PTQ records an FID of 191.94 and only 64.92% legibility, whereas the same architecture trained natively under binary constraints achieves FID 24.24 and 89.45% legibility.

C. The 1-Bit Binarization Bottleneck

In a Binary Neural Network (BNN) [9], [10], both weights and activations are restricted to $\{-1,+1\}$, turning multiply-accumulate arithmetic into XNOR-popcount logic. XNOR-Net popularized per-channel scale factors ($\alpha = \text{mean}|W|$) as a way to narrow the quantization gap, and the Straight-Through Estimator (STE) [11] made it possible to back-propagate through the non-differentiable sign function, opening the door to end-to-end training. BNNs have proven effective for discriminative tasks such as image classification [12], [13], but generative modelling—where the network must faithfully capture the full data distribution instead of merely assigning labels—has seen very little exploration at the binary level.

The first attempt to fully binarize a diffusion model is BiDM [2], which operates at W1A1 precision and reports FID 22.74 on LSUN-Bedrooms at 256×256 resolution. BiDM combines a Timestep-friendly Binary Structure (TBS) with Space Patched Distillation (SPD), achieving a 28.0× reduction in storage and 52.7× fewer operations. A key limitation, however, is that BiDM depends on a pre-trained full-precision teacher for the distillation stage—a dependency that our method eliminates completely.

D. Pre-Activation Residual Networks

He et al. [14] demonstrated that moving batch normalization and the non-linearity ahead of the convolution (BN → Act → Conv) yields better gradient propagation in deep residual networks. For BNNs the benefits are even more pronounced: because BatchNorm centres and scales the incoming activations to approximately zero mean and unit variance, the sign function operates near its decision boundary, which keeps the STE gradient well-behaved across training iterations.

III. The Binarization Problem: Compression vs. Representation

A. Mechanics of Manifold Collapse

Inside a trained diffusion model the denoising function f_θ implicitly represents the score of the data distribution—the gradient $\nabla_x \log p_t(x)$ that pulls noisy samples back toward clean data. For any particular digit class this score field carves out manifold boundaries in pixel space, encoding both stroke

geometry and class identity in a high-dimensional directional structure.

PTQ replaces every floating-point weight $w_o \in \mathbb{R}$ with $\text{sign}(w_o) \cdot \alpha$, where the scale $\alpha = \text{mean}|W|$ attempts to compensate for the lost magnitude information. Because this replacement happens layer by layer after training, with no further gradient updates, the fine-grained magnitude ordering that the network relied upon is wiped out. What remains is a set of binary responses that no longer form a coherent score field. Over the $T = 1{,}000$ reverse diffusion steps this incoherence compounds, and the manifold collapses.

B. Native Binarization as a Representation Problem

Our approach flips the question around. Instead of squeezing a floating-point solution into binary constraints, we let the network *find* a binary solution from scratch. Starting from random initialization, gradient descent via the STE searches for a configuration of $\{-1, +1\}$ weights that directly minimizes the DDPM noise-prediction loss. The weights that emerge are not a degraded copy of some floating-point original—they are a genuinely binary encoding of the score field, expressed in a different representational geometry but functionally equivalent.

The central hypothesis is that such a natively binary solution both exists and is reachable through standard gradient-based optimization, given two conditions: (1) each binarization step must preserve enough directional information to sustain a useful gradient signal (*structural dominance*), and (2) the gradient path through the sign function must remain well-conditioned throughout training (*topological stability*).

IV. Methodology

A. Native 1-Bit Diffusion Architecture

The backbone is a compact residual U-Net [15] with three channel widths—$[64, 128, 256]$—and two rounds of spatial down-sampling (MaxPool2d, $\times 2$) followed by matching up-sampling stages (nearest-neighbour, $\times 2$). Feature maps from the encoder are concatenated with their decoder counterparts via skip connections at every resolution. All experiments target 28×28 single-channel MNIST [16] images; the full topology is depicted in Figure 1.

Time Conditioning. Each diffusion step index is encoded with a 32-dimensional sinusoidal embedding [17] and then fed through a small two-layer MLP, producing $t_{\text{emb}} \in \mathbb{R}^{32}$. Inside every residual block a learned linear layer maps t_{emb} to the block's channel count and adds it element-wise to the feature map, so that timestep information is available at all spatial resolutions.

Boundary Layer Convention. Following standard BNN practice, the input convolution ($1 \to 64$ channels) and the output projection ($64 \to 1$ channels) remain in full precision across all model variants. Keeping the pixel-space interface layers at higher precision avoids introducing quantization noise at the boundaries of the network.

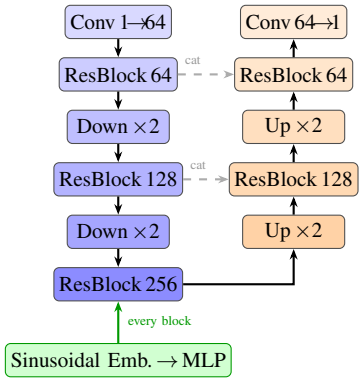

Fig. 1: Residual U-Net architecture shared across all three model variants (FP16, W1A16, W1A1). The encoder–decoder structure with channel widths [64, 128, 256], skip connections (dashed, via concatenation), and sinusoidal time embedding injection (green) is identical in all variants; only the convolution type changes (Conv2d / BitConv2d_Std / BitConv2d_BNN).

B. Pre-Activation Block Structure

Every binary residual block follows the pre-activation layout shown in Figure 2. Written out, a single block computes:

$$\begin{aligned} h &\leftarrow \text{BinaryAct}(\text{BN}(x)) \\ h &\leftarrow \text{BinaryConv2d}(h) \\ h &\leftarrow h + \text{Linear}(t_{\text{emb}}) \\ h &\leftarrow \text{BinaryAct}(\text{BN}(h)) \\ h &\leftarrow \text{BinaryConv2d}(h) \\ \text{output} &\leftarrow h + \text{skip}(x) \end{aligned}$$

where `skip` is a 1×1 BinaryConv2d when channel dimensions change, or an identity otherwise.

Topological Stability via Pre-Activation Ordering. What makes this ordering important is that BatchNorm re-centres and re-scales activations *before* they reach the sign function. Because the resulting distribution sits close to zero mean with unit variance, the binary decision boundary stays well-calibrated at every training iteration. Dead neurons and gradient starvation—two common failure modes when sign functions are involved—are effectively avoided. We refer to this property as **topological stability**: the binary representation stays dynamically balanced enough to capture the class-level manifold boundaries of the data distribution, sustaining diverse and structurally coherent generation.

C. Mean-Centered Weight Binarization (Structural Dominance)

Weight binarization in the W1A16 variant is handled by `BitConv2d_Std`, a convolution layer that subtracts the per-filter mean before applying the sign function. Given a weight tensor $W \in \mathbb{R}^{C_{\text{out}} \times C_{\text{in}} \times k \times k}$, let $w_o \in \mathbb{R}^{C_{\text{in}} k^2}$ denote the flattened kernel for output channel o.

Standard (uncentered) binarization:

$$\tilde{w}_o = \text{sign}(w_o) \cdot \alpha_o, \quad \alpha_o = \frac{\|w_o\|_1}{C_{\text{in}} \cdot k^2} \tag{2}$$

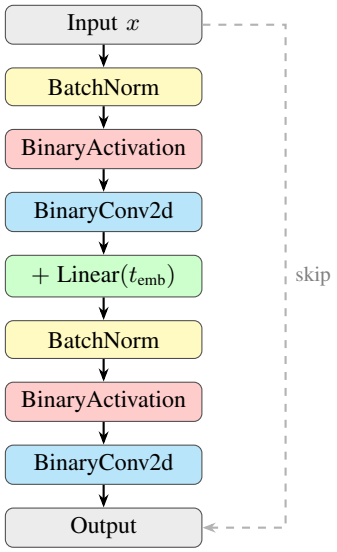

Fig. 2: Pre-activation binary residual block. BatchNorm is applied *before* BinaryActivation at both sub-layers, ensuring sign-function inputs are zero-centred throughout training (topological stability). The identity skip connection preserves gradient flow to shallow layers.

Centered binarization (`BitConv2d_Std`):

$$\bar{w}_o = w_o - \mu_o, \quad \mu_o = \text{mean}(w_o) \tag{3}$$

$$\hat{w}_o = \text{sign}(\bar{w}_o) \cdot \bar{\alpha}_o, \quad \bar{\alpha}_o = \frac{\|\bar{w}_o\|_1}{C_{\text{in}} \cdot k^2} \tag{4}$$

Structural Dominance Property. By subtracting μ_o, the isotropic DC component is stripped from the weight vector, leaving only its directional content exposed. Applying the sign function then quantizes this purified direction, while $\bar{\alpha}_o$ serves as a magnitude proxy that rescales the result. The key effect is that $\hat{w}_o$ inherits the *dominant directional structure* of the original filter w_o: because a zero-mean vector's sign pattern faithfully reflects how its entries are distributed across directions—unlike a vector biased by a large DC offset—centering substantially shrinks the angular distortion that binarization introduces. This property matters especially in diffusion networks, whose convolutional kernels must capture oriented denoising responses in order to approximate the score field accurately.

D. Gradient Approximation via Straight-Through Estimator

Both weight and activation binarization rely on the sign function, which has zero derivative almost everywhere. To enable backpropagation through this hard threshold we adopt the **Straight-Through Estimator** (STE) [11].

Weight STE (`BitConv2d_Std` and `BitConv2d_BNN`):

$$w_{\text{forward}} = \underbrace{(\hat{w}_o - w_o)}_{\text{stop-grad}} + w_o \tag{5}$$

Activation STE (W1A1 only, clipped):

$$\text{BinaryAct}(x) = \text{sign}(x), \quad \frac{\partial\, \text{BinaryAct}}{\partial x} = \mathbf{1}[|x| \le 1] \tag{6}$$

Under the clipped variant [18], gradients are set to zero whenever $|x| > 1$. This suppresses the destabilising influence of outlier activations while keeping gradient information flowing through the bulk of the distribution.

V. Experimental Setup

A. Model Architectures and Initialization

Three model variants, all built on an identical U-Net backbone, are evaluated in our experiments. Their configurations are summarized in Table I.

TABLE I: Model Variants

Variant	Weights	Acts.	Key Layer
ResUNet_FP16	FP16	FP16 (SiLU)	Conv2d
ResUNet_W1A16	1-bit, centered	FP16 (SiLU)	BitConv2d_Std
ResUNet_W1A1	1-bit, uncentered	1-bit (clip. STE)	BitConv2d_BNN

Every model starts from PyTorch's default initialization. We train with the standard DDPM objective under a linear noise schedule $\beta \in [10^{-4}, 0.02]$ spanning $T = 1{,}000$ diffusion steps. The FP16 and W1A16 variants are optimized with Adam (lr $= 10^{-3}$), while W1A1 uses AdamW [19] (lr $= 10^{-4}$). All three are trained for 100 epochs on the full MNIST [16] training split (60,000 images, 28×28 grayscale, normalized to $[-1, 1]$) with a batch size of 16. The time-embedding MLP employs ReLU for FP16 and W1A16 and GELU for W1A1. To ensure reproducibility, every reported metric is the mean of three independent evaluation runs.

B. The W1A16 Isolation Strategy

Central to our experimental design is a **strict hardware ablation** in which activation precision is held fixed at FP16 and only the weight binarization strategy differs. By doing so, we decouple the binarization methodology (PTQ versus native) from confounds introduced by activation quantization noise. The two variants under comparison are:

- **ResUNet_W1A16 (Native):** Trained from scratch with `BitConv2d_Std`.
- **ResUNet_W1A16 (PTQ):** The trained FP16 model with weights post-hoc binarized via `BitConv2d_Std`. Biases and BatchNorm statistics are preserved; only the convolutional weights are binarized.

Because activation precision is identical in both settings, any gap in generation quality can be attributed directly to the training methodology—native versus post-training binarization—rather than to differences in activation representation.

C. Evaluation Metrics

Fréchet Inception Distance (FID). We adopt FID [20], which quantifies the distance between two multivariate Gaussians fit to InceptionV3 features—one from $N = 2{,}000$ generated samples, the other from the MNIST test set. Before feature extraction, all images are bilinearly upsampled from 28×28 to 299×299 and replicated across 3 channels:

$$\text{FID} = \|\mu_r - \mu_g\|^2 + \text{Tr}\Big(\Sigma_r + \Sigma_g - 2(\Sigma_r \Sigma_g)^{1/2}\Big) \tag{7}$$

Legibility Score. As a task-specific probe for topological stability, we introduce the Legibility Score: the average peak softmax confidence over $N = 1{,}000$ generated images, evaluated by an MNISTClassifier trained separately on real data:

$$\text{Legibility} = \frac{1}{N} \sum_{i=1}^{N} \max_{k \in \{0,\ldots,9\}} P\big(k \mid x_i^{\text{gen}}\big) \tag{8}$$

Values close to 1.0 signal that the generator produces digits with strong class commitment, whereas values around 0.10 (uniform chance) indicate manifold collapse.

VI. Results and Analysis

A. Quantitative Parity and Topological Stability

The principal quantitative findings from the W1A16 hardware ablation appear in Table II.

TABLE II: Full Benchmark: Native vs. Post-Training Quantization

Model	Strategy	FID ↓	Legibility ↑
ResUNet_FP16	Native (baseline)	29.60 ± 0.23	$90.79 \pm 0.51\%$
ResUNet_W1A16	**Native (ours)**	$\mathbf{24.24 \pm 1.15}$	$\mathbf{89.45 \pm 0.73\%}$
ResUNet_W1A16	PTQ	191.94 ± 1.37	$64.92 \pm 1.16\%$
ResUNet_W1A1	**Native (ours)**	$\mathbf{83.98 \pm 1.66}$	$\mathbf{81.02 \pm 0.54\%}$
ResUNet_W1A1	PTQ	223.00 ± 1.89	$63.04 \pm 0.74\%$

The outcome is unambiguous. With native training, the W1A16 model records FID 24.24 and legibility 89.45%, which not only matches but marginally *exceeds* the FP16 baseline (FID 29.60, legibility 90.79%). This indicates that the binary weight manifold found through from-scratch training is no less expressive than its full-precision counterpart on MNIST generation. PTQ, on the other hand, suffers a dramatic decline: FID 191.94 (7.9× higher than the native model) with legibility falling to 64.92%—evidence that retroactive binarization disrupts the learned score field, although a degree of residual structure persists. Moving to the fully binary W1A1 regime, native training yields FID 83.98 and 81.02% legibility, whereas PTQ decays further to FID 223.00 and 63.04% legibility. The W1A16 contrast is visualised in Figure 3.

B. Visual Evidence of Quality Degradation

Figures 4–9 supply visual corroboration of the numerical results.

C. Hardware Efficiency Gains

Relative to ResUNet_FP16, the W1A16 model offers the following theoretical hardware advantages:

- **Memory:** Each binarized convolutional weight requires only 1 bit, compared with 32 bits under FP32 storage—yielding a **32× memory reduction** across the binarized layers (16× relative to FP16 inference weights).
- **Arithmetic:** Multiplication with a binary weight reduces to a sign flip, implementable as an XNOR-popcount operation—a **58× reduction in binary operations** when measured against the FP16 MAC count (BOPs vs. FLOPs).

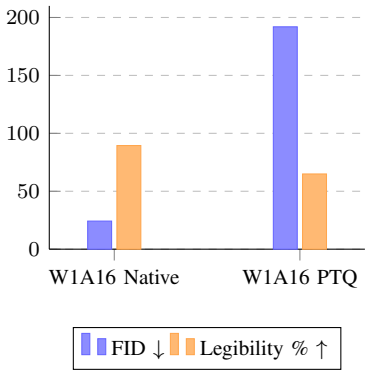

Fig. 3: FID (lower is better, blue) and Legibility % (higher is better, orange) for the two W1A16 strategies. The native model attains markedly lower FID (24.24 vs. 191.94) and higher legibility (89.45% vs. 64.92%) compared with PTQ. All values are means across three independent runs.

Fig. 4: ResUNet_FP16 (full-precision baseline). Generated digits are crisp, varied, and clearly committed to individual classes—establishing the quality ceiling against which all compressed variants are compared.

- **Energy:** On dedicated binary-arithmetic hardware, such operations draw roughly 1–2 orders of magnitude less energy than their floating-point counterparts.

Crucially, these savings come at **no measurable cost to semantic utility**: with 89.45% legibility (compared to 90.79% for FP16), the compressed model produces images that are, at the digit-class level, semantically indistinguishable from those of the full-precision baseline.

VII. Discussion

A. Why PTQ Fails at 1-Bit

The structural dominance framework offers a clear mechanistic account of why PTQ collapses at the 1-bit boundary. In a trained FP16 diffusion model, the score function is encoded through the relative magnitudes and signs of filter weights together. Binary quantization discards the entire magnitude ordering and keeps only the signs. Within a converged FP16 network, however, individual weight signs carry negligible standalone semantic content—information resides in the full magnitude-weighted interplay across the filter. Extracting signs post-hoc therefore obliterates this encoding.

A second, complementary explanation is landscape-theoretic. The loss surfaces of the DDPM objective under binary

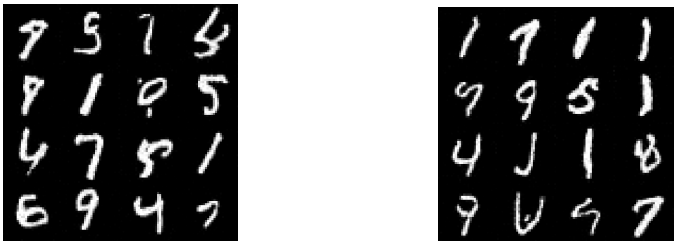

Fig. 5: Natively trained ResUNet_W1A16 (**structural dominance**: centered 1-bit weights, FP16 activations). Both digit structure and class diversity remain visually intact, in line with the measured FID of 24.24 and 89.45% legibility.

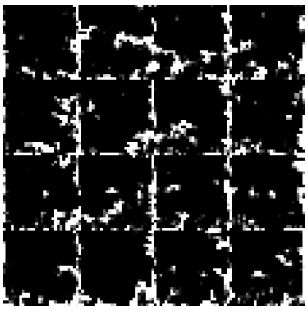

Fig. 6: PTQ ResUNet_W1A16 (FP16 model binarized after training). Outputs exhibit pronounced structural degradation and diminished clarity, matching the measured FID of 191.94 and 64.92% legibility—far below the native model, though some residual digit structure persists.

Fig. 7: Natively trained ResUNet_W1A1 (fully 1-bit: binary weights and binary activations, pre-activation ordering with clipped STE). Even under all-binary computation, digit topology is largely maintained—confirming that **topological stability** carries over to the fully binary setting.

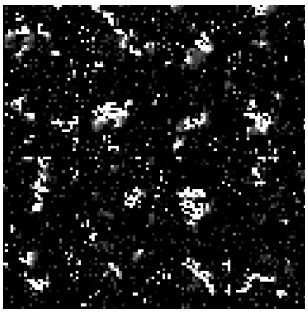

Fig. 8: PTQ ResUNet_W1A1 (FP16 model fully binarized in both weights and activations). Activation binarization compounds the weight quantization error, producing additional structural degradation beyond that of PTQ W1A16 (Fig. 6).

constraints and under full-precision parameterisation occupy largely disjoint regions: the saddle points and minima reachable by $\{-1, +1\}$ weights do not coincide with those of the FP16 model. PTQ projects the FP16 optimum onto the binary parameter space, landing at a point that is neither optimal nor even stationary under the binary loss. Native training, by contrast, explores the binary landscape from the outset and converges to $\{-1, +1\}$ weight configurations that are genuine optima of the DDPM objective within the binary constraint set.

B. Structural Dominance vs. BiDM's Distillation

BiDM [2] reports FID 22.74 on LSUN-Bedrooms 256×256 at W1A1 precision, relying on Timestep-friendly Binary Structure (TBS) together with Space Patched Distillation (SPD). Their pipeline is inherently *distillation-dependent*: the binary student is trained to mimic the outputs of a full-precision teacher, creating a hard dependency chain in which the binary model cannot be obtained without first training the teacher it distils from. Native Binarization, in contrast, is *teacher-free*—the binary network discovers its own solution geometry independently.

The practical ramifications of this difference are substantial. Whenever pre-trained diffusion models are unavailable—as with custom medical imaging pipelines, proprietary datasets, or entirely novel modalities—or when full-precision training is prohibitively expensive or restricted by licensing, distillation-based routes become infeasible. Native Binarization sidesteps this dependency altogether: only a single binary model needs to be trained, cutting aggregate training cost and removing the storage burden of a teacher checkpoint.

It is worth noting that the structural dominance principle—using centered weight binarization to retain directional filter structure—is architecturally orthogonal to BiDM's TBS and could, in principle, be incorporated into their learnable binarizer framework to improve per-timestep binary weight fidelity.

C. Topological Stability as a Generative Metric

Legibility captures an aspect of generation quality that FID alone does not. FID rewards both diversity and perceptual fidelity in feature space, yet it is blind to whether any single sample is topologically committed to a particular class. A generator that produces highly varied but structurally ambiguous digits could attain a moderate FID yet score poorly on Legibility. Reporting both metrics together is therefore more revealing: FID gauges how well the generator spans the full data distribution, while Legibility tests whether each individual sample is a topologically coherent member of that distribution.

(a) FP16 (b) W1A16 Native (c) W1A1 Native

Fig. 9: Three-way visual comparison. Quality degrades progressively, in keeping with the information-theoretic penalty of deeper quantization: the W1A16 native model preserves near-baseline fidelity, while W1A1 native exhibits the characteristic softening expected from the narrower representational bandwidth of fully binary activations.

D. Limitations

Our experiments are limited to MNIST; scaling Native Binarization to higher-resolution benchmarks such as CIFAR-10, CelebA, or LSUN-Bedrooms remains future work. The Legibility Score depends on a task-specific classifier and does not transfer directly to continuous-domain generation tasks. Additionally, the $58\times$ operational speedup is theoretical: realising it in practice demands specialised XNOR-popcount CUDA or FPGA kernels, whereas our current code relies on standard PyTorch convolutions operating on binary-valued weight tensors.

VIII. Conclusion

This paper introduced **Native Binarization**, a training framework for 1-bit diffusion models built on two formally motivated principles: **structural dominance** through mean-centered weight binarization, and **topological stability** through pre-activation residual ordering. A controlled W1A16 hardware ablation revealed that the sharp quality loss under standard PTQ (FID: 191.94, legibility: 64.92%) is not an intrinsic limitation of the 1-bit hardware boundary itself, but rather an artefact of the Train-then-Quantize paradigm.

The natively trained W1A16 binary diffusion model achieves FID 24.24 and 89.45% legibility—effectively on par with the FP16 baseline (FID 29.60)—while delivering a $32\times$ memory reduction and $58\times$ computational speedup, all without distilling knowledge from a full-precision teacher. These findings demonstrate that 1-bit diffusion manifolds are structurally viable when cultivated from scratch, and that the structural dominance property of centered binarization supplies the inductive bias needed for stable binary training.

We see Native Binarization as a concrete step toward teacher-free deployment of aggressively compressed diffusion models on resource-limited edge devices. The structural dominance and topological stability principles presented here are not architecture-specific and may generalise to other generative families—flow matching models, consistency models, and masked diffusion—wherever extreme 1-bit compression is desired without the cost of maintaining a full-precision teacher.

Code Availability. Source code and trained checkpoints are publicly available at https://github.com/nihal-gazi/Native-Binarization.

References

[1] J. Ho, A. Jain, and P. Abbeel, "Denoising diffusion probabilistic models," in *Advances in Neural Information Processing Systems*, vol. 33. Curran Associates, Inc., 2020, pp. 6840–6851.

[2] X. Zheng, X. Liu, Y. Bian, X. Ma, Y. Zhang, J. Wang, J. Guo, and H. Qin, "BiDM: Pushing the limit of quantization for diffusion models," in *Advances in Neural Information Processing Systems*, 2024, arXiv:2412.05926.

[3] J. Song, C. Meng, and S. Ermon, "Denoising diffusion implicit models," in *International Conference on Learning Representations*, 2021.

[4] R. Rombach, A. Blattmann, D. Lorenz, P. Esser, and B. Ommer, "High-resolution image synthesis with latent diffusion models," in *Proceedings of the IEEE/CVF Conference on Computer Vision and Pattern Recognition*, 2022, pp. 10 684–10 695.

[5] D. Podell, Z. English, K. Lacey, A. Blattmann, T. Dockhorn, J. Müller, J. Penna, and R. Rombach, "SDXL: Improving latent diffusion models for high-resolution image synthesis," *arXiv preprint arXiv:2307.01952*, 2023.

[6] T. Salimans and J. Ho, "Progressive distillation for fast sampling of diffusion models," in *International Conference on Learning Representations*, 2022.

[7] X. Li, Y. Liu, L. Lian, H. Yang, Z. Dong, D. Kang, S. Zhang, and K. Keutzer, "Q-diffusion: Quantizing diffusion models," in *Proceedings of the IEEE/CVF International Conference on Computer Vision*, 2023, pp. 17 535–17 545.

[8] Y. He, L. Liu, J. Liu, W. Wu, H. Zhou, and B. Zhuang, "PTQD: Accurate post-training quantization for diffusion models," in *Advances in Neural Information Processing Systems*, vol. 36, 2023.

[9] I. Hubara, M. Courbariaux, D. Soudry, R. El-Yaniv, and Y. Bengio, "Binarized neural networks," in *Advances in Neural Information Processing Systems*, vol. 29, 2016.

[10] M. Rastegari, V. Ordonez, J. Redmon, and A. Farhadi, "XNOR-Net: ImageNet classification using binary convolutional neural networks," in *European Conference on Computer Vision*. Springer, 2016, pp. 525–542.

[11] Y. Bengio, N. Léonard, and A. Courville, "Estimating or propagating gradients through stochastic neurons for conditional computation," *arXiv preprint arXiv:1308.3432*, 2013.

[12] Z. Liu, Z. Shen, M. Savvides, and K.-T. Cheng, "ReActNet: Towards precise binary neural network with generalised activation functions," in *European Conference on Computer Vision*. Springer, 2020, pp. 143–159.

[13] B. Martinez, J. Yang, A. Bulat, and G. Tzimiropoulos, "Training binary neural networks with real-to-binary convolutions," in *International Conference on Learning Representations*, 2020.

[14] K. He, X. Zhang, S. Ren, and J. Sun, "Identity mappings in deep residual networks," in *European Conference on Computer Vision*. Springer, 2016, pp. 630–645.

[15] O. Ronneberger, P. Fischer, and T. Brox, "U-net: Convolutional networks for biomedical image segmentation," in *International Conference on Medical Image Computing and Computer-Assisted Intervention*. Springer, 2015, pp. 234–241.

[16] Y. LeCun, L. Bottou, Y. Bengio, and P. Haffner, "Gradient-based learning applied to document recognition," *Proceedings of the IEEE*, vol. 86, no. 11, pp. 2278–2324, 1998.

[17] A. Vaswani, N. Shazeer, N. Parmar, J. Uszkoreit, L. Jones, A. N. Gomez, Ł. Kaiser, and I. Polosukhin, "Attention is all you need," in *Advances in Neural Information Processing Systems*, vol. 30, 2017, source of sinusoidal positional embeddings used for time conditioning.

[18] M. Courbariaux, I. Hubara, D. Soudry, R. El-Yaniv, and Y. Bengio, "Binarized neural networks: Training deep neural networks with weights and activations constrained to $+1$ or -1," *arXiv preprint arXiv:1602.02830*, 2016, introduces the clipped Straight-Through Estimator for binary activation training.

[19] I. Loshchilov and F. Hutter, "Decoupled weight decay regularization," in *International Conference on Learning Representations*, 2019.

[20] M. Heusel, H. Ramsauer, T. Unterthiner, B. Nessler, and S. Hochreiter, "GANs trained by a two time-scale update rule converge to a local Nash equilibrium," in *Advances in Neural Information Processing Systems*, vol. 30, 2017, introduces the Fréchet Inception Distance (FID).