Automata and Computability (Mid Assignment)

Course Code: CSE331
Faculty: Md. Rifat Rahman [RFR]

Problem 1.(30) $\Sigma = \{0, 1\}$

$L_1 = \{w :$ the number of 0s in w is a multiple of three$\}$
$L_2 = \{w :$ every 1 in w is followed by at least one 0$\}$
$L_3 = \{w :$ w does not contain 01 as a substring$\}$
$L_4 = \{0^m :$ m ≥ 0 $\}$(0^m means 0 is repeated m times)
$L_5 = \{1^n :$ n is even $\}$(1^n means 1 is repeated n times)
$L_6 = \{w :$ length of w is two more than multiple of four$\}$
$L_7 = \{w :$ every even position letter in w is different from first letter of w$\}$
$L_8 = \{w :$ w doesn't contain 11$\}$
$L_9 = \{w : w = 0^m 1^n,$ where $m, n \geq 0\}$
$L_{10} = \{w : 1$ doesn't appear at any even position in $w\}$
$L_{11} = \{w :$ length of w is exactly three$\}$
$L_{12} = \{w :$ w starts and ends with different letters$\}$
$L_{13} = \{w :$ w is divisible by 5 if it is treated like a binary number$\}$
$L_{14} = \{w :$ w has equal number of '01' and '10'$\}$
$L_{15} = \{w :$ the number of 0s in w is even and w doesn't contain 101 as a substring.$\}$
$L_{16} = \{w :$ after the first 1 in w, the number of 0's are odd$\}$
$L_{17} = \{w :$ w doesn't contain a palindromic substring of length 2$\}$
$L_{18} = \{w :$ w contains equal number of 0's and 1's$\}$
$L_{19} = \{w :$ every substring of length 3 contains even number of 1's$\}$
$L_{20} = \{w :$ the third last digit of w is 1$\}$
$L_{21} = \{w :$ w ends with 010 and has 011 somewhere in the preceding$\}$

(a) Give the state diagram of DFA for L_1 to L_{17}.
(b) Give the state diagram of DFA for $L_1 \cap L_2$
(c) Give the state diagram of DFA for $L_3 \cap (L_4 \circ L_5)$
(d) Give the state diagram of DFA for $L_9 \cap L_{10}$.
(e) Give the state diagram of DFA for $L_{17} \cap L_{18}$.
(f) Give the state diagram of NFA for L_{19} to L_{21}.

Problem 2(30) : For L_1 to L_8 $\Sigma = \{a, b\}$, for L_9 to L_{13} $\Sigma = \{0, 1\}$

$L_1 = \{w$: w contains no consecutive 'a'$\}$
$L_2 = \{w$: last two symbols of w are different$\}$
$L_3 = \{w$: if w starts with 'a', it contains exactly two b$\}$
$L_4 = \{w$: w contains no consecutive 'b'$\}$
$L_5 = \{w$: the first and last letters of w are 'a' and 'b' respectively$\}$
$L_6 = \{w$: every 'a' in w is followed by even number of b's$\}$
$L_7 = \{w$: w does not contain 'ab'$\}$
$L_8 = \{w$: 'ab' appears in w exactly once $\}$
$L_9 = \{w$: length of w is exactly 3$\}$
$L_{10} = \{w$: the third last digit of w is 1$\}$
$L_{11} = \{w$: w contains at most two 00$\}$
$L_{12} = \{w$: w contains no "11" and "000" as a substring$\}$
$L_{13} = \{w$: w has "101" as a substring and even number of 0's$\}$

(a) Give regular expressions for each of the above languages.(13 regular expressions)

(b) Give a regular expression that generates $L_1 \cap L_4$

(c) Give a regular expression that generates $L_8 \cap L_4$

(d) Give a regular expression that generates $\overline{L_9^* \cap L_{10}}$.

Problem 3(20) :

(a) Convert the following finite automata into an equivalent regular expression using the state elimination method. You must eliminate q_2 first, then q_4, then q_3, and finally q_5. Show each step of the process.

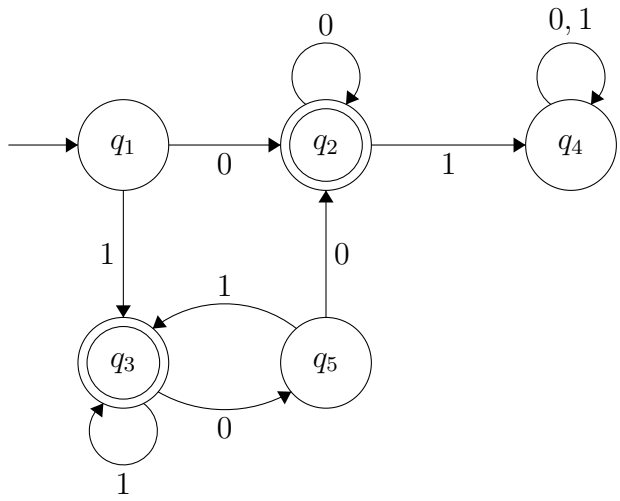

(a) Convert the following finite automata into an equivalent regular expression using the state elimination method. You must eliminate q_2 first, then q_3, and finally q_4. Show each step of the process.

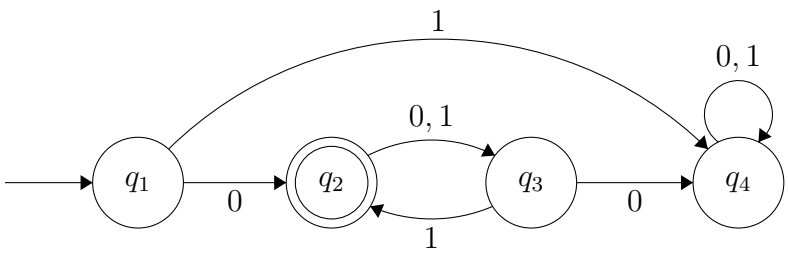

Problem 4(20) :

(a) Convert the following regular expression over $\Sigma = \{a, b, c\}$ into an equivalent NFA. Note that $R_1 + R_2$ is the same as $R_1 \cup R_2$.

$((ab + c)^* + bc^*)ac$

(b) Convert the following regular expression over $\Sigma = \{a, b\}$ into an equivalent NFA. Note that $R_1 + R_2$ is the same as $R_1 \cup R_2$.

$(bb + a^*b)^*a + b(aa)^*$