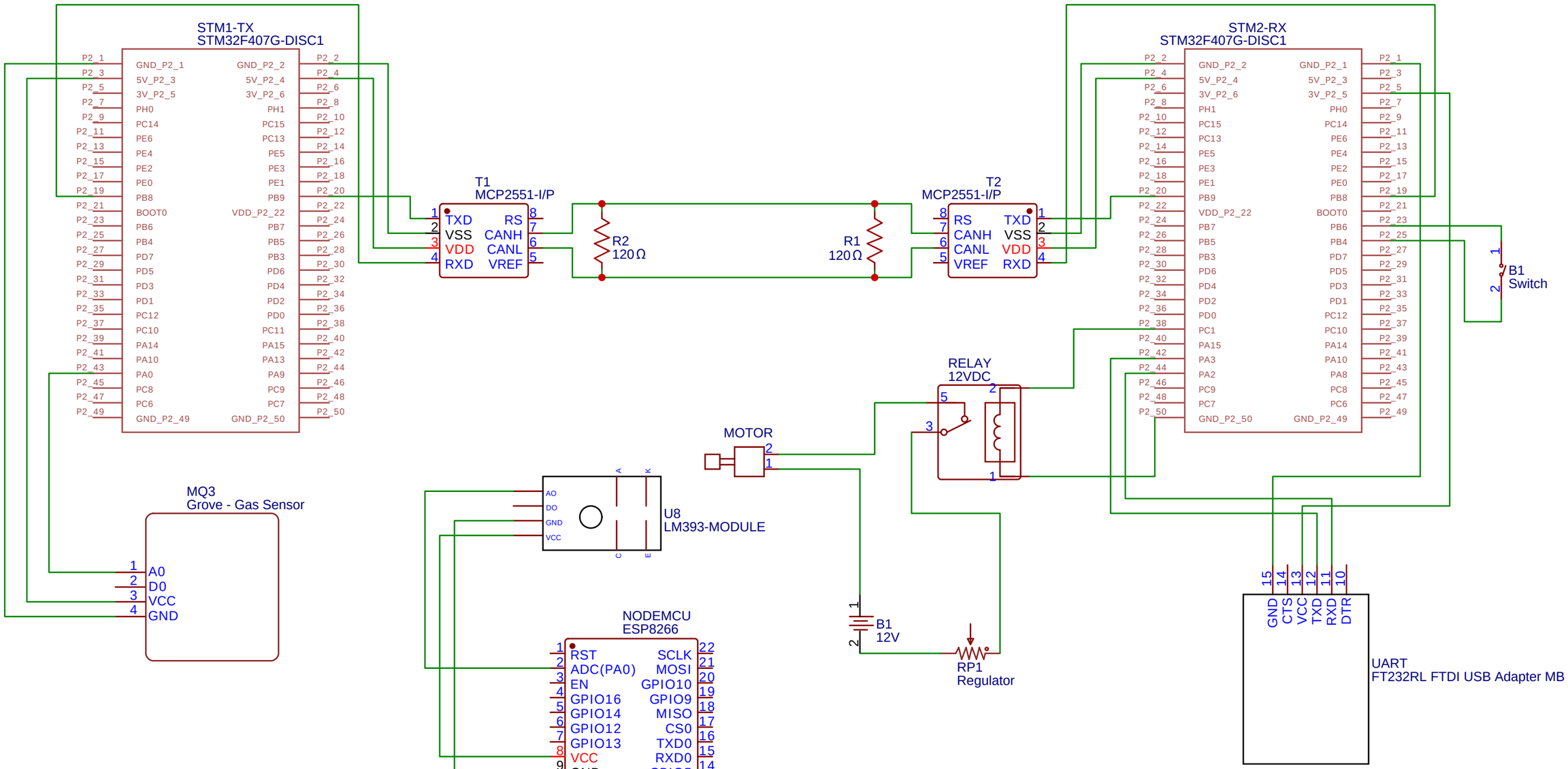

TITLE:

DriveSafe - Smart Connected vehicle using CAN and IoT Communication

REV: 1.0

Company: Sunbeam Institute of Information Technology

Sheet: 1/1

Date: 2025-02-12

Drawn By: Nikhil K. Kavate