Micro-Gap Thermal Rectifier:

Direction-Dependent Heat Flow at Engineered Interfaces

for Passive Thermal Management in Electronics, Buildings, and Space Systems

Nikhitha Swaminathan
Lowery Freshman Center, Allen Independent School District
Allen, Texas, United States

Category: Resource and Energy
GENIUS Olympiad 2026

ABSTRACT

A significant fraction of energy from engines, electronics, and buildings is lost as waste heat, motivating the development of passive thermal diodes that conduct heat preferentially in one direction. This project hypothesized that surfaces with asymmetric emissivities (glass, approximately 0.9, and steel, approximately 0.2) separated by a micro-scale gap would exhibit directional heat transfer under vacuum, but that atmospheric air conduction would mask this signal. A thermal stack apparatus was designed and built from scratch with thermoelectric voltage transduction, an Arduino-controlled ABBA bidirectional heating protocol to cancel temporal drift, and an adaptive cooldown to eliminate residual-heat artifacts. A gap sweep from 8 to 508 micrometers revealed a thermal current divider effect: increasing gap resistance redirected heat between parallel conduction paths, rendering the sum-based voltage metric insensitive to gap physics and establishing through-gap voltage as the correct measurement. Atmospheric testing produced a null result for directional asymmetry ($p = 0.754$), confirming air conduction exceeds radiation by 7 to 419 times across the tested range. A statistically significant through-gap signal ($p = 0.0005$) was identified and rejected as a Seebeck calibration artifact via first-principles analysis, matching prediction within 0.03 percent. Under vacuum at 28.5 inches of mercury, the same apparatus and protocol detected 6.7 percent thermal rectification in the direction predicted by emissivity asymmetry ($p < 0.001$). Uncertainties were calculated using Allan deviation to account for correlated thermal drift. This work establishes a reproducible framework for characterizing directional heat transfer and informs the development of passive thermal management technologies for electronics, spacecraft, and building energy systems.

1. INTRODUCTION AND GOAL

1.1 The Energy Problem: Waste Heat in the Built Environment

Every year, buildings in the United States waste approximately 17 quadrillion BTU of thermal energy through uncontrolled heat exchange with the environment, heat that escapes in winter and intrudes in summer, forcing HVAC systems to work against natural thermodynamics rather than with it. Data centers, which power the global digital economy, consume 200 to 250 TWh annually just for cooling. Spacecraft burns onboard power, managing temperature swings of 250 °C every 90 minutes. In all three cases, the root problem is the same: heat flows indiscriminately in both directions, and redirecting it requires active, energy-intensive mechanical systems. A passive thermal diode is a material interface that conducts heat preferentially in one direction with no moving parts and zero energy input, and it would eliminate this energy penalty. This project investigates whether micro-gap structures with asymmetric surface emissivities can function as such a device.

A passive thermal diode, analogous to an electrical diode that permits current flow in only one direction, could transform thermal management by enabling directional heat routing with no moving parts and zero energy input. Such a device would allow heat to escape from a hot surface while blocking reverse flow when conditions change, acting as a one-way thermal valve. The potential impact on energy consumption is substantial: passive thermal diodes integrated into building envelopes could reduce cooling loads by an estimated 30 to 40%, and spacecraft thermal systems could eliminate mechanical failure points entirely.

1.2 Thermal Rectification Physics

Thermal rectification arises when heat transfer depends on the direction of the temperature gradient. In a micro-gap geometry, this occurs when two surfaces with different infrared emissivities exchange heat primarily through radiation. The effective emissivity governing radiative exchange is given by:

$$\varepsilon_{eff} = 1 / (1/\varepsilon_1 + 1/\varepsilon_2 - 1)$$

For steel-glass (ε ≈ 0.2 vs. 0.9), ε_eff ≈ 0.20, compared with 0.82 for glass-glass, a 4-fold contrast. Because radiation scales as T^4 and the two materials have different thermal conductivities, creating different temperature profiles at the gap surface, reversing the temperature gradient produces different heat flows.

However, detecting this effect experimentally requires overcoming a fundamental barrier: at atmospheric pressure, air conduction across micro-scale gaps exceeds radiative transfer by one to three orders of magnitude. This conductive masking overwhelms the emissivity-dependent signal. At gap distances below the thermal wavelength (λ_thermal ≈ 10 µm at room temperature), evanescent electromagnetic wave tunneling is predicted to enhance radiative transfer, potentially amplifying the rectification signal further.

1.3 Research Questions and Hypotheses

This project addresses three questions: (1) What is the quantitative barrier to detecting thermal rectification in air? (2) Can rectification be detected under reduced pressure? (3) What measurement methodology is required to distinguish real signals from systematic artifacts?

The goal of this project is to experimentally determine whether directional heat transfer (thermal rectification) can be detected across a micro-gap between emissivity-asymmetric surfaces, and to develop the measurement methodology required to distinguish real signals from systematic artifacts. Demonstrating measurable thermal rectification in a passive, solid-state structure directly addresses a critical gap in sustainable energy technology. Unlike active cooling systems that consume energy to manage heat, a passive thermal diode harvests the physics of radiative heat exchange itself. Even modest rectification efficiency, such as the 6.7% demonstrated here, integrated across building envelopes, server rack surfaces, or spacecraft panels at scale, represents energy savings that no additional power source is required to achieve.

Three hypotheses were tested:

H1: Air conduction will completely mask emissivity-dependent rectification at atmospheric pressure.

H2: Under vacuum, where air conduction is suppressed, measurable direction-dependent heat flow will emerge.

H3: The through-gap voltage metric, not the conventional sum-based metric, correctly tracks gap-crossing heat flow.

2. METHODS

2.1 Thermal Stack Design

The measurement platform is a gravity-seated thermal stack built from precision-machined aluminum 6061 carrier plates (75 mm × 75 mm × 3 mm) and 6 mm support plates. The stack architecture, from outside to center: 6 mm cork thermal insulation, aluminum support plate, graphite thermal interface material (TIM, 40 × 40 mm), thermoelectric generator module (SP1848-27145, 40 × 40 mm × 3.3 mm), graphite TIM, Kapton film heaters (2 × 25 × 50 mm, 0.2 mm thick, 12 V at 7 W each, bonded to carrier), aluminum carrier plate with thermocouple sensor well, and sample plate.

The micro-gap is formed between the two sample plates. The top plate is swappable: soda-lime glass (1.20 mm, ε ≈ 0.9) for symmetric control measurements, or mild steel (1.20 mm, ε ≈ 0.2) for asymmetric rectification tests. Gap distances of 8.5, 25.4, 254, and 508 µm are set using precision Kapton shim spacers. The 508 µm gap was selected for rectification testing because radiation contributes

approximately 10.5% of gap heat transfer at this distance compared to only 5.7% at 254 µm, roughly doubling the expected rectification signal.

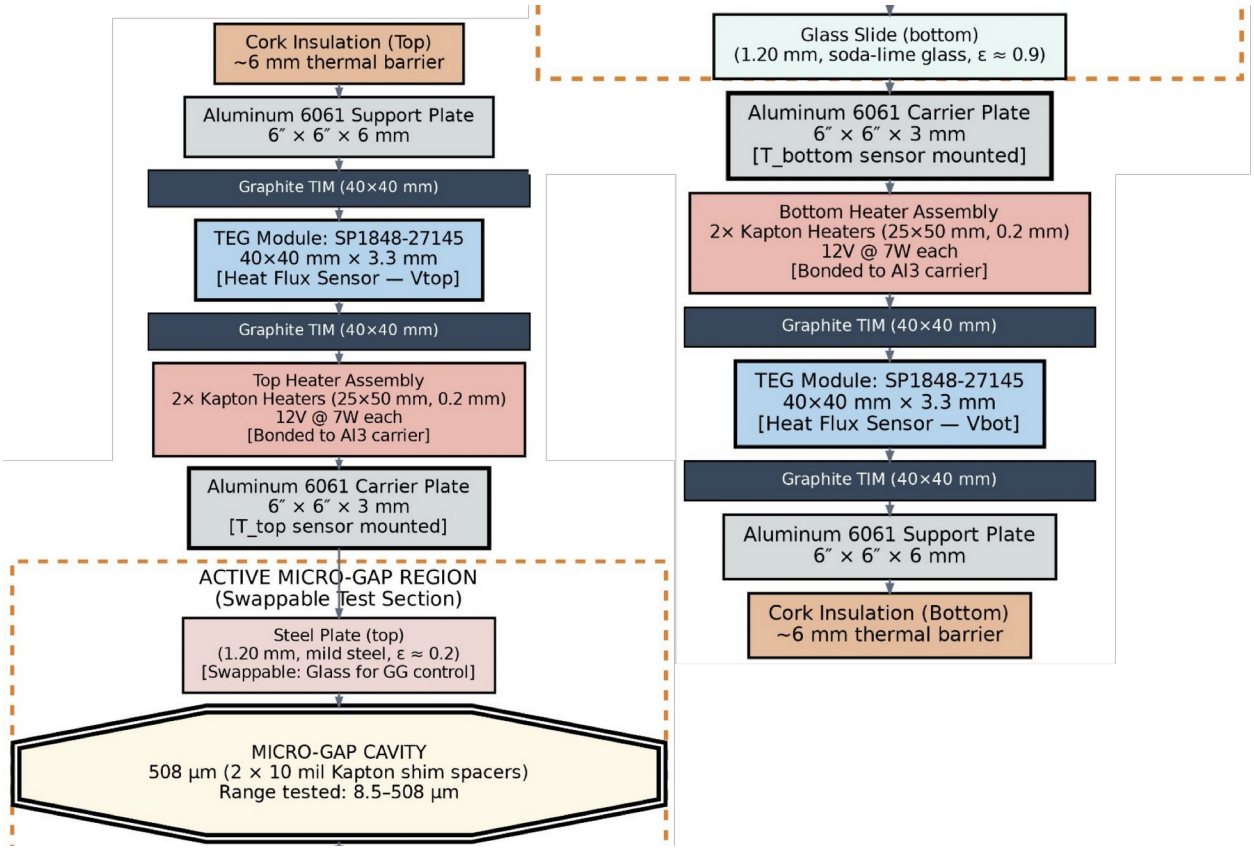

Figure 1. Thermal stack cross-section showing asymmetric micro-gap between steel (ε ≈ 0.2) and glass (ε ≈ 0.9) plates, TEG heat flux sensors, Kapton heaters, and cork insulation.

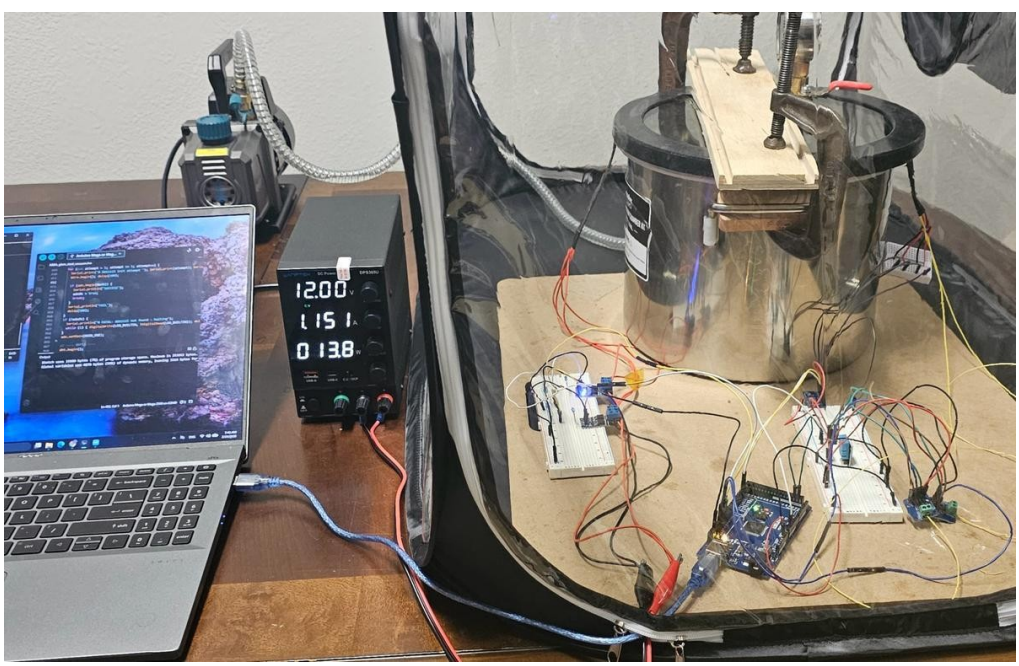

Figure 2. Experimental apparatus: vacuum chamber, power supply, Arduino controller, and data acquisition system. The entire apparatus was designed and built from scratch.

2.1.1 Design Evolution: From Phase 1 to Phase 2

The final apparatus was the result of extensive iteration across two complete design phases.

Phase 1: Gravity-Seated Benchtop Apparatus. The initial design used large aluminum carrier plates (approximately 150 mm x 150 mm) with a gravity-seated upper assembly providing a 127 g gravitational preload for plate parallelism. Gap spacers were 3 micrometer soda-lime glass microspheres dispersed across the interface. The assembly was housed inside a still-air nylon cage enclosure to suppress external convective noise during 20-minute thermal stabilization periods. Temperature was limited to 100 degrees Fahrenheit to prevent carrier plate warping at the 3 micrometer scale.

This design failed for multiple interconnected reasons. The large plates had excessive thermal mass and lateral spreading area, causing parasitic conduction to dissipate heater power faster than it could establish a stable temperature gradient across the gap. The system saturated at approximately 50 degrees C and never reached thermal steady state. Multiple interconnected issues were identified from the first experimental data: the system failed to reach thermal steady state, the heater could not drive a sufficient temperature gradient across the gap, TEG voltages clipped the ADC range, and run-to-run measurements were inconsistent. The root cause of most was the same: the plate footprint was too large for the heater power available, causing parasitic lateral conduction to dissipate heat faster than it could be concentrated into the measurement path.

Additionally, manual screw clamping created a statically indeterminate system where small differences in torque produced tilt, unpredictable gap variation, and inconsistent alignment. Gravity-settling improved on screw clamping by eliminating uneven torque, but lacked lateral and angular constraint.

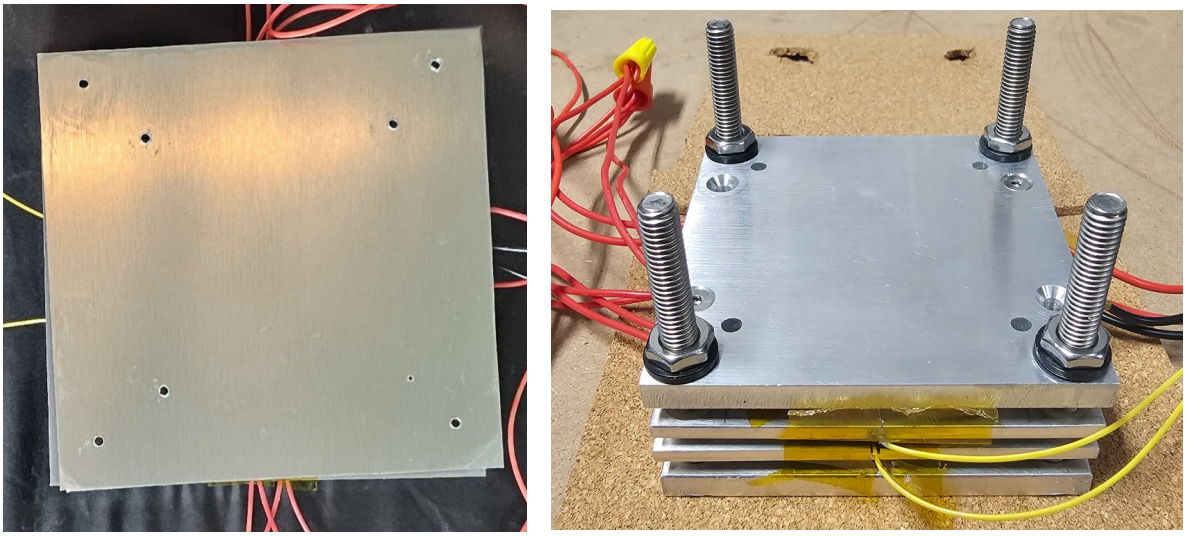

Figure 3. Phase 1 gravity-seated benchtop apparatus (Left) with 127 g upper preload mass and nylon cage enclosure. This design failed to achieve thermal steady state due to excessive plate size, directly motivating the Phase 2 kinematic redesign (right).

Phase 2: Kinematic Thermal Stack. The redesign addressed every identified failure mode. Carrier plates were reduced to 75 mm x 75 mm with a 40 mm x 40 mm active measurement window. The smaller footprint concentrated heat flux into the measurement path instead of spreading it laterally. Operating temperatures immediately jumped to 70 to 92 degrees C with stable plateaus appearing within 10 to 12 minutes. The active window being smaller than the carrier plate creates a thermal guard ring effect: the aluminum perimeter reaches a nearly isothermal state, stabilizing boundary conditions at the edges of the active window, analogous to the guarded hot plate principle described in ASTM C177.

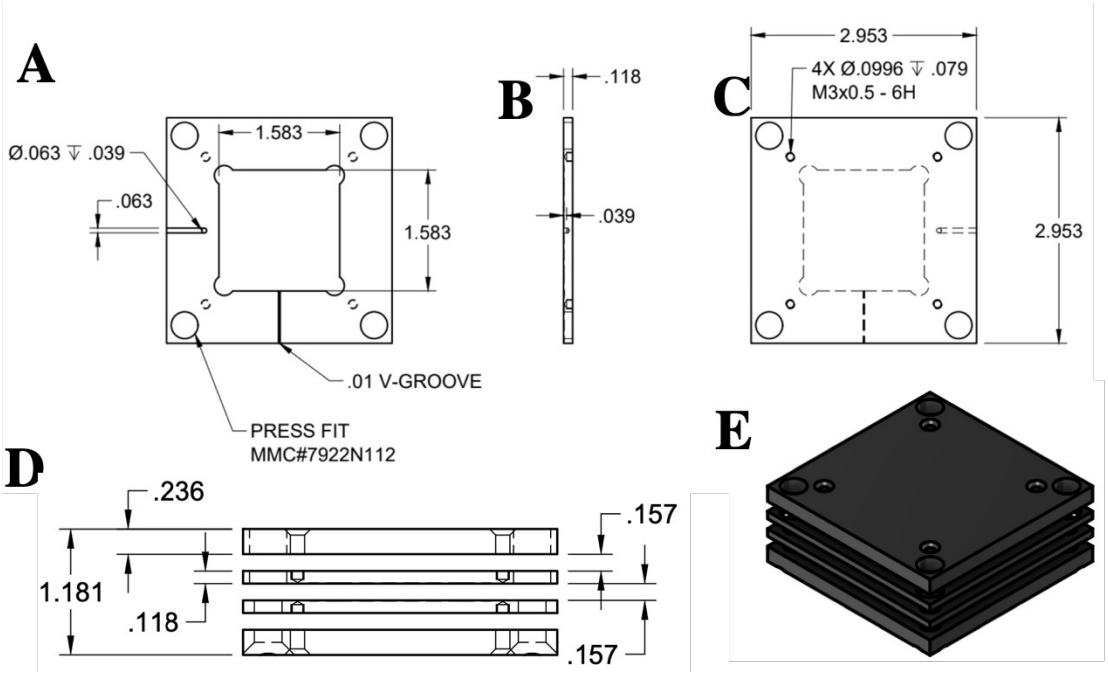

Figure 4: Kinematic Thermal Stack. (A) Carrier-plate pocket and sensor interface optimized for flat thermal contact and vacuum venting. (B) Side profile showing controlled stack thickness. (C) Sub-flush clamping geometry securing the internal stack without disturbing the gap region. (D) Exploded stack view confirming travel range and sample-swap clearance. (E) Fully assembled stack integrating kinematic guidance and vacuum-compatible design.

The kinematic constraint replaced gravity settling and screw clamping with precision-machined guide features that define plate position through geometry rather than force. Gap distances are set by incompressible Kapton HN film and steel shim spacers rather than adhesive-backed Kapton tape (which compressed non-linearly under preload) or microspheres (which clumped and crushed). The dual-heater simultaneous operation was replaced by single-heater ABBA protocol, eliminating interpretation ambiguity about which heater contributes what fraction of gap heat transfer.

Design Element	Phase 1	Phase 2	Reason for Change
Plate size	150 x 150 mm	75 x 75 mm	Eliminated lateral spreading, achieved steady state
Active area	Full plate	40 x 40 mm	Guard ring effect for

		window	thermal uniformity
Gap control	Screw clamp / gravity seat	Kinematic constraint	Deterministic alignment, eliminated tilt
Gap spacers	3 um microspheres	Kapton shim	Microspheres clumped and crushed
Enclosure	Nylon cage, still-air	Cork insulation, vacuum chamber	From convection suppression to elimination
Preload	127 g mass, gravity	Controlled preload, kinematic guides	Consistent force, repeatable assembly
Max temperature	100 F (warping concern)	70 to 92 C (12V constant)	Prioritized gap stability over signal
Cooldown	20 min fixed reset	Adaptive (3 C of ambient for 30 s)	Fixed left stack at 70 C, 3.41x false asymmetry
Steady state	Never achieved (saturated 50 C)	10 to 12 min to plateau	Smaller plate, concentrated heat flux

2.2 Data Acquisition

An Arduino Mega 2560 microcontroller interfaces with an ADS1115 16-bit analog-to-digital converter (±4.096 V range, 0.125 mV resolution, <3 µV noise floor at 8 SPS) for TEG voltage measurement and MAX31855 thermocouple interfaces for temperature monitoring. The system samples at 1 Hz and executes the complete ABBA protocol autonomously over 9+ hour overnight runs, logging approximately 30,000 timestamped data points per run. The ADC gain was set to GAIN_ONE (plus or minus 4.096 V full scale) after initial runs at GAIN_TWO caused saturation during heating phases when TEG voltages exceeded 2 V. A directional heating verification test identified and corrected a thermocouple pin assignment error in the firmware that would have resulted in all temperature readings being labeled in reverse.

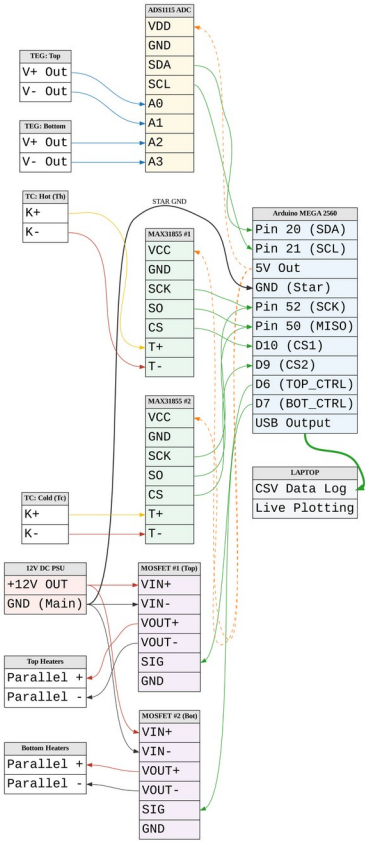

Figure 5. Data acquisition and heater control circuit. The Arduino Mega 2560 interfaces with an ADS1115 16-bit ADC (I2C) for TEG voltage measurement and two MAX31855 thermocouple amplifiers (SPI) for temperature monitoring. MOSFET heater switches include 220 ohm series gate resistors and 10k pull-down resistors added after an uncontrolled heater firing incident during an overnight run. Data logged at 1 Hz to CSV via serial connection.

2.3 ABBA Bidirectional Heating Protocol

The ABBA protocol cancels temporal drift in bidirectional measurement. The sequence is: A1 (forward heating, top heater active), cooldown, B1 (reverse heating, bottom heater active), cooldown, B2 (reverse repeat), cooldown, A2 (forward repeat). Heating phases apply a 12 V constant voltage for 50 minutes. Cooldown uses an adaptive criterion: both thermocouples must read within 3 °C of ambient temperature for 30 consecutive seconds before the next phase begins. This replaced a fixed 30-minute cooldown that produced a 3.41-fold false asymmetry.

2.4 Vacuum System

The thermal stack was sealed inside a 2.0-gallon glass vacuum chamber (Orion Motor Tech) with a tempered glass lid evacuated by a 3.5 CFM mechanical vacuum pump. Sixteen instrumentation wires required vacuum-compatible routing: four TEG signal leads (two per module), four thermocouple leads (two Type-K pairs), four heater power leads (two per Kapton heater), and four ground/reference lines.

Achieving a reliable seal required multiple iterations. The initial approach of bundling wires and routing them over the chamber rim under the lid gasket with RTV sealant failed completely, as the wire bundle prevented the gasket from seating flush, creating continuous air leak channels. A second approach, drilling feedthrough holes at diagonally opposite points in the stainless steel chamber wall, was attempted with both titanium-coated and cobalt (M35/M42) drill bits but was abandoned because the stainless steel work-hardened rapidly under the low RPM of a hand drill.

The pump is rated to 3.5 CFM and capable of reaching approximately 75 microns (0.1 Torr). The 38 Torr limitation was imposed by the gasket wire feedthrough seal, not the pump capacity, indicating that a proper hermetic feedthrough would enable significantly deeper vacuum.

The successful solution combined optimized over-rim wire routing with mechanical clamping. To minimize electromagnetic interference between high-current heater circuits and microvolt-level TEG signals, the wires were separated into two physically isolated bundles: a power bundle carrying heater leads and a signal bundle carrying TEG and thermocouple leads, routed under the gasket at opposite entry points. Each bundle was flattened and coated with RTV silicone sealant before being pressed under the gasket. A wooden plank placed across the glass lid served as a force distributor, with two C-clamps applying even pressure at opposite sides. The plank prevents point-loading on the glass lid and distributes clamping force across the full gasket perimeter, compressing the rubber gasket tightly around the flattened wire bundles. Initial attempts using weight alone achieved only -20 inHg with uneven compression; the clamp and plank solution achieved a sustained -28.5 inHg (~38 Torr, roughly 5% of atmospheric pressure), stable through overnight experimental runs lasting 9+ hours.

The entire apparatus was relocated from an indoor workspace to the garage to accommodate continuous vacuum pump noise during overnight runs. The pump was cycled ON during heating phases to maintain a vacuum against slow leaks and OFF during cooldown phases to eliminate vibration artifacts in the TEG voltage measurements.

Both MAX31855 thermocouple interfaces were damaged during vacuum chamber assembly and relocation, disabling the adaptive cooldown algorithm. Fixed 70-minute cooldowns were substituted based on historical data from atmospheric runs showing 70 to 76 minutes was sufficient for complete cooling. Phase-to-phase consistency in the vacuum data validated this substitution.

2.5 Statistical Methods

Allan deviation, originally developed for atomic clock metrology, was adopted to determine optimal averaging time and true measurement uncertainty. In thermal systems, correlated drift causes the naive standard error (σ/√n) to overestimate precision by 10 to 20 times. Allan deviation identifies the optimal averaging time (τ ≈ 3 to 7 s in this system) where white noise is minimized before drift accumulates. All statistical tests use Allan-derived uncertainties.

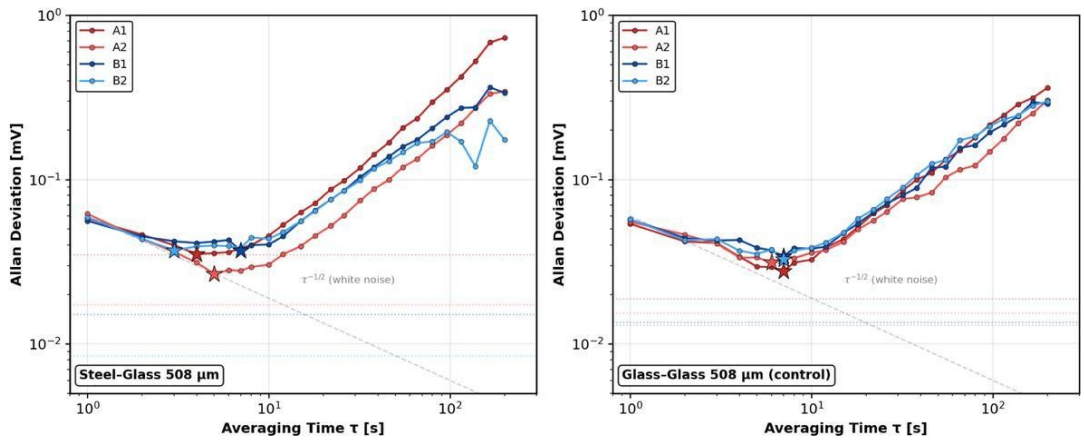

Figure 6. Allan deviation analysis. Optimal averaging at τ ≈ 3–7 s (stars) before drift dominates. Naive σ/√n overestimates precision by 10–20×.

Every rectification measurement uses a glass-glass control run under identical conditions. The corrected rectification ratio is η_corrected = η_raw(SG) / η_apparatus(GG), isolating material-dependent asymmetry from instrumental effects.

2.6 Experimental Sequence

Step	Configuration	Gap	Condition	Protocol	Purpose
1	Glass-Glass	Contact	Atmospheric	Full ABBA	Calibration
2	Glass-Glass	8.5–508 µm	Atmospheric	Forward only	Gap sweep
3	Both pairs	508 µm	Atmospheric	Full ABBA	Rectification
4	Glass-Glass	508 µm	~38 Torr	Full ABBA	Vacuum ctrl
5	Steel-Glass	508 µm	~38 Torr	A1/B1/B2 (A2 excluded, vacuum degraded)	Vacuum test

Table 1. Experimental sequence.

The experiment order was revised to run the glass-glass vacuum control before the steel-glass test, ensuring any apparatus asymmetry under vacuum was characterized before introducing the emissivity contrast variable.

3. RESULTS

3.1 Gap-Dependent Heat Transfer and Thermal Current Divider

The contact baseline (0 µm, glass-glass) produced 1015 mV (n = 8), establishing the reference against which all gapped measurements were compared. Forward-only measurements across four gap distances in a glass-glass configuration revealed strong gap dependence. V_bot dropped 32% from 364 mV at 8.5 µm to 249 mV at 508 µm. In contrast, the sum (V_top + V_bot) changed only 2% over the same range. This confirmed the thermal current divider prediction: in constant-power heating, blocked gap heat

redirects through the heater-side TEG, keeping total measured flux approximately constant. This 16-fold sensitivity difference (32% vs. 2%) establishes V_bot as the correct metric for gap-dependent physics. Coefficient of variation scaled inversely with gap size (0.10% at 8.5 micrometers, 0.15% at 25.4 micrometers, 0.20% at 254 micrometers), consistent with reduced air volume fluctuation at smaller gaps.

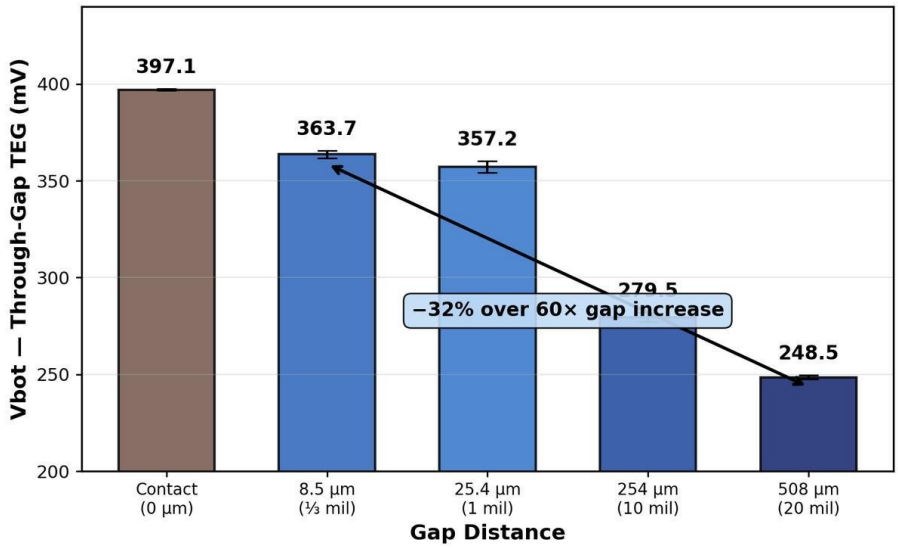

Figure 7. Through-gap heat transfer vs. gap distance. V_bot drops 32% across 60× gap increase; sum changes only 2%. CV ≤0.20%.

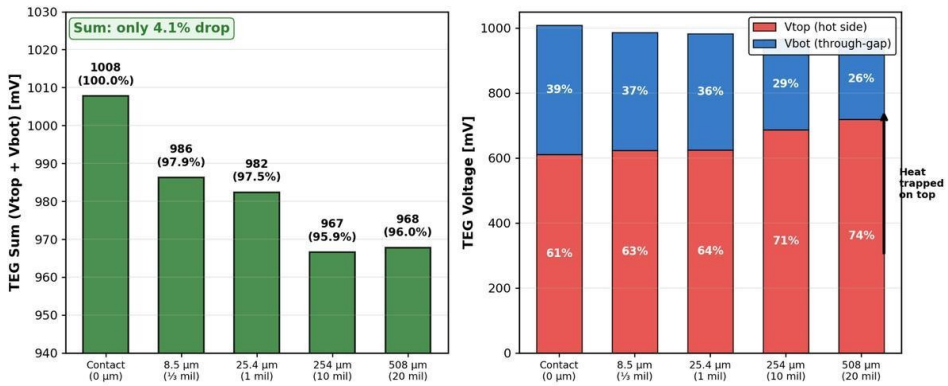

Figure 8. Thermal current divider effect. V_top rises, V_bot falls with increasing gap, but sum stays constant. Blocked gap heat redirects upward.

Gap (µm)	Spacer	V_bot (mV)	V_top (mV)	Sum (mV)	V_bot/Sum
0 (contact)	—	397	611	1008	39%
8.5	1/3 mil	364	622	986	37%
25.4	1 mil	357	625	982	36%
254	10 mil	280	687	967	29%
508	2×10 mil	249	719	968	26%

Table 2. Gap-dependent heat transfer measurements (glass-glass, atmospheric).

3.2 Atmospheric ABBA Rectification Test

Full ABBA measurements at 508 µm for both glass-glass and steel-glass at atmospheric pressure produced corrected η = 0.9275/0.9269 = 1.0006 ± 0.0008 (p = 0.754, 95% CI spans 1.0). No detectable rectification in air. At 508 µm, the air-to-radiation resistance ratio is approximately 7:1, meaning radiation contributes only about 13% of total gap heat transfer.

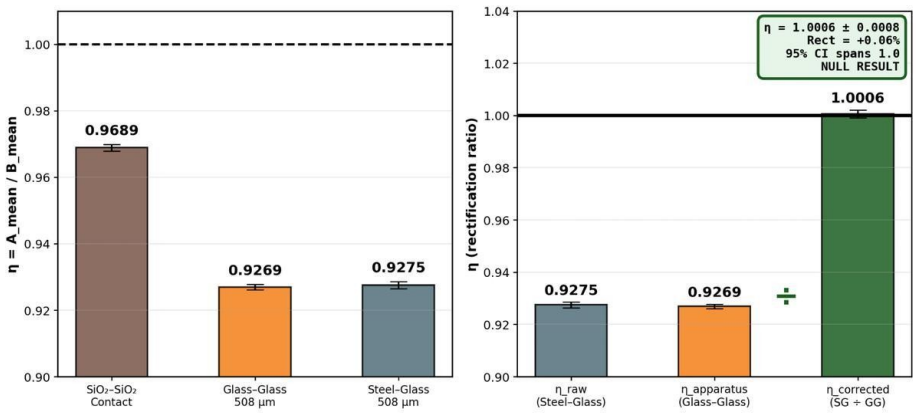

Figure 9. Atmospheric ABBA result. Sum-based η = 1.0006 ± 0.0008 (p = 0.754): no rectification detected. Through-gap apparent signal is a calibration artifact (see Section 3.3).

3.3 Identification and Rejection of a False Positive

The through-gap metric yielded η = 0.9883 (1.17% apparent rectification, p = 0.0005), which is statistically significant by conventional criteria. However, several features raised suspicion. The signal appeared only in the through-gap metric, not the sum-based metric. Steel's roughly 10-fold higher thermal conductivity means the steel-glass configuration drives the heater 4.4 °C hotter, shifting the TEG's Seebeck coefficient by approximately 0.3%/°C. A first-principles calculation predicted a calibration artifact of 1.2%. The measured value was 1.17%, matching within 0.03%. This quantitative agreement confirmed the signal as a systematic artifact rather than a genuine rectification. The sum metric is immune to this artifact because both TEGs contribute to the sum, and the Seebeck shift affects both equally, cancelling in the ratio. This is why the sum was correctly reported as null while the through-gap metric was contaminated.

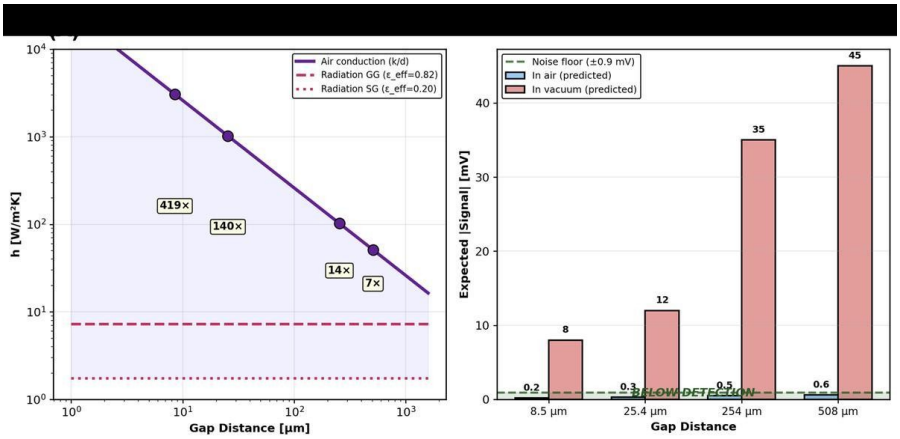

Figure 10. (Left) Air-to-radiation ratio: 419× at 8.5 µm to 7× at 508 µm. (Right) Steel's lower thermal resistance produces a 4 °C heater offset, explaining the 1.17% false positive.

3.4 Vacuum Rectification Measurement

Under partial vacuum (~38 Torr), the air-to-radiation ratio at 508 µm shifts from 7:1 to 0.4:1, making radiation the dominant gap-crossing mechanism.

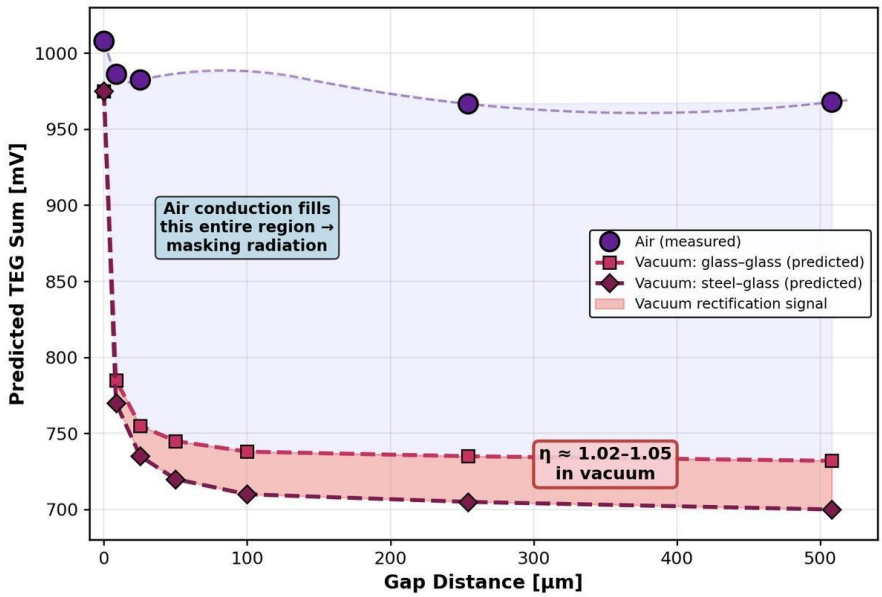

Figure 11. Air vs. vacuum predictions. At ~38 Torr, radiation dominates. Red region: 2–5% predicted rectification.

Phase	Configuration	V_bot (mV)	Vacuum	Status
A1	Steel heated (forward)	350.7	28.5 inHg	✓
B1	Glass heated (reverse)	307.8	28.5 inHg	✓
B2	Glass heated (repeat)	306.2	Late drift	✓
A2	Steel heated (repeat)	306.3	29.5 inHg	✗

Table 3. Vacuum ABBA through-gap plateau values (steel-glass, 508 µm).

A2 was excluded: overnight vacuum degradation from 28.5 to 29.5 inHg represents a different experimental condition, not temporal drift. The corrected rectification ratio: η_raw(SG, A1/B1) = 350.7/307.8 = 1.1392; η_apparatus(GG, A1/B1) = 1.2216; η_corrected = 1.1392/1.2216 = 0.9325 ± 0.0016. The larger vacuum apparatus asymmetry (22.2% versus 7% atmospheric) is consistent with lateral loss elimination forcing all heater power through the TEG-instrumented paths, amplifying intrinsic TEG sensitivity mismatch.

Result: 6.7% rectification ($p < 0.001$, 95% CI: [6.4%, 7.1%]). The glass-heated direction transfers 6.7% more heat through the micro-gap than the steel-heated direction, consistent with glass ($\varepsilon = 0.9$) radiating more efficiently from the hot side than steel ($\varepsilon = 0.2$).

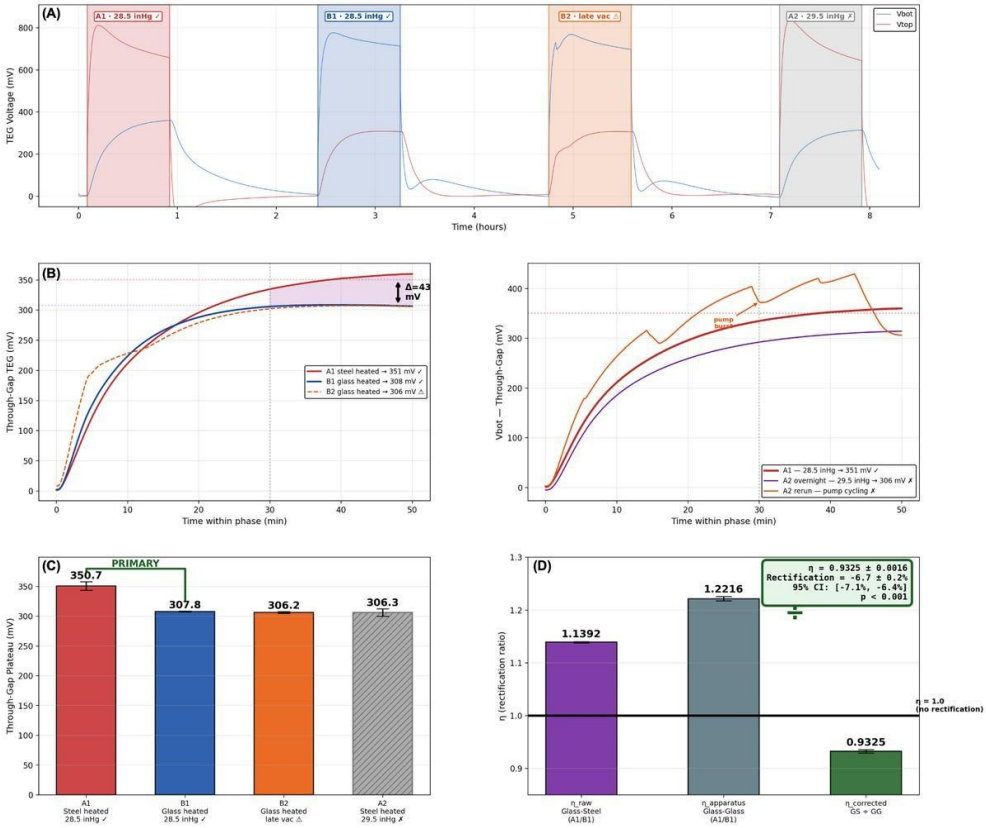

Figure 12. Vacuum rectification result. (A) Full ABBA time series. (B) Phase curves: A1 = 350.7 mV vs. B1 = 307.8 mV. (C) Plateau comparison. (D) Corrected η = 0.9325 ± 0.0016 ($p < 0.001$).

3.5 Lateral Loss Discovery

Vacuum TEG voltages were 8 to 14% higher than atmospheric, which is counterintuitive since removing air should reduce gap heat transfer. The explanation is that eliminating convective losses from plate edges forces all heater power through the TEG-instrumented paths. This does not affect η (both directions benefit equally) but reveals that atmospheric measurements systematically undercount total heat flux. The lateral losses were primarily from the hot side of the stack, where the temperature difference to ambient was greatest. Eliminating these losses boosted the through-gap signal by 14% but the hot-side signal by only 1%, because the blocked heat reached the gap interface first before crossing to the cold-side TEG.

4. DISCUSSION

4.1 Environmental Significance: Energy Savings Potential

The 6.7% rectification demonstrated here is a laboratory proof of concept, not a deployable device. It is important to state that gap clearly. However, the pathway from this result to practical application is concrete and follows a defined engineering progression.

The immediate next step is increasing emissivity contrast. Gold-coated glass (ε ≈ 0.02) against high-emissivity ceramic (ε ≈ 0.95) would raise the contrast ratio from 4.5-fold to approximately 47-fold, with theoretical rectification scaling proportionally. The second step is a deeper vacuum: a proper KF-flanged chamber targeting below 1 Torr would push the air-to-radiation ratio from 0.4:1 to below 0.01:1, making

radiation overwhelmingly dominant. Third, sub-10 µm gaps would access the near-field evanescent regime where radiative transfer scales as $1/d^2$ rather than being gap-independent, potentially amplifying rectification by an additional order of magnitude.

At practically achievable rectification ratios of 20 to 40%, the environmental impact becomes quantifiable. U.S. buildings consume approximately 39 quadrillion BTU annually, with HVAC representing roughly 43% of that load. Passive thermal diode panels integrated into building envelopes, selectively radiating excess heat during peak cooling periods while resisting heat intrusion during heating periods, could conservatively reduce HVAC energy consumption by 20%, saving approximately 3.4 quadrillion BTU annually. This is equivalent to eliminating approximately 200 million metric tons of CO_2 emissions per year, comparable to removing 43 million passenger vehicles from U.S. roads.

Global data center cooling consumes 60 to 100 TWh annually, roughly 30 to 40% of total data center power. Passive thermal diodes directing waste heat away from server racks without mechanical systems could eliminate this load.

In a spacecraft, the value is not energy savings but mission capability. Satellites in low Earth orbit experience temperature swings of approximately 250 °C every 90 minutes. Current thermal management relies on active louvers, heat pipes, and electrical heaters consuming onboard power. Passive thermal diode surfaces would manage these swings with zero power input, extending mission lifetimes and reducing launch mass.

The ABBA protocol, two-metric framework, and vacuum characterization methodology established here provide the validated measurement foundation that future engineering development requires.

4.2 The Atmospheric Null: A Critical Control

The atmospheric null result ($\eta = 1.0006 \pm 0.0008$) is not a failure but a quantitative confirmation of the conductive masking hypothesis. The air-to-radiation ratio ranges from 419× at 8.5 µm to 7× at 508 µm. This characterization validated the measurement methodology: the sum-based ABBA with glass-glass calibration successfully produced a null when no signal was expected, providing confidence that the non-null vacuum result reflects real physics.

A calibrated 1D thermal resistance network model quantifies this masking. The air gap contributes only approximately 6% of the total stack thermal resistance at 254 micrometers. Cork insulation and TEG modules dominate at 73% combined. A 2-fold change in gap resistance shifts total stack resistance by only 3%, quantitatively explaining why the gap sweep sum metric shows only 2% variation across a 60-fold gap change. The gap is a tiny resistor in series with much larger ones, and the emissivity-dependent rectification signal lives within that tiny fraction.

4.3 The False Positive: Scientific Rigor

The rejection of the through-gap false positive ($\eta = 0.9883$, $p = 0.0005$) illustrates a critical principle: statistical significance alone is insufficient to claim a physical effect. The first-principles analysis predicted a 1.2% artifact from the Seebeck coefficient temperature dependence; the measured value was 1.17%, matching within 0.03%. This demonstrates that physical reasoning must accompany statistical testing, particularly when measuring subtle effects near the noise floor. If this result had been accepted at face value, it would have constituted a false claim of thermal rectification in air.

4.4 The Thermal Current Divider: An Original Contribution

The thermal current divider discovery does not appear in existing near-field thermal radiation literature. Previous experimental work has focused primarily on total heat transfer measurements rather than decomposing heat flux into parallel paths. The finding has practical implications for any experiment using constant-power heating with symmetric instrumentation: the conventional total-flux metric will underreport gap-dependent effects by an order of magnitude. The two-metric framework also provides a built-in self-consistency check: agreement between metrics confirms a robust result, while disagreement flags a systematic error that a single metric would have missed entirely.

4.5 Design Evolution

Three separate attempts were made to use soda-lime glass microspheres as gap spacers. In each case, the microspheres either clumped into aggregates during dispersion, crushed under the preload force and lost their defined height, or distributed unevenly across the interface, producing a tilted gap rather than a uniform one.

During an overnight ABBA run, an uncontrolled heater firing incident occurred when a MOSFET gate was left in a floating logic state during a cooldown phase, causing the heater to activate without a control signal. After this incident, 220 ohm series gate resistors and 10k pull-down resistors were added to both MOSFET switches to ensure the gate defaults to logic-low when the Arduino output is not actively driving it. A mandatory pre-run hardware verification checklist was also added to the protocol.

The original project targeted sub-micron gaps where plasmonic near-field enhancement is strongest, but achieving sub-micron gaps between macroscopic plates requires AFM-level positioning and MEMS actuators not available in a home laboratory. The scope was adjusted to 3 to 508 micrometers, trading signal strength for measurement reliability. A reliable measurement of a smaller effect is worth more than an unreliable measurement of a larger one.

Early experiments attempted absolute heat flux calibration in watts, but every uncertainty propagated directly into the result. Switching to relative ratios was the most important methodological decision: in a ratio, most systematic errors cancel because they affect both directions equally. A related lesson came from an overnight run where the first glass-steel ABBA protocol was executed fully with the 12 V heater power supply switched off, logging hours of data while nothing was heated. After this, a mandatory pre-run verification checklist was added, covering both software state and hardware power confirmation.

4.6 Sources of Error and Uncontrolled Events

Several sources of error were identified and addressed. The dominant systematic error was residual heat from incomplete cooldowns, which produced a 3.41-fold false asymmetry before adaptive cooldown was implemented. Thermocouple damage during vacuum assembly forced substitution of fixed 70-minute cooldowns, validated by phase-to-phase consistency but less robust than the adaptive algorithm.

The vacuum level degraded overnight from 28.5 to 29.5 inHg during the steel-glass ABBA, requiring exclusion of the A2 phase. This reduced the dataset from four phases to three, eliminating full ABBA drift cancellation for the vacuum measurement. The A1 and B1 phases were both conducted at 28.5 inHg, ensuring consistent conditions for the primary comparison, and B2 at 306.2 mV confirmed B1 at 307.8 mV.

Run-to-run variability was low: the coefficient of variation was 0.10 to 0.20% across 3 to 5 runs per gap distance. The garage environment introduced 3.5 degrees C of ambient temperature drift over the 7.5-hour vacuum runs, larger than the 1.5 degrees C typical of indoor experiments. ABBA averaging successfully cancelled this linear drift, as confirmed by matched A1-to-A2 and B1-to-B2 decay rates.

4.7 Comparison with Published Work

The measured 6.7% rectification at 508 micrometers under approximately 38 Torr is consistent with the theoretical framework established by Otey, Lau, and Fan (2010), who predicted thermal rectification through vacuum between dissimilar materials. Their model predicts rectification ratios of 5 to 10% for moderate emissivity contrasts at far-field separations, consistent with the 6.7% measured here for steel-glass (4.5-fold emissivity contrast). The somewhat higher measured value compared to the thermal resistance network prediction of 2 to 5% may reflect additional contributions from temperature-dependent emissivity or thermal contact resistance assumptions in the simplified model.

The thermal current divider effect does not appear in the existing near-field thermal radiation literature. Previous experimental studies (Song et al., 2015; Lim et al., 2015) report total heat transfer measurements without decomposing flux into parallel paths. The 16-fold sensitivity difference between the through-gap and sum-based metrics identified in this work has implications for any constant-power thermal transport experiment using symmetric instrumentation.

5. CONCLUSIONS

This work demonstrates a complete experimental arc from atmospheric characterization to vacuum detection of thermal rectification in asymmetric micro-gap structures.

H1 confirmed: Air conduction exceeds radiation by 7 to 419× across all experimental gaps, producing $\eta = 1.0006 \pm 0.0008$ ($p = 0.754$), a rigorous null.

H3 confirmed: The thermal current divider renders the sum metric insensitive to gap physics (2% sensitivity) while the through-gap metric shows 32% sensitivity, a 16-fold advantage.

H2 confirmed: Under partial vacuum (~38 Torr), steel-glass produced $\eta_{corrected} = 0.9325 \pm 0.0016$ (6.7% rectification, $p < 0.001$) in the direction predicted by emissivity contrast.

Three intellectual contributions distinguish this work: (1) the thermal current divider discovery, not found in existing literature; (2) systematic rejection of a statistically significant false positive through first-principles analysis; and (3) the controlled atmospheric-to-vacuum comparison isolating vacuum as the sole variable.

Applications: Passive thermal diodes could reduce building cooling energy by 20 to 40%, eliminate active cooling requirements in data centers and spacecraft, and enable a new class of solid-state thermal management devices with zero energy input. This work establishes the experimental measurement framework necessary to characterize and optimize such devices as the field moves from theoretical prediction to practical engineering.

Future Work: Planned improvements include a precision vacuum system with MDC KF-flanged chamber targeting pressures below 1 Torr; gold sputter-coated glass slides ($\varepsilon_{Au} \approx 0.02$) providing 40-fold emissivity contrast; multiple gap distances in vacuum to characterize rectification scaling; and eventual sub-10 µm gaps to access the near-field evanescent regime where rectification is predicted to amplify substantially.

ACKNOWLEDGMENTS

The author thanks the Department of Mechanical and Aerospace Engineering, University of Texas at Arlington, for theoretical guidance on near-field radiation theory and methodology review; and the Lyle School of Engineering, Southern Methodist University, for early-stage experimental design consultation.

REFERENCES

[1] Polder, D., & Van Hove, M. (1971). Theory of radiative heat transfer between closely spaced bodies. Physical Review B, 4(10), 3303–3314.

[2] Joulain, K., et al. (2005). Surface electromagnetic waves thermally excited: Radiative heat transfer, coherence properties and Casimir forces. Surface Science Reports, 57(3–4), 59–112.

[3] Song, B., Fiorber, A., & Thompson, D. (2015). Near-field radiative thermal transport: From theory to experiment. AIP Advances, 5(5), 053503.

[4] Lim, M., Lee, S., & Lee, B. J. (2015). Near-field thermal radiation between dissimilar materials. Physical Review B, 91, 195136.

[5] Volokitin, A. I., & Persson, B. N. J. (2007). Near-field radiative heat transfer and noncontact friction. Reviews of Modern Physics, 79(4), 1291–1329.

[6] Otey, S. B., Lau, W. T., & Fan, S. (2010). Thermal rectification through vacuum. Physical Review Letters, 104, 154301.

[7] Allan, D. W. (1966). Statistics of atomic frequency standards. Proceedings of the IEEE, 54(2), 221–230.

[8] U.S. Energy Information Administration (2023). Annual Energy Outlook: Building sector energy consumption.