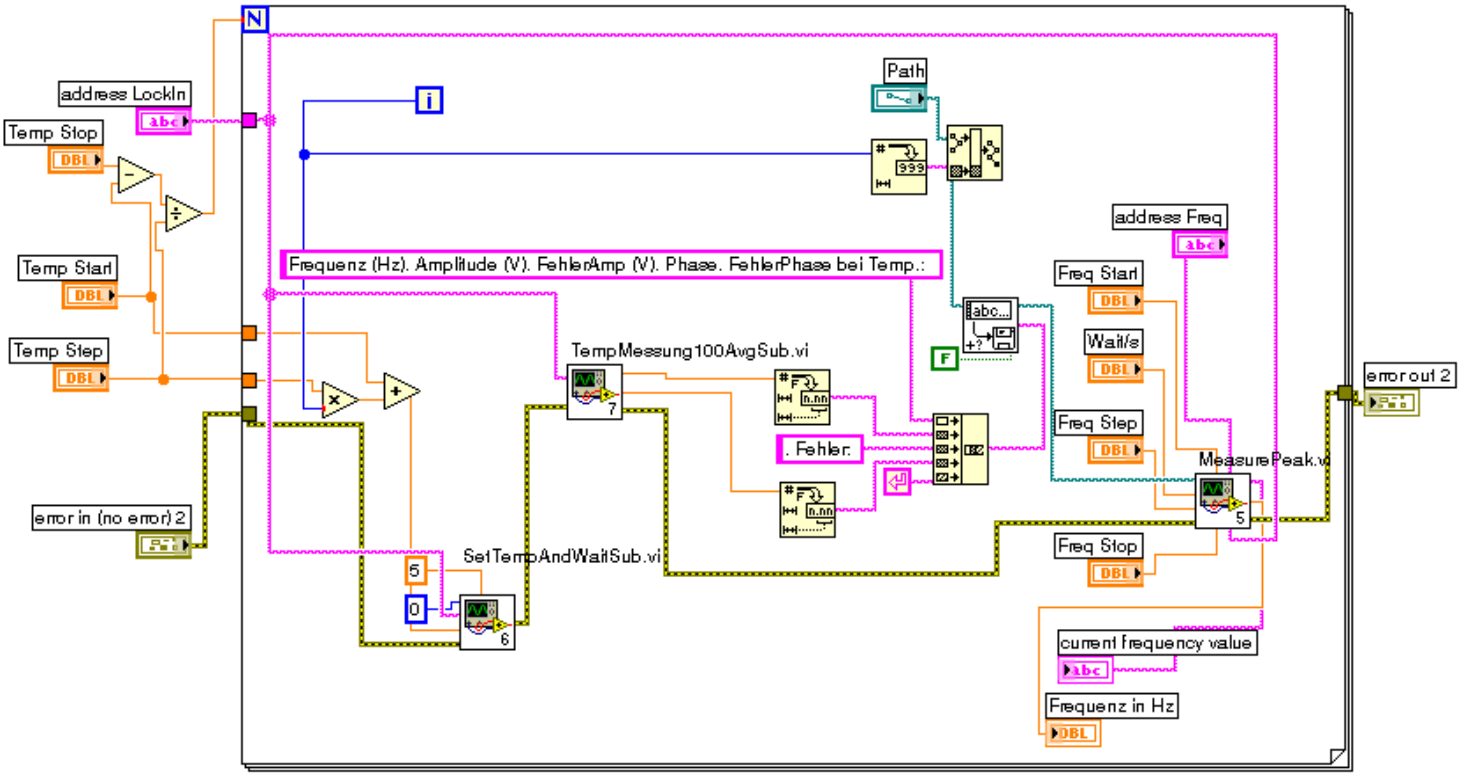
address LockIn
Temp Stop
Temp Start
Temp Step
error in (no error) 2
Path
Frequenz (Hz). Amplitude (V). FehlerAmp (V). Phase. FehlerPhase bei Temp.:
TempMessung100AvgSub.vi
. Fehler.
SetTempAndWaitSub.vi
address Freq
Freq Start
Wait/s
Freq Step
Freq Stop
MeasurePeak.vi
error out 2
current frequency value
Frequenz in Hz

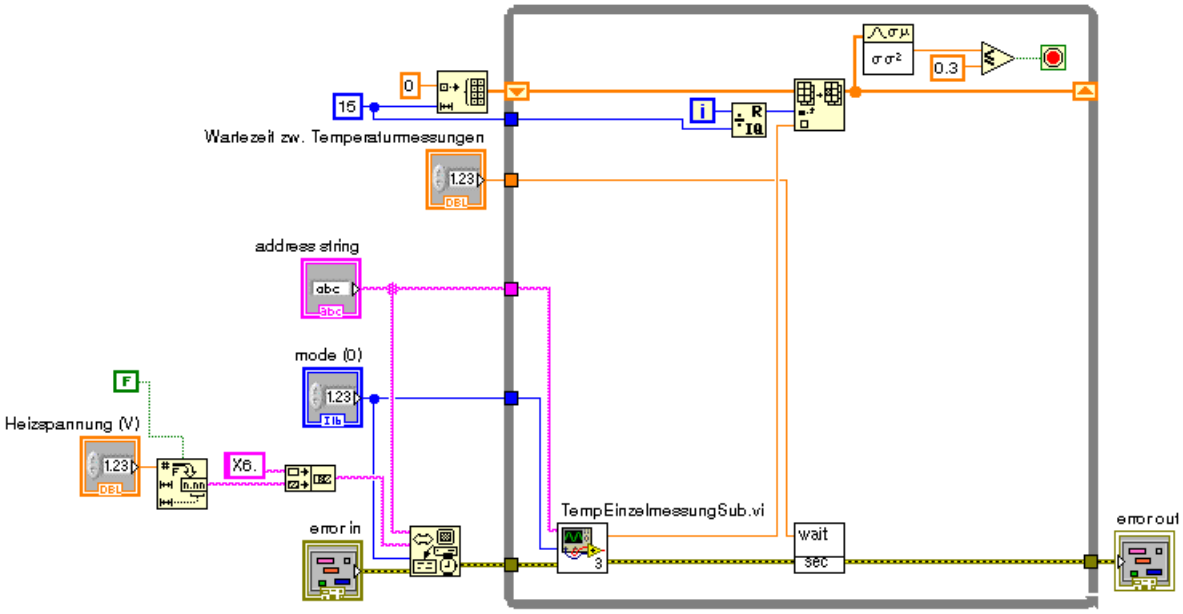
Wartezeit zw. Temperaturmessungen
address string
mode (0)
Heizspannung (V)
error in
TempEinzelmessungSub.vi
wait
sec
error out

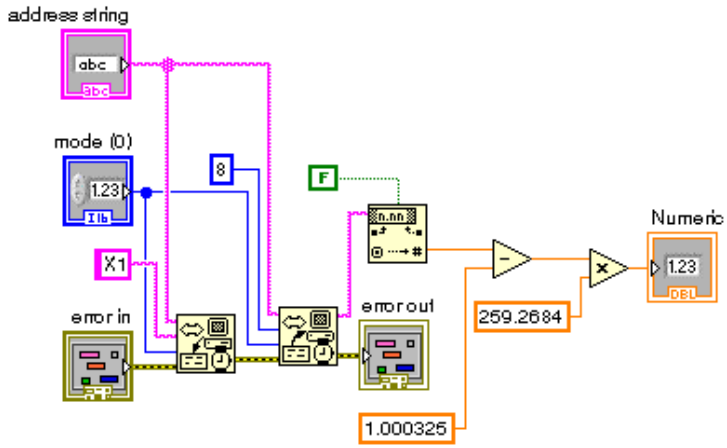
address string
mode (0)
error in
error out
Numeric
259.2684
1.000325

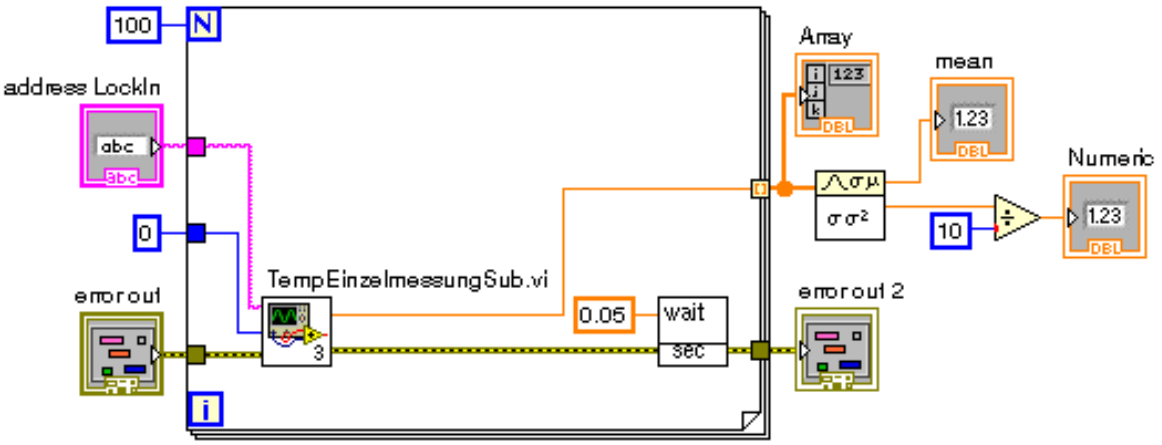
100
N
address LockIn
0
error out
TempEinzelmessungSub.vi
0.05
wait
sec
error out 2
Array
mean
Numeric
10

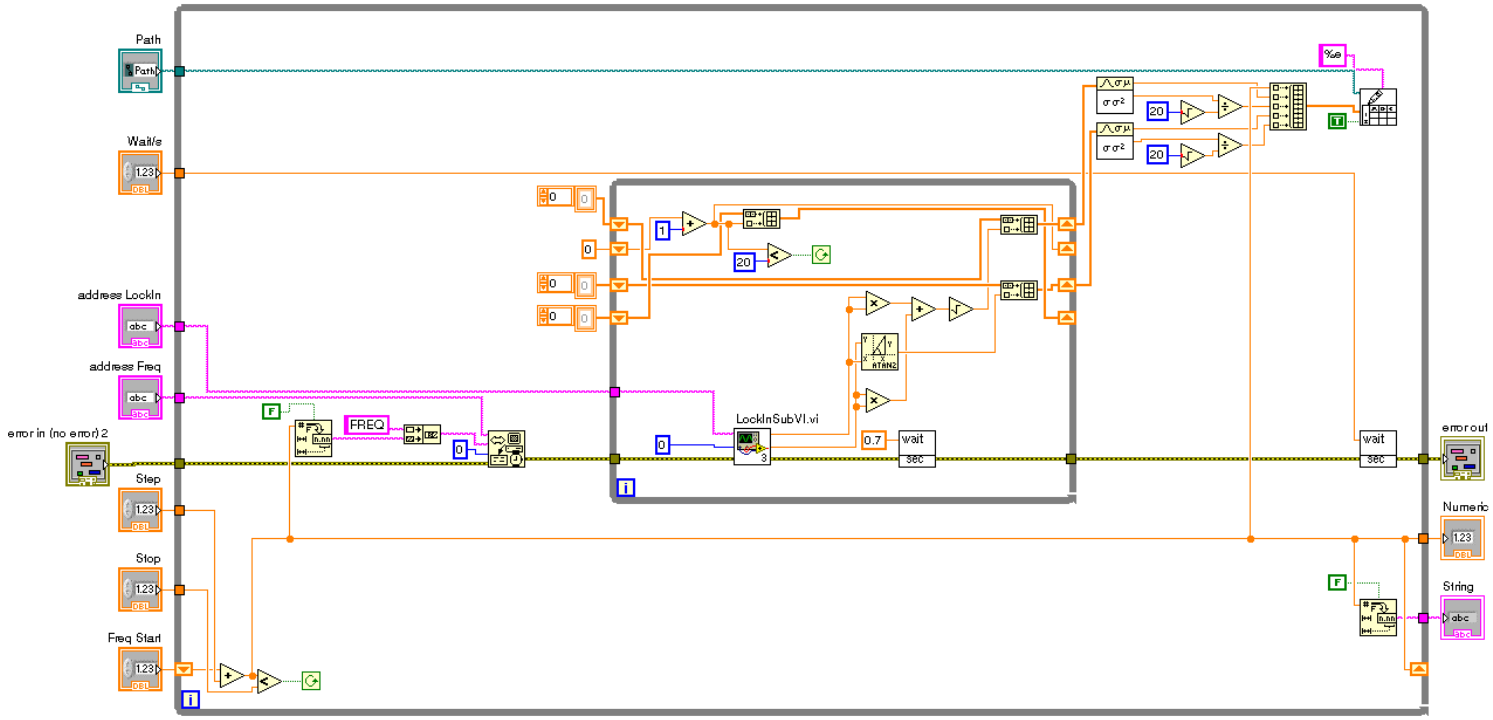
Path
Wait/s
address LockIn
address Freq
error in (no error) 2
Step
Stop
Freq Start
FREQ
LockInSubVI.vi
0.7
wait
sec
error out
Numeric
String