2013 ASME Boiler and Pressure Vessel Code

AN INTERNATIONAL CODE

VIII

Rules for Construction of Pressure Vessels

Division 1

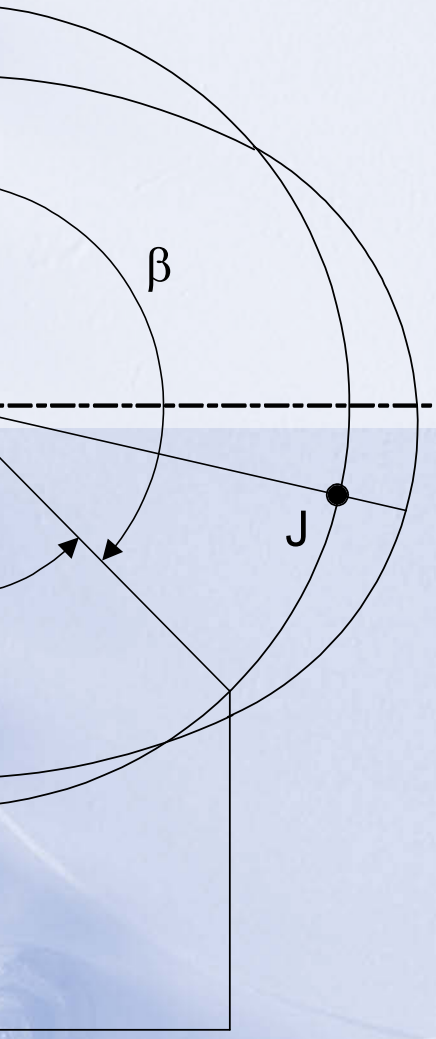

ASME
SETTING THE STANDARD

Provided by IHS under license with ASME
No reproduction or networking permitted without license from IHS
Licensee=Chevron Phillips Chemical Co LP/5956674001
Not for Resale, 11/09/2014 20:41:36 MST

INTENTIONALLY LEFT BLANK

Provided by IHS under license with ASME

No reproduction or networking permitted without license from IHS

Licensee=Chevron Phillips Chemical Co LP/5956674001
Not for Resale, 11/09/2014 20:41:36 MST

AN INTERNATIONAL CODE

2013 ASME Boiler & Pressure Vessel Code

2013 Edition July 1, 2013

VIII

RULES FOR CONSTRUCTION OF PRESSURE VESSELS

Division 1

ASME Boiler and Pressure Vessel Committee
on Pressure Vessels

The American Society of Mechanical Engineers

Two Park Avenue • New York, NY • 10016 USA

--`,,,``,,``,,,

Date of Issuance: July 1, 2013

This international code or standard was developed under procedures accredited as meeting the criteria for American National Standards and it is an American National Standard. The Standards Committee that approved the code or standard was balanced to assure that individuals from competent and concerned interests have had an opportunity to participate. The proposed code or standard was made available for public review and comment that provides an opportunity for additional public input from industry, academia, regulatory agencies, and the public-at-large.

ASME does not "approve," "rate," or "endorse" any item, construction, proprietary device, or activity.

ASME does not take any position with respect to the validity of any patent rights asserted in connection with any items mentioned in this document, and does not undertake to insure anyone utilizing a standard against liability for infringement of any applicable letters patent, nor assume any such liability. Users of a code or standard are expressly advised that determination of the validity of any such patent rights, and the risk of infringement of such rights, is entirely their own responsibility.

Participation by federal agency representative(s) or person(s) affiliated with industry is not to be interpreted as government or industry endorsement of this code or standard.

ASME accepts responsibility for only those interpretations of this document issued in accordance with the established ASME procedures and policies, which precludes the issuance of interpretations by individuals.

The endnotes in this document (if any) are part of this American National Standard.

ASME collective membership mark

Certification Mark

The above ASME symbol is registered in the U.S. Patent Office.

"ASME" is the trademark of The American Society of Mechanical Engineers.

No part of this document may be reproduced in any form, in an electronic retrieval system or otherwise, without the prior written permission of the publisher.

Library of Congress Catalog Card Number: 56-3934
Printed in the United States of America

Adopted by the Council of The American Society of Mechanical Engineers, 1914; latest edition 2013.

The American Society of Mechanical Engineers
Two Park Avenue, New York, NY 10016-5990

Copyright © 2013 by
THE AMERICAN SOCIETY OF MECHANICAL ENGINEERS
All rights reserved

Provided by IHS under license with ASME

No reproduction or networking permitted without license from IHS

Licensee=Chevron Phillips Chemical Co LP/5956674001
Not for Resale, 11/09/2014 20:41:36 MST

TABLE OF CONTENTS

	List of Sections	xxv
	Foreword	xxvii
	Statement of Policy on the Use of the Certification Mark and Code Authorization in Advertising	xxix
	Statement of Policy on the Use of ASME Marking to Identify Manufactured Items	xxix
	Submittal of Technical Inquiries to the Boiler and Pressure Vessel Standards Committees	xxx
	Personnel	xxxii
	Summary of Changes	xlvii
	List of Changes in Record Number Order	lvi
	Cross-Referencing and Stylistic Changes in the Boiler and Pressure Vessel Code	lx
	Introduction	1
Subsection A	**General Requirements**	7
Part UG	**General Requirements for All Methods of Construction and All Materials**	7
	Materials	7
UG-4	General	7
UG-5	Plate	8
UG-6	Forgings	8
UG-7	Castings	8
UG-8	Pipe and Tubes	8
UG-9	Welding Materials	9
UG-10	Material Identified with or Produced to a Specification Not Permitted by this Division, and Material Not Fully Identified	9
UG-11	Prefabricated or Preformed Pressure Parts Furnished Without a Certification Mark	10
UG-12	Bolts and Studs	12
UG-13	Nuts and Washers	12
UG-14	Rods and Bars	13
UG-15	Product Specification	13
	Design	13
UG-16	General	13
UG-17	Methods of Fabrication in Combination	14
UG-18	Materials in Combination	14
UG-19	Special Constructions	14
UG-20	Design Temperature	14
UG-21	Design Pressure	15
UG-22	Loadings	15
UG-23	Maximum Allowable Stress Values	15
UG-24	Castings	17
UG-25	Corrosion	18
UG-26	Linings	18
UG-27	Thickness of Shells Under Internal Pressure	18
UG-28	Thickness of Shells and Tubes Under External Pressure	19
UG-29	Stiffening Rings for Cylindrical Shells Under External Pressure	22
UG-30	Attachment of Stiffening Rings	24
UG-31	Tubes, and Pipe When Used as Tubes or Shells	28
UG-32	Formed Heads, and Sections, Pressure on Concave Side	28
UG-33	Formed Heads, Pressure on Convex Side	29
UG-34	Unstayed Flat Heads and Covers	32

--`,,,`,,`,`,,`,,,,`,`,`,`,,`,,`,,`,,`,`,`,`,,`,,`,,`,,`,---

Provided by IHS under license with ASME

No reproduction or networking permitted without license from IHS

Licensee=Chevron Phillips Chemical Co LP/5956674001
Not for Resale, 11/09/2014 20:41:36 MST

UG-35	Other Types of Closures	36
	Openings and Reinforcements	37
UG-36	Openings in Pressure Vessels	37
UG-37	Reinforcement Required for Openings in Shells and Formed Heads	39
UG-38	Flued Openings in Shells and Formed Heads	43
UG-39	Reinforcement Required for Openings in Flat Heads	43
UG-40	Limits of Reinforcement	45
UG-41	Strength of Reinforcement	48
UG-42	Reinforcement of Multiple Openings	48
UG-43	Methods of Attachment of Pipe and Nozzle Necks to Vessel Walls	50
UG-44	Flanges and Pipe Fittings	52
UG-45	Nozzle Neck Thickness	52
UG-46	Inspection Openings	53
	Braced and Stayed Surfaces	54
UG-47	Braced and Stayed Surfaces	54
UG-48	Staybolts	55
UG-49	Location of Staybolts	55
UG-50	Dimensions of Staybolts	55
	Ligaments	56
UG-53	Ligaments	56
UG-54	Supports	58
UG-55	Lugs for Platforms, Ladders, and Other Attachments to Vessel Walls	58
	Fabrication	58
UG-75	General	58
UG-76	Cutting Plates and Other Stock	58
UG-77	Material Identification (see UG-85)	58
UG-78	Repair of Defects in Materials	61
UG-79	Forming Pressure Parts	61
UG-80	Permissible Out-of-Roundness of Cylindrical, Conical, and Spherical Shells	61
UG-81	Tolerance for Formed Heads	63
UG-82	Lugs and Fitting Attachments	63
UG-83	Holes for Screw Stays	64
UG-84	Charpy Impact Tests	64
UG-85	Heat Treatment	70
	Inspection and Tests	70
UG-90	General	70
UG-91	The Inspector	71
UG-92	Access for Inspector	71
UG-93	Inspection of Materials	72
UG-94	Marking on Materials	73
UG-95	Examination of Surfaces During Fabrication	73
UG-96	Dimensional Check of Component Parts	73
UG-97	Inspection During Fabrication	73
UG-98	Maximum Allowable Working Pressure	73
UG-99	Standard Hydrostatic Test	73
UG-100	Pneumatic Test (see UW-50)	75
UG-101	Proof Tests to Establish Maximum Allowable Working Pressure	76
UG-102	Test Gages	81
UG-103	Nondestructive Testing	81
	Marking and Reports	81
UG-115	General	81
UG-116	Required Marking	81
UG-117	Certificates of Authorization and Certification Marks	83
UG-118	Methods of Marking	85
UG-119	Nameplates	85

Provided by IHS under license with ASME

No reproduction or networking permitted without license from IHS

Licensee=Chevron Phillips Chemical Co LP/5956674001
Not for Resale, 11/09/2014 20:41:36 MST

UG-120	Data Reports	86
	Overpressure Protection	88
UG-125	General	88
UG-126	Pressure Relief Valves	89
UG-127	Nonreclosing Pressure Relief Devices	89
UG-128	Liquid Pressure Relief Valves	91
UG-129	Marking	91
UG-130	Certification Mark	94
UG-131	Certification of Capacity of Pressure Relief Devices	94
UG-132	Certification of Capacity of Pressure Relief Valves in Combination with Nonreclosing Pressure Relief Devices	98
UG-133	Determination of Pressure Relieving Requirements	99
UG-134	Pressure Settings and Performance Requirements	99
UG-135	Installation	100
UG-136	Minimum Requirements for Pressure Relief Valves	100
UG-137	Minimum Requirements for Rupture Disk Devices	104
UG-138	Minimum Requirements for Pin Devices	105
UG-140	Overpressure Protection by System Design	107
Subsection B	**Requirements Pertaining to Methods of Fabrication of Pressure Vessels**	109
Part UW	**Requirements for Pressure Vessels Fabricated by Welding**	109
	General	109
UW-1	Scope	109
UW-2	Service Restrictions	109
UW-3	Welded Joint Category	110
	Materials	111
UW-5	General	111
UW-6	Nonmandatory Guidelines for Welding Material Selections	112
	Design	112
UW-8	General	112
UW-9	Design of Welded Joints	112
UW-10	Postweld Heat Treatment	113
UW-11	Radiographic and Ultrasonic Examination	113
UW-12	Joint Efficiencies	114
UW-13	Attachment Details	114
UW-14	Openings in or Adjacent to Welds	123
UW-15	Welded Connections	124
UW-16	Minimum Requirements for Attachment Welds at Openings	124
UW-17	Plug Welds	134
UW-18	Fillet Welds	135
UW-19	Welded Stayed Construction	135
UW-20	Tube-to-Tubesheet Welds	135
UW-21	ASME B16.5 Socket and Slip-on Flange Welds	139
	Fabrication	139
UW-26	General	139
UW-27	Welding Processes	140
UW-28	Qualification of Welding Procedure	140
UW-29	Tests of Welders and Welding Operators	140
UW-30	Lowest Permissible Temperatures for Welding	141
UW-31	Cutting, Fitting, and Alignment	141
UW-32	Cleaning of Surfaces to be Welded	141
UW-33	Alignment Tolerance	141
UW-34	Spin-Holes	141
UW-35	Finished Longitudinal and Circumferential Joints	142
UW-36	Fillet Welds	142

Provided by IHS under license with ASME

No reproduction or networking permitted without license from IHS

Licensee=Chevron Phillips Chemical Co LP/5956674001
Not for Resale, 11/09/2014 20:41:36 MST

UW-37	Miscellaneous Welding Requirements	142
UW-38	Repair of Weld Defects	143
UW-39	Peening	143
UW-40	Procedures for Postweld Heat Treatment	143
UW-41	Sectioning of Welded Joints	145
UW-42	Surface Weld Metal Buildup	145
	Inspection and Tests	145
UW-46	General	145
UW-47	Check of Welding Procedure	146
UW-48	Check of Welder and Welding Operator Qualifications	146
UW-49	Check of Postweld Heat Treatment Practice	146
UW-50	Nondestructive Examination of Welds on Pneumatically Tested Vessels	146
UW-51	Radiographic Examination of Welded Joints	146
UW-52	Spot Examination of Welded Joints	146
UW-53	Technique for Ultrasonic Examination of Welded Joints	147
UW-54	Qualification of Nondestructive Examination Personnel	148
	Marking and Reports	148
UW-60	General	148
	Pressure Relief Devices	148
UW-65	General	148
Part UF	**Requirements for Pressure Vessels Fabricated by Forging**	149
	General	149
UF-1	Scope	149
	Materials	149
UF-5	General	149
UF-6	Forgings	149
UF-7	Forged Steel Rolls Used for Corrugating Paper Machinery	149
	Design	149
UF-12	General	149
UF-13	Head Design	150
UF-25	Corrosion Allowance	150
	Fabrication	150
UF-26	General	150
UF-27	Tolerances on Body Forgings	150
UF-28	Methods of Forming Forged Heads	150
UF-29	Tolerance on Forged Heads	150
UF-30	Localized Thin Areas	150
UF-31	Heat Treatment	150
UF-32	Welding for Fabrication	151
UF-37	Repair of Defects in Material	152
UF-38	Repair of Weld Defects	152
UF-43	Attachment of Threaded Nozzles to Integrally Forged Necks and Thickened Heads on Vessels	153
	Inspection and Tests	153
UF-45	General	153
UF-46	Acceptance by Inspector	153
UF-47	Parts Forging	153
UF-52	Check of Heat Treatment and Postweld Heat Treatment	153
UF-53	Test Specimens	153
UF-54	Tests and Retests	153
UF-55	Ultrasonic Examination	153
	Marking and Reports	154
UF-115	General	154
	Pressure Relief Devices	154
UF-125	General	154

Provided by IHS under license with ASME
No reproduction or networking permitted without license from IHS
Licensee=Chevron Phillips Chemical Co LP/5956674001
Not for Resale, 11/09/2014 20:41:36 MST

Part UB	**Requirements for Pressure Vessels Fabricated by Brazing**	155
	General	155
UB-1	Scope	155
UB-2	Elevated Temperature	155
UB-3	Service Restrictions	155
	Materials	155
UB-5	General	155
UB-6	Brazing Filler Metals	155
UB-7	Fluxes and Atmospheres	156
	Design	156
UB-9	General	156
UB-10	Strength of Brazed Joints	156
UB-11	Qualification of Brazed Joints for Design Temperatures Up to the Maximum Shown in Column 1 of Table UB-2	156
UB-12	Qualification of Brazed Joints for Design Temperatures in the Range Shown in Column 2 of Table UB-2	156
UB-13	Corrosion	156
UB-14	Joint Efficiency Factors	156
UB-15	Application of Brazing Filler Metal	156
UB-16	Permissible Types of Joints	157
UB-17	Joint Clearance	157
UB-18	Joint Brazing Procedure	157
UB-19	Openings	158
UB-20	Nozzles	158
UB-21	Brazed Connections	158
UB-22	Low Temperature Operation	158
	Fabrication	159
UB-30	General	159
UB-31	Qualification of Brazing Procedure	159
UB-32	Qualification of Brazers and Brazing Operators	159
UB-33	Buttstraps	160
UB-34	Cleaning of Surfaces to be Brazed	160
UB-35	Clearance between Surfaces to be Brazed	160
UB-36	Postbrazing Operations	160
UB-37	Repair of Defective Brazing	160
	Inspection and Tests	160
UB-40	General	160
UB-41	Inspection During Fabrication	160
UB-42	Procedure	160
UB-43	Brazer and Brazing Operator	160
UB-44	Visual Examination	160
UB-50	Exemptions	161
	Marking and Reports	161
UB-55	General	161
	Pressure Relief Devices	161
UB-60	General	161
Subsection C	**Requirements Pertaining to Classes of Materials**	162
Part UCS	**Requirements for Pressure Vessels Constructed of Carbon and Low Alloy Steels**	162
	General	162
UCS-1	Scope	162
	Materials	162
UCS-5	General	162
UCS-6	Steel Plates	162
UCS-7	Steel Forgings	163

Provided by IHS under license with ASME

No reproduction or networking permitted without license from IHS

Licensee=Chevron Phillips Chemical Co LP/5956674001
Not for Resale, 11/09/2014 20:41:36 MST

UCS-8	Steel Castings	163
UCS-9	Steel Pipe and Tubes	163
UCS-10	Bolt Materials	163
UCS-11	Nuts and Washers	163
UCS-12	Bars and Shapes	163
	Design	163
UCS-16	General	163
UCS-19	Welded Joints	163
UCS-23	Maximum Allowable Stress Values	164
UCS-27	Shells Made From Pipe	164
UCS-28	Thickness of Shells Under External Pressure	164
UCS-29	Stiffening Rings for Shells Under External Pressure	165
UCS-30	Attachment of Stiffening Rings to Shell	165
UCS-33	Formed Heads, Pressure on Convex Side	165
UCS-56	Requirements for Postweld Heat Treatment	165
UCS-57	Radiographic Examination	176
	Low Temperature Operation	176
UCS-65	Scope	176
UCS-66	Materials	176
UCS-67	Impact Tests of Welding Procedures	188
UCS-68	Design	191
	Fabrication	192
UCS-75	General	192
UCS-79	Forming Pressure Parts	192
UCS-85	Heat Treatment of Test Specimens	193
	Inspection and Tests	194
UCS-90	General	194
	Marking and Reports	194
UCS-115	General	194
	Pressure Relief Devices	194
UCS-125	General	194
	Nonmandatory Appendix CS	194
UCS-150	General	194
UCS-151	Creep–Rupture Properties of Carbon Steels	194
UCS-160	Vessels Operating at Temperatures Colder than the MDMT Stamped on the Nameplate	194
Part UNF	**Requirements for Pressure Vessels Constructed of Nonferrous Materials**	195
	General	195
UNF-1	Scope	195
UNF-3	Uses	195
UNF-4	Conditions of Service	195
	Materials	195
UNF-5	General	195
UNF-6	Nonferrous Plate	195
UNF-7	Forgings	195
UNF-8	Castings	195
UNF-12	Bolt Materials	195
UNF-13	Nuts and Washers	196
UNF-14	Rods, Bars, and Shapes	196
UNF-15	Other Materials	196
	Design	196
UNF-16	General	196
UNF-19	Welded Joints	196
UNF-23	Maximum Allowable Stress Values	196
UNF-28	Thickness of Shells Under External Pressure	199

Provided by IHS under license with ASME
No reproduction or networking permitted without license from IHS
Licensee=Chevron Phillips Chemical Co LP/5956674001
Not for Resale, 11/09/2014 20:41:36 MST

UNF-30	Stiffening Rings	199
UNF-33	Formed Heads, Pressure on Convex Side	199
UNF-56	Postweld Heat Treatment	199
UNF-57	Radiographic Examination	200
UNF-58	Liquid Penetrant Examination	200
UNF-65	Low Temperature Operation	200
	Fabrication	200
UNF-75	General	200
UNF-77	Forming Shell Sections and Heads	201
UNF-78	Welding	201
UNF-79	Requirements for Postfabrication Heat Treatment Due to Straining	201
	Inspection and Tests	201
UNF-90	General	201
UNF-91	Requirements for Penetrameter	201
UNF-95	Welding Test Plates	201
	Marking and Reports	201
UNF-115	General	201
	Pressure Relief Devices	202
UNF-125	General Vessels	202
Nonmandatory Appendix NF	**Characteristics of the Nonferrous Materials (Informative and Nonmandatory)**	203
Part UHA	**Requirements for Pressure Vessels Constructed of High Alloy Steel**	205
	General	205
UHA-1	Scope	205
UHA-5	Uses	205
UHA-6	Conditions of Service	205
UHA-8	Material	205
	Materials	205
UHA-11	General	205
UHA-12	Bolt Materials	205
UHA-13	Nuts and Washers	205
	Design	205
UHA-20	General	205
UHA-21	Welded Joints	206
UHA-23	Maximum Allowable Stress Values	206
UHA-28	Thickness of Shells Under External Pressure	206
UHA-29	Stiffening Rings for Shells Under External Pressure	206
UHA-30	Attachment of Stiffening Rings to Shell	206
UHA-31	Formed Heads, Pressure on Convex Side	206
UHA-32	Requirements for Postweld Heat Treatment	206
UHA-33	Radiographic Examination	212
UHA-34	Liquid Penetrant Examination	212
	Fabrication	212
UHA-40	General	212
UHA-42	Weld Metal Composition	212
UHA-44	Requirements for Postfabrication Heat Treatment Due to Straining	212
	Inspection and Tests	214
UHA-50	General	214
UHA-51	Impact Tests	214
UHA-52	Welded Test Plates	217
	Marking and Reports	217
UHA-60	General	217
	Pressure Relief Devices	217
UHA-65	General	217

Provided by IHS under license with ASME
No reproduction or networking permitted without license from IHS
Licensee=Chevron Phillips Chemical Co LP/5956674001
Not for Resale, 11/09/2014 20:41:36 MST

Nonmandatory Appendix HA	**Suggestions on the Selection and Treatment of Austenitic Chromium–Nickel and Ferritic and Martensitic High Chromium Steels (Informative and Nonmandatory)**	218
Part UCI	**Requirements for Pressure Vessels Constructed of Cast Iron**	219
	General	219
UCI-1	Scope	219
UCI-2	Service Restrictions	219
UCI-3	Pressure–Temperature Limitations	219
	Materials	219
UCI-5	General	219
UCI-12	Bolt Materials	219
	Design	219
UCI-16	General	219
UCI-23	Maximum Allowable Stress Values	219
UCI-28	Thickness of Shells Under External Pressure	220
UCI-29	Dual Metal Cylinders	220
UCI-32	Heads with Pressure on Concave Side	220
UCI-33	Heads with Pressure on Convex Side	220
UCI-35	Spherically Shaped Covers (Heads)	220
UCI-36	Openings and Reinforcements	220
UCI-37	Corners and Fillets	221
	Fabrication	221
UCI-75	General	221
UCI-78	Repairs in Cast Iron Materials	221
	Inspection and Tests	222
UCI-90	General	222
UCI-99	Standard Hydrostatic Test	222
UCI-101	Hydrostatic Test to Destruction	222
	Marking and Reports	222
UCI-115	General	222
	Pressure Relief Devices	222
UCI-125	General	222
Part UCL	**Requirements for Welded Pressure Vessels Constructed of Material with Corrosion Resistant Integral Cladding, Weld Metal Overlay Cladding, or with Applied Linings**	223
	General	223
UCL-1	Scope	223
UCL-2	Methods of Fabrication	223
UCL-3	Conditions of Service	223
	Materials	223
UCL-10	General	223
UCL-11	Integral and Weld Metal Overlay Clad Material	223
UCL-12	Lining	224
	Design	224
UCL-20	General	224
UCL-23	Maximum Allowable Stress Values	224
UCL-24	Maximum Allowable Working Temperature	225
UCL-25	Corrosion of Cladding or Lining Material	225
UCL-26	Thickness of Shells and Heads Under External Pressure	225
UCL-27	Low Temperature Operations	225
	Fabrication	225
UCL-30	General	225
UCL-31	Joints in Integral or Weld Metal Overlay Cladding and Applied Linings	225
UCL-32	Weld Metal Composition	225
UCL-33	Inserted Strips in Clad Material	225

Provided by IHS under license with ASME

No reproduction or networking permitted without license from IHS

Licensee=Chevron Phillips Chemical Co LP/5956674001
Not for Resale, 11/09/2014 20:41:36 MST

UCL-34	Postweld Heat Treatment	225
UCL-35	Radiographic Examination	226
UCL-36	Examination of Chromium Stainless Steel Cladding or Lining	226
UCL-40	Welding Procedures	226
UCL-42	Alloy Welds in Base Metal	226
UCL-46	Fillet Welds	226
	Inspection and Tests	226
UCL-50	General	226
UCL-51	Tightness of Applied Lining	227
UCL-52	Hydrostatic Test	227
	Marking and Reports	227
UCL-55	General	227
	Pressure Relief Devices	227
UCL-60	General	227
Part UCD	**Requirements for Pressure Vessels Constructed of Cast Ductile Iron**	228
	General	228
UCD-1	Scope	228
UCD-2	Service Restrictions	228
UCD-3	Pressure–Temperature Limitations	228
	Materials	228
UCD-5	General	228
UCD-12	Bolt Materials	228
	Design	228
UCD-16	General	228
UCD-23	Maximum Allowable Stress Values	228
UCD-28	Thickness of Shells Under External Pressure	228
UCD-32	Heads with Pressure on Concave Side	228
UCD-33	Heads with Pressure on Convex Side	229
UCD-35	Spherically Shaped Covers (Heads)	229
UCD-36	Openings and Reinforcements	229
UCD-37	Corners and Fillets	229
	Fabrication	229
UCD-75	General	229
UCD-78	Repairs in Cast Ductile Iron Material	229
	Inspection and Tests	230
UCD-90	General	230
UCD-99	Standard Hydrostatic Test	230
UCD-101	Hydrostatic Test to Destruction	231
	Marking and Reports	231
UCD-115	General	231
	Pressure Relief Devices	231
UCD-125	General	231
Part UHT	**Requirements for Pressure Vessels Constructed of Ferritic Steels with Tensile Properties Enhanced by Heat Treatment**	232
	General	232
UHT-1	Scope	232
	Materials	232
UHT-5	General	232
UHT-6	Test Requirements	232
	Design	233
UHT-16	General	233
UHT-17	Welded Joints	233
UHT-18	Nozzles	234
UHT-19	Conical Sections	234

Provided by IHS under license with ASME

No reproduction or networking permitted without license from IHS

Licensee=Chevron Phillips Chemical Co LP/5956674001
Not for Resale, 11/09/2014 20:41:36 MST

UHT-20	Joint Alignment	234
UHT-23	Maximum Allowable Stress Values	234
UHT-25	Corrosion Allowance	234
UHT-27	Thickness of Shells Under External Pressure	237
UHT-28	Structural Attachments and Stiffening Rings	237
UHT-29	Stiffening Rings for Shells Under External Pressure	237
UHT-30	Attachment of Stiffening Rings to Shells	237
UHT-32	Formed Heads, Pressure on Concave Side	237
UHT-33	Formed Heads, Pressure on Convex Side	237
UHT-34	Hemispherical Heads	237
UHT-40	Materials Having Different Coefficients of Expansion	237
UHT-56	Postweld Heat Treatment	237
UHT-57	Examination	238
	Fabrication	239
UHT-75	General	239
UHT-79	Forming Pressure Parts	239
UHT-80	Heat Treatment	239
UHT-81	Heat Treatment Verification Tests	239
UHT-82	Welding	240
UHT-83	Methods of Metal Removal	241
UHT-84	Weld Finish	241
UHT-85	Structural and Temporary Welds	241
UHT-86	Marking on Plates and Other Materials	242
	Inspection and Tests	242
UHT-90	General	242
	Marking and Reports	242
UHT-115	General	242
	Pressure Relief Devices	242
UHT-125	General	242
Part ULW	**Requirements for Pressure Vessels Fabricated by Layered Construction**	243
	Introduction	243
ULW-1	Scope	243
ULW-2	Nomenclature	243
	Material	243
ULW-5	General	243
	Design	243
ULW-16	General	243
ULW-17	Design of Welded Joints	246
ULW-18	Nozzle Attachments and Opening Reinforcement	246
ULW-20	Welded Joint Efficiency	254
ULW-22	Attachments	254
ULW-26	Postweld Heat Treatment	254
	Welding	258
ULW-31	Welded Joints	258
ULW-32	Welding Procedure Qualification	258
ULW-33	Performance Qualification	258
	Nondestructive Examination of Welded Joints	258
ULW-50	General	258
ULW-51	Inner Shells and Inner Heads	258
ULW-52	Layers — Welded Joints	258
ULW-53	Layers — Step Welded Girth Joints	260
ULW-54	Butt Joints	260
ULW-55	Flat Head and Tubesheet Weld Joints	261
ULW-56	Nozzle and Communicating Chambers Weld Joints	261
ULW-57	Random Spot Examination and Repairs of Weld	261

Provided by IHS under license with ASME

No reproduction or networking permitted without license from IHS

Licensee=Chevron Phillips Chemical Co LP/5956674001
Not for Resale, 11/09/2014 20:41:36 MST

	Fabrication	262
ULW-75	General	262
ULW-76	Vent Holes	262
ULW-77	Contact Between Layers	264
ULW-78	Alternative to Measuring Contact Between Layers During Construction	264
	Inspection and Testing	265
ULW-90	General	265
	Marking and Reports	265
ULW-115	General	265
	Pressure Relief Devices	265
ULW-125	General	265
Part ULT	**Alternative Rules for Pressure Vessels Constructed of Materials Having Higher Allowable Stresses at Low Temperature**	266
	General	266
ULT-1	Scope	266
ULT-2	Conditions of Service	266
ULT-5	General	266
	Design	267
ULT-16	General	267
ULT-17	Welded Joints	267
ULT-18	Nozzles and Other Connections	267
ULT-23	Maximum Allowable Stress Values	267
ULT-27	Thickness of Shells	267
ULT-28	Thickness of Shells Under External Pressure	267
ULT-29	Stiffening Rings for Shells Under External Pressure	267
ULT-30	Structural Attachments	267
ULT-56	Postweld Heat Treatment	267
ULT-57	Examination	270
	Fabrication	270
ULT-75	General	270
ULT-79	Forming Shell Sections and Heads	270
ULT-82	Welding	270
ULT-86	Marking on Plate and Other Materials	270
	Inspection and Tests	270
ULT-90	General	270
ULT-99	Hydrostatic Test	270
ULT-100	Pneumatic Test	273
	Marking and Reports	273
ULT-115	General	273
	Pressure Relief Devices	273
ULT-125	General	273
Part UHX	**Rules for Shell-and-Tube Heat Exchangers**	274
Part UIG	**Requirements for Pressure Vessels Constructed of Impregnated Graphite**	319
	Nonmandatory Introduction	319
	General	319
UIG-1	Scope	319
UIG-2	Equipment and Service Limitations	319
UIG-3	Terminology	320
	Materials	320
UIG-5	Raw Material Control	320
UIG-6	Certified Material Control	320
UIG-7	Additional Properties	320
UIG-8	Tolerances for Impregnated Graphite Tubes	321
	Design	321

Provided by IHS under license with ASME

No reproduction or networking permitted without license from IHS

Licensee=Chevron Phillips Chemical Co LP/5956674001
Not for Resale, 11/09/2014 20:41:36 MST

UIG-22	Loadings	321
UIG-23	Maximum Allowable Stress Values for Certified Material	321
UIG-27	Thickness of Cylindrical Shells Made of Certified Materials under Internal Pressure	321
UIG-28	External Pressure	321
UIG-29	Euler Buckling of Extruded Graphite Tubes	322
UIG-34	Calculating Flat Heads, Covers, and Tubesheets	322
UIG-36	Openings and Reinforcements	323
UIG-45	Nozzle Neck Thickness	330
UIG-60	Lethal Service	330
	Fabrication	330
UIG-75	General Requirements	330
UIG-76	Procedure and Personnel Qualification	330
UIG-77	Certified Material Specification	330
UIG-78	Certified Cement Specification	331
UIG-79	Certified Cementing Procedure Specification	332
UIG-80	Cementing Technician Qualification	332
UIG-81	Repair of Materials	335
UIG-84	Required Tests	335
	Inspection and Tests	337
UIG-90	General	337
UIG-95	Visual Examination	337
UIG-96	Qualification of Visual Examination Personnel	337
UIG-97	Acceptance Standards and Documentation	337
UIG-99	Pressure Tests	337
UIG-112	Quality Control Requirements	337
UIG-115	Markings and Reports	337
UIG-116	Required Markings	337
UIG-120	Data Reports	338
UIG-121	Records	338
UIG-125	Pressure Relief Devices	338
Mandatory Appendix 1	**Supplementary Design Formulas**	351
Mandatory Appendix 2	**Rules for Bolted Flange Connections with Ring Type Gaskets**	373
Mandatory Appendix 3	**Definitions**	396
Mandatory Appendix 4	**Rounded Indications Charts Acceptance Standard for Radiographically Determined Rounded Indications in Welds**	399
Mandatory Appendix 5	**Flanged-and-Flued or Flanged-Only Expansion Joints**	408
Mandatory Appendix 6	**Methods for Magnetic Particle Examination (MT)**	411
Mandatory Appendix 7	**Examination of Steel Castings**	413
Mandatory Appendix 8	**Methods for Liquid Penetrant Examination (PT)**	416
Mandatory Appendix 9	**Jacketed Vessels**	418
Mandatory Appendix 10	**Quality Control System**	427
Mandatory Appendix 11	**Capacity Conversions for Safety Valves**	430
Mandatory Appendix 12	**Ultrasonic Examination of Welds (UT)**	434
Mandatory Appendix 13	**Vessels of Noncircular Cross Section**	435
Mandatory Appendix 14	**Integral Flat Heads with a Large, Single, Circular, Centrally Located Opening**	465
Mandatory Appendix 16		469

--`,,,``,,,```,,,,`,`,`,`,,`,,```-`-`,,`,,`,`,,`---

Provided by IHS under license with ASME

No reproduction or networking permitted without license from IHS

Licensee=Chevron Phillips Chemical Co LP/5956674001
Not for Resale, 11/09/2014 20:41:36 MST

Mandatory Appendix 17	**Dimpled or Embossed Assemblies**	470
Mandatory Appendix 18	**Adhesive Attachment of Nameplates**	482
Mandatory Appendix 19	**Electrically Heated or Gas-Fired Jacketed Steam Kettles**	483
Mandatory Appendix 20	**Hubs Machined from Plate**	484
Mandatory Appendix 21	**Jacketed Vessels Constructed of Work-Hardened Nickel**	485
Mandatory Appendix 22	**Integrally Forged Vessels**	486
Mandatory Appendix 23	**External Pressure Design of Copper, Copper Alloy, and Titanium Alloy Condenser and Heat Exchanger Tubes with Integral Fins**	488
Mandatory Appendix 24	**Design Rules for Clamp Connections**	490
Mandatory Appendix 25	**Acceptance of Testing Laboratories and Authorized Observers for Capacity Certification of Pressure Relief Valves**	496
Mandatory Appendix 26	**Bellows Expansion Joints**	498
Mandatory Appendix 27	**Alternative Requirements for Glass-Lined Vessels**	523
Mandatory Appendix 28	**Alternative Corner Weld Joint Detail for Box Headers for Air-Cooled Heat Exchangers**	525
Mandatory Appendix 30	**Rules for Drilled Holes not Penetrating Through Vessel Wall**	528
Mandatory Appendix 31	**Rules for Cr–Mo Steels with Additional Requirements for Welding and Heat Treatment**	530
Mandatory Appendix 32	**Local Thin Areas in Cylindrical Shells and in Spherical Segments of Shells**	533
Mandatory Appendix 33	**Standard Units for Use in Equations**	537
Mandatory Appendix 34	**Requirements for Use of High Silicon Stainless Steels for Pressure Vessels**	538
Mandatory Appendix 35	**Rules for Mass Production of Pressure Vessels**	540
Mandatory Appendix 36	**Standard Test Method for Determining the Flexural Strength of Certified Materials Using Three-Point Loading**	543
Mandatory Appendix 37	**Standard Test Method for Determining the Tensile Strength of Certified Impregnated Graphite Materials**	545
Mandatory Appendix 38	**Standard Test Method for Compressive Strength of Impregnated Graphite**	547
Mandatory Appendix 39	**Testing the Coefficient of Permeability of Impregnated Graphite**	549
Mandatory Appendix 40	**Thermal Expansion Test Method for Graphite and Impregnated Graphite**	551
Mandatory Appendix 41	**Electric Immersion Heater Element Support Plates**	554
Mandatory Appendix 42	**Diffusion Bonding**	559
Mandatory Appendix 43	**Establishing Governing Code Editions and Cases for Pressure Vessels and Parts**	561
Mandatory Appendix 44	**Cold Stretching of Austenitic Stainless Steel Pressure Vessels**	562
Nonmandatory Appendix A	**Basis for Establishing Allowable Loads for Tube-to-Tubesheet Joints**	565
Nonmandatory Appendix C	**Suggested Methods for Obtaining the Operating Temperature of Vessel Walls in Service**	571

Provided by IHS under license with ASME

No reproduction or networking permitted without license from IHS

Licensee=Chevron Phillips Chemical Co LP/5956674001
Not for Resale, 11/09/2014 20:41:36 MST

Nonmandatory Appendix D	**Suggested Good Practice Regarding Internal Structures**	572
Nonmandatory Appendix E	**Suggested Good Practice Regarding Corrosion Allowance**	573
Nonmandatory Appendix F	**Suggested Good Practice Regarding Linings**	574
Nonmandatory Appendix G	**Suggested Good Practice Regarding Piping Reactions and Design of Supports and Attachments**	575
Nonmandatory Appendix H	**Guidance to Accommodate Loadings Produced by Deflagration**	577
Nonmandatory Appendix K	**Sectioning of Welded Joints**	579
Nonmandatory Appendix L	**Application of Rules for Joint Efficiency in Shells and Heads of Vessels With Welded Joints**	581
Nonmandatory Appendix M	**Installation and Operation**	588
Nonmandatory Appendix P	**Basis for Establishing Allowable Stress Values for UCI, UCD, and ULT Materials**	594
Nonmandatory Appendix R	**Preheating**	596
Nonmandatory Appendix S	**Design Considerations for Bolted Flange Connections**	598
Nonmandatory Appendix T	**Temperature Protection**	600
Nonmandatory Appendix W	**Guide for Preparing Manufacturer's Data Reports**	601
Nonmandatory Appendix Y	**Flat Face Flanges with Metal-to-Metal Contact Outside the Bolt Circle**	630
Nonmandatory Appendix DD	**Guide to Information Appearing on Certificate of Authorization**	644
Nonmandatory Appendix EE	**Half-Pipe Jackets**	647
Nonmandatory Appendix FF	**Guide for the Design and Operation of Quick-Actuating (Quick-Opening) Closures**	652
Nonmandatory Appendix GG	**Guidance for the use of U.S. Customary and Si Units in the Asme Boiler and Pressure Vessel Code**	654
Nonmandatory Appendix HH	**Tube Expanding Procedures and Qualification**	657
Nonmandatory Appendix JJ	**Flowcharts Illustrating Toughness Testing Requirements and Exemptions from Toughness Testing by the Rules of UHA-51**	667
Nonmandatory Appendix KK	**Guide for Preparing User's Design Requirements**	673
Nonmandatory Appendix LL	**Graphical Representations of $F_{t,\min}$ and $F_{t,\max}$**	679
Nonmandatory Appendix MM	**Alternative Marking and Stamping of Graphite Pressure Vessels**	682
Nonmandatory Appendix NN	**Guidance to the Responsibilities of the User and Designated Agent**	683

FIGURES

UG-28	Diagrammatic Representation of Variables for Design of Cylindrical Vessels Subjected to External Pressure	20
UG-28.1	Diagrammatic Representation of Lines of Support for Design of Cylindrical Vessels Subjected to External Pressure	21
UG-29.1	Various Arrangements of Stiffening Rings for Cylindrical Vessels Subjected to External Pressure	25
UG-29.2	Maximum Arc of Shell Left Unsupported Because of Gap in Stiffening Ring of Cylindrical Shell Under External Pressure	26
UG-30	Some Acceptable Methods of Attaching Stiffening Rings	27
UG-33.1	Length L_c of Some Typical Conical Sections for External Pressure	31
UG-34	Some Acceptable Types of Unstayed Flat Heads and Covers	33

Provided by IHS under license with ASME
No reproduction or networking permitted without license from IHS
Licensee=Chevron Phillips Chemical Co LP/5956674001
Not for Resale, 11/09/2014 20:41:36 MST

UG-36	Large Head Openings — Reverse-Curve and Conical Shell-Reducer Sections	38
UG-37	Chart for Determining Value of F, as Required in UG-37	41
UG-37.1	Nomenclature and Formulas for Reinforced Openings	42
UG-38	Minimum Depth for Flange of Flued-In Openings	43
UG-39	Multiple Openings in Rim of Heads With a Large Central Opening	44
UG-40	Some Representative Configurations Describing the Reinforcement Dimension t_e and the Opening Dimension d	46
UG-41.1	Nozzle Attachment Weld Loads and Weld Strength Paths to Be Considered	49
UG-42	Examples of Multiple Openings	51
UG-47	Acceptable Proportions for Ends of Stays	55
UG-53.1	Example of Tube Spacing With Pitch of Holes Equal in Every Row	56
UG-53.2	Example of Tube Spacing With Pitch of Holes Unequal in Every Second Row	57
UG-53.3	Example of Tube Spacing With Pitch of Holes Varying in Every Second and Third Row	57
UG-53.4	Example of Tube Spacing With Tube Holes on Diagonal Lines	58
UG-53.5	Diagram for Determining the Efficiency of Longitudinal and Diagonal Ligaments Between Openings in Cylindrical Shells	59
UG-53.6	Diagram for Determining Equivalent Longitudinal Efficiency of Diagonal Ligaments Between Openings in Cylindrical Shells	60
UG-80.1	Maximum Permissible Deviation From a Circular Form e for Vessels Under External Pressure	62
UG-80.2	Example of Differences Between Maximum and Minimum Inside Diameters in Cylindrical, Conical, and Spherical Shells	62
UG-84	Simple Beam Impact Test Specimens (Charpy Type Test)	64
UG-84.1	Charpy V-Notch Impact Test Requirements for Full Size Specimens for Carbon and Low Alloy Steels, Having a Specified Minimum Tensile Strength of Less Than 95 ksi, Listed in Table UCS-23	65
UG-84.1M	Charpy V-Notch Impact Test Requirements for Full Size Specimens for Carbon and Low Alloy Steels, Having a Specified Minimum Tensile Strength of Less Than 655 MPa, Listed in Table UCS-23	66
UG-84.5	HAZ Impact Specimen Removal	68
UG-116	Official Certification Mark to Denote the American Society of Mechanical Engineers' Standard	81
UG-118	Form of Stamping	86
UG-129.1	Official Certification Mark to Denote the American Society of Mechanical Engineers' Standard for Pressure Relief Valves	92
UG-129.2	Official Certification Mark to Denote the American Society of Mechanical Engineers' Standard for Nonreclosing Pressure Relief Devices	92
UW-3	Illustration of Welded Joint Locations Typical of Categories A, B, C, and D	111
UW-9	Butt Welding of Plates of Unequal Thickness	113
UW-13.1	Heads Attached to Shells	118
UW-13.2	Attachment of Pressure Parts to Flat Plates to Form a Corner Joint	121
UW-13.3	Typical Pressure Parts With Butt Welded Hubs	122
UW-13.4	Nozzle Necks Attached to Piping of Lesser Wall Thickness	123
UW-13.5	Fabricated Lap Joint Stub Ends for Lethal Service	123
UW-16.1	Some Acceptable Types of Welded Nozzles and Other Connections to Shells, Heads, etc.	125
UW-16.2	Some Acceptable Types of Small Standard Fittings	132
UW-16.3	Some Acceptable Types of Small Bolting Pads	134
UW-19.1	Typical Forms of Welded Staybolts	136
UW-19.2	Use of Plug and Slot Welds for Staying Plates	136
UW-20.1	Some Acceptable Types of Tube-to-Tubesheet Strength Welds	137
UW-21	Welds of Socket Weld Flanges to Nozzle Necks	139
UB-14	Examples of Filler Metal Application	157
UB-16	Some Acceptable Types of Brazed Joints	158
UCS-66	Impact Test Exemption Curves	177
UCS-66M	Impact Test Exemption Curves	180
UCS-66.1	Reduction in Minimum Design Metal Temperature Without Impact Testing	185
UCS-66.1M	Reduction in Minimum Design Metal Temperature Without Impact Testing	186

Provided by IHS under license with ASME
No reproduction or networking permitted without license from IHS
Licensee=Chevron Phillips Chemical Co LP/5956674001
Not for Resale, 11/09/2014 20:41:36 MST

UCS-66.2 Diagram of UCS-66 Rules for Determining Lowest Minimum Design Metal Temperature (MDMT) Without Impact Testing . . . 187
UCS-66.3 Some Typical Vessel Details Showing the Governing Thicknesses as Defined in UCS-66 . . . 189
UHA-51-1 Weld Metal Delta Ferrite Content . . . 215
UHT-6.1 Charpy V-Notch Impact Test Requirements . . . 233
UHT-6.1M Charpy V-Notch Impact Test Requirements . . . 233
UHT-18.1 Acceptable Welded Nozzle Attachment Readily Radiographed to Code Standards . . . 235
UHT-18.2 Acceptable Full Penetration Welded Nozzle Attachments Radiographable With Difficulty and Generally Requiring Special Techniques Including Multiple Exposures to Take Care of Thickness Variations . . . 236
ULW-2.1 Some Acceptable Layered Shell Types . . . 244
ULW-2.2 Some Acceptable Layered Head Types . . . 245
ULW-17.1 Transitions of Layered Shell Sections . . . 247
ULW-17.2 Some Acceptable Solid Head Attachments to Layered Shell Sections . . . 248
ULW-17.3 Some Acceptable Flat Heads and Tubesheets With Hubs Joining Layered Shell Sections . . . 250
ULW-17.4 Some Acceptable Flanges for Layered Shells . . . 251
ULW-17.5 Some Acceptable Layered Head Attachments to Layered Shells . . . 252
ULW-17.6 Some Acceptable Welded Joints of Layered-to-Layered and Layered-to-Solid Sections . . . 253
ULW-18.1 Some Acceptable Nozzle Attachments in Layered Shell Sections . . . 255
ULW-22 Some Acceptable Supports for Layered Vessels . . . 257
ULW-32.1 Solid-to-Layered and Layered-to-Layered Test Plates . . . 259
ULW-32.2 . . . 260
ULW-32.3 . . . 260
ULW-32.4 . . . 261
ULW-54.1 . . . 262
ULW-54.2 . . . 263
ULW-77 . . . 265
ULT-82 . . . 272
UHX-3 Terminology of Heat Exchanger Components . . . 275
UHX-9 Some Representative Configurations Describing the Minimum Required Thickness of the Tubesheet Flanged Extension, h_r . . . 277
UHX-10 Integral Channels . . . 278
UHX-11.1 Tubesheet Geometry . . . 279
UHX-11.2 Typical Untubed Lane Configurations . . . 280
UHX-11.3 Curves for the Determination of E^*/E and $\boldsymbol{\nu}^*$ (Equilateral Triangular Pattern) . . . 282
UHX-11.4 Curves for the Determination of E^*/E and $\boldsymbol{\nu}^*$ (Square Pattern) . . . 283
UHX-12.1 U-Tube Tubesheet Configurations . . . 285
UHX-12.2 Tube Layout Perimeter . . . 286
UHX-13.1 Fixed Tubesheet Configurations . . . 291
UHX-13.2 Z_d, Z_v, Z_w, and Z_m Versus X_a . . . 294
UHX-13.3-1 F_m Versus X_a $(0.0 \le Q_3 \le 0.8)$ . . . 295
UHX-13.3-2 F_m Versus X_a $(-0.8 \le Q_3 \le 0.0)$ . . . 296
UHX-13.4 Shell With Increased Thickness Adjacent to the Tubesheets . . . 297
UHX-14.1 Floating Tubesheet Heat Exchangers . . . 306
UHX-14.2 Stationary Tubesheet Configurations . . . 307
UHX-14.3 Floating Tubesheet Configurations . . . 309
UIG-34-1 Typical Graphite Heat Exchanger . . . 323
UIG-34-2 Configuration g Stationary Tubesheet . . . 324
UIG-34-3 Configuration G Floating Tubesheet . . . 324
UIG-36-1 Unacceptable Nozzle Attachment Details . . . 325
UIG-36-2 Some Acceptable Nozzle Attachment Details in Impregnated Graphite Pressure Vessels . . . 326
UIG-76-1 Tension Test Specimen . . . 331
UIG-76-2 Cement Material Tension Test Specimen . . . 332
UIG-76-3 Tube to Tubesheet Tension Test Specimen . . . 333
UIG-76-4 Tube Cement Joint Tension Test Specimen . . . 334
UIG-76-5 Tube Tension Test Specimen . . . 335

Provided by IHS under license with ASME
No reproduction or networking permitted without license from IHS
Licensee=Chevron Phillips Chemical Co LP/5956674001
Not for Resale, 11/09/2014 20:41:36 MST

1-4	Principal Dimensions of Typical Heads	353
1-6	Dished Covers With Bolting Flanges	358
1-7-1		361
1-7-2		362
1-9		366
1-10-1	Nomenclature for Reinforced Openings	369
1-10-2	Nomenclature for Variable Thickness Openings	370
1-10-3	Radial Nozzle in a Cylindrical Shell	370
1-10-4	Nozzle in a Cylindrical Shell Oriented at an Angle From the Longitudinal Axis	370
1-10-5	Radial Nozzle in a Conical Shell	371
1-10-6	Nozzle in a Conical Shell Oriented Perpendicular to Longitudinal Axis	372
2-4	Types of Flanges	377
2-7.1	Values of T, U, Y, and Z	386
2-7.2	Values of F (Integral Flange Factors)	387
2-7.3	Values of V (Integral Flange Factors)	388
2-7.4	Values of F_L (Loose Hub Flange Factors)	389
2-7.5	Values of V_L (Loose Hub Flange Factors)	389
2-7.6	Values of f	390
2-13.1	Reverse Flange	393
2-13.2	Loose Ring Type Reverse Flange	394
4-1	Aligned Rounded Indications	400
4-2	Groups of Aligned Rounded Indications	401
4-3	Charts for t Equal to $^1/_8$ in. to $^1/_4$ in. (3 mm to 6 mm), Inclusive	402
4-4	Charts for t Over $^1/_4$ in. to $^3/_8$ in. (6 mm to 10 mm), Inclusive	403
4-5	Charts for t Over $^3/_8$ in. to $^3/_4$ in. (10 mm to 19 mm), Inclusive	404
4-6	Charts for t Over $^3/_4$ in. to 2 in. (19 mm to 50 mm), Inclusive	405
4-7	Charts for t Over 2 in. to 4 in. (50 mm to 100 mm), Inclusive	406
4-8	Charts for t Over 4 in. (100 mm)	407
5-1	Typical Flanged-and-Flued or Flanged-Only Flexible Elements	408
5-2	Typical Nozzle Attachment Details Showing Minimum Length of Straight Flange	409
9-2	Some Acceptable Types of Jacketed Vessels	419
9-5	Some Acceptable Types of Jacket Closures	421
9-6	Some Acceptable Types of Penetration Details	425
9-7		426
11-1	Constant C for Gas or Vapor Related to Ratio of Specific Heats ($k = c_p/c_v$)	431
11-1M	Constant C for Gas or Vapor Related to Ratio of Specific Heats ($k = c_p/c_v$)	431
11-2	Flow Capacity Curve for Rating Nozzle-Type Safety Valves on Saturated Water (Based on 10% Overpressure)	433
11-2M	Flow Capacity Curve for Rating Nozzle-Type Safety Valves on Saturated Water (Based on 10% Overpressure)	433
13-2(a)	Vessels of Rectangular Cross Section	436
13-2(b)	Vessels of Obround Cross Section	440
13-2(c)	Vessel of Circular Cross Section With Central Dividing Plate	441
13-6	Plate With Multidiameter Hole Pattern	445
13-14(a)		459
13-14(b)	Orientation of Panel Dimensions and Stresses	459
14-1	Integral Flat Head With Large Central Opening	466
14-2		466
14-3		468
17-1	Two Embossed Plates	471
17-2	Two Dimpled Plates	471
17-3	Embossed Plate to Plain Plate	471
17-4	Arc-Spot-Welded Two-Layer Assembly	472
17-5	Dimpled Plate Welded to Plain Plate	472
17-6	Three-Ply Assemblies	473
17-7	Single-Spot-Weld Tension Specimen, Two-Ply Joint	473

Provided by IHS under license with ASME
No reproduction or networking permitted without license from IHS
Licensee=Chevron Phillips Chemical Co LP/5956674001
Not for Resale, 11/09/2014 20:41:36 MST

17-8 Seam-Weld Specimen for Tension and Macrosection, Two-Ply Joint 475
17-9 Single Spot-Weld Tension Specimen for Three-Ply Joint 476
17-10 Seam-Weld Specimen for Tension and Macrosection for Three-Ply Joint 476
17-11 Gas Metal Arc-Spot-Weld Block for Macrosections and Strength Tests 477
17-12 Gas Metal Arc-Spot-Weld Block for Bend Tests 478
17-13 Gas Tungsten-Arc Seam Weld, Plasma-Arc Seam Weld, Submerged-Arc Seam Weld, and Laser Beam Seam Weld Test Specimen for Bend Tests 479
17-14 480
17-15 480
17-16 Peel Test 480
17-17 Complete Penetration Welding Per 17-1(c) 481
22-1 Typical Sections of Special Seamless Vessels 486
24-1 Typical Hub and Clamp 491
24-2 Typical Clamp Lug Configurations 492
26-1-1 Typical Bellows Expansion Joints 499
26-1-2 Starting Points for the Measurement of the Length of Shell on Each Side of the Bellows 500
26-2 Dimensions to Determine I_{xx} 502
26-3 Possible Convolution Profile in the Neutral Position 504
26-4 Coefficient C_p 505
26-5 Coefficient C_f 506
26-6 Coefficient C_d 509
26-7 Bellows Subjected to an Axial Displacement x 512
26-8 Bellows Subjected to a Lateral Deflection y 514
26-9 Bellows Subjected to an Angular Rotation $\boldsymbol{\theta}$ 515
26-10 Cyclic Displacements 516
26-11 Cyclic Displacements 517
26-12 Cyclic Displacements 517
26-13 Some Typical Expansion Bellows to Weld End Details 518
26-14 Toroidal Bellows Manufacturing Tolerances 519
28-1 526
30-1 Thickness Ratio Versus Diameter Ratio 528
31-1 531
32-3 Nomenclature 534
32-6.1 Limits for Torispherical Head 535
32-6.2 Limits for Ellipsoidal Head 535
32-6.3 Limits for Hemispherical Head 536
36-4-1 Test Specimen Arrangement 544
39-4-1 Schematic Diagram of Vacuum Apparatus 550
40-3-1 Typical Equipment (Dilometer) for Thermal Expansion Test 551
40-6-1 Typical Recording Curve in Thermal Expansion Test, $\Delta L_t = f(\boldsymbol{\theta})$ 552
41-1.1-1 EIH Support Plate Gasketed With Mating Flange 554
41-4-1 Typical EIH Support Plate and Element Geometry 555
41-5-1 Some Representative Configurations Describing the Minimum Required Thickness of the EIH Support Plate Flanged Extension, h_r 556
A-2 Some Acceptable Types of Tube-to-Tubesheet Welds 568
A-3 Typical Test Fixtures for Expanded or Welded Tube-to-Tubesheet Joints 569
K-2 Some Acceptable Types of Filler Plugs 580
L-1.4.1 Joint Efficiency and Weld Joint Type — Cylinders and Cones 582
L-1.4-2 Joint Efficiency and Weld Joint Type — Heads 583
L-1.4-3 Joint Efficiencies for Categories A and D Welded Joints in Shells, Heads, or Cones 584
L-1.4-4 Joint Efficiencies for Categories B and C Welded Joints in Shells or Cones 585
L-11-1 Single-Chamber Pressure Vessel 586
L-11-2 Single-Chamber Pressure Vessel Operating With Partial Vacuum 587
L-11-3 Shell and Tube Exchanger, With Shell and Tube Operating as Independent Chambers 587
W-3.1 Example of the Use of Form U-4 625
Y-3.1 633

Provided by IHS under license with ASME
No reproduction or networking permitted without license from IHS
Licensee=Chevron Phillips Chemical Co LP/5956674001
Not for Resale, 11/09/2014 20:41:36 MST

Y-3.2	Flange Dimensions and Forces	634
Y-5.1.1	Class 1 Flange Assembly (Identical Flange Pairs)	636
Y-5.1.2	Class 2 Flange Assembly	636
Y-5.1.3	Class 3 Flange Assembly	637
DD-1	Sample Certificate of Authorization	646
EE-1	NPS 2 Pipe Jacket	648
EE-2	NPS 3 Pipe Jacket	649
EE-3	NPS 4 Pipe Jacket	650
EE-4		651
EE-5		651
JJ-1.2-1	Austenitic Stainless Steel Base Metal and HAZ Toughness Testing Requirements	668
JJ-1.2-2	Welding Procedure Qualification With Toughness Testing Requirements for Austenitic Stainless Steel	669
JJ-1.2-3	Welding Consumable Pre-Use Testing Requirements for Austenitic Stainless Steel	670
JJ-1.2-4	Production Toughness Testing Requirements for Austenitic Stainless Steel	671
JJ-1.2-5	Austenitic-Ferritic Duplex, Ferritic Chromium, and Martensitic Stainless Steel Toughness Testing Requirements	672
LL-1	Graphical Representation of $F_{t,\min}$	680
LL-2	Graphical Representation of $F_{t,\max}$	681

TABLES

U-3	Year of Acceptable Edition of Referenced Standards in This Division	5
UG-33.1	Values of Spherical Radius Factor K_o for Ellipsoidal Head With Pressure on Convex Side	30
UG-37	Values of Spherical Radius Factor K_1	43
UG-43	Minimum Number of Pipe Threads for Connections	52
UG-45	Nozzle Minimum Thickness Requirements	53
UG-79-1	Equations for Calculating Forming Strains	61
UG-84.2	Charpy Impact Test Temperature Reduction Below Minimum Design Metal Temperature	67
UG-84.3	Specifications for Impact Tested Materials in Various Product Forms	67
UG-84.4	Impact Test Temperature Differential	67
UG-84.6	Required HAZ Impact Test Specimen Set Removal	68
UW-12	Maximum Allowable Joint Efficiencies for Arc and Gas Welded Joints	115
UW-16.1	Minimum Thickness Required by UW-16(f)(3)(-a)(-6)	131
UW-33		142
UB-2	Maximum Design Temperatures for Brazing Filler Metal	155
UB-17	Recommended Joint Clearances at Brazing Temperature	158
UCS-23	Carbon and Low Alloy Steel	164
UCS-56-1	Postweld Heat Treatment Requirements for Carbon and Low Alloy Steels — P-No. 1	167
UCS-56-2	Postweld Heat Treatment Requirements for Carbon and Low Alloy Steels — P-No. 3	168
UCS-56-3	Postweld Heat Treatment Requirements for Carbon and Low Alloy Steels — P-No. 4	169
UCS-56-4	Postweld Heat Treatment Requirements for Carbon and Low Alloy Steels — P-Nos. 5A, 5B, and 5C	170
UCS-56-5	Postweld Heat Treatment Requirements for Carbon and Low Alloy Steels — P-No. 9A	171
UCS-56-6	Postweld Heat Treatment Requirements for Carbon and Low Alloy Steels — P-No. 9B	172
UCS-56-7	Postweld Heat Treatment Requirements for Carbon and Low Alloy Steels — P-No. 10A	
UCS-56-8	Postweld Heat Treatment Requirements for Carbon and Low Alloy Steels — P-No. 10B	173
UCS-56-9	Postweld Heat Treatment Requirements for Carbon and Low Alloy Steels — P-No. 10C	174
UCS-56-10	Postweld Heat Treatment Requirements for Carbon and Low Alloy Steels — P-No. 10F	174
UCS-56-11	Postweld Heat Treatment Requirements for Carbon and Low Alloy Steels — P-No. 15E	175
UCS-56.1	Alternative Postweld Heat Treatment Requirements for Carbon and Low Alloy Steels	176
UCS-57	Thickness Above Which Full Radiographic Examination of Butt Welded Joints Is Mandatory	176
UCS-66	Tabular Values for Figure UCS-66 and Figure UCS-66M	183
UCS-79-1	Post-Cold-Forming Strain Limits and Heat Treatment Requirements for P-No. 15E Materials	193
UNF-23.1	Nonferrous Metals — Aluminum and Aluminum Alloy Products	197
UNF-23.2	Nonferrous Metals — Copper and Copper Alloys	197
UNF-23.3	Nonferrous Metals — Nickel, Cobalt, and High Nickel Alloys	198

Provided by IHS under license with ASME
No reproduction or networking permitted without license from IHS
Licensee=Chevron Phillips Chemical Co LP/5956674001
Not for Resale, 11/09/2014 20:41:36 MST

UNF-23.4	Nonferrous Metals — Titanium and Titanium Alloys	199
UNF-23.5	Nonferrous Metals — Zirconium	199
UNF-79	Postfabrication Strain Limits and Required Heat Treatment	202
UHA-23	High Alloy Steel	207
UHA-32-1	Postweld Heat Treatment Requirements for High Alloy Steels — P-No. 6	209
UHA-32-2	Postweld Heat Treatment Requirements for High Alloy Steels — P-No. 7	210
UHA-32-3	Postweld Heat Treatment Requirements for High Alloy Steels — P-No. 8	210
UHA-32-4	Postweld Heat Treatment Requirements for High Alloy Steels — P-No. 10H	211
UHA-32-5	Postweld Heat Treatment Requirements for High Alloy Steels — P-No. 10I	211
UHA-32-6	Postweld Heat Treatment Requirements for High Alloy Steels — P-No. 10K	212
UHA-44	Postfabrication Strain Limits and Required Heat Treatment	213
UCI-23	Maximum Allowable Stress Values in Tension for Cast Iron	220
UCI-78.1		221
UCI-78.2		221
UCD-23	Maximum Allowable Stress Values in Tension for Cast Ductile Iron, ksi (MPa)	229
UCD-78.1		230
UCD-78.2		230
UHT-23	Ferritic Steels With Properties Enhanced by Heat Treatment	237
UHT-56	Postweld Heat Treatment Requirements for Materials in Table UHT-23	238
ULT-23	Maximum Allowable Stress Values in Tension for 5%, 8%, and 9% Nickel Steels, Type 304 Stainless Steel, and 5083-0 Aluminum Alloy at Cryogenic Temperatures for Welded and Nonwelded Construction	268
ULT-82	Minimum Tensile Strength Requirements for Welding Procedure Qualification Tests on Tension Specimens Conforming to QW-462.1	271
ULT-82M	Minimum Tensile Strength Requirements for Welding Procedure Qualification Tests on Tension Specimens Conforming to QW-462.1	272
UHX-8.1	Tubesheet Effective Bolt Load, W^*	276
UHX-12.4-1		287
UHX-13.1	Formulas for Determination of Z_d, Z_v, Z_m, Z_w, and F_m	292
UHX-13.2	Formulas for the Determination of $F_{t,\ \min}$ and $F_{t,\ \max}$	293
UHX-13.4-1		296
UHX-13.4-2		297
UHX-13.8.4-1		304
UHX-14.4-1		310
UHX-14.6.4-1		315
UHX-17	Flanged-and-Flued or Flanged-Only Expansion Joint Load Cases and Stress Limits	317
UIG-6-1	Properties of Certified Material	321
UIG-84-1	Test Frequency for Certified Materials	336
1-4.1	Values of Factor K	353
1-4.2	Values of Factor M	354
1-4.3	Maximum Metal Temperature	354
1-4.4	Values of Knuckle Radius, r	355
1-5.1	Values of Δ for Junctions at the Large Cylinder for $\alpha \leq 30$ deg	356
1-5.2	Values of Δ for Junctions at the Small Cylinder for $\alpha \leq 30$ deg	356
1-8.1	Values of Δ for Junctions at the Large Cylinder for $\alpha \leq 60$ deg	363
2-4	Recommended Minimum Gasket Contact Widths for Sheet and Composite Gaskets	380
2-5.1	Gasket Materials and Contact Facings	381
2-5.2	Effective Gasket Width	383
2-6	Moment Arms for Flange Loads Under Operating Conditions	384
2-7.1	Flange Factors in Formula Form	391
2-14	Flange Rigidity Factors	395
4-1		399
11-1	Molecular Weights of Gases and Vapors	432
13-8(d)		448
13-8(e)		452
13-13(c)		458

Provided by IHS under license with ASME
No reproduction or networking permitted without license from IHS
Licensee=Chevron Phillips Chemical Co LP/5956674001
Not for Resale, 11/09/2014 20:41:36 MST

13-18.1		463
13-18(b)		464
24-8	Allowable Design Stress for Clamp Connections	495
26-8	Tabular Values for Coefficients B_1, B_2, B_3	513
26-10-1	U-Shaped Unreinforced and Reinforced Bellows Manufacturing Tolerances	516
26-15.1a	Polynomial Coefficients $\boldsymbol{\alpha}_i$ for the Determination of C_p When $C_1 \leq 0.3$	519
26-15.1b	Polynomial Coefficients $\boldsymbol{\alpha}_i$ for the Determination of C_p When $C_1 > 0.3$	520
26-15.2	Polynomial Coefficients $\boldsymbol{\beta}_i$ for the Determination of C_f	520
26-15.3	Polynomial Coefficients $\boldsymbol{\gamma}_i$ for the Determination of C_d	520
31-1	Material Specifications	530
31-2	Composition Requirements for $2\frac{1}{4}$Cr–1Mo–$\frac{1}{4}$V Weld Metal	531
33-1	Standard Units for Use in Equations	537
34-1	Material Specifications	538
34-2	Additional Requirements	539
42-5.1-1		560
44-4-1	Allowable Materials and Design Stress	562
A-2	Efficiencies f_r	567
P-1	Criteria for Establishing Allowable Stress Values	595
W-3	Instructions for the Preparation of Manufacturer's Data Reports	619
W-3.1	Supplementary Instructions for the Preparation of Manufacturer's Data Reports for Layered Vessels	626
W-3.2	Supplementary Instructions for the Preparation of Manufacturer's or Assembler's Certificate of Conformance Forms UV-1 and UD-1	629
Y-6.1	Summary of Applicable Equations for Different Classes of Assemblies and Different Categories of Flanges	638
Y-9.1	Trial Flange Thickness and Area of Bolting for Various Classes of Assemblies and Flange Categories	642
QEXP-1	Instructions for Filling Out TEPS Form	663
KK-1	Instructions for the Preparation of User's Design Requirements	678
NN-6-1	Responsibilities of the User	686
NN-6-2	Matters of Agreement Between the User and the Manufacturer	687
NN-6-3	The Manufacturer's Responsibility to the User	687
NN-6-4	Recommendations to the User	687
NN-6-5	Responsibilities of the User or His Designated Agent	688
NN-6-6	Matters of Agreement Between the User or His Designated Agent and the Manufacturer	688
NN-6-7	The Manufacturer's Responsibility to the User or His Designated Agent	689
NN-6-8	Recommendations to the User or His Designated Agent	689
NN-6-9	Cautionary Advice Provided to the User	689
NN-6-10	Guidance Code to Users and Their Designated Agents	690
NN-6-11	User–Manufacturer Rules	690

FORMS

CMQ	Certified Material Qualification Form (Used in the Construction of Graphite Pressure Vessels)	339
CCQ	Certified Cement Qualification	346
CPQ	Cementing Procedure Qualification Form	348
CTQ	Cementing Technician Qualification Form (Used in Cementing Parts of Graphite Pressure Vessels)	350
26-1	Form 26-1 Specification Sheet for ASME Section VIII, Division 1 Mandatory Appendix 26 Bellows Expansion Joints	521
26-1M	Form 26-1M Specification Sheet for ASME Section VIII, Division 1 Mandatory Appendix 26 Bellows Expansion Joints	522
U-1	Manufacturer's Data Report for Pressure Vessels	602
U-1A	Manufacturer's Data Report for Pressure Vessels	605
U-1B	Manufacturer's Supplementary Data Report for Graphite Pressure Vessels	607
U-2	Manufacturer's Partial Data Report	608
U-2A	Manufacturer's Partial Data Report (Alternative Form)	611

Provided by IHS under license with ASME
No reproduction or networking permitted without license from IHS
Licensee=Chevron Phillips Chemical Co LP/5956674001
Not for Resale, 11/09/2014 20:41:36 MST

U-3 Manufacturer's Certificate of Compliance Covering Pressure Vessels to be Stamped with the UM Designator [See U-1(j)] 613
U-3A Manufacturer's Certificate of Compliance (Alternative Form) Covering Pressure Vessels to be Stamped with the UM Designator [See U-1(j)] 615
U-4 Manufacturer's Data Report Supplementary Sheet 617
U-5 Manufacturer's Data Report Supplementary Sheet Shell-and-Tube Heat Exchangers 618
UV-1 Manufacturer's or Assembler's Certificate of Conformance for Pressure Relief Valves 627
UD-1 Manufacturer's Certificate of Conformance for Rupture Disk Devices 628
QEXP-1 Tube Expanding Procedure Specification (TEPS) 661
QEXP-2 Suggested Format for Tube-to-Tubesheet Expanding Procedure Qualification Record for Test Qualification (TEPQR) 665
U-DR-1 User's Design Requirements for Single Chamber Pressure Vessels 674
U-DR-2 User's Design Requirements for Multi-chamber Pressure Vessels 676

ENDNOTES 691

INDEX 699

Provided by IHS under license with ASME
No reproduction or networking permitted without license from IHS
Licensee=Chevron Phillips Chemical Co LP/5956674001
Not for Resale, 11/09/2014 20:41:36 MST

(13)

LIST OF SECTIONS

SECTIONS

I Rules for Construction of Power Boilers

II Materials
- Part A — Ferrous Material Specifications
- Part B — Nonferrous Material Specifications
- Part C — Specifications for Welding Rods, Electrodes, and Filler Metals
- Part D — Properties (Customary)
- Part D — Properties (Metric)

III Rules for Construction of Nuclear Facility Components
- Subsection NCA — General Requirements for Division 1 and Division 2
- Appendices
- Division 1
  - Subsection NB — Class 1 Components
  - Subsection NC — Class 2 Components
  - Subsection ND — Class 3 Components
  - Subsection NE — Class MC Components
  - Subsection NF — Supports
  - Subsection NG — Core Support Structures
  - Subsection NH — Class 1 Components in Elevated Temperature Service
- Division 2 — Code for Concrete Containments
- Division 3 — Containments for Transportation and Storage of Spent Nuclear Fuel and High Level Radioactive Material and Waste
- Division 5 — High Temperature Reactors

IV Rules for Construction of Heating Boilers

V Nondestructive Examination

VI Recommended Rules for the Care and Operation of Heating Boilers

VII Recommended Guidelines for the Care of Power Boilers

VIII Rules for Construction of Pressure Vessels
- Division 1
- Division 2 — Alternative Rules
- Division 3 — Alternative Rules for Construction of High Pressure Vessels

IX Welding, Brazing, and Fusing Qualifications

X Fiber-Reinforced Plastic Pressure Vessels

XI Rules for Inservice Inspection of Nuclear Power Plant Components

XII Rules for Construction and Continued Service of Transport Tanks

Provided by IHS under license with ASME
No reproduction or networking permitted without license from IHS
Licensee=Chevron Phillips Chemical Co LP/5956674001
Not for Resale, 11/09/2014 20:41:36 MST

INTERPRETATIONS

ASME issues written replies to inquiries concerning interpretation of technical aspects of the Code.

Interpretations of the Code are posted in January and July at http://cstools.asme.org/interpretations.cfm. Any Interpretations issued during the previous two calendar years are included with the publication of the applicable Section of the Code. Interpretations of Section III, Divisions 1 and 2 and Section III Appendices are included with Subsection NCA.

CODE CASES

The Boiler and Pressure Vessel Code committees meet regularly to consider proposed additions and revisions to the Code and to formulate Cases to clarify the intent of existing requirements or provide, when the need is urgent, rules for materials or constructions not covered by existing Code rules. Those Cases that have been adopted will appear in the appropriate 2013 Code Cases book: "Boilers and Pressure Vessels" or "Nuclear Components." Supplements will be sent automatically to the purchasers of the Code Cases books up to the publication of the 2015 Code.

Provided by IHS under license with ASME

No reproduction or networking permitted without license from IHS

Licensee=Chevron Phillips Chemical Co LP/5956674001
Not for Resale, 11/09/2014 20:41:36 MST

(13)

FOREWORD

(This Foreword is provided as an aid to the user and is not part of the rules of this Code.)

In 1911, The American Society of Mechanical Engineers established the Boiler and Pressure Vessel Committee to formulate standard rules for the construction of steam boilers and other pressure vessels. In 2009, the Boiler and Pressure Vessel Committee was superseded by the following committees:

(a) Committee on Power Boilers (I)

(b) Committee on Materials (II)

(c) Committee on Construction of Nuclear Facility Components (III)

(d) Committee on Heating Boilers (IV)

(e) Committee on Nondestructive Examination (V)

(f) Committee on Pressure Vessels (VIII)

(g) Committee on Welding, Brazing, and Fusing (IX)

(h) Committee on Fiber-Reinforced Plastic Pressure Vessels (X)

(i) Committee on Nuclear Inservice Inspection (XI)

(j) Committee on Transport Tanks (XII)

Where reference is made to "the Committee" in this Foreword, each of these committees is included individually and collectively.

The Committee's function is to establish rules of safety relating only to pressure integrity, which govern the construction* of boilers, pressure vessels, transport tanks, and nuclear components, and the inservice inspection of nuclear components and transport tanks. The Committee also interprets these rules when questions arise regarding their intent. This Code does not address other safety issues relating to the construction of boilers, pressure vessels, transport tanks, or nuclear components, or the inservice inspection of nuclear components or transport tanks. Users of the Code should refer to the pertinent codes, standards, laws, regulations, or other relevant documents for safety issues other than those relating to pressure integrity. Except for Sections XI and XII, and with a few other exceptions, the rules do not, of practical necessity, reflect the likelihood and consequences of deterioration in service related to specific service fluids or external operating environments. In formulating the rules, the Committee considers the needs of users, manufacturers, and inspectors of pressure vessels. The objective of the rules is to afford reasonably certain protection of life and property, and to provide a margin for deterioration in service to give a reasonably long, safe period of usefulness. Advancements in design and materials and evidence of experience have been recognized.

This Code contains mandatory requirements, specific prohibitions, and nonmandatory guidance for construction activities and inservice inspection and testing activities. The Code does not address all aspects of these activities and those aspects that are not specifically addressed should not be considered prohibited. The Code is not a handbook and cannot replace education, experience, and the use of engineering judgment. The phrase *engineering judgement* refers to technical judgments made by knowledgeable engineers experienced in the application of the Code. Engineering judgments must be consistent with Code philosophy, and such judgments must never be used to overrule mandatory requirements or specific prohibitions of the Code.

The Committee recognizes that tools and techniques used for design and analysis change as technology progresses and expects engineers to use good judgment in the application of these tools. The designer is responsible for complying with Code rules and demonstrating compliance with Code equations when such equations are mandatory. The Code neither requires nor prohibits the use of computers for the design or analysis of components constructed to the requirements of the Code. However, designers and engineers using computer programs for design or analysis are cautioned that they are responsible for all technical assumptions inherent in the programs they use and the application of these programs to their design.

* *Construction*, as used in this Foreword, is an all-inclusive term comprising materials, design, fabrication, examination, inspection, testing, certification, and pressure relief.

Provided by IHS under license with ASME
No reproduction or networking permitted without license from IHS
Licensee=Chevron Phillips Chemical Co LP/5956674001
Not for Resale, 11/09/2014 20:41:36 MST

The rules established by the Committee are not to be interpreted as approving, recommending, or endorsing any proprietary or specific design, or as limiting in any way the manufacturer's freedom to choose any method of design or any form of construction that conforms to the Code rules.

The Committee meets regularly to consider revisions of the rules, new rules as dictated by technological development, Code Cases, and requests for interpretations. Only the Committee has the authority to provide official interpretations of this Code. Requests for revisions, new rules, Code Cases, or interpretations shall be addressed to the Secretary in writing and shall give full particulars in order to receive consideration and action (see Submittal of Technical Inquiries to the Boiler and Pressure Vessel Standards Committees). Proposed revisions to the Code resulting from inquiries will be presented to the Committee for appropriate action. The action of the Committee becomes effective only after confirmation by ballot of the Committee and approval by ASME. Proposed revisions to the Code approved by the Committee are submitted to the American National Standards Institute (ANSI) and published at http://cstools.asme.org/csconnect/public/index.cfm?PublicReview=Revisions to invite comments from all interested persons. After public review and final approval by ASME, revisions are published at regular intervals in Editions of the Code.

The Committee does not rule on whether a component shall or shall not be constructed to the provisions of the Code. The scope of each Section has been established to identify the components and parameters considered by the Committee in formulating the Code rules.

Questions or issues regarding compliance of a specific component with the Code rules are to be directed to the ASME Certificate Holder (Manufacturer). Inquiries concerning the interpretation of the Code are to be directed to the Committee. ASME is to be notified should questions arise concerning improper use of an ASME Certification Mark.

When required by context in this Section, the singular shall be interpreted as the plural, and vice versa, and the feminine, masculine, or neuter gender shall be treated as such other gender as appropriate.

Provided by IHS under license with ASME

No reproduction or networking permitted without license from IHS

Licensee=Chevron Phillips Chemical Co LP/5956674001
Not for Resale, 11/09/2014 20:41:36 MST

STATEMENT OF POLICY ON THE USE OF THE CERTIFICATION MARK AND CODE AUTHORIZATION IN ADVERTISING

ASME has established procedures to authorize qualified organizations to perform various activities in accordance with the requirements of the ASME Boiler and Pressure Vessel Code. It is the aim of the Society to provide recognition of organizations so authorized. An organization holding authorization to perform various activities in accordance with the requirements of the Code may state this capability in its advertising literature.

Organizations that are authorized to use the Certification Mark for marking items or constructions that have been constructed and inspected in compliance with the ASME Boiler and Pressure Vessel Code are issued Certificates of Authorization. It is the aim of the Society to maintain the standing of the Certification Mark for the benefit of the users, the enforcement jurisdictions, and the holders of the Certification Mark who comply with all requirements.

Based on these objectives, the following policy has been established on the usage in advertising of facsimiles of the Certification Mark, Certificates of Authorization, and reference to Code construction. The American Society of Mechanical Engineers does not "approve," "certify," "rate," or "endorse" any item, construction, or activity and there shall be no statements or implications that might so indicate. An organization holding the Certification Mark and/or a Certificate of Authorization may state in advertising literature that items, constructions, or activities "are built (produced or performed) or activities conducted in accordance with the requirements of the ASME Boiler and Pressure Vessel Code," or "meet the requirements of the ASME Boiler and Pressure Vessel Code." An ASME corporate logo shall not be used by any organization other than ASME.

The Certification Mark shall be used only for stamping and nameplates as specifically provided in the Code. However, facsimiles may be used for the purpose of fostering the use of such construction. Such usage may be by an association or a society, or by a holder of the Certification Mark who may also use the facsimile in advertising to show that clearly specified items will carry the Certification Mark. General usage is permitted only when all of a manufacturer's items are constructed under the rules.

STATEMENT OF POLICY ON THE USE OF ASME MARKING TO IDENTIFY MANUFACTURED ITEMS

The ASME Boiler and Pressure Vessel Code provides rules for the construction of boilers, pressure vessels, and nuclear components. This includes requirements for materials, design, fabrication, examination, inspection, and stamping. Items constructed in accordance with all of the applicable rules of the Code are identified with the official Certification Mark described in the governing Section of the Code.

Markings such as "ASME," "ASME Standard," or any other marking including "ASME" or the Certification Mark shall not be used on any item that is not constructed in accordance with all of the applicable requirements of the Code.

Items shall not be described on ASME Data Report Forms nor on similar forms referring to ASME that tend to imply that all Code requirements have been met when, in fact, they have not been. Data Report Forms covering items not fully complying with ASME requirements should not refer to ASME or they should clearly identify all exceptions to the ASME requirements.

Provided by IHS under license with ASME

No reproduction or networking permitted without license from IHS

Licensee=Chevron Phillips Chemical Co LP/5956674001
Not for Resale, 11/09/2014 20:41:36 MST

(13) # SUBMITTAL OF TECHNICAL INQUIRIES TO THE BOILER AND PRESSURE VESSEL STANDARDS COMMITTEES

1 INTRODUCTION

(a) The following information provides guidance to Code users for submitting technical inquiries to the committees. See Guideline on the Approval of New Materials Under the ASME Boiler and Pressure Vessel Code in Section II, Parts C and D for additional requirements for requests involving adding new materials to the Code. Technical inquiries include requests for revisions or additions to the Code rules, requests for Code Cases, and requests for Code Interpretations, as described below.

(1) Code Revisions. Code revisions are considered to accommodate technological developments, address administrative requirements, incorporate Code Cases, or to clarify Code intent.

(2) Code Cases. Code Cases represent alternatives or additions to existing Code rules. Code Cases are written as a question and reply, and are usually intended to be incorporated into the Code at a later date. When used, Code Cases prescribe mandatory requirements in the same sense as the text of the Code. However, users are cautioned that not all jurisdictions or owners automatically accept Code Cases. The most common applications for Code Cases are:

(-a) to permit early implementation of an approved Code revision based on an urgent need

(-b) to permit the use of a new material for Code construction

(-c) to gain experience with new materials or alternative rules prior to incorporation directly into the Code

(3) Code Interpretations. Code Interpretations provide clarification of the meaning of existing rules in the Code, and are also presented in question and reply format. Interpretations do not introduce new requirements. In cases where existing Code text does not fully convey the meaning that was intended, and revision of the rules is required to support an interpretation, an Intent Interpretation will be issued and the Code will be revised.

(b) The Code rules, Code Cases, and Code Interpretations established by the committees are not to be considered as approving, recommending, certifying, or endorsing any proprietary or specific design, or as limiting in any way the freedom of manufacturers, constructors, or owners to choose any method of design or any form of construction that conforms to the Code rules.

(c) Inquiries that do not comply with these provisions or that do not provide sufficient information for a committee's full understanding may result in the request being returned to the inquirer with no action.

2 INQUIRY FORMAT

Submittals to a committee shall include:

(a) Purpose. Specify one of the following:

(1) revision of present Code rules

(2) new or additional Code rules

(3) Code Case

(4) Code Interpretation

(b) Background. Provide the information needed for the committee's understanding of the inquiry, being sure to include reference to the applicable Code Section, Division, Edition, Addenda (if applicable), paragraphs, figures, and tables. Preferably, provide a copy of the specific referenced portions of the Code.

(c) Presentations. The inquirer may desire or be asked to attend a meeting of the committee to make a formal presentation or to answer questions from the committee members with regard to the inquiry. Attendance at a committee meeting shall be at the expense of the inquirer. The inquirer's attendance or lack of attendance at a meeting shall not be a basis for acceptance or rejection of the inquiry by the committee.

Provided by IHS under license with ASME

No reproduction or networking permitted without license from IHS

Licensee=Chevron Phillips Chemical Co LP/5956674001
Not for Resale, 11/09/2014 20:41:36 MST

3 CODE REVISIONS OR ADDITIONS

Requests for Code revisions or additions shall provide the following:

(a) Proposed Revisions or Additions. For revisions, identify the rules of the Code that require revision and submit a copy of the appropriate rules as they appear in the Code, marked up with the proposed revision. For additions, provide the recommended wording referenced to the existing Code rules.

(b) Statement of Need. Provide a brief explanation of the need for the revision or addition.

(c) Background Information. Provide background information to support the revision or addition, including any data or changes in technology that form the basis for the request that will allow the committee to adequately evaluate the proposed revision or addition. Sketches, tables, figures, and graphs should be submitted as appropriate. When applicable, identify any pertinent paragraph in the Code that would be affected by the revision or addition and identify paragraphs in the Code that reference the paragraphs that are to be revised or added.

4 CODE CASES

Requests for Code Cases shall provide a Statement of Need and Background Information similar to that defined in 3(b) and 3(c), respectively, for Code revisions or additions. The urgency of the Code Case (e.g., project underway or imminent, new procedure, etc.) must be defined and it must be confirmed that the request is in connection with equipment that will bear the Certification Mark, with the exception of Section XI applications. The proposed Code Case should identify the Code Section and Division, and be written as a *Question* and a *Reply* in the same format as existing Code Cases. Requests for Code Cases should also indicate the applicable Code Editions and Addenda (if applicable) to which the proposed Code Case applies.

5 CODE INTERPRETATIONS

(a) Requests for Code Interpretations shall provide the following:

(1) Inquiry. Provide a condensed and precise question, omitting superfluous background information and, when possible, composed in such a way that a "yes" or a "no" *Reply,* with brief provisos if needed, is acceptable. The question should be technically and editorially correct.

(2) Reply. Provide a proposed *Reply* that will clearly and concisely answer the *Inquiry* question. Preferably, the *Reply* should be "yes" or "no," with brief provisos if needed.

(3) Background Information. Provide any background information that will assist the committee in understanding the proposed *Inquiry* and *Reply.*

(b) Requests for Code Interpretations must be limited to an interpretation of a particular requirement in the Code or a Code Case. The committee cannot consider consulting type requests such as the following:

(1) a review of calculations, design drawings, welding qualifications, or descriptions of equipment or parts to determine compliance with Code requirements;

(2) a request for assistance in performing any Code-prescribed functions relating to, but not limited to, material selection, designs, calculations, fabrication, inspection, pressure testing, or installation;

(3) a request seeking the rationale for Code requirements.

6 SUBMITTALS

Submittals to and responses from the committees shall meet the following:

(a) Submittal. Inquiries from Code users shall be in English and preferably be submitted in typewritten form; however, legible handwritten inquiries will also be considered. They shall include the name, address, telephone number, fax number, and e-mail address, if available, of the inquirer and be mailed to the following address:

Secretary
ASME Boiler and Pressure Vessel Committee
Two Park Avenue
New York, NY 10016-5990

As an alternative, inquiries may be submitted via e-mail to: SecretaryBPV@asme.org.

(b) Response. The Secretary of the appropriate committee shall acknowledge receipt of each properly prepared inquiry and shall provide a written response to the inquirer upon completion of the requested action by the committee.

Provided by IHS under license with ASME
No reproduction or networking permitted without license from IHS
Licensee=Chevron Phillips Chemical Co LP/5956674001
Not for Resale, 11/09/2014 20:41:36 MST

(13)

PERSONNEL
ASME Boiler and Pressure Vessel Standards Committees, Subgroups, and Working Groups

January 1, 2013

TECHNICAL OVERSIGHT MANAGEMENT COMMITTEE (TOMC)

J. G. Feldstein, *Chair*
T. P. Pastor, *Vice Chair*
J. S. Brzuszkiewicz, *Staff Secretary*
R. W. Barnes
R. J. Basile
J. E. Batey
T. L. Bedeaux
D. L. Berger
D. A. Canonico
A. Chaudouet
R. P. Deubler
D. A. Douin
R. E. Gimple
M. Gold
T. E. Hansen
J. F. Henry
G. G. Karcher
W. M. Lundy
J. R. Mackay
U. R. Miller
W. E. Norris
G. C. Park
M. D. Rana
B. W. Roberts
S. C. Roberts
F. J. Schaaf, Jr.
A. Selz
B. F. Shelley
W. J. Sperko
R. W. Swayne

HONORARY MEMBERS (MAIN COMMITTEE)

F. P. Barton
R. J. Cepluch
T. M. Cullen
W. D. Doty
J. R. Farr
G. E. Feigel
R. C. Griffin
O. F. Hedden
M. H. Jawad
A. J. Justin
W. G. Knecht
J. LeCoff
T. G. McCarty
G. C. Millman
R. A. Moen
R. F. Reedy, Sr.

ADMINISTRATIVE COMMITTEE

J. G. Feldstein, *Chair*
T. P. Pastor, *Vice Chair*
J. S. Brzuszkiewicz, *Staff Secretary*
R. W. Barnes
J. E. Batey
T. L. Bedeaux
D. L. Berger
J. F. Henry
U. R. Miller
G. C. Park
M. D. Rana
B. F. Shelley
W. J. Sperko

MARINE CONFERENCE GROUP

H. N. Patel, *Chair*
J. S. Brzuszkiewicz, *Staff Secretary*
J. G. Hungerbuhler, Jr.
G. Nair
J. D. Reynolds

CONFERENCE COMMITTEE

D. A. Douin — Ohio, *Secretary*
J. T. Amato — Minnesota
B. P. Anthony — Rhode Island
R. D. Austin — Arizona
G. Baumgardner — Michigan
W. K. Brigham — New Hampshire
C. W. Bryan — Tennessee
M. A. Burns — Florida
J. H. Burpee — Maine
C. B. Cantrell — Nebraska
D. C. Cook — California
B. J. Crawford — Georgia
E. L. Creaser — New Brunswick, Canada
W. E. Crider, Jr. — Vermont
P. L. Dodge — Nova Scotia, Canada
S. Donovan — Northwest Territories, Canada
D. Eastman — Newfoundland and Labrador, Canada
B. Fierheller — Manitoba, Canada
C. Fulton — Alaska
G. M. Given, Jr. — North Carolina
M. Graham — Oregon
R. J. Handy — Kentucky
D. R. Hannon — Arkansas
E. G. Hilton — Virginia
I. M. Hinkle — South Dakota
E. Hurd — British Colombia, Canada
D. T. Jagger — Ohio
D. J. Jenkins — Kansas
A. P. Jones — Texas
L. R. Kline — Pennsylvania
M. R. Klosterman — Iowa
K. J. Kraft — Maryland
K. T. Lau — Alberta, Canada
B. E. Logan — Massachusetts
W. McGivney — New York
S. V. Nelson — Colorado
C. C. Novak — Illinois
T. Oda — Washington
W. R. Owens — Louisiana
R. P. Pate — Alabama
R. L. Perry — Nevada
J. F. Porcella — West Virginia
D. C. Price — Yukon Territories, Canada
D. Pringnitz — Oklahoma
R. S. Pucek — Wisconsin
R. D. Reetz — North Dakota
C. F. Reyes — California
T. W. Rieger — Manitoba, Canada
K. A. Rudolph — Hawaii
M. J. Ryan — Illinois
M. H. Sansone — New York
T. S. Scholl — Ontario, Canada
G. Scribner — Missouri
C. S. Selinger — Saskatchewan, Canada
R. Spiker — North Carolina
T. Stewart — Montana
R. K. Sturm — Utah
S. R. Townsend — Prince Edward Island, Canada
W. Vallance — Michigan
M. J. Verhagen — Wisconsin
M. Washington — New Jersey
K. L. Watson — Mississippi
R. W. Whitman, Jr. — Delaware
D. J. Willis — Indiana

INTERNATIONAL INTEREST REVIEW GROUP

V. Felix
Y.-G. Kim
S. H. Leong
W. Lin
O. F. Manafa
C. Minu
T. S. G. Narayannen
Y.-W. Park
R. Reynaga
P. Williamson

Provided by IHS under license with ASME
No reproduction or networking permitted without license from IHS
Licensee=Chevron Phillips Chemical Co LP/5956674001
Not for Resale, 11/09/2014 20:41:36 MST

PROJECT TEAM ON HYDROGEN TANKS

A. P. Amato, *Staff Secretary*
F. L. Brown
D. A. Canonico
D. C. Cook
J. Coursen
J. W. Felbaum
N. L. Newhouse
A. S. Olivares
G. B. Rawls, Jr.
B. F. Shelley
J. R. Sims, Jr.
N. Sirosh
J. H. Smith
S. Staniszewski
T. Tahara
D. W. Treadwell
E. Upitis
C. T. I. Webster
W. Yoru
R. C. Biel, *Contributing Member*
M. Duncan, *Contributing Member*
D. R. Frikken, *Contributing Member*
L. E. Hayden, Jr., *Contributing Member*
K. T. Lau, *Contributing Member*
K. Nibur, *Contributing Member*
K. Oyamada, *Contributing Member*
C. H. Rivkin, *Contributing Member*
C. San Marchi, *Contributing Member*
B. Somerday, *Contributing Member*

COMMITTEE ON POWER BOILERS (BPV I)

D. L. Berger, *Chair*
R. E. McLaughlin, *Vice Chair*
U. D'Urso, *Staff Secretary*
J. L. Arnold
S. W. Cameron
D. A. Canonico
K. K. Coleman
P. D. Edwards
P. Fallouey
J. G. Feldstein
G. W. Galanes
T. E. Hansen
J. F. Henry
J. S. Hunter
W. L. Lowry
J. R. MacKay
F. Massi
P. A. Molvie
Y. Oishi
E. M. Ortman
J. T. Pillow
B. W. Roberts
R. D. Schueler, Jr.
J. M. Tanzosh
D. E. Tuttle
R. V. Wielgoszinski
D. J. Willis
G. Ardizzoia, *Delegate*
H. Michael, *Delegate*
D. N. French, *Honorary Member*
T. C. McGough, *Honorary Member*
R. L. Williams, *Honorary Member*

Subgroup on Design (BPV I)

P. A. Molvie, *Chair*
J. Vattappilly, *Secretary*
D. I. Anderson
P. Dhorajia
J. P. Glaspie
G. B. Komora
J. C. Light
B. W. Moore
D. A. Olson
R. D. Schueler, Jr.
S. V. Torkildson
M. Wadkinson
C. F. Jeerings, *Contributing Member*

Subgroup on Fabrication and Examination (BPV I)

J. T. Pillow, *Chair*
J. L. Arnold, *Secretary*
G. W. Galanes, *Secretary*
D. L. Berger
S. W. Cameron
K. Craver
G. T. Dunker
P. F. Gilston
J. Hainsworth
T. E. Hansen
C. T. McDaris
R. E. McLaughlin
R. J. Newell
Y. Oishi
R. V. Wielgoszinski

Subgroup on General Requirements (BPV I)

R. E. McLaughlin, *Chair*
T. E. Hansen, *Vice Chair*
F. Massi, *Secretary*
P. D. Edwards
W. L. Lowry
E. M. Ortman
J. T. Pillow
D. Tompkins
S. V. Torkildson
D. E. Tuttle
M. Wadkinson
R. V. Wielgoszinski
D. J. Willis
C. F. Jeerings, *Contributing Member*

Subgroup on Heat Recovery Steam Generators (BPV I)

T. E. Hansen, *Chair*
S. V. Torkildson, *Secretary*
J. L. Arnold
J. P. Bell
B. G. Carson
L. R. Douglas
J. Gertz
G. B. Komora
C. T. McDaris
B. W. Moore
Y. Oishi
E. M. Ortman
R. D. Schueler, Jr.
D. Tompkins
B. C. Turczynski

Subgroup on Locomotive Boilers (BPV I)

L. Moedinger, *Chair*
S. M. Butler, *Secretary*
P. Boschan
J. Braun
R. C. Franzen, Jr.
D. W. Griner
S. D. Jackson
M. A. Janssen
S. A. Lee
G. M. Ray
J. E. Rimmasch
R. D. Schueler, Jr.
R. B. Stone
M. W. Westland
W. L. Withuhn
R. Yuill
R. D. Reetz, *Contributing Member*

Subgroup on Materials (BPV I)

G. W. Galanes, *Chair*
K. K. Coleman, *Vice Chair*
J. S. Hunter, *Secretary*
S. H. Bowes
D. A. Canonico
P. Fallouey
K. L. Hayes
J. F. Henry
O. X. Li
J. R. MacKay
F. Masuyama
D. W. Rahoi
B. W. Roberts
J. M. Tanzosh
J. Vattappilly

Subgroup on Piping (BPV I)

D. Tompkins, *Chair*
B. Mollitor, *Secretary*
D. L. Berger
J. A. Byers
P. D. Edwards
G. W. Galanes
T. E. Hansen
T. G. Kosmatka
W. L. Lowry
F. Massi

Subgroup on Solar Boilers (BPV I)

J. S. Hunter, *Chair*
S. V. Torkildson, *Secretary*
G. W. Galanes
R. E. Hearne
D. J. Koza
J. C. Light
Y. Magen
F. Massi
M. J. Slater
J. T. Trimble, Jr.

--`,,,``,,`,```,,,,`,`-`-`,,`,,`,`,,`---
Provided by IHS under license with ASME
No reproduction or networking permitted without license from IHS
Licensee=Chevron Phillips Chemical Co LP/5956674001
Not for Resale, 11/09/2014 20:41:36 MST

Task Group on Modernization of BPVC Section I

D. I. Anderson, *Chair*
U. D'Urso, *Staff Secretary*
J. L. Arnold
S. W. Cameron
G. W. Galanes
J. P. Glaspie
J. F. Henry
R. E. McLaughlin
P. A. Molvie
E. M. Ortman
J. T. Pillow
B. W. Roberts
D. E. Tuttle

COMMITTEE ON MATERIALS (BPV II)

J. F. Henry, *Chair*
D. W. Rahoi, *Vice Chair*
N. Lobo, *Staff Secretary*
F. Abe
A. Appleton
J. Cameron
D. A. Canonico
A. Chaudouet
P. Fallouey
J. R. Foulds
D. W. Gandy
M. H. Gilkey
M. Gold
J. F. Grubb
J. A. Hall
M. Katcher
F. Masuyama
R. K. Nanstad
B. W. Roberts
E. Shapiro
M. H. Skillingberg
M. J. Slater
R. C. Sutherlin
R. W. Swindeman
J. M. Tanzosh
D. Tyler
D. Kwon, *Delegate*
O. Oldani, *Delegate*
W. R. Apblett, Jr., *Contributing Member*
H. D. Bushfield, *Contributing Member*
M. L. Nayyar, *Contributing Member*
E. G. Nisbett, *Contributing Member*
E. Upitis, *Contributing Member*
T. M. Cullen, *Honorary Member*
W. D. Doty, *Honorary Member*
W. D. Edsall, *Honorary Member*
G. C. Hsu, *Honorary Member*
R. A. Moen, *Honorary Member*
C. E. Spaeder, Jr., *Honorary Member*
A. W. Zeuthen, *Honorary Member*

Subgroup on External Pressure (BPV II)

R. W. Mikitka, *Chair*
D. L. Kurle, *Vice Chair*
J. A. A. Morrow, *Secretary*
L. F. Campbell
D. S. Griffin
J. F. Grubb
J. R. Harris III
M. H. Jawad
C. R. Thomas
M. Wadkinson
M. Katcher, *Contributing Member*
C. H. Sturgeon, *Contributing Member*

Subgroup on Ferrous Specifications (BPV II)

A. Appleton, *Chair*
S. Hochreiter, *Secretary*
B. M. Dingman
M. J. Dosdourian
P. Fallouey
J. D. Fritz
T. Graham
J. M. Grocki
J. F. Grubb
K. M. Hottle
D. S. Janikowski
L. J. Lavezzi
W. C. Mack
J. K. Mahaney
A. S. Melilli
E. G. Nisbett
K. E. Orie
J. Shick
E. Upitis
J. D. Wilson
P. Wittenbach
R. Zawierucha
R. M. Davison, *Contributing Member*

Subgroup on International Material Specifications (BPV II)

A. Chaudouet, *Chair*
O. X. Li, *Vice Chair*
T. F. Miskell, *Secretary*
S. W. Cameron
D. A. Canonico
P. Fallouey
A. F. Garbolevsky
D. O. Henry
M. Ishikawa
W. M. Lundy
A. R. Nywening
R. D. Schueler, Jr.
E. Upitis
O. Oldani, *Delegate*
H. Lorenz, *Contributing Member*

Subgroup on Nonferrous Alloys (BPV II)

R. C. Sutherlin, *Chair*
H. Anada
J. Calland
D. Denis
M. H. Gilkey
J. F. Grubb
A. Heino
M. Katcher
J. Kissell
T. M. Malota
J. A. McMaster
L. Paul
D. W. Rahoi
W. Ren
E. Shapiro
M. H. Skillingberg
D. Tyler
R. Zawierucha
W. R. Apblett, Jr., *Contributing Member*
H. D. Bushfield, *Contributing Member*

Subgroup on Physical Properties (BPV II)

J. F. Grubb, *Chair*
H. D. Bushfield
D. Denis
P. Fallouey
E. Shapiro

Subgroup on Strength, Ferrous Alloys (BPV II)

J. M. Tanzosh, *Chair*
M. J. Slater, *Secretary*
F. Abe
H. Anada
D. A. Canonico
A. Di Rienzo
P. Fallouey
J. R. Foulds
M. Gold
J. A. Hall
J. F. Henry
K. Kimura
F. Masuyama
D. W. Rahoi
B. W. Roberts
J. P. Shingledecker
R. W. Swindeman
T. P. Vassallo, Jr.
W. R. Apblett, Jr., *Contributing Member*
H. Murakami, *Contributing Member*

Subgroup on Strength of Weldments (BPV II & BPV IX)

W. F. Newell, Jr., *Chair*
S. H. Bowes
K. K. Coleman
P. D. Flenner
J. R. Foulds
D. W. Gandy
M. Gold
K. L. Hayes
J. F. Henry
D. W. Rahoi
B. W. Roberts
J. P. Shingledecker
W. J. Sperko
J. P. Swezy, Jr.
J. M. Tanzosh

Working Group on Materials Database (BPV II)

R. W. Swindeman, *Chair*
N. Lobo, *Staff Secretary*
F. Abe
J. R. Foulds
M. Gold
J. F. Henry
M. Katcher
B. W. Roberts
R. C. Sutherlin
D. Andrei, *Contributing Member*
W. Hoffelner, *Contributing Member*
T. Lazar, *Contributing Member*
D. T. Peters, *Contributing Member*
W. Ren, *Contributing Member*

Provided by IHS under license with ASME
No reproduction or networking permitted without license from IHS
Licensee=Chevron Phillips Chemical Co LP/5956674001
Not for Resale, 11/09/2014 20:41:36 MST

China International Working Group (BPV II)

T. Xu, *Secretary*
W. Fang
S. Huo
S. Li
M. Lu
B. Shou
S. Tan
C. Wang
X. Wang
Z. Wu
F. Yang
G. Yang
R. Ye
L. Yin
H. Zhang
X.-H Zhang
Yingkai Zhang
Yong Zhang
Q. Zhao
S. Zhao
R. Zhou
J. Zou

COMMITTEE ON CONSTRUCTION OF NUCLEAR FACILITY COMPONENTS (III)

R. W. Barnes, *Chair*
J. R. Cole, *Vice Chair*
A. Byk, *Staff Secretary*
T. Adams
A. Appleton
W. H. Borter
T. D. Burchell
R. P. Deubler
A. C. Eberhardt
B. A. Erler
G. M. Foster
R. S. Hill III
W. Hoffelner
R. M. Jessee
R. I. Jetter
R. B. Keating
G. H. Koo
V. Kostarev
W. C. LaRochelle
K. A. Manoly
D. E. Matthews
W. N. McLean
J. C. Minichiello
M. N. Mitchell
M. Morishita
D. K. Morton
T. Nagata
R. F. Reedy, Sr.
I. Saito
C. T. Smith
W. K. Sowder, Jr.
W. J. Sperko
J. D. Stevenson
K. R. Wichman
C. S. Withers
Y. H. Choi, *Delegate*
T. Ius, *Delegate*
H.-T. Wang, *Delegate*
C. C. Kim, *Contributing Member*
E. B. Branch, *Honorary Member*
G. D. Cooper, *Honorary Member*
W. D. Doty, *Honorary Member*
D. F. Landers, *Honorary Member*
R. A. Moen, *Honorary Member*
C. J. Pieper, *Honorary Member*

Subgroup on Containment Systems for Spent Fuel and High-Level Waste Transport Packagings (BPV III)

G. M. Foster, *Chair*
G. J. Solovey, *Vice Chair*
D. K. Morton, *Secretary*
G. Abramczyk
D. J. Ammerman
G. Bjorkman
W. H. Borter
G. R. Cannell
R. S. Hill III
S. Horowitz
D. W. Lewis
P. E. McConnell
A. B. Meichler
R. E. Nickell
E. L. Pleins
T. Saegusa
N. M. Simpson
R. H. Smith
J. D. Stevenson
C. J. Temus

Subgroup on Component Design (BPV III)

R. S. Hill III, *Chair*
T. M. Adams, *Vice Chair*
S. Pellet, *Secretary*
G. A. Antaki
S. Asada
C. W. Bruny
J. R. Cole
A. A. Dermenjian
R. P. Deubler
P. Hirschberg
R. I. Jetter
R. B. Keating
H. Kobayashi
R. A. Ladefian
K. A. Manoly
R. J. Masterson
D. E. Matthews
W. N. McLean
J. C. Minichiello
T. Nagata
A. N. Nguyen
E. L. Pleins
I. Saito
G. C. Slagis
J. D. Stevenson
J. P. Tucker
K. R. Wichman
C. Wilson
J. Yang
D. F. Landers, *Contributing Member*

Working Group on Supports (SG-D) (BPV III)

R. J. Masterson, *Chair*
U. S. Bandyopadhyay, *Secretary*
K. Avrithi
T. H. Baker
F. J. Birch
R. P. Deubler
A. N. Nguyen
I. Saito
J. R. Stinson
T. G. Terryah
G. Z. Tokarski
C.-I. Wu

Working Group on Core Support Structures (SG-D) (BPV III)

J. Yang, *Chair*
J. F. Kielb, *Secretary*
F. G. Al-Chammas
D. Keck
H. S. Mehta
M. D. Snyder
A. Tsirigotis
J. T. Land, *Contributing Member*

Working Group on Design Methodology (SG-D) (BPV III)

R. B. Keating, *Chair*
S. D. Snow, *Secretary*
K. Avrithi
R. D. Blevins
M. R. Breach
D. L. Caldwell
H. T. Harrison III
P. Hirschberg
M. Kassar
J. Kim
H. Kobayashi
J. F. McCabe
A. N. Nguyen
W. D. Reinhardt
D. H. Roarty
E. A. Rodriguez
P. K. Shah
J. D. Stevenson
A. Tsirigotis
S. Wang
T. M. Wiger
K. Wright
J. Yang
M. K. Au-Yang, *Contributing Member*
D. F. Landers, *Contributing Member*
W. S. Lapay, *Contributing Member*

Working Group on Design of Division 3 Containments (SG-D) (BPV III)

E. L. Pleins, *Chair*
D. J. Ammerman
G. Bjorkman
S. Horowitz
D. W. Lewis
J. C. Minichiello
D. K. Morton
C. J. Temus
I. D. McInnes, *Contributing Member*
R. E. Nickell, *Contributing Member*
H. P. Shrivastava, *Contributing Member*

Provided by IHS under license with ASME
No reproduction or networking permitted without license from IHS
Licensee=Chevron Phillips Chemical Co LP/5956674001
Not for Resale, 11/09/2014 20:41:36 MST

Working Group on Piping (SG-D) (BPV III)

G. A. Antaki, *Chair*
G. Z. Tokarski, *Secretary*
T. M. Adams
C. Basavaraju
J. Catalano
F. Claeys
J. R. Cole
R. G. Gilada
M. A. Gray
R. W. Haupt
P. Hirschberg
M. Kassar
J. Kawahata
R. B. Keating
V. Kostarev
Y. Liu
J. F. McCabe
J. C. Minichiello
I.-K. Nam
E. R. Nelson
A. N. Nguyen
M. S. Sills
G. C. Slagis
N. C. Sutherland
E. A. Wais
C.-I. Wu
D. F. Landers, *Contributing Member*
J. J. Martinez, *Contributing Member*
R. D. Patel, *Contributing Member*
N. J. Shah, *Contributing Member*
E. C. Rodabaugh, *Honorary Member*

Working Group on Probabilistic Methods in Design (SG-D) (BPV III)

R. S. Hill III, *Chair*
N. A. Palm, *Secretary*
T. Asayama
K. Avrithi
B. M. Ayyub
M. R. Graybeal
D. O. Henry
S. D. Kulat
A. McNeill III
M. Morishita
P. J. O'Regan
I. Saito
A. Tsirigotis
R. M. Wilson
D. Hofer, *Contributing Member*

Working Group on Pumps (SG-D) (BPV III)

R. A. Ladefian, *Chair*
P. W. Behnke
R. E. Cornman, Jr.
M. D. Eftychiou
A. Fraser
M. A. Gaydon
R. Ghanbari
M. Higuchi
J. W. Leavitt
S. Mauvais
R. A. Patrick
J. Sulley
R. Udo
A. G. Washburn

Working Group on Valves (SG-D) (BPV III)

J. P. Tucker, *Chair*
J. O'Callaghan, *Secretary*
G. A. Jolly
J. Klein
W. N. McLean
T. A. McMahon
C. A. Mizer
K. E. Reid II
S. N. Shields
H. R. Sonderegger
P. Vock

Working Group on Vessels (SG-D) (BPV III)

D. E. Matthews, *Chair*
R. M. Wilson, *Secretary*
C. Basavaraju
C. W. Bruny
J. V. Gregg, Jr.
W. J. Heilker
W. T. Jessup, Jr.
A. Kalnins
R. B. Keating
D. Keck
O.-S. Kim
K. Matsunaga
P. K. Shah
C. Turylo
D. Vlaicu
W. F. Weitze
T. Yamazaki

Special Working Group on Environmental Effects (SG-D) (BPV III)

W. Culp, *Chair*
B. D. Frew, *Secretary*
K. Avrithi
W. J. Heilker
R. S. Hill III
J. E. Nestell
W. Z. Novak
M. S. Shelton
Y. H. Choi, *Delegate*

Subgroup on General Requirements (BPV III & 3C)

R. P. McIntyre, *Chair*
L. M. Plante, *Secretary*
V. Apostolescu
A. Appleton
J. R. Berry
J. V. Gardiner
G. Gratti
J. W. Highlands
G. L. Hollinger
G. V. Imbro
K. A. Kavanagh
W. C. LaRochelle
M. R. Minick
E. C. Renaud
D. J. Roszman
C. T. Smith
W. K. Sowder, Jr.
G. E. Szabatura
T. G. Terryah
D. M. Vickery
C. S. Withers
H. Michael, *Delegate*

Working Group on Duties and Responsibilities (SG-GR) (BPV III)

J. V. Gardiner, *Chair*
G. L. Hollinger, *Secretary*
J. R. Berry
Y. Diaz-Castillo
E. L. Farrow
G. Gratti
K. A. Kavanagh
L. M. Plante
D. J. Roszman
S. Scardigno
T. G. Terryah

Working Group on Quality Assurance, Certification, and Stamping (SG-GR) (BPV III)

C. T. Smith, *Chair*
C. S. Withers, *Secretary*
V. Apostolescu
A. Appleton
S. Bell
B. K. Bobo
S. M. Goodwin
J. W. Highlands
R. P. McIntyre
M. R. Minick
R. B. Patel
E. C. Renaud
J. Rogers
W. K. Sowder, Jr.
J. F. Strunk
M. F. Sullivan
G. E. Szabatura
D. M. Vickery

Special Working Group on Regulatory Interface (BPV III)

G. V. Imbro, *Chair*
S. Bell, *Secretary*
A. Cardillo
A. A. Dermenjian
K. Matsunaga
D. E. Matthews
J. A. Schulz
R. R. Stevenson
D. Terao
M. L. Wilson
R. A. Yonekawa

Subgroup on Materials, Fabrication, and Examination (BPV III)

R. M. Jessee, *Chair*
S. Hunter, *Secretary*
W. H. Borter
G. R. Cannell
R. H. Davis
G. M. Foster
B. D. Frew
G. B. Georgiev
S. E. Gingrich
C. C. Kim
M. Lau
H. Murakami
J. Ossmann
C. Pearce
N. M. Simpson
W. J. Sperko
J. R. Stinson
J. F. Strunk
K. B. Stuckey
H. Michael, *Delegate*

Provided by IHS under license with ASME
No reproduction or networking permitted without license from IHS
Licensee=Chevron Phillips Chemical Co LP/5956674001
Not for Resale, 11/09/2014 20:41:36 MST

Subgroup on Pressure Relief (BPV III)

J. F. Ball, *Chair*
A. L. Szeglin
D. G. Thibault

Executive Committee on Strategy and Project Management (BPV III, Divisions 1 and 2)

J. R. Cole, *Chair*
C. A. Sanna, *Staff Secretary*
T. Adams
R. W. Barnes
B. K. Bobo
N. Broom
B. A. Erler
C. M. Faidy
R. S. Hill III
E. V. Imbro
R. M. Jessee
R. B. Keating
G. H. Koo
K. A. Manoly
D. K. Morton
J. Ramirez
R. F. Reedy, Sr.
C. T. Smith
W. K. Sowder, Jr.
Y. Urabe
C. S. Withers
C. Yan
M. F. Sullivan, *Contributing Member*

China International Working Group (BPV III)

J. Yan, *Chair*
W. Tang, *Vice Chair*
C. A. Sanna, *Staff Secretary*
Y. He, *Secretary*
H. Ge
Z. Han
J. Jian
Y. Jing
F. Kai
D. Kang
Y. Lee
X. Li
B. Liang
H. Lin
S. Lin
J. Liu
S. Liu
W. Liu
K. Mao
G. Sun
G. Tang
Y. Tu
Y. Wang
H. Wu
X. Wu
Z. Wu
S. Xue
Z. Yan
C. Ye
Z. Yin
S. Zaozhan
G. Zhang
K. Zhang
W. Zhang
G. Zhao
W. Zhao
Y. Zhong
Z. Zhong

Korea International Working Group (BPV III)

G. H. Koo, *Chair*
H. S. Byun
J.-Y. Hong
N.-S. Huh
S. S. Hwang
C. Jang
I. I. Jeong
H. J. Kim
J. Kim
O.-S. Kim
Y.-B. Kim
D. Kwon
B. Lee
D. Lee
S. Lee
D. J. Lim
I.-K. Nam
B. Noh
C.-K. Oh
C. Park
J.-S. Park
S. Song
O. Yoo

Special Working Group for New Advanced Light Water Reactor Plant Construction Issues (BPV III)

E. L. Pleins, *Chair*
M. C. Scott, *Secretary*
A. Cardillo
B. Gilligan
J. Honcharik
G. V. Imbro
Y. Katsura
O.–S Kim
M. Kris
J. C. Minichiello
D. W. Sandusky
C. A. Sanna
R. R. Stevenson
E. R. Willis
M. L. Wilson
J. Yan
J. A. Schulz, *Contributing Member*

Subgroup on Editing and Review (BPV III)

D. K. Morton, *Chair*
R. L. Bratton
R. P. Deubler
A. C. Eberhardt
R. I. Jetter
J. C. Minichiello
L. M. Plante
R. F. Reedy, Sr.
W. K. Sowder, Jr.
J. D. Stevenson
C. Wilson

Subgroup on Management Resources (BPV III)

R. M. Jessee, *Chair*
J. F. Bernardo
L. C. Cadwallader
J. B. Carr
M. Cusick
H. S. Farrow
S. Fincher
J. Fink
L. Hartless
M. A. Hayes, Jr.
M. Hokazono
B. N. Juarez
Y. S. Kim
J. M. Lyons
B. McGlone
A. A. Mostala
M. Osterfoss
J. D. Pasek
C. Pearce
J. Rogers
B. S. Sandhu
V. Suri
Z. Taylor
J. Webb, Jr.
R. A. West
R. Z. Ziegler

Working Group on International Meetings (BPV III)

R. S. Hill III, *Chair*
A. Byk, *Staff Secretary*
T. D. Burchell
J. R. Cole
R. L. Crane
G. M. Foster
M. N. Mitchell
R. F. Reedy, Sr.
C. A. Sanna
C. T. Smith

Subgroup on Polyethylene Pipe (BPV III)

T. M. Adams, *Chair*
D. Burwell, *Secretary*
W. I. Adams
C. Basavaraju
S. J. Boros
J. M. Craig
E. L. Farrow
E. M. Focht
M. Golliet
A. N. Haddad
P. Krishnaswamy
M. Lashley
E. Lever
K. Lively
M. Martin
E. W. McElroy
D. P. Munson
T. M. Musto
J. E. O'Sullivan
F. J. Schaaf, Jr.
H. E. Svetlik
M. Troughton
D. M. Vickery
Z. J. Zhou
L. J. Petroff, *Alternate*
S. Sandstrum, *Alternate*

Provided by IHS under license with ASME
No reproduction or networking permitted without license from IHS
Licensee=Chevron Phillips Chemical Co LP/5956674001
Not for Resale, 11/09/2014 20:41:36 MST

Working Group on Research and Development

A. N. Haddad, *Chair*
W. I. Adams
A. Amato
S. J. Boros
J. M. Craig
E. M. Focht
R. M. Jessee
D. Keller
M. Lamborn
S. Lefler
E. Lever
K. Lively
K. A. Manoly
L. Mizell
D. P. Munson
T. M. Musto
F. J. Schaaf, Jr.
M. Troughton
Z. J. Zhou
L. J. Petroff, *Alternate*
S. Sandstrum, *Alternate*

Working Group on Nondestructive Examination and Fusion of HDPE (BPV III)

M. Lashley, *Chair*
W. H. Borter
J. M. Craig
N. Y. Faransso
N. A. Finney
J. F. Halley
R. M. Jessee
M. D. Moles
F. J. Schaaf, Jr.
J. C. Spanner, Jr.
Z. J. Zhou
D. K. Zimmerman

Working Group on High Temperature Gas-Cooled Reactors (BPV III)

J. E. Nestell, *Chair*
N. Broom
T. D. Burchell
R. S. Hill III
W. Hoffelner
E. V. Imbro
R. I. Jetter
Y. W. Kim
T. R. Lupold
S. N. Malik
D. L. Marriott
D. K. Morton
T.-L. Sham
Y. Tachibana
T. Yuhara

Subgroup on Graphite Core Components (BPV III)

T. D. Burchell, *Chair*
M. N. Mitchell, *Vice Chair*
C. A. Sanna, *Staff Secretary*
R. L. Bratton, *Secretary*
T. Albers
A. Appleton
S.-H. Chi
A. Covac
M. W. Davies
S. W. Doms
S. F. Duffy
B. D. Frew
O. Gelineau
S. T. Gonczy
M. P. Hindley
Y. Katoh
N. N. Nemeth
T. Oku
J. Ossmann
M. Roemmler
N. Salstrom
T. Shibata
M. Srinivasan
A. G. Steer
S. Wendel
S. Yu

Subgroup on Industry Experience for New Plants (BPV III & BPV XI)

G. M. Foster, *Chair*
J. T. Lindberg, *Chair*
H. L. Gustin, *Secretary*
V. L. Armentrout
T. L. Chan
D. R. Graham
P. J. Hennessey
D. O. Henry
J. Honcharik
E. V. Imbro
C. G. Kim
O.-S. Kim
K. Matsunaga
D. E. Matthews
R. E. McLaughlin
J. Ossmann
E. L. Pleins
D. W. Sandusky
D. M. Swann
T. Tsuruta
E. R. Willis
S. M. Yee

Subgroup on Fusion Energy Devices (BPV III)

W. K. Sowder, Jr., *Chair*
D. Andrei, *Staff Secretary*
D. J. Roszman, *Secretary*
R. W. Barnes
M. Higuchi
G. Holtmeier
K. A. Kavanagh
H. J. Kim
S. Lee
G. Li
X. Li
P. Mokaria
S. J. Salvador
M. Trosen
I. J. Zatz

Subgroup on High-Temperature Reactors (BPV III)

M. Morishita, *Chair*
R. I. Jetter, *Vice Chair*
T.-L. Sham, *Secretary*
N. Broom
T. D. Burchell
W. Hoffelner
G. H. Koo
D. K. Morton
J. E. Nestell
N. N. Ray

Working Group on High Temperature Liquid-Cooled Reactors (BPV III)

T.-L. Sham, *Chair*
T. Asayama, *Secretary*
R. W. Barnes
P. Carter
C. M. Faidy
W. Hoffelner
A. B. Hull
R. I. Jetter
G. H. Koo
M. Li
S. Majumdar
M. Morishita
J. E. Nestell
D. K. Williams

Subgroup on Elevated Temperature Design (BPV III)

R. I. Jetter, *Chair*
T.-L. Sham, *Secretary*
J. J. Abou-Hanna
T. Asayama
C. Becht IV
F. W. Brust
P. Carter
J. F. Cervenka
D. S. Griffin
B. F. Hantz
W. Hoffelner
A. B. Hull
M. H. Jawad
G. H. Koo
W. J. Koves
M. Li
S. Majumdar
D. L. Marriott
T. E. McGreevy
J. E. Nestell
W. J. O'Donnell
R. W. Swindeman

Working Group on High Temperature Flaw Evaluation (BPV III)

F. W. Brust, *Chair*
N. Broom
P. Carter
W. Hoffelner
S. N. Malik
D. L. Rudland
P. J. Rush
D.-J. Shim
S. X. Xu

Working Group on Allowable Stress Criteria (BPV III)

R. W. Swindeman, *Chair*
M. Li, *Secretary*
J. R. Foulds
K. Kimura
S. N. Malik
J. E. Nestel
W. Ren
B. W. Roberts
T.-I Sham

Working Group on Analysis Methods (BPV III)

P. Carter, *Chair*
M. R. Beach
R. I. Jetter
S. Krishnamurthy
T.-I Sham
D. K. Williams

Provided by IHS under license with ASME
No reproduction or networking permitted without license from IHS
Licensee=Chevron Phillips Chemical Co LP/5956674001
Not for Resale, 11/09/2014 20:41:36 MST

Working Group on Creep-Fatigue and Negligible Creep (BPV III)

T. Asayama, *Chair*
M. Li, *Secretary*
F. W. Brust
R. I. Jetter
G. H. Koo
S. N. Malik
T.-I Sham

Subgroup on Fatigue Strength (BPV III)

W. J. O'Donnell, *Chair*
S. A. Adams
G. S. Chakrabarti
T. M. Damiani
P. R. Donavin
S. R. Gosselin
R. J. Gurdal
C. F. Heberling II
C. E. Hinnant
D. P. Jones
G. Kharshafdjian
S. Majumdar
S. N. Malik
R. Nayal
D. H. Roarty
M. S. Shelton
G. Taxacher
A. Tsirigotis
K. Wright
H. H. Ziada

Working Group on Environmental Fatigue Evaluation Methods (BPV III)

T. M. Adams
S. Asada
K. Avrithi
J. R. Cole
C. M. Faidy
T. D. Gilman
S. R. Gosselin
M. A. Gray
Y. He
H. S. Mehta
J.-S. Park
V. S. Ready
D. H. Roarty
I. Saito
D. Vlaicu
W. F. Weitze
K. Wright

Subcommittee on Design (BPV III)

R. P. Deubler, *Chair*
G. L. Hollinger, *Secretary*
T. M. Adams
G. A. Antaki
R. L. Bratton
R. S. Hill III
P. Hirschberg
M. H. Jawad
R. I. Jetter
R. B. Keating
R. A. Ladefian
K. A. Manoly
R. J. Masterson
D. E. Matthews
M. N. Mitchell
W. J. O'Donnell
E. L. Pleins
J. P. Tucker
J. Yang

Special Working Group on HDPE Design of Components (BPV III)

T. M. Adams, *Chair*
T. M. Musto, *Secretary*
W. I. Adams
T. A. Bacon
C. Basavaraju
D. Burwell
P. Krishnaswamy
M. Martin
E. W. McElroy
J. C. Minichiello
D. P. Munson
J. Ossmann
L. J. Petroff
H. E. Svetlik
K. Lively
L. Mizell

Special Working Group on Computational Modeling for Explicit Dynamics (BPV III)

G. Bjorkman, *Chair*
D. J. Ammerman, *Secretary*
G. Broz
J. Jordan
D. Molitoris
J. Piotter
P. Y.-K. Shih
S. D. Snow
C.-F Tso
M. C. Yaksh
U. Zencker

Subgroup on Elevated Temperature Construction (BPV III)

M. H. Jawad, *Chair*
B. Mollitor, *Secretary*
D. I. Anderson
R. G. Brown
J. P. Glaspie
B. F. Hantz
R. I. Jetter
S. Krishnamurthy
D. L. Marriott
M. N. Mitchell
D. K. Morton
C. Nadarajah

Subcommittee on General Requirements (BPV III)

W. C. LaRochelle, *Chair*
A. Appleton, *Secretary*
J. V. Gardiner
R. P. McIntyre
L. M. Plante
C. T. Smith
D. M. Vickery

JOINT ACI-ASME COMMITTEE ON CONCRETE COMPONENTS FOR NUCLEAR SERVICE (BPV 3C)

A. C. Eberhardt, *Chair*
C. T. Smith, *Vice Chair*
A. Byk, *Staff Secretary*
N. Alchaar
J. F. Artuso
C. J. Bang
F. Farzam
P. S. Ghosal
M. F. Hessheimer
B. D. Hovis
T. C. Inman
O. Jovall
N.-H. Lee
J. McLean
J. Munshi
N. Orbovic
B. B. Scott
J. D. Stevenson
J. F. Strunk
T. Tonyan
T. J. Ahl, *Contributing Member*
T. D. Al-Shawaf, *Contributing Member*
B. A. Erler, *Contributing Member*
J. Gutierrez, *Contributing Member*
T. E. Johnson, *Contributing Member*
T. Muraki, *Contributing Member*
M. R. Senecal, *Contributing Member*
M. K. Thumm, *Contributing Member*

Working Group on Design (BPV 3C)

J. Munshi, *Chair*
N. Alchaar
S. Bae
L. J. Colarusso
J. Colinares
A. C. Eberhardt
F. Farzam
P. S. Ghosal
M. F. Hessheimer
B. D. Hovis
T. C. Inman
O. Jovall
N.-H Lee
J. D. Stevenson
T. E. Johnson, *Contributing Member*
B. R. Laskewitz, *Contributing Member*
M. K. Thumm, *Contributing Member*

Working Group on Materials, Fabrication, and Examination (BPV 3C)

J. F. Artuso, *Chair*
P. S. Ghosal, *Vice Chair*
M. Allam
A. C. Eberhardt
J. Gutierrez
B. B. Scott
C. T. Smith
J. F. Strunk
T. Tonyan

Working Group on Modernization (BPV 3C)

O. Jovall, *Chair*
J. McLean, *Secretary*
A. Adediran
N. Alchaar
J. F. Artuso
J. J. Braun
J. Colinares
J.-B Domage
N. Orbovic
C. T. Smith
M. A. Ugalde
S. Wang
U. Ricklefs, *Contributing Member*

Provided by IHS under license with ASME
No reproduction or networking permitted without license from IHS
Licensee=Chevron Phillips Chemical Co LP/5956674001
Not for Resale, 11/09/2014 20:41:36 MST

COMMITTEE ON HEATING BOILERS (BPV IV)

T. L. Bedeaux, *Chair*
J. A. Hall, *Vice Chair*
G. Moino, *Staff Secretary*
J. Calland
J. P. Chicoine
C. M. Dove
B. G. French
A. Heino
B. J. Iske
D. J. Jenkins
M. R. Klosterman
K. M. McTague
P. A. Molvie
B. W. Moore
R. E. Olson
T. M. Parks
M. Wadkinson
R. V. Wielgoszinski
H. Michael, *Delegate*
D. Picart, *Delegate*
J. L. Kleiss, *Alternate*
M. T. Roby, *Alternate*
W. L. Haag, Jr., *Honorary Member*

Subgroup on Care and Operation of Heating Boilers (BPV IV)

M. Wadkinson, *Chair*
T. L. Bedeaux
J. Calland
J. A. Hall
M. R. Klosterman
P. A. Molvie
B. W. Moore
T. M. Parks

Subgroup on Cast Iron Boilers (BPV IV)

K. M. McTague, *Chair*
T. L. Bedeaux, *Vice Chair*
J. P. Chicoine
C. M. Dove
J. M. Downs
B. G. French
J. A. Hall
J. L. Kleiss
M. R. Klosterman
M. T. Roby, *Alternate*

Subgroup on Materials (BPV IV)

J. A. Hall, *Chair*
M. Wadkinson, *Vice Chair*
J. Calland
J. M. Downs
B. J. Iske
J. L. Kleiss
E. Rightmier

Subgroup on Water Heaters (BPV IV)

J. Calland, *Chair*
J. P. Chicoine
B. G. French
B. J. Iske
K. M. McTague
R. E. Olson
T. E. Trant
M. T. Roby, *Alternate*

Subgroup on Welded Boilers (BPV IV)

J. Calland, *Chair*
T. L. Bedeaux
B. G. French
J. L. Kleiss
M. R. Klosterman
P. A. Molvie
R. E. Olson
M. Wadkinson
R. V. Wielgoszinski
J.-M. Andre, *Contributing Member*

COMMITTEE ON NONDESTRUCTIVE EXAMINATION (BPV V)

J. E. Batey, *Chair*
F. B. Kovacs, *Vice Chair*
J. S. Brzuszkiewicz, *Staff Secretary*
S. J. Akrin
C. A. Anderson
A. S. Birks
P. L. Brown
M. A. Burns
B. Caccamise
N. Y. Faransso
N. A. Finney
A. F. Garbolevsky
G. W. Hembree
J. W. Houf
R. W. Kruzic
J. R. McGimpsey
M. D. Moles
A. B. Nagel
T. L. Plasek
F. J. Sattler
G. M. Gatti, *Delegate*
X. Guiping, *Delegate*
B. D. Laite, *Alternate*
H. C. Graber, *Honorary Member*
O. F. Hedden, *Honorary Member*
J. R. MacKay, *Honorary Member*
T. G. McCarty, *Honorary Member*

Subgroup on General Requirements/Personnel Qualifications and Inquiries (BPV V)

F. B. Kovacs, *Chair*
S. J. Akrin
C. A. Anderson
J. E. Batey
A. S. Birks
N. Y. Faransso
N. A. Finney
G. W. Hembree
J. W. Houf
J. P. Swezy, Jr., *Contributing Member*

Subgroup on Surface Examination Methods (BPV V)

S. J. Akrin, *Chair*
A. S. Birks
P. L. Brown
B. Caccamise
N. Y. Faransso
N. Farenbaugh
N. A. Finney
G. W. Hembree
S. Johnson
R. W. Kruzic
B. D. Laite
L. E. Mullins
A. B. Nagel
F. J. Sattler
G. M. Gatti, *Delegate*

Subgroup on Volumetric Methods (BPV V)

G. W. Hembree, *Chair*
S. J. Akrin
J. E. Batey
P. L. Brown
B. Caccamise
N. Y. Faransso
N. A. Finney
A. F. Garbolevsky
J. F. Halley
R. W. Hardy
S. Johnson
F. B. Kovacs
R. W. Kruzic
J. R. McGimpsey
M. D. Moles
L. E. Mullins
A. B. Nagel
T. L. Plasek
F. J. Sattler
G. M. Gatti, *Delegate*

Working Group on Acoustic Emissions (SG-VM) (BPV V)

N. Y. Faransso, *Chair*
J. E. Batey, *Vice Chair*
S. R. Doctor
R. K. Miller

Working Group on Radiography (SG-VM) (BPV V)

F. B. Kovacs, *Chair*
S. J. Akrin
J. E. Batey
P. L. Brown
B. Caccamise
N. Y. Faransso
A. F. Garbolevsky
R. W. Hardy
G. W. Hembree
S. Johnson
R. W. Kruzic
B. D. Laite
S. Mango
J. R. McGimpsey
R. J. Mills
A. B. Nagel
T. L. Plasek

Provided by IHS under license with ASME
No reproduction or networking permitted without license from IHS
Licensee=Chevron Phillips Chemical Co LP/5956674001
Not for Resale, 11/09/2014 20:41:36 MST

Working Group on Ultrasonics (SG-VM) (BPV V)

N. A. Finney, *Chair*
J. F. Halley, *Vice Chair*
B. Caccamise
K. J. Chizen
N. Y. Faransso
O. F. Hedden
S. Johnson
R. W. Kruzic
B. D. Laite
M. D. Moles
L. E. Mullins
A. B. Nagel
F. J. Sattler

Working Group on Guided Wave Ultrasonic Testing (SG-VM) (BPV V)

N. Y. Faransso, *Chair*
J. E. Batey, *Vice Chair*
D. Alleyne
J. F. Halley
S. Johnson
G. M. Light
M. D. Moles
P. Mudge
M. J. Quarry
J. Vanvelsor

COMMITTEE ON PRESSURE VESSELS (VIII)

U. R. Miller, *Chair*
R. J. Basile, *Vice Chair*
S. J. Rossi, *Staff Secretary*
T. Schellens, *Staff Secretary*
V. Bogosian
J. Cameron
A. Chaudouet
D. B. DeMichael
J. P. Glaspie
M. Gold
J. F. Grubb
L. E. Hayden, Jr.
G. G. Karcher
K T. Lau
R. Mahadeen
R. W. Mikitka
K. Mokhtarian
C. C. Neely
T. W. Norton
T. P. Pastor
D. T. Peters
M. J. Pischke
M. D. Rana
G. B. Rawls, Jr.
F. L. Richter
S. C. Roberts
C. D. Rodery
A. Selz
J. R. Sims, Jr.
E. Soltow
D. A. Swanson
J. P. Swezy, Jr.
S. Terada
E. Upitis
P. A. McGowan, *Delegate*
H. Michael, *Delegate*
K. Oyamada, *Delegate*
M. E. Papponetti, *Delegate*
D. Rui, *Delegate*
T. Tahara, *Delegate*
W. S. Jacobs, *Contributing Member*

Subgroup on Design (BPV VIII)

R. J. Basile, *Chair*
J. C. Sowinski, *Vice Chair*
M. D. Lower, *Secretary*
O. A. Barsky
M. R. Breach
F. L. Brown
J. R. Farr
B. F. Hantz
C. E. Hinnant
M. H. Jawad
D. L. Kurle
R. W. Mikitka
U. R. Miller
K. Mokhtarian
T. P. Pastor
M. D. Rana
G. B. Rawls, Jr.
S. C. Roberts
C. D. Rodery
S. C. Shah
D. A. Swanson
J. Vattappilly
R. A. Whipple
A. A. Gibbs, *Delegate*
K. Oyamada, *Delegate*
M. E. Papponetti, *Delegate*
M. Faulkner, *Corresponding Member*
C. S. Hinson, *Corresponding Member*
W. S. Jacobs, *Corresponding Member*
A. Selz, *Corresponding Member*
K. K. Tam, *Corresponding Member*

Working Group on Design-By-Analysis (BPV III)

B. F. Hantz, *Chair*
T. W. Norton, *Secretary*
R. G. Brown
R. D. Dixon
C. E. Hinnant
M. H. Jawad
S. Krishnamurthy
A. Mann
G. A. Miller
C. Nadarajah
M. D. Rana
T. G. Seipp
S. Terada

Subgroup on Fabrication and Inspection (BPV VIII)

C. D. Rodery, *Chair*
J. P. Swezy, Jr., *Vice Chair*
B. R. Morelock, *Secretary*
J. L. Arnold
L. F. Campbell
H. E. Gordon
D. I. Morris
M. J. Pischke
M. J. Rice
B. F. Shelley
P. L. Sturgill
T. Tahara
E. A. Whittle
K. Oyamada, *Delegate*
R. Uebel, *Delegate*
W. J. Bees, *Corresponding Member*
E. Upitis, *Corresponding Member*
W. S. Jacobs, *Contributing Member*
J. Lee, *Contributing Member*

Subgroup on General Requirements (BPV VIII)

S. C. Roberts, *Chair*
D. B. DeMichael, *Vice Chair*
F. L. Richter, *Secretary*
R. J. Basile
V. Bogosian
D. T. Davis
J. P. Glaspie
L. E. Hayden, Jr.
K. T. Lau
M. D. Lower
C. C. Neely
A. S. Olivares
J. C. Sowinski
P. Speranza
D. B. Stewart
D. A. Swanson
R. Uebel
A. H. Gibbs, *Delegate*
K. Oyamada, *Delegate*

Taskgroup on U-2(g) (BPV VIII)

S. R. Babka
R. J. Basile
D. K. Chandiramani
R. Mahadeen
U. R. Miller
T. W. Norton
T. P. Pastor
R. F. Reedy, Sr.
S. C. Roberts
J. R. Sims, Jr.
D. Srnic
D. A. Swanson
R. Uebel
K. K. Tam

Subgroup on Heat Transfer Equipment (BPV VIII)

R. Mahadeen, *Chair*
G. Aurioles, Sr., *Vice Chair*
F. E. Jehrio, *Secretary*
S. R. Babka
J. H. Barbee
O. A. Barsky
I. G. Campbell
A. Chaudouet
M. D. Clark
J. I. Gordon
M. J. Holtz
G. G. Karcher
D. L. Kurle
B. J. Lerch
P. Matkovics
S. Mayeux
U. R. Miller
T. W. Norton
K. Oyamada
D. Srnic
A. M. Voytko
R. P. Wiberg
F. Osweiller, *Corresponding Member*
S. Yokell, *Corresponding Member*
R. Tiwari, *Contributing Member*
S. M. Caldwell, *Honorary Member*

Provided by IHS under license with ASME
No reproduction or networking permitted without license from IHS
Licensee=Chevron Phillips Chemical Co LP/5956674001
Not for Resale, 11/09/2014 20:41:36 MST

Subgroup on High Pressure Vessels (BPV VIII)

D. T. Peters, *Chair*
R. T. Hallman, *Vice Chair*
A. P. Maslowski, *Staff Secretary*
L. P. Antalffy
R. C. Biel
P. N. Chaku
R. Cordes
R. D. Dixon
L. Fridlund
D. M. Fryer
A. H. Honza
M. M. James
J. A. Kapp
J. Keltjens
A. K. Khare
S. C. Mordre
G. T. Nelson
E. A. Rodriguez
E. D. Roll
J. R. Sims, Jr.
D. L. Stang
F. W. Tatar
S. Terada
J. L. Traud
R. Wink
K. J. Young
K. Oyamada, *Delegate*
R. M. Hoshman, *Contributing Member*
G. J. Mraz, *Contributing Member*
D. J. Burns, *Honorary Member*
E. H. Perez, *Honorary Member*

Subgroup on Materials (BPV VIII)

J. F. Grubb, *Chair*
J. Cameron, *Vice Chair*
P. G. Wittenbach, *Secretary*
A. Di Rienzo
J. D. Fritz
M. Gold
M. Katcher
W. M. Lundy
D. W. Rahoi
R. C. Sutherlin
E. Upitis
K. Xu
K. Oyamada, *Delegate*
E. G. Nisbett, *Corresponding Member*
G. S. Dixit, *Contributing Member*
J. A. McMaster, *Contributing Member*

Subgroup on Toughness (BPV II & BPV VIII)

D. A. Swanson, *Chair*
J. P. Swezy, Jr., *Vice Chair*
J. L. Arnold
R. J. Basile
J. Cameron
H. E. Gordon
W. S. Jacobs
D. L. Kurle
K. Mokhtarian
C. C. Neely
M. D. Rana
F. L. Richter
E. Upitis
J. Vattappilly
K. Xu
K. Oyamada, *Delegate*

Special Working Group on Graphite Pressure Equipment (BPV VIII)

E. Soltow, *Chair*
G. C. Becherer
T. F. Bonn
F. L. Brown
R. W. Dickerson
S. Malone
M. R. Minick
A. A. Stupica

Special Working Group on Bolted Flanged Joints (BPV VIII)

R. W. Mikitka, *Chair*
G. D. Bibel
W. Brown
W. J. Koves
M. Morishita
J. R. Payne
G. B. Rawls, Jr.
M. S. Shelton

Task Group on Design (BPV VIII)

J. Keltjens, *Chair*
R. C. Biel
D. J. Burns
R. Cordes
R. D. Dixon
L. Fridlund
D. M. Fryer
R. T. Hallman
S. C. Mordre
G. T. Nelson
E. H. Perez
D. T. Peters
E. D. Roll
K. C. Simpson
J. R. Sims, Jr.
D. L. Stang
S. Terada
J. L. Traud
R. Wink

Task Group on Materials (BPV VIII)

F. W. Tatar, *Chair*
L. P. Antalffy
P. N. Chaku
M. M. James
J. A. Kapp
A. K. Khare

Task Group on Impulsively Loaded Vessels (BPV VIII)

E. A. Rodriguez, *Chair*
P. O. Leslie, *Secretary*
G. A. Antaki
J. K. Asahina
D. D. Barker
D. W. Bowman
A. M. Clayton
J. E. Didlake, Jr.
T. A. Duffey
B. L. Haroldsen
H. L. Heaton
D. Hilding
K. W. King
R. Kitamura
R. A. Leishear
R. E. Nickell
F. Ohlson
C. Romero
N. Rushton
J. E. Shepherd
Q. Dong, *Corresponding Member*
M. Yip, *Corresponding Member*
C. R. Vaught, *Alternate*

COMMITTEE ON WELDING, BRAZING, AND FUSING (BPV IX)

W. J. Sperko, *Chair*
D. A. Bowers, *Vice Chair*
S. J. Rossi, *Staff Secretary*
M. Bernasek
R. K. Brown, Jr.
M. L. Carpenter
J. G. Feldstein
P. D. Flenner
R. M. Jessee
J. S. Lee
W. M. Lundy
T. Melfi
W. F. Newell, Jr.
B. R. Newmark
A. S. Olivares
M. J. Pischke
M. J. Rice
M. B. Sims
M. J. Stanko
J. P. Swezy, Jr.
P. L. Van Fosson
R. R. Young
A. Roza, *Delegate*
M. Consonni, *Contributing Member*
S. A. Jones, *Contributing Member*
W. D. Doty, *Honorary Member*
S. D. Reynolds, Jr., *Honorary Member*

Subgroup on Brazing (BPV IX)

M. J. Pischke, *Chair*
E. W. Beckman
L. F. Campbell
M. L. Carpenter
A. F. Garbolevsky
J. P. Swezy, Jr.

Subgroup on General Requirements (BPV IX)

B. R. Newmark, *Chair*
E. W. Beckman
G. Chandler
P. R. Evans
A. Howard
R. M. Jessee
A. S. Olivares
D. K. Peetz
H. B. Porter
P. L. Sturgill
K. R. Willens
E. W. Woelfel
E. Molina, *Delegate*

Provided by IHS under license with ASME
No reproduction or networking permitted without license from IHS
Licensee=Chevron Phillips Chemical Co LP/5956674001
Not for Resale, 11/09/2014 20:41:36 MST

Subgroup on Materials (BPV IX)

M. Bernasek, *Chair*
T. Anderson
J. L. Arnold
M. L. Carpenter
E. Cutlip
S. S. Fiore
S. E. Gingrich
R. M. Jessee
C. C. Kim
T. Melfi
M. J. Pischke
C. E. Sainz
W. J. Sperko
M. J. Stanko
P. L. Sturgill
R. R. Young
V. G. V. Giunto, *Delegate*

Subgroup on Performance Qualification (BPV IX)

D. A. Bowers, *Chair*
M. J. Rice, *Secretary*
V. A. Bell
M. A. Boring
R. B. Corbit
P. D. Flenner
K. L. Hayes
J. S. Lee
W. M. Lundy
E. G. Reichelt
M. B. Sims

Subgroup on Plastic Fusing (BPV IX)

M. L. Carpenter, *Chair*
D. Burwell
J. M. Craig
A. N. Haddad
K. L. Hayes
R. M. Jessee
E. Lever
E. W. McElroy
J. E. O'Sullivan
E. G. Reichelt
M. J. Rice
P. L. Sturgill
J. P. Swezy, Jr.
E. W. Woelfel
J. C. Minichiello
C. W. Rowley

Subgroup on Procedure Qualification (BPV IX)

D. A. Bowers, *Chair*
M. J. Rice, *Secretary*
M. Bernasek
M. A. Boring
R. K. Brown, Jr.
W. M. Lundy
J. R. McGimpsey
W. F. Newell, Jr.
A. S. Olivares
S. Raghunathan
M. B. Sims
W. J. Sperko
S. A. Sprague
J. P. Swezy, Jr.
P. L. Van Fosson
T. C. Wiesner

COMMITTEE ON FIBER-REINFORCED PLASTIC PRESSURE VESSELS (BPV X)

D. Eisberg, *Chair*
P. D. Stumpf, *Staff Secretary*
F. L. Brown
J. L. Bustillos
T. W. Cowley
I. L. Dinovo
T. J. Fowler
M. R. Gorman
D. H. Hodgkinson
L. E. Hunt
D. L. Keeler
B. M. Linnemann
N. L. Newhouse
D. J. Painter
G. Ramirez
J. R. Richter
B. F. Shelley
F. W. Van Name
D. O. Yancey, Jr.
P. H. Ziehl

COMMITTEE ON NUCLEAR INSERVICE INSPECTION (BPV XI)

G. C. Park, *Chair*
R. W. Swayne, *Vice Chair*
R. A. Yonekawa, *Vice Chair*
R. L. Crane, *Staff Secretary*
J. M. Agold
V. L. Armentrout
W. H. Bamford
T. L. Chan
R. C. Cipolla
D. D. Davis
G. H. DeBoo
R. L. Dyle
E. V. Farrell, Jr.
E. L. Farrow
E. B. Gerlach
R. E. Gimple
T. J. Griesbach
K. Hasegawa
D. O. Henry
R. D. Kerr
S. D. Kulat
G. L. Lagleder
D. W. Lamond
G. A. Lofthus
J. E. O'Sullivan
R. K. Rhyne
D. A. Scarth
F. J. Schaaf, Jr.
J. C. Spanner, Jr.
G. L. Stevens
D. E. Waskey
J. G. Weicks
C. J. Wirtz
T. Yuhara
H. D. Chung, *Delegate*
C. Ye, *Delegate*
R. A. West, *Contributing Member*
J. Hakii, *Alternate*
J. T. Lindberg, *Alternate*
W. E. Norris, *Alternate*
C. D. Cowfer, *Honorary Member*
F. E. Gregor, *Honorary Member*
O. F. Hedden, *Honorary Member*
P. C. Riccardella, *Honorary Member*

Executive Committee (BPV XI)

R. A. Yonekawa, *Chair*
G. C. Park, *Vice Chair*
R. L. Crane, *Staff Secretary*
W. H. Bamford
R. L. Dyle
M. J. Ferlisi
E. B. Gerlach
R. E. Gimple
S. D. Kulat
J. T. Lindberg
W. E. Norris
R. K. Rhyne
J. C. Spanner, Jr.
G. L. Stevens
R. W. Swayne

Subgroup on Evaluation Standards (SG-ES) (BPV XI)

W. H. Bamford, *Chair*
G. L. Stevens, *Secretary*
H. D. Chung
R. C. Cipolla
G. H. DeBoo
R. L. Dyle
B. R. Ganta
T. J. Griesbach
K. Hasegawa
K. Hojo
D. N. Hopkins
K. Koyama
D. R. Lee
R. O. McGill
H. S. Mehta
M. A. Mitchell
K. Miyazaki
R. Pace
S. Ranganath
D. A. Scarth
T. V. Vo
K. R. Wichman
S. X. Xu

Working Group on Flaw Evaluation (SG-ES) (BPV XI)

R. C. Cipolla, *Chair*
S. X. Xu, *Secretary*
W. H. Bamford
B. Bezensek
H. D. Chung
G. H. DeBoo
B. R. Ganta
R. G. Gilada
H. L. Gustin
F. D. Hayes
P. H. Hoang
K. Hojo
D. N. Hopkins
K. Koyama
D. R. Lee
H. S. Mehta
G. A. Miessi
K. Miyazaki
R. K. Qashu
S. Ranganath
H. Rathbun
P. J. Rush
D. A. Scarth
W. L. Server
N. J. Shah
T. V. Vo
K. R. Wichman
G. M. Wilkowski
D. L. Rudland, *Alternate*

Provided by IHS under license with ASME
No reproduction or networking permitted without license from IHS
Licensee=Chevron Phillips Chemical Co LP/5956674001
Not for Resale, 11/09/2014 20:41:36 MST

Working Group on Operating Plant Criteria (SG-ES) (BPV XI)

T. J. Griesbach, *Chair*
D. V. Sommerville, *Secretary*
W. H. Bamford
H. Behnke
T. L. Dickson
R. L. Dyle
S. R. Gosselin
M. Hayashi
H. S. Mehta
M. A. Mitchell
R. Pace
N. A. Palm
S. Ranganath
W. L. Server
D. P. Weakland
T. Hardin, *Alternate*

Working Group on Pipe Flaw Evaluation (SG-ES) (BPV XI)

D. A. Scarth, *Chair*
G. M. Wilkowski, *Secretary*
T. A. Bacon
W. H. Bamford
B. Bezensek
H. D. Chung
R. C. Cipolla
N. G. Cofie
J. M. Davis
G. H. DeBoo
B. R. Ganta
L. F. Goyette
K. Hasegawa
P. H. Hoang
K. Hojo
D. N. Hopkins
E. J. Houston
K. Kashima
R. O. McGill
H. S. Mehta
G. A. A. Miessi
K. Miyazaki
D. L. Rudland
P. J. Rush
D.-J. Shim
T. V. Vo
B. Wasiluk
S. X. Xu
H. Rathbun, *Alternate*

Subgroup on Nondestructive Examination (SG-NDE) (BPV XI)

J. C. Spanner, Jr., *Chair*
G. A. Lofthus, *Secretary*
T. L. Chan
C. B. Cheezem
D. R. Cordes
F. E. Dohmen
M. E. Gothard
D. O. Henry
J. T. Lindberg
T. R. Lupold
G. R. Perkins
S. A. Sabo
F. J. Schaaf, Jr.
R. V. Swain
G. Tang
C. J. Wirtz

Working Group on Personnel Qualification and Surface Visual and Eddy Current Examination (SG-NDE) (BPV XI)

J. T. Lindberg, *Chair*
D. R. Cordes, *Secretary*
S. E. Cumblidge
N. Farenbaugh
D. O. Henry
J. W. Houf
J. C. Spanner, Jr.
J. T. Timm
M. C. Weatherly
M. L. Whytsell
C. J. Wirtz

Working Group on Procedure Qualification and Volumetric Examination (SG-NDE) (BPV XI)

G. A. Lofthus, *Chair*
G. R. Perkins, *Secretary*
M. T. Anderson
M. Briley
C. B. Cheezem
A. D. Chockie
M. Dennis
S. R. Doctor
F. E. Dohmen
M. E. Gothard
K. J. Hacker
D. B. King
D. A. Kull
C. A. Nove
S. A. Sabo
R. V. Swain
B. A. Thigpen
S. J. Todd
D. K. Zimmerman

Subgroup on Repair/Replacement Activities (SG-RRA) (BPV XI)

E. B. Gerlach, *Chair*
E. V. Farrell, Jr., *Secretary*
S. B. Brown
R. E. Cantrell
G. G. Elder
P. D. Fisher
J. M. Gamber
R. E. Gimple
D. R. Graham
R. A. Hermann
K. J. Karwoski
R. D. Kerr
S. L. McCracken
B. R. Newton
J. E. O'Sullivan
R. R. Stevenson
R. W. Swayne
D. L. Tilly
D. E. Waskey
J. G. Weicks
R. A. Yonekawa
E. G. Reichelt, *Alternate*

Working Group on Welding and Special Repair Processes (SG-RRA) (BPV XI)

D. E. Waskey, *Chair*
D. J. Tilly, *Secretary*
R. E. Cantrell
S. J. Findlan
P. D. Fisher
M. L. Hall
R. A. Hermann
K. J. Karwoski
C. C. Kim
M. Lau
S. L. McCracken
D. B. Meredith
B. R. Newton
J. E. O'Sullivan
R. E. Smith
J. G. Weicks

Working Group on Nonmetals Repair/Replacement Activities (SG-RRA) (BPV XI)

J. E. O'Sullivan, *Chair*
S. Schuessler, *Secretary*
E. W. McElroy
T. M. Musto
B. B. Raji
E. G. Reichelt
F. J. Schaaf, Jr.
Z. J. Zhou

Task Group on Repair by Carbon Fiber Composites (WGN-MRR) (BPV XI)

J. E. O'Sullivan, *Chair*
M. Golliet
E. W. McElroy
B. B. Raji
F. J. Schaaf, Jr.

Working Group on Design and Programs (SG-RRA) (BPV XI)

G. G. Elder, *Chair*
S. B. Brown, *Secretary*
O. Bhatty
R. Clow
J. W. Collins
R. R. Croft
E. V. Farrell, Jr.
S. K. Fisher
J. M. Gamber
E. B. Gerlach
D. R. Graham
G. F. Harttraft
T. E. Hiss
H. Malikowski
M. A. Pyne
R. R. Stevenson
R. W. Swayne
R. A. Yonekawa

Subgroup on Water-Cooled Systems (SG-WCS) (BPV XI)

S. D. Kulat, *Chair*
N. A. Palm, *Secretary*
J. M. Agold
V. L. Armentrout
J. M. Boughman
S. T. Chesworth
D. D. Davis
H. Q. Do
E. L. Farrow
M. J. Ferlisi
P. J. Hennessey
D. W. Lamond
A. McNeill III
T. Nomura
W. E. Norris
G. C. Park
J. E. Staffiera
H. M. Stephens, Jr.
R. Turner
H. L. Graves III, *Alternate*

Provided by IHS under license with ASME
No reproduction or networking permitted without license from IHS
Licensee=Chevron Phillips Chemical Co LP/5956674001
Not for Resale, 11/09/2014 20:41:36 MST

Task Group on High Strength Nickel Alloys Issues (SG-WCS) (BPV XI)

V. L. Armentrout, *Chair*
B. L. Montgomery, *Secretary*
W. H. Bamford
P. R. Donavin
R. L. Dyle
G. G. Elder
R. E. Gimple
R. Hardies
K. Koyama
M. Lashley
G. C. Park
J. M. Shuping
J. C. Spanner, Jr.
K. B. Stuckey
E. J. Sullivan, Jr.
D. P. Weakland

Working Group on Containment (SG-WCS) (BPV XI)

J. E. Staffiera, *Chair*
H. M. Stephens, Jr., *Secretary*
P. S. Ghosal
D. H. Goche
H. L. Graves III
H. T. Hill
R. D. Hough
C. N. Krishnaswamy
D. J. Naus
F. Poteet III
A. A. Reyes-Cruz
E. A. Rodriguez
G. Thomas
S. G. Brown, *Alternate*
W. E. Norris, *Alternate*

Working Group on Inspection of Systems and Components (SG-WCS) (BPV XI)

J. M. Agold, *Chair*
H. Q. Do, *Secretary*
V. L. Armentrout
C. Cueto-Felgueroso
R. E. Day
M. J. Ferlisi
R. Fougerousse
K. W. Hall
K. M. Hoffman
S. D. Kulat
T. Nomura
J. C. Nygaard
R. Rishel
C. M. Ross

Working Group on Pressure Testing (SG-WCS) (BPV XI)

D. W. Lamond, *Chair*
J. M. Boughman, *Secretary*
Y.-K. Chung
T. Coste
J. A. Doughty
R. E. Hall
T. R. Lupold
J. K. McClanahan
B. L. Montgomery
S. A. Norman
P. N. Passalugo
J. A. Stevenson

Task Group on Buried Components Inspection and Testing (WG-PT) (BPV XI)

D. W. Lamond, *Chair*
J. M. Boughman, *Secretary*
C. Blackwelder
B. Clark III
G. C. Coker
R. E. Day
R. Hardies
T. Ivy
A. Lee
E. J. Maloney
M. Moenssens
J. Ossmann
P. N. Passalugo
J. H. Riley
D. M. Swann

Working Group on Risk-Informed Activities (SGW-CS) (BPV XI)

M. A. Pyne, *Chair*
S. T. Chesworth, *Secretary*
J. M. Agold
C. Cueto-Felgueroso
H. Q. Do
R. Fougerousse
M. R. Graybeal
R. Haessler
J. Hakii
K. W. Hall
S. D. Kulat
D. W. Lamond
R. K. Mattu
A. McNeill III
P. J. O'Regan
N. A. Palm
D. Vetter
J. C. Younger

Special Working Group on Editing and Review (BPV XI)

R. W. Swayne, *Chair*
C. E. Moyer
K. R. Rao
J. E. Staffiera
D. J. Tilly
C. J. Wirtz

Special Working Group on Nuclear Plant Aging Management (BPV XI)

T. A. Meyer, *Chair*
B. R. Snyder, *Secretary*
S. Asada
D. V. Burgess
Y.-K. Chung
D. D. Davis
R. L. Dyle
A. L. Hiser , Jr.
A. B. Meichler
R. E. Nickell
K. Sakamoto
W. L. Server
R. L. Turner
G. G. Young
Z. Zhong
C. E. Carpenter, *Alternate*

Working Group on General Requirements (BPV XI)

R. K. Rhyne, *Chair*
E. J. Maloney, *Secretary*
T. L. Chan
E. L. Farrow
R. Fox
P. J. Hennessey
K. M. Herman
R. K. Mattu
C. E. Moyer
D. J. Potter
R. L. Williams

Special Working Group on Reliability and Integrity Management Program (BPV XI)

F. J. Schaaf, Jr., *Chair*
M. A. Lockwood, *Secretary*
N. Broom
S. R. Doctor
J. Fletcher
M. R. Graybeal
J. Grimm
A. B. Hull
D. R. Lee
R. K. Miller
P. M. Mills
M. N. Mitchell
A. T. Roberts III
T. Roney
R. W. Swayne

COMMITTEE ON TRANSPORT TANKS (BPV XII)

M. D. Rana, *Chair*
N. J. Paulick, *Vice Chair*
T. Schellens, *Staff Secretary*
A. N. Antoniou
J. A. Byers
W. L. Garfield
C. H. Hochman
G. G. Karcher
J. R. McGimpsey
M. Pitts
T. A. Rogers
A. Selz
S. Staniszewski
A. P. Varghese
M. R. Ward
M. D. Pham, *Contributing Member*

Subgroup on Design and Materials (BPV XII)

A. P. Varghese, *Chair*
R. C. Sallash, *Secretary*
D. K. Chandiramani
P. Chilukuri
T. Hitchcock
G. G. Karcher
T. P. Lokey
S. L. McWilliams
N. J. Paulick
M. D. Rana
T. A. Rogers
A. Selz
M. R. Ward
K. Xu
J. Zheng, *Corresponding Member*
M. D. Pham, *Contributing Member*

--`,,,`,,`,,```,,,,`,`,`,,`,`,,`,,```-`-`,,`,,`,`,`,,`---

Provided by IHS under license with ASME

No reproduction or networking permitted without license from IHS

Licensee=Chevron Phillips Chemical Co LP/5956674001
Not for Resale, 11/09/2014 20:41:36 MST

Subgroup on Fabrication, Inspection, and Continued Service (BPV XII)

M. Pitts, *Chair*
P. Chilukuri, *Secretary*
S. E. Benet
J. A. Byers
W. L. Garfield
T. P. Lokey
K. Mansker
J. R. McGimpsey
A. S. Olivares
R. C. Sallash
S. Staniszewski
L. H. Strouse, *Contributing Member*

Subgroup on General Requirements (BPV XII)

W. L. Garfield, *Chair*
S. E. Benet, *Secretary*
T. W. Alexander
A. N. Antoniou
J. L. Freiler
C. H. Hochman
J. R. McGimpsey
M. Pitts
T. Rummel
R. C. Sallash
S. Staniszewski
K. L. Gilmore, *Contributing Member*
L. H. Strouse, *Contributing Member*

Subgroup on Nonmandatory Appendices (BPV XII)

T. A. Rogers, *Chair*
S. Staniszewski, *Secretary*
S. E. Benet
P. Chilukuri
R. Hayworth
K. Mansker
S. L. McWilliams
N. J. Paulick
M. Pitts
R. C. Sallash
D. G. Shelton
M. R. Ward
D. D. Brusewitz, *Contributing Member*
J. L. Conley, *Contributing Member*
T. Eubanks, *Contributing Member*
T. Hitchcock, *Contributing Member*
A. Selz, *Contributing Member*
A. P. Varghese, *Contributing Member*

COMMITTEE ON BOILER AND PRESSURE VESSEL CONFORMITY ASSESSMENT (CBPVCA)

P. D. Edwards, *Chair*
K. I. Baron, *Staff Secretary*
S. W. Cameron
M. A. DeVries
T. E. Hansen
D. J. Jenkins
K. T. Lau
L. E. McDonald
K. M. McTague
D. Miller
B. R. Morelock
J. D. O'Leary
T. M. Parks
B. C. Turczynski
D. E. Tuttle
E. A. Whittle
R. V. Wielgoszinski
S. F. Harrison, Jr., *Contributing Member*
V. Bogosian, *Alternate*
D. C. Cook, *Alternate*
D. W. King, *Alternate*
B. L. Krasiun, *Alternate*
W. C. LaRochelle, *Alternate*
P. F. Martin, *Alternate*
K. McPhie, *Alternate*
M. R. Minick, *Alternate*
I. Powell, *Alternate*
R. Pulliam, *Alternate*
M. T. Roby, *Alternate*
J. A. West, *Alternate*
A. J. Spencer, *Honorary Member*

COMMITTEE ON NUCLEAR CERTIFICATION (CNC)

W. C. LaRochelle, *Chair*
R. R. Stevenson, *Vice Chair*
E. Suarez, *Staff Secretary*
J. DeKleine
G. Gobbi
S. M. Goodwin
J. W. Highlands
K. A. Huber
J. C. Krane
R. P. McIntyre
M. R. Minick
L. M. Plante
H. B. Prasse
T. E. Quaka
C. T. Smith
D. M. Vickery
C. S. Withers
S. Yang
M. F. Sullivan, *Contributing Member*
S. Andrews, *Alternate*
V. Bogosian, *Alternate*
P. D. Edwards, *Alternate*
D. P. Gobbi, *Alternate*
K. M. Hottle, *Alternate*
K. A. Kavanagh, *Alternate*
B. G. Kovarik, *Alternate*
M. A. Lockwood, *Alternate*
R. J. Luymes, *Alternate*
J. Oyler, *Alternate*
M. Paris, *Alternate*
D. W. Stepp, *Alternate*
A. Torosyan, *Alternate*
E. A. Whittle, *Alternate*
H. L. Wiger, *Alternate*

COMMITTEE ON SAFETY VALVE REQUIREMENTS (BPV-SVR)

J. A. West, *Chair*
D. B. DeMichael, *Vice Chair*
C. E. O'Brien, *Staff Secretary*
J. F. Ball
S. Cammeresi
J. A. Cox
R. D. Danzy
R. J. Doelling
J. P. Glaspie
S. F. Harrison, Jr.
W. F. Hart
D. Miller
T. Patel
Z. Wang

Subgroup on Design (BPV-SVR)

R. D. Danzy, *Chair*
C. E. Beair
J. A. Conley
R. J. Doelling
D. Miller
T. Patel
J. A. West

Subgroup on General Requirements (BPV-SVR)

D. B. DeMichael, *Chair*
J. F. Ball
G. Brazier
J. Burgess
S. T. French
J. P. Glaspie
J. W. Richardson
D. E. Tuttle

Subgroup on Testing (BPV-SVR)

J. A. Cox, *Chair*
J. E. Britt
S. Cammeresi
J. W. Dickson
G. D. Goodson
W. F. Hart
B. K. Nutter
C. Sharpe
Z. Wang
A. Wilson

U.S. Technical Advisory Group ISO/TC 185 Safety Relief Valves

T. J. Bevilacqua, *Chair*
C. E. O'Brien, *Staff Secretary*
J. F. Ball
G. Brazier
D. B. DeMichael
D. Miller
B. K. Nutter
J. A. West

Provided by IHS under license with ASME
No reproduction or networking permitted without license from IHS
Licensee=Chevron Phillips Chemical Co LP/5956674001
Not for Resale, 11/09/2014 20:41:36 MST

SUMMARY OF CHANGES

The 2013 Edition of this Code contains revisions in addition to the 2010 Edition with 2011 Addenda.

After publication of the 2013 Edition, Errata to the BPV Code may be posted on the ASME Web site to provide corrections to incorrectly published items, or to correct typographical or grammatical errors in the BPV Code. Such Errata shall be used on the date posted.

Information regarding Special Notices and Errata is published on the ASME Web site under the BPVC Resources page at http://www.asme.org/kb/standards/publications/bpvc-resources.

Changes given below are identified on the pages by a margin note, **(13)**, placed next to the affected area.

The Record Numbers listed below are explained in more detail in "List of Changes in Record Number Order" following this Summary of Changes.

Page	*Location*	*Change (Record Number)*
xxv	List of Sections	Revised *(12-749)*
xxvii	Foreword	Revised in its entirety *(09-760)*
xxx	Submittal of Technical Inquiries to the Boiler and Pressure Vessel Standards Committees	Revised *(12-1641)*
xxxii	Personnel	Updated
lx	Cross-Referencing and Stylistic Changes in the Boiler and Pressure Vessel Code	Added
1	U-1	Subparagraph(c)(2)(-d) revised *(12-526)*
3	U-2	Subparagraph (a) revised *(06-788)*
4	U-3	First sentence of subpara. (a) revised *(09-1148)*
5	Table U-3	Revised *(11-1240)*
8	UG-6	Subparagraph (c) added *(12-2051)*
10	UG-11	Subparagraphs (a) and (c)(5) revised *(11-253, 11-987, 12-370)*
13	UG-16	Subparagraph (f) added *(12-904)*
14	UG-20	Subparagraph (f)(2) revised *(11-2185)*
18	UG-27	In subpara. (c)(2), endnote 20 revised *(12-904)*
19	UG-28(c)	In subpara. (1), last sentence of Step 8 deleted *(12-904)*
21	Figure UG-28.1	Note (1) revised *(11-442)*
22	UG-28(d)	Last sentence of Step 6 deleted *(12-904)*
22	UG-29	In subpara. (a), last sentence of Step 8 deleted *(12-904)*
24	UG-30	Last sentence of subpara. (e) deleted *(12-904)*
28	UG-32	*(1)* In subpara. (a), endnote 23 revised *(12-904)* *(2)* In subpara. (e), second paragraph revised *(11-1898)*

--`,,,`-`-`,,`,,`,`,,`---
Provided by IHS under license with ASME
No reproduction or networking permitted without license from IHS
Licensee=Chevron Phillips Chemical Co LP/5956674001
Not for Resale, 11/09/2014 20:41:36 MST

Page	*Location*	*Change (Record Number)*
29	UG-33	*(1)* In subparas. (c) and (e); subpara. (d), Step 2; and subpara. (f)(1), Step 8, last sentence deleted *(12-904)* *(2)* Subparagraph (f) revised *(11-442)*
36	UG-35.2	Subparagraphs (c)(1) and (e) revised *(06-788)*
37	"Openings and Reinforcements"	In-text Note deleted *(12-904)*
41	UG-37(g)	Revised *(08-1428)*
48	UG-41	In subparas. (b)(1) and (b)(2), references to L-7 examples deleted *(12-904)*
54	UG-47	Subparagraph (f) revised *(10-288)*
61	UG-79	*(1)* Title and subpara. (a) revised *(12-237)* *(2)* Subparagraph (d) added *(10-631)*
61	Table UG-79-1	Added *(12-237)*
61	UG-80(b)	Subparagraph (10) deleted *(12-904)*
68	Figure UG-84.5	Added *(00-211)*
68	Table UG-84.6	Added *(00-211)*
68	UG-84(f)(2)	Revised *(11-83)*
69	UG-84(g)(2)	Revised *(00-211)*
69	UG-84(h)	*(1)* Subparagraph (3) revised *(00-211)* *(2)* Subparagraph (4) corrected by errata *(11-2242)*
70	UG-84(i)(3)(-a)(-1)	Revised *(11-2183)*
75	UG-99(k)	Revised *(04-349)*
75	UG-100	Subparagraphs (d) and (e) revised *(04-349, 07-260)*
76	UG-101	Subparagraph (a)(1)(-a) corrected by errata *(11-1680)*
81	UG-116	*(1)* Subparagraph (a)(3) revised *(07-225)* *(2)* Subparagraph (a)(4) deleted, and subsequent subparagraphs renumbered *(07-225)*
81	Figure UG-116	Certification Mark corrected by errata *(11-1676)*
83	UG-117	Subparagraphs (a), (a)(2)(-c), and (a)(3) revised *(11-1398, 12-735)*
85	UG-118	Revised in its entirety *(11-861)*
86	Figure UG-118	*(1)* Certification Mark corrected by errata *(11-1676)* *(2)* General Note revised *(07-225)* *(3)* Note (2) added *(07-225)*
86	UG-120	Subparagraph (a)(4) revised *(12-735)*
88	UG-125	Subparagraph (a) revised *(12-1132)*
89	UG-126	Subparagraph (c) revised *(08-488)*
91	UG-129	Subparagraphs (a), (a)(7), (d), (e), (e)(8), (e)(9), (e)(10), (f), and (f)(9) revised *(09-2013, 12-401)*
92	Figure UG-129.1	Corrected by errata *(11-1676)*
92	Figure UG-129.2	Corrected by errata *(11-1676)*

Provided by IHS under license with ASME
No reproduction or networking permitted without license from IHS
Licensee=Chevron Phillips Chemical Co LP/5956674001
Not for Resale, 11/09/2014 20:41:36 MST

Page	*Location*	*Change (Record Number)*
96	UG-131(e)(7)	Revised *(08-487)*
101	UG-136(b)	In-text Note following subpara. (2) revised *(06-788)*
107	UG-140	Subparagraph (b)(2) revised *(12-403)*
109	UW-2	*(1)* Subparagraphs (a)(1)(-a), (b)(1), (b)(4)(-a), and (b)(4)(-b) revised *(04-1635, 10-1702)* *(2)* Last sentence of subpara. (a)(2) deleted *(04-1635)*
110	UW-3	Subparagraph (b) corrected by errata *(12-1736)*
112	UW-6	Added *(04-690)*
125	Figure UW-16.1	Sketch (a-4) added *(11-06)*
131	UW-16(f)(4)	Corrected by errata *(13-130)*
135	UW-19	Subparagraphs (a)(2), (c), and (c)(2) revised *(09-279, 10-288)*
139	Figure UW-21	*(1)* Label for sketches (1), (2), and (3) revised *(10-1796)* *(2)* Sketch (1) corrected by errata *(11-1680)*
140	UW-27	Subparagraph (a)(3) revised *(09-991)*
141	UW-34	First sentence revised *(11-475)*
142	UW-35	SI Units in in-text table of subpara. (d) revised *(11-471)*
145	UW-40(f)(5)(-h)	Added *(04-1628)*
146	UW-51	Subparagraph (a)(4) revised *(11-1158)*
146	UW-52	Subparagraph (c) corrected by errata *(11-733)*
164	Table UCS-23	*(1)* Revised *(08-1609, 08-1790, 09-299, 09-739, 10-286, 11-877, 12-482)* *(2)* "Type/Grade" entry for SA/EN 10028-2 corrected by errata *(11-1680)*
164	UCS-28	Subparagraph (b) deleted, and subpara. (c) redesignated *(12-904)*
165	UCS-29	Last sentence deleted *(12-904)*
165	UCS-33	Last sentence deleted *(12-904)*
165	UCS-56	*(1)* Subparagraph (f)(4)(-a) corrected by errata *(13-130)* *(2)* Subparagraph (g) added *(07-563)*
170	Table UCS-56-4	General Notes revised *(07-563)*
175	Table UCS-56-11	General Notes revised *(07-563)*
176	UCS-66	Subparagraph (a) revised *(11-1244)*
177	Figure UCS-66	*(1)* Revised *(11-1244)* *(2)* In Note (3), SA-533 Grade E added *(12-482)* *(3)* In Notes (2)(a) and (4), Grades for SA/EN 10028-2 corrected by errata *(11-1680)*
180	Figure UCS-66M	*(1)* Revised *(11-1244)* *(2)* In Note (3), SA-533 Grade E added *(12-482)* *(3)* In Notes (2)(a) and (4), Grades for SA/EN 10028-2 corrected by errata *(11-1680)*

Provided by IHS under license with ASME
No reproduction or networking permitted without license from IHS
Licensee=Chevron Phillips Chemical Co LP/5956674001
Not for Resale, 11/09/2014 20:41:36 MST

Page	*Location*	*Change (Record Number)*
185	Figure UCS-66.1	Cross-references in Figure nomenclature revised *(11-1245)*
186	Figure UCS-66.1M	Cross-references in Figure nomenclature revised *(11-1245)*
191	UCS-68	Subparagraph (c) revised *(01-193, 09-1229)*
192	UCS-79	*(1)* Title and subparas. (d) and (d)(5) revised *(09-819)* *(2)* Subparagraphs (e) and (f) added *(09-819)*
193	Table UCS-79-1	Added *(09-819)*
194	UCS-160	In-text Note added following subpara. (b) *(12-974)*
198	Table UNF-23.3	Revised *(08-1609)*
199	UNF-28	Revised *(12-904)*
199	UNF-33	Last sentence deleted *(12-904)*
199	Table UNF-23.4	*(1)* Revised *(08-1609)* *(2)* Entry for SB-367 inserted by errata *(11-1513)*
199	UNF-56(e)	Subparagraph (1) revised *(06-788)*
201	UNF-79	Subparagraph (a)(2) revised *(12-237)*
202	Table UNF-79	Entry for UNS N06230 added *(09-1440)*
206	UHA-28	Revised *(12-904)*
206	UHA-29	Last sentence deleted *(12-904)*
206	UHA-31	Last sentence deleted *(12-904)*
207	Table UHA-23	Revised *(03-1421, 07-695, 08-1609, 11-678)*
209	Table UHA-32-1	*(1)* Cross-reference for "Minimum Holding Time at Normal Temperature for Nominal Thickness" corrected by errata *(11-2242)* *(2)* General Note (a) revised *(12-1547)*
211	Table UHA-32-4	Table in General Note revised *(07-695, 11-678, 12-1306)*
212	UHA-44	Subparagraph (a)(2) revised *(12-237)*
214	UHA-51	*(1)* First paragraph and subparas. (a)(1), (a)(4)(-a), (a)(4)(-b), (b), (d), and (h)(2) revised *(09-1920, 10-1702, 12-83)* *(2)* Subparagraph (a)(4)(-c) added *(10-1702)* *(3)* Subparagraph (d)(1)(-a) deleted, and subparas. (d)(1)(-b) through (d)(1)(-d) redesignated *(10-1702)*
215	Figure UHA-51-1	Redesignated from Figure ULT-82 *(12-83)*
220	UCI-28	Revised *(12-904)*
222	UCI-99	Revised *(04-349)*
225	UCL-34	Last sentence of subpara. (a) deleted *(04-1628)*
228	UCD-28	Revised *(12-904)*
230	UCD-99	Revised *(04-349)*
237	UHT-27	Revised *(12-904)*
238	Table UHT-56	Note (1) revised *(04-1330)*
239	UHT-79	Title and subpara. (a)(1) revised *(12-237)*

Provided by IHS under license with ASME
No reproduction or networking permitted without license from IHS
Licensee=Chevron Phillips Chemical Co LP/5956674001
Not for Resale, 11/09/2014 20:41:36 MST

Page	*Location*	*Change (Record Number)*
240	UHT-82	Revised *(04-1330)*
248	Figure ULW-17.2	Sketch (a) corrected by errata *(13-958)*
267	ULT-28	Revised *(12-904)*
267	ULT-30	First line of subpara. (a) revised *(12-83)*
271	Table ULT-82	"Thickness, in." entries for SB-209, SB-221, and SB-241 revised *(09-10)*
272	Table ULT-82M	"Thickness, mm" entries for SB-209, SB-221, and SB-241 revised *(09-10)*
272	Figure ULT-82	Moved from Part ULT to Part UHA and redesignated as Figure UHA-51-1 *(12-83)*
274	UHX-4	*(1)* Subparagraph (b) deleted, and subsequent subparagraphs redesignated *(12-532)* *(2)* In-text Note added *(12-532)*
276	UHX-9	Revised *(11-1186)*
277	UHX-10	Revised *(06-886, 09-2162, 11-1186)*
284	UHX-12.3	Revised *(06-886, 11-1186)*
284	UHX-12.4	Revised *(06-886, 12-532)*
288	UHX-12.5.9	Revised *(08-1524)*
290	UHX-13.3	Revised *(06-886, 11-1186)*
295	UHX-13.4	Revised *(06-886, 12-532)*
297	UHX-13.5.1	Revised *(06-886)*
299	UHX-13.5.5	Subparagraph (a) revised *(06-886)*
299	UHX-13.5.7	Subparagraph (b) revised *(06-886)*
300	UHX-13.5.8	Revised *(08-1524)*
300	UHX-13.5.9	Subparagraph (a)(2) revised *(06-886)*
301	UHX-13.5.10	Subparagraph (a) revised *(06-886)*
301	UHX-13.5.11	Subparagraph (c) revised *(06-886)*
302	UHX-13.7.1	Second paragraph revised *(06-886)*
302	UHX-13.7.2	Subparagraph (b) revised *(06-886)*
303	UHX-13.7.3	First paragraph and subparas. (c) and (g) revised *(06-886)*
303	UHX-13.8.1	Subparagraph (c) revised *(06-886)*
303	UHX-13.8.3	Revised *(06-886)*
303	UHX-13.8.4	First paragraph revised, and second paragraph added *(06-886)*
304	Table UHX-13.8.4-1	Added *(06-886)*
305	UHX-13.9.3	First paragraph and subpara. (d) revised *(06-886)*
305	UHX-14.3	Revised *(06-886, 11-1186)*
308	UHX-14.4	Revised *(06-886, 12-532)*
310	Table UHX-14.4-1	Added *(06-886)*

Provided by IHS under license with ASME
No reproduction or networking permitted without license from IHS
Licensee=Chevron Phillips Chemical Co LP/5956674001
Not for Resale, 11/09/2014 20:41:36 MST

Page	*Location*	*Change (Record Number)*
310	UHX-14.5.1	Revised *(06-886)*
312	UHX-14.5.7	Subparagraph (b) revised *(06-886)*
312	UHX-14.5.8	Revised *(08-1524)*
312	UHX-14.5.9	Subparagraph (a)(2) revised *(06-886)*
313	UHX-14.5.10	Revised *(06-886)*
314	UHX-14.6.1	Subparagraph (c) revised *(06-886)*
314	UHX-14.6.3	Revised *(06-886)*
314	UHX-14.6.4	First paragraph revised, and second paragraph added *(06-886)*
315	Table UHX-14.6.4-1	Added *(06-886)*
315	UHX-14.7.3	Subparagraph (d) revised *(06-886)*
317	UHX-19.2	Revised *(11-754)*
318	UHX-19.2.2	Revised *(11-754)*
318	UHX-19.3	Revised *(11-754)*
318	UHX-20	Revised in its entirety *(12-904)*
352	1-4	*(1)* Examples 1 and 2 in subpara. (c) deleted *(12-904)* *(2)* Subparagraph (d) deleted, and subsequent subparagraphs redesignated *(12-904)* *(3)* Endnote 90 revised *(11-1898)*
355	1-5	Subparagraphs (a), (c), (d), and (e) revised *(10-1212)*
358	Figure 1-6	Sketch (d) corrected by errata *(11-1680)*
360	1-7	Subparagraphs (b)(1)(-a), (b)(1)(-b), (b)(3), and (b)(5) revised *(11-11)*
361	1-8	Title and subparas. (b) and (c) revised *(10-1212)*
377	Figure 2-4	Sketch (1) editorially revised *(08-1641)*
392	2-12	Subparagraph (a)(1) revised *(12-1282)*
395	2-14	Subparagraph (d) revised *(08-970)*
396	3-2	*(1)* Definition for *construction* added *(09-1148)* *(2)* Definition for *Material Test Report* revised *(11-601)*
414	7-4	Subparagraph (d) revised *(06-788)*
420	9-5(c)	Subparagraph (5) revised *(10-871)*
421	Figure 9-5	Sketch (b-1) corrected by errata *(12-1286)*
428	10-13	Subparagraph (b)(7) revised *(10-1250)*
445	13-7	Subparagraphs (a)(4), (b)(4), and (c)(4) deleted *(12-904)*
447	13-8	*(1)* Equations (e)(2)(5) through (e)(2)(8) corrected by errata *(12-1286)* *(2)* In subparas. (e)(3) and (f)(3), last sentence deleted *(12-904)*
455	13-10	Subparagraph (d) deleted *(12-904)*
455	13-11	Subparagraph (e)(4) deleted *(12-904)*
456	13-12	Subparagraph (d) deleted *(12-904)*

Provided by IHS under license with ASME
No reproduction or networking permitted without license from IHS
Licensee=Chevron Phillips Chemical Co LP/5956674001
Not for Resale, 11/09/2014 20:41:36 MST

Page	*Location*	*Change (Record Number)*
457	13-13	Subparagraphs (b)(4) and (c)(4) deleted *(12-904)*
461	13-17	Revised in its entirety *(12-904)*
466	Figure 14-2	Deleted *(12-904)*
467	14-5	Deleted *(12-904)*
468	Figure 14-3	Deleted *(12-904)*
469	Mandatory Appendix 16	Deleted *(12-911)*
472	17-5	Subparagraph (a)(2) revised *(09-279)*
494	24-4	Equation (d)(6) revised *(12-1551)*
498	26-2	Subparagraph (g) added *(12-891, 12-1834)*
498	26-3	Revised *(11-755, 12-890)*
499	Figure 26-1-1	*(1)* Redesignated from Figure 26-1 *(12-1834)* *(2)* Sketches (b) and (c) revised *(11-755, 12-890)*
500	Figure 26-1-2	Added *(12-1834)*
502	Figure 26-2	Editorially renumbered from previous Figure 26-3
502	26-4.1	Subparagraph (f) revised *(11-755)*
502	26-4.2	Subparagraphs (a) and (b) redesignated as 26-4.2.1 and 26-4.2.2, respectively *(11-755)*
503	26-6.2	Subparagraphs (b) and (c) revised *(11-755, 12-1834)*
504	Figure 26-3	Editorially renumbered from previous Figure 26-2
504	26-6.3.3(d)	Revised *(11-755)*
507	26-6.6.3.2	Subparagraph (b) revised *(11-755)*
508	26-7.2	Subparagraphs (b) and (c) revised *(11-755, 12-1834)*
508	26-7.3	Equations in 26-7.3.1, 26-7.3.2, and 26-7.3.3(b), 26-7.3.3(c), and 26-7.3.3(d) revised *(11-755)*
510	26-7.6.1	Equations in subparagraphs (a) and (b) revised *(11-755)*
510	26-7.6.3.2	Subparagraph (b) revised *(11-755)*
511	26-7.7	Equation revised *(11-755)*
511	26-8.1	Revised *(12-890)*
511	26-8.2	Revised in its entirety *(12-890)*
511	26-8.3	*(1)* Paragraphs 26-8.3.1 and 26-8.3.2 revised *(11-755, 12-890)* *(2)* Paragraph 26-8.3.4 added *(11-755)*
513	26-8.6.3.2	Subparagraph (b) revised *(11-755)*
515	26-10	Subparagraphs (d) and (e) added *(09-1452)*
516	Table 26-10-1	Added *(09-1452)*
517	26-12.1	Revised *(12-650)*
518	26-14	Revised in its entirety *(12-904)*
519	Figure 26-14	Added *(09-1452)*
525	28-2	Subparagraph (b)(6) revised *(05-458)*

Provided by IHS under license with ASME
No reproduction or networking permitted without license from IHS
Licensee=Chevron Phillips Chemical Co LP/5956674001
Not for Resale, 11/09/2014 20:41:36 MST

Page	*Location*	*Change (Record Number)*
538	34-2	In first and second paragraphs, "1150°C" revised to "1170°C" *(12-661)*
542	35-7	Added *(11-860)*
561	Mandatory Appendix 43	Added *(09-1148)*
562	Mandatory Appendix 44	Added *(10-2041)*
581	Nonmandatory Appendix L	*(1)* Title revised *(12-904)* *(2)* L-1.5 through L-10 deleted *(12-904)* *(3)* L-11 added *(07-225)*
601	W-1	*(1)* Subparagraph (d) revised *(11-754)* *(2)* New subpara. (e) added, and previous subpara. (e) redesignated as subpara. (f) *(11-754)*
602	Form U-1	All pages revised *(09-741, 10-1787)*
605	Form U-1A	Front and back revised *(09-741, 10-1787, 11-2101)*
607	Form U-1B	Revised *(10-1547, 10-1787)*
608	Form U-2	All pages revised *(09-741, 10-1787)*
611	Form U-2A	Front and back revised *(09-741, 10-1787)*
613	Form U-3	Added *(12-735)*
615	Form U-3A	Redesignated from previous Form U-3 and revised *(09-741, 12-735)*
617	Form U-4	Revised *(10-1787)*
618	Form U-5	Added *(11-754)*
619	Table W-3	*(1)* Columns "U-1B," "U-3," and "U-5" added *(10-1547, 11-754, 12-735)* *(2)* Previous "U3" column redesignated as "U-3A" *(12-735)* *(3)* Reference Nos. (12), (23), (25), (26), (35), (53), (55), (62), and (63) revised *(06-788, 10-1547, 10-1787, 11-754, 11-2101)* *(4)* Reference Nos. (53) and (55) corrected by errata *(11-2242)* *(5)* Reference No. (61) deleted *(10-1787)* *(6)* Reference No. (72) added *(11-754)*
625	Figure W-3.1	Revised *(10-1787)*
627	Form UV-1	Line 2 corrected by errata *(11-1676)*
628	Form UD-1	Lines 2A and 2B corrected by errata *(11-1676)*
646	Nonmandatory Appendix DD	Item (3) corrected by errata *(11-1676)*
646	Figure DD-1	The term "Code symbol" corrected by errata to "Certification Mark" *(11-1676)*
647	EE-3	Example and subparas. (a) through (c) deleted *(12-904)*
652	Nonmandatory Appendix FF	The term "User" editorially revised to "user" throughout *(06-788)*
653	FF-7	Second paragraph corrected by errata *(11-1274)*
667	Nonmandatory Appendix JJ	Revised in its entirety *(10-875)*
678	Table KK-1	Reference No. (36) revised *(11-861)*

--`,,,``,,``,,,

Page	*Location*	*Change (Record Number)*
682	MM-2	Title corrected by errata *(11-1676)*
683	Nonmandatory Appendix NN	Added *(04-349, 06-788)*

NOTE: Volume 62 of the Interpretations to Section VIII, Division 1 of the ASME Boiler and Pressure Vessel Code follows the last page of Section VIII, Division 1.

--`,,,``,,```,,,,`,``,`,``,,`,,```-`-`,,`,,`,`,,`---

Provided by IHS under license with ASME

No reproduction or networking permitted without license from IHS

Licensee=Chevron Phillips Chemical Co LP/5956674001
Not for Resale, 11/09/2014 20:41:36 MST

LIST OF CHANGES IN RECORD NUMBER ORDER

Record Number	Change
00-211	Revised UG-84(g)(2) and UG-84(h)(3). Added Figure UG-84.5 and Table UG-84.6 to specify the HAZ impact test specimen removal location and number of specimens required.
01-193	Modified UCS-68(c).
03-1421	Revised Table UHA-23 to incorporate Code Case 2127-3.
04-349	Revised UG-99(k) and UG-100(e) to prohibit painting of pressure-retaining welds of pressure vessels prior to pressure testing unless first completing a leak test per Section V, Article 10. Revised UCI-99 and UCD-99 to prohibit painting of pressure vessels or pressure vessel parts prior to pressure testing. Revised Table NN-6.2 to include permitting of painting or coating prior to pressure testing as a matter of agreement between the user and the Manufacturer.
04-690	Added new paragraph UW-6.
04-1330	Revised Note 1 of Table UHT-56. Added new subparagraph UHT-82(b) to give the requirement for the use of electrodes having the H4 supplemental diffusible hydrogen designator and to list the correct filler metal specifications for the various welding processes. Revised UHT-82(e)(6) to clarify essential variables regarding an increase in the diffusible hydrogen designator. Redesignated subparagraphs within UHT-82 accordingly.
04-1628	Revised UCL-34(a) and added new subparagraph UW-40(f)(5)(-h).
04-1635	Revised UW-2(a)(1)(-a) for clarity, and deleted the last sentence of UW-2(a)(2) to eliminate an apparent contradiction with UW-2(a)(3).
05-458	Added "±" before "25 amps" and "3 V" in 28-2(b)(6) to approve the following intent interpretation: "Question: Is it the intent of Section VIII Division 1, Appendix 28-2(b)(6) to limit electrical characteristic variability during fill pass welding of ±3 volts and ±25 amps?"
06-788	Added new Nonmandatory Appendix NN. Deleted endnote 4 referenced in U-2(a) and incorporated the information from this endnote in Nonmandatory Appendix NN as NN-3(a) and NN-3(b). Added reference to Nonmandatory Appendix NN in U-2(a). Added reference to Nonmandatory Appendix FF in UG-35.2(c)(1). Editorially revised UG-35.2(e); UG-136(b)(2); UNF-56(e)(1); 7-4(d); Table W-3, Reference No. (12); and FF-1, FF-2, FF-3, FF-5, FF-6, and FF-7 to promote consistency of terms relative to "user" and "designated agent."
06-886	Changed "loading cases 1, 2, and 3" to "design loading cases" and "loading cases 4, 5, 6, and 7" to "operating loading cases" throughout Part UHX. Revised the definitions of pressure, *P*, throughout Part UHX.
07-225	Deleted the term "maximum allowable external working pressure" (MAEWP) in Section VIII-1 , and added clarification that maximum allowable working pressure (MAWP) can be either an internal or external pressure. Added nameplate marking examples to Appendix L.
07-260	Revised UG-100(d).
07-563	Added new subparagraph UCS-56(g) describing capacitor discharge and electric resistance welding requirements. Revised the General Notes of Tables UCS-56-4 and UCS-56-11 to include the exemption of PWHT for electric resistance welding of thermocouple wires and to include the requirements of UCS-56(g).
07-695	Revised Tables UHA-23 and UHA-32-4 to incorporate Code Case 2245-1 allowing the use of duplex stainless steel corresponding to UNS S32760 in various product forms for temperatures up to 600°F (316°C).
08-487	Changed the phrase "direct spring loaded" to "pressure relief" in UG-131(e)(7) to cover all types of pressure relief valves, and editorially revised the word "providing" in the third sentence to "provided."
08-488	Revised first sentence of UG-126(c).
08-970	Revised 2-14(d) to clarify that rigidity index calculations are required to be performed for both gasket seating and operating conditions.
08-1428	Deleted from UG-37(g) the specific test to be used for leak tightness testing.
08-1524	Revised UHX-12.5.9, UHX-13.5.8, and UHX-14.5.8 to have one equation for the shear calculation.
08-1609	Revised Tables UCS-23, UNF-23.3, UNF-23.4, and UHA-23 to add materials that have allowable stresses in Section II, Part D, and editorially revised some entries.

--`,,,`-`-`,,`,,`,`,,`---`-`-`,,`,,`,`,,`---
Provided by IHS under license with ASME
No reproduction or networking permitted without license from IHS
Licensee=Chevron Phillips Chemical Co LP/5956674001
Not for Resale, 11/09/2014 20:41:36 MST

Record Number	Change
08-1641	Editorially revised Figure 2-4, sketch (1).
08-1790	Updated Table UCS-23 to remove the old Chinese material designation and replace it with the new designation.
09-10	Revised Tables ULT-82 and ULT-82M.
09-279	Modified UW-19(c), and added the following sentence to UW-19(c)(2) and 17-5(a)(2): “The representative panel shall utilize the same weld details as will be used in the final construction.”
09-299	Added SA/EN 10222-2 (forgings) Grades P280GH, P305GH, 13CrMo4-5, and 11CrMo9-10 to Table UCS-23.
09-739	Added SA/CSA-G40.21 Grades 44W and 50W to Table UCS-23.
09-741	Revised Forms U-1, U-1A, U-2, U-2A, and U-3.
09-760	Added an introductory subtitle clarifying the purpose and limitations of the Foreword. Revised history paragraph to recognize the realignment of the BPV into several BPVs. Deleted the paragraph on tolerances. Made editorial changes to recognize the new committee structure. Deleted words addressing governing code editions. Deleted the paragraph concerning materials. Deleted the paragraph dealing with what the committee considers in the formulation of these rules.
09-819	Revised UCS-79 title and UCS-79(d), and added UCS-79(e), UCS-79(f), and Table UCS-79-1, all to define when post-forming heat treatment is required for Grade 91.
09-991	Revised UW-27(a)(3) to add friction stir welding (FSW) as an acceptable welding process for Division 1 construction.
09-1148	Modified U-3(a), added definition of "construction" to 3-2 of Mandatory Appendix 3, and added new Mandatory Appendix 43.
09-1229	Revised last sentence of UCS-68(c).
09-1440	Added specifications for UNS N06230 to Table UNF-79.
09-1452	Added new subparagraphs 26-10(d) and 26-10(e), Table 26-10-1, and Figure 26-14 to Mandatory Appendix 26.
09-1920	Revised UHA-51 to require that UNS S17400 materials be CVN tested.
09-2013	Added capacity units to UG-129(e) for disks certified for flow capacity instead of flow resistance.
09-2162	Added new subparagraph UHX-10(e) specifying a condition of applicability for fully assembled heat exchangers. Redesignated the previous UHX-10(e) as UHX-10(f).
10-286	Revised Table UCS-23 to show both Grades A and B for SA-299.
10-288	Revised UW-19(a)(2) to eliminate the maximum thickness limit of $1\frac{1}{2}$ in. for sketches (e), (g), and (h) of Figure UW-19.1.
10-631	Added new subparagraph UG-79(d) addressing reductions of weld thickness due to forming operations.
10-871	Revised 9-5(c)(5) in Mandatory Appendix 9 to provide rules to determine the minimum dimensions for the weld sizes a and b in Figure 9-5, sketches (f-1), (f-2), and (f-3).
10-875	Revised Nonmandatory Appendix JJ in its entirety.
10-1212	Revised 1-5 and 1-8 of Mandatory Appendix 1.
10-1250	Changed “Welders Qualification Records” to “Welder / Welding Operator Performance Qualification Records” in 10-13(b)(7).
10-1547	In Form U-1B: added explanatory subscripts to lines 1 through 6; corrected Reference No. (6) to Reference No. (7) in the “Graphite components” table (line 6); added Reference No. (54); and deleted Reference letter (B). In Table W-3: inserted new column “U-1B,” and changed cross-reference “UG-98” to “UG-118” in Reference No. (35).
10-1702	In UHA-51, added a cross-reference to the flowcharts of Nonmandatory Appendix JJ. Revised UHA-51(a)(1), abbreviating “HAZ.” Revised UHA-51(a)(4)(-a) and UHA-51(a)(4)(-b), and added UHA-51(a)(4)(-c). Deleted UHA-51(d)(1)(-a) and cross-references to it in UHA-51(d)(1)(-b). Renumbered UHA-51(d)(1)(-b) through UHA-51(d)(1)(-d) as UHA-51(d)(1)(-a) through UHA-51(d)(1)(-c). Revised UHA-51(h)(2). Revised cross-reference to UHA-51(d)(1)(-a) in UW-2(b)(1). Deleted cross-reference to UHA-51(d)(1)(-b) in UW-2(b)(4)(-a). Revised cross-reference to UHA-51(d)(1)(-c) in UW-2(b)(4)(-b).
10-1787	Revised Forms U-1, U-1A, U-1B, U-2, U-2A, and U-4; Table W-3; and Figure W-3.1.
10-1796	Revised Figure UW-21 to clarify that the label for illustrations (1), (2), and (3) refers to the weld dimension and not the setback dimension for the location of the weld.
10-2041	Added Mandatory Appendix 44.

Provided by IHS under license with ASME
No reproduction or networking permitted without license from IHS
Licensee=Chevron Phillips Chemical Co LP/5956674001
Not for Resale, 11/09/2014 20:41:36 MST

Record Number	Change
11-06	Added sketch (a-4) to Figure UW-16.1.
11-11	Deleted the word "internal" from 1-7(b)(3) and added the definition of *P* to 1-7(b)(5). Added SI Unit equivalents to 1-7(b)(1)(-a) and 1-7(b)(1)(-b).
11-83	Revised UG-84(f)(2).
11-253	Revised UG-11 title and UG-11(a).
11-442	Revised Figure UG-28.1, Note (1), and UG-33(f) to require the cone thickness to be the same as the adjacent cylindrical shell thickness when the junction is not a line of support.
11-471	Revised the SI Units table in UW-35(d) per the guidelines in Nonmandatory Appendix GG.
11-475	Revised UW-34.
11-601	Revised definition of "Material Test Report" in Mandatory Appendix 3.
11-678	Added UNS S32202 to Tables UHA-23 and UHA-32-4.
11-733	Errata correction. See Summary of Changes for details.
11-754	Added character requirements for supplemental heat exchanger markings to UHX-19.2, and added the requirement in UHX-19.3 that the pertinent fixed-tubesheet heat-exchanger operating data be indicated on new Manufacturer's Data Report Form U-5.
11-755	Revised Mandatory Appendix 26 to bring it into alignment with EJMA, 9th Edition except coefficients taking into account the initial rotation of the bellows, and to incorporate Code Case 2587.
11-860	Added new paragraph 35-7 to Mandatory Appendix 35 to incorporate Code Case 2369.
11-861	Revised UG-118, and Table KK-1, Reference No. (36) to allow marking by electrochemical etching.
11-877	Deleted SA-695 from Table UCS-23.
11-987	Revised UG-11(a) to require the vessel Manufacturer be responsible for ensuring that post-forming heat treatment is conducted as required for parts that are supplied in a preformed condition by another organization.
11-1186	Added rules to UHX-9 for tubesheet edge extensions that are not extended for bolting. Added rules to UHX-10, UHX-12, UHX-13, and UHX-14 for modifying the tubesheet diameter of tubesheets having an edge thickness that is relatively thin compared to the center thickness.
11-1240	Revised Table U-3 to update "year of acceptable edition" for those standards that were reviewed. Editorially revised titles, and deleted and added standards as needed.
11-1244	Revised UCS-66(a) and Figures UCS-66 and UCS-66M to apply consistent terminology for "governing thickness."
11-1245	Revised the nomenclature in Figures UCS 66.1 and UCS-66.1M to refer to Notes (2) and (3) of Figure UCS-66.2 rather than to General Notes (b) and (c).
11-1274	Errata correction. See Summary of Changes for details.
11-1398	Revised UG-117(a) to clarify that when oversight is provided by a Certified Individual in accordance with provisions of the Code, the qualification and duties for the Certified Individual shall meet the current requirements of ASME QAI-1.
11-1513	Errata correction. See Summary of Changes for details.
11-1558	Revised UW-51(a)(4) to allow for weld examinations of material $^1/_4$ in. (6 mm) and greater in thickness.
11-1676	Errata correction. See Summary of Changes for details.
11-1680	Errata correction. See Summary of Changes for details.
11-1898	Changed UG-32(e) conversion of 70,000 psi to 485 MPa from 500 MPa, and 20,000 psi to 138 MPa from 150 MPa using formula.
11-2101	Revised Form U-1A, line 5 to be consistent with all the other forms. Revised Table W-3 as follows: in Reference No. (23), added a joint type of W for autogenously welded pipe and tube; in Reference No. (25), added Types 7 and 8; and in Reference No. (26), added an explanation for the joint efficiency for the circumferential joint(s) of the shell.
11-2183	Added the word "machine" to UG-84(i)(3)(-a)(-1).
11-2185	Revised UG-20(f)(2) to allow pneumatic testing of pressure vessels that apply the UG-20(f) impact test exemption.
11-2242	Errata correction. See Summary of Changes for details.
12-83	Corrected cross-reference in ULT-30(a). Redesignated Figure ULT-82 as Figure UHA-51-1, and corrected the cross-reference to this figure in UHA-51(a)(4)(-a)(-1).

Provided by IHS under license with ASME
No reproduction or networking permitted without license from IHS
Licensee=Chevron Phillips Chemical Co LP/5956674001
Not for Resale, 11/09/2014 20:41:36 MST

Record Number	Change
12-237	Added new Table UG-79-1, replacing the equations for forming strain and maximum fiber elongation strain in UNF-79(a)(2), UHA-44(a)(2), and UHT-79(a)(1).
12-370	Revised UG-11(c)(5) to provide an exemption to the requirement for a Material Test Report for ASME product standard parts, with an accompanying Intent Interpretation.
12-401	Revised UG-129(a), UG-129(a)(7), UG-129(d), and UG-129(e) to require secure attachment of nameplate, and added the word "metal" before "plate or plates." In UG-129(a)(7), revised cross-reference regarding adhesive attachment, from "UG-119" to "Appendix 18," and changed the word "tag" to "plate." Revised UG-129(a)(7), UG-129(e)(10), and UG-129(f)(9) to specify the location of the Certification Mark designator; added an alternate method of applying the Certification Mark; and added a reference to acceptance by an ASME Designated organization.
12-403	Added a phrase to the second sentence of UG-140(b)(2) that includes the requirements of UG-125 through UG-138.
12-482	Added SA-533, Type E Cl. 1 and 2 to Table UCS-23 and Figures UCS-66 and UCS-66M.
12-526	Deleted the phrase "except as covered in U-1(f)" from the beginning of U-1(c)(2)(-d).
12-532	Deleted mandatory subparagraphs UHX-4(b), UHX-12.4(c), UHX-13.4(d), and UHX-14.4(e); redesignated subsequent subparagraphs accordingly; and added a cautionary Note to UHX-4.
12-650	In Mandatory Appendix 26, 26-12.1, corrected equations giving maximum allowable test pressure vs. instability.
12-661	Revised Celsius temperatures in Mandatory Appendix 34.
12-735	Added new Form U-3 (similar to Form U-1) for UM multichamber vessels. Redesignated former Form U-3 as Form U-3A to be used for single chamber vessels, and revised Table W-3 to reflect the new form. Revised UG-117 and UG-120 to cover both Forms U-3 and U-3A.
12-749	Changed the existing Section III, Division 1 Appendices to Section III Appendices.
12-890	Added new rules on minimum shell length for internally attached bellows to 26-3, and added new rules for internally attached bellows and for reinforcing collars to 26-8.
12-891	Added new requirement on minimum length of shell on each side of the bellows to 26-2.
12-904	Added paragraph UG-16(f). Removed numerical example problems from various sections. Deleted the numerical examples in Nonmandatory Appendix L and revised its title.
12-911	Deleted Mandatory Appendix 16.
12-974	Added a Note to UCS-160, following UCS-160(b).
12-1132	Revised UG-125(a) for clarity.
12-1282	Changed the dimension g_1 given in 2-12 as follows: "The minimum dimension g_1 must be the lesser of $2t$ (t from UG-27) or $4r$, but in no case less than $\frac{1}{2}$ in. (13 mm)."
12-1286	Errata correction. See Summary of Changes for details.
12-1306	Revised the heat treatment temperatures for P-No 10H Gr. 1 materials given in the General Note of Table UHA-32-4.
12-1547	Revised Table UHA-32-1, General Note (a) for greater consistency with UW-40(f).
12-1551	Editorially corrected Sa in equation 24-4(d)(6) to S_a (subscript a).
12-1641	Deleted the phrase "—Mandatory" from "Submittal of Technical Inquiries to the Boiler and Pressure Vessel Committee—Mandatory" in the front matter.
12-1736	Errata correction. See Summary of Changes for details.
12-1834	Added new Figure 26-1-2 showing the starting points for the measurement of the length of shell on each side of bellows, and showing the convolution pitch for U-shaped bellows no longer measured after the sidewalls of the convolution have been made parallel.
12-2051	Added new subparagraph UG-6(c) to address the use of certain forgings for tubesheets and pressure vessel shells.
13-130	Errata correction. See Summary of Changes for details.
13-958	Errata correction. See Summary of Changes for details.

Provided by IHS under license with ASME
No reproduction or networking permitted without license from IHS
Licensee=Chevron Phillips Chemical Co LP/5956674001
Not for Resale, 11/09/2014 20:41:36 MST

(13) # CROSS-REFERENCING AND STYLISTIC CHANGES IN THE BOILER AND PRESSURE VESSEL CODE

There have been structural and stylistic changes to BPVC, starting with the 2011 Addenda, that should be noted to aid navigating the contents. The following is an overview of the changes:

Subparagraph Breakdowns/Nested Lists Hierarchy

- First-level breakdowns are designated as (a), (b), (c), etc., as in the past.
- Second-level breakdowns are designated as (1), (2), (3), etc., as in the past.
- Third-level breakdowns are now designated as (-a), (-b), (-c), etc.
- Fourth-level breakdowns are now designated as (-1), (-2), (-3), etc.
- Fifth-level breakdowns are now designated as (+a), (+b), (+c), etc.
- Sixth-level breakdowns are now designated as (+1), (+2), etc.

Footnotes

With the exception of those included in the front matter (roman-numbered pages), all footnotes are treated as endnotes. The endnotes are referenced in numeric order and appear at the end of each BPVC section/subsection.

Submittal of Technical Inquiries to the Boiler and Pressure Vessel Standards Committees

Submittal of Technical Inquiries to the Boiler and Pressure Vessel Standards Committees has been moved to the front matter. This information now appears in all Boiler Code Sections (except for Code Case books).

Cross-References

It is our intention to establish cross-reference link functionality in the current edition and moving forward. To facilitate this, cross-reference style has changed. Cross-references within a subsection or subarticle will not include the designator/identifier of that subsection/subarticle. Examples follow:

- *(Sub-)Paragraph Cross-References.* The cross-references to subparagraph breakdowns will follow the hierarchy of the designators under which the breakdown appears.
  - If subparagraph (-a) appears in X.1(c)(1) and is referenced in X.1(c)(1), it will be referenced as (-a).
  - If subparagraph (-a) appears in X.1(c)(1) but is referenced in X.1(c)(2), it will be referenced as (1)(-a).
  - If subparagraph (-a) appears in X.1(c)(1) but is referenced in X.1(e)(1), it will be referenced as (c)(1)(-a).
  - If subparagraph (-a) appears in X.1(c)(1) but is referenced in X.2(c)(2), it will be referenced as X.1(c)(1)(-a).
- *Equation Cross-References.* The cross-references to equations will follow the same logic. For example, if eq. (1) appears in X.1(a)(1) but is referenced in X.1(b), it will be referenced as eq. (a)(1)(1). If eq. (1) appears in X.1(a)(1) but is referenced in a different subsection/subarticle/paragraph, it will be referenced as eq. X.1(a)(1)(1).

--`,,`,`,`,`,,`,`,`,,`,`,`,`

INTRODUCTION

(13) U-1 SCOPE

(a) See below.

(1) The Foreword provides the basis for the rules described in this Division.

(2) For the scope of this Division, pressure vessels are containers for the containment of pressure, either internal or external. This pressure may be obtained from an external source, or by the application of heat from a direct or indirect source, or any combination thereof.

(3) This Division contains mandatory requirements, specific prohibitions, and nonmandatory guidance for pressure vessel materials, design, fabrication, examination, inspection, testing, certification, and pressure relief. The Code does not address all aspects of these activities, and those aspects which are not specifically addressed should not be considered prohibited. Engineering judgment must be consistent with the philosophy of this Division, and such judgments must never be used to overrule mandatory requirements or specific prohibitions of this Division. See also informative and nonmandatory guidance regarding metallurgical phenomena in Appendix A of Section II, Part D.

(b) This Division is divided into three Subsections, Mandatory Appendices, and Nonmandatory Appendices. Subsection A consists of Part UG, covering the general requirements applicable to all pressure vessels. Subsection B covers specific requirements that are applicable to the various methods used in the fabrication of pressure vessels. It consists of Parts UW, UF, and UB dealing with welded, forged, and brazed methods, respectively. Subsection C covers specific requirements applicable to the several classes of materials used in pressure vessel construction. It consists of Parts UCS, UNF, UHA, UCI, UCL, UCD, UHT, ULW, ULT, and Part UIG dealing with carbon and low alloy steels, nonferrous metals, high alloy steels, cast iron, clad and lined material, cast ductile iron, ferritic steels with properties enhanced by heat treatment, layered construction, low temperature materials, and impregnated graphite, respectively. Section II, Part D also contains tables of maximum allowable stress values for these classes of materials, except for impregnated graphite.

The Mandatory Appendices address specific subjects not covered elsewhere in this Division, and their requirements are mandatory when the subject covered is included in construction under this Division. The Nonmandatory Appendices provide information and suggested good practices.

(c) See below.

(1) The scope of this Division has been established to identify the components and parameters considered in formulating the rules given in this Division. Laws or regulations issued by municipality, state, provincial, federal, or other enforcement or regulatory bodies having jurisdiction at the location of an installation establish the mandatory applicability of the Code rules, in whole or in part, within their jurisdiction. Those laws or regulations may require the use of this Division of the Code for vessels or components not considered to be within its Scope. These laws or regulations should be reviewed to determine size or service limitations of the coverage which may be different or more restrictive than those given here.

(2) Based on the Committee's consideration, the following classes of vessels are not included in the scope of this Division; however, any pressure vessel which meets all the applicable requirements of this Division may be stamped with the Certification Mark with the U Designator:

(-a) those within the scope of other Sections;

(-b) fired process tubular heaters;

(-c) pressure containers which are integral parts or components of rotating or reciprocating mechanical devices, such as pumps, compressors, turbines, generators, engines, and hydraulic or pneumatic cylinders where the primary design considerations and/or stresses are derived from the functional requirements of the device;

(-d) structures whose primary function is the transport of fluids from one location to another within a system of which it is an integral part, that is, piping systems;

(-e) piping components, such as pipe, flanges, bolting, gaskets, valves, expansion joints, fittings, and the pressure containing parts of other components, such as strainers and devices which serve such purposes as mixing, separating, snubbing, distributing, and metering or controlling flow, provided that pressure containing parts of such components are generally recognized as piping components or accessories;

(-f) a vessel for containing water[1] under pressure, including those containing air the compression of which serves only as a cushion, when none of the following limitations are exceeded:

(-1) a design pressure of 300 psi (2 MPa);

(-2) a design temperature of 210°F (99°C);

(-g) a hot water supply storage tank heated by steam or any other indirect means when none of the following limitations is exceeded:

(-1) a heat input of 200,000 Btu/hr (58.6 kW);

(-2) a water temperature of 210°F (99°C);

Provided by IHS under license with ASME
No reproduction or networking permitted without license from IHS
Licensee=Chevron Phillips Chemical Co LP/5956674001
Not for Resale, 11/09/2014 20:41:36 MST

(-3) a nominal water containing capacity of 120 gal (450 L);

(-h) vessels not exceeding the design pressure (see 3-2), at the top of the vessel, limitations below, with no limitation on size [see UG-28(f), 9-1(c)]:

(-1) vessels having an internal or external pressure not exceeding 15 psi (100 kPa);

(-2) combination units having an internal or external pressure in each chamber not exceeding 15 psi (100 kPa) and differential pressure on the common elements not exceeding 15 psi (100 kPa) [see UG-19(a)];

(-i) vessels having an inside diameter, width, height, or cross section diagonal not exceeding 6 in. (152 mm), with no limitation on length of vessel or pressure;

(-j) pressure vessels for human occupancy.[2]

(d) The rules of this Division have been formulated on the basis of design principles and construction practices applicable to vessels designed for pressures not exceeding 3,000 psi (20 MPa). For pressures above 3,000 psi (20 MPa), deviations from and additions to these rules usually are necessary to meet the requirements of design principles and construction practices for these higher pressures. Only in the event that after having applied these additional design principles and construction practices the vessel still complies with all of the requirements of this Division may it be stamped with the applicable Certification Mark with the Designator.

(e) In relation to the geometry of pressure containing parts, the scope of this Division shall include the following:

(1) where external piping; other pressure vessels including heat exchangers; or mechanical devices, such as pumps, mixers, or compressors, are to be connected to the vessel:

(-a) the welding end connection for the first circumferential joint for welded connections [see UW-13(h)];

(-b) the first threaded joint for screwed connections;

(-c) the face of the first flange for bolted, flanged connections;

(-d) the first sealing surface for proprietary connections or fittings;

(2) where nonpressure parts are welded directly to either the internal or external pressure retaining surface of a pressure vessel, this scope shall include the design, fabrication, testing, and material requirements established for nonpressure part attachments by the applicable paragraphs of this Division;[3]

(3) pressure retaining covers for vessel openings, such as manhole or handhole covers, and bolted covers with their attaching bolting and nuts;

(4) the first sealing surface for proprietary fittings or components for which rules are not provided by this Division, such as gages, instruments, and nonmetallic components.

(f) The scope of the Division includes provisions for pressure relief devices necessary to satisfy the requirements of UG-125 through UG-137 and Mandatory Appendix 11.

(g) See below.

(1) Unfired steam boilers shall be constructed in accordance with the rules of Section I or this Division [see UG-125(b) and UW-2(c)].

(2) The following pressure vessels in which steam is generated shall not be considered as unfired steam boilers, and shall be constructed in accordance with the rules of this Division:

(-a) vessels known as evaporators or heat exchangers;

(-b) vessels in which steam is generated by the use of heat resulting from operation of a processing system containing a number of pressure vessels such as used in the manufacture of chemical and petroleum products;

(-c) vessels in which steam is generated but not withdrawn for external use.

(h) Pressure vessels or parts subject to direct firing from the combustion of fuel (solid, liquid, or gaseous), which are not within the scope of Sections I, III, or IV may be constructed in accordance with the rules of this Division [see UW-2(d)].

(i) Gas fired jacketed steam kettles with jacket operating pressures not exceeding 50 psi (345 kPa) may be constructed in accordance with the rules of this Division (see Mandatory Appendix 19).

(j) Pressure vessels exclusive of those covered in (c), (g), (h), and (i) that are not required by the rules of this Division to be fully radiographed, which are not provided with quick actuating closures (see UG-35), and that do not exceed the following volume and pressure limits may be exempted from inspection by Inspectors, as defined in UG-91, provided that they comply in all other respects with the requirements of this Division:

(1) 5 ft^3 (0.14 m^3) in volume and 250 psi (1.7 MPa) design pressure; or

(2) 3 ft^3 (0.08 m^3) in volume and 350 psi (2.4 MPa) design pressure;

(3) $1^1/_2$ ft^3 (0.04 m^3) in volume and 600 psi (4.1 MPa) design pressure.

In an assembly of vessels, the limitations in (1) through (3) above apply to each vessel and not the assembly as a whole. Straight line interpolation for intermediate volumes and design pressures is permitted. Vessels fabricated in accordance with this rule shall be marked with the "UM" Symbol in Figure UG-116 sketch (b) and with the data required in UG-116. Certificates of Compliance shall satisfy the requirements of UG-120(a).

Provided by IHS under license with ASME
No reproduction or networking permitted without license from IHS
Licensee=Chevron Phillips Chemical Co LP/5956674001
Not for Resale, 11/09/2014 20:41:36 MST

(13) U-2 GENERAL

(a) The user or his designated agent (see Nonmandatory Appendix NN) shall establish the design requirements for pressure vessels, taking into consideration factors associated with normal operation, such other conditions as startup and shutdown, and abnormal conditions which may become a governing design consideration (see UG-22).

Such consideration shall include but shall not be limited to the following:

(1) the need for corrosion allowances;

(2) the definition of lethal services. For example, see UW-2(a).

(3) the need for postweld heat treatment beyond the requirements of this Division and dependent on service conditions;

(4) for pressure vessels in which steam is generated, or water is heated [see U-1(g) and U-1(h)], the need for piping, valves, instruments, and fittings to perform the functions covered by PG-59 through PG-61 of Section I.

(5) the degree of nondestructive examinations(s) and the selection of applicable acceptance standards, when such examinations are applied, are beyond the requirements of this Division.

Sample User Design Requirements forms and guidance on their preparation are found in Nonmandatory Appendix KK. This sample form might not be applicable to all pressure vessels that may be constructed in accordance with this Division. The user is cautioned that input from the Manufacturer may be necessary for completion of this form.

(b) Responsibilities[4]

(1) The Manufacturer of any vessel or part to be marked with the Certification Mark has the responsibility of complying with all of the applicable requirements of this Division and, through proper certification, of assuring that all work done by others also complies. The vessel or part Manufacturer shall have available for the Inspector's review the applicable design calculations. See 10-5 and 10-15(d).

(2) Some types of work, such as forming, nondestructive examination, and heat treating, may be performed by others (for welding, see UW-26 and UW-31). It is the vessel or part Manufacturer's responsibility to ensure that all work so performed complies with all the applicable requirements of this Division. After ensuring Code compliance, the vessel or part may be stamped with the Certification Mark and Designator by the appropriate Certificate holder after acceptance by the Inspector.

(c) A vessel may be designed and constructed using any combination of the methods of fabrication and the classes of materials covered by this Division provided the rules applying to each method and material are complied with and the vessel is marked as required by UG-116.

(d) When the strength of any part cannot be computed with a satisfactory assurance of safety, the rules provide procedures for establishing its maximum allowable working pressure.

(e) It is the duty of the Inspector to make all of the inspections specified by the rules of this Division, and of monitoring the quality control and the examinations made by the Manufacturer. He shall make such other inspections as in his judgment are necessary to permit him to certify that the vessel has been designed and constructed in accordance with the requirements. The Inspector has the duty of verifying that the applicable calculations have been made and are on file at Manufacturer's plant at the time the Data Report is signed. Any questions concerning the calculations raised by the Inspector must be resolved. See UG-90(c)(1).

(f) The rules of this Division shall serve as the basis for the Inspector to:

(1) perform the required duties;

(2) authorize the application of the Certification Mark;

(3) sign the Certificate of Shop (or Field Assembly) Inspection.

(g) This Division of Section VIII does not contain rules to cover all details of design and construction. Where complete details are not given, it is intended that the Manufacturer, subject to the acceptance of the Inspector, shall provide details of design and construction which will be as safe as those provided by the rules of this Division.

(h) Field assembly of vessels constructed to this Division may be performed as follows.

(1) The Manufacturer of the vessel completes the vessel in the field, completes the Form U-1 or U-1A Manufacturer's Data Report, and stamps the vessel.

(2) The Manufacturer of parts of a vessel to be completed in the field by some other party stamps these parts in accordance with Code rules and supplies the Form U-2 or U-2A Manufacturer's Partial Data Report to the other party. The other party, who must hold a valid U Certificate of Authorization, makes the final assembly, required NDE, final pressure test; completes the Form U-1 or U-1A Manufacturer's Data Report; and stamps the vessel.

(3) The field portion of the work is completed by a holder of a valid U Certificate of Authorization other than the vessel Manufacturer. The Certificate Holder performing the field work is required to supply a Form U-2 or U-2A Manufacturer's Partial Data Report covering the

Provided by IHS under license with ASME
No reproduction or networking permitted without license from IHS
Licensee=Chevron Phillips Chemical Co LP/5956674001
Not for Resale, 11/09/2014 20:41:36 MST

portion of the work completed by his organization (including data on the pressure test if conducted by the Certificate Holder performing the field work) to the Manufacturer responsible for the Code vessel. The vessel Manufacturer applies his Certification Mark with the U Designator in the presence of a representative from his Inspection Agency and completes the Form U-1 or U-1A Manufacturer's Data Report with his Inspector.

In all three alternatives, the party completing and signing the Form U-1 or U-1A Manufacturer's Data Report assumes full Code responsibility for the vessel. In all three cases, each Manufacturer's Quality Control System shall describe the controls to assure compliance for each Certificate Holder.

(i) For some design analyses, both a chart or curve and a equation or tabular data are given. Use of the equation or tabular data may result in answers which are slightly different from the values obtained from the chart or curve. However, the difference, if any, is within practical accuracy and either method is acceptable.

(13) U-3 STANDARDS REFERENCED BY THIS DIVISION

(a) Throughout this Division references are made to various standards, such as ASME standards, which cover pressure–temperature rating, dimensional, or procedural standards for pressure vessel parts. These standards, with the year of the acceptable edition, are listed in Table U-3.

(b) Rules for the use of these standards are stated elsewhere in this Division.

U-4 UNITS OF MEASUREMENT[5]

Either U.S. Customary, SI, or any local customary units may be used to demonstrate compliance with all requirements of this edition, e.g., materials, design, fabrication, examination, inspection, testing, certification, and overpressure protection.

In general, it is expected that a single system of units shall be used for all aspects of design except where unfeasible or impractical. When components are manufactured at different locations where local customary units are different than those used for the general design, the local units may be used for the design and documentation of that component. Similarly, for proprietary components or those uniquely associated with a system of units different than that used for the general design, the alternate units may be used for the design and documentation of that component.

For any single equation, all variables shall be expressed in a single system of units. When separate equations are provided for U.S. Customary and SI units, those equations must be executed using variables in the units associated with the specific equation. Data expressed in other units shall be converted to U.S. Customary or SI units for use in these equations. The result obtained from execution of these equations may be converted to other units.

Production, measurement and test equipment, drawings, welding procedure specifications, welding procedure and performance qualifications, and other fabrication documents may be in U.S. Customary, SI, or local customary units in accordance with the fabricator's practice. When values shown in calculations and analysis, fabrication documents, or measurement and test equipment are in different units, any conversions necessary for verification of Code compliance and to ensure that dimensional consistency is maintained, shall be in accordance with the following:

(a) Conversion factors shall be accurate to at least four significant figures.

(b) The results of conversions of units shall be expressed to a minimum of three significant figures.

Conversion of units, using the precision specified above shall be performed to assure that dimensional consistency is maintained. Conversion factors between U.S. Customary and SI units may be found in the Nonmandatory Appendix, Guidance for the Use of U.S. Customary and SI Units in the ASME Boiler and Pressure Vessel Code. Whenever local customary units are used the Manufacturer shall provide the source of the conversion factors which shall be subject to verification and acceptance by the Authorized Inspector or Certified Individual.

Material that has been manufactured and certified to either the U.S. Customary or SI material specification (e.g., SA-516M) may be used regardless of the unit system used in design. Standard fittings (e.g., flanges, elbows, etc.) that have been certified to either U.S. Customary units or SI units may be used regardless of the units system used in design.

All entries on a Manufacturer's Data Report and data for Code-required nameplate marking shall be in units consistent with the fabrication drawings for the component using U.S. Customary, SI, or local customary units. It is acceptable to show alternate units parenthetically. Users of this Code are cautioned that the receiving jurisdiction should be contacted to ensure the units are acceptable.

U-5 TOLERANCES

The Code does not fully address tolerances. When dimensions, sizes, or other parameters are not specified with tolerances, the values of these parameters are considered nominal, and allowable tolerances or local variances may be considered acceptable when based on engineering judgment and standard practices as determined by the designer.

Provided by IHS under license with ASME
No reproduction or networking permitted without license from IHS
Licensee=Chevron Phillips Chemical Co LP/5956674001
Not for Resale, 11/09/2014 20:41:36 MST

(13)

Table U-3
Year of Acceptable Edition of Referenced Standards in This Division

Title	Number	Year
Seat Tightness of Pressure Relief Valves	API Std. 527	1991 (R2007) [Note (1)]
Unified Inch Screw Threads (UN and UNR Thread Form)	ASME B1.1	Latest edition
Pipe Threads, General Purpose (Inch)	ANSI/ASME B1.20.1	Latest edition
Cast Iron Pipe Flanges and Flanged Fittings, Classes 25, 125, and 250	ASME B16.1	2010
Pipe Flanges and Flanged Fittings, NPS $^1/_2$ Through NPS 24 Metric/Inch Standard	ASME B16.5	2009 [Note (2)]
Factory-Made Wrought Buttwelding Fittings	ASME B16.9	Latest edition
Forged Fittings, Socket-Welding and Threaded	ASME B16.11	Latest edition
Cast Copper Alloy Threaded Fittings, Classes 125 and 250	ASME B16.15	Latest edition
Metallic Gaskets for Pipe Flanges — Ring-Joint, Spiral– Wound, and Jacketed	ASME B16.20	Latest edition
Cast Copper Alloy Pipe Flanges and Flanged Fittings, Class 150, 300, 600, 900, 1500, and 2500	ASME B16.24	2011
Ductile Iron Pipe Flanges and Flanged Fittings, Class 150 and 300	ASME B16.42	2011
Large Diameter Steel Flanges, NPS 26 Through NPS 60 Metric/Inch Standard	ASME B16.47	2011
Nuts for General Applications: Machine Screw Nuts, Hex, Square, Hex Flange, and Coupling Nuts (Inch Series)	ASME B18.2.2	Latest edition
Welded and Seamless Wrought Steel Pipe	ASME B36.10M	Latest edition
Guidelines for Pressure Boundary Bolted Flange Joint Assembly	ASME PCC-1	2010
Repair of Pressure Equipment and Piping	ASME PCC-2	2011
Pressure Relief Devices	ASME PTC 25	2008
Qualifications for Authorized Inspection	ASME QAI-1	Latest edition [Note (3)]
ASNT Central Certification Program	ACCP	Rev 7
ASNT Standard for Qualification and Certification of Nondestructive Testing Personnel	ANSI/ASNT CP-189	2006
Recommended Practice for Personnel Qualification and Certification in Nondestructive Testing	SNTTC-1A	2006
Standard Test Method for Flash Point by Tag Closed Tester	ASTM D56	Latest edition
Standard Test Methods for Flash Point by Pensky-Martens Closed Cup Tester	ASTM D93	Latest edition
Standard Guide for Preparation of Metallographic Specimens	ASTM E3	2001 (R2007)
Pressure Relieving and Depressuring Systems	ANSI/API Std. 521	5th Ed., January 2007
Standard Reference Photographs for Magnetic Particle Indications on Ferrous Castings	ASTM E125	1963 (R2008) [Note (1)]
Standard Hardness Conversion Tables for Metals Relationship Among Brinell Hardness, Vickers Hardness, Rockwell Hardness, Superficial Hardness, Knoop Hardness, and Scleroscope Hardness	ASTM E140	Latest edition
Standard Reference Radiographs for Heavy-Walled [2 to $4^1/_2$-in. (51 to 114-mm)] Steel Castings	ASTM E186	2010
Standard Test Method for Conducting Drop-Weight Test to Determine Nil– Ductility Transition Temperature of Ferritic Steels	ASTM E208	2006
Standard Reference Radiographs for Heavy-Walled ($4^1/_2$ to 12-in. (114 to 305-mm)) Steel Castings	ASTM E280	2010
Standard Reference Radiographs for Steel Castings up to 2 in. (51 mm) in Thickness	ASTM E446	2010
Marking and Labeling Systems	ANSI/UL-969	1995
Metallic Materials — Charpy Pendulum Impact Test Part 1: Test Method	ISO 148-1	2009
Metallic Materials — Charpy Pendulum Impact Test Part 2: Verification of Testing Machines	ISO 148-2	2008
Metallic Materials — Charpy Pendulum Impact Test Part 3: Preparation and Characterization of Charpy V-Notch Test Pieces for Indirect Verification of Pendulum Impact Machines	ISO 148-3	2008
Metric Standards		
Metric Screw Thread — M Profile	ASME B1.13M	Latest edition
Metric Screw Thread — MJ Profile	ASME B1.21M	Latest edition
Metric Heavy Hex Screws	ASME B18.2.3.3M	Latest edition
Metric Hex Bolts	ASME B18.2.3.5M	Latest edition
Metric Heavy Hex Bolts	ASME B18.2.3.6M	Latest edition
Metric Fasteners for Use in Structural Applications	ASME B18.2.6M	Latest edition
Standard Test Method for Compressive Strength of Carbon and Graphite	ASTM C695	1991
Standard Terminology Relating to Manufactured Carbon and Graphite	ASTM C709	2009
Standard Practices for Force Verification of Testing Machines	ASTM E4	2010
Standard Practice for Use of the Terms Precision and Bias in ASTM Test Methods	ASTM E177	2006b

Provided by IHS under license with ASME
No reproduction or networking permitted without license from IHS
Licensee=Chevron Phillips Chemical Co LP/5956674001
Not for Resale, 11/09/2014 20:41:36 MST

Table U-3
Year of Acceptable Edition of Referenced Standards in This Division (Cont'd)

Title	Number	Year
Standard Practice for Conducting an Interlaboratory Study to Determine the Precision of a Test Method	ASTM E691	2011
Standard Procedures for Calibrating Magnetic Instruments to Measure the Delta Ferrite Content of Austenitic and Duplex Ferritic-Austenitic Stainless Steel Weld Metal	ANSI/AWS A4.2M	2006

NOTES:
(1) R — Reaffirmed.
(2) See UG-11(a)(2).
(3) See UG-91 and UG-117(f).

Provided by IHS under license with ASME
No reproduction or networking permitted without license from IHS
Licensee=Chevron Phillips Chemical Co LP/5956674001
Not for Resale, 11/09/2014 20:41:36 MST

SUBSECTION A
GENERAL REQUIREMENTS

PART UG
GENERAL REQUIREMENTS FOR ALL METHODS OF CONSTRUCTION AND ALL MATERIALS

UG-1 SCOPE

The requirements of Part UG are applicable to all pressure vessels and vessel parts and shall be used in conjunction with the specific requirements in Subsections B and C and the Mandatory Appendices that pertain to the method of fabrication and the material used.

MATERIALS

UG-4 GENERAL

(a) Material subject to stress due to pressure shall conform to one of the specifications given in Section II, Part D, Subpart 1, Tables 1A, 1B, and 3, including all applicable notes in the tables, and shall be limited to those that are permitted in the applicable Part of Subsection C, except as otherwise permitted in UG-9, UG-10, UG-11, UG-15, Part UCS, Part UIG, and the Mandatory Appendices. Material may be identified as meeting more than one material specification and/or grade provided the material meets all requirements of the identified material specification (s) and/or grade(s) [see UG-23(a)].

(b) Material for nonpressure parts, such as skirts, supports, baffles, lugs, clips, and extended heat transfer surfaces, need not conform to the specifications for the material to which they are attached or to a material specification permitted in this Division, but if attached to the vessel by welding shall be of weldable quality [see UW-5(b)]. The allowable stress values for material not identified in accordance with UG-93 shall not exceed 80% of the maximum allowable stress value permitted for similar material in Subsection C.

(c) Material covered by specifications in Section II is not restricted as to the method of production unless so stated in the specification, and so long as the product complies with the requirements of the specification. (See UG-85.)

(d) Materials other than those allowed by this Division may not be used, unless data thereon are submitted to and approved by the Boiler and Pressure Vessel Committee in accordance with Appendix 5 in Section II, Part D.

(e) Materials outside the limits of size and/or thickness given in the title or scope clause of the specifications given in Section II, and permitted by the applicable part of Subsection C, may be used if the material is in compliance with the other requirements of the specification,[6] and no size or thickness limitation is given in the stress tables. In those specifications in which chemical composition or mechanical properties vary with size or thickness, materials outside the range shall be required to conform to the composition and mechanical properties shown for the nearest specified range.

(f) It is recommended that the user or his designated agent assure himself that materials used for the construction of the vessels will be suitable for the intended service with respect to retention of satisfactory mechanical properties, and resistance to corrosion, erosion, oxidation, and other deterioration during their intended service life. See also informative and nonmandatory guidance regarding metallurgical phenomena in Appendix A of Section II, Part D.

(g) When specifications, grades, classes, and types are referenced, and the material specification in Section II, Part A or Part B is a dual-unit specification (e.g., SA-516/SA-516M), the design values and rules shall be applicable to either the U.S. Customary version of the material specification or the SI unit version of the material specification. For example, when SA-516M Grade 485 is used in construction, the design values listed for its equivalent, SA-516 Grade 70, in either the U.S. Customary or metric Section II, Part D (as appropriate) shall be used.

Provided by IHS under license with ASME
No reproduction or networking permitted without license from IHS
Licensee=Chevron Phillips Chemical Co LP/5956674001
Not for Resale, 11/09/2014 20:41:36 MST

UG-5 PLATE[7]

Plate used in the construction of pressure parts of pressure vessels shall conform to one of the specifications in Section II for which allowable stress values are given in the tables referenced in UG-23, except as otherwise provided in UG-4, UG-10, UG-11, and UG-15.

(13) UG-6 FORGINGS

(a) Forged material may be used in pressure vessel construction provided the material has been worked sufficiently to remove the coarse ingot structure. Specifications and maximum allowable stress values for acceptable forging materials are given in the tables referenced in UG-23. (See Part UF for forged vessels.)

(b) Forged rod or bar may only be used within the limitations of UG-14.

(c) Forgings certified to SA-105, SA-181, SA-182, SA-350, SA-403, and SA-420 may be used as tubesheets and hollow cylindrical forgings for pressure vessel shells that otherwise meet all the rules of this Division, provided that the following additional requirements are met:

(1) Forgings certified to SA-105 or SA-181 shall be subject to one of the austenitizing heat treatments permitted by these specifications.

(2) One tension test specimen shall be taken from each forging weighing more than 5,000 lb (2 250 kg). The largest obtainable tension test specimen as specified by the test methods referenced in the applicable specification shall be used. Except for upset-disk forgings, the longitudinal axis of the test specimen shall be taken parallel to the direction of major working of the forging. For upset-disk forgings, the longitudinal axis of the test specimen shall be taken in the tangential direction. When agreed to by the Manufacturer, and when not prohibited by the material specification, test specimens may be machined from specially forged test blocks meeting the provisions provided in SA-266 or other similar specifications for large forgings.

(3) For quenched and tempered forgings weighing more than 10,000 lb (4 500 kg) at the time of heat treatment, two tension test specimens shall be taken from each forging. These shall be offset 180 deg from each other, except that if the length of the forging, excluding test prolongations, exceeds 12 ft (3.7 m), then one specimen shall be taken from each end of the forging.

UG-7 CASTINGS

Cast material may be used in the construction of pressure vessels and vessel parts. Specifications and maximum allowable stress values for acceptable casting materials are given in the tables referenced in UG-23. These allowable stress values shall be multiplied by the applicable casting quality factor given in UG-24 for all materials except cast iron.

UG-8 PIPE AND TUBES

(a) Pipe and tubes of seamless or welded[8] construction conforming to one of the specifications given in Section II may be used for shells and other parts of pressure vessels. Allowable stress values for the materials used in pipe and tubes are given in the tables referenced in UG-23.

(b) Integrally finned tubes may be made from tubes that conform in every respect with one of the specifications given in Section II. These tubes may be used under the following conditions:

(1) The tubes, after finning, shall have a temper or condition that conforms to one of those provided in the governing specifications, or, when specified, they may be furnished in the "as-fabricated condition" where the finned portions of the tube are in the cold worked temper (as-finned) resulting from the finning operation, and the unfinned portions in the temper of the tube prior to finning.

(2) The maximum allowable stress value for the finned tube shall be that given in the tables referenced in UG-23 for the tube before finning except as permitted in (3) below.

(3) The maximum allowable stress value for a temper or condition that has a higher stress value than that of the tube before finning may be used provided that qualifying mechanical property tests demonstrate that such a temper or condition is obtained and conforms to one of those provided in the governing specifications in Section II, and provided that allowable stress values have been established in the tables referenced in UG-23 for the tube material used. The qualifying mechanical property tests shall be made on specimens of finned tube from which the fins have been removed by machining. The frequency of tests shall be as required in the unfinned tube specification.

(4) The maximum allowable internal or external working pressure of the tube shall be based on the root diameter and the minimum wall of the finned section, or the outside diameter and wall of the unfinned section together with appropriate stress values, whichever results in the lower maximum allowable working pressure. Alternatively, the maximum allowable external pressure for tubes with integral fins may be established under the rules of Mandatory Appendix 23.

(5) In addition to the tests required by the governing specifications, each tube after finning shall be subjected to a pneumatic test or a hydrostatic test as indicated below. UG-90(c)(1)(-i) requirement for a visual inspection by the Inspector does not apply to either of these tests.

(-a) an internal pneumatic test of not less than 250 psi (1.7 MPa) for 5 sec without evidence of leakage. The test method shall permit easy visual detection of any leakage such as immersion of the tube under water or a pressure differential method.[9]

(-b) an individual tube hydrostatic test in accordance with UG-99 that permits complete examination of the tube for leakage.

Provided by IHS under license with ASME
No reproduction or networking permitted without license from IHS
Licensee=Chevron Phillips Chemical Co LP/5956674001
Not for Resale, 11/09/2014 20:41:36 MST

UG-9 WELDING MATERIALS

Welding materials used for production shall comply with the requirements of this Division, those of Section IX, and the applicable qualified welding procedure specification. When the welding materials comply with one of the specifications in Section II, Part C, the marking or tagging of the material, containers, or packages as required by the applicable Section II specification may be accepted for identification in lieu of a Certified Test Report or a Certificate of Compliance. When the welding materials do not comply with one of the specifications of Section II, the marking or tagging shall be identifiable with the welding materials set forth in the welding procedure specification, and may be accepted in lieu of a Certified Test Report or a Certificate of Compliance.

UG-10 MATERIAL IDENTIFIED WITH OR PRODUCED TO A SPECIFICATION NOT PERMITTED BY THIS DIVISION, AND MATERIAL NOT FULLY IDENTIFIED

(a) Identified Material With Complete Certification From the Material Manufacturer. Material identified with a specification not permitted by this Division, or procured to chemical composition requirements, and identified to a single production lot as required by a permitted specification may be accepted as satisfying the requirements of a specification permitted by this Division provided the conditions set forth in (1) or (2) below are satisfied.

(1) Recertification by an Organization Other Than the Vessel or Part Manufacturer

(-a) All requirements, including but not limited to, melting method, melting practice, deoxidation, quality, and heat treatment, of the specification permitted by this Division, to which the material is to be recertified, have been demonstrated to have been met.

(-b) A copy of the certification by the material manufacturer of the chemical analysis required by the permitted specification, with documentation showing the requirements to which the material was produced and purchased, and which demonstrates that there is no conflict with the requirements of the permitted specification, has been furnished to the vessel or part Manufacturer.

(-c) A certification that the material was manufactured and tested in accordance with the requirements of the specification to which the material is recertified, excluding the specific marking requirements, has been furnished to the vessel or part Manufacturer, together with copies of all documents and test reports pertinent to the demonstration of conformance to the requirements of the permitted specification.

(-d) The material and the Certificate of Compliance or the Material Test Report have been identified with the designation of the specification to which the material is recertified and with the notation "Certified per UG-10."

(2) Recertification by the Vessel or Part Manufacturer

(-a) A copy of the certification by the material manufacturer of the chemical analysis required by the permitted specification, with documentation showing the requirements to which the material was produced and purchased, and which demonstrates that there is no conflict with the requirements of the permitted specification, is available to the Inspector.

(-b) For applications in which the maximum allowable stresses are subject to a cautionary note, documentation is available to the Inspector that establishes what deoxidation was performed during the material manufacture, to the degree necessary for the vessel or part Manufacturer to make a decision with regard to the cautionary note.

(-c) Documentation is available to the Inspector that demonstrates that the metallurgical structure, mechanical property, and hardness requirements of the permitted specification have been met.

(-d) For material recertified to a permitted specification that requires a fine austenitic grain size or that requires that a fine grain practice be used during melting, documentation is available to the Inspector that demonstrates that the heat treatment requirements of the permitted specification have been met, or will be met during fabrication.

(-e) The material has marking, acceptable to the Inspector, for identification to the documentation.

(-f) When the conformance of the material with the permitted specification has been established, the material has been marked as required by the permitted specification.

(b) Material Identified to a Particular Production Lot as Required by a Specification Permitted by This Division but Which Cannot Be Qualified Under (a). Any material identified to a particular production lot as required by a specification permitted by this Division, but for which the documentation required in (a) is not available, may be accepted as satisfying the requirements of the specification permitted by this Division provided that the conditions set forth below are satisfied.

(1) Recertification by an Organization Other Than the Vessel or Part Manufacturer. Not permitted.

(2) Recertification by the Vessel or Part Manufacturer

(-a) Chemical analyses are made on different pieces from the lot to establish a mean analysis that is to be accepted as representative of the lot. The pieces chosen for analysis shall be selected at random from the lot. The number of pieces selected shall be at least 10% of the number of pieces in the lot, but not less than three. For lots of three pieces or less, each piece shall be analyzed. Each individual analysis for an element shall conform to the limits for product analysis in the permitted specification, and the mean for each element shall conform to the heat analysis limits of that specification. Analyses need only be made for those elements required by the permitted specification. However, consideration should be given to

Provided by IHS under license with ASME
No reproduction or networking permitted without license from IHS
Licensee=Chevron Phillips Chemical Co LP/5956674001
Not for Resale, 11/09/2014 20:41:36 MST

making analyses for elements not specified in the specification but that would be deleterious if present in excessive amounts.

(-b) Mechanical property tests are made in accordance with the requirements of the permitted specification, and the results of the tests conform to the specified requirements.

(-c) For applications in which the maximum allowable stresses are subject to a cautionary note, chemical analysis results are obtained that are sufficient to establish what deoxidation was used during the material manufacture, to the degree necessary for making a decision with regard to the cautionary note.

(-d) When the requirements of the permitted specification include metallurgical structure requirements (i.e., fine austenitic grain size), tests are made and the results are sufficient to establish that those requirements of the specification have been met.

(-e) When the requirements of the permitted specification include heat treatment, the material is heat treated in accordance with those requirements, either prior to or during fabrication.

(-f) When the conformance of the material with the permitted specification has been established, the material has been marked as required by the permitted specification.

(c) Material Not Fully Identified. Material that cannot be qualified under the provisions of either (a) or (b), such as material not fully identified as required by the permitted specification or unidentified material, may be accepted as satisfying the requirements of a specification permitted by this Division provided that the conditions set forth below are satisfied.

(1) Qualification by an Organization Other Than the Vessel or Part Manufacturer. Not permitted.

(2) Qualification by the Vessel or Part Manufacturer

(-a) Each piece is tested to show that it meets the chemical composition for product analysis and the mechanical properties requirements of the permitted specification. Chemical analyses need only be made for those elements required by the permitted specification. However, consideration should be given to making analyses for elements not specified in the specification but that would be deleterious if present in excessive amounts. For plates, when the direction of final rolling is not known, both a transverse and a longitudinal tension test specimen shall be taken from each sampling location designated in the permitted specification. The results of both tests shall conform to the minimum requirements of the specification, but the tensile strength of only one of the two specimens need conform to the maximum requirement.

(-b) The provisions of (b)(2)(-c), (b)(2)(-d), and (b)(2)(-e) above are met.

(-c) When the identity of the material with the permitted specification has been established in accordance with (a) and (b) above, each piece (or bundle, etc., if permitted in the specification) is marked with a marking giving the permitted specification number and grade, type, or class as applicable and a serial number identifying the particular lot of material. A suitable report, clearly marked as being a "Report on Tests of Nonidentified Material," shall be completed and certified by the vessel or part Manufacturer. This report, when accepted by the Inspector, shall constitute authority to use the material in lieu of material procured to the requirements of the permitted specification.

UG-11 PREFABRICATED OR PREFORMED PRESSURE PARTS FURNISHED WITHOUT A CERTIFICATION MARK (13)

(a) Prefabricated or preformed pressure parts for pressure vessels that are subject to stresses due to pressure and that are furnished by others or by the Manufacturer of the completed vessel shall conform to all applicable requirements of this Division except as permitted in (b), (c), (d), and (e) below. When the prefabricated or preformed parts are furnished with a nameplate that contains product identifying marks and the nameplate interferes with further fabrication or service, and where stamping on the material is prohibited, the Manufacturer of the completed vessel, with the concurrence of the Authorized Inspector, may remove the nameplate. The removal of the nameplate shall be noted in the "Remarks" section of the vessel Manufacturer's Data Report. The nameplate shall be destroyed. The rules of (b), (c), (d), and (e) below shall not be applied to welded shells or heads or to quick-actuating closures [UG-35(b)].

Parts furnished under the provisions of (b), (c), and (d) need not be manufactured by a Certificate Holder. However, the Manufacturer of the completed vessel or Certification Mark–stamped part shall ensure that parts furnished under the provisions of (b), (c), (d), and (e) meet all of the applicable Code requirements such as UCS-79(d), UNF-79(a), UHA-44(a), and UHT-79(a)(1). Prefabricated or preformed pressure parts may be supplied as follows:

(1) cast, forged, rolled, or die formed non-standard pressure parts

(2) cast, forged, rolled, or die formed standard pressure parts that comply with an ASME product standard, either welded or nonwelded

(3) cast, forged, rolled, or die formed standard pressure parts that comply with a standard other than an ASME product standard, either welded or nonwelded

(b) Cast, Forged, Rolled, or Die Formed Non-standard Pressure Parts. Pressure parts such as shells, heads, removable doors, and pipe coils that are wholly formed by casting, forging, rolling, or die forming may be supplied basically as materials. All such parts shall be made of materials permitted under this Division, and the Manufacturer of the part shall furnish identification in accordance with UG-93. Such parts shall be marked with the name or trademark of the parts manufacturer and with such other markings as will serve to identify the particular parts with accompanying material identification. The

Provided by IHS under license with ASME
No reproduction or networking permitted without license from IHS
Licensee=Chevron Phillips Chemical Co LP/5956674001
Not for Resale, 11/09/2014 20:41:36 MST

Manufacturer of the completed vessel shall be satisfied that the part is suitable for the design conditions specified for the completed vessel in accordance with the rules of this Division.

(c) Cast, Forged, Rolled, or Die Formed Standard Pressure Parts That Comply With an ASME Product Standard, Either Welded or Nonwelded

(1) These are pressure parts that comply with an ASME product standard accepted by reference in UG-44. The ASME product standard establishes the basis for the pressure–temperature rating and marking unless modified in UG-44.

(2) Flanges and flanged fittings may be used at the pressure–temperature ratings specified in the appropriate standard listed in this Division.

(3) Materials for standard pressure parts shall be as follows:

(-a) as permitted by this Division or

(-b) as specifically listed in the ASME product standard

(4) When welding is performed it shall meet the following:

(-a) the requirements of UW-26(a), UW-26(b), and UW-26(c) and UW-27 through UW-40, or;

(-b) the welding requirements of ASME specification SA-234.

(5) Pressure parts, such as standard pipe fittings, welding caps, and flanges that are seamless or fabricated by one of the welding processes recognized by this Division do not require inspection, identification in accordance with UG-93(a) or UG-93(b), or Partial Data Reports provided the requirements of UG-11(c) are met.

(6) If postweld heat treatment is required by the rules of this Division, it may be performed either in the location of the parts manufacturer or in the location of the Manufacturer of the vessel to be marked with the Certification Mark.

(7) If radiography or other volumetric examination is required by the rules of this Division, it may be performed at one of the following locations:

(-a) the location of the Manufacturer of the completed vessel

(-b) the location of the pressure parts manufacturer

(8) Parts made to an ASME product standard shall be marked as required by the ASME product standard.

(9) The Manufacturer of the completed vessels shall have the following responsibilities when using standard pressure parts that comply with an ASME product standard:

(-a) Ensure that all standard pressure parts comply with applicable rules of this Division.

(-b) Ensure that all standard pressure parts are suitable for the design conditions of the completed vessel.

(-c) When volumetric examination is required by the rules of this Division, obtain the completed radiographs, properly identified, with a radiographic inspection report, and any other applicable volumetric examination report.

(10) The Manufacturer shall fulfill these responsibilities by obtaining, when necessary, documentation as provided below, provide for retention of this documentation, and have such documentation available for examination by the Inspector when requested. The documentation shall contain at a minimum:

(-a) material used

(-b) the pressure–temperature rating of the part

(-c) the basis for establishing the pressure–temperature rating

(d) Cast, Forged, Rolled, or Die Formed Standard Pressure Parts That Comply With a Standard Other Than an ASME Product Standard, Either Welded or Nonwelded

(1) Standard pressure parts that are either welded or nonwelded and comply with a manufacturer's proprietary standard or a standard other than an ASME product standard may be supplied by

(-a) a Certificate Holder

(-b) a pressure parts manufacturer

(2) Parts of small size falling within this category for which it is impossible to obtain identified material or that may be stocked and for which identification in accordance with UG-93 cannot be obtained and are not customarily furnished, may be used for parts as described in UG-4(b).

(3) Materials for these parts shall be as permitted by this Division only.

(4) When welding is performed, it shall meet the requirements of UW-26(a), UW-26(b), and UW-26(c) and UW-27 through UW-40.

(5) Pressure parts, such as welded standard pipe fittings, welding caps, and flanges that are fabricated by one of the welding processes recognized by this Division do not require inspection, identification in accordance with UG-93(a) or UG-93(b), or Partial Data Reports provided the requirements of UG-11(d) are met.

(6) If postweld heat treatment is required by the rules of this Division, it may be performed either in the location of the parts manufacturer or in the location of the Manufacturer of the completed vessel.

(7) If radiography or other volumetric examination is required by the rules of this Division, it may be performed at one of the following locations:

(-a) the location of the Manufacturer of the completed vessel

(-b) the location of the parts Manufacturer

(-c) the location of the pressure parts manufacturer

(8) Marking for these parts shall be as follows:

(-a) with the name or trademark of the Certificate Holder or the pressure part manufacturer and any other markings as required by the proprietary standard or other standard used for the pressure part

Provided by IHS under license with ASME
No reproduction or networking permitted without license from IHS
Licensee=Chevron Phillips Chemical Co LP/5956674001
Not for Resale, 11/09/2014 20:41:36 MST

(-b) with a permanent or temporary marking that will serve to identify the part with the Certificate Holder or the pressure parts manufacturer's written documentation of the particular items, and that defines the pressure–temperature rating of the part

(9) The Manufacturer of the completed vessels shall have the following responsibilities when using standard pressure parts:

(-a) Ensure that all standard pressure parts comply with applicable rules of this Division.

(-b) Ensure that all standard pressure parts are suitable for the design conditions of the completed vessel.

(-c) When volumetric examination is required by the rules of this Division, obtain the completed radiographs, properly identified, with a radiographic inspection report, and any other applicable volumetric examination report.

(10) The Manufacturer of the completed vessel shall fulfill these responsibilities by one of the following methods:

(-a) Obtain, when necessary, documentation as provided below, provide for retention of this documentation, and have such documentation available for examination by the Inspector when requested, or;

(-b) Perform an analysis of the pressure part in accordance with the rules of this Division. [See also U-2(g).] This analysis shall be included in the documentation and shall be made available for examination by the Inspector when requested.

(11) The documentation shall contain at a minimum:

(-a) material used

(-b) the pressure–temperature rating of the part

(-c) the basis for establishing the pressure–temperature rating

(-d) a written certification by the pressure parts manufacturer that all welding complies with Code requirements

(e) The Code recognizes that a Certificate Holder may fabricate parts in accordance with UG-11(d), and that are marked in accordance with UG-11(d)(8). In lieu of the requirement in UG-11(d)(4), the Certificate Holder may subcontract to an individual or organization not holding an ASME Certificate standard pressure parts that are fabricated to a standard other than an ASME product standard provided all the following conditions are met:

(1) The activities to be performed by the subcontractor are included within the Certificate Holder's Quality Control System.

(2) The Certificate Holder's Quality Control System provides for the following activities associated with subcontracting of welding operations, and these provisions shall be acceptable to the Manufacturer's Authorized Inspection Agency:

(-a) the welding processes permitted by this Division that are permitted to be subcontracted

(-b) welding operations

(-c) Authorized Inspection activities

(-d) placement of the Certificate Holder's marking in accordance with UG-11(d)(8)

(3) The Certificate Holder's Quality Control System provides for the requirements of UG-92 to be met at the subcontractor's facility.

(4) The Certificate Holder shall be responsible for reviewing and accepting the Quality Control Programs of the subcontractor.

(5) The Certificate Holder shall ensure that the subcontractor uses written procedures and welding operations that have been qualified as required by this Division.

(6) The Certificate Holder shall ensure that the subcontractor uses personnel that have been qualified as required by this Division.

(7) The Certificate Holder and the subcontractor shall describe in their Quality Control Systems the operational control of procedure and personnel qualifications of the subcontracted welding operations.

(8) The Certificate Holder shall be responsible for controlling the quality and ensuring that all materials and parts that are welded by subcontractors and submitted to the Inspector for acceptance, conform to all applicable requirements of this Division.

(9) The Certificate Holder shall describe in their Quality Control Systems the operational control for maintaining traceability of materials received from the subcontractor.

(10) The Certificate Holder shall receive approval for subcontracting from the Authorized Inspection Agency prior to commencing of activities.

UG-12 BOLTS AND STUDS

(a) Bolts and studs may be used for the attachment of removable parts. Specifications, supplementary rules, and maximum allowable stress values for acceptable bolting materials are given in the tables referenced in UG-23.

(b) Studs shall be threaded full length or shall be machined down to the root diameter of the thread in the unthreaded portion, provided that the threaded portions are at least $1^1/_2$ diameters in length.

Studs greater than eight diameters in length may have an unthreaded portion that has the nominal diameter of the thread, provided the following requirements are met:

(1) the threaded portions shall be at least $1^1/_2$ diameters in length;

(2) the stud shall be machined down to the root diameter of the thread for a minimum distance of 0.5 diameters adjacent to the threaded portion;

(3) a suitable transition shall be provided between the root diameter and the unthreaded portion; and

(4) particular consideration shall be given to any dynamic loadings.

UG-13 NUTS AND WASHERS

(a) Nuts shall conform to the requirements in the applicable Part of Subsection C (see UCS-11 and UNF-13). They shall engage the threads for the full depth of the nut.

Provided by IHS under license with ASME
No reproduction or networking permitted without license from IHS
Licensee=Chevron Phillips Chemical Co LP/5956674001
Not for Resale, 11/09/2014 20:41:36 MST

(b) The use of washers is optional. When used, they shall be of wrought materials.

UG-14 RODS AND BARS

(a) Rod and bar stock may be used in pressure vessel construction for pressure parts such as flange rings, stiffening rings, frames for reinforced openings, stays and stay-bolts, and similar parts. Rod and bar materials shall conform to the requirements for bars or bolting in the applicable part of Subsection C.

(b) Except for flanges of all types, hollow cylindrically shaped parts [up to and including NPS 4 (DN 100)] may be machined from rod or bar, provided that the axial length of the part is approximately parallel to the metal flow lines of the stock. Other parts, such as heads or caps [up to and including NPS 4 (DN 100)], not including flanges, may be machined from rod or bar. Elbows, return bends, tees, and header tees shall not be machined directly from rod or bar.

UG-15 PRODUCT SPECIFICATION

When there is no material specification listed in Subsection C covering a particular wrought product of a grade, but there is an approved specification listed in Subsection C covering some other wrought product of that grade, the product for which there is no specification may be used provided:

(a) the chemical and physical properties, heat treating requirements, and requirements for deoxidation, or grain size requirements conform to the approved specification listed in Subsection C. The stress values for that specification given in the tables referenced in UG-23 shall be used.

(b) the manufacturing procedures, tolerances, tests, and marking are in accordance with a Section II specification covering the same product form of a similar material;

(c) for the case of welded tubing made of plate, sheet, or strip, without the addition of filler metal, the appropriate stress values are multiplied by a factor of 0.85;

(d) the product is not pipe or tubing fabricated by fusion welding with the addition of filler metal unless it is fabricated in accordance with the rules of this Division as a pressure part;

(e) mill test reports reference the specifications used in producing the material and in addition make reference to this paragraph.

DESIGN

(13) UG-16 GENERAL

(a) The design of pressure vessels and vessel parts shall conform to the general design requirements in the following paragraphs and in addition to the specific requirements for *Design* given in the applicable Parts of Subsections B and C.

(b) Minimum Thickness of Pressure Retaining Components. Except for the special provisions listed below, the minimum thickness permitted for shells and heads, after forming and regardless of product form and material, shall be $^1/_{16}$ in. (1.5 mm) exclusive of any corrosion allowance. Exceptions are:

(1) the minimum thickness does not apply to heat transfer plates of plate-type heat exchangers;

(2) this minimum thickness does not apply to the inner pipe of double pipe heat exchangers nor to pipes and tubes that are enclosed and protected from mechanical damage by a shell, casing, or ducting, where such pipes or tubes are NPS 6 (DN 150) and less. This exemption applies whether or not the outer pipe, shell, or protective element is constructed to Code rules. When the outer protective element is not provided by the Manufacturer as part of the vessel, the Manufacturer shall note this on the Manufacturer's Data Report, and the owner or his designated agent shall be responsible to assure that the required enclosures are installed prior to operation. Where pipes and tubes are fully enclosed, consideration shall be given to avoiding buildup of pressure within the protective chamber due to a tube/pipe leak. All other pressure parts of these heat exchangers that are constructed to Code rules must meet the $^1/_{16}$ in. (1.5 mm) minimum thickness requirements.

(3) the minimum thickness of shells and heads of unfired steam boilers shall be $^1/_4$ in. (6 mm) exclusive of any corrosion allowance;

(4) the minimum thickness of shells and heads used in compressed air service, steam service, and water service, made from materials listed in Table UCS-23, shall be $^3/_{32}$ in. (2.5 mm) exclusive of any corrosion allowance.

(5) this minimum thickness does not apply to the tubes in air cooled and cooling tower heat exchangers if all the following provisions are met:

(-a) the tubes shall not be used for lethal UW-2(a) service applications;

(-b) the tubes shall be protected by fins or other mechanical means;

(-c) the tube outside diameter shall be a minimum of $^3/_8$ in. (10 mm) and a maximum of $1^1/_2$ in. (38 mm);

(-d) the minimum thickness used shall not be less than that calculated by the formulas given in UG-27 or 1-1 and in no case less than 0.022 in. (0.5 mm).

(c) Mill Undertolerance. Plate material shall be ordered not thinner than the design thickness. Vessels made of plate furnished with an undertolerance of not more than the smaller value of 0.01 in. (0.25 mm) or 6% of the ordered thickness may be used at the full design pressure for the thickness ordered. If the specification to which the plate is ordered allows a greater undertolerance, the ordered thickness of the materials shall be sufficiently greater than the design thickness so that the thickness of the material furnished is not more than the smaller of 0.01 in. (0.25 mm) or 6% under the design thickness.

Provided by IHS under license with ASME
No reproduction or networking permitted without license from IHS
Licensee=Chevron Phillips Chemical Co LP/5956674001
Not for Resale, 11/09/2014 20:41:36 MST

(d) Pipe Undertolerance. If pipe or tube is ordered by its nominal wall thickness, the manufacturing undertolerance on wall thickness shall be taken into account except for nozzle wall reinforcement area requirements in accordance with UG-37 and UG-40. The manufacturing undertolerances are given in the several pipe and tube specifications listed in the applicable Tables in Subsection C. After the minimum wall thickness is determined, it shall be increased by an amount sufficient to provide the manufacturing undertolerance allowed in the pipe or tube specification.

(e) Corrosion Allowance in Design Formulas. The dimensional symbols used in all design formulas throughout this Division represent dimensions in the corroded condition.

(f) Examples showing the application of the design rules of this Division are contained in ASME PTB-4, ASME Section VIII, Division 1, Example Problem Manual.

UG-17 METHODS OF FABRICATION IN COMBINATION

A vessel may be designed and constructed by a combination of the methods of fabrication given in this Division, provided the rules applying to the respective methods of fabrication are followed and the vessel is limited to the service permitted by the method of fabrication having the most restrictive requirements (see UG-116).

UG-18 MATERIALS IN COMBINATION

Except as specifically prohibited by other rules of this Division, a vessel may be designed and constructed of any combination of materials permitted in Subsection C, provided the applicable rules are followed and the requirements in Section IX for welding dissimilar metals are met.

The requirements for the base metals, HAZ's, and weld metal(s) of a dissimilar metal weldment shall each be applied in accordance with the rules of this Division. (For example, if a carbon steel base metal is joined to a stainless steel base metal with a nickel filler metal, the rules of Part UCS apply to the carbon steel base metal and its HAZ, Part UHA to the stainless steel base metal and its HAZ, and Part UNF to the weld metal.)

NOTE: Because of the different thermal coefficients of expansion of dissimilar materials, caution should be exercised in design and construction under the provisions of this paragraph in order to avoid difficulties in service under extreme temperature conditions, or with unusual restraint of parts such as may occur at points of stress concentration and also because of metallurgical changes occurring at elevated temperatures. [See also *Galvanic Corrosion* in Appendix A, A-440(c), of Section II, Part D.]

UG-19 SPECIAL CONSTRUCTIONS

(a) Combination Units. A combination unit is a pressure vessel that consists of more than one independent pressure chamber, operating at the same or different pressures and temperatures. The parts separating each independent pressure chamber are the common elements. Each element, including the common elements, shall be designed for at least the most severe condition of coincident pressure and temperature expected in normal operation (see 3-2). Only the chambers that come within the scope of this Division, U-1, need be constructed in compliance with its provisions. Also, see 9-1(c) for jacketed vessels.

(1) Common Element Design. It is permitted to design each common element for a differential pressure less than the maximum of the design pressures of its adjacent chambers (differential pressure design) or a mean metal temperature less than the maximum of the design temperatures of its adjacent chambers (mean metal temperature design), or both, only when the vessel is to be installed in a system that controls the common element design conditions.

(2) Differential Pressure Design. When differential pressure design is permitted, the common element design pressure shall be the maximum differential design pressure expected between the adjacent chambers. The common element and its corresponding differential pressure shall be indicated in the "Remarks" section of the Manufacturer's Data Report [see UG-120(b)(1) and UHX-19.3] and marked on the vessel [see UG-116(j)(1)(-a) and UHX-19.2.1(a)]. The differential pressure shall be controlled to ensure the common element design pressure is not exceeded.

(3) Mean Metal Temperature Design. When mean metal temperature design is used, the maximum common element design temperature determined in accordance with UG-20(a) may be less than the greater of the maximum design temperatures of its adjacent chambers; however, it shall not be less than the lower of the maximum design temperatures of its adjacent chambers. The common element and its corresponding design temperature shall be indicated in the "Remarks" section of the Manufacturer's Data Report [see UG-120(b)(2) and UHX-19.3] and marked on the vessel [see UG-116(j)(1)(-b) and UHX-19.2.1(b)]. The fluid temperature, flow, and pressure, as required, shall be controlled to ensure the common element design temperature is not exceeded.

(b) Special Shapes. Vessels other than cylindrical and spherical and those for which no design rules are provided in this Division may be designed under the conditions set forth in U-2.

(c) When no design rules are given and the strength of a pressure vessel or vessel part cannot be calculated with a satisfactory assurance of accuracy, the maximum allowable working pressure of the completed vessel shall be established in accordance with the provisions of UG-101.

UG-20 DESIGN TEMPERATURE (13)

(a) Maximum. Except as required in UW-2(d)(3), the maximum temperature used in design shall be not less than the mean metal temperature (through the thickness) expected under operating conditions for the part considered (see 3-2). If necessary, the metal temperature shall

Provided by IHS under license with ASME
No reproduction or networking permitted without license from IHS
Licensee=Chevron Phillips Chemical Co LP/5956674001
Not for Resale, 11/09/2014 20:41:36 MST

be determined by computation or by measurement from equipment in service under equivalent operating conditions. See also U-2(a).

NOTE: The user and Manufacturer are cautioned that certain fabrication details allowed by this Division may result in cracking at welds and associated heat affected zones (HAZ) for vessels designed for use at elevated temperature. WRC Bulletin 470, "Recommendations for Design of Vessels for Elevated Temperature Service" has information that may prove helpful to the vessel designer. WRC Bulletin 470 contains recommended design details for use at elevated temperature service, which is for the purposes of this Division, when the allowable stresses in Section II, Part D are based on time-dependent properties. The use of these details does not relieve the Manufacturer of design responsibility with regard to consideration of stresses associated with both steady state conditions and transient events, such as start-up, shutdown, intermittent operation, thermal cycling, etc., as defined by the user.

(b) Minimum. The minimum metal temperature used in design shall be the lowest expected in service except when lower temperatures are permitted by the rules of this Division (see UCS-66, UCS-160, and endnote [10], UG-116). The minimum mean metal temperature shall be determined by the principles described in (a) above. Consideration shall include the lowest operating temperature, operational upsets, autorefrigeration, atmospheric temperature, and any other sources of cooling [except as permitted in (f)(3) below for vessels meeting the requirements of (f) below]. The MDMT marked on the nameplate shall correspond to a coincident pressure equal to the MAWP. When there are multiple MAWP's, the largest value shall be used to establish the MDMT marked on the nameplate. Additional MDMT's corresponding with other MAWP's may also be marked on the nameplate (see footnote 37).

(c) Design temperatures that exceed the temperature limit in the applicability column shown in Section II, Part D, Subpart 1, Tables 1A, 1B, and 3 are not permitted. In addition, design temperatures for vessels under external pressure shall not exceed the maximum temperatures given on the external pressure charts.

(d) The design of zones with different metal temperatures may be based on their determined temperatures.

(e) Suggested methods for obtaining the operating temperature of vessel walls in service are given in Nonmandatory Appendix C.

(f) Impact testing per UG-84 is not mandatory for pressure vessel materials that satisfy all of the following:

(1) The material shall be limited to P-No. 1, Gr. No. 1 or 2, and the thickness, as defined in UCS-66(a) [see also Note (1) in Figure UCS-66.2], shall not exceed that given in (-a) or (-b) below:

(-a) $\frac{1}{2}$ in. (13 mm) for materials listed in Curve A of Figure UCS-66;

(-b) 1 in. (25 mm) for materials listed in Curve B, C, or D of Figure UCS-66.

(2) The completed vessel shall be hydrostatically tested per UG-99(b) or UG-99(c) or 27-4. Alternatively, the completed vessel may be pneumatically tested in accordance with 35-6.

(3) Design temperature is no warmer than 650°F (345°C) nor colder than −20°F (−29°C). Occasional operating temperatures colder than −20°F (−29°C) are acceptable when due to lower seasonal atmospheric temperature.

(4) The thermal or mechanical shock loadings are not a controlling design requirement. (See UG-22.)

(5) Cyclical loading is not a controlling design requirement. (See UG-22.)

UG-21 DESIGN PRESSURE[11]

Each element of a pressure vessel shall be designed for at least the most severe condition of coincident pressure (including coincident static head in the operating position) and temperature expected in normal operation. For this condition, the maximum difference in pressure between the inside and outside of a vessel, or between any two chambers of a combination unit, shall be considered [see UG-98 and 3-2]. See also U-2(a)

UG-22 LOADINGS

The loadings to be considered in designing a vessel shall include those from:

(a) internal or external design pressure (as defined in UG-21);

(b) weight of the vessel and normal contents under operating or test conditions;

(c) superimposed static reactions from weight of attached equipment, such as motors, machinery, other vessels, piping, linings, and insulation;

(d) the attachment of:

(1) internals (see Nonmandatory Appendix D);

(2) vessel supports, such as lugs, rings, skirts, saddles, and legs (see Nonmandatory Appendix G);

(e) cyclic and dynamic reactions due to pressure or thermal variations, or from equipment mounted on a vessel, and mechanical loadings;

(f) wind, snow, and seismic reactions, where required;

(g) impact reactions such as those due to fluid shock;

(h) temperature gradients and differential thermal expansion;

(i) abnormal pressures, such as those caused by deflagration;

(j) test pressure and coincident static head acting during the test (see UG-99).

UG-23 MAXIMUM ALLOWABLE STRESS VALUES[12]

(a) The maximum allowable stress value is the maximum unit stress permitted in a given material used in a vessel constructed under these rules. The maximum allowable tensile stress values permitted for different materials are given in Subpart 1 of Section II, Part D. Section II, Part D is published as two separate publications. One

Provided by IHS under license with ASME
No reproduction or networking permitted without license from IHS
Licensee=Chevron Phillips Chemical Co LP/5956674001
Not for Resale, 11/09/2014 20:41:36 MST

publication contains values only in the U.S. Customary units and the other contains values only in SI units. The selection of the version to use is dependent on the set of units selected for construction. A listing of these materials is given in the following tables, which are included in Subsection C. For material identified as meeting more than one material specification and/or grade, the maximum allowable tensile stress value for either material specification and/or grade may be used provided all requirements and limitations for the material specification and grade are met for the maximum allowable tensile stress value chosen.

Table	Title
UCS-23	Carbon and Low Alloy Steel (stress values in Section II, Part D, Table 3 for bolting, and Table 1A for other carbon steels)
Tables UNF-23.1 through UNF-23.5	Nonferrous Metals (stress values in Section II, Part D, Table 3 for bolting, and Table 1B for other nonferrous metals)
UHA-23	High Alloy Steel (stress values in Section II, Part D, Table 3 for bolting, and Table 1A for other high alloy steels)
UCI-23	Maximum Allowable Stress Values in Tension for Cast Iron
UCD-23	Maximum Allowable Stress Values in Tension for Cast Ductile Iron
UHT-23	Ferritic Steels with Properties Enhanced by Heat Treatment (stress values in Section II, Part D, Table 1A)
ULT-23	Maximum Allowable Stress Values in Tension for 5%, 8%, and 9% Nickel Steels and 5083-0 Aluminum Alloy at Cryogenic Temperatures for Welded and Nonwelded Construction

(b) The maximum allowable longitudinal compressive stress to be used in the design of cylindrical shells or tubes, either seamless or butt welded, subjected to loadings that produce longitudinal compression in the shell or tube shall be the smaller of the following values:

(1) the maximum allowable tensile stress value permitted in (a) above;

(2) the value of the factor B determined by the following procedure where

E = modulus of elasticity of material at design temperature. The modulus of elasticity to be used shall be taken from the applicable materials chart in Section II, Part D, Subpart 3. (Interpolation may be made between lines for intermediate temperatures.)

R_o = outside radius of cylindrical shell or tube

t = the minimum required thickness of the cylindrical shell or tube

The joint efficiency for butt welded joints shall be taken as unity.

The value of B shall be determined as follows.

Step 1. Using the selected values of t and R, calculate the value of factor A using the following equation:

$$A = \frac{0.125}{(R_o/t)}$$

Step 2. Using the value of A calculated in Step 1, enter the applicable material chart in Section II, Part D, Subpart 3for the material under consideration. Move vertically to an intersection with the material/temperature line for the design temperature (see UG-20). Interpolation may be made between lines for intermediate temperatures. If tabular values in Subpart 3 of Section II, Part D are used, linear interpolation or any other rational interpolation method may be used to determine a B value that lies between two adjacent tabular values for a specific temperature. Such interpolation may also be used to determine a B value at an intermediate temperature that lies between two sets of tabular values, after first determining B values for each set of tabular values.

In cases where the value at A falls to the right of the end of the material/temperature line, assume an intersection with the horizontal projection of the upper end of the material/temperature line. If tabular values are used, the last (maximum) tabulated value shall be used. For values of A falling to the left of the material/temperature line, see Step 4.

Step 3. From the intersection obtained in Step 2, move horizontally to the right and read the value of factor B. This is the maximum allowable compressive stress for the values of t and R_o used in Step 1.

Step 4. For values of A falling to the left of the applicable material/temperature line, the value of B shall be calculated using the following equation:

$$B = \frac{AE}{2}$$

If tabulated values are used, determine B as in Step 2 and apply it to the equation in Step 4.

Step 5. Compare the value of B determined in Steps 3 or 4 with the computed longitudinal compressive stress in the cylindrical shell or tube, using the selected values of t and R_o. If the value of B is smaller than the computed compressive stress, a greater value of t must be selected and the design procedure repeated until a value of B is obtained that is greater than the compressive stress computed for the loading on the cylindrical shell or tube.

(c) The wall thickness of a vessel computed by these rules shall be determined such that, for any combination of loadings listed in UG-22 that induce primary stress and are expected to occur simultaneously during normal operation[13] of the vessel, the induced maximum general primary membrane stress does not exceed the maximum allowable stress value in tension (see UG-23), except as provided in (d) below. Except where limited by special

Provided by IHS under license with ASME
No reproduction or networking permitted without license from IHS
Licensee=Chevron Phillips Chemical Co LP/5956674001
Not for Resale, 11/09/2014 20:41:36 MST

rules, such as those for cast iron in flanged joints, the above loads shall not induce a combined maximum primary membrane stress plus primary bending stress across the thickness that exceeds $1\frac{1}{2}$ times[14] the maximum allowable stress value in tension (see UG-23). It is recognized that high localized discontinuity stresses may exist in vessels designed and fabricated in accordance with these rules. Insofar as practical, design rules for details have been written to limit such stresses to a safe level consistent with experience.

The maximum allowable stress values that are to be used in the thickness calculations are to be taken from the tables at the temperature that is expected to be maintained in the metal under the conditions of loading being considered. Maximum stress values may be interpolated for intermediate temperatures.

(d) For the combination of earthquake loading, or wind loading with other loadings in UG-22, the wall thickness of a vessel computed by these rules shall be determined such that the general primary membrane stress shall not exceed 1.2 times the maximum allowable stress permitted in (a), (b), or (c) above. This rule is applicable to stresses caused by internal pressure, external pressure, and axial compressive load on a cylinder.[15]

Earthquake loading and wind loading need not be considered to act simultaneously.

(e) Localized discontinuity stresses [see (c) above] are calculated in Mandatory Appendix 1, 1-5(g) and 1-8(e), Part UHX, and Mandatory Appendix 5. The primary plus secondary stresses[14] at these discontinuities shall be limited to S_{PS}, where $S_{PS} = 3S$, and S is the maximum allowable stress of the material at temperature [see (a) above].

In lieu of using $S_{PS} = 3S$, a value of $S_{PS} = 2S_Y$ may be used, where S_Y is the yield strength at temperature, provided the following are met:

(1) the allowable stress of material S is not governed by time-dependent properties as provided in Tables 1A or 1B of Section II, Part D;

(2) the room temperature ratio of the specified minimum yield strength to specified minimum tensile strength for the material does not exceed 0.7;

(3) the value for S_Y at temperature can be obtained from Table Y-1 of Section II, Part D.

UG-24 CASTINGS

(a) Quality Factors. A casting quality factor as specified below shall be applied to the allowable stress values for cast materials given in Subsection C except for castings permitted by Part UCI. At a welded joint in a casting, only the lesser of the casting quality factor or the weld joint efficiency specified in UW-12 applies, but not both. NDE methods and acceptance standards are given in Mandatory Appendix 7.

(1) A factor not to exceed 80% shall be applied to static castings that are examined in accordance with the minimum requirements of the material specification. In addition to the minimum requirements of the material specification, all surfaces of centrifugal castings shall be machined after heat treatment to a finish not coarser than 250 μin. (6.3 μm) arithmetical average deviation, and a factor not to exceed 85% shall be applied.

(2) For nonferrous and ductile cast iron materials, a factor not to exceed 90% shall be applied if in addition to the minimum requirements of (1):

(-a) each casting is subjected to a thorough examination of all surfaces, particularly such as are exposed by machining or drilling, without revealing any defects;

(-b) at least three pilot castings[16] representing the first lot of five castings made from a new or altered design are sectioned or radiographed at all critical sections[17] without revealing any defects;

(-c) one additional casting taken at random from every subsequent lot of five is sectioned or radiographed at all critical sections without revealing any defects; and

(-d) all castings other than those that have been radiographed are examined at all critical sections by the magnetic particle or liquid penetrant methods in accordance with the requirements of Mandatory Appendix 7.

(3) For nonferrous and ductile cast iron materials, a factor not to exceed 90% may be used for a single casting that has been radiographed at all critical sections and found free of defects.

(4) For nonferrous and ductile cast iron materials, a factor not to exceed 90% may be used for a casting that has been machined to the extent that all critical sections are exposed for examination for the full wall thickness; as in tubesheets drilled with holes spaced no farther apart than the wall thickness of the casting. The examination afforded may be taken in lieu of destructive or radiographic testing required in (2)(-b) above.

(5) For carbon, low alloy, or high alloy steels, higher quality factors may be applied if in addition to the minimum requirements of (1) above, additional examinations are made as follows.

(-a) For centrifugal castings, a factor not to exceed 90% may be applied if the castings are examined by the magnetic particle or liquid penetrant methods in accordance with the requirements of Mandatory Appendix 7.

(-b) For static and centrifugal castings a factor not to exceed 100% may be applied if the castings are examined in accordance with all of the requirements of Mandatory Appendix 7.

(6) The following additional requirements apply when castings (including those permitted in UG-11) are to be used in vessels to contain lethal substances (UW-2).

(-a) Castings of cast iron (UCI-2) and cast ductile iron (UCD-2) are prohibited.

(-b) Each casting of nonferrous material permitted by this Division shall be radiographed at all critical sections[17] without revealing any defects. The quality factor for nonferrous castings for lethal service shall not exceed 90%.

Provided by IHS under license with ASME
No reproduction or networking permitted without license from IHS
Licensee=Chevron Phillips Chemical Co LP/5956674001
Not for Resale, 11/09/2014 20:41:36 MST

(-c) Each casting of steel material permitted by this Division shall be examined per Mandatory Appendix 7 for severe service applications [7-3(b)]. The quality factor for lethal service shall not exceed 100%.

(b) Defects. Imperfections defined as unacceptable by either the material specification or by Mandatory Appendix 7, 7-3, whichever is more restrictive, are considered to be defects and shall be the basis for rejection of the casting. Where defects have been repaired by welding, the completed repair shall be subject to reexamination and, when required by either the rules of this Division or the requirements of the castings specification, the repaired casting shall be postweld heat treated and, to obtain a 90% or 100% quality factor, the repaired casting shall be stress relieved.

(c) Identification and Marking. Each casting to which a quality factor greater than 80% is applied shall be marked with the name, trademark, or other traceable identification of the manufacturer and the casting identification, including the casting quality factor and the material designation.

UG-25 CORROSION

(a) The user or his designated agent (see U-2) shall specify corrosion allowances other than those required by the rules of this Division. Where corrosion allowances are not provided, this fact shall be indicated on the Data Report.

(b) Vessels or parts of vessels subject to thinning by corrosion, erosion, or mechanical abrasion shall have provision made for the desired life of the vessel by a suitable increase in the thickness of the material over that determined by the design formulas, or by using some other suitable method of protection. (See Nonmandatory Appendix E.)

NOTE: When using high alloys and nonferrous materials either for solid wall or clad or lined vessels, refer to UHA-6, UCL-3, and UNF-4, as appropriate.

(c) Material added for these purposes need not be of the same thickness for all parts of the vessel if different rates of attack are expected for the various parts.

(d) No additional thickness need be provided when previous experience in like service has shown that corrosion does not occur or is of only a superficial nature.

(e) Telltale Holes. Telltale holes may be used to provide some positive indication when the thickness has been reduced to a dangerous degree. Telltale holes shall not be used in vessels that are to contain lethal substances [see UW-2(a)], except as permitted by ULW-76 for vent holes in layered construction. When telltale holes are provided, they shall have a diameter of $^1/_{16}$ in. to $^3/_{16}$ in. (1.5 mm to 5 mm)and have a depth not less than 80% of the thickness required for a seamless shell of like dimensions. These holes shall be provided in the opposite surface to that where deterioration is expected. [For telltale holes in clad or lined vessels, see UCL-25(b).]

(f) Openings for Drain. Vessels subject to corrosion shall be supplied with a suitable drain opening at the lowest point practicable in the vessel; or a pipe may be used extending inward from any other location to within $^1/_4$ in. (6 mm) of the lowest point.

UG-26 LININGS

Corrosion resistant or abrasion resistant linings, whether or not attached to the wall of a vessel, shall not be considered as contributing to the strength of the wall except as permitted in Part UCL (see Nonmandatory Appendix F).

UG-27 THICKNESS OF SHELLS UNDER INTERNAL PRESSURE (13)

(a) The minimum required thickness of shells under internal pressure shall not be less than that computed by the following formulas,[18] except as permitted by Mandatory Appendix 1 or Mandatory Appendix 32. In addition, provision shall be made for any of the loadings listed in UG-22, when such loadings are expected. The provided thickness of the shells shall also meet the requirements of UG-16, except as permitted in Mandatory Appendix 32.

(b) The symbols defined below are used in the formulas of this paragraph.

E = joint efficiency for, or the efficiency of, appropriate joint in cylindrical or spherical shells, or the efficiency of ligaments between openings, whichever is less.
For welded vessels, use the efficiency specified in UW-12.
For ligaments between openings, use the efficiency calculated by the rules given in UG-53.

P = internal design pressure (see UG-21)

R = inside radius of the shell course under consideration,[19]

S = maximum allowable stress value (see UG-23 and the stress limitations specified in UG-24)

t = minimum required thickness of shell

(c) Cylindrical Shells. The minimum thickness or maximum allowable working pressure of cylindrical shells shall be the greater thickness or lesser pressure as given by (1) or (2) below.

(1) Circumferential Stress (Longitudinal Joints). When the thickness does not exceed one-half of the inside radius, or P does not exceed $0.385SE$, the following formulas shall apply:

$$t = \frac{PR}{SE - 0.6P} \quad \text{or} \quad P = \frac{SEt}{R + 0.6t} \qquad (1)$$

Provided by IHS under license with ASME
No reproduction or networking permitted without license from IHS
Licensee=Chevron Phillips Chemical Co LP/5956674001
Not for Resale, 11/09/2014 20:41:36 MST

(2) Longitudinal Stress (Circumferential Joints).[20] When the thickness does not exceed one-half of the inside radius, or P does not exceed $1.25SE$, the following formulas shall apply:

$$t = \frac{PR}{2SE + 0.4P} \quad \text{or} \quad P = \frac{2SEt}{R - 0.4t} \tag{2}$$

(d) Spherical Shells. When the thickness of the shell of a wholly spherical vessel does not exceed $0.356R$, or P does not exceed $0.665SE$, the following formulas shall apply:

$$t = \frac{PR}{2SE - 0.2P} \quad \text{or} \quad P = \frac{2SEt}{R + 0.2t} \tag{3}$$

(e) When necessary, vessels shall be provided with stiffeners or other additional means of support to prevent overstress or large distortions under the external loadings listed in UG-22 other than pressure and temperature.

(f) A stayed jacket shell that extends completely around a cylindrical or spherical vessel shall also meet the requirements of UG-47(c).

(g) Any reduction in thickness within a shell course or spherical shell shall be in accordance with UW-9.

UG-28 THICKNESS OF SHELLS AND TUBES UNDER EXTERNAL PRESSURE

(a) Rules for the design of shells and tubes under external pressure given in this Division are limited to cylindrical shells, with or without stiffening rings, tubes, and spherical shells. Three typical forms of cylindrical shells are shown in Figure UG-28. Charts used in determining minimum required thicknesses of these components are given in Subpart 3 of Section II, Part D.

(b) The symbols defined below are used in the procedures of this paragraph:

A = factor determined from Figure G in Subpart 3 of Section II, Part D and used to enter the applicable material chart in Subpart 3 of Section II, Part D. For the case of cylinders having D_o/t values less than 10, see (c)(2).

B = factor determined from the applicable material chart or table in Subpart 3 of Section II, Part D for maximum design metal temperature [see UG-20(c)]

D_o = outside diameter of cylindrical shell course or tube

E = modulus of elasticity of material at design temperature. For external pressure design in accordance with this Section, the modulus of elasticity to be used shall be taken from the applicable materials chart in Subpart 3 of Section II, Part D. (Interpolation may be made between lines for intermediate temperatures.)

L = total length, in. (mm), of a tube between tubesheets, or design length of a vessel section between lines of support (see Figure UG-28.1). A line of support is:

(a) a circumferential line on a head (excluding conical heads) at one-third the depth of the head from the head tangent line as shown on Figure UG-28;

(b) a stiffening ring that meets the requirements of UG-29;

(c) a jacket closure of a jacketed vessel that meets the requirements of 9-5;

(d) a cone-to-cylinder junction or a knuckle-to-cylinder junction of a toriconical head or section that satisfies the moment of inertia requirement of 1-8.

P = external design pressure [see Note in (f)]

P_a = calculated value of maximum allowable external working pressure for the assumed value of t, [see Note in (f) below]

R_o = outside radius of spherical shell

t = minimum required thickness of cylindrical shell or tube, or spherical shell, in. (mm)

t_s = nominal thickness of cylindrical shell or tube, in. (mm)

(c) Cylindrical Shells and Tubes. The required minimum thickness of a cylindrical shell or tube under external pressure, either seamless or with longitudinal butt joints, shall be determined by the following procedure: (13)

(1) Cylinders having D_o/t values ≥ 10:

Step 1. Assume a value for t and determine the ratios L/D_o and D_o/t.

Step 2. Enter Figure G in Subpart 3 of Section II, Part D at the value of L/D_o determined in Step 1. For values of L/D_o greater than 50, enter the chart at a value of L/D_o = 50. For values of L/D_o less than 0.05, enter the chart at a value of L/D_o = 0.05.

Step 3. Move horizontally to the line for the value of D_o/t determined in Step 1. Interpolation may be made for intermediate values of D_o/t; extrapolation is not permitted. From this point of intersection move vertically downward to determine the value of factor A.

Step 4. Using the value of A calculated in Step 3, enter the applicable material chart in Subpart 3 of Section II, Part D for the material under consideration. Move vertically to an intersection with the material/temperature line for the design temperature (see UG-20). Interpolation may be made between lines for intermediate temperatures. If tabular values in Subpart 3 of Section II, Part D are used, linear interpolation or any other rational interpolation method may be used to determine a B value that lies between two adjacent tabular values for a specific temperature. Such interpolation may also be used to determine a B value at an intermediate temperature that lies between two sets of tabular values, after first determining B values for each set of tabular values.

In cases where the value of A falls to the right of the end of the material/temperature line, assume an intersection with the horizontal projection of the upper end of the material/temperature line. If tabular values are used, the last

Provided by IHS under license with ASME
No reproduction or networking permitted without license from IHS
Licensee=Chevron Phillips Chemical Co LP/5956674001
Not for Resale, 11/09/2014 20:41:36 MST

Figure UG-28
Diagrammatic Representation of Variables for Design of Cylindrical Vessels Subjected to External Pressure

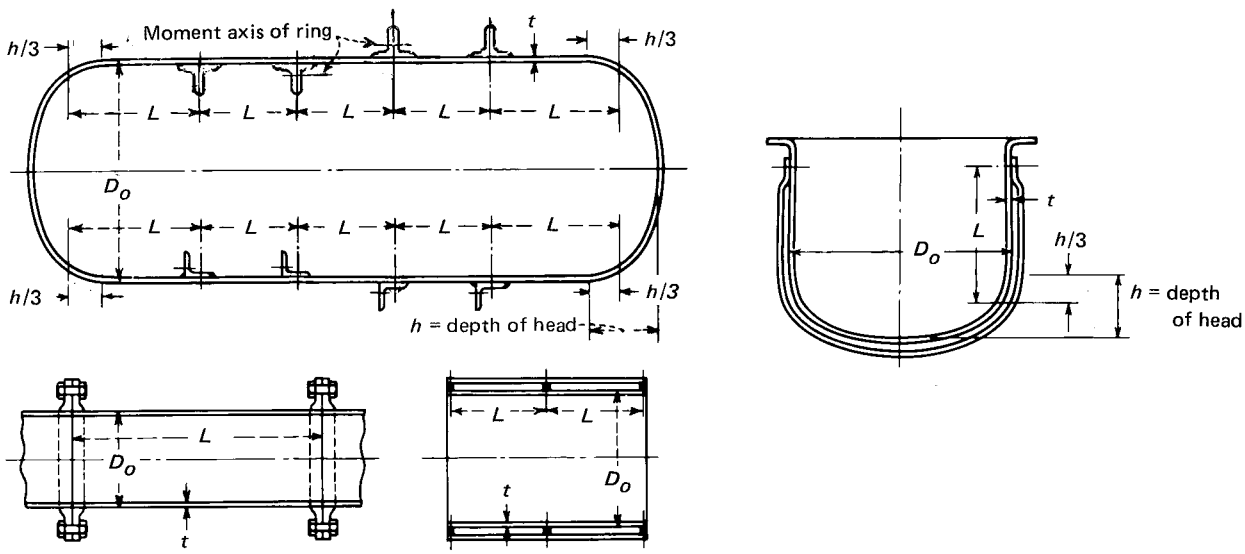

(maximum) tabulated value shall be used. For values of A falling to the left of the material/temperature line, see Step 7.

Step 5. From the intersection obtained in Step 4, move horizontally to the right and read the value of factor B.

Step 6. Using this value of B, calculate the value of the maximum allowable external working pressure P_a using the following equation:

$$P_a = \frac{4B}{3(D_o/t)}$$

Step 7. For values of A falling to the left of the applicable material/temperature line, the value of P_a can be calculated using the following equation:

$$P_a = \frac{2AE}{3(D_o/t)}$$

If tabular values are used, determine B as in Step 4 and apply it to the equation in Step 6.

Step 8. Compare the calculated value of P_a obtained in Steps 6 or 7 with P. If P_a is smaller than P, select a larger value for t and repeat the design procedure until a value of P_a is obtained that is equal to or greater than P.

(2) Cylinders having D_o/t values < 10:

Step 1. Using the same procedure as given in (1), obtain the value of B. For values of D_o/t less than 4, the value of factor A can be calculated using the following equation:

$$A = \frac{1.1}{(D_o/t)^2}$$

For values of A greater than 0.10, use a value of 0.10.

Step 2. Using the value of B obtained in Step 1, calculate a value P_{a1} using the following equation:

$$P_{a1} = \left[\frac{2.167}{(D_o/t)} - 0.0833\right]B$$

Step 3. Calculate a value P_{a2} using the following equation:

$$P_{a2} = \frac{2S}{D_o/t}\left[1 - \frac{1}{D_o/t}\right]$$

where S is the lesser of two times the maximum allowable stress value in tension at design metal temperature, from the applicable table referenced in UG-23, or 0.9 times the yield strength of the material at design temperature.

Provided by IHS under license with ASME
No reproduction or networking permitted without license from IHS
Licensee=Chevron Phillips Chemical Co LP/5956674001
Not for Resale, 11/09/2014 20:41:36 MST

Figure UG-28.1 (13)
Diagrammatic Representation of Lines of Support for Design of Cylindrical Vessels Subjected to External Pressure

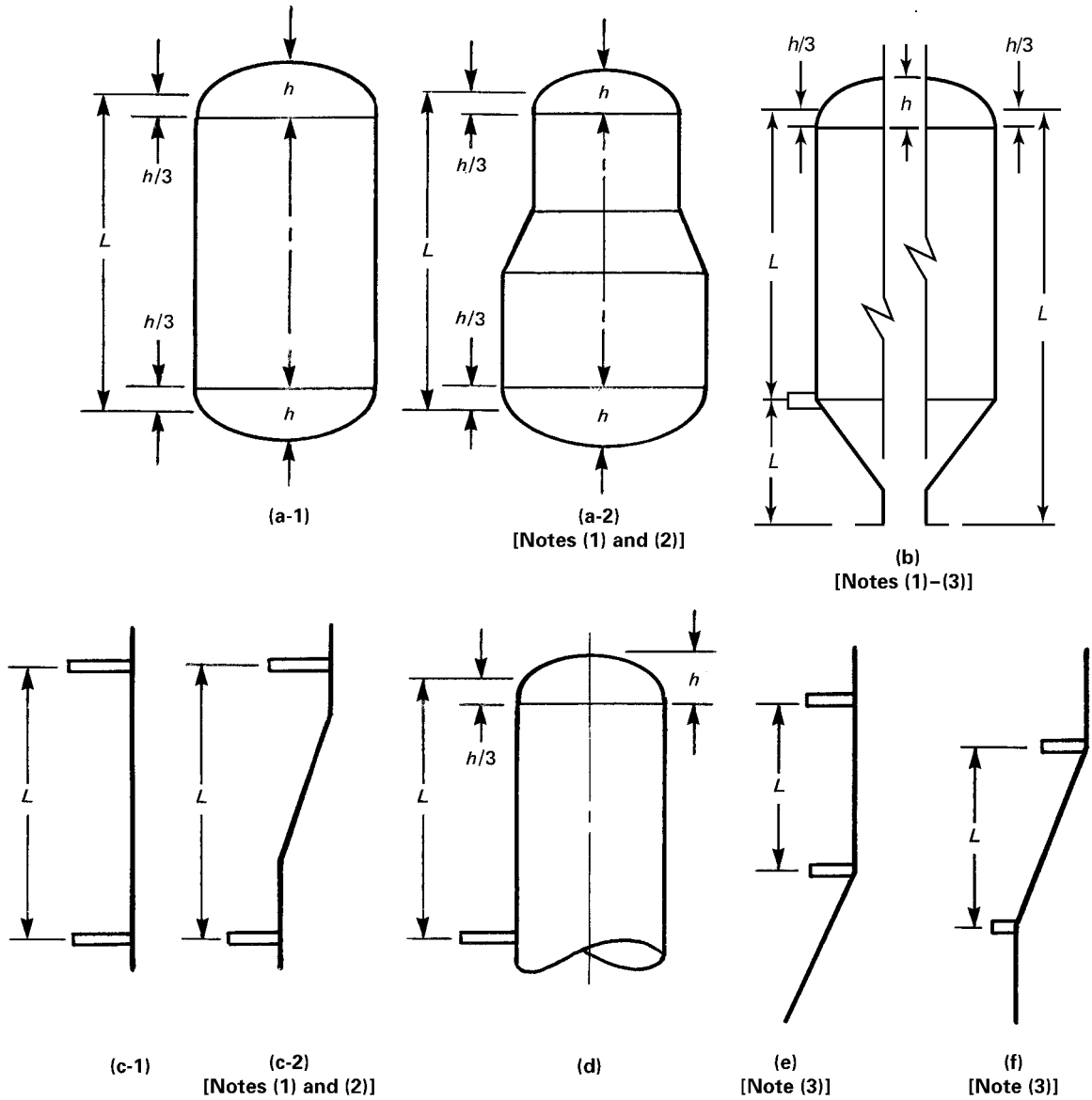

NOTES:

(1) When the cone-to-cylinder or the knuckle-to-cylinder junction is not a line of support, the required thickness of the cone, knuckle, or toriconical section shall not be less than the required thickness of the adjacent cylindrical shell. Also, the reinforcement requirement of 1-8 shall be satisfied when a knuckle is not provided at the cone-to-cylinder junction.

(2) Calculations shall be made using the diameter and corresponding thickness of each cylindrical section with dimension L as shown. Thicknesses of the transition sections are based on Note (1).

(3) When the cone-to-cylinder or the knuckle-to-cylinder junction is a line of support, the moment of inertia shall be provided in accordance with 1-8 [see UG-33(f)].

Provided by IHS under license with ASME
No reproduction or networking permitted without license from IHS
Licensee=Chevron Phillips Chemical Co LP/5956674001
Not for Resale, 11/09/2014 20:41:36 MST

Values of yield strength are obtained from the applicable external pressure chart as follows:

(a) For a given temperature curve, determine the B value that corresponds to the right hand side termination point of the curve.

(b) The yield strength is twice the B value obtained in (a) above.

Step 4. The smaller of the values of P_{a1} calculated in Step 2, or P_{a2} calculated in Step 3 shall be used for the maximum allowable external working pressure P_a. Compare P_a with P. If P_a is smaller than P, select a larger value for t and repeat the design procedure until a value for P_a is obtained that is equal to or greater than P.

(13) *(d) Spherical Shells.* The minimum required thickness of a spherical shell under external pressure, either seamless or of built-up construction with butt joints, shall be determined by the following procedure:

Step 1. Assume a value for t and calculate the value of factor A using the following equation:

$$A = \frac{0.125}{(R_o/t)}$$

Step 2. Using the value of A calculated in Step 1, enter the applicable material chart in Subpart 3 of Section II, Part D for the material under consideration. Move vertically to an intersection with the material/temperature line for the design temperature (see UG-20). Interpolation may be made between lines for intermediate temperatures. If tabular values in Subpart 3 of Section II, Part D are used, linear interpolation or any other rational interpolation method may be used to determine a B value that lies between two adjacent tabular values for a specific temperature. Such interpolation may also be used to determine a B value at an intermediate temperature that lies between two sets of tabular values, after first determining B values for each set of tabular values.

In cases where the value at A falls to the right of the end of the material/temperature line, assume an intersection with the horizontal projection of the upper end of the material/temperature line. If tabular values are used, the last (maximum) tabulated value shall be used. For values at A falling to the left of the material/temperature line, see Step 5.

Step 3. From the intersection obtained in Step 2, move horizontally to the right and read the value of factor B.

Step 4. Using the value of B obtained in Step 3, calculate the value of the maximum allowable external working pressure P_a using the following equation:

$$P_a = \frac{B}{(R_o/t)}$$

Step 5. For values of A falling to the left of the applicable material/temperature line, the value of P_a can be calculated using the following equation:

$$P_a = \frac{0.0625E}{(R_o/t)^2}$$

If tabulated values are used, determine B as in Step 2 and apply it to the equation in Step 4.

Step 6. Compare P_a obtained in Step 4 or 5 with P. If P_a is smaller than P, select a larger value for t and repeat the design procedure until a value for P_a is obtained that is equal to or greater than P.

(e) The external design pressure or maximum allowable external working pressure shall not be less than the maximum expected difference in operating pressure that may exist between the outside and the inside of the vessel at any time.

(f) Vessels intended for service under external design pressures of 15 psi (100 kPa) and less [see U-1(c)(2)(-h)] may be stamped with the Certification Mark and Designator denoting compliance with the rules for external pressure provided all the applicable rules of this Division are satisfied. When the Certification Mark is to be applied, the user or his designated agent shall specify the required maximum allowable external working pressure.[21] The vessel shall be designed and stamped with the maximum allowable external working pressure.

(g) When there is a longitudinal lap joint in a cylindrical shell or any lap joint in a spherical shell under external pressure, the thickness of the shell shall be determined by the rules in this paragraph, except that $2P$ shall be used instead of P in the calculations for the required thickness.

(h) Circumferential joints in cylindrical shells may be of any type permitted by the Code and shall be designed for the imposed loads.

(i) Those portions of pressure chambers of vessels that are subject to a collapsing pressure and that have a shape other than that of a complete circular cylinder or formed head, and also jackets of cylindrical vessels that extend over only a portion of the circumference, shall be fully staybolted in accordance with the requirements of UG-47 through UG-50 or shall be proof tested in compliance with UG-101(p).

(j) When necessary, vessels shall be provided with stiffeners or other additional means of support to prevent overstress or large distortions under the external loadings listed in UG-22 other than pressure and temperature.

UG-29 STIFFENING RINGS FOR CYLINDRICAL SHELLS UNDER EXTERNAL PRESSURE (13)

(a) External stiffening rings shall be attached to the shell by welding or brazing [see UG-30]. Internal stiffening rings need not be attached to the shell when the rings are designed to carry the loads and adequate means of

Provided by IHS under license with ASME
No reproduction or networking permitted without license from IHS
Licensee=Chevron Phillips Chemical Co LP/5956674001
Not for Resale, 11/09/2014 20:41:36 MST

support is provided to hold the ring in place when subjected to external pressure loads. Segments of rings need not be attached when the requirements of (c) are met.

Except as exempted in (f) below, the available moment of inertia of a circumferential stiffening ring shall be not less than that determined by one of the following two formulas:

$$I_s = \left[D_o^2 L_s (t + A_s/L_s) A\right] / 14$$

$$I'_s = \left[D_o^2 L_s (t + A_s/L_s) A\right] / 10.9$$

where

I_s = required moment of inertia of the stiffening ring cross section about its neutral axis parallel to the axis of the shell

I'_s = required moment of inertia of the combined ring-shell cross section about its neutral axis parallel to the axis of the shell

I = available moment of inertia of the stiffening ring cross section about its neutral axis parallel to the axis of the shell

I' = available moment of inertia of combined ring-shell cross section about its neutral axis parallel to the axis of the shell. The nominal shell thickness t_s shall be used and the width of shell that is taken as contributing to the moment of inertia of the combined section shall not be greater than $1.10\sqrt{D_o t_s}$ and shall be taken as lying one-half on each side of the centroid of the ring. Portions of the shell plate shall not be considered as contributing area to more than one stiffening ring.

CAUTION: Stiffening rings may be subject to lateral buckling. This should be considered in addition to the requirements for I_s and I'_s [see U-2(g)].

If the stiffeners should be so located that the maximum permissible effective shell sections overlap on either or both sides of a stiffener, the effective shell section for that stiffener shall be shortened by one-half of each overlap.

A_s = cross-sectional area of the stiffening ring

A = factor determined from the applicable chart in Subpart 3 of Section II, Part D for the material used in the stiffening ring, corresponding to the factor B, below, and the design temperature for the shell under consideration

B = factor determined from the applicable chart or table in Subpart 3 of Section II, Part D for the material used for the stiffening ring [see UG-20(c)]

L_s = one-half of the distance from the centerline of the stiffening ring to the next line of support on one side, plus one-half of the centerline distance to the next line of support on the other side of the stiffening ring, both measured parallel to the axis of the cylinder. A line of support is:

(a) a stiffening ring that meets the requirements of this paragraph;

(b) a circumferential connection to a jacket for a jacketed section of a cylindrical shell;

(c) a circumferential line on a head at one-third the depth of the head from the head tangent line as shown on Figure UG-28;

(d) a cone-to-cylinder junction.

D_o, E, P, t, and t_s are as defined in UG-28(b).

The adequacy of the moment of inertia for a stiffening ring shall be determined by the following procedure.

Step 1. Assuming that the shell has been designed and D_o, L_s, and t are known, select a member to be used for the stiffening ring and determine its cross-sectional area A_s. Then calculate factor B using the following equation:

$$B = \frac{3}{4}\left(\frac{P D_o}{t + A_s/L_s}\right)$$

Step 2. See below:

(a) If tabular values in Subpart 3 of Section II, Part D are used, linear interpolation or any other rational interpolation method may be used to determine an A value that lies between two adjacent tabular values for a specific temperature. Linear interpolation may also be used to determine an A value at an intermediate temperature that lies between two sets of tabular values, after first determining A values for each set of tabular values. The value of A so determined is then applied in the equation for I or I'_s in Steps 6(a) or 6(b).

(b) If material charts in Subpart 3 of Section II, Part D are used, enter the right-hand side of the applicable material chart for the material under consideration at the value of B determined by Step 1. If different materials are used for the shell and stiffening ring, use the material chart resulting in the larger value of A in Step 4, below.

Step 3. Move horizontally to the left to the material/temperature line for the design metal temperature. For values of B falling below the left end of the material/temperature line, see Step 5.

Step 4. Move vertically to the bottom of the chart and read the value of A.

Step 5. For values of B falling below the left end of the material/temperature line for the design temperature, the value of A can be calculated using the formula $A = 2B/E$.

Step 6. See below:

(a) In those cases where only the stiffening ring is considered, compute the required moment of inertia from the formula for I_s given above.

(b) In those cases where the combined ring-shell is considered, compute the required moment of inertia from the formula for I'_s given above.

Provided by IHS under license with ASME
No reproduction or networking permitted without license from IHS
Licensee=Chevron Phillips Chemical Co LP/5956674001
Not for Resale, 11/09/2014 20:41:36 MST

Step 7. See below:

(a) In those cases where only the stiffening ring is considered, determine the available moment of inertia I as given in the definitions.

(b) In those cases where the combined ring-shell is considered, determine the available moment of inertia I' as given in the definitions.

NOTE: In those cases where the stiffening ring is not attached to the shell or where the stiffening ring is attached but the designer chooses to consider only the ring, Step 6(a) and Step 7(a) are considered. In those cases where the stiffening ring is attached to the shell and the combined moment of inertia is considered, Step 6(b) and Step 7(b) are considered.

Step 8. If the required moment of inertia is greater than the available moment of inertia for the section selected, for those cases where the stiffening ring is not attached or where the combined ring-shell stiffness was not considered, a new section with a larger moment of inertia must be selected; the ring must be attached to the shell and the combination shall be considered; or the ring-shell combination that was previously not considered together shall be considered together. If the required moment of inertia is greater than the available moment of inertia for those cases where the combined ring-shell was considered, a new ring section with a larger moment of inertia must be selected. In any case, when a new section is used, all of the calculations shall be repeated using the new section properties of the ring or ring-shell combination.

If the required moment of inertia is smaller than the actual moment of inertia of the ring or ring-shell combination, whichever is used, that ring section or combined section is satisfactory.

(b) Stiffening rings shall extend completely around the circumference of the cylinder except as permitted in (c) below. Any joints between the ends or sections of such rings, such as shown in Figure UG-29.1(A) and (B), and any connection between adjacent portions of a stiffening ring lying inside or outside the shell as shown in Figure UG-29.1(C) shall be made so that the required moment of inertia of the combined ring-shell section is maintained.

(c) Stiffening rings placed on the inside of a vessel may be arranged as shown in Figure UG-29.1(E) and (F) provided that the required moment of inertia of the ring in (E) or of the combined ring-shell section in (F) is maintained within the sections indicated. Where the gap at (A) or (E) does not exceed eight times the thickness of the shell plate, the combined moment of inertia of the shell and stiffener may be used.

Any gap in that portion of a stiffening ring supporting the shell, such as shown in Figure UG-29.1(D) and (E), shall not exceed the length of are given in Figure UG-29.2 unless additional reinforcement is provided as shown in Figure UG-29.1(C) or unless the following conditions are met:

(1) only one unsupported shell arc is permitted per ring; and

(2) the length of the unsupported shell arc does not exceed 90 deg; and

(3) the unsupported arcs in adjacent stiffening rings are staggered 180 deg; and

(4) the dimension L defined in UG-28(b) is taken as the larger of the following: the distance between alternate stiffening rings, or the distance from the head tangent line to the second stiffening ring plus one-third of the head depth.

(d) When internal plane structures perpendicular to the longitudinal axis of the cylinder (such as bubble trays or baffle plates) are used in a vessel, they may also be considered to act as stiffening rings provided they are designed to function as such.

(e) Any internal stays or supports used as stiffeners of the shell shall bear against the shell of the vessel through the medium of a substantially continuous ring.

NOTE: Attention is called to the objection to supporting vessels through the medium of legs or brackets, the arrangement of which may cause concentrated loads to be imposed on the shell. Vertical vessels should be supported through a substantial ring secured to the shell (see G-3). Horizontal vessels, unless supported at or close to the ends (heads) or at stiffening rings, should be supported through the medium of substantial members extending over at least one-third of the circumference, as shown at (K) in Figure UG-29.1.

Attention is called also to the hazard of imposing highly concentrated loads by the improper support of one vessel on another or by the hanging or supporting of heavy weights directly on the shell of the vessel. (See Nonmandatory Appendix G.)

(f) When closure bars or other rings are attached to both the inner shell and outer jacket of a vessel, with pressure in the space between the jacket and inner shell, this construction has adequate inherent stiffness, and therefore the rules of this paragraph do not apply.

UG-30 ATTACHMENT OF STIFFENING RINGS (13)

(a) Stiffening rings may be placed on the inside or outside of a vessel, and except for the configurations permitted by UG-29, shall be attached to the shell by welding or brazing. Brazing may be used if the vessel is not to be later stress relieved. The ring shall be essentially in contact with the shell and meet the rules in UG-29(b) and UG-29(c). Welding of stiffening rings shall comply with the requirements of this Division for the type of vessel under construction.

(b) Stiffening rings may be attached to the shell by continuous, intermittent, or a combination of continuous and intermittent welds or brazes. Some acceptable methods of attaching stiffening rings are illustrated in Figure UG-30.

(c) Intermittent welding shall be placed on both sides of the stiffener and may be either staggered or in-line. Length of individual fillet weld segments shall not be less than 2 in. (50 mm) and shall have a maximum clear spacing between toes of adjacent weld segments of $8t$ for external

Provided by IHS under license with ASME
No reproduction or networking permitted without license from IHS
Licensee=Chevron Phillips Chemical Co LP/5956674001
Not for Resale, 11/09/2014 20:41:36 MST

Figure UG-29.1
Various Arrangements of Stiffening Rings for Cylindrical Vessels Subjected to External Pressure

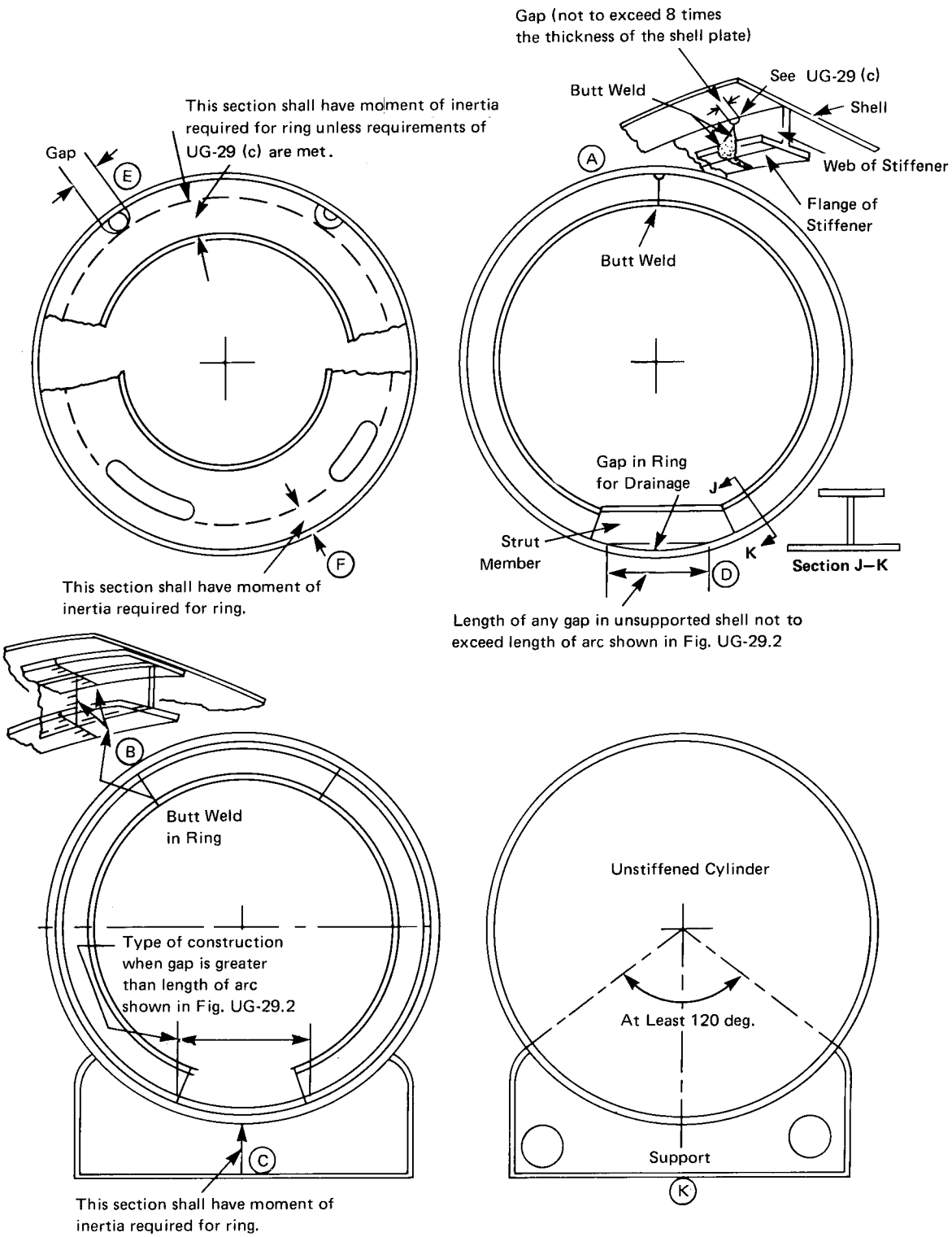

Provided by IHS under license with ASME
No reproduction or networking permitted without license from IHS
Licensee=Chevron Phillips Chemical Co LP/5956674001
Not for Resale, 11/09/2014 20:41:36 MST

Figure UG-29.2
Maximum Arc of Shell Left Unsupported Because of Gap in Stiffening Ring of Cylindrical Shell Under External Pressure

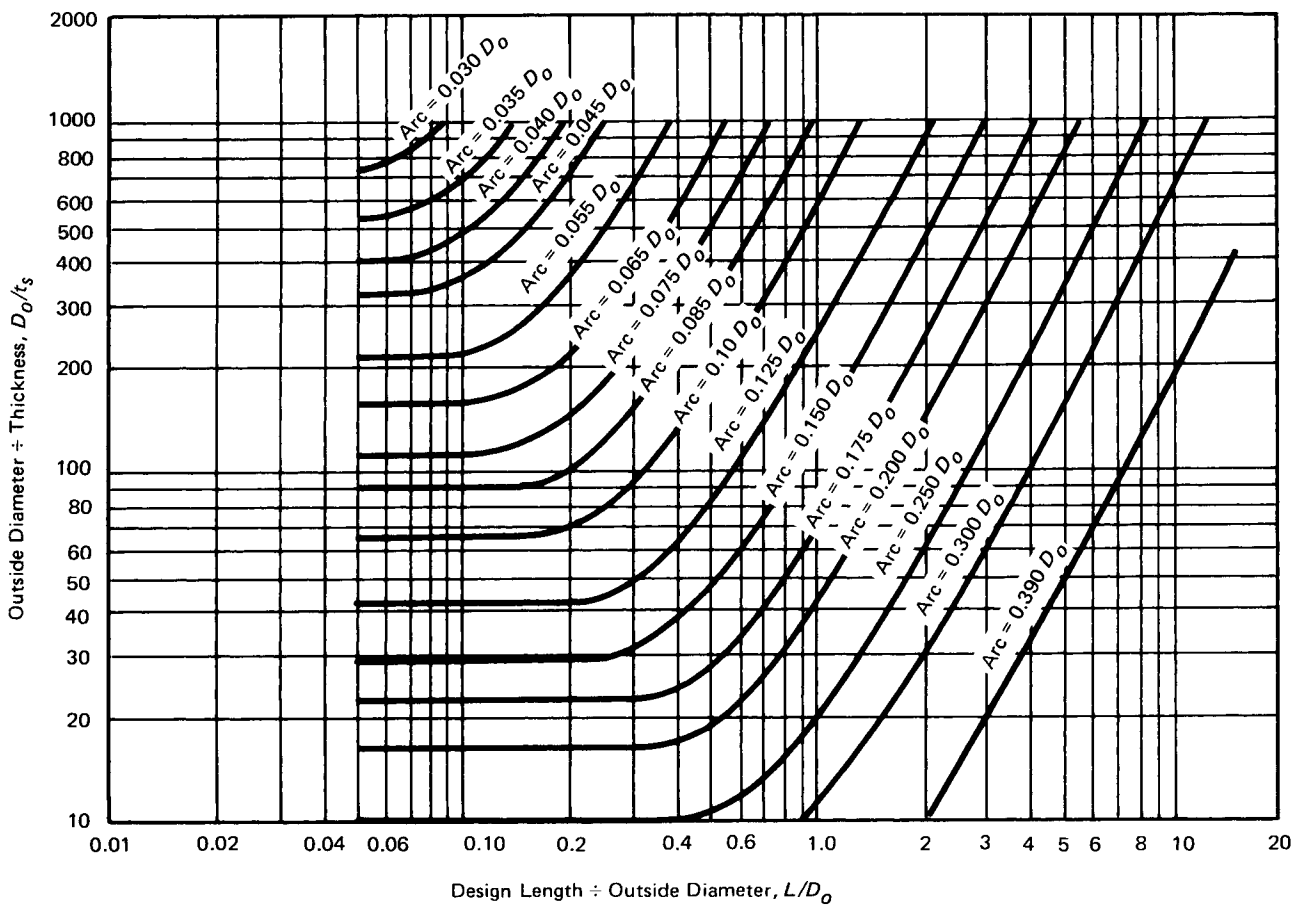

rings and $12t$ for internal rings where t is the shell thickness at the attachment. The total length of weld on each side of the stiffening ring shall be:

(1) not less than one-half the outside circumference of the vessel for rings on the outside; and

(2) not less than one-third the circumference of the vessel for rings on the inside.

(d) A continuous full penetration weld is permitted as shown in sketch (e) of Figure UG-30. Continuous fillet welding or brazing on one side of the stiffener with intermittent welding or brazing on the other side is permitted for sketches (a), (b), (c), and (d) of Figure UG-30 when the thickness t_w of the outstanding stiffening element [sketches (a) and (c)] or width w of the stiffening element mating to the shell [sketches (b) and (d)] is not more than 1 in. (25 mm). The weld segments shall be not less than 2 in. (50 mm) long and shall have a maximum clear spacing between toes of adjacent weld segments of $24t$.

(e) Strength of Attachment Welds. Stiffening ring attachment welds shall be sized to resist the full radial pressure load from the shell between stiffeners, and shear loads acting radially across the stiffener caused by external design loads carried by the stiffener (if any) and a computed radial shear equal to 2% of the stiffening ring's compressive load.

(1) The radial pressure load from shell, lb/in., is equal to PL_s.

(2) The radial shear load is equal to $0.01PL_sD_O$.

(3) P, L_s, and D_O are defined in UG-29.

(f) Minimum Size of Attachment Welds. The fillet weld leg size shall be not less than the smallest of the following:

(1) $^1/_4$ in. (6 mm);

(2) vessel thickness at the weld location;

(3) stiffener thickness at weld location.

Provided by IHS under license with ASME
No reproduction or networking permitted without license from IHS
Licensee=Chevron Phillips Chemical Co LP/5956674001
Not for Resale, 11/09/2014 20:41:36 MST

Figure UG-30
Some Acceptable Methods of Attaching Stiffening Rings

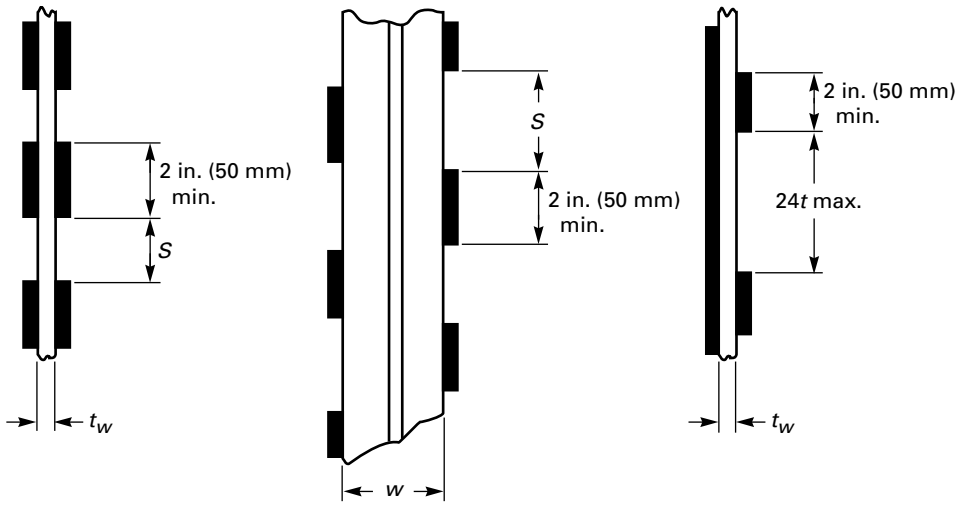

In-line Intermittent Weld | **Staggered Intermittent Weld** | **Continuous Fillet Weld One Side, Intermittent Other Side**

$S \leq 8t$ external stiffeners
$S \leq 12t$ internal stiffeners

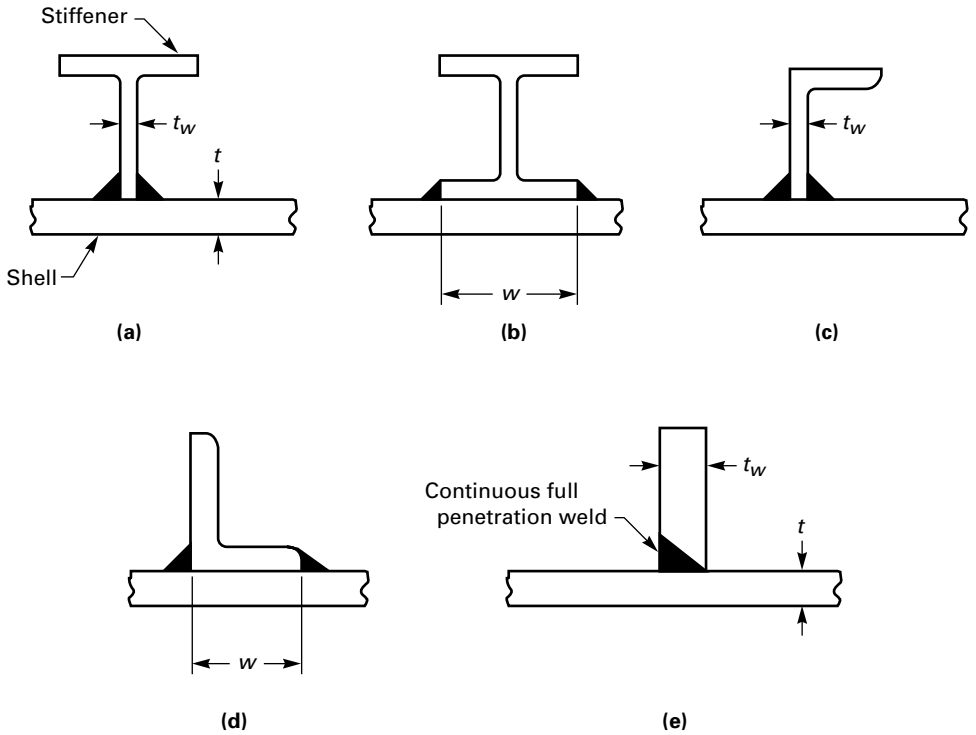

--`,,,``,,``,,,,,`,`,``,,,,,,,,,,,,-`-`,,`,,`,`,,`---
Provided by IHS under license with ASME
No reproduction or networking permitted without license from IHS
Licensee=Chevron Phillips Chemical Co LP/5956674001
Not for Resale, 11/09/2014 20:41:36 MST

UG-31 TUBES, AND PIPE WHEN USED AS TUBES OR SHELLS

(a) Internal Pressure. The required wall thickness for tubes and pipe under internal pressure shall be determined in accordance with the rules for shells in UG-27.

(b) External Pressure. The required wall thickness for tubes and pipe under external pressure shall be determined in accordance with the rules in UG-28.

(c) The thickness as determined under (a) or (b) above shall be increased when necessary to meet the following requirements:

(1) Additional wall thickness should be provided when corrosion, erosion, or wear due to cleaning operations is expected.

(2) Where ends are threaded, additional wall thickness is to be provided in the amount of $0.8/n$ in. ($20/n$ mm) [where n equals the number of threads per inch (25.4 mm)].

NOTE: The requirements for rolling, expanding, or otherwise seating tubes in tube plates may require additional wall thickness and careful choice of materials because of possible relaxation due to differential expansion stresses.

(13) **UG-32 FORMED HEADS, AND SECTIONS, PRESSURE ON CONCAVE SIDE**

(a) The minimum required thickness at the thinnest point after forming[22] of ellipsoidal, torispherical, hemispherical, conical, and toriconical heads under pressure on the concave side (plus heads) shall be computed by the appropriate formulas in this paragraph,[23] except as permitted by Mandatory Appendix 32. Heads with bolting flanges shall meet the requirements of UG-35.1. In addition, provision shall be made for any of the loadings listed in UG-22. The provided thickness of the heads shall also meet the requirements of UG-16, except as permitted in Mandatory Appendix 32.

(b) DELETED

(c) The symbols defined below are used in the formulas of this paragraph:

D = inside diameter of the head skirt; or inside length of the major axis of an ellipsoidal head; or inside diameter of a conical head at the point under consideration, measured perpendicular to the longitudinal axis

D_i = inside diameter of the conical portion of a toriconical head at its point of tangency to the knuckle, measured perpendicular to the axis of the cone

= $D - 2r(1 - \cos\alpha)$

E = lowest efficiency of any joint in the head; for hemispherical heads this includes head-to-shell joint; for welded vessels, use the efficiency specified in UW-12

L = inside spherical or crown radius. The value of L for ellipsoidal heads shall be obtained from Table UG-37.

P = internal design pressure (see UG-21)

r = inside knuckle radius

S = maximum allowable stress value in tension as given in the tables referenced in UG-23, except as limited in UG-24 and (e) below.

t = minimum required thickness of head after forming

t_s = minimum specified thickness of head after forming, in. (mm). t_s shall be ≥ t

α = one-half of the included (apex) angle of the cone at the centerline of the head (see Figure 1-4)

(d) Ellipsoidal Heads With $t_s/L \geq 0.002$. The required thickness of a dished head of semiellipsoidal form, in which half the minor axis (inside depth of the head minus the skirt) equals one-fourth of the inside diameter of the head skirt, shall be determined by

$$t = \frac{PD}{2SE - 0.2P} \quad \text{or} \quad P = \frac{2SEt}{D + 0.2t} \tag{1}$$

NOTE: For ellipsoidal heads with $t_s/L < 0.002$, the rules of 1-4(f) shall also be met.

An acceptable approximation of a 2:1 ellipsoidal head is one with a knuckle radius of $0.17D$ and a spherical radius of $0.90D$.

(e) Torispherical Heads With $t_s/L \geq 0.002$. The required thickness of a torispherical head for the case in which the knuckle radius is 6% of the inside crown radius and the inside crown radius equals the outside diameter of the skirt [see (j)] shall be determined by

$$t = \frac{0.885PL}{SE - 0.1P} \quad \text{or} \quad P = \frac{SEt}{0.885L + 0.1t} \tag{2}$$

NOTE: For torispherical heads with $t_s/L < 0.002$, the rules of 1-4(f) shall also be met.

Torispherical heads made of materials having a specified minimum tensile strength exceeding 70,000 psi (485 MPa) shall be designed using a value of S equal to 20,000 psi (138 MPa) at room temperature and reduced in proportion to the reduction in maximum allowable stress values at temperature for the material (see UG-23).

(f) Hemispherical Heads. When the thickness of a hemispherical head does not exceed $0.356L$, or P does not exceed $0.665SE$, the following formulas shall apply:

$$t = \frac{PL}{2SE - 0.2P} \quad \text{or} \quad P = \frac{2SEt}{L + 0.2t} \tag{3}$$

(g) Conical Heads and Sections (Without Transition Knuckle). The required thickness of conical heads or conical shell sections that have a half apex-angle α not greater than 30 deg shall be determined by

$$t = \frac{PD}{2\cos\alpha(SE - 0.6P)} \quad \text{or} \quad P = \frac{2SEt\cos\alpha}{D + 1.2t\cos\alpha} \tag{4}$$

Provided by IHS under license with ASME
No reproduction or networking permitted without license from IHS
Licensee=Chevron Phillips Chemical Co LP/5956674001
Not for Resale, 11/09/2014 20:41:36 MST

A reinforcing ring shall be provided when required by the rule in 1-5(d) and 1-5(e).

Conical heads or sections having a half apex-angle α greater than 30 deg without a transition knuckle shall comply with eq. (4) and 1-5(g).

(h) Toriconical Heads and Sections. The required thickness of the conical portion of a toriconical head or section, in which the knuckle radius is neither less than 6% of the outside diameter of the head skirt nor less than three times the knuckle thickness, shall be determined by eq. (g)(4) in (g) above, using D_i in place of D.

The required thickness of the knuckle shall be determined by eq. 1-4(d)(3) in which

$$L = \frac{D_i}{2 \cos \alpha}$$

Toriconical heads or sections may be used when the angle $\alpha \geq 30$ deg and are mandatory for conical head designs when the angle α exceeds 30 deg, unless the design complies with 1-5(g).

(i) When an ellipsoidal, torispherical, hemispherical, conical, or toriconical head is of a lesser thickness than required by the rules of this paragraph, it shall be stayed as a flat surface according to the rules of UG-47 for braced and stayed flat plates.

(j) The inside crown radius to which an unstayed head is dished shall be not greater than the outside diameter of the skirt of the head. The inside knuckle radius of a torispherical head shall be not less than 6% of the outside diameter of the skirt of the head but in no case less than 3 times the head thickness.

(k) A dished head with a reversed skirt may be used in a pressure vessel provided the maximum allowable working pressure for the head is established in accordance with the requirements of UG-101.

(l) All formed heads, thicker than the shell and concave to pressure, intended for butt welded attachment, shall have a skirt length sufficient to meet the requirements of Figure UW-13.1, when a tapered transition is required. All formed heads concave to pressure and intended for butt welded attachment need not have an integral skirt when the thickness of the head is equal to or less than the thickness of the shell. When a skirt is provided, its thickness shall be at least that required for a seamless shell of the same inside diameter.

(m) Heads concave to pressure, intended for attachment by brazing, shall have a skirt length sufficient to meet the requirements for circumferential joints in Part UB.

(n) Any taper at a welded joint within a formed head shall be in accordance with UW-9. The taper at a circumferential welded joint connecting a formed head to a main shell shall meet the requirements of UW-13 for the respective type of joint shown therein.

(o) If a torispherical, ellipsoidal, or hemispherical head is formed with a flattened spot or surface, the diameter of the flat spot shall not exceed that permitted for flat heads as given by eq. UG-34(c)(2)(1), using C = 0.25.

(p) Openings in formed heads under internal pressure shall comply with the requirements of UG-36 through UG-46.

(q) A stayed jacket that completely covers a formed inner head or any of the types included in this paragraph shall also meet the requirements of UG-47(c).

UG-33 FORMED HEADS, PRESSURE ON CONVEX SIDE (13)

(a) General. The required thickness at the thinnest point after forming [see footnote 18, UG-32(a)] of ellipsoidal, torispherical, hemispherical, toriconical, and conical heads and conical segments under pressure on the convex side (minus heads) shall be computed by the appropriate formulas given in this paragraph (see UG-16). Heads with bolting flanges shall meet the requirements of UG-35.1. In addition, provisions shall be made for any other loading given in UG-22. The required thickness for heads due to pressure on the convex side shall be determined as follows.

(1) For ellipsoidal and torispherical heads, the required thickness shall be the greater of the following:

(-a) the thickness computed by the procedure given in UG-32 for heads with pressure on the concave side (plus heads) using a design pressure 1.67 times the design pressure on the convex side, assuming a joint efficiency E = 1.00 for all cases; or

(-b) the thickness as computed by the appropriate procedure given in (d) or (e) below.

In determining the maximum allowable working pressure on the convex side of ellipsoidal or torispherical heads, reverse the procedures in (-a) and (-b) above, and use the smaller of the pressures obtained.

(2) For hemispherical heads, the required thickness shall be determined by the rules given in (c) below.

(3) For conical and toriconical heads and conical sections, the required thickness shall be determined by the rules given in (f) below.

(b) Nomenclature. The nomenclature defined below is used in this paragraph. Figure 1-4 shows principal dimensions of typical heads.

A, B, E, and *P* are as defined in UG-28(b)

D_o = outside diameter of the head skirt

$D_o/2h_o$ = ratio of the major to the minor axis of ellipsoidal heads, which equals the outside diameter of the head skirt divided by twice the outside height of the head (see Table UG-33.1)

D_L = outside diameter at large end of conical section under consideration

D_s = outside diameter at small end of conical section under consideration

Provided by IHS under license with ASME
No reproduction or networking permitted without license from IHS
Licensee=Chevron Phillips Chemical Co LP/5956674001
Not for Resale, 11/09/2014 20:41:36 MST

D_{ss} = outside diameter at small end of conical section under consideration

h_o = one-half of the length of the outside minor axis of the ellipsoidal head, or the outside height of the ellipsoidal head measured from the tangent line (head-bend line)

K_o = factor depending on the ellipsoidal head proportions $D_o/2h_o$ (see Table UG-33.1)

L_c = axial length of cone or conical section (see Figure UG-33.1).

L_e = equivalent length of conical head or Section between lines of support [see (g)]

R_o = for hemispherical heads, the outside radius
= for ellipsoidal heads, the equivalent outside spherical radius taken as K_oD_o
= for torispherical heads, the outside radius of the crown portion of the head

t = minimum required thickness of head after forming, in. (mm)

t_e = effective thickness of conical section
= $t \cos \alpha$

α = one-half the apex angle in conical heads and sections, deg

(c) Hemispherical Heads. The required thickness of a hemispherical head having pressure on the convex side shall be determined in the same manner as outlined in UG-28(d) for determining the thickness for a spherical shell.

(d) Ellipsoidal Heads. The required thickness of an ellipsoidal head having pressure on the convex side, either seamless or of built-up construction with butt joints, shall not be less than that determined by the following procedure.

Step 1. Assume a value for t and calculate the value of factor A using the following formula:

$$A = \frac{0.125}{R_o/t}$$

Step 2. Using the value of A calculated in Step 1, follow the same procedure as that given for spherical shells in UG-28(d), Steps 2 through 6.

Table UG-33.1
Values of Spherical Radius Factor K_o for Ellipsoidal Head With Pressure on Convex Side

$D_o/2h_o$	...	3.0	2.8	2.6	2.4	2.2
K_o	...	1.36	1.27	1.18	1.08	0.99
$D_o/2h_o$	2.0	1.8	1.6	1.4	1.2	1.0
K_o	0.90	0.81	0.73	0.65	0.57	0.50

GENERAL NOTE: Interpolation permitted for intermediate values.

(e) Torispherical Heads. The required thickness of a torispherical head having pressure on the convex side, either seamless or of built-up construction with butt joints, shall not be less than that determined by the same design procedure as is used for ellipsoidal heads given in (d) above, using the appropriate value for R_o.

(f) Conical Heads and Sections. When the cone-to-cylinder junction is not a line-of-support, the required thickness of a conical head or section under pressure on the convex side, either seamless or of built-up construction with butt joints shall not be less than the required thickness of the adjacent cylindrical shell and, when a knuckle is not provided, the reinforcement requirement of 1-8 shall be satisfied (see Figure UG-28.1). When the cone-to-cylinder junction is a line-of-support, the required thickness shall be determined in accordance with the following subparagraphs.

(1) When α is equal to or less than 60 deg:

(-a) cones having D_L/t_e values ≥ 10:

Step 1. Assume a value for t_e and determine the ratios L_e/D_L and D_L/t_e.

Step 2. Enter Figure G of Subpart 3 of Section II, Part D at a value of L/D_o equivalent to the value of L_e/D_L determined in Step 1. For values of L_e/D_L greater than 50, enter the chart at a value of L_e/D_L = 50.

Step 3. Move horizontally to the line for the value of D_o/t equivalent to the value of D_L/t_e determined in Step 1. Interpolation may be made for intermediate values of D_L/t_e; extrapolation is not permitted. From this point of intersection move vertically downwards to determine the value of factor A.

Step 4. Using the value of A calculated in Step 3, enter the applicable material chart in Subpart 3 of Section II, Part D for the material under consideration. Move vertically to an intersection with the material/temperature line for the design temperature (see UG-20). Interpolation may be made between lines for intermediate temperatures.

In cases where the value of A falls to the right of the end of the material/temperature line, assume an intersection with the horizontal projection of the upper end of the material/temperature line. For values of A falling to the left of the material/temperature line, see Step 7.

Step 5. From the intersection obtained in Step 4, move horizontally to the right and read the value of factor B.

Step 6. Using this value of B, calculate the value of the maximum allowable external working pressure P_a using the following formula:

$$P_a = \frac{4B}{3(D_L/t_e)}$$

Provided by IHS under license with ASME
No reproduction or networking permitted without license from IHS
Licensee=Chevron Phillips Chemical Co LP/5956674001
Not for Resale, 11/09/2014 20:41:36 MST

Figure UG-33.1
Length L_c of Some Typical Conical Sections for External Pressure

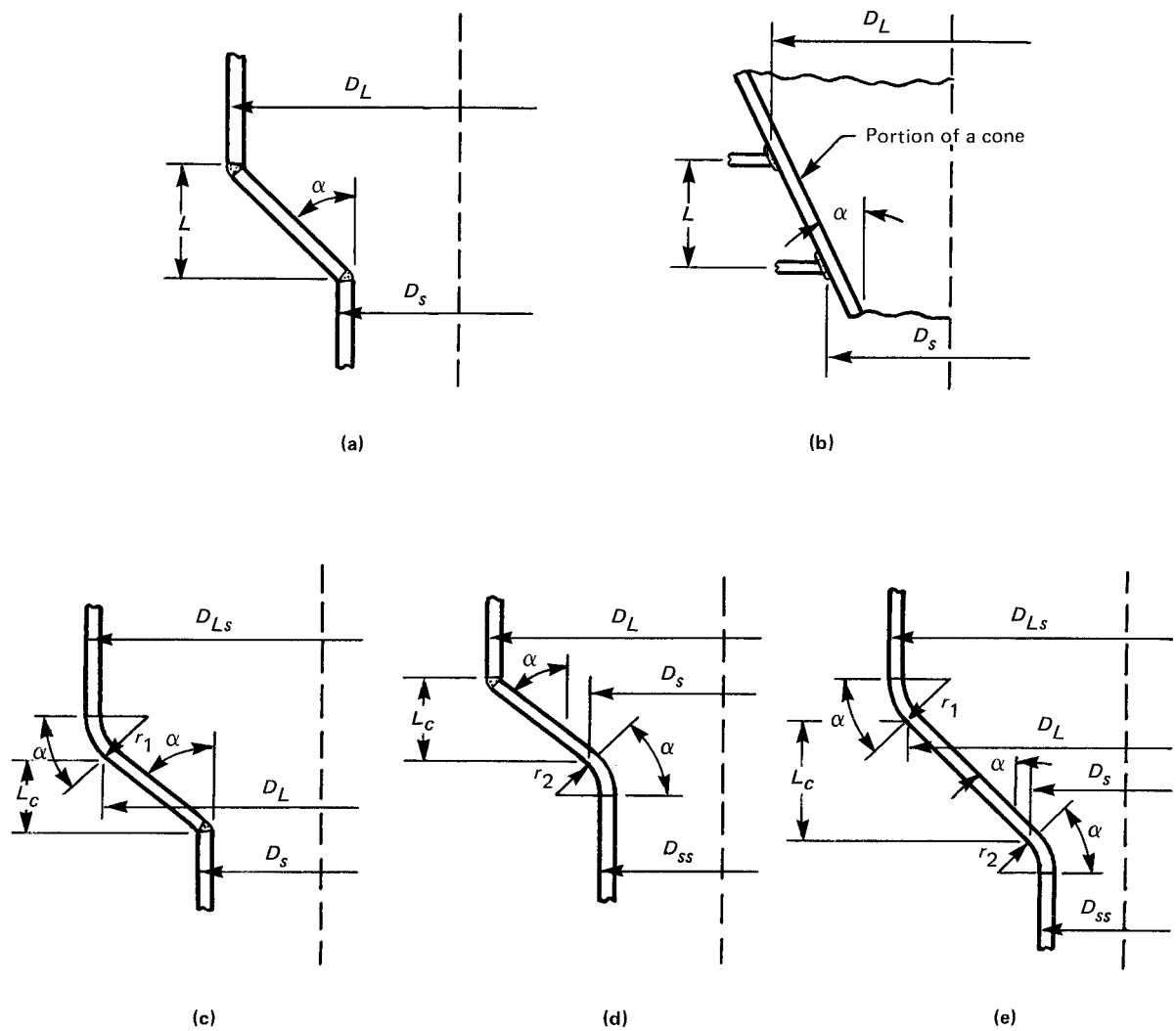

Step 7. For values of A falling to the left of the applicable material/temperature line, the value of P_a can be calculated using the following formula:

$$P_a = \frac{2AE}{3(D_L/t_e)}$$

Step 8. Compare the calculated value of P_a obtained in Steps 6 or 7 with P. If P_a is smaller than P, select a larger value for t and repeat the design procedure until a value of P_a is obtained that is equal to or greater than P.

Step 9. Provide adequate moment of inertia and reinforcement at the cone-to-cylinder junction in accordance with 1-8. For a junction with a knuckle, the reinforcement calculation is not required, and the moment of inertia calculation may be performed either by considering the presence of the knuckle or by assuming the knuckle is not present whereby the cone is assumed to intersect the adjacent cylinder.

(-b) cones having D_L/t_e values < 10:

Step 1. Using the same procedure as given in (-a) above, obtain the value of B. For values of D_L/t_e less than 4, the value of factor A can be calculated using the following formula:

$$A = \frac{1.1}{(D_L/t_e)^2}$$

For values of A greater than 0.10, use a value of 0.10.

Provided by IHS under license with ASME
No reproduction or networking permitted without license from IHS
Licensee=Chevron Phillips Chemical Co LP/5956674001
Not for Resale, 11/09/2014 20:41:36 MST

Step 2. Using the value of B obtained in Step 1, calculate a value P_{a1} using the following formula:

$$P_{a1} = \left[\frac{2.167}{(D_L/t_e)} - 0.0833\right]B$$

Step 3. Calculate a value P_{a2} using the following formula:

$$P_{a2} = \frac{2S}{D_L/t_e}\left[1 - \frac{1}{D_L/t_e}\right]$$

where

S = the lesser of two times the maximum allowable stress value in tension at design metal temperature, from the applicable table referenced by UG-23, or 0.9 times the yield strength of the material at design temperature

Values of yield strength are obtained from the applicable external pressure chart as follows.

(a) For a given temperature curve, determine the B value that corresponds to the right hand side termination point of the curve.

(b) The yield strength is twice the B value obtained in (a) above.

Step 4. The smaller of the values of P_{a1} calculated in Step 2, or P_{a2} calculated in Step 3 shall be used for the maximum allowable external working pressure P_a. Compare P_a with P. If P_a is smaller than P, select a larger value for t and repeat the design procedure until a value for P_a is obtained that is equal to or greater than P.

Step 5. Provide adequate moment of inertia and reinforcement at the cone-to-cylinder junction in accordance with 1-8. For a junction with a knuckle, the reinforcement calculation is not required, and the moment of inertia calculation may be performed either by considering the presence of the knuckle or by assuming the knuckle is not present whereby the cone is assumed to intersect the adjacent cylinder.

(2) When α of the cone is greater than 60 deg, the thickness of the cone shall be the same as the required thickness for a flat head under external pressure, the diameter of which equals the largest diameter of the cone (see UG-34).

(3) The thickness of an eccentric cone shall be taken as the greater of the two thicknesses obtained using both the smallest and largest α in the calculations.

(g) The required thickness of a conical part of a toriconical head or conical section having pressure on the convex side, either seamless or of built-up construction with butt joints within the conical part of a toriconical head or conical section, shall not be less than that determined from (f) above with the exception that L_e shall be determined as follows:

(1) For illustrations (a) and (b) in Figure UG-33.1,

$$L_e = (L_c/2)\,(1 + D_s/D_L)$$

(2) For sketch (c) in Figure UG-33.1,

$$L_e = r_1 \sin\alpha + \frac{L_c}{2}\left(\frac{D_L + D_s}{D_{Ls}}\right)$$

(3) For sketch (d) in Figure UG-33.1,

$$L_e = r_2 \frac{D_{ss}}{D_L}\sin\alpha + \frac{L_c}{2}\left(\frac{D_L + D_s}{D_L}\right)$$

(4) For sketch (e) in Figure UG-33.1,

$$L_e = \left(r_1 + r_2\frac{D_{ss}}{D_{Ls}}\right)\sin\alpha + \frac{L_c}{2}\frac{(D_L + D_s)}{D_{Ls}}$$

(h) When lap joints are used in formed head construction or for longitudinal joints in a conical head under external pressure, the thickness shall be determined by the rules in this paragraph, except that $2P$ shall be used instead of P in the calculations for the required thickness.

(i) The required length of skirt on heads convex to pressure shall comply with the provisions of UG-32(l) and UG-32(m) for heads concave to pressure.

(j) Openings in heads convex to pressure shall comply with the requirements of UG-36 through UG-46.

UG-34 UNSTAYED FLAT HEADS AND COVERS

(a) The minimum thickness of unstayed flat heads, cover plates and blind flanges shall conform to the requirements given in this paragraph. These requirements apply to both circular and noncircular[24] heads and covers. Some acceptable types of flat heads and covers are shown in Figure UG-34. In this figure, the dimensions of the component parts and the dimensions of the welds are exclusive of extra metal required for corrosion allowance.

(b) The symbols used in this paragraph and in Figure UG-34 are defined as follows:

C = a factor depending upon the method of attachment of head, shell dimensions, and other items as listed in (d) below, dimensionless. The factors for welded covers also include a factor of 0.667 that effectively increases the allowable stress for such constructions to $1.5S$.

D = long span of noncircular heads or covers measured perpendicular to short span

d = diameter, or short span, measured as indicated in Figure UG-34

E = joint efficiency, from Table UW-12, of any Category A weld as defined in UW-3(a)

Provided by IHS under license with ASME
No reproduction or networking permitted without license from IHS
Licensee=Chevron Phillips Chemical Co LP/5956674001
Not for Resale, 11/09/2014 20:41:36 MST

Figure UG-34
Some Acceptable Types of Unstayed Flat Heads and Covers

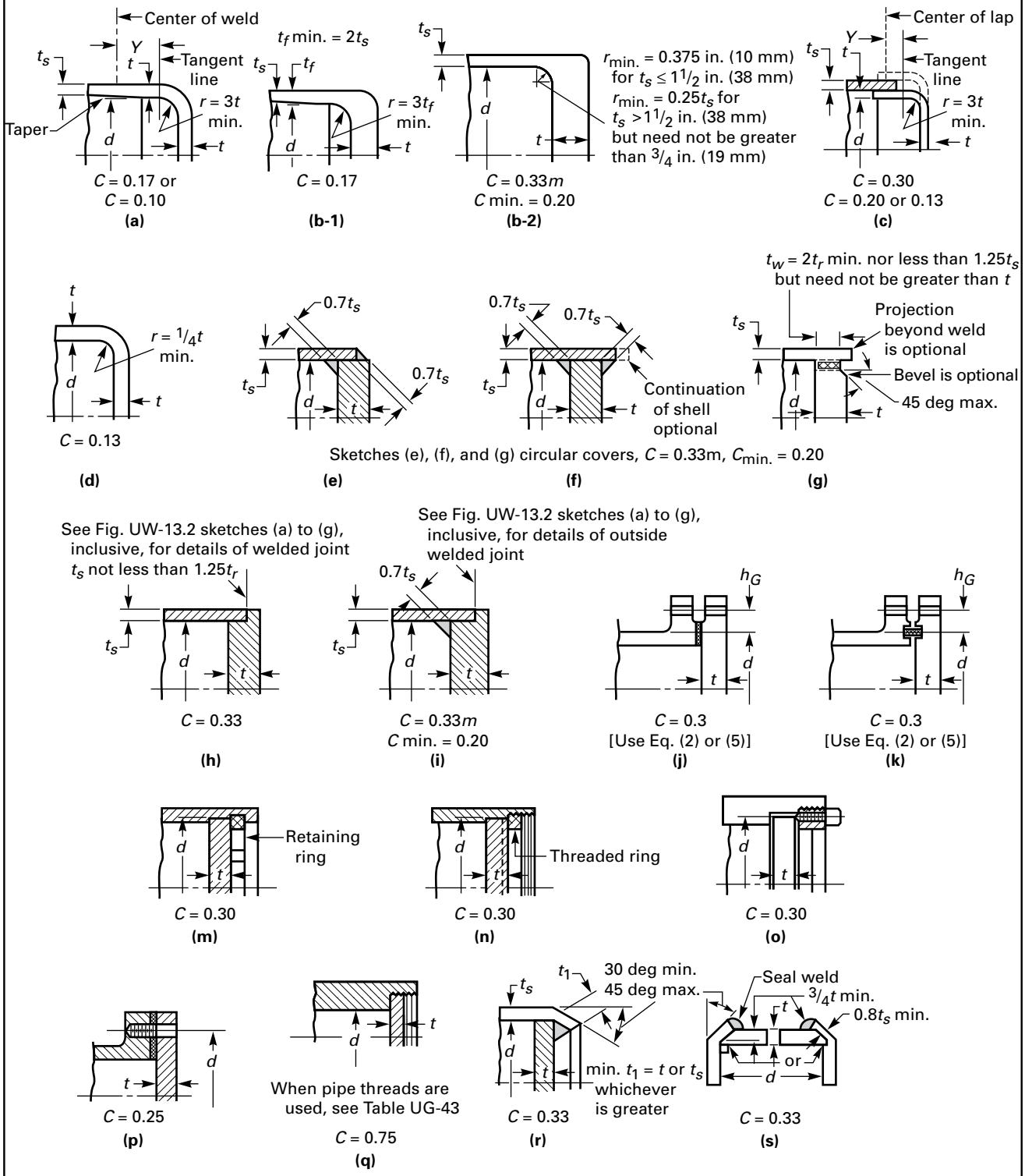

GENERAL NOTE: The above illustrations are diagrammatic only. Other designs that meet the requirements of UG-34 are acceptable.

Provided by IHS under license with ASME
No reproduction or networking permitted without license from IHS
Licensee=Chevron Phillips Chemical Co LP/5956674001
Not for Resale, 11/09/2014 20:41:36 MST

h_G = gasket moment arm, equal to the radial distance from the centerline of the bolts to the line of the gasket reaction, as shown in Table 2-5.2

L = perimeter of noncircular bolted head measured along the centers of the bolt holes

m = the ratio t_r/t_s, dimensionless

P = internal design pressure (see UG-21)

r = inside corner radius on a head formed by flanging or forging

S = maximum allowable stress value in tension from applicable table of stress values referenced by UG-23

t = minimum required thickness of flat head or cover

t_f = nominal thickness of the flange on a forged head, at the large end, as indicated in Figure UG-34 sketch (b)

t_h = nominal thickness of flat head or cover

t_r = required thickness of seamless shell, for pressure

t_s = nominal thickness of shell

t_w = thickness through the weld joining the edge of a head to the inside of a vessel, as indicated in Figure UG-34 sketch (g)

t_1 = throat dimension of the closure weld, as indicated in Figure UG-34 sketch (r)

W = total bolt load given for circular heads for eqs. 2-5(d)(3) and 2-5(e)(4)

Y = length of flange of flanged heads, measured from the tangent line of knuckle, as indicated in Figure UG-34 sketches (a) and (c), in. (mm)

Z = a factor of noncircular heads and covers that depends on the ratio of short span to long span, as given in (c) below, dimensionless

(c) The thickness of flat unstayed heads, covers, and blind flanges shall conform to one of the following three requirements.[25]

(1) Circular blind flanges conforming to any of the flange standards listed in Table U-3 and further limited in UG-44 shall be acceptable for the diameters and pressure–temperature ratings in the respective standard when the blind flange is of the types shown in Figure UG-34 sketches (j) and (k).

(2) The minimum required thickness of flat unstayed circular heads, covers and blind flanges shall be calculated by the following formula:

$$t = d\sqrt{CP/SE} \tag{1}$$

except when the head, cover, or blind flange is attached by bolts causing an edge moment [sketches (j) and (k)] in which case the thickness shall be calculated by

$$t = d\sqrt{CP/SE + 1.9Wh_G/SEd^3} \tag{2}$$

When using Eq. (2), the thickness t shall be calculated for both operating conditions and gasket seating, and the greater of the two values shall be used. For operating conditions, the value of P shall be the design pressure, and the values of S at the design temperature and W from Eq. 2-5(e)(4) shall be used. For gasket seating, P equals zero, and the values of S at atmospheric temperature and W from Eq. 2-5(e)(5) shall be used.

(3) Flat unstayed heads, covers, or blind flanges may be square, rectangular, elliptical, obround, segmental, or otherwise noncircular. Their required thickness shall be calculated by the following formula:

$$t = d\sqrt{ZCP/SE} \tag{3}$$

where

$$Z = 3.4 - \frac{2.4d}{D} \tag{4}$$

with the limitation that Z need not be greater than two and one-half (2.5).

Eq. (3) does not apply to noncircular heads, covers, or blind flanges attached by bolts causing a bolt edge moment [sketches (j) and (k)]. For noncircular heads of this type, the required thickness shall be calculated by the following formula:

$$t = d\sqrt{ZCP/SE + 6Wh_G/SELd^2} \tag{5}$$

When using Eq. (5), the thickness t shall be calculated in the same way as specified above for Eq. (2)(2).

(d) For the types of construction shown in Figure UG-34, the minimum values of C to be used in Eq. (c)(2)(1), (c)(2)(2), (c)(3)(3), and (c)(3)(5) are:

(1) Sketch (a). C = 0.17 for flanged circular and noncircular heads forged integral with or butt welded to the vessel with an inside corner radius not less than three times the required head thickness, with no special requirement with regard to length of flange, and where the welding meets all the requirements for circumferential joints given in Part UW.

C = 0.10 for circular heads, when the flange length for heads of the above design is not less than

$$Y = \left(1.1 - 0.8\frac{t_s^2}{t_h^2}\right)\sqrt{dt_h} \tag{6}$$

C = 0.10 for circular heads, when the flange length Y is less than the requirements in Formula (6) but the shell thickness is not less than

$$t_s = 1.12t_h\sqrt{1.1 - Y/\sqrt{dt_h}} \tag{7}$$

for a length of at least $2\sqrt{dt_s}$.

When C = 0.10 is used, the taper shall be at least 1:3.

Provided by IHS under license with ASME
No reproduction or networking permitted without license from IHS
Licensee=Chevron Phillips Chemical Co LP/5956674001
Not for Resale, 11/09/2014 20:41:36 MST

(2) Sketch (b-1). C = 0.17 for forged circular and noncircular heads integral with or butt welded to the vessel, where the flange thickness is not less than two times the shell thickness, the corner radius on the inside is not less than three times the flange thickness, and the welding meets all the requirements for circumferential joints given in Part UW.

(3) Sketch (b-2). $C = 0.33m$ but not less than 0.20 for forged circular and noncircular heads integral with or butt welded to the vessel, where the flange thickness is not less than the shell thickness, the corner radius on the inside is not less than the following:

$$r_{\min} = 0.375 \text{ in. } (10 \text{ mm}) \text{ for } t_s \le 1\tfrac{1}{2} \text{ in. } (38 \text{ mm})$$

$$r_{\min} = 0.25\, t_s \text{ for } t_s > 1\tfrac{1}{2} \text{ in. } (38 \text{ mm}) \text{ but need not be greater than } \tfrac{3}{4} \text{ in. } (19 \text{ mm})$$

The welding shall meet all the requirements for circumferential joints given in Part UW.

(4) Sketch (c). C = 0.13 for circular heads lap welded or brazed to the shell with corner radius not less than $3t$ and Y not less than required by Eq. (1)(6) and the requirements of UW-13 are met.

C = 0.20 for circular and noncircular lap welded or brazed construction as above, but with no special requirement with regard to Y.

C = 0.30 for circular flanged plates screwed over the end of the vessel, with inside corner radius not less than $3t$, in which the design of the threaded joint against failure by shear, tension, or compression, resulting from the end force due to pressure, is based on a factor of safety of at least four, and the threaded parts are at least as strong as the threads for standard piping of the same diameter. Seal welding may be used, if desired.

(5) Sketch (d). C = 0.13 for integral flat circular heads when the dimension d does not exceed 24 in. (600 mm), the ratio of thickness of the head to the dimension d is not less than 0.05 or greater than 0.25, the head thickness t_h is not less than the shell thickness t_s, the inside corner radius is not less than $0.25t$, and the construction is obtained by special techniques of upsetting and spinning the end of the shell, such as employed in closing header ends.

(6) Sketches (e), (f), and (g). $C = 0.33m$ but not less than 0.20 for circular plates, welded to the inside of a vessel, and otherwise meeting the requirements for the respective types of welded vessels. If a value of m less than 1 is used in calculating t, the shell thickness t_s shall be maintained along a distance inwardly from the inside face of the head equal to at least $2\sqrt{dt_s}$. The throat thickness of the fillet welds in sketches (e) and (f) shall be at least $0.7t_s$. The size of the weld t_w in sketch (g) shall be not less than 2 times the required thickness of a seamless shell nor less than 1.25 times the nominal shell thickness but need not be greater than the head thickness; the weld shall be deposited in a welding groove with the root of the weld at the inner face of the head as shown in the sketch.

C = 0.33 for noncircular plates, welded to the inside of a vessel and otherwise meeting the requirements for the respective types of welded vessels. The throat thickness of the fillet welds in sketches (e) and (f) shall be at least $0.7t_s$. The size of the weld t_w in sketch (g) shall be not less than 2 times the required thickness of a seamless shell nor less than 1.25 times the nominal shell thickness but need not be greater than the head thickness; the weld shall be deposited in a welding groove with the root of the weld at the inner face of the head as shown in the sketch.

(7) Sketch (h). C = 0.33 for circular plates welded to the end of the shell when t_s is at least $1.25t_r$ and the weld details conform to the requirements of UW-13(e) and Figure UW-13.2 sketches (a) to (g) inclusive. See also UG-93(d)(3).

(8) Sketch (i). $C = 0.33m$ but not less than 0.20 for circular plates if an inside fillet weld with minimum throat thickness of $0.7t_s$ is used and the details of the outside weld conform to the requirements of UW-13(e) and Figure UW-13.2 sketches (a) to (g) inclusive, in which the inside weld can be considered to contribute an amount equal to t_s to the sum of the dimensions a and b. See also UG-93(d)(3).

(9) Sketches (j) and (k). C = 0.3 for circular and noncircular heads and covers bolted to the vessel as indicated in the figures. Note that Eq. (c)(2)(2) or (c)(3)(5) shall be used because of the extra moment applied to the cover by the bolting.

When the cover plate is grooved for a peripheral gasket, as shown in sketch (k), the net cover plate thickness under the groove or between the groove and the outer edge of the cover plate shall be not less than

$$d\sqrt{1.9Wh_G/Sd^3}$$

for circular heads and covers, nor less than

$$d\sqrt{6Wh_G/SLd^3}$$

for noncircular heads and covers.

(10) Sketches (m), (n), and (o). C = 0.3 for a circular plate inserted into the end of a vessel and held in place by a positive mechanical locking arrangement, and when all possible means of failure (either by shear, tension, compression, or radial deformation, including flaring, resulting from pressure and differential thermal expansion) are resisted with a factor of safety of at least four. Seal welding may be used, if desired.

(11) Sketch (p). C = 0.25 for circular and noncircular covers bolted with a full-face gasket, to shells, flanges or side plates.

(12) Sketch (q). C = 0.75 for circular plates screwed into the end of a vessel having an inside diameter d not exceeding 12 in. (300 mm); or for heads having an integral

Provided by IHS under license with ASME
No reproduction or networking permitted without license from IHS
Licensee=Chevron Phillips Chemical Co LP/5956674001
Not for Resale, 11/09/2014 20:41:36 MST

flange screwed over the end of a vessel having an inside diameter d not exceeding 12 in. (300 mm); and when the design of the threaded joint, against failure by shear, tension, compression, or radial deformation, including flaring, resulting from pressure and differential thermal expansion, is based on a factor of safety of at least four. If a tapered pipe thread is used, the requirements of Table UG-43 shall also be met. Seal welding may be used, if desired.

(13) Sketch (r). C = 0.33 for circular plates having a dimension d not exceeding 18 in. (450 mm) inserted into the vessel as shown and otherwise meeting the requirements for the respective types of welded vessels. The end of the vessel shall be crimped over at least 30 deg, but not more than 45 deg. The crimping may be done cold only when this operation will not injure the metal. The throat of the weld shall be not less than the thickness of the flat head or shell, whichever is greater.

(14) Sketch (s). C = 0.33 for circular beveled plates having a diameter d not exceeding 18 in. (450 mm), inserted into a vessel, the end of which is crimped over at least 30 deg, but not more than 45 deg, and when the undercutting for seating leaves at least 80% of the shell thickness. The beveling shall be not less than 75% of the head thickness. The crimping shall be done when the entire circumference of the cylinder is uniformly heated to the proper forging temperature for the material used. For this construction, the ratio t_s/d shall be not less than the ratio P/S nor less than 0.05. The maximum allowable pressure for this construction shall not exceed $P = S/5d$ for Customary units ($P = 127S/d$ for SI units).

This construction is not permissible if machined from rolled plate.

UG-35 OTHER TYPES OF CLOSURES

UG-35.1 Dished Covers

Requirements for design of dished heads with bolting flanges are given in 1-6.

(13) UG-35.2 Quick-Actuating (Quick-Opening) Closures

(a) Definitions

(1) Quick-actuating or quick-opening closures are those that permit substantially faster access to the contents space of a pressure vessel than would be expected with a standard bolted flange connection (bolting through one or both flanges). Closures with swing bolts are not considered quick-actuating (quick-opening).

(2) Holding elements are parts of the closure used to hold the cover to the vessel, and/or to provide the load required to seal the closure. Hinge pins or bolts can be holding elements.

(3) Locking components are parts of the closure that prevent a reduction in the load on a holding element that provides the force required to seal the closure, or prevent the release of a holding element. Locking components may also be used as holding elements.

(4) The locking mechanism or locking device may consist of a combination of locking components.

(5) The use of a multi-link component, such as a chain, as a holding element is not permitted.

(b) General Design Requirements

(1) Quick-actuating closures shall be designed such that the locking elements will be engaged prior to or upon application of pressure and will not disengage until the pressure is released.

(2) Quick-actuating closures shall be designed such that the failure of a single locking component while the vessel is pressurized (or contains a static head of liquid acting at the closure) will not:

(-a) cause or allow the closure to be opened or leak; or

(-b) result in the failure of any other locking component or holding element; or

(-c) increase the stress in any other locking component or holding element by more than 50% above the allowable stress of the component.

(3) Quick-actuating closures shall be designed and installed such that it may be determined by visual external observation that the holding elements are in satisfactory condition.

(4) Quick-actuating closures shall also be designed so that all locking components can be verified to be fully engaged by visual observation or other means prior to the application of pressure to the vessel.

(5) When installed, all vessels having quick-actuating closures shall be provided with a pressure indicating device visible from the operating area and suitable to detect pressure at the closure.

(c) Specific Design Requirements

(1) Quick-actuating closures that are held in position by positive locking devices and that are fully released by partial rotation or limited movement of the closure itself or the locking mechanism, and any closure that is other than manually operated, shall be so designed that when the vessel is installed the following conditions are met (see also Nonmandatory Appendix FF):

(-a) The closure and its holding elements are fully engaged in their intended operating position before pressure can be applied in the vessel.

(-b) Pressure tending to force the closure open or discharge the vessel contents clear of the vessel shall be released before the closure can be fully opened for access.

(-c) In the event that compliance with (-a) and (-b) above is not inherent in the design of the closure and its holding elements, provisions shall be made so that devices to accomplish this can be added when the vessel is installed.

Provided by IHS under license with ASME
No reproduction or networking permitted without license from IHS
Licensee=Chevron Phillips Chemical Co LP/5956674001
Not for Resale, 11/09/2014 20:41:36 MST

(2) The design rules of Mandatory Appendix 2 of this Division may not be applicable to design quick-actuating or quick-opening closures; see 2-1(e).

(3) The designer shall consider the effects of cyclic loading, other loadings (see UG-22) and mechanical wear on the holding and locking components.

(4) It is recognized that it is impractical to write requirements to cover the multiplicity of devices used for quick access, or to prevent negligent operation or the circumventing of safety devices. Any device or devices that will provide the safeguards broadly described in (1)(-a), (1)(-b), and (1)(-c) above will meet the intent of this Division.

(d) Alternative Designs for Manually Operated Closures

(1) Quick-actuating closures that are held in position by a locking mechanism designed for manual operation shall be designed such that if an attempt is made to open the closure when the vessel is under pressure, the closure will leak prior to full disengagement of the locking components and release of the closure. The design of the closure and vessel shall be such that any leakage shall be directed away from the normal position of the operator.

(2) Manually operated closures need not satisfy (c)(1)(-a), (c)(1)(-b), or (c)(1)(-c) above, but such closures shall be equipped with an audible or visible warning device that will warn the operator if pressure is applied to the vessel before the holding elements and locking components are fully engaged in their intended position or if an attempt is made to disengage the locking mechanism before the pressure within the vessel is released.

(e) Supplementary Requirements for Quick-Actuation (Quick-Opening) Closures

Nonmandatory Appendix FF provides additional design information for the Manufacturer and provides installation, operational, and maintenance requirements for the Owner and the user.

(13) OPENINGS AND REINFORCEMENTS[26]

UG-36 OPENINGS IN PRESSURE VESSELS

(a) Shape of Opening [27]

(1) Openings in cylindrical or conical portions of vessels, or in formed heads, shall preferably be circular, elliptical, or obround.[28] When the long dimension of an elliptical or obround opening exceeds twice the short dimensions, the reinforcement across the short dimensions shall be increased as necessary to provide against excessive distortion due to twisting moment.

(2) Openings may be of other shapes than those given in (1) above, and all corners shall be provided with a suitable radius. When the openings are of such proportions that their strength cannot be computed with assurance of accuracy, or when doubt exists as to the safety of a vessel with such openings, the part of the vessel affected shall be subjected to a proof hydrostatic test as prescribed in UG-101.

(b) Size of Openings

(1) Properly reinforced openings in cylindrical and conical shells are not limited as to size except with the following provisions for design. The rules in UG-36 through UG-43 apply to openings not exceeding the following: for vessels 60 in. (1 500 mm) inside diameter and less, one-half the vessel diameter, but not to exceed 20 in. (500 mm); for vessels over 60 in. (1 500 mm) inside diameter, one-third the vessel diameter, but not to exceed 40 in. (1 000 mm). (For conical shells, the inside shell diameter as used above is the cone diameter at the center of the opening.) For openings exceeding these limits, supplemental rules of 1-7 shall be satisfied in addition to the rules of this paragraph. Alternatively, openings in cylindrical or conical shells exceeding these limits may be designed for internal pressure using the rules of 1-10 [see (c)(2)(-d).]

(2) Properly reinforced openings in formed heads and spherical shells are not limited in size. For an opening in an end closure, which is larger than one-half the inside diameter of the shell, one of the following alternatives to reinforcement may also be used:

(-a) a conical section as shown in Figure UG-36 sketch (a);

(-b) a cone with a knuckle radius at the large end as shown in Figure UG-36 sketch (b);

(-c) a reverse curve section as shown in Figure UG-36 sketches (c) and (d); or

(-d) using a flare radius at the small end as shown in Figure UG-33.1 sketch (d).

The design shall comply with all the requirements of the rules for reducer sections [see (e) below] insofar as these rules are applicable.

(c) Strength and Design of Finished Openings

(1) All references to dimensions in this and succeeding paragraphs apply to the finished construction after deduction has been made for material added as corrosion allowance. For design purposes, no metal added as corrosion allowance may be considered as reinforcement. The finished opening diameter is the diameter d as defined in UG-37 and in Figure UG-40.

(2) See below:

(-a) Openings in cylindrical or conical shells, or formed heads shall be reinforced to satisfy the requirements in UG-37 except as given in (-c), (-d), and (3) below.

(-b) Openings in flat heads shall be reinforced as required by UG-39.

(-c) Openings in cylindrical and conical shells subjected to internal pressure may be designed to satisfy the requirements in Mandatory Appendix 1, 1-9 in lieu of the internal pressure requirements in UG-37.

(-d) Openings in cylindrical and conical shells subjected to internal pressure may be designed to satisfy the requirements in Mandatory Appendix 1, 1-10 in lieu of the internal pressure requirements in UG-37.

Provided by IHS under license with ASME
No reproduction or networking permitted without license from IHS
Licensee=Chevron Phillips Chemical Co LP/5956674001
Not for Resale, 11/09/2014 20:41:36 MST

Figure UG-36
Large Head Openings — Reverse-Curve and Conical Shell-Reducer Sections

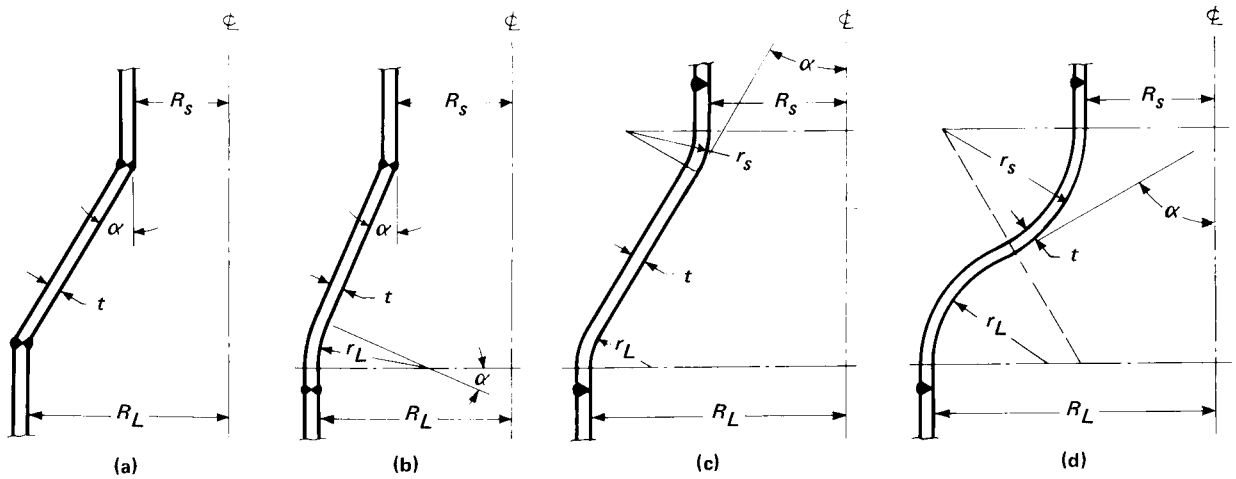

r_L shall not be less than the greater of $0.12\,(R_L + t)$ or $3t$; r_s has no dimensional requirement

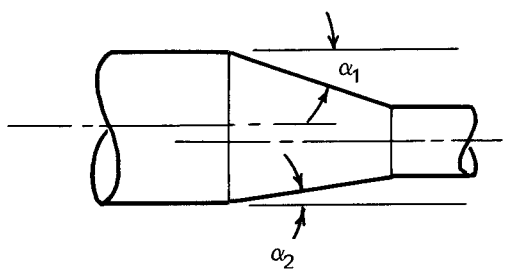

$\alpha_1 > \alpha_2$; therefore use α_1 in design formulas

(e)

(3) Openings in vessels not subject to rapid fluctuations in pressure do not require reinforcement other than that inherent in the construction under the following conditions:

(-a) welded, brazed, and flued connections meeting the applicable rules and with a finished opening not larger than:

(-1) $3\frac{1}{2}$ in. (89 mm) diameter — in vessel shells or heads with a required minimum thickness of $\frac{3}{8}$ in. (10 mm) or less;

(-2) $2\frac{3}{8}$ in. (60 mm) diameter — in vessel shells or heads over a required minimum thickness of $\frac{3}{8}$ in. (10 mm);

(-b) threaded, studded, or expanded connections in which the hole cut in the shell or head is not greater than $2\frac{3}{8}$ in. (60 mm) diameter;

(-c) no two isolated unreinforced openings, in accordance with (-a) or (-b) above, shall have their centers closer to each other than the sum of their diameters;

(-d) no two unreinforced openings, in a cluster of three or more unreinforced openings in accordance with (-a) or (-b) above, shall have their centers closer to each other than the following: for cylindrical or conical shells,

$$(1 + 1.5\cos\theta)(d_1 + d_2);$$

for doubly curved shells and formed or flat heads,

$$2.5(d_1 + d_2)$$

Provided by IHS under license with ASME
No reproduction or networking permitted without license from IHS
Licensee=Chevron Phillips Chemical Co LP/5956674001
Not for Resale, 11/09/2014 20:41:36 MST

where

θ = the angle between the line connecting the center of the openings and the longitudinal axis of the shell

d_1, d_2 = the finished diameter of the two adjacent openings

The centerline of an unreinforced opening as defined in (-a) and (-b) above shall not be closer than its finished diameter to any material used for reinforcement of an adjacent reinforced opening.

(d) Openings Through Welded Joints. Additional provisions governing openings through welded joints are given in UW-14.

(e) Reducer Sections Under Internal Pressure

(1) The equations and rules of this paragraph apply to concentric reducer sections wherein all the longitudinal loads are transmitted wholly through the shell of the reducer. Where loads are transmitted in part or as a whole by other elements, e.g., inner shells, stays, or tubes, the rules of this paragraph do not apply.

(2) The thickness of each element of a reducer, as defined in (4) below, under internal pressure shall not be less than that computed by the applicable formula. In addition, provisions shall be made for any of the other loadings listed in UG-22, where such loadings are expected.

(3) The symbols defined in either UG-32(c) or below are used in this paragraph (see Figure UG-36).

t = minimum required thickness of the considered element of a reducer after forming

R_L = inside radius of larger cylinder

r_L = inside radius of knuckle at larger cylinder

R_s = inside radius of smaller cylinder

r_s = radius to the inside surface of flare at the small end

α = one-half of the included (apex) angle of a conical element

(4) Elements of a Reducer. A transition section reducer consisting of one or more elements may be used to join two cylindrical shell sections of different diameters but with a common axis provided the requirements of this paragraph are met.

(-a) Conical Shell Section. The required thickness of a conical shell section, or the allowable working pressure for such a section of given thickness, shall be determined by the equations given in UG-32(g).

(-b) Knuckle Tangent to the Larger Cylinder. Where a knuckle is used at the large end of a reducer section, its shape shall be that of a portion of an ellipsoidal, hemispherical, or torispherical head. The thickness and other dimensions shall satisfy the requirements of the appropriate equations and provisions of UG-32.

(5) Combination of Elements to Form a Reducer. When elements of (4) above, having different thicknesses are combined to form a reducer, the joints including the plate taper required by UW-9(c) shall lie entirely within the limits of the thinner element being joined.

(-a) A reducer may be a simple conical shell section, Figure UG-36 sketch (a), without knuckle, provided the half-apex angle α is not greater than 30 deg, except as provided for in 1-5(g). A reinforcement ring shall be provided at either or both ends of the reducer when required by the rules of 1-5.

(-b) A toriconical reducer, Figure UG-36 sketch (b), may be shaped as a portion of a toriconical head, UG-32(h), a portion of a hemispherical head plus a conical section, or a portion of an ellipsoidal head plus a conical section, provided the half-apex angle α is not greater than 30 deg, except as provided for in 1-5(g). A reinforcement ring shall be provided at the small end of the conical reducer element when required by the rules in 1-5.

(-c) Reverse curve reducers, Figure UG-36 sketches (c) and (d), may be shaped of elements other than those of (e)(4) above. See U-2(g).

(f) Reducers Under External Pressure. The rules of UG-33(f) shall be followed, where applicable, in the design of reducers under external pressure.

(g) Oblique Conical Shell Sections Under Internal Pressure. A transition section reducer consisting of an oblique conical shell section may be used to join two cylindrical shell sections of different diameters and axes, provided the following requirements are used:

(1) The required thickness shall be determined by the equations given in UG-32(g).

(2) The angle α to be used shall be the largest included angle between the oblique cone and the attached cylindrical section [see Figure UG-36 sketch (e)] and shall not be greater than 30 deg.

(3) Diametrical dimensions to be used in the design equations shall be measured perpendicular to the axis of the cylinder to which the cone is attached.

(4) A reinforcement ring shall be provided at either or both ends of the reducer when required by the rules of 1-5.

UG-37 REINFORCEMENT REQUIRED FOR OPENINGS IN SHELLS AND FORMED HEADS

(a) Nomenclature. The symbols used in this paragraph are defined as follows:

A = total cross-sectional area of reinforcement required in the plane under consideration (see Figure UG-37.1) (includes consideration of nozzle area through shell if $S_n/S_v < 1.0$)

A_1 = area in excess thickness in the vessel wall available for reinforcement (see Figure UG-37.1) (includes consideration of nozzle area through shell if $S_n/S_v < 1.0$)

A_2 = area in excess thickness in the nozzle wall available for reinforcement (see Figure UG-37.1)

Provided by IHS under license with ASME
No reproduction or networking permitted without license from IHS
Licensee=Chevron Phillips Chemical Co LP/5956674001
Not for Resale, 11/09/2014 20:41:36 MST

A_3 = area available for reinforcement when the nozzle extends inside the vessel wall (see Figure UG-37.1)

A_5 = cross-sectional area of material added as reinforcement (see Figure UG-37.1)

A_{41}, A_{42}, A_{43} = cross-sectional area of various welds available for reinforcement (see Figure UG-37.1)

c = corrosion allowance

D = inside shell diameter

D_p = outside diameter of reinforcing element (actual size of reinforcing element may exceed the limits of reinforcement established by UG-40; however, credit cannot be taken for any material outside these limits)

d = finished diameter of circular opening or finished dimension (chord length at midsurface of thickness excluding excess thickness available for reinforcement) of nonradial opening in the plane under consideration, in. (mm) [see Figures UG-37.1 and UG-40]

E = 1 (see definitions for t_r and t_{rn})

E_1 = 1 when an opening is in the solid plate or in a Category B butt joint; or

= 0.85 when an opening is located in an ERW or autogenously welded pipe or tube. If the ERW or autogenously welded joint is clearly identifiable and it can be shown that the opening does not pass through this weld joint, then E_1 may be determined using the other rules of this paragraph; or

= joint efficiency obtained from Table UW-12 when any part of the opening passes through any other welded joint

F = correction factor that compensates for the variation in internal pressure stresses on different planes with respect to the axis of a vessel. A value of 1.00 shall be used for all configurations except that Figure UG-37 may be used for integrally reinforced openings in cylindrical shells and cones. [See UW-16(c)(1).]

f_r = strength reduction factor, not greater than 1.0 [see UG-41(a)]

f_{r1} = S_n/S_v for nozzle wall inserted through the vessel wall

f_{r1} = 1.0 for nozzle wall abutting the vessel wall and for nozzles shown in Figure UG-40, sketch (j), (k), (n) and (o).

f_{r2} = S_n/S_v

f_{r3} = (lesser of S_n or S_p)$/S_v$

f_{r4} = S_p/S_v

h = distance nozzle projects beyond the inner surface of the vessel wall. (Extension of the nozzle beyond the inside surface of the vessel wall is not limited; however, for reinforcement calculations, credit shall not be taken for material outside the limits of reinforcement established by UG-40.)

K_1 = spherical radius factor (see definition of t_r and Table UG-37)

L = length of projection defining the thickened portion of integral reinforcement of a nozzle neck beyond the outside surface of the vessel wall [see Figure UG-40 sketch (e)]

P = internal design pressure (see UG-21), psi (MPa)

R = inside radius of the shell course under consideration

R_n = inside radius of the nozzle under consideration

S = allowable stress value in tension (see UG-23), psi (MPa)

S_n = allowable stress in nozzle, psi (MPa) (see S above)

S_p = allowable stress in reinforcing element (plate), psi (MPa) (see S above)

S_v = allowable stress in vessel, psi (MPa) (see S above)

t = specified vessel wall thickness,[29] (not including forming allowances). For pipe it is the nominal thickness less manufacturing undertolerance allowed in the pipe specification.

t_e = thickness or height of reinforcing element (see Figure UG-40)

t_i = nominal thickness of internal projection of nozzle wall

t_n = nozzle wall thickness.[29] Except for pipe, this is the wall thickness not including forming allowances. For pipe, use the nominal thickness [see UG-16(d)].

t_r = required thickness of a seamless shell based on the circumferential stress, or of a formed head, computed by the rules of this Division for the designated pressure, using E = 1, except that:

(a) when the opening and its reinforcement are entirely within the spherical portion of a torispherical head, t_r is the thickness required by 1-4(d), using M = 1;

(b) when the opening is in a cone, t_r is the thickness required for a seamless cone of diameter D measured where the nozzle axis pierces the inside wall of the cone;

(c) when the opening and its reinforcement are in an ellipsoidal head and are located entirely within a circle the center of which coincides with the center of the head and the diameter of which is equal to 80% of the shell diameter, t_r is the thickness required for a seamless sphere of radius K_1D, where D is the shell diameter and K_1 is given by Table UG-37.

Provided by IHS under license with ASME
No reproduction or networking permitted without license from IHS
Licensee=Chevron Phillips Chemical Co LP/5956674001
Not for Resale, 11/09/2014 20:41:36 MST

t_{rn} = required thickness of a seamless nozzle wall
W = total load to be carried by attachment welds (see UG-41)

(b) General. The rules in this paragraph apply to all openings other than:

(1) small openings covered by UG-36(c)(3);

(2) openings in flat heads covered by UG-39;

(3) openings designed as reducer sections covered by UG-36(e);

(4) large head openings covered by UG-36(b)(2);

(5) tube holes with ligaments between them conforming to the rules of UG-53.

Reinforcement shall be provided in amount and distribution such that the area requirements for reinforcement are satisfied for all planes through the center of the opening and normal to the vessel surface. For a circular opening in a cylindrical shell, the plane containing the axis of the shell is the plane of greatest loading due to pressure. Not less than half the required reinforcement shall be on each side of the centerline of single openings.

Figure UG-37
Chart for Determining Value of *F*, as Required in UG-37

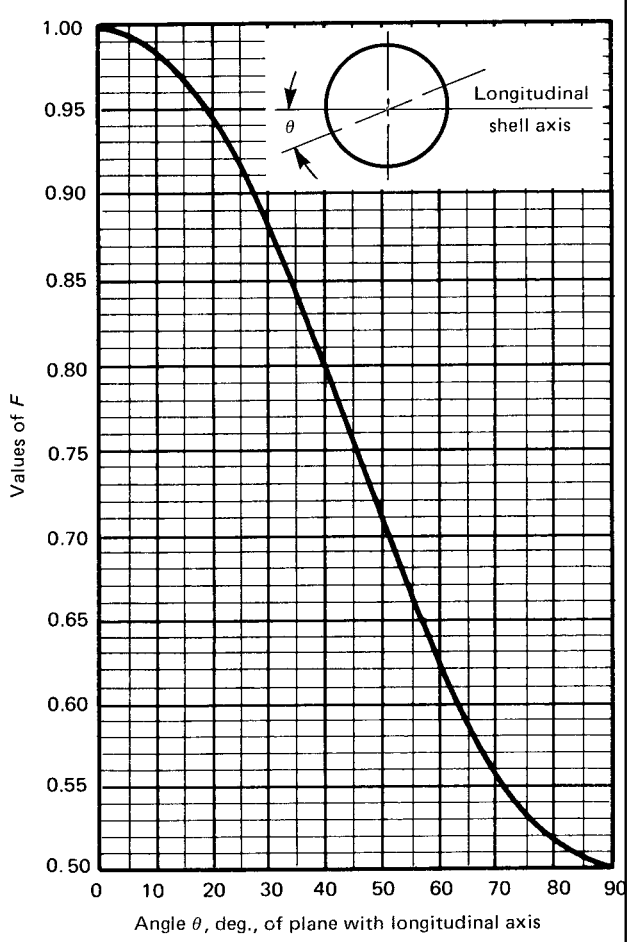

(c) Design for Internal Pressure. The total cross-sectional area of reinforcement A required in any given plane through the opening for a shell or formed head under internal pressure shall be not less than

$$A = dt_rF + 2t_nt_rF\left(1 - f_{r1}\right)$$

(d) Design for External Pressure

(1) The reinforcement required for openings in single-walled vessels subject to external pressure need be only 50% of that required in (c) above, where t_r is the wall thickness required by the rules for vessels under external pressure and the value of F shall be 1.0 in all external pressure reinforcement calculations.

(2) The reinforcement required for openings in each shell of a multiple-walled vessel shall comply with (1) above when the shell is subject to external pressure, and with (c) above when the shell is subject to internal pressure, regardless of whether or not there is a common nozzle secured to more than one shell by strength welds.

(e) Design for Alternate Internal and External Pressure. Reinforcement of vessels subject to alternate internal and external pressures shall meet the requirements of (c) above for internal pressure and of (d) above for external pressure.

(f) Details and equations for required area and available area are given in Figure UG-37.1.

(g) Reinforcing plates and saddles of nozzles attached to the outside of a vessel shall be provided with at least one telltale hole [maximum size NPS 1/4 (DN 8) tap] that may be tapped to test for tightness of welds that seal off the inside of the vessel. These telltale holes may be left open or may be plugged when the vessel is in service. If the holes are plugged, the plugging material used shall not be capable of sustaining pressure between the reinforcing plate and the vessel wall. (**13**)

(h) Segmental reinforcing elements are allowed provided the individual segments are joined by full penetration butt welds. These butt welds shall comply with all the applicable requirements of Part UW. Unless the provisions given below are satisfied, the area A_5 as defined in Figure UG-37.1 shall be multiplied by 0.75. The area A_5 does not require any reduction if one of the following is satisfied:

(1) Each butt weld is radiographed or ultrasonically examined to confirm full penetration, or

(2) For openings in cylinders, the weld is oriented at least 45 deg from the longitudinal axis of the cylinder.

Each segment of the reinforcing element shall have a clear path to a telltale hole and shall be tested as required by (g).

Provided by IHS under license with ASME
No reproduction or networking permitted without license from IHS
Licensee=Chevron Phillips Chemical Co LP/5956674001
Not for Resale, 11/09/2014 20:41:36 MST

Figure UG-37.1
Nomenclature and Formulas for Reinforced Openings

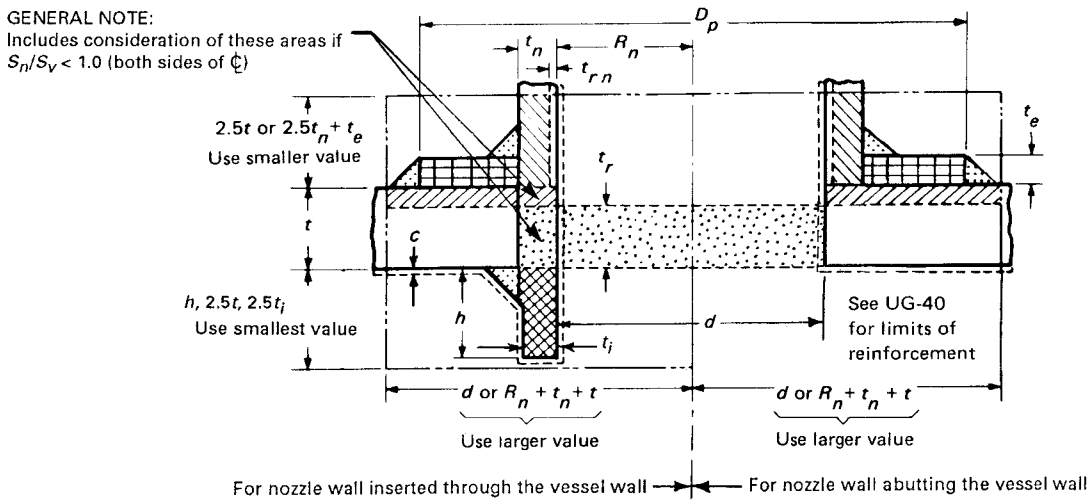

Without Reinforcing Element

= $A = d\,t_r\,F + 2t_n\,t_r\,F(1 - f_{r1})$	Area required
= $A_1 \begin{cases} = d(E_1\,t - Ft_r) - 2t_n\,(E_1 t - Ft_r)\,(1 - f_{r1}) \\ = 2\,(t + t_n)\,(E_1 t - Ft_r) - 2t_n\,(E_1 t - Ft_r)\,(1 - f_{r1}) \end{cases}$	Area available in shell; use larger value
= $A_2 \begin{cases} = 5(t_n - t_{rn})\,f_{r2} t \\ = 5(t_n - t_{rn})\,f_{r2} t_n \end{cases}$	Area available in nozzle projecting outward; use smaller value
= $A_3 = 5t\,t_i\,f_{r2} = 5t_i\,t_i\,f_{r2} = 2h\,t_i\,f_{r2}$	Area available in inward nozzle; use smallest value
= A_{41} = outward nozzle weld = $(\text{leg})^2 f_{r2}$	Area available in outward weld
= A_{43} = inward nozzle weld = $(\text{leg})^2 f_{r2}$	Area available in inward weld
If $A_1 + A_2 + A_3 + A_{41} + A_{43} \geq A$	Opening is adequately reinforced
If $A_1 + A_2 + A_3 + A_{41} + A_{43} < A$	Opening is not adequately reinforced so reinforcing elements must be added and/or thicknesses must be increased

With Reinforcing Element Added

A = same as A, above	Area required
A_1 = same as A_1, above	Area available
$A_2 \begin{cases} = 5(t_n - t_{rn})f_{r2} t \\ = 2(t_n - t_{rn})\,(2.5t_n + t_e)\,f_{r2} \end{cases}$	Area available in nozzle projecting outward; use smaller area
A_3 = same as A_3, above	Area available in inward nozzle
= A_{41} = outward nozzle weld = $(\text{leg})^2 f_{r3}$	Area available in outward weld
= A_{42} = outer element weld = $(\text{leg})^2 f_{r4}$	Area available in outer weld
= A_{43} = inward nozzle weld = $(\text{leg})^2 f_{r2}$	Area available in inward weld
= $A_5 = (D_p - d - 2t_n)\,t_e\,f_{r4}$ [Note (1)]	Area available in element
If $A_1 + A_2 + A_3 + A_{41} + A_{42} + A_{43} + A_5 \geq A$	Opening is adequately reinforced

GENERAL NOTE: This figure illustrates a common nozzle configuration and is not intended to prohibit other configurations permitted by the Code.

NOTE:
(1) This formula is applicable for a rectangular cross-sectional element that falls within the limits of reinforcement.

Provided by IHS under license with ASME
No reproduction or networking permitted without license from IHS
Licensee=Chevron Phillips Chemical Co LP/5956674001
Not for Resale, 11/09/2014 20:41:36 MST

Table UG-37
Values of Spherical Radius Factor K_1

$D/2h$	...	3.0	2.8	2.6	2.4	2.2
K_1	...	1.36	1.27	1.18	1.08	0.99
$D/2h$	2.0	1.8	1.6	1.4	1.2	1.0
K_1	0.90	0.81	0.73	0.65	0.57	0.50

GENERAL NOTES:
(a) Equivalent spherical radius = K_1D; $D/2h$ = axis ratio.
(b) For definitions, see 1-4(b).
(c) Interpolation permitted for intermediate values.

(i) The reinforcement rules in this Division are applicable for internal or external pressure and do not address the requirements for openings under the action of externally applied loadings (such as pipe reactions). When externally applied loadings are to be considered, see U-2(g).

UG-38 FLUED OPENINGS IN SHELLS AND FORMED HEADS

(a) Flued openings in shells and formed heads made by inward or outward forming of the head plate shall meet the requirements for reinforcement in UG-37. The thickness of the flued flange shall also meet the requirements of UG-27 and/or UG-28, as applicable, where L as used in UG-28 is the minimum depth of flange as shown in Figure UG-38. The minimum thickness of the flued flange on a vessel subject to both internal and external pressure shall be the larger of the two thicknesses as determined above.

(b) The minimum depth of flange of a flued in opening exceeding 6 in. (150 mm) in any inside dimension, when not stayed by an attached pipe or flue, shall equal $3t_r$ or (t_r + 3 in.) (for SI units, t_r + 75 mm), whichever is less, where t_r is the required shell or head thickness. The depth of flange shall be determined by placing a straight edge across the side opposite the flued opening along the major axis and measuring from the straightedge to the edge of the flanged opening (see Figure UG-38).

Figure UG-38
Minimum Depth for Flange of Flued-In Openings

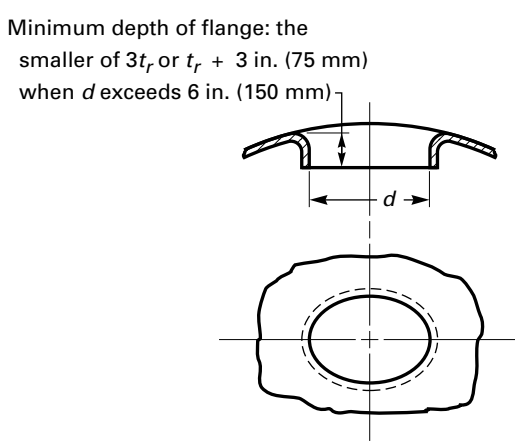

(c) There is no minimum depth of flange requirement for flued out openings.

(d) The minimum width of bearing surface for a gasket on a self-sealing flued opening shall be in accordance with UG-46(j).

UG-39 REINFORCEMENT REQUIRED FOR OPENINGS IN FLAT HEADS

(a) General. The rules in this paragraph apply to all openings in flat heads except opening(s) that do not exceed the size and spacing limits in UG-36(c)(3) and do not exceed one-fourth the head diameter or shortest span. Electric immersion heater support plates (see 41-3) may be designed in accordance with the rules of this paragraph or Mandatory Appendix 41.

(b) Single and multiple openings in flat heads that have diameters equal to or less than one-half the head diameter may be reinforced as follows:

(1) Flat heads that have a single opening with a diameter that does not exceed one-half the head diameter or shortest span, as defined in UG-34, shall have a total cross-sectional area of reinforcement for all planes through the center of the opening not less than that given by the formula

$$A = 0.5dt + tt_n\left(1 - f_{r1}\right)$$

where d, t_n, and f_{r1} are defined in UG-37 and t in UG-34.

(2) Multiple openings none of which have diameters exceeding one-half the head diameter and no pair having an average diameter greater than one-quarter the head diameter may be reinforced individually as required by (1) above when the spacing between any pair of adjacent openings is equal to or greater than twice the average diameter of the pair.

When spacing between adjacent openings is less than twice but equal to or more than $1^1/_4$ the average diameter of the pair, the required reinforcement for each opening in the pair, as determined by (1) above, shall be summed together and then distributed such that 50% of the sum is located between the two openings. Spacings of less than $1^1/_4$ the average diameter of adjacent openings shall be treated by rules of U-2(g).

(3) In no case shall the width of ligament between two adjacent openings be less than one-quarter the diameter of the smaller of the two openings in the pair. The width of ligament between the edge of any one opening and the edge of the flat head (such as U_3 or U_5 in Figure UG-39) shall not be less than one-quarter the diameter of that one opening.

Provided by IHS under license with ASME
No reproduction or networking permitted without license from IHS
Licensee=Chevron Phillips Chemical Co LP/5956674001
Not for Resale, 11/09/2014 20:41:36 MST

Figure UG-39
Multiple Openings in Rim of Heads With a Large Central Opening

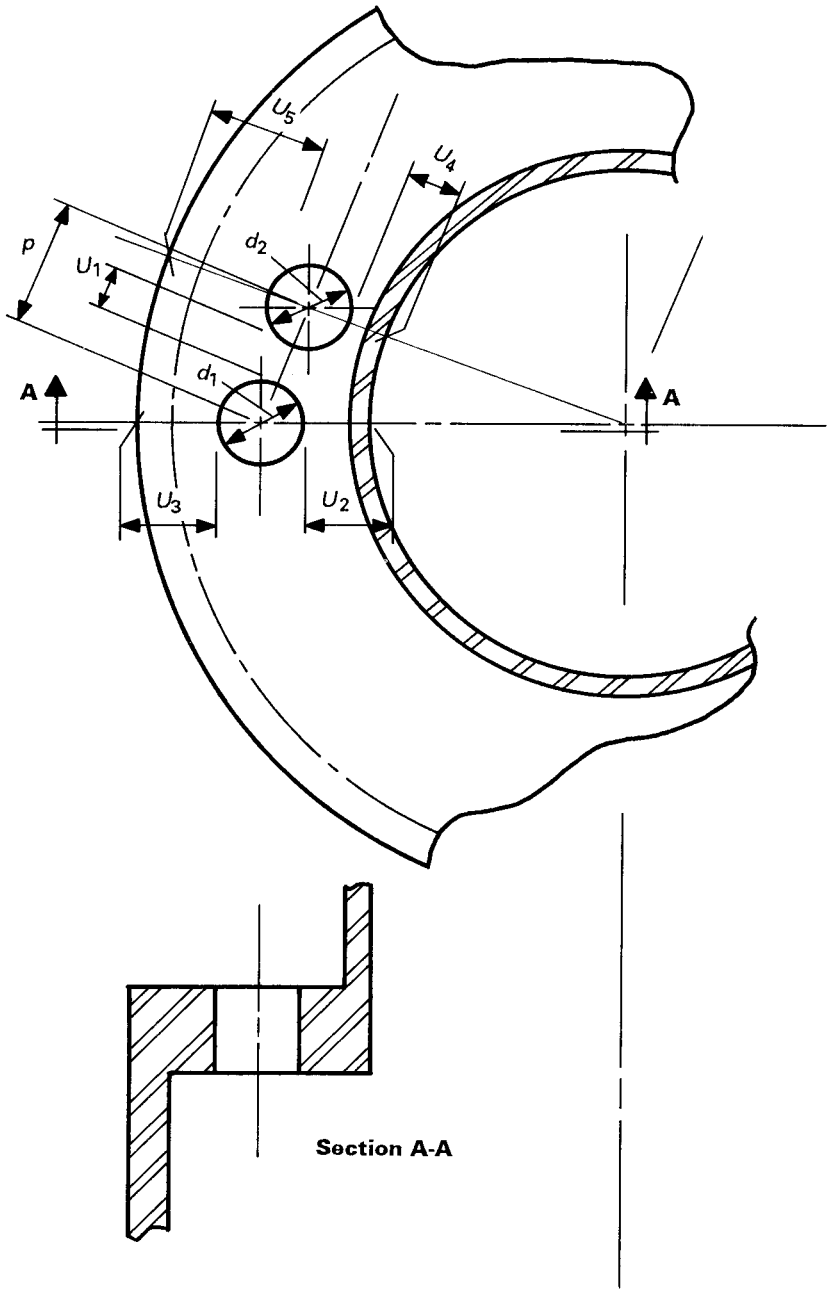

p = spacing, center-to-center, between openings
$U_1, U_2, \ldots$ = ligament width
$(d_1 + d_2)/2$ = average diameter of pair of openings

Provided by IHS under license with ASME
No reproduction or networking permitted without license from IHS
Licensee=Chevron Phillips Chemical Co LP/5956674001
Not for Resale, 11/09/2014 20:41:36 MST

(c) Flat heads that have an opening with a diameter that exceeds one-half the head diameter or shortest span, as defined in UG-34, shall be designed as follows:

(1) When the opening is a single, circular centrally located opening in a circular flat head, the head shall be designed according to Mandatory Appendix 14 and related factors in Mandatory Appendix 2. The head-to-shell junction may be integral, as shown in Figure UG-34 sketches (a), (b-1), (b-2), (d), and (g). The head may also be attached by a butt weld or a full-penetration corner weld similar to the joints shown in Figure UW-13.2 sketches (a), (b), (c), (d), (e), or (f). The large centrally located opening may have a nozzle that is integrally formed or integrally attached by a full penetration weld or may be plain without an attached nozzle or hub. The head thickness does not have to be calculated by UG-34 rules. The thickness that satisfies all the requirements of Mandatory Appendix 14 meets the requirements of the Code.

(2) Opening(s) may be located in the rim space surrounding the central opening. See Figure UG-39. Such openings may be reinforced by area replacement in accordance with the formula in (b)(1) above using as a required head thickness the thickness that satisfies rules of Mandatory Appendix 14. Multiple rim openings shall meet spacing rules of (b)(2) and (b)(3) above. Alternatively, the head thickness that meets the rules of Mandatory Appendix 14 may be increased by multiplying it by the square root of two (1.414) if only a single opening is placed in the rim space or if spacing p between two such openings is twice or more than their average diameter. For spacing less than twice their average diameter, the thickness that satisfies Mandatory Appendix 14 shall be divided by the square root of efficiency factor e, where e is defined in (e)(2) below.

The rim opening(s) shall not be larger in diameter than one-quarter the differences in head diameter less central opening diameter. The minimum ligament width U shall not be less than one-quarter the diameter of the smaller of the two openings in the pair. A minimum ligament width of one-quarter the diameter of the rim opening applies to ligaments designated as U_2, U_4, U_3, and U_5 in Figure UG-39.

(3) When the large opening is any other type than that described in (1) above, there are no specific rules given. Consequently, the requirements of U-2(g) shall be met.

(d) As an alternative to (b)(1) above, the thickness of flat heads and covers with a single opening with a diameter that does not exceed one-half the head diameter may be increased to provide the necessary reinforcement as follows:

(1) In Eq. UG-34(c)(2)(1) or UG-34(c)(3)(3), use $2C$ or 0.75 in place of C, whichever is the lesser; except that, for sketches (b-1), (b-2), (e), (f), (g), and (i) of Figure UG-34, use $2C$ or 0.50, whichever is the lesser.

(2) In Eq. UG-34(c)(2)(2) or UG-34(c)(3)(5), double the quantity under the square root sign.

(e) Multiple openings none of which have diameters exceeding one-half the head diameter and no pair having an average diameter greater than one-quarter the head diameter may be reinforced as follows:

(1) When the spacing between a pair of adjacent openings is equal to or greater than twice the average diameter of the pair, and this is so for all opening pairs, the head thickness may be determined by rules in (d) above.

(2) When the spacing between adjacent openings in a pair is less than twice but equal to or greater than $1\frac{1}{4}$ the average diameter of the pair, the required head thickness shall be that determined by (d) above multiplied by a factor h, where

$$h = \sqrt{0.5 / e}$$

$$e = \left[(p - d_{ave})/p\right]_{\text{smallest}}$$

where

d_{ave} = average diameter of the same two adjacent openings

e = smallest ligament efficiency of adjacent opening pairs in the head

p = center-to-center spacing of two adjacent openings

(3) Spacings of less than $1\frac{1}{4}$ the average diameter of adjacent openings shall be treated by rules of U-2(g).

(4) In no case shall the width of ligament between two adjacent openings be less than one-quarter the diameter of the smaller of the two openings in the pair.

(5) The width of ligament between the edge of any one opening and the edge of the flat head (such as U_3 or U_5 in Figure UG-39) shall not be less than one-quarter the diameter of that one opening.

UG-40 LIMITS OF REINFORCEMENT

(a) The boundaries of the cross sectional area in any plane normal to the vessel wall and passing through the center of the opening within which metal must be located in order to have value as reinforcement are designated as the limits of reinforcement for that plane (see Figure UG-37.1). Figure UG-40 depicts thicknesses t, t_e, and t_n, or t_i and diameter d used in establishing the limits of reinforcement. All dimensions are in the corroded condition; for nomenclature, see UG-37(a).

(b) The limits of reinforcement, measured parallel to the vessel wall, shall be at a distance, on each side of the axis of the opening, equal to the greater of the following:

(1) the diameter d of the finished opening;

(2) the inside radius, R_n, of the nozzle plus the vessel wall thickness t, plus the nozzle wall thickness t_n.

(c) The limits of reinforcement, measured normal to the vessel wall, shall conform to the contour of the surface at a distance from each surface equal to the smaller of the following:

(1) $2\frac{1}{2}$ times the vessel wall thickness t;

Provided by IHS under license with ASME
No reproduction or networking permitted without license from IHS
Licensee=Chevron Phillips Chemical Co LP/5956674001
Not for Resale, 11/09/2014 20:41:36 MST

Figure UG-40
Some Representative Configurations Describing the Reinforcement Dimension t_e and the Opening Dimension d

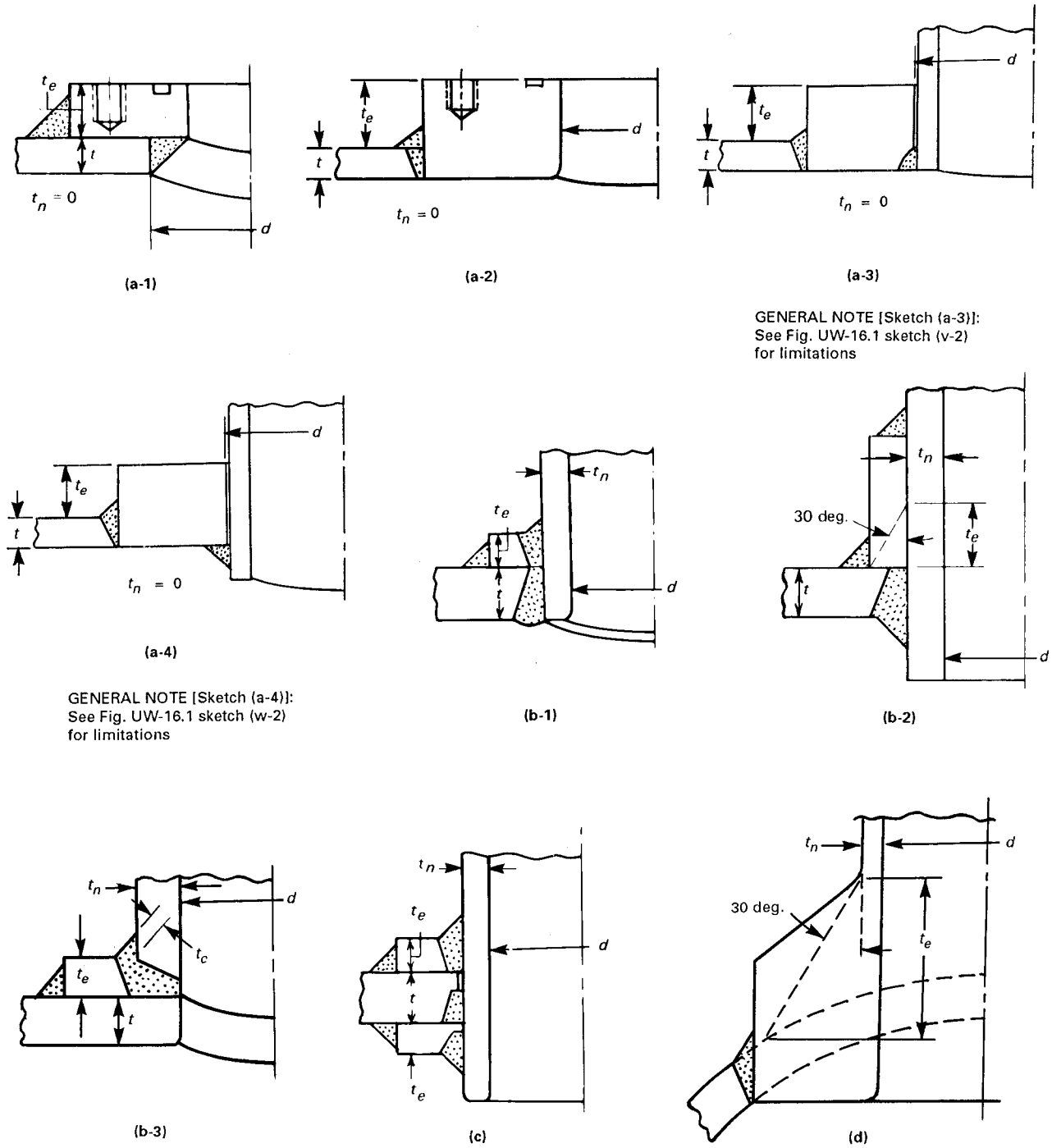

Provided by IHS under license with ASME
No reproduction or networking permitted without license from IHS
Licensee=Chevron Phillips Chemical Co LP/5956674001
Not for Resale, 11/09/2014 20:41:36 MST

Figure UG-40
Some Representative Configurations Describing the Reinforcement Dimension t_e and the Opening Dimension d (Cont'd)

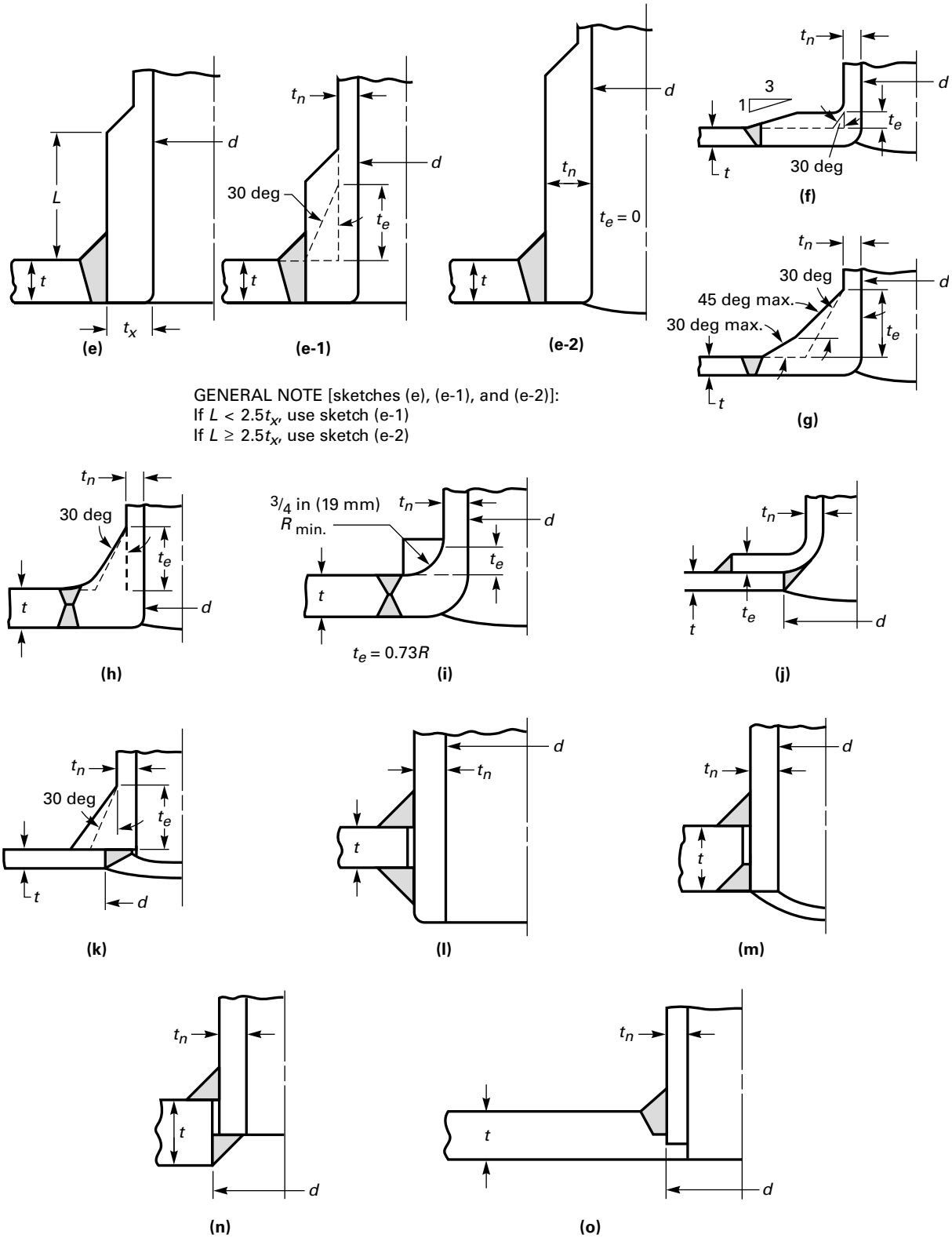

Provided by IHS under license with ASME
No reproduction or networking permitted without license from IHS
Licensee=Chevron Phillips Chemical Co LP/5956674001
Not for Resale, 11/09/2014 20:41:36 MST

(2) $2\frac{1}{2}$ times the nozzle wall thickness t_n plus the thickness t_e as defined in Figure UG-40.

(d) Metal within the limits of reinforcement that may be considered to have reinforcing value shall include the following:

(1) metal in the vessel wall over and above the thickness required to resist pressure and the thickness specified as corrosion allowance. the area in the vessel wall available as reinforcement is the larger of the values of A_1 given by the equations in Figure UG-37.1.

(2) metal over and above the thickness required to resist pressure and the thickness specified as corrosion allowance in that part of a nozzle wall extending outside the vessel wall. The maximum area in the nozzle wall available as reinforcement is the smaller of the values of A_2 given by the equations in Figure UG-37.1.

All metal in the nozzle wall extending inside the vessel wall A_3 may be included after proper deduction for corrosion allowance on all the exposed surface is made. No allowance shall be taken for the fact that a differential pressure on an inwardly extending nozzle may cause opposing stress to that of the stress in the shell around the opening:

(3) metal in attachment welds A_4 and metal added as reinforcement A_5.

(e) With the exception of studding outlet type flanges and the straight hubs of forged nozzle flanges [see UG-44(j)], bolted flange material within the limits of reinforcement shall not be considered to have reinforcing value.

(13) UG-41 STRENGTH OF REINFORCEMENT

(a) Material used for reinforcement shall have an allowable stress value equal to or greater than that of the material in the vessel wall, except that when such material is not available, lower strength material may be used, provided the area of reinforcement is increased in inverse proportion to the ratio of the allowable stress values of the two materials to compensate for the lower allowable stress value of the reinforcement. No credit may be taken for the additional strength of any reinforcement having a higher allowable stress value than that of the vessel wall. Deposited weld metal outside of either the vessel wall or any reinforcing pad used as reinforcement shall be credited with an allowable stress value equivalent to the weaker of the materials connected by the weld. Vessel-to-nozzle or pad-to-nozzle attachment weld metal within the vessel wall or within the pad may be credited with a stress value equal to that of the vessel wall or pad, respectively.

(b) On each side of the plane defined in UG-40(a), the strength of the attachment joining the vessel wall and reinforcement or any two parts of the attached reinforcement shall be at least equal to the smaller of:

(1) the strength in tension of the cross section of the element or elements of reinforcement being considered (see $W_{1\text{-}1}$, $W_{2\text{-}2}$, and $W_{3\text{-}3}$ of Figure UG-41.1 for examples);

(2) the strength in tension of the area defined in UG-37 less the strength in tension of the reinforcing area that is integral in the vessel wall as permitted by UG-40(d)(1) (see W of Figure UG-41.1 for examples);

(3) for welded attachments, see UW-15 for exemptions to strength calculations.

(c) The strength of the attachment joint shall be considered for its entire length on each side of the plane of the area of reinforcement defined in UG-40. For obround openings, consideration shall also be given to the strength of the attachment joint on one side of the plane transverse to the parallel sides of the opening that passes through the center of the semicircular end of the opening.

(d) For detailed requirements for welded and brazed reinforcement see the appropriate paragraphs in the Parts devoted to these subjects (see UW-15 and UB-19).

UG-42 REINFORCEMENT OF MULTIPLE OPENINGS

(See UG-39 for multiple openings in flat heads.)

(a) When any two openings are spaced such that their limits of reinforcement overlap [see Figure UG-42 sketch (a)], the two openings shall be reinforced in the plane connecting the centers, in accordance with the rules of UG-37, UG-38, UG-40, and UG-41 with a combined reinforcement that has an area not less than the sum of the areas required for each opening. No portion of the cross section is to be considered as applying to more than one opening, nor to be considered more than once in a combined area.

(1) The available area of the head or shell between openings having an overlap area shall be proportioned between the two openings by the ratio of their diameters.

(2) For cylinders and cones, if the area of reinforcement between the two openings is less than 50% of the total required for the two openings, the supplemental rules of 1-7(a) and 1-7(c) shall be used.

(3) A series of openings all on the same centerline shall be treated as successive pairs of openings.

(b) When more than two openings are spaced as in (a) above [see Figure UG-42 sketch (b)], and are to be provided with a combined reinforcement, the minimum distance between centers of any two of these openings shall be $1\frac{1}{3}$ times their average diameter, and the area of reinforcement between any two openings shall be at least equal to 50% of the total required for the two openings. If the distance between centers of two such openings is less than $1\frac{1}{3}$ times their average diameter, no credit for reinforcement shall be taken for any of the material between these openings. Such openings must be reinforced as described in (c) below.

(c) Alternatively, any number of adjacent openings, in any arrangement, may be reinforced by using an assumed opening enclosing all such openings. The limits for reinforcement of the assumed opening shall be those given in UG-40(b)(1) and UG-40(c)(1). The nozzle walls of the actual openings shall not be considered to have reinforcing

Provided by IHS under license with ASME
No reproduction or networking permitted without license from IHS
Licensee=Chevron Phillips Chemical Co LP/5956674001
Not for Resale, 11/09/2014 20:41:36 MST

Figure UG-41.1
Nozzle Attachment Weld Loads and Weld Strength Paths to Be Considered

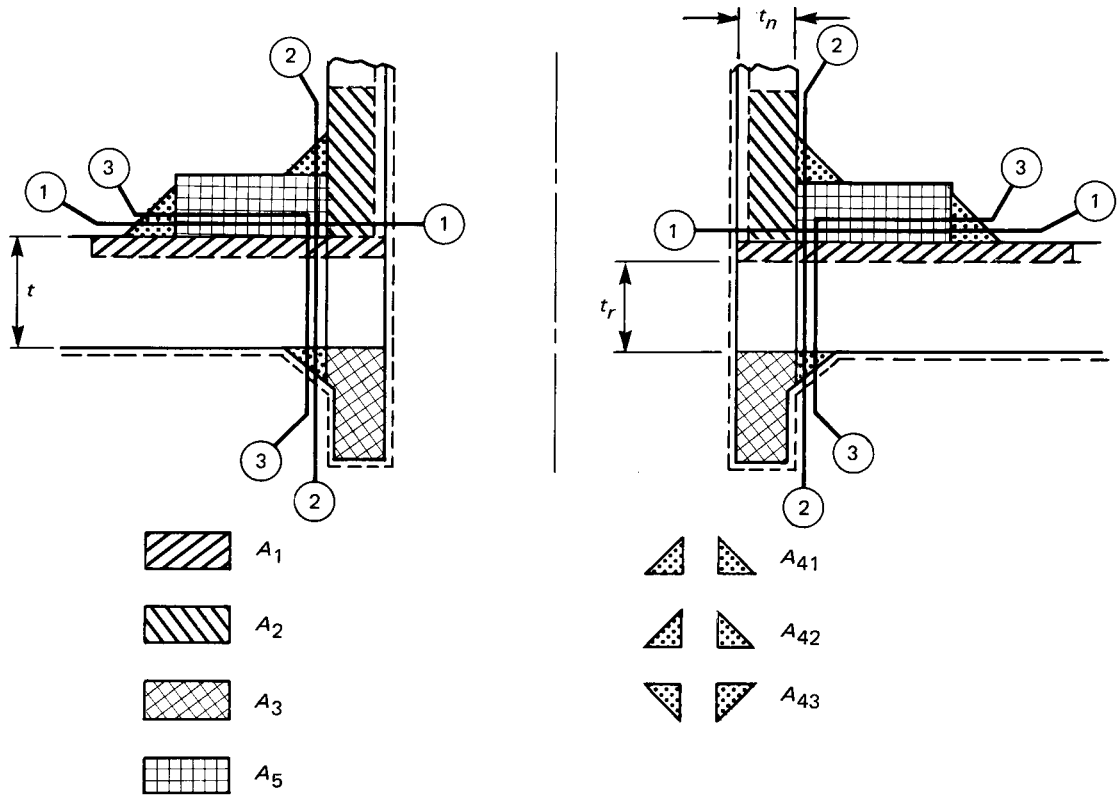

W = total weld load [UG-41(b)(2)]
= $[A - A_1 + 2t_n f_{r1}(E_1 t - Ft_r)]S_v$
$W_{1\text{-}1}$ = weld load for strength path 1-1 [UG-41(b)(1)]
= $(A_2 + A_5 + A_{41} + A_{42})S_v$
$W_{2\text{-}2}$ = weld load for strength path 2-2 [UG-41(b)(1)]
= $(A_2 + A_3 + A_{41} + A_{43} + 2t_n t f_{r1})S_v$
$W_{3\text{-}3}$ = weld load for strength path 3-3 [UG-41(b)(1)]
= $(A_2 + A_3 + A_5 + A_{41} + A_{42} + A_{43} + 2t_n t f_{r1})S_v$

GENERAL NOTES:
(a) Areas A_1, A_2, A_3, A_5, and A_{4i} are modified by f_{rx} factors.
(b) Nomenclature is the same as in UG-37 and Fig. UG-37.1.

(a) Depicts Typical Nozzle Detail With Neck Inserted Through the Vessel Wall

Provided by IHS under license with ASME
No reproduction or networking permitted without license from IHS
Licensee=Chevron Phillips Chemical Co LP/5956674001
Not for Resale, 11/09/2014 20:41:36 MST

Figure UG-41.1
Nozzle Attachment Weld Loads and Weld Strength Paths to Be Considered (Cont'd)

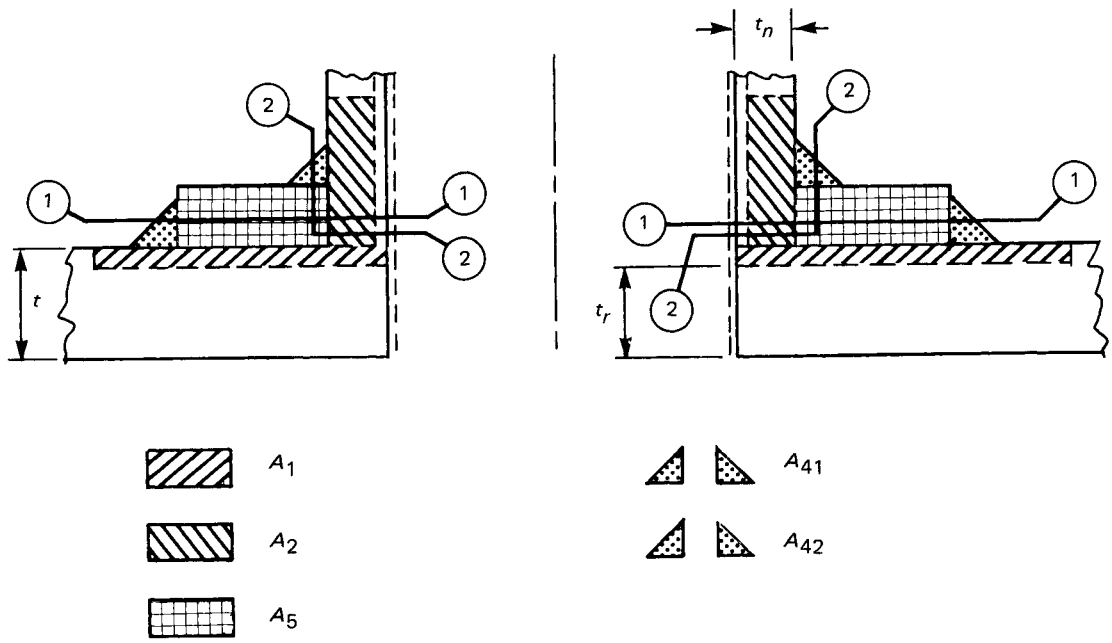

W = total weld load [UG-41(b)(2)]
= $(A - A_1)S_v$
W_{1-1} = weld load for strength path 1-1 [UG-41(b)(1)]
= $(A_2 + A_5 + A_{41} + A_{42})S_v$
W_{2-2} = weld load for strength path 2-2 [UG-41(b)(1)]
= $(A_2 + A_{41})S_v$

GENERAL NOTES:
(a) Areas A_1, A_2, A_5, and A_{4i} are modified by f_{rx} factors.
(b) Nomenclature is the same as in UG-37 and Fig. UG-37.1.

(b) Depicts Typical Nozzle Detail With Neck Abutting the Vessel Wall

value. For cylinders and cones, when the diameter of the assumed opening exceeds the limits in UG-36(b)(1), the supplemental rules of 1-7(a) and 1-7(c) shall also be used.

(d) When a group of openings is reinforced by a thicker section butt welded into the shell or head, the edges of the inserted section shall be tapered as prescribed in UW-9(c).

(e) When a series of two or more openings in a cylindrical or conical shell are arranged in a regular pattern, reinforcement of the openings may be provided per the rules of ligaments in UG-53.

UG-43 METHODS OF ATTACHMENT OF PIPE AND NOZZLE NECKS TO VESSEL WALLS

(a) General. Nozzles may be attached to the shell or head of a vessel by any of the methods of attachment given in this paragraph, except as limited in UG-36.

(b) Welded Connections. Attachment by welding shall be in accordance with the requirements of UW-15 and UW-16.

(c) Brazed Connections. Attachment by brazing shall be in accordance with the requirements of UB-17 through UB-19.

(d) Studded Connections. Connections may be made by means of studs. The vessel shall have a flat surface machined on the shell, or on a built-up pad, or on a properly

Provided by IHS under license with ASME
No reproduction or networking permitted without license from IHS
Licensee=Chevron Phillips Chemical Co LP/5956674001
Not for Resale, 11/09/2014 20:41:36 MST

Figure UG-42
Examples of Multiple Openings

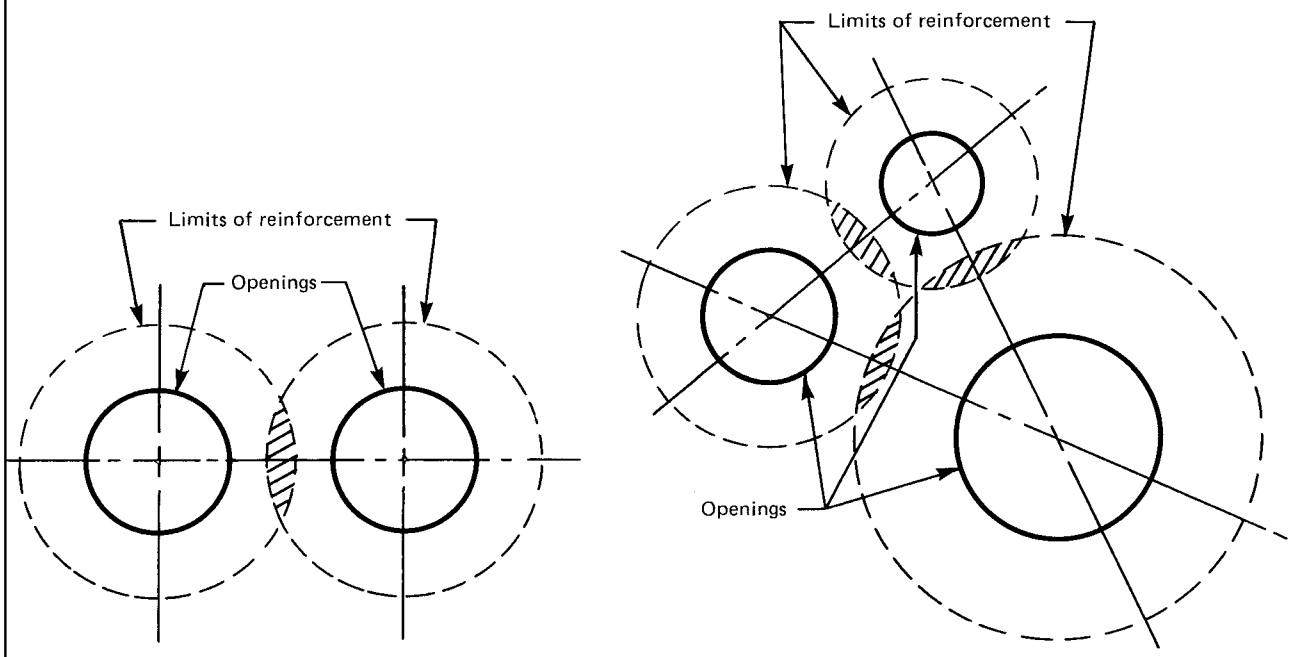

(a) Two Openings Spaced With Limits of Reinforcement Overlapping

(b) More Than Two Openings Spaced With Limits of Reinforcement Overlapping

attached plate or fitting. The distance from the inside surface of the vessel to the bottom of a drilled hole to be tapped shall not be less than the corrosion allowance plus one-fourth of the minimum required wall thickness. Weld metal may be added to the inside surface of the vessel to maintain this distance (see UW-42). The tapped holes shall also conform to the requirements of (g) below. Studded connections shall meet the requirements for reinforcement in UG-36 through UG-42.

(e) Threaded Connections. Pipes, tubes, and other threaded connections that conform to the ASME Standard for Pipe Threads, General Purpose, Inch (ASME B1.20.1) may be screwed into a threaded hole in a vessel wall, provided the pipe engages the minimum number of threads specified in Table UG-43 after allowance has been made for curvature of the vessel wall. The thread shall be a standard taper pipe thread except that a straight thread of at least equal strength may be used if other sealing means to prevent leakage are provided. A built-up pad or a properly attached plate or fitting may be used to provide the metal thickness and number of threads required in Table UG-43, or to furnish reinforcement when required.

Threaded connections larger than4 in. pipe size (DN 100) shall not be used in vessels that contain liquids having a flash-point below 110°F (43°C), or flammable vapors, or flammable liquids at temperatures above that at which they boil under atmospheric pressure.

Threaded connections larger than3 in. pipe size (DN 80) shall not be used when the maximum allowable working pressure exceeds 125 psi (0.8 MPa), except that this 3 in. pipe size (DN 80) restriction does not apply to plug closures used for inspection openings, end closures, or similar purposes, or to integrally forged openings in vessel heads meeting the requirement of UF-43.

(f) Expanded Connections. A pipe, tube, or forging may be attached to the wall of a vessel by inserting through an unreinforced opening and expanding into the shell, provided the diameter is not greater than 2 in. pipe size (DN 50). A pipe, tube, or forging not exceeding 6 in. (150 mm) in outside diameter may be attached to the wall of a vessel by inserting through a reinforced opening and expanding into the shell.

Such connections shall be:

(1) firmly rolled in and beaded; or

(2) rolled in, beaded, and seal-welded around the edge of the bead; or

(3) expanded and flared not less than $\frac{1}{8}$ in. (3 mm) over the diameter of the hole; or

(4) rolled, flared, and welded; or

(5) rolled and welded without flaring or beading, provided:

(-a) the ends extend at least $\frac{1}{4}$ in. (6 mm), but no more than $\frac{3}{8}$ in. (10 mm), through the shell;

Provided by IHS under license with ASME
No reproduction or networking permitted without license from IHS
Licensee=Chevron Phillips Chemical Co LP/5956674001
Not for Resale, 11/09/2014 20:41:36 MST

Table UG-43
Minimum Number of Pipe Threads for Connections

Size of Pipe Connection, NPS (DN)	Threads Engaged	Min. Plate Thickness Required, in. (mm)
$^1/_2$ & $^3/_4$ (DN 15 & 20)	6	0.43 (11.0)
1, $1^1/_4$ & $1^1/_2$ (DN 25, 32, & 40)	7	0.61 (15)
2 (DN 50)	8	0.70 (18)
$2^1/_2$ & 3 (DN 65 & 80)	8	1.0 (25)
4–6 (DN 100–150)	10	1.25 (32)
8 (DN 200)	12	1.5 (38)
10 (DN 250)	13	1.62 (41)
12 (DN 300)	14	1.75 (45)

(-b) the throat of the weld is at least $^3/_{16}$ in. (5 mm), but no more than $^5/_{16}$ in. (8 mm).

When the tube or pipe does not exceed $1^1/_2$ in. (38 mm) in outside diameter, the shell may be chamfered or recessed to a depth at least equal to the thickness of the tube or pipe and the tube or pipe may be rolled into place and welded. In no case shall the end of the tube or pipe extend more than $^3/_8$ in. (10 mm) beyond the shell.

Grooving of shell openings in which tubes and pipe are to be rolled or expanded is permissible.

Expanded connections shall not be used as a method of attachment to vessels used for the processing or storage of flammable and/or noxious gases and liquids unless the connections are seal-welded.

(g) Where tapped holes are provided for studs, the threads shall be full and clean and shall engage the stud for a length not less than the larger of d_s or

$$0.75d_s \times \frac{\text{maximum allowable stress value of stud material at design temperature}}{\text{maximum allowable stress value of tapped material at design temperature}}$$

in which d_s is the nominal diameter of the stud, except that the thread engagement need not exceed $1^1/_2 d_s$.

UG-44 FLANGES AND PIPE FITTINGS

The following standards covering flanges and pipe fittings are acceptable for use under this Division in accordance with the requirements of UG-11. Pressure–temperature ratings shall be in accordance with the appropriate standard except that the pressure–temperature ratings for ASME B16.9 and ASME B16.11 fittings shall be calculated as for straight seamless pipe in accordance with the rules of this Division including the maximum allowable stress for the material. The thickness tolerance of the ASME standards shall apply.

(a) ASME B16.1, Gray Iron Pipe Flanges and Flanged Fittings, Classes 25, 125, and 250. Permitted only for pressure vessel parts used on pressure vessels constructed in accordance with Part UCI of this Division.

(b) ASME B16.5, Pipe Flanges and Flanged Fittings [see UG-11(a)(2)]

(c) ASME B16.9, Factory-Made Wrought Buttwelding Fittings

(d) ASME B16.11, Forged Fittings, Socket-Welding and Threaded

(e) ASME B16.15, Cast Bronze Threaded Fittings, Classes 125 and 250

(f) ASME B16.20, Metallic Gaskets for Pipe Flanges — Ring-Joint, Spiral-Wound, and Jacketed

(g) ASME B16.24, Cast Copper Alloy Pipe Flanges and Flanged Fittings, Class 150, 300, 400, 600, 900, 1500, and 2500

(h) ASME B16.42, Ductile Iron Pipe Flanges and Flanged Fittings, Class 150 and 300

(i) ASME B16.47, Large Diameter Steel Flanges, NPS 26 Through NPS 60

(j) A forged nozzle flange may use the ASME B16.5/B16.47 pressure–temperature ratings for the flange material being used, provided all of the following are met:

(1) For ASME B16.5 applications, the forged nozzle flange shall meet all dimensional requirements of a flanged fitting given in ASME B16.5 with the exception of the inside diameter. The inside diameter of the forged nozzle flange shall not exceed the inside diameter of the same size lap joint flange given in ASME B16.5. For ASME B16.47 applications, the inside diameter shall not exceed the weld hub diameter A given in the ASME B16.47 tables.

(2) For ASME B16.5 applications, the outside diameter of the forged nozzle neck shall be at least equal to the hub diameter of the same size and class ASME B16.5 lap joint flange. For ASME B16.47 applications, the outside diameter of the hub shall at least equal the X diameter given in the ASME B16.47 tables. Larger hub diameters shall be limited to nut stop diameter dimensions. See Figure 2-4 sketches (12) and (12a).

UG-45 NOZZLE NECK THICKNESS

The minimum wall thickness of nozzle necks shall be determined as given below.

Provided by IHS under license with ASME
No reproduction or networking permitted without license from IHS
Licensee=Chevron Phillips Chemical Co LP/5956674001
Not for Resale, 11/09/2014 20:41:36 MST

For access openings and openings used only for inspection:

$$t_{UG\text{-}45} = t_a$$

For other nozzles:

Determine t_b.

$$t_b = \min\,[t_{b3}, \max\,(t_{b1}, t_{b2})]$$

$$t_{UG\text{-}45} = \max\,(t_a, t_b)$$

where

t_a = minimum neck thickness required for internal and external pressure using UG-27 and UG-28 (plus corrosion allowance), as applicable. The effects of external forces and moments from supplemental loads (see UG-22) shall be considered. Shear stresses caused by UG-22 loadings shall not exceed 70% of the allowable tensile stress for the nozzle material.

t_{b1} = for vessels under internal pressure, the thickness (plus corrosion allowance) required for pressure (assuming E = 1.0) for the shell or head at the location where the nozzle neck or other connection attaches to the vessel but in no case less than the minimum thickness specified for the material in UG-16(b).

t_{b2} = for vessels under external pressure, the thickness (plus corrosion allowance) obtained by using the external design pressure as an equivalent internal design pressure (assuming E = 1.0) in the formula for the shell or head at the location where the nozzle neck or other connection attaches to the vessel but in no case less than the minimum thickness specified for the material in UG-16(b).

t_{b3} = the thickness given in Table UG-45 plus the thickness added for corrosion allowance.

$t_{UG\text{-}45}$ = minimum wall thickness of nozzle necks

NOTE: For applications of rules in UG-45, refer to Nonmandatory Appendix L.

Table UG-45
Nozzle Minimum Thickness Requirements

Nominal Size	Minimum Wall Thickness [see UG-16(d)] in.	mm
NPS 1/8 (DN 6)	0.060	1.51
NPS 1/4 (DN 8)	0.077	1.96
NPS 3/8 (DN 10)	0.080	2.02
NPS 1/2 (DN 15)	0.095	2.42
NPS 3/4 (DN 20)	0.099	2.51
NPS 1 (DN 25)	0.116	2.96
NPS 11/4 (DN 32)	0.123	3.12
NPS 11/2 (DN 40)	0.127	3.22
NPS 2 (DN 50)	0.135	3.42
NPS 21/2 (DN 65)	0.178	4.52
NPS 3 (DN 80)	0.189	4.80
NPS 31/2 (DN 90)	0.198	5.02
NPS 4 (DN 100)	0.207	5.27
NPS 5 (DN 125)	0.226	5.73
NPS 6(DN 150)	0.245	6.22
NPS 8 (DN 200)	0.282	7.16
NPS 10 (DN 250)	0.319	8.11
— NPS 12 (DN 300)	0.328	8.34

GENERAL NOTE: For nozzles having a specified outside diameter not equal to the outside diameter of an equivalent standard NPS (DN) size, the NPS (DN) size chosen from the table shall be one having an equivalent outside diameter larger than the nozzle outside diameter.

UG-46 INSPECTION OPENINGS[30]

(a) All pressure vessels for use with compressed air and those subject to internal corrosion or having parts subject to erosion or mechanical abrasion (see UG-25), except as permitted otherwise in this paragraph, shall be provided with suitable manhole, handhole, or other inspection openings for examination and cleaning.

Compressed air as used in this paragraph is not intended to include air that has had moisture removed to provide an atmospheric dew point of −50°F (-46°C) or less.

Inspection openings may be omitted in vessels covered in (b), and in the shell side of fixed tubesheet heat exchangers. When inspection openings are not provided, the Manufacturer's Data Report shall include one of the following notations under remarks:

(1) "UG-46(b)" when telltale holes are used in lieu of inspection openings;

(2) "UG-46(a)" when inspection openings are omitted in fixed tubesheet heat exchangers;

(3) "UG-46(c)", "UG-46(d)", or "UG-46(e)" when provision for inspection is made in accordance with one of these paragraphs;

(4) the statement "for noncorrosive service."

(b) When provided with telltale holes complying with the provisions of UG-25, inspection openings as required in (a) above may be omitted in vessels not over 36 in. (900 mm). I.D. that are subject only to corrosion, provided that the holes are spaced one hole per 10 ft^2 (0.9 m^2) (or fraction thereof) of internal vessel surface area where corrosion is expected with a minimum of four uniformly spaced holes per vessel. This provision does not apply to vessels for compressed air.

(c) Vessels over 12 in. (300 mm) I.D. under air pressure that also contain, as an inherent requirement of their operation, other substances that will prevent corrosion need not have openings for inspection only, provided the vessel contains suitable openings through which inspection can

Provided by IHS under license with ASME
No reproduction or networking permitted without license from IHS
Licensee=Chevron Phillips Chemical Co LP/5956674001
Not for Resale, 11/09/2014 20:41:36 MST

be made conveniently, and provided such openings are equivalent in size and number to the requirements for inspection openings in (f) below.

(d) For vessels 12 in. (300 mm) or less in inside diameter, openings for inspection only may be omitted if there are at least two removable pipe connections not less than NPS $^3/_4$ (DN 20).

(e) Vessels less than 16 in. (400 mm) and over 12 in. (300 mm) I.D. shall have at least two handholes or two threaded pipe plug inspection openings of not less than NPS $1^1/_2$ (DN 40) except as permitted by the following: when vessels less than 16 in. (400 mm) and over 12 in. (300 mm) I.D. are to be installed so that inspection cannot be made without removing the vessel from the assembly, openings for inspection only may be omitted provided there are at least two removable pipe connections of not less than NPS $1^1/_2$ (DN 40).

(f) Vessels that require access or inspection openings shall be equipped as follows.[31]

(1) All vessels less than 18 in. (450 mm) and over 12 in. (300 mm) I.D. shall have at least two handholes or two plugged, threaded inspection openings of not less than NPS $1^1/_2$ (DN 40).

(2) All vessels 18 in. (450 mm) to 36 in. (900 mm), inclusive, I.D. shall have a manhole or at least two handholes or two plugged, threaded inspection openings of not less than NPS 2 (DN 50).

(3) All vessels over 36 in. (900 mm) I.D. shall have a manhole, except that those whose shape or use makes one impracticable shall have at least two handholes 4 in. × 6 in. (100 mm × 150 mm) or two equal openings of equivalent area.

(4) When handholes or pipe plug openings are permitted for inspection openings in place of a manhole, one handhole or one pipe plug opening shall be in each head or in the shell near each head.

(5) Openings with removable heads or cover plates intended for other purposes may be used in place of the required inspection openings provided they are equal at least to the size of the required inspection openings.

(6) A single opening with removable head or cover plate may be used in place of all the smaller inspection openings provided it is of such size and location as to afford at least an equal view of the interior.

(7) Flanged and/or threaded connections from which piping, instruments, or similar attachments can be removed may be used in place of the required inspection openings provided that:

(-a) the connections are at least equal to the size of the required openings; and

(-b) the connections are sized and located to afford at least an equal view of the interior as the required inspection openings.

(g) When inspection or access openings are required, they shall comply at least with the following requirements:

(1) An elliptical or obround manhole shall be not less than 12 in. × 16 in. (300 mm × 400 mm). A circular manhole shall be not less than 16 in. (400 mm) I.D.

(2) A handhole opening shall be not less than 2 in. × 3 in. (50 mm × 75 mm), but should be as large as is consistent with the size of the vessel and the location of the opening.

(h) All access and inspection openings in a shell or unstayed head shall be designed in accordance with the rules of this Division for openings.

(i) When a threaded opening is to be used for inspection or cleaning purposes, the closing plug or cap shall be of a material suitable for the pressure and no material shall be used at a temperature exceeding the maximum temperature allowed in this Division for that material. The thread shall be a standard taper pipe thread except that a straight thread of at least equal strength may be used if other sealing means to prevent leakage are provided.

(j) Manholes of the type in which the internal pressure forces the cover plate against a flat gasket shall have a minimum gasket bearing width of $^{11}/_{16}$ in. (17 mm).

BRACED AND STAYED SURFACES

UG-47 BRACED AND STAYED SURFACES (13)

(a) The minimum thickness and maximum allowable working pressure for braced and stayed flat plates and those parts that, by these rules, require staying as flat plates with braces or staybolts of uniform diameter symmetrically spaced, shall be calculated by the following equations:

$$t = p\sqrt{\frac{P}{SC}} \tag{1}$$

$$p = \frac{t^2 SC}{p^2} \tag{2}$$

where

C = 2.1 for welded stays or stays screwed through plates not over $^7/_{16}$ in. (11 mm) in thickness with ends riveted over

= 2.2 for welded stays or stays screwed through plates over $^7/_{16}$ in. (11 mm) in thickness with ends riveted over

= 2.5 for stays screwed through plates and fitted with single nuts outside of plate, or with inside and outside nuts, omitting washers; and for stays screwed into plates as shown in Figure UG-47 sketch (b)

Provided by IHS under license with ASME
No reproduction or networking permitted without license from IHS
Licensee=Chevron Phillips Chemical Co LP/5956674001
Not for Resale, 11/09/2014 20:41:36 MST

= 2.8 for stays with heads not less than 1.3 times the diameter of the stays screwed through plates or made a taper fit and having the heads formed on the stays before installing them, and not riveted over, said heads being made to have a true bearing on the plate

= 3.2 for stays fitted with inside and outside nuts and outside washers where the diameter of washers is not less than 0.4p and thickness not less than t

P = internal design pressure (see UG-21)

p = maximum pitch. The maximum pitch is the greatest distance between any set of parallel straight lines passing through the centers of staybolts in adjacent rows. Each of the three parallel sets running in the horizontal, the vertical, and the inclined planes shall be considered.

S = maximum allowable stress value in tension (see UG-23)

t = minimum thickness of plate

(b) The minimum thickness of plates to which stays may be applied, in other than cylindrical or spherical outer shell plates, shall be $^5/_{16}$ in. (8 mm) except for welded construction covered by UW-19 or Mandatory Appendix 17.

Figure UG-47
Acceptable Proportions for Ends of Stays

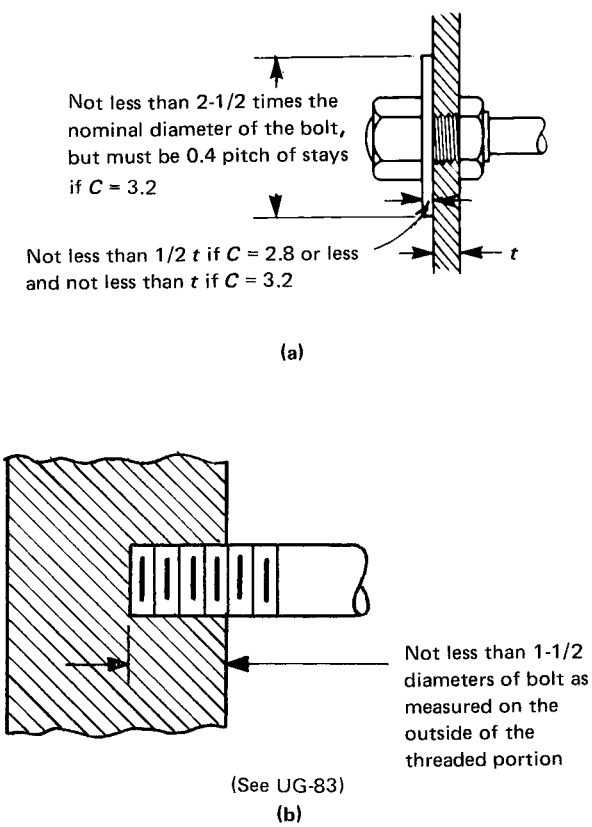

(c) If a stayed jacket extends completely around a cylindrical or spherical vessel, or completely covers a formed head, it shall meet the requirements given in (a) above, and shall also meet the applicable requirements for shells or heads in UG-27(c) and UG-27(d) and UG-32. In addition, where any nozzle or other opening penetrates the cylindrical or spherical vessel, or completely covered head, and the jacket, the vessel or formed head shall be designed in accordance with UG-37(d)(2).

(d) When two plates are connected by stays and but one of these plates requires staying, the value of C shall be governed by the thickness of the plate requiring staying.

(e) Acceptable proportions for the ends of through stays with washers are indicated in Figure UG-47 sketch (a). See UG-83.

(f) The maximum pitch shall be $8^1/_2$ in. (220 mm), except that for welded-in staybolts the pitch may be greater provided it does not exceed 15 times the diameter of the staybolt. See UW-19(a) for plate thicknesses greater than $^3/_4$ in. (19 mm).

(g) When the staybolting of shells is unsymmetrical by reason of interference with butt straps or other construction, it is permissible to consider the load carried by each staybolt as the area calculated by taking the distance from the center of the spacing on one side of the bolt to the center of the spacing on the other side.

UG-48 STAYBOLTS

(a) The ends of staybolts or stays screwed through the plate shall extend beyond the plate not less than two threads when installed, after which they shall be riveted over or upset by an equivalent process without excessive scoring of the plates, or they shall be fitted with threaded nuts through which the bolt or stay shall extend.

(b) The ends of steel stays upset for threading shall be fully annealed.

(c) Requirements for welded-in staybolts are given in UW-19.

UG-49 LOCATION OF STAYBOLTS

(a) When the edge of a flat stayed plate is flanged, the distance from the center of the outermost stays to the inside of the supporting flange shall not be greater than the pitch of the stays plus the inside radius of the flange.

UG-50 DIMENSIONS OF STAYBOLTS

(a) The required area of a staybolt at its minimum cross section[32] and exclusive of any allowance for corrosion shall be obtained by dividing the load on the staybolt computed in accordance with (b) below by the allowable stress value for the material used, as given in Subsection C, and multiplying the result by 1.10.

(b) Load Carried by Stays. The area supported by a stay shall be computed on the basis of the full pitch dimensions, with a deduction for the area occupied by the stay.

Provided by IHS under license with ASME
No reproduction or networking permitted without license from IHS
Licensee=Chevron Phillips Chemical Co LP/5956674001
Not for Resale, 11/09/2014 20:41:36 MST

The load carried by a stay is the product of the area supported by the stay and the maximum allowable working pressure.

(c) Stays made of parts joined by welding shall be checked for strength using a joint efficiency of 60% for the weld.

LIGAMENTS

UG-53 LIGAMENTS

(a) The symbols used in the equations and charts of this paragraph are defined as follows:

d = diameter of tube holes
n = number of tube holes in length p_1
p = longitudinal pitch of tube holes
p_1 = unit length of ligament
p' = diagonal pitch of tube holes
s = longitudinal dimension of diagonal pitch
= $p' \cos \theta$
θ = angle of diagonal with longitudinal line, deg

(b) When a cylindrical shell is drilled for tubes in a line parallel to the axis of the shell for substantially the full length of the shell as shown in Figures UG-53.1 through UG-53.3, the efficiency of the ligaments between the tube holes shall be determined as follows:

(1) When the pitch of the tube holes on every row is equal (see Figure UG-53.1), the formula is

$$\frac{p-d}{p} = \text{efficiency of ligament}$$

(2) When the pitch of tube holes on any one row is unequal (as in Figures UG-53.2 and UG-53.3), the formula is

$$\frac{p_1 - nd}{p_1} = \text{efficiency of ligament}$$

(c) When the adjacent longitudinal rows are drilled as described in (b) above, diagonal and circumferential ligaments shall also be examined. The least equivalent longitudinal efficiency shall be used to determine the minimum required thickness and the maximum allowable working pressure.

(d) When a cylindrical shell is drilled for holes so as to form diagonal ligaments, as shown in Figure UG-53.4, the efficiency of these ligaments shall be determined by Figures UG-53.5 and UG-53.6. Figure UG-53.5 is used to determine the efficiency of longitudinal and diagonal ligaments with limiting boundaries where the condition of equal efficiency of diagonal and longitudinal ligaments form one boundary and the condition of equal efficiency of diagonal and circumferential ligaments form the other boundary. Figure UG-53.6 is used for determining the equivalent longitudinal efficiency of diagonal ligaments. This efficiency is used in the equations for setting the minimum required thickness and the maximum allowable working pressure.

(e) Figure UG-53.5 is used when either or both longitudinal and circumferential ligaments exist with diagonal ligaments. To use Figure UG-53.5, compute the value of p'/p_1 and also the efficiency of the longitudinal ligament. Next find the vertical line in the diagram corresponding to the longitudinal efficiency of the ligament and follow this line vertically to the point where it intersects the diagonal line representing the ratio of p'/p_1. Then project this point horizontally to the left, and read the diagonal efficiency of the ligament on the scale at the edge of the diagram. The minimum shell thickness and the maximum allowable working pressure shall be based on the ligament that has the lower efficiency.

(f) Figure UG-53.6 is used for holes which are not in line, placed longitudinally along a cylindrical shell. The diagram may be used for pairs of holes for all planes between the longitudinal plane and the circumferential plane. To use Figure UG-53.6, determine the angle θ between the longitudinal shell axis and the line between the centers of the openings, θ, and compute the value of p'/d. Find the vertical line in the diagram corresponding

Figure UG-53.1
Example of Tube Spacing With Pitch of Holes Equal in Every Row

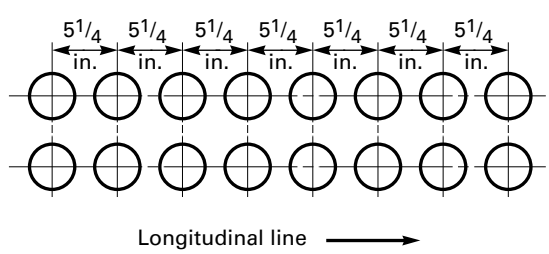

GENERAL NOTE: $5^1/_4$ in. = 133 mm

Provided by IHS under license with ASME
No reproduction or networking permitted without license from IHS
Licensee=Chevron Phillips Chemical Co LP/5956674001
Not for Resale, 11/09/2014 20:41:36 MST

Figure UG-53.2
Example of Tube Spacing With Pitch of Holes Unequal in Every Second Row

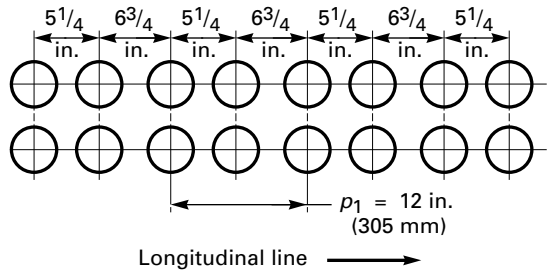

GENERAL NOTE: $5^1/_4$ in. = 135 mm
$6^3/_4$ in. = 170 mm

to the value of θ and follow this line vertically to the line representing the value of p'/d. Then project this point horizontally to the left, and read the equivalent longitudinal efficiency of the diagonal ligament. This equivalent longitudinal efficiency is used to determine the minimum required thickness and the maximum allowable working pressure.

(g) When tube holes in a cylindrical shell are arranged in symmetrical groups which extend a distance greater than the inside diameter of the shell along lines parallel to the axis and the same spacing is used for each group, the efficiency for one of the groups shall be not less than the efficiency on which the maximum allowable working pressure is based.

(h) The average ligament efficiency in a cylindrical shell, in which the tube holes are arranged along lines parallel to the axis with either uniform or nonuniform spacing, shall be computed by the following rules and shall satisfy the requirements of both:[33]

(1) For a length equal to the inside diameter of the shell for the position which gives the minimum efficiency, the efficiency shall be not less than that on which the maximum allowable working pressure is based. When the inside diameter of the shell exceeds 60 in. (1 500 mm), the length shall be taken as 60 in. (1 500 mm) in applying this rule.

(2) For a length equal to the inside radius of the shell for the position which gives the minimum efficiency, the efficiency shall be not less than 80% of that on which the maximum allowable working pressure is based. When the inside radius of the shell exceeds 30 in., the length shall be taken as 30 in. (760 mm) in applying this rule.

(i) When ligaments occur in cylindrical shells made from welded pipe or tubes, and their calculated efficiency is less than 85% (longitudinal) or 50% (circumferential), the efficiency to be used in the equations of UG-27 is the

Figure UG-53.3
Example of Tube Spacing With Pitch of Holes Varying in Every Second and Third Row

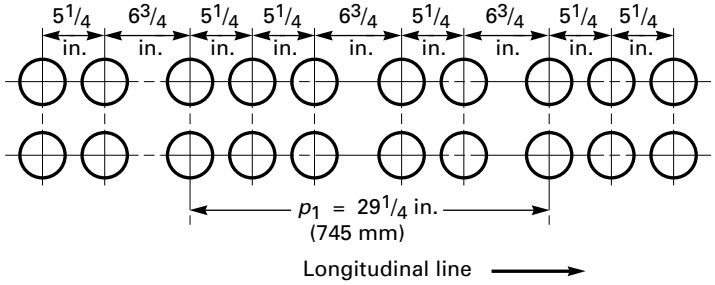

GENERAL NOTE: $5^1/_4$ in. = 135 mm
$6^3/_4$ in. = 170 mm

Provided by IHS under license with ASME
No reproduction or networking permitted without license from IHS
Licensee=Chevron Phillips Chemical Co LP/5956674001
Not for Resale, 11/09/2014 20:41:36 MST

Figure UG-53.4
Example of Tube Spacing With Tube Holes on Diagonal Lines

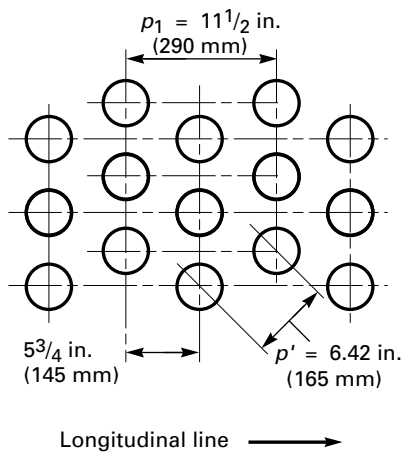

calculated ligament efficiency. In this case, the appropriate stress value in tension (see UG-23) may be multiplied by the factor 1.18.

(j) Examples illustrating the application of the rules in this paragraph are given in Nonmandatory Appendix L.

UG-54 SUPPORTS

(a) All vessels shall be so supported and the supporting members shall be arranged and/or attached to the vessel wall in such a way as to provide for the maximum imposed loadings (see UG-22 and UG-82).

(b) Nonmandatory Appendix G contains suggested rules for the design of supports.

UG-55 LUGS FOR PLATFORMS, LADDERS, AND OTHER ATTACHMENTS TO VESSEL WALLS

(a) Lugs or clips may be welded, brazed, or bolted to the outside or inside of the vessel to support ladders, platforms, piping, motor or machinery mounts, and attachment of insulating jackets (see UG-22). The material of the lugs or clips shall be in accordance with UG-4.

(b) External piping connected to a pressure vessel shall be installed so as not to overstress the vessel wall (see UG-22 and UG-82).

(c) Nonmandatory Appendix G provides guidance on the design of attachments.

FABRICATION

UG-75 GENERAL

The fabrication of pressure vessels and vessel parts shall conform to the general fabrication requirements in the following paragraphs and to the specific requirements for given in the applicable Parts of Subsections B and C.

UG-76 CUTTING PLATES AND OTHER STOCK

(a) Plates, edges of heads, and other parts may be cut to shape and size by mechanical means such as machining, shearing, grinding, or by oxygen or arc cutting. After oxygen or arc cutting, all slag and detrimental discoloration of material which has been molten shall be removed by mechanical means prior to further fabrication or use.

(b) Ends of nozzles or manhole necks which are to remain unwelded in the completed vessel may be cut by shearing provided sufficient additional material is removed by any other method that produces a smooth finish.

(c) Exposed inside edges shall be chamfered or rounded.

UG-77 MATERIAL IDENTIFICATION (SEE UG-85)

(a) Material for pressure parts preferably should be laid out so that when the vessel is completed, one complete set of the original identification markings required by UG-94 will be plainly visible. The pressure vessel Manufacturer shall maintain traceability of the material to the original identification markings by one or more of the following methods: accurate transfer of the original identification markings to a location where the markings will be visible on the completed vessel; identification by a coded marking traceable to the original required marking; or recording the required markings using methods such as material tabulations or as built sketches which assure identification of each piece of material during fabrication and subsequent identification in the completed vessel. Such transfers of markings shall be made prior to cutting except that the Manufacturer may transfer markings immediately after cutting provided the control of these transfers is described in his written Quality Control System (see 10-6). Except as indicated in (b) below, material may be marked by any method acceptable to the Inspector. The Inspector need not witness the transfer of the marks but shall satisfy himself that it has been correctly done (see UHT-86).

(b) Where the service conditions prohibit die-stamping for material identification, and when so specified by the user, the materials manufacturer shall mark the required data on the plates in a manner which will allow positive identification upon delivery. The markings must be recorded so that each plate will be positively identified in its position in the completed vessel to the satisfaction of the Inspector. Transfer of markings for material that is to be divided shall be done as in (a) above.

Provided by IHS under license with ASME
No reproduction or networking permitted without license from IHS
Licensee=Chevron Phillips Chemical Co LP/5956674001
Not for Resale, 11/09/2014 20:41:36 MST

Figure UG-53.5
Diagram for Determining the Efficiency of Longitudinal and Diagonal Ligaments Between Openings in Cylindrical Shells

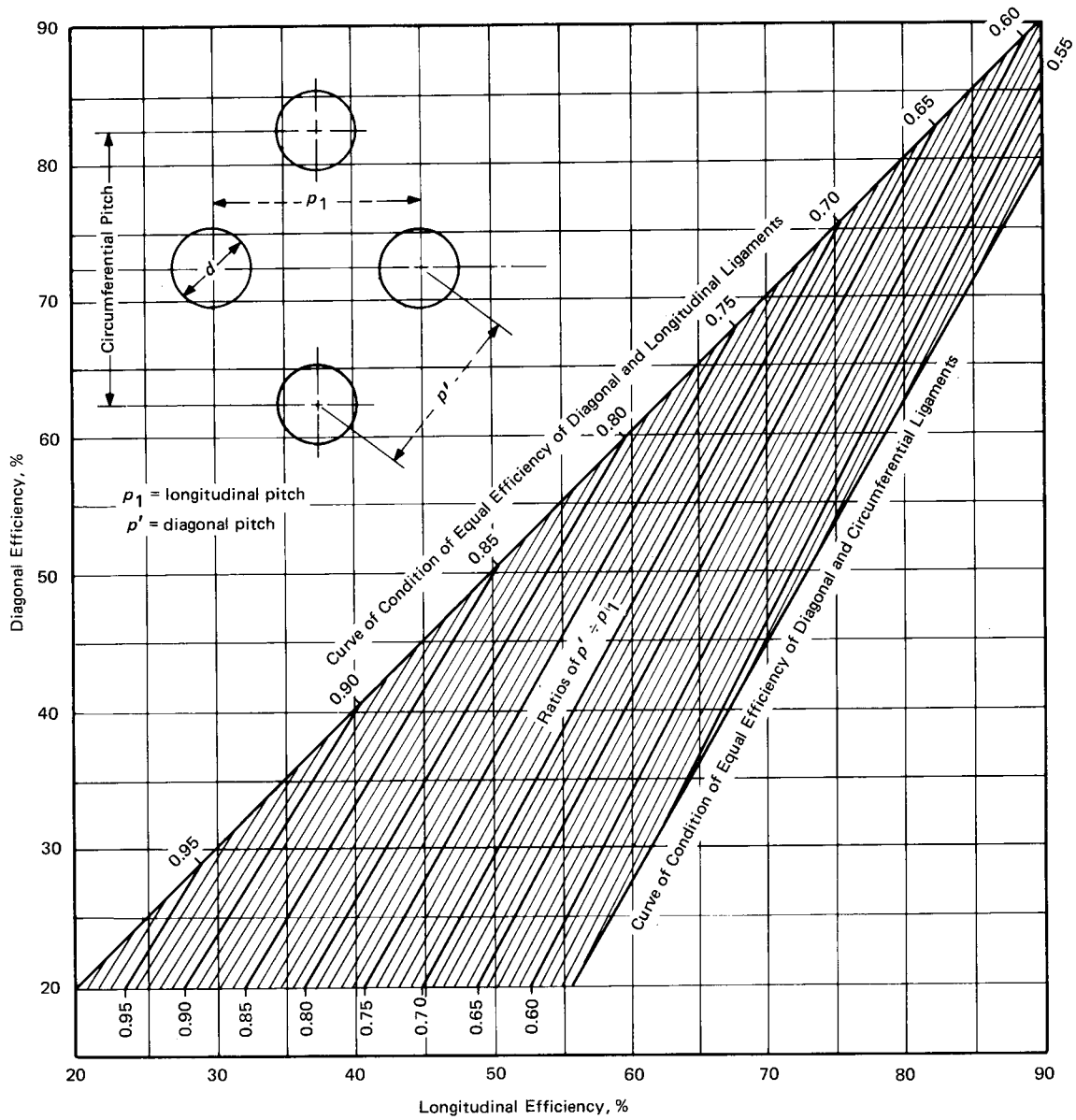

GENERAL NOTES:

(a) Equations are provided for the user's option in Notes (2), (3), and (4) below. The use of these equations is permitted for values beyond those provided by Figure UG-53.5.

(b) Diagonal efficiency, $\% = \dfrac{J + 0.25 - \left(1 - 0.01E_{\text{long.}}\right)\sqrt{0.75 + J}}{0.00375 + 0.005J}$, where $J = (p'/p_1)^2$

(c) Curve of condition of equal efficiency of diagonal and circumferential ligaments, diagonal efficiency, $\% = \dfrac{200M + 100 - 2\left(100 - E_{\text{long.}}\right)\sqrt{1 + M}}{\left(1 + M\right)}$, where $M = [(100 - E_{\text{long.}})/(200 - 0.5E_{\text{long.}})]^2$

(d) Longitudinal efficiency, $\% = E_{\text{long.}} = [(p_1 - d)/p_1]\ 100$

Provided by IHS under license with ASME
No reproduction or networking permitted without license from IHS
Licensee=Chevron Phillips Chemical Co LP/5956674001
Not for Resale, 11/09/2014 20:41:36 MST

Figure UG-53.6
Diagram for Determining Equivalent Longitudinal Efficiency of Diagonal Ligaments Between Openings in Cylindrical Shells

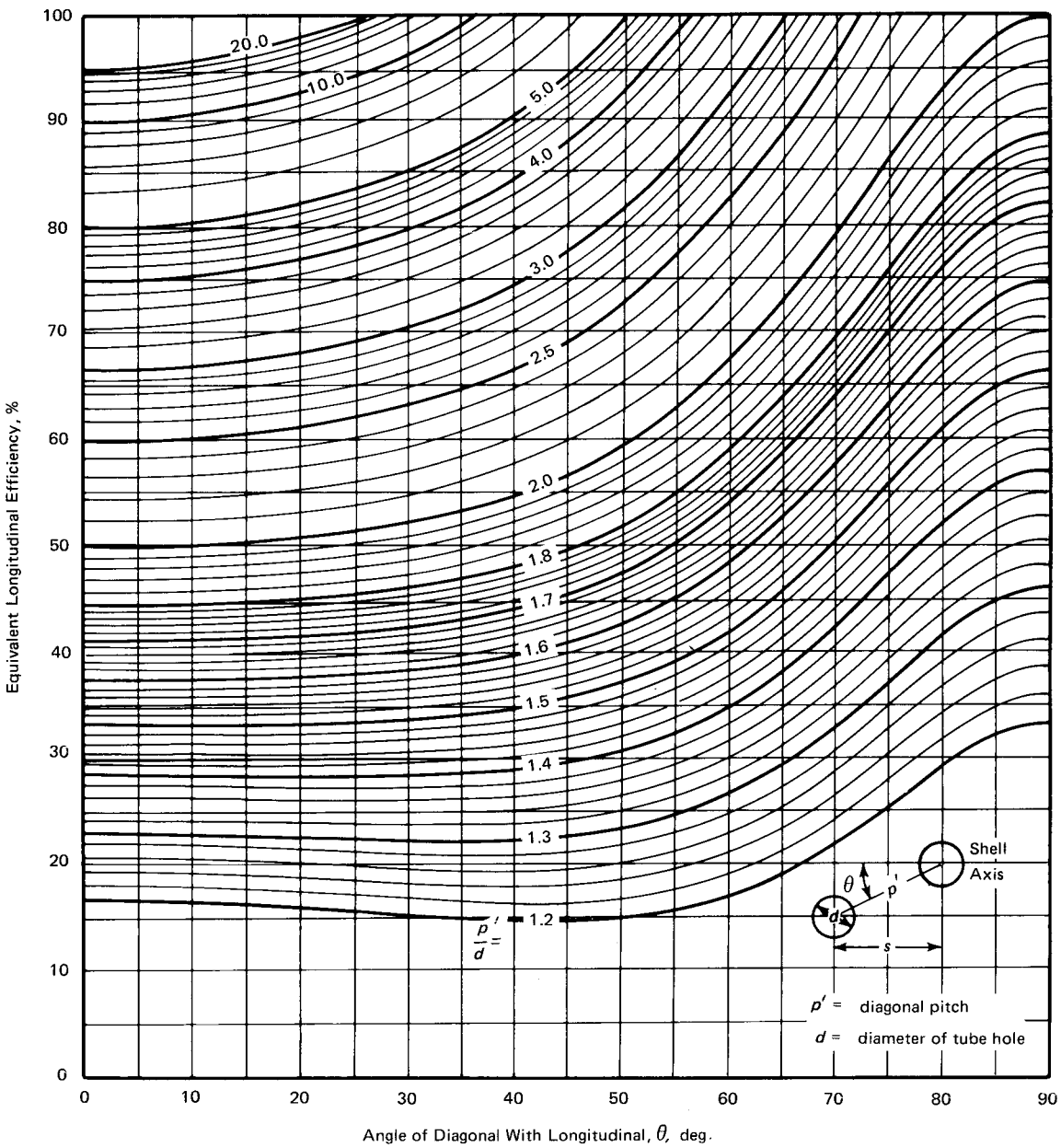

GENERAL NOTE: The equation below is provided for the user's option. The use of the equation is prohibited beyond the range of the abscissa and ordinate shown.

$$\text{Equivalent longitudinal efficiency, \%} = \frac{\sec^2\theta + 1 - \left(\frac{\sec\theta}{p'/d}\right)\sqrt{3 + \sec^2\theta}}{0.015 + 0.005\sec^2\theta}$$

Provided by IHS under license with ASME
No reproduction or networking permitted without license from IHS
Licensee=Chevron Phillips Chemical Co LP/5956674001
Not for Resale, 11/09/2014 20:41:36 MST

(c) When material is formed into shapes by anyone other than the Manufacturer of the completed pressure vessel, and the original markings as required by the applicable material specification are unavoidably cut out, or the material is divided into two or more parts, the manufacturer of the shape shall either:

(1) transfer the original identification markings to another location on the shape; or

(2) provide for identification by the use of a coded marking traceable to the original required marking, using a marking method agreed upon and described in the quality control system of the Manufacturer of the completed pressure vessel.

Identification in accordance with UG-93, in conjunction with the above modified marking requirements, shall be considered sufficient to identify these shapes. Manufacturer's Partial Data Reports and parts stamping are not a requirement unless there has been fabrication to the shapes that include welding, except as exempted by UG-11.

UG-78 REPAIR OF DEFECTS IN MATERIALS

Defects in material may be repaired provided acceptance by the Inspector is first obtained for the method and extent of repairs. Defective material that cannot be satisfactorily repaired shall be rejected.

(13) UG-79 FORMING PRESSURE PARTS

(a) Limits are provided on cold working of all carbon and low alloy steels, nonferrous alloys, high alloy steels, and ferritic steels with tensile properties enhanced by heat treatment [see UCS-79(d), UHA-44(a), UNF-79(a), and UHT-79(a)(1)]. Forming strains or extreme fiber elongation shall be determined by the equations in Table UG-79-1.

(b) If the plates are to be rolled, the adjoining edges of longitudinal joints of cylindrical vessels shall first be shaped to the proper curvature by preliminary rolling or forming in order to avoid having objectionable flat spots along the completed joints (see UG-80).

(c) When the vessel shell section, heads, or other pressure boundary parts are cold formed by other than the manufacturer of the vessel, the required certification for the part shall indicate whether or not the part has been heat-treated (see UCS-79, UHA-44, UNF-79, and UHT-79).

(d) A reduction in weld thickness due to a forming operation is acceptable provided all of the following conditions are met:

(1) Prior to the forming operation, the weld(s) are verified to comply with UW-35(a) through UW-35(d) by the Manufacturer and the Inspector.

(2) The reduced weld thickness, at any point, shall not be less than the minimum required thickness of the component.

Table UG-79-1 (13)
Equations for Calculating Forming Strains

Type of Part Being Formed	Forming Strain
Cylinders formed from plate	$\varepsilon_f = \left(\frac{50t}{R_f}\right)\left(1 - \frac{R_f}{R_o}\right)$
For double curvature (e.g., heads)	$\varepsilon_f = \left(\frac{75t}{R_f}\right)\left(1 - \frac{R_f}{R_o}\right)$
Tube and pipe bends	$\varepsilon_f = \frac{100r}{R}$

GENERAL NOTE:
ε_f = calculated forming strain or extreme fiber elongation
R = nominal bending radius to centerline of pipe or tube
R_f = final mean radius
R_o = original mean radius, equal to infinity for a flat plate
r = nominal outside radius of pipe or tube
t = nominal thickness of the plate, pipe, or tube before forming

(3) The reduction in thickness shall not exceed $^1/_{32}$ in. (1 mm) or 10% of the nominal thickness of the adjoining surface, whichever is less.

UG-80 PERMISSIBLE OUT-OF-ROUNDNESS OF CYLINDRICAL, CONICAL, AND SPHERICAL SHELLS

(a) Internal Pressure. The shell of a completed vessel shall be substantially round and shall meet the following requirements:

(1) The difference between the maximum and minimum inside diameters at any cross section shall not exceed 1% of the nominal diameter at the cross section under consideration. The diameters may be measured on the inside or outside of the vessel. If measured on the outside, the diameters shall be corrected for the plate thickness at the cross section under consideration (see Figure UG-80.2).

(2) When the cross section passes through an opening or within 1 I.D. of the opening measured from the center of the opening, the permissible difference in inside diameters given above may be increased by 2% of the inside diameter of the opening. When the cross section passes through any other location normal to the axis of the vessel, including head-to-shell junctions, the difference in diameters shall not exceed 1%.

For vessels with longitudinal lap joints, the permissible difference in inside diameters may be increased by the nominal plate thickness.

(b) External Pressure. The shell of a completed vessel to operate under external pressure shall meet the following requirements at any cross section: (13)

(1) The out-of-roundness limitations prescribed in (a)(1) and (a)(2) above.

Provided by IHS under license with ASME
No reproduction or networking permitted without license from IHS
Licensee=Chevron Phillips Chemical Co LP/5956674001
Not for Resale, 11/09/2014 20:41:36 MST

(2) The maximum plus-or-minus deviation from the true circular form, measured radially on the outside or inside of the vessel, shall not exceed the maximum permissible deviation e obtained from Figure UG-80.1. Use $e = 1.0t$ or $e = 0.2t$, respectively, for points falling above or below these curves. Measurements shall be made from a segmental circular template having the design inside or outside radius (depending upon where the measurements are taken) and a chord length equal to twice the arc length obtained from Figure UG-29.2. The values of L and D_o in Figures UG-29.2 and UG-80.1 shall be determined as follows:

(-a) for cylinders, L and D_o as defined in UG-28(b);

(-b) for cones and conical sections, L and D_o values to be used in the figures are given below in terms of the definitions given in UG-33(b). In all cases below,

$$L_e = 0.5L\left(1 + D_s/D_L\right)$$

Figure UG-80.2
Example of Differences Between Maximum and Minimum Inside Diameters in Cylindrical, Conical, and Spherical Shells

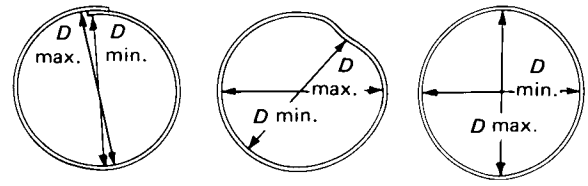

(-1) at the large diameter end,

$$L = L_e$$

$$D_o = D_L$$

Figure UG-80.1
Maximum Permissible Deviation From a Circular Form *e* for Vessels Under External Pressure

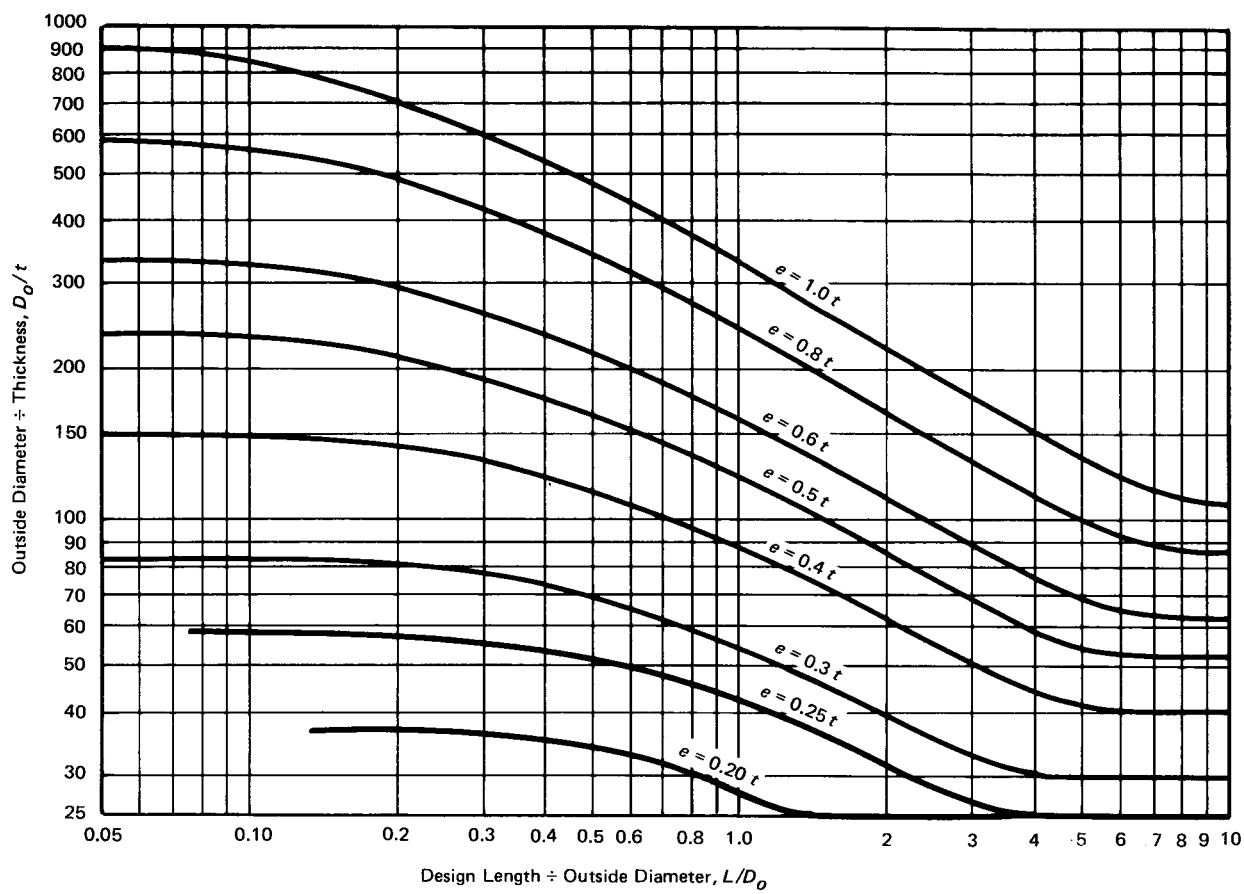

Provided by IHS under license with ASME
No reproduction or networking permitted without license from IHS
Licensee=Chevron Phillips Chemical Co LP/5956674001
Not for Resale, 11/09/2014 20:41:36 MST

(-2) at the small diameter end,

$$L = L_e(D_L/D_s)$$

$$D_o = D_s$$

(-3) at the midlength diameter,

$$L = L_e[2D_L/(D_L + D_s)]$$

$$D_o = 0.5\,(D_L + D_s)$$

(-4) at any cross section having an outside diameter of D_x,

$$L = L_e(D_L/D_x)$$

$$D_o = D_x$$

(-c) for spheres, L is one-half of the outside diameter D_o.

(3) For cylinders and spheres, the value of t shall be determined as follows:

(-a) For vessels with butt joints, t is the nominal plate thickness less corrosion allowance.

(-b) For vessels with longitudinal lap joints, t is the nominal plate thickness and the permissible deviation is

$$t + e$$

(-c) Where the shell at any cross section is made of plates having different thicknesses, t is the nominal thickness of the thinnest plate less corrosion allowance.

(4) For cones and conical sections, the value of t shall be determined as in (3) above, except that t in (3)(-a), (3)(-b), and (3)(-c) shall be replaced by t_e as defined in UG-33(b).

(5) The requirements of (b)(2) above shall be met in any plane normal to the axis of revolution for cylinders and cones and in the plane of any great circle for spheres. For cones and conical sections, a check shall be made at locations (2)(-b)(-1), (2)(-b)(-2), and (2)(-b)(-3) above and such other locations as may be necessary to satisfy manufacturers and inspectors that requirements are met.

(6) Measurements shall be taken on the surface of the base metal and not on welds or other raised parts of the material.

(7) The dimensions of a completed vessel may be brought within the requirements of this paragraph by any process which will not impair the strength of the material.

(8) Sharp bends and flat spots shall not be permitted unless provision is made for them in the design.

(9) If the nominal thickness of plate used for a cylindrical vessel exceeds the minimum thickness required by UG-28 for the external design pressure, and if such excess thickness is not required for corrosion allowance or loadings causing compressive forces, the maximum permissible deviation e determined for the nominal plate thickness used may be increased by the ratio of factor B for the nominal plate thickness used divided by factor B for the minimum required plate thickness; and the chord length for measuring $e_{\max}$ shall be determined by D_o/t for the nominal plate thickness used.

(c) Vessels and components fabricated of pipe or tube under internal or external pressure may have permissible variations in diameter (measured outside) in accordance with those permitted under the specification covering its manufacture.

UG-81 TOLERANCE FOR FORMED HEADS

(a) The inner surface of a torispherical, toriconical, hemispherical, or ellipsoidal head shall not deviate outside of the specified shape by more than $1\frac{1}{4}$% of D nor inside the specified shape by more than $\frac{5}{8}$% of D, where D is the nominal inside diameter of the vessel shell at point of attachment. Such deviations shall be measured perpendicular to the specified shape and shall not be abrupt. The knuckle radius shall not be less than that specified.

(b) Hemispherical heads or any spherical portion of a torispherical or ellipsoidal head designed for external pressure shall, in addition to satisfying (a) above, meet the tolerances specified for spheres in UG-80(b) using a value of 0.5 for L/D_o.

(c) Measurements for determining the deviations specified in (a) above shall be taken from the surface of the base metal and not from welds.

(d) The skirts of heads shall be sufficiently true to round so that the difference between the maximum and minimum inside diameters shall not exceed 1% of the nominal diameter.

(e) When the skirt of any unstayed formed head is machined to make a driving fit into or over a shell, the thickness shall not be reduced to less than 90% of that required for a blank head (see UW-13) or the thickness of the shell at the point of attachment. When so machined, the transition from the machined thickness to the original thickness of the head shall not be abrupt but shall be tapered for a distance of at least three times the difference between the thicknesses.

UG-82 LUGS AND FITTING ATTACHMENTS

All lugs, brackets, saddle type nozzles, manhole frames, reinforcement around openings, and other appurtenances shall be formed and fitted to conform reasonably to the curvature of the shell or surface to which they are attached.

Provided by IHS under license with ASME
No reproduction or networking permitted without license from IHS
Licensee=Chevron Phillips Chemical Co LP/5956674001
Not for Resale, 11/09/2014 20:41:36 MST

(a) When pressure parts, such as saddle type nozzles, manhole frames, and reinforcement around openings, extend over pressure retaining welds, such welds shall be ground flush for the portion of the weld to be covered.

(b) When nonpressure parts, such as lugs, brackets, and support legs and saddles, extend over pressure retaining welds, such welds shall be ground flush as described in (a) above, or such parts shall be notched or coped to clear those welds.

UG-83 HOLES FOR SCREW STAYS

Holes for screw stays shall be drilled full size or punched not to exceed $^1/_4$ in. (6 mm) less than full diameter of the hole for plates over $^5/_{16}$ in. (8 mm) in thickness and $^1/_8$ in. (3 mm) less than the full diameter of the hole for plates not exceeding $^5/_{16}$ in. (8 mm) in thickness, and then drilled or reamed to the full diameter. The holes shall be tapped fair and true with a full thread.

UG-84 CHARPY IMPACT TESTS

(a) General. Charpy V-notch impact tests in accordance with the provisions of this paragraph shall be made on weldments and all materials for shells, heads, nozzles, and other vessel parts subject to stress due to pressure for which impact tests are required by the rules in Subsection C.

(b) Test Procedures

(1) Impact test procedures and apparatus shall conform to the applicable paragraphs of SA-370 or ISO 148 (Parts 1, 2, and 3).

(2) Unless permitted by Table UG-84.4, impact test temperature shall not be warmer than the minimum design metal temperature [see UG-20(b)]. The test temperature may be colder than the minimum specified in the material specification of Section II.

(c) Test Specimens

(1) Each set of impact test specimens shall consist of three specimens.

(2) The impact test specimens shall be of the Charpy V-notch type and shall conform in all respects to Figure UG-84. The standard (10 mm × 10 mm) specimens, when obtainable, shall be used for nominal thicknesses of $^7/_{16}$ in. (11 mm) or greater, except as otherwise permitted in (-a) below.

(-a) For materials that normally have absorbed energy in excess of 180 ft-lbf (240 J) when tested using full size (10 mm × 10 mm) specimens at the specified testing temperature, subsize (10 mm × 6.7 mm) specimens may be used in lieu of full size specimens. However, when this option is used, the acceptance value shall be 75 ft-lbf (100 J) minimum for each specimen and the lateral expansion in mils (mm) shall be reported.

(3) For material from which full size (10 mm × 10 mm) specimens cannot be obtained, either due to the material shape or thickness, the specimens shall be either the largest possible standard subsize specimens obtainable or specimens of full material nominal thickness which may be machined to remove surface irregularities. [The test temperature criteria of (5)(-b) below shall apply for Table UCS-23 materials having a specified minimum tensile strength less than 95,000 psi (655 MPa) when the width along the notch is less than 80% of the material nominal thickness.] Alternatively, such material may be reduced in thickness to produce the largest possible Charpy subsize specimen. Toughness tests are not required where the maximum obtainable Charpy specimen has a width along the notch less than 0.099 in. (2.5 mm).

Figure UG-84
Simple Beam Impact Test Specimens (Charpy Type Test)

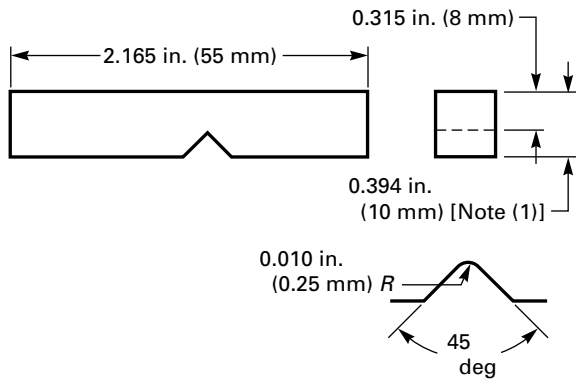

NOTE:
(1) See UG-84(c) for thickness of reduced size specimen.

(4) See below.

(-a) Except for materials produced and impact tested in accordance with the requirements in the specifications listed in General Note (c) of Figure UG-84.1, the applicable minimum energy requirement for all specimen sizes for Table UCS-23 materials having a specified minimum tensile strength less than 95,000 psi (655 MPa) shall be that shown in Figure UG-84.1, multiplied by the ratio of the actual specimen width along the notch to the width of a full-size (10 mm × 10 mm) specimen, except as otherwise provided in (2)(-a) above.

(-b) The applicable minimum lateral expansion opposite the notch for all specimen sizes for Table UCS-23 materials, having a specified minimum tensile strength of 95,000 psi (655 MPa) or more, shall be as required in UHT-6(a)(3) and UHT-6(a)(4). For UHT materials, all requirements of UHT-6(a)(3) and UHT-6(a)(4) shall apply. For Table UHA-23 materials, all requirements of UHA-51 shall apply.

(5) For all Charpy impact tests the following test temperature criteria shall be observed:

(-a) For Materials of Nominal Thickness Equal to or Greater Than 0.394 in. (10 mm). Where the largest obtainable Charpy V-notch specimen has a width along the notch of at least 0.315 in. (8 mm), the Charpy test using such a specimen shall be conducted at a temperature not warmer

Provided by IHS under license with ASME
No reproduction or networking permitted without license from IHS
Licensee=Chevron Phillips Chemical Co LP/5956674001
Not for Resale, 11/09/2014 20:41:36 MST

Figure UG-84.1
Charpy V-Notch Impact Test Requirements for Full Size Specimens for Carbon and Low Alloy Steels, Having a Specified Minimum Tensile Strength of Less Than 95 ksi, Listed in Table UCS-23

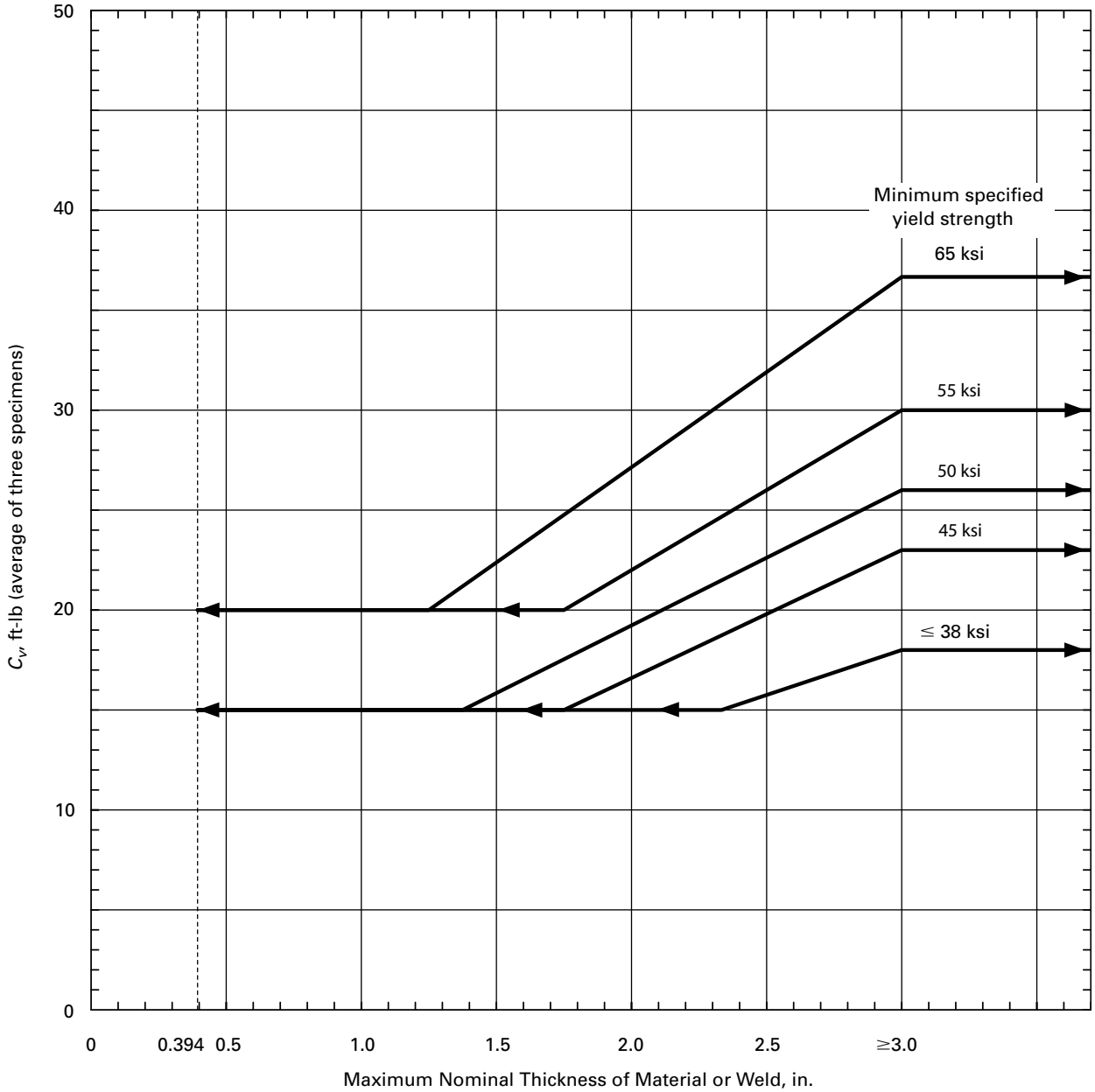

GENERAL NOTES:

(a) Interpolation between yield strengths shown is permitted.

(b) The minimum impact energy for one specimen shall not be less than $^2/_3$ of the average energy required for three specimens. The average impact energy value of the three specimens may be rounded to the nearest ft-lb.

(c) Material produced and impact tested in accordance with SA-320, SA-333, SA-334, SA-350, SA-352, SA-420, impact tested SA/AS 1548 (*L* impact designations), SA-437, SA-540 (except for materials produced under Table 2, Note 4 in SA-540), and SA-765do not have to satisfy these energy values. See UCS-66(g).

(d) For materials having a specified minimum tensile strength of 95 ksi or more, see UG-84(c)(4)(-b).

Provided by IHS under license with ASME
No reproduction or networking permitted without license from IHS
Licensee=Chevron Phillips Chemical Co LP/5956674001
Not for Resale, 11/09/2014 20:41:36 MST

Figure UG-84.1M
Charpy V-Notch Impact Test Requirements for Full Size Specimens for Carbon and Low Alloy Steels, Having a Specified Minimum Tensile Strength of Less Than 655 MPa, Listed in Table UCS-23

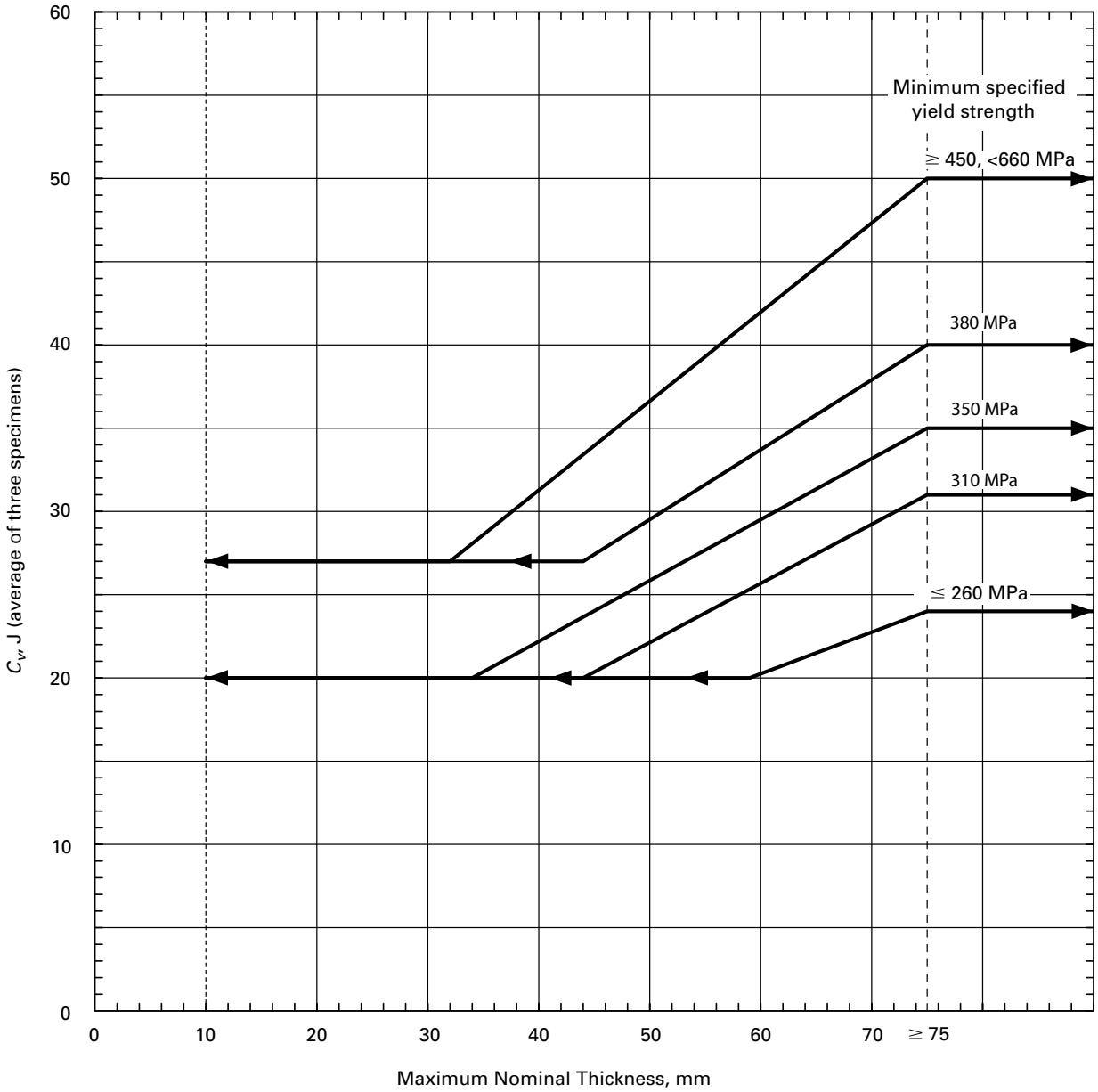

GENERAL NOTES:

(a) Interpolation between yield strengths shown is permitted.

(b) The minimum impact energy for one specimen shall not be less than $^2/_3$ of the average energy required for three specimens. The average impact energy value of the three specimens may be rounded to the nearest J.

(c) Material produced and impact tested in accordance with SA-320, SA-333, SA-334, SA-350, SA-352, SA-420, impact tested SA/AS 1548 (*L* impact designations), SA-437, SA-540 (except for materials produced under Table 2, Note 4 in SA-540), and SA-765 do not have to satisfy these energy values. See UCS-66(g).

(d) For materials having a specified minimum tensile strength of 655 MPa or more, see UG-84(c)(4)(-b).

Provided by IHS under license with ASME
No reproduction or networking permitted without license from IHS
Licensee=Chevron Phillips Chemical Co LP/5956674001
Not for Resale, 11/09/2014 20:41:36 MST

than the minimum design metal temperature.[34] Where the largest possible test specimen has a width along the notch less than 0.315 in. (8 mm), the test shall be conducted at a temperature lower than the minimum design metal temperature[34] by the amount shown in Table UG-84.2 for that specimen width. [This latter requirement does not apply when the option of (2)(-a) above is used.]

(-b) For Materials of Nominal Thickness Less Than 0.394 in. (10 mm). Where the largest obtainable Charpy V-notch specimen has a width along the notch of at least 80% of the material nominal thickness, the Charpy test of such a specimen shall be conducted at a temperature not warmer than the minimum design metal temperature.[34]

Where the largest possible test specimen has a width along the notch of less than 80% of the material nominal thickness, the test, for Table UCS-23 materials having specified minimum tensile strength of less than 95,000 psi (655 MPa), shall be conducted at a temperature lower than the minimum design metal temperature[34] by an amount equal to the difference (referring to Table UG-84.2) between the temperature reduction corresponding to the actual material thickness and the temperature reduction corresponding to the Charpy specimen width actually tested. [This latter requirement does not apply when the option of (2)(-a) above is used.] For Table UCS-23 materials having a specified minimum tensile strength of 95,000 psi (655 MPa) and over, for Table UHT-23 materials, and for Table UHA-23 materials, the test shall be conducted at a temperature not warmer than the minimum design temperature.

(6) When the average value of the three specimens equals or exceeds the minimum value permitted for a single specimen and the value for more than one specimen is below the required average value, or when the value for one specimen is below the minimum value permitted for a single specimen, a retest of three additional specimens shall be made. The value for each of these retest specimens shall equal or exceed the required average value.

When an erratic result is caused by a defective specimen or there is uncertainty in test procedure, a retest will be allowed. When the option of (2)(-a) above is used for the initial test and the acceptance value of 75 ft-lbf (100 J) minimum is not attained, retest using full size (10 mm × 10 mm) specimens will be allowed.

(d) Impact Tests of Material

(1) Reports or certificates of impact tests by the material manufacturer will be acceptable evidence that the material meets the requirements of this paragraph, provided the specimens comply with UCS-85, UHT-5, or UHT-81, as applicable.

(2) The Manufacturer of the vessel may have impact tests made to prove the suitability of a material which the material manufacturer has not impact tested provided

Table UG-84.2
Charpy Impact Test Temperature Reduction Below Minimum Design Metal Temperature

Actual Material Thickness [See UG-84(c)(5)(-b)] of Charpy Impact Specimen Width Along the Notch [Note (1)]	
Thickness, in. (mm)	Temperature Reduction, °F (°C)
0.394 (Full-size standard bar) (10)	0 (0)
0.354 (9)	0 (0)
0.315 (8.00)	0 (0)
0.295 (3/4 size bar) (7.5)	5 (3)
0.276 (7)	8 (4)
0.262 (2/3 size bar) (6.7)	10 (6)
0.236 (6)	15 (8)
0.197 (1/2 size bar) (5.00)	20 (11)
0.158 (4)	30 (17)
0.131 (1/3 size bar) (3.3)	35 (19)
0.118 (3.00)	40 (22)
0.099 (1/4 size bar) (2.5)	50 (28)

GENERAL NOTE: For Table UCS-23 materials having a specified minimum tensile strength of less than 95,000 psi (655 MPa) when the subsize charpy impact width is less than 80% of the material thickness.

NOTE:
(1) Straight line interpolation for intermediate values is permitted.

Table UG-84.3
Specifications for Impact Tested Materials in Various Product Forms

Product Form	Spec. No.
Plates	
Parts UCS and UHT	SA-20, S5
Part UHA	SA-480
Pipe	SA-333
Tubes	SA-334
Forgings	SA-350
Castings	SA-352
Bolting materials (and bars)	SA-320
Piping fittings	SA-420

Table UG-84.4
Impact Test Temperature Differential

Minimum Specified Yield Strength, ksi (MPa)	Temperature Difference, °F (°C) [Note (1)]
≤40 (280)	10 (6)
≤55 (380)	5 (3)
>55 (380)	0 (0)

NOTE:
(1) Impact test temperature may be warmer than the minimum design temperature by the amount shown.

Provided by IHS under license with ASME
No reproduction or networking permitted without license from IHS
Licensee=Chevron Phillips Chemical Co LP/5956674001
Not for Resale, 11/09/2014 20:41:36 MST

(13)

Figure UG-84.5
HAZ Impact Specimen Removal

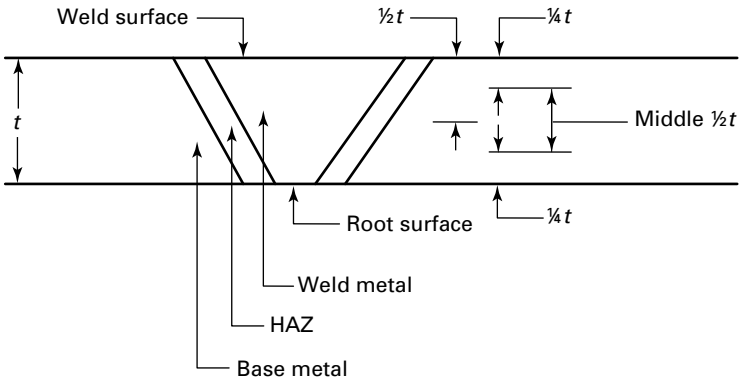

(13)

Table UG-84.6
Required HAZ Impact Test Specimen Set Removal

Base Metal Thickness, t	Removal Depth and Number of Specimen Sets	
	Single-Sided Weld	Two-Sided Weld
$t \le 3/4$ in. (19 mm)	$1/4t$ to $1/2t$ (one set)	Middle $1/2t$ (one set) [Note (1)]
$3/4$ in. (19 mm) $< t < 1\frac{1}{2}$ in. (38 mm)	$1/4t$ to $1/2t$ (one set)	$1/4t$ to $1/2t$ (two sets) [Note (2)]
$t \ge 1\frac{1}{2}$ in. (38 mm)	$1/4t$ to $1/2t$ (two sets) [Note (3)]	$1/4t$ to $1/2t$ (two sets) [Note (2)]

GENERAL NOTE: Testing shall be performed on sets of three impact test specimens as required by UG-84(c)(1). Each specimen shall be full size, or the largest subsize specimen that may be removed from the available material thickness as required by UG-84(c)(2). The specimen sets shall be removed at the indicated depth from the weld surface and prepared as specified in UG-84(g)(2).

NOTES:
(1) For two-sided welds in base metal thicknesses of $3/4$ in. (19 mm) or less, a single specimen set removed from the middle $1/2t$ shall represent the HAZ of the welds applied to both surfaces.
(2) For two-sided welds in base metal thicknesses greater than $3/4$ in. (19 mm), specimen sets shall be removed from a depth of between $1/4t$ and $1/2t$ from each weld surface.
(3) For single-sided welds in base metal thicknesses of $1\frac{1}{2}$ in. (38 mm) or greater, one specimen set shall be removed from a depth of between $1/4t$ and $1/2t$ from the weld surface, and a second specimen set shall be removed from a depth of between $1/4t$ and $1/2t$ from the root surface.

the number of tests and the method of taking the test specimens shall be as specified for the material manufacturer (see UG-85).

(e) Procedural Requirements

(1) Product Form Procedural Requirements. When no procedural requirements are listed in the material specifications, impact testing of each form of material shall comply with the applicable product form procedural requirements of the specifications listed in Table UG-84.3.

(2) Small Parts. The Manufacturer of small parts, either cast or forged, may certify a lot of not more than 20 duplicate parts by reporting the results of one set of impact specimens taken from one such part selected at random, provided the same specification and heat of material and the same process of production, including heat treatment, were used for all of the lot. When the part is too small to provide the three specimens of at least minimum size shown in Figure UG-84, no impact test need be made.

(3) Small Vessels. For small vessels in conformance with U-1(j), one set of impact specimens of the material may represent all vessels from the same heat of material not in excess of 100 vessels or one heat-treatment furnace batch, whichever is smaller.

(f) Impact Testing of Welds

(1) For steel vessels of welded construction the impact toughness of welds and heat affected zones of procedure qualification test plates and vessel impact test plates (production impact test plates) shall be determined as required herein.

(2) All test plates shall be subjected to heat treatment, including cooling rates and aggregate time at temperature or temperatures as established by the Manufacturer for use in actual manufacture. Heat treatment requirements of UG-85, UCS-85, UHT-81, and UHT-82 shall apply to the test plates except that the provisions of UCS-85(f) and UCS-85(g) are not applicable. (13)

Provided by IHS under license with ASME
No reproduction or networking permitted without license from IHS
Licensee=Chevron Phillips Chemical Co LP/5956674001
Not for Resale, 11/09/2014 20:41:36 MST

(g) Location, Orientation, Temperature, and Values of Weld Impact Tests. All weld impact tests shall comply with the following:

(1) Each set of weld metal impact specimens shall be taken across the weld with the notch in the weld metal. Each specimen shall be oriented so that the notch is normal to the surface of the material and one face of the specimen shall be within $^1/_{16}$ in. (1.5 mm) of the surface of the material.

(**13**) *(2)* Each set of heat affected zone impact specimens shall be taken across the weld and of sufficient length to locate, after etching, the notch in the heat affected zone. The number of heat affected zone impact specimen sets to be removed, and the location of their removal, shall be as shown in Figure UG-84.5 and Table UG-84.6. The notch shall be cut approximately normal to the material surface in such a manner as to include as much heat affected zone material as possible in the resulting fracture.

(3) For welds made by a solid-state welding process, such as for electric resistance welded (ERW) pipe, the weld impact tests shall consist only of one set of three specimens taken across the weld with the notch at the weld centerline. Each specimen shall be oriented so that the notch is normal to the surface of the material and one face of the specimen shall be within $^1/_{16}$ in. (1.5 mm) of the surface of the material. The weld impact tests are not required if the weld and the base metal have been: annealed, normalized, normalized and tempered, double normalized and tempered, or quenched and tempered.

(4) The test temperature for welds and heat affected zones shall not be higher than required for the base materials.

(5) Impact values shall be at least as high as those required for the base materials.

(**13**) *(h) Impact Tests of Welding Procedure Qualifications*

(1) General. For steel vessels of welded construction, the impact toughness of the welds and heat affected zones of the procedure qualification test plates shall be determined in accordance with (g) above and the following subparagraphs:

(2) When Required. Welding procedure impact tests shall be made when required by UCS-67, UHT-82, or UHA-51. For vessels constructed to the rules of Part UCS, the test plate material shall satisfy all of the following requirements relative to the material to be used in production:

(-a) be of the same P-Number and Group Number;

(-b) be in the same heat treated condition; and

(-c) meet the minimum notch toughness requirements of (c)(4) for the thickest material of the range of base material qualified by the procedure (see Figure UG-84.1).

If impact tests are required for the deposited weld metal, but the base material is exempted from impact tests (as in UHA-51), welding procedure test plates shall be made. The test plate material shall be material of the same P-Number and Group Number used in the vessel. One set of impact specimens shall be taken with the notch approximately centered in the weld metal and perpendicular to the surface; the heat affected zone need not be impact tested.

When the welding procedure employed for production welding is used for fillet welds only, it shall be qualified by a groove weld qualification test. The qualification test plate or pipe material shall meet the requirements of (-a), (-b), and (-c) above when impact testing is a requirement. This welding procedure test qualification is in addition to the requirements of Section IX, QW-202.2 for P-No. 11 materials.

(3) Material Over $1^1/_2$ in. (38 mm) Thick. When procedure tests are made on material over $1^1/_2$ in. (38 mm) in thickness, three sets of impact specimens are required. Heat affected zone specimens shall be as described in (g)(2) above. Two sets of impact specimens shall be removed from the weld with one set located near [within $^1/_{16}$ in. (1.5 mm)] the surface of one side of the material and one set taken as near as practical midway between the surface and the center of thickness of the opposite side as described in (g)(1) above.

(4) Essential Variables. The supplementary essential variables specified in Section IX, QW-250, for impact testing are required.

(i) Vessel (Production) Impact Test Plates

(1) General. In addition to the requirements of (h) above, impact tests of welds and heat affected zones shall be made in accordance with (g) above for each qualified welding procedure used on each vessel or group of vessels as defined in (3) below. The vessel impact test plate shall be from one of the heats of steel used for the vessel or group of vessels. For Category A joints, the test plate shall, where practicable, be welded as an extension to the end of a production joint so that the test plate weldment will represent as nearly as practicable the quality and type of welding in the vessel joint. For Category B joints that are welded using a different welding procedure than used on Category A joints, a test plate shall be welded under the production welding conditions used for the vessel, using the same type of equipment and at the same location and using the same procedures as used for the joint, and it shall be welded concurrently with the production welds or as close to the start of production welding as practicable.

(2) When Required. Vessel (production) impact test plates shall be made for all joints for which impact tests are required for the welding procedure by UCS-67, UHT-82, or UHA-51 (except where production test plates are specifically exempt by these paragraphs). Test shall be made of the weld metal and/or heat affected zone to the extent required by the procedure test (see UCS-67 and UHA-51).

Provided by IHS under license with ASME
No reproduction or networking permitted without license from IHS
Licensee=Chevron Phillips Chemical Co LP/5956674001
Not for Resale, 11/09/2014 20:41:36 MST

(3) Number of Vessel Impact Test Plates Required

(-a) For each vessel, one test plate shall be made for each welding procedure used for joints of Categories A and B, unless the vessel is one of several as defined in (-b) or (-c) below.

In addition, for Category A and B joints the following requirements shall apply:

(13) *(-1)* If automatic, machine, or semiautomatic welding is performed, a test plate shall be made in each position employed in the vessel welding.

(-2) If manual welding is also employed, a test plate shall be made in the flat position only, except if welding is to be performed in other positions a test plate need be made in the vertical position only (where the major portions of the layers of welds are deposited in the vertical upward direction). The vertically welded test plate will qualify the manual welding in all positions.

(-b) For several vessels or parts of vessels, welded within any 3 month period at one location, the plate thickness of which does not vary by more than $^1/_4$ in. (6 mm), or 25%, whichever is greater, and of the same specification and grade of material, a test plate shall be made for each 400 ft (120 m) of joints welded by the same procedure.

(-c) For small vessels not exceeding the volume limitations defined in U-1(j) made from one heat of material requiring impact tests, one welded test joint made from the same heat of material and welded with the same electrode and the same welding procedure may represent one lot of 100 vessels or less, or each heat treatment furnace batch, whichever is smaller.

(j) Rejection. If the vessel test plate fails to meet the impact requirements, the welds represented by the plate shall be unacceptable. Reheat treatment and retesting or retesting only are permitted.

UG-85 HEAT TREATMENT

When plate specification heat treatments are not performed by the material manufacturer, they shall be performed by, or be under the control of, the Manufacturer who shall then place the letter "T" following the letter "G" in the Mill plate marking (see SA-20) to indicate that the heat treatments required by the material specification have been performed. The Manufacturer shall also document in accordance with UG-93(b) that the specified heat treatment has been performed.

UCS-85, UHT-5(e), and UHT-81 provide requirements for heat treatment of test specimens.

INSPECTION AND TESTS

UG-90 GENERAL

(a) The inspection and testing of pressure vessels to be marked with the Certification Mark with the U Designator and the testing of vessels to be marked with the Certification Mark with the UM Designator shall conform to the general requirements for inspection and testing in the following paragraphs and, in addition, to the specific requirements for *Inspection and Tests* given in the applicable Parts of Subsections B and C.

(b) The Manufacturer has the responsibility of assuring that the quality control, the detailed examinations, and the tests required by this Division are performed. The Manufacturer shall perform his specified duties. See UG-92 and 10-15. Some, but not all, of these responsibilities, which are defined in the applicable rules, are summarized as follows:

(1) the Certificate of Authorization from the ASME Boiler and Pressure Vessel Committee authorizing the Manufacturer to fabricate the class of vessel being constructed [UG-117(a)];

(2) the drawings and design calculations for the vessel or part [10-5 and 10-15(d)];

(3) identification for all material used in the fabrication of the vessel or part (UG-93);

(4) securing Partial Data Reports [UG-120(c)];

(5) access for the Inspector in accordance with UG-92 and 10-15;

(6) examination of all materials before fabrication to make certain they have the required thickness, to detect defects [UG-93(d)], to make certain the materials are permitted by this Division (UG-4), and that traceability (UG-77) to the material identification (UG-93) has been maintained;

(7) documentation of impact tests when such tests are required (UF-5, UCS-66, UHA-51, UHT-6, and ULT-5);

(8) concurrence of the Inspector prior to any base metal repairs (UG-78 and UF-37);

(9) examination of the shell and head sections to confirm they have been properly formed to the specified shapes within the permissible tolerances (UG-79, UG-80, UG-81, UF-27, and UF-29);

(10) qualification of the welding and/or brazing procedures before they are used in fabrication [UG-84(h), UW-28(b), and UB-31];

(11) qualification of welders and welding operators and brazers before using the welders or brazers in production work (UW-29, UW-48, UB-32, and UB-43);

(12) examination of all parts prior to joining to make certain they have been properly fitted for welding or brazing and that the surfaces to be joined have been cleaned and the alignment tolerances are maintained (UW-31, UW-32, UW-33, and UB-17);

(13) examination of parts as fabrication progresses, for material marking (UG-94), that defects are not evident (UG-95), and that dimensional geometries are maintained (UG-96 and UF-30);

(14) provision of controls to assure that all required heat treatments are performed (UW-2, UW-10, UG-85, UF-31, and 10-11);

Provided by IHS under license with ASME
No reproduction or networking permitted without license from IHS
Licensee=Chevron Phillips Chemical Co LP/5956674001
Not for Resale, 11/09/2014 20:41:36 MST

(15) provision of records of nondestructive testing examinations performed on the vessel or vessel parts. This shall include retaining the radiographic film if radiographic examinations are performed (UW-51, UW-52, and 10-10);

(16) making the required hydrostatic or pneumatic test and having the required inspection performed during such test (UG-99, UG-100, UG-101, and UW-50);

(17) applying the required stamping and/or nameplate to the vessel and making certain it is applied to proper vessel (UG-116, UG-118, and UG-119);

(18) preparing required Manufacturer's Data Report and having it certified by the Inspector (UG-120);

(19) providing for retention of radiographs (UW-51), ultrasonic test reports (12-4), Manufacturer's Data Reports (UG-120), and other documents as required by this Division (10-13).

(c) See below:

(1) The Inspector shall make all inspections specifically required of him plus such other inspections as he believes are necessary to enable him to certify that all vessels which he authorizes to be stamped with the Certification Mark have been designed and constructed in accordance with the requirements of this Division. Some, but not all, of the required inspections and verifications, which are defined in the applicable rules, are summarized as follows:

(-a) verifying that the Manufacturer has a valid Certificate of Authorization [UG-117(a)] and is working to a Quality Control System [UG-117(e)];

(-b) verifying that the applicable design calculations are available [U-2(b), U-2(c), 10-5, and 10-15(d)];

(-c) verifying that materials used in the construction of the vessel comply with the requirements of UG-4 through UG-14 (UG-93);

(-d) verifying that all welding and brazing procedures have been qualified (UW-28, UW-47, and UB-42);

(-e) verifying that all welders, welding operators, brazers, and brazing operators have been qualified (UW-29, UW-48, and UB-43);

(-f) verifying that the heat treatments, including PWHT, have been performed (UG-85, UW-10, UW-40, UW-49, and UF-52);

(-g) verifying that material imperfections repaired by welding were acceptably repaired [UG-78, UW-52(d)(2)(-c), UF-37, and UF-47(c)];

(-h) verifying that weld defects were acceptably repaired [UW-51(a) and UW-52(c)];

(-i) verifying that required nondestructive examinations, impact tests, and other tests have been performed and that the results are acceptable (UG-84, UG-93, UW-50, UW-51, UW-52, and UB-44);

(-j) making a visual inspection of vessel to confirm that the material identification numbers have been properly transferred (UG-77 and UG-94);

(-k) making a visual inspection of the vessel to confirm that there are no material or dimensional defects (UG-95, UG-96, and UG-97);

(-l) performing internal and external inspections and witnessing the hydrostatic or pneumatic tests (UG-96, UG-97, UG-99, UG-100, and UG-101);

(-m) verifying that the required marking is provided (UG-115) and that any nameplate has been attached to the proper vessel;

(-n) signing the Certificate of Inspection on the Manufacturer's Data Report when the vessel, to the best of his knowledge and belief, is in compliance with all the provisions of this Division. When the Inspector has certified by signing the Manufacturer's Data Report, this indicates acceptance by the Inspector. This acceptance does not imply assumption by the Inspector of any of the responsibilities of the Manufacturer.

(2) When mass production of pressure vessels makes it impracticable for the Inspector to personally perform each of his required duties,[4] the Manufacturer, in collaboration with the Inspector, shall prepare an inspection and quality control procedure setting forth, in complete detail, the method by which the requirements[4] of this Division will be maintained. This procedure shall be developed, accepted, and implemented in accordance with Mandatory Appendix 35.

UG-91 THE INSPECTOR

(a) All references to *Inspectors* throughout this Division mean the Authorized Inspector as defined in this paragraph. All inspections required by this Division of Section VIII shall be:

(1) by an Inspector regularly employed by an ASME accredited Authorized Inspection Agency,[35] i.e., the inspection organization of a state or municipality of the United States, a Canadian province, or an insurance company authorized to write boiler and pressure vessel insurance, except that

(2) inspections may be by the regularly employed user's Inspector in the case of a User-Manufacturer which manufactures pressure vessels exclusively for its own use and not for resale [see UG-116(a)(1)].

Except as permitted in (2) above, the Inspector shall not be in the employ of the Manufacturer. All Inspectors shall have been qualified by a written examination under the rules of any state of the United States or province of Canada which has adopted the Code.

(b) In addition to the duties specified, the Inspector has the duty to monitor the Manufacturer's Quality Control System as required in Mandatory Appendix 10.

UG-92 ACCESS FOR INSPECTOR

The Manufacturer of the vessel shall arrange for the Inspector to have free access to such parts of all plants as are concerned with the supply or manufacture of materials for the vessel, when so requested. The Inspector shall be permitted free access, at all times while work on the vessel is being performed, to all parts of the Manufacturer's shop that concern the construction of the vessel and to the site of field erected vessels during the period of assembly and

Provided by IHS under license with ASME
No reproduction or networking permitted without license from IHS
Licensee=Chevron Phillips Chemical Co LP/5956674001
Not for Resale, 11/09/2014 20:41:36 MST

testing of the vessel. The Manufacturer shall keep the Inspector informed of the progress of the work and shall notify him reasonably in advance when vessels will be ready for any required tests or inspections.

UG-93 INSPECTION OF MATERIALS

(a) Except as otherwise provided in UG-4(b), UG-10, UG-11, or UG-15, requirements for acceptance of materials furnished by the material manufacturer or material supplier in complete compliance with a material specification of Section II shall be as follows.

(1) For plates,[7] the vessel Manufacturer shall ensure all requirements of the material specification, and all special requirements of this Division, that are to be fulfilled by the materials manufacturer have been complied with. The Manufacturer shall accomplish this by obtaining certificates of compliance or Material Test Reports. The Inspector shall determine if these documents represent the material and meet the requirements of the material specification.

(-a) These documents shall include results of all required tests and examinations, evidence of compliance with the material specifications, and additional requirements, as applicable. When the specification permits certain specific requirements to be completed later, those incomplete items shall be noted on the material documentation. When these specific requirements have been completed by someone other than the material manufacturer, this completion shall be documented and attached to the material documentation.

(-b) The vessel Manufacturer shall receive a copy of the test report as prepared by the originator of the data and maintain as part of his construction records.

(2) For all other product forms, the material shall be accepted as complying with the material specification if the material specification provides for the marking of each piece with the specification designation, including the grade, type, and class if applicable, and each piece is so marked.

(3) If the material specification does not provide for the marking of each piece as indicated in (2) above, the material shall be accepted as complying with the material specification provided the following requirements are met.

(-a) Each bundle, lift, or shipping container is marked with the specification designation, including the grade, type, and class if applicable by the material manufacturer or supplier.

(-b) The handling and storage of the material by the vessel Manufacturer shall be documented in his Quality Control System such that the Inspector can determine that it is the material identified in (-a) above. Traceability to specific lot, order, or heat is not required. Traceability is required only to material specification and grade and type and class, if applicable.

(4) For pipe or tube where the length is not adequate for the complete marking in accordance with the material specification or not provided in accordance with (a)(3) above, the material shall be acceptable as complying with the material specification provided the following are met:

(-a) a coded marking is applied to each piece of pipe or tube by the material manufacturer or material supplier; and

(-b) the coded marking applied by the material manufacturer or material supplier is traceable to the specification designation, including the grade, type, and class if applicable.

(b) Except as otherwise provided in UG-4(b), UG-10, UG-11, or UG-15, when some requirements of a material specification of Section II have been completed by other than the material manufacturer [see UG-84(d) and UG-85], then the vessel Manufacturer shall obtain supplementary material test reports or certificates of compliance and the Inspector shall examine these documents and shall determine that they represent the material and meet the requirements of the material specification.

(c) When requirements or provisions of this Division applicable to materials exceed or supplement the requirements of the material specification of Section II (see UG-24, UG-84, and UG-85), then the vessel Manufacturer shall obtain supplementary material test reports or certificates of compliance and the Inspector shall examine these documents and shall determine that they represent the material and meet the requirements or provisions of this Division.

(d) All materials to be used in constructing a pressure vessel shall be examined before fabrication for the purpose of detecting, as far as possible, imperfections which would affect the safety of the vessel.

(1) Particular attention should be given to cut edges and other parts of rolled plate which would disclose the existence of serious laminations, shearing cracks, and other imperfections.

(2) All materials that are to be tested in accordance with the requirements of UG-84 shall be inspected for surface cracks.

(3) When a pressure part is to be welded to a flat plate thicker than $\frac{1}{2}$ in. (13 mm) to form a corner joint under the provision of UW-13(e), the weld joint preparation in the flat plate shall be examined before welding as specified in (d)(4) below by either the magnetic particle or liquid penetrant methods. After welding, both the peripheral edge of the flat plate and any remaining exposed surface of the weld joint preparation shall be reexamined by the magnetic particle or liquid penetrant methods as specified in (d)(4) below. When the plate is nonmagnetic, only the liquid penetrant method shall be used. The requirements of this paragraph shall not apply to those joints when 80% or more of the pressure load is carried by tubes, stays, or braces.

Provided by IHS under license with ASME
No reproduction or networking permitted without license from IHS
Licensee=Chevron Phillips Chemical Co LP/5956674001
Not for Resale, 11/09/2014 20:41:36 MST

(4) For Figure UW-13.2 the weld joint preparation and the peripheral edges of flat plate forming a corner joint shall be examined as follows:

(-a) the weld edge preparation of typical weld joint preparations in the flat plate as shown in sketches (b), (c), (d), (f), and (n);

(-b) the outside peripheral edge of the flat plate after welding as shown in sketches (a), (b), (c), and (d);

(-c) the outside peripheral edge of the flat plate after welding, as shown in sketches (e), (f), and (g) if the distance from the edge of the completed weld to the peripheral edge of the flat plate is less than the thickness of the flat plate such as defined in UG-34(b);

(-d) the inside peripheral surface of the flat plate after welding as shown in sketches (m) and (n);

(-e) no examination is required on the flat plate as shown in sketches (h), (i), (j), (k), and (l).

(e) The Inspector shall assure himself that the thickness and other dimensions of material comply with the requirements of this Division.

(f) The Inspector shall satisfy himself that the inspection and marking requirements of UG-24 have been complied with for those castings assigned a casting quality factor exceeding 80%.

UG-94 MARKING ON MATERIALS

The Inspector shall inspect materials used in the construction to see that they bear the identification required by the applicable material specification, except as otherwise provided in UG-4(b), UG-10, UG-11, UG-15, or UG-93. Should the identifying marks be obliterated or the material be divided into two or more parts, the marks shall be properly transferred by the Manufacturer as provided in UG-77(a). See UG-85.

UG-95 EXAMINATION OF SURFACES DURING FABRICATION

As fabrication progresses, all materials used in the construction shall be examined for imperfections that have been uncovered during fabrication as well as to determine that the work has been done properly.

UG-96 DIMENSIONAL CHECK OF COMPONENT PARTS

(a) The Manufacturer shall examine the pressure retaining parts to make certain they conform to the prescribed shape and meet the thickness requirements after forming. The Manufacturer of the vessel shall furnish accurately formed templates as required by the Inspector for verification. See UG-80.

(b) Before attaching nozzles, manhole frames, nozzle reinforcement and other appurtenances to the inside or outside of the vessel they shall be examined to make certain they properly fit the vessel curvature. See UG-82.

(c) The Inspector shall satisfy himself that the above dimensional requirements have been met. This shall include making such dimensional measurements as he considers necessary.

UG-97 INSPECTION DURING FABRICATION

(a) When conditions permit entry into the vessel, as complete an examination as possible shall be made before final closure.

(b) The Inspector shall make an external inspection of the completed vessel at the time of the final hydrostatic test or pneumatic test.

(c) All welds, including the nozzle welds, of homogeneously lead-lined vessels shall be visually inspected on the inside prior to application of lining. A visual examination of the lining shall be made after completion to assure that there are no imperfections which might impair the integrity of the lining and subject the vessel to corrosion effects.

UG-98 MAXIMUM ALLOWABLE WORKING PRESSURE

(a) The maximum allowable working pressure for a vessel is the maximum pressure permissible at the top of the vessel in its normal operating position at the designated coincident temperature specified for that pressure. It is the least of the values found for maximum allowable working pressure for any of the essential parts of the vessel by the principles given in (b) below, and adjusted for any difference in static head that may exist between the part considered and the top of the vessel. (See 3-2.)

(b) The maximum allowable working pressure for a vessel part is the maximum internal or external pressure, including the static head thereon, as determined by the rules and equations in this Division, together with the effect of any combination of loadings listed in UG-22 which are likely to occur, for the designated coincident temperature, excluding any metal thickness specified as corrosion allowance. See UG-25.

(c) Maximum allowable working pressure may be determined for more than one designated operating temperature, using for each temperature the applicable allowable stress value.

UG-99 STANDARD HYDROSTATIC TEST

(a) A hydrostatic test shall be conducted on all vessels after:

(1) all fabrication has been completed, except for operations which could not be performed prior to the test such as weld end preparation [see U-1(e)(1)(-a)], cosmetic grinding on the base material which does not affect the required thickness; and

(2) all examinations have been performed, except those required after the test.

--`,,,``,,`,,,

The completed vessels, except those tested in accordance with the requirements of UG-100 and UG-101, shall have satisfactorily passed the hydrostatic test prescribed in this paragraph.

(b) Except as otherwise permitted in (a) above and 27-4, vessels designed for internal pressure shall be subjected to a hydrostatic test pressure that at every point in the vessel is at least equal to 1.3 times the maximum allowable working pressure[36] multiplied by the lowest stress ratio (LSR) for the materials of which the vessel is constructed. The stress ratio for each material is the stress value S at its test temperature to the stress value S at its design temperature (see UG-21). Bolting shall not be included in the determination of the LSR, except when 1.3 times the LSR multiplied by the allowable stress of the bolt at its design temperature exceeds 90% of the bolt material specified minimum yield strength at the test temperature. All loadings that may exist during this test shall be given consideration. The hydrostatic test pressure reading shall be adjusted to account for any static head conditions depending on the difference in elevation between the chamber being tested and the pressure gauge.

(c) A hydrostatic test based on a calculated pressure may be used by agreement between the user and the Manufacturer. The hydrostatic test pressure at the top of the vessel shall be the minimum of the test pressures calculated by multiplying the basis for calculated test pressure as defined in 3-2 for each pressure element by 1.3 and reducing this value by the hydrostatic head on that element. When this pressure is used, the Inspector shall reserve the right to require the Manufacturer or the designer to furnish the calculations used for determining the hydrostatic test pressure for any part of the vessel.

(d) The requirements of (b) above represent the minimum standard hydrostatic test pressure required by this Division. The requirements of (c) above represent a special test based on calculations. Any intermediate value of pressure may be used. This Division does not specify an upper limit for hydrostatic test pressure. However, if the hydrostatic test pressure is allowed to exceed, either intentionally or accidentally, the value determined as prescribed in (c) above to the degree that the vessel is subjected to visible permanent distortion, the Inspector shall reserve the right to reject the vessel.

(e) Combination units [see UG-19(a) and UG-21] shall be tested by one of the following methods.

(1) Pressure chambers of combination units that have been designed to operate independently shall be hydrostatically tested as separate vessels, that is, each chamber shall be tested without pressure in the adjacent chamber. If the common elements of a combination unit are designed for a larger differential pressure than the higher maximum allowable working pressure to be marked on the adjacent chambers, the hydrostatic test shall subject the common elements to at least their design differential pressure, corrected for temperature as in (b) above, as well as meet the requirements of (b) or (c) above for each independent chamber.

(2) When pressure chambers of combination units have their common elements designed for the maximum differential pressure that can possibly occur during start-up, operation, and shutdown, and the differential pressure is less than the higher pressure in the adjacent chambers, the common elements shall be subjected to a hydrostatic test pressure of at least 1.3 times the differential pressure to be marked on the unit, corrected for temperature as in (b).

Following the test of the common elements and their inspection as required by (g) below, the adjacent chambers shall be hydrostatically tested simultaneously [see (b) or (c) above]. Care must be taken to limit the differential pressure between the chambers to the pressure used when testing the common elements.

The vessel stamping and the vessel Data Report must describe the common elements and their limiting differential pressure. See UG-116(j) and UG-120(b).

(f) Single-wall vessels and individual pressure chambers of combination units designed for vacuum only (MAWP less than or equal to zero) shall be subjected to either

(1) an internal hydrostatic pressure test in accordance with UG-99, or a pneumatic pressure test in accordance with UG-100. The applied test pressure shall be not less than 1.3 times the specified external design pressure; or

(2) a vacuum test conducted at the lowest value of specified absolute internal design pressure. In conjunction with the vacuum test, a leak test shall be performed following a written procedure complying with the applicable technical requirements of Section V, Article 10 for the leak test method and technique specified by the user. Leak testing personnel shall be qualified and certified as required by T-120(e) of Section V, Article 1.

(g) Following the application of the hydrostatic test pressure, an inspection shall be made of all joints and connections. This inspection shall be made at a pressure not less than the test pressure divided by 1.3. Except for leakage that might occur at temporary test closures for those openings intended for welded connections, leakage is not allowed at the time of the required visual inspection. Leakage from temporary seals shall be directed away so as to avoid masking leaks from other joints.

The visual inspection of joints and connections for leaks at the test pressure divided by 1.3 may be waived provided:

(1) a suitable gas leak test is applied;

(2) substitution of the gas leak test is by agreement reached between Manufacturer and Inspector;

(3) all welded seams which will be hidden by assembly be given a visual examination for workmanship prior to assembly;

(4) the vessel will not contain a “lethal” substance.

Provided by IHS under license with ASME
No reproduction or networking permitted without license from IHS
Licensee=Chevron Phillips Chemical Co LP/5956674001
Not for Resale, 11/09/2014 20:41:36 MST

(h) Any nonhazardous liquid at any temperature may be used for the hydrostatic test if below its boiling point. Combustible liquids having a flash point less than 110°F (43°C), such as petroleum distillates, may be used only for near atmospheric temperature tests. It is recommended that the metal temperature during hydrostatic test be maintained at least 30°F (17°C) above the minimum design metal temperature, but need not exceed 120°F (48°C), to minimize the risk of brittle fracture. [See UG-20 and General Note (6) to Figure UCS-66.2.] The test pressure shall not be applied until the vessel and its contents are at about the same temperature. If the test temperature exceeds 120°F (48°C), it is recommended that inspection of the vessel required by (g) above be delayed until the temperature is reduced to 120°F (48°C) or less.

CAUTION: A small liquid relief valve set to $1\frac{1}{3}$ times the test pressure is recommended for the pressure test system, in case a vessel, while under test, is likely to be warmed up materially with personnel absent.

(i) Vents shall be provided at all high points of the vessel in the position in which it is to be tested to purge possible air pockets while the vessel is filling.

(j) Before applying pressure, the test equipment shall be examined to see that it is tight and that all low-pressure filling lines and other appurtenances that should not be subjected to the test pressure have been disconnected.

(13) *(k) Painting and Coating*

(1) Unless permitted by the user or his designated agent, pressure-retaining welds of vessels shall not be painted or otherwise coated either internally or externally prior to the pressure test. [See UCI-99(b) and UCD-99(b).]

(2) When painting or coating prior to the hydrostatic test is permitted, or when internal linings are to be applied, the pressure-retaining welds shall first be leak tested in accordance with ASME Section V, Article 10. Such a test may be waived with the approval of the user or his designated agent.

(3) Vessels for lethal service [see UW-2(a)] shall not be painted or otherwise coated or lined either internally or externally prior to the hydrostatic pressure test.

(13) UG-100 PNEUMATIC TEST[37] (SEE UW-50)

(a) Subject to the provisions of UG-99(a)(1) and UG-99(a)(2), a pneumatic test prescribed in this paragraph may be used in lieu of the standard hydrostatic test prescribed in UG-99 for vessels:

(1) that are so designed and/or supported that they cannot safely be filled with water;

(2) not readily dried, that are to be used in services where traces of the testing liquid cannot be tolerated and the parts of which have, where possible, been previously tested by hydrostatic pressure to the pressure required in UG-99.

(b) Except for enameled vessels, for which the pneumatic test shall be at least equal to, but not exceed, the maximum allowable working pressure to be marked on the vessel, the pneumatic test pressure at every point in the vessel shall be at least equal to 1.1 times the maximum allowable working pressure[36] multiplied by the lowest stress ratio (LSR) for the materials of which the vessel is constructed. The stress ratio for each material is the stress value S at its test temperature to the stress value S at its design temperature (see UG-21). Bolting shall not be included in the determination of the LSR, except when 1.1 times the LSR multiplied by the allowable stress of the bolt at its design temperature exceeds 90% of the bolt material specified minimum yield strength at the test temperature. All loadings that may exist during this test shall be given consideration. In no case shall the pneumatic test pressure exceed 1.1 times the basis for the calculated test pressure as defined in 3-2.

(c) The metal temperature during pneumatic test shall be maintained at least 30°F (17°C) above the minimum design metal temperature to minimize the risk of brittle fracture. [See UG-20 and General Note (6) to Figure UCS-66.2.]

(d) The pressure in the vessel shall be gradually increased to not more than one-half of the test pressure. Thereafter, the test pressure shall be increased in steps of approximately one-tenth of the test pressure until the required test pressure has been reached. Then the pressure shall be reduced to a value equal to the test pressure divided by 1.1 and held for a sufficient time to permit inspection of the vessel. Any leaks that are present, except for leakage that might occur at temporary test closures for those openings intended for welded connections, shall be corrected, and the vessel shall be retested.

The visual inspection of the vessel at the required test pressure divided by 1.1 may be waived provided:

(1) a suitable gas leak test is applied;

(2) substitution of the gas leak test is by agreement reached between Manufacturer and Inspector;

(3) all welded seams which will be hidden by assembly be given a visual examination for workmanship prior to assembly;

(4) the vessel will not contain a "lethal" substance.

(e) Painting and Coating

(1) Unless permitted by the user or his designated agent, pressure-retaining welds of vessels shall not be painted or otherwise coated either internally or externally prior to the pneumatic pressure test.

(2) When painting or coating prior to the hydrostatic test is permitted, or when internal linings are to be applied, the pressure-retaining welds shall first be leak tested in accordance with ASME Section V, Article 10. Such a test may be waived with the approval of the user or his designated agent.

(3) Vessels for lethal service [see UW-2(a)] shall not be painted or otherwise coated or lined either internally or externally prior to the hydrostatic pressure test.

Provided by IHS under license with ASME
No reproduction or networking permitted without license from IHS
Licensee=Chevron Phillips Chemical Co LP/5956674001
Not for Resale, 11/09/2014 20:41:36 MST

(13) UG-101 PROOF TESTS TO ESTABLISH MAXIMUM ALLOWABLE WORKING PRESSURE

(a) General

(1) The maximum allowable working pressure for vessels or vessel parts for which the strength cannot be computed with a satisfactory assurance of accuracy (see U-2) shall be established in accordance with the requirements of this paragraph, using one of the test procedures applicable to the type of loading and to the material used in construction. Production vessels or vessel parts that utilize the results of a proof test shall comply with all applicable construction rules of the current edition and applicable addenda of this Division.

(-a) Consideration of the use of proof-tested construction specifications based on past editions of this Division and documented in the original Proof Test Report requires that the Manufacturer determine whether or not there have been subsequent revisions to this Division that apply and must be evaluated. This evaluation may void the Division acceptability of establishing the vessel MAWP by proof testing (e.g., UCS-66, Part UHX, Mandatory Appendix 13, etc.). However, if applicable revisions are found, and it is judged that a new proof test is not required, the Manufacturer, using Duplicate and Similar Parts rules in (d) as guidelines, shall prepare a Supplement to the original Proof Test Report documenting any changes to the construction requirements and to the Manufacturer's Data Report. The following should be noted:

(-1) The production vessel material need not be identical with that used for the original proof tested vessel, but material equivalence must be confirmed and documented.

(-2) The MDMT established by current Division rules may be different from that originally assigned but must be suitable for the nameplate MDMT marking coincident with the established MAWP.

(-3) The Supplement to the original Proof Test Report shall be made available to the Inspector prior to the start of construction.

(2) Provision is made in these rules for two types of tests to determine the internal maximum allowable working pressure:

(-a) tests based on yielding of the part to be tested. These tests are limited to materials with a ratio of minimum specified yield to minimum specified ultimate strength of 0.625 or less.

(-b) tests based on bursting of the part.

(3) Safety of testing personnel should be given serious consideration when conducting proof tests, and particular care should be taken during bursting tests in (m) below.

(4) The Code recognizes that Manufacturers may maintain control of proof test reports under different ownerships than existed during the original application of the proof test. When a Manufacturer is acquired by a new owner(s), the proof test reports may be used by the new owner(s) without retesting, provided all of the following are met:

(-a) the new owner(s) takes responsibility for the proof tests;

(-b) the Proof Test Reports reflect the name of the new owner(s);

(-c) the Proof Test Reports indicate the actual test was performed by the former Manufacturer;

(-d) the Proof Test Report(s) is acceptable to the Inspector of the new owner(s) as indicated by his/her signature on the Manufacturer's report of the test.

(b) The tests in these paragraphs may be used only for the purpose of establishing the maximum allowable working pressure of those elements or component parts for which the thickness cannot be determined by means of the design rules given in this Division. The maximum allowable working pressure of all other elements or component parts shall not be greater than that determined by means of the applicable design rules.

Tests to establish the maximum allowable working pressure of vessels, or vessel parts, shall be witnessed by and be acceptable to the Inspector, as indicated by his signature on the Manufacturer's Proof Test Report. The report shall include sufficient detail to describe the test, the instrumentation and the methods of calibration used, and the results obtained. The report shall be made available to the Inspector for each application [see U-2(b) and UG-90(b)(2)].

(c) The vessel or vessel part for which the maximum allowable working pressure is to be established shall not previously have been subjected to a pressure greater than 1.3 times the desired or anticipated maximum allowable working pressure, adjusted for operating temperature as provided in (k) below.

(d) Duplicate and Similar Parts. When the maximum allowable working pressure of a vessel or vessel part has been established by a proof test, duplicate parts, or geometrically similar parts, that meet all of the requirements in (1) or (2) below, need not be proof tested but shall be given a hydrostatic pressure test in accordance with UG-99, or a pneumatic pressure test in accordance with UG-100, except as otherwise provided in UCI-101, and UCD-101.

(1) Duplicate Parts. All of the following requirements shall be met in order to qualify a part as a duplicate of the part that had been proof tested:

(-a) same basic design configuration and type of construction;

(-b) the material of the duplicate part is either:

(-1) the same material specifications:

(+a) alloy;

(+b) grade, class;

(+c) type, form;

(+d) heat treatment; or

Provided by IHS under license with ASME
No reproduction or networking permitted without license from IHS
Licensee=Chevron Phillips Chemical Co LP/5956674001
Not for Resale, 11/09/2014 20:41:36 MST

(-2) the same or closely similar material when only the material specification, the alloy, grade, or form is different, provided the material meets the following additional requirements:

(+a) has allowable stress in tension equal to or greater than the material used in the proof tested part at the test temperature [see (k) below];

(+b) has the same P-Number (Section IX);

(+c) for carbon or low alloy steels (Part UCS), has the same or tougher material grouping in UCS-66, Figure UCS-66, and Notes;

(-c) the nominal dimensions, diameter, or width and height, of the duplicate parts shall be the same, and the corresponding nominal thicknesses shall be the same as those used in the proof test. The length shall not be longer than that proof tested.

(-d) heat treatment shall be the same as performed on the original part that was tested;

(-e) the MAWP shall be calculated according to (e) below;

(-f) when there are permissible deviations from the original part that was proof tested, a supplement to the original Proof Test Report shall be prepared that states and evaluates each deviation.

(2) Geometrically Similar Parts. The maximum allowable working pressure for geometrically similar parts may be established by a series of proof tests that uniformly cover the complete range of sizes, pressure, or other variables by interpolation from smooth curves plotted from the results of the tests.[38]

(-a) Sufficient tests shall be performed to provide at least five data points that are at increments that are within 20% to 30% of the range covered.

(-b) The curves shall be based on the lower bound of the test data.

(-c) Extrapolation is not permitted.

(e) Proof test methods (l), (m), (n), and (o) below establish a pressure at which the test is terminated. The results of the test are recorded in a Proof Test Report according to (b).

(1) The MAWP for the first duplicate part, as defined in (d), to be put into service, shall be calculated according to the equations given in the proof test method applied.

The requirements for NDE are given in UG-24 and UW-12. Other requirements are based on thickness or material. These apply to parts which are to be put into service. It is not necessary to examine the part actually tested.

(2) For subsequent duplicate parts, the MAWP may be recalculated for a different extent of NDE in a supplement to the original Proof Test Report.

(3) The effect of the location of a weld joint may be evaluated and included in the Proof Test Report.

(f) A retest shall be allowed on a duplicate vessel or vessel part if errors or irregularities are obvious in the test results.

(g) In tests for determination of governing stresses, sufficient locations on the vessel shall be investigated to ensure that measurements are taken at the most critical areas. As a check that the measurements are being taken on the most critical areas, the Inspector may require a brittle coating to be applied on all areas of probable high stress concentrations in the test procedures given in (n) and (o) below. The surfaces shall be suitably cleaned before the coating is applied in order to obtain satisfactory adhesion. The technique shall be suited to the coating material.

NOTE: Strains should be measured as they apply to membrane stresses and to bending stresses within the range covered by UG-23(c).

(h) Application of Pressure. In the procedures given in (l), (n), and (o) below, the Displacement Measurement Test, the hydrostatic pressure in the vessel or vessel part shall be increased gradually until approximately one-half the anticipated working pressure is reached. Thereafter, the test pressure shall be increased in steps of approximately one-tenth or less of the anticipated maximum allowable working pressure until the pressure required by the test procedure is reached. The pressure shall be held stationary at the end of each increment for a sufficient time to allow the observations required by the test procedure to be made, and shall be released to zero to permit determination of any permanent strain after any pressure increment that indicates an increase in strain or displacement over the previous equal pressure increment.

(i) Corrosion Allowance. The test procedures in this paragraph give the maximum allowable working pressure for the thickness of material tested. The thickness of the pressure vessel that is to be proof tested should be the corroded thickness. When this is not practical and when the thickness as tested includes extra thickness as provided in UG-25, the maximum allowable working pressure at which the vessel shall be permitted to operate shall be determined by multiplying the maximum allowable working pressure obtained from the test by the ratio

$$(t-c)^n/t^n$$

where

c = allowance added for corrosion, erosion, and abrasion

n = 1 for curved surfaces such as parts of cylinders, spheres, cones with angle $\alpha \leq 60$ deg; for stayed surfaces similar to those described in UW-19(b) and UW-19(c); and parts whose stress due to bending is ≤ 67% of the total stress

= 2 for flat or nearly flat surfaces, such as flat sides, flanges, or cones with angle $\alpha > 60$ deg (except for stayed surfaces noted above) unless it can be shown that the stress due to bending at the limiting location is < 67% of the total stress

t = nominal thickness of the material at the weakest point

Provided by IHS under license with ASME
No reproduction or networking permitted without license from IHS
Licensee=Chevron Phillips Chemical Co LP/5956674001
Not for Resale, 11/09/2014 20:41:36 MST

(j) Determination of Yield Strength and Tensile Strength

(1) For proof tests based on yielding, (l), (n), or (o) below, the yield strength (or yield point for those materials which exhibit that type of yield behavior indicated by a "sharp-kneed" portion of the stress-strain diagram) of the material in the part tested shall be determined in accordance with the method prescribed in the applicable material specification. For proof tests based on bursting [see (m) below], the tensile strength instead of the yield strength of the material in the part tested shall be similarly determined.

(2) Yield or tensile strength so determined shall be the average from three or four specimens cut from the part tested after the test is completed. The specimens shall be cut from a location where the stress during the test has not exceeded the yield strength. The specimens shall not be flame cut because this might affect the strength of the material. If yield or tensile strength is not determined by test specimens from the pressure part tested, alternative methods are given in (l), (m), (n), and (o) below for evaluation of proof test results to establish the maximum allowable working pressure.

(3) When excess stock from the same piece of wrought material is available and has been given the same stress relieving heat treatment as the pressure part, the test specimens may be cut from this excess stock. The specimen shall not be removed by flame cutting or any other method involving sufficient heat to affect the properties of the specimen. When the sheet material is used, test specimens obtained from another piece cut from the same coil of sheet used in the proof tested component meet the requirements of this paragraph.

(k) Maximum Allowable Working Pressure at Higher Temperatures. The maximum allowable working pressure for vessels and vessel parts that are to operate at temperatures at which the allowable stress value of the material is less than at the test temperature shall be determined by the following formula:

$$P_0 = P_t \frac{S}{S_2}$$

where

P_0 = maximum allowable working pressure at the design temperature

P_t = maximum allowable working pressure at test temperature

S = maximum allowable stress value at the design temperature, as given in the tables referenced in UG-23 but not to exceed S_2

S_2 = maximum allowable stress value for the material used in the test at test temperature as given in the tables referenced in UG-23

(l) Brittle-Coating Test Procedure

(1) Subject to the limitations of (a)(2)(-a) above, this procedure may be used only for vessels and vessel parts under internal pressure, constructed of materials having a definitely determinable yield point (see SA-370, 13.1). The component parts that require proof testing shall be coated with a brittle coating in accordance with (g) above. Pressure shall be applied in accordance with (h) above. The parts being proof tested shall be examined between pressure increments for signs of yielding as evidenced by flaking of the brittle coating, or by the appearance of strain lines. The application of pressure shall be stopped at the first sign of yielding, or if desired, at some lower pressure.

(2) The maximum allowable working pressure P in pounds per square inch (MPa) at test temperature for parts tested under this paragraph shall be computed by one of the following equations.

(-a) If the average yield strength is determined in accordance with (j) above,

$$P = 0.5H \frac{S_y}{S_{y\ \mathrm{avg}}}$$

(-b) To eliminate the necessity of cutting tensile specimens and determining the actual yield strength of the material under test, one of the following equations may be used to determine the maximum allowable working pressure:

(-1) For carbon steel meeting an acceptable Code specification, with a specified minimum tensile strength of not over 70,000 psi (480 MPa),

(U.S. Customary Units)

$$P = 0.5H\left(\frac{S_\mu}{S_\mu + 5000}\right)$$

(SI Units)

$$P = 0.5H\left(\frac{S_\mu}{S_\mu + 35}\right)$$

(-2) For any acceptable material listed in this Division,

$$P = 0.4H$$

where

H = hydrostatic test pressure at which the test was stopped, psi (kPa)

S_y = specified minimum yield strength at room temperature, psi (kPa)

$S_{y\ avg}$ = actual average yield strength from test specimens at room temperature, psi (kPa)

Provided by IHS under license with ASME
No reproduction or networking permitted without license from IHS
Licensee=Chevron Phillips Chemical Co LP/5956674001
Not for Resale, 11/09/2014 20:41:36 MST

S_μ = specified minimum tensile strength at room temperature, psi (kPa)

When the formula in (-1) or (-2) above is used, the material in the pressure part shall have had no appreciable cold working or other treatment that would tend to raise the yield strength above the normal.

The maximum allowable working pressure at other temperatures shall be determined as provided in (k) above.

(m) Bursting Test Procedure

(1) This procedure may be used for vessels or vessel parts under internal pressure when constructed of any material permitted to be used under the rules of this Division. The maximum allowable working pressure of any component part proof tested by this method shall be established by a hydrostatic test to failure by rupture of a full-size sample of such pressure part. The hydrostatic pressure at which rupture occurs shall be determined. Alternatively, the test may be stopped at any pressure before rupture that will satisfy the requirements for the desired maximum allowable working pressure.

(2) The maximum allowable working pressure P in pounds per square inch (kilopascals) at test temperature for parts tested under this paragraph shall be computed by one of the following equations:

(-a) parts constructed of materials other than cast materials:

$$P = \frac{B}{4} \times \frac{S_\mu E}{S_{\mu\,\mathrm{avg}}} \quad or \quad P = \frac{B}{4} \times \frac{S_\mu E}{S_{\mu r}}$$

(-b) parts constructed of cast iron — see UCI-101; parts constructed of cast ductile iron — see UCD-101;

(-c) parts constructed of cast materials, except cast iron and ductile iron:

$$P = \frac{Bf}{4} \times \frac{S_\mu E}{S_{\mu\,\mathrm{avg}}} \quad \text{or} \quad P = \frac{Bf}{4} \times \frac{S_\mu E}{S_{\mu r}}$$

where

B = bursting test pressure, or hydrostatic test pressure at which the test was stopped

E = efficiency of welded joint, if used (see Table UW-12)

f = casting quality factor as specified in UG-24

S_μ = specified minimum tensile strength at room temperature

$S_{\mu\ avg}$ = average actual tensile strength of test specimens at room temperature

$S_{\mu\ r}$ = maximum tensile strength of range of specification at room temperature

The maximum allowable working pressure at other temperatures shall be determined as provided in (k) above.

(n) Strain Measurement Test Procedure

(1) Subject to limitations of (a)(2)(-a) above, this procedure may be used for vessels or vessel parts under internal pressure, constructed of any material permitted to be used under the rules of this Division. Strains shall be measured in the direction of the maximum stress at the most highly stressed parts [see (g) above] by means of strain gages of any type capable of indicating incremental strains to 0.00005 in./in. (0.005%). It is recommended that the gage length be such that the expected maximum strain within the gage length does not exceed the expected average strain within the gage length by more than 10%. The strain gages and the method of attachment shall be shown by test to be reliable and the results documented for a range of strain values that is at least 50% higher than expected, when used with the material surface finish and configuration being considered. [See (e) above.]

(2) Pressure shall be applied as provided in (h) above. After each increment of pressure has been applied, readings of the strain gages and the hydrostatic pressure shall be taken and recorded. The pressure shall be released and any permanent strain at each gage shall be determined after any pressure increment that indicates an increase in strain for this increment over the previous equal pressure increment. Only one application of each increment of pressure is required.

(3) Two curves of strain against test pressure shall be plotted for each gage line as the test progresses, one showing the strain under pressure and one showing the permanent strain when the pressure is removed. The test may be discontinued when the test pressure reaches the value H which will, by the formula, justify the desired working pressure, but shall not exceed the pressure at which the plotted points for the most highly strained gage line reaches the value given below for the material used:

(-a) 0.2% permanent strain for aluminum-base and nickel-base alloys;

(-b) 0.2% permanent strain for carbon low alloy and high alloy steels;

(-c) 0.5% strain under pressure for copper-base alloys.

(4) The maximum allowable working pressure P in pounds per square inch (kilopascals) at test temperature for parts tested under this paragraph shall be computed by one of the following equations:

(-a) If the average yield strength is determined in accordance with (j) above,

$$P = 0.5H\left(\frac{S_y}{S_{y\,\mathrm{avg}}}\right)$$

(-b) If the actual average yield strength is not determined by test specimens,

$$P = 0.4H$$

Provided by IHS under license with ASME
No reproduction or networking permitted without license from IHS
Licensee=Chevron Phillips Chemical Co LP/5956674001
Not for Resale, 11/09/2014 20:41:36 MST

where

H = hydrostatic test pressure at which the test was stopped in accordance with (n)(3) above

S_y = specified minimum yield strength at room temperature

$S_{y\ avg}$ = actual average yield strength from test specimens at room temperature

The maximum allowable working pressure at other temperatures shall be determined as provided in (k) above.

(o) Displacement Measurement Test Procedure

(1) Subject to the limitations of (a)(2)(-a) above, this procedure may be used only for vessels and vessel parts under internal pressure, constructed of materials having a definitely determinable yield point (see SA-370, 13.1). Displacement shall be measured at the most highly stressed parts [see (g) above] by means of measuring devices of any type capable of measuring to 0.001 in. (0.02 mm). The displacement may be measured between two diametrically opposed reference points in a symmetrical structure, or between a reference point and a fixed base point. Pressure shall be applied as provided in (h) above.

(2) After each increment of pressure has been applied, readings of the displacement and hydrostatic test pressure shall be taken and recorded. The pressure shall be released and any permanent displacement shall be determined after any pressure increment that indicates an increase in measured displacement for this increment over the previous equal pressure increment. Only one application of each increment is required. Care must be taken to assure that the readings represent only displacements of the parts on which measurements are being made and do not include any slip of the measuring devices or any movement of the fixed base points or of the pressure part as a whole.

(3) Two curves of displacement against test pressure shall be plotted for each reference point as the test progresses, one showing the displacement under pressure and one showing the permanent displacement when the pressure is removed. The application of pressure shall be stopped when it is evident that the curve through the points representing displacement under pressure has deviated from a straight line.

(4) The pressure coincident with the proportional limit of the material shall be determined by noting the pressure at which the curve representing displacement under pressure deviates from a straight line. The pressure at the proportional limit may be checked from the curve of permanent displacement by locating the point where the permanent displacement begins to increase regularly with further increases in pressure. Permanent deformation at the beginning of the curve that results from the equalization of stresses and irregularities in the material may be disregarded.

(5) The maximum allowable working pressure P in pounds per square inch (kilopascals) at test temperature for parts tested under this paragraph shall be computed by one of the following equations.

(-a) If the average yield strength is determined in accordance with (j) above,

$$P = 0.5H\left(\frac{S_y}{S_{y\ \mathrm{avg}}}\right)$$

(-b) To eliminate the necessity of cutting tensile specimens and determining the actual yield strength of the material under test, one of the following equations may be used to determine the maximum allowable working pressure.

(-1) For carbon steel, meeting an acceptable Code specification, with a specified minimum tensile strength of not over 70,000 psi (480 MPa),

(U.S. Customary Units)

$$P = 0.5H\left(\frac{S_\mu}{S_\mu + 5000}\right)$$

(SI Units)

$$P = 0.5H\left(\frac{S_\mu}{S_\mu + 35}\right)$$

(-2) For any acceptable material listed in this Division,

$$P = 0.4H$$

where

H = hydrostatic test pressure coincident with the proportional limit of the weakest element of the component part tested

S_y = specified minimum yield strength at room temperature

$S_{y\ avg}$ = actual average yield strength from test specimens at room temperature

S_μ = specified minimum tensile strength at room temperature

When the formula in (-1) or (-2) above is used, the material in the pressure part shall have had no appreciable cold working or other treatment that would tend to raise the yield strength above the normal. The maximum allowable working pressure at other temperatures shall be determined as provided in (k) above.

Provided by IHS under license with ASME
No reproduction or networking permitted without license from IHS
Licensee=Chevron Phillips Chemical Co LP/5956674001
Not for Resale, 11/09/2014 20:41:36 MST

(p) Procedure for Vessels Having Chambers of Special Shape Subject to Collapse

(1) Pressure chambers of vessels, portions of which have a shape other than that of a complete circular cylinder or formed head, and also jackets of cylindrical vessels which extend over only a portion of the circumference, which are not fully staybolted as required by UG-28(i), shall withstand without excessive deformation a hydrostatic test of not less than three times the desired maximum allowable working pressure.

(2) The maximum allowable working pressure at other temperatures shall be determined as provided in (k) above.

UG-102 TEST GAGES

(a) An indicating gage shall be connected directly to the vessel or with a pressure line that does not include intermediate valves. If the indicating gage is not readily visible to the operator controlling the pressure applied, an additional indicating gage shall be provided where it will be visible to the operator throughout the duration of the test. For large vessels, it is recommended that a recording gage be used in addition to indicating gages.

(b) Dial indicating pressure gages used in testing shall be graduated over a range of about double the intended maximum test pressure, but in no case shall the range be less than $1\frac{1}{2}$ nor more than 4 times that pressure. Digital reading pressure gages having a wider range of pressure may be used provided the readings give the same or greater degree of accuracy as obtained with dial pressure gages.

(c) All gages shall be calibrated against a standard deadweight tester or a calibrated master gage. Gages shall be recalibrated at any time that there is reason to believe that they are in error.

UG-103 NONDESTRUCTIVE TESTING

Where magnetic particle examination is prescribed in this Division it shall be done in accordance with Mandatory Appendix 6. Where liquid penetrant examination is prescribed it shall be done in accordance with Mandatory Appendix 8.

MARKING AND REPORTS

UG-115 GENERAL

(a) The marking and certification of all pressure vessels built under this Division shall comply with the requirements of the following paragraphs and in addition with the requirements for *Marking and Reports* given in the applicable Parts of Subsections B and C.

(b) The units of measurement used in Manufacturer's Data Reports, Manufacturer's Certificates of Compliance (UG-120), and capacity certification of pressure relief devices, and in marking or stamping pressure vessels, pressure vessel parts, and pressure relief devices, required by this Division, shall be either U.S. Customary units, SI, or any local customary units. See U-4.

UG-116 REQUIRED MARKING (13)

(a) Each pressure vessel shall be marked with the following:

(1) See below.

(-a) the official Certification Mark with the U Designator shown in Figure UG-116 sketch (a) on vessels inspected in accordance with the requirements in UG-90 through UG-97 (when inspected by a user's Inspector as provided in UG-91, the word USER shall be marked above the Certification Mark); or

(-b) the official Certification Mark with the UM Designator shown in Figure UG-116 sketch (b) on vessels constructed in accordance with the provisions in U-1(j).

(2) name of the Manufacturer of the pressure vessel preceded by the words "certified by";

(3) maximum allowable working pressure[10,36] (internal or external[39]) _____ at temperature _____;

(4) minimum design metal temperature _____ at maximum allowable working pressure[10] _____;

(5) Manufacturer's serial number;

(6) year built.

(b) See below:

(1) The type of construction used for the vessel shall be indicated directly under the Certification Mark by applying the appropriate designators and letter(s) as follows: vessels having Category A, B, or C joints (except nozzles or other openings and their attachment) in or joining parts of the vessels:

Type of Construction	Letter(s)
Arc or gas welded	W
Pressure welded (except resistance)	P
Brazed	B
Resistance welded	RES

Figure UG-116 (13)
Official Certification Mark to Denote the American Society of Mechanical Engineers' Standard

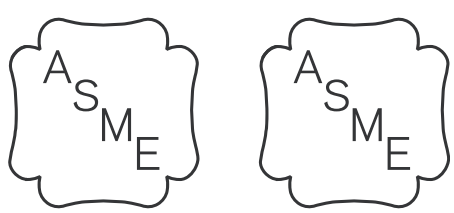

U (a) UM (b)

Provided by IHS under license with ASME
No reproduction or networking permitted without license from IHS
Licensee=Chevron Phillips Chemical Co LP/5956674001
Not for Resale, 11/09/2014 20:41:36 MST

(2) Vessels embodying a combination of types of construction shall be marked to indicate all of the types of construction used.

(c) When a vessel is intended for special service and the special requirements have been complied with [see UG-120(d)], the appropriate lettering shall be applied as listed below:

Lethal Service	L
Unfired Steam Boiler	UB
Direct Firing	DF

This lettering shall be separated by a hyphen and applied after the lettering of (b) above.

(d) The maximum allowable working pressure and temperature to be indicated on vessels embodying a combination of types of construction and material shall be based on the most restrictive detail of construction and material used.

(e) When radiographic or ultrasonic examination has been performed on a vessel in accordance with UW-11, marking shall be applied under the Certification Mark as follows:

(1) "RT 1" when all pressure-retaining butt welds, other than Category B and C butt welds associated with nozzles and communicating chambers that neither exceed NPS 10 (DN 250) nor $1\frac{1}{8}$ in. (29 mm) wall thickness [except as required by UHT-57(a)], satisfy the full radiography requirements of UW-11(a) for their full length; full radiography of the above exempted Category B and C butt welds, if performed, may be recorded on the Manufacturer's Data Report; or

(2) "RT 2" when the complete vessel satisfies the requirements of UW-11(a)(5) and when the spot radiography requirements of UW-11(a)(5)(-b) have been applied; or

(3) "RT 3" when the complete vessel satisfies the spot radiography requirements of UW-11(b); or

(4) "RT 4" when only part of the complete vessel has satisfied the radiographic requirements of UW-11(a) or where none of the markings "RT 1," "RT 2," or "RT 3" are applicable.

The extent of radiography and the applicable joint efficiencies shall be noted on the Manufacturer's Data Report.

(f) See below:

(1) The letters HT shall be applied under the Designators when the complete vessel has been postweld heat treated as provided in UW-10.

(2) The letters PHT shall be applied under the Designators when only part of the complete vessel has been postweld heat treated as provided in UW-10.

The extent of the postweld heat treatment shall be noted on the Manufacturer's Data Report.

(g) The Manufacturer shall have a valid Certificate of Authorization, and, with the acceptance of the Inspector, shall apply the Certification Mark to the vessel, which, together with the final certification [see U-1(j) and UG-120] shall indicate that all requirements of this Division have been met.

(1) Except as provided in (2) below, the Certification Mark shall be applied after the hydrostatic test or pneumatic test.

(2) The Certification Mark may be preapplied to a nameplate. The nameplate may be attached to the vessel after the final fabrication and examination sequence but before the hydrostatic tests or pneumatic test provided the procedure for sequence of stamping is described in the Manufacturer's accepted Quality Control System.

(h) See below:

(1) Parts of vessels for which Partial Data Reports are required in UG-120(c) shall be marked by the parts Manufacturer, with a nameplate or stamping, with the following:

(-a) the official Certification Mark with the U Designator shown in Figure UG-116 sketch (a), above the word "PART";

(-b) name of the Manufacturer of the part of the pressure vessel preceded by the words "certified by";

(-c) the Manufacturer's serial number.

Parts may be stamped with the Certification Mark without being pressure tested prior to shipment. If testing was not performed, this shall be indicated in the Remarks section of the U-2 and U-2A Manufacturer's Partial Data Reports (see Nonmandatory Appendix W, Forms U-2 and U-2A).

This requirement does not apply to such items as handhole covers, manhole covers and their accessories. [See (k) below.]

(2) As an alternative to nameplates or stamping, parts 5 in O.D. and under may be marked with an identification acceptable to the Inspector and traceable to the Form U-2 or Form U-2A Manufacturer's Partial Data Report. Such marking shall be of a type that will remain visible until the parts are installed. The Certification Mark is not required.

(3) No accessory or part of a pressure vessel may be marked "ASME" or "ASME Std." unless so specified in this Division.

(i) All required markings shall be located in a conspicuous place on the vessel, preferably near a manhole or handhole (see M-3).

(j) Combination Units

(1) Those chambers included within the scope of this Division shall be marked. The marking shall include the name of each chamber (e.g., process chamber, jacket, tubes, channel) and its corresponding data. The markings shall be grouped in one location on the combination unit or applied to each individual chamber. Each detachable

Provided by IHS under license with ASME
No reproduction or networking permitted without license from IHS
Licensee=Chevron Phillips Chemical Co LP/5956674001
Not for Resale, 11/09/2014 20:41:36 MST

chamber shall be marked to identify it with the combination unit. When required, the marking shall include the following:

(-a) for differential pressure design, the maximum differential design pressure for each common element and the name of the higher pressure chamber [see UG-19(a)(2)]

(-b) for mean metal temperature design, the maximum mean metal design temperature for each common element [see UG-19(a)(3)].

(-c) for a common element adjacent to a chamber not included within the scope of this Division, the common element design conditions from that chamber

(2) It is recommended that the design conditions for those chambers not included within the scope of this Division be marked on the combination unit. The markings may be on the applicable chamber or grouped as described in (1), provided they are not included in the markings covered by the Certification Mark.

(k) Removable pressure parts shall be permanently marked in a manner to identify them with the vessel or chamber of which they form a part. This does not apply to manhole covers, handhole covers, and their accessory parts provided the marking requirements of UG-11 are met.

(13) UG-117 CERTIFICATES OF AUTHORIZATION AND CERTIFICATION MARKS

(a) A Certificate of Authorization to use the Certification Mark with the U, UM, UV, or UD Designators shown in Figures UG-116, UG-129.1, and UG-129.2 will be granted by the Society pursuant to the provisions of the following paragraphs. Stamps for applying the Certification Mark shall be obtained from the Society. For those items to be marked with the UM, UV, or UD Designators, a Certified Individual meeting the current requirements of ASME QAI-1 shall provide oversight to ensure that each use of the UM, UV, or UD Designators is in accordance with the requirements of this Division. In addition, each use of the UM, UV, or UD Designators is to be documented on the Certificate of Compliance Form (U-3 or U-3A) for vessels bearing the UM Designator, or a Certificate of Conformance Form (UV-1 or UD-1) as appropriate.

(1) Requirements for the Certified Individual (CI). The CI shall:

(-a) be an employee of the Manufacturer or Assembler.

(-b) be qualified and certified by the Manufacturer or Assembler. Qualifications shall include as a minimum:

(-1) knowledge of the requirements of this Division for the application of the Certification Mark with the appropriate designator;

(-2) knowledge of the Manufacturer's or Assembler's quality program;

(-3) training commensurate with the scope, complexity, or special nature of the activities to which oversight is to be provided.

(-c) have a record, maintained and certified by the Manufacturer or Assembler, containing objective evidence of the qualifications of the CI and the training program provided.

(2) Duties of the Certified Individual (CI). The CI shall:

(-a) verify that each item to which the Certification Mark is applied meets all applicable requirements of this Division and has a current capacity certification for the "UV" or "UD" Designators;

(-b) for the "UV" or "UD" Designators, review documentation for each lot of items to be stamped to verify, for the lot, that requirements of this Division have been completed;

(-c) sign the appropriate Certificate of Compliance/Conformance Form U-3, U-3A, UV-1, or UD-1 as appropriate prior to release of control of the item.

(3) Certificate of Compliance/Conformance Form U-3, U-3A, UV-1, or UD-1.

(-a) The appropriate Certificate of Conformance shall be filled out by the Manufacturer or Assembler and signed by the Certified Individual. Mass produced pressure relief devices may be recorded on a single entry provided the devices are identical and produced in the same lot.

(-b) The Manufacturer's or Assembler's written quality control program shall include requirements for completion of Certificates of Conformance forms and retention by the Manufacturer or Assembler for a minimum of five years.

(b) Application for Authorization. Any organization desiring a Certificate of Authorization shall apply to the Boiler and Pressure Vessel Committee of the Society, on forms issued by the Society,[40] specifying the Certification Designator desired and the scope of Code activities to be performed. When an organization intends to build Code items in plants in more than one geographical area, either separate applications for each plant or a single application listing the addresses of all such plants may be submitted. Each application shall identify the Authorized Inspection Agency providing Code inspection at each plant. A separate Certificate of Authorization will be prepared and a separate fee charged by the Society for each plant. Applicants for a UM Certificate of Authorization must already hold an S or U Certificate.

Each applicant must agree that each Certificate of Authorization and each Certification Mark Stamp are at all times the property of the Society, that they will be used according to the rules and regulations of this Division of the Code, and that they will be promptly returned to the Society upon demand, or when the applicant discontinues the Code activities covered by his Certificate, or when the Certificate of Authorization has expired and no new Certificate has been issued. The holder of a Certification Mark Stamp shall not allow any other organization to use it.

(c) Issuance of Authorization. Authorization to use Certification Mark Stamps may be granted or withheld by the Society in its absolute discretion. If authorization is

--`,,,``,,``,,,,`,`,`,,`,,`,,```-`-`,,`,,`,`,,`---
Provided by IHS under license with ASME
No reproduction or networking permitted without license from IHS
Licensee=Chevron Phillips Chemical Co LP/5956674001
Not for Resale, 11/09/2014 20:41:36 MST

granted, and the proper administrative fee paid, a Certificate of Authorization evidencing permission to use any such Certification Designator, expiring on the triennial anniversary date thereafter, except for UM Certificates [see (f) below], will be forwarded to the applicant. Each such certificate will identify the Certification Designator to be used, and the type of shop and/or field operations for which authorization is granted (see Nonmandatory Appendix DD).

Six months prior to the date of expiration of any such Certificate, the applicant must apply for a renewal of such authorization and the issuance of a new Certificate. The Society reserves the absolute right to cancel or refuse to renew such authorization, returning, pro rata, fees paid for the unexpired term. The Boiler and Pressure Vessel Committee may at any time make such regulations concerning the issuance and use of the Certification Mark Stamp as it deems appropriate, and all such regulations shall become binding upon the holders of any valid Certificates of Authorization.

(d) Inspection Agreement. As a condition of obtaining and maintaining a Certificate of Authorization to use the Certification Mark with U or UM Designators, the Manufacturer must have in force at all times an inspection contract or agreement with an Authorized Inspection Agency as defined in UG-91 to provide inspection services. This inspection agreement is a written agreement between the Manufacturer and the Inspection Agency which specifies the terms and conditions under which the inspection services are to be furnished and which states the mutual responsibilities of the Manufacturer and the Authorized Inspectors. A Certificate Holder shall notify the Society whenever his agreement with an Authorized Inspection Agency is cancelled or changed to another Authorized Inspection Agency. Neither Manufacturers nor Assemblers of pressure relief valves are required to have an inspection agreement with an Authorized Inspection Agency.

(e) Quality Control System. Any Manufacturer or Assembler holding or applying for a Certificate of Authorization to use the Certification Mark with the U, UM, UV, or UD Designators shall have, and demonstrate, a Quality Control System to establish that all Code requirements, including material, design, fabrication, examination (by the Manufacturer), inspection of vessel and vessel parts (by the Authorized Inspector), pressure testing, and certification will be met. The Quality Control Systems of Certificate Holders with UM, UV, or UD Designators shall include duties of a Certified Individual, as required by this Division. The Quality Control System shall be in accordance with the requirements of Mandatory Appendix 10.

(f) Evaluation for Authorization and Reauthorization. Before issuance or triennial renewal of a Certificate of Authorization for use of the U or UM Designators, the Manufacturer's facilities and organization are subject to a joint review by a representative of his inspection agency and an individual certified as an ASME Designee who is selected by the concerned legal jurisdiction. A written description or checklist of the Quality Control System which identifies what documents and what procedures the Manufacturer will use to produce a Code item shall be available for review.

A written report to the Society shall be made jointly by the ASME Designee and the Inspection Agency employed by the Manufacturer to do his Code inspection. This report is then reviewed by the Subcommittee on Boiler and Pressure Vessel Accreditation, which will either issue a Certificate of Authorization or notify the applicant of deficiencies revealed by the review. In such a case, the applicant will be given an opportunity to explain or correct these deficiencies.

Certificates of Authorization will be endorsed to indicate the scope of activity authorized. Authorization may include field operations if the review team determines that these operations are adequately described in the quality control manual, and this determination is accepted by the Society.

Before issuance or renewal of a Certificate of Authorization for use of the UV or UD Designators, the valve or rupture disk device Manufacturer's or Assembler's facilities and organization are subject to a review by a representative from an ASME designated organization. A written description or checklist of the quality control system, which identifies the documents and procedures the Manufacturer or Assembler will use to produce Code pressure relief valves, shall be available for review. The representative from an ASME designated organization shall make a written report to the Society, where the Subcommittee on Boiler and Pressure Vessel Accreditation will act on it as described above.

The purpose of the review is to evaluate the applicant's Quality Control System and its implementation. The ASME Designee performs reviews, surveys, audits, and examinations of organizations or persons holding or applying for accreditation or certification in accordance with the ASME code or standard. The applicant shall demonstrate sufficient administrative and fabrication functions of the system to show that he has the knowledge and ability to produce the Code items covered by his Quality Control System. functions may be demonstrated using current work, a mock-up, or a combination of the two. Additionally, retained records as required by this Division and the Quality Control System shall be made available to Authorized Inspector supervisors or to review teams designated by ASME.

Certificates of Authorization for use of U, UV, and UD Designators are valid for 3 years. UM Certificates are valid for 1 year, but reviews after the first and second years of each 3 year period are performed by the Authorized Inspection Agency only and shall include at a minimum an Authorized Inspector Supervisor.

The Manufacturer may at any time make changes in the Quality Control System concerning the methods of achieving results, subject to acceptance by the Authorized Inspector. For Manufacturers of mass produced pressure

Provided by IHS under license with ASME
No reproduction or networking permitted without license from IHS
Licensee=Chevron Phillips Chemical Co LP/5956674001
Not for Resale, 11/09/2014 20:41:36 MST

vessels,[41] acceptance of these changes by the ASME Designee is also required. For Manufacturers and Assemblers of pressure relief valves bearing the UV Certification Designator or rupture disk devices bearing the UD Designator, such acceptance shall be by the ASME designated organization.

For those areas where there is no jurisdiction or where a jurisdiction does not choose to select an ASME Designee to review a vessel or vessel parts Manufacturer's facility, that function shall be performed by an ASME Designee selected by ASME. Where the jurisdiction is the Manufacturer's Inspection Agency, the joint review and joint report shall be made by the jurisdiction and an ASME Designee selected by ASME.

(g) Code Construction Before Receipt of Certificate of Authorization. When used to demonstrate his Quality Control System, a Manufacturer may start fabricating Code items before receipt of a Certificate of Authorization to use a Certification Mark under the following conditions.

(1) The fabrication is done with the participation of the Authorized Inspector and is subject to his acceptance.

(2) The activity is in conformance with the applicant's Quality Control System.

(3) The item is stamped with the Certification Mark with the appropriate Designation and certified once the applicant receives his Certificate of Authorization from the Society.

(13) UG-118 METHODS OF MARKING

(a) The required marking shall be applied to the vessel by one of the following methods:

(1) nameplate as provided in UG-119

(2) stamped directly on the vessel under the following conditions:

(-a) Unless the requirements of (-b) or (-c) are met, such stamping shall not be used on vessels constructed of steel plates less than 1/4 in. (6 mm) thick or of nonferrous plates less than 1/2 in. (13 mm) thick but may be used on vessels constructed of thicker plates.

(-b) For Ferrous Materials

(-1) The materials shall be limited to P-No. 1, Group Nos. 1 and 2.

(-2) The minimum nominal plate thickness shall be 0.1875 in. (5 mm), or the minimum nominal pipe wall thickness shall be 0.154 in. (4 mm).

(-3) The minimum design metal temperature shall be no colder than −20°F (−29°C).

(-c) For Nonferrous Materials

(-1) The materials shall be limited to aluminum as follows: SB-209 alloys 3003, 5083, 5454, and 6061; SB-241 alloys 3003, 5083, 5086, 5454, 6061, and 6063; and SB-247 alloys 3003, 5083, and 6061.

(-2) The minimum nominal plate thickness shall be 0.249 in. (6.30 mm), or the minimum nominal pipe thickness shall be 0.133 in. (3.38 mm).

(3) electrochemically etched, including the Certification Mark, directly on the vessel under the following conditions:

(-a) The electrochemically etched marking is acceptable to the user as indicated in the User's Design Requirements per Nonmandatory Appendix KK, or equivalent.

(-b) The material of construction shall be limited to high alloy steels and nonferrous materials.

(-c) The process controls for electrochemical etching shall be described in the Quality Control System and shall be acceptable to the Authorized Inspector. The process controls shall be established so that it can be demonstrated that the characters will be at least 0.004 in. (0.102 mm) deep.

(-d) The external vessel-surface condition where electrochemical etching is acceptable shall be clean, uncoated, and unpainted.

(-e) The electrochemical etching shall not result in any detrimental effect to the materials of the vessel.

(b) Stamped or electrochemically etched letters and figures shall be in characters not less than 5/16 in. (8 mm) high. The character size may be reduced as shown in the following table for small diameter vessels with space limitations:

Nominal Outside Vessel Diameter		Character Size,
Min., in. (mm)	Max., in. (mm)	Min., in. (mm)
...	3 1/2 (89)	1/8 (3)
>3 1/2 (89)	4 1/2 (114)	3/16 (5)
>4 1/2 (114)	6 5/8 (168)	1/4 (6)

(c) Stamping or electrochemical etching shall be arranged substantially as shown in Figure UG-118 when space permits and shall be located in a conspicuous place on the vessel [see UG-116(i)].

UG-119 NAMEPLATES

(a) Nameplates shall be used on vessels except when markings are directly applied in accordance with UG-118. Nameplates shall be metal suitable for the intended service and shall bear the markings called for in UG-116. The marking arrangement shall be substantially as shown in Figure UG-118. Required nameplates shall be located in a conspicuous place on the vessel [see UG-116(j)].

(b) The nameplate thickness shall be sufficient to resist distortion due to the application of the marking and to be compatible with the method of attachment. The nameplate nominal thickness shall not be less than 0.020 in.

(c) Nameplates may have markings produced by either casting, etching, embossing, debossing, stamping, or engraving, except that the Certification Mark shall be stamped on the nameplate.

--`,,,``,,,```,,,,`,`,``,,`,,```-`-`,,`,,`,`,,`---
Provided by IHS under license with ASME
No reproduction or networking permitted without license from IHS
Licensee=Chevron Phillips Chemical Co LP/5956674001
Not for Resale, 11/09/2014 20:41:36 MST

(13)

Figure UG-118
Form of Stamping

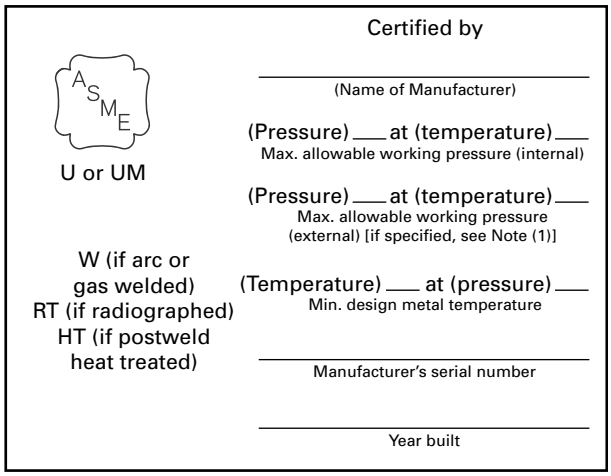

GENERAL NOTE: Information within parentheses is not part of the required marking. Phrases identifying data may be abbreviated; minimum abbreviations shall be MAWP, MAEWP, MDMT, S/N, FV, and year, respectively. See L-11 for sample Nameplate markings.

NOTES:
(1) The maximum allowable external working pressure is required only when specified as a design condition.
(2) For cases where the MAWP (internal) and MAWP (external) values have the same designated coincident temperature, the values may be combined on a single line as follows:

$$P_{int}/FV\ (psi)\ at\ Temp\ (°F)$$

(1) The required markings on a nameplate shall be in characters not less than $^5/_{32}$ in. (4 mm) high, except that characters for pressure relief device markings may be smaller.

(2) Characters shall be either indented or raised at least 0.004 in. (0.10 mm) and shall be legible and readable.

(d) The nameplate may be marked before it is affixed to the vessel, in which case the Manufacturer shall ensure that the nameplate with the correct marking has been applied to the proper vessel, and the Inspector shall satisfy himself that this has been done.

(e) The nameplate shall be attached to the vessel or to a pad, bracket, or structure that is welded, brazed, soldered, or attached with mechanical fasteners directly to the vessel. Mechanical fasteners shall be of a material and design that is compatible with the vessel, bracket materials, and the vessel service. After installation of the pad, bracket, or structure, the heads of the fasteners shall be welded, brazed, or soldered to the pad, bracket, or structure that supports the nameplate. The nameplate shall be located within 30 in. (760 mm) of the vessel. Removal shall require the willful destruction of the nameplate, or its attachment system. (See M-3.)

(1) Nameplates may be attached either by welding, brazing, or soldering.

(2) Nameplates may be attached by tamper-resistant mechanical fasteners of suitable metal construction.

(3) Nameplates may be attached with pressure-sensitive acrylic adhesive systems provided that, in addition to the requirements of this paragraph, those of Mandatory Appendix 18 are met.

(f) An additional nameplate in accordance with (a) through (d) may be installed on the skirt, supports, jacket, or other permanent attachment to a vessel. All data on the additional plate, including the Certification Mark with the Designator, shall be as required for the mandatory nameplate. The marking need not be witnessed by the Inspector. The additional nameplate shall be marked: "DUPLICATE."

(g) When a nameplate is employed, the Manufacturer's name or identifying trademark, and vessel serial number (or National Board Number, if applicable,) may also be marked directly on the vessel in close proximity to the nameplate attachment. The marking shall be of a visible permanent type that is not detrimental to the vessel, and its location shall be indicated on the Data Report.

(1) If the thickness limitations of UG-118 preclude marking directly on the vessel shell or heads, it may be applied to the skirt, supports, jacket, or other permanent attachment to the vessel.

UG-120 DATA REPORTS (13)

(a) A Data Report shall be filled out on Form U-1 or Form U-1A by the Manufacturer and shall be signed by the Manufacturer and the Inspector for each pressure vessel marked with the Certification Mark with the U Designator.

(1) Same day production of vessels may be reported on a single Form provided all of the following requirements are met:

(-a) vessels must be identical;

(-b) vessels must be manufactured for stock or for the same user or his designated agent;

(-c) serial numbers must be in uninterrupted sequence; and

(-d) the Manufacturer's written Quality Control System includes procedures to control the development, distribution, and retention of the Data Reports.

(2) The number of lines on the Data Report used to describe multiple components (e.g., nozzles, shell courses) may be increased or decreased as necessary to provide space to describe each component. If addition of lines used to describe multiple components results in the Data Report exceeding one page, space must be provided for the Manufacturer and Authorized Inspector to initial and date each of the additional pages. Horizontal spacing for information on each line may be altered as necessary. All information must be addressed; however, footnotes described in the remarks block are acceptable, e.g., for multiple cases of "none" or "not applicable."

Provided by IHS under license with ASME
No reproduction or networking permitted without license from IHS
Licensee=Chevron Phillips Chemical Co LP/5956674001
Not for Resale, 11/09/2014 20:41:36 MST

(3) The Manufacturer shall:

(-a) furnish a copy of the Manufacturer's Data Report to the user and, upon request, to the Inspector:

(-b) submit a copy of the Manufacturer's Data Report to the appropriate enforcement authority in the jurisdiction in which the vessel is to be installed, where required by law;

(-c) keep a copy of the Manufacturer's Data Report on file in a safe repository for at least 3 years.

In lieu of (-c) above, the vessel may be registered and the Data Report filed with the National Board of Boiler and Pressure Vessel Inspectors, 1055 Crupper Avenue, Columbus, Ohio 43229. Where acceptable to the appropriate enforcement authority in the jurisdiction in which the vessel is to be installed, the vessel may be registered and the Data Report filed with the National Board of Boiler and Pressure Vessel Inspectors in lieu of (-b) above.

(4) A Manufacturer's Certificate of Compliance on Form U-3 or U-3A shall be completed and signed by the Manufacturer for each pressure vessel marked with the Certification Mark with the UM Designator. This Certificate shall be maintained by the Manufacturer for 5 years and a copy made available upon request, or the vessel may be registered and the Data Report filed with the National Board of Boiler and Pressure Vessel Inspectors, 1055 Crupper Avenue, Columbus, OH 43229. Where acceptable to the appropriate enforcement authority in the jurisdiction in which the vessel is to be installed, the vessel may be registered and the Data Report filed with the National Board of Boiler and Pressure Vessel Inspectors. Identical vessels up to 1 day's production may be recorded on a single Certificate of Compliance.

(b) Combination Units

(1) Those chambers included within the scope of this Division shall be described on the same Data Report. This includes the following, as applicable:

(-a) for differential pressure design, the maximum differential design pressure for each common element and the name of the higher pressure chamber [see UG-19(a)(2)]

(-b) for mean metal temperature design, the maximum mean metal design temperature for each common element [see UG-19(a)(3)]

(-c) for a common element adjacent to a chamber not included within the scope of this Division, the common element design conditions from that chamber

(2) It is recommended that those chambers not included within the scope of this Division be described in the "Remarks" section of the Data Report.

(c) Partial Data Reports. Data Reports for pressure vessel parts requiring inspection under this Division which are furnished by other than the location of the Manufacturer responsible for the vessel to be marked with the Certification Mark shall be executed on the applicable Partial Data Report, Form U-2 or Form U-2A, by the parts Manufacturer and his Inspector in accordance with the requirements of this Division and shall be forwarded, in duplicate, to the Manufacturer of the completed vessel [see U-2(b)]. Form U-2A may be used for this purpose provided all the applicable information is recorded on this Form; otherwise Form U-2 shall be used. These Partial Data Reports, together with his own inspection, shall be the final Inspector's authority to witness the application of a Certification Mark to the vessel [see UG-90(c)]. When Form U-2 or Form U-2A is used, it shall be attached to the associated Form U-1 or Form U-1A by the Manufacturer of the vessel to be marked with the Certification Mark. Manufacturers with multiple locations, each with its own Certificate of Authorization, may transfer pressure vessel parts from one of its locations to another without Partial Data Reports, provided the Quality Control System describes the method of identification, transfer, and receipt of the parts.

(1) Data Reports for those parts of a pressure vessel which are furnished by a parts Manufacturer to the user of an existing Code vessel as replacement or repair parts shall be executed on Form U-2 or Form U-2A by the parts Manufacturer and his Inspector in accordance with the requirements of this Division. A copy of the parts Manufacturer's Partial Data Report shall be furnished to the user or his designated agent and maintained in accordance with (a) above.

(2) The parts Manufacturer shall indicate under "Remarks" the extent he has performed any or all of the design functions. When the parts Manufacturer performs only a portion of the design, he shall state which portions of the design he performed.

(3) Same day production of vessel parts may be reported on a single Form U-2 or Form U-2A provided all of the following are met:

(-a) vessel parts shall be identical;

(-b) Manufacturer's serial numbers must be in uninterrupted sequence; and

(-c) The Manufacturer's written Quality Control System includes procedures to control the development, distribution, and retention of the Partial Data Reports.

(4) For guidance in preparing Partial Data Reports, see Nonmandatory Appendix W.

(d) This Division, in paragraphs such as UW-2, UF-1, UF-32(b), UB-1, UB-22, UCS-66, UNF-56, UHA-51, UCL-27, and UHT-6, establishes special requirements to qualify a vessel for certain "special services." (Paragraphs, such as UW-2, prohibit certain types of construction or materials in some special services.) The special services to which special requirements are applicable are classified as follows:

(1) lethal service [for example, see UW-2(a)];

(2) services below certain temperatures (for example, see UW-2(b), UCS-65, UHA-51, and UHT-6);

(3) unfired steam boiler [for example, see UW-2(c)];

(4) direct firing [for example, see UW-2(d)].

When a vessel is intended for such special services, the special service and the paragraphs of special requirements complied with shall be indicated on the Data Reports.

Provided by IHS under license with ASME
No reproduction or networking permitted without license from IHS
Licensee=Chevron Phillips Chemical Co LP/5956674001
Not for Resale, 11/09/2014 20:41:36 MST

(e) Pressure retaining covers and their attaching bolting and nuts shall be listed in the Remarks section of the Manufacturer's Data Report or on an attached Form U-4 when required. The minimum information shall include the material specification, material grade, size, and thread designation.

(f) For sample forms and guidance in their preparation, see Nonmandatory Appendix W.

OVERPRESSURE PROTECTION

(13) **UG-125 GENERAL**

(a) Other than unfired steam boilers, all pressure vessels within the scope of this Division, irrespective of size or pressure, shall be provided with overpressure protection in accordance with the requirements of UG-125 through UG-138, or with overpressure protection by system design in accordance with the requirements of UG-140, or a combination of the two. Unfired steam boilers shall be provided with overpressure protection in accordance with the requirements of UG-125 through UG-138. In addition, the following shall apply:

(1) It is the user's or his/her designated agent's responsibility to identify all potential overpressure scenarios and the method of overpressure protection used to mitigate each scenario.

(2) It is the responsibility of the user to ensure that the required overpressure protection system is properly installed prior to initial operation.

(3) If a pressure relief device(s) is to be installed, it is the responsibility of the user or his/her designated agent to size and select the pressure relief device(s) based on its intended service. Intended service considerations shall include, but not necessarily be limited to, the following:

(-a) normal operating and upset conditions

(-b) fluids

(-c) fluid phases

(4) The overpressure protection system need not be supplied by the vessel Manufacturer.

(5) Unless otherwise defined in this Division, the definitions relating to pressure relief devices in Section 2 of ASME PTC 25 shall apply.

(b) An unfired steam boiler shall be equipped with pressure relief devices required by Section I insofar as they are applicable to the service of the particular installation.

(c) Other than unfired steam boilers, when a pressure relief device is provided, it shall prevent the pressure from rising more than 10% or 3 psi (20 kPa), whichever is greater, above the maximum allowable working pressure except as permitted in (1) and (2) below and UG-127(d)(3). (See UG-134 for pressure settings.)

(1) When multiple pressure relief devices are provided and set in accordance with UG-134(a), they shall prevent the pressure from rising more than 16% or 4 psi (30 kPa), whichever is greater, above the maximum allowable working pressure.

(2) When a pressure vessel can be exposed to fire or other unexpected sources of external heat, the pressure relief device(s) shall be capable of preventing the pressure from rising more than 21% above the maximum allowable working pressure. Supplemental pressure relief devices shall be installed to protect against this source of excessive pressure if the pressure relief devices used to satisfy the capacity requirements of (c) and (1) have insufficient capacity to provide the required protection. See Nonmandatory Appendix M, para. M-13 for cases where the metal temperature due to fire or other sources of external heat can cause vessel failure prior to reaching the MAWP.

(3) Pressure relief devices, intended primarily for protection against exposure of a pressure vessel to fire or other unexpected sources of external heat installed on vessels having no permanent supply connection and used for storage at ambient temperatures of nonrefrigerated liquefied compressed gases,[42] are excluded from the requirements of (1) and (2) above, provided:

(-a) the pressure relief devices are capable of preventing the pressure from rising more than 20% above the maximum allowable working pressure of the vessels;

(-b) the set pressure marked on these devices shall not exceed the maximum allowable working pressure of the vessels;

(-c) the vessels have sufficient ullage to avoid a liquid full condition;

(-d) the maximum allowable working pressure of the vessels on which these pressure relief devices are installed is greater than the vapor pressure of the stored liquefied compressed gas at the maximum anticipated temperature[43] that the gas will reach under atmospheric conditions; and

(-e) pressure relief valves used to satisfy these provisions also comply with the requirements of UG-129(a)(5), UG-131(c)(2), and UG-134(d)(2).

(d) Pressure relief devices shall be constructed, located, and installed so that they are readily accessible for testing, inspection, replacement, and repair and so that they cannot be readily rendered inoperative (see Nonmandatory Appendix M).

(e) Pressure relief valves or nonreclosing pressure relief devices[44] may be used to protect against overpressure. Nonreclosing pressure relief devices may be used either alone or, if applicable, in combination with pressure relief valves on vessels.

NOTE: Use of nonreclosing pressure relief devices of some types may be advisable on vessels containing substances that may render a pressure relief valve inoperative, where a loss of valuable material by leakage should be avoided, or where contamination of the atmosphere by leakage of noxious fluids must be avoided. The use of rupture disk devices may also be advisable when very rapid rates of pressure rise may be encountered.

Provided by IHS under license with ASME
No reproduction or networking permitted without license from IHS
Licensee=Chevron Phillips Chemical Co LP/5956674001
Not for Resale, 11/09/2014 20:41:36 MST

(f) Vessels that are to operate completely filled with liquid shall be equipped with pressure relief devices designed for liquid service, unless otherwise protected against overpressure.

(g) The pressure relief devices required in (a) above need not be installed directly on a pressure vessel when either of the following conditions apply:

(1) the source of pressure is external to the vessel and is under such positive control that the pressure in the vessel cannot exceed the maximum allowable working pressure at the operating temperature except as permitted in (c) above (see UG-98), or under the conditions set forth in Nonmandatory Appendix M.

(2) there are no intervening stop valves between the vessel and the pressure relief device or devices except as permitted under UG-135(d).

NOTE: Pressure reducing valves and similar mechanical or electrical control instruments, except for pilot operated pressure relief valves as permitted in UG-126(b), are not considered as sufficiently positive in action to prevent excess pressures from being developed.

(h) Pressure relief valves for steam service shall meet the requirements of UG-131(b).

(13) UG-126 PRESSURE RELIEF VALVES[45]

(a) Safety, safety relief, and relief valves shall be of the direct spring loaded type.

(b) Pilot operated pressure relief valves may be used, provided that the pilot is self-actuated and the main valve will open automatically at not over the set pressure and will discharge its full rated capacity if some essential part of the pilot should fail.

(c) The set pressure of a pressure relief device shall not be adjusted outside the range of set pressure specified by the device Manufacturer. The initial adjustment shall be performed by the Manufacturer, his authorized representative, or an Assembler, and a valve data tag shall be provided that identifies the set pressure capacity and date. The valve shall be sealed with a seal identifying the Manufacturer, his authorized representative, or the Assembler performing the adjustment.

(d) The set pressure tolerances, plus or minus, of pressure relief valves shall not exceed 2 psi (15 kPa) for pressures up to and including 70 psi (500 kPa) and 3% for pressures above 70 psi (500 kPa).

UG-127 NONRECLOSING PRESSURE RELIEF DEVICES

(a) Rupture Disk Devices[46]

(1) General. Every rupture disk shall have a marked burst pressure established by rules of UG-137(d)(3) within a manufacturing design range[47] at a specified disk temperature[48] and shall be marked with a lot[49] number. The burst pressure tolerance at the specified disk temperature shall not exceed ±2 psi (±15 kPa) for marked burst pressure up to and including 40 psi (300 kPa) and ±5% for marked burst pressure above 40 psi (300 kPa).

(2) Relieving Capacity. Rupture disk devices certified using the flow resistance method shall use (-a), and rupture disk devices certified using the coefficient of discharge method shall use (-b) below

(-a) The rated flow capacity of a pressure relief system that uses a rupture disk device as the sole relieving device shall be determined by a value calculated under the requirements of (-1) or (-2) below.

(-1) When the rupture disk device discharges directly to the atmosphere and

(+a) is installed within eight pipe diameters from the vessel nozzle entry; and

(+b) with a length of discharge pipe not greater than five pipe diameters from the rupture disk device; and

(+c) the nominal diameters of the inlet and discharge piping are equal to or greater than the stamped NPS (DN) designator of the device, the calculated relieving capacity of a pressure relief system shall not exceed a value based on the applicable theoretical flow equation [see UG-131(e)(2) and Mandatory Appendix 11] for the various media multiplied by a coefficient of discharge K equal to 0.62. The area A in the theoretical flow equation shall be the minimum net flow area[50] as specified by the rupture disk device Manufacturer.

(-2) The calculated capacity of any pressure relief system may be determined by analyzing the total system resistance to flow. This analysis shall take into consideration the flow resistance of the rupture disk device, piping and piping components including the exit nozzle on the vessels, elbows, tees, reducers, and valves. The calculation shall be made using accepted engineering practices for determining fluid flow through piping systems. This calculated relieving capacity shall be multiplied by a factor of 0.90 or less to allow for uncertainties inherent with this method. The certified flow resistance[51] K_R for the rupture disk device, expressed as the velocity head loss, shall be determined in accordance with UG-131(k) through UG-131(r).

(-b) The relieving capacity of the pressure relief system that uses a rupture disk device as the sole relieving device shall be determined by taking into consideration the certified capacity marked on the device and the characteristics of the system fluid and system components upstream and downstream of the rupture disk device. The certified coefficient of discharge K_D for the rupture disk device shall be determined in accordance with UG-131(b) through UG-131(j).

(3) Application of Rupture Disks

(-a) A rupture disk device may be used as the sole pressure relieving device on a vessel.

Provided by IHS under license with ASME
No reproduction or networking permitted without license from IHS
Licensee=Chevron Phillips Chemical Co LP/5956674001
Not for Resale, 11/09/2014 20:41:36 MST

NOTE: When rupture disk devices are used, it is recommended that the design pressure of the vessel be sufficiently above the intended operating pressure to provide sufficient margin between operating pressure and rupture disk bursting pressure to prevent premature failure of the rupture disk due to fatigue or creep.

Application of rupture disk devices to liquid service should be carefully evaluated to assure that the design of the rupture disk device and the dynamic energy of the system on which it is installed will result in sufficient opening of the rupture disk.

(-b) A rupture disk device may be installed between a pressure relief valve[52] and the vessel provided:

(-1) the combination of the pressure relief valve and the rupture disk device is ample in capacity to meet the requirements of UG-125(c);

(-2) the marked capacity of a pressure relief valve (nozzle type) when installed with a rupture disk device between the inlet of the valve and the vessel shall be multiplied by a factor of 0.90 of the rated relieving capacity of the valve alone, or alternatively, the capacity of such a combination shall be established in accordance with (-3) below;

(-3) the capacity of the combination of the rupture disk device and the pressure relief valve may be established in accordance with the appropriate paragraphs of UG-132;

(-4) the space between a rupture disk device and a pressure relief valve shall be provided with a pressure gage, a try cock, free vent, or suitable telltale indicator. This arrangement permits detection of disk rupture or leakage.[53]

(-5) the opening[50] provided through the rupture disk, after burst, is sufficient to permit a flow equal to the capacity of the valve [(-2) and (-3) above], and there is no chance of interference with proper functioning of the valve; but in no case shall this area be less than the area of the inlet of the valve unless the capacity and functioning of the specific combination of rupture disk device and pressure relief valve have been established by test in accordance with UG-132.

(-c) A rupture disk device may be installed on the outlet side[54] of a pressure relief valve which is opened by direct action of the pressure in the vessel provided:

(-1) the pressure relief valve will not fail to open at its proper pressure setting regardless of any back pressure that can accumulate between the pressure relief valve disk and the rupture disk. The space between the pressure relief valve disk and the rupture disk shall be vented or drained to prevent accumulation of pressure, or suitable means shall be provided to ensure that an accumulation of pressure does not affect the proper operation of the pressure relief valve.[55]

(-2) the pressure relief valve is ample in capacity to meet the requirements of UG-125(c);

(-3) the marked burst pressure of the rupture disk at the specified disk temperature plus any pressure in the outlet piping shall not exceed the design pressure of the outlet portion of the pressure relief valve and any pipe or fitting between the valve and the rupture disk device. However, in no case shall the marked burst pressure of the rupture disk at the specified disk temperature plus any pressure in the outlet piping exceed the maximum allowable working pressure of the vessel or the set pressure of the pressure relief valve.

(-4) the opening provided through the rupture disk device after breakage is sufficient to permit a flow equal to the rated capacity of the attached pressure relief valve without exceeding the allowable overpressure;

(-5) any piping beyond the rupture disk cannot be obstructed by the rupture disk or fragment;

(-6) the system is designed to consider the adverse effects of any leakage through the pressure relief valve or through the outlet side rupture disk device, to ensure system performance and reliability.[56]

(-7) the bonnet of a balancing bellows or diaphragm type pressure relief valve shall be vented to prevent accumulation of pressure in the bonnet.

(b) Pin Device[57]

(1) General. Every pin device shall have a marked set pressure established by the rules of UG-138(d)(4) and UG-138(d)(5) at a specified pin temperature.[58] The set pressure tolerance shall not exceed ±2 psi (±15 kPa) for marked set pressures up to and including 40 psi (300 kPa) and ±5% for marked set pressures above 40 psi (300 kPa).

(2) Relieving Capacity. Pin devices certified using the flow resistance method shall use (-a) and pin devices certified using the coefficient of discharge method shall use (-b) below.

(-a) The rated flow capacity of a pressure relief system that uses a pin device as the sole relieving device shall be determined by a value calculated under the requirements of (-1) or (-2) below.

(-1) When the pin device discharges directly to atmosphere and

(+a) is installed within eight pipe diameters from the vessel nozzle entry.

(+b) with a length of discharge pipe not greater than five pipe diameters from the pin device.

(+c) the nominal diameters of the inlet and discharge piping are equal to or greater than the stamped NPS (DN) designator of the device, the calculated relieving capacity of a pressure relief system shall not exceed a value based on the applicable theoretical flow equation [see UG-131(e)(2) and Mandatory Appendix 11] for the various media multiplied by a coefficient of discharge K equal to 0.62. The area A in the theoretical flow equation shall be the minimum net flow area[50] as specified by the pin device Manufacturer.

(-2) The calculated capacity of any pressure relief system may be determined by analyzing the total system resistance to flow. This analysis shall take into consideration the flow resistance of the pin device, piping and piping components including the exit nozzle on the vessels,elbows, tees, reducers, and valves. The calculation shall be made using accepted engineering practices for

Provided by IHS under license with ASME
No reproduction or networking permitted without license from IHS
Licensee=Chevron Phillips Chemical Co LP/5956674001
Not for Resale, 11/09/2014 20:41:36 MST

determining fluid flow through piping systems. This calculated relieving capacity shall be multiplied by a factor of 0.90 or less to allow for uncertainties inherent with this method. The certified flow resistance[51] K_R for the pin device, expressed as the velocity head loss, shall be determined in accordance with UG-131(k) through UG-131(r).

(-b) The relieving capacity of the pressure relief system that uses a pin device as the sole relieving device shall be determined by taking into consideration the certified capacity marked on the device and the characteristics of the system fluid and system components upstream and downstream of the pin device. The certified coefficient of discharge K_D for the pin device shall be determined in accordance with UG-131(b) through UG-131(j).

(3) Application of Pin Devices

(-a) A pin device may be used as the sole pressure relieving device on a vessel.

(-b) A pin device may be installed between a pressure relief valve and the vessel provided

(-1) the combination of the pressure relief valve and the pin device is ample in capacity to meet the requirements of UG-125(c)

(-2) the combined capacity of the pressure relief valve and pin device shall be the rated capacity of the valve multiplied by a factor of 0.90 provided the appropriate resistance factor K_{RG}, K_{RGL}, or K_{RL} of the device is less than 6.0 or by a combination capacity factor established in accordance with the appropriate paragraphs of UG-132.

(-3) the space between a pin device and a pressure relief valve shall be provided with a pressure gage, a try cock, free vent, or suitable telltale indicator.

(-4) the opening[50] provided through the pin device, after activation, is sufficient to permit flow equal to the capacity of the valve [(-2) above], and there is no chance of interference with proper functioning of the valve; but in no case shall this area be less than the area of the inlet of the valve unless the capacity and functioning of the specific combination of pin device and pressure relief valve have been established by test in accordance with UG-132.

(-5) The set pressure of the pin device is equal to or greater than 90% of the set pressure of the pressure relief valve.

(-c) A pin device shall not be installed on the outlet side of a pressure relief valve that is opened by direct action of the pressure in the vessel.

(-d) A pin actuated pilot operated pressure relief device may be used to satisfy the requirements of UG-125, provided the requirements of UG-125 through UG-136 for pilot operated pressure relief valves are met.

(c) Spring Loaded Nonreclosing Pressure Relief Device

(1) A spring loaded nonreclosing pressure relief device, pressure actuated by means which permit the spring loaded portion of the device to open at the specified set pressure and remain open until manually reset, may be used provided the design of the spring loaded nonreclosing device is such that if the actuating means fail, the device will achieve full opening at or below its set pressure. Such a device may not be used in combination with any other pressure relief device. The tolerance on opening point shall not exceed ±5%.

(2) The calculated capacity rating of a spring loaded nonreclosing pressure relief device shall not exceed a value based on the applicable theoretical formula (see UG-131) for the various media, multiplied by: K = coefficient = 0.62.

The area A (square inches) in the theoretical formula shall be the flow area through the minimum opening of the spring loaded nonreclosing pressure relief device.

(3) In lieu of the method of capacity rating in (2) above, a Manufacturer may have the capacity of a spring loaded nonreclosing pressure relief device design certified in general accordance with the procedures of UG-131, as applicable.

(d) Open Flow Paths or Vents

(1) Flow paths or vents, open directly or indirectly to the atmosphere, may be used as the sole pressure relieving device on a vessel.

(2) The calculated capacity of any pressure relief system may be determined by analyzing the total system resistance to flow. This analysis shall take into consideration the flow resistance of the piping and piping components including the exit nozzle on the vessels, elbows, tees, reducers, and valves. The calculation shall be made using accepted engineering practices for determining fluid flow through piping systems. This calculated relieving capacity shall be multiplied by a factor of 0.90 or less to allow for uncertainties inherent in this method.

(3) The aggregate capacity of the open flow paths, or vents, shall be sufficient to prevent overpressure in excess of those specified in UG-125(c). When the MAWP is 15 psi (105 kPa) or less, in no case shall the pressure be allowed to rise more than 21% above the MAWP.

UG-128 LIQUID PRESSURE RELIEF VALVES

Any liquid pressure relief valve used shall be at least NPS ½ (DN 15).

UG-129 MARKING (13)

(a) Safety, Safety Relief, Relief, Liquid Pressure Relief, and Pilot Operated Pressure Relief Valves. Each safety, safety relief, relief, liquid pressure relief, and pilot operated pressure relief valve NPS ½ (DN 15) and larger shall be plainly marked by the Manufacturer or Assembler with the required data in such a way that the marking will not be obliterated in service. The marking may be placed on the valve or on a metal plate or plates securely fastened to the valve.

(1) the name, or an acceptable abbreviation, of the Manufacturer and the Assembler;

(2) Manufacturer's design or type number;

(3) NPS size (DN) _____ (the nominal pipe size of the valve inlet);

Provided by IHS under license with ASME
No reproduction or networking permitted without license from IHS
Licensee=Chevron Phillips Chemical Co LP/5956674001
Not for Resale, 11/09/2014 20:41:36 MST

(4) set pressure _____ psi (kPa), and, if applicable per UG-136(d)(4), cold differential test pressure _____ psi (kPa);

(5) certified capacity (as applicable):

(-a) lb/hr (kg/hr) of saturated steam at an overpressure of 10% or 3 psi (20 kPa), whichever is greater for valves certified on steam complying with UG-131(b); or

(-b) gal/min (l/min) of water at 70°F (20°C) at an overpressure of 10% or 3 psi (20 kPa), whichever is greater for valves certified on water; or

(-c) SCFM [standard cubic feet per minute at 60°F and 14.7 psia] (M^3/min, cubic meters per minute at 20°C and 101 kPa), or lb/min (kg/min), of air at an overpressure of 10% or 3 psi (kPa), whichever is greater. Valves that are capacity certified in accordance with UG-131(c)(2) shall be marked "at 20% overpressure."

(-d) In addition to one of the fluids specified above, the Manufacturer may indicate the capacity in other fluids (see Mandatory Appendix 11).

(6) year built, or alternatively, a coding may be marked on the valve such that the valve Manufacturer or Assembler can identify the year the valve was assembled or tested;

(7) the Certification Mark with the UV Designator placed under the Mark, as shown in Figure UG-129.1. A marking method other than the stamp issued by the Society may be used provided it is acceptable to the ASME designated organization. The pilot of a pilot operated pressure relief valve shall be plainly marked by the Manufacturer or Assembler showing the name of the Manufacturer, the Manufacturer's design or type number, the set pressure in pounds per square inch (kPa), and the year built, or alternatively, a coding that the Manufacturer can use to identify the year built.

On valves smaller than NPS ½ (DN 15), the markings may be made on a metal plate attached by wire or adhesive meeting the requirements of Mandatory Appendix 18 or other means suitable for the service conditions.

(8) restricted lift _____ in. (mm) (For restricted lift valves only)

(b) Safety and safety relief valves certified for a steam discharging capacity under the provisions of Section I and bearing the Certification Mark with the V Designator for safety valves may be used on pressure vessels. The rated capacity in terms of other fluids shall be determined by the method of conversion given in Mandatory Appendix 11. [See UG-131(h).]

(c) Pressure Relief Valves in Combination With Rupture Disk Devices. Pressure relief valves in combination with rupture disk devices shall be marked with the capacity as established in accordance with UG-127(a)(3)(-b)(-2) (using 0.90 factor) or the combination capacity factor established by test in accordance with UG-132(a) or UG-132(b), in addition to the marking of (a) and (e) below. The marking may be placed on the pressure relief valve or rupture disk device or on a plate or plates that satisfy the requirements of UG-119. The marking shall include the following:

(1) name of Manufacturer of valve;

(2) design or type number of valve;

(3) name of Manufacturer of rupture disk device;

(4) design or type number of rupture disk device;

(5) capacity or combination capacity factor;

(6) name of organization responsible for this marking. This shall be either the vessel user, vessel Manufacturer, rupture disk Manufacturer, or pressure relief valve Manufacturer.

(d) Pressure Relief Valves in Combination With Pin Devices. Pressure relief valves in combination with pin devices shall be marked with the capacity as established in accordance with UG-127(b)(3)(-b)(-2) (using 0.90 factor) or the combination capacity factor established by test in accordance with UG-132(a) or UG-132(b), in addition to the marking of (a) and (f) below. The marking may be placed on the pressure relief valve or pin device or on a metal plate or plates securely fastened to the device. The marking shall include the following:

(1) name of Manufacturer of valve;

(2) design or type number of valve;

(3) name of Manufacturer of pin device;

Figure UG-129.1 (13)
Official Certification Mark to Denote the American Society of Mechanical Engineers' Standard for Pressure Relief Valves

UV

Figure UG-129.2 (13)
Official Certification Mark to Denote the American Society of Mechanical Engineers' Standard for Nonreclosing Pressure Relief Devices

UD

Provided by IHS under license with ASME
No reproduction or networking permitted without license from IHS
Licensee=Chevron Phillips Chemical Co LP/5956674001
Not for Resale, 11/09/2014 20:41:36 MST

(4) design or type number of pin device;

(5) capacity or combination capacity factor;

(6) name of organization responsible for this marking. This shall be either the vessel user, vessel Manufacturer, pin device Manufacturer, or pressure relief valve Manufacturer.

(e) Rupture Disk Devices. Every rupture disk shall be plainly marked by the Manufacturer in such a way that the marking will not be obliterated in service. The rupture disk marking may be placed on the flange of the disk or on a metal tab securely fastened to the device. The marking shall include the following:

(1) the name or an acceptable abbreviation of the Manufacturer;

(2) Manufacturer's design or type number;

(3) lot number;

(4) disk material;

(5) size _____ [NPS (DN) of rupture disk holder];

(6) marked burst pressure _____ psi (kPa);

(7) specified disk temperature _____ °F (°C);

(8) for capacity certified devices

(-a) lb/hr (kg/hr) of saturated steam at an overpressure of 10% or 3 psi (20 kPa), whichever is greater for devices certified on steam complying with UG-131(b), or

(-b) gal/min (l/min) of water at 70°F (20°C) at an overpressure of 10% or 3 psi (20 kPa), whichever is greater for devices certified on water, or

(-c) SCFM [standard cubic feet per minute at 60°F and 14.7 psia (M^3/min at 20°C and 101 kPa)] or lb/min (kg/min) of air, at an overpressure of 10% or 3 psi, whichever is greater. Devices that are capacity certified in accordance with the UG-131(c)(2) shall be marked "at 20% overpressure."

(-d) In addition to one of the fluids specified above, the Manufacturer may indicate the capacity in other fluids (see Mandatory Appendix 11).

(9) for flow resistance certified devices

(-a) minimum net flow area ____ in.^{2} (mm^2)

(-b) certified flow resistance (one or more as applicable)

(-1) K_{RG} _____ for rupture disks certified on air or gases

(-2) K_{RL} _____ for rupture disks certified on liquid

(-3) K_{RGL} _____ for rupture disks certified on air or gases, and liquid

(10) Certification Mark with the UD Designator placed under the Mark, as shown in Figure UG-129.2. A marking method other than the stamp issued by the Society may be used provided it is acceptable to the ASME designated organization.

(11) year built, or alternatively, a coding may be marked on the rupture disk such that the rupture disk device Manufacturer can identify the year the rupture disk device was assembled and tested.

Items (1), (2), (5), (10), and (11) above and flow direction shall also be marked on the rupture disk holder.

(f) Pin Devices and Pin Actuated Pilot Operated Pressure Relief Devices. Pin devices shall be plainly marked by the Manufacturer with the required data in such a way that the marking will not be obliterated in service. The marking may be placed on the device housing or on a metal plate or plates securely fastened to the device. The marking shall include the following:

(1) the name, or an acceptable abbreviation of the Manufacturer

(2) Manufacturer's design or type number

(3) NPS (DN) size _____ (the nominal pipe size of the device inlet)

(4) set pressure psi _____ (kPa)

(5) flow direction

(6) pin to pin device identifier

(7) for capacity certified devices

(-a) lb/hr of saturated steam at an overpressure 10% or 3 psi (20 kPa), whichever is greater for devices certified on steam complying with UG-131(b), or

(-b) gal/min of water at 70°F (20°C) at an overpressure of 10% or 3 psi (20 kPa), whichever is greater for devices certified on water, or

(-c) SCFM [standard cubic feet per minute at 60°F and 14.7 psia (20°C and 101 kPa)], or lb/min, of air at an overpressure of 10% or 3 psi, whichever is greater. Devices that are capacity certified in accordance with UG-131(c)(2) shall be marked "at 20% overpressure."

(-d) In addition to one of the fluids specified above, the Manufacturer may indicate the capacity in other fluids (see Mandatory Appendix 11).

(8) for flow resistance certified devices:

(-a) minimum net flow area _____ in.^{2} (mm^2)

(-b) certified flow resistance (one or more as applicable)

(-1) K_{RG} _____ for pin devices certified on air or gases

(-2) K_{RL} _____ for pin devices certified on liquid

(-3) K_{RGL} _____ for pin devices certified on air or gases, and liquid

(9) Certification Mark with the UD Designator placed under the Mark, as shown in Figure UG-129.2. A marking method other than the stamp issued by the Society may be used provided it is acceptable to the ASME designated organization.

(10) year built, or alternatively, a coding may be marked on the device such that the device Manufacturer can identify the year the device was tested

(11) The pin shall be marked according to one of the following methods:

(-a) for pin devices using a replaceable pin to control set pressure, the pin shall be marked with its lot number, pin temperature[58] °F (°C) and the information required by (1), (4), (6), (10), or

Provided by IHS under license with ASME
No reproduction or networking permitted without license from IHS
Licensee=Chevron Phillips Chemical Co LP/5956674001
Not for Resale, 11/09/2014 20:41:36 MST

NOTE: When the pin size or configuration does not permit the use of an attached metal tag, a metal tag may be attached using a nonmetallic connector with an adhesive that complies with Mandatory Appendix 18 of this Division.

(-b) for pin devices that are single use and permanently assembled, the marking requirements of (8)(-a), (8)(-b), and (-a) shall be applied to the device, or

(-c) for pin devices that have a replaceable pin within the sealed body per UG-138, the pin shall be marked with its lot number.

(g) Spring Loaded Nonreclosing Pressure Relief Devices. Spring loaded nonreclosing pressure relief devices shall be marked in accordance with (a) above except that the Certification Mark is to be applied only when the capacity has been established and certified in accordance with UG-127(c)(3) and all other requirements of UG-130 have been met.

(h) For units other than those included above, see U-4.

UG-130 CERTIFICATION MARK

Each pressure relief device[59] to which the Certification Mark with the appropriate Designator (see Figures UG-129.1 and UG-129.2) will be applied shall have been fabricated or assembled by a Manufacturer or Assembler holding a valid Certificate of Authorization (UG-117) and capacity certified in accordance with the requirements of this Division. A Certified Individual (CI) shall provide oversight as required by UG-117(a). Each use of the Certification Mark with the appropriate Designator shall also be documented on a Certificate of Conformance Form UV-1 or UD-1, as appropriate.

UG-131 CERTIFICATION OF CAPACITY OF PRESSURE RELIEF DEVICES

(a) Before the Certification Mark is applied to any pressure relief device, the device Manufacturers shall have the capacity of their devices certified in accordance with the provisions of these paragraphs. For pressure relief valves, (b) through (j) below apply. For rupture disks or pin devices to be certified for capacity, (b) through (j) below apply, and for rupture disk and pin devices to be certified for flow resistance, (k) through (r) below apply except where noted.

(b) See below:

(1) Capacity certification tests for pressure relief devices for compressible fluids shall be conducted on dry saturated steam, or air, or gas. When dry saturated steam is used, the limits for test purposes shall be 98% minimum quality and 20°F (10°C) maximum superheat. Correction from within these limits may be made to the dry saturated condition. Pressure relief devices for steam service may be rated as above, but at least one device of each series shall be tested on steam to demonstrate the steam capacity and performance.

(2) Capacity certification tests for pressure relief devices for incompressible fluids shall be conducted on water at a temperature between 40°F (5°C) and 125°F (50°C).

(c) See below:

(1) Capacity certification tests shall be conducted at a pressure which does not exceed the pressure for which the pressure relief device is set to operate by more than 10% or 3 psi (20 kPa), whichever is greater, except as provided in (c)(2) below. For pressure relief valves minimum pressure for capacity certification tests shall be at least 3 psi (20 kPa) above set pressure. The reseating pressure shall be noted and recorded.

(2) Capacity certification tests of pressure relief devices for use in accordance with UG-125(c)(3) may be conducted at a pressure not to exceed 120% of the stamped set pressure of the device.

(3) See below:

(-a) Pressure relief valves for compressible fluids having an adjustable blowdown construction shall be adjusted prior to testing so that the blowdown does not exceed 5% of the set pressure or 3 psi (20 kPa), whichever is greater.

(-b) The blowdown of pressure relief valves for incompressible fluids and pressure relief valves for compressible fluids having nonadjustable blowdown shall be noted and recorded.

(4) Capacity certification of pilot operated pressure relief devices may be based on tests without the pilot devices installed, provided prior to capacity tests it has been demonstrated by test to the satisfaction of the Authorized Observer that the pilot device will cause the main device to open fully at a pressure which does not exceed the set pressure by more than 10% or 3 psi (20 kPa), whichever is greater, and that the pilot device in combination with the main device will meet all the requirements of this Division.

(d) See below:

(1) A capacity certification test is required on a set of three devices for each combination of size, design, and pressure setting. The stamped capacity rating for each combination of design, size, and test pressure shall not exceed 90% of the average capacity of the three devices tested. The capacity for each set of three devices shall fall within a range of ±5% of the average capacity. Failure to meet this requirement shall be cause to refuse certification of that particular pressure relief device design.

(2) If a Manufacturer wishes to apply the Certification Mark to a design of pressure relief devices, four devices of each combination of pipe size and orifice size shall be tested. These four devices shall be set at pressures which cover the approximate range of pressures for which the device will be used or covering the range available at

Provided by IHS under license with ASME
No reproduction or networking permitted without license from IHS
Licensee=Chevron Phillips Chemical Co LP/5956674001
Not for Resale, 11/09/2014 20:41:36 MST

the certified test facility that shall conduct the tests. The capacities based on these four tests shall be as follows:

(-a) For compressible fluids, the slope W/P of the actual measured capacity versus the flow pressure for each test point shall be calculated and averaged:

$$\text{slope} = \frac{W}{P} = \frac{\text{measured capacity}}{\text{absolute flow pressure, psia}}$$

All values derived from the testing must fall within ±5% of the average value:

$$\text{minimum slope} = 0.95 \times \text{average slope}$$

$$\text{maximum slope} = 1.05 \times \text{average slope}$$

If the values derived from the testing do not fall between the minimum and maximum slope values, the Authorized Observer shall require that additional devices be tested at the rate of two for each device beyond the maximum and minimum values with a limit of four additional devices.

The relieving capacity to be stamped on the device shall not exceed 90% of the average slope times the absolute accumulation pressure:

$$\text{rated slope} = 0.90 \times \text{average slope}$$

(U.S. Customary Units)

$$\text{stamped capacity} \le \text{rated slope}\left(1.10 \times \text{set pressure} + 14.7\right) \text{ or } \left(\text{set pressure} + 3\text{ psi} + 14.7\right)\text{, whichever is greater}$$

(SI Units)

$$\text{stamped capacity} \le \text{rated slope}\left(1.10 \times \text{set pressure} + 100\text{ kPa}\right) \text{ or } \left(\text{set pressure} + 20\text{ kPa} + 101\text{ kPa}\right)\text{, whichever is greater}$$

For devices certified in accordance with (c)(2) above,

(U.S. Customary Units)

$$\text{stamped capacity} \le \text{rated slope}\left(1.20 \times \text{set pressure} + 14.7\right) \text{ or } \left(\text{set pressure} + 3\text{ psi} + 14.7\right)\text{, whichever is greater}$$

(SI Units)

$$\text{stamped capacity} \le \text{rated slope}\left(1.20 \times \text{set pressure} + 100\text{ kPa}\right) \text{ or } \left(\text{set pressure} + 20\text{ kPa} + 101\text{ kPa}\right)\text{, whichever is greater}$$

For direct spring loaded valves, the results may be extrapolated to valves with set pressures higher than the highest set pressure used in the capacity certification tests, if the spring in the valve with the higher set pressure meets the requirements of UG-136(a)(2).

(-b) For incompressible fluids, the capacities shall be plotted on log–log paper against the differential (inlet minus discharge pressure) test pressure and a straight line drawn through these four points. If the four points do not establish a straight line, two additional devices shall be tested for each unsatisfactory point, with a limit of two unsatisfactory points. Any point that departs from the straight line by more than 5% should be considered an unsatisfactory point. The relieving capacity shall be determined from this line. The certified capacity shall not exceed 90% of the capacity taken from the line.

For direct spring loaded valves, the results may be extrapolated to valves with set pressures higher than the highest set pressure used in the capacity certification tests, if the spring in the valve with the higher set pressure meets the requirements of UG-136(a)(2).

(e) Instead of individual capacity certification as provided in (d) above, a coefficient of discharge K may be established for a specific pressure relief device design according to the following procedure.

(1) For each design, the pressure relief device Manufacturer shall submit for test at least three devices for each of three different sizes (a total of nine devices) together with detailed drawings showing the device construction. Each device of a given size shall be set at a different pressure.

For each valve design intended to be restricted in lift, the Manufacturer shall have capacity tests conducted on three valves of different sizes. Each size valve shall be tested for capacity at the minimum lift for which certification is required, and at two intermediate lift points

Provided by IHS under license with ASME
No reproduction or networking permitted without license from IHS
Licensee=Chevron Phillips Chemical Co LP/5956674001
Not for Resale, 11/09/2014 20:41:36 MST

between the full rated lift and minimum lift certification points. Each of the three test valves shall be set at a different pressure.

For each restricted lift valve tested, it shall be verified that actual measured capacity at restricted lift will equal or exceed the ASME rated capacity at full rated lift multiplied by the ratio of measured restricted lift to full rated lift.

(2) Tests shall be made on each pressure relief device to determine its capacity-lift (if applicable), set pressure and blow-down pressures (for pressure relief valves), and actual capacity in terms of the fluid used in the test. A coefficient K_D shall be established for each test run as follows:

$$K_D = \frac{\text{actual flow}}{\text{theoretical flow}} = \text{coefficient of discharge}$$

where actual flow is determined quantitatively by test, and theoretical flow is calculated by the appropriate formula which follows:

For tests with dry saturated steam,

$$W_T = 51.5AP$$

NOTE: For dry saturated steam pressures over 1500 psig (10.9 MPa gage) and up to 3200 psig (22.1 MPa gage), the value of W_T, calculated by the above equation, shall be corrected by being multiplied by the following factors, which shall be used only if it is 1.0 or greater.

(U.S. Customary Units)

$$\left(\frac{0.1906P - 1000}{0.2292P - 1061}\right)$$

(SI Units)

$$\left(\frac{27.6P - 1\,000}{33.2P - 1\,061}\right)$$

For tests with air,

$$W_T = 356AP\sqrt{\frac{M}{T}}$$

For tests with natural gas,

$$W_T = CAP\sqrt{\frac{M}{ZT}}$$

For tests with water,

$$W_T = 2407A\sqrt{(P - P_d)w}$$

where

A = actual discharge area through the device at developed lift, sq in.
C = constant for gas or vapor based on the ratio of specific heats
$k = c_p/c_v$ (see Figure 11-1)
M = molecular weight
P = (set pressure × 1.10) plus atmospheric pressure, psia, or set pressure plus 3 psi (20 kPa) plus atmospheric pressure, whichever is greater
P_d = pressure at discharge from device
T = absolute temperature at inlet, °F + 460°F (273°C)
w = specific weight of water at device inlet conditions
W_T = theoretical flow
Z = compressibility factor corresponding to P and T

The average of the coefficients K_D of the nine tests required shall be multiplied by 0.90, and this product shall be taken as the coefficient K of that design. The coefficient of the design shall not be greater than 0.878 (the product of 0.9 × 0.975).

NOTE: All experimentally determined coefficients K_D shall fall within a range of ±5% of the average K_D found. Failure to meet this requirement shall be cause to refuse certification of that particular device design.

To convert lb/hr of water to gal/min of water, multiply the capacity in lb/hr by 1/500.

(3) The official relieving capacity of all sizes and pressures of a given design, for which K has been established under the provisions of (2) above, that are manufactured subsequently shall not exceed the value calculated by the appropriate formula in (2) above multiplied by the coefficient K (see Mandatory Appendix 11).

(4) The coefficient shall not be applied to devices whose beta ratio (ratio of valve throat to inlet diameter) lies outside the range of 0.15 to 0.75, unless tests have demonstrated that the individual coefficient of discharge K_D for devices at the extreme ends of a larger range is within ±5% of the average coefficient K. For designs where the lift is used to determine the flow area, all devices shall have the same nominal lift-to-seat diameter ratio (L/D).

(5) The coefficient shall not be applied to direct spring loaded valves with springs that do not meet the requirements of UG-136(a)(2).

(6) For direct spring loaded valves, the results may be extrapolated to valves with set pressures higher than the highest set pressure used in the capacity certification tests if the spring in the valve with the higher set pressure meets the requirements of UG-136(a)(2).

(7) For pressure relief valves, the results may be extrapolated to valves larger or smaller than the valves used in the capacity certification tests provided all dimensions of the flow path and all dimensions of the parts that can affect the overall thrust exercised by the medium on the moving parts are scaled with the corresponding dimensions of the valves used in the capacity certification testing. (**13**)

Provided by IHS under license with ASME
No reproduction or networking permitted without license from IHS
Licensee=Chevron Phillips Chemical Co LP/5956674001
Not for Resale, 11/09/2014 20:41:36 MST

(f) Tests shall be conducted at a place where the testing facilities, methods, procedures, and person supervising the tests (Authorized Observer) meet the applicable requirements of ASME PTC 25. The tests shall be made under the supervision of and certified by an Authorized Observer. The testing facilities, methods, procedures, and qualifications of the Authorized Observer shall be subject to the acceptance of the ASME on recommendation of a representative from an ASME designated organization. Acceptance of the testing facility is subject to review within each 5 year period.

(g) Capacity test data reports for each device model, type, and size, signed by the Manufacturer and the Authorized Observer witnessing the tests shall be submitted to the ASME designated organization for review and acceptance.[60] Where changes are made in the design, capacity certification tests shall be repeated.

(h) For absolute pressures up to 1500 psia (10 MPa) absolute), it is permissible to rate safety valves under PG-69.1.2 of Section I with capacity ratings at a flow pressure of 103% of the set pressure, for use on pressure vessels, without further test. In such instances, the capacity rating of the valve may be increased to allow for the flow pressure permitted in (c)(1) and (c)(3) above, namely, 110% of the set pressure, by the multiplier,

(U.S. Customary Units)

$$\frac{1.10p + 14.7}{1.03p + 14.7}$$

(SI Units)

$$\frac{1.10p + 100}{1.03p + 100}$$

where

p = set pressure, psig (kPa gage)

Such valves shall be marked in accordance with UG-129. This multiplier shall not be used as a divisor to transform test ratings from a higher to a lower flow.

For steam pressures above 1500 psig (10.3 MPa gage), the above multiplier is not applicable. For pressure relief valves with relieving pressures between 1500 psig (10.9 MPa gage) and 3200 psig (22.1 MPa gage), the capacity shall be determined by using the equation for steam and the correction factor for high pressure steam in (e)(2) above with the permitted absolute relieving pressure (for Customary units, $1.10p + 14.7$; for SI units, $1.10p + 101$) and the coefficient K for that valve design.

(i) Rating of nozzle type pressure relief valves, i.e., coefficient K_D, greater than 0.90 and nozzle construction, for saturated water shall be according to 11-2.

(j) When changes are made in the design of a pressure relief device in such a manner as to affect the flow path, lift, or performance characteristics of the device, new tests in accordance with this Division shall be performed.

(k) The certified flow resistance K_R of the nonreclosing pressure relief device used in UG-127(a)(2) or UG-127(b)(2) shall be either K_R = 2.4, or as determined in accordance with (l) through (r) below.

(l) Flow resistance certification tests for nonreclosing pressure relief device for air or gas service K_{RG} shall be activated and flow tested with air or gas. Flow resistance certification tests for liquid service K_{RL} shall be activated with water and flow tested with air or gas. Nonreclosing pressure relief device for air or gas and liquid service K_{RGL} may be certified with air or gas as above, but at least one device of the number required under (o) below for each size of each series shall be activated with water and flow tested with air or gas to demonstrate the liquid service flow resistance.

(m) Flow resistance certification tests shall be conducted at an inlet pressure which does not exceed 110% of the device set pressure.

(n) See below:

(1) The flow resistance for devices tested with nonpressure containing items, such as seals, support rings, and vacuum supports, is applicable for the same device design without seals, support rings, or vacuum supports.

(2) A change in material for rupture disks and their nonpressure containing disk items, such as seals, support rings, and vacuum supports, is not considered a design change and does not require retesting.

(3) Additional linings, coatings, or platings may be used for the same design of devices provided:

(-a) the certificate holder has performed a verification test with the additional linings, coatings, or platings and has documented that the addition of these materials does not affect the device opening configuration; and

(-b) such verification tests shall be conducted with devices of the smallest size and minimum set pressure for which the certified flow resistance with additional materials is to be used.

(o) Flow resistance certification shall be determined by one of the following methods:

(1) One Size Method

(-a) For each nonreclosing pressure relief device design, three activation components from the same lot shall be individually activated and the device tested in accordance with (p) below. The set pressure shall be the minimum of the nonreclosing pressure relief device design of the size tested.

(-b) The certified flow resistance K_R determined in (p) below shall apply only to the nonreclosing pressure relief device design of the size tested.

(-c) When additional activation components of the same design are constructed at a later date, the test results on the original components may be included as applicable in the three size method described in (2) below.

Provided by IHS under license with ASME
No reproduction or networking permitted without license from IHS
Licensee=Chevron Phillips Chemical Co LP/5956674001
Not for Resale, 11/09/2014 20:41:36 MST

(2) Three Size Method

(-a) This method of flow resistance certification may be used for a nonreclosing pressure relief device design of three or more sizes. The set pressure shall be the minimum of the activation component for each of the sizes submitted for test.

(-b) For each nonreclosing pressure relief device design, three activation components from the same lot shall be activated and the device flow tested in accordance with (p) below for each of three different sizes of the same design.

(-c) The certified flow resistance K_R shall apply to all sizes and pressures of the design of the nonreclosing pressure relief device tested.

(p) A certified flow resistance K_R may be established for a specific nonreclosing pressure relief device design according to the following procedure.

(1) For each design, the nonreclosing pressure relief device Manufacturer shall submit for test the required devices in accordance with (o) above together with the cross section drawings showing the device design.

(2) Tests shall be made on each device to determine its set pressure and flow resistance at a facility which meets the requirements of (f) above.

(3) Calculate an average flow resistance using the individual flow resistances determined in (2) above. All individual flow resistances shall fall within the average flow resistance by an acceptance band of plus or minus three times the average of the absolute values of the deviations of the individual flow resistances from the average flow resistance. Any individual flow resistance that falls outside of this band shall be replaced on a two for one basis. A new average flow resistance shall be computed and the individual flow resistances evaluated as stated above.

(4) The certified flow resistance K_R for a nonreclosing pressure relief device design shall not be less than zero and shall not be less than the sum of the average flow resistance plus three times the average of the absolute values of the deviations of individual flow resistances from the average flow resistance.

(q) Flow resistance test data reports for each nonreclosing pressure relief device design, signed by the Manufacturer and the Authorized Observer witnessing the tests, shall be submitted to the ASME designated organization for review and acceptance.[60]

(r) When changes are made in the design of a nonreclosing pressure relief device which affect the flow path or activation performance characteristics of the device, new tests in accordance with this Division shall be performed.

UG-132 CERTIFICATION OF CAPACITY OF PRESSURE RELIEF VALVES IN COMBINATION WITH NONRECLOSING PRESSURE RELIEF DEVICES

(a) Capacity of Pressure Relief Valves in Combination With a Nonreclosing Pressure Relief Device at the Inlet

(1) For each combination of pressure relief valve design and nonreclosing pressure relief device design, the pressure relief valve Manufacturer or the nonreclosing pressure relief device Manufacturer may have the capacity of the combination certified as prescribed in (3) and (4) below.

(2) Capacity certification tests shall be conducted on saturated steam, air, or natural gas. When saturated steam is used, corrections for moisture content of the steam shall be made.

(3) The pressure relief valve Manufacturer or the nonreclosing pressure relief device Manufacturer may submit for tests the smallest nonreclosing pressure relief device size with the equivalent size of pressure relief valve that is intended to be used as a combination device. The pressure relief valve to be tested shall have the largest orifice used in the particular inlet size.

(4) Tests may be performed in accordance with the following subparagraphs. The nonreclosing pressure relief device and pressure relief valve combination to be tested shall be arranged to duplicate the combination assembly design.

(-a) The test shall embody the minimum set pressure of the nonreclosing pressure relief device design which is to be used in combination with the pressure relief valve design. The marked set pressure of the nonreclosing pressure relief device shall be between 90% and 100% of the marked set pressure of the valve.

(-b) The test procedure to be used shall be as follows:

The pressure relief valve (one valve) shall be tested for capacity as an individual valve, without the nonreclosing pressure relief device at a pressure 10% or 3 psi (20 kPa), whichever is greater, above the valve set pressure.

The nonreclosing pressure relief device shall then be installed at the inlet of the pressure relief valve and the nonreclosing pressure relief device activated to operate the valve. The capacity test shall be performed on the combination at 10% or 3 psi (20 kPa), whichever is greater, above the valve set pressure duplicating the individual pressure relief valve capacity test.

(-c) Tests shall be repeated with two additional activation components of the same nominal rating for a total of three activation components to be tested with the single pressure relief valve. The results of the test capacity shall fall within a range of 10% of the average capacity of the three tests. Failure to meet this requirement shall be cause to require retest for determination of cause of the discrepancies.

(-d) From the results of the tests, a Combination Capacity Factor shall be determined. The Combination Capacity Factor is the ratio of the average capacity determined by the combination tests to the capacity determined on the individual valve.

Provided by IHS under license with ASME
No reproduction or networking permitted without license from IHS
Licensee=Chevron Phillips Chemical Co LP/5956674001
Not for Resale, 11/09/2014 20:41:36 MST

The Combination Capacity Factor shall be used as a multiplier to make appropriate changes in the ASME rated relieving capacity of the pressure relief valve in all sizes of the design. The value of the Combination Capacity Factor shall not be greater than one. The Combination Capacity Factor shall apply only to combinations of the same design of pressure relief valve and the same design of nonreclosing pressure relief device as those tested.

(-e) The test laboratory shall submit the test results to the ASME designated organization for acceptance of the Combination Capacity Factor.[61]

(b) Optional Testing of Nonreclosing Pressure Relief Devices and Pressure Relief Valves

(1) If desired, a valve Manufacturer or a nonreclosing pressure relief device Manufacturer may conduct tests in the same manner as outlined in (a)(4)(-c) and (a)(4)(-d) above using the next two larger sizes of the design of nonreclosing pressure relief device and pressure relief valve to determine a Combination Capacity Factor applicable to larger sizes. If a greater Combination Capacity Factor is established and can be certified, it may be used for all larger sizes of the combination, but shall not be greater than one.

(2) If desired, additional tests may be conducted at higher pressures in accordance with (a)(4)(-c) and (a)(4)(-d) above to establish a maximum Combination Capacity Factor to be used at all pressures higher than the highest tested, but shall not be greater than one.

UG-133 DETERMINATION OF PRESSURE RELIEVING REQUIREMENTS

(a) Except as permitted in (b) below, the aggregate capacity of the pressure relief devices connected to any vessel or system of vessels for the release of a liquid, air, steam, or other vapor shall be sufficient to carry off the maximum quantity that can be generated or supplied to the attached equipment without permitting a rise in pressure within the vessel of more than 16% above the maximum allowable working pressure when the pressure relief devices are blowing.

(b) Pressure relief devices as permitted in UG-125(c)(2), as protection against excessive pressure caused by exposure to fire or other sources of external heat, shall have a relieving capacity sufficient to prevent the pressure from rising more than 21% above the maximum allowable working pressure of the vessel when all pressure relief devices are blowing.

(c) Vessels connected together by a system of adequate piping not containing valves which can isolate any vessel, and those containing valves in compliance with Nonmandatory Appendix M, M-5, may be considered as one unit in figuring the required relieving capacity of pressure relief devices to be furnished.

(d) Heat exchangers and similar vessels shall be protected with a pressure relief device of sufficient capacity to avoid overpressure in case of an internal failure.

(e) The official rated capacity, or the certified flow resistance and minimum net flow area, of a pressure relief device shall be that which is stamped on the device and guaranteed by the Manufacturer.

(f) The rated pressure relieving capacity of a pressure relief valve for other than steam or air shall be determined by the method of conversion given in Mandatory Appendix 11.

(g) The relieving capacity of a pressure relief device for compressible fluids may be prorated at any relieving pressure greater than $1.10p$, as permitted under UG-125, by applying a multiplier to the official relieving capacity as follows:

(U.S. Customary Units)

$$\frac{P + 14.7}{1.10p + 14.7}$$

(SI Units)

$$\frac{P + 101}{1.10p + 101}$$

where

P = relieving pressure, psig (kPa gage)
p = set pressure, psig (kPa gage)

For steam pressures above 1,500 psig (10 MPa gage), the above multiplier is not applicable. For steam valves with relieving pressures greater than 1,500 psig (10 MPa gage) and less than or equal to 3,200 psig (22.1 MPa gage), the capacity at relieving pressures greater than $1.10p$ shall be determined using the equation for steam and the correction factor for high pressure steam in UG-131(e)(2) with the permitted absolute relieving pressure and the coefficient K for that valve design.

(h) When sizing and selecting valves, the restricted lift nameplate capacity shall be determined by multiplying the capacity at full rated lift as defined in UG-131(e)(3) by the ratio of the restricted lift to the full rated lift.

UG-134 PRESSURE SETTINGS AND PERFORMANCE REQUIREMENTS

(a) When a single pressure relief device is used, the set pressure[61] marked on the device shall not exceed the maximum allowable working pressure of the vessel. When the required capacity is provided in more than one pressure relief device, only one pressure relief device need be set at or below the maximum allowable working pressure, and the additional pressure relief devices may be set to open at higher pressures but in no case at a pressure higher than 105% of the maximum allowable working pressure, except as provided in (b) below.

(b) For pressure relief devices permitted in UG-125(c)(2) as protection against excessive pressure caused by exposure to fire or other sources of external

Provided by IHS under license with ASME
No reproduction or networking permitted without license from IHS
Licensee=Chevron Phillips Chemical Co LP/5956674001
Not for Resale, 11/09/2014 20:41:36 MST

heat, the device marked set pressure shall not exceed 110% of the maximum allowable working pressure of the vessel. If such a pressure relief device is used to meet the requirements of both UG-125(c) and UG-125(c)(2), the device marked set pressure shall not be over the maximum allowable working pressure.

(c) The pressure relief device set pressure shall include the effects of static head and constant back pressure.

(d) See below.

(1) The set pressure tolerance for pressure relief valves shall not exceed ±2 psi (15 kPa) for pressures up to and including 70 psi (500 kPa) and ±3% for pressures above 70 psi (500 kPa), except as covered in (2) below.

(2) The set pressure tolerance of pressure relief valves which comply with UG-125(c)(3) shall be within −0%, +10%.

(e) The burst pressure tolerance for rupture disk devices at the specified disk temperature shall not exceed ±2 psi (15 kPa) of marked burst pressure up to and including 40 psi (300 kPa) and ±5% of marked burst pressure above 40 psi (300 kPa).

(f) The set pressure tolerance for pin devices shall not exceed ±2 psi (15 kPa) of marked set pressure up to and including 40 psi (300 kPa) and ±5% of marked set pressures above 40 psi (300 kPa) at specified pin temperature.

(g) Pressure relief valves shall be designed and constructed such that when installed per UG-135, the valves will operate without chattering and shall not flutter at the flow-rated pressure in a way that either would interfere with the measurement of capacity or would result in damage.

UG-135 INSTALLATION

(a) Pressure relief devices intended for relief of compressible fluids shall be connected to the vessel in the vapor space above any contained liquid or to piping connected to the vapor space in the vessel which is to be protected. Pressure relief devices intended for relief of liquids shall be connected below the liquid level. Alternative connection locations are permitted, depending on the potential vessel overpressure scenarios and the type of relief device selected, provided the requirements of UG-125(a)(2) and UG-125(c) are met.

(b) See below:

(1) The opening through all pipe, fittings, and nonreclosing pressure relief devices (if installed) between a pressure vessel and its pressure relief valve shall have at least the area of the pressure relief valve inlet. The characteristics of this upstream system shall be such that the pressure drop will not reduce the relieving capacity below that required or adversely affect the proper operation of the pressure relief valve.

(2) The opening in the vessel wall shall be designed to provide unobstructed flow between the vessel and its pressure relief device (see Nonmandatory Appendix M).[62]

(c) When two or more required pressure relief devices are placed on one connection, the inlet internal cross-sectional area of this connection shall be either sized to avoid restricting flow to the pressure relief devices or made at least equal to the combined inlet areas of the safety devices connected to it. The flow characteristics of the upstream system shall satisfy the requirements of (b) above. (See Nonmandatory Appendix M.)

(d) There shall be no intervening stop valves between the vessel and its pressure relief device or devices, or between the pressure relief device or devices and the point of discharge, except:

(1) when these stop valves are so constructed or positively controlled that the closing of the maximum number of block valves possible at one time will not reduce the pressure relieving capacity provided by the unaffected pressure relief devices below the required relieving capacity; or

(2) under conditions set forth in Nonmandatory Appendix M.

(e) The pressure relief devices on all vessels shall be so installed that their proper functioning will not be hindered by the nature of the vessel's contents.

(f) Discharge lines from pressure relief devices shall be designed to facilitate drainage or shall be fitted with drains to prevent liquid from lodging in the discharge side of the pressure relief device, and such lines shall lead to a safe place of discharge. The size of the discharge lines shall be such that any pressure that may exist or develop will not reduce the relieving capacity of the pressure relief devices below that required to properly protect the vessel, or adversely affect the proper operation of the pressure relief devices. [See UG-136(a)(8) and Nonmandatory Appendix M.]

UG-136 MINIMUM REQUIREMENTS FOR PRESSURE RELIEF VALVES

(a) Mechanical Requirements

(1) The design shall incorporate guiding arrangements necessary to ensure consistent operation and tightness.

(2) The spring shall be designed so that the full lift spring compression shall be no greater than 80% of the nominal solid deflection. The permanent set of the spring (defined as the difference between the free height and height measured 10 min after the spring has been compressed solid three additional times after presetting at room temperature) shall not exceed 0.5% of the free height.

For direct spring loaded valves that have set pressures above the maximum pressure used in the capacity certification tests, the spring force ratio shall not exceed 1.1 times the spring force ratio of the valve with the highest set pressure that was used in the capacity certification tests. For direct spring loaded valves that have orifices larger than the largest size used in the capacity certification tests, the spring force ratio shall not exceed 1.1 times the

Provided by IHS under license with ASME
No reproduction or networking permitted without license from IHS
Licensee=Chevron Phillips Chemical Co LP/5956674001
Not for Resale, 11/09/2014 20:41:36 MST

spring force ratio of the valve with the largest size orifice in the capacity certification tests. The spring force ratio, R_{sf}, shall be calculated as follows:

$$R_{sf} = F_{so}/F_{sc}$$

where

F_{sc} = force exerted by the spring when the valve is closed or seated

F_{so} = force exerted by the spring when the valve is at rated lift

(3) Each pressure relief valve on air, water at the valve inlet that exceeds 140°F (60°C), excluding overpressure or relief events, or steam service shall have a substantial lifting device which when activated will release the seating force on the disk when the pressure relief valve is subjected to a pressure of at least 75% of the set pressure of the valve. Pilot operated pressure relief valves used on these services shall be provided with either a lifting device as described above or means for connecting and applying pressure to the pilot adequate to verify that the moving parts critical to proper operation are free to move.

(4) The seat of a pressure relief valve shall be fastened to the body of the pressure relief valve in such a way that there is no possibility of the seat lifting.

(5) In the design of the body of the pressure relief valve, consideration shall be given to minimizing the effects of deposits.

(6) Pressure relief valves having threaded inlet or outlet connections shall be provided with wrenching surfaces to allow for normal installation without damaging operating parts.

(7) Means shall be provided in the design of all pressure relief valves for use under this Division for sealing all initial adjustments which can be made without disassembly of the valve. Seals shall be installed by the Manufacturer or Assembler at the time of initial adjustment. Seals shall be installed in a manner to prevent changing the adjustment without breaking the seal. For pressure relief valves larger than NPS ½ (DN 15), the seal shall serve as a means of identifying the Manufacturer or Assembler making the initial adjustment.

(8) If the design of a pressure relief valve is such that liquid can collect on the discharge side of the disk, except as permitted in (a)(9) below, the valve shall be equipped with a drain at the lowest point where liquid can collect (for installation, see UG-135).

(9) Pressure relief valves that cannot be equipped with a drain as required in (a)(8) above because of design or application may be used provided:

(-a) the pressure relief valves are used only on gas service where there is neither liquid discharged from the valve nor liquid formed by condensation on the discharge side of the valve; and

(-b) the pressure relief valves are provided with a cover or discharge piping per UG-135(f) to prevent liquid or other contaminant from entering the discharge side of the valve; and

(-c) the pressure relief valve is marked FOR GAS SERVICE ONLY in addition to the requirements of UG-129.

(10) For pressure relief valves of the diaphragm type, the space above the diaphragm shall be vented to prevent a buildup of pressure above the diaphragm. Pressure relief valves of the diaphragm type shall be designed so that failure or deterioration of the diaphragm material will not impair the ability of the valve to relieve at the rated capacity.

(11) Valve capacity, including valves certified per UG-131, may be restricted by restricting the lift of a valve provided the following requirements are met:

(-a) The valve size shall be NPS ¾ (DN 20) or larger.

(-b) No changes shall be made in the design of the valve except to change the valve lift by use of a lift restraining device described in (-c) below.

(-c) The restriction of valve capacity shall be permitted only by the use of a lift restraining device that shall limit valve lift and shall not otherwise interfere with flow through the valve. The design of the lift restraining device shall be subject to review by an ASME designated organization.

(-d) The lift restraining device shall be designed so that, if adjustable, the adjustable feature can be sealed. Seals shall be installed by the valve Manufacturer or Assembler at the time of initial adjustment.

(-e) Valves shall not have their lifts restricted to a value less than 30% of full rated lift, or less than 0.080 in. (2 mm).

(b) Material Selections (**13**)

(1) Cast iron seats and disks are not permitted.

(2) Adjacent sliding surfaces such as guides and disks or disk holders shall both be of corrosion resistant material. Springs of corrosion resistant material or having a corrosion resistant coating are required. The seats and disks of pressure relief valves shall be of suitable material to resist corrosion by the fluid to be contained.

The Manufacturer shall consider the potential for galling and the effects on the performance of the pressure relief valve in the selection of materials for sliding surfaces. The Manufacturer shall consider the potential for brinelling and the effects on the performance of the pressure relief valve in the selection of materials for the seating surfaces.

NOTE: The degree of corrosion resistance, appropriate to the intended service, shall be a matter of agreement between the Manufacturer and the user or his designated agent.

(3) Materials used in bodies, bonnets or yokes, and body-to-bonnet or body-to-yoke bolting, shall be listed in Section II and this Division. Carbon and low alloy steel bodies, bonnets, yokes and bolting subject to in-service temperatures colder than −20°F (−30°C) shall meet the requirements of UCS-66, unless exempted by the following:

Provided by IHS under license with ASME
No reproduction or networking permitted without license from IHS
Licensee=Chevron Phillips Chemical Co LP/5956674001
Not for Resale, 11/09/2014 20:41:36 MST

(-a) The coincident ratio defined in Figure UCS-66.1 is 0.35 or less.

(-b) The material(s) is exempted from impact testing per Figure UCS-66.

(4) Materials used in all other parts required for the pressure relieving or retaining function shall be

(-a) listed in Section II; or

(-b) listed in ASTM specifications; or

(-c) controlled by the Manufacturer of the pressure relief valve by a specification ensuring control of chemical and physical properties and quality at least equivalent to ASTM standards.

(c) Inspection of Manufacturing and/or Assembly of Pressure Relief Valves

(1) A Manufacturer or Assembler shall demonstrate to the satisfaction of a representative from an ASME designated organization that his manufacturing, production, and testing facilities and quality control procedures will insure close agreement between the performance of random production samples and the performance of those valves submitted for Capacity Certification.

(2) Manufacturing, assembly, inspection, and test operations including capacity are subject to inspections at any time by a representative from an ASME designated organization.

(3) A Manufacturer or Assembler may be granted permission to apply the Certification Mark with the UV Designator to production pressure relief valves capacity certified in accordance with UG-131 provided the following tests are successfully completed. This permission shall expire on the sixth anniversary of the date it is initially granted. The permission may be extended for 6 year periods if the following tests are successfully repeated within the 6-month period before expiration.

(-a) Two sample production pressure relief valves of a size and capacity within the capability of an ASME accepted laboratory shall be selected by a representative from an ASME designated organization. Pressure relief valves having adjustable blowdown construction shall have the control elements positioned by the Manufacturer or Assembler for a blowdown typical of production methods.

(-b) Operational and capacity tests shall be conducted in the presence of a representative from an ASME designated organization at an ASME accepted laboratory. The pressure relief valve Manufacturer or Assembler shall be notified of the time of the test and may have representatives present to witness the test. If a pressure relief valve with adjustable blowdown construction selected from a Manufacturer exhibits a blowdown that exceeds 7% of the set pressure or 3 psi (20 kPa), whichever is greater, during operational and capacity tests, then an adjustment shall be made to meet this performance condition, and the operational and capacity tests shall be repeated. This adjustment may be made on the flow test facility.

(-c) Should any pressure relief valve fail to relieve at or above its certified capacity or should it fail to meet performance requirements in UG-134, the test shall be repeated at the rate of two replacement pressure relief valves, selected in accordance with (-a) above, for each pressure relief valve that failed.

(-d) Failure of any of the replacement pressure relief valves to meet the capacity or the performance requirements of this Division shall be cause for revocation within 60 days of the authorization to use the Certification Mark on that particular type of pressure relief valve. During this period, the Manufacturer or Assembler shall demonstrate the cause of such deficiency and the action taken to guard against future occurrence, and the requirements of (3) above shall apply.

(4) Use of the Certification Mark by an Assembler indicates the use of original, unmodified parts in strict accordance with the instructions of the Manufacturer of the pressure relief valve.

(-a) An assembler may transfer original and unmodified pressure relief parts produced by the Manufacturer to other Assemblers provided the following conditions are met:

(-1) both Assemblers have been granted permission to apply the Certification Mark with the V or UV Designator to the specific valve type in which the parts are to be used;

(-2) the Quality Control System of the Assembler receiving the pressure relief valve parts shall define the controls for the procurement and acceptance of those parts; and

(-3) the pressure relief valve parts are appropriately packaged, marked, or sealed by the Manufacturer to ensure that the parts are:

(+a) produced by the Manufacturer; and

(+b) the parts are original and unmodified.

(-b) However, an Assembler may convert original finished parts by either machining to another finished part or applying a corrosion-resistant coating to valve springs for a specific application under the following conditions:

(-1) Conversions shall be specified by the Manufacturer. Drawings and/or written instructions used for part conversion shall be obtained from the Manufacturer and shall include a drawing or description of the converted part before and after the conversion.

(-2) The Assembler's quality control system, as accepted by a representative from an ASME designated organization, must describe in detail the conversion of original parts, provisions for inspection and acceptance, personnel training, and control of current Manufacturer's drawings and/or written instructions.

(-3) The Assembler must document each use of a converted part and that the part was used in strict accordance with the instructions of the Manufacturer.

Provided by IHS under license with ASME
No reproduction or networking permitted without license from IHS
Licensee=Chevron Phillips Chemical Co LP/5956674001
Not for Resale, 11/09/2014 20:41:36 MST

(-4) The Assembler must demonstrate to the Manufacturer the ability to perform each type of conversion. The Manufacturer shall document all authorizations granted to perform part conversions. The Manufacturer and Assembler shall maintain a file of such authorizations.

(-5) For an Assembler to offer restricted lift valves, the Assembler must demonstrate to the satisfaction of the Manufacturer the ability to perform valve lift restrictions. The Manufacturer shall document all authorizations granted to restrict the lift of the valves, and shall maintain records of lift restrictions made by the Assembler. The Assembler shall maintain a file of such authorizations.

(-6) At least annually a review shall be performed by the Manufacturer of an Assembler's system and conversion capabilities. The Manufacturer shall document the results of these reviews. A copy of this documentation shall be kept on file by the Assembler. The review results shall be made available to a representative from an ASME designated organization.

(5) In addition to the requirements of UG-129, the marking shall include the name of the Manufacturer and the final Assembler. The Certification Mark shall be that of the final Assembler.

NOTE: Within the requirements of (c) and (d): A *Manufacturer* is defined as a person or organization who is completely responsible for design, material selection, capacity certification, manufacture of all component parts, assembly, testing, sealing, and shipping of pressure relief valves certified under this Division. An *Assembler* is defined as a person or organization who purchases or receives from a Manufacturer or another Assembler the necessary component parts or pressure relief valves and assembles, adjusts, tests, seals, and ships pressure relief valves certified under this Division, at a geographical location other than and using facilities other than those used by the Manufacturer. An Assembler may be organizationally independent of a Manufacturer or may be wholly or partly owned by a Manufacturer.

(d) Production Testing by Manufacturers and Assemblers

(1) Each pressure relief valve to which the Certification Mark is to be applied shall be subjected to the following tests by the Manufacturer or Assembler. A Manufacturer or Assembler shall have a documented program for the application, calibration, and maintenance of gages and instruments used during these tests.

(2) Hydrostatic Pressure Test

(-a) Hydrostatic testing shall be performed on the pressure containing parts of the shell of each valve at a pressure at least 1.5 times the design pressure of the parts. The valve shell is defined as parts, such as the body, bonnet, and cap, which isolates primary or secondary pressure from atmosphere. Parts meeting the following criteria shall be exempt from hydrostatic testing:

(-1) the applied stress under hydrostatic test conditions does not exceed 50% of the allowable stress; and

(-2) the part is not cast or welded.

(-b) Testing may be performed pneumatically at a pressure of 1.25 times the design pressure of the part. Pneumatic testing can be hazardous; it is therefore recommended that special precautions be taken when conducting a pneumatic test.

(-c) Testing may be done in the component or assembled condition.

(-d) These tests shall be conducted after all machining and welding operations on the parts have been completed.

(-e) There shall be no visible sign of leakage.

(3) The secondary pressure zone of each closed bonnet pressure relief valve exceeding NPS 1 (DN 25) inlet size when such pressure relief valves are designed for discharge to a closed system shall be tested with air or other gas at a pressure of at least 30 psi (200 kPa). There shall be no visible sign of leakage.[63]

(4) Each pressure relief valve shall be tested to demonstrate its popping or set pressure. Pressure relief valves marked for steam service or having special internal parts for steam service shall be tested with steam, except that pressure relief valves beyond the capability of the production steam test facility either because of size or set pressure may be tested on air. Necessary corrections for differentials in popping pressure between steam and air shall be established by the Manufacturer and applied to the popping point on air. Pressure relief valves marked for gas or vapor may be tested with air. Pressure relief valves marked for liquid service shall be tested with water or other suitable liquid. When a valve is adjusted to correct for service conditions of superimposed back pressure, temperature, or the differential in popping pressure between steam and air, the actual test pressure (cold differential test pressure) shall be marked on the valve per UG-129. Test fixtures and test drums where applicable shall be of adequate size and capacity to ensure that pressure relief valve action is consistent with the stamped set pressure within the tolerances required by UG-134(d).

(-a) When a direct spring-loaded pressure relief valve is beyond the production test equipment capabilities, an alternative test method presented in (-5) or (-6) may be used, provided all of the conditions of (-1) through (-4) are met:

(-1) testing the valve at full pressure may cause damage to the valve;

(-2) the valve lift has been mechanically verified to meet or exceed the required lift;

(-3) for valves with adjustable blowdown, the blowdown control elements are set to the valve manufacturer's specification, and

(-4) the valve design is compatible with the alternative test method selected.

(-5) The valve, with its lift temporarily restricted during the test, if required to prevent valve damage, shall be tested on the appropriate media to demonstrate popping or set pressure.

Provided by IHS under license with ASME
No reproduction or networking permitted without license from IHS
Licensee=Chevron Phillips Chemical Co LP/5956674001
Not for Resale, 11/09/2014 20:41:36 MST

(-6) The valve may be fitted with a hydraulic or pneumatic lift assist device and tested on the appropriate media at a pressure less than the valve set pressure. The lift assist device and test procedure shall be calibrated to provide the set pressure setting with the tolerance of UG-134(d)(1).

(5) After completion of the tests required by (4) above, a seat tightness test shall be conducted. Unless otherwise designated by a Manufacturer's published pressure relief valve specification or another specification agreed to by the user, the seat tightness test and acceptance criteria shall be in accordance with API 527.

(6) Testing time on steam pressure relief valves shall be sufficient, depending on size and design, to insure that test results are repeatable and representative of field performance.

(e) Design Requirements. At the time of the submission of pressure relief valves for capacity certification, or testing in accordance with (c)(3) above, the ASME designated organization has the authority to review the design for conformity with the requirements of (a) and (b) and to reject or require modification of designs which do not conform, prior to capacity testing.

(f) Welding and Other Requirements. All welding, brazing, heat treatment, and nondestructive examination used in the construction of bodies, bonnets, and yokes shall be performed in accordance with the applicable requirements of this Division.

UG-137 MINIMUM REQUIREMENTS FOR RUPTURE DISK DEVICES

(a) Mechanical Requirements

(1) The design shall incorporate arrangements necessary to ensure consistent operation and tightness.

(2) Rupture disk devices having threaded inlet or outlet connections shall be designed to allow for normal installation without damaging the rupture disk.

(b) Material Selections

(1) The rupture disk material is not required to conform to a material specification listed in ASME Section II. The rupture disk material shall be controlled by the Manufacturer of the rupture disk device by a specification ensuring the control of material properties.

(2) Materials used in rupture disk holders and their pressure retaining bolting shall be listed in Section II and this Division. Carbon and low alloy steel holders and bolting subject to in-service temperatures colder than −20°F (−30°C) shall meet the requirements of UCS-66, unless exempted by the following:

(-a) the coincident ratio defined in Figure UCS-66.1 is 0.40 or less; and

(-b) the material(s) is exempted from impact testing per Figure UCS-66.

(3) Materials used in all other parts required for the pressure relieving or retaining function shall be

(-a) listed in Section II; or

(-b) listed in ASTM specifications; or

(-c) controlled by the Manufacturer of the rupture disk device by a specification insuring control of chemical and physical properties and quality at least equivalent to ASTM standards.

(c) Inspection of Manufacturing of Rupture Disk Devices

(1) A Manufacturer shall demonstrate to the satisfaction of a representative of an ASME designated organization that its manufacturing, production, and testing facilities and quality control procedures will insure close agreement between the performance of random production samples and the performance of those devices submitted for Certification.

(2) Manufacturing, assembly, inspection, and test operations are subject to inspections at any time by an ASME designee.

(3) A Manufacturer may be granted permission to apply the Certification Mark with the UD Designator to production rupture disk devices certified in accordance with UG-131 provided the following tests are successfully completed. This permission shall expire on the sixth anniversary of the date it is initially granted. The permission may be extended for 6-year periods if the following tests are successfully repeated within the 6-month period before expiration:

(-a) Two production sample rupture disk devices of a size and capacity within the capability of an ASME accepted laboratory shall be selected by a representative of an ASME designated organization.

(-b) Burst and flow testing shall be conducted in the presence of a representative of an ASME designated organization at a place which meets the requirements of UG-131(f). The device Manufacturer shall be notified of the time of the test and may have representatives present to witness the test.

(-c) Should any device fail to meet or exceed the performance requirements (burst pressure, minimum net flow area, and flow resistance) of UG-127, the test shall be repeated at the rate of two replacement devices, selected and tested in accordance with (-a) and (-b) above for each device that failed.

(-d) Failure of any of the replacement devices to meet the performance requirements of this Division shall be cause for revocation within 60 days of the authorization to use the Certification Mark on that particular type of rupture disk device design. During this period, the Manufacturer shall demonstrate the cause of such deficiency and the action taken to guard against future occurrence, and the requirements of (3) above shall apply.

(d) Production Testing by Manufacturers

(1) Each rupture disk device to which the Certification Mark is to be applied shall be subjected to the following tests by the Manufacturer. The Manufacturer shall have a documented program for the application, calibration, and maintenance of gages and instruments used during these tests.

Provided by IHS under license with ASME
No reproduction or networking permitted without license from IHS
Licensee=Chevron Phillips Chemical Co LP/5956674001
Not for Resale, 11/09/2014 20:41:36 MST

(2) Hydrostatic Pressure Test

(-a) The pressure containing parts of each rupture disk holder shall be hydrostatically tested at a pressure at least 1.5 times the design pressure of the parts. Holders meeting the following criteria shall be exempt from hydrostatic testing:

(-1) the applied stress under hydrostatic test conditions does not exceed 50% of the allowable stress; and

(-2) the holder is not cast or welded.

(-b) Testing may be performed pneumatically at a pressure of 1.25 times the design pressure of the part. Pneumatic testing can be hazardous; it is therefore recommended that special precautions be taken when conducting a pneumatic test.

(-c) Testing may be done in the component or assembled condition.

(-d) When the outlet of the device is not designed to contain pressure, holder components downstream of the rupture disk are exempt from hydrostatic testing.

(-e) Holder components fully contained within the holder are exempt from hydrostatic testing.

(-f) These tests shall be conducted after all machining and welding operations on the parts have been completed.

(-g) There shall be no visible sign of leakage.

(3) Each lot of rupture disks shall be tested in accordance with one of the following methods. All tests of disks for a given lot shall be made in a holder of the same form and pressure area dimensions as that being used in service. Sample rupture disks, selected from each lot of rupture disks, shall be made from the same material and of the same size as those to be used in service. Test results shall be applicable only to rupture disks used in disk holders supplied by the rupture disk Manufacturer.

(-a) At least two sample rupture disks from each lot of rupture disks shall be burst at the specified disk temperature. The marked burst pressure shall be determined so that the sample rupture disk burst pressures are within the burst pressure tolerance specified by UG-127(a)(1).

(-b) At least four sample rupture disks, but not less than 5% from each lot of rupture disks, shall be burst at four different temperatures distributed over the applicable temperature range for which the disks will be used. This data shall be used to establish a smooth curve of burst pressure versus temperature for the lot of disks. The burst pressure for each data point shall not deviate from the curve more than the burst pressure tolerance specified in UG-127(a)(1).

The value for the marked burst pressure shall be derived from the curve for a specified temperature.

(-c) For prebulged solid metal disks or graphite disks only, at least four sample rupture disks using one size of disk from each lot of material shall be burst at four different temperatures, distributed over the applicable temperature range for which this material will be used. These data shall be used to establish a smooth curve of percent change of burst pressure versus temperature for the lot of material. The acceptance criteria of smooth curve shall be as in (-b) above.

At least two disks from each lot of disks, made from this lot of material and of the same size as those to be used, shall be burst at the ambient temperature to establish the room temperature rating of the lot of disks. The percent change shall be used to establish the marked burst pressure at the specified disk temperature for the lot of disks.

(e) Design Requirements. At the time of the inspection in accordance with (c)(3) above, a representative from an ASME designated organization has the authority to review the design for conformity with the requirements of (a) and (b) and to reject or require modification of designs which to not conform, prior to capacity testing.

(f) Welding and Other Requirements. All welding, brazing, heat treatment, and nondestructive examination used in the construction of rupture disk holders and pressure parts shall be performed in accordance with the applicable requirements of this Division.

UG-138 MINIMUM REQUIREMENTS FOR PIN DEVICES

(a) Mechanical Requirements

(1) The design shall incorporate guiding arrangements necessary to ensure consistent operation and tightness.

(2) The seat of a pin device shall be fastened to the body of the pin device in such a way that there is no possibility of the seat moving from its required position.

(3) In the design of the pin device, consideration shall be given to minimize the effects of deposits.

(4) Pin devices having threaded inlet or outlet connections shall be provided with wrenching surfaces to allow for normal installation without damaging operating parts.

(5) Means shall be provided in the design for sealing all critical parts to ensure that these parts are original and unmodified. Seals shall be installed in a manner to prevent changing or modifying parts without breaking the seal. If the pin is replaceable, this component is not required to be sealed if it is marked in accordance with UG-129(f)(11)(-a). Seals shall be installed by the Manufacturer. For pin devices larger than NPS $^1/_2$ (DN15), the seal shall serve as a means of identifying the device Manufacturer.

(6) If the design of the pin device is such that liquid can collect on the discharge side, except as permitted in (7) below, the device shall be equipped with a drain at the lowest point where liquid can collect (for installation, see UG-135).

(7) Devices that cannot be equipped with a drain as required in (6) above because of design or application may be used provided

--`,,,`,,`,`,,`,,,,,`,`,`,`,,`,,`,,`,`,`,`,,`,`,`,`,,`---

Provided by IHS under license with ASME

No reproduction or networking permitted without license from IHS

Licensee=Chevron Phillips Chemical Co LP/5956674001
Not for Resale, 11/09/2014 20:41:36 MST

(-a) the devices are used only on gas service where there is neither liquid discharged from the device nor liquid formed by condensation on the discharge side of the device

(-b) the devices are provided with a cover or discharge piping per UG-135(f) to prevent liquid or other contaminant from entering the discharge side of the device

(-c) the device is marked FOR GAS SERVICE ONLY in addition to the other required marking

(8) Pins shall be manufactured by the device Manufacturer.

(b) Material Selections

(1) Cast iron seats and disks are not permitted.

(2) Adjacent sliding and sealing surfaces shall both be of a corrosion-resistant material suitable for use with the fluid to be contained.

(3) Materials used in bodies and pressure containing members, excluding proprietary pin material, shall be listed in Section II and this Division. Carbon and low alloy steel bodies, pressure containing members, load bearing members and bolting subject to in service temperatures colder than −20°F (−30°C) shall meet the requirements of UCS-66, unless exempted by the following:

(-a) The coincident ratio defined in Figure UCS-66.1 is 0.35 or less.

(-b) The material(s) is exempted from impact testing per Figure UCS-66.

(4) Materials used in all other parts required for the pressure relieving or retaining function shall be

(-a) listed in Section II; or

(-b) listed in ASTM specifications; or

(-c) controlled by the Manufacturer of the pin device by a specification ensuring control of chemical and physical properties and quality at least equivalent to ASTM specifications.

(5) Materials used for pins shall be controlled by the Manufacturer of the device by a specification ensuring the control of material properties.

(c) Inspection of Manufacturing of Pin Devices

(1) A Manufacturer shall demonstrate to the satisfaction of a representative from an ASME designated organization that his manufacturing, production, and testing facilities and quality control procedures will ensure close agreement between the performance of random production samples and the performance of those devices submitted for Certification.

(2) Manufacturing, assembly, inspection, and test operations including capacity are subject to inspections at any time by a representative from an ASME designated organization.

(3) A Manufacturer may be granted permission to apply the Certification Mark with the UD Designator to production pin devices certified in accordance with UG-131 provided the following tests are successfully completed. The permission shall expire on the fifth anniversary of the date it is initially granted. The permission may be extended for 5-yr periods if the following tests are successfully repeated within the 6-mo period before expiration.

(-a) Two production sample pin devices of a size and capacity within the capability of an ASME accepted laboratory shall be selected by a representative of an ASME designated organization.

(-b) Operational and capacity tests shall be conducted in the presence of a representative from an ASME designated organization at an ASME accepted laboratory. The pin device Manufacturer shall be notified of the time of the test and may have representatives present to witness the test.

(-c) Should any pin device fail to meet or exceed performance requirements (set pressure and certified capacity or flow resistance) of UG-127, the test shall be repeated at the rate of two replacement devices, selected and tested in accordance with (-a) and (-b) above for each device that failed.

(-d) Failure of any of the replacement devices to meet the performance requirements of this Division shall be cause for revocation within 60 days of the authorization to use the Certification Mark on that particular type of pin device design. During this period, the Manufacturer shall demonstrate the cause of such deficiency and the action taken to guard against future occurrence, and the requirement of (c)(3) above shall apply.

(d) Production Testing by Manufacturers

(1) Each device to which the Certification Mark is to be applied shall be subjected to the following tests by the Manufacturer. The Manufacturer shall have a documented program for the application, calibration, and maintenance of gages and instruments used during these tests.

(2) Hydrostatic Pressure Test

(-a) The pressure containing parts of each pin device shall be hydrostatically tested at a pressure at least 1.5 times the design pressure of the parts. Parts meeting the following criteria shall be exempt from hydrostatic testing:

(-1) the applied stress under hydrostatic test conditions does not exceed 50% of the allowable stress

(-2) the part is not cast or welded

(-b) Testing may be performed pneumatically at a pressure of 1.25 times the design pressure of the part. Pneumatic testing can be hazardous; it is therefore recommended that special precautions be taken when conducting a pneumatic test.

(-c) Testing may be done in the component or assembled condition.

(-d) When the device is designed for discharging directly to atmosphere, the device components downstream of the pressure containing element are exempt from hydrostatic testing.

(-e) Device components downstream of the pressure containing element and fully contain within the device are exempt from hydrostatic testing.

Provided by IHS under license with ASME
No reproduction or networking permitted without license from IHS
Licensee=Chevron Phillips Chemical Co LP/5956674001
Not for Resale, 11/09/2014 20:41:36 MST

(-f) These tests shall be conducted after all machining and welding operations on the parts have been completed.

(-g) There shall be no visible sign of leakage.

(3) The secondary pressure zone exceeding NPS 1 (DN 25) inlet size, when such devices are designed for discharge to a closed system, shall be tested with air or other gas at a pressure of at least 30 psi (200 kPa). There shall be no visible signs of leakage.[63]

(4) Set pressure qualification of a pin device shall be accomplished by completing set pressure testing in the device. At least two pins from the same lot shall be tested in the device. For single use permanently assembled pin devices having the same specification and configuration, to be supplied as a single lot, at least two completed devices shall be tested. The tests shall be conducted at the pin temperature or according to (5)(-d) below. The tests shall be within the tolerance defined in UG-127(b)(1).

(5) For all pin lot qualification testing:

(-a) Sample pins selected from each lot shall be made from the same material, heat and of the same critical dimension as those to be used in service.

(-b) Test results shall be applicable only to pins used in pin devices supplied by the device Manufacturer.

(-c) At least two pins or two single-use permanently assembled pin devices from the same lot shall be tested.

(-d) Tests shall be conducted at ambient temperature or the pin temperature (as agreed between device Manufacturer and user).[64] The manufacturer shall establish a temperature range for which testing at ambient temperature is applicable. For qualification of a pin lot at a single pin temperature at least two pin tests shall be conducted at the specified pin temperature.

(-e) Pin testing shall be completed in the actual pin device(s) or using one or more of methods (-1) or (-2) below.

(-1) Lot qualification testing shall be done in a test pin device of the same form and pressure area dimensions as that in which the pins will be used. At least two set pressure tests shall be completed at the pin temperature in accordance with (-d). The tests shall be within the tolerance defined in UG-127(b)(1).

(-2) The set pressure of a lot of pins for a pin device may be verified by a characterization test that determines the activation loading (force) under device opening conditions. The following characterization test conditions shall apply:

(+a) The pin retaining arrangement shall be the same for all characterization tests applied to a pin device.

(+b) Using pins from the same lot as tested under (4) or (-1), at least two pins shall be tested to determine the activation force that correlates to the pin device tested set pressure. The average of these tests defines the base force that shall be used to permit further pin qualification using characterization rather than pin device set pressure testing. The following shall be used to define a Corrected Base Force that corresponds to the nominal set pressure of the pin device:

$$\text{Corrected Base Force} = \frac{(\text{Nominal Set Pressure}) \times (\text{Average Base Force})}{\text{Average Tested Set Pressure per UG-138(d)(4) or UG-138(d)(5)(-e)(-1)}}$$

(+c) The qualification of additional pin quantities or lots may use this Corrected Base Force in place of pin device set pressure testing provided the pins function at activation forces that are within ±3% of the Corrected Base Force for set pressures above 40 psi (275 kPa). For set pressures below 40 psi (275 kPa), the tested components shall function at activation forces within a plus/minus tolerance of the Corrected Base Force determined as follows:

$$\frac{[40\ \text{psi}\ (275\ \text{kPa})]}{[\text{corresponding nominal set pressure}\ (\text{psi or kPa})]} \times 3\% = \pm\ \%\ \text{tolerance for actual test forces}$$

(e) Design Requirements. At the time of the inspection in accordance with (c)(3) above, a representative from an ASME designated organization has the authority to review the design for conformity with the requirements of (a) and (b) and to reject or require modification of designs that do not conform, prior to capacity testing.

(f) Welding and Other Requirements. All welding, brazing, heat treatment, and nondestructive examination used in the construction of bodies, bonnets, and yokes shall be performed in accordance with the applicable requirements of this Division.

UG-140 OVERPRESSURE PROTECTION BY SYSTEM DESIGN (13)

(a) A pressure vessel does not require a pressure relief device if the pressure is self-limiting (e.g., the maximum discharge pressure of a pump or compressor), and this pressure is less than or equal to the MAWP of the vessel at the coincident temperature and the following conditions are met:

(1) The decision to limit the pressure by system design is the responsibility of the user. The user shall request that the Manufacturer's data report state that overpressure protection is provided by system design per (a).

(2) The user shall conduct a detailed analysis to identify and examine all potential overpressure scenarios. The "Causes of Overpressure" described in ANSI/API Standard 521, Pressure-Relieving and Depressuring Systems, shall be considered. Other standards or recommended practices that are more appropriate to the specific application may also be considered. A multidisciplinary team experienced in methods such as hazards and operability analysis

Provided by IHS under license with ASME
No reproduction or networking permitted without license from IHS
Licensee=Chevron Phillips Chemical Co LP/5956674001
Not for Resale, 11/09/2014 20:41:36 MST

(HazOp); failure modes, effects, and criticality analysis (FMECA); "what-if" analysis; or other equivalent methodology shall establish that there are no sources of pressure that can exceed the MAWP at the coincident temperature.

(3) The results of the analysis shall be documented and signed by the individual in responsible charge of the management of the operation of the vessel. This documentation shall include as a minimum the following:

(-a) detailed process and instrument flow diagrams (P&IDs), showing all pertinent elements of the system associated with the vessel

(-b) a description of all operating and upset scenarios, including scenarios involving fire and those that result from operator error, and equipment and/or instrumentation malfunctions

(-c) an analysis showing the maximum coincident pressure and temperature that can result from each of the scenarios listed in item (-b) above does not exceed the MAWP at that temperature

(b) If the pressure is not self-limiting, a pressure vessel may be protected from overpressure by system design or by a combination of overpressure by system design and pressure relief devices, if the following conditions are met. The rules below are not intended to allow for normal operation above the MAWP at the coincident temperature.

(1) The vessel is not exclusively in air, water, or steam service unless these services are critical to preventing the release of fluids that may result in safety or environmental concerns.

(2) The decision to limit the overpressure by system design is the responsibility of the user. The user shall request that the Manufacturer's data report state that overpressure protection is provided by system design per (b) if no pressure relief device compliant with UG-125 through UG-138 is to be installed. If no pressure relief device is to be installed, acceptance of the jurisdiction may be required.

(3) The user shall conduct a detailed analysis to identify and examine all scenarios that could result in an overpressure condition and magnitude of the overpressure. The "Causes of Overpressure" as described in ANSI/API Standard 521, Pressure-Relieving and Depressuring Systems, shall be considered. Other standards or recommended practices that are more appropriate to the specific application may also be considered. A multidisciplinary team experienced in methods such as hazards and operability analysis (HazOp); failure modes, effects, and criticality analysis (FMECA); "what-if" analysis; or other equivalent methodology shall conduct the analysis.

(4) The overpressure scenario shall be readily apparent so that operators or protective instrumentation will take corrective action to prevent operation above the MAWP at the coincident temperature.

(5) There shall be no credible overpressure scenario in which the pressure exceeds 116% of the MAWP times the ratio of the allowable stress value at the temperature of the overpressure scenario to the allowable stress value at the design temperature. The overpressure limit shall not exceed the test pressure. Credible events or scenario analysis as described in WRC Bulletin 498 "Guidance on the Application of Code Case 2211 — Overpressure Protection by Systems Design" shall be considered.

(6) The results of the analysis shall be documented and signed by the individual in responsible charge of the management of the operation of the vessel. This documentation shall include as a minimum the following:

(-a) detailed process and instrument flow diagrams (P&IDs), showing all pertinent elements of the system associated with the vessel

(-b) a description of all operating and upset scenarios, including those involving fire and those that result from operator error, and equipment and/or instrumentation malfunctions

(-c) a detailed description of any safety critical instrumentation used to limit the system pressure, including the identification of all truly independent redundancies and a reliability evaluation (qualitative or quantitative) of the overall safety system

(-d) an analysis showing the maximum pressure that can result from each of the scenarios

Provided by IHS under license with ASME
No reproduction or networking permitted without license from IHS
Licensee=Chevron Phillips Chemical Co LP/5956674001
Not for Resale, 11/09/2014 20:41:36 MST

SUBSECTION B
REQUIREMENTS PERTAINING TO METHODS OF FABRICATION OF PRESSURE VESSELS

PART UW
REQUIREMENTS FOR PRESSURE VESSELS FABRICATED BY WELDING

GENERAL

UW-1 SCOPE

The rules in Part UW are applicable to pressure vessels and vessel parts that are fabricated by welding and shall be used in conjunction with the general requirements in Subsection A, and with the specific requirements in Subsection C that pertain to the class of material used.

(13) #### UW-2 SERVICE RESTRICTIONS

(a) When vessels are to contain lethal[65] substances, either liquid or gaseous, all butt welded joints shall be fully radiographed, except under the provisions of (2) and (3) below, and UW-11(a)(4). ERW pipe or tube is not permitted to be used as a shell or nozzle in lethal service applications. When fabricated of carbon or low alloy steel, such vessels shall be postweld heat treated. When a vessel is to contain fluids of such a nature that a very small amount mixed or unmixed with air is dangerous to life when inhaled, it shall be the responsibility of the user and/or his designated agent to determine if it is lethal. If determined as lethal, the user and/or his designated agent [see U-2(a)] shall so advise the designer and/or Manufacturer. It shall be the responsibility of the Manufacturer to comply with the applicable Code provisions (see UCI-2 and UCD-2).

(1) The joints of various categories (see UW-3) shall be as follows:

(-a) Except for welded tubes and pipes internal to heat exchanger shells, all joints of Category A shall be Type No. (1) of Table UW-12.

(-b) All joints of Categories B and C shall be Type No. (1) or No. (2) of Table UW-12.

(-c) Category C joints for lap joint stub ends shall be as follows:

(-1) The finished stub end shall be attached to its adjacent shell with a Type No. (1) or Type No. (2) joint of Table UW-12. The finished stub end can be made from a forging or can be machined from plate material. [See UW-13(g).]

(-2) The lap joint stub end shall be fabricated as follows:

(+a) The weld is made in two steps as shown in Figure UW-13.5.

(+b) Before making weld No. 2, weld No. 1 is examined by full radiography in accordance with UW-51, regardless of size. The weld and fusion between the weld buildup and neck is examined by ultrasonics in accordance with Mandatory Appendix 12.

(+c) Weld No. 2 is examined by full radiography in accordance with UW-51.

(-3) The finished stub end may either conform to ASME B16.9 dimensional requirements or be made to a non-standard size, provided all requirements of this Division are met.

(-d) All joints of Category D shall be full penetration welds extending through the entire thickness of the vessel wall or nozzle wall.

(2) Radiographic examination of the welded seam in exchanger tubes and pipes, to a material specification permitted by this Division, which are butt welded without the addition of filler metal may be waived, provided the tube or pipe is totally enclosed within a shell of a vessel which meets the requirements of (a).

(3) If only one side of a heat exchanger contains a lethal substance, the other side need not be built to the rules for a vessel in lethal service if:

(-a) exchanger tubes are seamless; or

--`,,,``,,``,,,

(-b) exchanger tubes conform to a tube specification permitted by this Division, are butt welded without addition of filler metal, and receive in lieu of full radiography all of the following nondestructive testing and examination:

(-1) hydrotest in accordance with the applicable specification;

(-2) pneumatic test under water in accordance with the applicable material specification, or if not specified, in accordance with SA-688;

(-3) ultrasonic or nondestructive electric examination of sufficient sensitivity to detect surface calibration notches in any direction in accordance with SA-557, S1 or S3.

No improvement in longitudinal joint efficiency is permitted because of the additional nondestructive tests.

(b) When vessels are to operate below certain temperatures designated by Part UCS (see UCS-68), or impact tests of the material or weld metal are required by Part UHA, the joints of various categories (see UW-3) shall be as follows:

(1) All joints of Category A shall be Type No. (1) of Table UW-12 except that for austenitic chromium–nickel stainless steel Types 304, 304L, 316, 316L, 321, and 347, which satisfy the requirements of UHA-51(f), Type No. (2) joints may be used.

(2) All joints of Category B shall be Type No. (1) or No. (2) of Table UW-12.

(3) All joints of Category C shall be full penetration welds extending through the entire section at the joint.

(4) All joints of Category D shall be full penetration welds extending through the entire thickness of the vessel wall or nozzle wall except that partial penetration welds may be used between materials listed in Table UHA-23 as follows:

(-a) for materials shown in UHA-51(d)(1)(-a) and UHA-51(d)(2)(-a) at minimum design metal temperatures (MDMTs) of −320°F (−196°C) and warmer;

(-b) for materials shown in UHA-51(d)(1)(-b) and UHA-51(d)(2)(-b) at MDMTs of −50°F (−45°C) and warmer.

(c) Unfired steam boilers with design pressures exceeding 50 psi (343 kPa)shall satisfy all of the following requirements:

(1) All joints of Category A (see UW-3) shall be in accordance with Type No. (1) of Table UW-12, and all joints in Category B shall be in accordance with Type No. (1) or No. (2) of Table UW-12.

(2) All butt welded joints shall be fully radiographed except under the provisions of UW-11(a)(4) and except for ERW pipe weld seams. When using ERW pipe as the shell of an unfired steam boiler, its thickness shall not exceed ½ in. (13 mm), its diameter shall not exceed 24 in. (DN 600), and the ERW weld shall be completed using high frequency (HFI) welding.

(3) When fabricated of carbon or low-alloy steel, such vessels shall be postweld heat treated.

(4) See also U-1(g), UG-16(b), and UG-125(b).

(d) Pressure vessels or parts subject to direct firing [see U-1(h)] may be constructed in accordance with all applicable rules of this Division and shall meet the following requirements:

(1) All welded joints in Category A (see UW-3) shall be in accordance with Type No. (1) of Table UW-12, and all welded joints in Category B, when the thickness exceeds $^5/_8$ in. (16 mm), shall be in accordance with Type No. (1) or No. (2) of Table UW-12. No welded joints of Type No. (3) of Table UW-12 are permitted for either Category A or B joints in any thickness.

(2) When the thickness at welded joints exceeds $^5/_8$ in. (16 mm) for carbon (P-No. 1) steels and for all thicknesses for low alloy steels (other than P-No. 1 steels), postweld heat treatment is required. For all other material and in any thickness, the requirements for postweld heat treatment shall be in conformance with the applicable Subsections of this Division. See also U-1(g), UG-16(b), and UCS-56.

(3) The user, his designated agent, or the Manufacturer of the vessel shall make available to the Inspector the calculations used to determine the design temperature of the vessel. The provisions of UG-20 shall apply except that pressure parts in vessel areas having joints other than Type Nos. (1) and (2) of Table UW-12, subject to direct radiation and/or the products of combustion, shall be designed for temperatures not less than the maximum surface metal temperatures expected under operating conditions.

UW-3 WELDED JOINT CATEGORY (13)

The term "Category" as used herein defines the location of a joint in a vessel, but not the type of joint. The "Categories" established by this paragraph are for use elsewhere in this Division in specifying special requirements regarding joint type and degree of inspection for certain welded pressure joints. Since these special requirements, which are based on service, material, and thickness, do not apply to every welded joint, only those joints to which special requirements apply are included in the categories. The special requirements will apply to joints of a given category only when specifically so stated. The joints included in each category are designated as joints of Categories A, B, C, and D below. Figure UW-3 illustrates typical joint locations included in each category. Welded joints not defined by the category designations include but are not limited to Figure 5-1, illustration (a) corner joints, Figure 9-5 jacket closure-to-shell welds, and Figure 26-13 fillet welds. Unless limited elsewhere in this Division, the UW-9(a) permissible weld joint types may be used with welded joints that are not assigned a category.

(a) Category A. Longitudinal and spiral welded joints within the main shell, communicating chambers,[66] transitions in diameter, or nozzles; any welded joint within a

Provided by IHS under license with ASME
No reproduction or networking permitted without license from IHS
Licensee=Chevron Phillips Chemical Co LP/5956674001
Not for Resale, 11/09/2014 20:41:36 MST

Figure UW-3
Illustration of Welded Joint Locations Typical of Categories A, B, C, and D

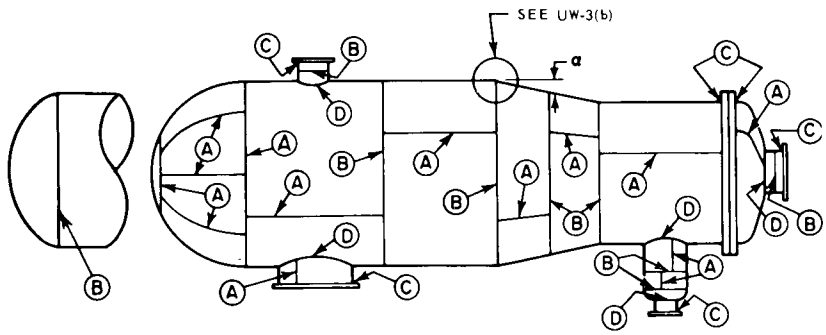

sphere, within a formed or flat head, or within the side plates[67] of a flat-sided vessel; circumferential welded joints connecting hemispherical heads to main shells, to transitions in diameters, to nozzles, or to communicating chambers.[66]

(b) Category B. Circumferential welded joints within the main shell, communicating chambers,[66] nozzles, or transitions in diameter including joints between the transition and a cylinder at either the large or small end; circumferential welded joints connecting formed heads other than hemispherical to main shells, to transitions in diameter, to nozzles, or to communicating chambers.[66] Circumferential welded joints are butt joints if the half-apex angle, α, is equal to or less than 30 deg and angle joints when α is greater than 30 deg. (See Figure UW-3.)

(c) Category C. Welded joints connecting flanges, Van Stone laps, tubesheets, or flat heads to main shell, to formed heads, to transitions in diameter, to nozzles, or to communicating chambers[66] any welded joint connecting one side plate[67] to another side plate of a flat-sided vessel.

(d) Category D. Welded joints connecting communicating chambers[66] or nozzles to main shells, to spheres, to transitions in diameter, to heads, or to flat-sided vessels, and those joints connecting nozzles to communicating chambers[66] (for nozzles at the small end of a transition in diameter, see Category B).

MATERIALS

UW-5 GENERAL

(a) Pressure Parts. Materials used in the construction of welded pressure vessels shall comply with the requirements for materials given in UG-4 through UG-15, and shall be proven of weldable quality. Satisfactory qualification of the welding procedure under Section IX is considered as proof.

(b) Nonpressure Parts. Materials used for nonpressure parts which are welded to the pressure vessel shall be proven of weldable quality as described below.

(1) For material identified in accordance with UG-10, UG-11, UG-15, or UG-93, satisfactory qualification of the welding procedure under Section IX is considered as proof of weldable quality.

(2) For materials not identifiable in accordance with UG-10, UG-11, UG-15, or UG-93, but identifiable as to nominal chemical analysis and mechanical properties, S-Number under Section IX, QW/QB-422, or to a material specification not permitted in this Division, satisfactory qualification of the welding procedure under Section IX is considered as proof of weldable quality. For materials identified by S-Numbers, the provisions of Section IX, QW/QB-422 may be followed for welding procedure qualification. The welding procedure need only be qualified once for a given nominal chemical analysis and mechanical properties or material specification not permitted in this Division.

(3) Material which cannot be identified may be proved to be of weldable quality by preparing a butt-joint test coupon from each piece of nonidentified material to be used. Guided bend test specimens made from the test coupon shall pass the tests specified in QW-451 of Section IX.

(c) Two materials of different specifications may be joined by welding provided the requirements of Section IX, QW-250, are met.

(d) Materials joined by the electroslag and electrogas welding processes shall be limited to ferritic steels and the following austenitic steels which are welded to produce a ferrite containing weld metal: SA-240 Types 304, 304L, 316, and 316L; SA-182 F304, F304L, F316, and F316L; SA-351 CF3, CF3A, CF3M, CF8, CF8A, and CF8M.

(e) Welding of SA-841 by the electroslag or electrogas welding process is prohibited.

Provided by IHS under license with ASME
No reproduction or networking permitted without license from IHS
Licensee=Chevron Phillips Chemical Co LP/5956674001
Not for Resale, 11/09/2014 20:41:36 MST

(f) Materials joined by the inertia and continuous drive friction welding processes shall be limited to materials assigned P-Numbers in Section IX and shall not include rimmed or semikilled steel.

(13) UW-6 NONMANDATORY GUIDELINES FOR WELDING MATERIAL SELECTIONS

The Manufacturer is responsible for the selection of welding consumables and welding processes. These nonmandatory guidelines for welding material selections are intended to achieve suitable vessel performance for the intended service conditions, but may not be appropriate for every condition in the absence of specific technical reasons to do otherwise. The user or his designated agent should inform the Manufacturer when a specific filler metal selection is necessary to achieve satisfactory vessel performance for the intended service conditions.

(a) The tensile strength of the weld should equal or exceed that of the base metals to be joined. When base metals of different strengths are to be joined by welding, the tensile strength of the weld metal should equal or exceed that of the weaker of the two base metals.

(b) When considerations such as corrosion resistance, toughness, or fatigue resistance require selecting welding consumables or processes that produce weld joints of a lesser strength than either of the base metals, the strength of the resulting joint should be reviewed and the design adjusted as appropriate for the intended service conditions.

(c) When welding materials of like composition, the nominal composition of the weld metal should be analogous to the nominal composition of the base metal, except when creep or corrosion performance is an overriding consideration.

(d) When welding materials of different nominal composition, the nominal composition of the weld metal should be analogous to one of the base metals, or be of an acceptable alternative composition.

(e) When joining nonferrous base metals, filler metal selections should follow the recommendations of the manufacturer of the nonferrous metal or applicable industry associations.

DESIGN

UW-8 GENERAL

The rules in the following paragraphs apply specifically to the design of pressure vessels and vessel parts that are fabricated by welding and shall be used in conjunction with the general requirements for *Design* in Subsection A, and with the specific requirements for *Design* in Subsection C that pertain to the class of material used.

UW-9 DESIGN OF WELDED JOINTS

(a) Permissible Types. The types of welded joints permitted in arc and gas welding processes are listed in Table UW-12, together with the limiting plate thickness permitted for each type. Butt type joints only are permitted with pressure welding processes [see UW-27(b)].

(b) Welding Grooves. The dimensions and shape of the edges to be joined shall be such as to permit complete fusion and complete joint penetration. Qualification of the welding procedure, as required in UW-28, is acceptable as proof that the welding groove is satisfactory.

(c) Tapered Transitions. A tapered transition having a length not less than *three* times the offset between the adjacent surfaces of abutting sections, as shown in Figure UW-9, shall be provided at joints between sections that differ in thickness by more than one-fourth of the thickness of the thinner section, or by more than $^1/_8$ in. (3 mm), whichever is less. The transition may be formed by any process that will provide a uniform taper. When the transition is formed by removing material from the thicker section, the minimum thickness of that section, after the material is removed, shall not be less than that required by UG-23(c). When the transition is formed by adding additional weld metal beyond what would otherwise be the edge of the weld, such additional weld metal buildup shall be subject to the requirements of UW-42. The butt weld may be partly or entirely in the tapered section or adjacent to it. This paragraph also applies when there is a reduction in thickness within a spherical shell or cylindrical shell course and to a taper at a Category A joint within a formed head. Provisions for tapers at circumferential, butt welded joints connecting formed heads to main shells are contained in UW-13.

(d) Except when the longitudinal joints are radiographed 4 in. (100 mm) each side of each circumferential welded intersection, vessels made up of two or more courses shall have the centers of the welded longitudinal joints of adjacent courses staggered or separated by a distance of at least five times the thickness of the thicker plate.

(e) Lap Joints. For lapped joints, the surface overlap shall be not less than four times the thickness of the inner plate except as otherwise provided for heads in UW-13.

(f) Welded Joints Subject to Bending Stresses. Except where specific details are permitted in other paragraphs, fillet welds shall be added where necessary to reduce stress concentration. Corner joints, with fillet welds only, shall not be used unless the plates forming the corner are properly supported independently of such welds. (See UW-18.)

(g) Minimum Weld Sizes. Sizing of fillet and partial penetration welds shall take into consideration the loading conditions in UG-22 but shall not be less than the minimum sizes specified elsewhere in this Division.

Provided by IHS under license with ASME
No reproduction or networking permitted without license from IHS
Licensee=Chevron Phillips Chemical Co LP/5956674001
Not for Resale, 11/09/2014 20:41:36 MST

Figure UW-9
Butt Welding of Plates of Unequal Thickness

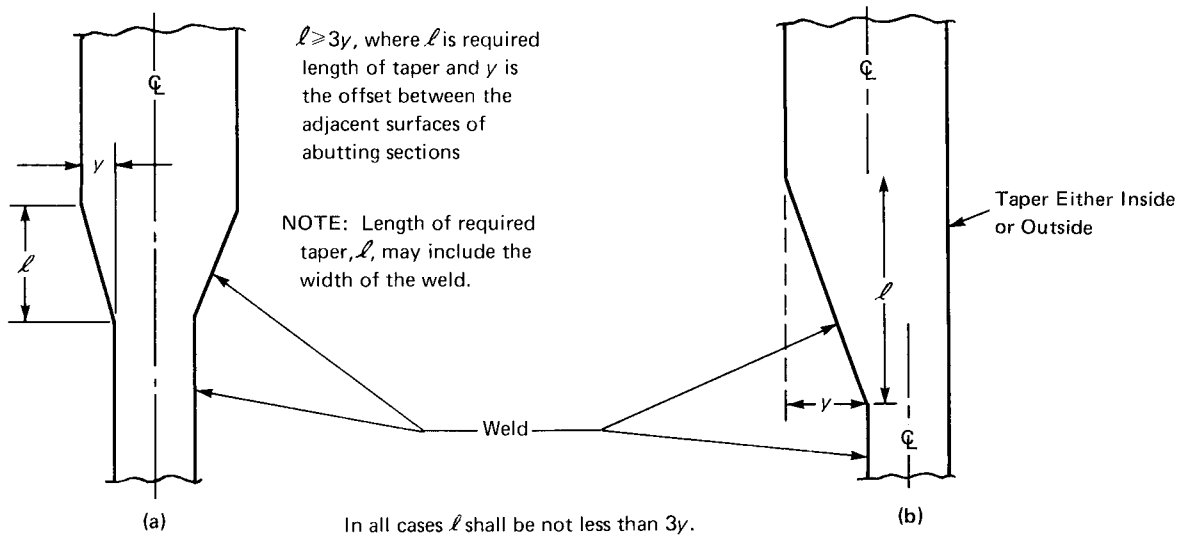

UW-10 POSTWELD HEAT TREATMENT

Pressure vessels and pressure vessel parts shall be postweld heat treated as prescribed in UW-40 when postweld heat treatment is required in the applicable part of Subsection C.

UW-11 RADIOGRAPHIC AND ULTRASONIC EXAMINATION

(a) Full Radiography. The following welded joints shall be examined radiographically for their full length in the manner prescribed in UW-51:

(1) all butt welds in the shell and heads of vessels used to contain lethal substances [see UW-2(a)];

(2) all butt welds in the shell and heads of vessels in which the nominal thickness [see (g) below] at the welded joint exceeds 1½ in. (38 mm), or exceeds the lesser thicknesses prescribed in UCS-57, UNF-57, UHA-33, UCL-35, or UCL-36 for the materials covered therein, or as otherwise prescribed in UHT-57, ULW-51, ULW-52(d), ULW-54, or ULT-57;

(3) all butt welds in the shell and heads of unfired steam boilers having design pressures

(-a) exceeding 50 psi (350 kPa) [see UW-2(c)];

(-b) not exceeding 50 psi (350 kPa) [see UW-2(c)] but with nominal thickness at the welded joint exceeding the thickness specified in (2) above;

(4) all butt welds in nozzles, communicating chambers, etc., with the nominal thickness at the welded joint that exceeds the thickness in (2) above or attached to the shell or heads of vessels under (1), (2), or (3) above that are required to be fully radiographed; however, except as required by UHT-57(a), Categories B and C butt welds in nozzles and communicating chambers that neither exceed NPS 10 (DN 250) nor 1⅛ in. (29 mm) wall thickness do not require any radiographic examination;

(5) all Category A and D butt welds in the shell and heads of vessels where the design of the joint or part is based on a joint efficiency permitted by UW-12(a), in which case:

(-a) Category A and B welds connecting the shell or heads of vessels shall be of Type No. (1) or Type No. (2) of Table UW-12;

(-b) Category B or C butt welds [but not including those in nozzles and communicating chambers except as required in (4) above] which intersect the Category A butt welds in the shell or heads of vessels or connect seamless vessel shell or heads shall, as a minimum, meet the requirements for spot radiography in accordance with UW-52. Spot radiographs required by this paragraph shall not be used to satisfy the spot radiography rules as applied to any other weld increment.

(6) all butt welds joined by electrogas welding with any single pass greater than 1½ in. (38 mm) and all butt welds joined by electroslag welding;

(7) ultrasonic examination in accordance with UW-53 may be substituted for radiography for the final closure seam of a pressure vessel if the construction of the vessel does not permit interpretable radiographs in accordance with Code requirements. The absence of suitable radiographic equipment shall not be justification for such substitution.

Provided by IHS under license with ASME
No reproduction or networking permitted without license from IHS
Licensee=Chevron Phillips Chemical Co LP/5956674001
Not for Resale, 11/09/2014 20:41:36 MST

(8) exemptions from radiographic examination for certain welds in nozzles and communicating chambers as described in (2), (4), and (5) above take precedence over the radiographic requirements of Subsection C of this Division.

(b) Spot Radiography. Except when spot radiography is required for Category B or C butt welds by (a)(5)(-b) above, butt welded joints made in accordance with Type No. (1) or (2) of Table UW-12 which are not required to be fully radiographed by (a) above, may be examined by spot radiography. Spot radiography shall be in accordance with UW-52. If spot radiography is specified for the entire vessel, radiographic examination is not required of Category B and C butt welds in nozzles and communicating chambers that exceed neither NPS 10 (DN 250) nor $1\frac{1}{8}$ in. (29 mm) wall thickness.

NOTE: This requirement specifies spot radiography for butt welds of Type No. (1) or No. (2) that are used in a vessel, but does not preclude the use of fillet and/or corner welds permitted by other paragraphs, such as for nozzle and manhole attachments, welded stays, flat heads, etc., which need not be spot radiographed.

(c) No Radiography. Except as required in (a) above, no radiographic examination of welded joints is required when the vessel or vessel part is designed for external pressure only, or when the joint design complies with UW-12(c).

(d) Electrogas welds in ferritic materials with any single pass greater that $1\frac{1}{2}$ in. (38 mm) and electroslag welds in ferritic materials shall be ultrasonically examined throughout their entire length in accordance with the requirements of Mandatory Appendix 12. This ultrasonic examination shall be done following the grain refining (austenitizing) heat treatment or postweld heat treatment.

(e) In addition to the requirements in (a) and (b) above, all welds made by the electron beam process shall be ultrasonically examined for their entire length in accordance with the requirements of Mandatory Appendix 12.

(f) When radiography is required for a welded joint in accordance with (a) and (b) above, and the weld is made by the inertia and continuous drive friction welding processes, the welded joints shall also be ultrasonically examined for their entire length in accordance with Mandatory Appendix 12.

(g) For radiographic and ultrasonic examination of butt welds, the definition of nominal thickness at the welded joint under consideration shall be the nominal thickness of the thinner of the two parts joined. Nominal thickness is defined in 3-2.

UW-12 JOINT EFFICIENCIES

Table UW-12 gives the joint efficiencies E to be used in the equations of this Division for joints completed by an arc or gas welding process. Except as required by UW-11(a)(5), a joint efficiency depends only on the type of joint and on the degree of examination of the joint and does not depend on the degree of examination of any other joint. The User or his designated agent [see U-2(a)] shall establish the type of joint and the degree of examination when the rules of this Division do not mandate specific requirements. Rules for determining the applicability of the efficiencies are found in the various paragraphs covering design equations [for example, see UG-24(a) and UG-27]. For further guidance, see Nonmandatory Appendix L.

(a) A value of E not greater than that given in column (a) of Table UW-12 shall be used in the design calculations for fully radiographed butt joints [see UW-11(a)], except that when the requirements of UW-11(a)(5) are not met, a value of E not greater than that given in column (b) of Table UW-12 shall be used.

(b) A value of E not greater than that given in column (b) of Table UW-12 shall be used in the design calculations for spot radiographed butt welded joints [see UW-11(b)].

(c) A value of E not greater than that given in column (c) of Table UW-12 shall be used in the design calculations for welded joints that are neither fully radiographed nor spot radiographed [see UW-11(c)].

(d) Seamless vessel sections or heads shall be considered equivalent to welded parts of the same geometry in which all Category A welds are Type No. 1. For calculations involving circumferential stress in seamless vessel sections or for thickness of seamless heads, E = 1.0 when the spot radiography requirements of UW-11(a)(5)(-b) are met. E = 0.85 when the spot radiography requirements of UW-11(a)(5)(-b) are not met, or when the Category A or B welds connecting seamless vessel sections or heads are Type No. 3, 4, 5, or 6 of Table UW-12.

(e) Welded pipe or tubing shall be treated in the same manner as seamless, but with allowable tensile stress taken from the welded product values of the stress tables, and the requirements of (d) applied.

(f) A value of E not greater than 0.80 may be used in the equations of this Division for joints completed by any of the pressure welding processes given in UW-27(a)(2), except for electric resistance welding, provided the welding process used is permitted by the rules in the applicable parts of Subsection C for the material being welded. The quality of such welds used in vessels or parts of vessels shall be proved as follows: Test specimens shall be representative of the production welding on each vessel. They may be removed from the shell itself or from a prolongation of the shell including the longitudinal joint, or, in the case of vessels not containing a longitudinal joint, from a test plate of the same material and thickness as the vessel and welded in accordance with the same procedure. One reduced-section tension test and two side-bend tests shall be made in accordance with, and shall meet the requirements of QW-150 and QW-160, Section IX.

UW-13 ATTACHMENT DETAILS

(a) Definitions

t_h = nominal thickness of head

Provided by IHS under license with ASME
No reproduction or networking permitted without license from IHS
Licensee=Chevron Phillips Chemical Co LP/5956674001
Not for Resale, 11/09/2014 20:41:36 MST

Provided by IHS under license with ASME
No reproduction or networking permitted without license from IHS

Table UW-12
Maximum Allowable Joint Efficiencies for Arc and Gas Welded Joints

Type No.	Joint Description	Limitations	Joint Category	Degree of Radiographic Examination: (a) Full [Note (1)]	(b) Spot [Note (2)]	(c) None
(1)	Butt joints as attained by double-welding or by other means which will obtain the same quality of deposited weld metal on the inside and outside weld surfaces to agree with the requirements of UW-35. Welds using metal backing strips which remain in place are excluded.	None	A, B, C & D	1.00	0.85	0.70
(2)	Single-welded butt joint with backing strip other than those included under (1)	*(a)* None except as in (b) below	A, B, C & D	0.90	0.80	0.65
		(b) Circumferential butt joints with one plate offset; see UW-13(b)(4) and Figure UW-13.1, sketch (i)	A, B & C	0.90	0.80	0.65
(3)	Single-welded butt joint without use of backing strip	Circumferential butt joints only, not over $^5/_8$ in. (16 mm) thick and not over 24 in. (600 mm) outside diameter	A, B & C	NA	NA	0.60
(4)	Double full fillet lap joint	*(a)* Longitudinal joints not over $^3/_8$ in. (10 mm) thick	A	NA	NA	0.55
		(b) Circumferential joints not over $^5/_8$ in. (16 mm) thick	B & C [Note (3)]	NA	NA	0.55
(5)	Single full fillet lap joints with plug welds conforming to UW-17	*(a)* Circumferential joints [Note (4)] for attachment of heads not over 24 in. (600 mm) outside diameter to shells not over $^1/_2$ in. (13 mm) thick	B	NA	NA	0.50
		(b) Circumferential joints for the attachment to shells of jackets not over $^5/_8$ in. (16 mm) in nominal thickness where the distance from the center of the plug weld to the edge of the plate is not less than $1^1/_2$ times the diameter of the hole for the plug.	C	NA	NA	0.50
(6)	Single full fillet lap joints without plug welds	*(a)* For the attachment of heads convex to pressure to shells not over $^5/_8$ in. (16 mm) required thickness, only with use of fillet weld on inside of shell; or	A & B	NA	NA	0.45
		(b) for attachment of heads having pressure on either side, to shells not over 24 in. (600 mm) inside diameter and not over $^1/_4$ in. (6 mm) required thickness with fillet weld on outside of head flange only	A & B	NA	NA	0.45
(7)	Corner joints, full penetration, partial penetration, and/or fillet welded	As limited by Figure UW-13.2 and Figure UW-16.1	C & D [Note (5)]	NA	NA	NA
(8)	Angle joints	Design per U-2(g) for Category B and C joints	B, C & D	NA	NA	NA

GENERAL NOTES:

(a) The single factor shown for each combination of joint category and degree of radiographic examination replaces both the stress reduction factor and the joint efficiency factor considerations previously used in this Division.

(b) E = 1.0 for butt joints in compression.

Licensee=Chevron Phillips Chemical Co LP/5956674001
Not for Resale, 11/09/2014 20:41:36 MST

Table UW-12
Maximum Allowable Joint Efficiencies for Arc and Gas Welded Joints (Cont'd)

NOTES:
(1) See UW-12(a) and UW-51.
(2) See UW-12(b) and UW-52.
(3) For Type No. 4 Category C joint, limitation not applicable for bolted flange connections.
(4) Joints attaching hemispherical heads to shells are excluded.
(5) There is no joint efficiency E in the design equations of this Division for Category C and D corner joints. When needed, a value of E not greater than 1.00 may be used.

Provided by IHS under license with ASME
No reproduction or networking permitted without license from IHS
Licensee=Chevron Phillips Chemical Co LP/5956674001
Not for Resale, 11/09/2014 20:41:36 MST
--`,,,``,,`,,```,,,,`,``,`,``,,`,,```-`-``,,`,,`,`,,`---

t_p = minimum distance from outside surface of flat head to edge of weld preparation measured as shown in Figure UW-13.2

t_s = nominal thickness of shell

(See UG-27, UG-28, UG-32, UG-34, and other paragraphs for additional definitions.)

(b) See below:

(1) Ellipsoidal, torispherical, and other types of formed heads shall be attached to the shell with a butt weld, or as illustrated in the applicable Figure UW-13.1 sketches (a), (b), (c), (d), and (i). The construction shown in sketch (e) may also be used for end heads when the thickness of the shell section of the vessel does not exceed $^5/_8$ in. (16 mm) [see also (c) below]. Limitations relative to the use of these attachments shall be as given in the sketches and related notes and in Table UW-12. Figure UW-13.1 sketches (f), (g), and (h) are examples of attachment methods which are not permissible.

(2) Formed heads, concave or convex to the pressure, shall have a skirt length not less than that shown in Figure UW-13.1, using the applicable sketch. Heads that are fitted inside or over a shell shall have a driving fit before welding.

(3) A tapered transition having a length not less than three times the offset between the adjacent surfaces of abutting sections as shown in Figure UW-13.1 sketches (j) and (k) shall be provided at joints between formed heads and shells that differ in thickness by more than one-fourth the thickness of the thinner section or by more than $^1/_8$ in. (3 mm), whichever is less. When a taper is required on any formed head thicker than the shell and intended for butt welded attachment [Figure UW-13.1 sketches (l) and (m)], the skirt shall be long enough so that the required length of taper does not extend beyond the tangent line. When the transition is formed by removing material from the thicker section, the minimum thickness of that section, after the material is removed, shall not be less than that required by UG-23(c). When the transition is formed by adding additional weld metal beyond what would otherwise be the edge of the weld, such additional weld metal buildup shall be subject to the requirements of UW-42. The centerline misalignment between shell and head shall be no greater than one-half the difference between the actual shell and head thickness, as illustrated in Figure UW-13.1 sketches (j), (k), (l), and (m).

(4) Shells and heads may be attached to shells or heads using a butt weld with one plate offset as shown in Figure UW-13.1 sketch (i). The weld bead may be deposited on the inside of the vessel only when the weld is accessible for inspection after the vessel is completed. The offset shall be smooth and symmetrical and shall not be machined or otherwise reduced in thickness. There shall be a uniform force fit with the mating section at the root of the weld. Should the offset contain a longitudinal joint, the following shall apply:

(-a) The longitudinal weld within the area of the offset shall be ground substantially flush with the parent metal prior to the offsetting operation.

(-b) The longitudinal weld from the edge of the plate through the offset shall be examined by the magnetic particle method after the offsetting operation. Cracks and cracklike defects are unacceptable and shall be repaired or removed.

(-c) As an acceptable alternative to magnetic particle examination or when magnetic particle methods are not feasible because of the nonmagnetic character of the weld deposit, a liquid penetrant method shall be used. Cracks and cracklike defects are unacceptable and shall be repaired or removed.

(5) Non-butt welded bolting flanges shall be attached to formed heads as illustrated in Figure 1-6.

(c) See below:

(1) Intermediate heads, without limit to thickness, of the type shown in Figure UW-13.1 sketch (e) may be used for all types of vessels provided that the outside diameter of the head skirt is a close fit inside the overlapping ends of the adjacent length of cylinder.

(2) The butt weld and fillet weld shall be designed to take shear based on $1^1/_2$ times the maximum differential pressure that can exist. The allowable stress value for the butt weld shall be 70% of the stress value for the vessel material and that of the fillet 55%. The area of the butt weld in shear is the width at the root of the weld times the length of weld. The area of the fillet weld is the minimum leg dimension times the length of weld. The fillet weld may be omitted if the construction precludes access to make the weld, and the vessel is in noncorrosive service.

(d) The requirements for the attachment of welded unstayed flat heads to shells are given in UG-34 and in (e) and (f) hereunder.

(e) When shells, heads, or other pressure parts are welded to a forged or rolled plate to form a corner joint, as in Figure UW-13.2, the joint shall meet the following requirements [see also UG-93(d)(3)]:

(1) On the cross section through the welded joint, the line of fusion between the weld metal and the forged or rolled plate being attached shall be projected on planes both parallel to and perpendicular to the surface of the plate being attached, in order to determine the dimensions a and b, respectively (see Figure UW-13.2).

(2) For flange rings of bolted flanged connections, the sum of a and b shall be not less than three times the nominal wall thickness of the abutting pressure part.

(3) For other components, the sum a and b shall be not less than two times the nominal wall thickness of the abutting pressure part. Examples of such components are flat heads, tube sheets with or without a projection having holes for a bolted connection, and the side plates of a rectangular vessel.

Provided by IHS under license with ASME
No reproduction or networking permitted without license from IHS
Licensee=Chevron Phillips Chemical Co LP/5956674001
Not for Resale, 11/09/2014 20:41:36 MST

Figure UW-13.1
Heads Attached to Shells

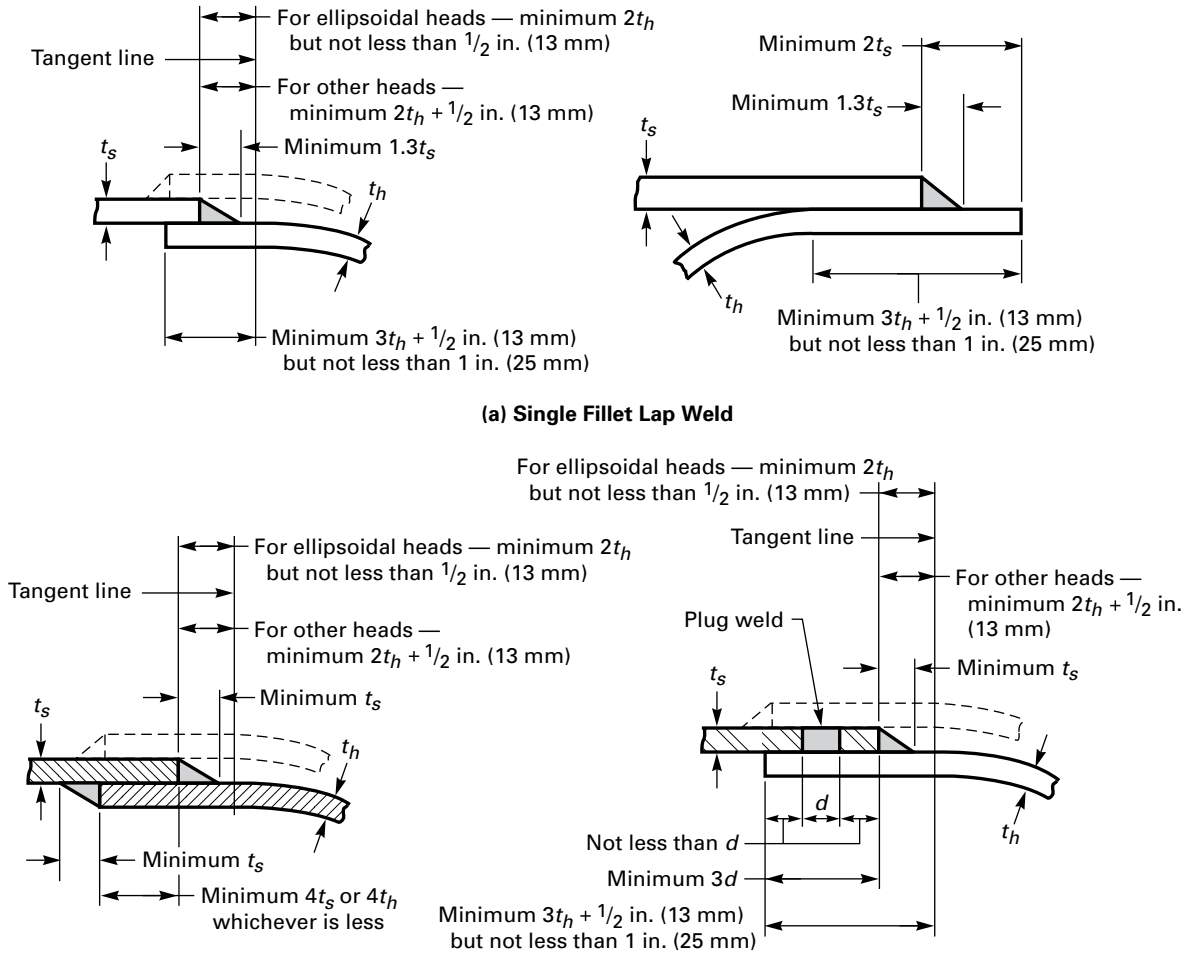

(a) Single Fillet Lap Weld

(b) Double Fillet Lap Weld

(c) Single Fillet Lap Weld With Plug Welds

Provided by IHS under license with ASME
No reproduction or networking permitted without license from IHS
Licensee=Chevron Phillips Chemical Co LP/5956674001
Not for Resale, 11/09/2014 20:41:36 MST

Figure UW-13.1
Heads Attached to Shells (Cont'd)

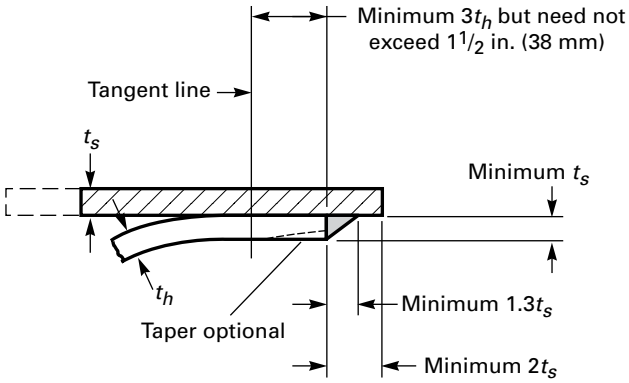

(d) Single Fillet Lap Weld

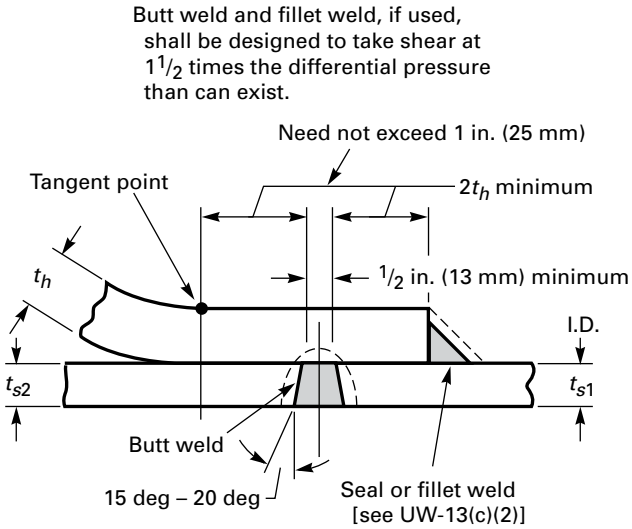

GENERAL NOTE: t_{s1} and t_{s2} may be different.

(e) Intermediate Head

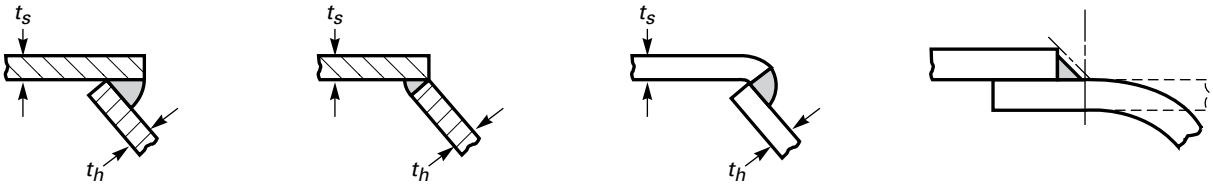

(f-1) **(f-2)** **(g)** **(h)**

GENERAL NOTE: Sketches (f-1), (f-2), (g), and (h) are not permissible.

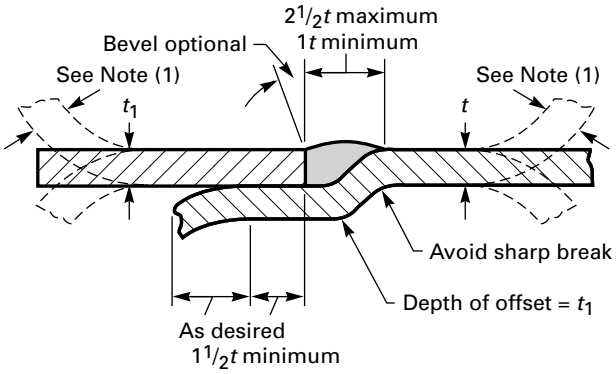

t or t_1 = $^5/_8$ maximum [see Note (2)]

NOTES:
(1) See UW-13(b)(4) for limitation when weld bead is deposited from inside.
(2) For joints connecting hemispherical heads to shells, the following shall apply:
(a) t or t_1 = $^3/_8$ in. (10 mm) maximum
(b) maximum difference in thickness between t or t_1 = $^3/_{32}$ in. (2.5 mm);
(c) use of this figure for joints connecting hemispherical heads to shells shall be noted in the "Remarks" part of the Data Report Form.

(i) Butt Weld With One Plate Edge Offset

Provided by IHS under license with ASME
No reproduction or networking permitted without license from IHS
Licensee=Chevron Phillips Chemical Co LP/5956674001
Not for Resale, 11/09/2014 20:41:36 MST

Figure UW-13.1
Heads Attached to Shells (Cont'd)

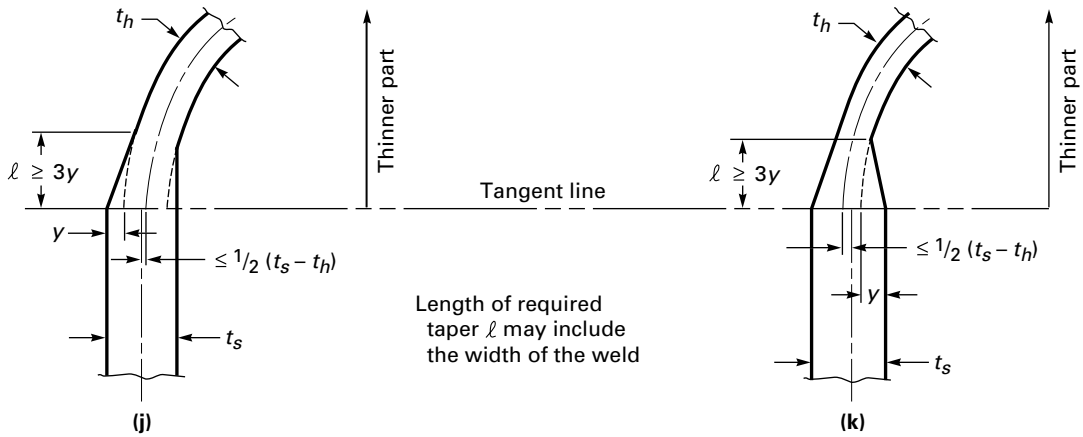

In all cases, the projected length of taper ℓ shall be not less than $3y$.
The shell plate centerline may be on either side of the head plate centerline.

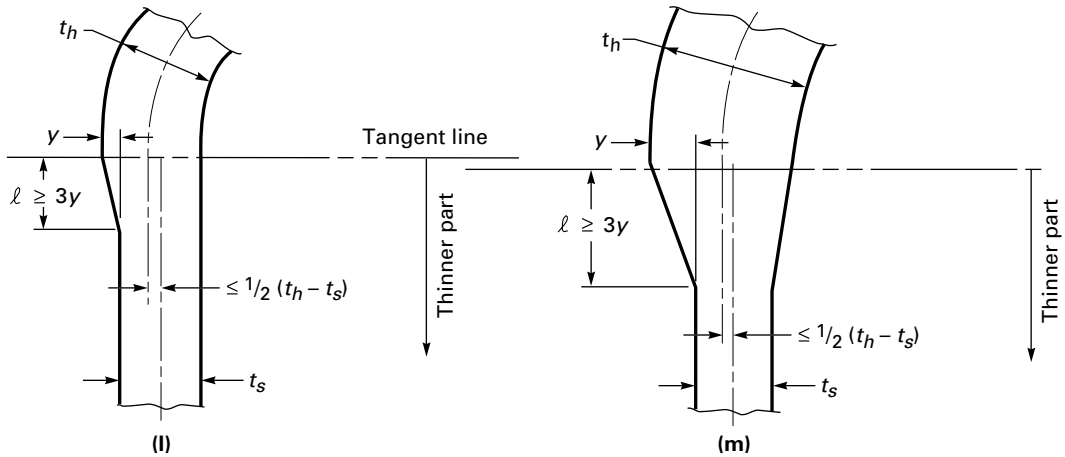

In all cases ℓ shall be not less than $3y$ when t_h exceeds t_s. Minimum length of skirt is $3t_h$ but need not exceed $1^1/_2$ in. (38 mm) except when necessary to provide required length of taper.
When t_h is equal to or less than $1.25t_s$, length of skirt shall be sufficient for any required taper.

Length of required taper ℓ may include the width of the weld. The shell plate centerline may be on either side of the head plate centerline.

GENERAL NOTE: See Table UW-12 for limitations.

--`,,,``,,,```,,,,`,```,,,,```-`-`,,`,,`-`-`,,`,,`,`,,`---
Provided by IHS under license with ASME
No reproduction or networking permitted without license from IHS
Licensee=Chevron Phillips Chemical Co LP/5956674001
Not for Resale, 11/09/2014 20:41:36 MST

Figure UW-13.2
Attachment of Pressure Parts to Flat Plates to Form a Corner Joint

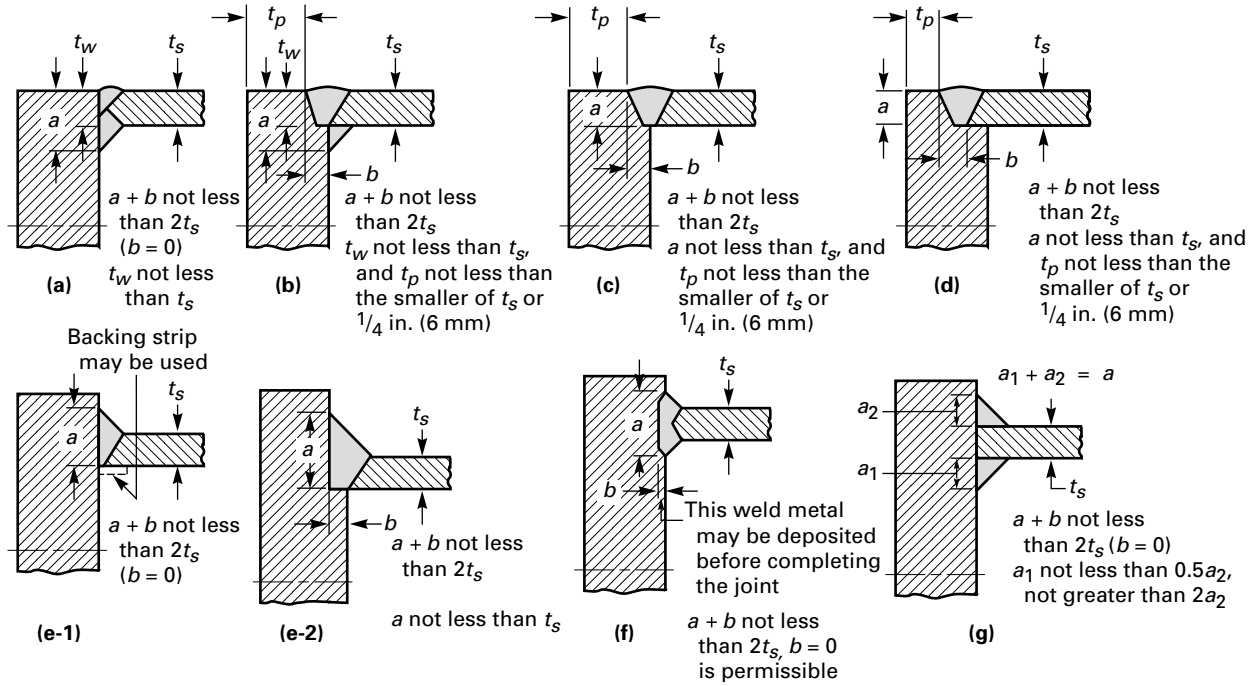

Typical Unstayed Flat Heads, Tubesheets Without a Bolting Flange, and Side Plates of Rectangular Vessels
For unstayed flat heads, see also UG-34

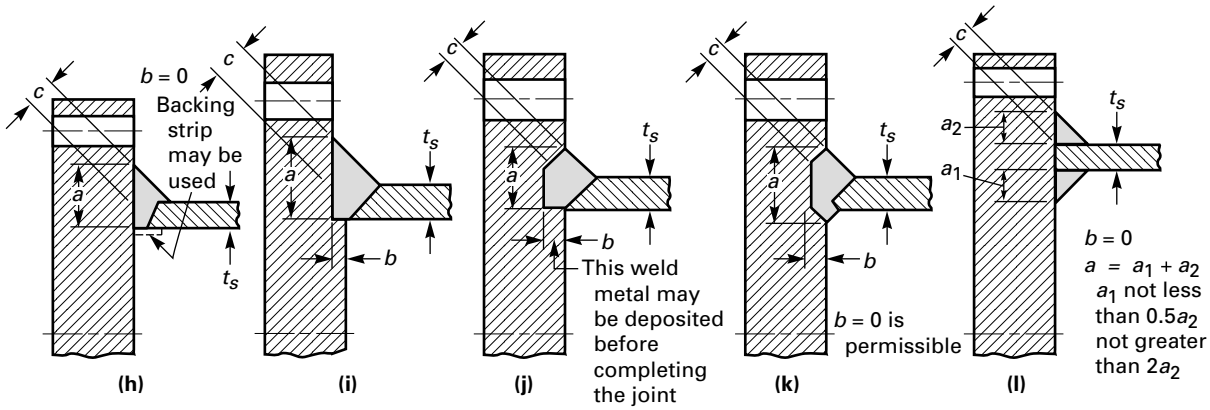

t_s is defined in UG-34(b)
Typical Tubesheets With a Bolting Flange

GENERAL NOTES:
(a) $a+b$ not less than $2t_s$, c not less than $0.7t_s$ or $1.4t_r$, whichever is less.
(b) t_s and t_r are as defined in UG-34(b).
(c) Dimension b is produced by the weld preparation and shall be verified after fit up and before welding.

Provided by IHS under license with ASME
No reproduction or networking permitted without license from IHS
Licensee=Chevron Phillips Chemical Co LP/5956674001
Not for Resale, 11/09/2014 20:41:36 MST

Figure UW-13.2
Attachment of Pressure Parts to Flat Plates to Form a Corner Joint (Cont'd)

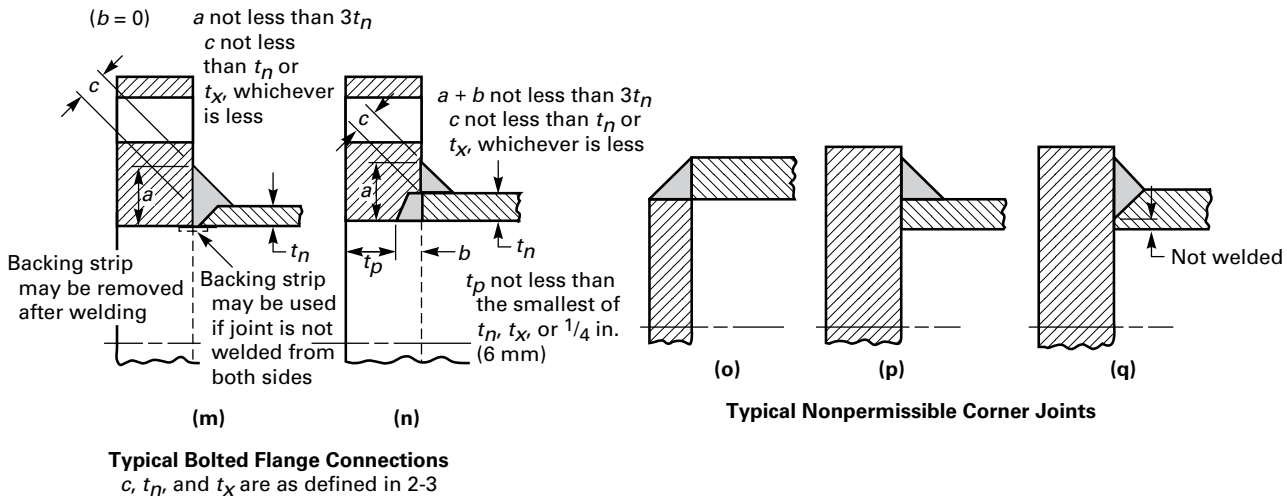

(4) Other dimensions at the joint shall be in accordance with details as shown in Figure UW-13.2.

(5) Joint details that have a dimension through the joint less than the thickness of the shell, head or other pressure part, or that provide attachment eccentric thereto, are not permissible. See Figure UW-13.2 sketches (o), (p), and (q).

(f) When used, the hub of a tubesheet or flat head shall have minimum dimensions in accordance with Figure UW-13.3 and shall meet the following requirements:

(1) When the hub is integrally forged with the tubesheet or flat head, or is machined from a forging, the hub shall have the minimum tensile strength and elongation specified for the material, measured in the direction

Figure UW-13.3
Typical Pressure Parts With Butt Welded Hubs

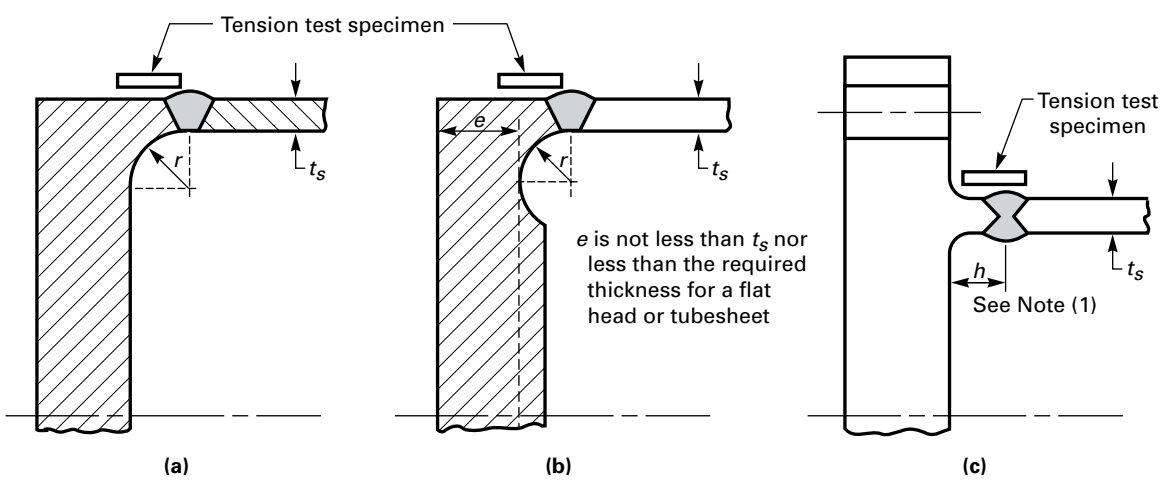

GENERAL NOTES:
(a) Refer to Figure UG-34 sketch (b-2) for dimensional requirements.
(b) Not permissible if machined from rolled plate unless in accordance with Mandatory Appendix 20. See UW-13(f).
(c) Tension test specimen may be located inside or outside the hub.

NOTE:
(1) h is the greater of $^3/_4$ in. (19 mm) or $1.5t_s$, but need not exceed 2 in. (50 mm).

Provided by IHS under license with ASME
No reproduction or networking permitted without license from IHS
Licensee=Chevron Phillips Chemical Co LP/5956674001
Not for Resale, 11/09/2014 20:41:36 MST

parallel to the axis of the vessel. Proof of this shall be furnished by a tension test specimen (subsize if necessary) taken in this direction and as close to the hub as practical.[68]

(2) When the hub is machined from plate, the requirements of Mandatory Appendix 20 shall be met.

(g) When the hub of a lap joint stub end is machined from plate with the hub length in the through thickness direction of the plate, the requirements of Mandatory Appendix 20 shall be met.

(h) In the case of nozzle necks which attach to piping [see U-1(e)(1)(-a)] of a lesser wall thickness, a tapered transition from the weld end of the nozzle may be provided to match the piping thickness although that thickness is less than otherwise required by the rules of this Division. This tapered transition shall meet the limitations as shown in Figure UW-13.4.

Figure UW-13.5
Fabricated Lap Joint Stub Ends for Lethal Service

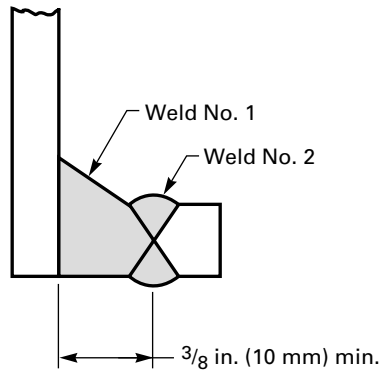

UW-14 OPENINGS IN OR ADJACENT TO WELDS

(a) Any type of opening that meets the requirements for reinforcement given in UG-37 or UG-39 may be located in a welded joint.

(b) Single openings meeting the requirements given in UG-36(c)(3) may be located in head-to-shell or Category B or C butt welded joints, provided the weld meets the radiographic requirements in UW-51 for a length equal to three times the diameter of the opening with the center of the hole at midlength. Defects that are completely removed in cutting the hole shall not be considered in judging the acceptability of the weld.

(c) In addition to meeting the radiographic requirements of (b) above, when multiple openings meeting the requirements given in UG-36(c)(3) are in line in a head-to-shell or Category B or C butt welded joint, the requirements of UG-53 shall be met or the openings shall be reinforced in accordance with UG-37 through UG-42.

(d) Except when the adjacent butt weld satisfies the requirement for radiography in (b) above, the edge of openings in solid plate meeting the requirements of

Figure UW-13.4
Nozzle Necks Attached to Piping of Lesser Wall Thickness

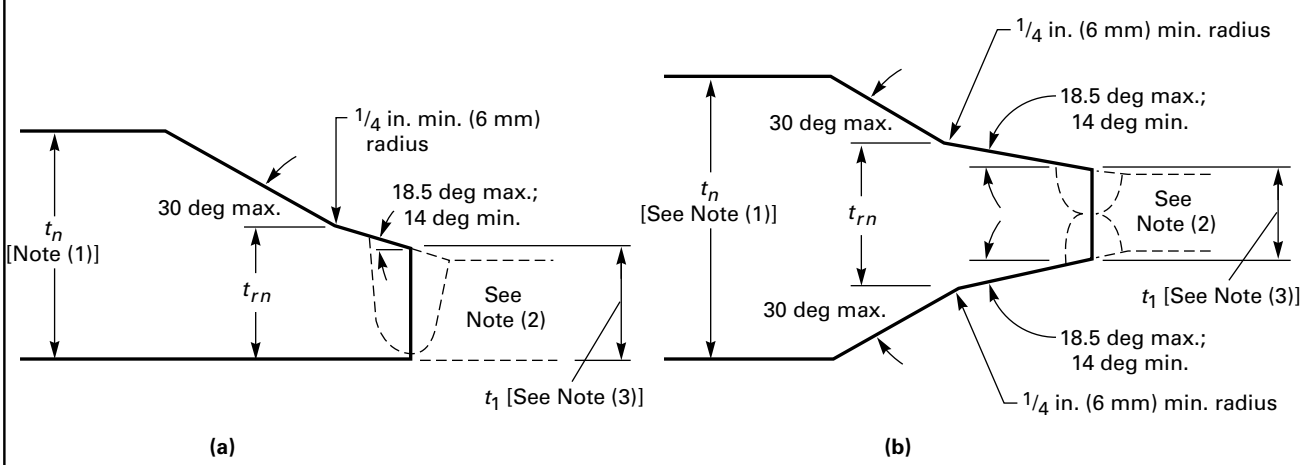

NOTES:
(1) As defined in UG-40.
(2) Weld bevel is shown for illustration only.
(3) t_1 is not less than the greater of:
(a) $0.8t_{rn}$ where
t_{rn} = required thickness of seamless nozzle wall
(b) Minimum wall thickness of connecting pipe

Provided by IHS under license with ASME
No reproduction or networking permitted without license from IHS
Licensee=Chevron Phillips Chemical Co LP/5956674001
Not for Resale, 11/09/2014 20:41:36 MST

UG-36(c)(3) shall not be placed closer than $\frac{1}{2}$ in. (13 mm) from the edge of a Category A, B, or C weld for material $1\frac{1}{2}$ in. (38 mm) thick or less.

UW-15 WELDED CONNECTIONS

(a) Nozzles, other connections, and their reinforcements may be attached to pressure vessels by arc or gas welding. Sufficient welding shall be provided on either side of the line through the center of the opening parallel to the longitudinal axis of the shell to develop the strength of the reinforcing parts as prescribed in UG-41 through shear or tension in the weld, whichever is applicable. The strength of groove welds shall be based on the area subjected to shear or to tension. The strength of fillet welds shall be based on the area subjected to shear (computed on the minimum leg dimension). The inside diameter of a fillet weld shall be used in figuring its length.

(b) Strength calculations for nozzle attachment welds for pressure loading are not required for the following:

(1) Figure UW-16.1 sketches (a), (b), (c), (d), (e), (f-1), (f-2), (f-3), (f-4), (g), (x-1), (y-1), and (z-1), and all the sketches in Figures UHT-18.1 and UHT-18.2

(2) openings that are exempt from the reinforcement requirements by UG-36(c)(3)

(3) openings designed in accordance with the rules for ligaments in UG-53

(c) The allowable stress values for groove and fillet welds in percentages of stress values for the vessel material, which are used with UG-41 calculations, are as follows:

(1) groove-weld tension, 74%

(2) groove-weld shear, 60%

(3) fillet-weld shear, 49%

NOTE: These values are obtained by combining the following factors: $87\frac{1}{2}$% for combined end and side loading, 80% for shear strength, and the applicable joint efficiency factors.

UW-16 MINIMUM REQUIREMENTS FOR ATTACHMENT WELDS AT OPENINGS

(a) General

(1) The terms: nozzles, connections, reinforcements, necks, tubes, fittings, pads, and other similar terms used in this paragraph define essentially the same type construction and form a Category D weld joint between the nozzle (or other term) and the shell, head, etc., as defined in UW-3(d).

(2) The location and minimum size of attachment welds for nozzles and other connections shall conform to the requirements of this paragraph in addition to the strength calculations required in UW-15.

(b) Symbols. The symbols used in this paragraph and in Figures UW-16.1 and UW-16.2 are defined as follows:

D_o = outside diameter of neck or tube attached by welding on inside of vessel shell only

G = radial clearance between hole in vessel wall and outside diameter of nozzle neck or tube

Radius = $\frac{1}{8}$ in. (3 mm) minimum blend radius

r_1 = minimum inside corner radius, the lesser of $\frac{1}{4}t$ or $\frac{1}{8}$ in. (3 mm)

t = nominal thickness of vessel shell or head,

t_n = nominal thickness of nozzle wall

t_w = dimension of attachment welds (fillet, single-bevel, or single-J), measured as shown in Figure UW-16.1

t_e = thickness of reinforcing plate, as defined in UG-40

t_{min} = the smaller of $\frac{3}{4}$ in. (19 mm) or the thickness of the thinner of the parts joined by a fillet, single-bevel, or single-J weld

t_c = not less than the smaller of $\frac{1}{4}$ in. (6 mm) or $0.7t_{\min}$ (inside corner welds may be further limited by a lesser length of projection of the nozzle wall beyond the inside face of the vessel wall)

t_1 *or* t_2 = not less than the smaller of $\frac{1}{4}$ in. (6 mm) or $0.7t_{\min}$

(c) Necks Attached by a Full Penetration Weld. Necks abutting a vessel wall shall be attached by a full penetration groove weld. See Figure UW-16.1 sketches (a) and (b) for examples. Necks inserted through the vessel wall may be attached by a full penetration groove weld. See Figure UW-16.1 sketches (c), (d), and (e). When complete joint penetration cannot be verified by visual inspection or other means permitted in this Division, backing strips or equivalent shall be used with full penetration welds deposited from one side.

If additional reinforcement is required, it shall be provided as integral reinforcement as described in (1) below, or by the addition of separate reinforcement elements (plates) attached by welding as described in (2) below.

(1) Integral reinforcement is that reinforcement provided in the form of extended or thickened necks, thickened shell plates, forging type inserts, or weld buildup which is an integral part of the shell or nozzle wall and, where required, is attached by full penetration welds. See Figure UW-16.1 sketches (a), (b), (c), (d), (e), (f-1), (f-2), (f-3), (f-4), (g), (x-1), (y-1), and (z-1) for examples of nozzles with integral reinforcement where the F factor in Figure UG-37 may be used.

(2) Separate reinforcement elements (plates) may be added to the outside surface of the shell wall, the inside surface of the shell wall, or to both surfaces of the shell wall. When this is done, the nozzle and reinforcement is no longer considered a nozzle with integral reinforcement and the F factor in UG-37(a) shall be F = 1.0. Figure UW-16.1 sketches (a-1), (a-2), and (a-3) depict various applications of reinforcement elements added to sketch (a). Any of these applications of reinforcement elements may be used with necks of the types shown in Figure UW-16.1 sketches (b), (c), (d), and (e) or any other integral reinforcement types listed in (1) above. The

Provided by IHS under license with ASME
No reproduction or networking permitted without license from IHS
Licensee=Chevron Phillips Chemical Co LP/5956674001
Not for Resale, 11/09/2014 20:41:36 MST

Provided by IHS under license with ASME
No reproduction or networking permitted without license from IHS

(13)

Figure UW-16.1
Some Acceptable Types of Welded Nozzles and Other Connections to Shells, Heads, etc.

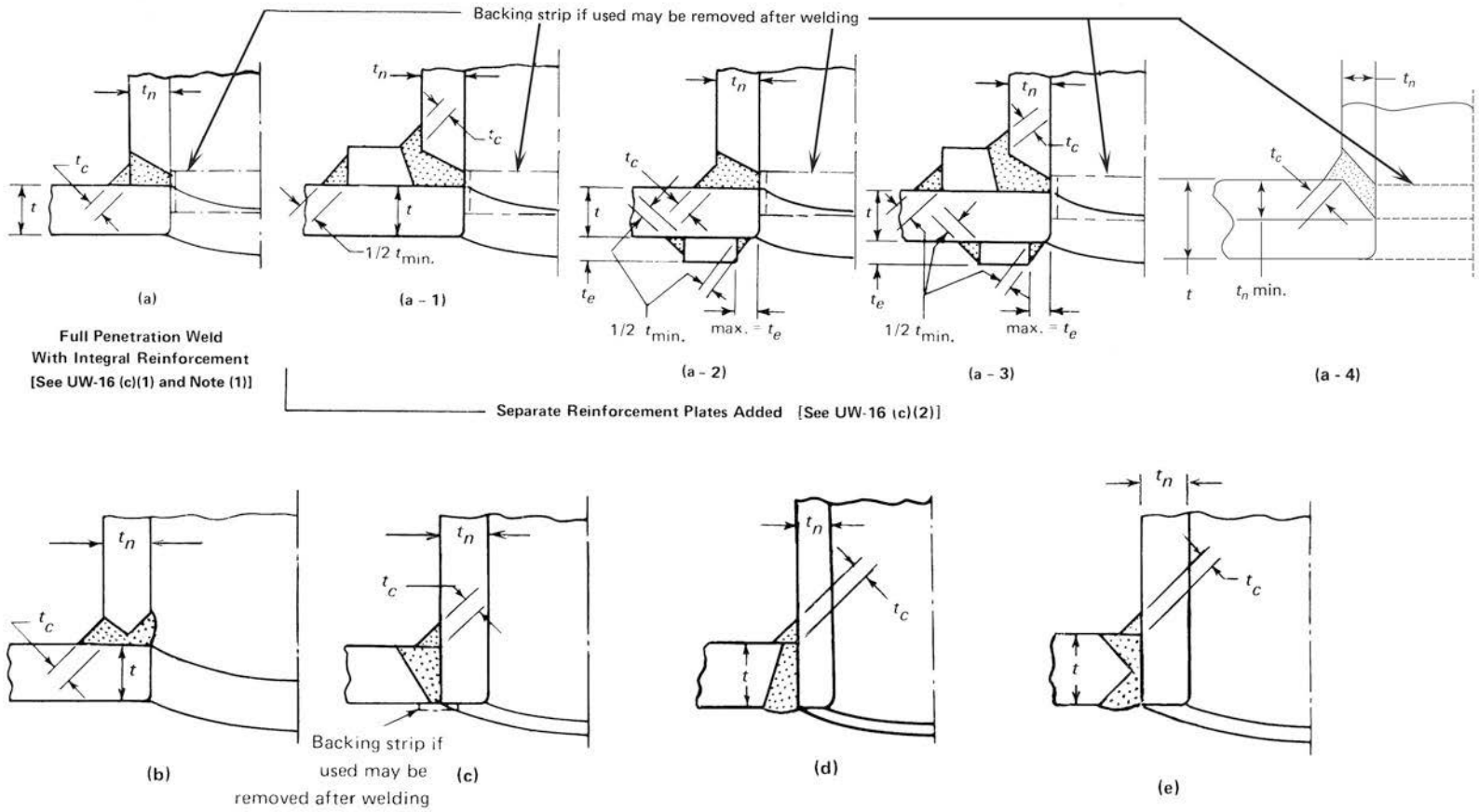

Full Penetration Welds to Which Separate Reinforcement Plates May be Added [See UW-16 (c)(2) and Note (1)]

Notes follow on last page of this Figure

Licensee=Chevron Phillips Chemical Co LP/5956674001
Not for Resale, 11/09/2014 20:41:36 MST

Figure UW-16.1
Some Acceptable Types of Welded Nozzles and Other Connections to Shells, Heads, etc. (Cont'd)

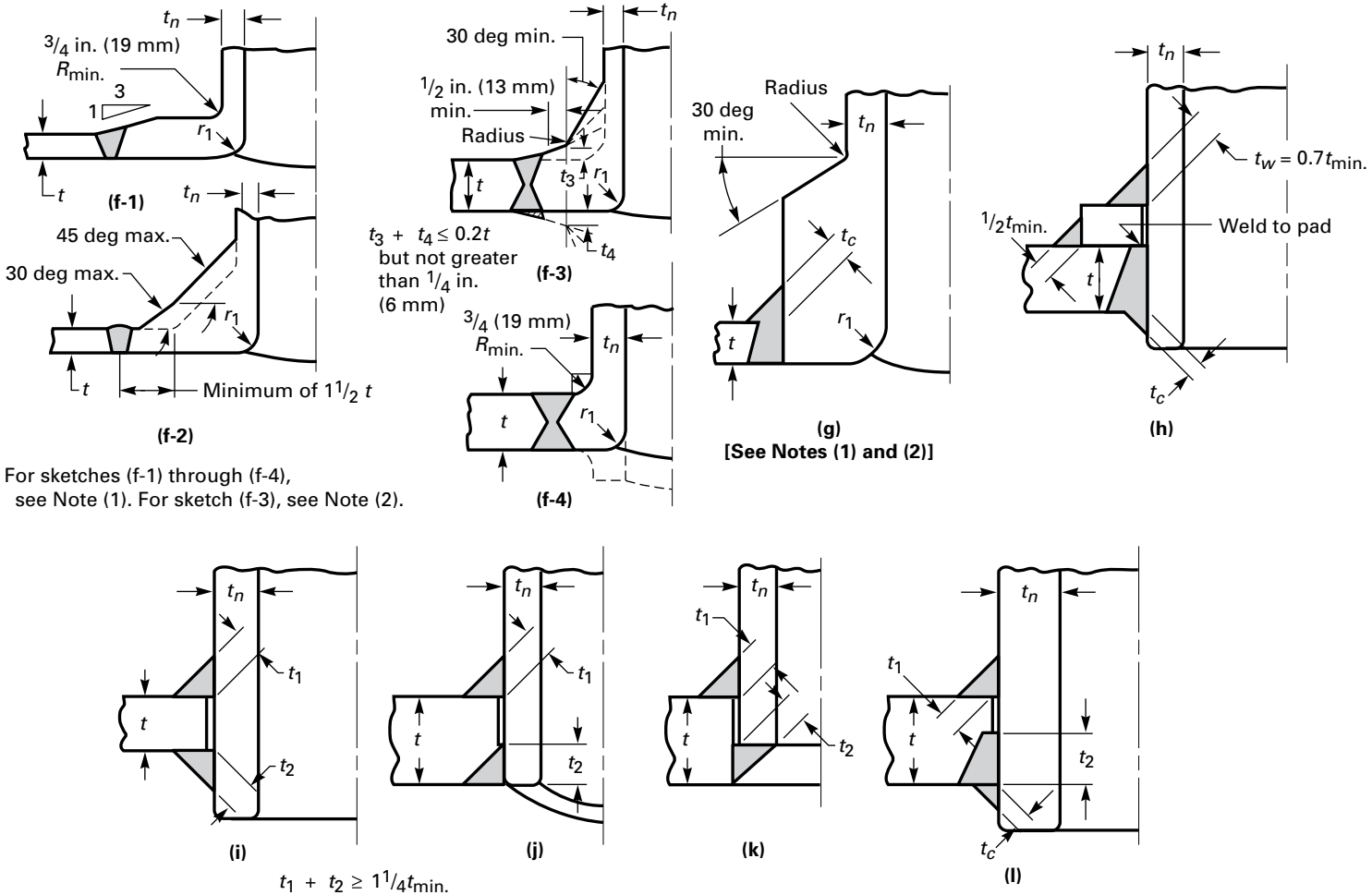

For sketches (f-1) through (f-4), see Note (1). For sketch (f-3), see Note (2).

$t_1 + t_2 \ge 1^1/_4 t_{min.}$
t_1 or t_2 not less than the smaller of 1/4 in. (6 mm) or $0.7t_{min.}$

Notes follow on last page of this Figure

Provided by IHS under license with ASME
No reproduction or networking permitted without license from IHS
Licensee=Chevron Phillips Chemical Co LP/5956674001
Not for Resale, 11/09/2014 20:41:36 MST

Figure UW-16.1
Some Acceptable Types of Welded Nozzles and Other Connections to Shells, Heads, etc. (Cont'd)

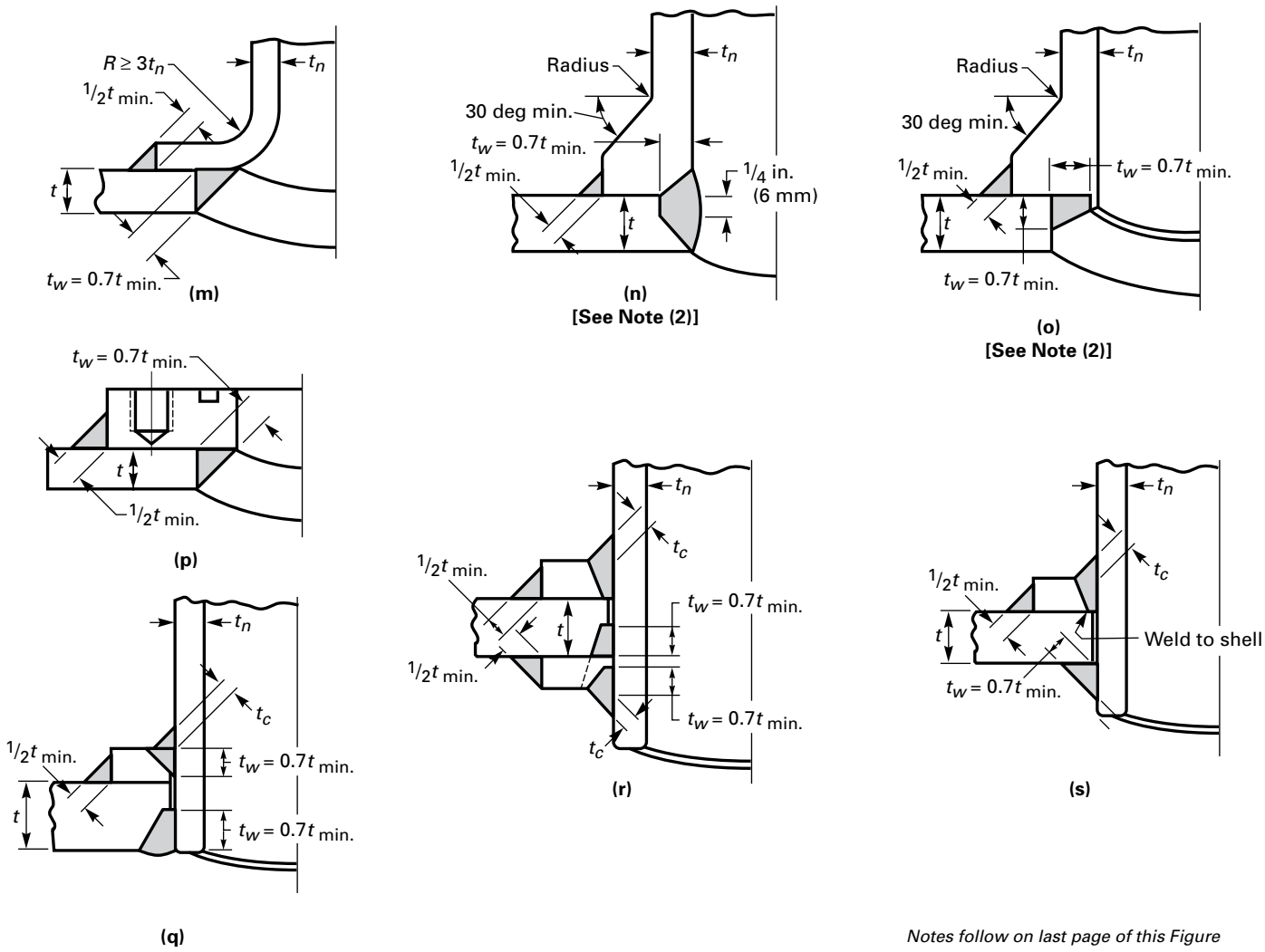

Notes follow on last page of this Figure

Provided by IHS under license with ASME
No reproduction or networking permitted without license from IHS
Licensee=Chevron Phillips Chemical Co LP/5956674001
Not for Resale, 11/09/2014 20:41:36 MST

Figure UW-16.1
Some Acceptable Types of Welded Nozzles and Other Connections to Shells, Heads, etc. (Cont'd)

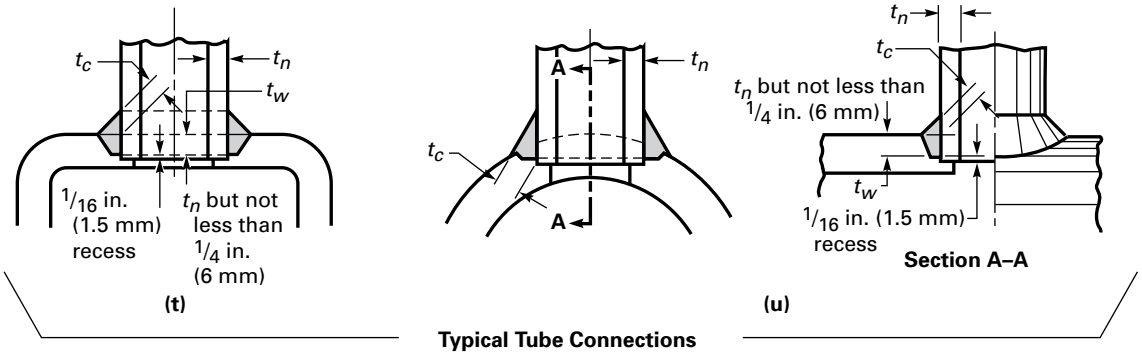

Typical Tube Connections

(When used for other than square, round, or oval headers, round off corners)

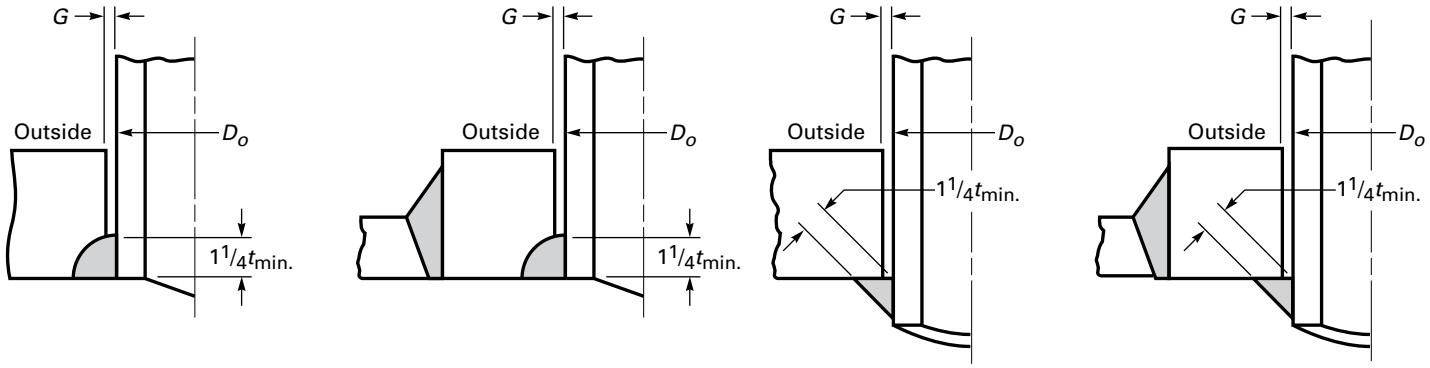

(v-1)
[see Note (3)]

(v-2)
[see Note (3)]

(w-1)
[see Note (3)]

(w-2)
[see Note (3)]

Notes follow on last page of this Figure.

Provided by IHS under license with ASME
No reproduction or networking permitted without license from IHS
Licensee=Chevron Phillips Chemical Co LP/5956674001
Not for Resale, 11/09/2014 20:41:36 MST

Figure UW-16.1
Some Acceptable Types of Welded Nozzles and Other Connections to Shells, Heads, etc. (Cont'd)

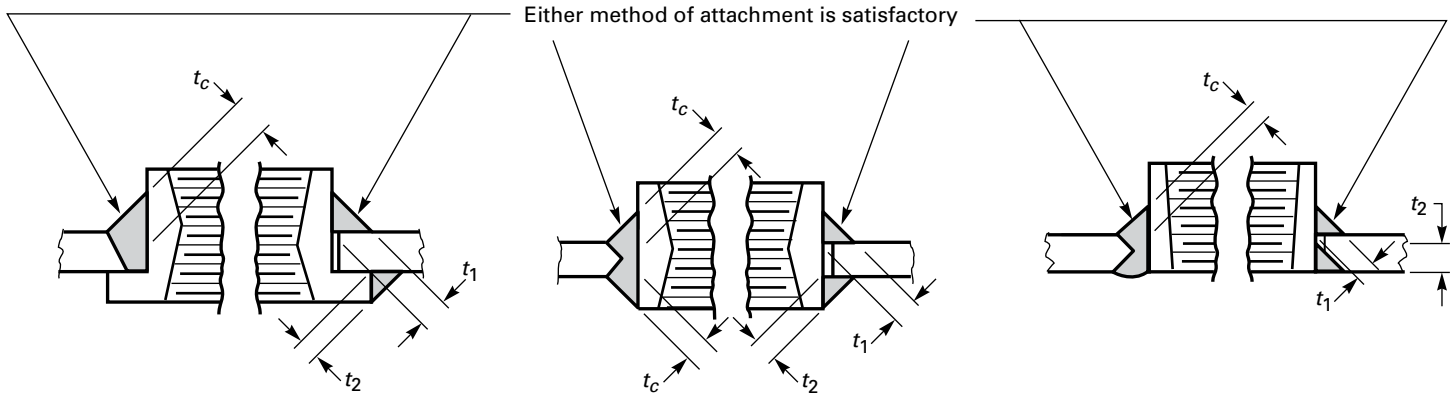

(x-1) (x-2)
[See Notes (1) and (4)]

(y-1) (y-2)
[See Notes (1) and (4)]

(z-1) (z-2)
[See Notes (1) and (4)]

$t_1 + t_2 \geq 1^1/_4 t_{min.}$

t_1 or t_2 not less than the smaller of $^1/_4$ in. (6 mm) or $0.7t_{min.}$

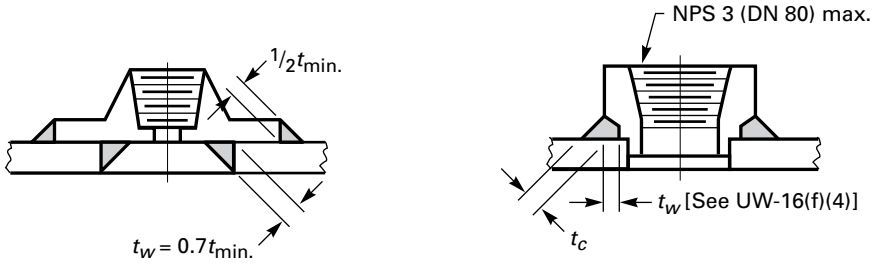

(aa)
[See Note (4)]

(bb)
[See Note (4)]

NOTES:
(1) Sketches (a), (b), (c), (d), (e), (f-1) through (f-4), (g), (x-1), (y-1), and (z-1) are examples of nozzles with integral reinforcement.
(2) Where the term *Radius* appears, provide a $^1/_8$ in. (3 mm) minimum blend radius.
(3) For sketches (v-1) through (w-2):
  (a) For applications where there are no external loads, $G = {}^1/_8$ in. (3 mm) max.
  (b) With external loads:
    $G = 0.005$ for $D_o \leq 1$ in. (25 mm); $G = 0.010$ for 1 in. (25 mm) $< D_o \leq 4$ in. (100 mm); $G = 0.015$ for 4 in. (100 mm) $< D_o \leq 6^5/_8$ in. (170 mm).
(4) For NPS 3 (DN 80) and smaller, see exemptions in UW-16(f)(2).

Provided by IHS under license with ASME
No reproduction or networking permitted without license from IHS
Licensee=Chevron Phillips Chemical Co LP/5956674001
Not for Resale, 11/09/2014 20:41:36 MST

reinforcement plates shall be attached by welds at the outer edge of the plate, and at the nozzle neck periphery or inner edge of the plate if no nozzle neck is adjacent to the plate.

(-a) The weld at the outer edge of the reinforcement plate shall be a continuous fillet weld with a minimum throat dimension of $\frac{1}{2}t_{\min}$.

(-b) The weld at the inner edge of the reinforcement plate which does not abut a nozzle neck shall be a continuous fillet weld with a minimum throat dimension $\frac{1}{2}t_{\min}$ [see Figure UW-16.1, sketches (a-2) and (a-3)].

(-c) The weld at the inner edge of the reinforcement plate when the reinforcement plate is full penetration welded to the nozzle neck shall be a continuous fillet weld with a minimum throat dimension of t_c [see Figure UW-16.1, sketches (a-1) and (a-3)].

(-d) The weld at the inner edge of the reinforcement plate when the reinforcement plate is not full penetration welded to the nozzle neck shall be a continuous fillet weld with a minimum throat dimension of $t_w = 0.7t_{\min}$ [see Figure UW-16.1, sketch (h)].

(d) Neck Attached by Fillet or Partial Penetration Welds

(1) Necks inserted into or through the vessel wall may be attached by fillet or partial penetration welds, one on each face of the vessel wall. The welds may be any desired combination of fillet, single-bevel, and single-J welds. The dimension of t_1 or t_2 for each weld shall be not less than the smaller of $\frac{1}{4}$ in. (6 mm) or $0.7t_{\min}$, and their sum shall be not less than $1\frac{1}{4}t_{\min}$. See Figure UW-16.1 sketches (i), (j), (k), and (l).

If additional reinforcement is required, it may be provided in the form of extended or thickened necks, thickened shell plates, forgings, and/or separate reinforcement elements (plates) attached by welding. Weld requirements shall be the same as given in (c)(2) above, except as follows. The welds attaching the neck to the vessel wall or to the reinforcement plate shall consist of one of the following:

(-a) a single-bevel or single-J weld in the shell plate, and a single-bevel or single-J weld in each reinforcement plate. The dimension t_w of each weld shall be not less than $0.7t_{\min}$. See Figure UW-16.1 sketches (q) and (r).

(-b) a full penetration groove weld in each reinforcement plate, and a fillet, single-bevel, or single-J weld with a weld dimension t_w not less than $0.7t_{\min}$ in the shell plate. See Figure UW-16.1 sketch (s).

(2) Nozzle necks, flared necks, and studding outlet type flanges may be attached by fillet welds or partial penetration welds between the outside diameter or the attachment and the outside surface of the shell and at the inside of the opening in the shell. The throat dimension of the outer attachment weld shall not be less than $\frac{1}{2}t_{\min}$. The dimension t_w of the weld at the inside of the shell cutout shall not be less than $0.7t_{\min}$. See Figure UW-16.1 sketches (m), (n), (o), and (p).

(e) Necks and Tubes Up to and Including NPS 6 (DN 150) Attached From One Side Only. Necks and tubes not exceeding NPS 6 (DN 150) may be attached from one side only on either the outside or inside surface of the vessel.

(1) The depth of the welding groove or the throat of the fillet weld shall be at least equal to $1\frac{1}{4}t_{\min}$. The radial clearance between the vessel hole and the nozzle outside diameter at the unwelded side shall not exceed the tolerances given in Figure UW-16.1 sketches (v-1), (v-2), (w-1), and (w-2). When welded from the outside only, the neck or tube shall extend to be at least flush to the inside surface of the vessel wall. Such attachments shall satisfy the rules for reinforcement of openings, except that no material in the nozzle neck shall be counted as reinforcement.

(2) As an alternative to (1) above, when the neck or tube is attached from the outside only, a welding groove shall be cut into the surface to a depth of not less than t_n on the longitudinal axis of the opening. It is recommended that a recess $\frac{1}{16}$ in. (1.5 mm) deep be provided at the bottom of the groove, in which to center the nozzle. The dimension t_w of the attachment weld shall be not less than t_n nor less than $\frac{1}{4}$ in. (6 mm). See Figure UW-16.1 sketches (t) and (u).

(f) Standard Fittings: ASME/ANSI or Manufacturer's Standard. The attachment of standard fittings shall meet the following requirements; see (g) for the attachment of bolting pads:

(1) Except as provided for in (2), (3), (4), (5), and (6) below, fittings shall be attached by a full penetration groove weld or by two fillet or partial penetration welds, one on each face of the vessel wall. The minimum weld dimensions shall be as shown in Figure UW-16.1 sketches (x), (y), (z), and (aa).

(2) Fittings not exceeding NPS 3 (DN 80) shown on Figure UW-16.1 sketches (x), (y), (z), (aa), and (bb) may be attached by welds that are exempt from size requirements with the following limitations:

(-a) UW-15(a) requirements shall be satisfied for UG-22 loadings.

(-b) For partial penetration welds or fillet welds, t_1 or t_2 shall not be less than the smaller of $\frac{3}{32}$ in. (2.5 mm) or $0.7t_{\min}$.

(3) See below:

(-a) Fittings not exceeding NPS 3 (DN 80), as shown in Figure UW-16.2, may be attached to vessels that are not subject to rapid fluctuations in pressure by a fillet weld deposited from the outside only without additional reinforcement other than is inherent in the fitting and its attachment to the vessel wall provided all of the following conditions are met

(-1) maximum vessel wall thickness of $\frac{3}{8}$ in. (10 mm);

(-2) the maximum size of the opening in the vessel is limited to the outside diameter of the attached pipe plus $\frac{3}{4}$ in. (19 mm), but not greater than one-half of the vessel inside diameter;

Provided by IHS under license with ASME
No reproduction or networking permitted without license from IHS
Licensee=Chevron Phillips Chemical Co LP/5956674001
Not for Resale, 11/09/2014 20:41:36 MST

Table UW-16.1
Minimum Thickness Required by UW-16(f)(3)(-a)(-6)

NPS	in.	mm
1/8	0.11	2.7
1/4	0.11	2.7
3/8	0.11	2.7
1/2	0.14	3.6
3/4	0.16	4.2
1	0.22	5.5
1 1/4	0.30	7.5
1 1/2	0.30	7.5
2	0.31	7.9
2 1/2	0.37	9.5
3	0.38	9.5

(-3) the attachment weld throat shall be the greater of the following:

(+a) the minimum nozzle neck thickness required by UG-45 for the same nominal size connection; or

(+b) that necessary to satisfy the requirements of UW-18 for the applicable loadings of UG-22.

(-4) the typical fitting dimension t_f as shown in Figure UW-16.2 sketch (p) shall be sufficient to accommodate a weld leg which will provide a weld throat dimension as required in (-3) above.

(-5) The openings shall meet the requirements provided in UG-36(c)(3)(-c) and UG-36(c)(3)(-d).

(-6) The minimum wall thickness shall not be less than that shown in Table Table UW-16.1 for the nearest equivalent nominal pipe size.

(-b) If the opening does not meet the requirements of (-a)(-5) or exceeds the requirements of (-a)(-2) above or (5)(-d) below in any direction, or is greater than one-half the vessel inside diameter, the part of the vessel affected shall be subjected to a proof test as required in UG-36(a)(2), or the opening shall be reinforced in accordance with UG-37 and the nozzle or other connection attached, using a suitable detail in Figure UW-16.1, if welded. In satisfying the rules for reinforcement of openings, no material in the nozzle neck shall be counted as reinforcement.

(**13**) *(4)* Fittings not exceeding NPS 3 (DN 80) may be attached by a fillet groove weld from the outside only as shown in Figure UW-16.1 illustration (bb). The groove weld t_w shall not be less than the thickness of Schedule 160 pipe (ASME B36.10M) for the nearest equivalent pipe size. [For fittings smaller than NPS ½ (DN 15), use Schedule 160 taken from Table 8 of ASME B16.11.]

(5) Flange-type fittings not exceeding NPS 2 (DN 50), with some acceptable types such as those shown in Figure UW-16.2, may be attached without additional reinforcement other than that in the fitting and its attachment to the vessel wall. The construction satisfies the requirements of this Division without further calculation or proof test as permitted in UG-36(c)(3) provided all of the following conditions are met:

(-a) Maximum vessel wall thickness shall not exceed 3/8 in. (10 mm).

(-b) Maximum design pressure shall not exceed 350 psi (2.5 MPa).

(-c) Minimum fillet leg t_f is 3/32 in. (2.45 mm).

(-d) The finished opening, defined as the hole in the vessel wall, shall not exceed the outside diameter of the nominal pipe size plus 3/4 in. (19 mm).

(6) Fittings conforming to Figure UW-16.2 sketch (k) not exceeding NPS 3 (DN 80) may be attached by a single fillet weld on the inside of the vessel only, provided the criteria of Figure UW-16.1 sketch (w) and (e)(1) are met.

(g) Bolting Pads: Manufacturer's Standard. The attachment of standard bolting pads shall meet the following requirements:

(1) Except as provided for in (2) and (3), bolting pads shall be attached by a full penetration groove weld or by two fillet or partial penetration welds, one on each face of the vessel wall. The minimum weld dimensions shall be as shown in Figure UW-16.1, illustrations (p), (x), (y), (z), and (aa).

(2) Bolting pads as shown in Figure UW-16.3 illustrations (a) and (b) may be attached to vessels by a fillet weld deposited from the outside only with the following limitations:

(-a) The maximum vessel wall thickness is 3/8 in. (10 mm), and the bolting pad outside the diameter is not greater than 4 3/4 in. (120 mm).

(-b) The maximum size of the opening in the vessel is limited to the following:

(-1) 4 3/4 in. (120 mm) for bolting pads that are installed through wall; see Figure UW-16.3, illustration (a)

(-2) 1/4 in. (6 mm) less than the bolting pad diameter for those that are attached to the outside of the vessel; see Figure UW-16.3, illustration (b).

(-c) The attachment weld throat shall be the greatest of the following:

(-1) the minimum nozzle neck thickness required by UG-45 for the same nominal size connection

(-2) $1.0t_{min}$

(-3) that necessary to satisfy the requirements of UW-18 for the applicable loadings of UG-22

(-d) The typical bolting pad dimension, t_f, as shown in Figure UW-16.3, illustration (a), shall be sufficient to accommodate a weld leg that will provide a weld throat dimension.

(-e) In satisfying the rules for reinforcement of openings, no material in the bolting pad shall be counted as reinforcement.

(3) If the opening exceeds the requirements of (2)(-b) above, or is greater than one-half the vessel inside diameter, the part of the vessel affected shall be subjected to a proof test as required in UG-36(a)(2), or the opening

--`,,,``,,,```,,,,`,``,``,,,,```-`-`,,`,,`,`,,`---
Provided by IHS under license with ASME
No reproduction or networking permitted without license from IHS
Licensee=Chevron Phillips Chemical Co LP/5956674001
Not for Resale, 11/09/2014 20:41:36 MST

Figure UW-16.2
Some Acceptable Types of Small Standard Fittings

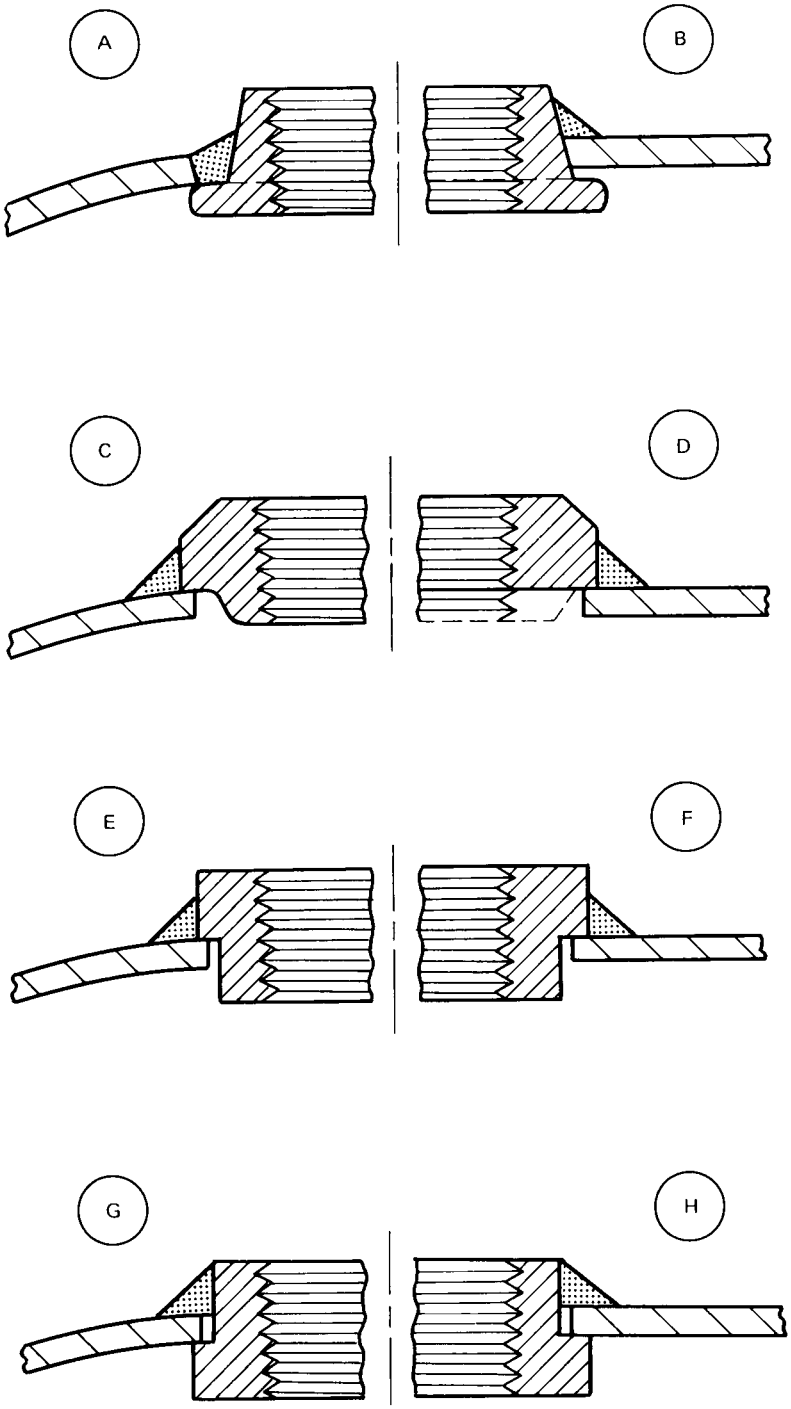

Provided by IHS under license with ASME
No reproduction or networking permitted without license from IHS
Licensee=Chevron Phillips Chemical Co LP/5956674001
Not for Resale, 11/09/2014 20:41:36 MST

Figure UW-16.2
Some Acceptable Types of Small Standard Fittings (Cont'd)

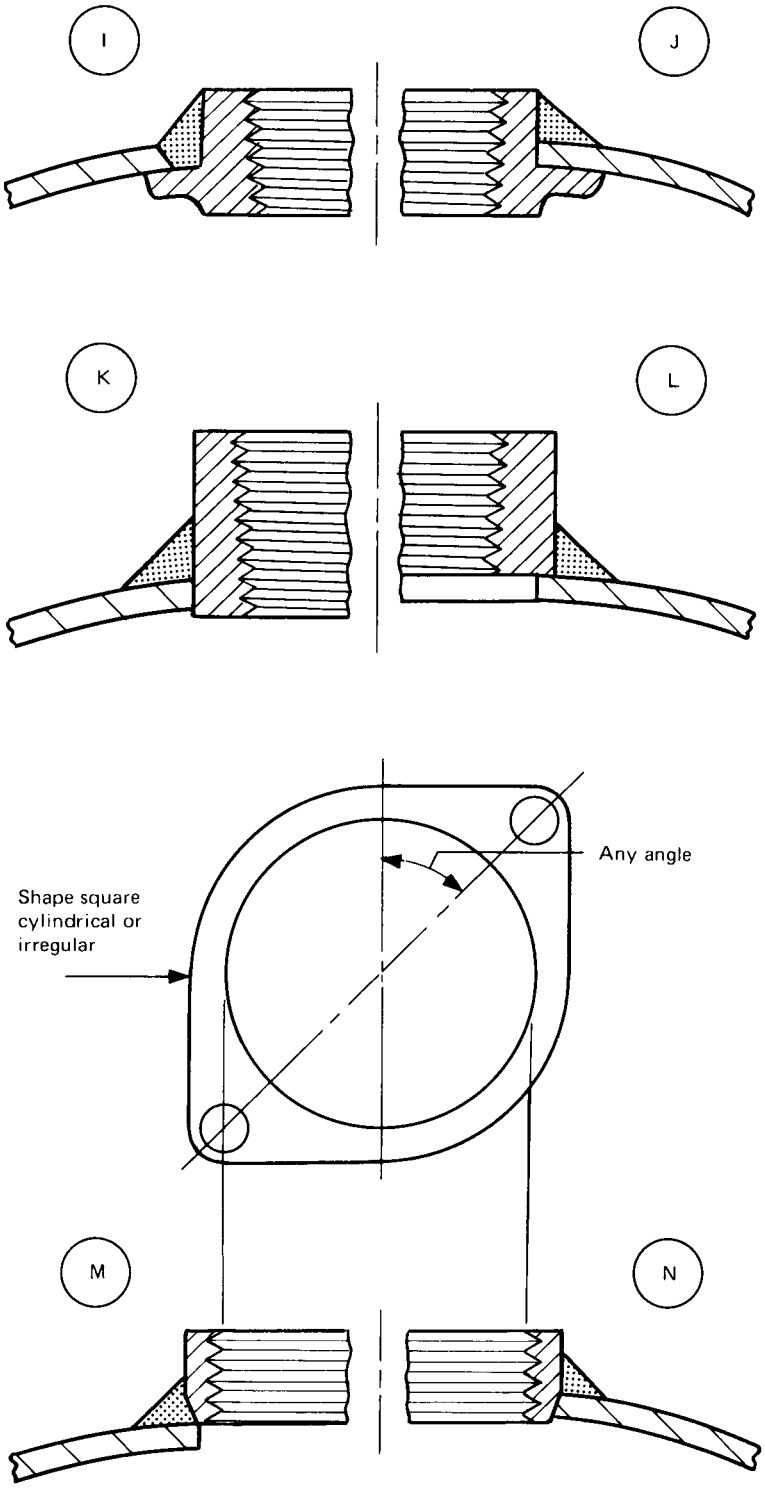

Provided by IHS under license with ASME
No reproduction or networking permitted without license from IHS
Licensee=Chevron Phillips Chemical Co LP/5956674001
Not for Resale, 11/09/2014 20:41:36 MST

Figure UW-16.2
Some Acceptable Types of Small Standard Fittings (Cont'd)

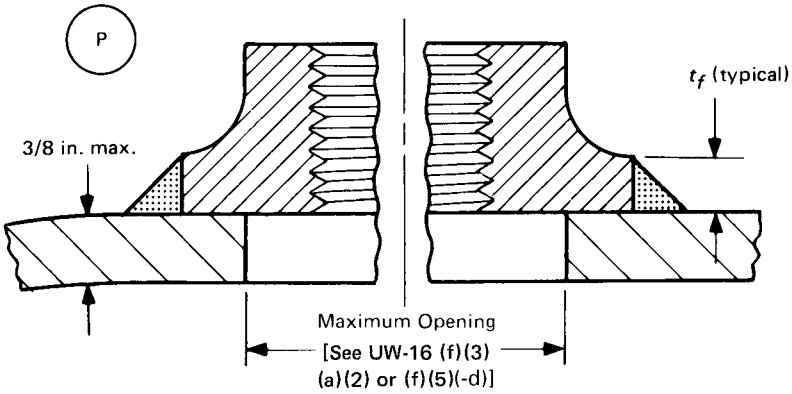

GENERAL NOTE: See UW-16(f) for limitations.

shall be reinforced in accordance with UG-37 and the nozzle or other connection attached, using a suitable detail in Figure UW-16.1, if welded.

UW-17 PLUG WELDS

(a) Plug welds may be used in lap joints, in reinforcements around openings and in nonpressure structural attachments. They shall be properly spaced to carry their proportion of the load, but shall not be considered to take more than 30% of the total load to be transmitted.

(b) Plug weld holes shall have a diameter not less than $t + {}^{1}/_{4}$ in. (6 mm) and not more than $2t + {}^{1}/_{4}$ in. (6 mm), where t is the thickness in inches of the plate or attached part in which the hole is made.

(c) Plug weld holes shall be completely filled with weld metal when the thickness of the plate, or attached part, in which the weld is made is ${}^{5}/_{16}$ in. (8 mm) or less; for thicker plates or attached parts the holes shall be filled to a depth of at least half the plate thickness or ${}^{5}/_{16}$ of the hole diameter, whichever is larger, but in no case less than ${}^{5}/_{16}$ in. (8 mm).

Figure UW-16.3
Some Acceptable Types of Small Bolting Pads

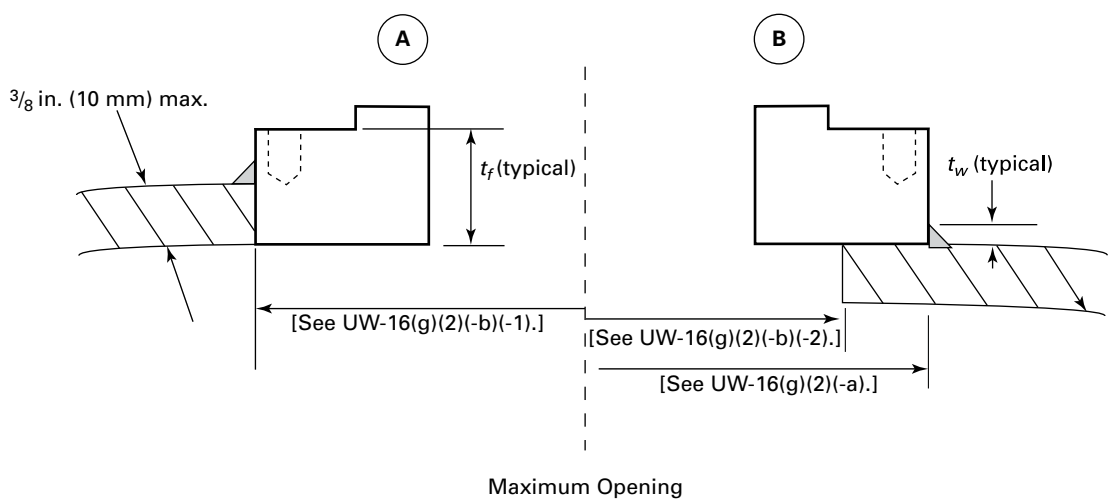

GENERAL NOTE: See UW-16(g)(2) for limitations.

Provided by IHS under license with ASME
No reproduction or networking permitted without license from IHS
Licensee=Chevron Phillips Chemical Co LP/5956674001
Not for Resale, 11/09/2014 20:41:36 MST

(d) The allowable working load on a plug weld in either shear or tension shall be computed by the following formula:

(U.S. Customary Units)

$$P = 0.63S\left(d - \frac{1}{4}\right)^2$$

(SI Units)

$$P = 0.63S(d - 6)^2$$

where

d = the bottom diameter of the hole in which the weld is made
P = total allowable working load on the plug weld
S = maximum allowable stress value for the material in which the weld is made (see UG-23)

UW-18 FILLET WELDS

(a) Fillet welds may be employed as strength welds for pressure parts within the limitations given elsewhere in this Division. Particular care shall be taken in the layout of joints in which fillet welds are to be used in order to assure complete fusion at the root of the fillet.

(b) Corner or tee joints may be made with fillet welds provided the plates are properly supported independently of such welds, except that independent supports are not required for joints used for the purposes enumerated in UG-55.

(c) Figures UW-13.1 and UW-13.2 show several construction details that are not permissible.

(d) Unless the sizing basis is given elsewhere in this Division, the allowable load on fillet welds shall equal the product of the weld area (based on minimum leg dimension), the allowable stress value in tension of the material being welded, and a joint efficiency of 55%.

(13) UW-19 WELDED STAYED CONSTRUCTION

(a) Welded-in staybolts shall meet the following requirements:

(1) the arrangement shall substantially conform to one of those illustrated in Figure UW-19.1;

(2) the required thickness of the plate shall not exceed $1\frac{1}{2}$ in. (38 mm), except for Figure UW-19.1, illustrations (e), (g), and (h). For plate thicknesses greater than $\frac{3}{4}$ in. (19 mm), the staybolt pitch shall not exceed the smaller of 20 in. (500 mm) or the limits established in UG-47(f).

(3) the provisions of UG-47 and UG-49 shall be followed; and

(4) the required area of the staybolt shall be determined in accordance with the requirements in UG-50.

(b) Welded stays, substantially as shown in Figure UW-19.2, may be used to stay jacketed pressure vessels provided:

(1) the pressure does not exceed 300 psi (2 MPa);

(2) the required thickness of the plate does not exceed $\frac{1}{2}$ in. (13 mm);

(3) the size of the fillet welds is not less than the plate thickness;

(4) the inside welds are properly inspected before the closing plates are attached;

(5) the allowable load on the fillet welds is computed in accordance with UW-18(d);

(6) the maximum diameter or width of the hole in the plate does not exceed $1\frac{1}{4}$ in. (32 mm);

(7) the welders are qualified under the rules of Section IX;

(8) the maximum spacing of stays is determined by the formula in UG-47(a), using C = 2.1 if either plate is not over $\frac{7}{16}$ in. (11 mm) thick, C = 2.2 if both plates are over $\frac{7}{16}$ in. (11 mm) thick.

(c) Welded stayed construction, as shown in Figure UW-19.2 or consisting of a dimpled or embossed plate welded to another like plate or to a plain plate, may be used, provided

(1) the welded attachment is made by fillet welds around holes or slots as shown in Figure UW-19.2 or if the thickness of the plate having the hole or slot is $\frac{3}{16}$ in. (5 mm) or less, and the hole is 1 in. (25 mm) or less in diameter, the holes may be completely filled with weld metal. The allowable load on the weld shall equal the product of the thickness of the plate having the hole or slot, the circumference or perimeter of the hole or slot, the allowable stress value in tension of the weaker of the materials being joined and a joint efficiency of 55%.

(2) the maximum allowable working pressure of the dimpled or embossed components is established in accordance with the requirements of UG-101. The joint efficiency, E, used in UG-101 to calculate the MAWP of the dimpled panel shall be taken as 0.80. This proof test may be carried out on a representative panel. If a representative panel is used, it shall be rectangular in shape and at least 5 pitches in each direction, but not less than 24 in. (600 mm) in either direction. The representative panel shall utilize the same weld details as will be used in the final construction.

(3) the plain plate, if used, shall meet the requirements for braced and stayed surfaces.

(d) The welds need not be radiographed, nor need they be postweld heat treated unless the vessel or vessel part in which they occur is required to be postweld heat treated.

UW-20 TUBE-TO-TUBESHEET WELDS

UW-20.1 Scope. These rules provide a basis for establishing weld sizes and allowable joint loads for full strength and partial strength tube-to-tubesheet welds.

Provided by IHS under license with ASME
No reproduction or networking permitted without license from IHS
Licensee=Chevron Phillips Chemical Co LP/5956674001
Not for Resale, 11/09/2014 20:41:36 MST

Figure UW-19.1
Typical Forms of Welded Staybolts

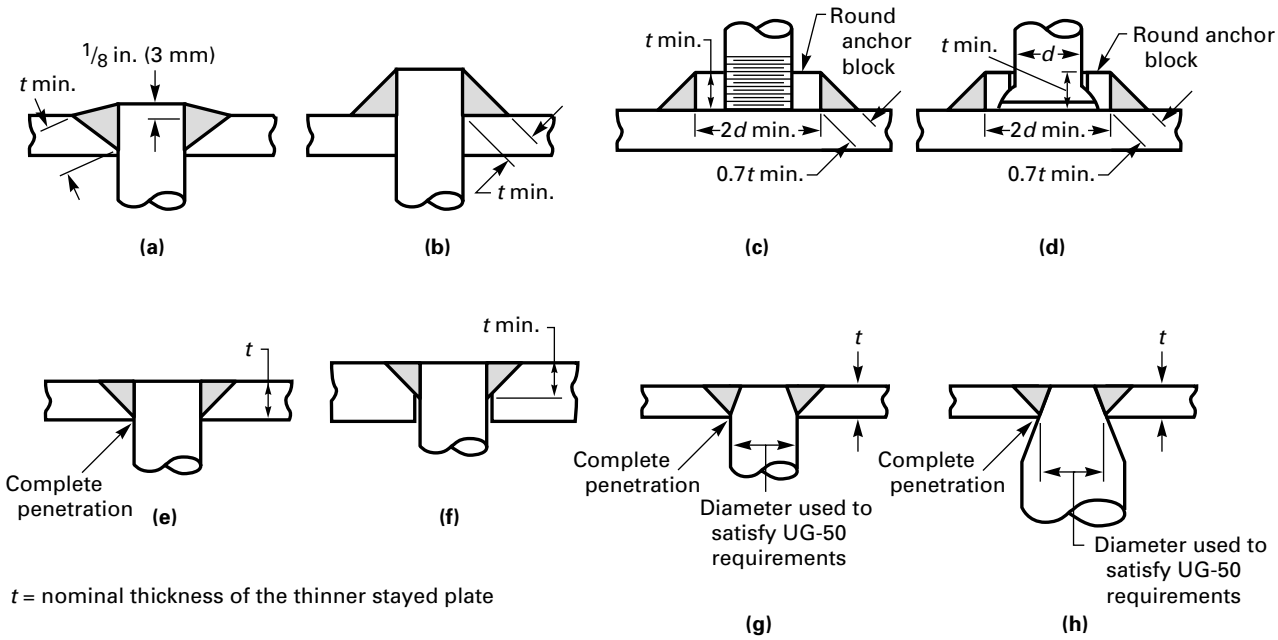

UW-20.2 Definitions.

(a) Full Strength Weld. A full strength tube-to-tubesheet weld is one in which the design strength is equal to or greater than the axial tube strength, F_t. When the weld in a tube-to-tubesheet joint meets the requirements of UW-20.4, it is a full strength weld and the joint does not require qualification by shear load testing. Such a weld also provides tube joint leak tightness.

(b) Partial Strength Weld. A partial strength weld is one in which the design strength is based on the mechanical and thermal axial tube loads (in either direction) that are determined from the actual design conditions. The maximum allowable axial load of this weld may be determined in accordance with UW-20.5, Nonmandatory Appendix A, or UW-18(d). When the weld in a tube-to-tubesheet joint meets the requirements of UW-20.5 or

Figure UW-19.2
Use of Plug and Slot Welds for Staying Plates

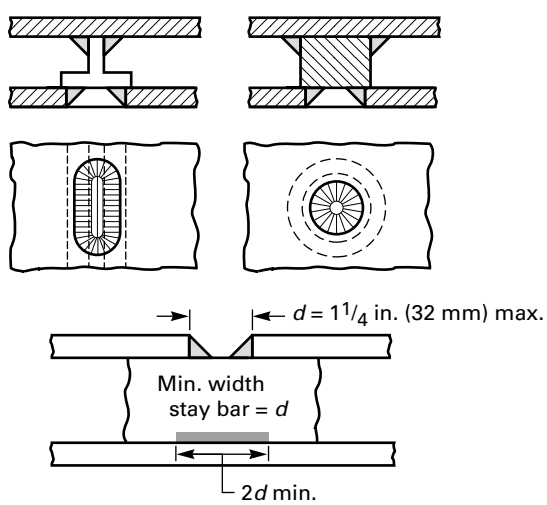

Provided by IHS under license with ASME
No reproduction or networking permitted without license from IHS
Licensee=Chevron Phillips Chemical Co LP/5956674001
Not for Resale, 11/09/2014 20:41:36 MST

Figure UW-20.1
Some Acceptable Types of Tube-to-Tubesheet Strength Welds

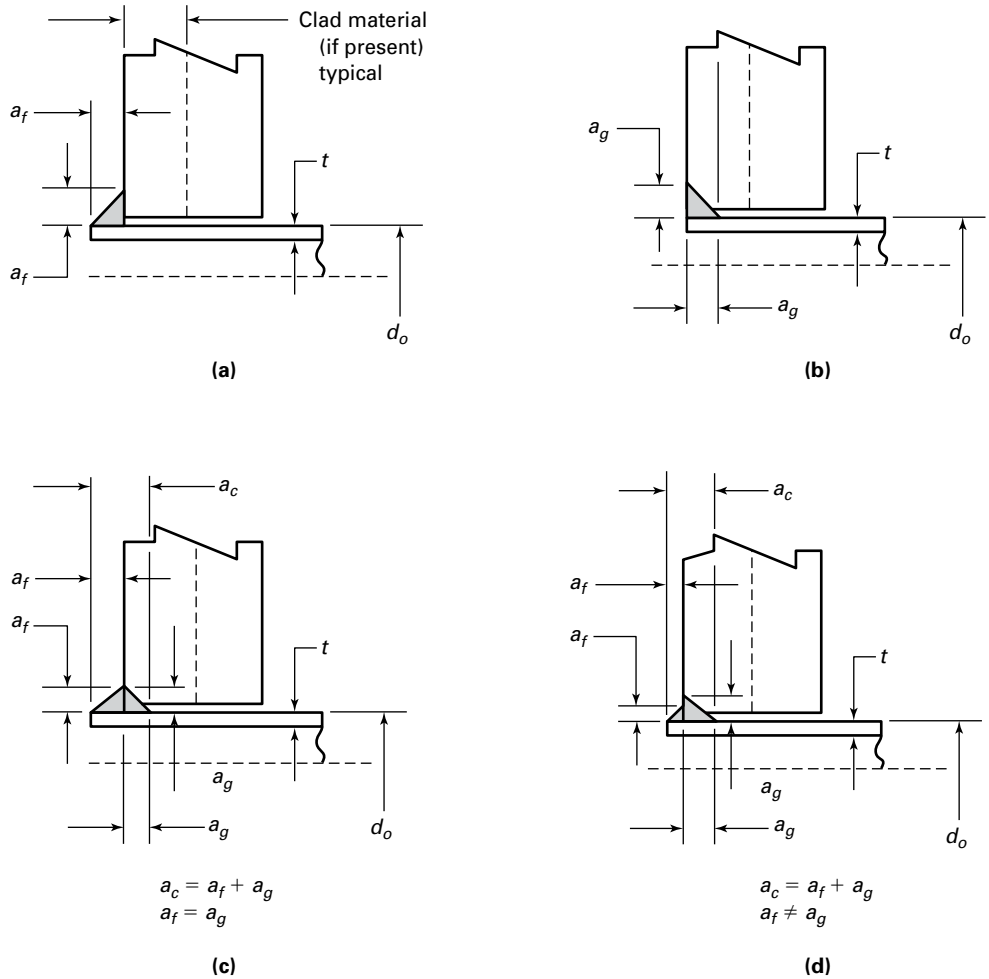

UW-18(d), it is a partial strength weld and the joint does not require qualification by shear load testing. Such a weld also provides tube joint leak tightness.

(c) Seal Weld. A tube-to-tubesheet seal weld is one used to supplement an expanded tube joint to ensure leak tightness. Its size has not been determined based on axial tube loading.

UW-20.3 Nomenclature. The symbols described below are used for the design of tube-to-tubesheet welds.

a_c = length of the combined weld legs measured parallel to the longitudinal axis of the tube at its outside diameter
a_f = fillet weld leg
a_g = groove weld leg
a_r = minimum required length of the weld leg(s) under consideration
d_o = tube outside diameter
F_d = design strength, but not greater than F_t
f_d = ratio of the design strength to the tube strength
= 1.0 for full strength welds
= F_d/F_t for partial strength welds
F_f = fillet weld strength, but not greater than F_t
= $0.55\pi a_f\,(d_o + 0.67a_f)\,S_w$
f_f = ratio of the fillet weld strength to the design strength
= $1 - F_g/(f_d F_t)$
F_g = groove weld strength, but not greater than F_t
= $0.85\pi a_g\,(d_o + 0.67a_g)\,S_w$
F_t = axial tube strength
= $\pi t\,(d_o - t)\,S_a$
f_w = weld strength factor
= S_a/S_w
L_{max} = maximum allowable axial load in either direction on the tube-to-tubesheet joint
S = allowable stress value as given in the applicable part of Section II, Part D
S_a = allowable stress in tube (see S, above)

Provided by IHS under license with ASME
No reproduction or networking permitted without license from IHS
Licensee=Chevron Phillips Chemical Co LP/5956674001
Not for Resale, 11/09/2014 20:41:36 MST

S_t = allowable stress of the material to which the tube is welded (see S, above)
S_w = allowable stress in weld (lesser of S_a or S_t, above)
t = nominal tube thickness

NOTE: For a welded tube or pipe, use the allowable stress for the equivalent seamless product. When the allowable stress for the equivalent seamless product is not available, divide the allowable stress of the welded product by 0.85.

UW-20.4 Full Strength Welds. Full strength welds shown in Figure UW-20.1 shall conform to the following requirements:

(a) The size of a full strength weld shall be determined in accordance with UW-20.6.

(b) The maximum allowable axial load in either direction on a tube-to-tubesheet joint with a full strength weld shall be determined as follows:

(1) For loads due to pressure-induced axial forces, $L_{\max} = F_t$.

(2) For loads due to thermally induced or pressure plus thermally induced axial forces:

(-a) $L_{\max} = F_t$ for welded only tube-to-tubesheet joints, where the thickness through the weld throat is less than the nominal tube thickness t;

(-b) $L_{\max} = 2F_t$ for all other welded tube-to-tubesheet joints.

UW-20.5 Partial Strength Welds. Partial strength welds shown in Figure UW-20.1 shall conform to the following requirements:

(a) The size of a partial strength weld shall be determined in accordance UW-20.6.

(b) The maximum allowable axial load in either direction on a tube-to-tubesheet joint with a partial strength weld shall be determined as follows:

(1) For loads due to pressure-induced axial forces, $L_{\max} = F_f + F_g$, but not greater than F_t.

(2) For loads due to thermally induced or pressure plus thermally induced axial forces:

(-a) $L_{\max} = F_f + F_g$, but not greater than F_t, for welded only tube-to-tubesheet joints, where the thickness through the weld throat is less than the nominal tube thickness t;

(-b) $L_{\max} = 2(F_f + F_g)$, but not greater than $2F_t$, for all other welded tube-to-tubesheet joints.

UW-20.6 Weld Size Design Formulas. The size of tube-to-tubesheet strength welds shown in Figure UW-20.1 shall conform to the following requirements:

(a) For fillet welds shown in sketch (a),

$$a_r = \sqrt{(0.75d_o)^2 + 2.73t(d_o - t)f_w f_d} - 0.75d_o$$

(1) For full strength welds, a_f shall not be less than the greater of a_r or t.

(2) For partial strength welds, a_f shall not be less than a_r.

(b) For groove welds shown in sketch (b),

$$a_r = \sqrt{(0.75d_o)^2 + 1.76t(d_o - t)f_w f_d} - 0.75d_o$$

(1) For full strength welds, a_g shall not be less than the greater of a_r or t.

(2) For partial strength welds, a_g shall not be less than a_r.

(c) For combined groove and fillet welds shown in sketch (c), where a_f is equal to a_g,

$$a_r = 2\left[\sqrt{(0.75d_o)^2 + 1.07t(d_o - t)f_w f_d} - 0.75d_o\right]$$

(1) For full strength welds, a_c shall not be less than the greater of a_r or t.

(2) For partial strength welds, a_c shall not be less than a_r.

Calculate a_f and a_g: $a_f = a_c/2$ and $a_g = a_c/2$.

(d) For combined groove and fillet welds shown in sketch (d), where a_f is not equal to a_g, a_r shall be determined as follows: Choose a_g. Calculate a_r:

$$a_r = \sqrt{(0.75d_o)^2 + 2.73t(d_o - t)f_w f_d f_f} - 0.75d_o$$

(1) For full strength welds, a_c shall not be less than the greater of $(a_r + a_g)$ or t.

(2) For partial strength welds, a_c shall not be less than $(a_r + a_g)$.

Calculate a_f : $a_f = a_c - a_g$.

UW-20.7 Clad Tubesheets.

(a) Tube-to-tubesheet welds in the cladding of either integral or weld metal overlay clad tubesheets may be considered strength welds (full or partial), provided the welds meet the design requirements of UW-20. In addition, when the strength welds are to be made in the clad material of integral clad tubesheets, the integral clad material to be used for tubesheets shall meet the requirements in (a)(1) and (a)(2) for any combination of clad and base materials. The shear strength test and ultrasonic examination specified in (a)(1) and (a)(2) are not required for weld metal overlay clad tubesheets.

(1) Integral clad material shall be shear strength tested in accordance with SA-263. One shear test shall be made on each integral clad plate or forging and the results shall be reported on the material test report.

(2) Integral clad material shall be ultrasonically examined for bond integrity in accordance with SA-578, including Supplementary Requirement S1, and shall meet the acceptance criteria given in SA-263 for Quality Level Class 1.

Provided by IHS under license with ASME
No reproduction or networking permitted without license from IHS
Licensee=Chevron Phillips Chemical Co LP/5956674001
Not for Resale, 11/09/2014 20:41:36 MST

(b) When the design calculations for clad tubesheets are based on the total thickness including the cladding, the clad material shall meet any additional requirements specified in Part UCL.

(c) When tubesheets are constructed using linings, or integral cladding that does not meet the requirements of (a)(1) and (a)(2), the strength of the tube-to-tubesheet joint shall not be dependent upon the connection between the tubes and the lining or integral cladding, as applicable.

UW-21 ASME B16.5 SOCKET AND SLIP-ON FLANGE WELDS

(a) ASME B16.5 socket weld flanges shall be welded using an external fillet weld. The minimum fillet weld throat dimension shall be the lesser of the nozzle wall thickness or 0.7 times the hub thickness of the socket weld flange. See Figure UW-21, illustration (4).

(b) ASME B16.5 slip-on flanges shall be welded using an internal and an external weld. See Figure UW-21, illustrations (1), (2), and (3).

FABRICATION

UW-26 GENERAL

(a) The rules in the following paragraphs apply specifically to the fabrication of pressure vessels and vessel parts that are fabricated by welding and shall be used in conjunction with the general requirements for in Subsection A, and with the specific requirements for in Subsection C that pertain to the class of material used.

(b) Each Manufacturer or parts Manufacturer shall be responsible for the quality of the welding done by his organization and shall conduct tests not only of the welding procedure to determine its suitability to ensure welds which will meet the required tests, but also of the welders and welding operators to determine their ability to apply the procedure properly.

(c) No production welding shall be undertaken until after the welding procedures which are to be used have been qualified. Only welders and welding operators who are qualified in accordance with Section IX shall be used in production.

(d) The Manufacturer (Certificate Holder) may engage individuals by contract or agreement for their services as welders[69] at the shop location shown on the Certificate of Authorization and at field sites (if allowed by the Certificate of Authorization) for the construction of pressure vessels or vessel parts, provided all of the following conditions are met:

(1) All Code construction shall be the responsibility of the Manufacturer.

(2) All welding shall be performed in accordance with the Manufacturer's welding procedure specifications in accordance with the requirements of Section IX.

(3) All welders shall be qualified by the Manufacturer in accordance with the requirements of Section IX.

(4) The Manufacturer's Quality Control System shall include as a minimum:

(-a) a requirement for complete and exclusive administrative and technical supervision of all welders by the Manufacturer;

(-b) evidence of the Manufacturer's authority to assign and remove welders at his discretion without involvement of any other organization;

(-c) a requirement for assignment of welder identification symbols;

(-d) evidence that this program has been accepted by the Manufacturer's Authorized Inspection Agency which provides the inspection service.

(5) The Manufacturer shall be responsible for Code compliance of the vessel or part, including Certification Mark stamping and providing Data Report Forms properly executed and countersigned by the Inspector.

Figure UW-21
Welds of Socket Weld Flanges to Nozzle Necks (13)

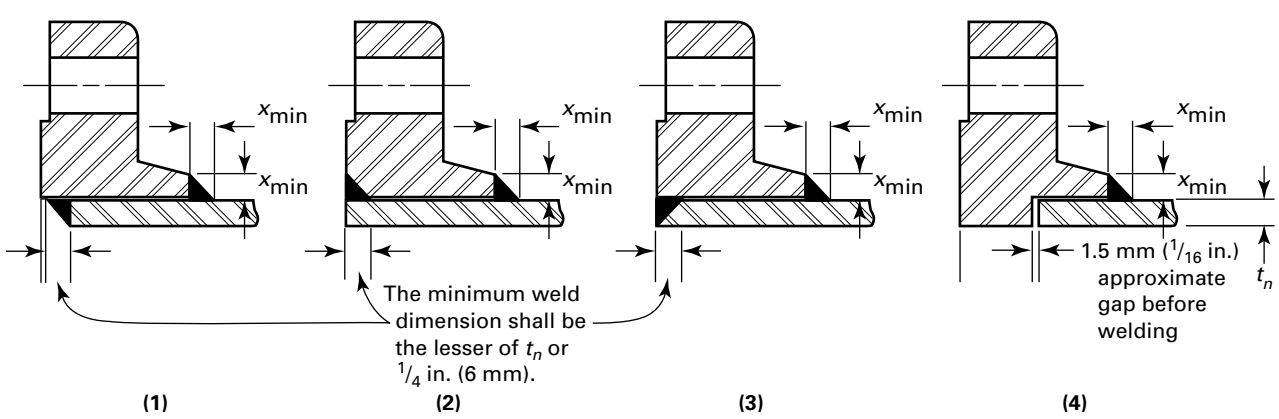

GENERAL NOTE: x_{min} = the lesser of $1.4t_n$ or the thickness of the hub

Provided by IHS under license with ASME
No reproduction or networking permitted without license from IHS
Licensee=Chevron Phillips Chemical Co LP/5956674001
Not for Resale, 11/09/2014 20:41:36 MST

(13) **UW-27 WELDING PROCESSES**

(a) The welding processes that may be used in the construction of vessels under this Part of this Division are restricted as follows:

(1) arc welding processes: atomic hydrogen, electrogas, gas metal arc, gas tungsten arc, plasma arc, shielded metal arc, stud, and submerged arc;

(2) pressure welding processes: flash, induction, resistance, pressure thermit, explosive,[70] pressure gas, and inertia and continuous drive friction welding.

(3) other welding processes: electron beam, electroslag, laser beam, oxyfuel gas, thermit, and friction stir.

(b) Other than pressure inherent to the welding processes, no mechanical pressure or blows shall be applied except as permitted for peening in UW-39.

(c) Definitions are given in Section IX which include variations of these processes.

(d) Arc stud welding and resistance stud welding may be used only for nonpressure-bearing attachments, having a load or nonload-carrying function, except for material listed in Table UHT-23 provided that, in the case of ferrous materials, the heat treatment requirements of UCS-56 are complied with and the requirements of UW-28(b) and UW-29(a) are met prior to start of production welding. Studs shall be limited to 1 in. (25 mm) diameter maximum for round studs and an equivalent cross-sectional area for studs with other shapes.

(e) The electroslag welding process may be used for butt welds only in ferritic steels and austenitic stainless steels of types listed in UW-5(d), provided the requirements of UW-11(a)(6) and UW-11(d) are satisfied. [See UW-5(e).]

(f) The electrogas welding process may be used for butt welds only in ferritic steels and austenitic stainless steels of types listed in UW-5(d), provided the requirements of UW-11(a)(6) are satisfied. When a single pass is greater than $1\frac{1}{2}$ in. (38 mm) in ferritic materials, the joint shall be given a grain refining (austenitizing) heat treatment. [See UW-5(e).]

UW-28 QUALIFICATION OF WELDING PROCEDURE

(a) Each procedure of welding that is to be followed in construction shall be recorded in detail by the manufacturer.

(b) The procedure used in welding pressure parts and in joining load-carrying nonpressure parts, such as all permanent or temporary clips and lugs, to pressure parts shall be qualified in accordance with Section IX.

(c) The procedure used in welding nonpressure-bearing attachments which have essentially no load-carrying function (such as extended heat transfer surfaces, insulation support pins, etc.), to pressure parts shall meet the following requirements.

(1) When the welding process is manual, machine, or semiautomatic, procedure qualification is required in accordance with Section IX.

(2) When the welding is any automatic welding process performed in accordance with a Welding Procedure Specification (in compliance with Section IX as far as applicable), procedure qualification testing is not required.

(d) Welding of all test coupons shall be conducted by the Manufacturer. Testing of all test coupons shall be the responsibility of the Manufacturer. Alternatively, AWS Standard Welding Procedure Specifications that have been accepted by Section IX may be used provided they meet all other requirements of this Division. Qualification of a welding procedure by one Manufacturer shall not qualify that procedure for any other Manufacturer except as provided in QW-201 of Section IX.

UW-29 TESTS OF WELDERS AND WELDING OPERATORS

(a) The welders and welding operators used in welding pressure parts and in joining load-carrying nonpressure parts (attachments) to pressure parts shall be qualified in accordance with Section IX.

(1) The qualification test for welding operators of machine welding equipment shall be performed on a separate test plate prior to the start of welding or on the first workpiece.

(2) When stud welding is used to attach load-carrying studs, a production stud weld test of each welder or welding operator shall be performed on a separate test plate or tube prior to the start of welding on each work shift. This weld test shall consist of five studs, welded and tested by the bend or torque stud weld testing procedure described in Section IX.

(b) The welders and welding operators used in welding nonpressure-bearing attachments, which have essentially no load-carrying function (such as extended heat transfer surfaces, insulation support pins, etc.), to pressure parts shall comply with the following:

(1) When the welding process is manual, machine, or semiautomatic, qualification in accordance with Section IX is required.

(2) When welding is done by any automatic welding process, performance qualification testing is not required.

(3) When stud welding is used, a production stud weld test, appropriate to the end use application requirements, shall be specified by the Manufacturer and carried out on a separate test plate or tube at the start of each shift.

(c) Each welder and welding operator shall be assigned an identifying number, letter, or symbol by the manufacturer which shall be used to identify the work of that welder or welding operator in accordance with UW-37(f).

Provided by IHS under license with ASME
No reproduction or networking permitted without license from IHS
Licensee=Chevron Phillips Chemical Co LP/5956674001
Not for Resale, 11/09/2014 20:41:36 MST

(d) The Manufacturer shall maintain a record of the welders and welding operators showing the date and result of tests and the identification mark assigned to each. These records shall be maintained in accordance with Section IX.

(e) Welding of all test coupons shall be conducted by the Manufacturer. Testing of all test coupons shall be the responsibility of the Manufacturer. A performance qualification test conducted by one Manufacturer shall not qualify a welder or welding operator to do work for any other Manufacturer except as provided in QW-300 of Section IX.

UW-30 LOWEST PERMISSIBLE TEMPERATURES FOR WELDING

It is recommended that no welding of any kind be done when the temperature of the base metal is lower than 0°F (−20°C). At temperatures between 32°F (0°C) and 0°F (−20°C), the surface of all areas within 3 in. (75 mm) of the point where a weld is to be started should be heated to a temperature at least warm to the hand [estimated to be above 60°F (15°C)] before welding is started. It is recommended also that no welding be done when surfaces are wet or covered with ice, when snow is falling on the surfaces to be welded, or during periods of high wind, unless the welders or welding operators and the work are properly protected.

UW-31 CUTTING, FITTING, AND ALIGNMENT

(a) When plates are shaped by oxygen or arc cutting, the edges to be welded shall be uniform and smooth and shall be freed of all loose scale and slag accumulations before welding (see UG-76 and UCS-5).

(b) Plates that are being welded shall be fitted, aligned, and retained in position during the welding operation.

(c) Bars, jacks, clamps, tack welds, or other appropriate means may be used to hold the edges of parts in alignment. Tack welds used to secure alignment shall either be removed completely when they have served their purpose, or their stopping and starting ends shall be properly prepared by grinding or other suitable means so that they may be satisfactorily incorporated into the final weld. Tack welds, whether removed or left in place, shall be made using a fillet weld or butt weld procedure qualified in accordance with Section IX. Tack welds to be left in place shall be made by welders qualified in accordance with Section IX, and shall be examined visually for defects, and if found to be defective shall be removed.

Provided that the work is done under the provisions of U-2(b), it is not necessary that a subcontractor making such tack welds for a vessel or parts manufacturer be a holder of a Code Certificate of Authorization. The requirements of UW-26(d) do not apply to such tack welds.

(d) The edges of butt joints shall be held during welding so that the tolerances of UW-33 are not exceeded in the completed joint. When fitted girth joints have deviations exceeding the permitted tolerances, the head or shell ring, whichever is out-of-true, shall be reformed until the errors are within the limits specified. Where fillet welds are used, the lapped plates shall fit closely and be kept in contact during welding.

(e) When joining two parts by the inertia and continuous drive friction welding processes, one of the two parts must be held in a fixed position and the other part rotated. The two faces to be joined must be essentially symmetrical with respect to the axis of rotation. Some of the basic types of applicable joints are solid round to solid round, tube to tube, solid round to tube, solid round to plate, and tube to plate.

UW-32 CLEANING OF SURFACES TO BE WELDED

(a) The surfaces to be welded shall be clean and free of scale, rust, oil, grease, slag, detrimental oxides, and other deleterious foreign material. The method and extent of cleaning should be determined based on the material to be welded and the contaminants to be removed. When weld metal is to be deposited over a previously welded surface, all slag shall be removed by a roughing tool, chisel, chipping hammer, or other suitable means so as to prevent inclusion of impurities in the weld metal.

(b) Cast surfaces to be welded shall be machined, chipped, or ground to remove foundry scale and to expose sound metal.

(c) The requirements in (a) and (b) above are not intended to apply to any process of welding by which proper fusion and penetration are otherwise obtained and by which the weld remains free from defects.

UW-33 ALIGNMENT TOLERANCE

(a) Alignment of sections at edges to be butt welded shall be such that the maximum offset is not greater than the applicable amount for the welded joint category (see UW-3) under consideration, as listed in Table UW-33. The section thickness t is the nominal thickness of the thinner section at the joint.

(b) Any offset within the allowable tolerance provided above shall be faired at a three to one taper over the width of the finished weld, or if necessary, by adding additional weld metal beyond what would otherwise be the edge of the weld. Such additional weld metal buildup shall be subject to the requirements of UW-42.

UW-34 SPIN-HOLES (13)

Spin-holes are permitted within heads or segments thereof to facilitate forming. Spin-holes not greater in diameter than $2^3/_8$ in. (60 mm) may be closed with a full-penetration weld using either a welded plug or weld metal. The weld and plug shall be no thinner than the head material adjacent to the spin-hole.

The finished weld shall be examined[71] and shall meet the acceptance requirements of Mandatory Appendix 6 or Mandatory Appendix 8 of this Division. Radiographic

Provided by IHS under license with ASME
No reproduction or networking permitted without license from IHS
Licensee=Chevron Phillips Chemical Co LP/5956674001
Not for Resale, 11/09/2014 20:41:36 MST

Table UW-33

Customary Units		
	Joint Categories	
Section Thickness, in.	A	B, C, & D
Up to $\frac{1}{2}$, incl.	$\frac{1}{4}t$	$\frac{1}{4}t$
Over $\frac{1}{2}$ to $\frac{3}{4}$, incl.	$\frac{1}{8}$ in.	$\frac{1}{4}t$
Over $\frac{3}{4}$ to $1\frac{1}{2}$, incl.	$\frac{1}{8}$ in.	$\frac{3}{16}$ in.
Over $1\frac{1}{2}$ to 2, incl.	$\frac{1}{8}$ in.	$\frac{1}{8}t$
Over 2	Lesser of $\frac{1}{16}t$ or $\frac{3}{8}$ in.	Lesser of $\frac{1}{8}t$ or $\frac{3}{4}$ in.
SI Units		
	Joint Categories	
Section Thickness, mm	A	B, C, & D
Up to 13, incl.	$\frac{1}{4}t$	$\frac{1}{4}t$
Over 13 to 19, incl.	3 mm	$\frac{1}{4}t$
Over 19 to 38, incl.	3 mm	5 mm
Over 38 to 51, incl.	3 mm	$\frac{1}{8}t$
Over 51	Lesser of $\frac{1}{16}t$ or 10 mm	Lesser of $\frac{1}{8}t$ or 19 mm

examination, if required by UW-11(a), and additional inspections, if required by the material specification, shall be performed.

This weld is a butt weld, but it is not categorized. It shall not be considered in establishing the joint efficiency of any part of the head or of the head-to-shell weld.

(13) UW-35 FINISHED LONGITUDINAL AND CIRCUMFERENTIAL JOINTS

(a) Butt welded joints shall have complete penetration and full fusion. As-welded surfaces are permitted; however, the surface of welds shall be sufficiently free from coarse ripples, grooves, overlaps, and abrupt ridges and valleys to permit proper interpretation of radiographic and other required nondestructive examinations. If there is a question regarding the surface condition of the weld when interpreting a radiographic film, the film shall be compared to the actual weld surface for determination of acceptability.

(b) A reduction in thickness due to the welding process is acceptable provided all of the following conditions are met:

(1) The reduction in thickness shall not reduce the material of the adjoining surfaces below the minimum required thickness at any point.

(2) The reduction in thickness shall not exceed $\frac{1}{32}$ in. (1 mm) or 10% of the nominal thickness of the adjoining surface, whichever is less.[72]

(c) When a single-welded butt joint is made by using a backing strip which is left in place [Type No. (2) of Table UW-12], the requirement for reinforcement applies only to the side opposite the backing strip.

(d) To assure that the weld grooves are completely filled so that the surface of the weld metal at any point does not fall below the surface of the adjoining base materials,[73] weld metal may be added as reinforcement on each face of the weld. The thickness of the weld reinforcement on each face shall not exceed the following:

Customary Units		
	Maximum Reinforcement, in.	
Material Nominal Thickness, in.	Category B & C Butt Welds	Other Welds
Less than $\frac{3}{32}$	$\frac{3}{32}$	$\frac{1}{32}$
$\frac{3}{32}$ to $\frac{3}{16}$, incl.	$\frac{1}{8}$	$\frac{1}{16}$
Over $\frac{3}{16}$ to $\frac{1}{2}$, incl.	$\frac{5}{32}$	$\frac{3}{32}$
Over $\frac{1}{2}$ to 1, incl.	$\frac{3}{16}$	$\frac{3}{32}$
Over 1 to 2, incl.	$\frac{1}{4}$	$\frac{1}{8}$
Over 2 to 3, incl.	$\frac{1}{4}$	$\frac{5}{32}$
Over 3 to 4, incl.	$\frac{1}{4}$	$\frac{7}{32}$
Over 4 to 5, incl.	$\frac{1}{4}$	$\frac{1}{4}$
Over 5	$\frac{5}{16}$	$\frac{5}{16}$
SI Units		
	Maximum Reinforcement, mm.	
Material Nominal Thickness, mm	Category B & C Butt Welds	Other Welds
Less than 2.4	2.5	0.8
2.4 to 4.8, incl.	3	1.5
Over 4.8 to 13, incl.	4	2.5
Over 13 to 25, incl.	5	2.5
Over 25 to 51, incl.	6	3
Over 51 to 76, incl.	6	4
Over 76 to 102, incl.	6	5.5
Over 102 to 127, incl.	6	6
Over 127	8	8

UW-36 FILLET WELDS

In making fillet welds, the weld metal shall be deposited in such a way that adequate penetration into the base metal at the root of the weld is secured. The reduction of the thickness of the base metal due to the welding process at the edges of the fillet weld shall meet the same requirements as for butt welds [see UW-35(b)].

UW-37 MISCELLANEOUS WELDING REQUIREMENTS

(a) The reverse side of double-welded joints shall be prepared by chipping, grinding, or melting out, so as to secure sound metal at the base of weld metal first deposited, before applying weld metal from the reverse side.

(b) The requirements in (a) above are not intended to apply to any process of welding by which proper fusion and penetration are otherwise obtained and by which the base of the weld remains free from defects.

(c) If the welding is stopped for any reason, extra care shall be taken in restarting to get the required penetration and fusion. For submerged arc welding, chipping out a groove in the crater is recommended.

Provided by IHS under license with ASME
No reproduction or networking permitted without license from IHS
Licensee=Chevron Phillips Chemical Co LP/5956674001
Not for Resale, 11/09/2014 20:41:36 MST

(d) Where single-welded joints are used, particular care shall be taken in aligning and separating the components to be joined so that there will be complete penetration and fusion at the bottom of the joint for its full length.

(e) In welding plug welds, a fillet around the bottom of the hole shall be deposited first.

(f) Welder and Welding Operator Identification

(1) Each welder and welding operator shall stamp the identifying number, letter, or symbol assigned by the Manufacturer, on or adjacent to and at intervals of not more than 3 ft (1 m) along the welds which he makes in steel plates $^1/_4$ in. (6 mm) and over in thickness and in nonferrous plates $^1/_2$ in. (13 mm) and over in thickness; or a record shall be kept by the Manufacturer of welders and welding operators employed on each joint which shall be available to the Inspector. For identifying welds on vessels in which the wall thickness is less than $^1/_4$ in. (6 mm) for steel material and less than $^1/_2$ in. (13 mm) for nonferrous material, suitable stencil or other surface markings shall be used; or a record shall be kept by the Manufacturer of welders and welding operators employed on each joint which shall be available to the Inspector; or a stamp may be used provided the vessel part is not deformed and the following additional requirements are met:

(-a) for ferrous materials:

(-1) the materials shall be limited to P-No. 1 Gr. Nos. 1 and 2;

(-2) the minimum nominal plate thickness shall be $^3/_{16}$ in. (5 mm), or the minimum nominal pipe wall thickness shall be 0.154 in. (3.91 mm);

(-3) the minimum design metal temperature shall be no colder than −20°F (−29°C);

(-b) for nonferrous materials:

(-1) the materials shall be limited to aluminum as follows: SB-209 Alloys 3003, 5083, 5454, and 6061; SB-241 Alloys 3003, 5083, 5086, 5454, 6061, and 6063; and SB-247 Alloys 3003, 5083, and 6061;

(-2) the minimum nominal plate thickness shall be 0.249 in. (6.32 mm), or the minimum nominal pipe thickness shall be 0.133 in. (3.37 mm).

(2) When a multiple number of permanent nonpressure part load bearing attachment welds, nonload-bearing welds such as stud welds, or special welds such as tube-to-tubesheet welds are made on a vessel, the Manufacturer need not identify the welder or welding operator that welded each individual joint provided:

(-a) the Manufacturer's Quality Control System includes a procedure that will identify the welders or welding operators that made such welds on each vessel so that the Inspector can verify that the welders or welding operators were all properly qualified;

(-b) the welds in each category are all of the same type and configuration and are welded with the same welding procedure specification.

(3) Permanent identification of welders or welding operators making tack welds that become part of the final pressure weld is not required provided the Manufacturer's Quality Control System includes a procedure to permit the Inspector to verify that such tack welds were made by qualified welders or welding operators.

(g) The welded joint between two members joined by the inertia and continuous drive friction welding processes shall be a full penetration weld. Visual examination of the as-welded flash roll of each weld shall be made as an in-process check. The weld upset shall meet the specified amount within ±10%. The flash shall be removed to sound metal.

(h) Capacitor discharge welding may be used for welding temporary attachments and permanent nonstructural attachments without postweld heat treatment, provided the following requirements are met:

(1) A welding procedure specification shall be prepared in accordance with Section IX, insofar as possible describing the capacitor discharge equipment, the combination of materials to be joined, and the technique of application. Qualification of the welding procedure is not required.

(2) The energy output shall be limited to 125 W-sec.

UW-38 REPAIR OF WELD DEFECTS

Defects, such as cracks, pinholes, and incomplete fusion, detected visually or by the hydrostatic or pneumatic test or by the examinations prescribed in UW-11 shall be removed by mechanical means or by thermal gouging processes, after which the joint shall be rewelded [see UW-40(e)].

UW-39 PEENING

(a) Weld metal and heat affected zones may be peened by manual, electric, or pneumatic means when it is deemed necessary or helpful to control distortion, to relieve residual stresses, or to improve the quality of the weld. Peening shall not be used on the initial (root) layer of weld metal nor on the final (face) layer unless the weld is subsequently postweld heat treated. In no case, however, is peening to be performed in lieu of any postweld heat treatment required by these rules.

(b) Controlled shot peening and other similar methods which are intended only to enhance surface properties of the vessel or vessel parts shall be performed after any nondestructive examinations and pressure tests required by these rules.

UW-40 PROCEDURES FOR POSTWELD HEAT TREATMENT

(a) The operation of postweld heat treatment shall be performed in accordance with the requirements given in the applicable Part in Subsection C using one of the following procedures. In the procedures that follow, the soak band is defined as the volume of metal required to meet or exceed the minimum PWHT temperatures listed in Tables UCS-56-1 through UCS-56-11. As a minimum, the soak band shall contain the weld, heat affected zone, and

Provided by IHS under license with ASME
No reproduction or networking permitted without license from IHS
Licensee=Chevron Phillips Chemical Co LP/5956674001
Not for Resale, 11/09/2014 20:41:36 MST

a portion of base metal adjacent to the weld being heat treated. The minimum width of this volume is the widest width of weld plus $1t$ or 2 in. (50 mm), whichever is less, on each side or end of the weld. The term t is the nominal thickness as defined in (f) below. For additional detailed recommendations regarding implementation and performance of these procedures, refer to Welding Research Council (WRC) Bulletin 452, June 2000, "Recommended Practices for Local Heating of Welds in Pressure Vessels."

(1) heating the vessel as a whole in an enclosed furnace. This procedure is preferable and should be used whenever practicable.

(2) heating the vessel in more than one heat in a furnace, provided the overlap of the heated sections of the vessel is at least 5 ft (1.5 m). When this procedure is used, the portion outside of the furnace shall be shielded so that the temperature gradient is not harmful. The cross section where the vessel projects from the furnace shall not intersect a nozzle or other structural discontinuity.

(3) heating of shell sections and/or portions of vessels to postweld heat treat longitudinal joints or complicated welded details before joining to make the completed vessel. When the vessel is required to be postweld heat treated, and it is not practicable to postweld heat treat the completed vessel as a whole or in two or more heats as provided in (2) above, any circumferential joints not previously postweld heat treated may be thereafter locally postweld heat treated by heating such joints by any appropriate means that will assure the required uniformity. For such local heating, the soak band shall extend around the full circumference. The portion outside the soak band shall be protected so that the temperature gradient is not harmful. This procedure may also be used to postweld heat treat portions of new vessels after repairs.

(4) heating the vessel internally by any appropriate means and with adequate indicating and recording temperature devices to aid in the control and maintenance of a uniform distribution of temperature in the vessel wall. Previous to this operation, the vessel should be fully enclosed with insulating material, or the permanent insulation may be installed provided it is suitable for the required temperature. In this procedure the internal pressure should be kept as low as practicable, but shall not exceed 50% of the maximum allowable working pressure at the highest metal temperature expected during the postweld heat treatment period.

(5) heating a circumferential band containing nozzles or other welded attachments that require postweld heat treatment in such a manner that the entire band shall be brought up uniformly to the required temperature and held for the specified time. Except as modified in this paragraph below, the soak band shall extend around the entire vessel, and shall include the nozzle or welded attachment. The circumferential soak band width may be varied away from the nozzle or attachment weld requiring PWHT, provided the required soak band around the nozzle or attachment weld is heated to the required temperature and held for the required time. As an alternative to varying the soak band width, the temperature within the circumferential band away from the nozzle or attachment may be varied and need not reach the required temperature, provided the required soak band around the nozzle or attachment weld is heated to the required temperature, held for the required time, and the temperature gradient is not harmful throughout the heating and cooling cycle. The portion of the vessel outside of the circumferential soak band shall be protected so that the temperature gradient is not harmful. This procedure may also be used to postweld heat treat portions of vessels after repairs.

(6) heating the circumferential joints of pipe or tubing by any appropriate means using a soak band that extends around the entire circumference. The portion outside the soak band shall be protected so that the temperature gradient is not harmful. The proximity to the shell increases thermal restraint, and the designer should provide adequate length to permit heat treatment without harmful gradients at the nozzle attachment or heat a full circumferential band around the shell, including the nozzle.

(7) heating a local area around nozzles or welded attachments in the larger radius sections of a double curvature head or a spherical shell or head in such a manner that the area is brought up uniformly to the required temperature and held for the specified time. The soak band shall include the nozzle or welded attachment. The soak band shall include a circle that extends beyond the edges of the attachment weld in all directions by a minimum of t or 2 in. (50 mm), whichever is less. The portion of the vessel outside of the soak band shall be protected so that the temperature gradient is not harmful.

(8) heating of other configurations. Local area heating of other configurations such as "spots" or "bulls eye" local heating not addressed in (a)(1) through (a)(7) above is permitted, provided that other measures (based upon sufficiently similar, documented experience or evaluation) are taken that consider the effect of thermal gradients, all significant structural discontinuities (such as nozzles, attachments, head to shell junctures), and any mechanical loads which may be present during PWHT. The portion of the vessel or component outside the soak band shall be protected so that the temperature gradient is not harmful.

(b) The temperatures and rates of heating and cooling to be used in postweld heat treatment of vessels constructed of materials for which postweld heat treatment may be required are given in UCS-56, UHT-56, UNF-56, and UHA-32.

(c) The minimum temperature for postweld heat treatment given in Tables UCS-56-1 through UCS-56-11, Table UHT-56, and Tables UHA-32-1 through UHA-32-6, and in UNF-56, shall be the minimum temperature of the plate material of the shell or head of any vessel. Where more than one pressure vessel or pressure vessel part are postweld heat treated in one furnace charge,

Provided by IHS under license with ASME
No reproduction or networking permitted without license from IHS
Licensee=Chevron Phillips Chemical Co LP/5956674001
Not for Resale, 11/09/2014 20:41:36 MST

thermocouples shall be placed on vessels at the bottom, center, and top of the charge, or in other zones of possible temperature variation so that the temperature indicated shall be true temperature for all vessels or parts in those zones.[74]

(d) When pressure parts of two different P-Number Groups are joined by welding, the postweld heat treatment shall be that specified according to either UCS-56 or UHA-32, for the material requiring the higher postweld heat treatment temperature.

(e) Postweld heat treatment, when required, shall be done before the hydrostatic test and after any welded repairs except as permitted by UCS-56(f). A preliminary hydrostatic test to reveal leaks prior to postweld heat treatment is permissible.

(f) The term nominal thickness as used in Tables UCS-56-1 through UCS-56-11, UCS-56.1, UHA-32-1 through UHA-32-6, and UHT-56, is the thickness of the welded joint as defined below. For pressure vessels or parts of pressure vessels being postweld heat treated in a furnace charge, it is the greatest weld thickness in any vessel or vessel part which has not previously been postweld heat treated.

(1) When the welded joint connects parts of the same thickness, using a full penetration buttweld, the nominal thickness is the total depth of the weld exclusive of any permitted weld reinforcement.

(2) For groove welds, the nominal thickness is the depth of the groove.

(3) For fillet welds, the nominal thickness is the throat dimension. If a fillet weld is used in conjunction with a groove weld, the nominal thickness is the depth of the groove or the throat dimension, whichever is greater.

(4) For stud welds, the nominal thickness shall be the diameter of the stud.

(5) When a welded joint connects parts of unequal thicknesses, the nominal thickness shall be the following:

(-a) the thinner of two adjacent butt-welded parts including head to shell connections

(-b) the thickness of the shell or the fillet weld, whichever is greater, in connections to intermediate heads of the type shown in Figure UW-13.1 sketch (e);

(-c) the thickness of the shell in connections to tubesheets, flat heads, covers, flanges (except for welded parts depicted in Figure 2-4 sketch (7), where the thickness of the weld shall govern), or similar constructions;

(-d) in Figures UW-16.1 and UW-16.2, the thickness of the weld across the nozzle neck or shell or head or reinforcing pad or attachment fillet weld, whichever is the greater;

(-e) the thickness of the nozzle neck at the joint in nozzle neck to flange connections;

(-f) the thickness of the weld at the point of attachment when a nonpressure part is welded to a pressure part;

(-g) the thickness of the weld in tube-to-tubesheet connections.

(-h) the thickness of the weld metal overlay when weld metal overlay is the only welding applied (13)

The thickness of the head, shell, nozzle neck, or other parts as used above shall be the wall thickness of the part at the welded joint under consideration. For plate material, the thickness as shown on the Material Test Report or material Certificate of Compliance before forming may be used, at the Manufacturer's option, in lieu of measuring the wall thickness at the welded joint.

(6) For repairs, the nominal thickness is the depth of the repair weld.

UW-41 SECTIONING OF WELDED JOINTS

Welded joints may be examined by sectioning when agreed to by user and Manufacturer, but this examination shall not be considered a substitute for spot radiographic examination. This type of examination has no effect on the joint factors in Table UW-12. The method of closing the hole by welding is subject to acceptance by the Inspector. Some acceptable methods are given in Nonmandatory Appendix K.

UW-42 SURFACE WELD METAL BUILDUP

(a) Construction in which deposits of weld metal are applied to the surface of base metal for the purpose of restoring the thickness of the base metal for strength consideration; or modifying the configuration of weld joints in order to provide the tapered transition requirements of UW-9(c) and UW-33(b) shall be performed in accordance with the rules in (b) and (c).

(b) Procedure Qualification. A butt welding procedure qualification in accordance with provisions of Section IX shall be performed for the thickness of weld metal deposited, prior to production welding.

(c) Examination Requirements

(1) All weld metal buildup shall be examined over the full surface of the deposit by either magnetic particle examination to the requirements of Mandatory Appendix 6, or by liquid penetrant examination to the requirements of Mandatory Appendix 8.

(2) When such surface weld metal buildup is used in welded joints which require full or spot radiographic examination, the weld metal buildup shall be included in the examination.

INSPECTION AND TESTS

UW-46 GENERAL

The rules in the following paragraphs apply specifically to the inspection and testing of pressure vessels and vessel parts that are fabricated by welding and shall be used in conjunction with the general requirements for *Inspection and Tests* in Subsection A, and with the specific

Provided by IHS under license with ASME
No reproduction or networking permitted without license from IHS
Licensee=Chevron Phillips Chemical Co LP/5956674001
Not for Resale, 11/09/2014 20:41:36 MST

requirements for *Inspection and Tests* in Subsection C that pertain to the class of material used. [For tests on reinforcing plates, see UG-37(g).]

UW-47 CHECK OF WELDING PROCEDURE

The Inspector shall assure himself that the welding procedure employed in the construction of a vessel has been qualified under the provisions of Section IX. The Manufacturer shall submit evidence to the Inspector that the requirements have been met.

UW-48 CHECK OF WELDER AND WELDING OPERATOR QUALIFICATIONS

(a) The Manufacturer shall certify that the welding on a vessel has been done only by welders and welding operators who have been qualified under the requirements of Section IX and the Inspector shall assure himself that only qualified welders and welding operators have been used.

(b) The Manufacturer shall make available to the Inspector the record of the qualification tests of each welder and welding operator. The Inspector shall have the right at any time to call for and witness tests of the welding procedure or of the ability of any welder and welding operator.

UW-49 CHECK OF POSTWELD HEAT TREATMENT PRACTICE

The Inspector shall satisfy himself that all postweld heat treatment has been correctly performed and that the temperature readings conform to the requirements.

UW-50 NONDESTRUCTIVE EXAMINATION OF WELDS ON PNEUMATICALLY TESTED VESSELS

On welded pressure vessels to be pneumatically tested in accordance with UG-100, the full length of the following welds shall be examined[71] before the pneumatic test is performed, for the purpose of detecting cracks:

(a) all welds around openings;

(b) all attachment welds, including welds attaching nonpressure parts to pressure parts, having a throat thickness greater than $^1/_4$ in. (6 mm).

(13) UW-51 RADIOGRAPHIC EXAMINATION OF WELDED JOINTS

(a) All welded joints to be radiographed shall be examined in accordance with Article 2 of Section V except as specified below.

(1) A complete set of radiographs and records, as described in Article 2 of Section V, for each vessel or vessel part shall be retained by the Manufacturer, as follows:

(-a) films until the Manufacturer's Data Report has been signed by the Inspector;

(-b) records as required by this Division (10-13).

(2) A written radiographic examination procedure is not required. Demonstration of density and penetrameter image requirements on production or technique radiographs shall be considered satisfactory evidence of compliance with Article 2 of Section V.

(3) The requirements of T-274.2 of Article 2 of Section V are to be used only as a guide. Final acceptance of radiographs shall be based on the ability to see the prescribed penetrameter image and the specified hole or the designated wire of a wire penetrameter.

(4) As an alternative to the radiographic examination requirements above, all welds in material $^1/_4$ in. (6 mm) and greater in thickness may be examined using the ultrasonic (UT) method per the requirements of 7.5.5 of Section VIII, Division 2.

(b) Indications shown on the radiographs of welds and characterized as imperfections are unacceptable under the following conditions and shall be repaired as provided in UW-38, and the repair radiographed to UW-51 or, at the option of the Manufacturer, ultrasonically examined in accordance with the method described in Mandatory Appendix 12 and the standards specified in this paragraph, provided the defect has been confirmed by the ultrasonic examination to the satisfaction of the Authorized Inspector prior to making the repair. For material thicknesses in excess of 1 in. (25 mm), the concurrence of the user shall be obtained. This ultrasonic examination shall be noted under remarks on the Manufacturer's Data Report Form:

(1) any indication characterized as a crack or zone of incomplete fusion or penetration;

(2) any other elongated indication on the radiograph which has length greater than:

(-a) $^1/_4$ in. (6 mm) for t up to $^3/_4$ in. (19 mm)

(-b) $^1/_3 t$ for t from $^3/_4$ in. (19 mm) to $2^1/_4$ in. (57 mm)

(-c) $^3/_4$ in. (19 mm) for t over $2^1/_4$ in. (57 mm)

where

t = the thickness of the weld excluding any allowable reinforcement. For a butt weld joining two members having different thicknesses at the weld, t is the thinner of these two thicknesses. If a full penetration weld includes a fillet weld, the thickness of the throat of the fillet shall be included in t.

(3) any group of aligned indications that have an aggregate length greater than t in a length of $12t$, except when the distance between the successive imperfections exceeds $6L$ where L is the length of the longest imperfection in the group;

(4) rounded indications in excess of that specified by the acceptance standards given in Mandatory Appendix 4.

UW-52 SPOT EXAMINATION OF WELDED JOINTS (13)

NOTE: Spot radiographing of a welded joint is recognized as an effective inspection tool. The spot radiography rules are also considered to be an aid to quality control. Spot radiographs made directly after a

Provided by IHS under license with ASME
No reproduction or networking permitted without license from IHS
Licensee=Chevron Phillips Chemical Co LP/5956674001
Not for Resale, 11/09/2014 20:41:36 MST

welder or an operator has completed a unit of weld proves that the work is or is not being done in accordance with a satisfactory procedure. If the work is unsatisfactory, corrective steps can then be taken to improve the welding in the subsequent units, which unquestionably will improve the weld quality.

Spot radiography in accordance with these rules will not ensure a fabrication product of predetermined quality level throughout. It must be realized that an accepted vessel under these spot radiography rules may still contain defects which might be disclosed on further examination. If all radiographically disclosed weld defects must be eliminated from a vessel, then 100% radiography must be employed.

(a) Butt welded joints which are to be spot radiographed shall be examined locally as provided herein.

(b) Minimum Extent of Spot Radiographic Examination

(1) One spot shall be examined on each vessel for each 50 ft (15 m) increment of weld or fraction thereof for which a joint efficiency from column (b) of Table UW-12 is selected. However, for identical vessels or parts, each with less than 50 ft (15 m) of weld for which a joint efficiency from column (b) of Table UW-12 is selected, 50 ft (15 m) increments of weld may be represented by one spot examination.

(2) For each increment of weld to be examined, a sufficient number of spot radiographs shall be taken to examine the welding of each welder or welding operator. Under conditions where two or more welders or welding operators make weld layers in a joint, or on the two sides of a double-welded butt joint, one spot may represent the work of all welders or welding operators.

(3) Each spot examination shall be made as soon as practicable after completion of the increment of weld to be examined. The location of the spot shall be chosen by the Inspector after completion of the increment of welding to be examined, except that when the Inspector has been notified in advance and cannot be present or otherwise make the selection, the Manufacturer may exercise his own judgment in selecting the spots.

(4) Radiographs required at specific locations to satisfy the rules of other paragraphs, such as UW-9(d), UW-11(a)(5)(-b), and UW-14(b), shall not be used to satisfy the requirements for spot radiography.

(c) Standards for Spot Radiographic Examination. Spot examination by radiography shall be made in accordance with the technique prescribed in UW-51(a). The minimum length of spot radiograph shall be 6 in. (150 mm). Spot radiographs may be retained or be discarded by the Manufacturer after acceptance of the vessel by the Inspector. The acceptability of welds examined by spot radiography shall be judged by the following standards:

(1) Welds in which indications are characterized as cracks or zones of incomplete fusion or penetration shall be unacceptable.

(2) Welds having indications characterized as slag inclusions or cavities are unacceptable when the indication length exceeds $^2/_3 t$, where t is defined as shown in UW-51(b)(2). For all thicknesses, indications less than $^1/_4$ in. (6 mm) are acceptable, and indications greater than $^3/_4$ in. (19 mm) are unacceptable. Multiple aligned indications meeting these acceptance criteria are acceptable when the sum of their longest dimensions indications does not exceed t within a length of $6t$ (or proportionally for radiographs shorter than $6t$), and when the longest length L for each indication is separated by a distance not less than $3L$ from adjacent indications.

(3) Rounded indications are not a factor in the acceptability of welds not required to be fully radiographed.

(d) Evaluation and Retests

(1) When a spot, radiographed as required in (b)(1) or (b)(2) above, is acceptable in accordance with (c)(1) and (c)(2) above, the entire weld increment represented by this radiograph is acceptable.

(2) When a spot, radiographed as required in (b)(1) or (b)(2) above, has been examined and the radiograph discloses welding which does not comply with the minimum quality requirements of (c)(1) or (c)(2) above, two additional spots shall be radiographically examined in the same weld increment at locations away from the original spot. The locations of these additional spots shall be determined by the Inspector or fabricator as provided for the original spot examination in (b)(3) above.

(-a) If the two additional spots examined show welding which meets the minimum quality requirements of (c)(1) and (c)(2) above, the entire weld increment represented by the three radiographs is acceptable provided the defects disclosed by the first of the three radiographs are removed and the area repaired by welding. The weld repaired area shall be radiographically examined in accordance with the foregoing requirements of UW-52.

(-b) If either of the two additional spots examined shows welding which does not comply with the minimum quality requirements of (c)(1) or (c)(2) above, the entire increment of weld represented shall be rejected. The entire rejected weld shall be removed and the joint shall be rewelded or, at the fabricator's option, the entire increment of weld represented shall be completely radiographed and only defects need be corrected.

(-c) Repair welding shall be performed using a qualified procedure and in a manner acceptable to the Inspector. The rewelded joint, or the weld repaired areas, shall be spot radiographically examined at one location in accordance with the foregoing requirements of UW-52.

UW-53 TECHNIQUE FOR ULTRASONIC EXAMINATION OF WELDED JOINTS

Ultrasonic examination of welded joints when required or permitted by other paragraphs of this Division shall be performed in accordance with Mandatory Appendix 12 and shall be evaluated to the acceptance standards specified in Mandatory Appendix 12. The written examination procedure shall be available to the Inspector and shall be proven by actual demonstration to the satisfaction of the Inspector to be capable of detecting and locating imperfections described in this Division.

--`,,,``,,,```,,,,`,`,``,,`,,`,```-`-`,,`,,`,`,,`---

Provided by IHS under license with ASME

No reproduction or networking permitted without license from IHS

Licensee=Chevron Phillips Chemical Co LP/5956674001
Not for Resale, 11/09/2014 20:41:36 MST

UW-54 QUALIFICATION OF NONDESTRUCTIVE EXAMINATION PERSONNEL

(a) The Manufacturer shall be responsible for assuring that nondestructive examination (NDE) personnel have been qualified and certified in accordance with their employer's written practice prior to performing or evaluating radiographic or ultrasonic examinations required by this Division. SNT-TC-1A[75] or CP-189[75] shall be used as a guideline for employers to establish their written practice. National or international Central Certification Programs, such as the ASNT Central Certification Program (ACCP),[75] may be used to fulfill the examination and demonstration requirements of the employer's written practice. Provisions for training, experience, qualification, and certification of NDE personnel shall be described in the Manufacturer's quality control system.

(b) NDE personnel shall be qualified by examination. Qualification of NDE Level III personnel certified prior to the 2004 Edition of this Division may be based on demonstrated ability, achievement, education, and experience. Such qualification shall be specifically addressed in the written practice. When NDE personnel have been certified in accordance with a written practice based on an edition of SNT TC-1A or CP-189 referenced in Table U-3, their certification shall be valid until their next scheduled recertification.

(c) Recertification shall be in accordance with the employer's written practice based on the edition of SNT-TC-1A or CP-189 referenced in Table U-3. Recertification may be based on evidence of continued satisfactory performance or by reexamination(s) deemed necessary by the employer.

MARKING AND REPORTS

UW-60 GENERAL

The provisions for marking and reports, UG-115 through UG-120, shall apply without supplement to welded pressure vessels.

PRESSURE RELIEF DEVICES

UW-65 GENERAL

The provisions for pressure relief devices, UG-125 through UG-136, shall apply without supplement to welded pressure vessels.

Provided by IHS under license with ASME

No reproduction or networking permitted without license from IHS

Licensee=Chevron Phillips Chemical Co LP/5956674001
Not for Resale, 11/09/2014 20:41:36 MST

PART UF
REQUIREMENTS FOR PRESSURE VESSELS FABRICATED BY FORGING

GENERAL

UF-1 SCOPE

The rules in Part UF are applicable to forged pressure vessels without longitudinal joints, including their component parts that are fabricated of carbon and low alloy steels or of high alloy steels within the limitations of Part UHA. These rules shall be used in conjunction with the applicable requirements in Subsection A, and with the specific requirements in Subsection C that pertain to the respective classes of all materials used.

MATERIALS

UF-5 GENERAL

(a) Materials used in the construction of forged pressure vessels shall comply with the requirements for materials given in UG-4 through UG-14, except as specifically limited or extended in (b) and (c) below, and in UF-6.

(b) The heat analysis of forgings to be fabricated by welding shall not exceed carbon 0.35%. However, when the welding involves only minor nonpressure attachments as limited in UF-32, seal welding of threaded connections as permitted in UF-43, or repairs as limited by UF-37, the carbon content shall not exceed 0.50% by heat analysis. When by heat analysis the carbon analysis exceeds 0.50% no welding is permitted.

(c) This part contains special requirements applicable to SA-372 materials subjected to liquid quench and temper heat treatment. Such special requirements do not apply to austenitic materials or to materials not exceeding 95 ksi (655 MPa) specified minimum tensile strength. SA-372 materials may be subjected to accelerated cooling or may be quenched and tempered to attain their specified minimum properties provided:

(1) after heat treatment, inspection for injurious defects shall be performed according to UF-31(b)(1)(-a);

(2) tensile strength shall not be greater than 20,000 psi (140 MPa) above their specified minimum tensile strength.

(d) For vessels constructed of SA-372 Grade J, Class 110 or Grade L material, transverse impact tests shall be made at the minimum allowable temperature in accordance with Part UHT of this Division, except in no case shall the test temperature be higher than −20°F (−29°C). Certification is required. An ultrasonic examination shall be made in accordance with UF-55.

UF-6 FORGINGS

All materials subject to stress due to pressure shall conform to one of the specifications given in Section II and limited to those listed in Table UCS-23 and UHA-23 for forgings or to plates, and seamless pipe and tube when such material is further processed by a forging operation.

UF-7 FORGED STEEL ROLLS USED FOR CORRUGATING PAPER MACHINERY

Materials and rules of construction to be applied in the manufacture of forged steel corrugating and pressure rolls used in machinery for producing corrugated paper are covered in SA-649 in Section II, Part A.

DESIGN

UF-12 GENERAL

The rules in the following paragraphs apply specifically to vessels or main sections of vessels that are forged from ingots, slabs, billets, plate, pipe, or tubes, and shall be used to supplement the requirements for design which are applicable, as given in UG-16 through UG-55, and those given in UCS-16 through UCS-67, and UHA-20 through UHA-34. Sections of vessels may be joined by any method permitted in the several parts of this Division except as limited in UF-5(b) and UF-5(c).

Vessels constructed of SA-372 Grade A, B, C, or D; Grade E, Class 65 or 70; Grade F, Class 70; Grade G, Class 70; Grade H, Class 70; Grade J, Class 65, 70, or 110; Grade L; or Grade M, Class A or B must be of streamlined design, and stress raisers, such as abrupt changes in section, shall be minimized. Openings in vessels constructed of liquid quenched and tempered materials, other than austenitic steel, shall be reinforced in accordance with UG-37; UG-36(c)(3) shall not apply.

The nominal wall thickness of the cylindrical shell of vessels constructed of SA-372 Grade J, Class 110 shall not exceed 2 in. (50 mm).

Provided by IHS under license with ASME
No reproduction or networking permitted without license from IHS
Licensee=Chevron Phillips Chemical Co LP/5956674001
Not for Resale, 11/09/2014 20:41:36 MST

UF-13 HEAD DESIGN

(a) The minimum required thickness of forged heads shall be computed using the equations of UG-32. When heads are made separate from the body forging they may be attached by any method permitted in the several parts of this Division except as limited in UF-5(b) and UF-5(c).

(b) The juncture of a forged conical head with the body shall be a knuckle, the inside radius of which shall be not less than 6% of the internal diameter of the vessel. The thickness at the knuckle shall be not less than that of the cylinder and shall be faired into that of the head at the base of the cone.

(c) Except for the $3t$ requirements in UG-32(j) the design of the head shall comply with the applicable provisions of UG-32, UG-33, UG-34, and 1-6.

UF-25 CORROSION ALLOWANCE

(a) Provision shall be made for corrosion in accordance with the requirements in UG-25.

FABRICATION

UF-26 GENERAL

The rules in the following paragraphs apply specifically to forged vessels, main sections of vessels and other vessel parts, and shall be used to supplement the applicable requirements for fabrication given in UG-75 through UG-84 and UCS-79. For high alloy steel forged vessels, the applicable paragraphs of Part UHA shall also apply.

UF-27 TOLERANCES ON BODY FORGINGS

(a) The inner surface of the body shall be true-to-round to the degree that the maximum difference between any two diameters at 90 deg to each other, determined for any critical cross section, does not exceed 1% of the mean diameter at that section. Chip marks and minor depressions in the inner surface may be filled by welding to meet these tolerances when the welding is done as permitted in UF-32.

(b) If out-of-roundness exceeds the limit in (a) and the condition cannot be corrected, the forging shall be rejected except that if the out-of-roundness does not exceed 3%, the forging may be certified for a lower pressure in the formula:

$$\text{Reduced pressure } P' = P\left(\frac{1.25}{\frac{S_b}{S} + 1}\right)$$

and in which

$$S_b = \frac{1.5PR_1t(D_1 - D_2)}{t^3 + 3\frac{P}{E}R_1R_a{}^2}$$

where

D_1, D_2 = the inside diameters maximum and minimum, respectively, as measured for the critical section, and for one additional section in each direction therefrom at a distance not exceeding $0.2D_2$. The average of the three readings for D_1 and D_2, respectively, shall be inserted in the formula.

E = modulus of elasticity of material at design temperature. The modulus of elasticity shall be taken from the applicable Table TM in Section II, Part D. When a material is not listed in the TM tables, the requirements of U-2(g) shall be applied.

P = maximum allowable working pressure for forging meeting the requirements of (a)

R_a = average radius to middle of shell wall at critical section
= $\frac{1}{4}(D_1 + D_2) + t/2$

R_1 = average inside radius at critical section
= $\frac{1}{4}(D_1 + D_2)$

S = design stress value, psi (kPa), at metal service temperature

S_b = bending stress at metal service temperature

t = the average (mean) thickness

NOTES:
(1) Use $P'=P$ when S_b is less than $0.25S$.
(2) In all measurements, correct for corrosion allowance if specified.

UF-28 METHODS OF FORMING FORGED HEADS

Forged heads shall be made either by closing in extensions of the body of such shape and dimensions as may be required to produce the final form desired, or by separate forgings [see UF-13(a)].

UF-29 TOLERANCE ON FORGED HEADS

Forged heads shall be as true as it is practicable to make them to the shape shown on the design drawings. Any deviations therefrom shall merge smoothly into the general shape of the head and shall not evidence a decrease of strength for the sections as required by the equations for design.

UF-30 LOCALIZED THIN AREAS

Forgings are permitted to have small areas thinner than required if the adjacent areas surrounding each have sufficient thickness to provide the necessary reinforcement according to the rules for reinforcement in UG-40.

UF-31 HEAT TREATMENT

(a) Normalized or Annealed Material

(1) After all forging is completed, each vessel or forged part fabricated without welding shall be heat treated in accordance with the applicable material specification. When defects are repaired by welding, subsequent heat treatment may be necessary in accordance with UF-37(b).

Provided by IHS under license with ASME
No reproduction or networking permitted without license from IHS
Licensee=Chevron Phillips Chemical Co LP/5956674001
Not for Resale, 11/09/2014 20:41:36 MST

(2) Vessels fabricated by welding of forged parts requiring heat treatment shall be heat treated in accordance with the applicable material specification as follows:

(-a) after all welding is completed; or

(-b) prior to welding, followed by postweld heat treatment of the finished weld in accordance with UW-40;

(-c) when the welding involves only minor nonpressure attachments to vessels having carbon content exceeding 0.35% but not exceeding 0.50% by ladle analysis, requirements of UF-32(b) shall govern.

(b) Liquid Quenched Material

(1) Vessels fabricated from SA-372 forging material to be liquid quenched and tempered shall be subjected to this heat treatment in accordance with the applicable material specifications after the completion of all forging, welding of nonpressure attachments as permitted by UF-32, and repair welding as limited by UF-37. Seal welding of threaded connections, as permitted in UF-43, may be performed either before or after this heat treatment.

(-a) After final heat treatment, such vessels shall be examined for the presence of cracks on the outside surface of the shell portion and on the inside surface where practicable. This examination shall be made by liquid penetrant when the material is nonmagnetic and by liquid penetrant or magnetic particle examination when the material is ferromagnetic.

(-b) After final heat treatment, liquid quenched and tempered vessels, except those made of austenitic steels and except as provided in (-c) below, shall be subjected to Brinell hardness tests at 5 ft (1.5 m) intervals with a minimum of four readings at each of not less than three different sections representing approximately the center and each end of the heat treated shell. The average of the individual Brinell hardness numbers at each section shall be not less than 10% below, nor more than 25% above the number obtained by dividing 500 into the specified minimum tensile strength of the material, and the highest average hardness number shall not exceed the lowest average value on an individual vessel by more than 40. Reheat treatment is permitted.

NOTE: Other hardness testing methods may be used and converted to Brinell numbers by means of the Table in ASTM E140.

(-c) For vessels which are integrally forged, having an overall length less than 5 ft (1.5 m) and a nominal thickness not exceeding $\frac{1}{2}$ in. (13 mm), the requirements of (-b) above may be modified by taking a minimum of two hardness readings at each end of the vessel. These four hardness readings shall satisfy the requirements of (-b) above as if the four hardnesses were applicable to one section.

(-d) In the case of austenitic steels, the heat treatment procedures followed shall be in accordance with UHA-32.

(c) Nonheat-Treated Material. Postweld heat treatment of vessels fabricated by welding of forged parts not requiring heat treatment shall meet with the requirements of UCS-56.

UF-32 WELDING FOR FABRICATION

(a) All welding used in connection with the fabrication of forged vessels or components shall comply with the applicable requirements of Parts UW, UCS, and UHA and UF-5(b) except as modified in (b) and (c) below. Procedure qualification in accordance with Section IX shall be performed with the heat treatment condition of the base metal and weld metal as in UF-31 as contemplated for the actual work.

(b) When the carbon content of the material exceeds 0.35% by ladle analysis, the vessel or part shall be fabricated without welding of any kind, except for repairs [see UF-37(b)], for seal welding of threaded connections as permitted in UF-43, and for minor nonpressure attachments. Minor nonpressure attachments shall be joined by fillet welds of not over $\frac{1}{4}$ in. (6 mm) throat dimensions. Such welding shall be allowed under the following conditions:

(1) The suitability of the electrode and procedure shall be established by making a groove weld specimen as shown in QW-461.2 of Section IX in material of the same analysis and of thickness in conformance with QW-451. The specimen before welding shall be in the same condition of heat treatment as the work it represents, and after welding the specimen shall be subjected to heat treatment equivalent to that contemplated for the work. Tensile and bend tests, as shown in QW-462.1, QW-462.2(a) and QW-462.3(a), shall be made. These tests shall meet the requirements of QW-150 and QW-160 of Section IX. The radius of the mandrel used in the guided bend test shall be as follows:

Specimen Thickness	Radius of Mandrel *B* [Note (1)]	Radius of Die *D* [Note (1)]
$\frac{3}{8}$ in. (10 mm)	$1\frac{1}{2}$ in. (38 mm)	$1\frac{11}{16}$ in. (42 mm)
t	$3\frac{1}{3}t$	$4\frac{1}{3}t + \frac{1}{16}$ in. (1.5 mm)

NOTE:
(1) Corresponds to dimensions *B* and *D* in QW-466.1 in Section IX, and other dimensions to be in proportion.

Any cutting and gouging processes used in the repair work shall be included as part of the procedure qualification.

(2) Welders shall be qualified for fillet welding specified by making and testing a specimen in accordance with QW-462.4(b) and QW-180 of Section IX. Welders shall be qualified for repair welding by making a test plate in accordance with QW-461.3 from which the bend tests outlined in QW-452 shall be made. The electrode used in making these tests shall be of the same classification number as that specified in the procedure. The material for these tests can be carbon steel plate or pipe provided

Provided by IHS under license with ASME
No reproduction or networking permitted without license from IHS
Licensee=Chevron Phillips Chemical Co LP/5956674001
Not for Resale, 11/09/2014 20:41:36 MST

the test specimens are preheated, welded and postheated in accordance with the procedure specification for the type of electrode involved.

(3) The finished weld shall be postweld heat treated or given a further heat treatment as required by the applicable material specification. The types of welding permitted in (b) shall be performed prior to final heat treatment except for seal welding of threaded openings which may be performed either before or after final heat treatment.

(4) The finished welds shall be examined after postweld heat treatment by liquid penetrant when the material is nonmagnetic and by liquid penetrant or magnetic particle examination using the prod method when the material is ferromagnetic.

(c) The following requirements shall be used to qualify welding procedure and welder performance for seal welding of threaded connections in seamless forged pressure vessels of SA-372 Grades A, B, C, D, E, F, G, H, and J materials:

(1) The suitability of the welding procedure, including electrode, and the welder performance shall be established by making a seal weld in the welding position to be used for the actual work and in a full-size prototype of the vessel neck, including at least some portion of the integrally forged head, conforming to the requirements of UF-43 and the same geometry, thickness, vessel material type, threaded-plug material type, and heat treatment as that for the production vessel it represents.

(2) The seal weld in the prototype at the threaded connection of the neck and plug shall be cross sectioned to provide four macro-test specimens taken 90 deg apart.

(3) One face of each cross section shall be smoothed and etched with suitable etchant (see QW-470) to give a clear definition of the weld metal and heat affected zone. Visual examination of the cross sections of the weld metal and heat affected zone shall show complete fusion and freedom from cracks.

(4) All production welding shall be done in accordance with the procedure qualification of (1) above, including the preheat and the electrode of the same classification as that specified in the procedure, and with welders qualified using that procedure.

(5) Seal welding of threaded connections may be performed either before or after final heat treatment.

(6) The finished weld shall be examined by liquid penetrant or magnetic particle examination using the prod method.

UF-37 REPAIR OF DEFECTS IN MATERIAL

(a) Surface defects, such as chip marks, blemishes, or other irregularities, shall be removed by grinding or machining and the surface exposed shall be blended smoothly into the adjacent area where sufficient wall thickness permits thin areas in compliance with the requirements of UF-30.

(b) Thinning to remove imperfections beyond those permitted in UF-30 may be repaired by welding only after acceptance by the Inspector. Defects shall be removed to sound metal as shown by acid etch or any other suitable method of examination. The welding shall be as outlined below.

(1) Material Having Carbon Content of 0.35% or Less (by Ladle Analysis)

(-a) The welding procedure and welders shall be qualified in accordance with Section IX.

(-b) Postweld heat treatment after welding shall be governed as follows.

(-1) All welding shall be postweld heat treated if UCS-56 requires postweld heat treatment, for all thicknesses of material of the analysis being used.

(-2) Fillet welds need not be postweld heat treated unless required by (-1) above or unless the fillet welds exceed the limits given in UCS-56.

(-3) Repair welding shall be postweld heat treated when required by (-1) above or if it exceeds 6 sq in. (4 000 mm^2) at any spot or if the maximum depth exceeds $^1/_4$ in. (6 mm).

(-c) Repair welding shall be radiographed if the maximum depth exceeds $^3/_8$ in. (10 mm). Repair welds $^3/_8$ in. (10 mm) and under in depth which exceed 6 sq in. (4 000 mm^2) at any spot and those made in materials requiring postweld heat treatment shall be examined by radiographing, magnetic particle or liquid penetrant examination, or any alternative method suitable for revealing cracks.

(-d) For liquid quenched and tempered steels, other than austenitic steels, welding repairs shall be in accordance with (3).

(2) Material Having Carbon Content Over 0.35% (by Ladle Analysis)

(-a) Welding repairs shall conform with UF-32(b) except that if the maximum weld depth exceeds $^1/_4$ in. (6 mm), radiography, in addition to magnetic particle or liquid penetrant examination, shall be used.

(-b) For liquid quenched and tempered steels, other than austenitic steel, welding repair shall be in accordance with (3) below.

(3) Welding repairs of materials which are to be or have been liquid quenched and tempered, regardless of depth or area of repairs shall have the repaired area radiographed and examined by magnetic particle or liquid penetrant examination.

UF-38 REPAIR OF WELD DEFECTS

The repair of welds of forgings having carbon content not exceeding 0.35% by ladle analysis shall follow the requirements of UW-38.

Provided by IHS under license with ASME
No reproduction or networking permitted without license from IHS
Licensee=Chevron Phillips Chemical Co LP/5956674001
Not for Resale, 11/09/2014 20:41:36 MST

UF-43 ATTACHMENT OF THREADED NOZZLES TO INTEGRALLY FORGED NECKS AND THICKENED HEADS ON VESSELS

Threaded openings, over NPS 3 (DN 80), but not exceeding the smaller of one-half of the vessel diameter or NPS 8, may be used in the heads of vessels having integrally forged heads and necks that are so shaped and thickened as to provide a center opening, which shall meet the rules governing openings and reinforcements contained elsewhere in the Code. Length of thread shall be calculated for the opening design, but shall not be less than shown in Table UG-43. Threaded connections employing straight threads shall provide for mechanical seating of the assembly by a shoulder or similar means. When seal welding is employed in the installation of a threaded nozzle, the work shall be performed and inspected in the shop of the vessel manufacturer. Seal welding shall comply with UF-32.

INSPECTION AND TESTS

UF-45 GENERAL

The rules in the following paragraphs apply specifically to the inspection and testing of forged vessels and their component parts. These rules shall be used to supplement the applicable requirements for inspection and tests given in UG-90 through UG-102. All forged vessels shall be examined as manufacture proceeds, to assure freedom from loose scale, gouges or grooves, and cracks or seams that are visible. After fabrication has passed the machining stage, the vessel body shall be measured at suitable intervals along its length to get a record of variations in wall thickness, and the nozzles for connecting piping and other important details shall be checked for conformity to the design dimensions.

UF-46 ACCEPTANCE BY INSPECTOR

Surfaces which are not to be machined shall be carefully inspected for visible defects such as seams, laps, or folds. On surfaces to be machined the inspection shall be made after machining. Regions from which defective material has been removed shall be inspected after removal and again after any necessary repair.

UF-47 PARTS FORGING

(a) When welding is used in the fabrication of parts forgings completed elsewhere, the parts forging manufacturer shall furnish a Form U-2 Partial Data Report.

(b) All parts forgings completed elsewhere shall be marked with the manufacturer's name and the forging identification, including material designation. Should identifying marks be obliterated in the fabrication process, and for small parts, other means of identification shall be used. The forging manufacturer shall furnish reports of chemical and mechanical properties of the material and certification that each forging conforms to all requirements of Part UF.

(c) Parts forgings furnished as material for which parts Data Reports are not required need not be inspected at the plant of the forging manufacturer, but the manufacturer shall furnish a report of the extent and location of any repairs together with certification that they were made in accordance with all other requirements of UF-37 and UF-38. If desired, welding repairs of such forgings may be made, inspected, and tested at the shop of the pressure vessel manufacturer.

UF-52 CHECK OF HEAT TREATMENT AND POSTWELD HEAT TREATMENT

The Inspector shall check the provisions made for heat treatment to assure himself that the heat treatment is carried out in accordance with provisions of UF-31 and UF-32. He shall also assure himself that postweld heat treatment is done after repair welding when required under the rules of UF-37.

UF-53 TEST SPECIMENS

When test specimens are to be taken under the applicable specification, the Inspector shall be allowed to witness the selection, place the identifying stamping on them, and witness the testing of these specimens.

UF-54 TESTS AND RETESTS

Tests and retests shall be made in accordance with the requirements of the material specification.

UF-55 ULTRASONIC EXAMINATION

(a) For vessels constructed of SA-372 Grade J, Class 110 material, the completed vessel after heat treatment shall be examined ultrasonically in accordance with SA-388. The reference specimen shall have the same nominal thickness, composition, and heat treatment as the vessel it represents. Angle beam examination shall be calibrated with a notch of a depth equal to 5% of the nominal section thickness, a length of approximately 1 in. (25 mm), and a width not greater than twice its depth.

(b) A vessel is unacceptable if examination results show one or more imperfections which produce indications exceeding in amplitude the indication from the calibrated notch. Round bottom surface imperfections, such as pits, scores, and conditioned areas, producing indications exceeding the amplitude of the calibrated notch shall be acceptable if the thickness below the indication is not less than the design wall thickness of the vessel, and its sides are faired to a ratio of not less than three to one.

Provided by IHS under license with ASME
No reproduction or networking permitted without license from IHS
Licensee=Chevron Phillips Chemical Co LP/5956674001
Not for Resale, 11/09/2014 20:41:36 MST

MARKING AND REPORTS

UF-115 GENERAL

The rules of UG-115 through UG-120 shall apply to forged vessels as far as practicable. Vessels constructed of liquid quenched and tempered material, other than austenitic steels, shall be marked on the thickened head, unless a nameplate is used.

PRESSURE RELIEF DEVICES

UF-125 GENERAL

The provisions for pressure relief devices of UG-125 through UG-136 shall apply without supplement.

Provided by IHS under license with ASME

No reproduction or networking permitted without license from IHS

Licensee=Chevron Phillips Chemical Co LP/5956674001
Not for Resale, 11/09/2014 20:41:36 MST

PART UB
REQUIREMENTS FOR PRESSURE VESSELS FABRICATED BY BRAZING

GENERAL

UB-1 SCOPE

(a) The rules in Part UB are applicable to pressure vessels and parts thereof that are fabricated by brazing and shall be used in conjunction with the general requirements in Subsection A, and with the specific requirements in Subsection C that pertain to the class of material used.

(b) Definition. The term brazing as used in Part UB is defined as a group of welding processes that produce coalescence of materials by heating them to the brazing temperature in the presence of a filler metal having liquidus above 840°F (450°C) and below the solidus of the base metal. The filler metal is distributed between the closely fitted surfaces of the joint by capillary attraction.

(c) Specific brazing processes which are permitted for use under this Division are classified by method of heating as follows:

(1) torch brazing;
(2) furnace brazing;
(3) induction brazing;
(4) electrical resistance brazing;
(5) dip brazing — salt and flux bath.

UB-2 ELEVATED TEMPERATURE

Operating temperature is dependent on the brazing filler metal as well as on the base metals being joined. The maximum allowable operating temperatures for the brazing filler metals are shown in Table UB-2.

UB-3 SERVICE RESTRICTIONS

Brazed vessels shall not be used for services as follows:
(a) lethal services as defined in UW-2(a);
(b) unfired steam boilers as defined in U-1(g);
(c) direct firing [see UW-2(d)].

MATERIALS

UB-5 GENERAL

(a) Materials used in the construction of pressure vessels and parts thereof by brazing shall conform to the specifications in Section II and shall be limited to those materials for which allowable stress values have been assigned in the tables referenced by UG-23.

(b) Combinations of dissimilar metals may be joined by brazing provided they meet the qualification requirements of Section IX, and the additional requirements of UB-12 when applicable.

UB-6 BRAZING FILLER METALS

The selection of the brazing filler metal for a specific application shall depend upon its suitability for the base metals being joined and the intended service. Satisfactory qualification of the brazing procedure under Section IX and when necessary based on design temperature, with the additional requirements of this Section, is considered proof of the suitability of the filler metal. Brazing with brazing filler metals other than those listed in Section II,

Table UB-2
Maximum Design Temperatures for Brazing Filler Metal

Filler Metal Classification	Column 1 Temperature, °F (°C), Below Which Section IX Tests Only Are Required	Column 2 Temperature, °F (°C), Range Requiring Section IX and Additional Tests
BCuP	300 (150)	300 - 350 (150 - 180)
BAg	400 (200)	400 - 500 (200 - 260)
BCuZn	400 (200)	400 - 500 (200 - 260)
BCu	400 (200)	400 - 650 (200 - 340)
BAlSi	300 (150)	300 - 350 (150 - 180)
BNi	1200 (650)	1200 - 1500 (650 - 815)
BAu	800 (430)	800 - 900 (430 - 480)
BMg	250 (120)	250 - 275 (120 - 135)

GENERAL NOTE: Temperatures based on AWS recommendations.

Provided by IHS under license with ASME
No reproduction or networking permitted without license from IHS
Licensee=Chevron Phillips Chemical Co LP/5956674001
Not for Resale, 11/09/2014 20:41:36 MST

Part C, SFA-5.8 shall be separately qualified for both procedure and performance qualification in accordance with Section IX and when necessary with the additional requirements of this Section.

UB-7 FLUXES AND ATMOSPHERES

Suitable fluxes or atmospheres or combinations of fluxes and atmospheres shall be used to prevent oxidation of the brazing filler metal and the surfaces to be joined. Satisfactory qualification of the brazing procedure under Section IX and when necessary based on design temperature, with the additional requirements of this Section, is considered proof of the suitability of the flux and/or atmosphere.

DESIGN

UB-9 GENERAL

The rules in the following paragraphs apply specifically to pressure vessels and parts thereof that are fabricated by brazing and shall be used in conjunction with the general requirements for *Design* in Subsection A, and the specific requirements for *Design* in Subsection C that pertain to the class of material used.

UB-10 STRENGTH OF BRAZED JOINTS

It is the responsibility of the Manufacturer to determine from suitable tests or from experience that the specific brazing filler metal selected can produce a joint which will have adequate strength at design temperature. The strength of the brazed joint shall not be less than the strength of the base metal, or the weaker of two base metals in the case of dissimilar metal joints.

UB-11 QUALIFICATION OF BRAZED JOINTS FOR DESIGN TEMPERATURES UP TO THE MAXIMUM SHOWN IN COLUMN 1 OF TABLE UB-2

Satisfactory qualification of the brazing procedure in accordance with Part QB of Section IX is considered evidence of the adequacy of the base materials, the brazing filler metal, the flux and/or atmosphere, and other variables of the procedure.

UB-12 QUALIFICATION OF BRAZED JOINTS FOR DESIGN TEMPERATURES IN THE RANGE SHOWN IN COLUMN 2 OF TABLE UB-2

For design temperatures in the range shown in Column 2 of Table UB-2, tests in addition to those in UB-11 are required. These tests shall be considered a part of the qualification procedure. For such design temperatures, two tension tests on production type joints are required, one at the design temperature, T, and one at $1.05T$. Neither of these production type joints shall fail in the braze metal.

UB-13 CORROSION

(a) Provision shall be made for corrosion in accordance with the requirements in UG-25.

(b) Corrosion of the brazing filler metal and galvanic action between the brazing filler metal and the base metals shall be considered in selecting the brazing filler metal.

(c) The plate thickness in excess of that computed for a seamless vessel taking into account the applicable loadings in UG-22 may be taken as allowance for corrosion in vessels that have longitudinal joints of double-strap butt joint construction. Additional corrosion allowance shall be provided when needed, particularly on the inner buttstraps.

(d) The rules in this Part are not intended to apply to brazing used for the attachment of linings of corrosion resistant material that are not counted on to carry load.

UB-14 JOINT EFFICIENCY FACTORS

(a) The joint efficiency factor to be used in the appropriate design equations of pressure vessels and parts thereof shall be 1.0 for joints in which visual examination assures that the brazing filler metal has penetrated the entire joint [see Figure UB-14 sketch (a)].

(b) The joint efficiency factor to be used in the appropriate design equations of pressure vessels and parts thereof shall be 0.5 for joints in which visual examination will not provide proof that the brazing filler metal has penetrated the entire joint. [see Figure UB-14 sketch (b); UB-15(b) and UB-15(c).]

(c) The appropriate joint efficiency factor to be used in design equations for seamless flat heads and seamless formed heads, excluding seamless hemispherical heads, is 1.0. The appropriate joint efficiency factor to be used in design equations for circumferential stress in seamless cylindrical or conical shells is 1.0.

UB-15 APPLICATION OF BRAZING FILLER METAL

(a) The design shall provide for the application of the brazing filler metal as part of the design of the joint. Where practicable, the brazing filler metal shall be applied in such a manner that it will flow into the joint or be distributed across the joint and produce visible evidence that it has penetrated the joint.

(b) Manual Application. The manual application of the brazing filler metal by face feeding to a joint should be from the one side only. Visual observation of the other side of the joint will then show if the required penetration of the joint by the filler metal has been obtained. If the side opposite to the filler metal application cannot be visually examined, as is the case with socket type joints in pipe and tubing (blind joint), a joint efficiency factor of 0.5 shall be used in design of this joint as provided in UB-14(b).

(c) Preplaced Brazing Filler Metal. The brazing filler metal may be preplaced in the form of slugs, powder, rings, strip, cladding, spraying or other means. After brazing, the brazing filler metal should be visible on both sides

Provided by IHS under license with ASME
No reproduction or networking permitted without license from IHS
Licensee=Chevron Phillips Chemical Co LP/5956674001
Not for Resale, 11/09/2014 20:41:36 MST

Figure UB-14
Examples of Filler Metal Application

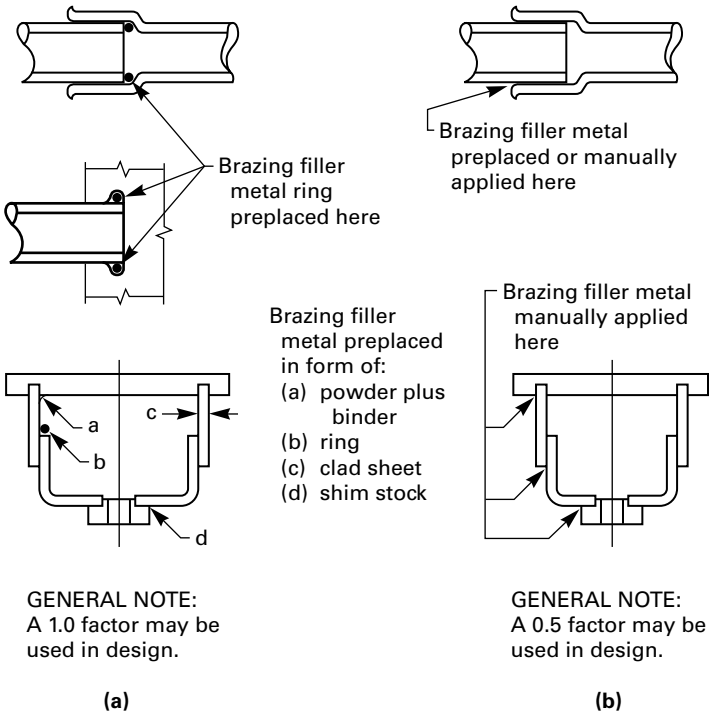

GENERAL NOTE:
A 1.0 factor may be used in design.

(a)

GENERAL NOTE:
A 0.5 factor may be used in design.

(b)

of the joint. If the brazing filler metal is preplaced within a blind joint in such a manner that it penetrates the major portion of the joint during brazing and appears at the visible side of the joint, a joint efficiency factor of 1.0 may be used in the design of the joint. If the brazing filler metal is preplaced on the outside or near the outside of a blind joint, and the other side cannot be inspected to ascertain complete penetration, then a joint efficiency factor of 0.5 shall be used in the design of the joint as provided in UB-14(b). Figure UB-14 illustrates a few examples of this rule.

UB-16 PERMISSIBLE TYPES OF JOINTS

(a) Some permissible types of brazed joints are shown in Figure UB-16. For any type of joint, the strength of the brazed section shall exceed that of the base metal portion of the test specimen in the qualification tension tests provided for in QB-150 of Section IX. Lap joints shall have a sufficient overlap to provide a higher strength in the brazed joint than in the base metal.

(b) The nominal thickness of base material used with lap joints tested using the test fixture shown in QB-462.1(e) shall not exceed $^1/_2$ in. (13 mm). There is no thickness limitation when specimens are tested without the test fixture shown in QB-462.1(e).

UB-17 JOINT CLEARANCE

The joint clearance shall be kept sufficiently small so that the filler metal will be distributed by capillary attraction. Since the strength of a brazed joint tends to decrease as the joint clearance used is increased, the clearances for the assembly of joints in pressure vessels or parts thereof shall be within the tolerances set up by the joint design and as used for the corresponding qualification specimens made in accordance with Section IX and UB-12 where applicable.

NOTE: For guidance, see Table UB-17 which gives recommended joint clearances at brazing temperature for various types of brazing filler metal. Brazing alloys will exhibit maximum unit strength if clearances are maintained within these limits.

UB-18 JOINT BRAZING PROCEDURE

A joint brazing procedure shall be developed for each different type of joint of a brazed assembly. A recommended form for recording the brazing procedure is shown in QB-482 of Section IX. If more than one joint occurs in a brazed assembly, the brazing sequence shall be specified on the drawing or in instructions accompanying the drawing. If welding and brazing are to be done on the same assembly, the welding shall precede the brazing unless it is determined that the heat of welding will not adversely affect the braze previously made.

Provided by IHS under license with ASME
No reproduction or networking permitted without license from IHS
Licensee=Chevron Phillips Chemical Co LP/5956674001
Not for Resale, 11/09/2014 20:41:36 MST

Figure UB-16
Some Acceptable Types of Brazed Joints

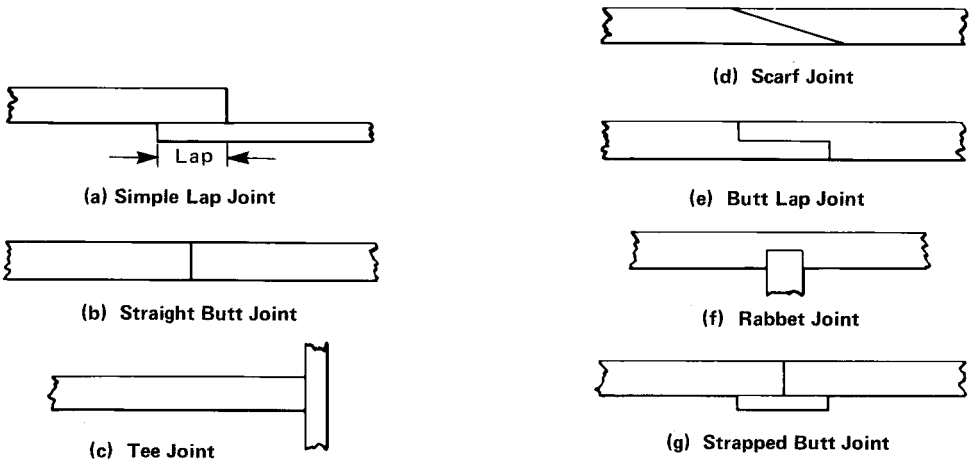

GENERAL NOTE: Other equivalent geometries yielding substantially equal results are also acceptable.

UB-19 OPENINGS

(a) Openings for nozzles and other connections shall be far enough away from any main brazed joint so that the joint and the opening reinforcement plates do not interfere with one another.

(b) Openings for pipe connections in vessels having brazed joints may be made by inserting pipe couplings, not exceeding NPS 3 (DN 80), or similar devices in the shell or heads and securing them by welding, without necessitating the application of the restrictive stamping provisions of UG-116, provided the welding is performed by welders who have been qualified under the provisions of Section IX for the welding position and type of joint used. Such attachments shall conform to the rules for welded connections in UW-15 and UW-16.

Table UB-17
Recommended Joint Clearances at Brazing Temperature

Brazing Filler Metal	Clearance, in. (mm) [Note (1)]
BAlSi	0.006 - 0.010 (0.15 - 0.25) for laps less than or equal to $^1/_4$ in. (6 mm) 0.010 - 0.025 (0.25 - 0.64) for laps greater than $^1/_4$ in. (6 mm)
BCuP	0.001 - 0.005 (0.02 - 0.13)
BAg	0.002 - 0.005 (0.05 - 0.13)
BCuZn	0.002 - 0.005 (0.05 - 0.13)
BCu	0.000 - 0.002 (0.05 - 0.13) [Note (2)]
BNi	0.001 - 0.005 (0.02 - 0.13)

NOTES:
(1) In the case of round or tubular members, clearance on the radius is intended.
(2) For maximum strength, use the smallest possible clearance.

UB-20 NOZZLES

(a) Nozzles may be integral or attached to the vessel by any of the methods provided for in UG-43.

(b) For nozzle fittings having a bolting flange and an integral flange for brazing, the thickness of the flange attached to the pressure vessel shall not be less than the thickness of the neck of the fitting.

UB-21 BRAZED CONNECTIONS

Connections, such as saddle type fittings and fittings inserted into openings formed by outward flanging of the vessel wall, in sizes not exceeding NPS 3 (DN 80), may be attached to pressure vessels by lap joints of brazed construction. Sufficient brazing shall be provided on either side of the line through the center of the opening parallel to the longitudinal axis of the shell to develop the strength of the reinforcement as prescribed in UG-41 through shear in the brazing.

UB-22 LOW TEMPERATURE OPERATION

Impact tests shall be made of the brazed joints in pressure vessels and parts thereof fabricated from materials for which impact tests are required in Subsection C. The tests shall be made in accordance with UG-84 except that terms referring to welding shall be interpreted as referring to brazing.

Provided by IHS under license with ASME
No reproduction or networking permitted without license from IHS
Licensee=Chevron Phillips Chemical Co LP/5956674001
Not for Resale, 11/09/2014 20:41:36 MST

FABRICATION

UB-30 GENERAL

(a) The rules in the following paragraphs apply specifically to the fabrication of pressure vessels and parts thereof that are fabricated by brazing and shall be used in conjunction with the requirements for in Subsection A, and with the specific requirements for in Subsection C that pertain to the class of material used.

(b) Each manufacturer or contractor shall be responsible for the quality of the brazing done by his organization and shall conduct tests not only of the brazing procedure to determine its suitability to ensure brazes which will meet the required tests, but also of the brazers and brazing operators to determine their ability to apply the procedure properly.

(c) No production work shall be undertaken until both the brazing procedure and the brazers or brazing operators have been qualified.

(d) The Manufacturer (Certificate Holder) may engage individuals by contract or agreement for their services as brazers at the shop location shown on the Certificate of Authorization and at field sites (if allowed by the Certificate of Authorization) for the construction of pressure vessels or vessel parts, provided all the following conditions are met:

(1) All Code construction shall be the responsibility of the Manufacturer.

(2) All brazing shall be performed in accordance with the Manufacturer's Brazing Procedure Specifications which have been qualified by the Manufacturer in accordance with the requirements of Section IX.

(3) All brazers shall be qualified by the Manufacturer in accordance with the requirements of Section IX.

(4) The Manufacturer's Quality Control System shall include as a minimum:

(-a) a requirement for complete and exclusive administrative and technical supervision of all brazers by the Manufacturer;

(-b) evidence of the Manufacturer's authority to assign and remove brazers at his discretion without the involvement of any other organization;

(-c) a requirement for assignment of brazer identification symbols;

(-d) evidence that this program has been accepted by the Manufacturer's Authorized Inspection Agency which provides the inspection service.

(5) The Manufacturer shall be responsible for Code compliance of the vessel or part, including Certification Mark stamping and providing completed Data Report Forms.

UB-31 QUALIFICATION OF BRAZING PROCEDURE

(a) Each procedure of brazing that is to be followed in construction shall be recorded in detail by the Manufacturer. Each brazing procedure shall be qualified in accordance with Section IX and when necessary determined by design temperature, with the additional requirements of this Section.

(b) The procedure used in brazing pressure parts and in joining load-carrying nonpressure parts, such as all permanent or temporary clips and lugs, to pressure parts shall be qualified in accordance with Section IX.

(c) The procedure used in brazing nonpressure-bearing attachments which have essentially no load-carrying function (such as extended heat transfer surfaces, insulation support pins, etc.) to pressure parts shall meet the following requirements:

(1) When the brazing process is manual, machine, or semiautomatic, procedure qualification is required in accordance with Section IX.

(2) When the brazing is any automatic brazing process performed in accordance with a Brazing Procedure Specification (in compliance with Section IX as far as applicable), procedure qualification testing is not required.

(d) Brazing of all test coupons shall be conducted by the Manufacturer. Testing of all test coupons shall be the responsibility of the Manufacturer. Qualification of a brazing procedure by one Manufacturer shall not qualify that procedure for any other Manufacturer, except as provided in QW-201 of Section IX.

UB-32 QUALIFICATION OF BRAZERS AND BRAZING OPERATORS

(a) The brazers and brazing operators used in brazing pressure parts and in joining load-carrying nonpressure parts (attachments) to pressure parts shall be qualified in accordance with Section IX.

(1) The qualification test for brazing operators of machine brazing equipment shall be performed on a separate test plate prior to the start of brazing or on the first workpiece.

(b) The brazers and brazing operators used in brazing nonpressure-bearing attachments, which have essentially no load-carrying function (such as extended heat transfer surfaces, insulation support pins, etc.), to pressure parts shall comply with the following:

(1) When the brazing process is manual, machine, or semiautomatic, qualification in accordance with Section IX is required.

(2) When brazing is done by any automatic brazing process, performance qualification testing is not required.

(c) Each brazer or brazing operator shall be assigned an identifying number, letter, or symbol by the Manufacturer which shall be used to identify the work of that brazer or brazing operator in accordance with UW-37(f).

(d) The Manufacturer shall maintain a record of the brazers and brazing operators showing the date and result of tests and the identification mark assigned to each. These records shall be maintained in accordance with Section IX.

(e) Brazing of all test coupons shall be conducted by the Manufacturer. Testing of all test coupons shall be the responsibility of the Manufacturer. A performance

Provided by IHS under license with ASME
No reproduction or networking permitted without license from IHS
Licensee=Chevron Phillips Chemical Co LP/5956674001
Not for Resale, 11/09/2014 20:41:36 MST

qualification test conducted by one Manufacturer shall not qualify a brazer or brazing operator to do work for any other Manufacturer.

UB-33 BUTTSTRAPS

(a) Buttstraps shall be formed to the curvature of the shell with which they are to be used.

(b) When the buttstraps of a longitudinal joint do not extend the full length of a shell section, the abutting edges of the shell plate may be welded provided the length of the weld between the end of the buttstraps and the edge of the head or adjoining shell plate is not greater than four times the shell plate thickness. When so constructed, the restrictive stamping provisions of UG-116 shall not apply provided the welding is performed by welders who have been qualified under the provisions of Section IX for the welding position and type of joint used. The welds shall be completed before brazing is begun.

UB-34 CLEANING OF SURFACES TO BE BRAZED

The surfaces to be brazed shall be clean and free from grease, paint, oxides, scale and foreign matter of any kind. Any chemical or mechanical cleaning method may be used that will provide a surface suitable for brazing.

UB-35 CLEARANCE BETWEEN SURFACES TO BE BRAZED

The clearances between surfaces to be brazed shall be maintained within the tolerances provided for by the joint design and used in the qualifying procedure. If greater tolerances are to be used in production, the joint must be requalified for those greater tolerances. The control of tolerances required may be obtained by using spot welding, crimping, or other means which will not interfere with the quality of the braze. If such means are employed in production, they must also be employed in qualification of procedure, brazer, and operator.

UB-36 POSTBRAZING OPERATIONS

Brazed joints shall be thoroughly cleaned of flux residue by any suitable means after brazing and prior to inspection.[76] Other postbrazing operations such as thermal treatments shall be performed in accordance with the qualified procedure.

UB-37 REPAIR OF DEFECTIVE BRAZING

Brazed joints which have been found to be defective may be rebrazed, where feasible, after thorough cleaning, and by employing the same brazing procedure used for the original braze. See UB-44. If a different brazing procedure is employed, i.e., torch repair of furnace brazed parts, a repair brazing procedure shall be established and qualified.

When a repair brazing procedure is established, it shall meet Section IX and other conditions set forth in this Section.

INSPECTION AND TESTS

UB-40 GENERAL

The rules in the following paragraphs apply specifically to the inspection and testing of pressure vessels and parts thereof that are fabricated by brazing and shall be used in conjunction with the general requirements for *Inspection and Tests* in Subsection A and with the specific requirements for *Inspection and Tests* in Subsection C that pertain to the class of material used.

UB-41 INSPECTION DURING FABRICATION

The Manufacturer shall submit the vessel or other pressure parts for inspection at such stages of the work as may be designated by the Inspector.

UB-42 PROCEDURE

The Inspector shall assure himself that the brazing procedure for each type of joint being produced is qualified in accordance with the requirements of Section IX and when necessary the additional requirements of this Section. He shall satisfy himself that each joint has been fabricated in accordance with the procedure. Where there is evidence of consistent poor quality, the Inspector shall have the right at any time to call for and witness tests of the brazing procedure.

UB-43 BRAZER AND BRAZING OPERATOR

(a) The manufacturer shall certify that the brazing on a vessel or part thereof has been done by brazers or brazing operators who are qualified under the requirements of Section IX and the Inspector shall assure himself that only qualified brazers or brazing operators have been used.

(b) The manufacturer shall make available to the Inspector the record of the qualification tests of each brazer and brazing operator. The Inspector shall have the right at any time to call for and witness tests of the ability of a brazer or brazing operator.

UB-44 VISUAL EXAMINATION

(a) Where possible, the Inspector shall visually inspect both sides of each brazed joint after flux residue removal. Where it is not possible to inspect one side of a brazed joint (blind joint), the Inspector shall check the design to determine that the proper joint factor has been employed, unless he can assure himself that the brazing filler metal has been preplaced in such a manner that it satisfies UB-15(b) and UB-15(c).

(b) There shall be evidence that the brazing filler metal has penetrated the joint. In a butt braze there shall be no concavity. The braze may be repaired or rebrazed.

(c) The presence of a crack in the brazing filler metal shall be cause for rejection. Dye penetrant inspection may be used if desired. The braze may be repaired or rebrazed. See UB-37.

Provided by IHS under license with ASME
No reproduction or networking permitted without license from IHS
Licensee=Chevron Phillips Chemical Co LP/5956674001
Not for Resale, 11/09/2014 20:41:36 MST

(d) The presence of a crack in the base metal adjacent to a braze shall be cause for rejection even if the crack is filled with brazing alloy. Such cracking shall not be repaired.

(e) Pinholes or open defects in the braze shall be cause for rejection. The joint may be rebrazed.

(f) Rough fillets, particularly those with a convex appearance, are cause for rejection. Such joints may be repaired or rebrazed.

UB-50 EXEMPTIONS

Certain brazed joints regardless of their service temperatures may be exempt from the additional mechanical testing of this Section providing that the design application does not assume any benefit from the brazed joint strength. It shall, however, meet the requirements of those qualification tests required by Section IX of the Code.

MARKING AND REPORTS

UB-55 GENERAL

The provisions for marking and reports given in UG-115 through UG-120 shall apply without supplement to brazed pressure vessels and parts thereof.

PRESSURE RELIEF DEVICES

UB-60 GENERAL

The provisions for pressure relieving devices given in UG-125 through UG-136 shall apply without supplement to brazed pressure vessels.

Provided by IHS under license with ASME
No reproduction or networking permitted without license from IHS
Licensee=Chevron Phillips Chemical Co LP/5956674001
Not for Resale, 11/09/2014 20:41:36 MST

SUBSECTION C
REQUIREMENTS PERTAINING TO CLASSES OF MATERIALS

PART UCS
REQUIREMENTS FOR PRESSURE VESSELS CONSTRUCTED OF CARBON AND LOW ALLOY STEELS[77]

GENERAL

UCS-1 SCOPE

The rules in Part UCS are applicable to pressure vessels and vessel parts that are constructed of carbon and low alloy steels and shall be used in conjunction with the general requirements in Subsection A, and with the specific requirements in Subsection B that pertain to the method of fabrication used.

MATERIALS

UCS-5 GENERAL

(a) All carbon and low alloy steel material subject to stress due to pressure shall conform to one of the Specifications given in Section II and shall be limited to those listed in Table UCS-23 except as otherwise provided in UG-10 and UG-11.

(b) In addition to the requirements of UG-4(a), backing strips which remain in place need not conform to a material specification permitted by this Division if all of the following are met:

(1) The specification maximum composition limits or certificate values for the backing strip material shall not exceed those of the material specification for the pressure part to which it is attached.

(2) Either of the following requirements shall be met:

(-a) The backing strip base metal, and its associated HAZ, and the weld metal shall be impact tested in accordance with UG-84 at the MDMT shown on the nameplate with a butt weld test specimen to the pressure part material or to a material with the same P-No. and Group No. as the pressure part.

(-b) The material is assigned to Curve A and is exempt from impact testing at the MDMT shown on the nameplate by Figure UCS-66 alone (i.e., MDMT reduction per Figure UCS-66.1 is not permitted), and both of the following apply:

(-1) The backing strip material specification minimum tensile strength shall not exceed that of the pressure part material specification.

(-2) The backing strip material specification minimum percent elongation shall be at least equal to that for the pressure part material specification.

(c) Carbon or low alloy steel having a carbon content of more than 0.35% by heat analysis shall not be used in welded construction or be shaped by oxygen cutting (except as provided in Part UF in this Division).

(d) Small parts used under the provisions of UG-11(a)(2) in welded construction shall be of good weldable quality.

UCS-6 STEEL PLATES

(a) Approved specifications for carbon and low alloy steel plates are given in Table UCS-23. A tabulation of allowable stress values at different temperatures are given in Table 1A of Section II, Part D (see UG-5).

(b) Steel plates conforming to SA-36, SA/CSA-G40.21 38W, and SA-283 Grades A, B, C, and D may be used for pressure parts in pressure vessels provided all of the following requirements are met:

(1) The vessels are not used to contain lethal substances, either liquid or gaseous.

(2) The material is not used in the construction of unfired steam boilers [see U-1(g)].

(3) With the exception of flanges, flat bolted covers, and stiffening rings, the thickness of plates on which strength welding is applied does not exceed $^{5}/_{8}$ in. (16 mm).

Provided by IHS under license with ASME
No reproduction or networking permitted without license from IHS
Licensee=Chevron Phillips Chemical Co LP/5956674001
Not for Resale, 11/09/2014 20:41:36 MST

(c) Except for local heating, such as cutting and welding, heating of SA-841 above 1,200°F (649°C) during fabrication is prohibited.

UCS-7 STEEL FORGINGS

Approved specifications for forgings of carbon and low alloy steel are given in Table UCS-23. A tabulation of allowable stress values at different temperatures are given in Table 1A of Section II, Part D (see UG-6).

UCS-8 STEEL CASTINGS

Approved specifications for castings of carbon and low alloy steel are given in Table UCS-23. A tabulation of allowable stress values at different temperatures are given in Table 1A of Section II, Part D. These stress values are to be multiplied by the casting quality factors of UG-24. Castings that are to be welded shall be of weldable grade.

UCS-9 STEEL PIPE AND TUBES

Approved specifications for pipe and tubes of carbon and low alloy steel are given in Table UCS-23. A tabulation of allowable stress values of the materials from which the pipe or tubes are manufactured are given in Table 1A of Section II, Part D. Net allowable stress values for pipe or tubes of welded manufacture are given in Table 1A of Section II, Part D.

UCS-10 BOLT MATERIALS

(a) Approved specifications for bolt materials of carbon steel and low alloy steel are given in Table UCS-23. A tabulation of allowable stress values at different temperatures (see UG-12) are given in Table 3 of Section II, Part D.

(b) Nonferrous and high alloy steel bolts, studs, and nuts may be used provided they are suitable for the application. They shall conform to the requirements of Part UNF or UHA, as applicable.

UCS-11 NUTS AND WASHERS

(a) Except as otherwise provided in (b)(4) below, materials for nuts shall conform to SA-194, SA-563, or to the requirements for nuts in the specification for the bolting material with which they are to be used. Nuts of special design, such as wing nuts, may be made of any suitable wrought material listed in Table UCS-23 or Table UHA-23 and shall be either: hot or cold forged; or machined from hot-forged, hot-rolled, or cold-drawn bars. Washers may be made from any suitable material listed in Table UCS-23 and Table UHA-23.

(b) Materials for nuts and washers shall be selected as follows:

(1) Carbon steel nuts and carbon steel washers may be used with carbon steel bolts or studs.

(2) Carbon or alloy steel nuts and carbon or alloy steel washers of approximately the same hardness as the nuts may be used with alloy steel bolts or studs for metal temperatures not exceeding 900°F (480°C).

(3) Alloy steel nuts shall be used with alloy steel studs or bolts for metal temperatures exceeding 900°F (480°C). Washers, if used, shall be of alloy steel equivalent to the nut material.

(4) Nonferrous nuts and washers may be used with ferrous bolts and studs provided they are suitable for the application. Consideration shall be given to the differences in thermal expansion and possible corrosion resulting from the combination of dissimilar metals. Nonferrous nuts and washers shall conform to the requirements of UNF-13.

(c) Nuts shall be semifinished, chamfered, and trimmed. Nuts shall be threaded to Class 2B or finer tolerances according to ASME B1.1. For use with flanges conforming to the standards listed in UG-44, nuts shall conform at least to the dimensions given in ASME B18.2.2 for Heavy Series nuts. For use with connections designed in accordance with the rules in Mandatory Appendix 2, nuts may be of the ANSI Heavy Series, or they may be of other dimensions as permitted in (d) below.

(d) Nuts of special design or of dimensions other than ANSI Heavy Series may be used provided their strength is equal to that of the bolting, giving due consideration to bolt hole clearance, bearing area, thread form and class of fit, thread shear, and radial thrust from threads [see U-2(g)].

UCS-12 BARS AND SHAPES

(a) Approved specifications for bar and shape materials of carbon steel are given in Table UCS-23. A tabulation of allowable stress values at different temperatures are given in Table 1A of Section II, Part D.

(b) Bolt materials as described in UCS-10 may be used as bar materials.

(c) Parts made from bars, on which welding is done, shall be of material for which a P-Number for procedure qualification is given in Section IX, QW-422 (see UW-5).

DESIGN

UCS-16 GENERAL

The rules in the following paragraphs apply specifically to the design of pressure vessels and vessel parts that are constructed of carbon and low alloy steel and shall be used in conjunction with the general requirements for *Design* in Subsection A and with the specific requirements for *Design* in Subsection B that pertain to the method of fabrication used.

UCS-19 WELDED JOINTS

When radiographic examination is required for butt welded joints by UCS-57, joints of Categories A and B (see UW-3) shall be of Type No. (1) or No. (2) of Table UW-12.

Provided by IHS under license with ASME
No reproduction or networking permitted without license from IHS
Licensee=Chevron Phillips Chemical Co LP/5956674001
Not for Resale, 11/09/2014 20:41:36 MST

UCS-23 MAXIMUM ALLOWABLE STRESS VALUES

Tables 3 (for bolting) and 1A (other materials) in Section II, Part D give the maximum allowable stress values at the temperature indicated for materials conforming to the specifications listed therein.[78] Values may be interpolated for intermediate temperatures. (See UG-23.) For vessels designed to operate at a temperature below −20°F (−29°C), the allowable stress values to be used in design shall not exceed those given in Table 3 or 1A in Section II, Part D for 100°F (40°C).

UCS-27 SHELLS MADE FROM PIPE

(a) Shells of pressure vessels may be made from seamless pipe or tubing listed in Table 1A of Section II, Part D provided the material of the pipe is manufactured by the open-hearth, basic oxygen, or electric-furnace process.

(b) Shells of pressure vessels may be made from electric resistance welded pipe or tubing listed in Table 1A of Section II, Part D in nominal diameters up to 30 in. (750 mm) provided the material is manufactured by the open-hearth, basic oxygen, or electric-furnace process [see UG-16(d)].

UCS-28 THICKNESS OF SHELLS UNDER EXTERNAL PRESSURE (13)

(a) Cylindrical and spherical shells under external pressure shall be designed by the rules in UG-28, using the applicable figures in Subpart 3 of Section II, Part D and the temperature limits of UG-20(c).

(b) Corrugated shells subject to external pressure may be used in pressure vessels in accordance with PFT-19 of Section I.

(13)

Table UCS-23
Carbon and Low Alloy Steel

Spec. No.	Type/Grade
SA-36	. . .
SA-53	E/A, E/B, S/A, S/B
SA-105	. . .
SA-106	A, B, C
SA-135	A, B
SA-178	A, C
SA-179	. . .
SA-181	. . .
SA-182	FR, F1, F2, F3V, F3VCb, F5, F5a, F9, F11 Cl. 1 & 2, F12 Cl. 1 & 2, F21, F22 Cl. 1 & 3, F22V, F91
SA-192	. . .
SA-193	B5, B7, B7M, B16
SA-202	A, B
SA-203	A, B, D, E, F
SA-204	A, B, C
SA-209	T1, T1a, T1b
SA-210	A-1, C
SA-213	T2, T5, T5b, T5c, T9, T11, T12, T17, T21, T22, T91
SA-214	. . .
SA-216	WCA, WCB, WCC
SA-217	C12, C5, WC1, WC4, WC5, WC6, WC9
SA-225	C
SA-234	WPB, WPC, WPR, WP1, WP5, WP9, WP11 Cl. 1, WP12 Cl. 1, WP22 Cl. 1
SA-250	T1, T1a, T1b
SA-266	1, 2, 3, 4
SA-283	A, B, C, D
SA-285	A, B, C
SA-299	A, B
SA-302	A, B, C, D
SA-307	B
SA-320	L7, L7A, L7M, L43
SA-325	1
SA-333	1, 3, 4, 6, 7, 9
SA-334	1, 3, 6, 7, 9
SA-335	P1, P2, P5, P5b, P5c, P9, P11, P12, P15, P21, P22, P91
SA-336	F1, F3V, F3VCb, F5, F5A, F9, F11 Cl. 2 & 3, F12, F21 Cl. 1 & 3, F22 Cl. 1 & 3, F22V, F91
SA-350	LF1, LF2, LF3, LF5, LF9
SA-352	LCB, LC1, LC2, LC3
SA-354	BC, BD
SA-369	FP1, FP2, FP5, FP9, FP11, FP12, FP21, FP22
SA-372	A, B, C, D, E Cl.65 & 70, F Cl. 70, G Cl. 70, H Cl. 70, J Cl. 65, 70 & 110, L, M Cl. 85 & 100
SA-387	2, 5, 11, 12, 21, 22, 91
SA-414	A, B, C, D, E, F, G
SA-420	WPL 3, WPL 6, WPL 9
SA-423	1, 2
SA-437	B4B, B4C
SA-449	. . .
SA-455	. . .
SA-487	1 Cl. A & B, 2 Cl. A & B, 4 Cl. A, 8 Cl. A
SA-508	1, 1A, 2 Cl. 1, 2 Cl. 2, 3 Cl. 1, 3 Cl. 2, 3V, 3VCb, 4N Cl. 3, 22 Cl. 3
SA-515	60, 65, 70
SA-516	55, 60, 65, 70
SA-524	I, II
SA-533	A Cl. 1 & 2, B Cl. 1 & 2, C Cl. 1 & 2, D Cl. 2, E Cl. 1 & 2
SA-537	Cl. 1, 2 & 3
SA-540	B21, B22, B23, B24, B24V
SA-541	1, 1A, 2 Cl. 1, 2 Cl. 2, 3 Cl. 1, 3 Cl. 2, 3V, 3VCb, 22 Cl. 3, 22V
SA-542	B Cl. 4, C Cl. 4a, D Cl. 4a, E Cl. 4a
SA-556	A2, B2, C2
SA-557	A2, B2, C2
SA-562	. . .
SA-574	4037, 4042, 4140, 4340, 5137M, 51B37M
SA-587	. . .
SA-612	. . .
SA-662	A, B, C
SA-675	45, 50, 55, 60, 65, 70
SA-727	. . .
SA-737	B, C
SA-738	A, B, C
SA-739	B11, B22
SA-765	I, II, III, IV
SA-832	21V, 22V, 23V
SA-836	. . .
SA-841	A Cl. 1, B Cl. 2
SA-1008	CS-A, CS-B
SA/AS 1548	PT430, PT460, PT490
SA/CSA-G40.21	38W, 44W, 50W
SA/EN 10028-2	P235GH, P265GH, P295GH, P355GH
SA/EN 10028-3	P275NH
SA/EN 10222-2	P280GH, P305GH, 13CrMo 4–5, 11CrMo 9–10
SA/GB 713	Q345R

GENERAL NOTE: Maximum allowable stress values in tension for the materials listed in the above table are contained in Subpart 1 of Section II, Part D (see UG-23).

Provided by IHS under license with ASME
No reproduction or networking permitted without license from IHS
Licensee=Chevron Phillips Chemical Co LP/5956674001
Not for Resale, 11/09/2014 20:41:36 MST

(13) UCS-29 STIFFENING RINGS FOR SHELLS UNDER EXTERNAL PRESSURE

Rules covering the design of stiffening rings are given in UG-29.

UCS-30 ATTACHMENT OF STIFFENING RINGS TO SHELL

Rules covering the attachment of stiffening rings are given in UG-30.

(13) UCS-33 FORMED HEADS, PRESSURE ON CONVEX SIDE

Ellipsoidal, torispherical, hemispherical, and conical heads having pressure on the convex side (minus heads) shall be designed by the rules of UG-33, using Figure CS-1 or Figure CS-2 of Subpart 3 of Section II, Part D.

(13) UCS-56 REQUIREMENTS FOR POSTWELD HEAT TREATMENT

(a) Before applying the detailed requirements and exemptions in these paragraphs, satisfactory weld procedure qualifications of the procedures to be used shall be performed in accordance with all the essential variables of Section IX including conditions of postweld heat treatment or lack of postweld heat treatment and including other restrictions listed below.

Except as otherwise specifically provided in the notes to Tables UCS-56-1 through UCS-56-11 and Table UCS-56.1, all welds in pressure vessels or pressure vessel parts shall be given a postweld heat treatment at a temperature not less than specified in those Tables when the nominal thickness, as defined in UW-40(f), including corrosion allowance, exceeds the limits in those Tables. The exemptions provided in Tables UCS-56-1 through UCS-56-11 or Table UCS-56.1 are not permitted when postweld heat treatment is a service requirement as set forth in UCS-68, when welding ferritic materials greater than $^1/_8$ in. (3 mm) thick with the electron beam welding process, or when welding P-No. 3, P-No. 4, P-Nos. 5A, 5B, and 5C, P-No. 10, and P-No. 15E materials of any thickness using the inertia and continuous drive friction welding processes. Electroslag welds in ferritic materials over $1^1/_2$ in. (38 mm) thickness at the joint shall be given a grain refining (austenitizing) heat treatment. Electrogas welds in ferritic materials with any single pass greater than $1^1/_2$ in. (38 mm) shall be given a grain refining (austenitizing) heat treatment. For P-No. 1 materials only, the heating and cooling rate restrictions of (d)(2) and (d)(5) below do not apply when the heat treatment following welding is in the austenitizing range.

The materials in Tables UCS-56-1 through UCS-56-11 are listed in accordance with Section IX P-Number material groupings of QW-422 and also listed in Table UCS-23.

(b) Except where prohibited in Tables UCS-56-1 through UCS-56-11, holding temperatures and/or holding times in excess of the minimum values given in Tables UCS-56-1 through UCS-56-11 may be used. Intermediate postweld heat treatments need not conform to the requirements of Tables UCS-56-1 through UCS-56-11. The holding time at temperature as specified in Tables UCS-56-1 through UCS-56-11 need not be continuous. It may be an accumulation of time of multiple postweld heat treatment cycles.

(c) When pressure parts of two different P-Number groups are joined by welding, the postweld heat treatment shall be that specified in either of Tables UCS-56-1 through UCS-56-11 or Tables UHA-32-1 through UHA-32-6, with applicable notes, for the material requiring the higher postweld temperature. When nonpressure parts are welded to pressure parts, the postweld heat treatment temperature of the pressure part shall control.

(d) The operation of postweld heat treatment shall be carried out by one of the procedures given in UW-40 in accordance with the following requirements:

(1) The temperature of the furnace shall not exceed 800°F (425°C) at the time the vessel or part is placed in it.

(2) Above 800°F (425°C), the rate[79] of heating shall be not more than 400°F/hr (222°C/h) divided by the maximum metal thickness of the shell or head plate in inches, but in no case more than 400°F/hr (222°C/h). During the heating period there shall not be a greater variation in temperature throughout the portion of the vessel being heated than 250°F (140°C) within any 15 ft (4.6 m) interval of length.

(3) The vessel or vessel part shall be held at or above the temperature specified in Tables UCS-56-1 through UCS-56-11 or Table UCS-56.1 for the period of time specified in the Tables. During the holding period, there shall not be a greater difference than 150°F (83°C) between the highest and lowest temperature throughout the portion of the vessel being heated, except where the range is further limited in Tables UCS-56-1 through UCS-56-11.

(4) During the heating and holding periods, the furnace atmosphere shall be so controlled as to avoid excessive oxidation of the surface of the vessel. The furnace shall be of such design as to prevent direct impingement of the flame on the vessel.

(5) Above 800°F (425°C), cooling shall be done in a closed furnace or cooling chamber at a rate[79] not greater than 500°F/hr (280°C/h) divided by the maximum metal thickness of the shell or head plate in inches, but in no case more than 500°F/hr (280°C/h). From 800°F (425°C) the vessel may be cooled in still air.

(e) Except as permitted in (f) below, vessels or parts of vessels that have been postweld heat treated in accordance with the requirements of this paragraph shall again be postweld heat treated after welded repairs have been made.

(f) Weld repairs to P-No. 1 Group Nos. 1, 2, and 3 materials and to P-No. 3 Group Nos. 1, 2, and 3 materials and to the weld metals used to join these materials may be made after the final PWHT but prior to the final hydrostatic test, without additional PWHT, provided that PWHT is not

Provided by IHS under license with ASME
No reproduction or networking permitted without license from IHS
Licensee=Chevron Phillips Chemical Co LP/5956674001
Not for Resale, 11/09/2014 20:41:36 MST

required as a service requirement in accordance with UW-2(a), except for the exemptions in Tables UCS-56-1 through UCS-56-11, or as a service requirement in accordance with UCS-68. The welded repairs shall meet the requirements of (1) through (6) below. These requirements do not apply when the welded repairs are minor restorations of the material surface, such as those required after removal of construction fixtures, and provided that the surface is not exposed to the vessel contents.

(1) The Manufacturer shall give prior notification of the repair to the user or to his designated agent and shall not proceed until acceptance has been obtained. Such repairs shall be recorded on the Data Report.

(2) The total repair depth shall not exceed $1\frac{1}{2}$ in. (38 mm) for P-No. 1 Group Nos. 1, 2, and 3 materials and $\frac{5}{8}$ in. (16 mm) for P-No. 3 Group Nos. 1, 2, and 3 materials. The total depth of a weld repair shall be taken as the sum of the depths for repairs made from both sides of a weld at a given location.

(3) After removal of the defect, the groove shall be examined, using either the magnetic particle or the liquid penetrant examination methods, in accordance with Mandatory Appendix 6 for MT and Mandatory Appendix 8 for PT.

(4) In addition to the requirements of Section IX for qualification of Welding Procedure Specifications for groove welds, the following requirements shall apply:

(-a) The weld metal shall be deposited by the manual shielded metal arc process using low hydrogen electrodes. The electrodes shall be properly conditioned in accordance with Section II, Part C, SFA-5.1, Annex A, A6.11; and SFA-5.5, Annex A, A6.12. The maximum bead width shall be four times the electrode core diameter.

(-b) For P-No. 1 Group Nos. 1, 2, and 3 materials, the repair area shall be preheated and maintained at a minimum temperature of 200°F (95°C) during welding.

(-c) For P-No. 3 Group Nos. 1, 2, and 3 materials, the repair weld method shall be limited to the half bead weld repair and weld temper bead reinforcement technique. The repair area shall be preheated and maintained at a minimum temperature of 350°F (175°C) during welding. The maximum interpass temperature shall be 450°F (230°C). The initial layer of weld metal shall be deposited over the entire area using $\frac{1}{8}$ in. (3 mm) maximum diameter electrodes. Approximately one-half the thickness of this layer shall be removed by grinding before depositing subsequent layers. The subsequent weld layers shall be deposited using $\frac{5}{32}$ in. (4 mm) maximum diameter electrodes in such a manner as to assure tempering of the prior weld beads and their heat affected zones. A final temper bead weld shall be applied to a level above the surface being repaired without contacting the base material but close enough to the edge of the underlying weld bead to assure tempering of the base material heat affected zone. After completing all welding, the repair area shall be maintained at a temperature of 400°F to 500°F (205°C to 260°C) for a minimum period of 4 hr. The final temper bead reinforcement layer shall be removed substantially flush with the surface of the base material.

(5) After the finished repair weld has reached ambient temperature, it shall be inspected using the same nondestructive examination that was used in (3) above, except that for P-No. 3, Group No. 3 materials, the examination shall be made after the material has been at ambient temperature for a minimum period of 48 hr to determine the presence of possible delayed cracking of the weld. If the examination is by the magnetic particle method, only the alternating current yoke type is acceptable. In addition, welded repairs greater than $\frac{3}{8}$ in. (10 mm) deep in materials and in welds that are required to be radiographed by the rules of this Division, shall be radiographically examined to the requirements of UW-51.

(6) The vessel shall be hydrostatically tested after making the welded repair.

(g) Capacitor discharge or electric resistance welding may be used for attaching bare-wire thermocouples, without subsequent postweld heat treatment, provided the energy output for welding is limited to 125 W-sec max. and any requirements specified in the applicable notes as found in Tables UCS-56-1 through UCS-56-11 shall apply. A welding procedure specification shall be prepared, and the content shall describe, as a minimum, the capacitor discharge equipment, the combination of materials to be joined, and the technique of application. Qualification of the welding procedure is not required.

--`,,,``,,,

Table UCS-56-1
Postweld Heat Treatment Requirements for Carbon and Low Alloy Steels — P-No. 1

Material	Normal Holding Temperature, °F (°C), Minimum	Minimum Holding Time at Normal Temperature for Nominal Thickness [See UW-40(f)]		
		Up to 2 in. (50 mm)	Over 2 in. to 5 in. (50 mm to 125 mm)	Over 5 in. (125 mm)
P-No. 1 Gr. Nos. 1, 2, 3	1,100 (595)	1 hr/in. (25 mm), 15 min minimum	2 hr plus 15 min for each additional inch (25 mm) over 2 in. (50 mm)	2 hr plus 15 min for each additional inch (25 mm) over 2 in. (50 mm)
Gr. No. 4	NA	None	None	None

GENERAL NOTES:

(a) When it is impractical to postweld heat treat at the temperature specified in this Table, it is permissible to carry out the postweld heat treatment at lower temperatures for longer periods of time in accordance with Table UCS-56.1.

(b) Postweld heat treatment is mandatory under the following conditions:

(1) for welded joints over $1\frac{1}{2}$ in. (38 mm) nominal thickness;

(2) for welded joints over $1\frac{1}{4}$ in. (32 mm) nominal thickness through $1\frac{1}{2}$ in. (38 mm) nominal thickness unless preheat is applied at a minimum temperature of 200°F (95°C) during welding. This preheat need not be applied to SA-841 Grades A and B, provided that the carbon content and carbon equivalent (CE) for the plate material, by heat analysis, do not exceed 0.14% and 0.40%, respectively, where

$$CE = C + \frac{Mn}{6} + \frac{Cr+Mo+V}{5} + \frac{Cu+Ni}{15}$$

(3) for welded joints of all thicknesses if required by UW-2, except postweld heat treatment is not mandatory under the conditions specified below:

(a) for groove welds not over $\frac{1}{2}$ in. (13 mm) size and fillet welds with a throat not over $\frac{1}{2}$ in. (13 mm) that attach nozzle connections that have a finished inside diameter not greater than 2 in. (50 mm), provided the connections do not form ligaments that require an increase in shell or head thickness, and preheat to a minimum temperature of 200°F (95°C) is applied;

(b) for groove welds not over $\frac{1}{2}$ in. (13 mm) in size or fillet welds with a throat thickness of $\frac{1}{2}$ in. (13 mm) or less that attach tubes to a tubesheet when the tube diameter does not exceed 2 in. (50 mm). A preheat of 200°F (95°C) minimum must be applied when the carbon content of the tubesheet exceeds 0.22%.

(c) for groove welds not over $\frac{1}{2}$ in. (13 mm) in size or fillet welds with a throat thickness of $\frac{1}{2}$ in. (13 mm) or less used for attaching nonpressure parts to pressure parts provided preheat to a minimum temperature of 200°F (95°C) is applied when the thickness of the pressure part exceeds $1\frac{1}{4}$ in. (32 mm);

(d) for studs welded to pressure parts provided preheat to a minimum temperature of 200°F (95°C) is applied when the thickness of the pressure part exceeds $1\frac{1}{4}$ in. (32 mm);

(e) for corrosion resistant weld metal overlay cladding or for welds attaching corrosion resistant applied lining (see UCL-34) provided preheat to a minimum temperature of 200°F (95°C) is maintained during application of the first layer when the thickness of the pressure part exceeds $1\frac{1}{4}$ in. (32 mm).

(c) NA = not applicable

Provided by IHS under license with ASME
No reproduction or networking permitted without license from IHS
Licensee=Chevron Phillips Chemical Co LP/5956674001
Not for Resale, 11/09/2014 20:41:36 MST

Table UCS-56-2
Postweld Heat Treatment Requirements for Carbon and Low Alloy Steels — P-No. 3

Material	Normal Holding Temperature, °F (°C), Minimum	Minimum Holding Time at Normal Temperature for Nominal Thickness [see UW-40(f)]		
		Up to 2 in. (50 mm)	Over 2 in. to 5 in. (50 mm to 125 mm)	Over 5 in. (125 mm)
P-No. 3 Gr. Nos. 1, 2, 3	1,100 (595)	1 hr/in. (25 mm), 15 min minimum	2 hr plus 15 min for each additional inch (25 mm) over 2 in. (50 mm)	2 hr plus 15 min for each additional inch (25 mm) over 2 in. (50 mm)

GENERAL NOTES:

(a) When it is impractical to postweld heat treat at the temperatures specified in this Table, it is permissible to carry out the postweld heat treatment at lower temperatures for longer periods of time in accordance with Table UCS-56.1.

(b) Postweld heat treatment is mandatory on P-No. 3 Gr. No. 3 material in all thicknesses.

(c) Except for the exemptions in General Note (d), postweld heat treatment is mandatory under the following conditions:

(1) on P-No. 3 Gr. No. 1 and P-No. 3 Gr. No. 2 over $\frac{5}{8}$ in. (16 mm) nominal thickness. For these materials, postweld heat treatment is mandatory on material up to and including $\frac{5}{8}$ in. (16 mm) nominal thickness unless a welding procedure qualification described in UCS-56(a) has been made in equal or greater thickness than the production weld.

(2) on material in all thicknesses if required by UW-2.

(d) For welding connections and attachments to pressure parts, postweld heat treatment is not mandatory under the conditions specified below:

(1) for attaching to pressure parts that have a specified maximum carbon content of not more than 0.25% (SA material specification carbon content, except when further limited by the purchaser to a value within the specification limits) or nonpressure parts with groove welds not over $\frac{1}{2}$ in. (13 mm) in size or fillet welds that have a throat thickness of $\frac{1}{2}$ in. (13 mm) or less, provided preheat to a minimum temperature of 200°F (95°C) is applied;

(2) for circumferential butt welds in pipe or tube where the pipe or tube have both a nominal wall thickness of $\frac{1}{2}$ in. (13 mm) or less and a specified maximum carbon content of not more than 0.25% (SA material specification carbon content, except when further limited by the purchaser to a value within the specification limits);

(3) for studs welded to pressure parts that have a specified maximum carbon content of not more than 0.25% (SA material specification carbon content, except when further limited by the purchaser to a value within the specification limits) provided preheat to a minimum temperature of 200°F (95°C) is applied;

(4) for corrosion resistant weld metal overlay cladding or for welds attaching corrosion resistant applied lining (see UCL-34) when welded to pressure parts which have a specified maximum carbon content of not more than 0.25% (SA material specification carbon content, except when further limited by the purchaser to a value within the specification limits) provided preheat to a minimum temperature of 200°F (95°C) is maintained during application of the first layer.

Provided by IHS under license with ASME
No reproduction or networking permitted without license from IHS
Licensee=Chevron Phillips Chemical Co LP/5956674001
Not for Resale, 11/09/2014 20:41:36 MST

Table UCS-56-3
Postweld Heat Treatment Requirements for Carbon and Low Alloy Steels — P-No. 4

Material	Normal Holding Temperature, °F (°C), Minimum	Minimum Holding Time at Normal Temperature for Nominal Thickness [See UW-40(f)]		
		Up to 2 in. (50 mm)	Over 2 in. to 5 in. (50 mm to 125 mm)	Over 5 in. (125 mm)
P-No. 4 Gr. Nos. 1, 2	1,200 (650)	1 hr/in. (25 mm), 15 min minimum	1 hr/in. (25 mm)	5 hr plus 15 min for each additional inch (25 mm) over 5 in. (125 mm)

GENERAL NOTES:

(a) Except for exemptions in General Note (b), postweld heat treatment is mandatory under the following conditions:

(1) on material of SA-202 Grades A and B over $^5/_8$ in. (16 mm) nominal thickness. For these materials postweld heat treatment is mandatory up to and including $^5/_8$ in. (16 mm) nominal thickness unless a welding procedure qualification described in UCS-56(a) has been made in equal or greater thickness than the production weld.

(2) on material of all thicknesses if required by UW-2;

(3) on all other P-No. 4 Gr. Nos. 1 and 2 materials.

(b) Postweld heat treatment is not mandatory under the conditions specified below:

(1) for circumferential butt welds in pipe or tube of P-No. 4 materials where the pipe or tubes comply with all of the following conditions:

(a) a maximum nominal outside diameter of 4 in. (100 mm) (DN 100);

(b) a maximum nominal thickness of $^5/_8$ in. (16 mm);

(c) a maximum specified carbon content of not more than 0.15% (SA material specification carbon content, except when further limited by the purchaser to a value within the specification limits);

(d) a minimum preheat of 250°F (120°C).

(2) for P-No. 4 pipe or tube materials meeting the requirements of (1)(a), (1)(b), and (1)(c) above, having nonpressure attachments fillet welded to them provided:

(a) the fillet welds have a maximum throat thickness of $^1/_2$ in. (13 mm);

(b) a minimum preheat temperature of 250°F (120°C) is applied.

(3) for P-No. 4 pipe or tube materials meeting the requirements of (1)(a), (1)(b), and (1)(c) above, having studs welded to them, a minimum preheat temperature of 250°F (120°C) is applied.

(4) for P-No. 4 pipe or tube materials meeting the requirements of (1)(a), (1)(b), and (1)(c) above, having extended heat absorbing fins electrically resistance-welded to them provided:

(a) the fins have a maximum thickness of $^1/_8$ in. (3 mm);

(b) prior to using the welding procedure, the Manufacturer shall demonstrate that the heat-affected zone does not encroach upon the minimum pipe or tube wall thickness.

Provided by IHS under license with ASME
No reproduction or networking permitted without license from IHS
Licensee=Chevron Phillips Chemical Co LP/5956674001
Not for Resale, 11/09/2014 20:41:36 MST

(13)

Table UCS-56-4
Postweld Heat Treatment Requirements for Carbon and Low Alloy Steels — P-Nos. 5A, 5B, and 5C

Material	Normal Holding Temperature, °F (°C), Minimum	Minimum Holding Time at Normal Temperature for Nominal Thickness [see UW-40(f)]		
		Up to 2 in. (50 mm)	Over 2 in. to 5 in. (50 mm to 125 mm)	Over 5 in. (125 mm)
P-Nos. 5A, 5B Gr. No. 1, and 5C Gr. No. 1	1,250 (675)	1 hr/in. (25 mm), 15 min minimum	1 hr/in. (25 mm)	5 hr plus 15 min for each additional inch (25 mm) over 5 in. (125 mm)

GENERAL NOTES:

(a) Except for exemptions in General Notes (b) and (d), postweld heat treatment is mandatory under all conditions.

(b) Postweld heat treatment is not mandatory under the following conditions:

(1) for circumferential butt welds in pipe or tube where the pipe or tubes comply with all of the following conditions:

(a) a maximum specified chromium content of 3.00%;

(b) a maximum nominal outside diameter of 4 in. (100 mm) (DN 100);

(c) a maximum nominal thickness of $^5/_8$ in. (16 mm);

(d) a maximum specified carbon content of not more than 0.15% (SA material specification carbon content, except when further limited by the purchaser to a value within the specification limits);

(e) a minimum preheat of 300°F (150°C) is applied.

(2) for pipe or tube materials meeting the requirements of (1)(a), (1)(b), (1)(c), and (1)(d) having nonpressure attachments fillet welded to them provided:

(a) the fillet welds have a maximum throat thickness of $^1/_2$ in. (13 mm);

(b) a minimum preheat temperature of 300°F (150°C) is applied.

(3) for pipe or tube materials meeting the requirements of (1)(a), (1)(b), (1)(c), and (1)(d) having studs welded to them provided a minimum preheat temperature of 300°F (150°C) is applied.

(4) for pipe or tube materials meeting the requirements of (1)(a) and (1)(c), above, having extended heat absorbing fins electrically resistance-welded to them provided:

(a) the fins have a maximum thickness of $^1/_8$ in. (3 mm);

(b) prior to using the welding procedure, the Manufacturer shall demonstrate that the heat-affected zone does not encroach upon the minimum pipe or tube wall thickness.

(c) When it is impractical to postweld heat P-Nos. 5A, 5B Gr. No. 1, and 5C Gr. No. 1 materials at the temperature specified in this Table, it is permissible to perform the postweld heat treatment at 1,200°F (650°C) minimum provided that, for material up to 2 in. (50 mm) nominal thickness, the holding time is increased to the greater of 4 hr minimum or 4 hr/in. (25 mm) of thickness; for thickness over 2 in. (50 mm), the specified holding times are multiplied by 4. The requirements of UCS-85 must be accommodated in this reduction in post-weld heat treatment.

(d) Postweld heat treatment is not mandatory for attaching bare-wire thermocouples by capacitor discharge welding or electric resistance welding provided

(1) the requirements of UCS-56(g) are met

(2) the maximum carbon content of the base material is restricted to 0.15%

(3) the minimum wall thickness is 0.20 in. (5 mm)

Provided by IHS under license with ASME
No reproduction or networking permitted without license from IHS
Licensee=Chevron Phillips Chemical Co LP/5956674001
Not for Resale, 11/09/2014 20:41:36 MST

Table UCS-56-5
Postweld Heat Treatment Requirements for Carbon and Low Alloy Steels — P-No. 9A

Material	Normal Holding Temperature, °F (°C), Minimum	Minimum Holding Time at Normal Temperature for Nominal Thickness [See UW-40(f)]
P-No. 9A Gr. No. 1	1,100 (595)	1 hr minimum, plus 15 min/in. (25 mm) for thickness over 1 in. (25 mm)

GENERAL NOTES:

(a) When it is impractical to postweld heat treat at the temperature specified in this Table, it is permissible to carry out the postweld heat treatment at lower temperatures [1,000°F (540°C) minimum] for longer periods of time in accordance with Table UCS-56.1.

(b) Except for exemptions in General Note (c), postweld heat treatment is mandatory under the following conditions:

(1) on material over $^5/_8$ in. (16 mm) nominal thickness. For material up to and including $^5/_8$ in. (16 mm) nominal thickness, postweld heat treatment is mandatory unless a welding procedure qualification described in UCS-56(a) has been made in equal or greater thickness than the production weld.

(2) on material of all thicknesses if required by UW-2.

(c) Postweld heat treatment is not mandatory under conditions specified below:

(1) for circumferential butt welds in pipe or tubes where the pipe or tubes comply with all the following conditions:

(a) a maximum nominal outside diameter of 4 in. (100 mm) (DN 100);

(b) a maximum thickness of $^1/_2$ in. (13 mm);

(c) a maximum specified carbon content of not more than 0.15% (SA material specification carbon content, except when further limited by the purchaser to a value within the specification limits);

(d) a minimum preheat of 250°F (120°C).

(2) for pipe or tube materials meeting the requirements of (1)(a), (1)(b), and (1)(c) above, having attachments fillet welded to them, provided:

(a) the fillet welds have a throat thickness of $^1/_2$ in. (13 mm) or less;

(b) the material is preheated to 250°F (120°C) minimum. A lower preheating temperature may be used provided specifically controlled procedures necessary to produce sound welded joints are used. Such procedures shall include but shall not be limited to the following:

(-1) The throat thickness of fillet welds shall be $^1/_2$ in. (13 mm) or less.

(-2) The maximum continuous length of fillet welds shall be not over 4 in. (100 mm).

(-3) The thickness of the test plate used in making the welding procedure qualification of Section IX shall not be less than that of the material to be welded.

(3) (c) for attaching nonpressure parts to pressure parts with groove welds not over $^1/_2$ in. (13 mm) in size or fillet welds that have a throat thickness of $^1/_2$ in. (13 mm) or less, provided preheat to a minimum temperature of 200°F (95°C) is applied;

(4) for studs welded to pressure parts provided preheat to a minimum temperature of 200°F (95°C) is applied;

(5) for corrosion resistant weld metal overlay cladding or for welds attaching corrosion resistant applied lining (see UCL-34) provided preheat to a minimum temperature of 200°F (95°C) is maintained during application of the first layer.

(d) When the heating rate is less than 50°F (28°C/hr) between 800°F (425°C) and the holding temperature, the additional 15 min/in. (25 mm) holding time is not required. Additionally, where the Manufacturer can provide evidence that the minimum temperature has been achieved throughout the thickness, the additional 15 min/in. (25 mm) holding time is not required.

Provided by IHS under license with ASME
No reproduction or networking permitted without license from IHS
Licensee=Chevron Phillips Chemical Co LP/5956674001
Not for Resale, 11/09/2014 20:41:36 MST

Table UCS-56-6
Postweld Heat Treatment Requirements for Carbon and Low Alloy Steels — P-No. 9B

Material	Normal Holding Temperature, °F (°C), Minimum	Minimum Holding Time at Normal Temperature for Nominal Thickness [See UW-40(f)]
P-No. 9B Gr. No. 1	1,100 (595)	1 hr minimum, plus 15 min/in. (25 mm) for thickness over 1 in. (25 mm)

GENERAL NOTES:

(a) When it is impractical to postweld heat treat at the temperatures specified in this Table, it is permissible to carry out the postweld heat treatment at lower temperatures [1,000°F (540°C) minimum] for longer periods of time in accordance with Table UCS-56.1.

(b) The holding temperature for postweld heat treatment shall not exceed 1,175°F (635°C).

(c) Except for exemptions in General Note (d), postweld heat treatment is mandatory under the following conditions:

(1) on material over $\frac{5}{8}$ in. (16 mm) nominal thickness. For material up to and including $\frac{5}{8}$ in. (16 mm) nominal thickness, postweld heat treatment is mandatory unless a welding procedure qualification described in UCS-56(a) has been made in equal or greater thickness than the production weld.

(2) on material of all thicknesses if required by UW-2.

(d) Postweld heat treatment is not mandatory under the conditions specified below:

(1) for attaching nonpressure parts to pressure parts with groove welds not over $\frac{1}{2}$ in. (13 mm) in size or fillet welds that have a throat thickness of $\frac{1}{2}$ in. (13 mm) or less, provided preheat to a minimum temperature of 200°F (95°C) is applied;

(2) for studs welded to pressure parts provided preheat to a minimum temperature of 200°F (95°C) is applied;

(3) for corrosion resistant weld metal overlay cladding or for welds attaching corrosion resistant applied lining (see UCL-34) provided preheat to a minimum temperature of 200°F (95°C) is maintained during application of the first layer.

(e) When the heating rate is less than 50°F (28°C/hr) between 800°F (425°C) and the holding temperature, the additional 15 min/in. (25 mm) holding time is not required. Additionally, where the Manufacturer can provide evidence that the minimum temperature has been achieved throughout the thickness, the additional 15 min/in. (25 mm) holding time is not required.

Provided by IHS under license with ASME
No reproduction or networking permitted without license from IHS
Licensee=Chevron Phillips Chemical Co LP/5956674001
Not for Resale, 11/09/2014 20:41:36 MST

Table UCS-56-7
Postweld Heat Treatment Requirements for Carbon and Low Alloy Steels — P-No. 10A

Material	Normal Holding Temperature, °F (°C), Minimum	Minimum Holding Time at Normal Temperature for Nominal Thickness [See UW-40(f)]
P-No. 10A Gr. No. 1	1,100 (595)	1 hr minimum, plus 15 min/in. (25 mm) for thickness over 1 in. (25 mm)

GENERAL NOTES:

(a) See below.

(1) When it is impractical to postweld heat treat at the temperature specified in this Table, it is permissible to carry out the postweld heat treatment at lower temperatures for longer periods of time in accordance with Table UCS-56.1.

(2) Consideration should be given for possible embrittlement of materials containing up to 0.15% vanadium when postweld heat treating at the minimum temperature and at lower temperature for longer holding times.

(b) Except for exemptions in General Note (c), postweld heat treatment is mandatory under the following conditions:

(1) on all thicknesses of SA-487 Class 1Q material;

(2) on all other P-No. 10A materials over $^5/_8$ in. (16 mm) nominal thickness. For these materials up to and including $^5/_8$ in. (16 mm) nominal thickness, postweld heat treatment is mandatory unless a welding procedure qualification described in UCS-56(a) has been made in equal or greater thickness than the production weld.

(3) on material of all thicknesses if required by UW-2.

(c) Postweld heat treatment is not mandatory under the conditions specified below:

(1) for attaching to pressure parts that have a specified maximum carbon content of not more than 0.25% (SA material specification carbon content, except when further limited by the purchaser to a value within the specification limits) or nonpressure parts with groove weld not over $^1/_2$ in. (13 mm) in size or fillet welds having a throat thickness of $^1/_2$ in. (13 mm) or less, provided preheat to a minimum temperature of 200°F (95°C) is applied;

(2) for circumferential butt welds in pipes or tube where the pipe or tube has both a nominal wall thickness of $^1/_2$ in. (13 mm) or less and a specified maximum carbon content of not more than 0.25% (SA material specification carbon content, except when further limited by purchaser to a value within the specification limits) provided preheat to a minimum temperature of 200°F (95°C) is applied;

(3) for studs welded to pressure parts that have a specified maximum carbon content of not more than 0.25% (SA material specification carbon content, except when further limited by purchaser to a value within the specification limits) provided preheat to a minimum temperature of 200°F (95°C) is applied;

(4) for corrosion resistant weld metal overlay cladding or for welds attaching corrosion resistant applied lining (see UCL-34) when welded to pressure parts that have a specified maximum carbon content of not more than 0.25% (SA material specification carbon content, except when further limited by the purchaser to a value within the specification limits) provided preheat to a minimum temperature of 200°F (95°C) is maintained during application of the first layer.

(d) When the heating rate is less than 50°F (28°C)/hr between 800°F (425°C) and the holding temperature, the additional 15 min/in. (25 mm) holding time is not required. Additionally, where the Manufacturer can provide evidence that the minimum temperature has been achieved throughout the thickness, the additional 15 min/in. (25 mm) holding time is not required.

Table UCS-56-8
Postweld Heat Treatment Requirements for Carbon and Low Alloy Steels — P-No. 10B

Material	Normal Holding Temperature, °F (°C), Minimum	Minimum Holding Time at Normal Temperature for Nominal Thickness [See UW-40(f)]
P-No. 10B Gr. No. 1	1,100 (595)	1 hr minimum, plus 15 min/in. (25 mm) for thickness over 1 in. (25 mm)

GENERAL NOTES:

(a) Postweld heat treatment is mandatory for P-No. 10B materials for all thicknesses.

(b) When the heating rate is less than 50°F (28°C/hr) between 800°F (425°C) and the holding temperature, the additional 15 min/in. (25 mm) holding time is not required. Additionally, where the Manufacturer can provide evidence that the minimum temperature has been achieved throughout the thickness, the additional 15 min/in. (25 mm) holding time is not required.

--`,,,``,,``,,,

Table UCS-56-9
Postweld Heat Treatment Requirements for Carbon and Low Alloy Steels — P-No. 10C

Material	Normal Holding Temperature, °F (°C), Minimum	Minimum Holding Time at Normal Temperature for Nominal Thickness [See UW-40(f)]
P-No. 10C Gr. No. 1	1,000 (540)	1 hr minimum, plus 15 min/in. (25 mm) for thickness over 1 in. (25 mm)

GENERAL NOTES:

(a) When it is impractical to postweld heat treat at the temperatures specified in this Table, it is permissible to carry out the postweld heat treatment at lower temperatures for longer periods of time in accordance with Table UCS-56.1.

(b) Except for exemptions in General Note (c), postweld heat treatment is mandatory under the following conditions:

(1) for material over $1\frac{1}{2}$ in. (38 mm) nominal thickness. Postweld heat treatment is mandatory on materials over $1\frac{1}{4}$ in. (32 mm) nominal thickness through $1\frac{1}{2}$ in. (38 mm) nominal thickness unless preheat is applied at a minimum temperature of 200°F (95°C) during welding.

(2) on material of all thicknesses if required by UW-2.

(c) Postweld heat treatment is not mandatory under the conditions specified below:

(1) for groove welds not over $\frac{1}{2}$ in. (13 mm) in size and fillet welds with throat not over $\frac{1}{2}$ in. (13 mm) that attach nozzle connections that have a finished inside diameter not greater than 2 in. (50 mm) provided the connections do not form ligaments that require an increase in shell or head thickness and preheat to a minimum temperature of 200°F (95°C) is applied;

(2) for groove welds not over $\frac{1}{2}$ in. (13 mm) in size or fillet welds having throat thickness of $\frac{1}{2}$ in. (13 mm) or less used for attaching nonpressure parts to pressure parts and preheat to a minimum temperature of 200°F (95°C) is applied when the thickness of the pressure part exceeds $1\frac{1}{4}$ in. (32 mm);

(3) for studs welded to pressure parts provided preheat to a minimum temperature of 200°F (95°C) is applied when the thickness of the pressure part exceeds $1\frac{1}{4}$ in. (32 mm);

(4) for corrosion resistant weld metal overlay cladding or for welds attaching corrosion resistant applied lining (see UCL-34) provided preheat to a minimum temperature of 200°F (95°C) is maintained during application of the first layer when the thickness of the pressure part exceeds $1\frac{1}{4}$ in. (32 mm).

(d) When the heating rate is less than 50°F (28°C)/hr between 800°F (425°C) and the holding temperature, the additional 15 min/in. (25 mm) holding time is not required. Additionally, where the Manufacturer can provide evidence that the minimum temperature has been achieved throughout the thickness, the additional 15 min/in. (25 mm) holding time is not required.

Table UCS-56-10
Postweld Heat Treatment Requirements for Carbon and Low Alloy Steels — P-No. 10F

Material	Normal Holding Temperature, °F (°C), Minimum	Minimum Holding Time at Normal Temperature for Nominal Thickness [See UW-40(f)]
P-No. 10F Gr. No. 1	1,000 (540)	1 hr minimum, plus 15 min/in. (25 mm) for thickness over 1 in. (25 mm)

GENERAL NOTES:

(a) Postweld heat treatment is mandatory for P-No. 10F materials for all thicknesses.

(b) When the heating rate is less than 50°F (28°C)/hr between 800°F (425°C) and the holding temperature, the additional 15 min/in. (25 mm) holding time is not required. Additionally, where the Manufacturer can provide evidence that the minimum temperature has been achieved throughout the thickness, the additional 15 min/in. (25 mm) holding time is not required.

Provided by IHS under license with ASME
No reproduction or networking permitted without license from IHS
Licensee=Chevron Phillips Chemical Co LP/5956674001
Not for Resale, 11/09/2014 20:41:36 MST

Table UCS-56-11 (13)
Postweld Heat Treatment Requirements for Carbon and Low Alloy Steels — P-No. 15E

Material	Minimum Holding Temperature, °F (°C) [Note (1)] and [Note (2)]	Maximum Holding Temperature, °F (°C) [Note (3)] and [Note (4)]	Minimum Holding Time at Normal Temperature for Weld Thickness (Nominal)	
			Up to 5 in. (125 mm)	Over 5 in. (125 mm)
P-No. 15E Group No. 1	1,350 (730)	1,425 (775)	1 hr/in. (2 min/mm), 30 min minimum	5 hr plus 15 min for each additional inch (25 mm) over 5 in. (125 mm)

GENERAL NOTES:

(a) Postweld heat treatment is not mandatory for electric resistance welds used to attach extended heat-absorbing fins to pipe and tube materials, provided the following requirements are met:

(1) a maximum pipe or tube size of NPS 4 (DN 100)

(2) a maximum specified carbon content (SA material specification carbon content, except when further limited by the Purchaser to a value within the specification limits) of not more than 0.15%

(3) a maximum fin thickness of $^1/_8$ in. (3 mm)

(4) prior to using the welding procedure, the Manufacturer shall demonstrate that the heat-affected zone does not encroach upon the minimum wall thickness

(b) Postweld heat treatment is not mandatory for attaching bare-wire thermocouples by capacitor discharge welding or electric resistance welding provided

(1) the requirements of UCS-56(g) are met

(2) the maximum carbon content of the base material is restricted to 0.15%

(3) the minimum wall thickness is 0.20 in. (5 mm)

NOTES:

(1) If the nominal weld thickness is ≤ 0.5 in. (13 mm), the minimum holding temperature is 1,325°F (720°C).

(2) For dissimilar metal welds (i.e., welds made between a P-No. 15E Group No. 1 and another lower chromium ferritic, austenitic, or nickel-based steel), if filler metal chromium content is less than 3.0% or if the filler metal is nickel-based or austenitic, the minimum holding temperature shall be 1,300°F (705°C).

(3) The maximum holding temperature above is to be used if the actual chemical composition of the matching filler metal used when making the weld is unknown. If the chemical composition of the matching filler metal is known, the maximum holding temperature can be increased as follows:

(a) If Ni + Mn < 1.50% but ≥ 1.0%, the maximum PWHT temperature is 1,450°F (790°C).

(b) If Ni + Mn < 1.0%, the maximum PWHT temperature is 1,470°F (800°C).

The lower transformation temperature for matching filler material is affected by alloy content, primarily the total of Ni + Mn. The maximum holding temperature has been set to avoid heat treatment in the intercritical zone.

(4) If a portion of the component is heated above the heat treatment temperature allowed above, one of the following actions shall be performed:

(a) The component in its entirety must be renormalized and tempered.

(b) If the maximum holding temperature in the Table or Note (3)(a) above is exceeded, but does not exceed 1,470°F (800°C), the weld metal shall be removed and replaced.

(c) The portion of the component heated above 1,470°F (800°C) and at least 3 in. (75 mm) on either side of the overheated zone must be removed and be renormalized and tempered or replaced.

(d) The allowable stress shall be that for Grade 9 material (i.e., SA-213-T9, SA-335-P9, or equivalent product specification) at the design temperature, provided that the portion of the component heated to a temperature greater than that allowed above is reheat treated within the temperature range specified above.

Provided by IHS under license with ASME
No reproduction or networking permitted without license from IHS
Licensee=Chevron Phillips Chemical Co LP/5956674001
Not for Resale, 11/09/2014 20:41:36 MST

Table UCS-56.1
Alternative Postweld Heat Treatment Requirements for Carbon and Low Alloy Steels

Decrease in Temperature Below Minimum Specified Temperature, °F (°C)	Minimum Holding Time [Note (1)] at Decreased Temperature, hr	Notes
50 (28)	2	...
100 (56)	4	...
150 (83)	10	(2)
200 (111)	20	(2)

GENERAL NOTE: Applicable only when permitted in Tables UCS-56-1 through UCS-56-11.

NOTES:
(1) Minimum holding time for 1 in. (25 mm) thickness or less. Add 15 minutes per inch (25 mm) of thickness for thicknesses greater than 1 in. (25 mm).
(2) These lower postweld heat treatment temperatures permitted only for P-No. 1 Gr. Nos. 1 and 2 materials.

UCS-57 RADIOGRAPHIC EXAMINATION

In addition to the requirements of UW-11, complete radiographic examination is required for each butt welded joint at which the thinner of the plate or vessel wall thicknesses at the welded joint exceeds the thickness limit above which full radiography is required in Table UCS-57.

Table UCS-57
Thickness Above Which Full Radiographic Examination of Butt Welded Joints Is Mandatory

P-No. & Group No. Classification of Material	Nominal Thickness Above Which Butt Welded Joints Shall Be Fully Radiographed, in. (mm)
1 Gr. 1, 2, 3	1¼ (32)
3 Gr. 1, 2, 3	¾ (19)
4 Gr. 1, 2	⅝ (16)
5A Gr. 1, 2	0 (0)
5B Gr. 1	0 (0)
5C Gr. 1	0 (0)
15E, Gr. 1	0 (0)
9A Gr. 1	⅝ (16)
9B Gr. 1	⅝ (16)
10A Gr. 1	¾ (19)
10B Gr. 1	⅝ (16)
10C Gr. 1	⅝ (16)
10F Gr. 1	¾ (19)

LOW TEMPERATURE OPERATION

UCS-65 SCOPE

The following paragraphs contain requirements for vessels and vessel parts constructed of carbon and low alloy steels with respect to minimum design metal temperatures.

UCS-66 MATERIALS (13)

(a) Unless exempted by the rules of UG-20(f) or other rules of this Division, Figure UCS-66 shall be used to establish impact testing exemptions for steels listed in Part UCS. When Figure UCS-66 is used, impact testing is required for a combination of minimum design metal temperature (see UG-20) and governing thickness (as defined below) that is below the curve assigned to the subject material. If a minimum design metal temperature and governing thickness combination is on or above the curve, impact testing is not required by the rules of this Division, except as required by (j) below and UCS-67(a)(3) for weld metal.

Components, such as shells, heads, nozzles, manways, reinforcing pads, flanges, tubesheets, flat cover plates, backing strips which remain in place, and attachments which are essential to the structural integrity of the vessel when welded to pressure retaining components, shall be treated as separate components. Each component shall be evaluated for impact test requirements based on its individual material classification, governing thickness as defined in (1), (2), or (3) below, and the minimum design metal temperature.

The following governing thickness definitions apply when using Figure UCS-66:

(1) Excluding castings, the governing thickness t_g of a welded part is as follows:

(-a) for butt joints except those in flat heads and tubesheets, the nominal thickness of the thickest welded joint [see Figure UCS-66.3 sketch (a)];

(-b) for corner, fillet, or lap welded joints, including attachments as defined above, the thinner of the two parts joined;

(-c) for flat heads or tubesheets, the larger of (-b) above or the flat component thickness divided by 4;

(-d) for welded assemblies comprised of more than two components (e.g., nozzle-to-shell joint with reinforcing pad), the governing thickness and permissible minimum design metal temperature of each of the individual welded joints of the assembly shall be determined, and the warmest of the minimum design metal temperatures shall be used as the permissible minimum design metal temperature of the welded assembly. [See Figure UCS-66.3 sketch (b).]

If the governing thickness at any welded joint exceeds 4 in. and the minimum design metal temperature is colder than 120°F (50°C), impact tested material shall be used.

(2) The governing thickness of a casting shall be its largest nominal thickness.

Provided by IHS under license with ASME
No reproduction or networking permitted without license from IHS
Licensee=Chevron Phillips Chemical Co LP/5956674001
Not for Resale, 11/09/2014 20:41:36 MST

(13)

Figure UCS-66
Impact Test Exemption Curves

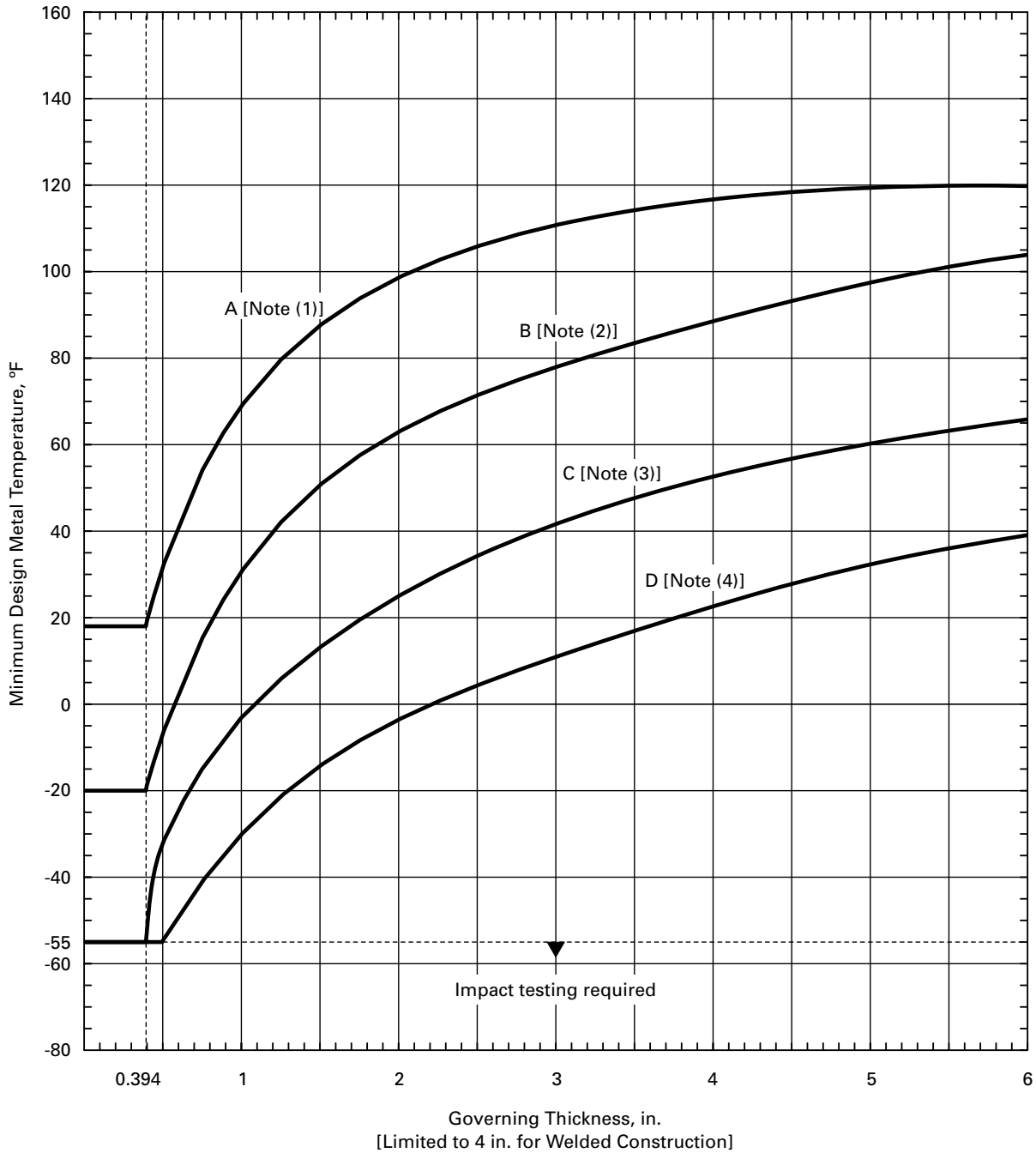

GENERAL NOTES:

(a) Tabular values for this figure are provided in Table UCS-66.

(b) See UCS-66(a).

(c) For bolting and nuts, the following impact test exemption temperatures shall apply:

Bolting

Spec. No.	Grade	Diameter, in. (mm)	Impact Test Exemption Temperature, °F (°C)
SA-193	B5	Up to 4 (100), incl.	−20 (−30)
SA-193	B7	Up to $2\frac{1}{2}$ in. (64), incl.	−55 (−48)
SA-193	...	Over $2\frac{1}{2}$ (64) to 7 (175), incl.	−40 (−40)
SA-193	B7M	Up to $2\frac{1}{2}$ (64), incl.	−55 (−48)

--`,,,``,,`,,,

Figure UCS-66
Impact Test Exemption Curves (Cont'd)

GENERAL NOTES (CONT'D):

Table continued

Bolting

Spec. No.	Grade	Diameter, in. (mm)	Impact Test Exemption Temperature, °F (°C)
SA-193	B16	Up to 7 (175), incl.	−20 (−30)
SA-307	B	All	−20 (−30)
SA-320	L7, L7A, L7M	Up to 2½ (64), incl.	See General Note (c) of Figure UG-84.1
SA-320	L43	Up to 1 (25), incl.	See General Note (c) of Figure UG-84.1
SA-325	1	½ (13) to 1½ (38)	−20 (−30)
SA-354	BC	Up to 4 (100), incl.	0 (−18)
SA-354	BD	Up to 4 (100), incl.	+20 (−7)
SA-437	B4B, B4C	All diameters	See General Note (c) of Figure UG-84.1
SA-449	...	Up to 3 (75), incl.	−20 (−30)
SA-540	B21 Cl. All	All	Impact test required
SA-540	B22 Cl. 3	Up to 4 (100), incl.	Impact test required
SA-540	B23 Cl. 1, 2	All	Impact test required
SA-540	B23 Cl. 3, 4	Up to 6 (150), incl.	See General Note (c) of Figure UG-84.1
SA-540	B23 Cl. 3, 4	Over 6 (150) to 9½ (240), incl.	Impact test required
SA-540	B23 Cl. 5	Up to 8 (200), incl.	See General Note (c) of Figure UG-84.1
SA-540	B23 Cl. 5	Over 8 (200) to 9½ (240), incl.	Impact test required
SA-540	B24 Cl. 1	Up to 6 (150), incl.	See General Note (c) of Figure UG-84.1
SA-540	B24 Cl. 1	Over 6 (150) to 8 (200), incl.	Impact test required
SA-540	B24 Cl. 2	Up to 7 (175), incl.	See General Note (c) of Figure UG-84.1
SA-540	B24 Cl. 2	Over 7 (175) to 9½ (240), incl.	Impact test required
SA-540	B24 Cl. 3, 4	Up to 8 (200), incl.	See General Note (c) of Figure UG-84.1
SA-540	B24 Cl. 3, 4	Over 8 (200) to 9½ (240), incl.	Impact test required
SA-540	B24 Cl. 5	Up to 9½ (240), incl.	See General Note (c) of Figure UG-84.1
SA-540	B24V Cl. 3	All	See General Note (c) of Figure UG-84.1

Nuts

Spec. No.	Grade	Impact Test Exemption Temperature, °F (°C)
SA-194	2, 2H, 2HM, 3, 4, 7, 7M, and 16	−55 (−48)
SA-540	B21/B22/B23/B24/B24V	−55 (−48)

(d) When no class or grade is shown, all classes or grades are included.

(e) The following shall apply to all material assignment notes:

(1) Cooling rates faster than those obtained by cooling in air, followed by tempering, as permitted by the material specification, are considered to be equivalent to normalizing or normalizing and tempering heat treatments.

(2) Fine grain practice is defined as the procedure necessary to obtain a fine austenitic grain size as described in SA-20.

(3) Normalized rolling condition is not considered as being equivalent to normalizing.

(f) Castings not listed in Notes (1) and (2) below shall be impact tested.

NOTES:

(1) Curve A applies to:

(a) all carbon and all low alloy steel plates, structural shapes, and bars not listed in Curves B, C, and D below;

(b) SA-216 Grades WCB and WCC if normalized and tempered or water-quenched and tempered; SA-217 Grade WC6 if normalized and tempered or water-quenched and tempered.

(2) Curve B applies to:

(a) see below:

SA-216 Grade WCA if normalized and tempered or water-quenched and tempered
SA-216 Grades WCB and WCC for thicknesses not exceeding 2 in. (50 mm) , if produced to fine grain practice and water-quenched and tempered
SA-217 Grade WC9 if normalized and tempered
SA-285 Grades A and B
SA-414 Grade A
SA-515 Grade 60
SA-516 Grades 65 and 70 if not normalized
SA-612 if not normalized
SA-662 Grade B if not normalized

Provided by IHS under license with ASME
No reproduction or networking permitted without license from IHS
Licensee=Chevron Phillips Chemical Co LP/5956674001
Not for Resale, 11/09/2014 20:41:36 MST

Figure UCS-66
Impact Test Exemption Curves (Cont'd)

NOTES (CONT'D):

SA/EN 10028-2 Grades P235GH, P265GH, P295GH, and P355GH as rolled
SA/AS 1548 Grades PT430NR and PT460NR

(b) except for cast steels, all materials of Curve A if produced to fine grain practice and normalized which are not listed in Curves C and D below;

(c) all pipe, fittings, forgings and tubing not listed for Curves C and D below;

(d) parts permitted under UG-11 shall be included in Curve B even when fabricated from plate that otherwise would be assigned to a different curve.

(3) Curve C applies to:

(a) see below:

SA-182 Grades F21 and F22 if normalized and tempered
SA-302 Grades C and D
SA-336 F21 and F22 if normalized and tempered, or liquid quenched and tempered
SA-387 Grades 21 and 22 if normalized and tempered, or liquid quenched and tempered
SA-516 Grades 55 and 60 if not normalized
SA-533 Grades B, C, and E
SA-662 Grade A;

(b) all materials listed in 2(a) and 2(c) for Curve B if produced to fine grain practice and normalized, normalized and tempered, or liquid quenched and tempered as permitted in the material specification, and not listed for Curve D below.

(4) Curve D applies to:

SA-203
SA-508 Grade 1
SA-516 if normalized or quenched and tempered
SA-524 Classes 1 and 2
SA-537 Classes 1, 2, and 3
SA-612 if normalized
SA-662 if normalized
SA-738 Grade A
SA-738 Grade A with Cb and V deliberately added in accordance with the provisions of the material specification, not colder than −20°F (−29°C)
SA-738 Grade B not colder than −20°F (−29°C)
SA/AS 1548 Grades PT430N and PT460N
SA/EN 10028-2 Grades P235GH, P265GH, P295GH, and P355GH if normalized
SA/EN 10028-3 Grade P275NH

(3) The governing thickness of flat nonwelded parts, such as bolted flanges, tubesheets, and flat heads, is the flat component thickness divided by 4.

(4) The governing thickness of a nonwelded dished head [see Figure 1-6 sketch (c)] is the greater of the flat flange thickness divided by 4 or the minimum thickness of the dished portion.

(5) If the governing thickness of the nonwelded part exceeds 6 in. (150 mm) and the minimum design metal temperature is colder than 120°F (50°C), impact tested material shall be used.

Examples of the governing thickness for some typical vessel details are shown in Figure UCS-66.3.

NOTE: The use of provisions in UCS-66 which waive the requirements for impact testing does not provide assurance that all test results for these materials would satisfy the impact energy requirements of UG-84 if tested.

(b) When the coincident ratio defined in Figure UCS-66.1 is less than one, Figure UCS-66.1 provides a basis for the use of components made of Part UCS materials to have a colder MDMT than that derived from (a) above without impact testing.

(1) See below.

(-a) For such components, and for a MDMT of −55°F (−48°C) and warmer, the MDMT without impact testing determined in (a) above for the given material and thickness may be reduced as determined from Figure UCS-66.2. If the resulting temperature is colder than the required MDMT, impact testing of the material is not required.

(-b) Figure UCS-66.1 may also be used for components not stressed in general primary membrane tensile stress, such as flat heads, covers, tubesheets, and flanges (including bolts and nuts). The MDMT of these components without impact testing as determined in (a) or (c) may be reduced as determined from Figure UCS-66.2. The ratio used in Step 3 of Figure UCS-66.2 shall be the ratio of maximum design pressure at the MDMT to the

Provided by IHS under license with ASME
No reproduction or networking permitted without license from IHS
Licensee=Chevron Phillips Chemical Co LP/5956674001
Not for Resale, 11/09/2014 20:41:36 MST

(13)

Figure UCS-66M
Impact Test Exemption Curves

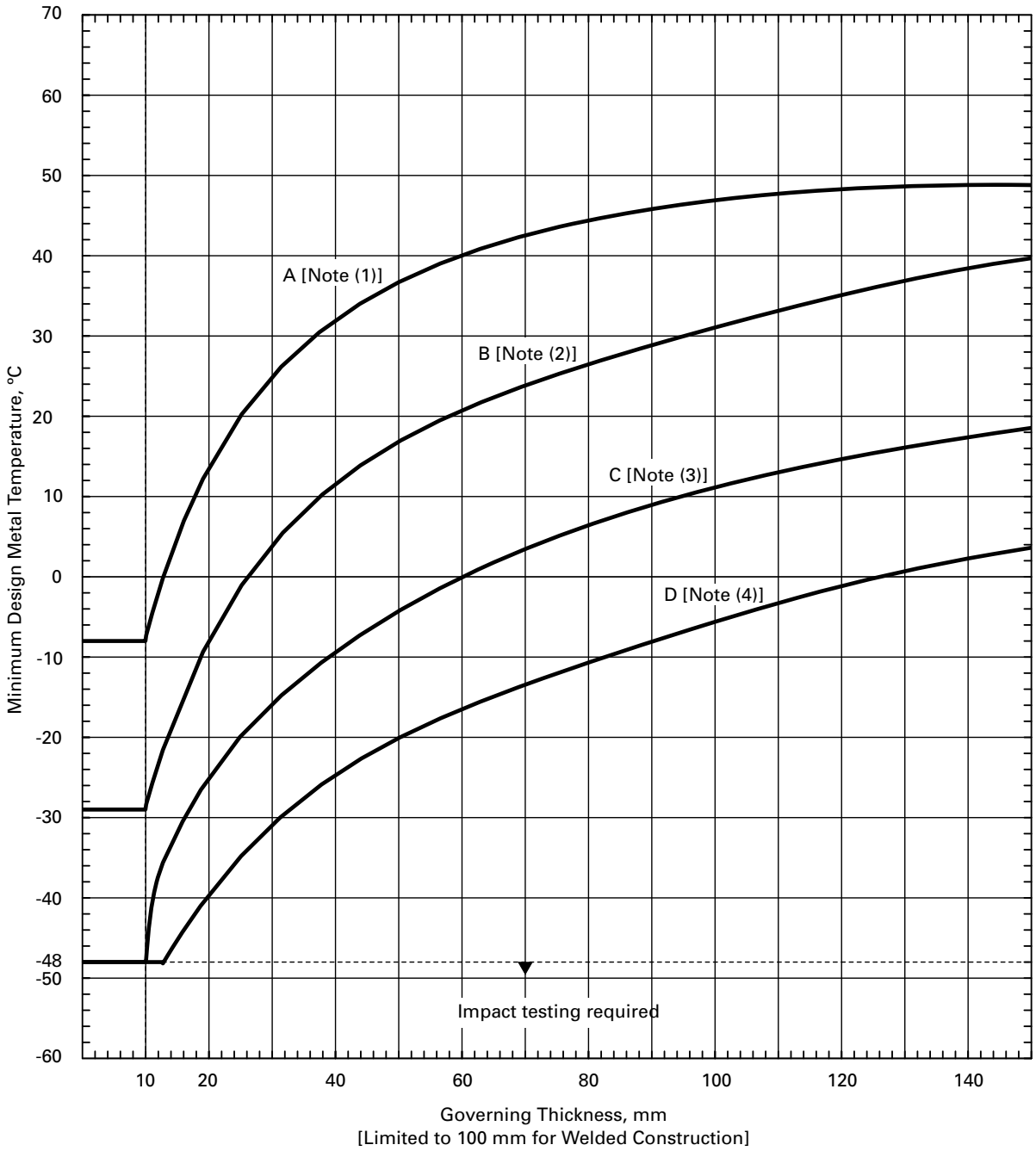

GENERAL NOTES:

(a) Tabular values for this figure are provided in Table UCS-66.

(b) See UCS-66(a).

(c) For bolting and nuts, the following impact test exemption temperatures shall apply:

Bolting

Spec. No.	Grade	Diameter, in. (mm)	Impact Test Exemption Temperature, °F (°C)
SA-193	B5	Up to 4 (100), incl.	−20 (−30)
SA-193	B7	Up to 2½ in. (64), incl.	−55 (−48)
SA-193	...	Over 2½ (64) to 7 (175), incl.	−40 (−40)
SA-193	B7M	Up to 2½ (64), incl.	−55 (−48)

--`,,,``,,,```,,,,,`,``,`,`,,`,,`,,```-`-`,,`,,`,`,,`---
Provided by IHS under license with ASME
No reproduction or networking permitted without license from IHS
Licensee=Chevron Phillips Chemical Co LP/5956674001
Not for Resale, 11/09/2014 20:41:36 MST

Figure UCS-66M
Impact Test Exemption Curves (Cont'd)

GENERAL NOTES (CONT'D):

Table continued

Bolting

Spec. No.	Grade	Diameter, in. (mm)	Impact Test Exemption Temperature, °F (°C)
SA-193	B16	Up to 7 (175), incl.	−20 (−30)
SA-307	B	All	−20 (−30)
SA-320	L7, L7A, L7M	Up to 2½ (64), incl.	See General Note (c) of Figure UG-84.1
SA-320	L43	Up to 1 (25), incl.	See General Note (c) of Figure UG-84.1
SA-325	1	½ (13) to 1½ (38)	−20 (−30)
SA-354	BC	Up to 4 (100), incl.	0 (−18)
SA-354	BD	Up to 4 (100), incl.	+20 (−7)
SA-437	B4B, B4C	All diameters	See General Note (c) of Figure UG-84.1
SA-449	...	Up to 3 (75), incl.	−20 (−30)
SA-540	B21 Cl. All	All	Impact test required
SA-540	B22 Cl. 3	Up to 4 (100), incl.	Impact test required
SA-540	B23 Cl. 1, 2	All	Impact test required
SA-540	B23 Cl. 3, 4	Up to 6 (150), incl.	See General Note (c) of Figure UG-84.1
SA-540	B23 Cl. 3, 4	Over 6 (150) to 9½ (240), incl.	Impact test required
SA-540	B23 Cl. 5	Up to 8 (200), incl.	See General Note (c) of Figure UG-84.1
SA-540	B23 Cl. 5	Over 8 (200) to 9½ (240), incl.	Impact test required
SA-540	B24 Cl. 1	Up to 6 (150), incl.	See General Note (c) of Figure UG-84.1
SA-540	B24 Cl. 1	Over 6 (150) to 8 (200), incl.	Impact test required
SA-540	B24 Cl. 2	Up to 7 (175), incl.	See General Note (c) of Figure UG-84.1
SA-540	B24 Cl. 2	Over 7 (175) to 9½ (240), incl.	Impact test required
SA-540	B24 Cl. 3, 4	Up to 8 (200), incl.	See General Note (c) of Figure UG-84.1
SA-540	B24 Cl. 3, 4	Over 8 (200) to 9½ (240), incl.	Impact test required
SA-540	B24 Cl. 5	Up to 9½ (240), incl.	See General Note (c) of Figure UG-84.1
SA-540	B24V Cl. 3	All	See General Note (c) of Figure UG-84.1

Nuts

Spec. No.	Grade	Impact Test Exemption Temperature, °F (°C)
SA-194	2, 2H, 2HM, 3, 4, 7, 7M, and 16	−55 (−48)
SA-540	B21/B22/B23/B24/B24V	−55 (−48)

(d) When no class or grade is shown, all classes or grades are included.

(e) The following shall apply to all material assignment notes:

(1) Cooling rates faster than those obtained by cooling in air, followed by tempering, as permitted by the material specification, are considered to be equivalent to normalizing or normalizing and tempering heat treatments.

(2) Fine grain practice is defined as the procedure necessary to obtain a fine austenitic grain size as described in SA-20.

(3) Normalized rolling condition is not considered as being equivalent to normalizing.

(f) Castings not listed in Notes (1) and (2) below shall be impact tested.

NOTES:

(1) Curve A applies to:

(a) all carbon and all low alloy steel plates, structural shapes, and bars not listed in Curves B, C, and D below;

(b) SA-216 Grades WCB and WCC if normalized and tempered or water-quenched and tempered; SA-217 Grade WC6 if normalized and tempered or water-quenched and tempered.

(2) Curve B applies to:

(a) see below:

SA-216 Grade WCA if normalized and tempered or water-quenched and tempered
SA-216 Grades WCB and WCC for thicknesses not exceeding 2 in. (50 mm) , if produced to fine grain practice and water-quenched and tempered
SA-217 Grade WC9 if normalized and tempered
SA-285 Grades A and B
SA-414 Grade A
SA-515 Grade 60
SA-516 Grades 65 and 70 if not normalized
SA-612 if not normalized
SA-662 Grade B if not normalized

Provided by IHS under license with ASME
No reproduction or networking permitted without license from IHS
Licensee=Chevron Phillips Chemical Co LP/5956674001
Not for Resale, 11/09/2014 20:41:36 MST

Figure UCS-66M
Impact Test Exemption Curves (Cont'd)

NOTES (CONT'D):

SA/EN 10028-2 Grades P235GH, P265GH, P295GH, and P355GH as rolled
SA/AS 1548 Grades PT430NR and PT460NR

(b) except for cast steels, all materials of Curve A if produced to fine grain practice and normalized which are not listed in Curves C and D below;

(c) all pipe, fittings, forgings and tubing not listed for Curves C and D below;

(d) parts permitted under UG-11 shall be included in Curve B even when fabricated from plate that otherwise would be assigned to a different curve.

(3) Curve C applies to:

(a) see below:

SA-182 Grades F21 and F22 if normalized and tempered
SA-302 Grades C and D
SA-336 F21 and F22 if normalized and tempered, or liquid quenched and tempered
SA-387 Grades 21 and 22 if normalized and tempered, or liquid quenched and tempered
SA-516 Grades 55 and 60 if not normalized
SA-533 Grades B, C, and E
SA-662 Grade A;

(b) all materials listed in 2(a) and 2(c) for Curve B if produced to fine grain practice and normalized, normalized and tempered, or liquid quenched and tempered as permitted in the material specification, and not listed for Curve D below.

(4) Curve D applies to:

SA-203
SA-508 Grade 1
SA-516 if normalized or quenched and tempered
SA-524 Classes 1 and 2
SA-537 Classes 1, 2, and 3
SA-612 if normalized
SA-662 if normalized
SA-738 Grade A
SA-738 Grade A with Cb and V deliberately added in accordance with the provisions of the material specification, not colder than −20°F (−29°C)
SA-738 Grade B not colder than −20°F (−29°C)
SA/AS 1548 Grades PT430N and PT460N
SA/EN 10028-2 Grades P235GH, P265GH, P295GH, and P355GH if normalized
SA/EN 10028-3 Grade P275NH

maximum allowable pressure (MAP) of the component at the MDMT. If the resulting temperature is colder than the required MDMT, impact testing of the material is not required, provided the MDMT is not colder than −55°F (−48°C).

(-c) In lieu of using (-b) above, the MDMT determined in (a) or (c) may be reduced for a flange attached by welding, by the same reduction as determined in (-a) above for the neck or shell which the flange is attached.

NOTE: The bolt-up condition need not be considered when determining the temperature reduction for flanges.

(2) For minimum design metal temperatures colder than −55°F (−48°C), impact testing is required for all materials, except as allowed in (3) below and in UCS-68(c).

(3) When the minimum design metal temperature is colder than −55°F (−48°C) and no colder than −155°F (−105°C), and the coincident ratio defined in Figure UCS-66.1 is less than or equal to 0.35, impact testing is not required.

(c) No impact testing is required for the following flanges when used at minimum design metal temperatures no colder than −20°F (−29°C):

(1) ASME B16.5 flanges of ferritic steel;

(2) ASME B16.47 flanges of ferritic steel;

(3) split loose flanges of SA-216 GR WCB when the outside diameter and bolting dimensions are either ASME B16.5 Class 150 or Class 300, and the flange thicknesses are not greater than that of either ASME B16.5 Class 150 or Class 300, respectively.

(4) Carbon and Low Alloy Steel Long Weld Neck Flanges. Long weld neck flanges are defined as forged nozzles that meet the dimensional requirements of a flanged fitting given in ASME B16.5 but having a straight hub/neck. The neck inside diameter shall not be less than the nominal size of the flange and the outside diameter of the neck and any nozzle reinforcement shall not exceed the diameter of the hub as specified in ASME B16.5.

(d) No impact testing is required for UCS materials 0.10 in. (2.5 mm) in thickness and thinner, but such exempted UCS materials shall not be used at design metal

Provided by IHS under license with ASME
No reproduction or networking permitted without license from IHS
Licensee=Chevron Phillips Chemical Co LP/5956674001
Not for Resale, 11/09/2014 20:41:36 MST

Table UCS-66
Tabular Values for Figure UCS-66 and Figure UCS-66M

Customary Units					SI Units				
Thick-ness, in.	Curve A, °F	Curve B, °F	Curve C, °F	Curve D, °F	Thick-ness, mm	Curve A, °C	Curve B, °C	Curve C, °C	Curve D, °C
0.25	18	−20	−55	−55	6.4	−8	−29	−48	−48
0.3125	18	−20	−55	−55	7.9	−8	−29	−48	−48
0.375	18	−20	−55	−55	9.5	−8	−29	−48	−48
0.4375	25	−13	−40	−55	11.1	−4	−25	−40	−48
0.5	32	−7	−34	−55	12.7	0	−22	−37	−48
0.5625	37	−1	−26	−51	14.3	3	−18	−32	−46
0.625	43	5	−22	−48	15.9	6	−15	−30	−44
0.6875	48	10	−18	−45	17.5	9	−12	−28	−43
0.75	53	15	−15	−42	19.1	12	−9	−26	−41
0.8125	57	19	−12	−38	20.6	14	−7	−24	−39
0.875	61	23	−9	−36	22.2	16	−5	−23	−38
0.9375	65	27	−6	−33	23.8	18	−3	−21	−36
1.0	68	31	−3	−30	25.4	20	−1	−19	−35
1.0625	72	34	−1	−28	27.0	22	1	−18	−33
1.125	75	37	2	−26	28.6	24	3	−17	−32
1.1875	77	40	2	−23	30.2	25	4	−17	−31
1.25	80	43	6	−21	31.8	27	6	−14	−30
1.3125	82	45	8	−19	33.3	28	7	−13	−28
1.375	84	47	10	−18	34.9	29	8	−12	−28
1.4375	86	49	12	−16	36.5	30	9	−11	−27
1.5	88	51	14	−14	38.1	31	11	−10	−26
1.5625	90	53	16	−13	39.7	32	12	−9	−25
1.625	92	55	17	−11	41.3	33	13	−8	−24
1.6875	93	57	19	−10	42.9	34	14	−7	−23
1.75	94	58	20	−8	44.5	34	14	−7	−22
1.8125	96	59	22	−7	46.0	36	15	−6	−22
1.875	97	61	23	−6	47.6	36	16	−5	−21
1.9375	98	62	24	−5	49.2	37	17	−4	−21
2.0	99	63	26	−4	50.8	37	17	−3	−20
2.0625	100	64	27	−3	52.4	38	18	−3	−19
2.125	101	65	28	−2	54.0	38	18	−2	−19
2.1875	102	66	29	−1	55.6	39	19	−2	−18
2.25	102	67	30	0	57.2	39	19	−1	−18
2.3125	103	68	31	1	58.7	39	20	−1	−17
2.375	104	69	32	2	60.3	40	21	0	−17
2.4375	105	70	33	3	61.9	41	21	1	−16
2.5	105	71	34	4	63.5	41	22	1	−16
2.5625	106	71	35	5	65.1	41	22	2	−15
2.625	107	73	36	6	66.7	42	23	2	−14
2.6875	107	73	37	7	68.3	42	23	3	−14
2.75	108	74	38	8	69.9	42	23	3	−13
2.8125	108	75	39	8	71.4	42	24	4	−13
2.875	109	76	40	9	73.0	43	24	4	−13
2.9375	109	77	40	10	74.6	43	25	5	−12
3.0	110	77	41	11	76.2	43	26	5	−12
3.0625	111	78	42	12	77.8	44	26	6	−11
3.125	111	79	43	12	79.4	44	26	6	−11
3.1875	112	80	44	13	81.0	44	27	7	−11
3.25	112	80	44	14	82.6	44	27	7	−10
3.3125	113	81	45	15	84.1	45	27	7	−9
3.375	113	82	46	15	85.7	45	28	8	−9
3.4375	114	83	46	16	87.3	46	28	8	−9
3.5	114	83	47	17	88.9	46	28	8	−8
3.5625	114	84	48	17	90.5	46	29	9	−8
3.625	115	85	49	18	92.1	46	29	9	−7
3.6875	115	85	49	19	93.7	46	29	9	−7
3.75	116	86	50	20	95.3	47	30	10	−7
3.8125	116	87	51	21	96.8	47	31	11	−6

Provided by IHS under license with ASME
No reproduction or networking permitted without license from IHS
Licensee=Chevron Phillips Chemical Co LP/5956674001
Not for Resale, 11/09/2014 20:41:36 MST

Table UCS-66
Tabular Values for Figure UCS-66 and Figure UCS-66M (Cont'd)

Customary Units					SI Units				
Thickness, in.	Curve A, °F	Curve B, °F	Curve C, °F	Curve D, °F	Thickness, mm	Curve A, °C	Curve B, °C	Curve C, °C	Curve D, °C
3.875	116	88	51	21	98.4	47	31	11	−6
3.9375	117	88	52	22	100.0	47	32	11	−6
4.0	117	89	52	23	101.6	47	32	11	−5
4.0625	117	90	53	23	103.0	47	32	12	−5
4.125	118	90	54	24	105.0	48	32	12	−4
4.1875	118	91	54	25	106.0	48	33	12	−4
4.25	118	91	55	25	108.0	48	33	12	−4
4.3125	118	92	55	26	110.0	48	33	12	−3
4.375	119	93	56	27	111.0	49	34	13	−3
4.4375	119	93	56	27	113.0	49	34	13	−3
4.5	119	94	57	28	114.0	49	34	13	−2
4.5625	119	94	57	29	115.0	49	34	13	−2
4.625	119	95	58	29	117.0	49	35	14	−2
4.6875	119	95	58	30	118.0	49	35	14	−1
4.75	119	96	59	30	119.0	49	35	14	−1
4.8125	119	96	59	31	120.0	49	35	14	−1
4.875	119	97	60	31	121.0	49	36	15	−1
4.9375	119	97	60	32	122.0	49	36	15	0
5	119	97	60	32	123.0	49	36	15	0
5.0625	119	98	61	33	124.0	49	36	15	0
5.125	119	98	61	33	125.0	49	36	15	0
5.1875	119	98	62	34	126.0	49	36	16	1
5.25	119	99	62	34	127.0	49	37	16	1
5.3125	119	99	62	35	128.0	49	37	16	1
5.375	119	100	63	35	129.0	49	37	16	1
5.4375	119	100	63	36	130.0	49	37	16	2
5.5	119	100	63	36	131.0	49	37	16	2
5.5625	119	101	64	36	132.0	49	38	17	2
5.625	119	101	64	37	133.0	49	38	17	2
5.6875	119	102	64	37	134.0	49	38	17	2
5.75	120	102	65	38	135.0	50	38	17	3
5.8125	120	103	65	38	136.0	50	39	17	3
5.875	120	103	66	38	137.0	50	39	18	3
5.9375	120	104	66	39	138.0	50	39	18	3
6.0	120	104	66	39	139.0	50	39	18	3

temperatures colder than −55°F (−48°C). For vessels or components made from NPS 4 (DN 100) or smaller tubes or pipe of P-No. 1 materials, the following exemptions from impact testing are also permitted as a function of the material specified minimum yield strength (SMYS) for metal temperatures of −155°F (−105°C) and warmer:

SMYS, ksi (MPa)	Thickness, in. (mm)
20 to 35 (140 to 240)	0.237 (6.0)
36 to 45 (250 to 310)	0.125 (3.2)
46 (320) and higher	0.10 (2.5)

(e) The material manufacturer's identification marking required by the material specification shall not be stamped on plate material less than $^1/_4$ in. (6 mm) in thickness unless the following requirements are met.

(1) The materials shall be limited to P-No. 1 Gr. Nos. 1 and 2.

(2) The minimum nominal plate thickness shall be $^3/_{16}$ in. (5 mm), or the minimum nominal pipe wall thickness shall be 0.154 in. (3.91 mm).

(3) The minimum design metal temperature shall be no colder than −20°F (−29°C).

(f) Unless specifically exempted in Figure UCS-66, materials having a specified minimum yield strength greater than 65 ksi (450 MPa) must be impact tested.

(g) Materials produced and impact tested in accordance with the requirements of the specifications listed in Figure UG-84.1, General Note (c), are exempt from impact testing by the rules of this Division at minimum design metal temperatures not more than 5°F (3°C) colder than the test temperature required by the specification.

Provided by IHS under license with ASME
No reproduction or networking permitted without license from IHS
Licensee=Chevron Phillips Chemical Co LP/5956674001
Not for Resale, 11/09/2014 20:41:36 MST

Figure UCS-66.1
Reduction in Minimum Design Metal Temperature Without Impact Testing (13)

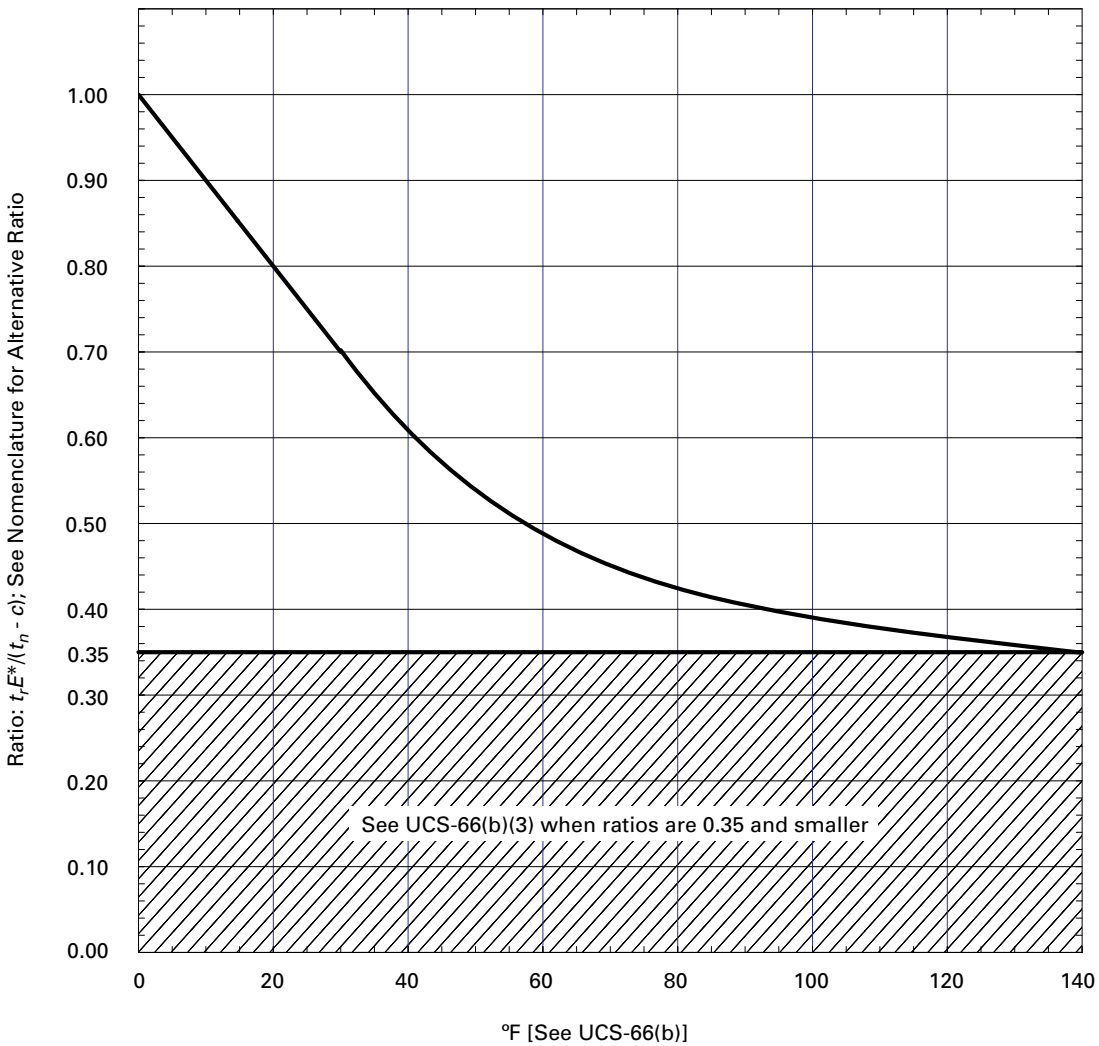

c = corrosion allowance, in.

E^* = as defined in Note (3) of Figure UCS-66.2

t_n = nominal thickness of the component under consideration before corrosion allowance is deducted, in.

t_r = required thickness of the component under consideration in the corroded condition for all applicable loadings [Note (2) of Figure UCS-66.2], based on the applicable joint efficiency E [Note (3) of Figure UCS-66.2], in.

Alternative Ratio = S^*E^* divided by the product of the maximum allowable stress value from Table UCS-23 times E, where S^* is the applied general primary membrane tensile stress and E and E^* are as defined in Note (3) of Figure UCS-66.2

Provided by IHS under license with ASME
No reproduction or networking permitted without license from IHS
Licensee=Chevron Phillips Chemical Co LP/5956674001
Not for Resale, 11/09/2014 20:41:36 MST

(13)

Figure UCS-66.1M
Reduction in Minimum Design Metal Temperature Without Impact Testing

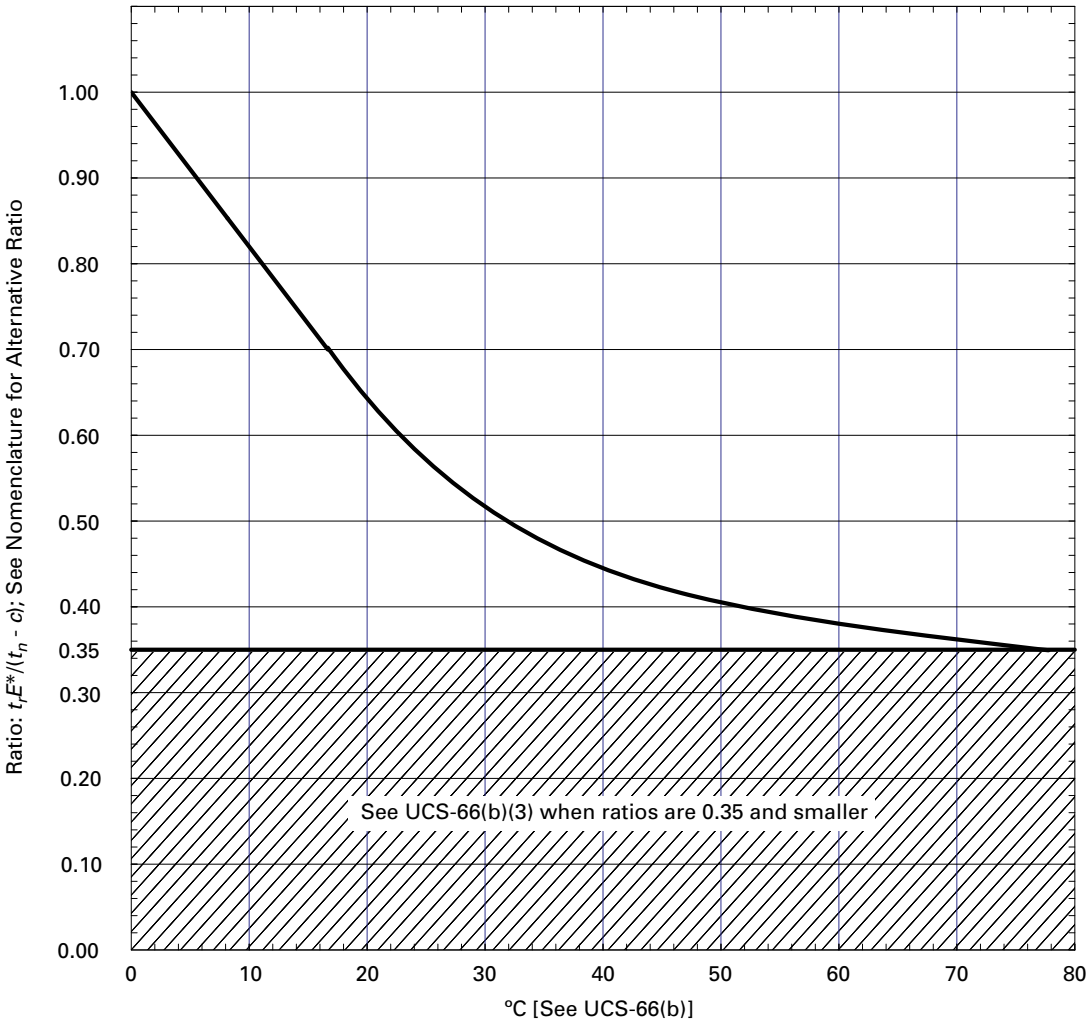

c = corrosion allowance, mm

E^* = as defined in Note (3) of Figure UCS-66.2

t_n = nominal thickness of the component under consideration before corrosion allowance is deducted, mm

t_r = required thickness of the component under consideration in the corroded condition for all applicable loadings [Note (2) of Figure UCS-66.2], based on the applicable joint efficiency E [Note (3) of Figure UCS-66.2], mm

Alternative Ratio = S^*E^* divided by the product of the maximum allowable stress value from Table UCS-23 times E, where S^* is the applied general primary membrane tensile stress and E and E^* are as defined in Note (3) of Figure UCS-66.2

Provided by IHS under license with ASME
No reproduction or networking permitted without license from IHS
Licensee=Chevron Phillips Chemical Co LP/5956674001
Not for Resale, 11/09/2014 20:41:36 MST

Figure UCS-66.2
Diagram of UCS-66 Rules for Determining Lowest Minimum Design Metal Temperature (MDMT) Without Impact Testing

Step 1

Establish nominal thickness [Note (1)] of welded parts, nonwelded parts, and attachments under consideration both before and after corrosion allowance is deducted (t_n and $t_n - c$, respectively), and other pertinent data applicable to the nominal thickness such as:

All applicable loadings [Note (2)] and coincident minimum design metal temperature (MDMT)
Materials of construction
E = joint efficiency [Note (3)]
t_n = nominal noncorroded thickness [Note (1)], in. (mm)
t_r = required thickness in corroded condition for all applicable loadings [Note (2)], based on the applicable joint efficiency [Note (3)], in. (mm)
Applicable curve(s) of Fig. UCS-66
c = corrosion allowance, in. (mm)

↓

Step 2

Select MDMT from Fig. UCS-66 [Note (4)] for each nominal noncorroded governing thickness [Note (5)].

↓

Step 3

Determine Ratio: $\frac{t_r E^*}{t_n - c}$

[Notes (3), (6), (7), and (8)]

↓

Step 4

Using Ratio from Step 3 to enter ordinate of Fig. UCS-66.1, determine reduction in Step 2 MDMT [Note (9)].

↓

Step 5

Determine adjusted MDMT for governing thickness under consideration.

↓

Step 6

Repeat for all governing thicknesses [Note (5)] and take *warmest* value as the lowest allowable MDMT to be marked on nameplate for the zone under consideration [Note (10)]. See UG-116.
See UG-99(h) for coldest recommended metal temperature during hydrostatic test [Note (6)].
See UG-100(c) for coldest metal temperature permitted during pneumatic test [Note (6)].

Legend

Requirement Optional

NOTES:
(1) For pipe where a mill undertolerance is allowed by the material specification, the thickness after mill undertolerance has been deducted shall be taken as the noncorroded nominal thickness t_n for determination of the MDMT to be stamped on the nameplate. Likewise, for formed heads, the minimum specified thickness after forming shall be used as t_n.
(2) Loadings, including those listed in UG-22, which result in general primary membrane tensile stress at the coincident MDMT.

Provided by IHS under license with ASME
No reproduction or networking permitted without license from IHS
Licensee=Chevron Phillips Chemical Co LP/5956674001
Not for Resale, 11/09/2014 20:41:36 MST

Figure UCS-66.2
Diagram of UCS-66 Rules for Determining Lowest Minimum Design Metal Temperature (MDMT) Without Impact Testing (Cont'd)

NOTES (CONT'D):

(3) E is the joint efficiency (Table UW-12) used in the calculation of t_r; E^* has a value equal to E except that E^* shall not be less than 0.80. For castings, use quality factor or joint efficiency E whichever governs design.

(4) The construction of Figure UCS-66 is such that the MDMT so selected is considered to occur coincidentally with an applied general primary membrane tensile stress at the maximum allowable stress value in tension from Table 1A of Section II Part D, Tabular values for Figure UCS-66 are shown in Table UCS-66.

(5) See UCS-66(a)(1), (a)(2), and (a)(3) for definitions of governing thickness.

(6) If the basis for calculated test pressure is greater than the design pressure [UG-99(c) test], a Ratio based on the t_r determined from the basis for calculated test pressure and associated appropriate value of $t_n - c$ shall be used to determine the recommended coldest metal temperature during hydrostatic test and the coldest metal temperature permitted during the pneumatic test. See UG-99(h) and UG-100(c).

(7) Alternatively, a Ratio of S^* E^* divided by the product of the maximum allowable stress value in tension from Table 1A of Section II Part D times E may be used, where S^* is the applied general primary membrane tensile stress and E and E^* are as defined in Note (3).

(8) For UCS-66(b)(1)(-b) and UCS-66(i)(2), a ratio of the maximum design pressure at the MDMT to the maximum allowable pressure (MAP) at the MDMT shall be used. The MAP is defined as the highest permissible pressure as determined by the design equations for a component using the nominal thickness less corrosion allowance and the maximum allowable stress value from the Table 1A of Section II, Part D at the MDMT. For ferritic steel flanges defined in UCS-66(c), the flange rating at the warmer of the MDMT or 100°F (38°C) may be used as the MAP.

(9) For reductions in MDMT up to and including 40°F (22°C), the reduction can be determined by: reduction in MDMT = (1 − Ratio) 100°F (56°C).

(10) A colder MDMT may be obtained by selective use of impact tested materials as appropriate to the need (see UG-84). See also UCS-68(c).

(h) No impact testing is required for metal backing strips which remain in place made of materials assigned to Curve A of Figure UCS-66 in thicknesses not exceeding $^1/_4$ in. (6 mm) when the minimum design metal temperature is −20°F (−29°C) or warmer.

(i) For components made of Part UCS materials that are impact tested, Figure UCS-66.1 provides a basis for the use of these components at an MDMT colder than the impact test temperature.

(1) For such components, the MDMT shall not be colder than the impact test temperature less the allowable temperature reduction as determined from Figure UCS-66.2.

(2) Figure UCS-66.1 may also be used for components not stressed in general primary membrane tensile stress, such as flat heads, covers, tubesheets, and flanges (including bolts and nuts). The MDMT shall not be colder than the impact test temperature less the allowable temperature reduction as determined from Figure UCS-66.2. The ratio used in Step 3 of Figure UCS-66.2 shall be the ratio of maximum design pressure at the MDMT to the maximum allowable pressure (MAP) of the component at the MDMT.

(3) In lieu of using (2) above, the MDMT for a flange attached by welding shall not be colder than the impact test temperature less the allowable temperature reduction as determined in (1) above for the neck or shell to which the flange is attached.

(4) The MDMT adjustment as determined in (1) above may be used for impact tested welding procedures or production welds.

(5) The MDMT for the component shall not be colder than −155°F (−105°C).

(j) When the base metal is exempt from impact testing by (g) above or by Figure UCS-66 Curves C or D, −20°F (−29°C) is the coldest MDMT to be assigned for welded components that do not meet the requirements of UCS-67(a)(3).

UCS-67 IMPACT TESTS OF WELDING PROCEDURES

Except as exempted in UG-20(f), UCS-66, and UCS-68, the welding procedure qualification shall include impact tests of the weld metal and heat affected zones (HAZ) in accordance with UG-84 when required by the following provisions. The minimum design metal temperature (MDMT) used below shall be either the MDMT stamped on the nameplate or the exemption temperature of the welded component before applying the temperature reduction permitted by UCS-66(b) or UCS-68(c).

(a) Welds made with filler metal shall be deposited using welding procedures qualified with impact testing in accordance with UG-84 when any of the following apply:

(1) when either base metal is required to be impact tested by the rules of this Division; or

(2) when the thickness of any individual weld pass exceeds $^1/_2$ in. (13 mm) and the MDMT is colder than 70°F (21°C); or

(3) when joining base metals exempt from impact testing by UCS-66(g) or Figure UCS-66, Curve C or D and the MDMT is colder than −20°F (−29°C) but not colder than −55°F (−48°C). Qualification of the welding procedure with impact testing is not required when no individual weld pass in the production weld exceeds $^1/_4$ in. (6 mm) in thickness; and each heat and/or lot of filler

--`,,,``,,``,,,,,`,``,``,,`,,`,``-`-`,,`,,`,`,,`---
Provided by IHS under license with ASME
No reproduction or networking permitted without license from IHS
Licensee=Chevron Phillips Chemical Co LP/5956674001
Not for Resale, 11/09/2014 20:41:36 MST

Figure UCS-66.3
Some Typical Vessel Details Showing the Governing Thicknesses as Defined in UCS-66

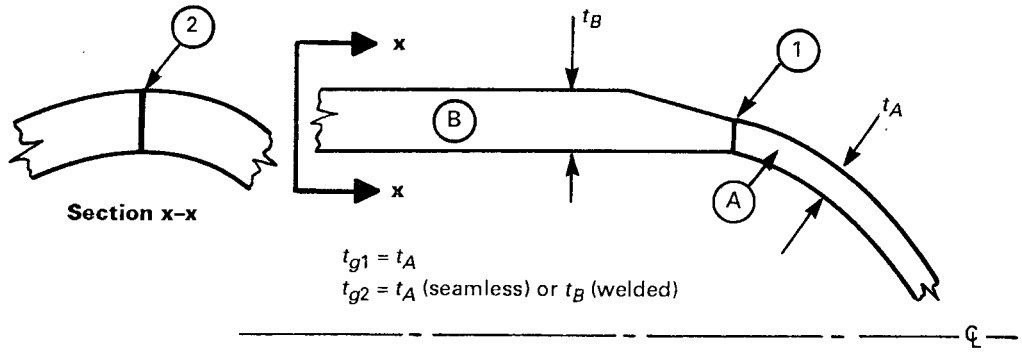

(a) Butt Welded Components

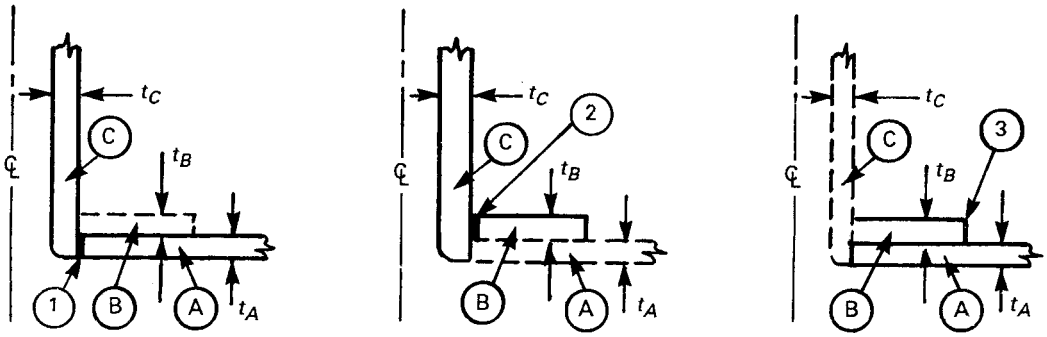

t_{g1} = the thinner of t_A or t_C

t_{g2} = the thinner of t_B or t_C

t_{g3} = the thinner of t_A or t_B

(b) Welded Connection with Reinforcement Plate Added

Provided by IHS under license with ASME
No reproduction or networking permitted without license from IHS
Licensee=Chevron Phillips Chemical Co LP/5956674001
Not for Resale, 11/09/2014 20:41:36 MST

Figure UCS-66.3
Some Typical Vessel Details Showing the Governing Thicknesses as Defined in UCS-66 (Cont'd)

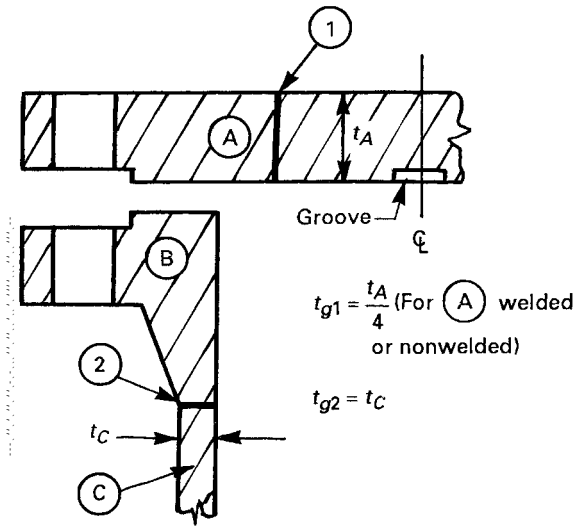

(c) Bolted Flat Head or Tubesheet and Flange

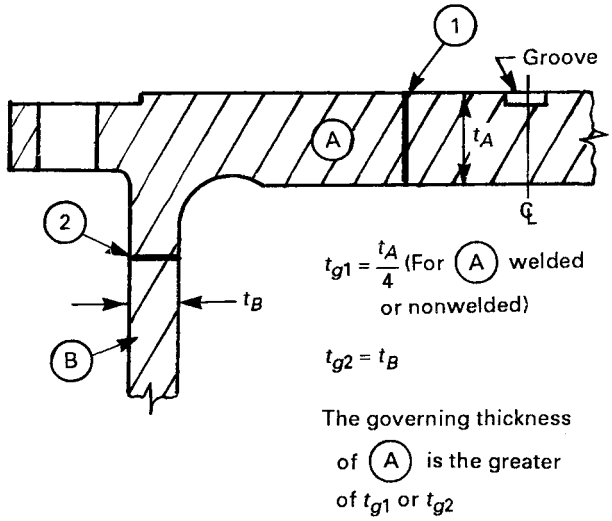

(d) Integral Flat Head or Tubesheet

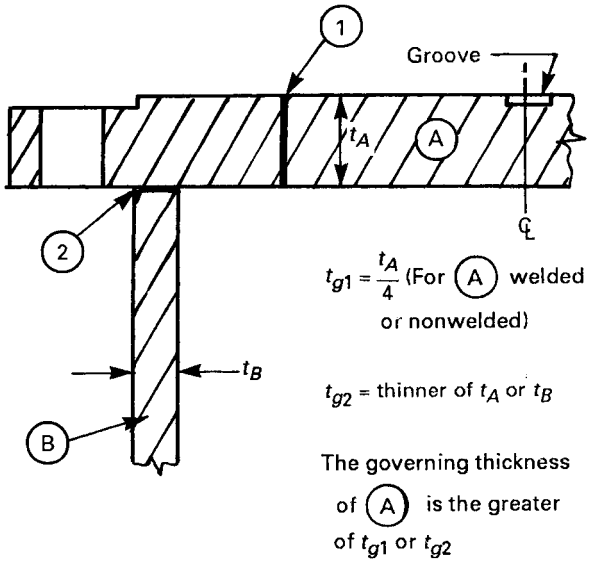

(e) Flat Head or Tubesheet With a Corner Joint

Provided by IHS under license with ASME
No reproduction or networking permitted without license from IHS
Licensee=Chevron Phillips Chemical Co LP/5956674001
Not for Resale, 11/09/2014 20:41:36 MST

Figure UCS-66.3
Some Typical Vessel Details Showing the Governing Thicknesses as Defined in UCS-66 (Cont'd)

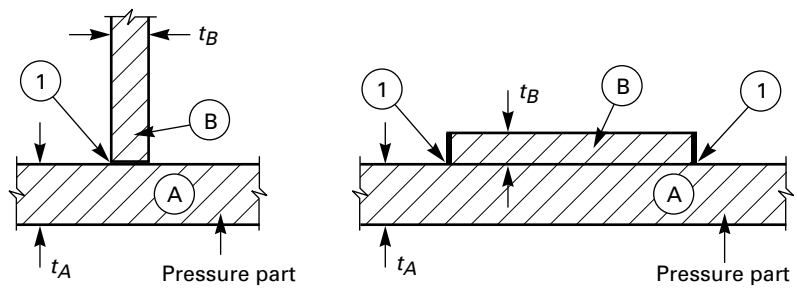

t_{g1} = thinner of t_A or t_B

(f) Welded Attachments as Defined in UCS-66(a)

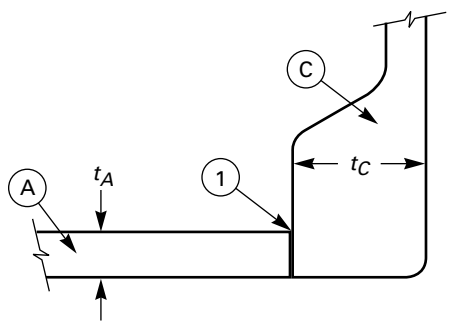

t_{g1} = thinner of t_A or t_C

(g) Integrally Reinforced Welded Connection

GENERAL NOTES:
(a) Using t_{g1}, t_{g2}, and t_{g3}, determine the warmest MDMT and use that as the permissible MDMT for the welded assembly.
(b) t_g = governing thickness of the welded joint as defined in UCS-66.

metal or combination of heat and/or lot of filler metal and batch of flux has been classified by their manufacturer through impact testing per the applicable SFA specification at a temperature not warmer than the MDMT. Additional testing beyond the scope of the SFA specification may be performed by the filler metal and/or flux manufacturer to expand their classification for a broader range of temperatures; or

(4) when joining base metals exempt from impact testing by UCS-66(g) and the MDMT is colder than −55°F (−48°C).

(b) Except for welds made as part of the material specification, welds in UCS materials made without filler metal shall be completed using welding procedures qualified with impact testing any of the following conditions apply:

(1) when either base metal is required to be impact tested by the rules of this Division; or

(2) the thickness at the weld exceeds $^1/_2$ in. (13 mm) regardless of the MDMT; or

(3) when the thickness at the weld exceeds $^5/_{16}$ in. (8 mm) and the MDMT is colder than 50°F (10°C); or

(4) when joining base metals exempt from impact testing by UCS-66(g) and the MDMT is colder than −55°F (−48°C).

UCS-68 DESIGN[80] (13)

(a) Welded joints shall comply with UW-2(b) when the minimum design metal temperature is colder than −55°F (−48°C), unless the coincident ratio defined in Figure UCS-66.1 is less than 0.35.

(b) Welded joints shall be postweld heat treated in accordance with the requirements of UW-40 when required by other rules of this Division. When the minimum design metal temperature is colder than −55°F (−48°C), and the

Provided by IHS under license with ASME
No reproduction or networking permitted without license from IHS
Licensee=Chevron Phillips Chemical Co LP/5956674001
Not for Resale, 11/09/2014 20:41:36 MST

coincident ratio defined in Figure UCS-66.1 is 0.35 or greater, postweld heat treatment is required, except that this requirement does not apply to the following welded joints, in vessels or vessel parts fabricated of P-No. 1 materials that are impact tested at the MDMT or colder in accordance with UG-84. The minimum average energy requirement for base metals and weldments shall be 25 ft-lb (34 J) instead of the values shown in Figure UG-84.1:

(1) Type 1 Category A and B joints, not including cone-to-cylinder junctions, which have been 100% radiographed. Category A and B joints attaching sections of unequal thickness shall have a transition with a slope not exceeding 3:1;

(2) fillet welds having leg dimensions not exceeding $^{3}/_{8}$ in. (10 mm) attaching lightly loaded attachments, provided the attachment material and the attachment weld meet requirements of UCS-66 and UCS-67. "Lightly loaded attachment," for this application, is defined as an attachment for which the stress in the attachment weld does not exceed 25% of the allowable stress. All such welds shall be examined by magnetic particle or liquid penetrant examination in accordance with Mandatory Appendix 6 or Mandatory Appendix 8.

(c) If postweld heat treating of a pressure-retaining weld is performed when it is not otherwise a requirement of this Division, a 30°F (17°C) reduction in impact testing exemption temperature may be given to the minimum permissible temperature from Figure UCS-66 for P-No. 1 materials. The resulting exemption temperature may be colder than −55°F (−48°C) when the PWHT exemption in (b) is applicable.

(d) The allowable stress values to be used in design at the minimum design metal temperature shall not exceed those given in Section II, Part D, Tables 3 for bolting and 1A for other materials for temperatures of 100°F (38°C).

FABRICATION

UCS-75 GENERAL

The rules in the following paragraphs apply specifically to the fabrication of pressure vessels and vessel parts that are constructed of carbon and low alloy steel and shall be used in conjunction with the general requirements for in Subsection A, and with the specific requirements for in Subsection B that pertain to the method of fabrication used.

(13) UCS-79 FORMING PRESSURE PARTS

(a) The following provisions shall apply in addition to the general rules for forming given in UG-79.

(b) Carbon and low alloy steel plates shall not be formed cold by blows.

(c) Carbon and low alloy steel plates may be formed by blows at a forging temperature provided the blows do not objectionably deform the plate and it is subsequently postweld heat treated.

(d) Except when made of P-No. 1, Group Nos. 1 and 2; and P-No. 15E materials, all vessel shell sections, heads, and other pressure parts fabricated by cold forming shall be heat treated subsequently (see UCS-56) when the resulting extreme fiber elongation exceeds 5% from the supplied condition. For P-No. 1, Group Nos. 1 and 2, this subsequent heat treatment is required when the extreme fiber elongation exceeds 40%, or if the extreme fiber elongation exceeds 5% and any of the following conditions exist:

(1) The vessel will contain lethal substances either liquid or gaseous (see UW-2).

(2) The material is not exempt from impact testing by the rules of this Division or impact testing is required by the material specification.

(3) The thickness of the part before cold forming exceeds $^{5}/_{8}$ in. (16 mm).

(4) The reduction by cold forming from the as-rolled thickness is more than 10% at any location where the extreme fiber elongation exceeds 5%.

(5) The temperature of the material during forming is in the range of 250°F to 900°F (120°C to 480°C).

The extreme fiber elongation shall be determined by the equations in Table UG-79-1.

(e) Forming of Creep-Strength-Enhanced Ferritic Steels (P-No. 15E Materials). The cold-formed areas of vessel shell sections, heads, and other pressure boundary parts of the creep-strength-enhanced ferritic steels shall be heat treated as listed in Table UCS-79-1. Cold forming is defined as any forming that is performed at a temperature below 1,300°F (705°C) and produces permanent strain in the material. Hot forming is defined as any forming that is performed at or above a temperature of 1,300°F (705°C) and produces permanent strain in the material. Forming strains (extreme fiber elongations) shall be calculated using the equations of Table UG-79-1.

(1) When the forming strains cannot be calculated as shown in Table UG-79-1, the Manufacturer shall have the responsibility to determine the maximum forming strain.

(2) For cold-formed flares, swages, or upsets in tubing and pipe, normalizing and tempering in accordance with Note (1) of Table UCS-79-1 shall apply, regardless of the amount of strain.

(3) For any hot-formed product form, normalizing and tempering in accordance with Note (1) of Table UCS-79-1 shall apply, regardless of the amount of strain.

(f) When vessel shell sections, heads, and other pressure boundary parts of carbon and low alloy steel are cold formed by other than the Manufacturer of the vessel, the required certification for the part shall indicate if the part has been heat treated per the requirements of UCS-79.

Provided by IHS under license with ASME
No reproduction or networking permitted without license from IHS
Licensee=Chevron Phillips Chemical Co LP/5956674001
Not for Resale, 11/09/2014 20:41:36 MST

(13)

Table UCS-79-1
Post-Cold-Forming Strain Limits and Heat Treatment Requirements for P-No. 15E Materials

Grade	UNS Number	Limitations in Lower Temperature Range: For Design Temperature Exceeding °F	°C	But Less Than or Equal to °F	°C	And Forming Strains	Limitations in Higher Temperature Range: For Design Temperature Exceeding °F	°C	And Forming Strains	Required Heat Treatment When Design Temperature and Forming Strain Limits Are Exceeded
91	K90901	1,000	540	1,115	600	> 25%	1,115	600	> 20%	Normalize and temper [Note (1)]
		1,000	540	1,115	600	> 5 to ≤ 25%	1,115	600	> 5 to ≤ 20%	Post-forming heat treatment [Note (2)], [Note (3)], and [Note (4)]

GENERAL NOTE: The limits shown are for cylinders formed from plates, spherical or dished heads formed from plate, and tube and pipe bends. The forming strain limits tabulated above shall be divided by 2 if the equation, from Table UG-79-1, for double-curvature products such as heads, is applied.

NOTES:
(1) Normalization and tempering shall be performed in accordance with the requirements of the base material specification and shall not be performed locally. Either the material shall be heat treated in its entirety, or the cold-strained area (including the transition to the unstrained portion) shall be cut away from the balance of the component and heat treated separately, or replaced.
(2) Post-forming heat treatments shall be performed at 1,350°F to 1,425°F (730°C to 775°C) for 1 hr/in. (1 h/25 mm) or 30 min, minimum. Alternatively, a normalization and temper in accordance with the requirements in the base metal specification may be performed.
(3) For materials with greater than 5% strain but less than or equal to 25% strain with design temperatures less than or equal to 1,115°F (600°C), if a portion of the component is heated above the heat treatment temperature allowed in [Note (2)], one of the following actions shall be performed:
(a) The component in its entirety shall be renormalized and tempered.
(b) The allowable stress shall be that for Grade 9 material (i.e., SA-213 T9, SA-335 P9, or equivalent product specification) at the design temperature, provided that portion of the component that was heated to a temperature exceeding the maximum holding temperature is subjected to a final heat treatment within the temperature range and for the time required in [Note (2)]. The use of this provision shall be noted on the Manufacturer's Data Report.
(4) If a longitudinal weld is made to a portion of the material that is cold strained, that portion shall be normalized and tempered, prior to or following welding. This normalizing and tempering shall not be performed locally.

UCS-85 HEAT TREATMENT OF TEST SPECIMENS

(a) The following provisions shall apply in addition to, or as exceptions to the general rules for heat treatment given in UG-85.

(b) Heat treatment as used in this section shall include all thermal treatments of the material during fabrication exceeding 900°F (480°C), except as exempted below.

(c) The material used in the vessel shall be represented by test specimens which have been subjected to the same heat treatments above the lower transformation temperature and postweld heat treatment except as provided in (e), (f), (g), (h), and (i) below. The kind and number of tests and test results shall be as required by the material specification. The vessel Manufacturer shall specify the temperature, time, and cooling rates to which the material will be subjected during fabrication, except as permitted in (h) below. Material from which the specimens are prepared shall be heated at the specified temperature within reasonable tolerances such as are normal in actual fabrication. The total time at temperature shall be at least 80% of the total time at temperature during actual heat treatment of the product and may be performed in a single cycle.

(d) Thermal treatment of material is not intended to include such local heating as thermal cutting, preheating, welding, or heating below the lower transformation temperature of tubing and pipe for bending or sizing.

(e) An exception to the requirements of (c) above and UG-85 shall apply to standard items such as described in UG-11(a). These may be subject to postweld heat treatment with the vessel or vessel part without the same treatment being required of the test specimens. This exception shall not apply to specially designed cast or wrought fittings.

(f) Materials conforming to one of the specifications listed in P-No. 1 Group Nos. 1 and 2 of QW-422 and all carbon and low alloy steels used in the annealed condition as permitted by the material specification are exempt from the requirements of (c) above when the heat treatment during fabrication is limited to postweld heat treatment at temperatures below the lower transformation temperature of the steel. This exemption does not apply to SA-841.

(g) Materials listed in QW-422 as P-No. 1 Group No. 3 and P-No. 3 Group Nos. 1 and 2 that are certified in accordance with (c) above from test specimens subjected to the PWHT requirements of Tables UCS-56-1 through UCS-56-11 need not be recertified if subjected to the alternate PWHT conditions permitted by Table UCS-56.1.

Provided by IHS under license with ASME
No reproduction or networking permitted without license from IHS
Licensee=Chevron Phillips Chemical Co LP/5956674001
Not for Resale, 11/09/2014 20:41:36 MST

(h) The simulation of cooling rates for test specimens from nonimpact tested materials 3 in. and under in thickness is not required for heat treatments below the lower transformation temperature.

(i) All thermal treatments which precede a thermal treatment that fully austenitizes the material need not be accounted for by the specimen heat treatments, provided the austenitizing temperature is at least as high as any of the preceding thermal treatments.

INSPECTION AND TESTS

UCS-90 GENERAL

The provisions for inspection and testing in Subsections A and B shall apply without supplement to vessels constructed of carbon and low alloy steels.

MARKING AND REPORTS

UCS-115 GENERAL

The provisions for marking and reports in UG-115 through UG-120 shall apply without supplement to pressure vessels constructed of carbon and low alloy steels.

PRESSURE RELIEF DEVICES

UCS-125 GENERAL

The provisions for pressure relief devices in UG-125 through UG-136 shall apply without supplement to pressure vessels constructed of carbon and low alloy steels.

NONMANDATORY APPENDIX CS

UCS-150 GENERAL

See Nonmandatory Appendix A, A-100, of Section II, Part D.

UCS-151 CREEP–RUPTURE PROPERTIES OF CARBON STEELS

See Nonmandatory Appendix A, A-200, of Section II, Part D.

UCS-160 VESSELS OPERATING AT TEMPERATURES COLDER THAN THE MDMT STAMPED ON THE NAMEPLATE (13)

(a) Vessels or components may be operated at temperatures colder than the MDMT stamped on the nameplate, provided the provisions of UCS-66, UCS-67 and UCS-68 are met when using the reduced (colder) operating temperature as the MDMT, but in no case shall the operating temperature be colder than −155°F (−105°C).

(b) As an alternative to (a) above, for vessels or components whose thicknesses are based on pressure loading only, the coincident operating temperature may be as cold as the MDMT stamped on the nameplate less the allowable temperature reduction as determined from Figure UCS-66.2. The ratio used in Step 3 of Figure UCS-66.2 shall be the ratio of maximum pressure at the coincident operating temperature to the MAWP of the vessel at the stamped MDMT, but in no case shall the operating temperature be colder than −155°F (−105°C).

NOTE: One common usage of the exemptions in (a) and (b) is for vessels in which the internal pressure is dependent on the vapor pressure of the contents (e.g., vessels in refrigeration or hydrocarbon processing plants with operating systems that do not permit immediate repressurization). For such services, the primary thickness calculations (shell and head) are normally made for the maximum design pressure coincident with the design temperature (MDMT). The ratio of required thickness to nominal thickness as defined in Figure UCS-66.2, Step 3, for the design condition is then calculated. Thickness calculations are also made for other expected pressures at coincident temperature, along with the ΔT difference from the MDMT at design pressure, and the thickness ratio defined in Step 3 of Figure UCS-66.2. The ratio/ΔT points are then plotted on Figure UCS-66.1. Ratio/ΔT points that are on or below the Figure UCS-66.1 curve are acceptable, but in no case may the operating temperature be colder than −155°F (−104°C). See also ASME PTB-4–2012, example 3.3. Comparison of pressure–temperature or stress–temperature coincident ratios may also be used as noted in Figure UCS-66.1.

Provided by IHS under license with ASME
No reproduction or networking permitted without license from IHS
Licensee=Chevron Phillips Chemical Co LP/5956674001
Not for Resale, 11/09/2014 20:41:36 MST

PART UNF
REQUIREMENTS FOR PRESSURE VESSELS CONSTRUCTED OF NONFERROUS MATERIALS

GENERAL

UNF-1 SCOPE

The rules in Part UNF are applicable to pressure vessels and vessel parts that are constructed of nonferrous materials and shall be used in conjunction with the general requirements in Subsection A, and with the specific requirements in Subsection B that pertain to the method of fabrication used.

UNF-3 USES

Some of the uses of nonferrous materials are to resist corrosion, to facilitate cleaning of vessels for processing foods, to provide strength or scaling-resistance at high temperatures, and to provide notch toughness at low temperatures.

UNF-4 CONDITIONS OF SERVICE

Specific chemical compositions, heat-treatment procedures, fabrication requirements, and supplementary tests may be required to assure that the vessel will be in its most favorable condition for the intended service. This is particularly true for vessels subject to severe corrosion. These rules do not indicate the selection of nonferrous material suitable for the intended service or the amount of the corrosion allowance to be provided. It is recommended that users assure themselves by appropriate tests, or otherwise, that the nonferrous material selected will be suitable for the intended service both with respect to corrosion and to retention of satisfactory mechanical properties during the desired service life, taking into account any heating or heat treatment that might be performed during fabrication. See also Nonmandatory Appendix A, A-400, of Section II, Part D.

MATERIALS

UNF-5 GENERAL

(a) All nonferrous materials subject to stress due to pressure shall conform to one of the specifications given in Section II and shall be limited to those listed in Tables UNF-23.1 through UNF-23.5 except as otherwise provided in UG-10 and UG-11.

(b) Nonmandatory Appendix NF of this Division of Section VIII and the paragraph entitled *Basis of Purchase* and the appendix of the applicable material specification contain information relative to the fabricating characteristics of the material. They are intended to help the manufacturer in ordering the correct material, and in fabricating it, and to help the producer to select the material best able to fulfill the requirements of the fabricating procedures to be used.

UNF-6 NONFERROUS PLATE

Approved specifications for nonferrous plates are given in Tables UNF-23.1 through UNF-23.5. A tabulation of allowable stress values at different temperatures is given in Table 1B of Section II, Part D (see UG-5).

UNF-7 FORGINGS

Approved specifications for nonferrous forgings are given in Tables UNF-23.1 through UNF-23.5. A tabulation of allowable stress values at different temperatures is given in Table 1B of Section II, Part D (see UG-6).

UNF-8 CASTINGS

Approved specifications for nonferrous castings are given in Tables UNF-23.1 through UNF-23.5. A tabulation of allowable stress values at different temperatures is given in Table 1B of Section II, Part D. These stress values are to be multiplied by the casting quality factors of UG-24. Castings that are to be welded shall be of a weldable grade.

UNF-12 BOLT MATERIALS

(a) Approved specifications for bolt materials are given in Tables UNF-23.1 through UNF-23.5. A tabulation of allowable stress values at different temperatures is given in Table 3 of Section II, Part D.

(b) When bolts are machined from heat treated, hot rolled, or cold worked material and are not subsequently hot worked or annealed, the allowable stress values in Table 3 to be used in design shall be based on the condition of the material selected.

(c) When bolts are fabricated by hot-heading, the allowable stress values for annealed material in Table 3 shall apply unless the manufacturer can furnish adequate control data to show that the tensile properties of hot rolled bars or hot finished forgings are being met, in which case the allowable stress values for the material in the hot finished condition may be used.

Provided by IHS under license with ASME
No reproduction or networking permitted without license from IHS
Licensee=Chevron Phillips Chemical Co LP/5956674001
Not for Resale, 11/09/2014 20:41:36 MST

(d) When bolts are fabricated by cold heading, the allowable stress values for annealed material in Table 3 shall apply unless the manufacturer can furnish adequate control data to show that higher design stresses, as agreed upon, may be used. In no case shall such stresses exceed the allowable stress values given in Table 3 for cold worked bar stock.

(e) Ferrous bolts, studs, and nuts may be used provided they are suitable for the application. They shall conform to the requirements of UCS-10 and 11.

UNF-13 NUTS AND WASHERS

Nuts and washers may be made from any suitable material listed in Tables UNF-23.1 through UNF-23.5. Nuts may be of any dimension or shape provided their strength is equal to that of the bolting, giving due consideration to bolt hole clearance, bearing area, thread form and class of fit, thread shear, and radial thrust from threads [see U-2(g)].

UNF-14 RODS, BARS, AND SHAPES

Rods, bars and shapes shall conform to one of the specifications in Tables UNF-23.1 through UNF-23.5.

UNF-15 OTHER MATERIALS

(a) Other materials, either ferrous or nonferrous, may be used for parts of vessels provided that they are suitable for the purpose intended.

(b) The user shall satisfy himself that the coupling of dissimilar metals will have no harmful effect on the corrosion rate or service life of the vessel for the service intended.

(c) Other materials used in conjunction with nonferrous metals shall meet the requirements given for those materials in other parts of this Division.

DESIGN

UNF-16 GENERAL

The rules in the following paragraphs apply specifically to the design of pressure vessels and vessel parts of nonferrous materials and shall be used in conjunction with the general requirements for *Design* in Subsection A, and with the specific requirements for *Design* in Subsection B that pertain to the method of fabrication used.

UNF-19 WELDED JOINTS

(a) For vessels constructed of titanium or zirconium and their alloys, all joints of Categories A and B shall be of Type No. (1) or No. (2) of Table UW-12.

(b) Titanium or zirconium and their alloys shall not be welded to other materials.

(c) For vessels constructed of UNS N06625, all joints of Categories A and B shall be Type No. (1) or No. (2) of Table UW-12. All joints of Categories C and D shall be Type No. (1) or No. (2) of Table UW-12 when the design temperature is 1,000°F (540°C) or higher.

(d) For vessels constructed of UNS N12160, the nominal thickness of the base material at the weld shall not exceed 0.5 in. (13 mm). When welding is performed with filler metal of the same nominal composition as the base metal, only GMAW or GTAW processes are allowed and the nominal weld deposit thickness shall not exceed 0.5 in. (13 mm).

(e) For vessels constructed of UNS N06230 and UNS N06210 and when welding is performed with filler metal of the same nominal composition as the base metal, only GMAW or GTAW processes are allowed. For applications using UNS N06230 above 1,650°F (900°C), welding shall be limited to the GTAW and GMAW welding processes using SFA-5.14, ERNiCrWMo-1.

(f) For vessels constructed of UNS R31233 during weld procedure qualification testing, when using a matching filler metal composition, the minimum specified tensile strength of the weld metal shall be 120 ksi (828 MPa). Longitudinal bend tests are permitted per Section IX, QW-160.

UNF-23 MAXIMUM ALLOWABLE STRESS VALUES

(a) Tables 3 (for bolting) and 1B (other materials) in Section II, Part D give the maximum allowable stress values at the temperatures indicated for materials conforming to the specifications listed therein. Values may be interpolated for intermediate temperatures [see UG-23 and UG-31(a)]. For vessels designed to operate at a temperature colder than −20°F (−29°C), the allowable stress values to be used in design shall not exceed those given for temperatures of −20°F to 100°F (−29°C to 38°C).

(b) Shells of pressure vessels may be made from welded pipe or tubing listed in Tables UNF-23.1, UNF-23.2, UNF-23.3, UNF-23.4, and UNF-23.5.

(c) When welding or brazing is to be done on material having increased tensile strength produced by hot or cold working, the allowable stress value for the material in the annealed condition shall be used for joint design. One-piece heads and seamless shells may be designed on the basis of the actual temper of the material.

(d) When welding or brazing is to be done on material having increased tensile strength produced by heat treatment, the allowable stress value for the material in the annealed condition shall be used for the joint design unless the stress values for welded construction are given in Table 1B or 3 in Section II, Part D or unless the finished construction is subjected to the same heat treatment as that which produced the temper in the "as-received" material, provided the welded joint and the base metal are similarly affected by the heat treatment.

Provided by IHS under license with ASME
No reproduction or networking permitted without license from IHS
Licensee=Chevron Phillips Chemical Co LP/5956674001
Not for Resale, 11/09/2014 20:41:36 MST

Table UNF-23.1
Nonferrous Metals — Aluminum and Aluminum Alloy Products

Spec. No.	Alloy Designation/UNS No.	Spec. No.	Alloy Designation/UNS No.
SB-26	A02040, A03560, A24430	SB-221	A91060, A91100, A92024, A93003, A95083, A95086, A95154, A95454, A95456, A96061, A96063
SB-108	A02040, A03560	SB-234	Alclad 3003; A91060, A93003, A95052, A95454, A96061
SB-209	Alclad 3003, 3004, 6061; A91060, A91100, A93003, A93004, A95052, A95083, A95086, A95154, A95254, A95454, A95456, A95652, A96061	SB-241	Alclad 3003; A91060, A91100, A93003, A95052, A95083, A95086, A95454, A95456, A96061, A96063
SB-210	Alclad 3003; A91060, A93003, A95052, A95154, A96061, A96063	SB-247	A92014, A93003, A95083, A96061
		SB-308	A96061
SB-211	A92014, A92024, A96061	SB-928	A95083, A95086, A95456

GENERAL NOTE: Maximum allowable stress values in tension for the materials listed in the above table are contained in Subpart 1 of Section II, Part D (see UG-23).

Table UNF-23.2
Nonferrous Metals — Copper and Copper Alloys

Spec. No.	UNS No.	Spec. No.	UNS No.
SB-42	C10200, C12000, C12200	SB-171	C36500, C44300, C44400, C44500, C46400, C46500, C61400, C63000, C70600, C71500
SB-43	C23000		
SB-61	C92200	SB-187	C10200, C11000
SB-62	C83600	SB-271	C95200
SB-75	C10200, C12000, C12200, C14200	SB-283	C37700, C64200
SB-96	C65500	SB-315	C65500
SB-98	C65100, C65500, C66100	SB-359	C12200, C44300, C44400, C44500, C70600, C71000, C71500
SB-111	C10200, C12000, C12200, C14200, C19200, C23000, C28000, C44300, C44400, C44500, C60800, C68700, C70400, C70600, C71000, C71500, C72200	SB-395	C10200, C12000, C12200, C14200, C19200, C23000, C44300, C44400, C44500, C60800, C68700, C70600, C71000, C71500
SB-135	C23000	SB-466	C70600, C71000, C71500
SB-148	C95200, C95400	SB-467	C70600
SB-150	C61400, C62300, C63000, C64200	SB-543	C12200, C19400, C23000, C44300, C44400, C44500, C68700, C70400, C70600, C71500
SB-152	C10200, C10400, C10500, C10700, C11000, C12200, C12300	SB-584	C92200, C93700, C97600
SB-169	C61400	SB-956	C70600, C71500

GENERAL NOTE: Maximum allowable stress values in tension for the materials listed in the above table are contained in Subpart 1 of Section II, Part D (see UG-23).

Provided by IHS under license with ASME
No reproduction or networking permitted without license from IHS
Licensee=Chevron Phillips Chemical Co LP/5956674001
Not for Resale, 11/09/2014 20:41:36 MST

(13)

Table UNF-23.3
Nonferrous Metals — Nickel, Cobalt, and High Nickel Alloys

Spec. No.	UNS No.
SA-351	J94651
SA-494	N26022, N30002, N30012
SB-127	N04400
SB-160	N02200, N02201
SB-161	N02200, N02201
SB-162	N02200, N02201
SB-163	N02200, N02201, N04400, N06600, N06601, N08120, N08801, N08800, N08810, N08811, N08825
SB-164	N04400, N04405
SB-165	N04400
SB-166	N06045, N06600, N06601, N06617, N06690
SB-167	N06045, N06600, N06601, N06617, N06690
SB-168	N06045, N06600, N06601, N06617, N06690
SB-333	N10001, N10629, N10665, N10675
SB-335	N10001, N10629, N10665, N10675
SB-366	N02200, N02201, N04400, N06002, N06007, N06022, N06030, N06035, N06045, N06059, N06200, N06210, N06230, N06455, N06600, N06625, N06985, N08020, N08031, N08120, N08330, N08367, N08800, N08825, N08904, N10001, N10003, N10242, N10276, N10629, N10665, N10675, N12160, R20033
SB-407	N08120, N08801, N08800, N08810, N08811
SB-408	N08120, N08800, N08810, N08811
SB-409	N08120, N08800, N08810, N08811
SB-423	N08825
SB-424	N08825
SB-425	N08825
SB-434	N10003, N10242
SB-435	N06002, N06230, N12160, R30556
SB-443	N06625
SB-444	N06625
SB-446	N06625
SB-462	N06022, N06030, N06035, N06045, N06059, N06200, N06686, N08020, N08031, N08367, N10276, N10629, N10665, N10675, R20033
SB-463	N08020, N08024, N08026
SB-464	N08020, N08024, N08026
SB-468	N08020, N08024, N08026
SB-473	N08020
SB-511	N08330
SB-514	N08120, N08800, N08810
SB-515	N08120, N08800, N08810, N08811
SB-516	N06045, N06600
SB-517	N06045, N06600
SB-525	N08330
SB-535	N08330
SB-536	N08330
SB-564	N04400, N06022, N06035, N06045, N06059, N06200, N06210, N06230, N06600, N06617, N06625, N06686, N08031, N08120, N08367, N08800, N08810, N08811, N08825, N10242, N10276, N10629, N10665, N10675, N12160, R20033
SB-572	N06002, N06230, N12160, R30556
SB-573	N10003, N10242
SB-574	N06022, N06030, N06035, N06059, N06200, N06210, N06455, N06686, N10276
SB-575	N06022, N06059, N06035, N06200, N06210, N06455, N06686, N10276
SB-581	N06007, N06030, N06975, N06985, N08031
SB-582	N06007, N06030, N06975, N06985
SB-599	N08700
SB-619	N06002, N06007, N06022, N06030, N06035, N06059, N06200, N06230, N06455, N06686, N06975, N06985, N06210, N08031, N08320, N10001, N10242, N10276, N10629, N10665, N10675, N12160, R20033, R30556
SB-620	N08320
SB-621	N08320
SB-622	N06002, N06007, N06022, N06030, N06035, N06059, N06200, N06210, N06230 N06455, N06686, N06975, N06985, N08031, N08320, N10001, N10242, N10276, N10629, N10665, N10675, N12160, R20033, R30556
SB-625	N08031, N08904, N08925, R20033
SB-626	N06002, N06007, N06022, N06030, N06035, N06059, N06200, N06210, N06230, N06455, N06686, N06975, N06985, N08031, N08320, N10001, N10242, N10276, N10629, N10665, N10675, N12160, R20033, R30556
SB-637	N07718, N07750
SB-649	N08904, N08925, R20033
SB-668	N08028
SB-672	N08700
SB-673	N08904, N08925
SB-674	N08904, N08925
SB-675	N08367
SB-676	N08367
SB-677	N08904, N08925
SB-688	N08367
SB-690	N08367
SB-691	N08367
SB-704	N06625, N08825
SB-705	N06625, N08825
SB-709	N08028
SB-710	N08330
SB-729	N08020
SB-804	N08367
SB-815	R31233
SB-818	R31233
SF-468	N05500
SF-467	N05500
SF-467M	N05500

GENERAL NOTE: Maximum allowable stress values in tension for the materials listed in the above table are contained in Subpart 1 of Section II, Part D (see UG-23).

Provided by IHS under license with ASME
No reproduction or networking permitted without license from IHS
Licensee=Chevron Phillips Chemical Co LP/5956674001
Not for Resale, 11/09/2014 20:41:36 MST

Table UNF-23.4
Nonferrous Metals — Titanium and Titanium Alloys (13)

Spec. No.	UNS No.	Spec. No.	UNS No.
SB-265	R50250, R50400, R50550, R52250, R52252, R52254, R52400, R52402, R52404, R53400, R56320, R56323	SB-367	R50400, R50550, R52400
SB-338	R50250, R50400, R50550, R52400, R52402, R52404, R53400, R56320, R56323	SB-381	R50250, R50400, R50550, R52400, R52402, R52404, R53400, R56323
SB-348	R50250, R50400, R50550, R52400, R52402, R52404, R53400, R56323	SB-861	R50250, R50400, R50550, R52400, R52402, R52404, R53400, R56320, R56323
SB-363	R50250, R50400, R50550, R52400, R52404, R53400, R56323	SB-862	R50250, R50400, R50550, R52400, R52402, R52404, R53400, R56320, R56323

GENERAL NOTE: Maximum allowable stress values in tension for the materials listed in the above table are contained in Subpart 1 of Section II, Part D (see UG-23).

(13) UNF-28 THICKNESS OF SHELLS UNDER EXTERNAL PRESSURE

Cylindrical and spherical shells under external pressure shall be designed by the rules in UG-28, using the applicable figures in Subpart 3 of Section II, Part D and the temperature limits of UG-20(c).

UNF-30 STIFFENING RINGS

Rules covering the design and attachment of stiffening rings are given in UG-29 and UG-30.

(13) UNF-33 FORMED HEADS, PRESSURE ON CONVEX SIDE

Ellipsoidal, torispherical, hemispherical, and conical heads having pressure on the convex side (minus heads) shall be designed by the rules of UG-33, using fig-ures in Subpart 3 of Section II, Part D having NFA, NFC, NFN, NFT, and NFZ designators.

UNF-56 POSTWELD HEAT TREATMENT

(a) Postweld heat treatment of nonferrous materials is not normally necessary nor desirable.

(b) Except as in (c), (d), and (e) below, no postweld heat treatment shall be performed except by agreement between the user and the Manufacturer. The temperature, time and method of heat treatment shall be covered by agreement.

(c) If welded, castings of SB-148, Alloy CDA 954 shall be heat treated after all welding at 1,150°F to 1,200°F (620°C to 650°C) for $1\frac{1}{2}$ hr at temperature for the first inch of cross section thickness plus $\frac{1}{2}$ hr for each additional inch of section thickness. Material shall then be air cooled.

(d) Within 14 days after welding, all products of zirconium Grade R60705 shall be heat treated at 1,000°F to 1,100°F (540°C to 595°C) for a minimum of 1 hr for thicknesses up to 1 in. (25 mm) plus $\frac{1}{2}$ hr for each additional inch of thickness. Above 800°F (425°C), cooling shall be done in a closed furnace or cooling chamber at a rate not greater than 500°F/hr (278°C/h) divided by the maximum metal thickness of the shell or head plate in inches but in no case more than 500°F/hr (278°C/h). From 800°F (425°C), the vessel may be cooled in still air.

(e) Postweld Heat Treatment of UNS Nos. N08800, N08810, and N08811 Alloys (13)

(1) Pressure boundary welds and welds to pressure boundaries in vessels with design temperatures above 1000°F fabricated from UNS No. N08800 (Alloy 800), UNS No. N08810 (Alloy 800H), and UNS No. N08811 (Alloy 800HT) shall be postweld heat treated. The postweld heat treatment shall consist of heating to a minimum temperature of 1,625°F (885°C) for $1\frac{1}{2}$ hr for thicknesses up to 1 in. (25 mm), and for $1\frac{1}{2}$ hr + 1 hr/in. of thickness for thicknesses in excess of 1 in. (25 mm). Cooling and heating rates shall be by agreement between the user or his

Table UNF-23.5
Nonferrous Metals — Zirconium

Spec. No.	UNS No.	Spec. No.	UNS No.
SB-493	R60702, R60705	SB-551	R60702, R60705
SB-523	R60702, R60705	SB-653	R60702, R60705
SB-550	R60702, R60705	SB-658	R60702, R60705

GENERAL NOTE: Maximum allowable stress values in tension for the materials listed in the above table are contained in Subpart 1 of Section II, Part D (see UG-23).

Provided by IHS under license with ASME
No reproduction or networking permitted without license from IHS
Licensee=Chevron Phillips Chemical Co LP/5956674001
Not for Resale, 11/09/2014 20:41:36 MST

designated agent and the Manufacturer. As an alternative, solution annealing in accordance with the material specification is acceptable. Postweld heat treatment of tube-to-tubesheet and expansion bellows attachment welds is neither required nor prohibited.

(2) Except as permitted in (3) below, vessels or parts of vessels that have been postweld heat treated in accordance with the requirements of this paragraph shall again be postweld heat treated after welded repairs have been made.

(3) Weld repairs to the weld metal and heat affected zone in welds joining these materials may be made after the final PWHT, but prior to the final hydrostatic test, without additional PWHT. The weld repairs shall meet the requirements of (-a) through (-d) below.

(-a) The Manufacturer shall give prior notification of the repair to the user or to his designated agent and shall not proceed until acceptance has been obtained.

(-b) The total repair depth shall not exceed $\frac{1}{2}$ in. (13 mm) or 30% of the material thickness, whichever is less. The total depth of a weld repair shall be taken as the sum of the depths for repairs made from both sides of a weld at a given location.

(-c) After removal of the defect, the groove shall be examined. The weld repair area must also be examined. The liquid penetrant examination method, in accordance with Mandatory Appendix 8, shall be used.

(-d) The vessel shall be hydrostatically tested after making the welded repair.

(f) Postweld heat treatment of UNS R31233 is required prior to cold forming when the cold forming bend radius at the weld is less than 4 times the thickness of the component. Postweld treatment shall consist of annealing at 2,050°F (1 121°C) immediately followed by water quenching.

UNF-57 RADIOGRAPHIC EXAMINATION

(a) Vessels or parts of vessels constructed of nonferrous materials shall be radiographed in accordance with the requirements of UW-11.

(b) In addition, for vessels constructed of titanium or zirconium and their alloys, all joints of Categories A and B shall be fully radiographed in accordance with UW-51.

(c) Welded butt joints in vessels constructed of materials listed in Table UNF-23.3, with the exception of alloys 200 (UNS No. N02200), 201 (UNS No. N02201), 400 (UNS No. N04400), 401 (UNS No. N04401), and 600 (UNS No. N06600), shall be examined radiographically for their full length as prescribed in UW-51 when the thinner of the plate or vessel wall thicknesses at the welded joint exceeds $\frac{3}{8}$ in. (10 mm).

(d) Where a defect is removed and welding repair is not necessary, care shall be taken to contour notches or corners. The contoured surface shall then be reinspected by the same means originally used for locating the defect to be sure it has been completely removed.

UNF-58 LIQUID PENETRANT EXAMINATION

(a) All welds, both groove and fillet, in vessels constructed of materials covered by UNS N06625 (for Grade 2 only in SB-443, SB-444, and SB-446), UNS N10001, and UNS N10665 shall be examined for the detection of cracks by the liquid penetrant method. This examination shall be made following heat treatment if heat treatment is performed. All cracks shall be removed by grinding, or grinding and filing. Where a defect is removed and welding repair is not necessary, care shall be taken to contour notches or corners. The contoured surface shall then be reinspected by the same means originally used for locating the defect to be sure it has been completely removed.

(b) All joints in vessels constructed of titanium or zirconium and their alloys shall be examined by the liquid penetrant method of Mandatory Appendix 8.

(c) Welded joints in vessels or parts of vessels, constructed of materials listed in Table UNF-23.3, with the exception of alloys 200 (UNS No. N02200), 201 (UNS No. N02201), 400 (UNS No. N04400), 405 (UNS No. N04405), and 600 (UNS No. N06600), shall be examined by the liquid penetrant method when they are not required to be fully radiographed.

(d) Laser and resistance welded lap joints are exempt from liquid penetrant examination requirements of (a), (b), and (c) above.

UNF-65 LOW TEMPERATURE OPERATION

The materials listed in Tables UNF-23.1 through UNF-23.5, together with deposited weld metal within the range of composition for material in that Table, do not undergo a marked drop in impact resistance at subzero temperature. Therefore, no additional requirements are specified for wrought aluminum alloys when they are used at temperatures down to −452°F (−269°C); for copper and copper alloys, nickel and nickel alloys, and cast aluminum alloys when they are used at temperatures down to −325°F (−198°C); and for titanium or zirconium and their alloys used at temperatures down to −75°F (−59°C). The materials listed in Tables UNF-23.1 through UNF-23.5 may be used at lower temperatures than those specified herein and for other weld metal compositions provided the user satisfies himself by suitable test results such as determinations of tensile elongation and sharp-notch tensile strength (compared to unnotched tensile strength) that the material has suitable ductility at the design temperature.

FABRICATION

UNF-75 GENERAL

The rules in the following paragraphs apply specifically to the fabrication of pressure vessels and vessel parts that are constructed of nonferrous materials and shall be used in conjunction with the general requirements for in

Provided by IHS under license with ASME
No reproduction or networking permitted without license from IHS
Licensee=Chevron Phillips Chemical Co LP/5956674001
Not for Resale, 11/09/2014 20:41:36 MST

Subsection A, and with the specific requirements for in Subsection B that pertain to the method of fabrication used.

UNF-77 FORMING SHELL SECTIONS AND HEADS

The following provisions shall apply in addition to the general rules for forming given in UG-79:

(a) The selected thickness of material shall be such that the forming processes will not reduce the thickness of the material at any point below the minimum value required by the design computation.

(b) Relatively small local bulges and buckles may be removed from formed parts for shells and heads by hammering or by local heating and hammering. For limiting temperatures see Nonmandatory Appendix NF.

(c) A shell section that has been formed by rolling may be brought true-to-round for its entire length by pressing, rolling, or hammering.

UNF-78 WELDING

Welding of titanium or zirconium and their alloys is to be by the gas-shielded tungsten arc process, the gas-shielded metal arc (consumable-electrode) process, the plasma arc welding process, the electron beam process, the laser beam process, or the resistance welding process, meeting the requirements of Section IX or Mandatory Appendix 17 of this Division, whichever is applicable.

(13) UNF-79 REQUIREMENTS FOR POSTFABRICATION HEAT TREATMENT DUE TO STRAINING

(a) The following rules shall apply in addition to general rules for forming given in UNF-77.

(1) If the following conditions prevail, the cold formed areas of pressure-retaining components manufactured of austenitic alloys shall be solution annealed by heating at the temperatures given in Table UNF-79 for 20 min/in. (20 min/25 mm) of thickness or 10 min, whichever is greater, followed by rapid cooling:

(-a) the finishing-forming temperature is below the minimum heat-treating temperature given in Table UNF-79; and

(-b) the design metal temperature and the forming strains exceed the limits shown in Table UNF-79.

(2) Forming strains shall be determined by the equations in Table UG-79-1.

(b) When forming strains cannot be calculated as shown in (a) above, the Manufacturer shall have the responsibility to determine the maximum forming strain. For flares, swages, or upsets, heat treatment in accordance with Table UNF-79 shall apply, regardless of the amount of strain.

INSPECTION AND TESTS

UNF-90 GENERAL

The rules in the following paragraphs apply specifically to the inspection and testing of pressure vessels and vessel parts that are constructed of nonferrous materials and shall be used in conjunction with the general requirements for *Inspection Tests* in Subsection A, and with the specific requirements for *Inspection and Tests* in Subsection B that pertain to the method of fabrication used.

UNF-91 REQUIREMENTS FOR PENETRAMETER

If the filler metal is radiographically similar[81] to the base metal, the penetrameter may be placed adjacent to the weld; otherwise it shall be placed on the deposited weld metal.

UNF-95 WELDING TEST PLATES

If a vessel of welded titanium or zirconium and their alloys construction incorporates joints of Category A or B as described in UW-3, a production test plate of the same specification, grade, and thickness shall be made of sufficient size to provide at least one face and one root bend specimen or two side bend specimens dependent upon plate thickness. Where longitudinal joints are involved, the test plate shall be attached to one end of the longitudinal joint and welded continuously with the joint. Where circumferential joints only are involved, the test plate need not be attached but shall be welded along with the joint and each welder or welding operator shall deposit weld metal in the test plate at the location and proportional to that deposited in the production weld. Test plates shall represent each welding process or combination of processes or a change from machine to manual or vice versa. At least one test plate is required for each vessel provided not over 100 ft of Category A or B joints are involved. An additional test plate, meeting the same requirements as outlined above, shall be made for each additional 100 ft of Category A or B joints involved. The bend specimens shall be prepared and tested in accordance with Section IX, QW-160. Failure of either bend specimen constitutes rejection of the weld.

MARKING AND REPORTS

UNF-115 GENERAL

The provisions for marking and reports in UG-115 through UG-120 shall apply without supplement to pressure vessels constructed of nonferrous materials.

Provided by IHS under license with ASME
No reproduction or networking permitted without license from IHS
Licensee=Chevron Phillips Chemical Co LP/5956674001
Not for Resale, 11/09/2014 20:41:36 MST

(13)

Table UNF-79
Postfabrication Strain Limits and Required Heat Treatment

		Limitation in Lower Temperature Range			Limitations in Higher Temperature Range		
		For Design Temperature, °F (°C)					
Grade	UNS Number	Exceeding	But Less Than or Equal To	And Forming Strains Exceeding, %	For Design Temperature, °F (°C), Exceeding	And Forming Strain Exceeding, %	Minimum Heat Treatment Temperature, °F (°C), When Design Temperature and Forming Strain Limits Are Exceeded [Note (1)]
...	N06230	1,100 (595)	1,400 (760)	15	1,400 (760)	10	2,200 (1 205)
600	N06600	1,075 (580)	1,200 (650)	20	1,200 (650)	10	1,900 (1 040)
617	N06617	1,000 (540)	1,250 (675)	15	1,250 (675)	10	2,100 (1 150)
800	N08800	1,100 (595)	1,250 (675)	15	1,250 (675)	10	1,800 (980)
800H	N08810	1,100 (595)	1,250 (675)	15	1,250 (675)	10	2,050 (1 120)
...	N08811	1,100 (595)	1,250 (675)	15	1,250 (675)	10	2,050 (1 120)

GENERAL NOTES:
(a) The limits shown are for cylinders formed from plates, spherical or dished heads formed from plate, and tube and pipe bends.
(b) When the forming strains cannot be calculated as shown in UNF-79(a), the forming strain limits shall be half those tabulated in this Table [see UNF-79(b)].

NOTE:
(1) Rate of cooling from heat-treatment temperature is not subject to specific control limits.

PRESSURE RELIEF DEVICES

UNF-125 GENERAL VESSELS

The provisions for pressure relief devices in UG-125 through UG-136 shall apply without supplement to pressure vessels constructed of nonferrous materials.

Provided by IHS under license with ASME
No reproduction or networking permitted without license from IHS
Licensee=Chevron Phillips Chemical Co LP/5956674001
Not for Resale, 11/09/2014 20:41:36 MST

NONMANDATORY APPENDIX NF CHARACTERISTICS OF THE NONFERROUS MATERIALS (INFORMATIVE AND NONMANDATORY)

NF-1 PURPOSE

This Appendix summarizes the major properties and fabricating techniques suitable for the nonferrous materials.

NF-2 GENERAL

The nonferrous materials can be formed and fabricated into a variety of types of assemblies with the same types of fabricating equipment as are used for steel. The details of some fabricating procedures vary among the several nonferrous materials and differ from those used for steel because of differences in the inherent mechanical properties of these materials. Detailed information regarding procedures best suited to the several metals may be obtained from the literature of the material producers, and from other reliable sources such as the latest editions of handbooks issued by the American Welding Society and the American Society for Metals.

NF-3 PROPERTIES

The specified mechanical properties, as listed in Tables 1B and 3 of Section II, Part D, show a wide range of strengths. The maximum allowable stress values show a correspondingly wide range and a variable relationship to service temperature. The maximum temperature listed for any material is the temperature above which that material is not customarily used. Section II, Part D, Table PRD provides Poisson's ratios and densities for ferrous and nonferrous materials.

NF-4 MAGNETIC PROPERTIES

See Nonmandatory Appendix A, A-410, of Section II, Part D.

NF-5 ELEVATED TEMPERATURE EFFECTS

See Nonmandatory Appendix A, A-420, of Section II, Part D.

NF-6 LOW TEMPERATURE BEHAVIOR

See Nonmandatory Appendix A, A-430, of Section II, Part D.

NF-7 THERMAL CUTTING

In general, nonferrous materials cannot be cut by the conventional oxyacetylene cutting equipment commonly used for steel. They may be melted and cut by oxyacetylene, powder cutting carbon arc, oxygen arc, and other means. When such thermal means for cutting are employed a shallow contaminated area adjacent to the cut results. This contamination should be removed by grinding, machining, or other mechanical means after thermal cutting and prior to use or further fabrication by welding.

NF-8 MACHINING

The nonferrous materials can be machined with properly sharpened tools of high-speed steel or cemented-carbide tools. A coolant is necessary and should be used copiously. In general, the tools should have more side and top rake than required for cutting steel and the edges should be keen and smooth. Comparatively high speeds and fine feeds give best results. Information can be obtained from the material producers and the Metals Handbook for conditions to give optimum results.

NF-9 GAS WELDING

The commonly used gas processes for welding aluminum-base materials employ oxyhydrogen or oxyacetylene flames whereas only the latter produces sufficient heat for welding the copper-base and nickel-base alloys. For the aluminum, nickel and cupro-nickel alloys a neutral to slightly reducing flame should be used, whereas for copper base materials the flame should be neutral to slightly oxidizing. A suitable flux, applied to the welding rod and the work, shall be used except that no flux is required for nickel. Boron-free and phosphorus-free fluxes are required for nickel–copper alloy and for nickel–chromium–iron alloy. Residual deposits of flux shall be removed.

--`,,,``,,``,,,

NF-10 METAL ARC WELDING

Metal arc welds can be made with standard dc equipment using reversed polarity (electrode-positive) and coated electrodes. A slightly greater included angle in butt welds for adequate manipulation of the electrode is required.

NF-11 INERT GAS METAL ARC WELDING

Both the consumable and nonconsumable electrode processes are particularly advantageous for use with the nonferrous materials. Best results are obtained through the use of special filler metals.

NF-12 RESISTANCE WELDING

Electric resistance welding, which includes spot, line or seam, and butt or flash welding, can be used with the nonferrous materials. Proper equipment and technique are required for making satisfactory welds.

NF-13 CORROSION

See Nonmandatory Appendix A, A-440, of Section II, Part D.

NF-14 SPECIAL COMMENTS

(a) Aluminum. See Nonmandatory Appendix A, A-451, of Section II, Part D.

(b) Nickel. See Nonmandatory Appendix A, A-452, of Section II, Part D.

(c) Titanium or Zirconium. See Nonmandatory Appendix A, A-453, of Section II, Part D.

--`,,,``,,``,,,,`,`,``,,`,,`,,`,,``-`-`,,`,,`,`,,`---

Provided by IHS under license with ASME

No reproduction or networking permitted without license from IHS

Licensee=Chevron Phillips Chemical Co LP/5956674001
Not for Resale, 11/09/2014 20:41:36 MST

PART UHA
REQUIREMENTS FOR PRESSURE VESSELS CONSTRUCTED OF HIGH ALLOY STEEL

GENERAL

UHA-1 SCOPE

The rules in Part UHA are applicable to pressure vessels and vessel parts that are constructed of high alloy steel and shall be used in conjunction with the general requirements in Subsection A, and with the specific requirements in Subsection B that pertain to the method of fabrication used.

UHA-5 USES

Some of the uses of high alloy steel are to resist corrosion, to avoid contamination of contents with iron, to facilitate cleaning of vessels for processing foods, to provide strength or scaling resistance at high temperatures, and to provide impact resistance at low temperatures.

UHA-6 CONDITIONS OF SERVICE

Specific chemical compositions, heat treatment procedures, fabrication requirements, and supplementary tests may be required to assure that the vessel will be in its most favorable condition for the intended service. This is particularly true for vessels subject to severe corrosion. These rules do not indicate the selection of an alloy suitable for the intended service or the amount of the corrosion allowance to be provided.

It is recommended that users assure themselves by appropriate tests, or otherwise, that the high alloy steel selected and its heat treatment during fabrication will be suitable for the intended service both with respect to corrosion resistance and to retention of satisfactory mechanical properties during the desired service life. (See Nonmandatory Appendix HA, Suggestions on the Selection and Treatment of Austenitic Chromium–Nickel Steels.)

UHA-8 MATERIAL

(a) Approved specifications for castings of high alloy steel are given in Table UHA-23. A tabulation of allowable stress values at different temperatures is given in Section II, Part D, Table 3 (for bolting) and Table 1A (for other materials). These stress values are to be multiplied by the casting quality factors of UG-24. Castings that are to be welded shall be of weldable grade.

(b) Cast high alloy steel flanges and fittings complying with ASME B16.5 shall be used within the ratings assigned in these standards.

MATERIALS

UHA-11 GENERAL

(a) All materials subject to stress due to pressure shall conform to one of the specifications given in Section II, and shall be limited to those listed in Table UHA-23 except as otherwise provided in (b) and UG-4.

(b) The specifications listed in Tables 1A and 3 of Section II, Part D do not use a uniform system for designating the Grade number of materials that have approximately the same range of chemical composition. To provide a uniform system of reference, these tables include a column of UNS (Unified Numbering System) numbers assigned to identify the various alloy compositions. When these particular UNS numbers were assigned, the familiar AISI type numbers for stainless steels were incorporated into the designation. These type numbers are used in the rules of Part UHA whenever reference is made to materials of approximately the same chemical composition that are furnished under more than one approved specification or in more than one product form.

UHA-12 BOLT MATERIALS

(a) Approved specifications for bolt materials of carbon steel and low alloy steel are listed in Table UCS-23 and of high alloy steel in Table UHA-23. A tabulation of allowable stress values at different temperatures (see UG-12) is given in Table 3 of Section II, Part D.

(b) Nonferrous bolts, studs, and nuts may be used provided they are suitable for the application. They shall conform to the requirements of Part UNF.

UHA-13 NUTS AND WASHERS

Nuts and washers shall conform to the requirements in UCS-11.

DESIGN

UHA-20 GENERAL

The rules in the following paragraphs apply specifically to the design of pressure vessels and vessel parts that are constructed of high alloy steel and shall be used in conjunction with the general requirements for *Design* in Subsection A, and with the specific requirements for *Design* in Subsection B that pertain to the method of fabrication used.

Provided by IHS under license with ASME
No reproduction or networking permitted without license from IHS
Licensee=Chevron Phillips Chemical Co LP/5956674001
Not for Resale, 11/09/2014 20:41:36 MST

UHA-21 WELDED JOINTS

When radiographic examination is required for butt welded joints by UHA-33, joints of Categories A and B (see UW-3) shall be of Type Nos. (1) and (2) of Table UW-12.

UHA-23 MAXIMUM ALLOWABLE STRESS VALUES

(a) Tables 3 (for bolting) and 1A (for other materials) of Section II, Part D give the maximum allowable stress values at the temperatures indicated for the materials conforming to the specifications listed therein. Values may be interpolated for intermediate temperatures [see UG-23 and UG-31(a)].

(b) Shells of pressure vessels may be made from welded pipe or tubing listed in Table UHA-23.

(c) For vessels designed to operate at a temperature below −20°F (−30°C), the allowable stress values to be used in design shall not exceed those given in Table 1A or 3 of Section II, Part D for temperatures of −20°F to 100°F (−30°C to 40°C).

(13) UHA-28 THICKNESS OF SHELLS UNDER EXTERNAL PRESSURE

Cylindrical and spherical shells under external pressure shall be designed by the rules in UG-28, using the applicable figures in Subpart 3 of Section II, Part D and the temperature limits of UG-20(c).

(13) UHA-29 STIFFENING RINGS FOR SHELLS UNDER EXTERNAL PRESSURE

Rules covering the design of stiffening rings are given in UG-29.

UHA-30 ATTACHMENT OF STIFFENING RINGS TO SHELL

Rules covering the attachment of stiffening rings are given in UG-30.

(13) UHA-31 FORMED HEADS, PRESSURE ON CONVEX SIDE

Ellipsoidal, torispherical, hemispherical, and conical heads, having pressure on the convex side (minus heads), shall be designed by the rules of UG-33, using the figures for high alloy steels or Figure CS-2 in Subpart 3 of Section II, Part D.

UHA-32 REQUIREMENTS FOR POSTWELD HEAT TREATMENT

(a) Before applying the detailed requirements and exemptions in these paragraphs, satisfactory weld procedure qualifications of the procedures to be used shall be performed in accordance with all the essential variables of Section IX including conditions of postweld heat treatment or lack of postweld heat treatment and including other restrictions listed below. Welds in pressure vessels or pressure vessel parts shall be given a postweld heat treatment at a temperature not less than specified in Tables UHA-32-1 through UHA-32-6 when the nominal thickness, as defined in UW-40(f), including corrosion allowance, exceeds the limits in the Notes to Tables UHA-32-1 through UHA-32-6. The exemptions provided for in the Notes to Tables UHA-32-1 through UHA-32-6 are not permitted when postweld heat treatment is a service requirement as set forth in UHA-51 and UW-2, when welding ferritic materials greater than $^1/_8$ in. (3 mm) thick with the electron beam welding process, or when welding P-Nos. 6 and 7 (except for Type 405 and Type 410S) materials of any thickness using the inertia and continuous drive friction welding processes. The materials in Tables UHA-32-1 through UHA-32-6 are listed in accordance with the Section IX P-Number material groupings of QW-432 and are also listed in Table UHA-23.

(b) Holding temperatures and/or holding times in excess of the minimum values given in Tables UHA-32-1 through UHA-32-6 may be used. The holding time at temperature as specified in Tables UHA-32-1 through UHA-32-6 need not be continuous. It may be an accumulation of time of multiple postweld heat treat cycles. Long time exposure to postweld heat treatment temperatures may cause sigma phase formation (see UHA-104).

(c) When pressure parts of two different P-Number groups are joined by welding, the postweld heat treatment shall be that specified in either of Tables UHA-32-1 through UHA-32-6 or Tables UCS-56-1 through UCS-56-11, with applicable notes, for the material requiring the higher postweld temperature. When nonpressure parts are welded to pressure parts, the postweld heat treatment temperature of the pressure part shall control. Ferritic steel parts, when used in conjunction with austenitic chromium–nickel stainless steel parts or austenitic/ferritic duplex steel, shall not be subjected to the solution heat treatment described in UHA-105.

(d) The operation of postweld heat treatment shall be carried out by one of the procedures given in UW-40 in accordance with the requirements of UCS-56(d) except as modified by the Notes to Tables UHA-32-1 through UHA-32-6.

(e) Vessels or parts of vessels that have been postweld heat treated in accordance with the requirements of this paragraph shall again be postweld heat treated after repairs have been made.

Provided by IHS under license with ASME
No reproduction or networking permitted without license from IHS
Licensee=Chevron Phillips Chemical Co LP/5956674001
Not for Resale, 11/09/2014 20:41:36 MST

Table UHA-23
High Alloy Steel

(13)

Spec. No.	UNS No.	Type/Grade
SA-182	S20910	FXM-19
	S21904	FXM-11
	S30400	F304
	S30403	F304L
	S30409	F304H
	S30453	F304LN
	S30815	F45
	S31000	F310
	S31050	F310MoLN
	S31254	F44
	S31600	F316
	S31603	F316L
	S31609	F316H
	S31700	F317
	S31703	F317L
	S31803	F51
	S32100	F321
	S32109	F321H
	S32202	F66
	S32750	. . .
	S32750	F53
	S32760	F55
	S34700	F347
	S34709	F347H
	S34800	F348
	S34809	F348H
	S39274	F54
	S41000	F6a Cl. 1 & 2
	S44627	FXM-27Cb
SA-193	S21800	B8S, B8SA
	S30400	B8 Cl. 1 & 2
	S30451	B8NA Cl. 1A
	S30500	B8P Cl. 1 & 2
	S31600	B8M Cl. 1 & 2, B8M2 Cl. 2
	S31651	B8MNA Cl. 1A
	S32100	B8T Cl. 1 & 2
	S34700	B8C Cl. 1 & 2
	S41000	B6
SA-213	S20910	XM-19
	S30400	TP304
	S30403	TP304L
	S30409	TP304H
	S30451	TP304N
	S30453	TP304LN
	S30815	...
	S30908	TP309S
	S30909	TP309H
	S30940	TP309Cb
	S31008	TP310S
	S31009	TP310H
	S31040	TP310Cb
	S31050	TP310MoLN
	S31277	...
	S31600	TP316
	S31603	TP316L
	S31609	TP316H
	S31651	TP316N
	S31725	...
	S32100	TP321
SA-213	S32109	TP321H
	S34700	TP347
	S34709	TP347H
	S34751	TP347LN
	S34800	TP348
	S34809	TP348H
	S38100	XM-15
SA-217	J91150	CA15
SA-240	S20100	201-1, 201-2
	S20153	201LN
	S20400	204
	S20910	XM-19
	S24000	XM-29
	S30100	301
	S30200	302
	S30400	304
	S30403	304L
	S30409	304H
	S30451	304N
	S30453	304LN
	S30815	...
	S30908	309S
	S30909	309H
	S30940	309Cb
	S31008	310S
	S31009	310H
	S31040	310Cb
	S31050	310MoLN
	S31200	...
	S31254	...
	S31260	...
	S31277	...
	S31600	316
	S31603	316L
	S31609	316H
	S31635	316Ti
	S31640	316Cb
	S31651	316N
	S31700	317
	S31703	317L
	S31725	...
	S31803	...
	S32100	321
	S32109	321H
	S32202	...
	S32304	...
	S32550	...
	S32750	...
	S32760	...
	S32900	329
	S32906	...
	S32950	...
	S34700	347
	S34709	347H
	S34800	348
	S38100	XM-15
	S40500	405
	S40910	...
	S40920	...
	S40930	...
SA-240	S41000	410
	S41008	410S
	S42900	429
	S43000	430
	S44400	...
	S44626	XM-33
	S44627	XM-27
	S44635	...
	S44660	26-3-3
	S44700	...
	S44800	...
SA-249	S20910	TPXM-19
	S24000	TPXM-29
	S30400	TP304
	S30403	TP304L
	S30409	TP304H
	S30451	TP304N
	S30453	TP304LN
	S30815	...
	S30908	TP309S
	S30909	TP309H
	S30940	TP309Cb
	S31008	TP310S
	S31009	TP310H
	S31040	TP310Cb
	S31050	TP310MoLN
	S31254	...
	S31277	...
	S31600	TP316
	S31603	TP316L
	S31609	TP316H
	S31651	TP316N
	S31700	TP317
	S31703	TP317L
	S31725	...
	S32100	TP321
	S32109	TP321H
	S34700	TP347
	S34709	TP347H
	S34800	TP348
	S34809	TP348H
	S38100	TPXM-15
SA-268	S40500	TP405
	S40800	...
	S40900	TP409
	S41000	TP410
	S42900	TP429
	S43000	TP430
	S43035	TP439
	S43036	TP430Ti
	S44400	...
	S44600	TP446-1, TP446-2
	S44626	XM-33
	S44627	XM-27
	S44635	...
	S44660	26-3-3
	S44700	29-4
	S44735	...
	S44800	29-4-2
SA-312	S20910	TPXM-19

Provided by IHS under license with ASME
No reproduction or networking permitted without license from IHS
Licensee=Chevron Phillips Chemical Co LP/5956674001
Not for Resale, 11/09/2014 20:41:36 MST

Table UHA-23
High Alloy Steel (Cont'd)

Spec. No.	UNS No.	Type/Grade
SA-312	S21904	TPXM-11
	S24000	TPXM-29
	S30400	TP304
	S30403	TP304L
	S30409	TP304H
	S30451	TP304N
	S30453	TP304LN
	S30815	...
	S30908	TP309S
	S30909	TP309H
	S30940	TP309Cb
	S31008	TP310S
	S31009	TP310H
	S31040	TP310Cb
	S31050	TP310MoLN
	S31254	...
	S31600	TP316
	S31603	TP316L
	S31609	TP316H
	S31651	TP316N
	S31700	TP317
	S31703	TP317L
	S31725	...
	S32100	TP321
	S32109	TP321H
	S34700	TP347
	S34709	TP347H
	S34751	TP347LN
	S34800	TP348
	S34809	TP348H
	S38100	TPXM-15
SA-320	S30323	B8F Cl. 1, B8FA Cl. 1A
	S30400	B8 Cl. 1 & 2, B8A Cl. 1A
	S31600	B8M Cl. 1 & 2, B8MA Cl. 1A
	S32100	B8T Cl. 1 & 2, B8TA Cl. 1A
	S34700	B8C Cl. 1 & 2, B8CA Cl. 1A
SA-351	J92500	CF3, CF3A
	J92590	CF10
	J92600	CF8, CF8A
	J92710	CF8C
	J92800	CF3M
	J92900	CF8M
	J92901	CF10M
	J93000	CG8M
	J93254	CK3MCuN
	J93400	CH8
	J93402	CH20
	J93790	CG6MMN
	J94202	CK20
	...	CT15C
	J95150	CN7M
SA-358	S31254	...
	S31725	...
SA-376	S30400	TP304
	S30409	TP304H
	S30451	TP304N

Spec. No.	UNS No.	Type/Grade
SA-376	S30453	TP304LN
	S31600	TP316
	S31609	TP316H
	S31651	TP316N
	S31725	...
	S32100	TP321
	S32109	TP321H
	S34700	TP347
	S34709	TP347H
	S34800	TP348
SA-403	S20910	XM-19
	S30400	304
	S30403	304L
	S30409	304H
	S30451	304N
	S30453	304LN
	S30900	309
	S31008	310S
	S31600	316
	S31603	316L
	S31609	316H
	S31651	316N
	S31700	317
	S31703	317L
	S31725	...
	S32100	321
	S32109	321H
	S34700	347
	S34709	347H
	S34800	348
	S34809	348H
SA-409	S31725	...
SA-451	J92800	CPF3M
	J92900	CPF8M
SA-453	S63198	651 Cl. A & B
	S66286	660 Cl. A & B
SA-479	S20910	XM-19
	S24000	XM-29
	S30200	302
	S30400	304
	S30403	304L
	S30409	304H
	S30453	304LN
	S30815	...
	S30908	309S
	S30909	309H
	S30940	309Cb
	S31008	310S
	S31009	310H
	S31040	310Cb
	S31600	316
	S31603	316L
	S31725	...
	S31803	...
	S32100	321
	S32109	321H
	S32202	...
	S32550	...
	S32760	...
	S32906	...

Spec. No.	UNS No.	Type/Grade
SA-479	S34700	347
	S34800	348
	S40500	405
	S41000	410
	S43000	430
	S43035	439
	S44627	XM-27
	S44700	...
	S44800	...
SA-564	S17400	630
SA-638	S66286	660
SA-666	S20100	201-1, 201-2
	S21904	XM-11
SA-688	S24000	TPXM-29
	S30400	TP304
	S30403	TP304L
	S30451	TP304N
	S30453	TP304LN
	S31600	TP316
	S31603	TP316L
SA-705	S17400	630
SA-731	S44626	TPXM-33
	S44627	TPXM-27
SA-747	J92180	CB7Cu-1
SA-789	S31260	...
	S31500	...
	S31803	...
	S32202	...
	S32304	...
	S32550	...
	S32750	...
	S32760	...
	S32900	...
	S32906	...
	S32950	...
	S39274	...
SA-790	S31260	...
	S31500	...
	S31803	...
	S32202	...
	S32304	...
	S32550	...
	S32750	...
	S32760	...
	S32900	...
	S32906	...
	S32950	...
	S39274	...
SA-803	S30453	TP304LN
	S43035	TP439
	S44660	26-3-3
SA-813	S30453	TP304LN
	S30908	TP309S
	S30940	TP309Cb
	S31008	TP310S
	S31040	TP310Cb
SA-814	S30908	TP309S
	S30940	TP309Cb
	S31008	TP310S
	S31040	TP310Cb

Provided by IHS under license with ASME
No reproduction or networking permitted without license from IHS
Licensee=Chevron Phillips Chemical Co LP/5956674001
Not for Resale, 11/09/2014 20:41:36 MST

Table UHA-23
High Alloy Steel (Cont'd)

Spec. No.	UNS No.	Type/Grade	Spec. No.	UNS No.	Type/Grade	Spec. No.	UNS No.	Type/Grade
SA-815	S31803	...	SA-965	S31609	F316H	SA/EN 10028-7	...	X5 CrNiMo 17-12-2 [Note (2)]
	S32202	...		S31651	F316N			
	S32760	...		S32100	F321	SA/JIS G4303	...	SUS302
SA-965	S21904	FXM-11		S32109	F321H			
	S30400	F304		S34700	F347		...	SUS304
	S30403	F304L		S34709	F347H		...	SUS304L
	S30409	F304H		S34800	F348		...	SUS310S
	S30451	F304N		S34809	F348H		...	SUS316
	S30453	F348LN	SA-995	J93345	2A		...	SUS316L
	S31000	F310	SA-1010	S41003	40, 50		...	SUS321
	S31600	F316	SA/EN 10028-7	...	X5 CrNi 18-10 [Note (1)]		...	SUS347
	S31603	F316L					...	SUS405

GENERAL NOTE: Maximum allowable stress values in tension for the materials listed in the above table are contained in Subpart 1 of Section II, Part D (see UG-23).

NOTES:
(1) X5 CrNi 18-10 shall be considered as Type 309 for the rules of this Part.
(2) X5 CrNiMo 17-12-2 shall be considered as Type 316 for the rules of this Part.

(13)

Table UHA-32-1
Postweld Heat Treatment Requirements for High Alloy Steels — P-No. 6

Material	Normal Holding Temperature, °F (°C), Minimum	Minimum Holding Time at Normal Temperature for Nominal Thickness [see UHA-32(d)]		
		Up to 2 in. (50 mm)	Over 2 in. to 5 in. (50 mm to 125 mm)	Over 5 in. (125 mm)
P-No. 6 Gr. Nos. 1, 2, 3	1400 (760)	1 hr/in. (25 mm), 15 min minimum	2 hr plus 15 min for each additional inch (25 mm) over 2 in. (50 mm)	2 hr plus 15 min for each additional inch (25 mm) over 2 in. (50 mm)

GENERAL NOTES:
(a) Postweld heat treatment is not required for vessels constructed of 'Type 410 material for SA-182 Grade F6a, SA-240, SA-268, and SA-479 with carbon content not to exceed 0.08% and welded with electrodes that produce an austenitic chromium–nickel weld deposit or a non-air-hardening nickel–chromium–iron weld deposit, provided the nominal thickness does not exceed $^3/_8$ in. (10 mm), and for nominal thicknesses over $^3/_8$ in. (10 mm) to $1^1/_2$ in. (38 mm) provided a preheat of 450°F (230°C) is maintained during welding and that the joints are completely radiographed.
(b) Postweld heat treatment shall be performed as prescribed in UW-40 and UCS-56(e).

Provided by IHS under license with ASME
No reproduction or networking permitted without license from IHS
Licensee=Chevron Phillips Chemical Co LP/5956674001
Not for Resale, 11/09/2014 20:41:36 MST

Table UHA-32-2
Postweld Heat Treatment Requirements for High Alloy Steels — P-No. 7

Material	Normal Holding Temperature, °F (°C), Minimum	Minimum Holding Time at Normal Temperature for Nominal Thickness [See UHA-32(d)]		
		Up to 2 in. (50 mm)	Over 2 in. to 5 in. (50 mm to 125 mm)	Over 5 in. (125 mm)
P-No. 7 Gr. Nos. 1, 2	1350 (730)	1 hr/in. (25 mm), 15 min minimum	2 hr plus 15 min for each additional inch (25 mm) over 2 in. (50 mm)	2 hr plus 15 min for each additional inch (25 mm) over 2 in. (50 mm)

GENERAL NOTES:

(a) Postweld heat treatment is not required for vessels constructed of SA-1010 UNS S41003 Type 405, Type 410S, or Type 430 Ti materials for SA-240 and SA-268 with carbon content not to exceed 0.08%, welded with electrodes that produce an austenitic–chromium–nickel weld deposit or a non-air-hardening nickel–chromium–iron weld deposit, provided the plate thickness at the welded joint does not exceed $^3/_8$ in. (10 mm) and for thicknesses over $^3/_8$ in. (10 mm) to $1^1/_2$ in. (38 mm) provided a preheat of 450°F (230°C) is maintained during welding and that the joints are completely radiographed.

(b) Postweld heat treatment shall be performed as prescribed in UW-40 and UCS-56(e) except that the cooling rate shall be a maximum of 100°F (56°C)/hr in the range above 1200°F (650°C) after which the cooling rate shall be sufficiently rapid to prevent embrittlement.

(c) Postweld heat treatment is not required for vessels constructed of Grade TP XM-8 material for SA-268 and SA-479 or of Grade TP 18Cr–2Mo for SA-240 and SA-268.

Table UHA-32-3
Postweld Heat Treatment Requirements for High Alloy Steels — P-No. 8

Material	Normal Holding Temperature, °F (°C), Minimum	Minimum Holding Time at Normal Temperature for Nominal Thickness [See UHA-32(d)]		
		Up to 2 in. (50 mm)	Over 2 in. to 5 in. (50 mm to 125 mm)	Over 5 in. (125 mm)
P-No. 8 Gr. Nos. 1, 2, 3, 4	...	...	...	...

GENERAL NOTE: Postweld heat treatment is neither required nor prohibited for joints between austenitic stainless steels of the P-No. 8 group. See Nonmandatory Appendix HA, UHA-100 through UHA-108, inclusive.

--`,,,``,,,```,,,,`,``,`,,`,,`,,```-`-`,,`,,`,`,,`---

Provided by IHS under license with ASME

No reproduction or networking permitted without license from IHS

Licensee=Chevron Phillips Chemical Co LP/5956674001
Not for Resale, 11/09/2014 20:41:36 MST

(13)

Table UHA-32-4
Postweld Heat Treatment Requirements for High Alloy Steels — P-No. 10H

Material	Normal Holding Temperature, °F (°C), Minimum	Minimum Holding Time at Normal Temperature for Nominal Thickness [See UHA-32(d)]		
		Up to 2 in. (50 mm)	Over 2 in. to 5 in. (50 mm to 125 mm)	Over 5 in. (125 mm)
P-No. 10H Gr. No. 1	...	...	...	...

GENERAL NOTE: For the austenitic-ferritic wrought or cast duplex stainless steels listed below, postweld heat treatment is neither required nor prohibited, but any heat treatment applied shall be performed as listed below and followed by liquid quenching or rapid cooling by other means:

Alloy	Postweld Heat Treatment Temperature, °F (°C)
J93345	2050 min. (1120 min.)
S31200, S31803, and S32550	1900 min. (1040 min.)
S31260	1870–2010 (1020–1100)
S31500	1785–1875 (975–1025)
S32202	1800–1975 (980–1080)
S32304	1800 min. (980 min.)
S32750	1880–2060 (1025–1125)
S32760	2010–2085 (1100–1140)
S32900 (0.08 max. C)	1725–1775 (940–970)
S32950	1825–1875 (995–1025)
S39274	1925–2100 (1050–1150)

Table UHA-32-5
Postweld Heat Treatment Requirements for High Alloy Steels — P-No. 10I

Material	Normal Holding Temperature, °F (°C), Minimum	Minimum Holding Time at Normal Temperature for Nominal Thickness [See UHA-32(d)]		
		Up to 2 in. (50 mm)	Over 2 in. to 5 in. (50 mm to 125 mm)	Over 5 in. (125 mm)
P-No. 10I Gr. No. 1	1350 (730)	1 hr/in. (25 mm), 15 min minimum	1 hr/in. (25 mm)	1 hr/in. (25 mm)

GENERAL NOTES:

(a) Postweld heat treatment shall be performed as prescribed in UW-40 and UCS-56(e) except that the cooling rate shall be a maximum of 100°F (56°C)/hr in the range above 1200°F (650°C) after which the cooling rate shall be rapid to prevent embrittlement.

(b) Postweld heat treatment is neither required nor prohibited for a thickness of ½ in. (13 mm) or less.

(c) For Alloy S44635, the rules for ferritic chromium stainless steel shall apply, except that postweld heat treatment is neither prohibited nor required. If heat treatment is performed after forming or welding, it shall be performed at 1850°F (1010°C) minimum followed by rapid cooling to below 800°F (430°C).

Provided by IHS under license with ASME
No reproduction or networking permitted without license from IHS
Licensee=Chevron Phillips Chemical Co LP/5956674001
Not for Resale, 11/09/2014 20:41:36 MST

Table UHA-32-6
Postweld Heat Treatment Requirements for High Alloy Steels — P-No. 10K

Material	Normal Holding Temperature, °F (°C), Minimum	Minimum Holding Time at Normal Temperature for Nominal Thickness [See UHA-32(d)]		
		Up to 2 in. (50 mm)	Over 2 in. to 5 in. (50 mm to 125 mm)	Over 5 in. (125 mm)
P-No. 10K Gr. No. 1	...	...	...	...

GENERAL NOTE: For Alloy S44660, the rules for ferritic chromium stainless steel shall apply, except that postweld heat treatment is neither required nor prohibited. If heat treatment is performed after forming or welding, it shall be performed at 1500°F to 1950°F (816°C to 1066°C) for a period not to exceed 10 min followed by rapid cooling.

UHA-33 RADIOGRAPHIC EXAMINATION

(a) The requirements for radiographing prescribed in UW-11, UW-51, and UW-52 shall apply in high alloy vessels, except as provided in (b) below. (See UHA-21.)

(b) Butt welded joints in vessels constructed of materials conforming to Type 405 welded with straight chromium electrodes, and to Types 410, 429, and 430 welded with any electrode, shall be radiographed in all thicknesses. The final radiographs of all straight chromium ferritic welds including major repairs to these welds shall be made after postweld heat treatment has been performed.

(c) Butt welded joints in vessels constructed of austenitic chromium–nickel stainless steels which are radiographed because of the thickness requirements of UW-11, or for lesser thicknesses where the joint efficiency reflects the credit for radiographic examination of Table UW-12, shall be radiographed following post heating if such is performed.

UHA-34 LIQUID PENETRANT EXAMINATION

All austenitic chromium–nickel alloy steel and austenitic/ferritic duplex steel welds, both groove and fillet, which exceed a nominal size of $^3/_4$ in. (19 mm), as defined in UW-40(f), shall be examined for the detection of cracks by the liquid penetrant method. This examination shall be made following heat treatment if heat treatment is performed. All cracks shall be eliminated.

FABRICATION

UHA-40 GENERAL

The rules in the following paragraphs apply specifically to the fabrication of pressure vessels and vessel parts that are constructed of high alloy steel and shall be used in conjunction with the general requirements for in Subsection A, and with the specific requirements for in Subsection B that pertain to the method of fabrication used.

UHA-42 WELD METAL COMPOSITION

Welds that are exposed to the corrosive action of the contents of the vessel should have a resistance to corrosion that is not substantially less than that of the base metal. The use of filler metal that will deposit weld metal with practically the same composition as the material joined is recommended. When the manufacturer is of the opinion that a physically better joint can be made by departure from these limits, filler metal of a different composition may be used provided the strength of the weld metal at the operating temperature is not appreciably less than that of the high alloy material to be welded, and the user is satisfied that its resistance to corrosion is satisfactory for the intended service. The columbium content of weld metal shall not exceed 1.00%, except that ENiCrMo-3, ERNiCrMo-3, and ENiCrMo-12 weld filler metal made to SFA-5.11 and SFA-5.14 may be used to weld S31254, S31603, S31703, S31725, and S31726 to a maximum design temperature of 900°F (482°C).

UHA-44 REQUIREMENTS FOR POSTFABRICATION HEAT TREATMENT DUE TO STRAINING (13)

(a) The following rules shall apply in addition to general rules for forming given in UHA-40.

(1) If the following conditions prevail, the cold formed areas of pressure-retaining components manufactured of austenitic alloys shall be solution annealed by heating at the temperatures given in Table UHA-44 for 20 min/in. (20 min/25 mm) of thickness or 10 min, whichever is greater, followed by rapid cooling:

(-a) the finishing-forming temperature is below the minimum heat-treating temperature given in Table UHA-44; and

(-b) the design metal temperature and the forming strains exceed the limits shown in Table UHA-44.

(2) Forming strains shall be determined by the equations in Table UG-79-1.

(b) When forming strains cannot be calculated as shown in (a) above, the Manufacturer shall have the responsibility to determine the maximum forming strain. For flares,

Provided by IHS under license with ASME
No reproduction or networking permitted without license from IHS
Licensee=Chevron Phillips Chemical Co LP/5956674001
Not for Resale, 11/09/2014 20:41:36 MST

Table UHA-44
Postfabrication Strain Limits and Required Heat Treatment

		Limitations in Lower Temperature Range			Limitations in Higher Temperature Range		
		For Design Temperature, °F (°C)					
Grade	UNS Number	Exceeding	But Less Than or Equal to	And Forming Strains Exceeding, %	For Design Temperature, °F (°C), Exceeding	And Forming Strains Exceeding, %	Minimum Heat-Treatment Temperature, °F (°C), When Design Temperature and Forming Strain Limits Are Exceeded [Note (1)] and [Note (2)]
201-1	S20100 heads	All	All	All	All	All	1,950 (1 065)
201-1	S20100 all others	All	All	4	All	4	1,950 (1 065)
201-2	S20100 heads	All	All	All	All	All	1,950 (1 065)
201-2	S20100 all others	All	All	4	All	4	1,950 (1 065)
201LN	S20153 heads	All	All	All	All	All	1,950 (1 065)
201LN	S20153 all others	All	All	4	All	4	1,950 (1 065)
204	S20400 heads	All	All	All	All	All	1,950 (1 065)
204	S20400 all others	All	All	4	All	4	1,950 (1 065)
304	S30400	1,075 (580)	1,250 (675)	20	1,250 (675)	10	1,900 (1 040)
304H	S30409	1,075 (580)	1,250 (675)	20	1,250 (675)	10	1,900 (1 040)
304L	S30403	1,075 (580)	1,250 (675)	20	1,250 (675)	10	1,900 (1 040)
304N	S30451	1,075 (580)	1,250 (675)	15	1,250 (675)	10	1,900 (1 040)
309S	S30908	1,075 (580)	1,250 (675)	20	1,250 (675)	10	2,000 (1 095)
310H	S31009	1,075 (580)	1,250 (675)	20	1,250 (675)	10	2,000 (1 095)
310S	S31008	1,075 (580)	1,250 (675)	20	1,250 (675)	10	2,000 (1 095)
316	S31600	1,075 (580)	1,250 (675)	20	1,250 (675)	10	1,900 (1 040)
316H	S31609	1,075 (580)	1,250 (675)	20	1,250 (675)	10	1,900 (1 040)
316N	S31651	1,075 (580)	1,250 (675)	15	1,250 (675)	10	1,900 (1 040)
321	S32100	1,000 (540)	1,250 (675)	15 [Note (3)]	1,250 (675)	10	1,900 (1 040)
321H	S32109	1,000 (540)	1,250 (675)	15 [Note (3)]	1,250 (675)	10	2,000 (1 095)
347	S34700	1,000 (540)	1,250 (675)	15	1,250 (675)	10	1,900 (1 040)
347H	S34709	1,000 (540)	1,250 (675)	15	1,250 (675)	10	2,000 (1 095)
347LN	S34751	1,000 (540)	1,250 (675)	15	1,250 (675)	10	1,900 (1 040)
348	S34800	1,000 (540)	1,250 (675)	15	1,250 (675)	10	1,900 (1 040)
348H	S34809	1,000 (540)	1,250 (675)	15	1,250 (675)	10	2,000 (1 095)

GENERAL NOTES:

(a) The limits shown are for cylinders formed from plates, spherical or dished heads formed from plate, and tube and pipe bends.

(b) When the forming strains cannot be calculated as shown in UHA-44(a), the forming strain limits shall be half those tabulated in this Table [see UHA-44(b)].

NOTES:

(1) Rate of cooling from heat-treatment temperature is not subject to specific control limits.

(2) While minimum heat-treatment temperatures are specified, it is recommended that the heat-treatment temperature range be limited to 150°F (85°C) above that minimum [250°F (140°C) for 347, 347H, 347LN, 348, and 348H].

(3) For simple bends of tubes or pipes whose outside diameter is less than 3.5 in. (88 mm), this limit is 20%.

Provided by IHS under license with ASME
No reproduction or networking permitted without license from IHS
Licensee=Chevron Phillips Chemical Co LP/5956674001
Not for Resale, 11/09/2014 20:41:36 MST

swages, or upsets, heat treatment in accordance with Table UHA-44 shall apply, regardless of the amount of strain.

INSPECTION AND TESTS

UHA-50 GENERAL

The rules in the following paragraphs apply specifically to the inspection and testing of pressure vessels and vessel parts that are constructed of high alloy steel and shall be used in conjunction with the general requirements for *Inspection and Tests* in Subsection A, and with the specific requirements for *Inspection and Tests* in Subsection B that pertain to the method of fabrication used.

(13) UHA-51 IMPACT TESTS

Impact tests, as prescribed in (a), shall be performed on materials listed in Table UHA-23 for all combinations of materials and minimum design metal temperatures (MDMTs) except as exempted in (d), (e), (f), (g), (h), or (i). Impact testing is required for UNS S17400 materials. Impact tests are not required where the maximum obtainable Charpy specimen has a width along the notch less than 0.099 in. (2.5 mm). See Figures JJ-1.2-1 through JJ-1.2-5 for flowchart illustrations of impact testing requirements.

(a) Required Impact Testing of Base Metal, Heat-Affected Zones, and Weld Metal

(1) Impact test shall be made from sets of three specimens. A set shall be tested from the base metal, a set shall be tested from the heat affected zone (HAZ), and a set shall be tested from the weld metal. Specimens shall be subjected to the same thermal treatments[82] as the part or vessel that the specimens represent. Test procedures, size, location, and orientation of the specimens shall be the same as required in UG-84.

(2) Each of the three specimens tested in each set shall have a lateral expansion opposite the notch not less than 0.015 in. (0.38 mm) for MDMTs of −320°F (−196°C) and warmer.

(3) When the MDMT is −320°F (−196°C) and warmer, and the value of lateral expansion for one specimen of a set is less than 0.015 in. (0.38 mm) but not less than 0.010 in. (0.25 mm), a retest of three additional specimens may be made, each of which must equal or exceed 0.015 in. (0.38 mm). Such a retest shall be permitted only when the average value of the three specimens equals or exceeds 0.015 in. (0.38 mm). If the required values are not obtained in the retest or if the values in the initial test are less than minimum required for retest, the material may be reheat treated. After reheat treatment, new sets of specimens shall be made and retested; all specimens must meet the lateral expansion value of 0.015 in. minimum.

(4) When the MDMT is colder than −320°F (−196°C), production welding processes shall be limited to shielded metal arc welding (SMAW), gas metal arc welding (GMAW), submerged arc welding (SAW), plasma arc welding (PAW), and gas tungsten arc welding (GTAW). Each heat, lot, or batch of filler metal and filler metal/flux combination shall be pre-use tested as required by (f)(4)(-a) through (f)(4)(-c). Exemption from pre-use testing as allowed by (f)(4)(-d) and (f)(4)(-e) is not applicable. Notch toughness testing shall be performed as specified in (-a) or (-b) below, as appropriate.

(-a) If using Type 316L weld filler metal, or Type 308L filler metal welded with the GTAW or GMAW process

(-1) a weld metal deposited from each heat of Type 316L filler metal shall have a Ferrite Number (FN) not greater than 5, and a weld metal deposited from each heat of Type 308L filler metal shall have a FN in the range of 4 to 14, as measured by a ferritescope or magna gauge calibrated in accordance with AWS A4.2, or as determined by applying the chemical composition from the test weld to Figure UHA-51-1

(-2) impact tests shall be conducted at −320°F (−196°C) on three sets of three specimens: one set from the base metal, one set from the weld metal, and one set from the HAZ

(-3) each of the three specimens from each test set shall have a lateral expansion opposite the notch not less than 0.021 in. (0.53 mm)

(-b) When the qualifying conditions of (-a) cannot be met

(-1) a weld metal deposited from each heat or lot of austenitic stainless steel filler metal used in production shall have a FN not greater than the FN determined for the test weld.

(-2) impact tests shall be conducted at −320°F (−196°C) on a set of three specimens from the base metal. Each of three specimens shall have a lateral expansion opposite the notch not less than 0.021 in. (0.53 mm).

(-3) ASTM E 1820 J_{IC} tests shall be conducted on two sets of two specimens, one set from the HAZ, one set from the weld metal, at a test temperature no warmer than MDMT. The HAZ specimen orientation shall be T-L. A $K_{IC}(J)$ value of not less than 120 $\text{ksi}\sqrt{\text{in.}}$ (132 $\text{MPa}\sqrt{\text{m}}$) is required for all specimens tested.

(-c) When the required Charpy impact test specimens do not meet the lateral expansion requirements in (-a)(-3) or (-b)(-2), ASTM E1820 J_{IC} tests shall be conducted on an additional set of two specimens representing the failed set of impact test specimens at a test temperature no warmer than MDMT. The specimen orientation for the base metal and HAZ shall be T-L. A $K_{IC}(J)$ value of not less than 120 $\text{ksi}\sqrt{\text{in.}}$ (132 $\text{MPa}\sqrt{\text{m}}$) is required for all specimens tested.

(b) Required Impact Testing for Welding Procedure Qualifications. For welded construction the Welding Procedure Qualification shall include impact tests of welds

Provided by IHS under license with ASME
No reproduction or networking permitted without license from IHS
Licensee=Chevron Phillips Chemical Co LP/5956674001
Not for Resale, 11/09/2014 20:41:36 MST

(13)

Figure UHA-51-1
Weld Metal Delta Ferrite Content

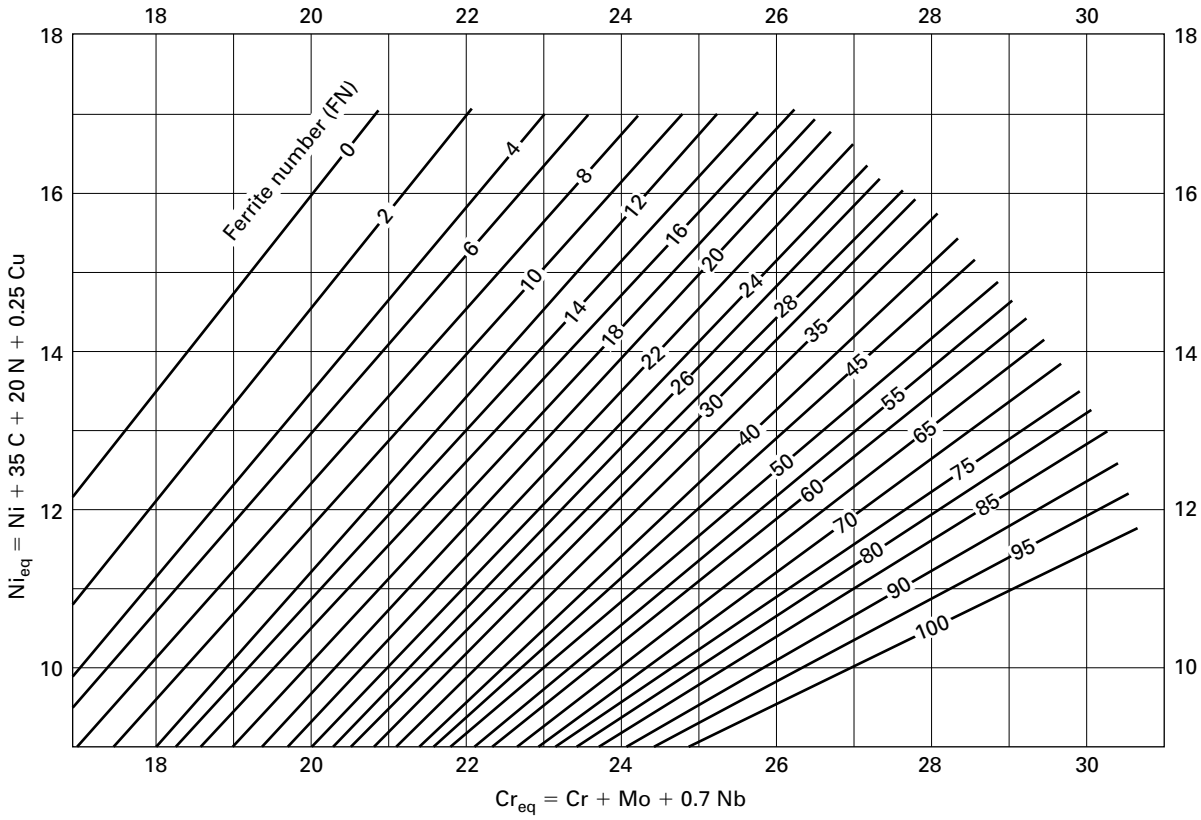

GENERAL NOTES:

(a) The actual nitrogen content is preferred. If this is not available, the following applicable nitrogen value shall be used:

(1) GMAW welds — 0.08%, except that when self shielding flux cored electrodes are used — 0.12%

(2) Welds made using other processes — 0.06%.

(b) This diagram is identical to the WRC-1992 Diagram, except that the solidification mode lines have been removed for ease of use.

and HAZs made in accordance with UG-84(h) and with the requirements of (a), when any of the components[83] of the welded joint are required to be impact tested by the rules of this Division.

(c) Required Impact Testing When Thermal Treatments Are Performed. Impact tests are required at the colder of 70°F (20°C) or the MDMT, whenever thermal treatments[82] within the temperature ranges listed for the following materials are applied:

(1) austenitic stainless steels thermally treated at temperatures between 900°F (480°C) and 1650°F (900°C); however, Types 304, 304L, 316, and 316L that are thermally treated at temperatures between 900°F (480°C) and 1300°F (705°C) are exempt from impact testing provided the MDMT is −20°F (−29°C) or warmer and vessel (production) impact tests of the thermally treated weld metal are performed for Category A and B joints;

(2) austenitic-ferritic duplex stainless steels thermally treated at temperatures between 600°F (315°C) and 1750°F (955°C);

(3) ferritic chromium stainless steels thermally treated at temperatures between 800°F (425°C) and 1,350°F (730°C);

(4) martensitic chromium stainless steels thermally treated at temperatures between 800°F (425°C) and 1,350°F (730°C).

(d) Exemptions from Impact Testing for Base Metals and HAZs. Impact testing is not required for Table UHA-23 base metals for the following combinations of base metals and HAZs (if welded) and MDMTs, except as modified in (c):

(1) for austenitic chromium–nickel stainless steels as follows:

(-a) having a carbon content not exceeding 0.10% at MDMTs of −320°F (−196°C) and warmer;

(-b) having carbon content exceeding 0.10% at MDMTs of −55°F (−48°C) and warmer;

(-c) for castings at MDMTs of −20°F (−29°C) and warmer;

Provided by IHS under license with ASME
No reproduction or networking permitted without license from IHS
Licensee=Chevron Phillips Chemical Co LP/5956674001
Not for Resale, 11/09/2014 20:41:36 MST

(2) for austenitic chromium–manganese–nickel stainless steels (200 series) as follows:

(-a) having a carbon content not exceeding 0.10% at MDMTs of −320°F (−196°C) and warmer;

(-b) having a carbon content exceeding 0.10% at MDMTs of −55°F (−48°C) and warmer;

(-c) for castings at MDMTs of −20°F (−29°C) and warmer;

(3) for the following steels in all product forms at MDMTs of −20°F (−29°C) and warmer:

(-a) austenitic ferritic duplex steels with a nominal material thickness of $^3/_8$ in. (10 mm) and thinner;

(-b) ferritic chromium stainless steels with a nominal material thickness of $^1/_8$ in. (3 mm) and thinner;

(-c) martensitic chromium stainless steels with a nominal material thickness of $^1/_4$ in. (6 mm) and thinner.

Carbon content as used in (1) and (2) above is as specified by the purchaser and must be within the limits of the material specification.

(e) Exemptions from Impact Testing for Welding Procedure Qualifications. For Welding Procedure Qualifications, impact testing is not required for the following combinations of weld metals and MDMTs except as modified in (c):

(1) for austenitic chromium–nickel stainless steel base materials having a carbon content not exceeding 0.10% welded without the addition of filler metal, at MDMTs of −155°F (−104°C) and warmer;

(2) for austenitic weld metal:

(-a) having a carbon content not exceeding 0.10% and produced with filler metals conforming to SFA-5.4, SFA-5.9, SFA-5.11, SFA-5.14, and SFA-5.22 at MDMTs of −155°F (−104°C) and warmer;

(-b) having a carbon content exceeding 0.10% and produced with filler metals conforming to SFA-5.4, SFA-5.9, SFA-5.11, SFA-5.14, and SFA-5.22 at MDMTs of −55°F (−48°C) and warmer;

(3) for the following weld metal, when the base metal of similar chemistry is exempt as stated in (d)(3), then the weld metal shall also be exempt at MDMTs of −20°F (−29°C) and warmer:

(-a) austenitic ferritic duplex steels;

(-b) ferritic chromium stainless steels;

(-c) martensitic chromuim stainless steels.

Carbon content as used in (2) above is for weld metal produced with the addition of filler metal.

(f) Required Impact Testing for Austenitic Stainless Steel Welding Consumables With MDMTs Colder Than −155°F (−104°C). For production welds at MDMTs colder than −155°F (−104°C), all of the following conditions shall be satisfied:

(1) The welding processes are limited to SMAW, SAW, GMAW, GTAW, and PAW.

(2) The applicable Welding Procedure Specifications (WPSs) are supported by Procedure Qualification Records (PQRs) with impact testing in accordance with the requirements of (a) at the MDMT or colder, or when the applicable PQR is exempted from impact testing by other provisions of this Division.

(3) The weld metal (produced with or without the addition of filler metal) has a carbon content not exceeding 0.10%.

(4) The weld metal is produced by filler metal conforming to SFA-5.4, SFA-5.9, SFA-5.11, SFA-5.14, and SFA-5.22 as modified below.

(-a) Each heat and/or lot of welding consumables to be used in production welding with the SMAW and GMAW processes shall be pre-use tested by conducting impact tests at the MDMT or colder. Test coupons shall be prepared in accordance with Section II, Part C, SFA-5.4, A9.3.5 utilizing the WPS to be used in production welding. Acceptance criteria shall conform with (a).

(-b) Each heat of filler metal and batch of flux combination to be used in production welding with the SAW process shall be pre-use tested by conducting impact tests at the MDMT or colder. Test coupons shall be prepared in accordance with Section II, Part C, SFA-5.4, A9.3.5 utilizing the WPS to be used in production welding. Acceptance criteria shall conform with (a).

(-c) Combining more than one welding process or more than one heat, lot, and/or batch of welding material into a single test coupon is unacceptable. Pre-use testing at the MDMT or colder may be conducted by the welding consumable manufacturer, provided certified mill test reports are furnished with the consumables.

(-d) The following filler metals may be used without pre-use testing of each heat, lot, and/or batch, provided that procedure qualification impact testing in accordance with UG-84(h) at the MDMT or colder is performed using the same manufacturer brand and type filler metal: ENiCrFe-2, ENiCrFe-3, ENiCrMo-3, ENiCrMo-4, ENiCrMo-6, ERNiCr-3, ERNiCrMo-3, ERNiCrMo-4, SFA-5.4 E310-15 or 16.

(-e) The following filler metals may be used without pre-use testing of each heat and/or lot, provided that procedure qualification impact testing in accordance with UG-84(h) at the MDMT or colder is performed: ER308L, ER316L, and ER310 used with the GTAW or PAW processes.

(g) Exemption From Impact Testing Because of Low Stress. Impact testing of materials listed in Table UHA-23 is not required, except as modified by (c), for vessels when the coincident ratio of design stress[84] in tension to allowable tensile stress is less than 0.35. This exemption also applies to the welding procedures and production welds for the component.

(h) Vessel (Production) Impact Tests

(1) For welded construction of duplex stainless steels, ferritic stainless steels, and martensitic stainless steels, vessel (production) impact tests in accordance with UG-84(i) are required if the Weld Procedure Qualification requires impact testing, unless otherwise exempted by the rules of this Division.

Provided by IHS under license with ASME
No reproduction or networking permitted without license from IHS
Licensee=Chevron Phillips Chemical Co LP/5956674001
Not for Resale, 11/09/2014 20:41:36 MST

(2) For welded construction of austenitic stainless steels, the following rules apply:

(-a) At MDMTs of −155°F (−104°C) and warmer, vessel (production) impact tests are exempted provided that the impact test exemption requirements for the applicable Weld Procedure Qualification in (e) are satisfied.

(-b) At MDMTs colder than −155°F (−104°C) but not colder than −320°F (−196°C), vessel (production) impact tests are exempted provided that the preuse test requirements in (f) are satisfied.

(-c) At MDMTs colder than −320°F (−196°C), vessel (production) impact tests or ASTM E1820 J_{Ic} tests shall be conducted in accordance with (a)(4).

(i) Vessel (Production) Impact Tests for Autogenous Welds in Austenitic Stainless Steels. For autogenous welds (welded without filler metal) in austenitic stainless steels, vessel (production) impact tests are not required when both of the following conditions are satisfied:

(1) The material is solution annealed after welding.

(2) The MDMT is not colder than −320°F (−196°C).

UHA-52 WELDED TEST PLATES

(a) For welded vessels constructed of Type 405 material which are not postweld heat treated, welded test plates shall be made to include material from each melt of plate steel used in the vessel. Plates from two different melts may be welded together and be represented by a single test plate.

(b) From each welded test plate there shall be taken two face-bend test specimens as prescribed in QW-461.2 of Section IX; these shall meet the requirements of QW-160, Section IX.

MARKING AND REPORTS

UHA-60 GENERAL

The provisions for marking and reports in UG-115 through UG-120 shall apply without supplement to vessels constructed of high alloy steels.

PRESSURE RELIEF DEVICES

UHA-65 GENERAL

The provisions for pressure relief devices given in UG-125 through UG-136 shall apply without supplement to vessels constructed of high alloy steels.

Provided by IHS under license with ASME
No reproduction or networking permitted without license from IHS
Licensee=Chevron Phillips Chemical Co LP/5956674001
Not for Resale, 11/09/2014 20:41:36 MST

NONMANDATORY APPENDIX HA SUGGESTIONS ON THE SELECTION AND TREATMENT OF AUSTENITIC CHROMIUM–NICKEL AND FERRITIC AND MARTENSITIC HIGH CHROMIUM STEELS (INFORMATIVE AND NONMANDATORY)

UHA-100 GENERAL

The selection of the proper metal composition to resist a given corrosive medium and the choice of the proper heat treatment and surface preparation of the material selected are not within the scope of this Division. Nonmandatory Appendix A, A-310 to A-360, of Section II, Part D discusses some of the factors that should be considered in arriving at a proper selection.

UHA-101 STRUCTURE

See Nonmandatory Appendix A, A-310, of Section II, Part D.

UHA-102 INTERGRANULAR CORROSION

See Nonmandatory Appendix A, A-320, of Section II, Part D.

UHA-103 STRESS CORROSION CRACKING

See Nonmandatory Appendix A, A-330, of Section II, Part D.

UHA-104 SIGMA PHASE EMBRITTLEMENT

See Nonmandatory Appendix A, A-340, of Section II, Part D.

UHA-105 HEAT TREATMENT OF AUSTENITIC CHROMIUM–NICKEL STEELS

See Nonmandatory Appendix A, A-350, of Section II, Part D.

UHA-107 DISSIMILAR WELD METAL

The difference between the coefficients of expansion of the base material and the weld should receive careful consideration before undertaking the welding of ferritic type stainless steels with austenitic electrodes for services involving severe temperature conditions, particularly those of a cyclic nature.

UHA-108 FABRICATION

It is recommended that the user of austenitic chromium–nickel steel vessels in corrosive service consider the following additional fabrication test.

A welded guided-bend test specimen should be made as prescribed in QW-161.2 of Section IX from one of the heats of material used in the shell. The test plate should be welded by the procedure used in the longitudinal joints of the vessel and should be heat treated using the same temperature cycle as used for the vessel. The operations on the test plate should be such as to duplicate as closely as possible the physical conditions of the material in the vessel itself.

Grind and polish the specimen and immerse it for not less than 72 hr in a boiling solution consisting of 47 ml concentrated sulfuric acid and 13 g of crystalline copper sulfate ($CuSO_4 \cdot 5H_2O$) per liter of water. Then bend the specimen so as to produce an elongation of not less than 20% at a section in the base metal $\frac{1}{4}$ in. (6 mm) from the edge of the weld. The metal shall show no sign of disintegration after bending.

UHA-109 885°F (475°C) EMBRITTLEMENT

See Nonmandatory Appendix A, A-360, of Section II, Part D.

Provided by IHS under license with ASME
No reproduction or networking permitted without license from IHS
Licensee=Chevron Phillips Chemical Co LP/5956674001
Not for Resale, 11/09/2014 20:41:36 MST

PART UCI
REQUIREMENTS FOR PRESSURE VESSELS CONSTRUCTED OF CAST IRON

GENERAL

UCI-1 SCOPE

The rules in Part UCI are applicable to pressure vessels and vessel parts that are constructed of cast iron, cast nodular iron having an elongation of less than 15% in 2 in. (50 mm), or of cast dual metal (see UCI-23 and UCI-29) except standard pressure parts covered by UG-11(b), and shall be used in conjunction with the general requirements in Subsection A insofar as these requirements are applicable to cast material.

UCI-2 SERVICE RESTRICTIONS

Cast iron vessels shall not be used for services as follows:

(a) to contain lethal[85] or flammable substances, either liquid or gaseous;

(b) for unfired steam boilers as defined in U-1(g);

(c) for direct firing [see UW-2(d)].

UCI-3 PRESSURE–TEMPERATURE LIMITATIONS

(a) The design pressure for vessels and vessel parts constructed of any of the classes of cast iron listed in Table UCI-23 shall not exceed the following values except as provided in (b) and (c) below:

(1) 160 psi (1.1 MPa) at temperatures not greater than 450°F (230°C) for vessels containing gases, steam, or other vapors;

(2) 160 psi (1.1 MPa) at temperatures not greater than 375°F (190°C) for vessels containing liquids;

(3) 250 psi (1.7 MPa) for liquids at temperatures less than their boiling point at design pressure, but in no case at temperatures exceeding 120°F (50°C);

(4) 300 psi (2 MPa) at temperatures not greater than 450°F (230°C) for bolted heads, covers, or closures that do not form a major component of the pressure vessel.

(b) Vessels and vessel parts constructed of stress relieved material conforming to Classes 40 through 60 of SA-278 may be used for design pressures up to 250 psi (1.7 MPa) at temperatures up to 650°F (345°C), provided the distribution of metal in the pressure containing walls of the casting is shown to be approximately uniform.

(c) Vessels and vessel parts constructed of stress relieved material conforming to SA-476 may be used for design pressures up to 250 psi (1.7 MPa) at temperatures up to 450°F (230°C).

(d) Cast iron flanges and flanged fittings conforming to ASME B16.1, Cast Iron Pipe Flanges and Flanged Fittings, Classes 125 and 250, may be used in whole or in part of a pressure vessel for pressures not exceeding the American National Standard ratings at temperatures not exceeding 450°F (230°C).

MATERIALS

UCI-5 GENERAL

All cast iron material subject to stress due to pressure shall conform to one of the specifications given in Section II and shall be limited to those listed in Table UCI-23 except as otherwise provided in UG-11.

UCI-12 BOLT MATERIALS

The requirements for bolts, nuts, and washers shall be the same as for carbon and low alloy steels in UCS-10 and UCS-11.

DESIGN

UCI-16 GENERAL

The rules in the following paragraphs apply specifically to the design of pressure vessels and pressure vessel parts of cast iron and shall be used in conjunction with the general requirements for *Design* in Subsection A, insofar as these requirements are applicable to cast materials.

For components for which the Code provides no design rules, the provisions of UG-19(b) and UG-19(c) apply. If a proof test is performed, the rules of UCI-101 apply.

UCI-23 MAXIMUM ALLOWABLE STRESS VALUES

(a) Table UCI-23 gives the maximum allowable stress values in tension at the temperatures indicated for castings conforming to the specifications listed therein. For dual metal cylinders conforming to SA-667 or SA-748, the maximum calculated stress, including all applicable loadings of UG-22, shall not exceed the allowable stress given in Table UCI-23 computed on the basis of the gray cast iron thickness of the cylinder.

(b) The maximum allowable stress value in bending shall be $1\frac{1}{2}$ times that permitted in tension, and the maximum allowable stress value in compression shall be two times that permitted in tension.

Provided by IHS under license with ASME
No reproduction or networking permitted without license from IHS
Licensee=Chevron Phillips Chemical Co LP/5956674001
Not for Resale, 11/09/2014 20:41:36 MST

Table UCI-23
Maximum Allowable Stress Values in Tension for Cast Iron

Spec. No.	Class	Specified Min. Tensile Strength, ksi (MPa)	Maximum Allowable Stress, ksi (MPa), for Metal Temperature Not Exceeding 450°F (230°C) and Colder	650°F (345°C)	Ext. Press. Chart Fig. No. [Note (1)]
SA-667	...	20 (138)	2.0 (13.8)	...	CI-1
SA-278	20	20 (138)	2.0 (13.8)	...	CI-1
SA-278	25	25 (172)	2.5 (17.2)	...	CI-1
SA-278	30	30 (207)	3.0 (20.7)	...	CI-1
SA-278	35	35 (241)	3.5 (24.1)	...	CI-1
SA-278	40	40 (276)	4.0 (27.6)	4.0 (27.6)	CI-1
SA-278	45	45 (310)	4.5 (31.0)	4.5 (31.0)	CI-1
SA-278	50	50 (345)	5.0 (34.5)	5.0 (34.5)	CI-1
SA-47	(Grade 3-2510)	50 (345)	5.0 (34.5)	5.0 (34.5)	CI-1
SA-278	55	55 (379)	5.5 (37.9)	5.5 (37.9)	CI-1
SA-278	60	60 (414)	6.0 (41.4)	6.0 (41.4)	CI-1
SA-476	...	80 (552)	8.0 (55.2)	...	CI-1
SA-748	20	16 (110)	1.6 (11.0)	...	CI-1
SA-748	25	20 (138)	2.0 (13.8)	...	CI-1
SA-748	30	24 (165)	2.4 (16.5)	...	CI-1
SA-748	35	28 (193)	2.8 (19.3)	...	CI-1

NOTE:
(1) Figure CI-1 is contained in Subpart 3 of Section II, Part D.

(13) **UCI-28 THICKNESS OF SHELLS UNDER EXTERNAL PRESSURE**

Cylindrical and spherical shells under external pressure shall be designed by the rules in UG-28, using the applicable figures in Subpart 3 of Section II, Part D and the temperature limits of UG-20(c).

UCI-29 DUAL METAL CYLINDERS

The minimum wall thickness of dual metal cylinders conforming to SA-667 or SA-748 shall be 5 in. (125 mm), and the outside diameter of such cylinders shall not exceed 36 in. (900 mm).

UCI-32 HEADS WITH PRESSURE ON CONCAVE SIDE

Heads with pressure on the concave side (plus heads) shall be designed in accordance with the equations in UG-32 using the maximum allowable stress value in tension.

UCI-33 HEADS WITH PRESSURE ON CONVEX SIDE

The thickness of heads with pressure on the convex side (minus heads) shall not be less than the thickness required in UCI-32 for plus heads under the same pressure nor less than 0.01 times the inside diameter of the head skirt.

UCI-35 SPHERICALLY SHAPED COVERS (HEADS)

(a) Circular cast iron spherically shaped heads with bolting flanges, similar to Figure 1-6 sketches (b), (c), and (d), shall be designed in accordance with the provisions in 1-6, except that corners and fillets shall comply with the requirements of UCI-37.

(b) Circular cast iron spherically shaped heads with bolting flanges other than those described in (a) above shall be designed in accordance with the following requirements.

(1) The head thickness shall be determined in accordance with the requirements in UG-32.

(2) The spherical and knuckle radii shall conform to the requirements in UG-32.

(3) Cast iron flanges and flanged fittings conforming to ASME B16.1 [see UG-44(a)] may be used in whole or in part of a pressure vessel for pressures not exceeding American National Standard ratings at temperatures not exceeding 450°F (232°C). Other flanges may be designed in accordance with the provisions of Mandatory Appendix 2 using the allowable stress values in bending.

UCI-36 OPENINGS AND REINFORCEMENTS

(a) The dimensional requirements in UG-36 through UG-46 are applicable to cast iron and shall be used in the design of openings and reinforcements in pressure vessels and pressure vessel parts which are cast integrally with the vessel or vessel part. In no case shall the

Provided by IHS under license with ASME
No reproduction or networking permitted without license from IHS
Licensee=Chevron Phillips Chemical Co LP/5956674001
Not for Resale, 11/09/2014 20:41:36 MST

thickness of the reinforcement, including the nominal thickness of the vessel wall, exceed twice the nominal thickness of the vessel wall.

(b) Cast iron flanges, nozzles, and openings shall not be attached to steel or nonferrous pressure vessels or pressure parts by welding or brazing, nor shall they be considered to contribute strength to the vessel or part.

UCI-37 CORNERS AND FILLETS

A liberal radius shall be provided at projecting edges and in reentrant corners in accordance with good foundry practice. Abrupt changes in surface contour and in wall thickness at junctures shall be avoided. Fillets shall conform to the following.

(a) Fillets forming the transition between the pressure containing walls and integral attachments, such as brackets, lugs, supports, nozzles, flanges, and bosses, shall have a radius not less than one-half the thickness of the pressure containing wall adjacent to the attachment.

FABRICATION

UCI-75 GENERAL

The rules in the following paragraphs apply specifically to the fabrication of pressure vessels and vessel parts of cast iron and shall be used in conjunction with the general requirements for in Subsection A insofar as these requirements are applicable to cast materials.

UCI-78 REPAIRS IN CAST IRON MATERIALS

(a) Imperfections that permit leakage in cast iron materials may be repaired by using threaded plugs provided:

(1) the vessel or vessel parts are to operate within the limits of UCI-3(a) or UCI-3(b);

(2) no welding is performed;

(3) the diameter of the plug shall not exceed the diameter of a standard NPS 2 pipe plug;

(4) the plugs, where practical, shall conform in all dimensions to standard NPS pipe plugs, and in addition they shall have full thread engagement corresponding to the thickness of the repaired section. (See Table UCI-78.1.) Where a tapered plug is impractical because of excess wall thickness in terms of plug diameter and coincident thread engagement, other types of plugs may be used provided both full thread engagement and effective sealing against pressure are obtained. Where possible, the ends of the plug should be ground smooth after installation to conform to the inside and outside contours of the walls of the pressure vessel or pressure part;

(5) the material from which the plug is manufactured shall conform in all respects to the material specification which applies to the pressure vessel or pressure vessel part;

Table UCI-78.1

NPS Plug or Equivalent	Minimum Thickness of Repaired Section, in. (mm)
1/8	11/32 (9)
1/4	7/16 (11)
3/8	1/2 (13)
1/2	21/32 (17)
3/4	3/4 (19)
1	13/16 (21)
1 1/4	7/8 (22)
1 1/2	15/16 (24)
2	1 (25)

(6) the machined surface of the drilled or bored hole before tapping shall be free from visible defects and the adjacent metal shown to be sound by radiographic examination;

(7) the thickness of any repaired section in relation to the size of plug used shall not be less than that given in Table UCI-78.1;

(8) the minimum radius of curvature of repaired sections of cylinders or cones in relation to the size of plug used shall not be less than that given in Table UCI-78.2;

(9) the ligament efficiency between any two adjacent plugs shall not be less than 80% where

$$E = \frac{p - \left(\frac{d_1 + d_2}{2}\right)}{p}$$

where

E = ligament efficiency
p = distance between plug centers
d_1, d_2 = respective diameters of the two plugs under consideration

Table UCI-78.2

NPS Plug or Equivalent	Minimum Radius of Curvature of Cylinder or Cone, in. (mm)
1/8	9/16 (14)
1/4	11/16 (17)
3/8	1 1/16 (27)
1/2	1 1/4 (32)
3/4	2 (50)
1	2 1/2 (64)
1 1/4	4 (100)
1 1/2	5 1/4 (134)
2	8 1/8 (207)

--`,,,``,,``,,,,,`,``,``,,`,,`,,```-`-`,,`,,`,`,,`---
Provided by IHS under license with ASME
No reproduction or networking permitted without license from IHS
Licensee=Chevron Phillips Chemical Co LP/5956674001
Not for Resale, 11/09/2014 20:41:36 MST

(10) the pressure vessel or pressure vessel part meets the standard hydrostatic test prescribed in UCI-99.

(b) Surface imperfections, such as undue roughness, which do not permit leakage in cast iron materials may be repaired using driven plugs provided:

(1) the vessel or vessel parts operate within the limits of UCI-3(a)(1), UCI-3(a)(2), or UCI-3(a)(4);

(2) no welding is performed;

(3) the material from which the plug is manufactured conforms in all respects to the material specification which applies to the pressure vessel or pressure vessel part;

(4) the depth of the plug is not greater than 20% of the thickness of the section and its diameter is not greater than the larger of $^3/_8$ in. (10 mm) or 20% of the thickness of the section;

(5) the pressure vessel or pressure vessel part meets the standard hydrostatic test prescribed in UCI-99.

(c) Surface imperfections, such as undue roughness, which do not permit leakage in cast iron vessels that are to operate under the limits of UCI-3(a)(3) may be repaired under (a) or (b) above or by welding. Where welding is used, the weld and the metal adjacent to it shall be examined by either the magnetic particle or liquid penetrant method and shown to be free of linear indications.

INSPECTION AND TESTS

UCI-90 GENERAL

The rules in the following paragraphs apply specifically to the inspection and testing of pressure vessels and vessel parts of cast iron and shall be used in conjunction with the general requirements for *Inspection and Tests* in Subsection A insofar as these requirements are applicable to cast material.

(13) UCI-99 STANDARD HYDROSTATIC TEST

(a) Cast iron pressure vessels shall be hydrostatically tested by the method prescribed in UG-99 except that the test pressure shall be two times the maximum allowable working pressure to be marked on the vessel for maximum allowable working pressures greater than 30 psi (200 kPa) and $2^1/_2$ times the maximum allowable working pressure but not to exceed 60 psi (400 kPa) for maximum allowable working pressure under 30 psi (200 kPa).

(b) Cast iron pressure vessels and cast iron pressure vessel parts shall not be painted or otherwise coated either internally or externally prior to the hydrostatic pressure test.

UCI-101 HYDROSTATIC TEST TO DESTRUCTION

(a) The maximum allowable working pressure of identical cast iron vessels or vessel parts, based on testing one of them to destruction, limited to the service conditions specified in UCI-3 and in accordance with UG-101(m) shall be

$$P_R = \frac{P_B}{6.67} \times \frac{(\text{specified minimum tensile strength})}{(\text{avg. tensile strength of test specimens})}$$

where

P_B = destruction test pressure

P_R = maximum allowable working pressure at operating temperatures listed in Table UCI-23

The principle of UG-101(c) shall be followed.

NOTE: It is assumed that failure will occur in bending.

(b) The value of the average tensile strength of test specimens in the foregoing equation shall be determined from the test results of three test bars from the same ladle of iron as used in the part, or from three test specimens cut from the part.

(c) All vessels or vessel parts of the same material, design, and construction, whose maximum allowable working pressure is based on a test to destruction of a sample vessel in accordance with (a) above, shall be considered to have a design pressure equal to the maximum allowable working pressure thus determined, except as limited by the rules of UCI-3, and shall be subjected to a hydrostatic test pressure in conformity with the rules of UCI-99.

MARKING AND REPORTS

UCI-115 GENERAL

The provisions for marking and reports in UG-115 through UG-120 shall apply without supplement to vessels constructed of cast iron.

PRESSURE RELIEF DEVICES

UCI-125 GENERAL

The provisions for pressure relief devices in UG-125 through UG-136 shall apply without supplement to vessels constructed of cast iron.

Provided by IHS under license with ASME
No reproduction or networking permitted without license from IHS
Licensee=Chevron Phillips Chemical Co LP/5956674001
Not for Resale, 11/09/2014 20:41:36 MST

PART UCL
REQUIREMENTS FOR WELDED PRESSURE VESSELS CONSTRUCTED OF MATERIAL WITH CORROSION RESISTANT INTEGRAL CLADDING, WELD METAL OVERLAY CLADDING, OR WITH APPLIED LININGS

GENERAL

UCL-1 SCOPE

The rules in Part UCL are applicable to pressure vessels or vessel parts that are constructed of base material with corrosion resistant integral or weld metal overlay cladding and to vessels and vessel parts that are fully or partially lined inside or outside with corrosion resistant plate, sheet, or strip, attached by welding to the base plates before or after forming or to the shell, heads, and other parts during or after assembly into the completed vessel.[13] These rules shall be used in conjunction with the general requirements in Subsection A and with the specific requirements in the applicable Parts of Subsection B.

UCL-2 METHODS OF FABRICATION

Vessels and vessel parts of base material with corrosion resistant integral or weld metal overlay cladding construction shall be fabricated by welding. Corrosion resistant linings may be attached by welding to vessels fabricated by any method of construction permitted under the rules of this section.

UCL-3 CONDITIONS OF SERVICE

Specific chemical compositions, heat treatment procedures, fabrication requirements, and supplementary tests may be required to assure that the vessel will be suitable for the intended service. This is particularly true for vessels subject to severe corrosive conditions, and also those vessels operating in a cyclic temperature service. These rules do not indicate the selection of an alloy suitable for the intended service or the amount of the corrosion allowance to be provided. See also informative and nonmandatory guidance regarding metallurgical phenomena in Nonmandatory Appendix A of Section II, Part D.

It is recommended that users assure themselves by appropriate tests, or otherwise, that the alloy material selected and its heat treatment during fabrication will be suitable for the intended service.

NOTE: Attention is called to the difficulties that have been experienced in welding materials differing greatly in chemical composition. Mixtures of uncertain chemical composition and physical properties are produced at the line of fusion. Some of these mixtures are brittle and may give rise to cracks during solidification or afterward. To avoid weld embrittlement, special care is required in the selection of lining material and welding electrodes, and in the application of controls over the welding process and other fabrication procedures.

MATERIALS

UCL-10 GENERAL

The base materials used in the construction of clad vessels and of those having applied corrosion linings shall comply with the requirements for materials given in UCS-5, UF-5, UHT-5, or ULW-5.

UCL-11 INTEGRAL AND WELD METAL OVERLAY CLAD MATERIAL

(a) Clad material used in constructions in which the design calculations are based on the total thickness including cladding [see UCL-23(c)] shall conform to one of the following specifications:

(1) SA-263, Stainless Chromium Steel-Clad Plate

(2) SA-264, Stainless Chromium–Nickel Steel-Clad Plate

(3) SA-265, Nickel and Nickel-Base Alloy-Clad Steel Plate

In addition to the above, weld metal overlay cladding may be used as defined in this Part.

(b) Base material with corrosion resistant integral or weld metal overlay cladding used in constructions in which the design calculations are based on the base material thickness, exclusive of the thickness of the cladding material, may consist of any base material satisfying the requirements of UCL-10 and any metallic corrosion resistant integral or weld metal overlay cladding material of weldable quality that in the judgment of the user is suitable for the intended service.

(c) Base material with corrosion resistant integral cladding in which any part of the cladding is included in the design calculations, as permitted in UCL-23(c), shall show a minimum shear strength of 20,000 psi (140 MPa) when tested in the manner described in the clad plate

Provided by IHS under license with ASME
No reproduction or networking permitted without license from IHS
Licensee=Chevron Phillips Chemical Co LP/5956674001
Not for Resale, 11/09/2014 20:41:36 MST

specification. One shear test shall be made on each such clad plate as rolled, and the results shall be reported on the material test report.

When the composite thickness of the clad material is $^3/_4$ in. (19 mm) or less, and/or when the cladding metal thickness is nominally 0.075 in. (1.9 mm) or less, the "Bond Strength" test, as described in SA-263, SA-264, or SA-265, may be used in lieu of the bond "Shear Strength" test to fulfill the criteria for acceptable minimum shear strength, except that the bend test specimen shall be $1^1/_2$ in. (38 mm) wide by not more than $^3/_4$ in. (19 mm) in thickness and shall be bent, at room temperature, through an angle of 180 deg to the bend diameter provided for in the material specifications applicable to the backing metal. The results of the "Bond Strength" test shall be reported on the certified material test report.

(d) A shear or bond strength test is not required for weld metal overlay cladding.

(e) When any part of the cladding thickness is specified as an allowance for corrosion, such added thickness shall be removed before mill tension tests are made. When corrosion of the cladding is not expected, no part of the cladding need be removed before testing, even though excess thickness seems to have been provided or is available as corrosion allowance.

UCL-12 LINING

Material used for applied corrosion resistant lining may be any metallic material of weldable quality that in the judgment of the user is suitable for the intended purpose.

DESIGN

UCL-20 GENERAL

(a) The rules in the following paragraphs apply specifically to pressure vessels and vessel parts constructed of base material with corrosion resistant integral or weld metal overlay cladding and those having applied corrosion resistant linings and shall be used in conjunction with the general requirements for *Design* in Subsection A, and with the specific requirements for *Design* in Subsection B that pertain to the method of fabrication used.

(b) Minimum Thickness of Shells and Heads. The minimum thickness specified in UG-16(b) shall be the total thickness for clad material with corrosion resistant integral or weld metal overlay cladding and the base-material thickness for applied-lining construction.

UCL-23 MAXIMUM ALLOWABLE STRESS VALUES

(a) Applied Corrosion Resistant Linings. The thickness of material used for applied lining shall not be included in the computation for the required thickness of any lined vessel. The maximum allowable stress value shall be that given for the base material in Table UCS-23, or UNF-23.

(b) Integrally Clad Material Without Credit for Full Cladding Thickness. Except as permitted in (c) below, design calculations shall be based on the total thickness of the clad material less the specified nominal minimum thickness of cladding. A reasonable excess thickness either of the actual cladding or of the same thickness of corrosion resistant weld metal may be included in the design calculations as an equal thickness of base material. The maximum allowable stress value shall be that given for the base material referenced in Table UCS-23, UF-6, or UHT-23 and listed in Table 1A of Section II, Part D.

(c) Base Material with Corrosion Resistant Integral or Weld Metal Overlay Cladding With Credit for Cladding Thickness. When the base material with corrosion resistant integral cladding conforms to one of the specifications listed in UCL-11(a), or consists of an acceptable base material with corrosion resistant weld metal overlay and the joints are completed by depositing corrosion resisting weld metal over the weld in the base material to restore the cladding, the design calculations may be based on a thickness equal to the nominal thickness of the base material plus S_c/S_b times the nominal thickness of the cladding after any allowance provided for corrosion has been deducted, where

S_b = maximum allowable stress value for the base material at the design temperature

S_c = maximum allowable stress value for the integral cladding at the design temperature, or for corrosion resistant weld metal overlay cladding, that of the wrought material whose chemistry most closely approximates that of the cladding, at the design temperature

Where S_c is greater than S_b, the multiplier S_c/S_b shall be taken equal to unity. The maximum allowable stress value shall be that given for the base material referenced in Table UCS-23, UF-6, or UHT-23 and listed in Table 1A of Section II, Part D. Vessels in which the cladding is included in the computation of required thickness shall not be constructed for internal pressure under the provisions of Table UW-12, column (c).

The thickness of the corrosion resistant weld metal overlay cladding deposited by manual processes shall be verified by electrical or mechanical means. One examination shall be made for every head, shell course, or any other pressure retaining component for each welding process used. The location of examinations shall be chosen by the Inspector except that, when the Inspector has been duly notified in advance and cannot be present or otherwise make the selection, the fabricator may exercise his own judgment in selecting the locations.

Provided by IHS under license with ASME
No reproduction or networking permitted without license from IHS
Licensee=Chevron Phillips Chemical Co LP/5956674001
Not for Resale, 11/09/2014 20:41:36 MST

UCL-24 MAXIMUM ALLOWABLE WORKING TEMPERATURE

(a) When the design calculations are based on the thickness of base material exclusive of lining or cladding thickness, the maximum service metal temperature of the vessel shall be that allowed for the base material.

(b) When the design calculations are based on the full thickness of base material with corrosion resistant integral or weld metal overlay cladding as permitted in UCL-23(c), the maximum service metal temperature shall be the lower of the values allowed for the base material referenced in Table UCS-23, UF-6, or UHT-23 and listed in Table 1A of Section II, Part D, or refer to UCL-23(c) for corrosion resistant weld metal overlay cladding and the cladding material referenced in Table UHA-23 or Tables UNF-23.1 through UNF-23.5.

(c) The use of corrosion resistant integral or weld metal overlay cladding or lining material of chromium-alloy stainless steel with a chromium content of over 14% is not recommended for service metal temperatures above 800°F (425°C).

UCL-25 CORROSION OF CLADDING OR LINING MATERIAL

(a) When corrosion or erosion of the cladding or lining material is expected, the cladding or lining thickness shall be increased by an amount that in the judgment of the user will provide the desired service life.

(b) Telltale Holes. The requirements of UG-25(e) and UG-46(b) shall apply when telltale holes are used in clad or lined vessels, except that such holes may extend to the cladding or lining.

UCL-26 THICKNESS OF SHELLS AND HEADS UNDER EXTERNAL PRESSURE

The thickness of shells or heads under external pressure shall satisfy the requirements of the Part of Subsection C applicable to the base material. The cladding may be included in the design calculations for clad material to the extent provided in UCL-23(b) and UCL-23(c).

UCL-27 LOW TEMPERATURE OPERATIONS

The base materials used in the construction of vessels shall satisfy the requirements of UCS-66, UCS-67, UCS-68, Part UF, or UHT-5.

FABRICATION

UCL-30 GENERAL

The rules in the following paragraphs apply specifically to pressure vessels and vessel parts constructed of base material with corrosion resistant integral or weld metal overlay cladding and those having applied corrosion resistant linings, and shall be used in conjunction with the general requirements for in Subsection A, and with the specific requirements for in Subsection B that pertain to the method of fabrication used.

UCL-31 JOINTS IN INTEGRAL OR WELD METAL OVERLAY CLADDING AND APPLIED LININGS

(a) The types of joints and welding procedure used shall be such as to minimize the formation of brittle weld composition by the mixture of metals of corrosion resistant alloy and the base material.

(b) When a shell, head, or other pressure part is welded to form a corner joint, as in Figure UW-13.2, the weld shall be made between the base materials either by removing the clad material prior to welding the joint or by using weld procedures that will assure the base materials are fused. The corrosion resistance of the joint may be provided by using corrosion resistant and compatible weld filler material or may be restored by any other appropriate means.

NOTE: Because of the different thermal coefficients of expansion of dissimilar metals, caution should be exercised in design and construction under the provisions of these paragraphs in order to avoid difficulties in service under extreme temperature conditions, or with unusual restraint of parts such as may occur at points of stress concentration.

UCL-32 WELD METAL COMPOSITION

Welds that are exposed to the corrosive action of the contents of the vessel should have a resistance to corrosion that is not substantially less than that of the corrosion resistant integral or weld metal overlay cladding or lining. The use of filler metal that will deposit weld metal with practically the same composition as the material joined is recommended. Weld metal of different composition may be used provided it has better mechanical properties in the opinion of the manufacturer, and the user is satisfied that its resistance to corrosion is satisfactory for the intended service. The columbium content of columbium-stabilized austenitic stainless steel weld metal shall not exceed 1.00%, except when a higher columbium content is permitted in the material being welded.

UCL-33 INSERTED STRIPS IN CLAD MATERIAL

The thickness of inserted strips used to restore cladding at joints shall be equal to that of the nominal minimum thickness of cladding specified for the material backed, if necessary, with corrosion resistant weld metal deposited in the groove to bring the insert flush with the surface of the adjacent cladding.

UCL-34 POSTWELD HEAT TREATMENT (13)

CAUTION: Postweld heat treatment may be in the carbide-precipitation range for unstabilized austenitic chromium–nickel steels, as well as within the range where a sigma phase may

Provided by IHS under license with ASME
No reproduction or networking permitted without license from IHS
Licensee=Chevron Phillips Chemical Co LP/5956674001
Not for Resale, 11/09/2014 20:41:36 MST

form, and if used indiscriminately could result in material of inferior physical properties and inferior corrosion resistance, which ultimately could result in failure of the vessel.

(a) Vessels or parts of vessels constructed of base material with corrosion resistant integral or weld metal overlay cladding or applied corrosion resistant lining material shall be postweld heat treated when the base material is required to be postweld heat treated.

When the thickness of the base material requires postweld heat treatment, it shall be performed after the application of corrosion resistant weld metal overlay cladding or applied corrosion resistant lining unless exempted by the Notes of Tables UCS-56-1 through UCS-56-11.

(b) Vessels or parts of vessels constructed of chromium stainless steel integral or weld metal overlay cladding and those lined with chromium stainless steel applied linings shall be postweld heat treated in all thicknesses, except vessels that are integrally clad or lined with Type 405 or Type 410S and welded with an austenitic electrode or non-air-hardening nickel–chromium–iron electrode need not be postweld heat treated unless required by (a) above.

UCL-35 RADIOGRAPHIC EXAMINATION

(a) General. Vessels or parts of vessels constructed of base material with corrosion resistant integral or weld metal overlay cladding and those having applied corrosion resistant linings shall be radiographed when required by the rules in UW-11, UCS-57, UHT-57, and UCL-36. The material thickness specified under these rules shall be the total material thickness for clad construction and the base material thickness for applied-lining construction, except as provided in (c) below.

(b) Base Material Weld Protected by a Strip Covering. When the base material weld in clad or lined construction is protected by a covering strip or sheet of corrosion resistant material applied over the weld in the base material to complete the cladding or lining, any radiographic examination required by the rules of UW-11, UHT-57, and UCS-57 may be made on the completed weld in the base material before the covering is attached.

(c) Base Material Weld Protected by an Alloy Weld. The radiographic examination required by the rules in UW-11, UHT-57, and UCS-57 shall be made after the joint, including the corrosion resistant layer, is complete, except that the radiographic examination may be made on the weld in the base material before the alloy cover weld is deposited, provided the following requirements are met.

(1) The thickness of the base material at the welded joint is not less than required by the design calculation.

(2) The corrosion resistant alloy weld deposit is non-air-hardening.

(3) The completed alloy weld deposit is spot examined by any method that will detect cracks.

(4) The thickness of the base material shall be used in determining the radiography requirement in (a) above.

UCL-36 EXAMINATION OF CHROMIUM STAINLESS STEEL CLADDING OR LINING

The alloy weld joints between the edges of adjacent chromium stainless steel cladding layers or liner sheets shall be examined for cracks as follows.

(a) Joints welded with straight chromium stainless steel filler metal shall be examined throughout their full length. The examination shall be by radiographic methods when the chromium stainless steel welds are in continuous contact with the welds in the base metal. Liner welds that are attached to the base metal, but merely cross the seams in the base metal, may be examined by any method that will disclose surface cracks.

(b) Joints welded with austenitic chromium–nickel steel filler metal or non-air-hardening nickel–chromium–iron filler metal shall be given a radiographic spot examination in accordance with UW-52. For lined construction, at least one spot examination shall include a portion of the liner weld that contacts weld metal in the base material.

UCL-40 WELDING PROCEDURES

Welding procedures for corrosion resistant weld overlay, composite (clad) metals, and attachment of applied linings shall be prepared and qualified in accordance with the requirements of Section IX.

UCL-42 ALLOY WELDS IN BASE METAL

Groove joints in base material and parts may be made with corrosion resistant alloy-steel filler metal, or groove joints may be made between corrosion resistant alloy steel and carbon or low alloy steel, provided the welding procedure and the welders have been qualified in accordance with the requirements of Section IX for the combination of materials used. Some applications of this rule are base metal welded with alloy-steel electrodes, and alloy nozzles welded to steel shells.

UCL-46 FILLET WELDS

Fillet welds of corrosion resistant metal deposited in contact with two materials of dissimilar composition may be used for shell joints under the limitations of UW-12, for connection attachments under the limitations of UW-15 and UW-16, and for any other uses permitted by this Division. The qualification of the welding procedures and welders to be used on fillet welds for a given combination of materials and alloy weld metal shall be made in accordance with the rules prescribed in Section IX.

INSPECTION AND TESTS

UCL-50 GENERAL

The rules in the following paragraphs apply specifically to the inspection and testing of pressure vessels and vessel parts constructed of base material with corrosion resistant integral or weld metal overlay cladding and those

Provided by IHS under license with ASME
No reproduction or networking permitted without license from IHS
Licensee=Chevron Phillips Chemical Co LP/5956674001
Not for Resale, 11/09/2014 20:41:36 MST

having applied corrosion resistant linings, and shall be used in conjunction with the general requirements for *Inspection and Tests* in Subsection A, and with the specific requirements for *Inspection and Tests* in Subsection B that pertain to the method of fabrication used.

UCL-51 TIGHTNESS OF APPLIED LINING

A test for tightness of the applied lining that will be appropriate for the intended service is recommended, but the details of the test shall be a matter for agreement between the user and the manufacturer. The test should be such as to assure freedom from damage to the load carrying base material. When rapid corrosion of the base material is to be expected from contact with the contents of the vessel, particular care should be taken in devising and executing the tightness test.

Following the hydrostatic pressure test, the interior of the vessel shall be inspected to determine if there is any seepage of the test fluid through the lining. Seepage of the test fluid behind the applied lining may cause serious damage to the liner when the vessel is put in service. When seepage occurs, F-4 of Nonmandatory Appendix F shall be considered and the lining shall be repaired by welding. Repetition of the radiography, and heat treatment, or the hydrostatic test of the vessel after lining repairs is not required except when there is reason to suspect that the repair welds may have defects that penetrate into the base material, in which case the Inspector shall decide which one or more shall be repeated.

UCL-52 HYDROSTATIC TEST

The requirements for standard hydrostatic test in UG-99 shall apply to pressure vessels fabricated in accordance with the rules of Part UCL.

MARKING AND REPORTS

UCL-55 GENERAL

The provisions for marking and reports in UG-115 through UG-120 shall apply to vessels that are constructed of base material with corrosion resistant integral or weld metal overlay cladding and those having applied corrosion resistant linings, with the following supplements to the Data Reports.

(a) Include specification and type of lining material.

(b) Include applicable paragraph in UCL-23 under which the shell and heads were designed.

PRESSURE RELIEF DEVICES

UCL-60 GENERAL

The provisions for pressure relief devices given in UG-125 through UG-136 shall apply without supplement to welded vessels that are constructed of base material with corrosion resistant integral or weld metal overlay cladding and those having applied corrosion resistant linings.

Provided by IHS under license with ASME
No reproduction or networking permitted without license from IHS
Licensee=Chevron Phillips Chemical Co LP/5956674001
Not for Resale, 11/09/2014 20:41:36 MST

PART UCD
REQUIREMENTS FOR PRESSURE VESSELS CONSTRUCTED OF CAST DUCTILE IRON

GENERAL

UCD-1 SCOPE

The rules in Part UCD are applicable to pressure vessels and pressure vessel parts that are constructed of cast ductile iron,[86] and shall be used in conjunction with the general requirements in Subsection A insofar as these requirements are applicable to cast material.

UCD-2 SERVICE RESTRICTIONS

Cast ductile iron pressure vessels shall not be used for services as follows:

(a) to contain lethal[85] substances, either liquid or gaseous;

(b) for unfired steam boilers as defined in U-1(g);

(c) for direct firing [see UW-2(d)].

UCD-3 PRESSURE–TEMPERATURE LIMITATIONS

(a) The maximum design temperature shall not be higher than 650°F (345°C). The minimum design temperature shall not be less than −20°F (−29°C), and the design pressure shall not exceed 1,000 psi (7 MPa) unless the requirements in UG-24 for a casting quality factor of 90% are met, and the vessel contains liquids only.

(b) Cast ductile iron flanges and fittings covered by ASME B16.42 may be used in whole or as a part of a pressure vessel at the pressure–temperature ratings listed in that standard.

NOTE: Cast ductile iron flanges and fittings conforming in dimension to the Class 125 and 250 American National Standard for cast iron flanges and fittings may be used in whole or as a part of a pressure vessel at the pressure–temperature ratings listed in ASME B16.42, except that NPS $3\frac{1}{2}$ and smaller screwed and tapped flanges conforming in dimensions to the Class 125 ASME B16.1 for cast iron flanged fittings shall have identical ratings specified in ASME B16.1.

(c) Cast ductile iron flanges and fittings, Class 400 and higher, conforming in dimension to the carbon steel pipe flanges and flanged fittings in ASME B16.5 may be used in whole or as a part of a pressure vessel at the pressure–temperature ratings for carbon steel, material category 1.4, in that standard provided the temperature is not less than −20°F (−29°C) nor greater than 650°F (345°C) and provided that the pressure does not exceed 1,000 psi (7 MPa).

MATERIALS

UCD-5 GENERAL

All cast ductile iron material subject to stress due to pressure shall conform to the specifications given in Section II and shall be limited to those listed in Table UCD-23 except as otherwise provided in UG-11.

UCD-12 BOLT MATERIALS

The requirements for bolt materials, nuts, and washers shall be the same as for carbon and low alloy steels in UCS-10 and UCS-11.

DESIGN

UCD-16 GENERAL

The rules in the following paragraphs apply specifically to the design of pressure vessels and pressure vessel parts of cast ductile iron and shall be used in conjunction with the general requirements for *Design* in Subsection A insofar as these requirements are applicable to cast materials.

For components for which the Code provides no design rules, the provisions of UG-19(b) and UG-19(c) apply. If a proof test is performed, the rules of UCD-101 apply.

UCD-23 MAXIMUM ALLOWABLE STRESS VALUES

Table UCD-23 gives the maximum allowable stress values at the temperatures indicated for castings conforming to the Specification listed therein. These stress values shall be limited to the stress values in Table UCD-23 multiplied by the applicable casting quality factor given in UG-24.

UCD-28 THICKNESS OF SHELLS UNDER EXTERNAL PRESSURE (13)

Cylindrical and spherical shells under external pressure shall be designed by the rules in UG-28, using the applicable figures in Subpart 3 of Section II, Part D and the temperature limits of UG-20(c).

UCD-32 HEADS WITH PRESSURE ON CONCAVE SIDE

Heads with pressure on the concave side (plus heads) shall be designed in accordance with the equations in UG-32.

Provided by IHS under license with ASME
No reproduction or networking permitted without license from IHS
Licensee=Chevron Phillips Chemical Co LP/5956674001
Not for Resale, 11/09/2014 20:41:36 MST

Table UCD-23
Maximum Allowable Stress Values in Tension for Cast Ductile Iron, ksi (MPa)

Spec. No.	Class	Note	Specified Min. Tensile Strength [Note (1)]	For Metal Temp. Not Exceeding −20°F to 650°F (−29°C to 345°C)	Ext. Pressure Chart Fig. No. [Note (2)]
SA-395	...	(1)	60 (414)	12.0 (82.7)	CD-1

GENERAL NOTE: To these stress values, a quality factor as specified in UG-24 shall be applied.

NOTES:
(1) The yield stresses in compression and tension for cast ductile iron are not sufficiently different to justify an increase in the allowable stress for bending except as permitted in 2-8(a).
(2) Refer to Subpart 3 of Section II, Part D.

UCD-33 HEADS WITH PRESSURE ON CONVEX SIDE

The thickness of heads with pressure on the convex side (minus heads) shall not be less than the thickness required in UG-33.

UCD-35 SPHERICALLY SHAPED COVERS (HEADS)

(a) Circular cast ductile iron spherically shaped heads with bolting flanges, similar to Figure 1-6 sketches (b), (c), and (d) shall be designed in accordance with the provisions in 1-6, except that corners and fillets shall comply with the requirements of UCD-37.

(b) Circular cast ductile iron spherically shaped heads with bolting flanges other than those described in (a) above shall be designed in accordance with the following requirements.

(1) The head thickness shall be determined in accordance with the requirements in UG-32.

(2) The spherical and knuckle radii shall conform to the requirements in UG-32.

(3) Flanges made of cast ductile iron in compliance with SA-395 and conforming in dimensions to American National Standard for carbon steel given in ASME B16.5 may be used at pressures not exceeding 80% of the pressures permitted in those standards at their listed temperatures provided the temperature is not less than −20°F (−29°C) nor greater than 650°F (345°C) and provided that the adjusted service pressure does not exceed 1,000 psi (7 MPa).

NOTE: Cast ductile iron flanges conforming in dimension to the 125 lb and 250 lb American National Standard for cast iron flanges may be used for pressures not exceeding 80% of the American National Standard pressure ratings for 150 lb and 300 lb carbon steel flanges, respectively, at their listed temperatures provided the temperature is not less than −20°F (−29°C) nor greater than 650°F (345°C), except as in Note to UCD-3(b).

UCD-36 OPENINGS AND REINFORCEMENTS

(a) The dimensional requirements in UG-36 through UG-46 are applicable to cast ductile iron and shall be used in the design of openings and reinforcements in pressure vessels and pressure vessel parts which are cast integrally with the vessel or vessel part. In no case shall the thickness of the reinforcement, including the nominal thickness of the vessel wall, exceed twice the nominal thickness of the vessel wall.

(b) Cast ductile iron flanges, nozzles, and openings shall not be attached to steel or nonferrous pressure vessels or pressure parts by welding or brazing, nor shall they be considered to contribute strength to the vessel or part.

UCD-37 CORNERS AND FILLETS

A liberal radius shall be provided at projecting edges and in reentrant corners in accordance with good foundry practice. Abrupt changes in surface contour and in wall thickness at junctures shall be avoided. Fillets shall conform to the following:

(a) Fillets forming the transition between the pressure containing walls and integral attachments, such as brackets, lugs, supports, nozzles, flanges, and bosses, shall have a radius not less than one-half the thickness of the pressure containing wall adjacent to the attachment.

FABRICATION

UCD-75 GENERAL

The rules in the following paragraphs apply specifically to the fabrication of pressure vessels and pressure vessel parts of cast ductile iron and shall be used in conjunction with the general requirements for in Subsection A insofar as these requirements are applicable to cast materials.

UCD-78 REPAIRS IN CAST DUCTILE IRON MATERIAL

(a) Imperfections which permit leakage in cast ductile iron materials may be repaired by using threaded plugs provided:

(1) the vessel or vessel parts operate within the temperature limits of UCD-3(a), and the design pressure does not exceed 1,000 psi (7 MPa);

(2) no welding is performed;

(3) the diameter of the plug shall not exceed the diameter of a standard NPS 2 pipe plug;

(4) the plugs, where practical, shall conform in all dimensions to standard NPS pipe plugs, and in addition they shall have full thread engagement corresponding to the thickness of the repaired section. (See Table UCD-78.1.) Where a tapered plug is impractical because of excess wall thickness in terms of plug diameter and coincident thread

Provided by IHS under license with ASME
No reproduction or networking permitted without license from IHS
Licensee=Chevron Phillips Chemical Co LP/5956674001
Not for Resale, 11/09/2014 20:41:36 MST

engagement, other types of plugs may be used provided both full thread engagement and effective sealing against pressure are obtained. Where possible, the ends of the plug should be ground smooth after installation to conform to the inside and outside contours of the walls of the pressure vessel or pressure part;

(5) the material from which the plug is manufactured shall conform in all respects to the material specification which applies to the pressure vessel or pressure vessel part;

(6) the machined surface of the drilled or bored hole before tapping shall be free from visible defects and the adjacent metal shown to be sound by radiographic examination;

(7) the thickness of any repaired section in relation to the size of plug used shall not be less than that given in Table UCD-78.1;

(8) the minimum radius of curvature of repaired sections of cylinders or cones in relation to the size of plug used shall not be less than that given in Table UCD-78.2;

(9) the ligament efficiency between any two adjacent plugs shall not be less than 80% where

$$E = \frac{p - \left(\frac{d_1 + d_2}{2}\right)}{p}$$

where

d_1, d_2 = respective diameters of the two plugs under consideration
E = ligament efficiency
p = distance between plug centers

(10) the pressure vessel or pressure vessel part meets the standard hydrostatic test prescribed in UCD-99.

Table UCD-78.1

NPS Plug or Equivalent	Minimum Thickness of Repaired Section, in. (mm)
1/8	11/32 (9)
1/4	7/16 (11)
3/8	1/2 (13)
1/2	21/32 (17)
3/4	3/4 (19)
1	13/16 (21)
1 1/4	7/8 (22)
1 1/2	15/16 (24)
2	1 (25)

Table UCD-78.2

NPS Plug or Equivalent	Minimum Radius of Curvature of Cylinder or Cone, in. (mm)
1/8	9/16 (14)
1/4	11/16 (17)
3/8	1 1/16 (27)
1/2	1 1/4 (32)
3/4	2 (50)
1	2 1/2 (64)
1 1/4	4 (100)
1 1/2	5 1/4 (134)
2	8 1/8 (207)

(b) Surface imperfections, such as undue roughness, which do not permit leakage in cast ductile iron materials may be repaired using driven plugs provided:

(1) the vessel or vessel parts are to operate within the limits of UCD-3(a);

(2) no welding is performed;

(3) the material from which the plug is manufactured shall conform in all respects to the material specification which applies to the pressure vessel or pressure vessel part;

(4) the depth of the plug is not greater than 20% of the thickness of the section and its diameter is not greater than its engaged length;

(5) the pressure vessel or pressure vessel part meets the standard hydrostatic test prescribed in UCD-99.

INSPECTION AND TESTS

UCD-90 GENERAL

The rules in the following paragraphs apply specifically to the inspection and testing of pressure vessels and pressure vessel parts of cast ductile iron and shall be used in conjunction with the general requirements of *Inspection and Tests* in Subsection A insofar as these requirements are applicable to cast material.

UCD-99 STANDARD HYDROSTATIC TEST (13)

(a) Cast ductile iron pressure vessels and pressure vessel parts shall be hydrostatically tested by the method prescribed in UG-99 except that the test pressure shall be two times the maximum allowable working pressure.

(b) Cast ductile iron pressure vessels and cast ductile iron pressure vessel parts shall not be painted or otherwise coated either internally or externally prior to the hydrostatic pressure test.

Provided by IHS under license with ASME
No reproduction or networking permitted without license from IHS
Licensee=Chevron Phillips Chemical Co LP/5956674001
Not for Resale, 11/09/2014 20:41:36 MST

UCD-101 HYDROSTATIC TEST TO DESTRUCTION

(a) The maximum allowable working pressure of identical cast ductile iron vessels, based on testing one of them to destruction in accordance with UG-101(m), shall be

$$P_R = \left(\frac{P_B f}{5}\right)\left(\frac{\text{specified min. tensile strength}}{\text{avg. tensile strength of test specimens}}\right)$$

where

f = casting quality factor as defined in UG-24, which applies only to identical cast ductile iron vessels put into service

P_B = destruction test pressure

P_R = maximum allowable working pressure of identical cast ductile iron vessels

The principle of UG-101(c) shall be followed.

(b) The value of the average tensile strength of test specimens in the foregoing equation shall be determined from the test results of three test bars from the same ladle of iron as used in the part, or from three test specimens cut from the part.

(c) All pressure vessels or pressure vessel parts of the same material, design, and construction, whose maximum allowable working pressure is based on the destruction test of a sample vessel or part, shall be subjected to a hydrostatic test pressure of not less than twice the maximum allowable working pressure determined by the application of the rules in (a).

MARKING AND REPORTS

UCD-115 GENERAL

The provisions for marking and preparing reports in UG-115 through UG-120 shall apply without supplement to vessels constructed of cast ductile iron.

PRESSURE RELIEF DEVICES

UCD-125 GENERAL

The provisions for the application of pressure relief devices in UG-125 through UG-136 shall apply without supplement to vessels constructed of cast ductile iron.

Provided by IHS under license with ASME
No reproduction or networking permitted without license from IHS
Licensee=Chevron Phillips Chemical Co LP/5956674001
Not for Resale, 11/09/2014 20:41:36 MST

PART UHT
REQUIREMENTS FOR PRESSURE VESSELS CONSTRUCTED OF FERRITIC STEELS WITH TENSILE PROPERTIES ENHANCED BY HEAT TREATMENT

GENERAL

UHT-1 SCOPE

The rules in Part UHT are applicable to pressure vessels and vessel parts that are constructed of ferritic steels suitable for welding, whose tensile properties have been enhanced by heat treatment, and shall be used in conjunction with the general requirements in Subsection A, and with the specific requirements in Part UW of Subsection B. The heat treatment may be applied to the individual parts of a vessel prior to assembly by welding, to partially fabricated components, or to an entire vessel after completion of welding. This part is not intended to apply to those steels approved for use under the rules of Part UCS but which are furnished in such thicknesses that heat treatment involving the use of accelerated cooling, including liquid quenching, is used to attain structures comparable to those attained by normalizing thinner sections. Integrally forged vessels, quenched and tempered, which do not contain welded seams, are not intended to be covered by the rules of this Part.

MATERIALS

UHT-5 GENERAL

(a) Steels covered by this Part subject to stress due to pressure shall conform to one of the specifications given in Section II and shall be limited to those listed in Table UHT-23.

The thickness limitations of the material specifications shall not be exceeded.

(b) Except when specifically prohibited by this Part [such as in UHT-18 and UHT-28], steels listed in Table UHT-23 may be used for the entire vessel or for individual components which are joined to other Grades listed in that Table or to other steels conforming to specifications listed in Parts UCS or UHA of this Division.

(c) All steels listed in Table UHT-23 shall be tested for notch ductility, as required by UHT-6. These tests shall be conducted at a temperature not warmer than the minimum design metal temperature (see UG-20) but not warmer than +32°F (0°C). Materials may be used at temperatures colder than the minimum design metal temperature as limited in (1) and (2) below.

(1) When the coincident ratio defined in Figure UCS-66.1 is 0.35 or less, the corresponding minimum design metal temperature shall not be colder than −155°F (−104°C).

(2) When the coincident ratio defined in Figure UCS-66.1 is greater than 0.35, the corresponding minimum design metal temperature shall not be colder than the impact test temperature less the allowable temperature reduction permitted in Figure UCS-66.1 and shall in no case be colder than −155°F (−104°C).

(d) All test specimens shall be prepared from the material in its final heat treated condition or from full-thickness samples of the same heat similarly and simultaneously treated. Test samples shall be of such size that the prepared test specimens are free from any change in properties due to edge effects. When the material is clad or weld deposit overlayed by the producer or fabricator prior to quench and temper treatments, the full thickness samples shall be clad or weld deposit overlayed before such heat treatments.

(e) Where the vessel or vessel parts are to be hot formed or postweld heat treated (stress relieved), this identical heat treatment shall be applied to the test specimens required by the material specifications including the cooling rate specified by the fabricator which shall in no case be slower than that specified in the applicable material specification.

(f) All material shall be heat treated in accordance with the applicable material specifications.

UHT-6 TEST REQUIREMENTS

(a) See below.

(1) One Charpy V-notch test (three specimens) shall be made from each plate as heat treated, and from each heat of bars, pipe, tube, rolled sections, forged parts, or castings included in any one heat treatment lot.

(2) The test procedures, and size, location and orientation of the specimens shall be the same as required by UG-84 except that for plates the specimens shall be oriented transverse to the final direction of rolling and for circular forgings the specimens shall be oriented tangential to the circumference.

Provided by IHS under license with ASME
No reproduction or networking permitted without license from IHS
Licensee=Chevron Phillips Chemical Co LP/5956674001
Not for Resale, 11/09/2014 20:41:36 MST

(3) Each of the three specimens tested shall have a lateral expansion opposite the notch not less than the requirements shown in Figure UHT-6.1.

(4) If the value of lateral expansion for one specimen is less than that required in Figure UHT-6.1 but not less than $^{2}/_{3}$ of the required value, a retest of three additional specimens may be made, each of which must be equal to or greater than the required value in Figure UHT-6.1. Such a retest shall be permitted only when the average value of the three specimens is equal to or greater than the required value in Figure UHT-6.1. If the values required are not obtained in the retest or if the values in the initial test are less than the values required for retest, the material may be reheat treated. After reheat treatment, a set of three specimens shall be made, each of which must be equal to or greater than the required value in Figure UHT-6.1.

(b) Materials conforming to SA-353 and SA-553 for use at minimum design metal temperatures colder than −320°F (−196°C), materials conforming to SA-508, SA-517, SA-543, and SA-592 for use at minimum design metal temperatures colder than −20°F (−29°C), and materials conforming to SA-645, Grade A, for use at minimum design metal temperatures colder than −275°F (−171°C) shall have, in addition to the Charpy tests required under (a), drop-weight tests as defined by ASTM E208, made as follows:

(1) For plates $^{5}/_{8}$ in. (16 mm) thick and over, one drop-weight test (two specimens) shall be made for each plate as heat treated.

Figure UHT-6.1
Charpy V-Notch Impact Test Requirements

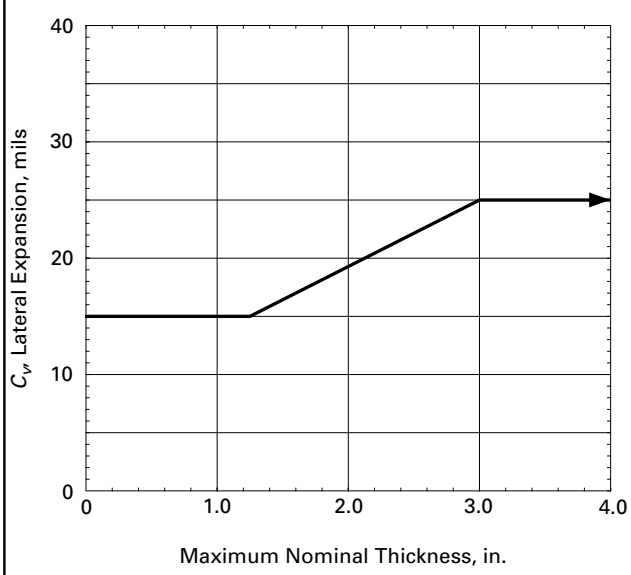

GENERAL NOTE: For Table UCS-23 materials having a specified minimum tensile strength of 95,000 psi or greater, and for Table UHT-23 materials.

Figure UHT-6.1M
Charpy V-Notch Impact Test Requirements

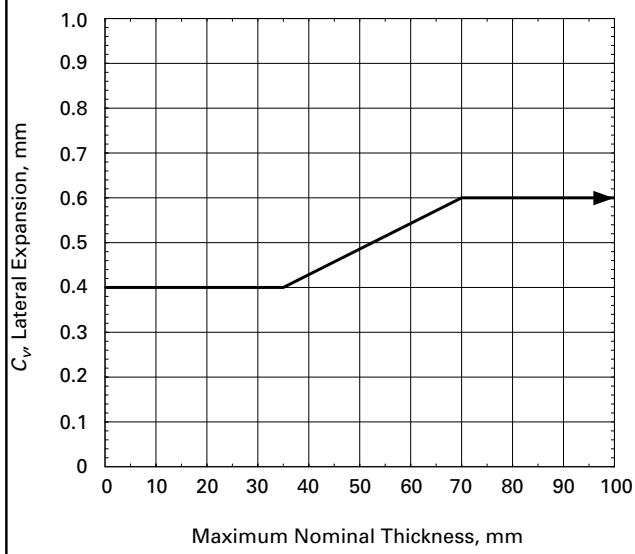

GENERAL NOTE: For Table UCS-23 materials having a specified minimum tensile strength of 655 MPa or greater, and for Table UHT-23 materials.

(2) For forgings and castings of all thicknesses, one drop-weight test (two specimens) shall be made for each heat in any one heat treatment lot using the procedure in SA-350 for forgings and in SA-352 for castings.

(3) Each of the two test specimens shall meet the "no-break" criterion, as defined by ASTM E208, at test temperature.

DESIGN

UHT-16 GENERAL

The rules in the following paragraphs apply specifically to the design of pressure vessels and vessel parts that are constructed of heat treated steels covered by this Part and shall be used in conjunction with the general requirements for Design in Subsection A and in Subsection B, Part UW.

UHT-17 WELDED JOINTS

(a) In vessels or vessel parts constructed of heat treated steels covered by this Part *except as permitted in (b) below*, all joints of Categories A, B, and C, as defined in UW-3, and all other welded joints between parts of the pressure containing enclosure which are not defined by the category designation, shall be in accordance with Type No. (1) of Table UW-12. All joints of Category D shall be in accordance with Type No. (1) of Table UW-12 and Figure UHT-18.1 when the shell plate thickness is 2 in.

Provided by IHS under license with ASME
No reproduction or networking permitted without license from IHS
Licensee=Chevron Phillips Chemical Co LP/5956674001
Not for Resale, 11/09/2014 20:41:36 MST

(50 mm) or less. When the thickness exceeds 2 in. (50 mm), the weld detail may be as permitted for nozzles in Figure UHT-18.1 and Figure UHT-18.2.

(b) For materials SA-333 Grade 8, SA-334 Grade 8, SA-353, SA-522, SA-553, and SA-645, Grade A, the joints of various categories (see UW-3) shall be as follows:

(1) All joints of Category A shall be Type No. (1) of Table UW-12.

(2) All joints of Category B shall be Type No. (1) or (2) of Table UW-12.

(3) All joints of Category C shall be full penetration welds extending through the entire section at the joint.

(4) All joints of Category D attaching a nozzle neck to the vessel wall and to a reinforcing pad, if used, shall be full penetration groove welds.

UHT-18 NOZZLES

(a) All openings regardless of size shall meet the requirements for reinforcing, nozzle geometry, and nozzle attachments and shall conform to details shown in Figure UHT-18.1 or as shown in Figure UHT-18.2 or sketch (y-l) or (z-l) in Figure UW-16.1 when permitted by the provisions of UHT-17(a), or as shown in Figure UW-16.1 when permitted by the provisions of UHT-17(b).

(b) Except for nozzles covered in (c) below, all nozzles and reinforcement pads shall be made of material with a specified minimum yield strength within ± 20% of that of the shell to which they are attached; however, pipe flanges, pipe, or communicating chambers may be of carbon, low, or high alloy steel welded to nozzle necks of the required material provided:

(1) the joint is a circumferential butt weld located not less than $\sqrt{Rt_n}$ which, except for the nozzle type shown in Figure UHT-18.1 sketch (f), is measured from the limit of reinforcement as defined in UG-40. For Figure UHT-18.1 sketch (f), the $\sqrt{Rt_n}$ is measured as shown on that Figure. In these equations,

R = inside radius of the nozzle neck except for Figure UHT-18.1 sketch (f) where it is the inside radius of the vessel opening as shown in that Figure

t_n = nominal thickness of the nozzle

(2) the design of the nozzle neck at the joint is made on the basis of the allowable stress value of the weaker material;

(3) the slope of the nozzle neck does not exceed three to one for at least a distance of $1.5t_n$ from the center of the joint;

(4) the diameter of the nozzle neck does not exceed the limits given in 1-7 for openings designed to UG-36 through UG-44.

(c) Nozzles of nonhardenable austenitic-type stainless steel may be used in vessels constructed of steels conforming to SA-353, SA-553 Types I and II, or SA-645, Grade A, provided the construction meets all of the following conditions:

(1) The nozzles are nonhardenable austenitic-type stainless steel conforming to one of the following specifications: SA-182, SA-213, SA-240, SA-312, SA-336, SA-403, SA-430, or SA-479.

(2) The maximum nozzle size is limited to NPS 4.

(3) None of the nozzles is located in a Category A or B joint.

(4) The nozzles are located so that the reinforcement area of one nozzle does not overlap the reinforcement area of an adjacent nozzle.

UHT-19 CONICAL SECTIONS

Conical sections shall be provided with a skirt having a length not less than $0.50\sqrt{rt}$ (where r is the inside radius of the adjacent cylinder and t is the thickness of the cone), or $1\frac{1}{2}$ in. (38 mm) whichever is larger. A knuckle shall be provided at both ends of the conical section; the knuckle radius shall not be less than 10% of the outside diameter of the skirt, but in no case less than three times the cone thickness.

UHT-20 JOINT ALIGNMENT

The requirements of UW-33 shall be met except that the following maximum permissible offset values shall be used in place of those given in UW-33(a):

Section Thickness, in. (mm)	Joint Direction	
	Longitudinal	Circumferential
Up to $\frac{1}{2}$ (13), incl.	$0.2t$	$0.2t$
Over $\frac{1}{2}$ to $\frac{15}{16}$ (13 to 24), incl.	$\frac{3}{32}$ in. (2.5 mm)	$0.2t$
Over $\frac{15}{16}$ to $1\frac{1}{2}$ (24 to 38), incl.	$\frac{3}{32}$ in. (2.5 mm)	$\frac{3}{16}$ in. (5 mm)
Over $1\frac{1}{2}$ (38)	$\frac{3}{32}$ in. (2.5 mm)	Lesser of $\frac{1}{8}$ t or $\frac{1}{4}$ in. (6 mm)

UHT-23 MAXIMUM ALLOWABLE STRESS VALUES

(a) Table 1A of Section II, Part D gives the maximum allowable stress values at the temperatures indicated for materials conforming to the specifications listed therein. Values may be interpolated for intermediate temperatures (see UG-23). For vessels designed to operate at a temperature colder than −20°F (−29°C), the allowable stress values to be used in design shall not exceed those given for temperatures of −20°F (−29°C) to 100°F (38°C).

(b) Shells of pressure vessels may be made from welded pipe or tubing listed in Table 1A.

UHT-25 CORROSION ALLOWANCE

Provision for possible deterioration due to the environment in which the vessel operates is the responsibility of the designer.

Provided by IHS under license with ASME
No reproduction or networking permitted without license from IHS
Licensee=Chevron Phillips Chemical Co LP/5956674001
Not for Resale, 11/09/2014 20:41:36 MST

Figure UHT-18.1
Acceptable Welded Nozzle Attachment Readily Radiographed to Code Standards

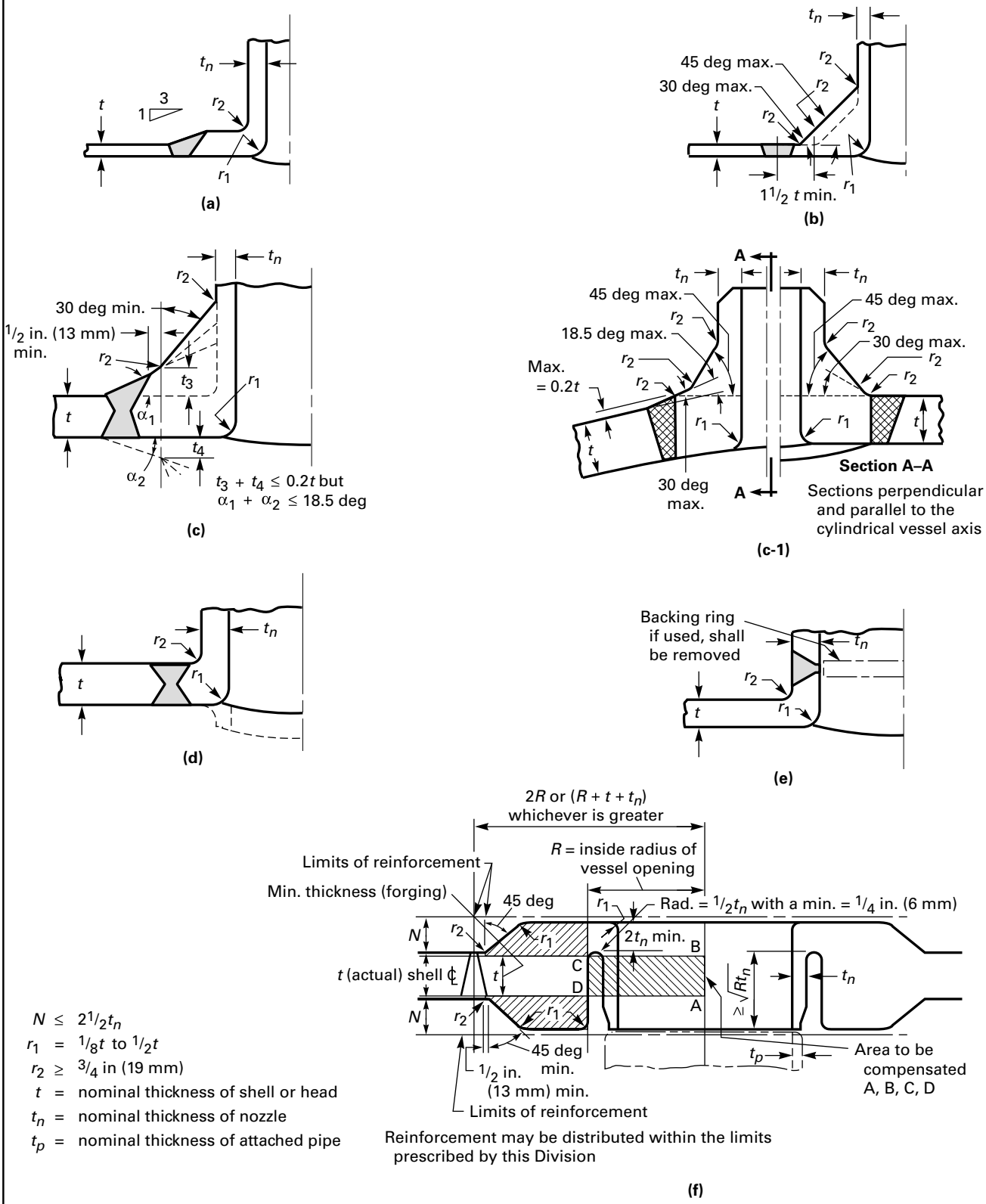

Provided by IHS under license with ASME
No reproduction or networking permitted without license from IHS
Licensee=Chevron Phillips Chemical Co LP/5956674001
Not for Resale, 11/09/2014 20:41:36 MST

Figure UHT-18.2
Acceptable Full Penetration Welded Nozzle Attachments Radiographable With Difficulty and Generally Requiring Special Techniques Including Multiple Exposures to Take Care of Thickness Variations

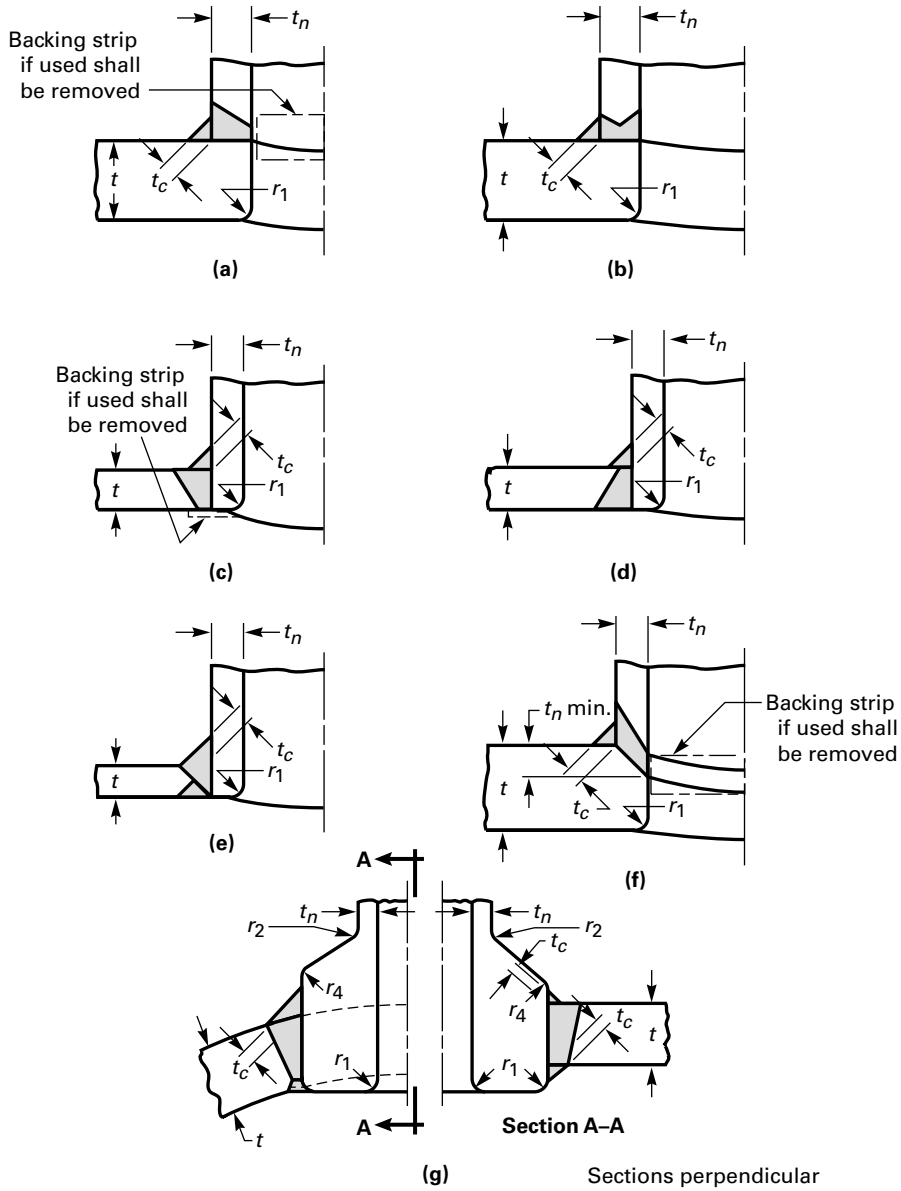

r_1 = $^1/_8 t$ to $^1/_2 t$
r_2 ≥ $^3/_4$ in. (19 mm)
r_4 ≥ $^1/_4$ in. (6 mm)
t = nominal thickness of shell or head
t_c ≥ $0.7t_n$ or $^1/_4$ in. (6 mm), whichever is less
t_n = nominal thickness of nozzle

Provided by IHS under license with ASME
No reproduction or networking permitted without license from IHS
Licensee=Chevron Phillips Chemical Co LP/5956674001
Not for Resale, 11/09/2014 20:41:36 MST

Table UHT-23
Ferritic Steels With Properties Enhanced by Heat Treatment

Spec. No.	Type/Grade
SA-333	8
SA-334	8
SA-353	...
SA-420	WPL8
SA-487	4 Cl. B & E, CA6NM Cl. A
SA-508	4N Cl. 1 & 2
SA-517	A, B, E, F, J, P
SA-522	I
SA-533	B Cl. 3, D Cl. 3
SA-543	B, C
SA-553	I, II
SA-592	A, E, F
SA-645	A
SA-724	A, B, C

GENERAL NOTE: Maximum allowable stress values in tension for the materials listed in the above table are contained in Subpart 1 of Section II, Part D (see UG-23).

(13) **UHT-27 THICKNESS OF SHELLS UNDER EXTERNAL PRESSURE**

Cylindrical and spherical shells under external pressure shall be designed by the rules in UG-28, using the applicable figures in Subpart 3 of Section II, Part D and the temperature limits of UG-20(c).

UHT-28 STRUCTURAL ATTACHMENTS AND STIFFENING RINGS

(a) Except as permitted in (b) below, all structural attachments and stiffening rings which are welded directly to pressure parts shall be made of materials of specified minimum yield strength within ± 20% of that of the material to which they are attached.

(b) All permanent structural attachments welded directly to shells or heads constructed of materials conforming to SA-333 Grade 8, SA-334 Grade 8, SA-353, SA-522, SA-553, and SA-645, Grade A, shall be of the material covered by these specifications or austenitic stainless steel of the type which cannot be hardened by heat treatment. If suitable austenitic stainless steel is used for permanent attachments, consideration should be given to the greater coefficient of expansion of the austenitic stainless steel.

UHT-29 STIFFENING RINGS FOR SHELLS UNDER EXTERNAL PRESSURE

Rules covering the design of stiffening rings are given in UG-29. The design shall be based on the appropriate figure in Subpart 3 of Section II, Part D for the material used in the ring.

UHT-30 ATTACHMENT OF STIFFENING RINGS TO SHELLS

Rules covering the attachment of stiffening rings are given in UG-30. Attachments shall be made using a welding procedure qualified to Section IX for vessels constructed to Part UHT.

UHT-32 FORMED HEADS, PRESSURE ON CONCAVE SIDE

Except as provided in UG-32(e), 1-4(c), and 1-4(d), formed heads shall be limited to ellipsoidal and/or hemispherical heads designed in accordance with UG-32(d) or UG-32(f).

UHT-33 FORMED HEADS, PRESSURE ON CONVEX SIDE

Ellipsoidal, hemispherical, and conical heads having pressure on the convex side (minus heads) shall be designed by the rules of UG-33, using the applicable external pressure charts referenced in Table 1A of Section II, Part D and given in Subpart 3 of Section II, Part D.

UHT-34 HEMISPHERICAL HEADS

When hemispherical heads are used, the head-to-shell transition of Figure UW-13.1 sketch (j) or Figure UW-13.1 sketch (l) shall be used. When the weld is in or adjacent to the tapered section, it shall be finished in a manner that will maintain the required uniform slope for the full length of the tapered section.

UHT-40 MATERIALS HAVING DIFFERENT COEFFICIENTS OF EXPANSION

When welding materials with austenitic electrodes, the differences between the coefficients of expansion and the strengths of the base material and the weld metal should be carefully considered, particularly for applications involving cyclic stresses.

UHT-56 POSTWELD HEAT TREATMENT

(a) Before applying the detailed requirements and exemptions in these paragraphs, satisfactory weld procedure qualifications of the procedures to be used shall be performed in accordance with all of the variables in Section IX including conditions of postweld heat treatment or lack of postweld heat treatment and including restrictions listed below. When determining the thickness requiring postweld treatment in Table UHT-56 for clad or weld deposit overlayed vessels or parts of vessels, the total thickness of the material, including the clad and weld deposit overlay, shall be employed.

(b) Vessels or vessel parts constructed of steels listed in Table UHT-23 shall be postweld heat treated when required in Table UHT-56, except that postweld heat treatment shall be required for all thicknesses when joining the materials with the inertia and continuous drive friction welding processes.

Provided by IHS under license with ASME
No reproduction or networking permitted without license from IHS
Licensee=Chevron Phillips Chemical Co LP/5956674001
Not for Resale, 11/09/2014 20:41:36 MST

(13)

Table UHT-56
Postweld Heat Treatment Requirements for Materials in Table UHT-23

Spec. No.	Grade or Type	P-No./ Gr. No.	Nominal Thickness Requiring PWHT, in. (mm)	Notes	PWHT Temp., °F (°C)	Holding Time hr/in. (25 mm)	Holding Time Minimum, hr
Plate Steels							
SA-353	9Ni	11A/1	Over 2 (50)	...	1,025–1,085 (550–585)	1	2
SA-517	Grade A	11B/1	Over 0.58 (15)	(1)	1,000–1,100 (540–595)	1	1/4
SA-517	Grade B	11B/4	Over 0.58 (15)	(1)	1,000–1,100 (540–595)	1	1/4
SA-517	Grade E	11B/2	Over 0.58 (15)	(1)	1,000–1,100 (540–595)	1	1/4
SA-517	Grade F	11B/3	Over 0.58 (15)	(1)	1,000–1,100 (540–595)	1	1/4
SA-517	Grade J	11B/6	Over 0.58 (15)	(1)	1,000–1,100 (540–595)	1	1/4
SA-517	Grade P	11B/8	Over 0.58 (15)	(1)	1,000–1,100 (540–595)	1	1/4
SA-533	Types B, D, Cl. 3	11A/4	Over 0.58 (15)	...	1,000–1,050 (540–565)	1/2	1/2
SA-543	Types B, C, Cl. 1	11A/5	...	(2)	1,000–1,050 (540–565)	1	1
SA-543	Types B, C, Cl. 2	11B/10	...	(2)	1,000–1,050 (540–565)	1	1
SA-543	Types B, C, Cl. 3	11A/5	...	(2)	1,000–1,050 (540–565)	1	1
SA-553	Types I, II	11A/1	Over 2 (50)	...	1,025–1,085 (550–585)	1	2
SA-645	Grade A	11A/2	Over 2 (50)	...	1,025–1,085 (550–585)	1	2
SA-724	Grade A, B	1/4	None	...	NA	NA	NA
SA-724	Grade C	1/4	Over 1 1/2 (38)	...	1,050–1,150 (565–620)	1	1/2
Castings							
SA-487	Class 4B	11A/3	Over 0.58 (15)	...	1,000–1,050 (540–565)	1	1/4
SA-487	Class 4E	11A/3	Over 0.58 (15)	...	1,000–1,050 (540–565)	1	1/4
SA-487	Class CA 6NM	6/4	Over 0.58 (15)	...	1,050–1,150 (565–620)	1	1/4
Pipes and Tubes							
SA-333	Grade 8	11A/1	Over 2 (50)	...	1,025–1,085 (550–585)	1	2
SA-334	Grade 8	11A/1	Over 2 (50)	...	1,025–1,085 (550–585)	1	2
Forgings							
SA-508	Grade 4N Cl. 1	11A/5	...	(2)	1,000–1,050 (540–565)	1	1
SA-508	Grade 4N Cl. 2	11B/10	...	(2)	1,000–1,050 (540–565)	1	1
SA-522	Type I	11A/1	Over 2 (50)	...	1,025–1,085 (550–585)	1	2
SA-592	Grade A	11B/1	Over 0.58 (15)	(1)	1,000–1,100 (540–595)	1	1/4
SA-592	Grade E	11B/2	Over 0.58 (15)	(1)	1,000–1,100 (540–595)	1	1/4
SA-592	Grade F	11B/3	Over 0.58 (15)	(1)	1,000–1,100 (540–595)	1	1/4

GENERAL NOTE: NA = not applicable.

NOTES:
(1) See UHT-82(g).
(2) PWHT is neither required nor prohibited. Consideration should be given to the possibility of temper embrittlement. The cooling rate from PWHT, when used, shall not be slower than that obtained by cooling in still air.

(c) Postweld heat treatment shall be performed in accordance with UCS-56 as modified by the requirements of Table UHT-56. In no case shall the PWHT temperature exceed the tempering temperature. PWHT and tempering may be accomplished concurrently. The maximum cooling rate established in UCS-56(e)(5) need not apply. Where accelerated cooling from the tempering temperature is required by the material specification, the same minimum cooling rate shall apply to PWHT.

(d) All welding of connections and attachments shall be postweld heat treated whenever required by Table UHT-56 based on the greatest thickness of material at the point of attachment of the head or shell [see (b) and (c)].

(e) When material of SA-333 Grade 8, SA-334 Grade 8, SA-353, SA-522, SA-553, and SA-645, Grade A are postweld heat treated, the complete vessel or vessel component being so heat treated shall be maintained within the permissible temperature range defined in Table UHT-56.

UHT-57 EXAMINATION

(a) Radiography. Radiographic examination for the complete length of weld in accordance with the requirements of UW-51 is required for all welded joints of Type No. (1) of Table UW-12. The required radiographic examination shall be made after any corrosion-resistant alloy cover weld has been deposited.

Provided by IHS under license with ASME
No reproduction or networking permitted without license from IHS
Licensee=Chevron Phillips Chemical Co LP/5956674001
Not for Resale, 11/09/2014 20:41:36 MST

(b) Nozzle Attachment Welds. Nozzle attachment welds as provided for in UHT-18, Figures UHT-18.1 and UHT-18.2 shall be radiographically examined in accordance with the requirements of UW-51, except that Figure UHT-18.2 type nozzles having an inside diameter of 2 in. (50 mm) or less shall be examined by a magnetic particle or liquid penetrant method. For nozzle attachments illustrated as sketches (a), (b), and (f) of Figure UHT-18.2, the exposed cross section of the vessel wall at the opening shall be included in the examination.

(c) All corrosion resistant overlay weld deposits shall be examined by the liquid penetrant method.

(d) Magnetic Particle Method. All welds, including welds for attaching nonpressure parts to heat treated steels covered by this Part, shall be examined by the magnetic particle method after the hydrostatic test, except that those surfaces not accessible after the hydrostatic test shall be examined by the magnetic particle method at the last feasible stage of vessel fabrication. A magnetization method shall be used that will avoid arc strikes. Cracks shall be repaired or removed.

(e) Liquid Penetrant Method. As an acceptable alternative to magnetic particle examination or when magnetic particle methods are not feasible because of the nonmagnetic character of the weld deposits, a liquid penetrant method shall be used. For vessels constructed of SA-333 Grade 8, SA-334 Grade 8, SA-353, SA-522, SA-553 Grades A and B, and SA-645 materials, welds not examined radiographically shall be examined by the liquid penetrant method either before or after the hydrotest. Cracks are unacceptable and shall be repaired or removed. Relevant indications are those which result from imperfections. Linear indications are those indications in which the length is more than three times the width. Any relevant linear indications greater than $^1/_{16}$ in. (1.5 mm) shall be repaired or removed.

FABRICATION

UHT-75 GENERAL

The rules in the following paragraphs apply specifically to the fabrication of pressure vessels and vessel parts that are constructed of heat treated steels covered by this Part and shall be used in conjunction with the general requirements for fabrication in Subsection A, and, when applicable, with the specific requirements for fabrication in Subsection B, Part UW.

(13) UHT-79 FORMING PRESSURE PARTS

(a) The selected thickness of material shall be such that the forming processes will not reduce the thickness of the material at any point below the minimum value required by the rules.

(1) Pieces that are formed after heat treatment at a temperature lower than the final tempering shall be heat treated in accordance with Table UHT-56 when the extreme fiber elongation from forming exceeds 5% as determined by the equations in Table UG-79-1.

(2) Pieces that are formed at temperatures equal to or higher than the original tempering shall be reheat treated in accordance with the applicable material specification, either before or after welding into the vessel.

UHT-80 HEAT TREATMENT

(a) Heating Furnace. Furnaces for heating, for quenching, for normalizing, and for tempering shall be provided with suitable equipment for the automatic recording of temperatures. The temperature of the vessel or vessel part during the holding period shall be recorded and shall be controlled within ±25°F (±15°C).

(b) Liquid quenching of flat plates and individual parts shall be done as required by the applicable material specifications.

(c) Formed plates for shell sections and heads may be quenched by sprays or immersion.

(d) Entire vessels, after completion of all welding operations, may be quenched by sprays or immersion.

(e) The design and operation of spray equipment and the size of tanks and provision for forced circulation shall be such as to produce a severity of quench in the quenched item sufficient to meet, in representative test specimens after tempering, the requirements of the materials specifications.

UHT-81 HEAT TREATMENT VERIFICATION TESTS

(a) Tests shall be made to verify that the heat treatments, and subsequent thermal treatments, performed by the fabricator have produced the required properties.

(b) One or more test coupons representative of the material and the welding in each vessel or vessel component shall be heat treated with the vessel or vessel component.

The requirements of (c) and (d) below are to be taken as minimum steps toward these objectives.

(c) See below.

(1) One or more test coupons from each lot of material in each vessel [see (d)] shall be quenched with the vessel or vessel component. A lot is defined as material from the same melt, quenched or normalized simultaneously and whose thicknesses are within plus or minus 20% or $^1/_2$ in. (13 mm) of nominal thickness, whichever is smaller. The test coupons shall be so proportionated that tensile and impact tests may be taken from the same locations relative to thickness as are required by the applicable material specifications. Weld metal tests shall be taken from the same locations relative to thickness as are required by the materials specifications for plates used in the component to be treated. The gage length of tensile specimens and the middle third of the length of impact specimens must be located at a minimum distance of $1 \times t$ from the quenched edge and/or end of the test coupon, where t

Provided by IHS under license with ASME
No reproduction or networking permitted without license from IHS
Licensee=Chevron Phillips Chemical Co LP/5956674001
Not for Resale, 11/09/2014 20:41:36 MST

is the thickness of the material which the test coupon represents. If desired, the effect of this distance may be achieved by temporary attachment of suitable thermal buffers. The effectiveness of such buffers shall be demonstrated by tests.

(2) In cases where the test coupon is not attached to the part being treated, it shall be quenched from the same heat treatment charge and under the conditions as the part which it represents. It shall be so proportioned that test specimens may be taken from the locations prescribed in (1) above.

(d) Tempering

(1) Attached Test Coupons. The coupons shall remain attached to the vessel or vessel component during tempering, except that any thermal buffers may be removed after quenching. After the tempering operation and after removal from the component, the coupon shall be subjected to the same thermal treatment(s), if any, to which the vessel or vessel component will be later subjected. The holding time at temperature shall not be less than that applied to the vessel or vessel component (except that the total time at each temperature may be applied in one heating cycle) and the cooling rate shall be no faster.

(2) Separate Test Coupons. Test coupons which are quenched separately as described in (c)(2) above shall be tempered similarly and simultaneously with the vessel or component which they represent. The conditions for subjecting the test coupons to subsequent thermal treatment(s) shall be as described in (c)(1) above.

(e) Number of Tests. One tensile test and one impact test shall be made on material from coupons representing each lot of material in each vessel or vessel component heat treated. A lot is defined as material from the same melt quenched simultaneously and whose thicknesses are within plus or minus 20%, or $^1/_2$ in. (13 mm), of nominal thickness, whichever is smaller.

(1) Coupons not containing welds shall meet the complete tensile requirements of the material specification and impact requirements of this part.

(2) Coupons containing weld metal shall be tested across the weld and shall meet the ultimate tensile strength requirements of the material specifications; in addition, the minimum impact requirements shall be met by samples with notches in the weld metal. The form and dimension of the tensile test specimen shall conform to QW-462.1(d) of Section IX. Yield strength and elongation are not a requirement of this test. Charpy impact testing shall be in accordance with the requirements of UHT-6.

(13) UHT-82 WELDING

(a) The qualification of the welding procedure and the welders shall conform to the requirements of Section IX, and such qualification tests shall be performed on postweld heat treated specimens when a postweld heat treatment is used.

(b) Due consideration shall be given to electrodes and filler metals for all welding processes to minimize the sources for hydrogen. When low-alloy steel electrodes and filler metals are used, the classification shall include an H4 supplemental diffusible hydrogen designator (4 ml of hydrogen max. per 100 g of weld metal) for each of the following:

(1) electrodes for shielded metal arc welding conforming to SFA-5.5

(2) electrodes and fluxes for submerged arc welding conforming to SFA-5.23

(3) electrodes and rods for gas-shielded arc welding conforming to SFA-5.28 or SFA-5.36

(4) electrodes for flux-cored arc welding conforming to SFA-5.29 or SFA-5.36

Practices used for controlling the storage of electrodes, rods, and fluxes shall be developed by the vessel manufacturer or those recommended by the electrode manufacturer.

(c) Filler metal containing more than 0.06% vanadium shall not be used for weldments subject to postweld heat treatment.

(d) For welded vessels in which the welds are not subject to quenching and tempering, the deposited weld metal and the heat affected zone shall meet the impact test requirements of UG-84, except that the Charpy V-notch tests and requirements of UHT-6(a) shall apply.

(e) The following materials are exempt from production impact tests of the weld metal in accordance with UG-84 under the conditions given in (1) through (5) below:

Specification No.	UNS No.	P-No./Group No.
SA-353	K81340	11A/1
SA-522 Type I	K81340	11A/1
SA-553 Type I	K81340	11A/1
SA-553 Type II	K71340	11A/1
SA-645,Grade A	K41583	11A/2

(1) One of the following high nickel alloy filler metals is used:

Specification No.	Classification	F-No.
SFA-5.11	ENiCrMo-3	43
SFA-5.11	ENiCrMo-6	43
SFA-5.11	ENiCrFe-2	43
SFA-5.11	ENiCrFe-3	43
SFA-5.14	ERNiCr-3	43
SFA-5.14	ERNiCrFe-6	43
SFA-5.14	ERNiCrMo-3	43
SFA-5.14	ERNiCrMo-4	44

(2) All required impact tests shall be performed as part of the procedure qualification tests as specified in UG-84.

(3) Production impact tests of the heat affected zone are performed in accordance with UG-84(i).

(4) The welding processes are limited to gas metal arc, shielded metal arc, and gas tungsten arc.

Provided by IHS under license with ASME
No reproduction or networking permitted without license from IHS
Licensee=Chevron Phillips Chemical Co LP/5956674001
Not for Resale, 11/09/2014 20:41:36 MST

(5) The minimum allowable temperature of the vessel shall be not less than −320°F (−195°C).

(f) For materials SA-508 and SA-543, the following, in addition to the variables in Section IX, QW-250, shall be considered as essential variables requiring requalification of the welding procedure:

(1) a change in filler metal SFA classification or to weld metal not covered by an SFA specification.

(2) an increase in the maximum interpass temperature or a decrease in the minimum specified preheat temperature. The specified range between the preheat and interpass temperatures shall not exceed 150°F (85°C).

(3) a change in the heat treatment (Procedure qualification tests shall be subjected to heat treatment essentially equivalent to that encountered in fabrication of the vessel or vessel parts including the maximum total aggregate time at temperature or temperatures and cooling rates.)

(4) a change in the type of current (AC or DC), polarity, or a change in the specified range for amp, volt, or travel speed.

(5) a change in the thickness T of the welding procedure qualification test plate as follows:

(-a) for welded joints which are quenched and tempered after welding, any increase in thickness [the minimum thickness qualified in all cases is $^1/_4$ in. (6 mm)];

(-b) for welded joints which are not quenched and tempered after welding, any change as follows:

T less than $^5/_8$ in. (16 mm)	Any decrease in thickness (the maximum thickness qualified is $2T$)
$^5/_8$ in. (16 mm) and over	Any departure from the range of $^5/_8$ in. (16 mm) to $2T$

(6) for the shielded metal arc, submerged arc, and gas-shielded and flux-cored arc welding processes, an increase in the supplemental diffusible hydrogen designator from that used during procedure qualification.

(7) preheat shall be 100°F (38°C) minimum for material thickness up to and including $^1/_2$ in. (13 mm); 200°F (95°C) minimum for material above $^1/_2$ in. (13 mm) to and including $1^1/_2$ in. (38 mm); 300°F (150°C) minimum above $1^1/_2$ in. (38 mm). Preheat temperature shall be maintained for a minimum of 2 hr after completion of the weld joint.

(g) For SA-517 and SA-592 materials the requirements of (f)(1), (f)(2), (f)(3), (f)(4), and (f)(6), in addition to the variables in Section IX, QW-250, shall be considered as essential variables requiring requalification of the welding procedure.

(h) The PWHT as required by Table UHT-56 may be waived for SA-517 and SA-592 materials with a nominal thickness over 0.58 in. to $1^1/_4$ in. (15 mm to 32 mm), inclusive, provided the following conditions are met:

(1) a minimum preheat of 200°F (95°C) and a maximum interpass of 400°F (205°C) is used;

(2) after completion of welding and without allowing the weldment to cool below the minimum preheat temperature, the temperature of the weldment is raised to a minimum of 400°F (205°C) and maintained at that temperature for at least 4 hr; and

(3) all welds are examined by nondestructive examination in accordance with the provisions of this Part.

UHT-83 METHODS OF METAL REMOVAL

(a) Plate edges, welding bevels, chamfering and other operations involving the removal of metal shall be by machining, chipping, or grinding except as provided in (b) below.

(b) When metal removal is accomplished by methods involving melting, such as gas cutting or arc-air gouging, etc., it shall be done with due precautions to avoid cracking. Where the cut surfaces are not to be subsequently eliminated by fusion with weld deposits, they shall be removed by machining or grinding to a depth of at least $^1/_{16}$ in. (1.5 mm) followed by inspection by magnetic particle or liquid penetrant methods.

CAUTION: The properties of the base metal may be adversely affected by excessive local heat inputs.

UHT-84 WELD FINISH

The requirements of UW-35(a) and UW-51(b) shall be met except that for SA-517 material the maximum weld reinforcement shall not exceed 10% of the plate thickness or $^1/_8$ in. (3.0 mm), whichever is less. The edge of the weld deposits shall merge smoothly into the base metal without undercuts or abrupt transitions; this requirement shall apply to fillet and groove welds as well as to butt welds.

UHT-85 STRUCTURAL AND TEMPORARY WELDS

(a) Welds for pads, lifting lugs and other nonpressure parts, as well as temporary lugs for alignment, shall be made by qualified welders in full compliance with a qualified welding procedure.

(b) Temporary welds shall be removed and the metal surface shall be restored to a smooth contour. The area shall be inspected by magnetic particle or liquid penetrant method for the detection and elimination of cracks. If repair welding is required, it shall be in accordance with qualified procedures, and the finished weld surface shall be inspected as required in UHT-57(b) or UHT-57(c). Temporary welds and repair welds shall be considered the same as all other welds so far as requirements for qualified operators and procedures and for heat treatment are concerned.

Provided by IHS under license with ASME
No reproduction or networking permitted without license from IHS
Licensee=Chevron Phillips Chemical Co LP/5956674001
Not for Resale, 11/09/2014 20:41:36 MST

UHT-86 MARKING ON PLATES AND OTHER MATERIALS

Any steel stamping shall be done with "low stress" stamps as commercially available. Steel stamping of all types may be omitted on material below $^1/_2$ in. (13 mm) in thickness. For the use of other markings in lieu of stamping, see UG-77(b).

INSPECTION AND TESTS

UHT-90 GENERAL

The provisions for inspection and testing in Subsections A and B shall apply to vessels and vessel parts constructed of steels covered by this Part.

MARKING AND REPORTS

UHT-115 GENERAL

The provisions for marking and reports in UG-115 through UG-120 shall apply to pressure vessels constructed in whole or in part of steels covered by this Part, except that the use of nameplates is mandatory for shell thicknesses below $^1/_2$ in. (13 mm). Nameplates are preferred on vessels constructed of steels covered by this Part in all thicknesses in preference to stamping. In addition to the required marking, the letters UHT shall be applied below the Certification Mark and U Designator.

PRESSURE RELIEF DEVICES

UHT-125 GENERAL

The provisions for pressure relief devices in UG-125 through UG-136 shall apply without supplement to pressure vessels constructed in whole or in part of steels covered by this Part.

Provided by IHS under license with ASME
No reproduction or networking permitted without license from IHS
Licensee=Chevron Phillips Chemical Co LP/5956674001
Not for Resale, 11/09/2014 20:41:36 MST

PART ULW
REQUIREMENTS FOR PRESSURE VESSELS FABRICATED BY LAYERED CONSTRUCTION

INTRODUCTION

The rules in Section VIII, Divisions 1 and 2 to cover the construction of layered vessels have been developed to parallel each other as far as can be done within the parameters of each Division. The design criteria may influence the selection of the Division. There are several manufacturing techniques used to fabricate layered vessels, and these rules have been developed to cover most techniques used today for which there is extensive documented construction and operational data. Some acceptable layered shell types are shown in Figure ULW-2.1. Some acceptable layered head types are shown in Figure ULW-2.2.

ULW-1 SCOPE

The rules in Part ULW are applicable to pressure vessels or parts thereof fabricated by layered construction as defined in 3-2 and ULW-2. These rules shall be used in conjunction with the requirements of Subsections A, B, and C, except for directly fired vessels described in UW-2(d) in Subsection B and except for Parts UCI and UCD in Subsection C, or except as otherwise required in this Part. The requirements for vessels that are to contain lethal substances, UW-2(a), apply only to the inner shell and the inner heads. Brazing of layered parts is not permitted except for the inner shell, inner head, and special solid wall fittings. The Manufacturer's Quality Control System as required by U-2(h) and Mandatory Appendix 10 shall include the construction procedure that will outline the sequence and method of application of layers and measurement of layer gaps.

ULW-2 NOMENCLATURE

The following terms are used in Part ULW relative to layered vessels:

(a) Layered Vessel. A vessel having a shell and/or heads made up of two or more separate layers.

(b) Inner Shell. The inner cylinder that forms the pressure tight membrane.

(c) Inner Head. The inner head that forms the pressure tight membrane.

(d) Shell Layer. Layers may be cylinders formed from plate, sheet, or forging, or the equivalent formed by coiling, or by helically wound interlocking strips. (This does not include wire winding.)

(e) Head Layer. Any one of the head layers of a layered vessel except the inner head.

(f) Overwraps. Layers added to the basic shell or head thickness for the purpose of building up the thickness of a layered vessel for reinforcing shell or head openings, or making a transition to thicker sections of the layered vessel.

(g) Dummy Layer. A layer used as a filler between the inner shell (or inner head) and other layers, and not considered as part of the required total thickness.

MATERIAL

ULW-5 GENERAL

Material used for pressure parts shall conform to one of the specifications permitted in the applicable Parts of Subsections A, B, and C, except for 5%, 8%, and 9% nickel steel materials which are permitted only for inner shells and inner heads.

DESIGN

ULW-16 GENERAL

(a) The design of layered pressure vessels shall conform to the design requirements given in UG-16 through UG-46 except that:

(1) reinforcement of openings is required as illustrated in Figure ULW-18.1;

(2) in calculating the requirements for vacuum per UG-28, only the inner shell or inner head thickness shall be used;

(3) layered shells under axial compression shall be calculated using UG-23, and utilizing the total shell thickness.

(b) The inner shell or inner head material which has a lower allowable design stress than the layer materials may only be included as credit for part of the total wall thickness if S_1 is not less than $0.50S_L$ by considering its effective thickness to be

$$t_{\text{eff}} = t_{\text{act}}\frac{S_1}{S_L}$$

where

S_L = design stress of layers

Provided by IHS under license with ASME
No reproduction or networking permitted without license from IHS
Licensee=Chevron Phillips Chemical Co LP/5956674001
Not for Resale, 11/09/2014 20:41:36 MST

Figure ULW-2.1
Some Acceptable Layered Shell Types

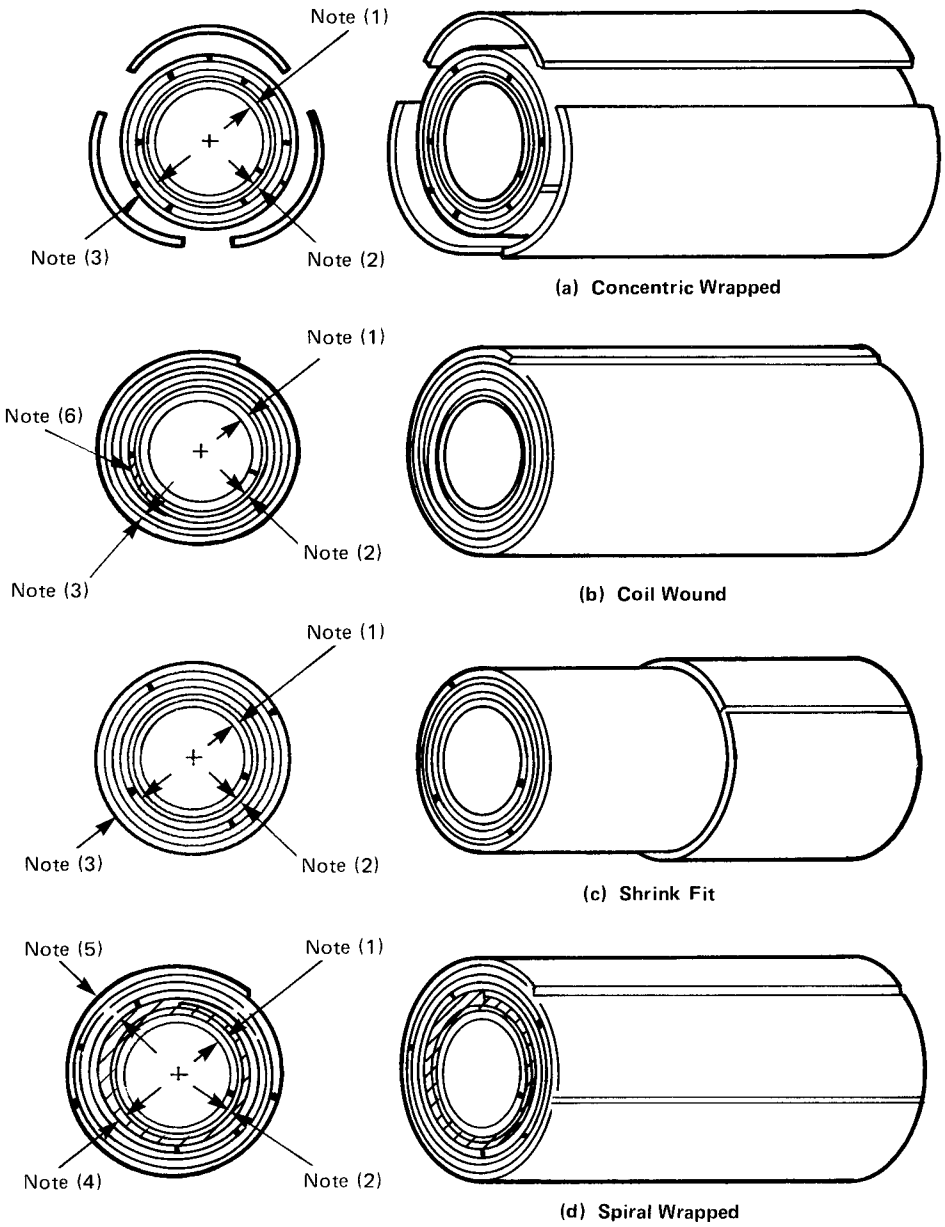

NOTES:
(1) Inner Shell
(2) Dummy layer (if used)
(3) Layers
(4) Shell layer (tapered)
(5) Balance of layers
(6) Gap

Provided by IHS under license with ASME
No reproduction or networking permitted without license from IHS
Licensee=Chevron Phillips Chemical Co LP/5956674001
Not for Resale, 11/09/2014 20:41:36 MST

Figure ULW-2.2
Some Acceptable Layered Head Types

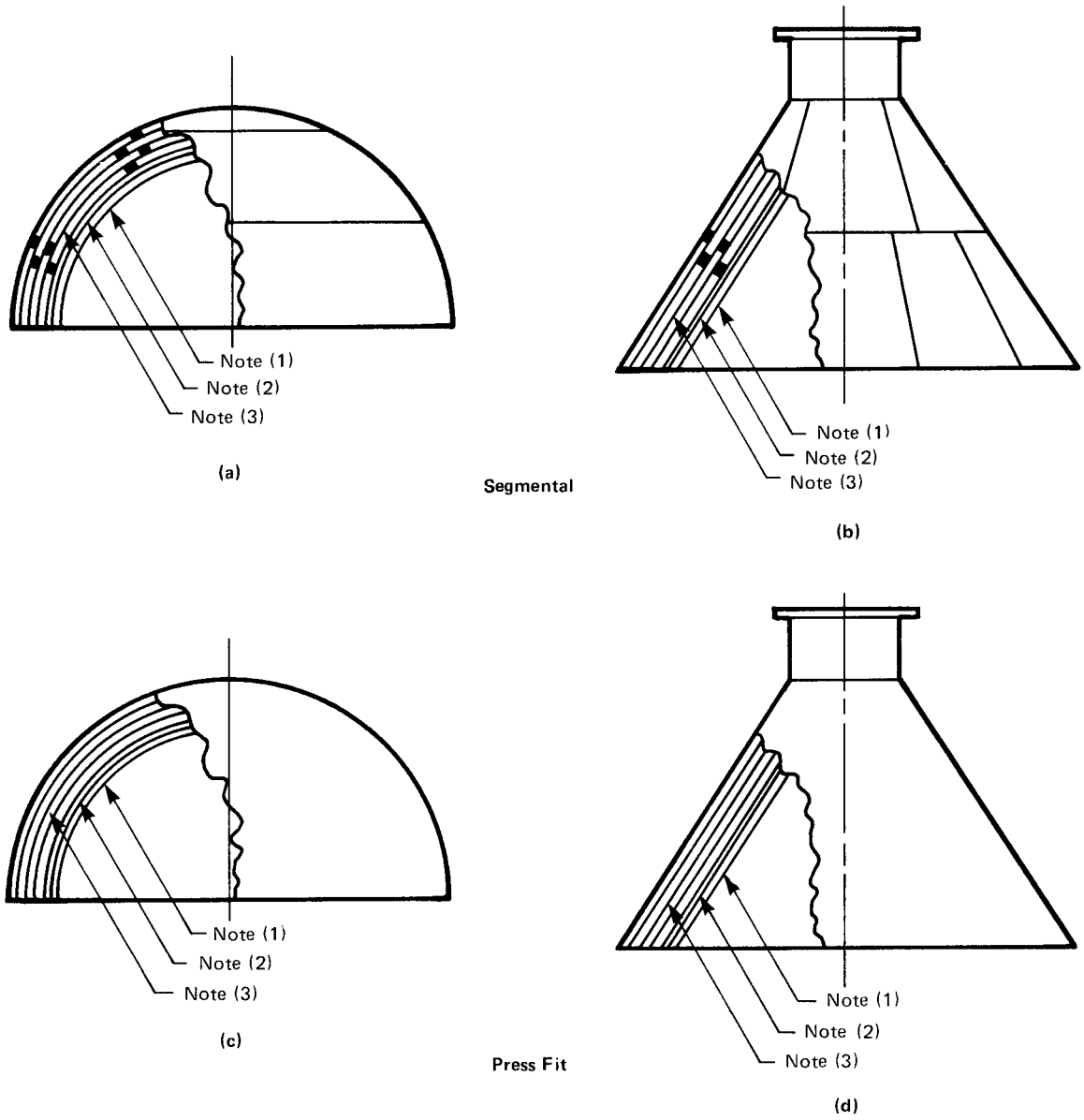

NOTES:
(1) Inner head
(2) Dummy layer (if used)
(3) Head layers

Provided by IHS under license with ASME
No reproduction or networking permitted without license from IHS
Licensee=Chevron Phillips Chemical Co LP/5956674001
Not for Resale, 11/09/2014 20:41:36 MST

S_1 = design stress of inner shell or inner head
t_{act} = nominal thickness of inner shell or inner head
t_{eff} = effective thickness of inner shell or inner head

(c) Layers in which the maximum allowable stress value of the materials is within 20% of the other layers may be used by prorating the maximum allowable stress of the layers in the thickness formula, provided the materials are compatible in modulus of elasticity and coefficient of thermal expansion.

(d) The minimum thickness of any layer shall not be less than $^1/_8$ in. (3 mm).

(e) Torispherical layered heads are not permitted.

ULW-17 DESIGN OF WELDED JOINTS

(a) Categories A and B joints of inner shells and inner heads of layered sections shall be as follows:

(1) Category A joints shall be Type No. (1) of Table UW-12.

(2) Category B joints shall be Type No. (1) or (2) of Table UW-12.

(b) Category A joints of layered sections shall be as follows:

(1) Category A joints of layers over $^7/_8$ in. (22 mm). in thickness shall be Type No. (1) of Table UW-12.

(2) Category A joints of layers $^7/_8$ in. (22 mm) or less in thickness shall be of Type No. (1) or (2) of Table UW-12, except the final outside weld joint of spiral wrapped layered shells may be a single lap weld.

(c) Category B joints of layered shell sections to layered shell sections, or layered shell sections to solid shell sections, shall be of Type (1) or (2) of Table UW-12.

(1) Category B joints of layered sections to layered sections of unequal thickness shall have transitions as shown in Figure ULW-17.1 sketch (a) or (b).

(2) Category B joints of layered sections to solid sections of unequal thickness shall have transitions as shown in Figure ULW-17.1 sketch (c), (d), (e), or (f).

(3) Category B joints of layered sections to layered sections of equal thickness shall be as shown in Figure ULW-17.6 sketch (b), (c), (f), or (g).

(4) Category B joints of layered sections to solid sections of equal thickness shall be as shown in Figure ULW-17.6 sketch (a) or (e).

(d) Category A joints of solid hemispherical heads to layered shell sections shall be of Type (1) or (2) of Table UW-12.

(1) Transitions shall be as shown in Figure ULW-17.2 sketch (a), (b-1), (b-2), or (b-3) when the hemispherical head thickness is less than the thickness of the layered shell section and the transition is made in the layered shell section.

(2) Transitions shall be as shown in Figure ULW-17.2 sketches (c), (d-1), or (e) when the hemispherical head thickness is greater than the thickness of the layered shell section and transition is made in the layered shell section.

(3) Transition shall be as shown in Figure ULW-17.2 sketch (f) when the hemispherical head thickness is less than the thickness of the layered shell section and the transition is made in the hemispherical head section.

(e) Category B joints of solid elliptical, torispherical, or conical heads to layered shell sections shall be of Type (1) or (2) of Table UW-12. Transitions shall be as shown in Figure ULW-17.2 sketch (c), (d-1), (d-2), (e), or (f).

(f) Category C joints of solid flat heads and tubesheets to layered shell sections shall be of Type (1) or (2) of Table UW-12 as indicated in Figure ULW-17.3. Transitions, if applicable, shall be used as shown in Figure ULW-17.1 sketch (c), (d), (e), or (f).

(g) Category C joints attaching solid flanges to layered shell sections and layered flanges to layered shell sections shall be of Type (1) or (2) of Table UW-12 as indicated in Figure ULW-17.4.

(h) Category A joints of layered hemispherical heads to layered shell sections shall be of Type (1) or (2) of Table UW-12 with a transition as shown in Figure ULW-17.5 sketch (a-1) or (a-2).

(i) Category B joints of layered conical heads to layered shell sections shall be of Type (1) or (2) of Table UW-12 with transitions as shown in Figure ULW-17.5 sketch (b-1).

(j) Category B joints of layered shells to layered shell sections or layered shell sections to solid heads or shells may be butt joints as shown in Figure ULW-17.6 sketches (c), (d), and (e), or step welds as shown in Figure ULW-17.6 sketches (a), (b), (f), and (g).

(k) Category D joints of solid nozzles, manholes, and other connections to layered shell or layered head sections shall be full penetration welds as shown in Figure ULW-18.1 except as permitted in sketch (i), (j), (k), or (l). Category D joints between layered nozzles and shells or heads are not permitted.

(l) When layers of Category A joints as shown in Figure ULW-17.2 sketches (a), (b-1), (b-2), and (b-3) and Figure ULW-17.5 sketches (a-1) and (a-2) are welded with fillet welds having a taper less than 3:1, the longitudinal load resisted by the weld shall not exceed the allowable load as defined in UW-18(d). No resistance due to friction shall be used in determining the longitudinal load at the welds. The longitudinal load resisted by the weld shall consider the load transferred from the remaining outer layers.

ULW-18 NOZZLE ATTACHMENTS AND OPENING REINFORCEMENT

(a) All openings, except as provided in (b) below, shall meet the requirements for reinforcing per UG-36 through UG-46. All reinforcements required for openings shall be integral with the nozzle or provided in the layered section or both. Additional layers may be included for required reinforcement. Some acceptable nozzle geometries and

Provided by IHS under license with ASME
No reproduction or networking permitted without license from IHS
Licensee=Chevron Phillips Chemical Co LP/5956674001
Not for Resale, 11/09/2014 20:41:36 MST

Figure ULW-17.1
Transitions of Layered Shell Sections

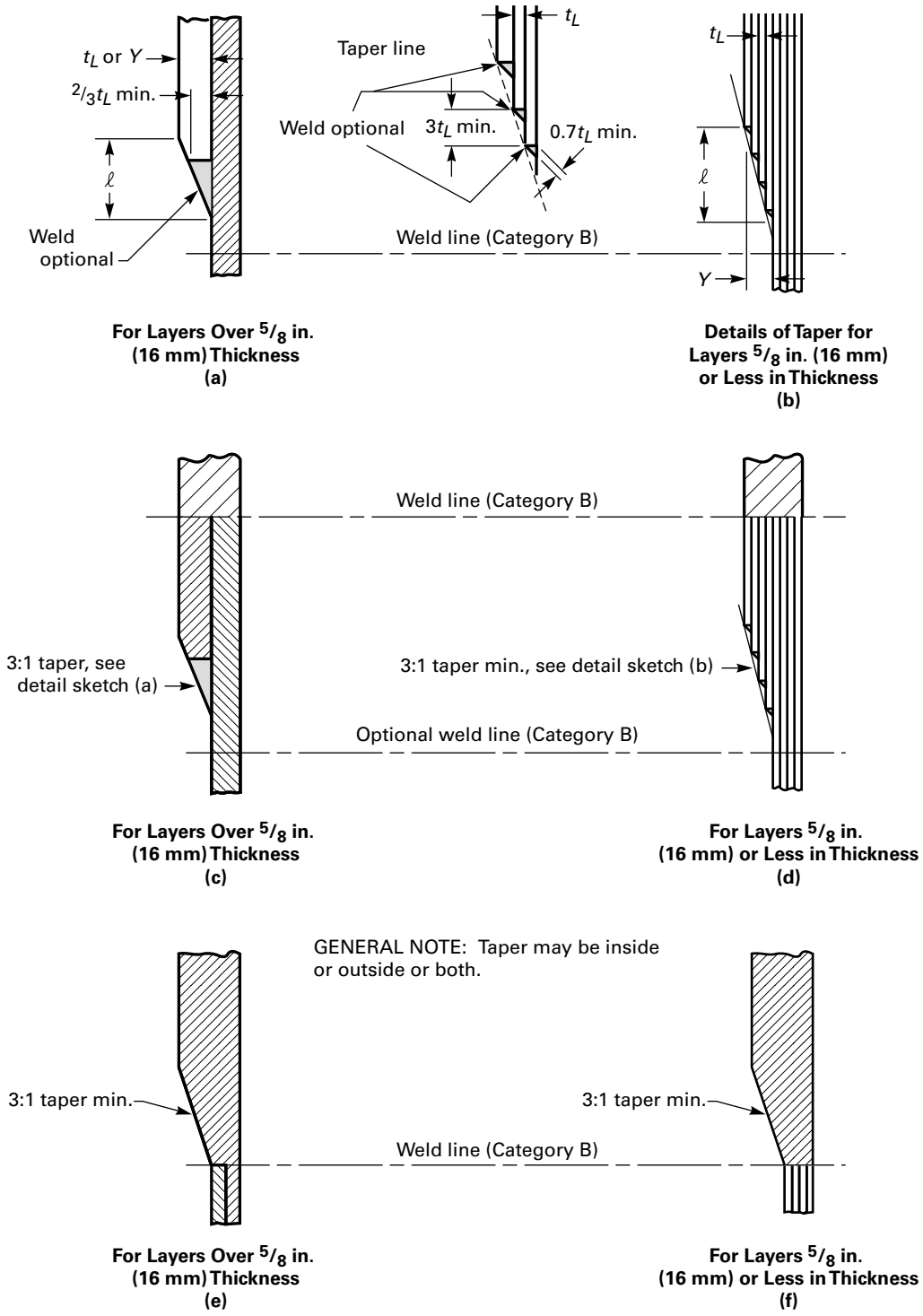

GENERAL NOTE: $\ell \geq 3Y$, where ℓ is required length of taper and Y is the offset. t_L is the thickness of one layer. The length of required taper may include the width of the weld. The transition may be on either or both sides.

Provided by IHS under license with ASME
No reproduction or networking permitted without license from IHS
Licensee=Chevron Phillips Chemical Co LP/5956674001
Not for Resale, 11/09/2014 20:41:36 MST

(13)

Figure ULW-17.2
Some Acceptable Solid Head Attachments to Layered Shell Sections

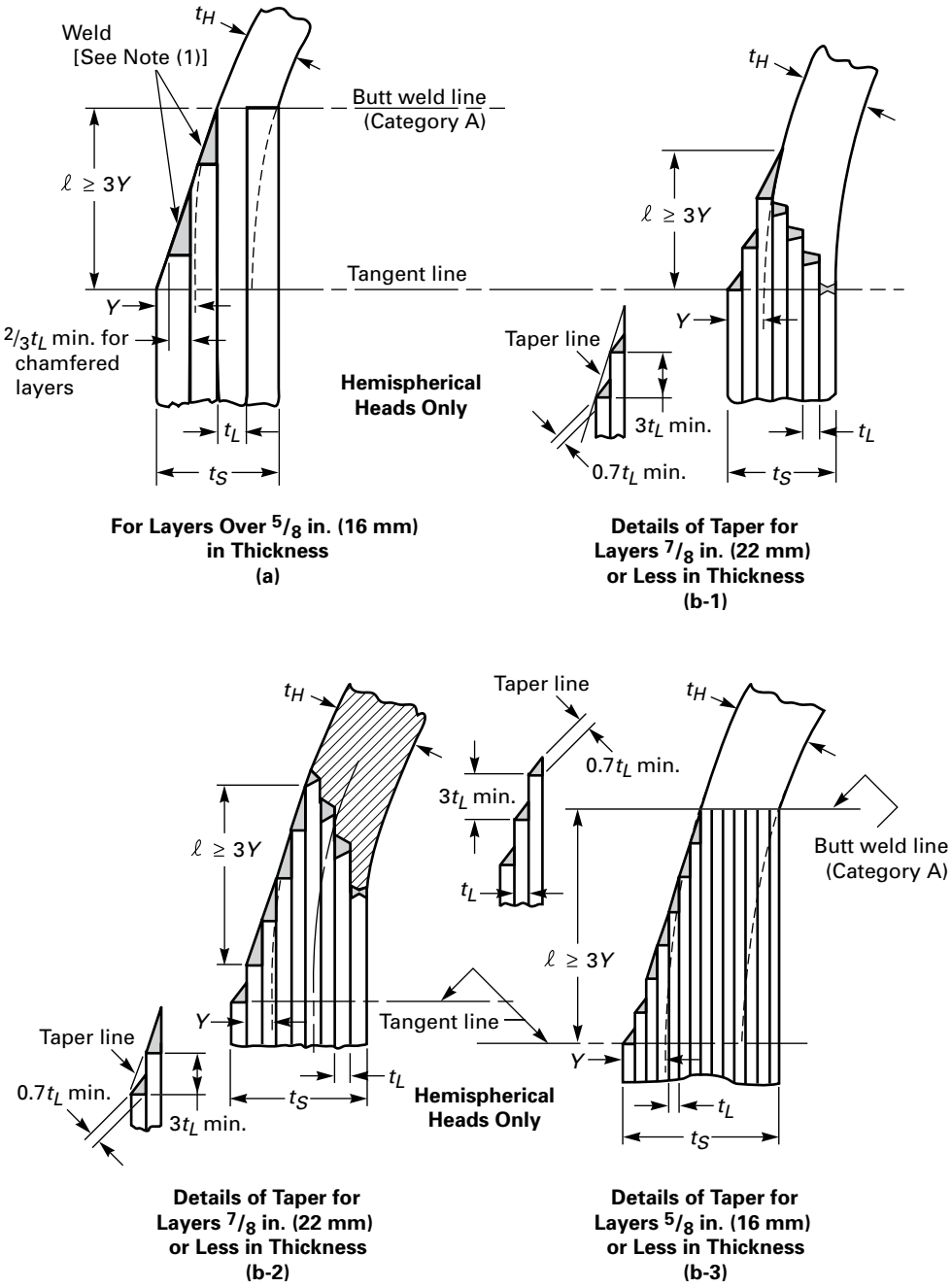

For Layers Over $^5/_8$ in. (16 mm) in Thickness (a)

Details of Taper for Layers $^7/_8$ in. (22 mm) or Less in Thickness (b-1)

Details of Taper for Layers $^7/_8$ in. (22 mm) or Less in Thickness (b-2)

Details of Taper for Layers $^5/_8$ in. (16 mm) or Less in Thickness (b-3)

Provided by IHS under license with ASME
No reproduction or networking permitted without license from IHS
Licensee=Chevron Phillips Chemical Co LP/5956674001
Not for Resale, 11/09/2014 20:41:36 MST

Figure ULW-17.2
Some Acceptable Solid Head Attachments to Layered Shell Sections (Cont'd)

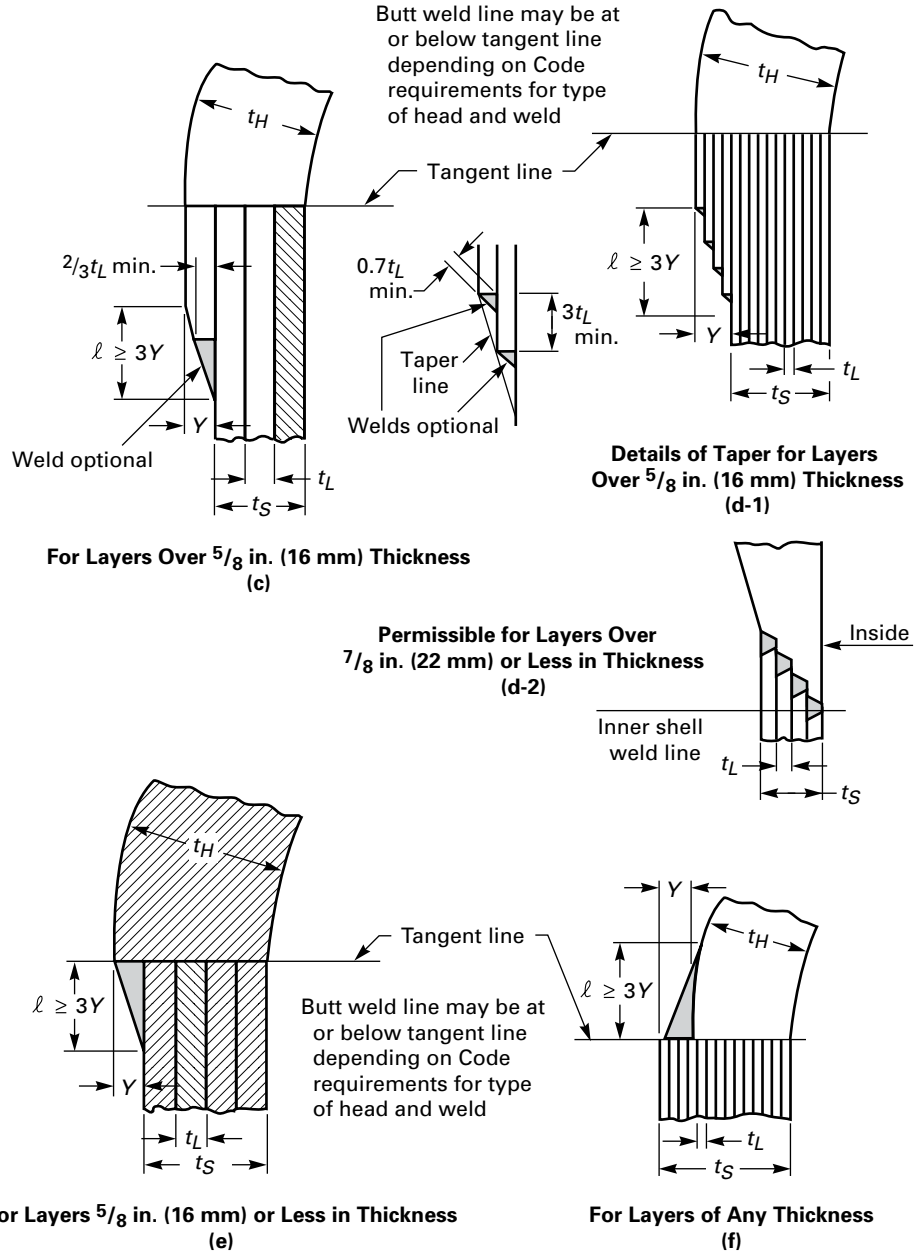

For Layers Over $^5/_8$ in. (16 mm) Thickness
(c)

Details of Taper for Layers Over $^5/_8$ in. (16 mm) Thickness
(d-1)

Permissible for Layers Over $^7/_8$ in. (22 mm) or Less in Thickness
(d-2)

For Layers $^5/_8$ in. (16 mm) or Less in Thickness
(e)

For Layers of Any Thickness
(f)

t_H = thickness of head at joint
t_L = thickness of one layer
t_S = thickness of layered shell
Y = offset

GENERAL NOTE: In sketch (e), Y shall not be larger than t_L. In sketch (f), Y shall not be larger than $^1/_2 t_S$. In all cases, ℓ shall not be less than 3 times Y. The shell centerline may be on either side of the head centerline by a maximum of $^1/_2(t_S - t_H)$. The length of required taper may include the width of the weld.

NOTE:
(1) Actual thickness shall not be less than theoretical head thickness.

Provided by IHS under license with ASME
No reproduction or networking permitted without license from IHS
Licensee=Chevron Phillips Chemical Co LP/5956674001
Not for Resale, 11/09/2014 20:41:36 MST

Figure ULW-17.3
Some Acceptable Flat Heads and Tubesheets With Hubs Joining Layered Shell Sections

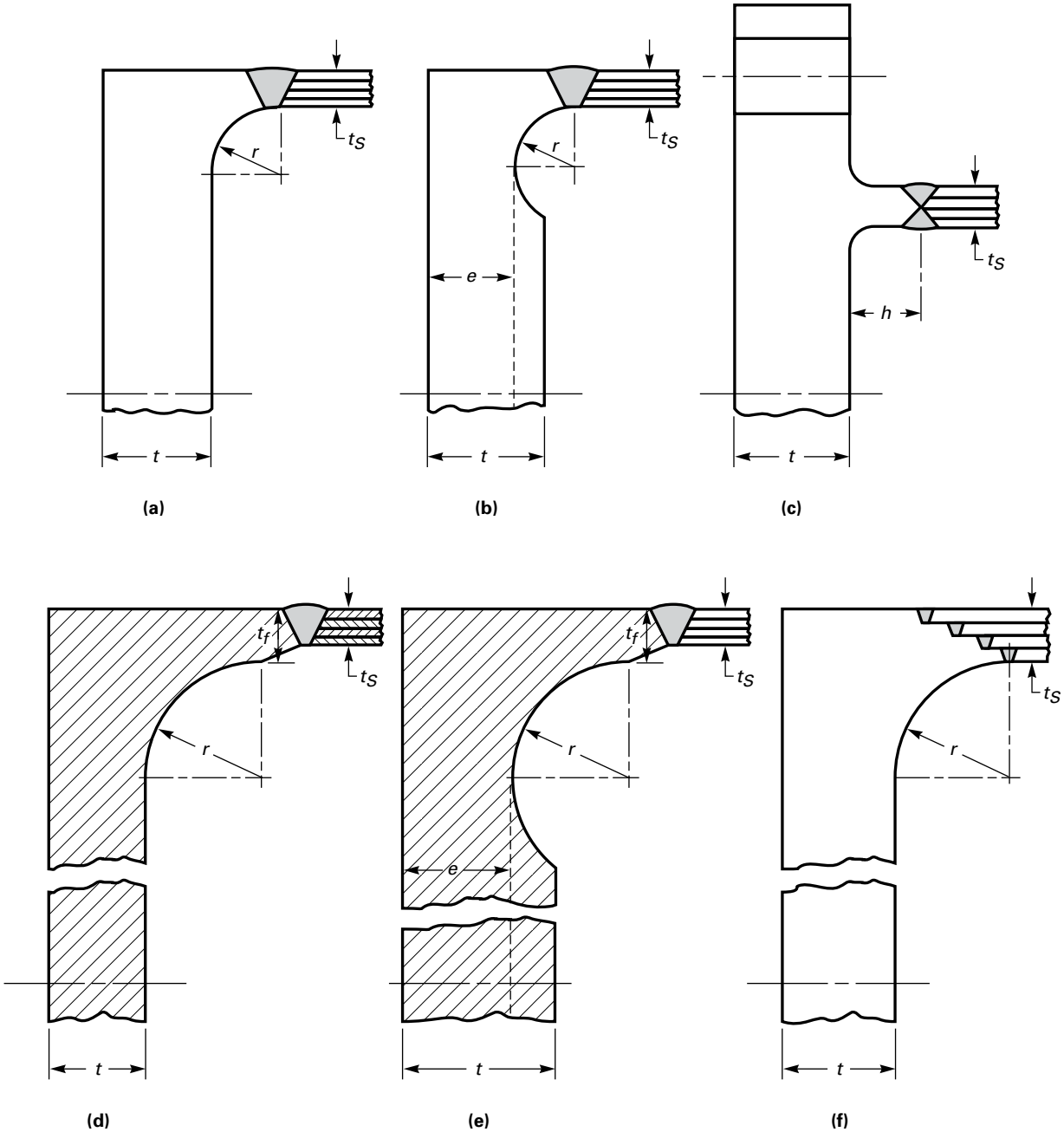

GENERAL NOTES:
(a) t_s = thickness of layered shell [see ULW-17 (f)]
(b) t = thickness of flat head or tubesheet [see UG-34]
(c) For all other dimensions, see Figure UW-13.3.

Provided by IHS under license with ASME
No reproduction or networking permitted without license from IHS
Licensee=Chevron Phillips Chemical Co LP/5956674001
Not for Resale, 11/09/2014 20:41:36 MST

Figure ULW-17.4
Some Acceptable Flanges for Layered Shells

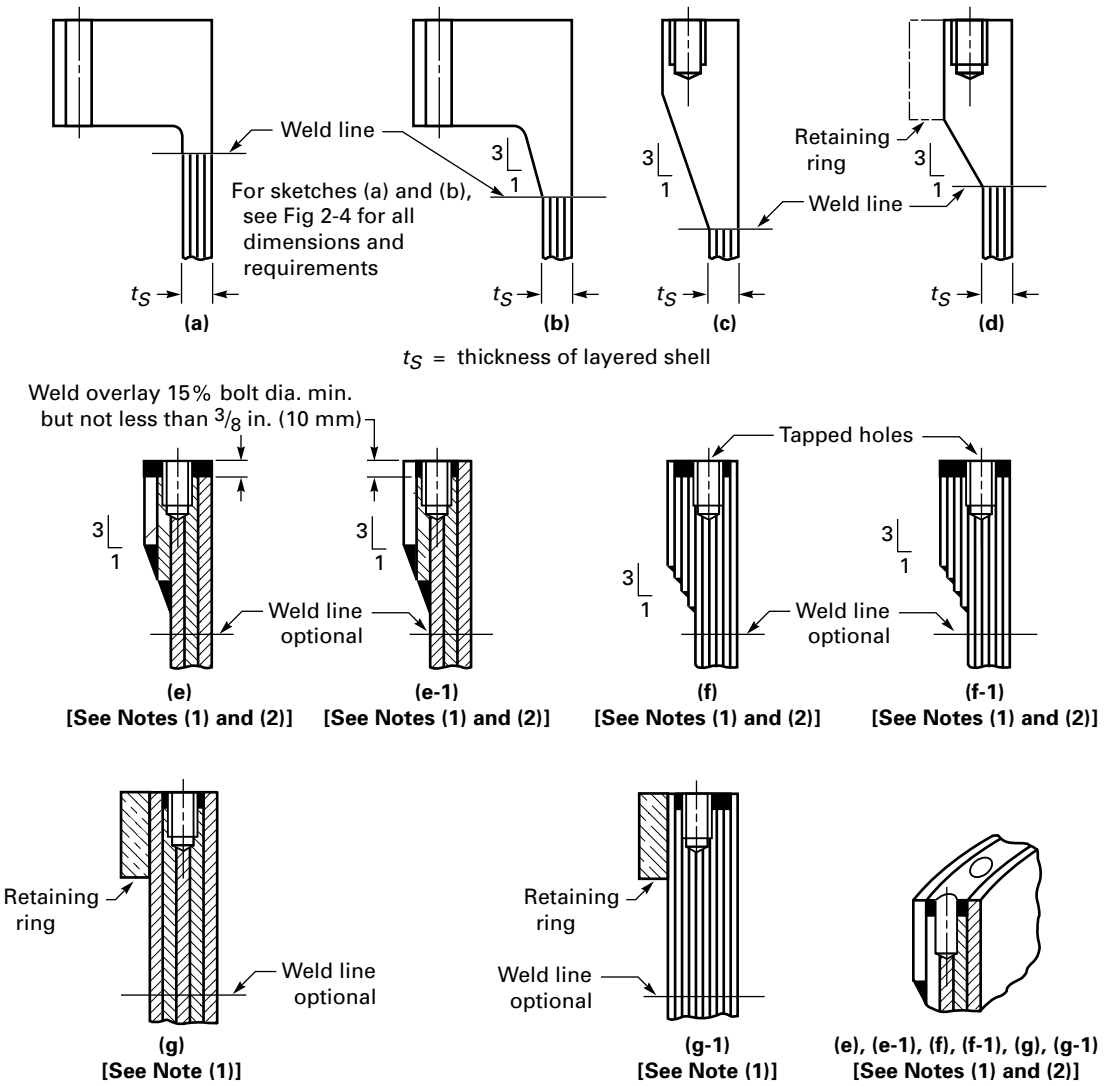

NOTES:

(1) The following limitations apply to sketches (e), (e-1), (f), (f-1), (g), and (g-1):
(a) the weld overlay shall tie the overlay, the overwraps, and layers together; and
(b) the bolt circle shall not exceed the outside diameter of the shell.

(2) For sketches (e), (e-1), (f), and (f-1), the angle of transition and size of fillet welds are optional. The bolt circle diameter shall be less than the outside diameter of the layered shell.

Provided by IHS under license with ASME
No reproduction or networking permitted without license from IHS
Licensee=Chevron Phillips Chemical Co LP/5956674001
Not for Resale, 11/09/2014 20:41:36 MST

Figure ULW-17.5
Some Acceptable Layered Head Attachments to Layered Shells

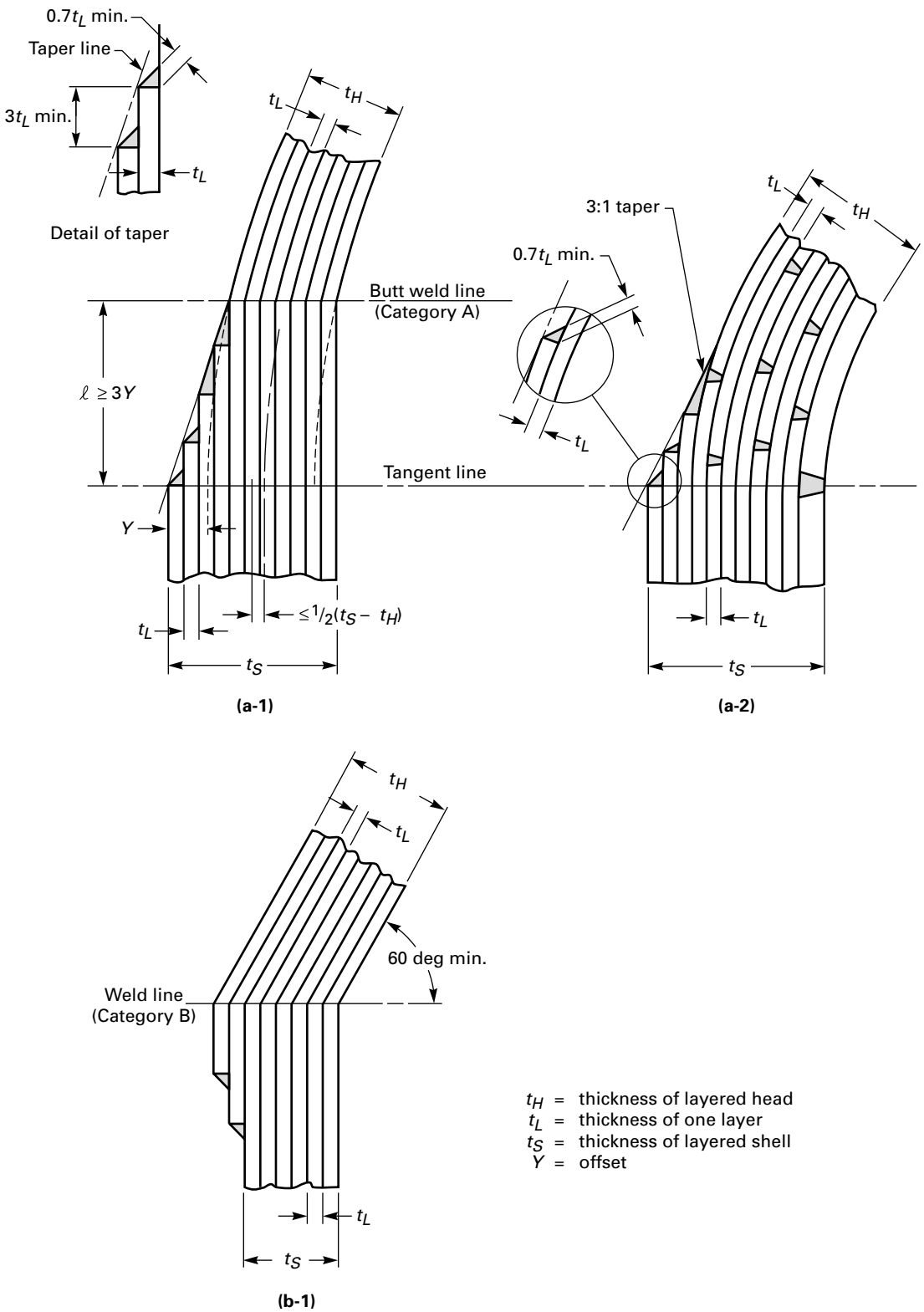

Provided by IHS under license with ASME
No reproduction or networking permitted without license from IHS
Licensee=Chevron Phillips Chemical Co LP/5956674001
Not for Resale, 11/09/2014 20:41:36 MST

Figure ULW-17.6
Some Acceptable Welded Joints of Layered-to-Layered and Layered-to-Solid Sections

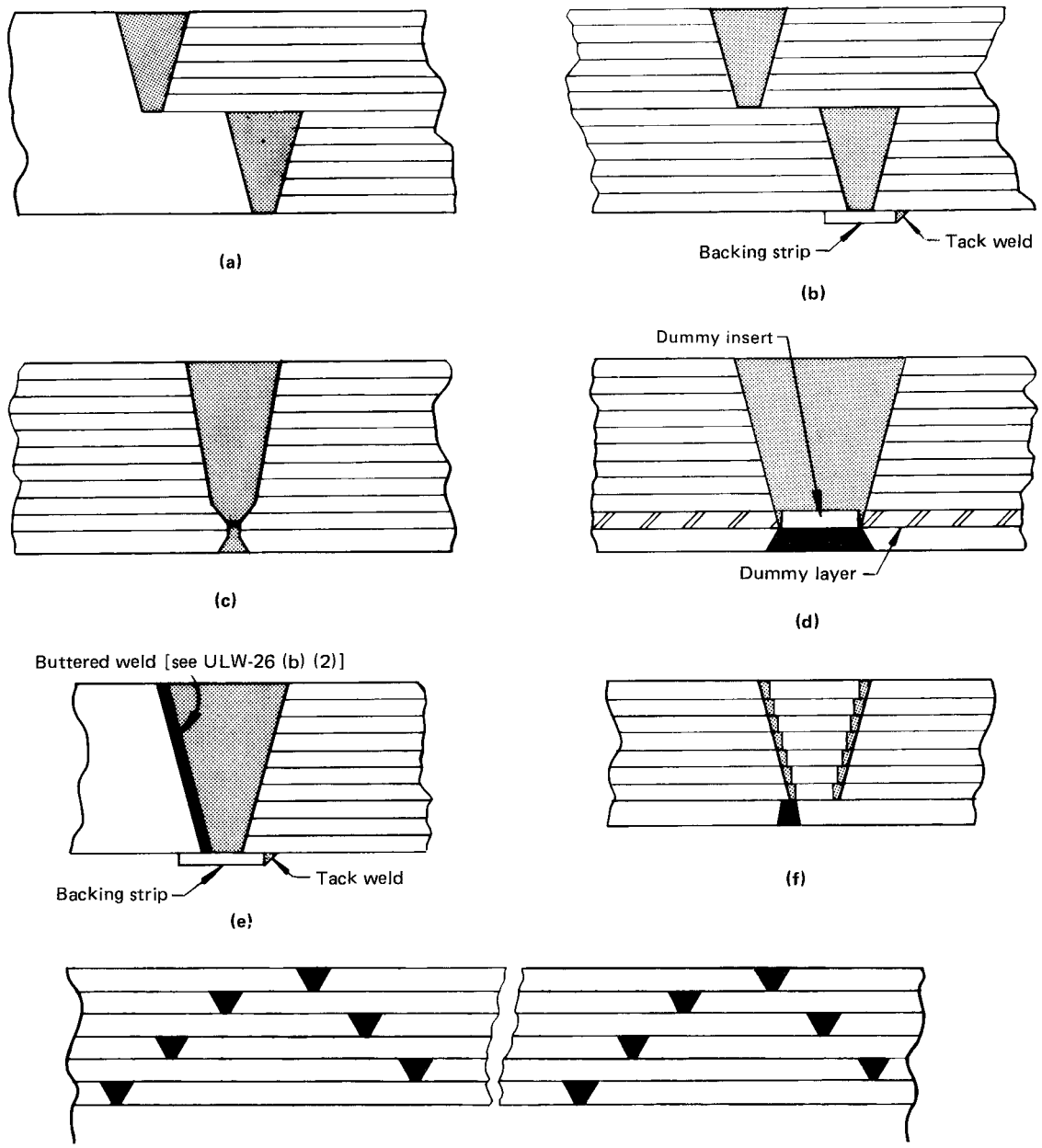

Provided by IHS under license with ASME
No reproduction or networking permitted without license from IHS
Licensee=Chevron Phillips Chemical Co LP/5956674001
Not for Resale, 11/09/2014 20:41:36 MST

attachments are shown in Figure ULW-18.1. Openings are not permitted in the shell sections of helically wound interlocking strip construction.

(b) Openings, NPS 2 (DN 50) and smaller, need not be reinforced when installed in layered construction, but shall be welded on the inside as shown in Figure ULW-18.1 sketch (j). The nozzle nominal wall thickness shall not be less than Schedule 80 pipe as fabricated, in addition to meeting the requirements of UG-45.

(c) Openings up to and including 6 in. (150 mm) nominal pipe size may be constructed as shown in Figure ULW-18.1 sketches (k) and (l). Such partial penetration weld attachments may only be used for instrumentation openings, inspection openings, etc., on which there are no external mechanical loadings provided the following requirements are met.

(1) The requirements for reinforcing specified in (a) above apply except that the diameter of the finished openings in the wall shall be d' as specified in Figure ULW-18.1 sketches (k) and (l), and the thickness t_r is the required thickness of the layered shells computed by the design requirements.

(2) Additional reinforcement, attached to the inside surface of the inner shell, may be included after the corrosion allowance is deducted from all exposed surfaces. The attachment welds shall comply with UW-15, UW-16, and Figure ULW-18.1 sketch (k) or (l).

(3) Metal in the nozzle neck available for reinforcement shall be limited by the boundaries specified in UG-40(c), except that the inner layer shall be considered the shell.

(d) Openings greater than NPS 2 may be constructed as shown in Figure ULW-18.1 sketch (i). The requirements for reinforcing specified in (a) above apply except that:

(1) the diameter of the finished openings in the wall shall be d' as specified in Figure ULW-18.1 sketch (i); and the thickness t_r is the required thickness of the layered shells computed by the design requirements;

(2) additional reinforcement may be included in the solid hub section as shown in Figure ULW-18.1 sketch (i);

(3) metal in the nozzle neck available for reinforcement shall be limited by the boundaries specified in UG-40(c), except that the inner layer shall be considered the shell.

(e) The bolt circle in a layered flange shall not exceed the outside diameter of the shell. Weld overlay as shown in Figure ULW-17.4 sketches (e), (e-1), (f), (f-1), (g), and (g-1) shall be provided to tie the overwraps and layers together.

ULW-20 WELDED JOINT EFFICIENCY

When the nondestructive examinations outlined in ULW-50 through ULW-57 have been complied with, the weld joint efficiency for design purposes shall be 100%.

ULW-22 ATTACHMENTS

Attachments to a single layer of a layered vessel shall be given consideration in meeting the requirements of UG-22. Outside layers are especially critical when support lugs, skirts, or jacket closures are welded to them. Only the thickness of the layer to which the attachment is welded shall be considered in calculating the stress near the attachment, except where provisions are made to transfer the load to other layers. For some acceptable supports, see Figure ULW-22. Jacketed closures shall be designed in accordance with Mandatory Appendix 9 except that:

(a) partial jackets as shown in Figure 9-7 are not permitted on layered sections;

(b) provisions shall be made for extending layer vents through the jacket (see ULW-76).

ULW-26 POSTWELD HEAT TREATMENT

(a) When required, pressure parts shall be postweld heat treated in accordance with the rules prescribed in UCS-56, UG-85, UW-10, UW-40, and UHT-56; however, layered vessels or layered vessel sections need not be postweld heat treated provided the requirements of (b) below are met.

(b) Unless required by UW-2, layered vessels or layered vessel sections need not be postweld heat treated when welded joints connect a layered section to a layered section, or a layered section to a solid wall, provided all of the following conditions are met.

(1) The thickness referred to in UCS-56 and UHT-56 is the thickness of one layer. Should more than one thickness of layer be used, the thickness of the thickest layer shall govern.

(2) The finished joint preparation of a solid section which is required to be postweld heat treated under the provisions of UCS-56 or UHT-56, shall be provided with a buttered[87] layer of at least $^1/_8$ in. (3 mm) thick welding material not requiring postweld heat treatment. Solid sections of P-No. 1 materials need not have this buttered layer. Postweld heat treatment of the buttered solid section shall then be performed prior to attaching to the layered sections. Postweld heat treatment following attachment to the layered section is not required unless the layered section is required to be postweld heat treated.

(3) Multipass welding is used and the weld layer thickness is limited to $^3/_8$ in. (10 mm) maximum. When materials listed in Part UHT are used, the last pass shall be given a temper bead welding technique[88] treatment except for 5%, 8%, and 9% nickel steels.

(4) For lethal service [UW-2(a)], see ULW-1 Scope.

Provided by IHS under license with ASME
No reproduction or networking permitted without license from IHS
Licensee=Chevron Phillips Chemical Co LP/5956674001
Not for Resale, 11/09/2014 20:41:36 MST

Figure ULW-18.1
Some Acceptable Nozzle Attachments in Layered Shell Sections

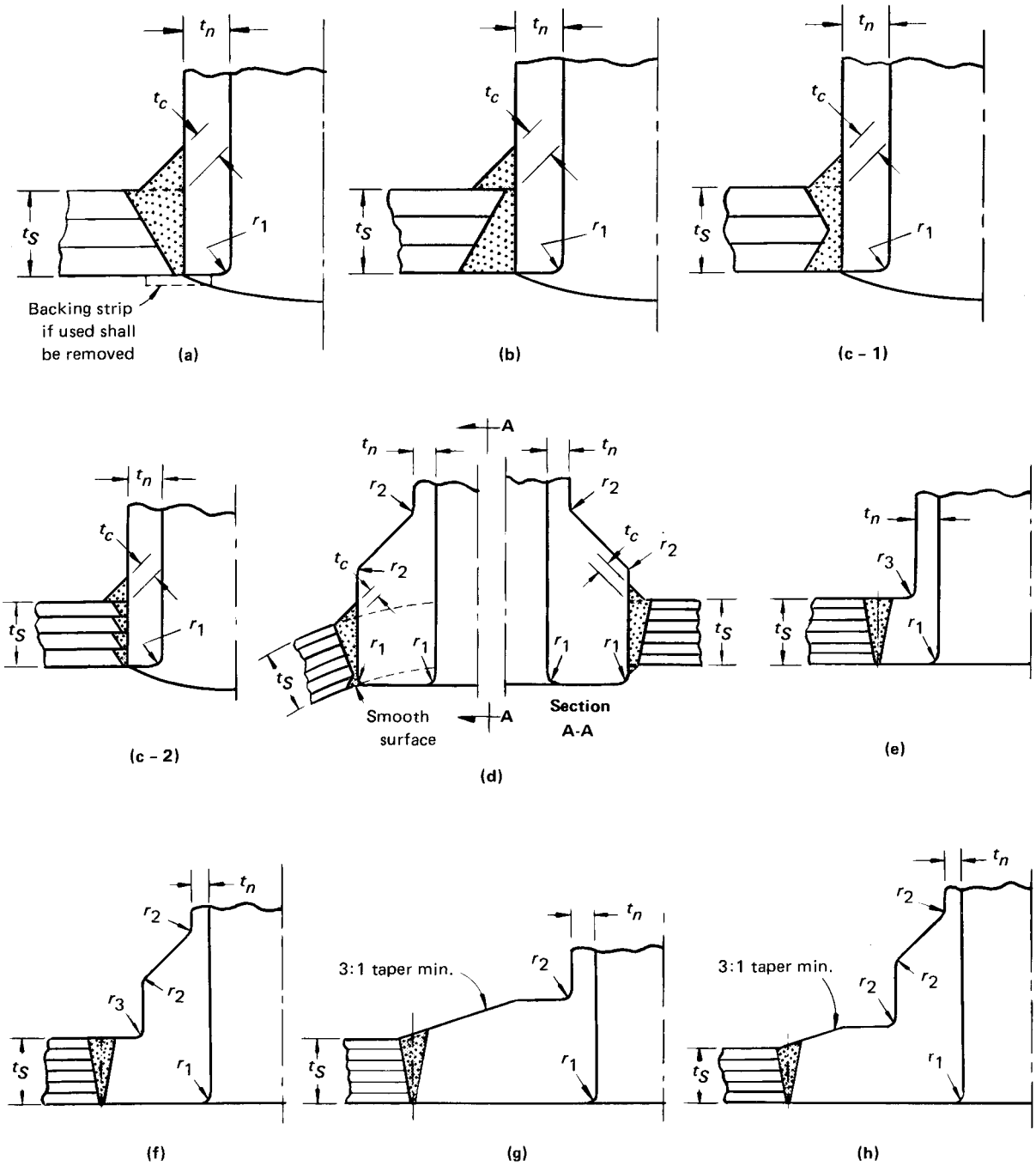

Provided by IHS under license with ASME
No reproduction or networking permitted without license from IHS
Licensee=Chevron Phillips Chemical Co LP/5956674001
Not for Resale, 11/09/2014 20:41:36 MST

Figure ULW-18.1
Some Acceptable Nozzle Attachments in Layered Shell Sections (Cont'd)

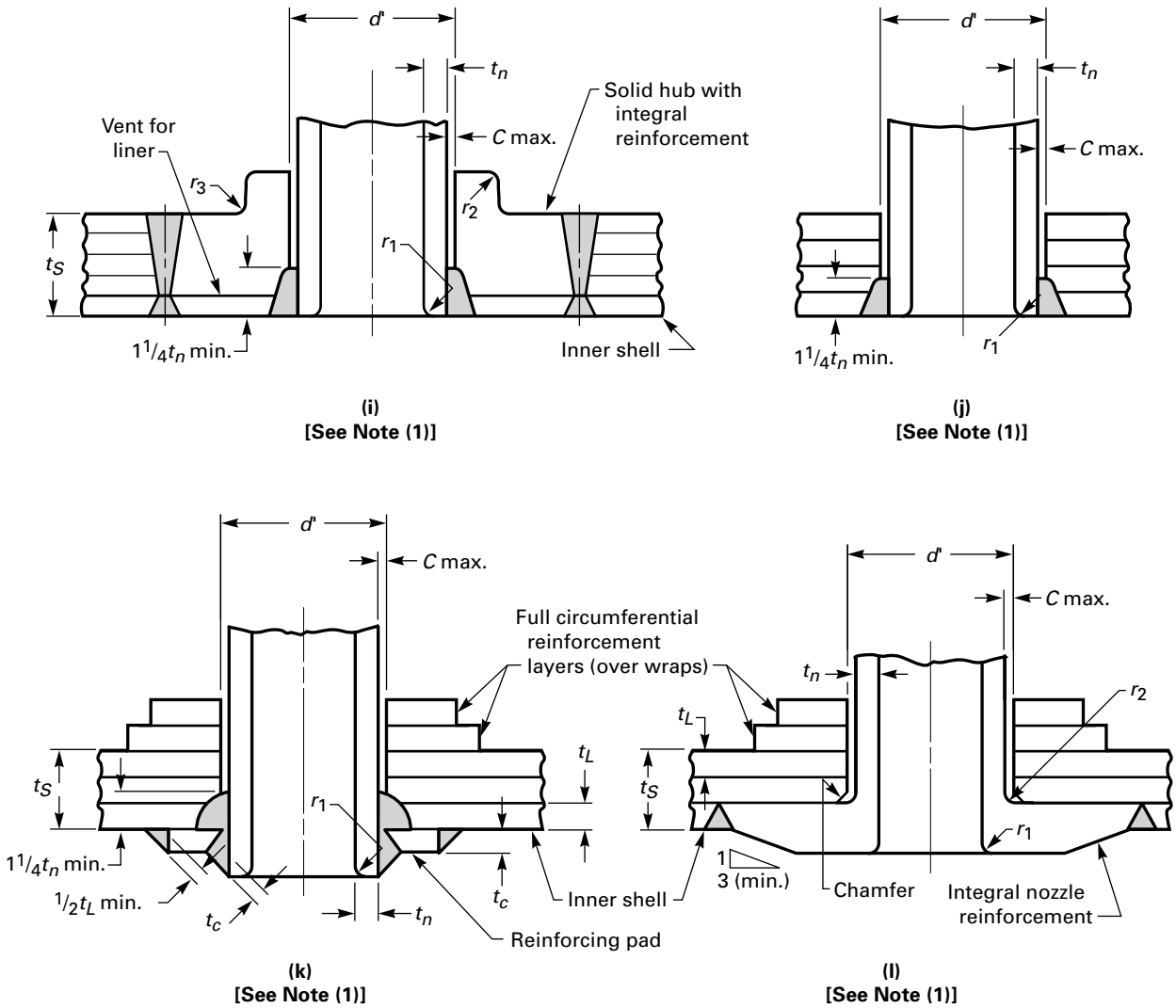

C max.	=	$^1/_8$ in (3 mm) radial clearance between nozzle neck and vessel opening
d'	=	finished opening in the wall (refer fo ULW-18 for max. permissible diameter)
r_1 min.	=	$^1/_4$ t_n or $^1/_8$ in. (3 mm), whichever is less
r_2	=	$^1/_4$ in. (6 mm) minimum
r_3 min.	=	$(^1/_4)t_n$ or $^3/_4$ in. (19 mm), whichever is less
t_c	=	not less than $^1/_4$ in. (6 mm) or 0.7 of the smaller of $^3/_4$ in. (19 mm) or t_n
t_L	=	thickness of one layer
t min.	=	the smaller of $^3/_4$ in. (19 mm) or t_n
t_n	=	nominal thickness of nozzle wall
t_S	=	thickness of layered shell

NOTE:
(1) Provide means, other than by seal welding, to prevent entry of external foreign matter into the annulus between the layers and the nozzle neck O.D. for sketches (i), (j), (k), (l).

Provided by IHS under license with ASME
No reproduction or networking permitted without license from IHS
Licensee=Chevron Phillips Chemical Co LP/5956674001
Not for Resale, 11/09/2014 20:41:36 MST

Figure ULW-22
Some Acceptable Supports for Layered Vessels

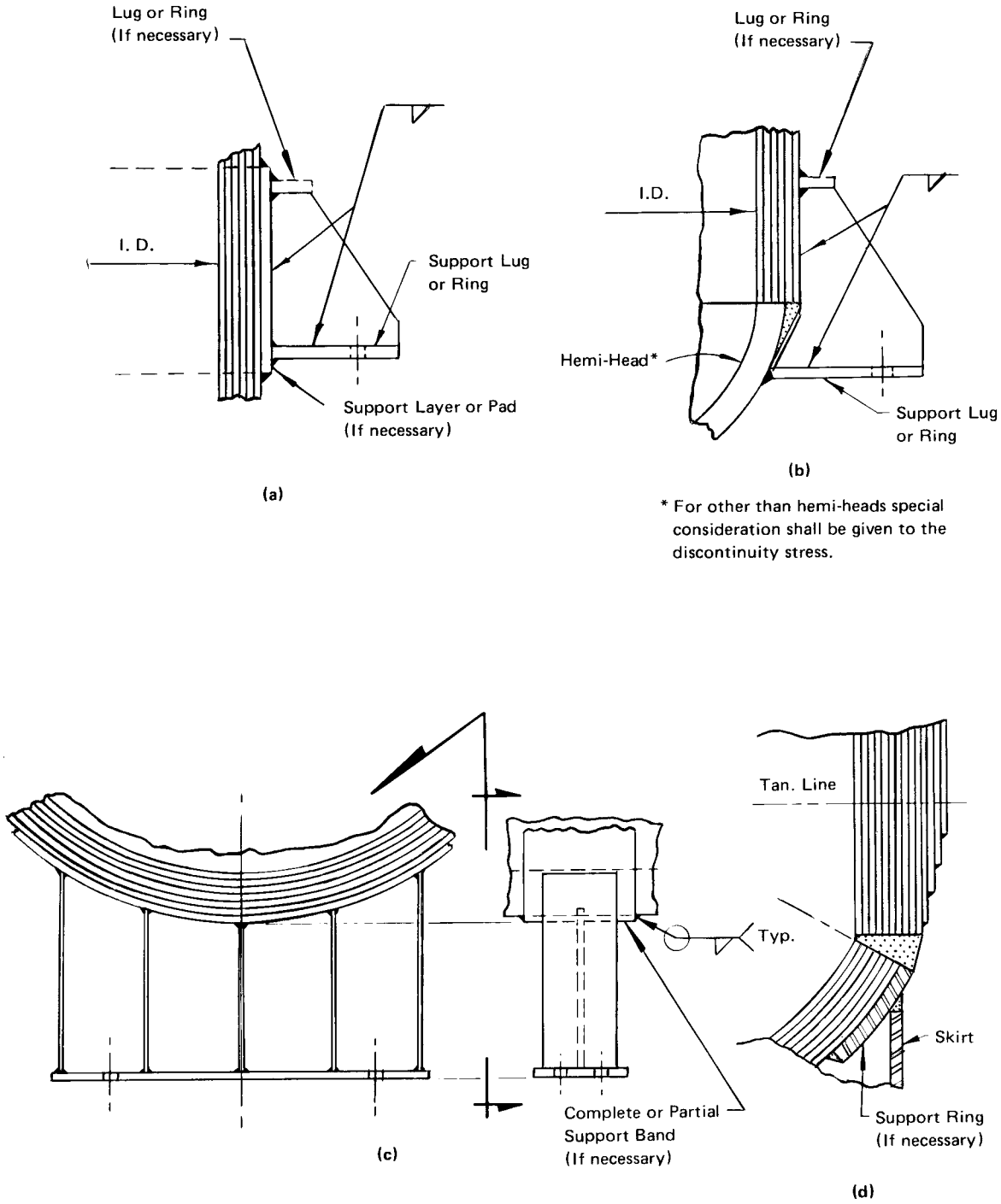

Provided by IHS under license with ASME
No reproduction or networking permitted without license from IHS
Licensee=Chevron Phillips Chemical Co LP/5956674001
Not for Resale, 11/09/2014 20:41:36 MST

WELDING

ULW-31 WELDED JOINTS

The design of welded joints of layered vessels shall be in accordance with ULW-17. Welded joints of Table UW-12, Type Nos. (3), (4), (5), and (6) are not permitted in layered vessels, except as provided for in ULW-17(b)(2).

ULW-32 WELDING PROCEDURE QUALIFICATION

Welding procedure qualifications shall be in accordance with Section IX except as modified herein.

(a) The minimum and maximum thicknesses qualified by procedure qualification test plates shall be as shown in Table QW-451 of Section IX except that:

(1) for the longitudinal joints of the layer section of the shell, the qualification shall be based upon the thickness of the thickest individual layer, exclusive of the inner shell or inner head;

(2) for circumferential joint procedure qualification, the thickness of the layered test plate need not exceed 3 in. (75 mm), shall consist of at least 2 layers, but shall not be less than 2 in. (50 mm) in thickness;

(3) for circumferential weld joints made individually for single layers and spaced at least one layer thickness apart, the procedure qualification for the longitudinal joint applies.

(b) The longitudinal weld joint of the inner shell or inner head and the longitudinal weld joint of layer shell or layer head shall be qualified separately except if of the same P-Number material. The weld gap of the longitudinal layer weld joint shall be the minimum width used in the procedure qualification for layers $^7/_8$ in. (22 mm) and less in thickness.

(c) The circumferential weld joint of the layered to layered sections shall be qualified with a simulated layer test plate as shown in Figure ULW-32.1 for layer thicknesses $^7/_8$ in. (22 mm) and under. A special type of joint tensile specimen shall be made from the layer test coupon as shown in Figure ULW-32.2. (See also Figure ULW-32.4.) Face and root bend specimens shall be made of both the inner and outer weld to the thickness of the layer by cutting the weld to the layer thickness.

(d) The circumferential weld joint of the layer shell for layer thicknesses $^7/_8$ in. (22 mm) and under to the solid head, flange, or end closure shall be qualified with a simulated layer test coupon as shown in Figure ULW-32.1 wherein the one side of the test coupon is solid throughout its entire thickness. A special type of joint tensile specimen shall be made from the test coupon as shown in Figure ULW-32.3. (See also Figure ULW-32.4.) Face and root bend specimens shall be made of both the inner and outer weld to the thickness of the layer by slicing the weld and solid portion to the layer thickness.

ULW-33 PERFORMANCE QUALIFICATION

Welding shall be performed only by welders and welding operators who have been qualified as given in Section IX. The minimum and maximum thicknesses qualified by any welder test plate shall be as shown on Table QW-452 of Section IX.

NONDESTRUCTIVE EXAMINATION OF WELDED JOINTS

ULW-50 GENERAL

The rules of the following paragraphs apply specifically to the nondestructive examination of pressure vessels and vessel parts that are fabricated using layered construction.

ULW-51 INNER SHELLS AND INNER HEADS

Category A and B joints in the inner shells of layered shell sections, and in the inner heads of layered heads before application of the layers, shall be examined throughout their entire length by radiography and meet the requirements of UW-51.

ULW-52 LAYERS — WELDED JOINTS

(a) Category A joints in layers $^1/_8$ in. (3 mm) through $^5/_{16}$ in. (8 mm) in thickness welded to the previous surface shall be examined for 100% of their length in accordance with Mandatory Appendix 6 by the magnetic particle method using direct current.

(b) Category A joints in layers over $^5/_{16}$ in. (8 mm) through $^5/_8$ in. (16 mm) in thickness welded to the previous surface shall be examined for 100% of their length in accordance with Mandatory Appendix 6 by the magnetic particle method using direct current. In addition, these joints shall be examined for 10% of their length at random in accordance with Mandatory Appendix 12 ultrasonic method except that for the bottom 10% of the weld thickness the distance amplitude correction curve or reference level may be raised by 6 dB. The random spot examination shall be performed as specified in ULW-57.

(c) Category A joints in layers over $^5/_8$ in. (16 mm) through $^7/_8$ in. (22 mm) in thickness welded to the previous surface shall be examined for 100% of their length in accordance with Mandatory Appendix 12 ultrasonic method except that for the bottom 10% of the weld thickness the distance amplitude correction curve or reference level may be raised by 6 dB.

(d) Category A joints in layers not welded to the previous surface shall be examined before assembly for 100% of their length by radiography and meet the requirements of UW-51.

(e) Welds in spirally wound strip construction with a winding or spiral angle of 75 deg or less measured from the vessel axial centerline shall be classified as Category A joints and examined accordingly.

Provided by IHS under license with ASME
No reproduction or networking permitted without license from IHS
Licensee=Chevron Phillips Chemical Co LP/5956674001
Not for Resale, 11/09/2014 20:41:36 MST

Figure ULW-32.1
Solid-to-Layered and Layered-to-Layered Test Plates

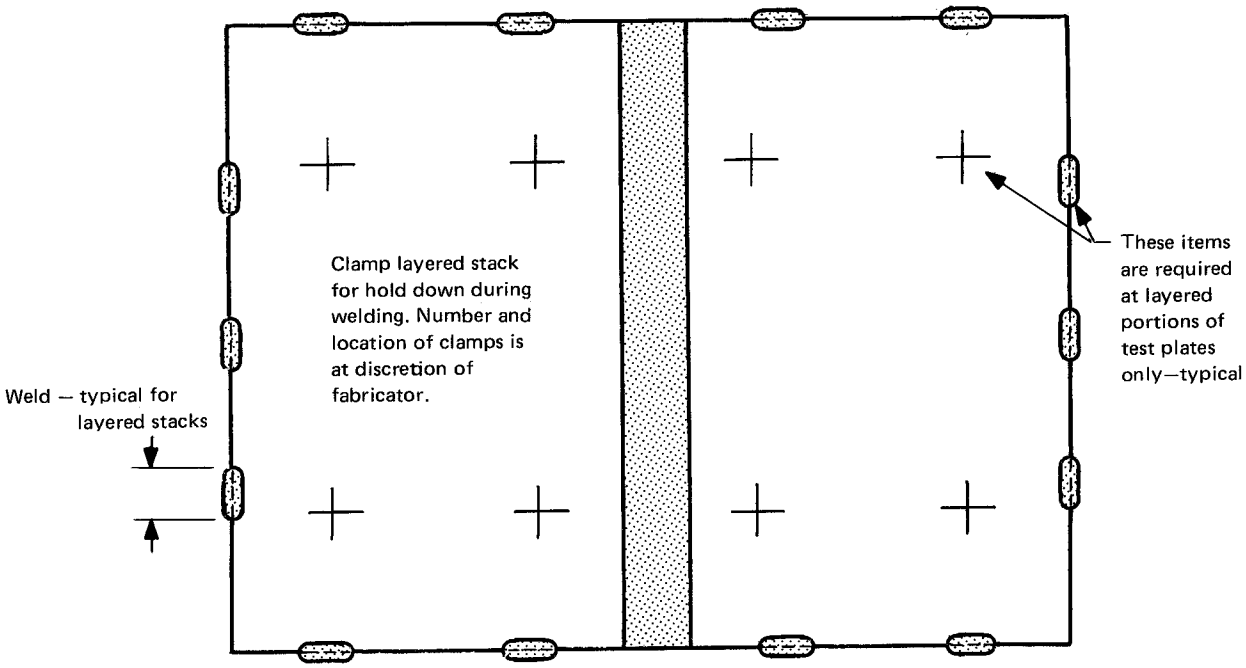

Plan View of Solid to Layered and Layered to Layered Test Plates

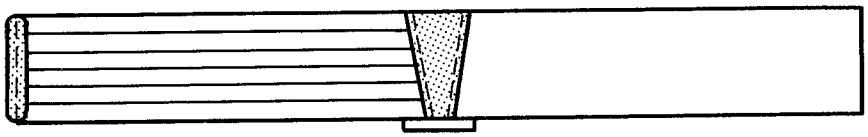

Layered to Solid Test Plate

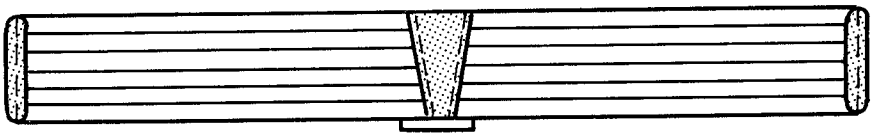

Layered to Layered Test Plate

Provided by IHS under license with ASME
No reproduction or networking permitted without license from IHS
Licensee=Chevron Phillips Chemical Co LP/5956674001
Not for Resale, 11/09/2014 20:41:36 MST

Figure ULW-32.2

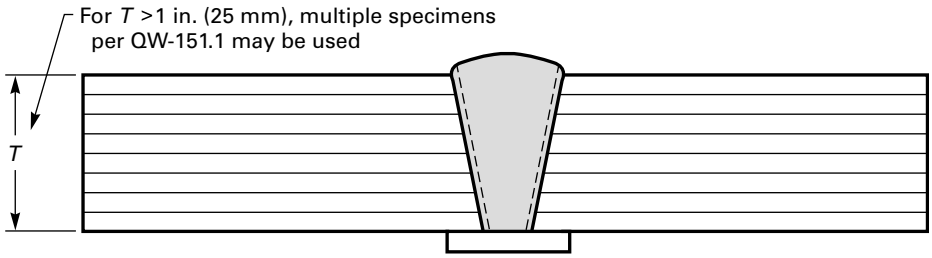

ULW-53 LAYERS — STEP WELDED GIRTH JOINTS

(a) Category B joints in layers $^1/_8$ in. (3 mm) through $^5/_{16}$ in. (8 mm) in thickness shall be examined for 10% of their length in accordance with Mandatory Appendix 6 by the magnetic particle method using direct current. The random spot examination shall be performed as specified in ULW-57.

(b) Category B joints in layers over $^5/_{16}$ in. (8 mm) through $^5/_8$ in. (16 mm) in thickness shall be examined for 100% of their length in accordance with Mandatory Appendix 6 by the magnetic particle method, using direct current.

(c) Category B joints in layers over $^5/_8$ in. (16 mm) through $^7/_8$ in. (22 mm) in thickness shall be examined for 100% of their length in accordance with Mandatory Appendix 6 by the magnetic particle method using direct current. In addition these joints shall be examined for 10% of their length in accordance with Mandatory Appendix 12 ultrasonic examination, except that for the bottom 10% of the weld thickness the distance amplitude correction curve or reference level may be raised by 6 dB. The random spot examination shall be performed as specified in ULW-57.

(d) Category B joints in layers over $^7/_8$ in. (22 mm) in thickness shall be examined for 100% of their length in accordance with Mandatory Appendix 12 ultrasonic method except that for the bottom 10% of the weld thickness the distance amplitude correction curve or reference level may be raised by 6 dB.

ULW-54 BUTT JOINTS

(a) Full Thickness Welding of Solid Section to Layered Sections. Category A, B, and D joints attaching a solid section to a layered section of any of the layered thicknesses given in ULW-52 shall be examined by radiography for their entire length in accordance with UW-51.

It is recognized that layer wash[89] or acceptable gaps (see ULW-77) may show as indications difficult to distinguish from slag on the radiographic film. Acceptance shall be based on reference to the weld geometry as shown in Figure ULW-54.1. As an alternative, an angle radiographic technique, as shown in Figure ULW-54.2, may be used to locate individual gaps in order to determine the acceptability of the indication.

(b) Full Thickness Welding of Layered Section to Layered Section. Category A and B joints attaching a layered section to a layered section need not be radiographed after being fully welded when the Category A hemispherical head and Category B welded joints of the inner shell or inner head made after application of the layers have been radiographed in accordance with UW-51. The inner shell or inner head thicknesses need not be radiographed in thicknesses over $^7/_8$ in. (22 mm) if the completed joint is radiographed. Weld joints in the inner shell or inner head welded after application of the layers of the inner shell or inner head weld joints shall be radiographed throughout their entire length and meet the requirements of UW-51.

Figure ULW-32.3

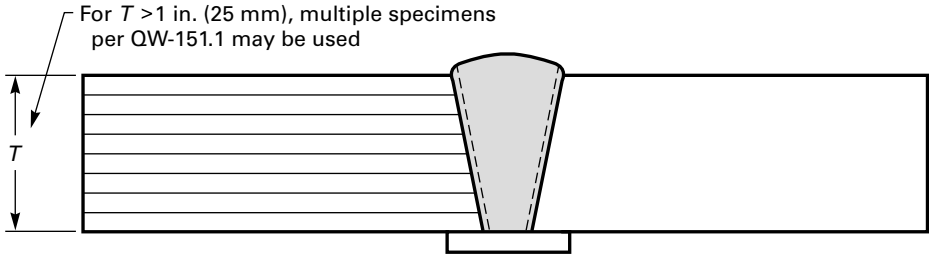

Provided by IHS under license with ASME
No reproduction or networking permitted without license from IHS
Licensee=Chevron Phillips Chemical Co LP/5956674001
Not for Resale, 11/09/2014 20:41:36 MST

Figure ULW-32.4

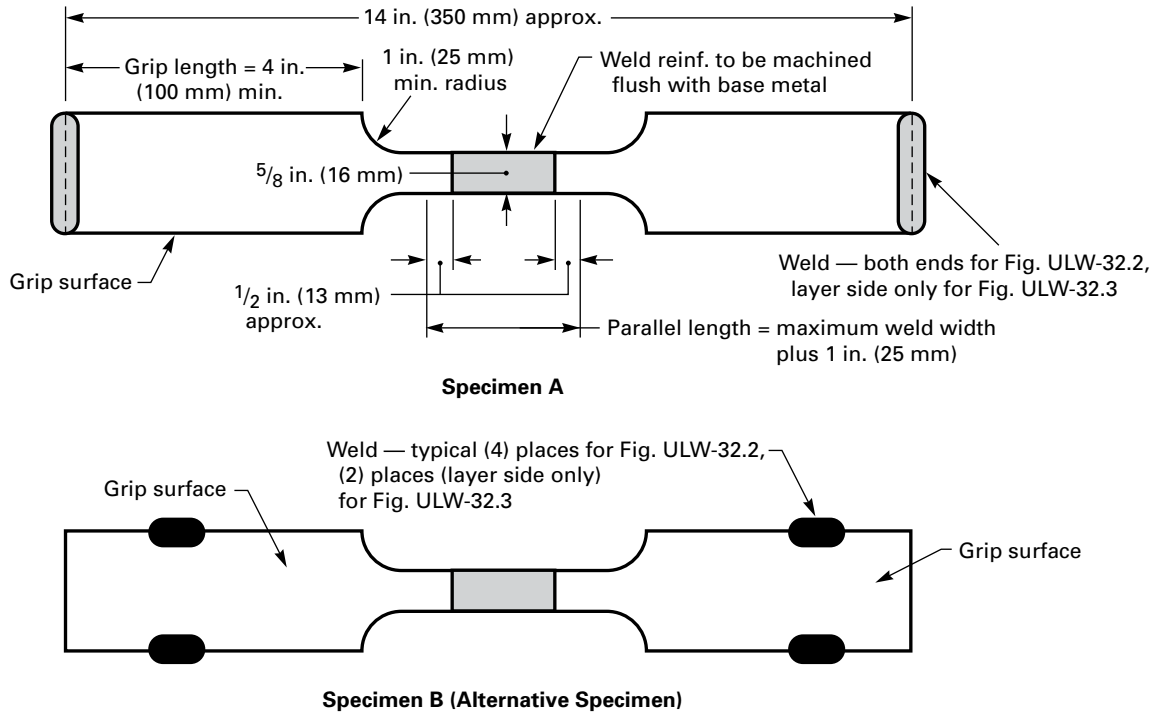

GENERAL NOTE: Specimens A and B are plan views of Figs. ULW-32.2 and ULW-32.3 and are identical except for locations of grip surfaces and welds. All grip surfaces are to be machined flat.

ULW-55 FLAT HEAD AND TUBESHEET WELD JOINTS

Category C joints attaching layered shells or layered heads to flat heads and tubesheets as shown in Figure ULW-17.3 shall be examined to the same requirements as specified in ULW-53 and ULW-54(a) for Category B joints.

ULW-56 NOZZLE AND COMMUNICATING CHAMBERS WELD JOINTS

Category D joints in layered shells or layered heads not requiring radiographic examination shall be examined by the magnetic particle method in accordance with Mandatory Appendix 6. The partial penetration weld joining liner type nozzle as shown in Figure ULW-18.1 sketches (i), (j), (k), and (l) to layered vessel shells or layered heads shall be examined by magnetic particle or liquid penetrant. Acceptance standards shall meet the requirements of Mandatory Appendix 6 or Mandatory Appendix 8, respectively, for magnetic particle and liquid penetrant examination.

ULW-57 RANDOM SPOT EXAMINATION AND REPAIRS OF WELD

The random ultrasonic examination of ULW-52(b) and ULW-53(c) and random magnetic particle examination of ULW-53(a) shall be performed as follows:

(a) The location of the random spot shall be chosen by the Inspector except that when the Inspector has been duly notified in advance and cannot be present or otherwise make the selection, the fabricator may exercise his own judgment in selecting the random spot or spots. The minimum length of a spot shall be 6 in. (150 mm).

(b) When any random spot examination discloses welding which does not comply with the minimum quality requirements of ULW-52(b), ULW-53(a), and ULW-53(c), two additional spots of equal length shall be examined in the same weld unit at locations away from the original spot. The locations of these additional spots shall be determined by the Inspector or fabricator as provided for the original spot examination.

(c) If either of the two additional spots examined shows welding which does not comply with the minimum quality requirements of ULW-52(b), ULW-53(a), and ULW-53(c), the entire unit of weld represented shall be rejected. The entire rejected weld shall be removed and the joint shall

Provided by IHS under license with ASME
No reproduction or networking permitted without license from IHS
Licensee=Chevron Phillips Chemical Co LP/5956674001
Not for Resale, 11/09/2014 20:41:36 MST

Figure ULW-54.1

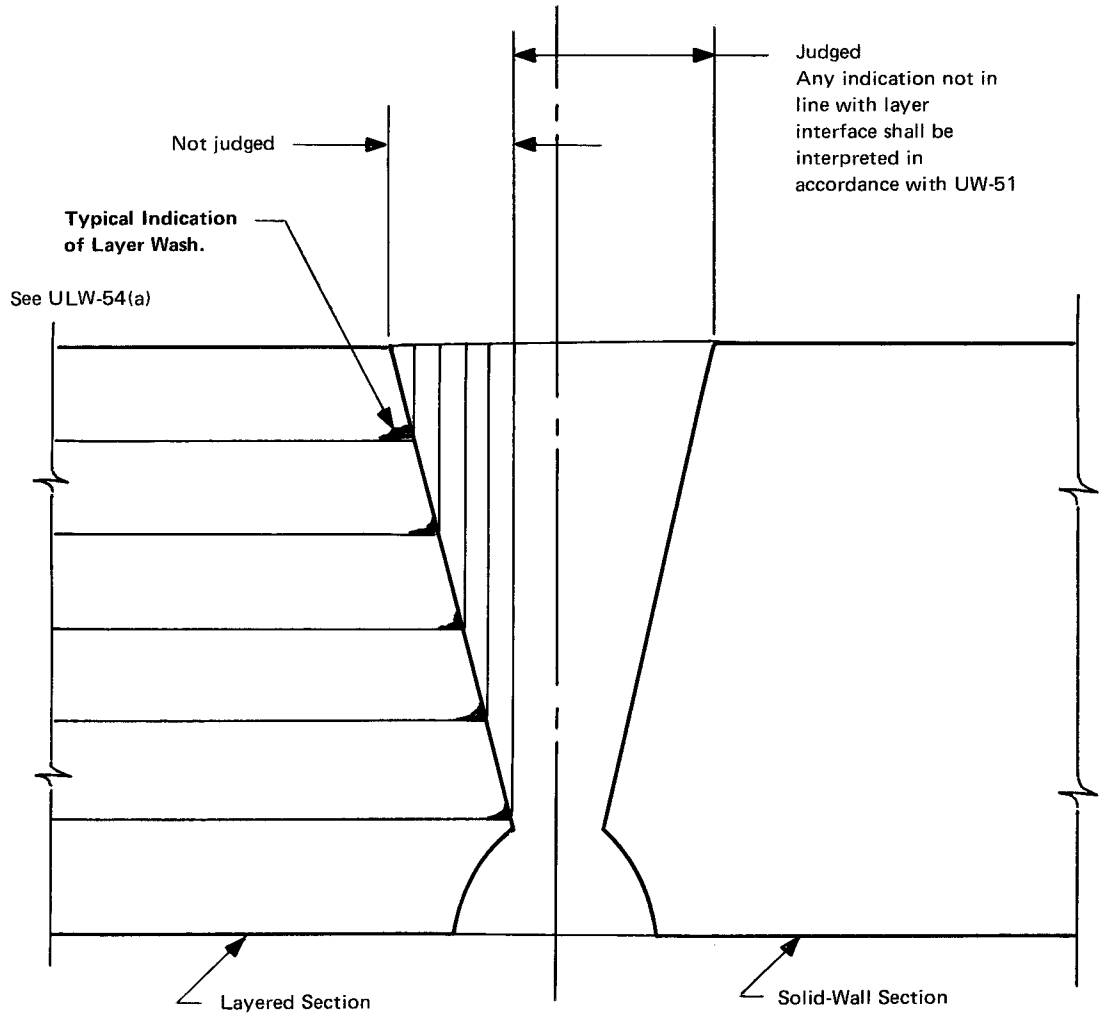

be rewelded or, at the fabricator's option, the entire unit of weld represented shall be completely examined and defects only need be corrected.

(d) Repair welding shall be performed using a qualified procedure and in a manner acceptable to the Inspector. The rewelded joint or the weld repaired areas shall be random spot examined at one location in accordance with the foregoing requirements of ULW-52(b), ULW-53(a), and ULW-53(c).

FABRICATION

ULW-75 GENERAL

The rules in the following paragraphs apply to layered shells, layered heads, and layered transition sections that are fabricated by welding and shall be used in conjunction with the general requirements for fabrication in Subsection A, UG-75 through UG-85, with the exception of UG-83. For layered vessels, the minimum thickness permitted for layers is $\frac{1}{8}$ in. (3 mm).

ULW-76 VENT HOLES

Vent holes shall be provided to detect leakage of the inner shell and to prevent buildup of pressure within the layers as follows:

(a) In each shell course or head segment a layer may be made up of one or more plates. Each layer plate shall have at least two vent holes $\frac{1}{4}$ in. (6 mm) minimum diameter. Holes may be drilled radially through the multiple layers or may be staggered in individual layer plates.

(b) For continuous coil wrapped layers, each layered section shall have at least four vent holes $\frac{1}{4}$ in. (6 mm) minimum diameter. Two of these vent holes shall be located near each end of the section and spaced approximately 180 deg apart.

Provided by IHS under license with ASME
No reproduction or networking permitted without license from IHS
Licensee=Chevron Phillips Chemical Co LP/5956674001
Not for Resale, 11/09/2014 20:41:36 MST

Figure ULW-54.2

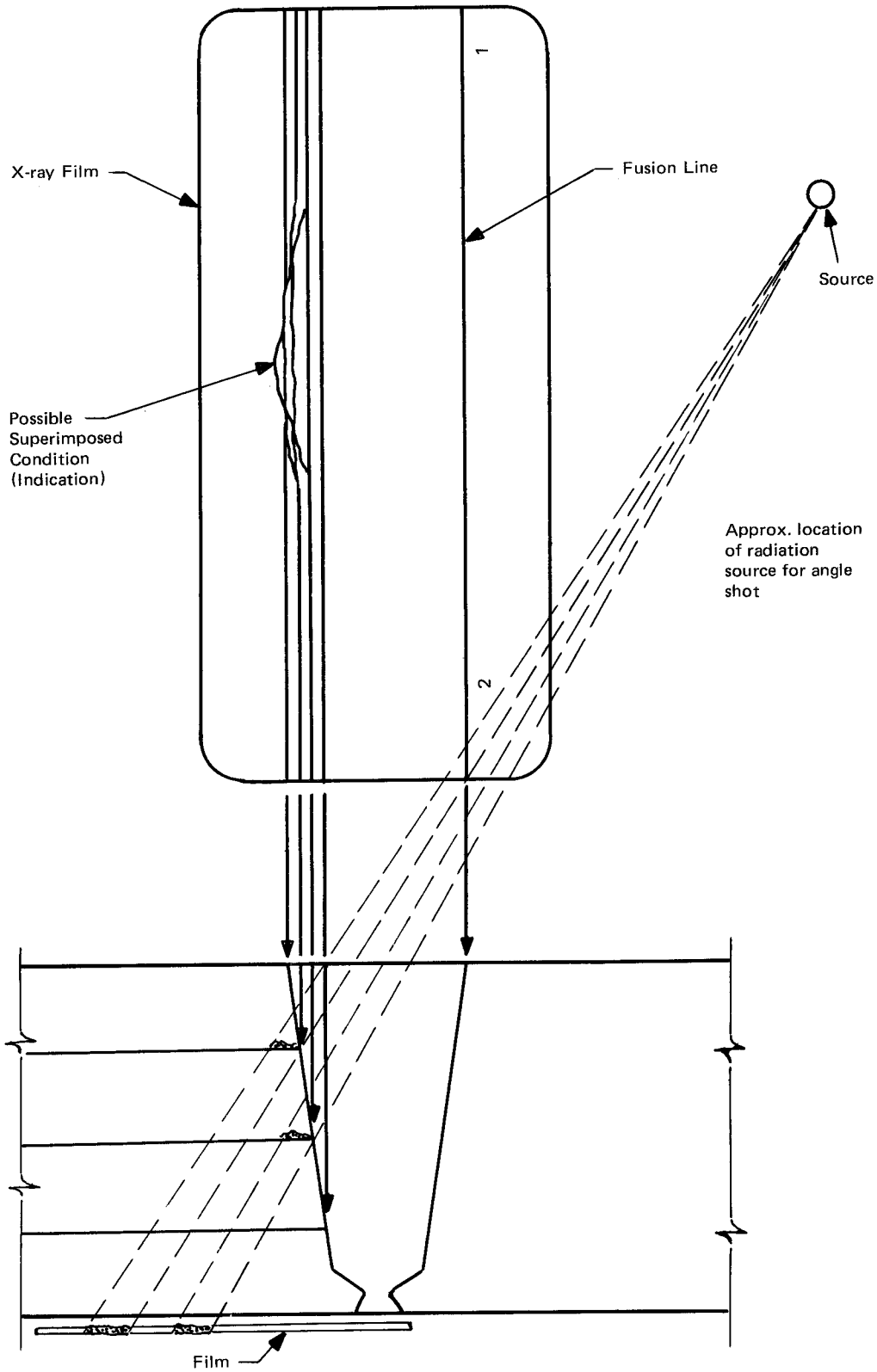

Provided by IHS under license with ASME
No reproduction or networking permitted without license from IHS
Licensee=Chevron Phillips Chemical Co LP/5956674001
Not for Resale, 11/09/2014 20:41:36 MST

(c) The minimum requirement for spirally wound strip layered construction shall be $^1/_4$ in. (6 mm) minimum diameter vent holes drilled near both edges of the strip. They shall be spaced for the full length of the strip and shall be located a distance of approximately $\pi R \tan \theta$ from each other where

R = the mean radius of the shell
θ = the acute angle of spiral wrap measured from longitudinal centerline, deg

If a strip weld covers a vent hole, partially or totally, an additional vent hole shall be drilled on each side of the obstructed hole.

In lieu of the above, holes may be drilled radially through the multiple layers.

(d) Vent holes shall not be obstructed. If a monitoring system is used, it shall be designed to prevent buildup of pressure within the layers.

ULW-77 CONTACT BETWEEN LAYERS

(a) Category A weld joints shall be ground to ensure contact between the weld area and the succeeding layer, before application of the layer.

(b) Category A weld joints of layered shell sections shall be in an offset pattern so that the centers of the welded longitudinal joints of adjacent layers are separated circumferentially by a distance of at least five times the layer thickness.

(c) Category A weld joints in layered heads may be in an offset pattern; if offset, the joints of adjacent layers shall be separated by a distance of at least five times the layer thickness.

(d) After weld preparation and before welding circumferential seams, the height of the radial gaps between any two adjacent layers shall be measured at the ends of the layered shell section or layered head section at right angles to the vessel axis, and also the length of the relevant radial gap in inches shall be measured [neglecting radial gaps of less than 0.010 in. (0.25 mm) as nonrelevant]. An approximation of the area of the gap shall be calculated as indicated in Figure ULW-77.

The gap area A_g shall not exceed the thickness of a layer expressed in square inches. The maximum length of any gap shall not exceed the inside diameter of the vessel. Where more than one gap exists between any two adjacent layers, the sum of the gap lengths shall not exceed the inside diameter of the vessel. The maximum height of any gap shall not exceed $^3/_{16}$ in. (5 mm).

It is recognized that there may be vessels of dimensions wherein it would be desirable to calculate a maximum permissible gap area. This procedure is provided for in Section VIII, Division 2 rules for layered vessels in lieu of the maximum gap area empirically given above, except that the maximum allowable stress S given in Section II, Part D, Tables 1A and 1B shall be used instead of the stress intensity S_m given in Tables 2A and 2B.

(e) In the case of layered spheres or layered heads, if the gaps cannot be measured as required in (d) above, measurement of gap heights shall be taken through vent holes in each layer course to assure that the height of layer gaps between any two layers does not exceed the gap permitted in (d) above. The spacing of the vent holes shall be such that gap lengths can be determined. In the event an excessive gap height is measured through a vent hole, additional vent holes shall be drilled as required to determine the gap length. There shall be at least one vent hole per layer segment.

ULW-78 ALTERNATIVE TO MEASURING CONTACT BETWEEN LAYERS DURING CONSTRUCTION

As an alternative to ULW-77, the following measurements shall be taken at the time of the hydrostatic test to check on the contact between successive layers, and the effect of gaps which may or may not be present between layers.

(a) The circumference shall be measured at the midpoint between adjacent circumferential joints, or between a circumferential joint and any nozzle in a shell course. Measurements shall be taken at zero pressure, and following application of hydrostatic test pressure, at the design pressure. The difference in measurements shall be averaged for each course in the vessel and the results recorded as average middle circumferential expansion e_m in inches (millimeters).

(b) The theoretical circumferential expansion of a solid vessel of the same dimensions and materials as the layered vessel shall be calculated from the following formula:

$$e_{th} = \frac{1.7\pi P(2R - t_s)^2(2R + t_s)}{8ERt_s}$$

where

E = modulus of elasticity [use 30×10^6 psi (200×10^6 kPa) for carbon steel]
e_{th} = theoretical circumferential expansion
P = internal design pressure
R = mean radius
= outside radius − $t_s/2$
t_s = wall thickness

(c) Acceptance criteria for circumferential expansion at the design pressure shall be as follows: e_m shall not be less than 0.5 e_{th}.

Provided by IHS under license with ASME
No reproduction or networking permitted without license from IHS
Licensee=Chevron Phillips Chemical Co LP/5956674001
Not for Resale, 11/09/2014 20:41:36 MST

Figure ULW-77

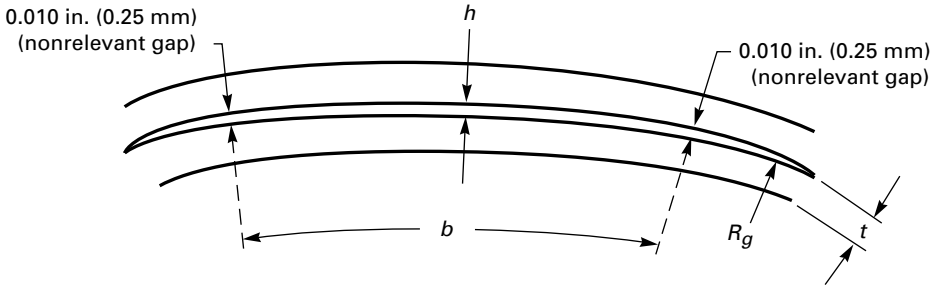

A_g = area of gap (approx.) = $^2/_3hb$
b = arc length of relevant radial gap
h = radial gap
R_g = radius of vessel at gap
t = layer thickness

INSPECTION AND TESTING

ULW-90 GENERAL

The inspection and testing of layered pressure vessels to be marked with the Certification Mark with the U Designator shall be in accordance with UG-90 through UG-103.

MARKING AND REPORTS

ULW-115 GENERAL

(a) The rules for marking and reports of layered pressure vessels built under Part ULW shall meet the requirements given in UG-115 through UG-120.

(b) In addition, a description of the layered shell and/or layered heads shall be given on the Data Report describing the number of layers, their thickness or thicknesses, and type of construction. See W-2 and Table W-3 for the use of Form U-4 Manufacturer's Data Report Supplementary Sheet. An example of the use of Form U-4 illustrating the minimum required data for layered construction is given in Figure W-3.1.

(c) In addition, the stamping below the Certification Mark and Designator prescribed in UG-116(c) shall be the letters WL to designate layered construction.

PRESSURE RELIEF DEVICES

ULW-125 GENERAL

The provisions for pressure relief devices in UG-125 through UG-134 shall apply without supplement to pressure vessels fabricated in whole or in part of layered construction.

Provided by IHS under license with ASME
No reproduction or networking permitted without license from IHS
Licensee=Chevron Phillips Chemical Co LP/5956674001
Not for Resale, 11/09/2014 20:41:36 MST

PART ULT
ALTERNATIVE RULES FOR PRESSURE VESSELS CONSTRUCTED OF MATERIALS HAVING HIGHER ALLOWABLE STRESSES AT LOW TEMPERATURE

GENERAL

ULT-1 SCOPE

The alternative rules in Part ULT are applicable to pressure vessels or vessel parts that are constructed of materials for which increased design stress values have been established for low temperature applications. When applied, these rules shall be used in conjunction with the requirements in Subsection A and Part UW of Subsection B. The requirements of Subsection C do not apply except when referenced in Part ULT.

ULT-2 CONDITIONS OF SERVICE

(a) Measures shall be taken to avoid stresses at any temperature that are in excess of the maximum allowable stress applicable to that temperature. For example, the membrane stress at the maximum allowable working pressure at 150°F (65°C) shall never exceed the maximum allowable stress for 150°F (65°C). See ULT-27.

(b) Vessel use shall be restricted to fluids specifically considered for the design of the vessel. The physical characteristics of the contained fluid shall be such that a maximum operating temperature can be determined for the liquid phase at the maximum allowable working pressure of the vessel. The safety relief valve setting thus controls the maximum operating temperature of the vessel for the specific fluid.

(c) The allowable stress at 150°F (65°C) shall be used for the design of vessel parts that are exposed to the static head of cryogenic fluid but are not actually contacted by the fluid, such as, as in a dead-end cylinder connected to the bottom of a vessel that contains a gas cushion.

(d) Insulation shall be applied external to the pressure vessel.

ULT-5 GENERAL

(a) Materials covered by this Part subject to stress due to pressure shall conform to one of the specifications given in Section II and shall be limited to those listed in Table ULT-23. The allowable stress values of Table ULT-23 are limited to those materials which will be in contact with the cold liquid when subject to liquid head.

(b) Materials not covered by Part ULT may be used for vessel parts, provided such materials shall conform to one of the specifications in Section II and shall be limited to those materials permitted by another Part of Subsection C. The maximum allowable stress for such parts shall be determined at 150°F (65°C). All applicable requirements of that Part of Subsection C shall be met including any required impact tests.

(c) The 5%, 8%, and 9% nickel steels listed in Table ULT-23 shall be tested for notch ductility as required by UHT-5(d) and UHT-5(e) and UHT-6. These ductility tests shall be conducted at the lowest temperature at which pressure will be applied to the vessel or the minimum allowable temperature to be marked on the vessel, whichever is lower.

(d) For 5083 aluminum the provisions and requirements of UNF-65 for low temperature operation apply.

(e) For 5%, 8%, and 9% nickel steel vessels, all structural attachments and stiffening rings which are welded directly to pressure parts shall be made of materials of specified minimum strength equal to or greater than that of the material to which they are attached.

(f) The weldments of Type 304 stainless steel shall be Charpy impact tested as required by UG-84(h), except that the exemptions of UHA-51 do not apply. These impact tests shall be conducted at the lowest temperature at which pressure will be applied to the vessel or the minimum allowable temperature to be marked on the vessel, whichever is lower. The applicable minimum lateral expansion opposite the notch for all specimen sizes shall be as required in UHT-6(a)(3) and UHT-6(a)(4). All requirements of UHT-6(a)(3) and UHT-6(a)(4) shall apply.

(g) For Type 304 stainless steel vessels, all structural attachments and stiffening rings that are welded directly to pressure parts shall be made of the same material as the pressure part to which they are attached.

Provided by IHS under license with ASME
No reproduction or networking permitted without license from IHS
Licensee=Chevron Phillips Chemical Co LP/5956674001
Not for Resale, 11/09/2014 20:41:36 MST

DESIGN

ULT-16 GENERAL

(a) The rules in the following paragraphs apply specifically to the design of pressure vessels and vessel parts that are constructed of materials listed in Table ULT-23 and shall be used in conjunction with the requirements for Design in Subsection A and Part UW of Subsection B.

(1) The thermal stresses resulting from the differences between the base metal and the weld metal shall be considered in the design.

(2) For vessels made of 5%, 8%, and 9% nickel steels, the minimum thickness after forming of a section subject to pressure shall be $^{3}/_{16}$ in. (5 mm) and the maximum thickness of the base metal at welds shall be 2 in. (51 mm).

ULT-17 WELDED JOINTS

(a) All Category A, B, C, and D joints (UW-3) shall be full penetration welds.

(b) The alignment of longitudinal joints in adjacent cylindrical sections or heads shall be displaced at least five times the thickness of the thicker material.

(c) In vessels of 5%, 8%, or 9% nickel steels, all Category D joints shall be in accordance with Figure UHT-18.1 or UHT-18.2 when the nominal shell thickness at the opening exceeds 1 in. (25 mm).

(1) All joints of Category D attaching a nozzle neck to the vessel wall, and to a reinforcing pad if used, shall be full penetration groove weld conforming to Figure UHT-18.1 or UHT-18.2 or any of the sketches in Figure UW-16.1 having full penetration welds.

(2) All joints of Category A shall be Type No. (1) of Table UW-12.

(3) All joints of Category B shall be Type No. (1) or (2) of Table UW-12.

(4) All joints of Category C shall be full penetration welds extending through the entire section at the joint.

(5) Joint alignment requirements of UHT-20 shall be met.

(d) Butt welds with one plate edge offset [Figure UW-13.1 sketch (i)] are prohibited anywhere in the vessel.

ULT-18 NOZZLES AND OTHER CONNECTIONS

(a) Nozzles shall not be located in Category A or B joints. When adjacent to Category A or B joints, the nearest edge of the nozzle-to-shell weld shall be at least five times the nominal thickness of the shell from the nearest edge of the Category A or B joint.

(b) The attachment of pipe and nozzle necks to vessel walls shall be by welded construction only.

ULT-23 MAXIMUM ALLOWABLE STRESS VALUES

Table ULT-23 gives the maximum allowable stress values at the temperatures indicated for materials conforming to the specifications listed therein. Values may be interpolated for intermediate temperatures (see UG-23).

ULT-27 THICKNESS OF SHELLS

The minimum thickness of any vessel part shall be the greater of the following:

(a) the thickness based on the MAWP at the top of the vessel in its normal operating position plus any other loadings per UG-22, including the static head of the most dense cryogenic liquid to be contained. The permissible stress value shall be determined for the applicable material in Table ULT-23 at the operating temperature corresponding to the saturation temperature at MAWP of the warmest cryogenic fluid contained. The maximum allowable compressive stress shall be determined in accordance with UG-23(b) at 150°F (65°C) and the requirements of UG-23(c) shall be met.

(b) the thickness determined by using the permissible stress value at 150°F (65°C) based on the MAWP at the top of the vessel in its normal operating position plus any other loadings per UG-22, except that no static head need be included.

ULT-28 THICKNESS OF SHELLS UNDER EXTERNAL PRESSURE (13)

Cylindrical and spherical shells under external pressure shall be designed by the rules in UG-28 using the applicable figures in Subpart 3 of Section II, Part D at 150°F (65°C).

ULT-29 STIFFENING RINGS FOR SHELLS UNDER EXTERNAL PRESSURE

Rules covering the design of stiffening rings are given in UG-29. The design shall be based on the appropriate chart in Subpart 3 of Section II, Part D for the material used in the ring at 150°F (65°C).

ULT-30 STRUCTURAL ATTACHMENTS (13)

(a) See ULT-5(e) for limitations on material used in permanent structural attachments in 5%, 8%, or 9% nickel steel vessels. See ULT-5(g) for limitations on material used in permanent structural attachments in Type 304 stainless steel vessels.

(b) The structural details of supporting lugs, rings, saddles, straps, and other types of supports shall be given special design consideration to minimize local stresses in attachment areas.

(c) Attachments to 5%, 8%, or 9% nickel steel vessels shall be made using a weld procedure qualified to Section IX.

(d) Attachments to Type 304 stainless steel vessels shall be made using a weld procedure meeting ULT-82.

ULT-56 POSTWELD HEAT TREATMENT

(a) For 5%, 8%, or 9% nickel steels, the provisions of UHT-56, UHT-80, and UHT-81 apply.

(b) For 5083 aluminum, the provisions of UNF-56 apply.

Provided by IHS under license with ASME
No reproduction or networking permitted without license from IHS
Licensee=Chevron Phillips Chemical Co LP/5956674001
Not for Resale, 11/09/2014 20:41:36 MST

Table ULT-23
Maximum Allowable Stress Values in Tension for 5%, 8%, and 9% Nickel Steels, Type 304 Stainless Steel, and 5083-0 Aluminum Alloy at Cryogenic Temperatures for Welded and Nonwelded Construction

5% Nickel Steels, Customary Units				8% and 9% Nickel Steels, Customary Units			
Plates: SA-645 Grade A [Note (1)]				Plates: [Note (1)] SA-353, SA-553 Type I, and SA-553 Type II; Seamless Pipes and Tubes: SA-333Grade 8 and SA-334 Grade 8; Forgings: SA-522			
		Welded Construction [Note (3)], [Note (4)]				Welded Construction [Note (3)], [Note (4)]	
Temperature, [Note (2)] °F	Nonwelded Construction, ksi	UTS100 ksi	UTS 95 ksi	Temperature, [Note (2)] °F	Nonwelded Construction, ksi	UTS 100 ksi	UTS 95 ksi
−320	43.1	38.9	36.9	−320	43.9	38.9	36.9
−300	39.4	37.9	36.1	−300	42.6	37.9	36.1
−250	37.0	36.3	34.6	−250	39.8	36.3	34.6
−200	36.0	35.0	33.3	−200	37.3	35.0	33.3
−150	34.5	33.5	31.8	−150	35.1	33.5	31.8
−100	32.9	32.1	30.5	−100	33.2	32.1	30.5
−50	31.3	31.0	29.5	−50	31.6	31.0	29.5
0	27.1	27.1	27.1	0	28.6	28.6	27.1
100	27.1	27.1	27.1	100	28.6	28.6	27.1
150	27.1	27.1	27.1	150	28.6	28.6	27.1

Type 304 Stainless Steel, Customary Units

		Specified Minimum Strengths at Room Temperature		Maximum Allowable Stress, ksi, for Temperatures, [Note (2)] °F, Not Exceeding									
Spec. No.	Grade	Tensile, ksi	Yield, ksi	−320	−300	−250	−200	−150	−100	−50	0	100	150
SA-240 nonwelded construction	304	75.0	30.0	35.5	35.0	33.4	31.7	29.7	27.5	25.3	20.0	20.0	20.0
SA-240 welded construction	304	75.0	30.0	23.6	23.4	23.1	22.8	22.4	22.1	21.8	20.0	20.0	20.0

5083-0 Aluminum Alloy, Customary Units

				Specified Minimum Strengths at Room Temperature		Maximum Allowable Stress, ksi, for Metal Temperature, [Note (2)] °F, Not Exceeding									
Spec. No.	Alloy	Temper	Thickness, in.	Tensile, ksi	Yield, ksi	−320	−300	−250	−200	−150	−100	−50	0	100	150
Sheet and Plate															
SB-209	5083	0	0.051–1.500	40	18	15.6	15.3	14.5	13.8	13.1	12.5	12.1	11.4	11.4	11.4
SB-209	5083	0	1.501–3.000	39	17	14.7	14.4	13.7	13.0	12.4	11.8	11.5	11.1	11.1	11.1
SB-209	5083	0	3.001–5.000	38	16	13.9	13.6	12.9	12.2	11.6	11.1	10.8	10.7	10.7	10.7
SB-209	5083	0	5.001–7.000	37	15	13.0	12.7	12.1	11.5	10.9	10.4	10.1	10.0	10.0	10.0
SB-209	5083	0	7.001–8.000	36	14	12.1	11.9	11.3	10.7	10.2	9.7	9.4	9.3	9.3	9.3
Rods, Bars, and Shapes															
SB-221	5083	0	Up thru 5.000	39	16	13.9	13.6	12.9	12.2	11.6	11.1	10.8	10.7	10.7	10.7
Seamless Extruded Tube															
SB-241	5083	0	Up thru 5.000	39	16	13.9	13.6	12.9	12.2	11.6	11.1	10.8	10.7	10.7	10.7

5% Nickel Steels, SI Units				8% and 9% Nickel Steels, SI Units			
Plates: SA-645 [Note (1)]				Plates: [Note (1)] SA-353, SA-553 Type I, and SA-553 Type II; Seamless Pipes and Tubes: SA-333 Grade 8 and SA-334 Grade 8; Forgings: SA-522			
		Welded Construction [Note (3)], [Note (4)]				Welded Construction [Note (3)], [Note (4)]	
Temperature, [Note (2)] °C	Nonwelded Construction, MPa	UTS690 MPa	UTS 655 MPa	Temperature, [Note (2)] °C	Nonwelded Construction, MPa	UTS 690 MPa	UTS 655 MPa
−195	296	268	254	−195	302	268	254
−170	257	255	243	−170	283	255	243
−145	253	247	235	−145	267	247	235
−120	245	238	226	−120	252	238	226

Provided by IHS under license with ASME
No reproduction or networking permitted without license from IHS
Licensee=Chevron Phillips Chemical Co LP/5956674001
Not for Resale, 11/09/2014 20:41:36 MST

Table ULT-23
Maximum Allowable Stress Values in Tension for 5%, 8%, and 9% Nickel Steels, Type 304 Stainless Steel, and 5083-0 Aluminum Alloy at Cryogenic Temperatures for Welded and Nonwelded Construction (Cont'd)

5% Nickel Steels, SI Units				8% and 9% Nickel Steels, SI Units			
Plates: SA-645 [Note (1)]				Plates: [Note (1)] SA-353, SA-553 Type I, and SA-553 Type II; Seamless Pipes and Tubes: SA-333 Grade 8 and SA-334 Grade 8; Forgings: SA-522			
		Welded Construction [Note (3)], [Note (4)]				Welded Construction [Note (3)], [Note (4)]	
Temperature, [Note (2)] °C	Nonwelded Construction, MPa	UTS690 MPa	UTS 655 MPa	Temperature, [Note (2)] °C	Nonwelded Construction, MPa	UTS 690 MPa	UTS 655 MPa
−95	235	229	217	−95	239	229	217
−70	226	221	210	−70	228	220	210
−45	215	213	203	−45	218	214	203
−20	187	187	187	−40	197	197	187
40	187	187	187	40	197	197	187
65	187	187	187	65	197	197	187

Type 304 Stainless Steel, SI Units

Spec. No.	Grade	Specified Minimum Strengths at Room Temperature: Tensile, MPa	Specified Minimum Strengths at Room Temperature: Yield, MPa	Maximum Allowable Stress, MPa, for Temperatures, [Note (2)] °C, Not Exceeding: −195	−170	−145	−120	−95	−70	−45	−20	40	65
SA-240 nonwelded construction	304	515	205	243	234	223	212	199	187	173	137	137	137
SA-240 welded construction	304	515	205	161	159	157	155	153	151	149	137	137	137

5083-0 Aluminum Alloy, SI Units

Spec. No.	Alloy	Temper	Thickness, mm	Specified Minimum Strengths at Room Temperature: Tensile, MPa	Specified Minimum Strengths at Room Temperature: Yield, MPa	Maximum Allowable Stress, MPa, for Metal Temperature, [Note (2)] °C, Not Exceeding: −195	−170	−145	−120	−95	−70	−45	−20	40	65
Sheet and Plate															
SB-209	5083	0	1.30–38.10	276	124	107	103	97.9	93.6	89.3	85.8	83.4	78.8	78.8	78.8
SB-209	5083	0	38.13–76.20	269	117	101	96.8	92.4	88.3	84.5	81.0	79.3	76.8	76.8	76.8
SB-209	5083	0	76.23–127.00	262	110	95.7	91.2	86.9	82.7	79.1	76.2	74.4	73.5	73.5	73.5
SB-209	5083	0	127.03–177.80	255	103	89.5	85.3	81.7	77.9	74.3	71.4	69.6	69.0	69.0	69.0
SB-209	5083	0	199.83–203.20	248	97	83.4	80.0	76.1	72.6	69.5	66.5	64.8	64.4	64.4	64.4
Rods, Bars, and Shapes															
SB-221	5083	0	Up thru 127.00	269	110	95.7	91.2	86.9	82.7	79.1	76.2	74.4	73.5	73.5	73.5
Seamless Extruded Tube															
SB-241	5083	0	Up thru 127.00	269	110	95.7	91.2	86.9	82.7	79.1	76.2	74.4	73.5	73.5	73.5

NOTES:
(1) Minimum thickness after forming any section subject to pressure shall be $^{3}/_{16}$ in. (5 mm), and maximum thickness of the base metal at welds shall be 2 in. (51 mm).
(2) Stress values at intermediate temperatures may be interpolated.
(3) The minimum tensile strength of the reduced tension specimen in accordance with QW-462.1 shall not be less than 100 ksi (690 MPa) or 95 ksi (655 MPa), respectively, at room temperature. Choice of UTS depends on welding process and filler metal used in the construction.
(4) Welded construction allowable stresses apply only to butt joints.

Provided by IHS under license with ASME
No reproduction or networking permitted without license from IHS
Licensee=Chevron Phillips Chemical Co LP/5956674001
Not for Resale, 11/09/2014 20:41:36 MST

(c) For Type 304 stainless steel vessels, the provisions of UHA-32 apply.

ULT-57 EXAMINATION

(a) All butt joints shall be examined by 100% radiography, except as permitted in UW-11(a)(7).

(b) All attachment welds, and all welded joints subject to pressure not examined by radiography or ultrasonic testing, shall be given a liquid penetrant examination either before or after hydrotest. Relevant indications are those which result from imperfections. Any relevant linear indication greater than $^1/_{16}$ in. (1.6 mm) shall be repaired or removed.

When a pneumatic test is conducted in accordance with ULT-100, these liquid penetrant examinations shall be performed prior to the pneumatic test.

(c) For 5083 aluminum, the requirements of UNF-91 apply.

FABRICATION

ULT-75 GENERAL

The rules in the following paragraphs apply specifically to the fabrication of pressure vessels and vessel parts that are constructed to this Part and shall be used in conjunction with the requirements for fabrication in Subsection A and Part UW of Subsection B.

ULT-79 FORMING SHELL SECTIONS AND HEADS

The requirements and limitations of UNF-77 apply for 5083 aluminum, and of UHT-79 for 5%, 8%, or 9% nickel steel.

ULT-82 WELDING

(a) A separate welding procedure qualification shall be made, as prescribed in Section IX, Part QW, except that the procedure qualification tests on tension specimens conforming to QW-462.1 and prescribed in QW-451 shall be four in number, two of which when tested at room temperature shall meet the minimum tensile strength requirements for room temperature as listed in Table ULT-82 and two of which when tested at or below the vessel minimum allowable temperature shall meet the minimum tensile strength requirements for that test temperature as listed in the applicable table, except that the requirements for the two tests at vessel minimum allowable temperature shall not be applied to procedure qualification for 5083 aluminum welded with 5183 aluminum filler metal.

(b) For 5%, 8%, or 9% nickel steels, the provisions of UHT-82, UHT-83, UHT-84, and UHT-85 apply.

(c) For Type 304 stainless steel vessels, the provisions of UHA-51 apply.

ULT-86 MARKING ON PLATE AND OTHER MATERIALS

For 5%, 8%, or 9% nickel steel the requirements of UHT-86 apply. For the use of other markings in lieu of stamping, see UG-77(b).

INSPECTION AND TESTS

ULT-90 GENERAL

The provisions for inspection and testing in Subsections A and B shall apply to vessels and vessel parts constructed of materials covered by this Part, except as modified herein.

ULT-99 HYDROSTATIC TEST

The vessel shall be hydrostatically pressure tested at ambient temperature in the operating position for a minimum of 15 min, using the following requirements of (a) or (b), whichever is applicable:

(a) Except for vessels covered by (b) below, a hydrostatic test shall be performed in accordance with UG-99, except that the ratio of stresses is not applied, and the test pressure shall be at least 1.4 times the design pressure at 150°F (65°C).

(b) When the test procedure in (a) above will cause a nominal membrane stress greater than 95% of specified minimum yield strength or 50% of specified minimum tensile strength of the material in any part of the vessel, the hydrostatic test may be conducted at a pressure that limits the nominal membrane stress at such part to the lesser of those values. When these conditions limit the hydrostatic test pressure to a value less than 110% of the maximum allowable working pressure at 100°F (38°C), a pneumatic test in accordance with ULT-100 shall also be conducted.

(c) Vessels which are to be installed in the vertical position may be tested in the horizontal position provided all components of the vessel are hydrostatically tested for a minimum of 15 min at a pressure not less than 1.4 times the design pressure at 150°F (65°C) plus the equivalent of the head of the test liquid in the operating position.

Provided by IHS under license with ASME
No reproduction or networking permitted without license from IHS
Licensee=Chevron Phillips Chemical Co LP/5956674001
Not for Resale, 11/09/2014 20:41:36 MST

(13)

Table ULT-82
Minimum Tensile Strength Requirements for Welding Procedure Qualification Tests on Tension Specimens Conforming to QW-462.1

Temp.,[Note (1)] °F	SA-645, Customary Units Welded Construction UTS 100 ksi	SA-645, Customary Units Welded Construction UTS 95 ksi	SA-353, SA-553 Types I and II, SA-333 Grade 8, SA-334, SA-522, Customary Units Welded Construction UTS 100 ksi	SA-353, SA-553 Types I and II, SA-333 Grade 8, SA-334, SA-522, Customary Units Welded Construction UTS 95 ksi
−320	136	129	136	129
−300	133	126	133	126
−250	125	121	125	121
−200	122	116	122	116
−150	117	111	117	111
−100	112	107	112	107
−50	108	103	108	103
0	95	95	100	95
100	95	95	100	95
150	95	95	100	95

5083-0 Aluminum Alloy, Customary Units

Spec. No.	Nominal Thickness, in.	Minimum Tensile Strength, ksi, for Metal Temperature,[Note (1)] °F, Not Exceeding −320	−300	−250	−200	−150	−100	−50	0	100	150
Sheet and Plate											
SB-209	$0.051 \le t < 1.50$	55.2	53.3	48.2	43.8	41.4	40.4	40	40	40	40
	$1.50 \le t < 3.00$	53.8	52	47	42.7	40.4	39.4	39.1	39	39	39
	$3.00 \le t < 5.00$	52.5	50.7	45.8	41.6	39.4	38.4	38.1	38	38	38
	$5.00 \le t < 7.00$	51.1	49.3	44.6	40.5	38.3	37.4	37.1	37	37	37
	$7.00 \le t < 8.00$	49.7	48	43.4	39.4	37.3	36.4	36.1	36	36	36
Rods, Bars, and Shapes											
SB-221	$1 \le 5.00$	53.8	52	47	42.7	40.4	39.4	39.1	39	39	39
Seamless Extruded Tube											
SB-241	$t \le 5.00$	53.8	52	47	42.7	40.4	39.4	39.1	39	39	39

Type 304 Stainless Steel, Customary Units

Spec. No.	Minimum Tensile Strength, ksi, for Metal Temperature,[Note (1)] °F, Not Exceeding −320	−300	−250	−200	−150	−100	−50	0	100	150
SA-240	82.7	82.1	80.9	79.7	78.5	77.4	76.2	75.0	75.0	75.0

NOTE:
(1) Strength values at intermediate temperatures may be interpolated.

Provided by IHS under license with ASME
No reproduction or networking permitted without license from IHS
Licensee=Chevron Phillips Chemical Co LP/5956674001
Not for Resale, 11/09/2014 20:41:36 MST

(13)

Table ULT-82M
Minimum Tensile Strength Requirements for Welding Procedure Qualification Tests on Tension Specimens Conforming to QW-462.1

Temp., [Note (1)] °C	SA-645, SI Units Welded Construction UTS 689 MPa	SA-645, SI Units Welded Construction UTS 655 MPa	SA-353, SA-553 Types I and II, SA-333 Grade 8, SA-334, SA-522, SI Units Welded Construction UTS 689 MPa	SA-353, SA-553 Types I and II, SA-333 Grade 8, SA-334, SA-522, SI Units Welded Construction UTS 655 MPa
−196	938	889	938	889
−184	917	869	917	869
−156	862	834	862	834
−129	841	800	841	800
−101	807	765	807	765
−73	772	738	772	738
−46	745	710	745	710
−18	655	655	689	655
38	655	655	689	655
65	655	655	689	655

5083-O Aluminum Alloy, SI Units

Spec. No.	Nominal Thickness, mm	Minimum Tensile Strength, MPa, for Metal Temperature, [Note (1)] °C, Not Exceeding −196	−184	−156	−129	−101	−73	−46	−18	38	65
Sheet and Plate											
SB-209	$1.30 \le t < 38.1$	381	368	332	302	285	279	276	276	276	276
	$38.1 \le t < 76.2$	371	359	324	294	279	272	270	269	269	269
	$76.2 \le t < 127$	362	350	316	287	272	265	263	262	262	262
	$127 \le t < 177.8$	352	340	308	279	264	258	256	255	255	255
	$177.8 \le t \le 203.2$	343	331	299	272	257	251	249	248	248	248
Rods, Bars, and Shapes											
SB-221	$t \le 127$	371	358	324	294	279	272	270	269	269	269
Seamless Extruded Tube											
SB-241	$t \le 127$	371	358	324	294	279	272	270	269	269	269

Type 304 Stainless Steel, SI Units

Spec. No.	Minimum Tensile Strength, MPa, for Metal Temperature, [Note (1)] °C, Not Exceeding −196	−184	−156	−129	−101	−73	−46	−18	38	65
SA-240	570	566	558	550	541	534	525	517	517	517

(13)

Figure ULT-82

DELETED

Provided by IHS under license with ASME
No reproduction or networking permitted without license from IHS
Licensee=Chevron Phillips Chemical Co LP/5956674001
Not for Resale, 11/09/2014 20:41:36 MST

ULT-100 PNEUMATIC TEST

(a) A pneumatic test prescribed in this paragraph may be used in lieu of the hydrostatic test prescribed in ULT-99 for vessels that are either:

(1) so designed and/or supported that they cannot safely be filled with water, or

(2) are not readily dried, and will be used in services where traces of testing liquid cannot be tolerated.

(b) The vessel shall be tested at ambient temperature for a minimum of 15 min.

(c) The pneumatic test shall be performed in accordance with UG-100, except that the ratio of stresses is not applied, and the test pressure shall be at least 1.2 times the internal pressure at 150°F (65°C). In no case shall the pneumatic test pressure exceed 1.2 times the basis for calculated test pressure as defined in Mandatory Appendix 3, para. 3-2.

MARKING AND REPORTS

ULT-115 GENERAL

The provisions for marking and reports in UG-115 through UG-120 shall apply to vessels constructed to this Part, with the following supplements to the marking and Manufacturer's Data Reports:

(a) The vessel markings shall be in accordance with UG-116 except:

(1) the letters ULT shall be applied below the Certification Mark and Designator;

(2) the following markings shall be used instead of those in UG-116(a)(3) and :

Maximum Allowable Working Pressure: ____psi at 150°F
Minimum Allowable Temperature: Minus ____°F

Service Restricted to the Following	Operating Temperature
Liquid _____	Minus ____°F
Liquid _____	Minus ____°F
Liquid _____	Minus ____°F
Liquid _____	Minus ____°F

GENERAL NOTES:

(a) Minimum allowable temperature is the temperature of the coldest cryogenic liquid which will be admitted to or stored within the vessel.

(b) Operating temperature for the cryogenic liquid is its saturation temperature at MAWP. All liquids that may be contained in the vessel shall be listed.

(b) On the Manufacturer's Data Report, under Remarks, show the additional marking notations from (a) above.

(c) Unless the requirements of (1) and (2) below are met, for 5%, 8%, and 9% nickel steels, the use of nameplates is mandatory for shell thicknesses below $^1/_2$ in. (13 mm); nameplates are preferred in all thicknesses.

(1) The materials shall be limited to aluminum as follows: SB-209 Alloys 3003, 5083, 5454, and 6061; SB-241 Alloys 3003, 5083, 5086, 5454, 6061, and 6063; and SB-247 Alloys 3003, 5083, and 6061.

(2) The minimum nominal plate thickness shall be 0.249 in. (6.32 mm), or the minimum nominal pipe thickness shall be 0.133 in. (3.38 mm).

PRESSURE RELIEF DEVICES

ULT-125 GENERAL

The provisions of UG-125 through UG-136 shall apply to vessels constructed to this Part; the vessel shall be equipped with a safety relief valve suitable for low temperature service and installed to remain at ambient temperature except when relieving.

--`,,,``,,```,,,,`,``,`,,`,,```-`-`,,`,,`,`,,`---
Provided by IHS under license with ASME
No reproduction or networking permitted without license from IHS
Licensee=Chevron Phillips Chemical Co LP/5956674001
Not for Resale, 11/09/2014 20:41:36 MST

PART UHX
RULES FOR SHELL-AND-TUBE HEAT EXCHANGERS

UHX-1 SCOPE

The rules in UHX cover the minimum requirements for design, fabrication, and inspection of shell-and-tube heat exchangers.

UHX-2 MATERIALS AND METHODS OF FABRICATION

Materials and methods of fabrication of heat exchangers shall be in accordance with Subsections A, B, and C.

UHX-3 TERMINOLOGY

UHX-3.1 U-Tube Heat Exchanger

Heat exchanger with one stationary tubesheet attached to the shell and channel. The heat exchanger contains a bundle of U-tubes attached to the tubesheet [see Figure UHX-3, sketch (a)].

UHX-3.2 Fixed Tubesheet Heat Exchanger

Heat exchanger with two stationary tubesheets, each attached to the shell and channel. The heat exchanger contains a bundle of straight tubes connecting both tubesheets [see Figure UHX-3, sketch (b)].

UHX-3.3 Floating Tubesheet Heat Exchanger

Heat exchanger with one stationary tubesheet attached to the shell and channel, and one floating tubesheet that can move axially. The heat exchanger contains a bundle of straight tubes connecting both tubesheets [see Figure UHX-3, sketch (c)].

(13) **UHX-4 DESIGN**

(a) The design of all components shall be in accordance with the applicable rules of Subsection A, Mandatory Appendices, and this Part.

(b) The design of flanges shall consider the effects of pass partition gasketing in determining the minimum required bolt loads, W_{m1} and W_{m2}, of Mandatory Appendix 2. When the tubesheet is gasketed between the shell and channel flanges, the shell and channel flange bolt loads are identical and shall be treated as flange pairs in accordance with Mandatory Appendix 2.

(c) Requirements for distribution and vapor belts shall be as follows:

(1) Distribution and vapor belts where the shell is not continuous across the belt shall be designed in accordance with UHX-17.

(2) Distribution and vapor belts, where the shell is continuous across the belt, shall be designed in accordance with a Type 1 jacket in Mandatory Appendix 9. The longitudinal stress in the shell section with openings (for flow into the shell) shall be based on the net area of the shell (the shell area less that removed by the openings) and shall not exceed the applicable allowable stress criteria. For U-tube and floating head exchangers, the allowable axial stress is the maximum allowable stress for the shell material (see UG-23), and for fixed tubesheet exchangers, the allowable stress is as defined in UHX-13.5.10.

(d) Requirements for tubes shall be as follows:

(1) The allowable axial tube stresses in fixed and floating tubesheet heat exchangers given in this Part UHX-13 and UHX-14 supersede the requirements of UG-23.

(2) The thickness of U-tubes after forming shall not be less than the design thickness.

(e) Rules for U-tube heat exchangers are covered in UHX-12.

(f) Rules for fixed tubesheet heat exchangers are covered in UHX-13.

(g) Rules for floating tubesheet heat exchangers are covered in UHX-14.

NOTE: Tubesheet deflection, especially when the tubesheet thickness is less than the tube diameter, may contribute to tube-to-tubesheet joint leakage; likewise, deflection of a tubesheet or flat bolted cover may result in fluid leakage across a gasketed pass partition plate. Such leakages can be detrimental to the thermal performance of the heat exchanger, and deflection may need to be considered by the designer.

UHX-8 TUBESHEET EFFECTIVE BOLT LOAD, *W**

UHX-8.1 Scope

Table UHX-8.1 provides the tubesheet effective bolt load, W^*, transmitted to the perforated region of the tubesheet for each combination of Configuration and Loading Case. The bolt loads shall be calculated using the appropriate formula from Mandatory Appendix 2 considering the requirements in UHX-4(b).

UHX-8.2 Nomenclature

W_c = channel flange design bolt load for the gasket seating condition (see Mandatory Appendix 2)

W_{m1c} = channel flange design bolt load for the operating condition (see Mandatory Appendix 2)

$W_{m1\max}$ = MAX[(W_{m1c}), (W_{m1s})]

Provided by IHS under license with ASME
No reproduction or networking permitted without license from IHS
Licensee=Chevron Phillips Chemical Co LP/5956674001
Not for Resale, 11/09/2014 20:41:36 MST

Figure UHX-3
Terminology of Heat Exchanger Components

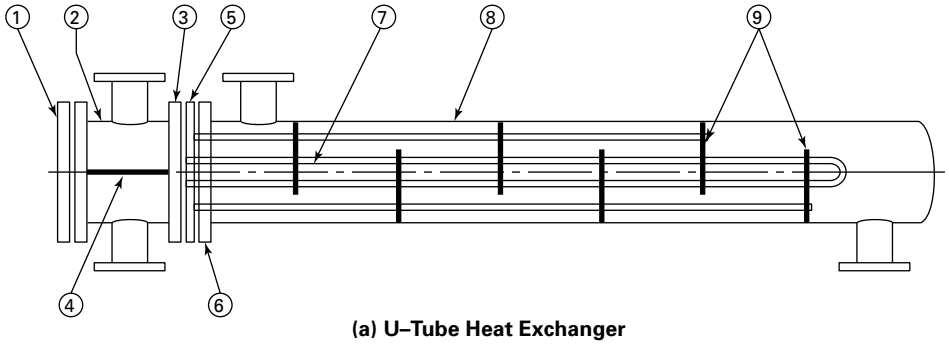

(a) U–Tube Heat Exchanger

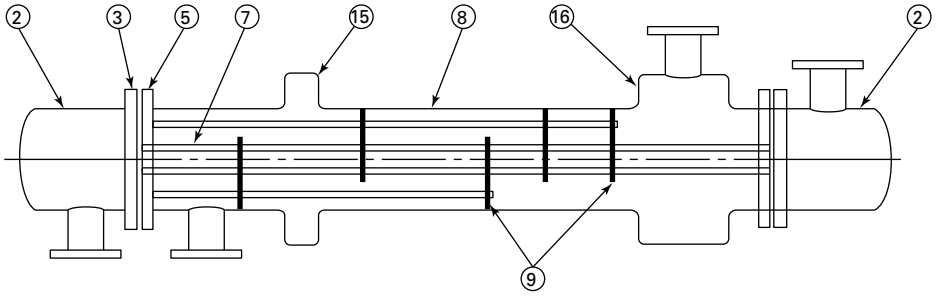

(b) Fixed Tubesheet Heat Exchanger

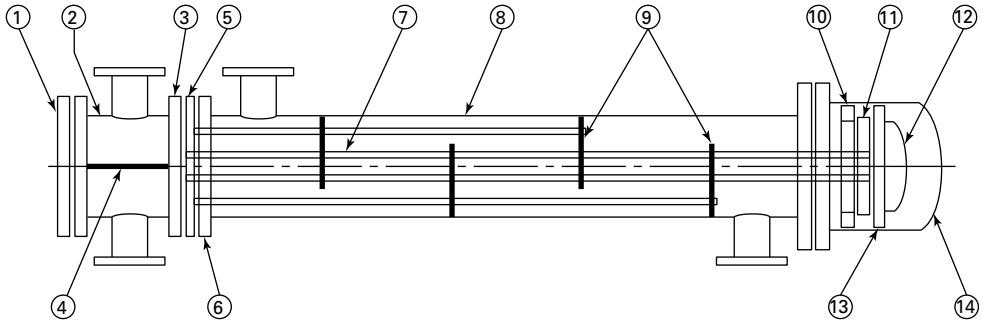

(c) Floating Tubesheet Heat Exchanger

(1) Channel cover (bolted flat cover)
(2) Channel
(3) Channel flange
(4) Pass partition
(5) Stationary tubesheet
(6) Shell flange
(7) Tubes
(8) Shell
(9) Baffles or support plates
(10) Floating head backing device
(11) Floating tubesheet
(12) Floating head
(13) Floating head flange
(14) Shell cover
(15) Expansion joint
(16) Distribution or vapor belt

Provided by IHS under license with ASME
No reproduction or networking permitted without license from IHS
Licensee=Chevron Phillips Chemical Co LP/5956674001
Not for Resale, 11/09/2014 20:41:36 MST

Table UHX-8.1
Tubesheet Effective Bolt Load, W^*

Configuration	Loading Case 1	2	3	4–7
a	0	0	0	0
b	W_{m1c}	0	W_{m1c}	W_c
c	W_{m1c}	0	W_{m1c}	W_c
d	W_{m1c}	W_{m1s}	$W_{m1\max}$	$W_{\max}$
e	0	W_{m1s}	W_{m1s}	W_s
f	0	W_{m1s}	W_{m1s}	W_s
A	0	0	0	0
B	W_{m1c}	0	W_{m1c}	W_c
C	W_{m1c}	0	W_{m1c}	W_c
D	0	0	0	0

W_{m1s} = shell flange design bolt load for the operating condition (see Mandatory Appendix 2)

$W_{\max}$ = MAX[(W_c), (W_s)]

W_s = shell flange design bolt load for the gasket seating condition (see Mandatory Appendix 2)

W^* = tubesheet effective bolt load selected from Table UHX-8.1 for the respective Configuration and Loading Case

(13) **UHX-9 TUBESHEET EXTENSION**

UHX-9.1 Scope

(a) Tubesheet extensions, if present, may be extended as a flange (flanged) or not extended as a flange (unflanged).

(1) Configuration a tubesheets may have no extension or an unflanged extension.

(2) Configurations b, e, and B tubesheets have flanged extensions.

(3) Configurations c, f, and C tubesheets have unflanged extensions.

(4) Configuration d may have a flanged or unflanged tubesheet extension.

(5) Configurations A and D do not have tubesheet extensions.

(b) These rules cover the design of tubesheet extensions that have loads applied to them.

(c) The required thickness of the tubesheet extension may differ from that required for the interior of the tubesheet as calculated in UHX-12, UHX-13, or UHX-14.

UHX-9.2 Conditions of Applicability

(a) The general conditions of applicability given in UHX-10 apply.

(b) These rules do not apply to Configurations a, A, and D.

(c) These rules apply to flanged extensions that have bolt loads applied to them (Configurations b, e, and B). This includes Configuration d if the extension is flanged and there are bolt loads applied to the extension.

(d) These rules apply to unflanged extensions (Configurations c, d, f, and C) and flanged extensions that have no bolt loads applied to them (Configuration d), if the thickness of the extension is less than the tubesheet thickness, h. If the tubesheet extension is equal to or greater than the tubesheet thickness, h, no analysis is required.

UHX-9.3 Nomenclature

The following symbols are used for determining the required thickness of the tubesheet extension:

D_E = maximum of the shell and channel gasket inside diameters, but not less than the maximum of the shell and channel flange inside diameters

G = diameter of gasket load reaction
= G_c for tubesheet configuration b of a U-tube tubesheet heat exchanger
= G_s for tubesheet configuration e of a U-tube tubesheet heat exchanger
= G_c for tubesheet configuration b of a fixed tubesheet heat exchanger
= G_c for stationary tubesheet configuration b of a floating tubesheet exchanger
= G_s for stationary tubesheet configuration e of a floating tubesheet exchanger
= G_c for floating tubesheet configuration B of a floating tubesheet exchanger
= G_c or G_s for tubesheet configuration d when applicable (e.g., hydrotest)

h_G = gasket moment arm, equal to the radial distance from the centerline of the bolts to the line of the gasket reaction as shown in Table 2-5.2

h_r = minimum required thickness of the tubesheet extension

MAX [(a), (b),(c),...] = greatest of *a, b, c,...*

P_s = shell side design pressure. For shell side vacuum, use a negative value for P_s.

P_t = tube side design pressure. For tube side vacuum, use a negative value for P_t.

S = allowable stress for the material of the tubesheet extension at design temperature (see UG-23)

S_a = allowable stress for the material of the tubesheet extension at ambient temperature (see UG-23)

W = flange design bolt load from eq. 2-5(e)(5) considering UHX-4(c).

W_{m1} = flange design bolt load from eq. 2-5(c)(1)(1) considering UHX-4(c).

Provided by IHS under license with ASME
No reproduction or networking permitted without license from IHS
Licensee=Chevron Phillips Chemical Co LP/5956674001
Not for Resale, 11/09/2014 20:41:36 MST

UHX-9.4 Design Considerations

(a) The designer shall take appropriate consideration of the stresses resulting from the pressure test required by UG-99 or UG-100 [see UG-99(b) and UG-99(d)]. Special consideration shall be required for tubesheets that are gasketed on both sides when the pressure test in each chamber is conducted independently and the bolt loading is only applied to the flanged extension during the pressure test.

(b) If the tubesheet is grooved for a peripheral gasket, the net thickness under the groove or between the groove and the outer edge of the tubesheet shall not be less than h_r. Figure UHX-9 depicts thickness h_r for some representative configurations.

UHX-9.5 Calculation Procedure

(a) For flanged extensions that have bolt loads applied to them [Configurations b, d (extended for bolting), e, and B], the procedure for calculating the minimum required thickness of the extension, h_r, is as follows:

$$h_r = \mathrm{MAX}\left[\sqrt{\frac{1.9Wh_G}{S_aG}}, \sqrt{\frac{1.9W_{m1}h_G}{SG}}\right]$$

(b) For unflanged Configurations c and f, the minimum required thickness of the extension, h_r, shall be calculated in accordance with Mandatory Appendix 2, 2-8(c) for loose-type flanges with laps.

(c) For unflanged Configurations d and C and for flanged Configuration d having no bolt loads applied to the extension, the minimum required thickness of the extension, h_r, shall be the maximum of the values determined for each design loading case as follows:

$$h_r = \left(\frac{D_E}{3.2S}\right)\left|P_s - P_t\right|$$

UHX-10 GENERAL CONDITIONS OF APPLICABILITY FOR TUBESHEETS (13)

(a) The tubesheet shall be flat and circular.

(b) The tubesheet shall be of uniform thickness, except that the thickness of a tubesheet extension as determined in UHX-9 may differ from the center thickness as determined in UHX-12, UHX-13, and UHX-14. The outside diameter, A, used for the tubesheet calculations shall not exceed the diameter at which the thickness of the tubesheet extension is less than the minimum of $0.75h$ or h – 0.375 in. (h – 10 mm).

(c) The tubesheet shall be uniformly perforated over a nominally circular area, in either equilateral triangular or square patterns. However, untubed lanes for pass partitions are permitted.

(d) The channel component integral with the tubesheet (UHX-12.5, UHX-13.5, and UHX-14.5; configurations a, e, f, and A) shall be either a cylinder or a hemispherical head (see Figure UHX-10). The hemispherical head rules shall be used when the head is attached directly to the tubesheet and there are no cylindrical sections between the head and the tubesheet.

(e) The tube side and shell side pressures are assumed to be uniform. These rules do not cover weight loadings or pressure drop.

Figure UHX-9
Some Representative Configurations Describing the Minimum Required Thickness of the Tubesheet Flanged Extension, h_r

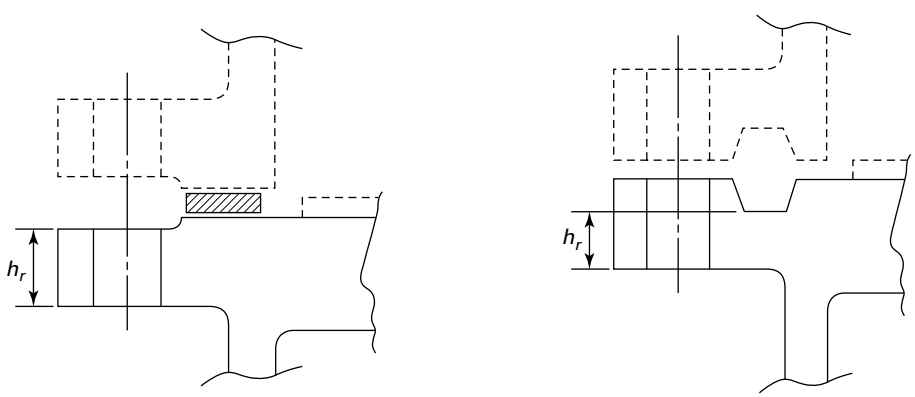

(a) Raised Face (b) Grooved for Ring Gasket

Provided by IHS under license with ASME
No reproduction or networking permitted without license from IHS
Licensee=Chevron Phillips Chemical Co LP/5956674001
Not for Resale, 11/09/2014 20:41:36 MST

Figure UHX-10
Integral Channels

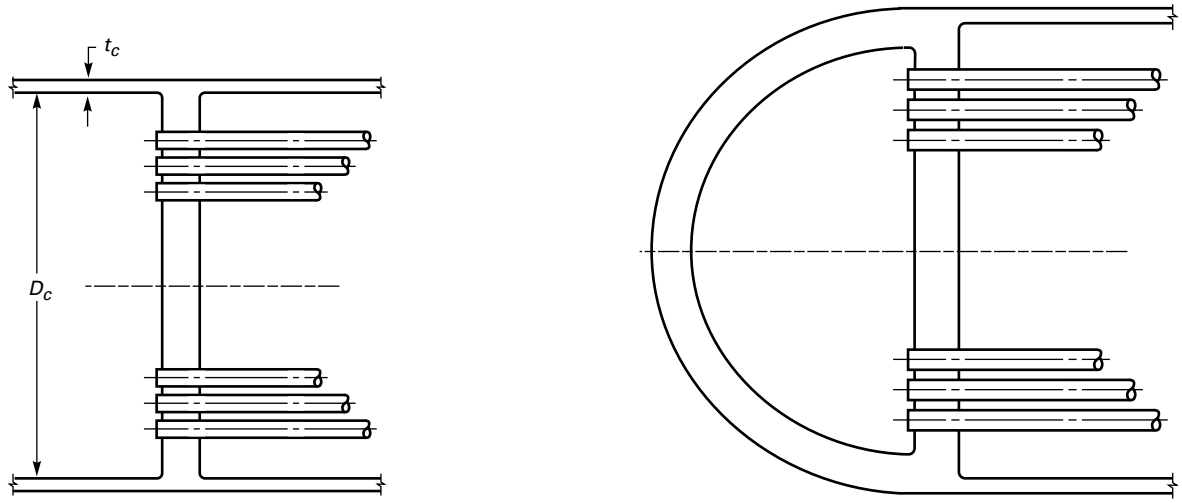

(a) Cylindrical Channel [Note (1)] **(b) Hemispherical Channel [Note (2)]**

NOTES:
(1) Length of cylinder shall be $\geq 1.8\sqrt{D_c t_c}$.
(2) Head shall be 180 deg with no intervening cylinders.

(f) The design pressure or operating pressure defined in the nomenclature is the applicable pressure in the shell side or tube side chamber, including any static head, not the coincident pressure defined in UG-21. For the design-pressure-only conditions (design loading cases), the design pressure shall be used. For the operating-thermal-pressure conditions (operating loading cases), the operating pressure shall be used. If the operating pressure is not available, the design pressure shall be used for all loading cases.

(g) The design rules in UHX-12, UHX-13, and UHX-14 are based on a fully assembled heat exchanger. If pressure is to be applied to a partially assembled heat exchanger having a Configuration d tubesheet that is extended for bolting, special consideration, in addition to the rules given in UHX-9, UHX-12, UHX-13, and UHX-14, shall be given to ensure that the tubesheet is not overstressed for the condition considered.

(h) When these conditions of applicability are not satisfied, see U-2(g).

UHX-11 TUBESHEET CHARACTERISTICS

UHX-11.1 Scope

These rules cover the determination of the ligament efficiencies, effective depth of the tube side pass partition groove, and effective elastic constants to be used in the calculation of U-tube, fixed, and floating tubesheets.

UHX-11.2 Conditions of Applicability

The general conditions of applicability given UHX-10 apply.

UHX-11.3 Nomenclature

The symbols described below are used for determining the effective elastic constants.

A_L = total area of untubed lanes
= $U_{L1}L_{L1} + U_{L2}L_{L2} + \ldots$ (limited to $4D_o p$)
c_t = tubesheet corrosion allowance on the tube side; $c_t = 0$ in the uncorroded condition
D_o = equivalent diameter of outer tube limit circle [see Figure UHX-11.1 sketch (a)]
d = diameter of tube hole
d_t = nominal outside diameter of tubes
d^* = effective tube hole diameter
E = modulus of elasticity for tubesheet material at tubesheet design temperature
E_{tT} = modulus of elasticity for tube material at tubesheet design temperature
E^* = effective modulus of elasticity of tubesheet in perforated region

NOTE: The modulus of elasticity shall be taken from the applicable Table TM in Section II, Part D. When a material is not listed in the TM tables, the requirements of U-2(g) shall be applied.

Provided by IHS under license with ASME
No reproduction or networking permitted without license from IHS
Licensee=Chevron Phillips Chemical Co LP/5956674001
Not for Resale, 11/09/2014 20:41:36 MST

Figure UHX-11.1
Tubesheet Geometry

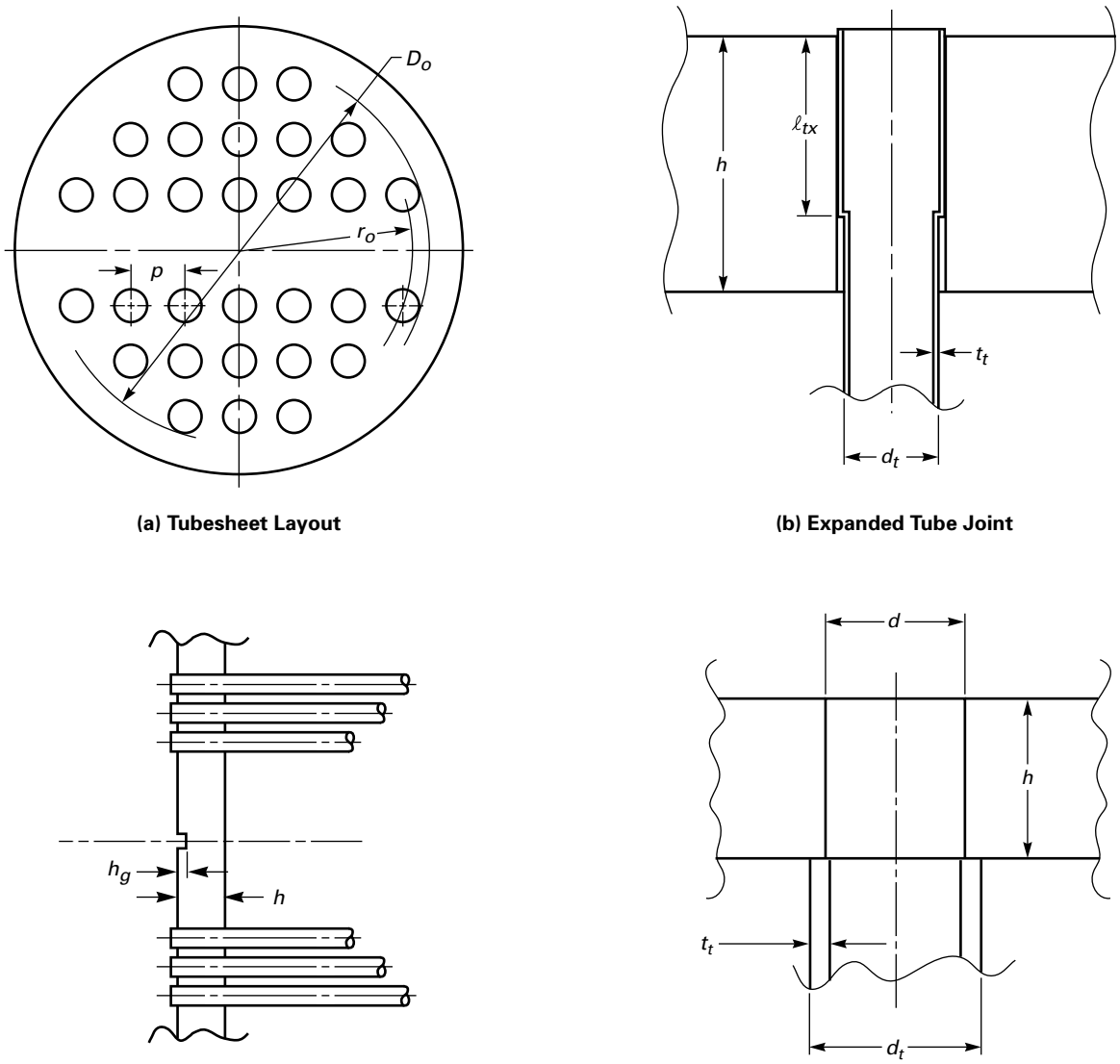

(a) Tubesheet Layout

(b) Expanded Tube Joint

(c) Tube Side Pass Partition Groove Depth

(d) Tubes Welded to Backside of Tubesheet

NOTE: $d_t - 2t_t \leq d < d_t$

Provided by IHS under license with ASME
No reproduction or networking permitted without license from IHS
Licensee=Chevron Phillips Chemical Co LP/5956674001
Not for Resale, 11/09/2014 20:41:36 MST

Figure UHX-11.2
Typical Untubed Lane Configurations

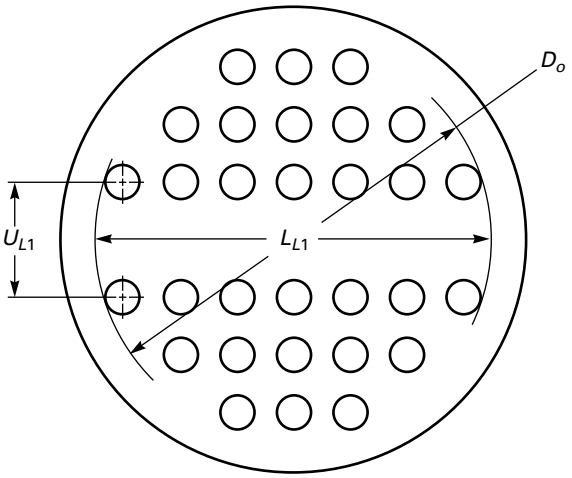

$A_L = U_{L1} L_{L1}$

(a) One Lane

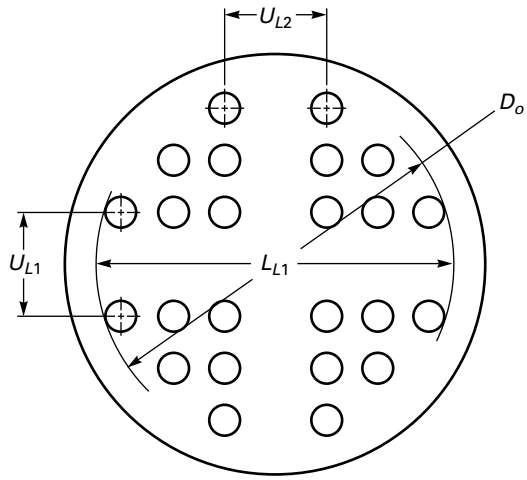

$L_{L2} = L_{L1} - U_{L1}$
$A_L = U_{L1}L_{L1} + U_{L2}L_{L2}$

(b) Two Lanes

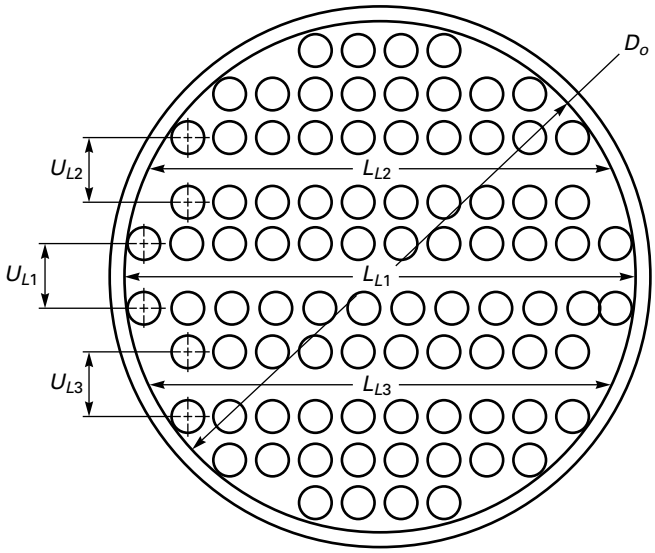

$A_L = U_{L1}L_{L1} + U_{L2}L_{L2} + U_{L3}L_{L3}$

(c) Three Lanes

Provided by IHS under license with ASME
No reproduction or networking permitted without license from IHS
Licensee=Chevron Phillips Chemical Co LP/5956674001
Not for Resale, 11/09/2014 20:41:36 MST

h = tubesheet thickness

h_g = tube side pass partition groove depth [see Figure UHX-11.1 sketch (c)]

h'_g = effective tube side pass partition groove depth

L_{L1}, L_{L2}... = length(s) of untubed lane(s) (see Figure UHX-11.2)

ℓ_{tx} = expanded length of tube in tubesheet ($0 \le \ell_{tx} \le h$) [see Figure UHX-11.1 sketch (b)]. An expanded tube-to-tubesheet joint is produced by applying pressure inside the tube such that contact is established between the tube and tubesheet. In selecting an appropriate value of expanded length, the designer shall consider the degree of initial expansion, differences in thermal expansion, or other factors that could result in loosening of the tubes within the tubesheet.

MAX [(a),(b),(c),...] = greatest of *a, b, c,...*

MIN [(a),(b),(c),...] = smallest of *a, b, c...*

p = tube pitch

p^* = effective tube pitch

r_o = radius to outermost tube hole center [see Figure UHX-11.1 sketch (b)]

S = allowable stress for tubesheet material at tubesheet design temperature (see UG-23)

S_{tT} = allowable stress for tube material at tubesheet design temperature (see UG-23)

NOTE: For a welded tube or pipe, use the allowable stress for the equivalent seamless product. When the allowable stress for the equivalent seamless product is not available, divide the allowable stress of the welded product by 0.85.

t_t = nominal tube wall thickness

U_{L1}, U_{L2}... = center-to-center distance(s) between adjacent tube rows of untubed lane(s), but not to exceed $4p$ (see Figure UHX-11.2)

μ = basic ligament efficiency for shear

μ^* = effective ligament efficiency for bending

ν^* = effective Poisson's ratio in perforated region of tubesheet

ρ = tube expansion depth ratio = ℓ_{tx}/h, ($0 \le \rho \le 1$)

UHX-11.4 Design Considerations

(a) Elastic moduli and allowable stresses shall be taken at the design temperatures. However, for cases involving thermal loading, it is permitted to use the operating temperatures instead of the design temperatures.

(b) When the values calculated in this section are to be used for fixed tubesheets, they shall be determined in both the corroded and uncorroded conditions.

(c) ρ may be either calculated or chosen as a constant.

UHX-11.5 Calculation Procedure

UHX-11.5.1 Determination of Effective Dimensions and Ligament Efficiencies. From the geometry (see Figure UHX-11.1 and Figure UHX-11.2) and material properties of the exchanger, calculate the required parameters in accordance with (a) or (b) below.

(a) For geometries where the tubes extend through the tubesheet [see Figure UHX-11.1 sketch (b)], calculate D_o, μ, d^*, p^*, μ^*, and h'_g.

$$D_o = 2r_o + d_t$$

$$\mu = \frac{p - d_t}{p}$$

$$d^* = \mathrm{MAX}\left\{\left[d_t - 2t_t\left(\frac{E_{tT}}{E}\right)\left(\frac{S_{tT}}{S}\right)\rho\right], \left[d_t - 2t_t\right]\right\}$$

$$p^* = \frac{p}{\left(1 - \frac{4\mathrm{MIN}\left[(A_L), (4D_o p)\right]}{\pi D_o^2}\right)^{\frac{1}{2}}}$$

$$\mu^* = \frac{p^* - d^*}{p^*}$$

$$h'_g = \mathrm{MAX}\left[\left(h_g - c_t\right), (0)\right]$$

(b) For tubes welded to the backside of the tubesheet [see Figure UHX-11.1(d)], calculate D_o, μ, p^*, μ^*, and h'_g.

$$D_o = 2r_o + d$$

$$\mu = \frac{p - d}{p}$$

$$p^* = \frac{p}{\left(1 - \frac{4\mathrm{MIN}\left[(A_L), (4D_o p)\right]}{\pi D_o^2}\right)^{\frac{1}{2}}}$$

$$\mu^* = \frac{p^* - d}{p^*}$$

$$h'_g = \mathrm{MAX}\left[\left(h_g - c_t\right), (0)\right]$$

UHX-11.5.2 Determination of Effective Elastic Properties. Determine the values for E^*/E and ν^* relative to h/p using either Figure UHX-11.3 (equilateral triangular pattern) or Figure UHX-11.4 (square pattern).

Provided by IHS under license with ASME
No reproduction or networking permitted without license from IHS
Licensee=Chevron Phillips Chemical Co LP/5956674001
Not for Resale, 11/09/2014 20:41:36 MST

Figure UHX-11.3
Curves for the Determination of E^*/E and ν^* (Equilateral Triangular Pattern)

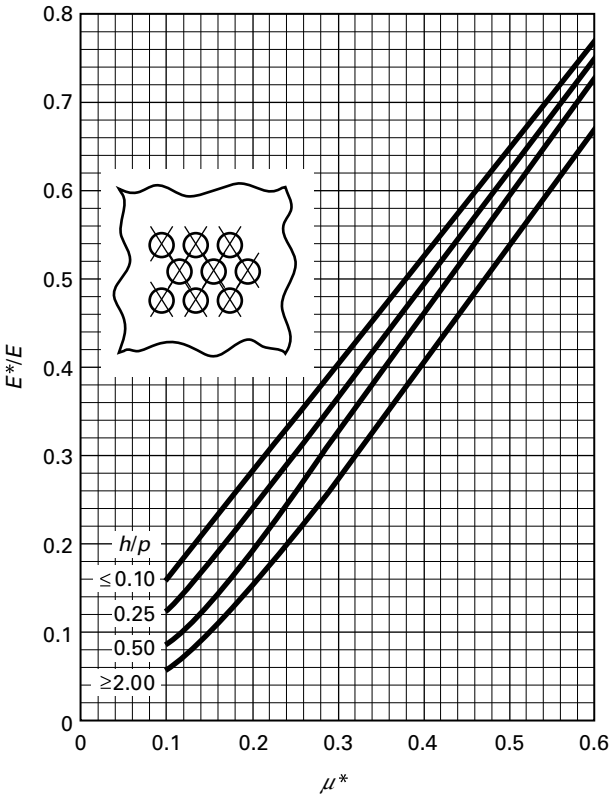

(a) E^*/E (Equilateral Triangular Pattern)

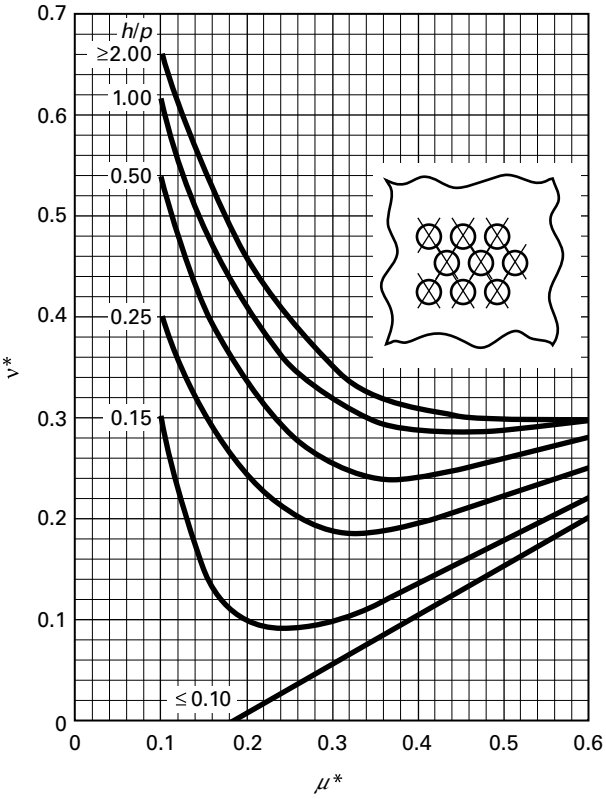

(b) ν^* (Equilateral Triangular Pattern)

(a) Equilateral Triangular Pattern: $E^*/E = \alpha_0 + \alpha_1\mu^* + \alpha_2\mu^{*2} + \alpha_3\mu^{*3} + \alpha_4\mu^{*4}$

h/p	α_0	α_1	α_2	α_3	α_4
0.10	0.0353	1.2502	−0.0491	0.3604	−0.6100
0.25	0.0135	0.9910	1.0080	−1.0498	0.0184
0.50	0.0054	0.5279	3.0461	−4.3657	1.9435
2.00	−0.0029	0.2126	3.9906	−6.1730	3.4307

(b) Equilateral Triangular Pattern: $\nu^* = \beta_0 + \beta_1\mu^* + \beta_2\mu^{*2} + \beta_3\mu^{*3} + \beta_4\mu^{*4}$

h/p	β_0	β_1	β_2	β_3	β_4
0.10	−0.0958	0.6209	−0.8683	2.1099	−1.6831
0.15	0.8897	−9.0855	36.1435	−59.5425	35.8223
0.25	0.7439	−4.4989	12.5779	−14.2092	5.7822
0.50	0.9100	−4.8901	12.4325	−12.7039	4.4298
1.00	0.9923	−4.8759	12.3572	−13.7214	5.7629
2.0	0.9966	−4.1978	9.0478	−7.9955	2.2398

GENERAL NOTES:
(a) The polynomial equations given in the tabular part of this Figure can be used in lieu of the curves.
(b) For both parts (a) and (b) in the tabular part of this Figure, these coefficients are only valid for $0.1 \le \mu^* \le 0.6$.
(c) For both parts (a) and (b) in the tabular part of this Figure: for values of h/p lower than 0.1, use $h/p = 0.1$; for values of h/p higher than 2.0, use $h/p = 2.0$.

Provided by IHS under license with ASME
No reproduction or networking permitted without license from IHS
Licensee=Chevron Phillips Chemical Co LP/5956674001
Not for Resale, 11/09/2014 20:41:36 MST

Figure UHX-11.4
Curves for the Determination of E^*/E and ν^* (Square Pattern)

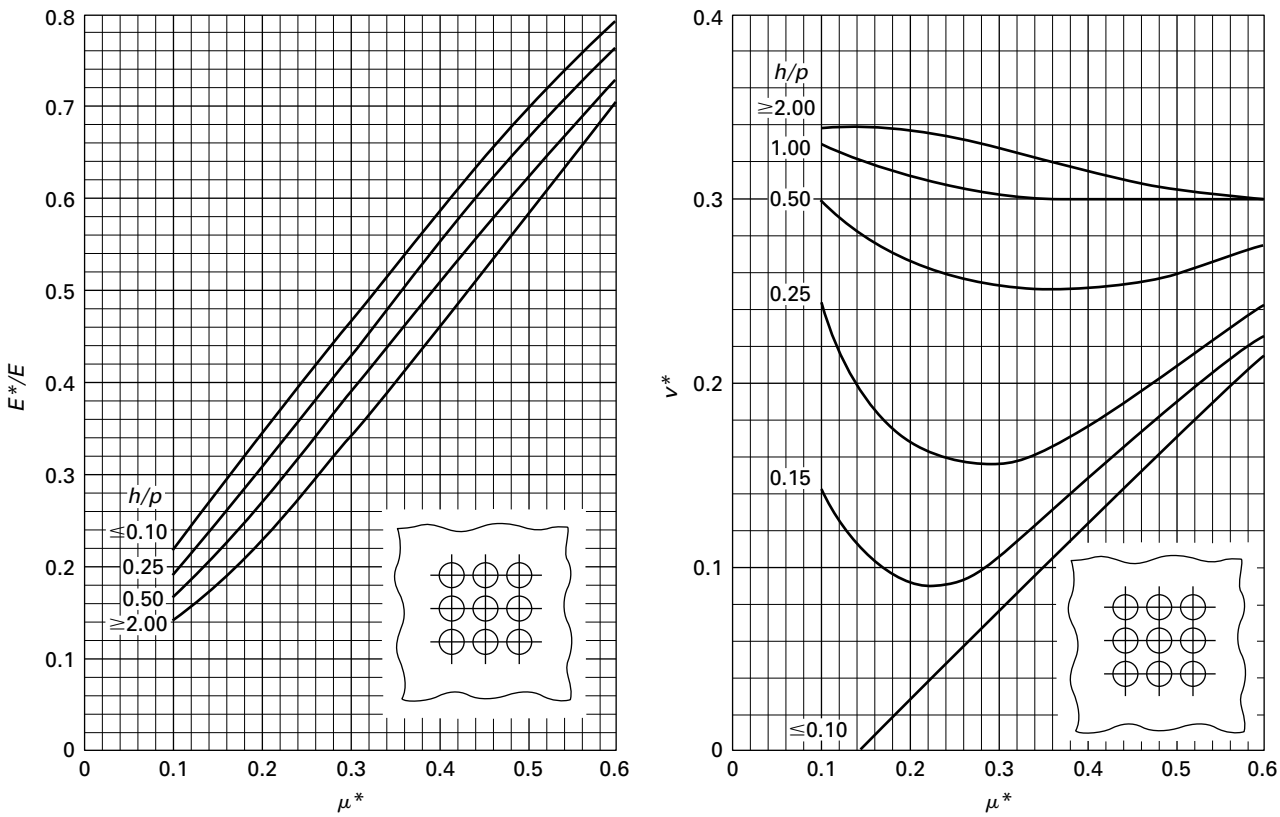

(a) E^*/E (Square Pattern) (b) ν^* (Square Pattern)

(a) Square Pattern: $E^*/E = \alpha_0 + \alpha_1\mu^* + \alpha_2\mu^{*2} + \alpha_3\mu^{*3} + \alpha_4\mu^{*4}$

h/p	α_0	α_1	α_2	α_3	α_4
0.10	0.0676	1.5756	−1.2119	1.7715	−1.2628
0.25	0.0250	1.9251	−3.5230	6.9830	−5.0017
0.50	0.0394	1.3024	−1.1041	2.8714	−2.3994
2.00	0.0372	1.0314	−0.6402	2.6201	−2.1929

(b) Square Pattern: $\nu^* = \beta_0 + \beta_1\mu^* + \beta_2\mu^{*2} + \beta_3\mu^{*3} + \beta_4\mu^{*4}$

h/p	β_0	β_1	β_2	β_3	β_4
0.10	−0.0791	0.6008	−0.3468	0.4858	−0.3606
0.15	0.3345	−2.8420	10.9709	−15.8994	8.3516
0.25	0.4296	−2.6350	8.6864	−11.5227	5.8544
0.50	0.3636	−0.8057	2.0463	−2.2902	1.1862
1.00	0.3527	−0.2842	0.4354	−0.0901	−0.1590
2.00	0.3341	0.1260	−0.6920	0.6877	−0.0600

GENERAL NOTES:

(a) The polynomial equations given in the tabular part of this Figure can be used in lieu of the curves.

(b) For both parts (a) and (b) in the tabular part of this Figure, these coefficients are only valid for $0.1 \le \mu^* \le 0.6$.

(c) For both parts (a) and (b) in the tabular part of this Figure: for values of h/p lower than 0.1, use $h/p = 0.1$; for values of h/p higher than 2.0, use $h/p = 2.0$.

Provided by IHS under license with ASME
No reproduction or networking permitted without license from IHS
Licensee=Chevron Phillips Chemical Co LP/5956674001
Not for Resale, 11/09/2014 20:41:36 MST

UHX-12 RULES FOR THE DESIGN OF U-TUBE TUBESHEETS

UHX-12.1 Scope

These rules cover the design of tubesheets for U-tube heat exchangers. The tubesheet may have one of the six configurations shown in Figure UHX-12.1:

(a) Configuration a: tubesheet integral with shell and channel;

(b) Configuration b: tubesheet integral with shell and gasketed with channel, extended as a flange;

(c) Configuration c: tubesheet integral with shell and gasketed with channel, not extended as a flange;

(d) Configuration d: tubesheet gasketed with shell and channel;

(e) Configuration e: tubesheet gasketed with shell and integral with channel, extended as a flange;

(f) Configuration f: tubesheet gasketed with shell and integral with channel, not extended as a flange.

UHX-12.2 Conditions of Applicability

The general conditions of applicability given in UHX-10 apply.

(13) UHX-12.3 Nomenclature

The symbols described below are used for the design of the tubesheet. Symbols D_o, E^*, h'_g, μ, μ^*, and ν^* are defined in UHX-11.

A = outside diameter of tubesheet, except as limited by UHX-10(b)

A_p = total area enclosed by C_p

C = bolt circle diameter (see Mandatory Appendix 2)

C_p = perimeter of the tube layout measured stepwise in increments of one tube pitch from the center-to-center of the outermost tubes (see Figure UHX-12.2)

D_c = inside channel diameter

D_s = inside shell diameter

E = modulus of elasticity for tubesheet material at design temperature

E_c = modulus of elasticity for channel material at design temperature

E_s = modulus of elasticity for shell material at design temperature

NOTE: The modulus of elasticity shall be taken from the applicable Table TM in Section II, Part D. When a material is not listed in the TM tables, the requirements of U-2(g) shall be applied.

G_1 = midpoint of contact between flange and tubesheet

G_c = diameter of channel gasket load reaction (see Mandatory Appendix 2)

G_s = diameter of shell gasket load reaction (see Mandatory Appendix 2)

h = tubesheet thickness

MAX [(a),(b),(c),...] = greatest of *a, b, c,...*

P_s = shell side design pressure. For shell side vacuum, use a negative value for P_s.

$P_{sd,\max}$ = maximum shell side design pressure

$P_{sd,\min}$ = minimum shell side design pressure (negative if vacuum is specified, otherwise zero)

P_t = tube side design pressure. For tube side vacuum, use a negative value for P_t.

$P_{td,\max}$ = maximum tube side design pressure

$P_{td,\min}$ = minimum tube side design pressure (negative if vacuum is specified, otherwise zero)

S = allowable stress for tubesheet material at tubesheet design temperature (see UG-23)

S_c = allowable stress for channel material at design temperature

S_s = allowable stress for shell material at design temperature

NOTE: For a welded tube or pipe, use the allowable stress for the equivalent seamless product. When the allowable stress for the equivalent seamless product is not available, divide the allowable stress of the welded product by 0.85.

$S_{y,c}$ = yield strength for channel material at design temperature

$S_{y,s}$ = yield strength for shell material at design temperature

NOTE: The yield strength shall be taken from Table Y-1 in Section II, Part D. When a yield strength value is not listed in Table Y-1, one may be obtained by using the procedure in UG-28(c)(2) Step 3.

$S_{PS,c}$ = allowable primary plus secondary stress for channel material at design temperature per UG-23(e)

$S_{PS,s}$ = allowable primary plus secondary stress for shell material at design temperature per UG-23(e)

t_c = channel thickness

t_s = shell thickness

W^* = tubesheet effective bolt load determined in accordance with UHX-8

ν_c = Poisson's ratio of channel material

ν_s = Poisson's ratio of shell material

UHX-12.4 Design Considerations (13)

(a) The various loading conditions to be considered shall include, but not be limited to, normal operating, startup, shutdown, cleaning, and upset conditions, which may govern the design of the tubesheet.

For each of these conditions, the following loading cases shall be considered:

(1) Design Loading Cases. Table UHX-12.4-1 provides the load combinations required to evaluate the heat exchanger for the design condition. When $P_{sd,\min}$ and $P_{td,\min}$ are both zero, design loading case 4 does not need to be considered.

Provided by IHS under license with ASME
No reproduction or networking permitted without license from IHS
Licensee=Chevron Phillips Chemical Co LP/5956674001
Not for Resale, 11/09/2014 20:41:36 MST

Provided by IHS under license with ASME
No reproduction or networking permitted without license from IHS

Figure UHX-12.1
U-Tube Tubesheet Configurations

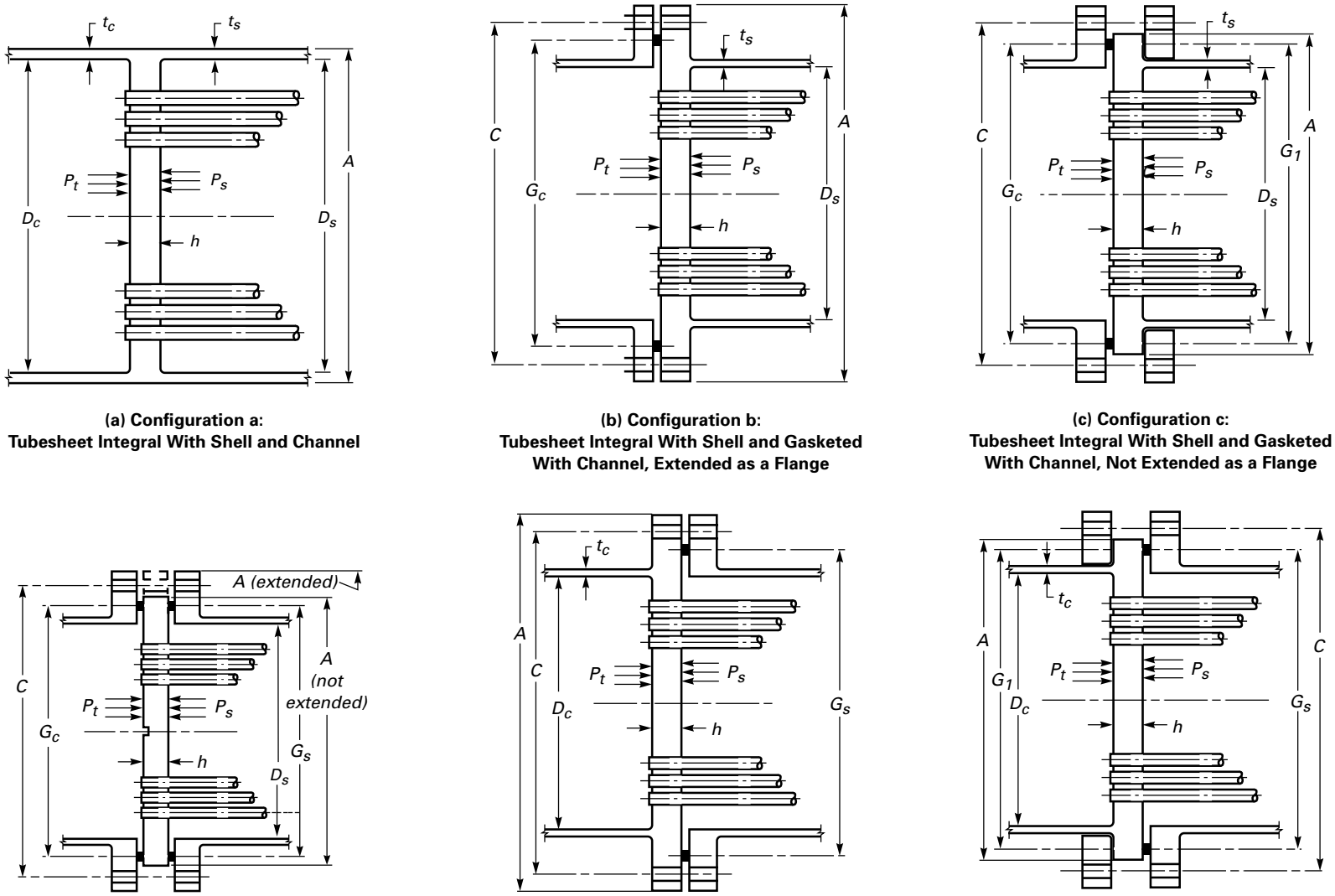

(a) Configuration a:
Tubesheet Integral With Shell and Channel

(b) Configuration b:
Tubesheet Integral With Shell and Gasketed With Channel, Extended as a Flange

(c) Configuration c:
Tubesheet Integral With Shell and Gasketed With Channel, Not Extended as a Flange

(d) Configuration d:
Tubesheet Gasketed With Shell and Channel

(e) Configuration e:
Tubesheet Gasketed With Shell and Integral With Channel, Extended as a Flange

(f) Configuration f:
Tubesheet Gasketed With Shell and Integral With Channel, Not Extended as a Flange

Licensee=Chevron Phillips Chemical Co LP/5956674001
Not for Resale, 11/09/2014 20:41:36 MST

Figure UHX-12.2
Tube Layout Perimeter

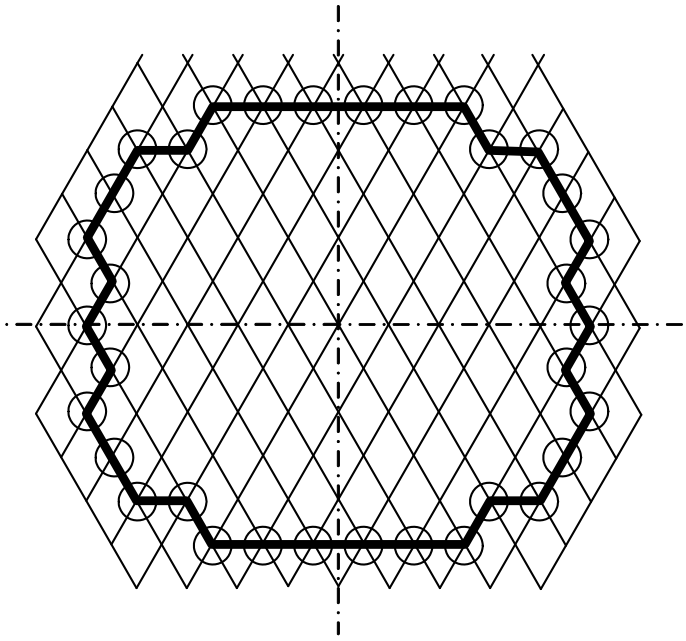

(a) Equilateral Triangular Pattern

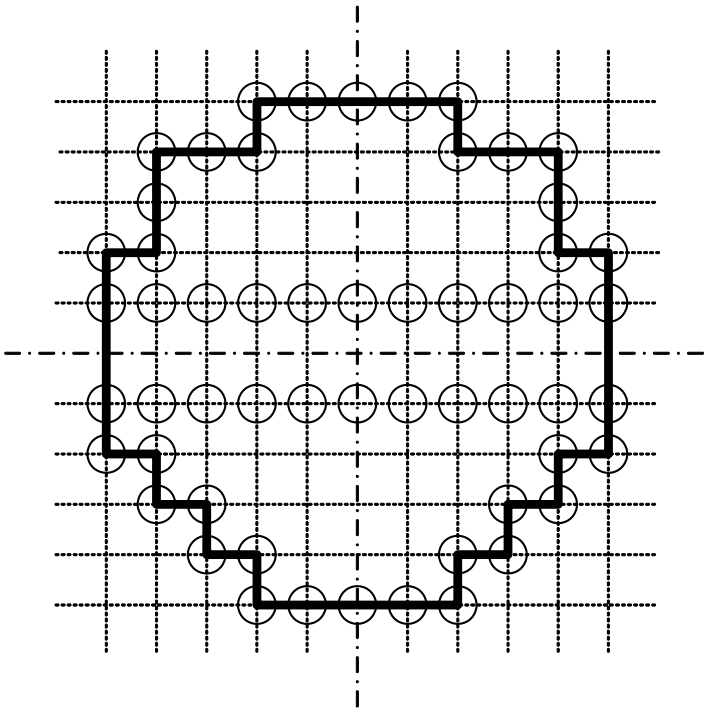

(b) Square Pattern

GENERAL NOTE: C_p (perimeter) is the length of the heavy line.

Provided by IHS under license with ASME
No reproduction or networking permitted without license from IHS
Licensee=Chevron Phillips Chemical Co LP/5956674001
Not for Resale, 11/09/2014 20:41:36 MST

Table UHX-12.4-1

Design Loading Case	Shell Side Design Pressure, P_s	Tube Side Design Pressure, P_t
1	$P_{sd,\min}$	$P_{td,\max}$
2	$P_{sd,\max}$	$P_{td,\min}$
3	$P_{sd,\max}$	$P_{td,\max}$
4	$P_{sd,\min}$	$P_{td,\min}$

(2) When differential design pressure is specified by the user or his designated agent, the design shall be based only on loading case 3. If the tube side is the higher-pressure side, P_t shall be the tube side design pressure and P_s shall be P_t less the differential design pressure. If the shell side is the higher-pressure side, P_s shall be the shell side design pressure and P_t shall be P_s less the differential design pressure.

(3) The designer should take appropriate consideration of the stresses resulting from the pressure test required by UG-99 or UG-100 [see UG-99(d)].

(b) As the calculation procedure is iterative, a value h shall be assumed for the tubesheet thickness to calculate and check that the maximum stresses in tubesheet, shell, and channel are within the maximum permissible stress limits.

(c) The designer may consider the tubesheet as simply supported in accordance with UHX-12.6.

UHX-12.5 Calculation Procedure

The procedure for the design of a tubesheet for a U-tube heat exchanger is as follows:

UHX-12.5.1 Step 1. Determine D_o, μ, μ^*, and h'_g from UHX-11.5.1.

UHX-12.5.2 Step 2. Calculate diameter ratios ρ_s and ρ_c. Configurations a, b, and c:

$$\rho_s = \frac{D_s}{D_o}$$

Configurations d, e, and f:

$$\rho_s = \frac{G_s}{D_o}$$

Configurations a, e, and f:

$$\rho_c = \frac{D_c}{D_o}$$

Configurations b, c, and d:

$$\rho_c = \frac{G_c}{D_o}$$

For each loading case, calculate moment M_{TS} due to pressures P_s and P_t acting on the unperforated tubesheet rim.

$$M_{TS} = \frac{D_o^2}{16}\left[\left(\rho_s - 1\right)\left(\rho_s^2 + 1\right)P_s - \left(\rho_c - 1\right)\left(\rho_c^2 + 1\right)P_t\right]$$

UHX-12.5.3 Step 3. Calculate h/p. If ρ changes, recalculate d^* and μ^* from UHX-11.5.1.

Determine E^*/E and ν^* relative to h/p from UHX-11.5.2.

Configurations a, b, c, e, and f: Proceed to UHX-12.5.4.

Configuration d: Proceed to UHX-12.5.5.

UHX-12.5.4 Step 4. Configurations a, b, and c: Calculate shell coefficients β_s, k_s, λ_s, δ_s, and ω_s.

$$\beta_s = \frac{\sqrt[4]{12\left(1 - \nu_s^2\right)}}{\sqrt{\left(D_s + t_s\right)t_s}}$$

$$k_s = \beta_s \frac{E_s t_s^3}{6\left(1 - \nu_s^2\right)}$$

$$\lambda_s = \frac{6D_s}{h^3} k_s \left(1 + h\beta_s + \frac{h^2\beta_s^2}{2}\right)$$

$$\delta_s = \frac{D_s^2}{4E_s t_s}\left(1 - \frac{\nu_s}{2}\right)$$

$$\omega_s = \rho_s k_s \beta_s \delta_s \left(1 + h\,\beta_s\right)$$

Configurations a, e, and f: Calculate channel coefficients β_c, k_c, λ_c, δ_c, and ω_c.

$$\beta_c = \frac{\sqrt[4]{12\left(1 - \nu_c^2\right)}}{\sqrt{\left(D_c + t_c\right)t_c}}$$

$$k_c = \beta_c \frac{E_c t_c^3}{6\left(1 - \nu_c^2\right)}$$

$$\lambda_c = \frac{6\,D_c}{h^3} k_c \left(1 + h\beta_c + \frac{h^2\beta_c^2}{2}\right)$$

Provided by IHS under license with ASME
No reproduction or networking permitted without license from IHS
Licensee=Chevron Phillips Chemical Co LP/5956674001
Not for Resale, 11/09/2014 20:41:36 MST

For a cylinder:

$$\delta_c = \frac{D_c^2}{4E_c t_c}\left(1 - \frac{v_c}{2}\right)$$

For a hemispherical head:

$$\delta_c = \frac{D_c^2}{4E_c t_c}\left(\frac{1 - v_c}{2}\right)$$

$$\omega_c = \rho_c\, k_c\, \beta_c\, \delta_c\left(1 + h\,\beta_c\right)$$

UHX-12.5.5 Step 5. Calculate diameter ratio K.

$$K = \frac{A}{D_o}$$

Calculate coefficient F.

Configuration a:

$$F = \frac{1 - v^*}{E^*}\left(\lambda_s + \lambda_c + E\ \ln K\right)$$

Configurations b and c:

$$F = \frac{1 - v^*}{E^*}\left(\lambda_s + E\ \ln K\right)$$

Configuration d:

$$F = \frac{1 - v^*}{E^*}\left(E\ \ln K\right)$$

Configurations e and f:

$$F = \frac{1 - v^*}{E^*}\left(\lambda_c + E\ \ln K\right)$$

UHX-12.5.6 Step 6. For each loading case, calculate moment M^* acting on the unperforated tubesheet rim.

Configuration a:

$$M^* = M_{TS} + \omega_c P_t - \omega_s P_s$$

Configuration b:

$$M^* = M_{TS} - \omega_s P_s - \frac{\left(C - G_c\right)}{2\pi\, D_o} W^*$$

Configuration c:

$$M^* = M_{TS} - \omega_s P_s - \frac{\left(G_1 - G_c\right)}{2\pi\, D_o} W^*$$

Configuration d:

$$M^* = M_{TS} + \frac{\left(G_c - G_s\right)}{2\pi\, D_o} W^*$$

Configuration e:

$$M^* = M_{TS} + \omega_c P_t + \frac{\left(C - G_s\right)}{2\pi\, D_o} W^*$$

Configuration f:

$$M^* = M_{TS} + \omega_c P_t + \frac{\left(G_1 - G_s\right)}{2\pi\, D_o} W^*$$

UHX-12.5.7 Step 7. For each loading case, calculate the maximum bending moments acting on the tubesheet at the periphery M_p and at the center M_o.

$$M_p = \frac{M^* - \frac{D_o^{\,2}}{32} F\left(P_s - P_t\right)}{1 + F}$$

$$M_o = M_p + \frac{D_o^{\,2}}{64}\left(3 + v^*\right)\left(P_s - P_t\right)$$

For each loading case, determine the maximum bending moment M acting on the tubesheet.

$$M = \mathrm{MAX}\left[\left|M_p\right|, \left|M_o\right|\right]$$

UHX-12.5.8 Step 8. For each loading case, calculate the tubesheet bending stress σ.

$$\sigma = \frac{6M}{\mu^*\left(h - h_g'\right)^2}$$

If $\sigma \le 2S$, the assumed tubesheet thickness is acceptable for bending. Otherwise, increase the assumed tubesheet thickness h and return to UHX-12.5.1.

UHX-12.5.9 Step 9. For each loading case, calculate the average shear stress in the tubesheet at the outer edge of the perforated region, if required. (**13**)

(a) If $\left|P_s - P_t\right| \le \frac{3.2S\mu h}{D_o}$, the shear stress is not required to be calculated. Proceed to (c).

(b) Calculate the average shear stress, τ.

Provided by IHS under license with ASME
No reproduction or networking permitted without license from IHS
Licensee=Chevron Phillips Chemical Co LP/5956674001
Not for Resale, 11/09/2014 20:41:36 MST

$$\tau = \left(\frac{1}{4\mu}\right)\left(\frac{1}{h}\left\{\frac{4A_p}{C_p}\right\}\right)|P_s - P_t|$$

If $\tau \le 0.8S$, the assumed tubesheet thickness is acceptable for shear. Otherwise, increase the assumed tubesheet thickness, h, and return to UHX-12.5.1.

(c) Configurations a, b, c, e, and f: Proceed to UHX-12.5.10. Configuration d: The calculation procedure is complete.

UHX-12.5.10 Step 10. For each loading case, calculate the stresses in the shell and/or channel integral with the tubesheet.

Configurations a, b, and c: The shell shall have a uniform thickness of t_s for a minimum length of $1.8\sqrt{D_s t_s}$ adjacent to the tubesheet. Calculate the axial membrane stress $\sigma_{s,m}$, axial bending stress $\sigma_{s,b}$, and total axial stress σ_s, in the shell at its junction to the tubesheet.

$$\sigma_{s,m} = \frac{D_s^2}{4t_s(D_s + t_s)}P_s$$

$$\sigma_{s,b} = \frac{6}{t_s^2}k_s\left[\beta_s\delta_s P_s + 6\frac{1-\nu^*}{E^*}\frac{D_o}{h^3}\left(1 + \frac{h\beta_s}{2}\right) \times\left(M_p + \frac{D_o^2}{32}(P_s - P_t)\right)\right]$$

$$\sigma_s = |\sigma_{s,m}| + |\sigma_{s,b}|$$

Configurations a, e, and f: A cylindrical channel shall have a uniform thickness of t_c for a minimum length of $1.8\sqrt{D_c t_c}$ adjacent to the tubesheet. Calculate the axial membrane stress $\sigma_{c,m}$, axial bending stress $\sigma_{c,b}$, and total axial stress σ_c, in the channel at its junction to the tubesheet.

$$\sigma_{c,m} = \frac{D_c^2}{4t_c(D_c + t_c)}P_t$$

$$\sigma_{c,b} = \frac{6}{t_c^2}k_c\left[\beta_c\delta_c P_t - 6\frac{1-\nu^*}{E^*}\frac{D_o}{h^3}\left(1 + \frac{h\beta_c}{2}\right) \times\left(M_p + \frac{D_o^2}{32}(P_s - P_t)\right)\right]$$

$$\sigma_c = |\sigma_{c,m}| + |\sigma_{c,b}|$$

Configuration a: If $\sigma_s \le 1.5S_s$ and $\sigma_c \le 1.5S_c$, the shell and channel designs are acceptable and the calculation procedure is complete. Otherwise, proceed to UHX-12.5.11.

Configurations b and c: If $\sigma_s \le 1.5S_s$, the shell design is acceptable and the calculation procedure is complete. Otherwise, proceed to UHX-12.5.11.

Configurations e and f: If $\sigma_c \le 1.5S_c$, the channel design is acceptable and the calculation procedure is complete. Otherwise, proceed to UHX-12.5.11.

UHX-12.5.11 Step 11. The design shall be reconsidered. One or a combination of the following three options may be used.

Option 1. Increase the assumed tubesheet thickness h and return to UHX-12.5.1.

Option 2. Increase the integral shell and/or channel thickness as follows:

Configurations a, b, and c: If $\sigma_s > 1.5S_s$, increase the shell thickness t_s.

Configurations a, e, and f: If $\sigma_c > 1.5S_c$ increase the channel thickness t_c.

Return to UHX-12.5.1.

Option 3. Perform a simplified elastic–plastic calculation for each applicable loading case by using a reduced effective modulus for the integral shell and/or channel to reflect the anticipated load shift resulting from plastic action at the integral shell and/or channel-to-tubesheet junction. This may result in a higher tubesheet bending stress σ. This option shall not be used at temperatures where the time-dependent properties govern the allowable stress.

Configuration a: This option may only be used when $\sigma_s \le S_{PS,s}$ and $\sigma_c \le S_{PS,c}$. In UHX-12.5.4, if $\sigma_s > 1.5\ S_s$, replace E_s with $E_s^* = E_s\sqrt{1.5S_s/\sigma_s}$ and recalculate k_s and λ_s. If $\sigma_c > 1.5\ S_c$, replace E_c with $E_c^* = E_c\sqrt{1.5S_c/\sigma_c}$ and recalculate k_c and λ_c.

Configurations b and c: This option may only be used when $\sigma_s \le S_{PS,s}$. In UHX-12.5.4, replace E_s with $E_s^* = E_s\sqrt{1.5S_s/\sigma_s}$ and recalculate k_s and λ_s.

Configurations e and f: This option may only be used when $\sigma_c \le S_{PS,c}$. In UHX-12.5.4, replace E_c with $E_c^* = E_c\sqrt{1.5S_c/\sigma_c}$ and recalculate k_c and λ_c.

Configurations a, b, c, e, and f: Perform Steps UHX-12.5.5 and UHX-12.5.7, and recalculate the tubesheet bending stress σ given in UHX-12.5.8.

If $\sigma \le 2S$, the assumed tubesheet thickness h is acceptable and the design is complete. Otherwise, the design shall be reconsidered by using Option 1 or 2.

UHX-12.6 Calculation Procedure for Simply Supported U-Tube Tubesheets

UHX-12.6.1 Scope. This procedure describes how to use the rules of UHX-12.5 when the effect of the stiffness of the integral channel and/or shell is not considered.

UHX-12.6.2 Conditions of Applicability. This calculation procedure applies only when the tubesheet is integral with the shell or channel (configurations a, b, c, e, and f).

UHX-12.6.3 Calculation Procedure. The calculation procedure outlined in UHX-12.5 shall be performed accounting for the following modifications:

(a) Perform Steps UHX-12.5.1 through UHX-12.5.9.

Provided by IHS under license with ASME
No reproduction or networking permitted without license from IHS
Licensee=Chevron Phillips Chemical Co LP/5956674001
Not for Resale, 11/09/2014 20:41:36 MST

(b) Perform UHX-12.5.10 except as follows:

(1) The shell (configurations a, b, and c) is not required to meet a minimum length requirement.

(2) The channel (configurations a, e, and f) is not required to meet a minimum length requirement.

(3)

Configuration a: If $\sigma_s \le S_{PS,s}$ and $\sigma_c \le S_{PS,c}$, then the shell and channel are acceptable. Otherwise, increase the thickness of the overstressed component(s) (shell and/or channel) and return to UHX-12.5.1.

Configurations b and c: If $\sigma_s \le S_{PS,s}$, then the shell is acceptable. Otherwise, increase the thickness of the shell and return to UHX-12.5.1.

Configurations e and f: If $\sigma_c \le S_{PS,c}$, then the channel is acceptable. Otherwise, increase the thickness of the channel and return to UHX-12.5.1.

(c) Do not perform UHX-12.5.11.

(d) Repeat UHX-12.5.1 - UHX-12.5.8 with the following changes until the tubesheet stress criteria have been met.

(1) Step 4

Configurations a, b, and c: $\beta_s = 0$, $k_s = 0$, $\lambda_s = 0$, $\delta_s = 0$. Configurations a, e, and f: $\beta_c = 0$, $k_c = 0$, $\lambda_c = 0$, $\delta_c = 0$.

(2) Step 7. $M = |M_o|$.

UHX-13 RULES FOR THE DESIGN OF FIXED TUBESHEETS

UHX-13.1 Scope

These rules cover the design of tubesheets for fixed tubesheet heat exchangers. The tubesheets may have one of the four configurations shown in Figure UHX-13.1:

(a) Configuration a: tubesheet integral with shell and channel;

(b) Configuration b: tubesheet integral with shell and gasketed with channel, extended as a flange;

(c) Configuration c: tubesheet integral with shell and gasketed with channel, not extended as a flange;

(d) Configuration d: tubesheet gasketed with shell and channel.

UHX-13.2 Conditions of Applicability

The two tubesheets shall have the same thickness, material and edge conditions.

(13) ### UHX-13.3 Nomenclature

The symbols described below are used for the design of the tubesheets. Symbols D_o, E^*, h'_g, μ, μ* and ν^* are defined in UHX-11.

A = outside diameter of tubesheet, except as limited by UHX-10(b)

A_P = total area enclosed by C_P

a_c = radial channel dimension
Configuration a: $a_c = D_c/2$
Configurations b, c, and d: $a_c = G_c/2$

a_o = equivalent radius of outer tube limit circle

a_s = radial shell dimension
Configurations a, b, and c: $a_s = D_s/2$
Configuration d: $a_s = G_s/2$

C = bolt circle diameter (see Mandatory Appendix 2)

C_P = perimeter of the tube layout measured stepwise in increments of one tube pitch from the center-to-center of the outermost tubes (see Figure UHX-12.2)

D_c = inside channel diameter

D_J = inside diameter of the expansion joint at its convolution height

D_s = inside shell diameter

d_t = nominal outside diameter of tubes

E = modulus of elasticity for tubesheet material at T

E_c = modulus of elasticity for channel material at T_c

E_s = modulus of elasticity for shell material at T_s

$E_{s,w}$ = joint efficiency (longitudinal stress) for shell

E_t = modulus of elasticity for tube material at T_t

NOTE: The modulus of elasticity shall be taken from applicable Table TM in Section II, Part D. When a material is not listed in the TM tables, the requirements of U-2(g) shall be applied.

G_c = diameter of channel gasket load reaction (see Mandatory Appendix 2)

G_s = diameter of shell gasket load reaction (see Mandatory Appendix 2)

G_1 = midpoint of contact between flange and tubesheet

h = tubesheet thickness

J = ratio of expansion joint to shell axial rigidity (J = 1.0 if no expansion joint)

K_J = axial rigidity of expansion joint, total force/elongation

k = constant accounting for the method of support for the unsupported tube span under consideration
= 0.6 for unsupported spans between two tubesheets,
= 0.8 for unsupported spans between a tubesheet and a tube support,
= 1.0 for unsupported spans between two tube supports.

L = tube length between inner tubesheet faces
= $L_t - 2h$

L_t = tube length between outer tubesheet faces

ℓ = unsupported tube span under consideration

MAX [(a),(b),(c),...] = greatest of *a, b, c,...*

N_t = number of tubes

P_e = effective pressure acting on tubesheet

P_s = shell side design or operating pressure, as applicable. For shell side vacuum, use a negative value for P_s.

$P_{sd,\max}$ = maximum shell side design pressure

Provided by IHS under license with ASME
No reproduction or networking permitted without license from IHS
Licensee=Chevron Phillips Chemical Co LP/5956674001
Not for Resale, 11/09/2014 20:41:36 MST

Figure UHX-13.1
Fixed Tubesheet Configurations

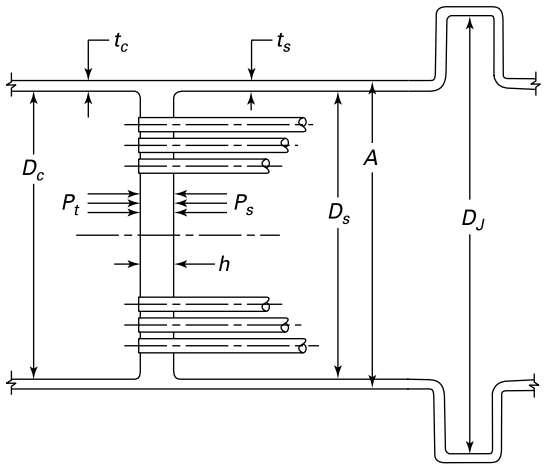

(a) Configuration a:
Tubesheet Integral With Shell and Channel

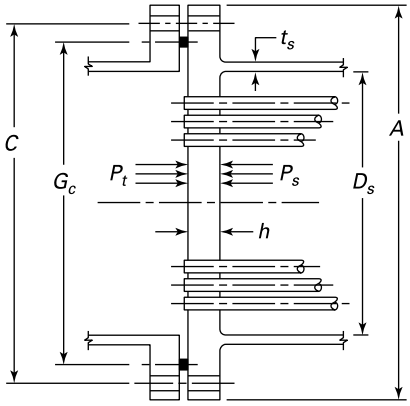

(b) Configuration b:
Tubesheet Integral With Shell and Gasketed With Channel, Extended as a Flange

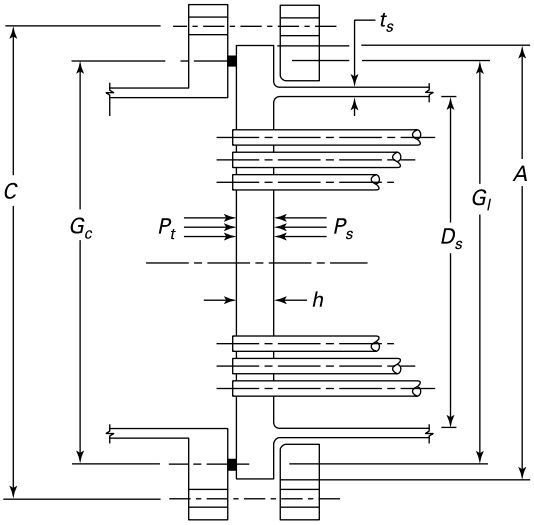

(c) Configuration c:
Tubesheet Integral With Shell and Gasketed With Channel, Not Extended as a Flange

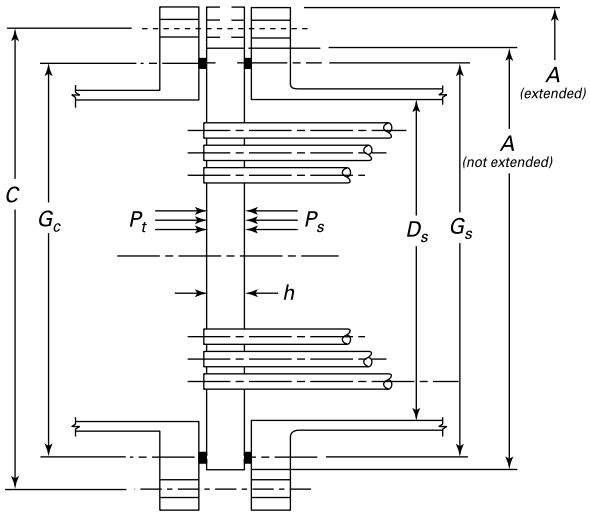

(d) Configuration d:
Tubesheet Gasketed With Shell and Channel

GENERAL NOTE: The expansion joint detail in Configuration a applies to bellows, flanged-and-flued, and flanged-only expansion joints for Configurations a, b, c, and d.

Provided by IHS under license with ASME
No reproduction or networking permitted without license from IHS
Licensee=Chevron Phillips Chemical Co LP/5956674001
Not for Resale, 11/09/2014 20:41:36 MST

Table UHX-13.1
Formulas for Determination of Z_d, Z_v, Z_m, Z_w, and F_m

(1) Calculate Kelvin functions of order 0 relative to x, where x varies from 0 to X_a such that $0 < x \le X_a$ [Note (1)]:

$$\mathrm{ber}(x) = \sum_{n=0}^{n=m-1} (-1)^n \frac{(x/2)^{4n}}{[(2n)!]^2} = 1 - \frac{(x/2)^4}{(2!)^2} + \frac{(x/2)^8}{(4!)^2} - \frac{(x/2)^{12}}{(6!)^2} + \ldots$$

$$\mathrm{bei}(x) = \sum_{n=1}^{n=m} (-1)^{n-1} \frac{(x/2)^{4n-2}}{[(2n-1)!]^2} = \frac{(x/2)^2}{(1!)^2} - \frac{(x/2)^6}{(3!)^2} + \frac{(x/2)^{10}}{(5!)^2} - \ldots$$

and their derivatives:

$$\mathrm{ber}'(x) = \sum_{n=1}^{n=m} (-1)^n \frac{(2n)(x/2)^{4n-1}}{[(2n)!]^2} = -\frac{2(x/2)^3}{(2!)^2} + \frac{4(x/2)^7}{(4!)^2} - \frac{6(x/2)^{11}}{(6!)^2} + \ldots$$

$$\mathrm{bei}'(x) = \sum_{n=1}^{n=m} (-1)^{n-1} \frac{(2n-1)(x/2)^{4n-3}}{[(2n-1)!]^2} = \frac{(x/2)^1}{(1!)^2} - \frac{3(x/2)^5}{(3!)^2} + \frac{5(x/2)^9}{(5!)^2} - \ldots$$

(2) Calculate functions $\psi_1(x)$ and $\psi_2(x)$ relative to x:

$$\psi_1(x) = \mathrm{bei}(x) + \frac{1-\nu^*}{x} \cdot \mathrm{ber}'(x)$$

$$\psi_2(x) = \mathrm{ber}(x) - \frac{1-\nu^*}{x} \cdot \mathrm{bei}'(x)$$

(3) Calculate Z_a, Z_d, Z_v, Z_w, and Z_m relative to X_a:

$$Z_a = \mathrm{bei}'(X_a) \cdot \psi_2(X_a) - \mathrm{ber}'(X_a) \cdot \psi_1(X_a)$$

$$Z_d = \frac{\mathrm{ber}(X_a) \cdot \psi_2(X_a) + \mathrm{bei}(X_a) \cdot \psi_1(X_a)}{X_a^3 \cdot Z_a}$$

$$Z_v = \frac{\mathrm{ber}'(X_a) \cdot \psi_2(X_a) + \mathrm{bei}'(X_a) \cdot \psi_1(X_a)}{X_a^2 \cdot Z_a}$$

$$Z_w = \frac{\mathrm{ber}'(X_a) \cdot \mathrm{ber}(X_a) + \mathrm{bei}'(X_a) \cdot \mathrm{bei}(X_a)}{X_a^2 \cdot Z_a}$$

$$Z_m = \frac{\mathrm{ber}'^2(X_a) + \mathrm{bei}'^2(X_a)}{X_a \cdot Z_a}$$

(4) Calculate functions $Q_m(x)$ and $Q_v(x)$ relative to x:

$$Q_m(x) = \frac{\mathrm{bei}'(X_a) \cdot \psi_2(x) - \mathrm{ber}'(X_a) \cdot \psi_1(x)}{Z_a}$$

$$Q_v(x) = \frac{\psi_1(X_a) \cdot \psi_2(x) - \psi_2(X_a) \cdot \psi_1(x)}{X_a \cdot Z_a}$$

(5) For each loading case, calculate $F_m(x)$ relative to x:

$$F_m(x) = \frac{Q_v(x) + Q_3 \cdot Q_m(x)}{2}$$

(6) F_m is the maximum of the absolute value of $F_m(x)$ when x varies from 0 to X_a such that $0 < x \le X_a$:

$$F_m = \mathrm{MAX} \left| F_m(x) \right|$$

Provided by IHS under license with ASME
No reproduction or networking permitted without license from IHS
Licensee=Chevron Phillips Chemical Co LP/5956674001
Not for Resale, 11/09/2014 20:41:36 MST

Table UHX-13.1
Formulas for Determination of Z_d, Z_v, Z_m, Z_w, and F_m (Cont'd)

NOTE:
(1) Use $m = 4 + X_a/2$ (rounded to the nearest integer) to obtain an adequate approximation of the Kelvin functions and their derivatives.

$P_{sd,\min}$ = minimum shell side design pressure (negative if vacuum is specified, otherwise zero)
P_{sox} = shell side operating pressure for operating condition x (positive, negative, or zero operating pressure)
P_t = tube side design or operating pressure, as applicable. For tube side vacuum, use a negative value for P_t.
$P_{td,\max}$ = maximum tube side design pressure
$P_{td,\min}$ = minimum tube side design pressure (negative if vacuum is specified, otherwise zero)
P_{tox} = tube side operating pressure for operating condition x (positive, negative, or zero operating pressure)
S = allowable stress for tubesheet material at T
$S_{s,b}$ = maximum allowable longitudinal compressive stress in accordance with UG-23(b) for the shell
S_c = allowable stress for channel material at T_c
S_s = allowable stress for shell material at T_s
S_t = allowable stress for tube material at T_t

NOTE: For a welded tube or pipe, use the allowable stress for the equivalent seamless product. When the allowable stress for the equivalent seamless product is not available, divide the allowable stress of the welded product by 0.85.

S_y = yield strength for tubesheet material at T
$S_{y,c}$ = yield strength for channel material at T_c
$S_{y,s}$ = yield strength for shell material at T_s
$S_{y,t}$ = yield strength for tube material at T_t

NOTE: The yield strength shall be taken from Table Y-1 in Section II, Part D. When a yield strength value is not listed in Table Y-1, one may be obtained by using the procedure in Step UG-28(c)(2)3.

Table UHX-13.2
Formulas for the Determination of $F_{t,\min}$ and $F_{t,\max}$

Step No.	Description
1	Follow steps (1), (2), and (3) in Table UHX-13.1.
2	Calculate functions $Z_d(x)$ and $Z_w(x)$ relative to x: $$Z_d(x) = \frac{\psi_2(X_a)\cdot \mathrm{ber}(x) + \psi_1(X_a)\cdot \mathrm{bei}(x)}{X_a^3 \cdot Z_a}$$ $$Z_w(x) = \frac{\mathrm{ber}'(X_a)\cdot \mathrm{ber}(x) + \mathrm{bei}'(X_a)\cdot \mathrm{bei}(x)}{X_a^2 \cdot Z_a}$$
3	For each loading case, calculate $F_t(x)$ relative to x in accordance with a or b below. (a) When $P_e \neq 0$ $$F_t(x) = \left[Z_d(x) + Q_3 \cdot Z_w(x)\right]\cdot \frac{X_a^4}{2}$$ (b) When $P_e = 0$ $$F_t(x) = Z_w(x)\cdot \frac{X_a^4}{2}$$
4	Calculate the minimum and maximum values, $F_{t,\min}$ and $F_{t,\max}$, of $F_t(x)$ when x varies from 0 to X_a such that $0 \le x \le X_a$. $F_{t,\min}$ and $F_{t,\max}$ may be positive or negative. $$F_{t,\min} = \mathrm{MIN}\left[F_t(x)\right]$$ $$F_{t,\max} = \mathrm{MAX}\left[F_t(x)\right]$$ When $P_e \neq 0$, see Figures LL-1 and LL-2 in Nonmandatory Appendix LL for a graphical representation of $F_{t,\min}$ and $F_{t,\max}$.

Provided by IHS under license with ASME
No reproduction or networking permitted without license from IHS
Licensee=Chevron Phillips Chemical Co LP/5956674001
Not for Resale, 11/09/2014 20:41:36 MST

Figure UHX-13.2
Z_d, Z_v, Z_w, and Z_m Versus X_a

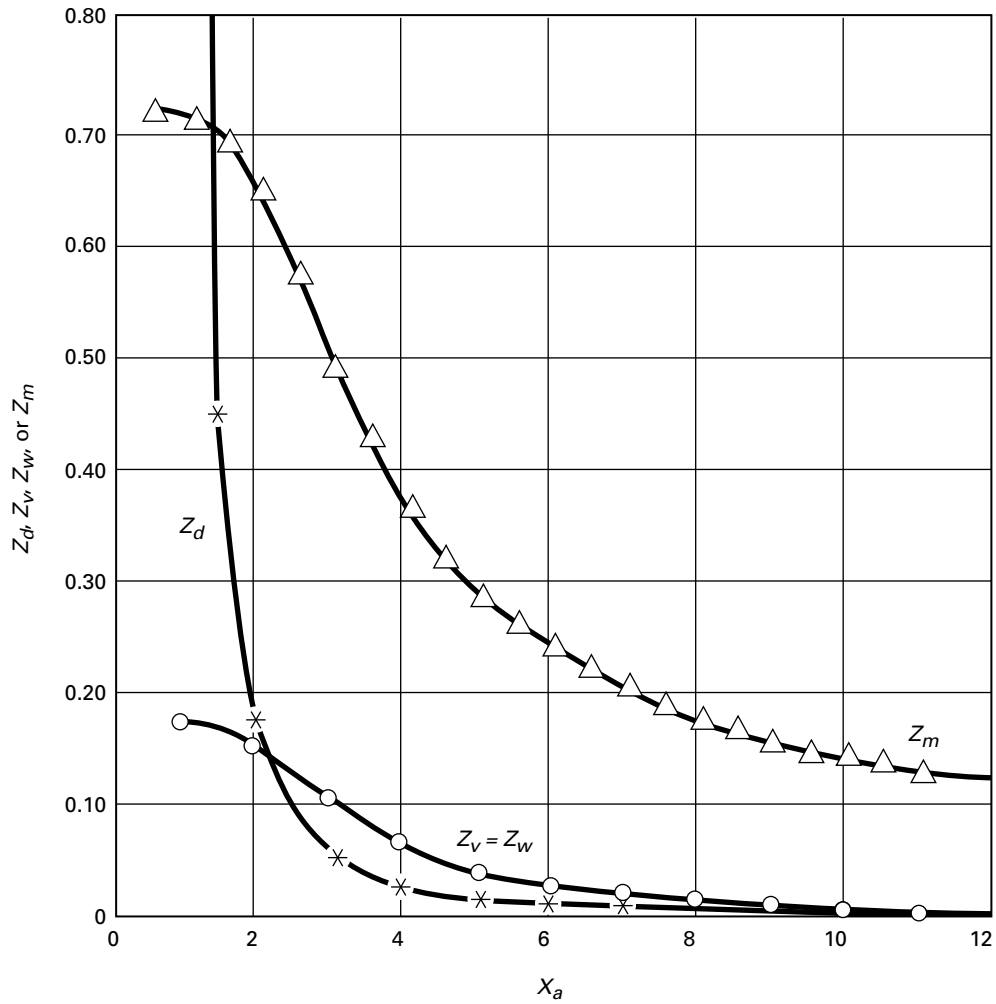

GENERAL NOTES:
(a) Curves giving Z_d, Z_v, Z_w, or Z_m are valid for $v^* = 0.4$. They are sufficiently accurate to be used for other values of v^*.
(b) For $X_a > 12.0$, see Table UHX-13.1.

S_{PS} = allowable primary plus secondary stress for tubesheet material at T per UG-23(e)

$S_{PS,c}$ = allowable primary plus secondary stress for channel material at T_c per UG-23(e)

$S_{PS,s}$ = allowable primary plus secondary stress for shell material at T_s per UG-23(e)

T = tubesheet design temperature for the design condition or operating metal temperature for operating condition x, as applicable [see UHX-13.4(b)]

T_c = channel design temperature for the design condition or operating metal temperature for operating condition x, as applicable [see UHX-13.4(b)]

T_s = shell design temperature for the design condition or operating metal temperature for operating condition x, as applicable [see UHX-13.4(b)]

$T_{s,m}$ = mean shell metal temperature along shell length

$T_{s,mx}$ = shell axial mean metal temperature for operating condition x, as applicable

T_t = tube design temperature for the design condition or operating metal temperature for operating condition x, as applicable [see UHX-13.4(b)]

$T_{t,m}$ = mean tube metal temperature along tube length

$T_{t,mx}$ = tube axial mean metal temperature for operating condition x, as applicable

Provided by IHS under license with ASME
No reproduction or networking permitted without license from IHS
Licensee=Chevron Phillips Chemical Co LP/5956674001
Not for Resale, 11/09/2014 20:41:36 MST

t_c = channel thickness
t_s = shell thickness
t_t = nominal tube wall thickness
W_t = tube-to-tubesheet joint load
W^* = tubesheet effective bolt load determined in accordance with UHX-8
$\alpha_{s,m}$ = mean coefficient of thermal expansion of shell material at $T_{s,m}$
$\alpha_{t,m}$ = mean coefficient of thermal expansion of tube material at $T_{t,m}$
γ = axial differential thermal expansion between tubes and shell
ν = Poisson's ratio of tubesheet material
ν_c = Poisson's ratio of channel material
ν_s = Poisson's ratio of shell material
ν_t = Poisson's ratio of tube material
x = 1, 2, 3, ..., n, integer denoting applicable operating condition under consideration (e.g., normal operating, start-up, shutdown, cleaning, upset)

UHX-13.4 Design Considerations (13)

(a) It is generally not possible to determine, by observation, the most severe condition of coincident pressure, temperature, and differential thermal expansion. Thus, it is necessary to evaluate all the anticipated loading conditions to ensure that the worst load combination has been considered in the design.

The user or his designated agent shall specify all the design and operating conditions that govern the design of the main components of the heat exchanger (i.e., tubesheets, tubes, shell, channel, tube-to-tubesheet joint). These shall include, but not be limited to, normal operating, start-up, shutdown, cleaning, and upset conditions.

For each of these conditions, the following loading cases shall be considered to determine the effective pressure, P_e, to be used in the design formulas:

(1) Design Loading Cases. Table UHX-13.4-1 provides the load combinations required to evaluate the heat exchanger for the design condition. When $P_{sd,\min}$ and $P_{td,\min}$ are both zero, design loading case 4 does not need to be considered.

Figure UHX-13.3-1
F_m Versus X_a ($0.0 \le Q_3 \le 0.8$)

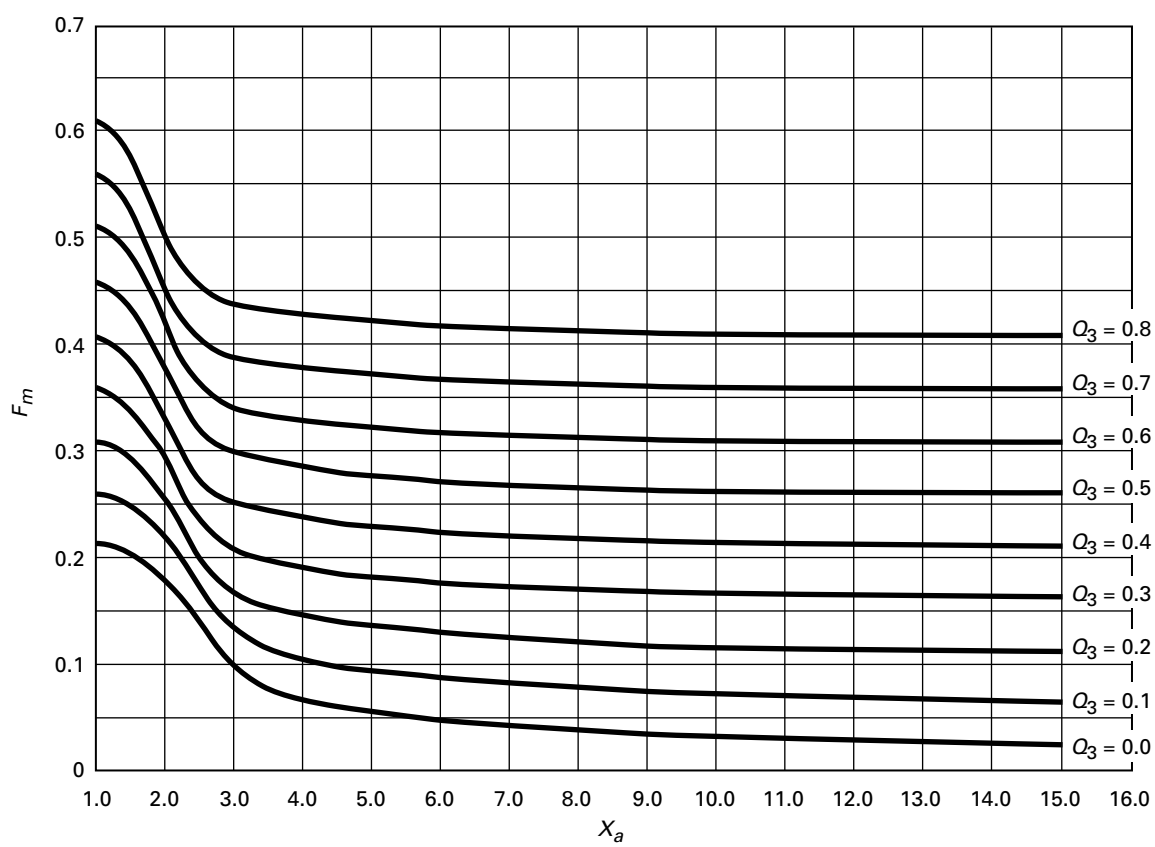

GENERAL NOTES:
(a) Curves giving F_m are valid for ν^*=0.4. They are sufficiently accurate to be used for other values of ν^*.
(b) For values of X_a and Q_3 beyond those given by the curves, see Table UHX-13.1.

Provided by IHS under license with ASME
No reproduction or networking permitted without license from IHS
Licensee=Chevron Phillips Chemical Co LP/5956674001
Not for Resale, 11/09/2014 20:41:36 MST

Figure UHX-13.3-2
F_m Versus X_a ($-0.8 \le Q_3 \le 0.0$)

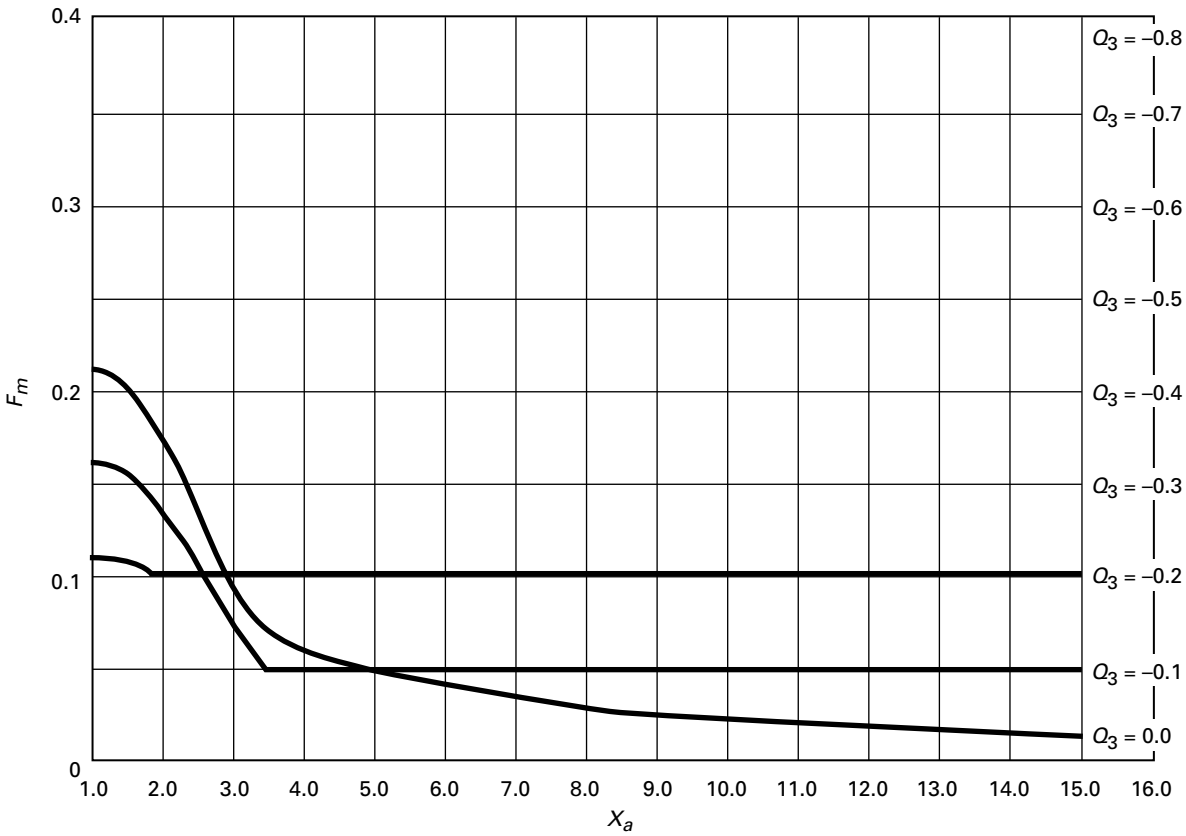

GENERAL NOTES:
(a) Curves giving F_m are valid for ν^*=0.4. They are sufficiently accurate to be used for other values of ν^*.
(b) For values of X_a and Q_3 beyond those given by the curves, see Table UHX-13.1.

(2) Operating Loading Cases. Table UHX-13.4-2 provides the load combinations required to evaluate the heat exchanger for each operating condition x.

(3) When differential pressure design is specified by the user or his designated agent, the design shall be based only on design loading case 3 and operating loading cases 3 and 4 for each specified operating condition. If the tube side is the higher-pressure side, P_t shall be the tube side design pressure and P_s shall be P_t less the differential design pressure. If the shell side is the higher-pressure side, P_s shall be the shell side design pressure and P_t shall be the P_s less the differential pressure. For the operating loading cases, the differential pressure and the individual operating pressures shall not exceed the values used for design.

(4) The designer should take appropriate consideration of the stresses resulting from the pressure test required by UG-99 or UG-100 [see UG-99(d)].

(b) The elastic moduli, yield strengths, and allowable stresses shall be taken at the design temperatures for the design loading cases and may be taken at the operating metal temperature of the component under consideration for operating condition x.

(c) As the calculation procedure is iterative, a value h shall be assumed for the tubesheet thickness to calculate and check that the maximum stresses in tubesheet, tubes, shell, and channel are within the maximum permissible stress limits, and that the resulting tube-to-tubesheet joint load is acceptable.

Table UHX-13.4-1

Design Loading Case	Shell Side Design Pressure, P_s	Tube Side Design Pressure, P_t
1	$P_{sd,\min}$	$P_{td,\max}$
2	$P_{sd,\max}$	$P_{td,\min}$
3	$P_{sd,\max}$	$P_{td,\max}$
4	$P_{sd,\min}$	$P_{td,\min}$

Provided by IHS under license with ASME
No reproduction or networking permitted without license from IHS
Licensee=Chevron Phillips Chemical Co LP/5956674001
Not for Resale, 11/09/2014 20:41:36 MST

Table UHX-13.4-2

Operating Loading Case	Operating Pressure		Axial Mean Metal Temperature	
	Shell Side, P_s	Tube Side, P_t	Tubes, $T_{t,m}$	Shell, $T_{s,m}$
1	None	P_{tox}	$T_{t,mx}$	$T_{s,mx}$
2	P_{sox}	None	$T_{t,mx}$	$T_{s,mx}$
3	P_{sox}	P_{tox}	$T_{t,mx}$	$T_{s,mx}$
4	None	None	$T_{t,mx}$	$T_{s,mx}$

Because any increase of tubesheet thickness may lead to overstresses in the tubes, shell, channel, or tube-to-tubesheet joint, a final check shall be performed, using in the equations the nominal thickness of tubesheet, tubes, shell, and channel, in both corroded and uncorroded conditions.

(d) The designer shall consider the effect of radial differential thermal expansion between the tubesheet and integral shell or channel (configurations a, b, and c) in accordance with UHX-13.8, if required by UHX-13.8.1.

(e) The designer may consider the tubesheet as simply supported in accordance with UHX-13.9.

UHX-13.5 Calculation Procedure

The procedure for the design of tubesheets for a fixed tubesheet heat exchanger is as follows.

UHX-13.5.1 Step 1. Determine D_o, μ, μ^*, and h'_g from UHX-11.5.1. (13)

Operating loading cases: $h'_g = 0$

Calculate a_o, ρ_s, ρ_c, x_s, and x_t.

$$a_o = \frac{D_o}{2}$$

$$\rho_s = \frac{a_s}{a_o}$$

$$\rho_c = \frac{a_c}{a_o}$$

$$x_s = 1 - N_t\left(\frac{d_t}{2a_o}\right)^2$$

$$x_t = 1 - N_t\left(\frac{d_t - 2t_t}{2a_o}\right)^2$$

Figure UHX-13.4
Shell With Increased Thickness Adjacent to the Tubesheets

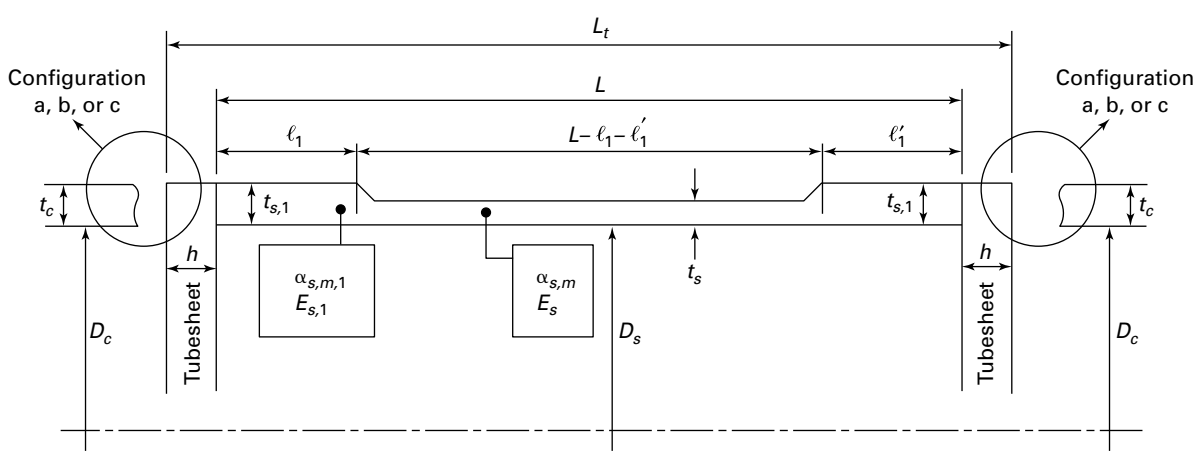

Provided by IHS under license with ASME
No reproduction or networking permitted without license from IHS
Licensee=Chevron Phillips Chemical Co LP/5956674001
Not for Resale, 11/09/2014 20:41:36 MST

UHX-13.5.2 Step 2. Calculate the shell axial stiffness K_s, tube axial stiffness K_t, and stiffness factors $K_{s,t}$ and J.

$$K_s = \frac{\pi\, t_s(D_s + t_s)E_s}{L}$$

$$K_t = \frac{\pi\, t_t(d_t - t_t)E_t}{L}$$

$$K_{s,t} = \frac{K_s}{N_t K_t}$$

$$J = \frac{1}{1 + \frac{K_s}{K_J}}$$

Calculate shell coefficients β_s, k_s, λ_s, and δ_s.

Configurations a, b, and c:

$$\beta_s = \frac{\sqrt[4]{12\left(1 - v_s^2\right)}}{\sqrt{(D_s + t_s)t_s}}$$

$$k_s = \beta_s \frac{E_s t_s^3}{6\left(1 - v_s^2\right)}$$

$$\lambda_s = \frac{6D_s}{h^3} k_s \left(1 + h\beta_s + \frac{h^2\beta_s^2}{2}\right)$$

$$\delta_s = \frac{D_s^2}{4E_s t_s}\left(1 - \frac{v_s}{2}\right)$$

Configuration d: β_s =0, k_s =0, λ_s =0, δ_s =0

Calculate channel coefficients β_c, k_c, λ_c, and δ_c.

Configuration a:

$$\beta_c = \frac{\sqrt[4]{12\left(1 - v_c^2\right)}}{\sqrt{(D_c + t_c)\, t_c}}$$

$$k_c = \beta_c \frac{E_c t_c^3}{6\left(1 - v_c^2\right)}$$

$$\lambda_c = \frac{6D_c}{h^3} k_c \left(1 + h\beta_c + \frac{h^2\beta_c^2}{2}\right)$$

For a cylinder:

$$\delta_c = \frac{D_c^2}{4E_c t_c}\left(1 - \frac{v_c}{2}\right)$$

For a hemispherical head:

$$\delta_c = \frac{D_c^2}{4E_c t_c}\left(\frac{1 - v_c}{2}\right)$$

Configurations b, c, d: β_c =0, k_c =0, λ_c =0, δ_c =0

UHX-13.5.3 Step 3. Calculate h/p. If ρ changes, recalculate d^* and μ^* from UHX-11.5.1.

Determine E^*/E and v^* relative to h/p from UHX-11.5.2.

Calculate X_a.

$$X_a = \left[24\left(1 - v^{*2}\right)N_t \frac{E_t\, t_t(d_t - t_t)a_o^2}{E^* L h^3}\right]^{\frac{1}{4}}$$

Using the calculated value of X_a, enter either Table UHX-13.1 or Figure UHX-13.2 to determine Z_d, Z_v, Z_w, and Z_m.

UHX-13.5.4 Step 4. Calculate diameter ratio K and coefficient F.

$$K = \frac{A}{D_o}$$

$$F = \frac{1 - v^*}{E^*}\left(\lambda_s + \lambda_c + E \ln K\right)$$

Calculate Φ, Q_1, Q_{Z1}, Q_{Z2}, and U.

$$\Phi = \left(1 + v^*\right)F$$

$$Q_1 = \frac{\rho_s - 1 - \Phi Z_v}{1 + \Phi Z_m}$$

$$Q_{Z1} = \frac{\left(Z_d + Q_1 Z_w\right)X_a^4}{2}$$

$$Q_{Z2} = \frac{\left(Z_v + Q_1 Z_m\right)X_a^4}{2}$$

$$U = \frac{\left[Z_w + \left(\rho_s - 1\right)Z_m\right]X_a^4}{1 + \Phi Z_m}$$

Provided by IHS under license with ASME
No reproduction or networking permitted without license from IHS
Licensee=Chevron Phillips Chemical Co LP/5956674001
Not for Resale, 11/09/2014 20:41:36 MST

(13) **UHX-13.5.5 Step 5.**

(a) Calculate γ.

Design loading cases: $\gamma = 0$.

Operating loading cases:

$$\gamma = \left[\alpha_{t,m}\left(T_{t,m} - T_a\right) - \alpha_{s,m}\left(T_{s,m} - T_a\right)\right]L$$

(b) Calculate ω_s, ω_s^*, and ω_c, ω_c^*.

$$\omega_s = \rho_s k_s \beta_s \delta_s\left(1 + h\beta_s\right)$$

$$\omega_s^* = a_o^2 \frac{\left(\rho_s^2 - 1\right)\left(\rho_s - 1\right)}{4} - \omega_s$$

$$\omega_c = \rho_c k_c \beta_c \delta_c\left(1 + h\beta_c\right)$$

$$\omega_c^* = a_o^2\left[\frac{\left(\rho_c^2 + 1\right)\left(\rho_c - 1\right)}{4} - \frac{\left(\rho_s - 1\right)}{2}\right] - \omega_c$$

(c) Calculate γ_b.

Configuration a:

$$\gamma_b = 0$$

Configuration b:

$$\gamma_b = \frac{G_c - C}{D_o}$$

Configuration c:

$$\gamma_b = \frac{G_c - G_1}{D_o}$$

Configuration d:

$$\gamma_b = \frac{G_c - G_s}{D_o}$$

UHX-13.5.6 Step 6. For each loading case, calculate P_s', P_t', P_γ, P_W, P_{rim}, and effective pressure P_e.

$$P_s' = \left(x_s + 2\left(1 - x_s\right)v_t + \frac{2}{K_{s,t}}\left(\frac{D_s}{D_o}\right)^2 v_s - \frac{\rho_s^2 - 1}{JK_{s,t}} - \frac{\left(1 - J\right)}{2JK_{s,t}}\frac{\left[D^2 J - \left(D_s\right)^2\right]}{D_o^2}\right)P_s$$

$$P_t' = \left(x_t + 2\left(1 - x_t\right)v_t + \frac{1}{JK_{s,t}}\right)P_t$$

$$P_\gamma = \frac{N_t K_t}{\pi a_o^2}\gamma$$

$$P_w = -\frac{U}{a_o^2}\frac{\gamma_b}{2\pi}W^*$$

$$P_{\text{rim}} = -\frac{U}{a_o^2}\left(\omega_s^* P_s - \omega_c^* P_t\right)$$

$$P_e = \frac{JK_{s,t}}{1 + JK_{s,t}\left[Q_{Z1} + \left(\rho_s - 1\right)Q_{Z2}\right]} \times \left(P_s' - P_t' + P_\gamma + P_W + P_{\text{rim}}\right)$$

UHX-13.5.7 Step 7. For each loading case, calculate (13) Q_2.

$$Q_2 = \frac{\left(\omega_s^* P_s - \omega_c^* P_t\right) + \frac{\gamma_b}{2\pi}W^*}{1 + \Phi Z_m}$$

For each loading case, calculate the maximum bending stress in the tubesheet in accordance with (a) or (b) below.

(a) When $P_e \neq 0$:

(1) Calculate Q_3.

$$Q_3 = Q_1 + \frac{2Q_2}{P_e a_o^2}$$

(2) For each loading case, determine coefficient F_m from either Table UHX-13.1 or Figures UHX-13.3-1 and UHX-13.3-2 and calculate the maximum bending stress σ.

$$\sigma = \left(\frac{1.5\,F_m}{\mu^*}\right)\left(\frac{2a_o}{h - h_g'}\right)^2 P_e$$

Provided by IHS under license with ASME
No reproduction or networking permitted without license from IHS
Licensee=Chevron Phillips Chemical Co LP/5956674001
Not for Resale, 11/09/2014 20:41:36 MST

(b) When $P_e = 0$, calculate the maximum bending stress σ.

$$\sigma = \frac{6Q_2}{\mu^*\left(h - h'_g\right)^2}$$

For the design loading cases, if $|\sigma| \le 1.5S$, and for the operating loading cases, if $|\sigma| \le S_{PS}$, the assumed tubesheet thickness is acceptable for bending. Otherwise, increase the assumed tubesheet thickness h and return to the step in UHX-13.5.1.

(13) **UHX-13.5.8 Step 8.** For each loading case, calculate the average shear stress in the tubesheet at the outer edge of the perforated region, if required.

(a) If $\left|P_e\right| \le \frac{1.6S\mu h}{a_o}$, the shear stress is not required to be calculated. Proceed to UHX-13.5.9.

(b) Calculate the average shear stress, τ.

$$\tau = \left(\frac{1}{4\mu}\right)\left(\frac{1}{h}\left\{\frac{4A_p}{C_p}\right\}\right)P_e$$

If $|\tau| \le 0.8S$, the assumed tubesheet thickness is acceptable for shear. Otherwise, increase the assumed tubesheet thickness, h, and return to UHX-13.5.1.

(13) **UHX-13.5.9 Step 9.** Perform this step for each loading case.

(a) Check the axial tube stress.

(1) For each loading case, determine coefficients $F_{t,\min}$ and $F_{t,\max}$ from Table UHX-13.2 and calculate the two extreme values of tube stress, $\sigma_{t,1}$ and $\sigma_{t,2}$. The values for $\sigma_{t,1}$ and $\sigma_{t,2}$ may be positive or negative.

(-a) When $P_e \ne 0$:

$$\sigma_{t,1} = \frac{1}{x_t - x_s}\left[\left(P_s x_s - P_t x_t\right) - P_e F_{t,\min}\right]$$

$$\sigma_{t,2} = \frac{1}{x_t - x_s}\left[\left(P_s x_s - P_t x_t\right) - P_e F_{t,\max}\right]$$

(-b) When $P_e = 0$:

$$\sigma_{t,1} = \frac{1}{x_t - x_s}\left[\left(P_s x_s - P_t x_t\right) - \frac{2Q_2}{a_o^2} F_{t,\min}\right]$$

$$\sigma_{t,2} = \frac{1}{x_t - x_s}\left[\left(P_s x_s - P_t x_t\right) - \frac{2Q_2}{a_o^2} F_{t,\min}\right]$$

(2) Determine $\sigma_{t,max}$ = MAX ($|\sigma_{t,1}|$, $|\sigma_{t,2}|$).

For the design loading cases, if $\sigma_{t,max} > S_t$, and for the operating loading cases, if $\sigma_{t,max} > 2S_t$, reconsider the tube design and return to the step in UHX-13.5.1.

(b) Check the tube-to-tubesheet joint design.

(1) Calculate the largest tube-to-tubesheet joint load, W_t

$$W_t = \sigma_{t,\max}\pi(d_t - t_t)t_t$$

(2) Determine the maximum allowable load for the tube-to-tubesheet joint design, L_{max}. For tube-to-tubesheet joints with full strength welds, L_{max} shall be determined in accordance with UW-20. For tube-to-tubesheet joints with partial strength welds, L_{max} shall be determined in accordance UW-20, UW-18(d), or Nonmandatory Appendix A, as applicable. For all other tube joints, L_{max} shall be determined in accordance with Nonmandatory Appendix A.

If $W_t > L_{max}$, reconsider the tube-to-tubesheet joint design.

If $W_t \le L_{max}$, tube-to-tubesheet joint design is acceptable.

If $\sigma_{t,1}$ or $\sigma_{t,2}$ is negative, proceed to (c) below.

If $\sigma_{t,1}$ and $\sigma_{t,2}$ are positive, the tube design is acceptable. Proceed to the step in UHX-13.5.10.

(c) Check the tubes for buckling.

(1) Calculate the largest equivalent unsupported buckling length of the tube ℓ_t considering the unsupported tube spans ℓ and their corresponding method of support k.

$$\ell_t = k\ell$$

(2) Calculate r_t, F_t, and C_t.

$$r_t = \frac{\sqrt{d_t^2 + \left(d_t - 2t_t\right)^2}}{4}$$

$$F_t = \frac{\ell_t}{r_t}$$

$$C_t = \sqrt{\frac{2\pi^2 E_t}{S_{y,t}}}$$

(3) Determine the factor of safety F_s in accordance with (-a) or (-b) below:

(-a) When $P_e \ne 0$,

$$F_s = \text{MAX}\ \{[(3.25\text{-}0.25(Z_d + Q_3 Z_w)X_a{}^4], [1.25]\}$$

F_s need not be taken greater than 2.0.

(-b) When $P_e = 0$, $F_s = 1.25$.

(4) Determine the maximum permissible buckling stress limit S_{tb} for the tubes in accordance with (-a) or (-b) below:

(-a) When $C_t \le F_t$

$$S_{tb} = \text{MIN}\left\{\left[\frac{1}{F_s}\frac{\pi^2 E_t}{F_t^2}\right], [S_t]\right\}$$

Provided by IHS under license with ASME
No reproduction or networking permitted without license from IHS
Licensee=Chevron Phillips Chemical Co LP/5956674001
Not for Resale, 11/09/2014 20:41:36 MST

(-b) When $C_t > F_t$

$$S_{tb} = \mathrm{MIN}\left\{\left[\frac{S_{y,t}}{F_s}\left(1 - \frac{F_t}{2C_t}\right)\right], [S_t]\right\}$$

(5) Determine $\sigma_{t,min} = \mathrm{MIN}(\sigma_{t,1}, \sigma_{t,2})$.

If $|\sigma_{t,min}| > S_{tb}$, reconsider the tube design and return to the step in UHX-13.5.1.

If $|\sigma_{t,min}| \le S_{tb}$, the tube design is acceptable. Proceed to the step in UHX-13.5.10.

(13) **UHX-13.5.10 Step 10.** Perform this step for each loading case.

(a) Calculate the axial membrane stress, $\sigma_{s,m}$, in each different shell section. For shell sections integral with the tubesheet having a different material and/or thickness than the shell, refer to UHX-13.6 for the nomenclature.

$$\sigma_{s,m} = \frac{a_o^2}{t_s(D_s + t_s)}\left[P_e + \left(\rho_s^2 - 1\right)(P_s - P_t)\right] + \frac{a_s^2}{t_s(D_s + t_s)}P_t$$

For the design loading cases, if $|\sigma_{s,m}| > S_s E_{s,w}$, and for the operating loading cases, if $|\sigma_{s,m}| > S_{PS,s}$, reconsider the shell design and return to the step in UHX-13.5.1.

If $\sigma_{s,m}$ is negative, proceed to (b) below.

If $\sigma_{s,m}$ is positive, the shell design is acceptable.

Configurations a, b, and c: Proceed to the step in UHX-13.5.11.

Configuration d: The calculation procedure is complete.

(b) Determine the maximum allowable longitudinal compressive stress, $S_{s,b}$.

If $|\sigma_{s,m}| > S_{s,b}$, reconsider the shell design and return to the step in UHX-13.5.1.

If $|\sigma_{s,m}| \le S_{s,b}$, the shell design is acceptable.

Configurations a, b, and c: Proceed to the step in UHX-13.5.11.

Configuration d: The calculation procedure is complete.

(13) **UHX-13.5.11 Step 11.** For each loading case, calculate the stresses in the shell and/or channel when integral with the tubesheet (Configurations a, b, and c).

(a) Shell Stresses (Configurations a, b, and c). The shell shall have a uniform thickness of t_s for a minimum length of $1.8\sqrt{D_s t_s}$ adjacent to the tubesheet. Calculate the axial membrane stress $\sigma_{s,m}$, axial bending stress $\sigma_{s,b}$, and total axial stress σ_s, in the shell at its junction to the tubesheet.

$$\sigma_{s,m} = \frac{a_o^2}{t_s(D_s + t_s)}\left[P_e + \left(\rho_s^2 - 1\right)(P_s - P_t)\right] + \frac{a_s^2}{t_s(D_s + t_s)}P_t$$

$$\sigma_{s,b} = \frac{6}{t_s^2}k_s\left\{\beta_s\delta_s P_s + \frac{6\left(1 - \nu^{*2}\right)}{E^*}\left(\frac{a_o^3}{h^3}\right)\left(1 + \frac{h\beta_s}{2}\right)\left[P_e(Z_v + Z_m Q_1) + \frac{2}{a_o^2}Z_m Q_2\right]\right\}$$

$$\sigma_s = |\sigma_{s,m}| + |\sigma_{s,b}|$$

(b) Channel Stresses (Configuration a). When the channel is cylindrical, it shall have a uniform thickness of t_c for a minimum length of $1.8\sqrt{D_c t_c}$ adjacent to the tubesheet. Calculate the axial membrane stress $\sigma_{c,m}$, axial bending stress $\sigma_{c,b}$, and total axial stress σ_c, in the channel at its junction to the tubesheet.

$$\sigma_{c,m} = \frac{a_c^2}{t_c(D_c + t_c)}P_t$$

$$\sigma_{c,b} = \frac{6}{t_c^2}k_c\left\{\beta_c\delta_c P_t - \frac{6\left(1 - \nu^{*2}\right)}{E^*}\left(\frac{a_o^3}{h^3}\right)\left(1 + \frac{h\beta_c}{2}\right) \times\left[P_e(Z_v + Z_m Q_1) + \frac{2}{a_o^2}Z_m Q_2\right]\right\}$$

$$\sigma_c = |\sigma_{c,m}| + |\sigma_{c,b}|$$

(c) Stress Limitations

Configuration a: For the design loading cases, if $\sigma_s \le 1.5\,S_s$ and $\sigma_c \le 1.5\,S_c$, and for the operating loading cases, if $\sigma_s \le S_{PS,s}$ and $\sigma_c \le S_{PS,c}$, the shell and channel designs are acceptable, and the calculation procedure is complete. Otherwise, proceed to the step in UHX-13.5.12.

Configurations b and c: For the design loading cases, if $\sigma_s \le 1.5\,S_s$, and for the operating loading cases, if $\sigma_s \le S_{PS,s}$, the shell design is acceptable, and the calculation procedure is complete. Otherwise, proceed to the step in UHX-13.5.12.

UHX-13.5.12 Step 12. The design shall be reconsidered by using one or a combination of the following three options:

UHX-13.5.12.1 Option 1. Increase the assumed tubesheet thickness h and return to the step in UHX-13.5.1.

UHX-13.5.12.2 Option 2. Increase the integral shell and/or channel thickness as follows:

Configurations a, b, and c: If $\sigma_s > 1.5\,S_s$, increase the shell thickness t_s and return to Step 1. It is permitted to increase the shell thickness adjacent to the tubesheet only. (See UHX-13.6.)

Configuration a: If $\sigma_c > 1.5\,S_c$, increase the channel thickness t_c and return to the step in UHX-13.5.1.

Provided by IHS under license with ASME
No reproduction or networking permitted without license from IHS
Licensee=Chevron Phillips Chemical Co LP/5956674001
Not for Resale, 11/09/2014 20:41:36 MST

UHX-13.5.12.3 Option 3. Perform the elastic–plastic calculation procedure as defined in UHX-13.7 only when the conditions of applicability stated in UHX-13.7.2 are satisfied.

UHX-13.6 Calculation Procedure for Effect of Different Shell Material and Thickness Adjacent to the Tubesheet

UHX-13.6.1 Scope.

(a) This procedure describes how to use the rules of UHX-13.5 when the shell has a different thickness and/or a different material adjacent to the tubesheet (see Figure UHX-13.4).

(b) Use of this procedure may result in a smaller tubesheet thickness and should be considered when optimization of the tubesheet thickness or shell stress is desired.

UHX-13.6.2 Conditions of Applicability. This calculation procedure applies only when the shell is integral with the tubesheet (Configurations a, b, and c).

UHX-13.6.3 Additional Nomenclature.

$E_{s,1}$ = modulus of elasticity for shell material adjacent to tubesheets at T_s

ℓ_1, ℓ_1' = lengths of shell of thickness $t_{s,1}$ adjacent to tubesheets

$S_{PS,s,1}$ = allowable primary plus secondary stress for shell material at T_s per UG-23(e)

$S_{s,1}$ = allowable stress for shell material adjacent to tubesheets at T_s

$S_{s,b,1}$ = maximum allowable longitudinal compressive stress in accordance with UG-23(b) for the shell adjacent to the tubesheets

$S_{y,s,1}$ = yield strength for shell material adjacent to tubesheets at T_s. The yield strength shall be taken from Table Y-1 in Section II, Part D. When a yield strength value is not listed in Table Y-1, one may be obtained by using the procedure in UG-28(c)(2) Step 3.

$t_{s,1}$ = shell thickness adjacent to tubesheets

$\alpha_{s,m,1}$ = mean coefficient of thermal expansion of shell material adjacent to tubesheets at $T_{s,m}$

UHX-13.6.4 Calculation Procedure. The calculation procedure outlined in UHX-13.5 shall be performed, accounting for the following modifications:

(a) The shell shall have a thickness of $t_{s,1}$ for a minimum length of $1.8\sqrt{D_s t_{s,1}}$ adjacent to the tubesheets.

(b) In the step in UHX-13.5.2, replace the formula for K_s with:

$$K_s^* = \frac{\pi(D_s + t_s)}{\dfrac{L - \ell_1 - \ell_1'}{E_s t_s} + \dfrac{\ell_1 + \ell_1'}{E_{s,1} t_{s,1}}}$$

Calculate $K_{s,t}$ and J, replacing K_s with K_s^*. Calculate β_s, k_s, and δ_s, replacing t_s with $t_{s,1}$ and E_s with $E_{s,1}$.

(c) In the step in UHX-13.5.5, replace the formula for γ with:

$$\gamma^* = (T_{t,m} - T_a)\alpha_{t,m}L - (T_{s,m} - T_a) \times\left[\alpha_{s,m}(L - \ell_1 - \ell_1') + \alpha_{s,m,1}(\ell_1 + \ell_1')\right]$$

(d) In the step in UHX-13.5.6, calculate P_γ, replacing γ with γ^*.

(e) In the step in UHX-13.5.10, calculate $\sigma_{s,m}$, replacing t_s with $t_{s,1}$. Replace S_s with $S_{s,1}$ and $S_{s,b}$ with $S_{s,b,1}$.

(f) In the step in UHX-13.5.11, calculate $\sigma_{s,m}$ and $\sigma_{s,b}$, replacing t_s with $t_{s,1}$ and E_s with $E_{s,1}$. Replace S_s with $S_{s,1}$ and $S_{PS,s}$ with $S_{PS,s,1}$.

If the elastic–plastic calculation procedure of UHX-13.7 is being performed, replace $S_{y,s}$ with $S_{y,s,1}$, $S_{PS,s}$ with $S_{PS,s,1}$, and E_s with $E_{s,1}$ in UHX-13.7.

If the radial thermal expansion procedure of UHX-13.8 is being performed, replace t_s with $t_{s,1}$ and E_s with $E_{s,1}$ in UHX-13.8.

UHX-13.7 Calculation Procedure for Effect of Plasticity at Tubesheet/Channel or Shell Joint

UHX-13.7.1 Scope. This procedure describes how to use the rules of UHX-13.5 when the effect of plasticity at the shell-tubesheet and/or channel-tubesheet joint is to be considered. (13)

When the calculated tubesheet stresses are within the allowable stress limits, but either or both of the calculated shell or channel total stresses exceed their allowable stress limits, an additional "elastic–plastic solution" calculation may be performed.

This calculation permits a reduction of the shell and/or channel modulus of elasticity, where it affects the rotation of the joint, to reflect the anticipated load shift resulting from plastic action at the joint. The reduced effective modulus has the effect of reducing the shell and/or channel stresses in the elastic-plastic calculation; however, due to load shifting this usually leads to an increase in the tubesheet stress. In most cases, an elastic–plastic calculation using the appropriate reduced shell or channel modulus of elasticity results in a design where the calculated tubesheet stresses are within the allowable stress limits.

UHX-13.7.2 Conditions of Applicability. (13)

(a) This procedure shall not be used at temperatures where the time-dependent properties govern the allowable stress.

(b) This procedure applies only for the design loading cases.

(c) This procedure applies to Configuration a when $\sigma_s \le S_{PS,s}$ and $\sigma_c \le S_{PS,c}$.

(d) This procedure applies to Configurations b and c when $\sigma_s \le S_{PS,s}$.

Provided by IHS under license with ASME
No reproduction or networking permitted without license from IHS
Licensee=Chevron Phillips Chemical Co LP/5956674001
Not for Resale, 11/09/2014 20:41:36 MST

(e) This procedure may only be used once for each iteration of tubesheet, shell, and channel thicknesses and materials.

(13) **UHX-13.7.3 Calculation Procedure.** After the calculation procedure given in UHX-13.5.1 through UHX-13.5.11 has been performed for the elastic solution, an elastic–plastic calculation using the referenced steps from UHX-13.5 shall be performed in accordance with the following procedure for each applicable loading case. Except for those quantities modified below, the quantities to be used for the elastic–plastic calculation shall be the same as those calculated for the corresponding elastic loading case.

(a) Define the maximum permissible bending stress limit in the shell and channel.

Configurations a, b, and c:

$$S_s^* = \mathrm{MIN}\left[\left(S_{y,s}\right), \left(\frac{S_{PS,s}}{2}\right)\right]$$

Configuration a:

$$S_c^* = \mathrm{MIN}\left[\left(S_{y,c}\right), \left(\frac{S_{PS,c}}{2}\right)\right]$$

(b) Using bending stresses $\sigma_{s,b}$ and $\sigma_{c,b}$ computed in Step 11 for the elastic solution, determine fact_s and fact_c as follows:

Configurations a, b, and c:

$$\mathrm{fact}_s = \mathrm{MIN}\left[\left(1.4 - 0.4\frac{|\sigma_{s,b}|}{S_s^*}\right), (1)\right]$$

Configuration a:

$$\mathrm{fact}_c = \mathrm{MIN}\left[\left(1.4 - 0.4\frac{|\sigma_{c,b}|}{S_c^*}\right), (1)\right]$$

Configuration a: If $\mathrm{fact}_s = 1.0$ and $\mathrm{fact}_c = 1.0$, the design is acceptable, and the calculation procedure is complete. Otherwise, proceed to (c) below.

Configurations b and c: If $\mathrm{fact}_s = 1.0$, the design is acceptable, and the calculation procedure is complete. Otherwise, proceed to (c) below.

(c) Calculate reduced values of E_s and E_c as follows:

Configurations a, b, and c: $E_s^* = E_s \mathrm{fact}_s$

Configuration a: $E_c^* = E_c \mathrm{fact}_c$

(d) In Step 2, recalculate k_s, λ_s, k_c, and λ_c replacing E_s by E_s^* and E_c by E_c^*.

(e) In Step 4, recalculate F, Φ, Q_1, Q_{Z1}, Q_{Z2}, and U.

(f) In Step 6, recalculate P_W, P_{rim}, and P_e.

(g) In Step 7, recalculate Q_2, Q_3, and F_m as applicable, and the tubesheet bending stress σ.

If $|\sigma| \leq 1.5S$, the design is acceptable and the calculation procedure is complete. Otherwise, the unit geometry shall be reconsidered.

UHX-13.8 Calculation Procedure for Effect of Radial Differential Thermal Expansion Adjacent to the Tubesheet

UHX-13.8.1 Scope. (13)

(a) This procedure describes how to use the rules of UHX-13.5 when the effect of radial differential thermal expansion between the tubesheet and integral shell or channel is to be considered.

(b) This procedure shall be used when cyclic or dynamic reactions due to pressure or thermal variations are specified [see UG-22(e)].

(c) This procedure shall be used when specified by the user or his designated agent. The user or his designated agent shall provide the Manufacturer with the data necessary to determine the required tubesheet, channel, and shell metal temperatures.

(d) Optionally, the designer may use this procedure to consider the effect of radial differential thermal expansion even when it is not required by (b) or (c) above.

UHX-13.8.2 Conditions of Applicability. This calculation procedure applies only when the tubesheet is integral with the shell or channel (Configurations a, b, and c).

UHX-13.8.3 Additional Nomenclature. (13)

T' = tubesheet metal temperature at the rim
T'_c = channel metal temperature at the tubesheet
T'_{cx} = channel metal temperature at the tubesheet for operating condition x
T'_s = shell metal temperature at the tubesheet
T'_{sx} = shell metal temperature at the tubesheet for operating condition x
T'_x = tubesheet metal temperature at the rim for operating condition x
α' = mean coefficient of thermal expansion of tubesheet material at T'
α'_c = mean coefficient of thermal expansion of channel material at T'_c
α'_s = mean coefficient of thermal expansion of shell material at T'_s

UHX-13.8.4 Calculation Procedure. The calculation procedure given in UHX-13.5 and UHX-13.6, if applicable, shall be performed only for the operating loading cases accounting for the modifications given in (a) through (g). (13)

Table UHX-13.8.4-1 provides the load combinations required to evaluate the heat exchanger for each operating condition x.

(a) Determine the average temperature of the unperforated rim T_r.

Provided by IHS under license with ASME
No reproduction or networking permitted without license from IHS
Licensee=Chevron Phillips Chemical Co LP/5956674001
Not for Resale, 11/09/2014 20:41:36 MST

(**13**)

Table UHX-13.8.4-1

Operating Loading Case	Operating Pressure		Axial Mean Metal Temperature		Metal Temperature		
	Shell Side, P_s	Tube Side, P_t	Tubes, $T_{t,m}$	Shell, $T_{s,m}$	Tubesheet at the Rim, T'	Channel at Tubesheet, T'_c	Shell at Tubesheet, T'_s
1	None	P_{tox}	$T_{t,mx}$	$T_{s,mx}$	T'_x	T'_{cx}	T'_{sx}
2	P_{sox}	None	$T_{t,mx}$	$T_{s,mx}$	T'_x	T'_{cx}	T'_{sx}
3	P_{sox}	P_{tox}	$T_{t,mx}$	$T_{s,mx}$	T'_x	T'_{cx}	T'_{sx}
4	None	None	$T_{t,mx}$	$T_{s,mx}$	T'_x	T'_{cx}	T'_{sx}

Configuration a:

$$T_r = \frac{T' + T'_s + T'_c}{3}$$

Configurations b and c:

$$T_r = \frac{T' + T'_s}{2}$$

For conservative values of P_s^* and P_c^*, $T_r = T'$ may be used.

(b) Determine the average temperature of the shell T_s^* and channel T_c^* at their junction to the tubesheet as follows:

Configurations a, b, and c:

$$T_s^* = \frac{T'_s + T_r}{2}$$

Configuration a:

$$T_c^* = \frac{T'_c + T_r}{2}$$

For conservative values of P_s^* and P_c^*, $T_s^* = T'_s$ and $T_c^* = T'_c$ may be used.

(c) Calculate P_s^* and P_c^*.

Configurations a, b, and c:

$$P_s^* = \frac{E_s t_s}{a_s}\left[\alpha'_s\left(T_s^* - T_a\right) - \alpha'\left(T_r - T_a\right)\right]$$

Configuration a:

$$P_c^* = \frac{E_c t_c}{a_c}\left[\alpha'_c\left(T_c^* - T_a\right) - \alpha'\left(T_r - T_a\right)\right]$$

Configurations b and c:

$$P_c^* = 0$$

(d) Calculate P_ω.

$$P_\omega = \frac{\xi}{a_o^2}\left(\omega_s P_s^* - \omega_c P_c^*\right)$$

(e) In Step 6, replace the formula for P_e with:

$$P_e = \frac{JK_{s,t}}{1 + JK_{s,t}\left[Q_{Z1} + \left(\rho_s - 1\right)Q_{Z2}\right] \times\left(P'_s - P'_t + P_\gamma + P_\omega + P_W + P_{\text{rim}}\right)}$$

(f) In Step 7, replace the formula for Q_2 with:

$$Q_2 = \frac{\left(\omega_s^* P_s - \omega_c^* P_t\right) - \left(\omega_s P_s^* - \omega_c P_c^*\right) + \frac{\gamma_b}{2\pi}W^*}{1 + \Phi Z_m}$$

(g) In Step 11, replace the equations for $\sigma_{s,b}$ and $\sigma_{c,b}$ with:

$$\sigma_{s,b} = \frac{6}{t_s^2}k_s\left\{\beta_s\left[\delta_s P_s + \frac{a_s^2}{E_s t_s}P_s^*\right] + \frac{6\left(1 - \nu^{*2}\right)}{E^*} \times\left(\frac{a_o^3}{h^3}\right)\left(1 + \frac{h\beta_s}{2}\right)\left[P_e\left(Z_\nu + Z_m Q_1\right) + \frac{2}{a_o^2}Z_m Q_2\right]\right\}$$

$$\sigma_{c,b} = \frac{6}{t_c^2}k_c\left\{\beta_c\left[\delta_c P_t + \frac{a_c^2}{E_c t_c}P_c^*\right] - \frac{6\left(1 - \nu^{*2}\right)}{E^*} \times\left(\frac{a_o^3}{h^3}\right)\left(1 + \frac{h\beta_c}{2}\right)\left[P_e\left(Z_\nu + Z_m Q_1\right) + \frac{2}{a_o^2}Z_m Q_2\right]\right\}$$

Provided by IHS under license with ASME
No reproduction or networking permitted without license from IHS
Licensee=Chevron Phillips Chemical Co LP/5956674001
Not for Resale, 11/09/2014 20:41:36 MST

UHX-13.9 Calculation Procedure for Simply Supported Fixed Tubesheets

UHX-13.9.1 Scope. This procedure describes how to use the rules of UHX-13.5 when the effect of the stiffness of the integral channel and/or shell is not considered.

UHX-13.9.2 Conditions of Applicability. This calculation procedure applies only when the tubesheet is integral with the shell or channel (configurations a, b, and c).

(13) **UHX-13.9.3 Calculation Procedure.** The calculation procedure given in UHX-13.5 shall be performed accounting for the following modifications.

(a) Perform Steps 1 through 10.

(b) Perform Step 11 except as follows:

(1) The shell (configurations a, b, and c) is not required to meet a minimum length requirement. The shell is exempt from the minimum length requirement in UHX-13.6.4(a).

(2) The channel (configuration a) is not required to meet a minimum length requirement.

(3) Configuration a: If $\sigma_s \le S_{PS,s}$ and $\sigma_c \le S_{PS,c}$, the shell and channel are acceptable. Otherwise, increase the thickness of the overstressed component(s) (shell and/or channel) and return to Step 1.

Configurations b and c: If $\sigma_s - S_{PS,s}$, the shell is acceptable. Otherwise, increase the thickness of the shell and return to Step 1.

(c) Do not perform Step 12.

(d) Repeat Steps 1 through 7 for the design loading cases, with the following changes to Step 2, until the tubesheet stress criteria have been met:

Configurations a, b, and c: $\beta_s = 0$, $k_s = 0$, $\lambda_s = 0$, $\delta_s = 0$.

Configuration a: $\beta_c = 0$, $k_c = 0$, $\lambda_c = 0$, $\delta_c = 0$.

UHX-14 RULES FOR THE DESIGN OF FLOATING TUBESHEETS

UHX-14.1 Scope

(a) These rules cover the design of tubesheets for floating tubesheet heat exchangers that have one stationary tubesheet and one floating tubesheet. Three types of floating tubesheet heat exchangers are covered as shown in Figure UHX-14.1.

(1) Sketch (a), immersed floating head;

(2) Sketch (b), externally sealed floating head;

(3) Sketch (c), internally sealed floating tubesheet.

(b) Stationary tubesheets may have one of the six configurations shown in Figure UHX-14.2:

(1) Configuration a: tubesheet integral with shell and channel;

(2) Configuration b: tubesheet integral with shell and gasketed with channel, extended as a flange;

(3) Configuration c: tubesheet integral with shell and gasketed with channel, not extended as a flange;

(4) Configuration d: tubesheet gasketed with shell and channel;

(5) Configuration e: tubesheet gasketed with shell and integral with channel, extended as a flange;

(6) Configuration f: tubesheet gasketed with shell and integral with channel, not extended as a flange.

(c) Floating tubesheets may have one of the four configurations shown in Figure UHX-14.3:

(1) Configuration A: tubesheet integral;

(2) Configuration B: tubesheet gasketed, extended as a flange;

(3) Configuration C: tubesheet gasketed, not extended as a flange;

(4) Configuration D: tubesheet internally sealed.

UHX-14.2 Conditions of Applicability

The two tubesheets shall have the same thickness and material.

UHX-14.3 Nomenclature (13)

The symbols described below are used for the design of the stationary and floating tubesheets. Symbols D_o, E^*, h'_g, μ, μ^*, and ν^* are defined in UHX-11.

A = outside diameter of tubesheet, except as limited by UHX-10(b)

A_P = total area enclosed by C_P

a_c = radial channel dimension
Configurations a, e, f, and A: $a_c = D_c/2$
Configurations b, c, d, B, and C: $a_c = G_c/2$
Configuration D: $a_c = A/2$

a_o = equivalent radius of outer tube limit circle

a_s = radial shell dimension
Configurations a, b, and c: $a_s = D_s/2$
Configurations d, e, and f: $a_s = G_s/2$
Configurations A, B, C, and D: $a_s = a_c$

C = bolt circle diameter (see Mandatory Appendix 2)

Cp = perimeter of the tube layout measured stepwise in increments of one tube pitch from the center-to-center of the outermost tubes (see Figure UHX-12.2)

D_c = inside channel diameter

D_s = inside shell diameter

d_t = nominal outside diameter of tubes

E = modulus of elasticity for tubesheet material at T

E_c = modulus of elasticity for channel material at T_c

E_s = modulus of elasticity for shell material at T_s

E_t = modulus of elasticity for tube material at T_t

NOTE: The modulus of elasticity shall be taken from the applicable Table TM in Section II, Part D. When a material is not listed in the TM tables, the requirements of U-2(g) shall be applied.

G_c = diameter of channel gasket load reaction (see Mandatory Appendix 2)

Provided by IHS under license with ASME
No reproduction or networking permitted without license from IHS
Licensee=Chevron Phillips Chemical Co LP/5956674001
Not for Resale, 11/09/2014 20:41:36 MST

Figure UHX-14.1
Floating Tubesheet Heat Exchangers

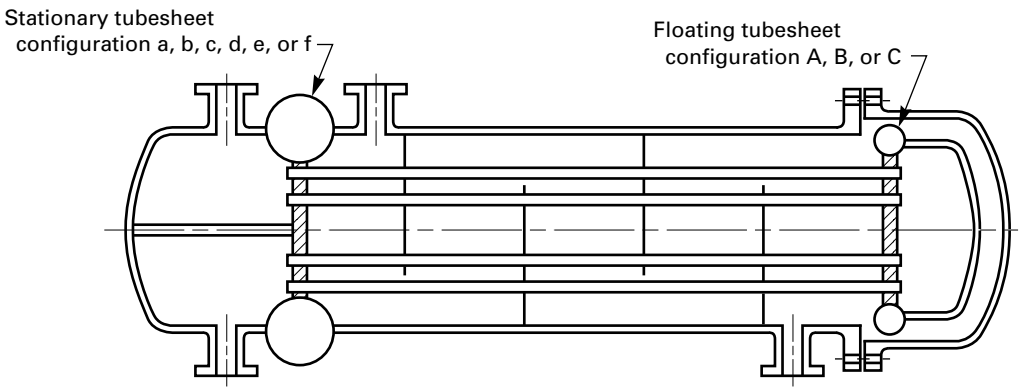

(a) Typical Floating Tubesheet Exchanger With an Immersed Floating Head

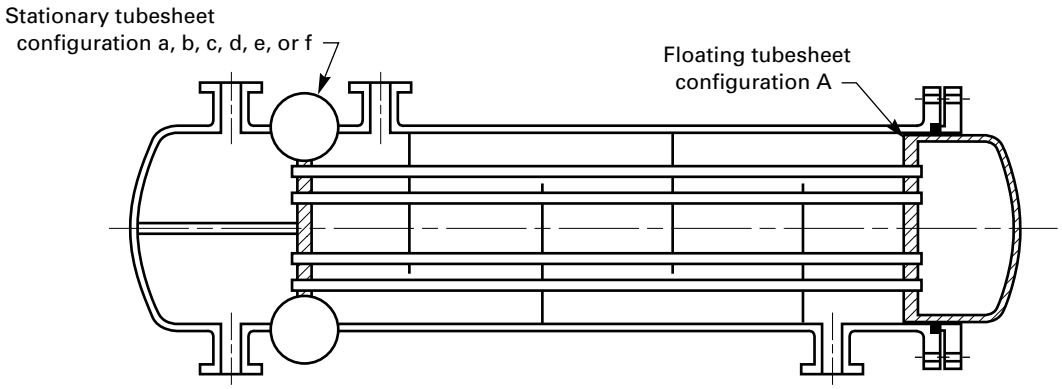

(b) Typical Floating Tubesheet Exchanger With an Externally Sealed Floating Head

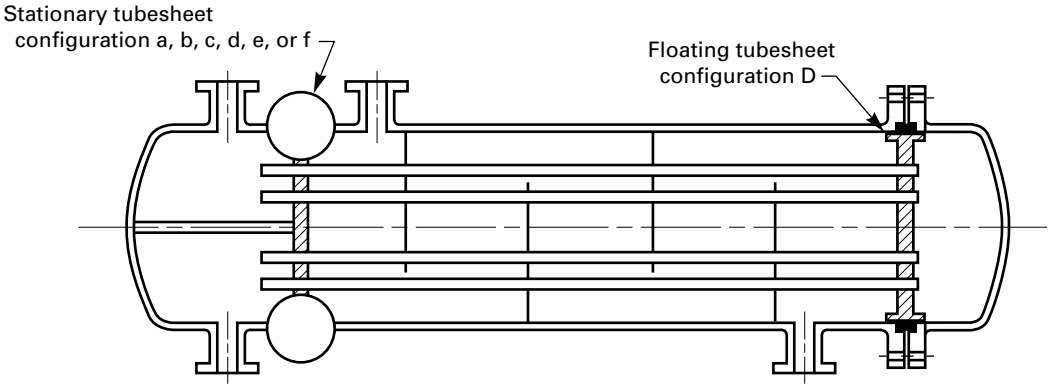

(c) Typical Floating Tubesheet Exchanger With an Internally Sealed Floating Tubesheet

Provided by IHS under license with ASME
No reproduction or networking permitted without license from IHS
Licensee=Chevron Phillips Chemical Co LP/5956674001
Not for Resale, 11/09/2014 20:41:36 MST

Provided by IHS under license with ASME
No reproduction or networking permitted without license from IHS

Figure UHX-14.2
Stationary Tubesheet Configurations

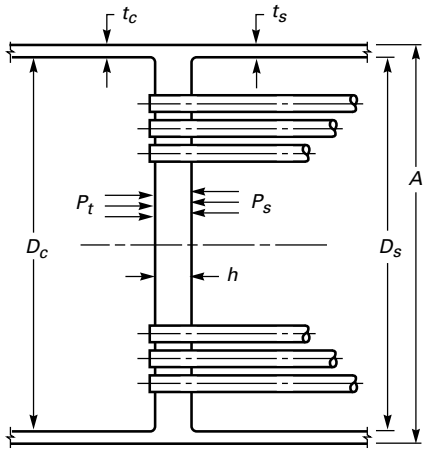

(a) Configuration a:
Tubesheet Integral With Shell and Channel

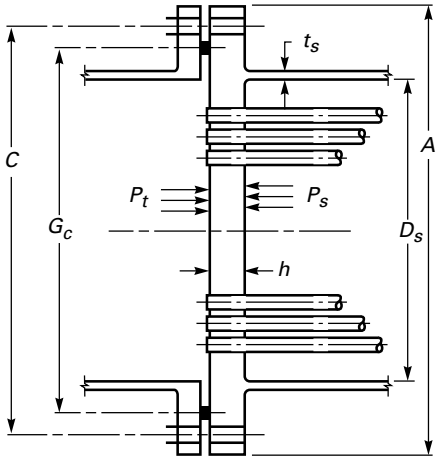

(b) Configuration b:
Tubesheet Integral With Shell and Gasketed With Channel, Extended as a Flange

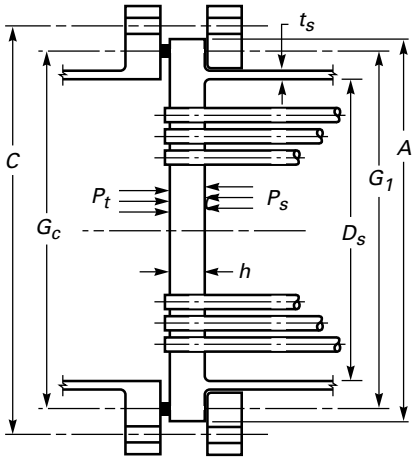

(c) Configuration c:
Tubesheet Integral With Shell and Gasketed With Channel, Not Extended as a Flange

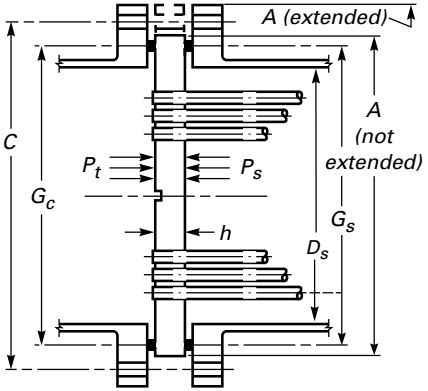

(d) Configuration d:
Tubesheet Gasketed With Shell and Channel

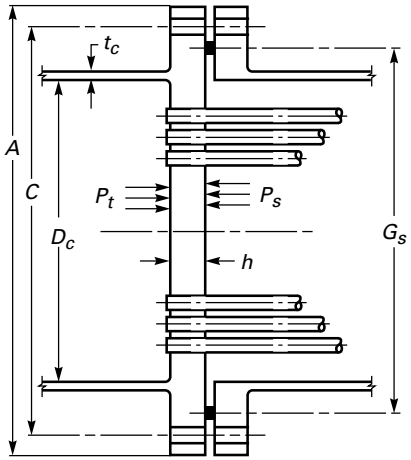

(e) Configuration e:
Tubesheet Gasketed With Shell and Integral With Channel, Extended as a Flange

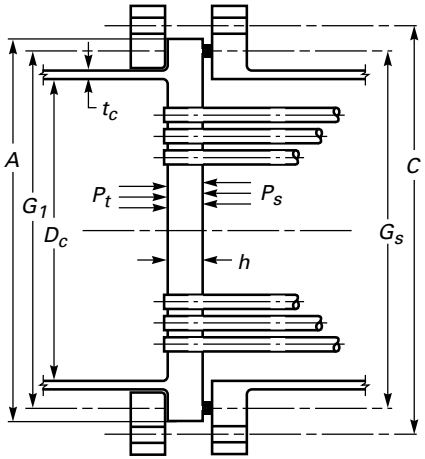

(f) Configuration f:
Tubesheet Gasketed With Shell and Integral With Channel, Not Extended as a Flange

Licensee=Chevron Phillips Chemical Co LP/5956674001
Not for Resale, 11/09/2014 20:41:36 MST

G_s = diameter of shell gasket load reaction (see Mandatory Appendix 2)
G_1 = midpoint of contact between flange and tubesheet
h = tubesheet thickness
k = constant accounting for the method of support for the unsupported tube span under consideration
= 0.6 for unsupported spans between two tubesheets
= 0.8 for unsupported spans between a tubesheet and a tube support
= 1.0 for unsupported spans between two tube supports
L = tube length between inner tubesheet faces
= $L_t - 2h$
L_t = tube length between outer tubesheet faces
l = unsupported tube span under consideration
MAX [(a),(b),(c),...] = greatest of *a, b, c, ...*
N_t = number of tubes
P_e = effective pressure acting on tubesheet
P_s = shell side design or operating pressure, as applicable. For shell side vacuum, use a negative value for P_s.
$P_{sd,\max}$ = maximum shell side design pressure
$P_{sd,\min}$ = minimum shell side design pressure (negative if vacuum is specified, otherwise zero)
P_{sox} = shell side operating pressure for operating condition x (positive, negative, or zero operating pressure)
P_t = tube side design or operating pressure, as applicable. For tube side vacuum, use a negative value for P_t.
$P_{td,\max}$ = maximum tube side design pressure
$P_{td,\min}$ = minimum tube side design pressure (negative if vacuum is specified, otherwise zero)
P_{tox} = tube side operating pressure for operating condition x (positive, negative, or zero operating pressure)
S = allowable stress for tubesheet material at T
S_c = allowable stress for channel material at T_c
S_s = allowable stress for shell material at T_s
S_t = allowable stress for tube material at T_t

NOTE: For a welded tube or pipe, use the allowable stress for the equivalent seamless product. When the allowable stress for the equivalent seamless product is not available, divide the allowable stress of the welded product by 0.85.

S_y = yield strength for tubesheet material at T
$S_{y,c}$ = yield strength for channel material at T_c
$S_{y,s}$ = yield strength for shell material at T_s
$S_{y,t}$ = yield strength for tube material at T_t

NOTE: The yield strength shall be taken from Table Y-1 in Section II, Part D. When a yield strength value is not listed in Table Y-1, one may be obtained by using the procedure in UG-28(c)(2) Step 3.

S_{PS} = allowable primary plus secondary stress for tubesheet material at T per UG-23(e)
$S_{PS,c}$ = allowable primary plus secondary stress for channel material at T_c per UG-23(e)
$S_{PS,s}$ = allowable primary plus secondary stress for shell material at T_s per UG-23(e)
T = tubesheet design temperature for the design condition or operating metal temperature for operating condition x, as applicable [see UHX-14.4(c)]
T_a = ambient temperature, 70°F (20°C)
T_c = channel design temperature for the design condition or operating metal temperature for operating condition x, as applicable [see UHX-14.4(c)]
T_s = shell design temperature for the design condition or operating metal temperature for operating condition x, as applicable [see UHX-14.4(c)]
T_t = tube design temperature for the design condition or operating metal temperature for operating condition x, as applicable [see UHX-14.4(c)]
t_c = channel thickness
t_s = shell thickness
t_t = nominal tube wall thickness
W_t = tube-to-tubesheet joint load
W^* = tubesheet effective bolt load determined in accordance with UHX-8
ν = Poisson's ratio of tubesheet material
ν_c = Poisson's ratio of channel material
ν_s = Poisson's ratio of shell material
ν_t = Poisson's ratio of tube material
x = 1, 2, 3, ... n, integer denoting applicable operating condition under consideration (e.g., normal operating, start-up, shutdown, cleaning, upset)

UHX-14.4 Design Considerations (13)

(a) The calculation shall be performed for the stationary end and for the floating end of the exchanger. Since the edge configurations of the stationary and floating tubesheets are different, the data may be different for each set of calculations. However, the conditions of applicability given in UHX-14.2 must be maintained. For the stationary end, diameters A, C, D_s, D_c, G_s, G_c, G_1, and thickness t_c shall be taken from Figure UHX-14.2. For the floating end, diameters A, C, D_c, G_c, G_1, and thickness t_c shall be taken from Figure UHX-14.3, and the radial shell dimension a_s shall be taken equal to a_c.

(b) It is generally not possible to determine, by observation, the most severe condition of coincident pressure, temperature, and radial differential thermal expansion. Thus, it is necessary to evaluate all the anticipated loading conditions to ensure that the worst load combination has been considered in the design.

Provided by IHS under license with ASME
No reproduction or networking permitted without license from IHS
Licensee=Chevron Phillips Chemical Co LP/5956674001
Not for Resale, 11/09/2014 20:41:36 MST

Figure UHX-14.3
Floating Tubesheet Configurations

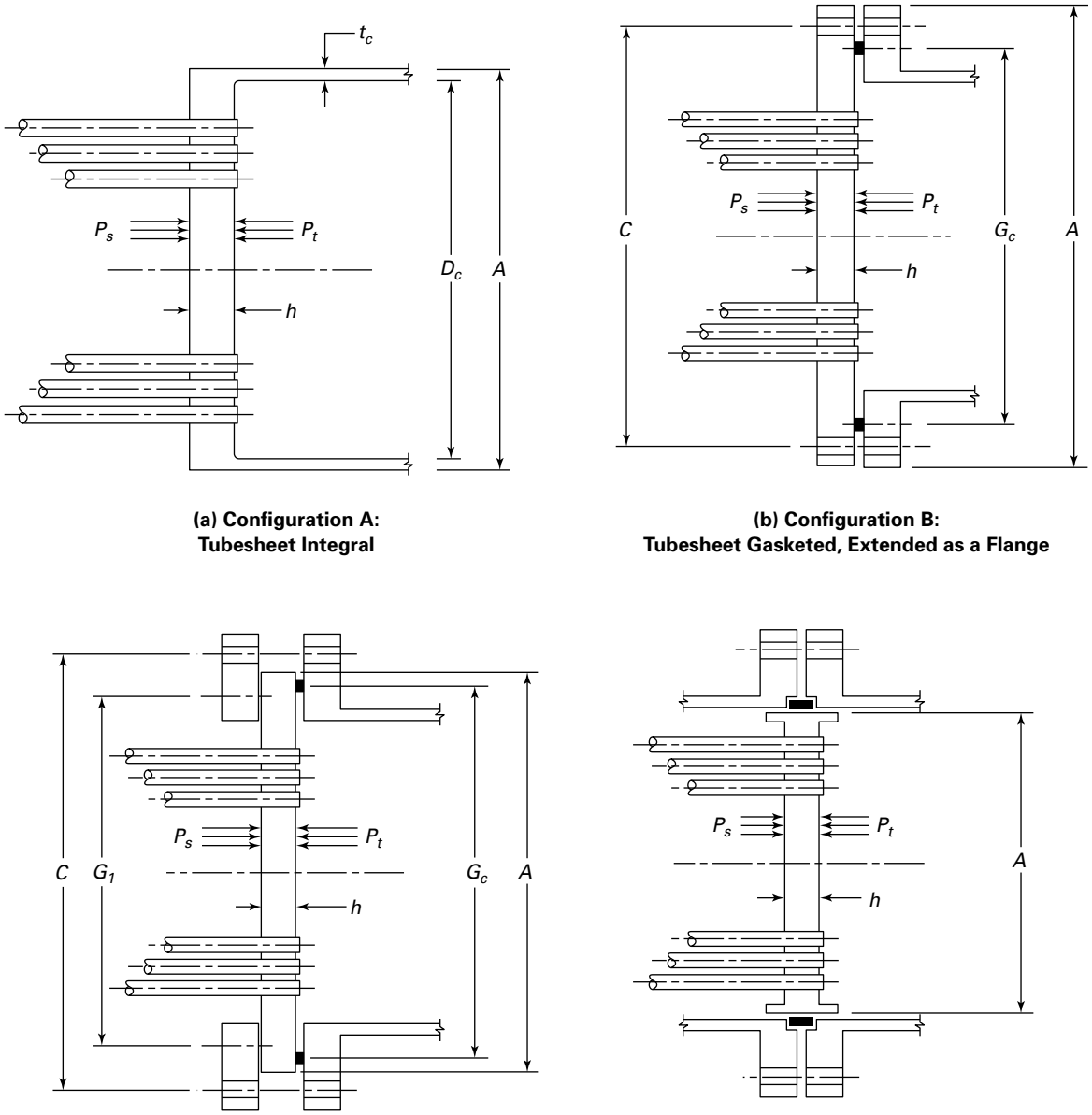

(a) Configuration A:
Tubesheet Integral

(b) Configuration B:
Tubesheet Gasketed, Extended as a Flange

(c) Configuration C:
Tubesheet Gasketed, Not Extended as a Flange

(d) Configuration D:
Tubesheet Internally Sealed

Provided by IHS under license with ASME
No reproduction or networking permitted without license from IHS
Licensee=Chevron Phillips Chemical Co LP/5956674001
Not for Resale, 11/09/2014 20:41:36 MST

The user or his designated agent shall specify all the design and operating conditions that govern the design of the main components of the heat exchanger (i.e., tubesheets, tubes, shell, channel, tube-to-tubesheet joint). These shall include, but not be limited to, normal operating, start-up, shutdown, cleaning, and upset conditions.

For each of these conditions, the following loading cases shall be considered to determine the effective pressure P_e to be used in the design equations:

(1) Design Loading Cases. Table UHX-14.4-1 provides the load combinations required to evaluate the heat exchanger for the design condition. When $P_{sd,\min}$ and $P_{td,\min}$ are both zero, design loading case 4 does not need to be considered.

(2) Operating Loading Cases. The operating loading cases are required only when the effect of radial differential thermal expansion is to be considered [see (f)].

(3) When differential pressure design is specified by the user or his designated agent, the design shall be based only on design loading case 3 and operating loading cases 3 and 4 for each specified operating condition. If the tube side is the higher-pressure side, P_t shall be the tube side design pressure, and P_s shall be P_t less the differential design pressure. If the shell side is the higher-pressure side, P_s shall be the shell side design pressure, and P_t shall be P_s less the differential design pressure. For the operating loading cases, the differential pressure and the individual operating pressures shall not exceed the values used for design.

(4) The designer should take appropriate consideration of the stresses resulting from the pressure test required by UG-99 or UG-100 [see UG-99(d)].

(c) The elastic moduli, yield strengths, and allowable stresses shall be taken at the design temperatures for the design loading cases and may be taken at the operating metal temperature of the component under consideration for operating condition x.

(d) As the calculation procedure is iterative, a value h shall be assumed for the tubesheet thickness to calculate and check that the maximum stresses in tubesheet, tubes, shell, and channel are within the maximum permissible stress limits and that the resulting tube-to-tubesheet joint load is acceptable.

(13) **Table UHX-14.4-1**

Design Loading Case	Shell Side Design Pressure, P_s	Tube Side Design Pressure, P_t
1	$P_{sd,\min}$	$P_{td,\max}$
2	$P_{sd,\max}$	$P_{td,\min}$
3	$P_{sd,\max}$	$P_{td,\max}$
4	$P_{sd,\min}$	$P_{td,\min}$

(e) The designer shall consider the effect of radial differential thermal expansion adjacent to the tubesheet in accordance with UHX-14.6, if required by UHX-14.6.1.

(f) The designer may consider the tubesheet as simply supported in accordance with UHX-14.7.

UHX-14.5 Calculation Procedure

The procedure for the design of tubesheets for a floating tubesheet heat exchanger is as follows. Calculations shall be performed for both the stationary tubesheet and the floating tubesheet.

UHX-14.5.1 Step 1. Determine D_o, μ, μ^*, and h'_g from UHX-11.5.1. (13)

Operating loading cases: $h'_g = 0$

Calculate a_o, ρ_s, ρ_c, x_s, and x_t.

$$a_o = \frac{D_o}{2}$$

$$\rho_s = \frac{a_s}{a_o}$$

$$\rho_c = \frac{a_c}{a_o}$$

$$x_s = 1 - N_t\left(\frac{d_t}{2a_o}\right)^2$$

$$x_t = 1 - N_t\left(\frac{d_t - 2t_t}{2a_o}\right)^2$$

UHX-14.5.2 Step 2. Calculate shell coefficients β_s, k_s, λ_s, and δ_s.

Configurations a, b, and c:

$$\beta_s = \frac{\sqrt[4]{12\left(1 - \nu_s^2\right)}}{\sqrt{\left(D_s + t_s\right)t_s}}$$

$$k_s = \beta_s \frac{E_s t_s^3}{6\left(1 - \nu_s^2\right)}$$

$$\lambda_s = \frac{6D_s}{h^3} k_s \left(1 + h\beta_s + \frac{h^2\beta_s^2}{2}\right)$$

$$\delta_s = \frac{D_s^2}{4E_s t_s}\left(1 - \frac{\nu_s}{2}\right)$$

Configurations d, e, f, A, B, C, and D: $\beta_s = 0$, $k_s = 0$, $\lambda_s = 0$, $\delta_s = 0$

Calculate channel coefficients β_c, k_c, λ_c, and δ_c.

Provided by IHS under license with ASME
No reproduction or networking permitted without license from IHS
Licensee=Chevron Phillips Chemical Co LP/5956674001
Not for Resale, 11/09/2014 20:41:36 MST

Configurations a, e, f, and A:

$$\beta_c = \frac{\sqrt[4]{12\left(1 - v_c^2\right)}}{\sqrt{\left(D_c + t_c\right)t_c}}$$

$$k_c = \beta_c \frac{E_c t_c^3}{6\left(1 - v_c^2\right)}$$

$$\lambda_c = \frac{6D_c}{h^3} k_c \left(1 + h\beta_c + \frac{h^2\beta_c^2}{2}\right)$$

For a cylinder:

$$\delta_c = \frac{D_c^2}{4E_c t_c}\left(1 - \frac{v_c}{2}\right)$$

For a hemispherical head:

$$\delta_c = \frac{D_c^2}{4E_c t_c}\left(\frac{1 - v_c}{2}\right)$$

Configurations b, c, d, B, C, and D: $\beta_c = 0$, $k_c = 0$, $\lambda_c = 0$, $\delta_c = 0$

UHX-14.5.3 Step 3. Calculate h/p. If ρ changes, recalculate d^* and μ^* from UHX-11.5.1.

Determine E^*/E and v^* relative to h/p from UHX-11.5.2.

Calculate X_a.

$$X_a = \left[24\left(1 - v^{*2}\right)N_t \frac{E_t\, t_t\left(d_t - t_t\right)a_o^2}{E^*\, L\, h^3}\right]^{\frac{1}{4}}$$

Using the calculated value of X_a, enter either Table UHX-13.1 or Figure UHX-13.2 to determine Z_d, Z_v, Z_w, and Z_m.

UHX-14.5.4 Step 4. Calculate diameter ratio K and coefficient F.

$$K = \frac{A}{D_o}$$

$$F = \frac{1 - v^*}{E^*}\left(\lambda_s + \lambda_c + E \ln K\right)$$

Calculate Φ and Q_1.

$$\Phi = \left(1 + v^*\right)F$$

$$Q_1 = \frac{\rho_s - 1 - \Phi Z_v}{1 + \Phi Z_m}$$

UHX-14.5.5 Step 5.

(a) Calculate ω_s, ω_s^* and ω_c, ω_c^*.

$$\omega_s = \rho_s k_s \beta_s \delta_s \left(1 + h\beta_s\right)$$

$$\omega_s^* = a_o^2 \frac{\left(\rho_s^2 - 1\right)\left(\rho_s - 1\right)}{4} - \omega_s$$

$$\omega_c = \rho_c k_c \beta_c \delta_c \left(1 + h\beta_c\right)$$

$$\omega_c^* = a_o^2 \left[\frac{\left(\rho_c^2 + 1\right)\left(\rho_c - 1\right)}{4} - \frac{\left(\rho_s - 1\right)}{2}\right] - \omega_c$$

(b) Calculate γ_b.

Configurations a, A, and D:

$$\gamma_b = 0$$

Configurations b and B:

$$\gamma_b = \frac{G_c - C}{D_o}$$

Configurations c and C:

$$\gamma_b = \frac{G_c - G_1}{D_o}$$

Configuration d:

$$\gamma_b = \frac{G_c - G_s}{D_o}$$

Configuration e:

$$\gamma_b = \frac{C - G_s}{D_o}$$

Configuration f:

$$\gamma_b = \frac{G_1 - G_s}{D_o}$$

UHX-14.5.6 Step 6. For each loading case, calculate the effective pressure P_e.

For an exchanger with an immersed floating head [Figure UHX-14.1(a)]: $P_e = P_s - P_t$

For an exchanger with an externally sealed floating head [Figure UHX-14.1(b)]: $P_e = P_s\,(1 - \rho_s^2) - P_t$

For an exchanger with an internally sealed floating tubesheet [Figure UHX-14.1(c)]: $P_e = (P_s - P_t)(1 - \rho_s^2)$

Provided by IHS under license with ASME
No reproduction or networking permitted without license from IHS
Licensee=Chevron Phillips Chemical Co LP/5956674001
Not for Resale, 11/09/2014 20:41:36 MST

(13) **UHX-14.5.7 Step 7.** For each loading case, calculate Q_2.

$$Q_2 = \frac{\left(\omega_s^* P_s - \omega_c^* P_t\right) + \frac{\gamma_b}{2\pi} W^*}{1 + \Phi Z_m}$$

For each loading case, calculate the maximum bending stress in the tubesheet in accordance with (a) or (b) below.

(a) When $P_e \neq 0$:

(1) Calculate Q_3.

$$Q_3 = Q_1 + \frac{2\,Q_2}{P_e a_o^2}$$

(2) For each loading case, determine coefficient F_m from either Table UHX-13.1 or Figures UHX-13.3-1 and UHX-13.3-2 and calculate the maximum bending stress σ.

$$\sigma = \left(\frac{1.5\,F_m}{\mu^*}\right)\left(\frac{2a_o}{h - h'_g}\right)^2 P_e$$

(b) When $P_e = 0$, calculate the maximum bending stress σ.

$$\sigma = \frac{6Q_2}{\mu^*\left(h - h'_g\right)2}$$

For the design loading cases, if $|\sigma| \leq 1.5S$, and for the operating loading cases, if $|\sigma| \leq S_{PS}$, the assumed tubesheet thickness is acceptable for bending. Otherwise, increase the assumed tubesheet thickness h and return to Step 1.

Configurations a, b, c, d, e, and f: Proceed to Step 8.

Configuration A: Proceed to Step 10.

Configurations B, C, and D: The calculation procedure is complete.

(13) **UHX-14.5.8 Step 8.** For each loading case, calculate the average shear stress in the tubesheet at the outer edge of the perforated region, if required.

(a) If $\left|P_e\right| \leq \frac{1.6S\mu h}{a_o}$, the shear stress is not required to be calculated. Proceed to UHX-14.5.9.

(b) Calculate the average shear stress, τ.

$$\tau = \left(\frac{1}{4\mu}\right)\left(\frac{1}{h}\left\{\frac{4A_p}{C_p}\right\}\right)P_e$$

If $|\tau| \leq 0.8S$, the assumed tubesheet thickness is acceptable for shear. Otherwise, increase the assumed tubesheet thickness, h, and return to UHX-14.5.1.

(13) **UHX-14.5.9 Step 9.** Perform this step for each loading case.

(a) Check the axial tube stress.

(1) For each loading case, determine coefficients $F_{t,\min}$ and $F_{t,\max}$ from Table UHX-13.2 and calculate the two extreme values of tube stress, $\sigma_{t,1}$ and $\sigma_{t,2}$. The values for $\sigma_{t,1}$ and $\sigma_{t,2}$ may be positive or negative.

(-a) When $P_e \neq 0$:

$$\sigma_{t,1} = \frac{1}{x_t - x_s}\left[\left(P_s x_s - P_t x_t\right) - P_e F_{t,\min}\right]$$

$$\sigma_{t,2} = \frac{1}{x_t - x_s}\left[\left(P_s x_s - P_t x_t\right) - P_e F_{t,\max}\right]$$

(-b) When $P_e = 0$:

$$\sigma_{t,1} = \frac{1}{x_t - x_s}\left[\left(P_s x_s - P_t x_t\right) - \frac{2Q_2}{a_o^2} F_{t,\min}\right]$$

$$\sigma_{t,2} = \frac{1}{x_t - x_s}\left[\left(P_s x_s - P_t x_t\right) - \frac{2Q_2}{a_o^2} F_{t,\max}\right]$$

(2) Determine $\sigma_{t,\max} = \mathrm{MAX}(|\sigma_{t,1}|, |\sigma_{t,2}|)$.

For the design loading cases, if $\sigma_{t,\max} > S_t$, and for the operating loading cases, if $\sigma_{t,\max} > 2S_t$, reconsider the tube design and return to Step 1.

(b) Check the tube-to-tubesheet joint design.

(1) Calculate the largest tube-to-tubesheet joint load, W_t

$$W_t = \sigma_{t,\max}\,\pi\,(d_t - t_t)t_t$$

(2) Determine the maximum allowable load for the tube-to-tubesheet joint design, $L_{\max}$. For tube-to-tubesheet joints with full strength welds, $L_{\max}$ shall be determined in accordance with UW-20. For tube-totubesheet joints with partial strength welds, $L_{\max}$ shall be in accordance with UW-20, UW-18(d), or Nonmandatory Appendix A, as applicable. For all other tube joints, $L_{\max}$ shall be determined in accordance with Nonmandatory Appendix A.

If $W_t > L_{\max}$, reconsider the tube-to-tubesheet joint design.

If $W_t \leq L_{\max}$, tube-to-tubesheet joint design is acceptable.

If $\sigma_{t,1}$ or $\sigma_{t,2}$ is negative, proceed to (c) below.

If $\sigma_{t,1}$ and $\sigma_{t,2}$ are positive, the tube design is acceptable. Proceed to Step 10.

(c) Check the tubes for buckling.

(1) Calculate the largest equivalent unsupported buckling length of the tube ℓ_t considering the unsupported tube spans ℓ and their corresponding method of support k.

$$\ell_t = k\,\ell$$

Provided by IHS under license with ASME
No reproduction or networking permitted without license from IHS
Licensee=Chevron Phillips Chemical Co LP/5956674001
Not for Resale, 11/09/2014 20:41:36 MST

(2) Calculate r_t, F_t, and C_t.

$$r_t = \frac{\sqrt{d_t^2 + (d_t - 2t_t)^2}}{4}$$

$$F_t = \frac{\ell_t}{r_t}$$

$$C_t = \sqrt{\frac{2\pi^2 E_t}{S_{y,t}}}$$

(3) Determine the factor of safety F_s in accordance with (-a) or (-b) below:

(-a) When $P_e \neq 0$,

$$F_s = \text{MAX}\left\{\left[3.25 - 0.25(Z_d + Q_3 Z_w) X_a^4\right], (1.25)\right\}$$

F_s need not be taken greater than 2.0.

(-b) When $P_e = 0$, $F_s = 1.25$

(4) Determine the maximum permissible buckling stress limit S_{tb} for the tubes in accordance with (-a) or (-b) below:

(-a) When $C_t \leq F_t$,

$$S_{tb} = \text{MIN}\left\{\left[\frac{1}{F_s}\frac{\pi^2 E_t}{F_t^2}\right], [S_t]\right\}$$

(-b) When $C_t > F_t$,

$$S_{tb} = \text{MIN}\left\{\left[\frac{S_{y,t}}{F_s}\left(1 - \frac{F_t}{2C_t}\right)\right], [S_t]\right\}$$

(5) Determine $\sigma_{t,\min} = \text{MIN}\ (\sigma_{t,1}, \sigma_{t,2})$.

If $|\sigma_{t,\min}| > S_{tb}$, reconsider the tube design and return to Step 1.

If $|\sigma_{t,\min}| \leq S_{tb}$, the tube design is acceptable. Proceed to Step 10.

(13) **UHX-14.5.10 Step 10.** For each loading case, calculate the stresses in the shell and/or channel integral with the tubesheet.

Configurations a, b, and c: The shell shall have a uniform thickness of t_s for a minimum length of $1.8\sqrt{D_s t_s}$ adjacent to the tubesheet. Calculate the axial membrane stress $\sigma_{s,m}$, axial bending stress $\sigma_{s,b}$, and total axial stress σ_s in the shell at its junction to the tubesheet.

$$\sigma_{s,m} = \frac{a_o^2}{t_s(D_s + t_s)}\left[P_e + \left(\rho_s^2 - 1\right)(P_s - P_t)\right] + \frac{a_s^2}{t_s(D_s + t_s)}P_t$$

$$\sigma_{s,b} = \frac{6}{t_s^2}k_s\left\{\beta_s\delta_s P_s + \frac{6(1-\nu^{*2})}{E^*}\left(\frac{a_o^3}{h^3}\right)\left(1 + \frac{h\beta_s}{2}\right) \times \left[P_e(Z_v + Z_m Q_1) + \frac{2}{a_o^2}Z_m Q_2\right]\right\}$$

$$\sigma_s = |\sigma_{s,m}| + |\sigma_{s,b}|$$

Configurations a, e, f, and A: A cylindrical channel shall have a uniform thickness of t_c for a minimum length of $1.8\sqrt{D_c t_c}$ adjacent to the tubesheet. Calculate the axial membrane stress $\sigma_{c,m}$, axial bending stress $\sigma_{c,b}$, and total axial stress σ_c, in the channel at its junction to the tubesheet.

$$\sigma_{c,m} = \frac{a_c^2}{t_c(D_c + t_c)}P_t$$

$$\sigma_{c,b} = \frac{6}{t_c^2}k_c\left\{\beta_c\delta_c P_t - \frac{6(1-\nu^{*2})}{E^*}\left(\frac{a_o^3}{h^3}\right)\left(1 + \frac{h\beta_c}{2}\right) \times \left[P_e(Z_v + Z_m Q_1) + \frac{2}{a_o^2}Z_m Q_2\right]\right\}$$

$$\sigma_c = |\sigma_{c,m}| + |\sigma_{c,b}|$$

Configuration a: For the design loading cases, if $\sigma_s \leq 1.5S_s$ and $\sigma_c \leq 1.5S_c$, and for the operating loading cases, if $\sigma_s \leq S_{PS,s}$ and $\sigma_c \leq S_{PS,c}$, the shell and channel designs are acceptable, and the calculation procedure is complete. Otherwise, proceed to Step 11.

Configurations b and c: For the design loading cases, if $\sigma_s \leq 1.5S_s$, and for the operating loading cases, if $\sigma_s \leq S_{PS,s}$, the shell design is acceptable, and the calculation procedure is complete. Otherwise, proceed to Step 11.

Configurations e, f, and A: For the design loading cases, if $\sigma_c \leq 1.5S_c$, and for the operating loading cases, if $\sigma_c \leq S_{PS,c}$, the channel design is acceptable and the calculation procedure is complete. Otherwise, proceed to Step 11.

UHX-14.5.11 Step 11. The design shall be reconsidered by using one or a combination of the following three options.

UHX-14.5.11.1 Option 1. Increase the assumed tubesheet thickness h and return to Step 1.

UHX-14.5.11.2 Option 2. Increase the integral shell and/or channel thickness as follows:

Configurations a, b, and c: If $\sigma_s > 1.5S_s$, increase the shell thickness t_s. and return to Step 1.

Configurations a, e, f, and A: If $\sigma_c > 1.5S_c$, increase the channel thickness t_c and return to Step 1.

Provided by IHS under license with ASME
No reproduction or networking permitted without license from IHS
Licensee=Chevron Phillips Chemical Co LP/5956674001
Not for Resale, 11/09/2014 20:41:36 MST

UHX-14.5.11.3 Option 3. Perform the elastic-plastic calculation procedure as defined in UHX-14.8 only when the conditions of applicability stated in UHX-14.8.2 are satisfied.

UHX-14.6 Calculation Procedure for Effect of Radial Thermal Expansion Adjacent to the Tubesheet

(13) **UHX-14.6.1 Scope.**

(a) This procedures describes how to use the rules of UHX-14.5 when the effect of radial differential thermal expansion between the tubesheet and integral shell or channel is to be considered.

(b) This procedure shall be used when cyclic or dynamic reactions due to pressure or thermal variations are specified [see UG-22(e)].

(c) This procedure shall be used when specified by the user or his designated agent. The user or his designated agent shall provide the Manufacturer with the data necessary to determine the required tubesheet, channel, and shell metal temperatures.

(d) Optionally, the designer may use this procedure to consider the effect of radial differential thermal expansion even when it is not required by (b) or (c) above.

UHX-14.6.2 Conditions of Applicability. This calculation procedure applies only when the tubesheeet is integral with the shell or channel (Configurations a, b, c, e, f, and A).

(13) **UHX-14.6.3 Additional Nomenclature.**

T' = tubesheet metal temperature at the rim
T'_c = channel metal temperature at the tubesheet
T'_{cx} = channel metal temperature at the tubesheet for operating condition x
T'_s = shell metal temperature at the tubesheet
T'_{sx} = shell metal temperature at the tubesheet for operating condition x
T'_x = tubesheet metal temperature at the rim for operating condition x
α' = mean coefficient of thermal expansion of tubesheet material at T'
α'_c = mean coefficient of thermal expansion of channel material at T'_c
α'_s = mean coefficient of thermal expansion of shell material at T'_s

(13) **UHX-14.6.4 Calculation Procedure.** The calculation procedure given in UHX-14.5 shall be performed for the operating loading cases accounting for the modifications in (a) through (e).

Table UHX-14.6.4-1 provides the load combinations required to evaluate the heat exchanger for each operating condition x.

(a) Determine the average temperature of the unperforated rim T_r.

Configuration a:

$$T_r = \frac{T' + T'_s + T'_c}{3}$$

Configurations b and c:

$$T_r = \frac{T' + T'_s}{2}$$

Configurations e, f, and A:

$$T_r = \frac{T' + T'_c}{2}$$

For conservative values of P_s^* and P_c^*, $T_r = T'$ may be used.

(b) Determine the average temperature of the shell T_s^* and channel T_c^* at their junction to the tubeshet as follows:

Configurations a, b, and c:

$$T_s^* = \frac{T'_s + T_r}{2}$$

Configurations a, e, f, and A:

$$T_c^* = \frac{T'_c + T_r}{2}$$

For conservative values of P_s^* and P_c^*, $T_s^* = T'_s$ and $T_c^* = T'_c$ may be used.

(c) Calculate P_s^* and P_c^*.

Configurations a, b, and c:

$$P_s^* = \frac{E_s t_s}{a_s}\left[\alpha'_s\left(T_s^* - T_a\right) - \alpha'\left(T_r - T_a\right)\right]$$

Configurations e, f, and A:

$$P_s^* = 0$$

Configurations a, e, f, and A:

$$P_c^* = \frac{E_c t_c}{a_c}\left[\alpha'_c\left(T_c^* - T_a\right) - \alpha'\left(T_r - T_a\right)\right]$$

Configurations b and c:

$$P_c^* = 0$$

Provided by IHS under license with ASME
No reproduction or networking permitted without license from IHS
Licensee=Chevron Phillips Chemical Co LP/5956674001
Not for Resale, 11/09/2014 20:41:36 MST

Table UHX-14.6.4-1 (13)

Operating Loading Case	Operating Pressure		Metal Temperature		
	Shell Side, P_s	Tube Side, P_t	Tubesheet at the Rim, T'	Channel at Tubesheet, T'_c	Shell at Tubesheet, T'_s
1	None	P_{tox}	T'_x	T'_{cx}	T'_{sx}
2	P_{sox}	None	T'_x	T'_{cx}	T'_{sx}
3	P_{sox}	P_{tox}	T'_x	T'_{cx}	T'_{sx}
4	None	None	T'_x	T'_{cx}	T'_{sx}

(d) In Step 7, replace the formula for Q_2 with:

$$Q_2 = \frac{\left(\omega_s^* P_s - \omega_c^* P_t\right) - \left(\omega_s P_s^* - \omega_c P_c^*\right) + \frac{\gamma_b}{2\pi} W^*}{1 + \Phi Z_m}$$

(e) In Step 10, replace the equations for $\sigma_{s,b}$ and $\sigma_{c,b}$ with:

$$\sigma_{s,b} = \frac{6}{t_s^2} k_s \left\{ \beta_s \left[\delta_s P_s + \frac{a_s^2}{E_s t_s} P_s^* \right] + \frac{6\left(1 - \nu^{*2}\right)}{E^*} \left(\frac{a_o^3}{h^3} \right) \times \left(1 + \frac{h\beta_s}{2} \right) \left[P_e \left(Z_v + Z_m Q_1 \right) + \frac{2}{a_o^2} Z_m Q_2 \right] \right\}$$

$$\sigma_{c,b} = \frac{6}{t_c^2} k_c \left\{ \beta_c \left[\delta_c P_t + \frac{a_c^2}{E_c t_c} P_c^* \right] - \frac{6\left(1 - \nu^{*2}\right)}{E^*} \left(\frac{a_o^3}{h^3} \right) \times \left(1 + \frac{h\beta_c}{2} \right) \left[P_e \left(Z_v + Z_m Q_1 \right) + \frac{2}{a_o^2} Z_m Q_2 \right] \right\}$$

UHX-14.7 Calculation Procedure for Simply Supported Floating Tubesheets

UHX-14.7.1 Scope. This procedure describes how to use the rules of UHX-14.5 when the effect of the stiffness of the integral channel and/or shell is not considered.

UHX-14.7.2 Conditions of Applicability. This calculation procedure applies only when the tubesheet is integral with the shell or channel (configurations a, b, c, e, f, and A).

(13) **UHX-14.7.3 Calculation Procedure.** The calculation procedure outlined in UHX-14.5 shall be performed accounting for the following modifications.

(a) Perform Steps 1 through 9.

(b) Perform Step 10 except as follows:

(1) The shell (configurations a, b, and c) is not required to meet a minimum length requirement.

(2) The channel (configurations a, e, f, and A) is not required to meet a minimum length requirement.

(3) Configuration a: If $\sigma_s \le S_{PS,s}$ and $\sigma_c \le S_{PS,c}$, then the shell and channel are acceptable. Otherwise, increase the thickness of the overstressed component(s) (shell and/or channel) and return to Step 1.

Configurations b and c: If $\sigma_s \le S_{PS,s}$, then the shell is acceptable. Otherwise, increase the thickness of the shell and return to Step 1.

Configurations e, f, and A: If $\sigma_c \le S_{PS,c}$, then the channel is acceptable. Otherwise increase the thickness of the channel and return to Step 1.

(c) Do not perform Step 11.

(d) Repeat Steps 1 through 7 for the design loading cases, with the following changes to Step 2, until the tubesheet stress criteria have been met:

Configurations a, b, and c: $\beta_s = 0$, $k_s = 0$, $\lambda_s = 0$, $\delta_s = 0$.

Configurations a, e, f, and A: $\beta_c = 0$, $k_c = 0$, $\lambda_c = 0$, $\delta_c = 0$.

UHX-14.8 Calculation Procedure for Effect of Plasticity at Tubesheet/Channel or Shell Joint

UHX-14.8.1 Scope. This procedure describes how to use the rules of UHX-14.5 when the effect of plasticity at the shell-tubesheet and/or channel-tubesheet joint is to be considered.

When the calculated tubesheet stresses are within the allowable stress limits, but either or both of the calculated shell or channel total stresses exceed their allowable stress limits, an additional "elastic-plastic solution" calculation may be performed.

This calculation permits a reduction of the shell and/or channel modulus of elasticity, where it affects the rotation of the joint, to reflect the anticipated load shift resulting from plastic action at the joint. The reduced effective modulus has the effect of reducing the shell and/or channel stresses in the elastic-plastic calculation; however, due to load shifting this usually leads to an increase in the tubesheet stress. In most cases, an elastic-plastic calculation using the appropriate reduced shell or channel modulus of elasticity results in a design where the calculated tubesheet stresses are within the allowable stress limits.

Provided by IHS under license with ASME
No reproduction or networking permitted without license from IHS
Licensee=Chevron Phillips Chemical Co LP/5956674001
Not for Resale, 11/09/2014 20:41:36 MST

UHX-14.8.2 Conditions of Applicability.

(a) This procedure shall not be used at temperatures where the time-dependent properties govern the allowable stress.

(b) This procedure applies only for loading cases 1, 2, and 3.

(c) This procedure applies to Configuration a when $\sigma_s \leq S_{PS,c}$ and $\sigma_s \leq S_{PS,c}$.

(d) This procedure applies to Configurations b and c when $\sigma_s \leq S_{PS,s}$.

(e) This procedure applies to Configurations e, f, and A when $\sigma_c \leq S_{PS,c}$.

(f) This procedure may only be used once for each iteration of tubesheet, shell, and channel thicknesses and materials.

UHX-14.8.3 Calculation Procedure. After the calculation procedure given in the steps in UHX-14.5.1 through UHX-14.5.10 has been performed for the elastic solution, an elastic–plastic calculation using the referenced steps from UHX-14.5 shall be performed in accordance with the following procedure for each applicable loading case. Except for those quantities modified below, the quantities to be used for the elastic–plastic calculation shall be the same as those calculated for the corresponding elastic loading case.

(a) Define the maximum permissible bending stress limit in the shell and channel.

Configurations a, b, and c:

$$S_s^* = \mathrm{MIN}\left[\left(S_{y,s}\right), \left(\frac{S_{PS,s}}{2}\right)\right]$$

Configurations a, e, f, and A:

$$S_c^* = \mathrm{MIN}\left[\left(S_{y,c}\right), \left(\frac{S_{PS,c}}{2}\right)\right]$$

(b) Using bending stresses $\sigma_{s,b}$ and $\sigma_{c,b}$ computed in the step in UHX-14.5.10 for the elastic solution, determine fact_s and fact_c as follows:

Configurations a, b, and c:

$$\mathrm{fact}_s = \mathrm{MIN}\left[\left(1.4 - 0.4\frac{|\sigma_{s,b}|}{S_s^*}\right), (1.0)\right]$$

Configurations a, e, f, and A:

$$\mathrm{fact}_c = \mathrm{MIN}\left[\left(1.4 - 0.4\frac{|\sigma_{c,b}|}{S_c^*}\right), (1.0)\right]$$

Configuration a: If $\mathrm{fact}_s = 1.0$ and $\mathrm{fact}_c = 1.0$, the design is acceptable, and the calculation procedure is complete. Otherwise, proceed to (c) below.

Configurations b and c: If $\mathrm{fact}_s = 1.0$, the design is acceptable, and the calculation procedure is complete. Otherwise, proceed to (c) below.

Configurations e, f, and A: If $\mathrm{fact}_c = 1.0$, the design is acceptable, and the calculation procedure is complete. Otherwise, proceed to (c) below.

(c) Calculate reduced values of E_s and E_c as follows:

Configurations a, b, and c: $E_s^* = E_s\ \mathrm{fact}_s$

Configurations a, e, f, and A: $E_c^* = E_c\ \mathrm{fact}_c$

(d) In Step 2, recalculate k_s, λ_s, k_c, and λ_c replacing E_s by E_s^* and E_c by E_c^*.

(e) In Step 4, recalculate F, Φ, and Q_1.

(f) In Step 7, recalculate Q_2, Q_3, and F_m, as applicable, and the tubesheet bending stress, σ.

If $|\sigma| \leq 1.5S$, the design is acceptable and the calculation procedure is complete. Otherwise, the unit geometry shall be reconsidered.

UHX-16 BELLOWS EXPANSION JOINTS

Bellows expansion joints shall be in accordance with Mandatory Appendix 26, as applicable. Bellows expansion joints not covered by Mandatory Appendix 26 shall be in accordance with U-2(g).

UHX-17 FLANGED-AND-FLUED OR FLANGED-ONLY EXPANSION JOINTS

(a) Flanged-and-flued or flanged-only expansion joints shall be in accordance with Mandatory Appendix 5, as applicable. The higher stress limits shown in Table UHX-17 may be applied in lieu of Appendix 5-3(a). These limits allow the expansion joint to yield, which decreases its stiffness. All calculations must be performed in both the corroded and noncorroded condition. To apply these limits, it shall be shown that

(1) the design of the other components of the heat exchanger (i.e., tubesheet, tubes, shell, channel, etc.) is acceptable considering the decreased stiffness of the expansion joint. This may be accomplished by performing an additional evaluation of all the components of the exchanger for load cases 1–3 with zero expansion joint stiffness. In UHX-13, this may be accomplished by replacing the Step 6 formula for P_e with

$$P_e = \left[1 - \frac{1}{2}\left(\rho_S{}^2 + \frac{D_J{}^2}{D_o{}^2}\right)\right]P_S - P_t$$

(2) the rotational stiffness at the expansion joint corners and torus is not necessary to meet the stress limits for annular plates and straight flanges for load cases 2 and 3 shown in Table UHX-17. This may be accomplished by modeling the corners and torus as simply supported to determine the stress in the annular plates and straight flanges.

Provided by IHS under license with ASME
No reproduction or networking permitted without license from IHS
Licensee=Chevron Phillips Chemical Co LP/5956674001
Not for Resale, 11/09/2014 20:41:36 MST

Table UHX-17
Flanged-and-Flued or Flanged-Only Expansion Joint Load Cases and Stress Limits

				Maximum Stress			
				Membrane	Membrane Plus Bending		
Load Case	Tube Side Pressure	Shell Side Pressure	Differential Thermal Expansion	Corners and Torus	Corners and Torus	Annular Plates	Straight Flanges
1	Yes	No	No	S_{PS}	S_{PS}	S_{PS}	S_{PS}
2	No	Yes	No	1.5 S	S_{PS}	1.5 S	1.5 S
3	Yes	Yes	No	1.5 S	S_{PS}	1.5 S	1.5 S
4	No	No	Yes	S_{PS}	S_{PS}	S_{PS}	S_{PS}
5	Yes	No	Yes	S_{PS}	S_{PS}	S_{PS}	S_{PS}
6	No	Yes	Yes	S_{PS}	S_{PS}	S_{PS}	S_{PS}
7	Yes	Yes	Yes	S_{PS}	S_{PS}	S_{PS}	S_{PS}

(b) Flanged-and-Flued or Flanged-Only expansion joints not covered by Mandatory Appendix 5 shall be in accordance with U-2(g).

UHX-18 PRESSURE TEST REQUIREMENTS

The shell side and the tube side of the heat exchanger shall be subjected to a pressure test in accordance with UG-99 or UG-100.

UHX-19 HEAT EXCHANGER MARKING AND REPORTS

UHX-19.1 Required Marking

The marking of heat exchangers shall be in accordance with UG-116 using the specific requirements of UG-116(j) for combination units (multi-chamber vessels). When the markings are grouped in one location in accordance with requirements of UG-116(j)(1) and abbreviations for each chamber are used, they shall be as follows:

(a) For markings in accordance with UG-116(a)(3) and UG-116(a)(4), the chambers shall be abbreviated as:

(1) SHELL for shell side

(2) TUBES for tube side

This abbreviation shall precede the appropriate design data. For example, use:

(3) SHELL FV&300 psi (FV&2000 kPa) at 500°F (260°C) for the shell side maximum allowable working pressure

(4) TUBES 150 psi (1 000 kPa) at 350°F (175°C) for the tube side maximum allowable working pressure

(b) When the markings in accordance with UG-116(b)(1), UG-116(c), UG-116(e) and UG-116(f) are different for each chamber, the chambers shall be abbreviated as:

(1) S for shell side

(2) T for tube side

This abbreviation shall follow the appropriate letter designation and shall be separated by a hyphen. For example, use:

(3) L-T for lethal service tube side

(4) RT 1-S for full radiography on the shell side

UHX-19.2 Supplemental Marking (13)

A supplemental tag or marking shall be supplied on the heat exchanger to caution the user if there are any restrictions on the design, testing, or operation of the heat exchanger. The marking shall meet the requirements of UG-118 or UG-119, except that height of the characters for the caution required by UHX-19.2.2 shall be at least $^1/_8$ in. (3 mm) high. Supplemental marking shall be required for, but not limited to, the following:

UHX-19.2.1 Common Elements. Shell-and-tube heat exchangers are combination units as defined in UG-19(a) and the tubes and tubesheets are common elements. The following marking is required when the common elements are designed for conditions less severe than the design conditions for which its adjacent chambers are stamped.

(a) Differential Pressure Design. When common elements such as tubes and tubesheets are designed for a differential design pressure, the heat exchanger shall be marked "Differential Design" in addition to meeting all the requirements of UG-19(a)(2) [see UG-116(j)]. If the tubes and tubesheets are designed for a differential pressure of 150 psi, an example of the marking would be

DIFFERENTIAL DESIGN: TUBES
& TUBESHEETS 150 psi

(b) Mean Metal Temperature Design. When common elements such as tubes and tubesheets are designed for a maximum mean metal design temperature that is less than the maximum of the shell side and tube side design temperatures, the heat exchanger shall be marked "Max Mean Metal Temp" in addition to meeting all the

Provided by IHS under license with ASME
No reproduction or networking permitted without license from IHS
Licensee=Chevron Phillips Chemical Co LP/5956674001
Not for Resale, 11/09/2014 20:41:36 MST

requirements of UG-19(a)(3) [see UG-116(j)]. If the tubes are designed for a maximum mean metal temperature of 400°F, an example of the marking would be

MAX MEAN METAL TEMP: TUBES 400°F

(13) **UHX-19.2.2 Fixed Tubesheet Heat Exchangers.** Fixed tubesheet heat exchangers shall be marked with the following caution:

CAUTION: The heat exchanger design has been evaluated for the range of conditions listed on Form U-5 of the MDR. It shall be re-evaluated for conditions outside this range before being operated at them.

(13) UHX-19.3 Manufacturer's Data Reports

UHX-19.3.1 Common Elements. When common elements such as tubes and tubesheets are designed for a differential pressure, or a mean metal temperature, or both, that is less severe than the design conditions for which its adjacent chambers are stamped, the data for each common element that differs from the data for the corresponding chamber shall be indicated as required by UG-19(a) and UG-120(b) in the "Remarks" section of the Manufacturer's Data Report.

UHX-19.3.2 Fixed Tubesheet Heat Exchangers. For each design and operating condition, the following information shall be indicated on Form U-5 of the Manufacturer's Data Report Supplementary Sheet for Shell-and-Tube Heat Exchangers. The operating conditions may be combined on this form where they are bounded by the operating pressure range, maximum metal temperatures, and axial differential thermal expansion range.

(a) Name of Condition. The first condition shown shall be the design condition. If there is more than one design condition or a differential pressure design condition, multiple lines may be used. Each different operating condition or range of operating conditions shall be listed.

(b) Design/Operating Pressure Ranges. Range of shell side and tube side pressures for each condition shall be listed.

(c) Maximum Design/Operating Metal Temperatures. Maximum shell, channel, tube, and tubesheet metal temperatures, as applicable, for each condition shall be listed.

(d) Axial Differential Thermal Expansion Range. The minimum and maximum axial differential thermal expansion for each operating condition shall be listed. If the minimum value is positive, zero shall be used for the minimum value. If the maximum value is negative, zero shall be used for the maximum value.

UHX-20 EXAMPLES (13)

See UG-16(f).

Provided by IHS under license with ASME
No reproduction or networking permitted without license from IHS
Licensee=Chevron Phillips Chemical Co LP/5956674001
Not for Resale, 11/09/2014 20:41:36 MST

PART UIG
REQUIREMENTS FOR PRESSURE VESSELS CONSTRUCTED OF IMPREGNATED GRAPHITE

NONMANDATORY INTRODUCTION

(a) General. The use of impregnated graphite for the manufacture of pressure vessels presents unique material considerations for design, fabrication, and testing. Metallic vessels, being made from materials that are normally ductile, are designed using well-established allowable stresses based on measured tensile and ductility properties. In contrast, the parts of impregnated graphite vessels are relatively brittle, and the properties of the parts are dependent upon the fabrication process. It is the purpose of this Introduction to describe in a general way the criteria that were used in preparing this Part.

(b) Materials. Specifications exist for graphite and for impregnating agents; however, there are no published specifications for impregnated graphite. Impregnated graphite is made up of different combinations of graphite grades and impregnating agents that are combined in a specified process to make a unique composite material (both impregnated and un-impregnated graphite are often referred to as grades). Also, some grades of impregnated graphite may be more suitable for certain applications (service conditions) than other grades. The impregnated graphite manufacturing process is specified by the Manufacturer and is proprietary. The "specified process" is a listing of each step required to produce a specific "grade" of impregnated graphite. It includes such items as the grade of graphite, resin, vacuum, pressure, and any other steps needed to produce the desired grade of impregnated graphite.

Graphite is naturally porous so it is impregnated with resin to make it impervious to gases and liquids; therefore, only impregnated graphite is suitable for construction of pressure vessels and components. However, the resin used for impregnation has a significant effect on the properties of the graphite. The impregnation cycle and resin type may vary from manufacturer to manufacturer and may also vary for each grade of the impregnated material the vessel Manufacturer produces; therefore, the impregnation process should be tightly controlled to ensure that the material meets the specified properties.

(c) Design. Adequacy of specific designs should be qualified by compliance with all applicable materials, design, fabrication, examination, inspection, testing, certification, and overpressure protection rules contained in this Division.

(d) Modulus of Elasticity. The typical modulus of elasticity is 2.0×10^6 psi (14×10^3 MPa) compared with that of ferrous materials, which may be on the order of 30×10^6 psi (207×10^3 MPa). This low modulus characteristic requires careful consideration of vessel geometry in order to minimize bending and tensile stresses.

(e) Fatigue. Like metallic materials, the impregnated graphite material, when stressed at sufficiently low levels, exhibits good fatigue life. While fatigue is not directly addressed by Part UIG, if service conditions warrant, the Manufacturer should take fatigue into consideration.

(f) Creep and Temperature Effects. Impregnated graphite material is not subject to creep. The material has nearly constant tensile strength characteristics throughout the specified temperature range. Possible loss of strength at elevated temperatures is related to the maximum permissible temperature of the impregnation agent.

(g) Inspection. This Part incorporates the general philosophy of Section VIII, Division 1, regarding inspection during fabrication. Familiarity with impregnated graphite production processes and the nature of vessel imperfections is required of the Authorized Inspector. Reliance is placed upon thorough monitoring of the Manufacturer's Quality Control Program, close visual inspection of vessels and vessel parts by both Manufacturing personnel and the Authorized Inspector, as well as acceptance testing where required by this Part.

GENERAL

UIG-1 SCOPE

The rules in Part UIG are applicable to pressure vessels and vessel parts that are constructed of impervious graphite and graphite compounds and shall be used in conjunction with the rules in this Division insofar as these requirements are applicable to graphite materials. Impregnated graphite vessels may not be constructed under the rules of U-1(j) or UG-90(c)(2).

UIG-2 EQUIPMENT AND SERVICE LIMITATIONS

(a) Impregnated graphite pressure vessels covered by Part UIG are limited to the following:

(1) shell and tube heat exchangers
(2) bayonet heat exchangers
(3) cylindrical block heat exchangers
(4) rectangular block heat exchangers

Provided by IHS under license with ASME
No reproduction or networking permitted without license from IHS
Licensee=Chevron Phillips Chemical Co LP/5956674001
Not for Resale, 11/09/2014 20:41:36 MST

(5) plate heat exchangers

(6) cylindrical vessels

(b) Impregnated graphite pressure vessels have the following limitations:

(1) maximum external design pressure: 350 psi (2.4 MPa)

(2) maximum internal design pressure: 350 psi (2.4 MPa)

(3) minimum design temperature: −100°F (−73°C)

(4) maximum design temperature: 400°F (204°C)

(c) Metal parts used in conjunction with impregnated graphite pressure vessels, including those for lethal service, shall be constructed in accordance with the requirements of this Division.

UIG-3 TERMINOLOGY

batch: that quantity of material contained in a single impregnation cycle.

cementing: the process of joining parts using graphite cement followed by a curing process.

certified materials: may only be manufactured by a Certificate Holder.

impervious materials: graphite in which pores are filled with impregnation agents, and that have a coefficient of permeability of not more than 4.5×10^{-6} in.^{2}/sec (2.9×10^{-3} mm^2/sec) as measured in accordance with Mandatory Appendix 39.

graphite cement: mix of carbonaceous or graphite powder and/or resin.

graphite compound: graphite material mixed with high corrosion resistant binder systems and with a minimum graphite content of 50% rendering it impervious to a permeation rate of not more than 4.5×10^{-6} in.^{2}/s (2.9×10^{-3} mm^2/s) as measured in accordance with Mandatory Appendix 39.

grade: material manufacturer's designation for a raw or certified material.

graphite pressure vessel: a pressure vessel constructed of certified materials [see UIG-3(b)].

graphitization: a solid-state transformation of carbon into graphite by means of heat treatment.

lot: a "lot" is that quantity of certified material produced within a 3-mo period from a specific grade of graphite and resin that meets established specifications for material properties. Furthermore, the impregnation process must be controlled to a process specification. (See UIG-84.)

raw materials: include graphite material and impregnation agent.

graphite material: a bonded granular carbon body whose matrix has been subjected to a temperature in excess of 4,350°F (2 400°C), and whose matrix is thermally stable below that temperature.

impregnation agent: material used to render carbon and graphite materials impervious.

MATERIALS

UIG-5 RAW MATERIAL CONTROL

(a) Raw materials used in the manufacturing of the certified material shall be identified by its source and grade, and documented on the Certified Material Qualification Form (CMQ) by the Certificate Holder.

(b) Graphite material and the impregnating agent used in the construction of graphite pressure vessels, and vessel parts shall be the same as the materials specified in the Certified Material Specification (CMS) (see UIG-77). Each of these materials shall be traceable in accordance with UIG-112(b).

UIG-6 CERTIFIED MATERIAL CONTROL

(a) All material used in the construction of graphite pressure vessels shall be certified by the Manufacturer of the material to meet the properties in Table UIG-6 and all other requirements in Part UIG.

(b) The Manufacturer of certified material shall prepare a Certified Material Test Report (CMTR) that shall include the following, as a minimum (see UIG-84)

(1) Manufacturer's name

(2) lot number

(3) grade

(4) lot specific room temperature compressive strength values

(5) lot specific room temperature tensile strength values

(6) date tested

(7) tensile strength values at the maximum allowable material temperature

(c) The Manufacturer of certified material shall perform testing to meet the minimum properties in Table UIG-6-1 and test frequency for strength per UIG-84. The Manufacturer shall additionally prepare a Certified Cement Specification, CCS (see UIG-78). The cement material and cementing procedure (see UIG-79) shall be qualified. Tensile testing shall be performed per Mandatory Appendix 37.

UIG-7 ADDITIONAL PROPERTIES

The modulus of elasticity tested per ASTM C747 and ASTM C769 is typically 2.0×10^6 psi, and the Poisson's ratio for impervious graphite is typically 0.15. The coefficient of thermal expansion for impervious graphite exhibits a typical range of 1.5 to 3.5×10^{-6} in./in./°F.

--`,,,``,,``,,,,,`,`,``,`,,`,,``-`-`,,`,,`,`,,`---

Provided by IHS under license with ASME

No reproduction or networking permitted without license from IHS

Licensee=Chevron Phillips Chemical Co LP/5956674001
Not for Resale, 11/09/2014 20:41:36 MST

Table UIG-6-1
Properties of Certified Material

	Tube [Note (1)] Material	Block [Note (1)] Material	Compound [Note (2)] Material	Cement [Note (3)] Material
Minimum tensile strength at room temperature	3,800 psi (26.2 MPa)	2,000 psi (13.8 MPa)	1,500 psi (10.3 MPa)	1,500 psi (10.3 MPa)
Minimum tensile strength at maximum design temperature	3,000 psi (20.7 MPa)	1,600 psi (11.0 MPa)	900 psi (6.2 MPa)	900 psi (6.2 MPa)
Minimum flexural strength	5,700 psi (39.3 MPa)	N/A [Note (4)]	N/A [Note (4)]	N/A [Note (4)]
Minimum compressive strength	10,000 psi (69 MPa)	6,500 psi (45 MPa)	4,500 psi (31 MPa)	N/A [Note (4)]
Maximum coefficient of permeability	4.5×10^{-6} in.^{2}/sec (2.9×10^{-3} mm^2/s)	4.5×10^{-6} in.^{2}/sec (2.9×10^{-3} mm^2/s)	4.5×10^{-6} in.^{2}/sec (2.9×10^{-3} mm^2/s)	N/A [Note (4)]

NOTES:
(1) Resin impregnated graphite.
(2) Resin bonded graphite.
(3) Resin with graphite filler and catalyst.
(4) N/A: not applicable

UIG-8 TOLERANCES FOR IMPREGNATED GRAPHITE TUBES

(a) Extruded graphite tubes 3 in. O.D. and under shall meet the following tolerances:

(1) outside diameter: ±0.062 in. (1.5 mm)

(2) inside diameter: ±0.062 in. (1.5 mm)

(3) wall thickness variation: −0.062 in. (−1.5 mm)

(4) out-of roundness: 0.04 in. (1.0 mm)

(5) bow: 0.70% of unit length

DESIGN

UIG-22 LOADINGS

The loadings described in UG-22 shall be considered in the design of graphite pressure vessels and vessel parts. Flexible joints (expansion joints/flexible bellows) should be used for all connections to graphite components to minimize loads on nozzles and other connections.

UIG-23 MAXIMUM ALLOWABLE STRESS VALUES FOR CERTIFIED MATERIAL

(a) The design factor to be used for graphite pressure vessels shall be not less than 6.0 for parts subjected to tensile stresses.

(b) The maximum allowable tensile and compressive stress values to be used in design shall be the average value at the design temperature stated in the CMQ minus 20%, divided by the design factor of 6.0 (7.0 for lethal service; see UIG-60).

(c) The maximum compressive stress in impregnated graphite under the gasket of a flanged joint resulting from the design bolt load W (see Mandatory Appendix 2) shall be limited to 60% of the average compressive strength value at the design temperature that is stated in the CMQ.

UIG-27 THICKNESS OF CYLINDRICAL SHELLS MADE OF CERTIFIED MATERIALS UNDER INTERNAL PRESSURE

The minimum thickness or the maximum allowable working pressure of cylindrical shells, made of certified materials and subject to internal pressure, shall be calculated in accordance with the equations in UG-27 or Mandatory Appendix 1, as applicable, using a joint efficiency of E = 1.0. As installed, the minimum tube wall thickness shall be greater than or equal to the calculated minimum value.

UIG-28 EXTERNAL PRESSURE

(a) Out of Roundness Less Than 0.5%

The maximum allowable external pressure shall not be greater than that computed by the following formula when the out-of-roundness is less than or equal to 0.5%.

$$P_e = 5S_t\frac{t}{D}$$

where

D = nominal outside diameter, in. (mm)
P_e = maximum allowable external pressure, psi (MPa)
S_t = maximum allowable tensile stress, psi (MPa)
t = nominal wall thickness, in. (mm)

Provided by IHS under license with ASME
No reproduction or networking permitted without license from IHS
Licensee=Chevron Phillips Chemical Co LP/5956674001
Not for Resale, 11/09/2014 20:41:36 MST

(b) Out-of-Roundness Greater Than 0.5%

The maximum allowable external pressure shall not exceed that computed by the following formula when the out-of-roundness is greater than 0.5%.

$$P_e = 2S_c\frac{t}{D}\left[\frac{1}{1 + \frac{1.5u\left(1 - 0.2\frac{D}{L}\right)D}{100t}}\right]$$

where

D = inside diameter of cylindrical shell

L = design length of a vessel or tube section between lines of support, in. (mm)

S_c = allowable compressive stress (= 2.5 times the allowable tensile stress S_t), psi (MPa)

$u = 2\frac{D_{i\,\max} - D_{i\,\min}}{D_{i\,\max} + D_{i\,\min}}100$, % out-of-roundness

UIG-29 EULER BUCKLING OF EXTRUDED GRAPHITE TUBES

The requirements of UHX-14.5.9(b) shall apply. To determine S_y for yield strength, the tensile strength value as determined in accordance with UIG-84 shall be multiplied by a value of 0.55 to establish a yield equivalent value.

UIG-34 CALCULATING FLAT HEADS, COVERS, AND TUBESHEETS

The minimum thickness of flat heads and covers shall conform to the following requirements.

(a) The minimum required thickness of a graphite flat head or cover held in place by a bolted steel backing plate causing an edge moment shall be calculated by the following formula [see Figure UG-34, illustration j]:

$$t = G\sqrt{\frac{0.3P}{S_t} + \frac{1.9Wh_g}{S_tG^3}}$$

where

G = the diameter at the location of the gasket load reaction, as defined in this Division

h_g = gasket moment arm, equal to the radial distance from the centerline of the bolts to the line of the gasket reaction as shown in Table 2-5.2

P = design pressure, psi (MPa)

S_t = allowable tensile stress, psi (MPa)

t = minimum required thickness, in. (mm)

W = total bolt load

(b) Calculation Procedure for Tubesheets

(1) Scope. This procedure describes how to use the rules of UHX-13 to design tubesheets for graphite heat exchangers. These rules cover the design of tubesheets that have one stationary tubesheet (fixed end) and one floating tubesheet (floating end) as shown in Figure UIG-34-1. Stationary tubesheets shall be Configuration g as shown in Figure UIG-34-2, and floating tubesheets shall be Configuration G as shown in Figure UIG-34-3.

(2) Conditions of Applicability. In addition to the conditions of applicability given in UHX-10, the following conditions of applicability apply:

(-a) There shall be no untubed lanes.

(-b) There shall be no pass partition grooves.

(-c) The tubes shall not be considered in the calculation of the ligament efficiency.

(-d) The tubesheet thickness to tube pitch ratio (h/p) shall be greater than or equal to 2.0.

(-e) The tubesheets shall be the same material.

(3) Nomenclature. The nomenclature shall be the same as that given in UHX-13.3 with the following modifications:

a_c = radial channel dimension
Configurations g and G: $a_c = G_c/2$

a_s = radial shell dimension
Configuration g: $a_s = G_s/2$
Configuration G: $a_s = a_c$

G_1 = midpoint of contact between the split shear ring and tubesheet

J = ratio of spring rigidity to shell axial rigidity (J = 1.0 if there are no springs)

K_J = axial rigidity of springs

(4) Design Considerations. The design considerations given in UHX-13.4 apply, except as follows:

(-a) Both tubesheets shall be considered simply supported.

(-b) The calculation shall be performed for the stationary tubesheet and for the floating tubesheet. Since the edge configurations of the stationary and floating tubesheets are different, the data may be different for each set of calculations. However, the conditions of applicability given in (2) must be maintained. For the stationary tubesheet, diameters A, G_s, and G_c shall be taken from Figure UIG-34-2. For the floating tubesheet, diameters A, G_o, and G_1 shall be taken from Figure UIG-34-3, and the radial shell dimension as shall be taken equal to a_c.

(-c) If the exchanger does not use springs to accommodate the differential thermal expansion, only Loading Cases 1 through 3 shall be considered; otherwise, all the loading cases shall be considered.

(5) Calculation Procedure. The calculation procedure outlined in UHX-13.5 shall be performed accounting for the following modifications.

(-a) Perform Step 1, except that D_o and μ shall be determined from UHX-11.5.1(b). μ^* and h'_g are not required.

Provided by IHS under license with ASME
No reproduction or networking permitted without license from IHS
Licensee=Chevron Phillips Chemical Co LP/5956674001
Not for Resale, 11/09/2014 20:41:36 MST

Figure UIG-34-1
Typical Graphite Heat Exchanger

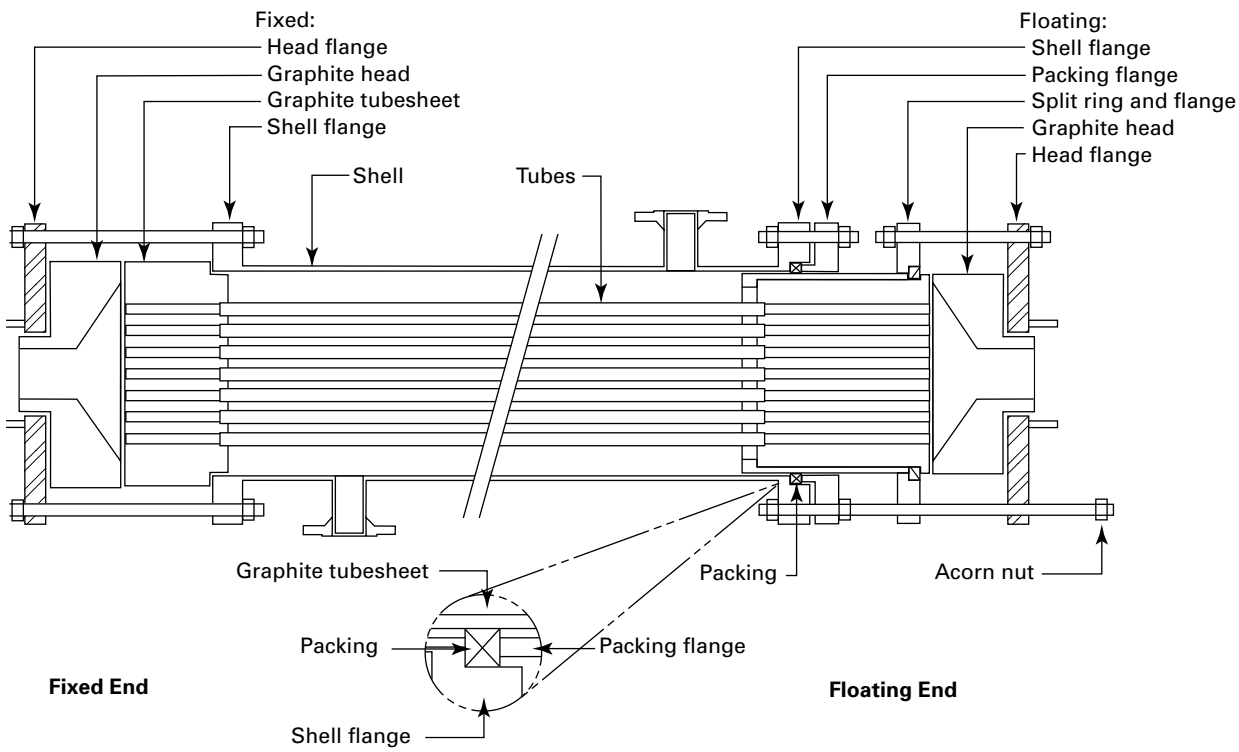

(-b) In Step 2, set $\beta_s = 0$, $k_s = 0$, $\lambda_s = 0$, $\delta_s = 0$ and $\beta_c = 0$, $k_c = 0$, $\lambda_c = 0$, $\delta_c = 0$. If the exchanger does not use springs to accommodate the differential thermal expansion, do not calculate K_s, K_b, $K_{s,t}$, and J.

(-c) Perform Step 3, except that E^*/E and ν^* shall be determined for $h/p = 2.0$.

(-d) Perform Step 4. If the exchanger does not use springs to accommodate the differential thermal expansion, do not calculate Q_{Z1}, Q_{Z2}, and U.

(-e) Perform Step 5. If the exchanger does not use springs to accommodate the differential thermal expansion, set $\gamma = 0$. Use the following for γ_b.

Configuration g: $\gamma_b = \dfrac{G_c - G_s}{D_o}$

Configuration G: $\gamma_b = \dfrac{G_c - G_1}{D_o}$

(-f) Calculate P_e using either (-1) or (-2) below:

(-1) If the exchanger uses springs to accommodate the differential thermal expansion, perform Step 6 using $D_J = D_s$ in the equation for P_s'.

(-2) If the exchanger does not use springs to accommodate the differential thermal expansion, do not perform Step 6 and use the following equation for P_e:

$$P_e = P_s\left(1 - \rho_s^2\right) - P_t$$

(-g) Perform Step 7 using $\mu^* = \mu$ and $h_g' = 0$.

(-h) Perform Step 8.

(-i) Perform Step 9.

(-j) If the exchanger uses springs to accommodate the differential thermal expansion, perform Step 10.

UIG-36 OPENINGS AND REINFORCEMENTS

The rules for the reinforcement of openings in graphite pressure vessels and vessel parts shall be used in conjunction with the general requirements of Openings and Reinforcements in Part UG of this Division insofar as they are applicable to graphite pressure vessels. Unacceptable nozzle configurations include those shown in Figure UIG-36-1. The acceptable nozzle configurations include, but are not limited to, those shown in Figure UIG-36-2.

Provided by IHS under license with ASME
No reproduction or networking permitted without license from IHS
Licensee=Chevron Phillips Chemical Co LP/5956674001
Not for Resale, 11/09/2014 20:41:36 MST

Figure UIG-34-2
Configuration g Stationary Tubesheet

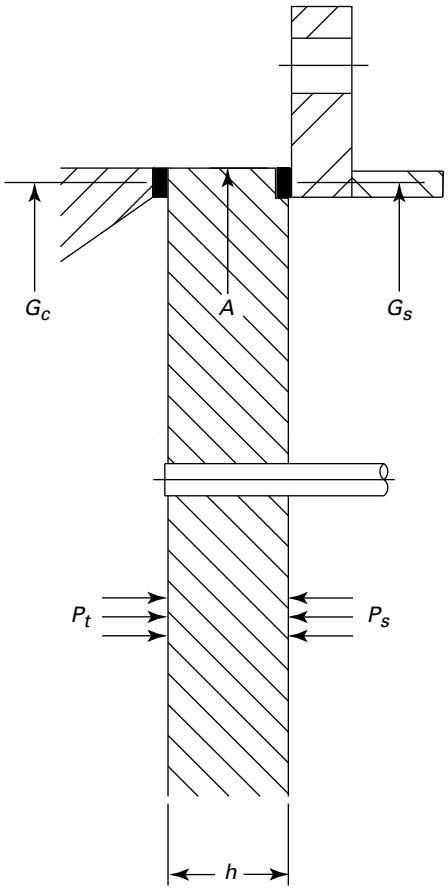

Figure UIG-34-3
Configuration G Floating Tubesheet

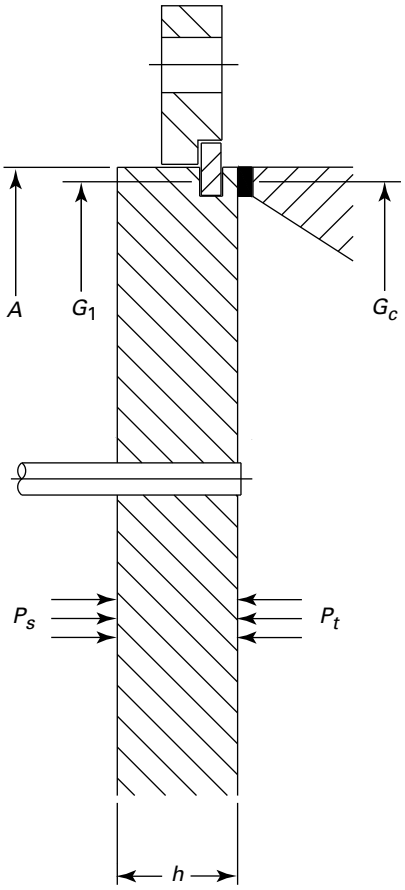

Provided by IHS under license with ASME
No reproduction or networking permitted without license from IHS
Licensee=Chevron Phillips Chemical Co LP/5956674001
Not for Resale, 11/09/2014 20:41:36 MST

Figure UIG-36-1
Unacceptable Nozzle Attachment Details

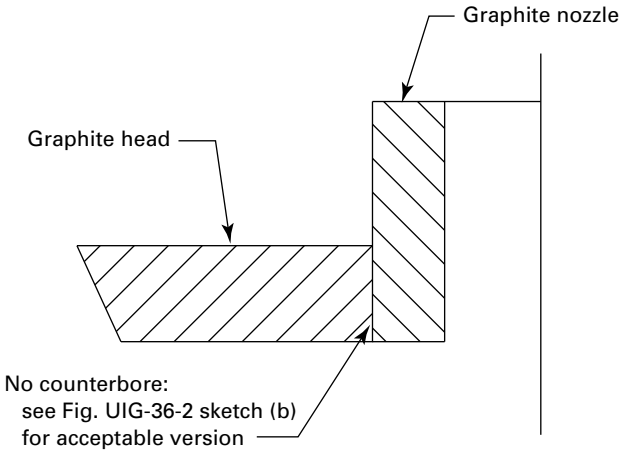

(a)

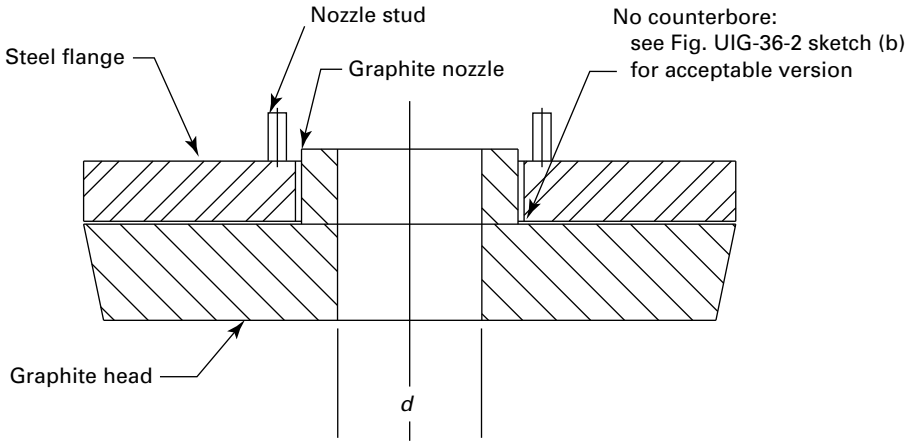

(b)

Provided by IHS under license with ASME
No reproduction or networking permitted without license from IHS
Licensee=Chevron Phillips Chemical Co LP/5956674001
Not for Resale, 11/09/2014 20:41:36 MST

Figure UIG-36-2
Some Acceptable Nozzle Attachment Details in Impregnated Graphite Pressure Vessels

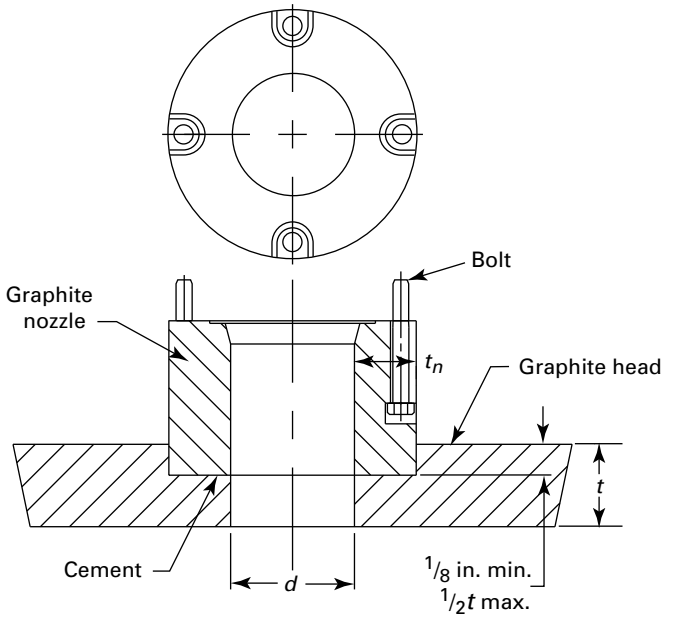

(a) Insert Joint

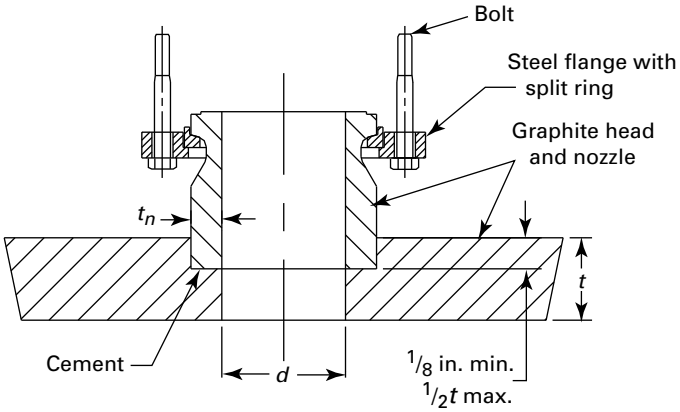

(b) Split Ring

Provided by IHS under license with ASME
No reproduction or networking permitted without license from IHS
Licensee=Chevron Phillips Chemical Co LP/5956674001
Not for Resale, 11/09/2014 20:41:36 MST

Figure UIG-36-2
Some Acceptable Nozzle Attachment Details in Impregnated Graphite Pressure Vessels (Cont'd)

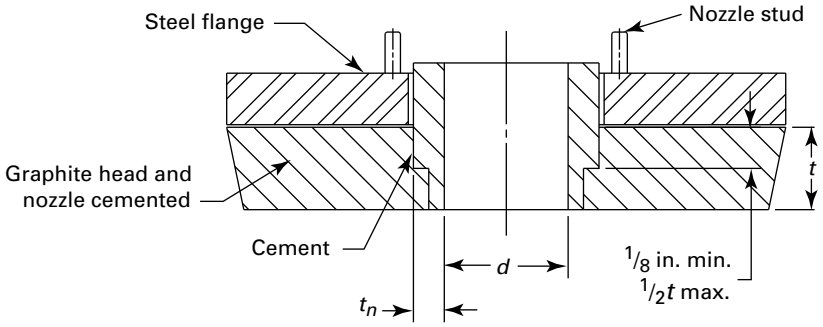

(c) Deep Counterbore

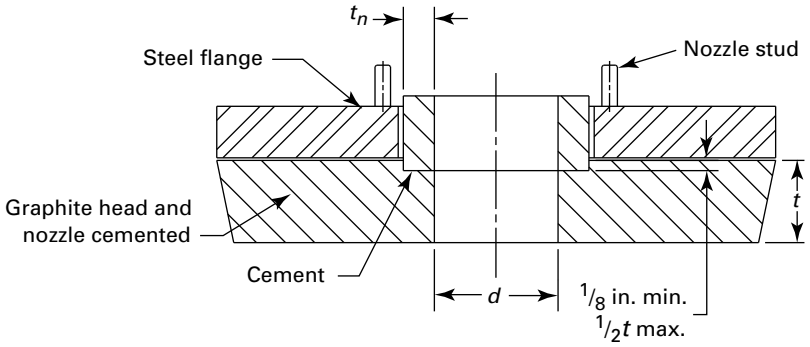

(d) Shallow Counterbore

Provided by IHS under license with ASME
No reproduction or networking permitted without license from IHS
Licensee=Chevron Phillips Chemical Co LP/5956674001
Not for Resale, 11/09/2014 20:41:36 MST

Figure UIG-36-2
Some Acceptable Nozzle Attachment Details in Impregnated Graphite Pressure Vessels (Cont'd)

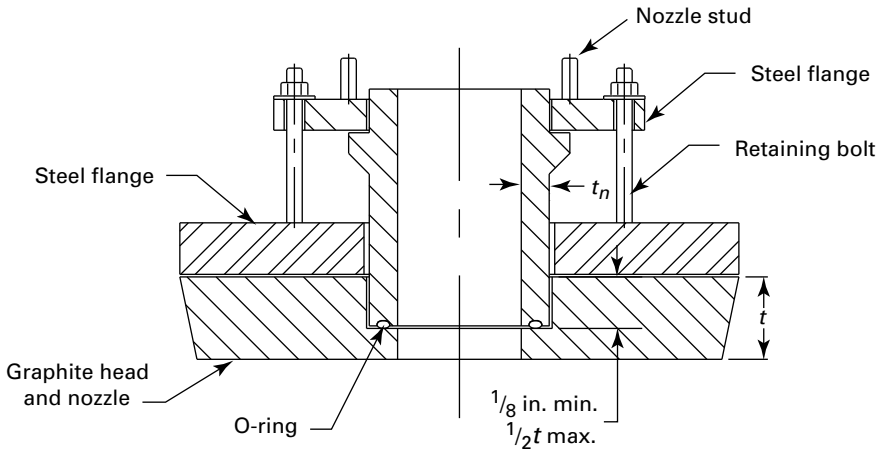

(e) O-Ring

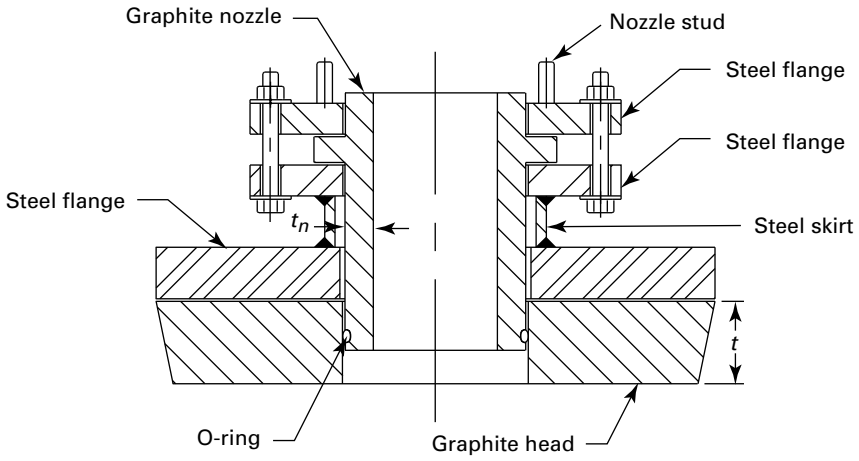

(f) O-Ring

Provided by IHS under license with ASME
No reproduction or networking permitted without license from IHS
Licensee=Chevron Phillips Chemical Co LP/5956674001
Not for Resale, 11/09/2014 20:41:36 MST

Figure UIG-36-2
Some Acceptable Nozzle Attachment Details in Impregnated Graphite Pressure Vessels (Cont'd)

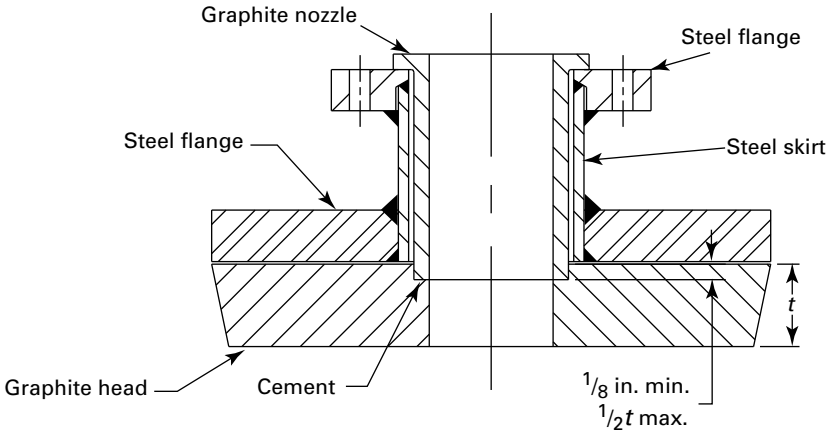

(g) Shrouded Flanged

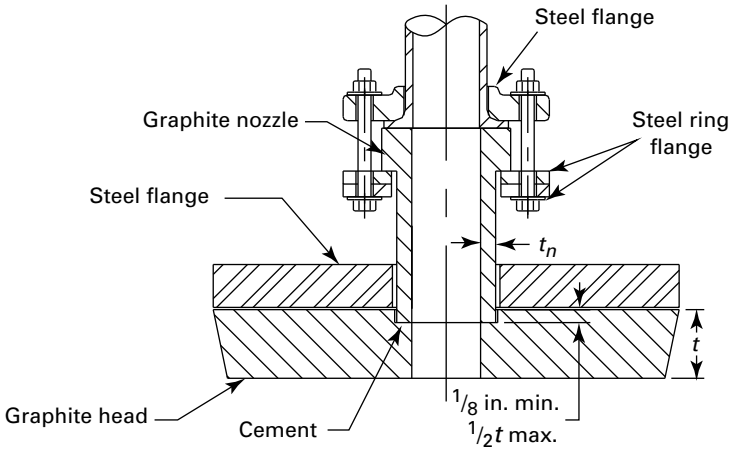

(h) Split Ring Flanged

Provided by IHS under license with ASME
No reproduction or networking permitted without license from IHS
Licensee=Chevron Phillips Chemical Co LP/5956674001
Not for Resale, 11/09/2014 20:41:36 MST

UIG-45 NOZZLE NECK THICKNESS

The minimum nozzle neck thickness shall be $\frac{1}{2}$ in. (13 mm) for nozzles of 3 in. (75 mm) nominal inside diameter or larger, and $\frac{1}{4}$ in. (6 mm) for nozzles less than 3 in. (75 mm) nominal inside diameter, but in no case less than the thickness required by UIG-27 or UIG-28 as appropriate.

UIG-60 LETHAL SERVICE

Graphite pressure vessels and vessel parts to be used for lethal service, as defined in UW-2(a), shall meet the following additional requirements:

(a) The design factor shall be 7.0 for lethal service.

(b) In addition to the testing requirements in Table UIG-84-1, all graphite components for lethal service, excluding tubes, shall be tested per UIG-84 requirements at room temperature to determine mechanical properties.

(c) All interior corners of pressure components shall have a $\frac{1}{2}$ in. (13 mm) minimum radius.

(d) Exposed graphite shall be shielded with a metal shroud. This shroud shall be constructed per the rules of this Division, but is exempt from NDE and pressure testing requirements.

(e) Hydro test pressure shall not be less than 1.75 MAWP.

It is strongly recommended that owners/users monitor the permeability of graphite equipment in lethal service.

FABRICATION

UIG-75 GENERAL REQUIREMENTS

The fabrication of graphite pressure vessels and vessel parts shall conform to the general requirements of this Division and to the specific requirements for Fabrication given in Part UIG.

(a) Each Manufacturer shall be responsible for the quality of the materials, processes, and personnel used by their organization, and shall conduct tests of the processes to ensure that materials and completed joints comply with the requirements of this Part.

(b) The design of pressure containing and structural cemented joints shall be limited to those qualified in accordance with the Manufacturer's cementing procedure qualification (see UIG-79).

(c) No production cementing shall be undertaken until after the cementing procedures and the cementing technicians to be used in production have been qualified.

(d) Each cementing technician shall be assigned an identifying number, letter, or symbol by the Manufacturer, which shall be used to identify his work.

(e) The Manufacturer shall maintain a continuity record for each cementing technician showing the date, the results of tests, and the identification mark assigned to each. These records shall be certified by the Manufacturer and shall be accessible to the Authorized Inspector.

(f) The cementing technician shall mark the work, or the Manufacturer may record the cementing technician's I.D. number on a drawing or similar document traceable to the joint or seam. When multiple operators are cementing tubes to tubesheets, the Manufacturer shall record all cementing technicians' identification numbers on a drawing or similar document.

(g) The bulk temperature of the material to be joined shall be between 50°F (10°C) and 125°F (52°C) during the cementing operation.

UIG-76 PROCEDURE AND PERSONNEL QUALIFICATION

(a) Material manufacturing shall not be undertaken until after the material specifications have been qualified. Production cementing activities shall not be undertaken until after the cementing procedures and cementing technicians have been qualified (see UIG-79 and UIG-80).

(b) Tensile test specimens shall comply with Figure UIG-76-1, UIG-76-2, UIG-76-3, UIG-76-4, or UIG-76-5.

(c) Tensile tests shall be performed as described in Mandatory Appendix 37.

(d) Compressive strength tests shall be performed as described in Mandatory Appendix 38.

(e) Flexural strength tests shall be performed as described in Mandatory Appendix 36.

UIG-77 CERTIFIED MATERIAL SPECIFICATION

(a) The Manufacturer shall prepare a Certified Material Specification (CMS) to ensure that the material meets the requirements of Table UIG-6-1. The CMS shall include the raw materials and processes necessary to manufacture certified material. The CMS shall include all essential and non-essential variables with tolerance ranges.

(b) The Manufacturer shall qualify the Certified Material Specification (CMS) using the Certified Material Qualification (CMQ) form. Ten specimens are required for each test.

(c) Any change to any essential variable, including the tolerance range, requires requalification of the CMS.

(d) The essential variables to be included in the qualification of a CMS are as follows:

(1) Carbon or graphite material:
- *(-a)* manufacturer
- *(-b)* grade or number
- *(-c)* density range
- *(-d)* grain size range

(2) Impregnation agent:
- *(-a)* manufacturer
- *(-b)* type / resin system
- *(-c)* specific gravity range
- *(-d)* viscosity range at room temperature
- *(-e)* significant ingredients with range

(3) Impregnation or curing process:
- *(-a)* process pressure ranges
- *(-b)* process time ranges
  - *(-1)* under vacuum

Provided by IHS under license with ASME
No reproduction or networking permitted without license from IHS
Licensee=Chevron Phillips Chemical Co LP/5956674001
Not for Resale, 11/09/2014 20:41:36 MST

Figure UIG-76-1
Tension Test Specimen

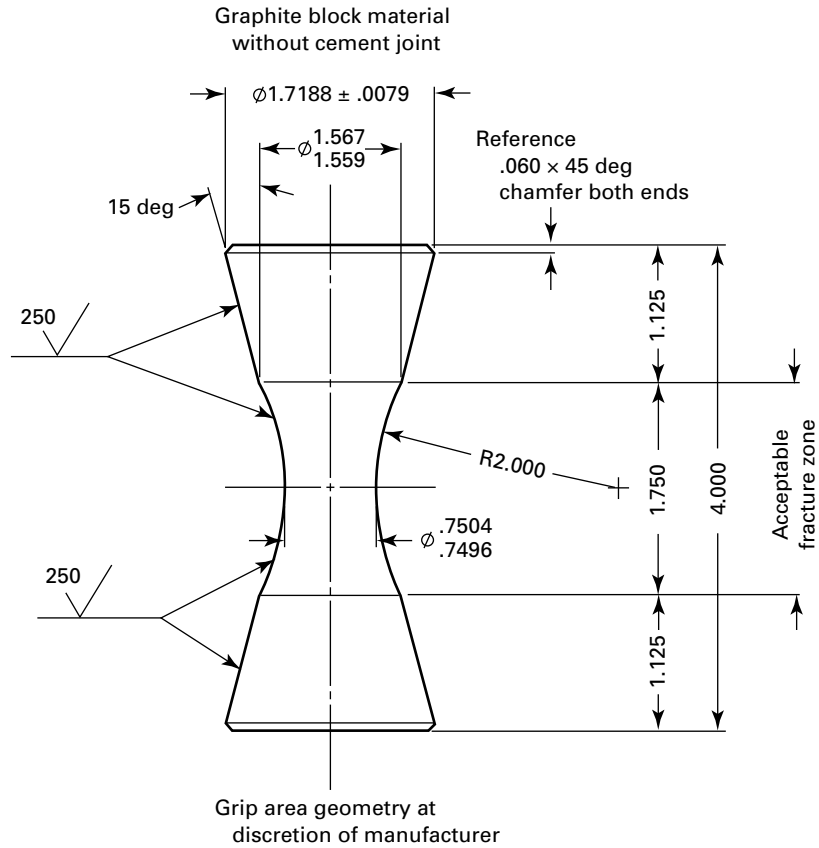

GENERAL NOTES:
(a) All dimensions are in inches.
(b) Except as noted, tolerance = ±.010.

(-2) under pressure

(-3) at temperature

(-c) process temperature ranges

(-d) vacuum ranges

(e) Nonessential variables are those elements that the Manufacturer may include in the CMS to provide direction in producing certified material, but that do not affect the resulting properties of the material. Changes to nonessential variables do not require requalification of the CMS.

(f) Tests to be included for Certified Material Qualification shall include flexural strength (tubes only), compression strength, coefficient of thermal expansion, coefficient of permeability, and tensile strength at both room and at maximum allowable material temperatures.

UIG-78 CERTIFIED CEMENT SPECIFICATION

(a) The Manufacturer shall prepare a Certified Cement Specification (CCS). The CCS shall include the raw materials and processes necessary to manufacturer certified cement. The CCS shall include all essential and nonessential variables with tolerance ranges, including shelf life and storage recommendations.

(b) The manufacturer shall qualify the Certified Cement Specification (CCS) using a Certified Cement Qualification Form (CCQ). The CCQ shall include all essential variables and the actual test results.

(c) Any change to any essential variable, including the tolerance range, shall require requalification of the CCS.

(d) The essential variables to be included in the qualification of a CCS are as follows:

(1) Cement material data

(-a) filler material

(-b) resin material

(-c) accelerator material

(2) Curing process (i.e., time, temperature)

(e) Nonessential variables are those elements that the Manufacturer may include in the CCS to provide direction in producing certified cement, but that do not affect the resulting properties of the material. Changes to nonessential variables do not require requalification of the CCS.

Provided by IHS under license with ASME
No reproduction or networking permitted without license from IHS
Licensee=Chevron Phillips Chemical Co LP/5956674001
Not for Resale, 11/09/2014 20:41:36 MST

Figure UIG-76-2
Cement Material Tension Test Specimen

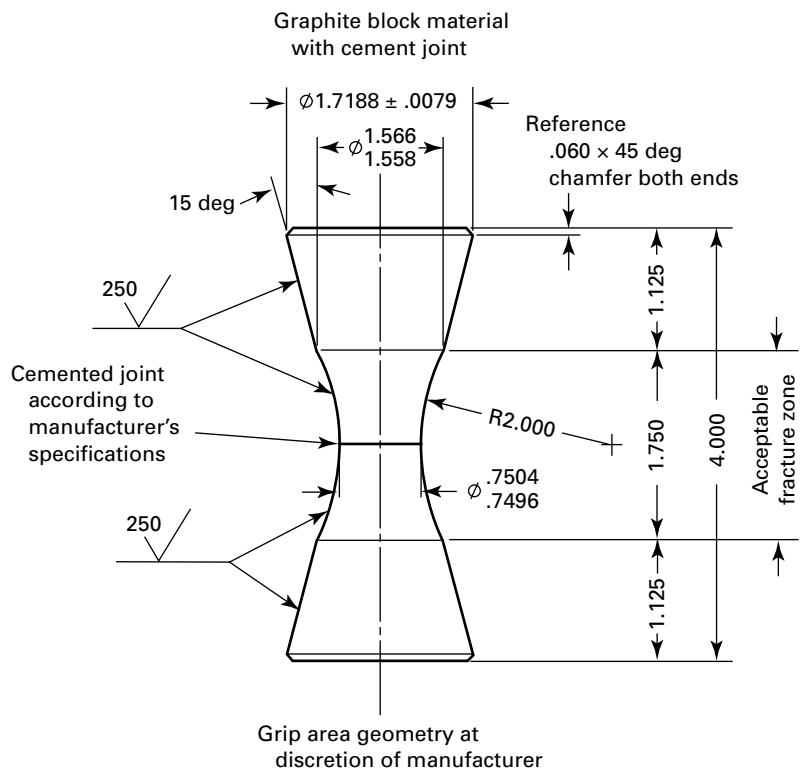

GENERAL NOTES:
(a) All dimensions are in inches.
(b) Except as noted, tolerance = ±.010.

The Certified Cement Specification (CCS) qualification shall include tensile strength testing at both room and maximum allowable material temperatures. (See Mandatory Appendix 37.)

UIG-79 CERTIFIED CEMENTING PROCEDURE SPECIFICATION

(a) The Manufacturer shall prepare a Cementing Procedure Specification (CPS). The CPS shall include the materials and processes necessary to manufacture items using certified material and certified cement. The CPS shall include all essential and non-essential variables with tolerance ranges.

(b) The Manufacturer shall qualify the Cementing Procedure Specification using a Cementing Procedure Qualification (CPQ). The CPQ shall include all essential variables and the actual test results.

(c) Any change to any essential variable, including the tolerance range, shall require requalification of the CPS.

(d) The essential variables to be included in the qualification of a CPS are as follows:

(1) joint design with clearances

(2) certified cement specification

(3) surface preparation

(4) curing time and temperature range

(e) Tests to be included for Certified Cementing Procedure Qualification (CPQ) shall include tensile strength (see Mandatory Appendix 37).

UIG-80 CEMENTING TECHNICIAN QUALIFICATION

(a) A cementing technician is any individual who is responsible for proper joint preparation, cleaning of parts to be joined, mixing cement, applying cement, securing the joint during curing, and monitoring the curing process.

(b) The Manufacturer shall qualify technicians to be used in fabrication of graphite vessels and parts. The Manufacturer shall document qualification of the technician using a Cementing Technician Qualification (CTQ) form.

(c) Tests to be included for Cement Technician Qualification shall include four tensile strength tests using specimens shown in Figure UIG-76-2.

(d) Technicians shall be requalified when they have not been actively engaged in production of graphite pressure vessels within 6 mo or when there is a reason to question their ability to complete a sound joint.

Provided by IHS under license with ASME
No reproduction or networking permitted without license from IHS
Licensee=Chevron Phillips Chemical Co LP/5956674001
Not for Resale, 11/09/2014 20:41:36 MST

Figure UIG-76-3
Tube to Tubesheet Tension Test Specimen

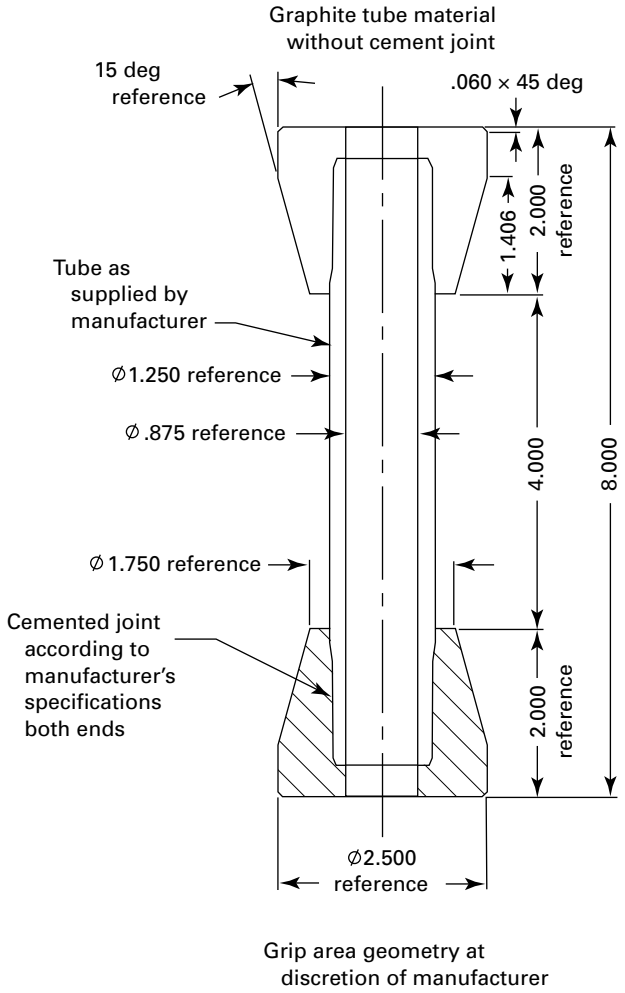

GENERAL NOTES:
(a) All dimensions are in inches.
(b) Except as noted, tolerance = ±.010.

Provided by IHS under license with ASME
No reproduction or networking permitted without license from IHS
Licensee=Chevron Phillips Chemical Co LP/5956674001
Not for Resale, 11/09/2014 20:41:36 MST

Figure UIG-76-4
Tube Cement Joint Tension Test Specimen

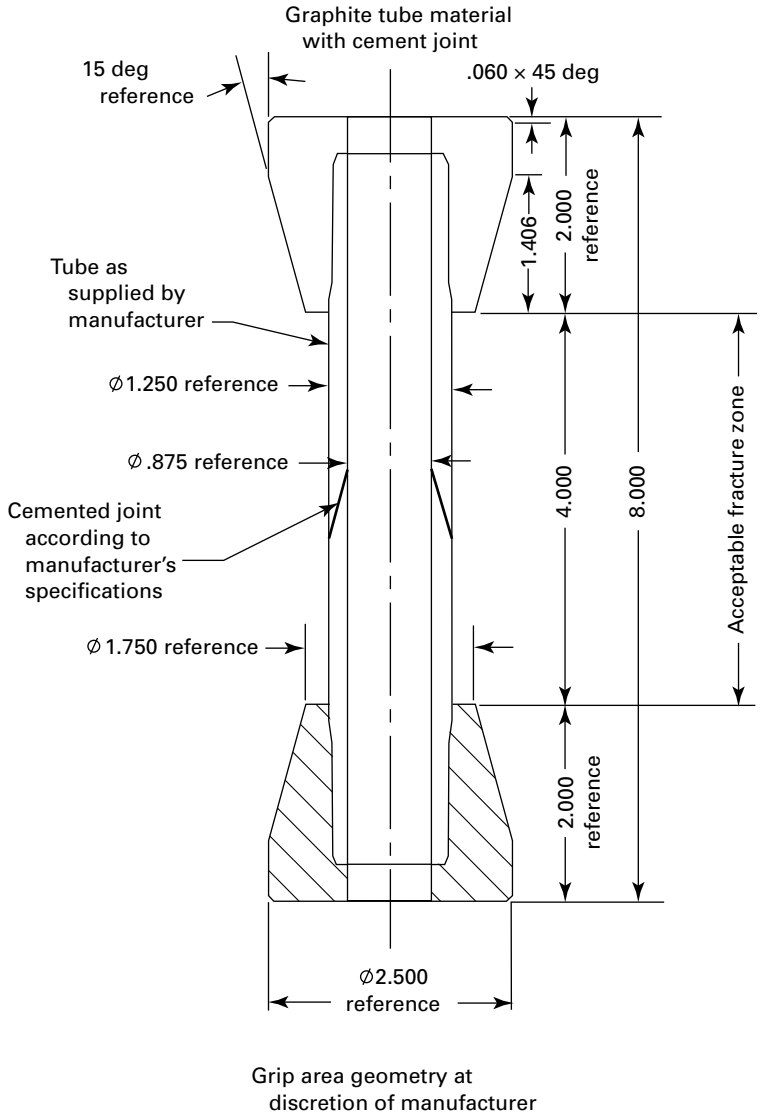

GENERAL NOTES:
(a) All dimensions are in inches.
(b) Except as noted, tolerance = ±.010.

--`,,,``,,`,,`,,,,,`,`,``,,`,,`,,,``-`-`,,`,,`,`,,`---
Provided by IHS under license with ASME
No reproduction or networking permitted without license from IHS
Licensee=Chevron Phillips Chemical Co LP/5956674001
Not for Resale, 11/09/2014 20:41:36 MST

Figure UIG-76-5
Tube Tension Test Specimen

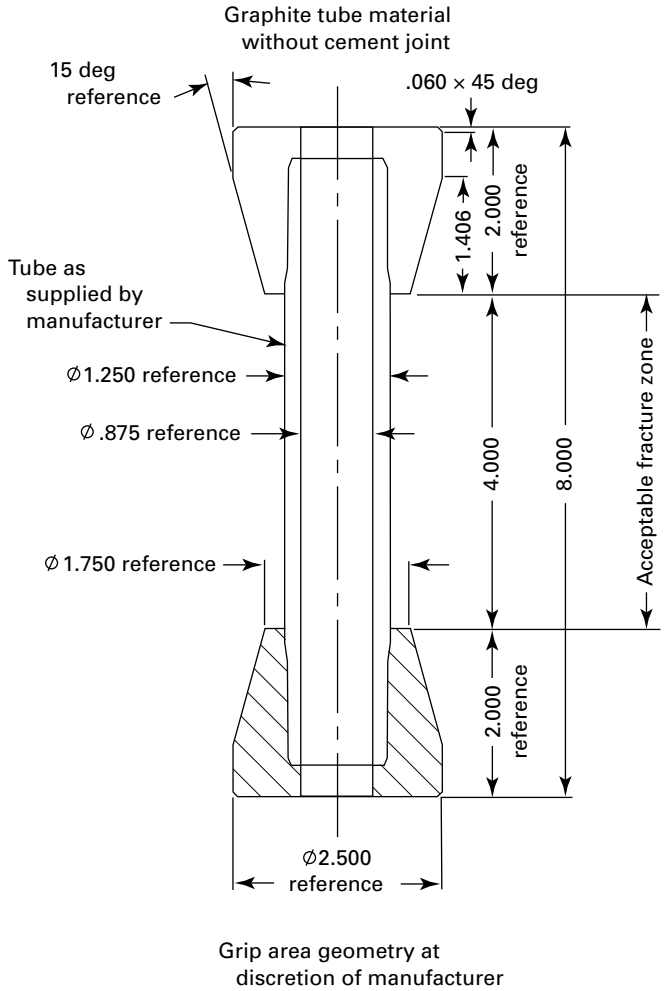

GENERAL NOTES:
(a) All dimensions are in inches.
(b) Except as noted, tolerance = ±.010.

UIG-81 REPAIR OF MATERIALS

(a) Materials may be repaired using qualified procedures provided that the concurrence of the Authorized Inspector is first obtained for the method and extent of repairs. Defective material that cannot be satisfactorily repaired shall be rejected.

(b) Only certified materials shall be used for repairs, and such materials shall possess properties that equal or exceed the properties of the material to be repaired. UIG-97 provides relevant rules for methods and standards.

UIG-84 REQUIRED TESTS

(a) The required tests of certified material shall be conducted at the frequency specified in Table UIG-84-1.

(b) Block and Compound Material

(1) The tensile strength test defined in Mandatory Appendix 37 and the compressive strength test defined in Mandatory Appendix 38 shall be used to establish the strength of certified block material.

(2) The test specimens shall be taken in accordance with Mandatory Mandatory Appendices 37 and 38.

(3) For each lot of material, the tensile and compressive strength values shall be within 20% of the average value determined during the certified material qualification test.

(4) When the average value of the five specimens tested in accordance with UIG-84 exceeds the minimum value permitted for a single specimen, and when the value

Provided by IHS under license with ASME
No reproduction or networking permitted without license from IHS
Licensee=Chevron Phillips Chemical Co LP/5956674001
Not for Resale, 11/09/2014 20:41:36 MST

Table UIG-84-1
Test Frequency for Certified Materials

Property	Testing Frequency
Flexural strength	Tubes: Tested property at time of certified material specification, for each lot [Note (1)], and at minimum, every 3 mo.
Compressive strength	(a) Tubes: Only at time of certified material qualification, thereafter calculated property based upon specific relationship with flexural strength tests.
	(b) Blocks: Tested property at time of certified material specification, for each lot and at minimum, every 3 mo (shall be across the grain).
Tensile strength	(a) Tubes: Only at time of certified material qualification, thereafter calculated property based upon specific relationship with flexural strength tests.
	(b) Blocks: Tested property at time of certified material specification, for each lot and at minimum, every 3 mo (shall be across the grain).
Tensile strength at maximum material temperature	At time of certified material qualification for tubes, blocks, and cement (blocks shall be across the grain). (This test may be used in lieu of the room temperature lot test.)
Cement tensile strength	The cement manufacturing process shall be certified. Based upon this certification, the test shall be performed at the time of certified material qualification and verified by testing five samples every 3 mo.
Coefficient of thermal expansion	The value shall be determined by tests performed at the time of certified material qualification. The value shall be made available by the Manufacturer.
Coefficient of permeability	The value shall be determined by tests performed at the time of certified material qualification. The value shall be made available by the Manufacturer.

NOTE:
(1) A "lot" is that quantity of certified material produced within a 3-mo period from a specific grade of graphite and resin that meets established specifications for material properties. Furthermore, the impregnation process must be similarly controlled to a process specification.

of one specimen is below the minimum value permitted for a single specimen, a retest of five additional specimens shall be made. If the second set fails, the batch is rejected.

(5) The tensile strength and compressive strength values obtained in accordance with UIG-84 shall be equal to or greater than the values listed in Table UIG-6-1.

(c) Tube Material

(1) The tensile strength test defined in Mandatory Appendix 37 shall be used to establish the strength of certified tube material.

(2) The test specimens from the tube material shall be in accordance with Mandatory Appendix 37.

(3) For each lot of material, the strength values shall be within 20% of the average value determined during the certified material qualification tests.

(4) For each lot of tube material, the flexural strength (see Mandatory Appendix 36) shall be multiplied by the factors determined during material qualification to calculate the tensile and compressive strengths.

(5) When the average value of the five specimens tested in accordance with UIG-84 exceeds the minimum value permitted for a single specimen, and when the value for one specimen is below the minimum value permitted for a single specimen, a retest of five additional specimens shall be made. If the second set fails, the batch shall be rejected.

(6) The tensile strength and flexural strength values obtained in accordance with UIG-84 shall be equal to or greater than the values listed in Table UIG-6-1.

(7) After impregnation and prior to cementing, all extruded heat exchanger tubes shall be subjected to an internal pressure test at a minimum of 290 psi (2.0 MPa) or 2 times the design pressure, whichever is greater. The AI is not required to witness this test. The results of this test shall be documented by the impregnated tube Manufacturer.

(d) Cement Material

(1) The tensile strength test is defined in Mandatory Appendix 37.

(2) The test specimens shall comply with Figure UIG-76-2 for tension testing.

(3) For each lot of material, the strength values shall be within 20% of the average value determined during the certified material qualification tests.

(4) When the average value of the five specimens tested in accordance with UIG-84 exceeds the minimum value permitted for a single specimen, and when the value for one specimen is below the minimum value permitted for a single specimen, a retest of five additional specimens shall be made. If the second set fails, the batch is rejected.

(5) The tensile strength values obtained in accordance with UIG-84 shall be equal to or greater than the values listed in Table UIG-6-1.

Provided by IHS under license with ASME
No reproduction or networking permitted without license from IHS
Licensee=Chevron Phillips Chemical Co LP/5956674001
Not for Resale, 11/09/2014 20:41:36 MST

INSPECTION AND TESTS

UIG-90 GENERAL

The general requirements of UG-90 of this Division apply insofar as these requirements are applicable to graphite pressure vessels.

UIG-95 VISUAL EXAMINATION

(a) Parts, material, finished joints, and completed vessels shall be visually examined by the Manufacturer over the full surface to detect defects. Surfaces that are accessible for visual examination after the vessel is completed need not be examined before completion of the vessel or vessel parts; however, such examination shall occur prior to the final pressure test.

(b) The Manufacturer shall prepare and qualify a written procedure that meets the requirements of Section V, Article 9 (Visual Examination). The procedure qualification shall be subject to and demonstrated to the Authorized Inspector.

(c) The Manufacturer shall designate qualified personnel for Visual Examination.

(d) All cemented nozzles must be examined to ensure that cement has flowed around the entire perimeter and that full penetration through the depth of the joint has been achieved.

UIG-96 QUALIFICATION OF VISUAL EXAMINATION PERSONNEL

(a) Personnel who perform the Visual Examinations shall be qualified and certified for this method in accordance with a program established by the employer of the personnel being certified, which shall be based on the following minimum requirements:

(1) instruction in the fundamentals of the visual examination method.

(2) on-the-job training to familiarize the personnel with the appearance and interpretation of indications of defects. The length of time for such training shall be sufficient to ensure adequate assimilation of the knowledge required.

(3) An eye examination shall be performed per the requirements of ASME Section V, Article 9 to determine near-distance acuity of personnel to perform the required examination.

(4) Upon completion of (1) and (2) above, the personnel shall be given an oral or written examination and performance examination to determine if the personnel are qualified to perform the required examination and interpret the results.

(5) Certified personnel whose work has not included performance of visual examination for a period of 1 yr or more shall be re-certified by completing (1) through (4) above.

UIG-97 ACCEPTANCE STANDARDS AND DOCUMENTATION

(a) The surface shall be free of any visible laminations, spalling, or cracks. Cracks in tubes shall not be repaired and shall be considered cause for rejection.

(b) For tubes, scratches shall not exceed $^1/_{32}$ in. (0.8 mm) in depth. For all other material, scratch depth shall not exceed $^1/_8$ in. (3 mm).

(c) Unacceptable discontinuities may be repaired by removing the discontinuity in its entirety, and the material repaired in accordance with a repair procedure written and qualified by the Manufacturer with the concurrence of the Authorized Inspector. The repair shall neither result in sharp edges nor in the finished thickness being less than the minimum design thickness. Cracks and voids shall not be repaired by adding cement only.

(d) The examination shall be documented in accordance with Section V, Article 9, T-990, Documentation.

UIG-81 provides rules for Repair of Material.

UIG-99 PRESSURE TESTS

Completed pressure vessels shall be subjected to a hydrostatic test in accordance with the requirements of UG-99, except that the test pressure shall not be less than 1.5 times design pressure (1.75 for lethal service vessels). The lowest ratio for impregnated graphite material for the stress value at the test temperature to the stress value at the design temperature shall be taken as 1.0. The inspection for leaks of all joints and connections shall be made at a pressure not less than the design pressure.

UIG-112 QUALITY CONTROL REQUIREMENTS

The Manufacturer's quality control manual shall, in addition to the provisions of Mandatory Appendix 10, include the following:

(a) The Authorized Inspector may, with cause, call for the requalification of procedures and personnel.

(b) The Manufacturer shall include sufficient provision for material control to ensure that all material is traceable to the manufacturing lot number. The Manufacturer shall maintain traceability of all materials used in construction of vessels and vessel parts until such time that the Manufacturer's Data Report has been completed and the Certification Mark applied.

UIG-115 MARKINGS AND REPORTS

The provisions of UG-115 through UG-120 shall apply to complete graphite pressure vessels or parts except as modified in UIG-116 through UIG-121.

UIG-116 REQUIRED MARKINGS

(a) Each graphite pressure vessel and graphite pressure vessel part requiring inspection under this Part shall be marked in accordance with the requirements of UG-116 except as modified herein.

Provided by IHS under license with ASME
No reproduction or networking permitted without license from IHS
Licensee=Chevron Phillips Chemical Co LP/5956674001
Not for Resale, 11/09/2014 20:41:36 MST

(b) The type of construction shall be indicated directly below the Certification Mark by applying the letter "G", indicating graphite pressure vessel or pressure vessel part.

(c) The stamping may be applied to metallic parts, a nameplate, or a permanent impression on the graphite using cement (see Nonmandatory Appendix MM). Nameplates may be attached to either metallic or graphite parts.

(d) For multiple identical items from a single lot, such as tubes, the Manufacturer shall apply the partial stamping nameplate to the bundle or container. Each piece shall be identified by permanent marking with the Manufacturer's name, date, and serial number. (A coded marking system with traceability of these data is acceptable.) The subsequent Manufacturer shall maintain the nameplate until all of the multiple pieces have been used, and shall then obliterate the Certification Mark with the U Designator from the nameplate. Obliteration of the Certification Mark with the U Designator stamping shall be witnessed by the Authorized Inspector.

NOTE: Permanent shall mean any method of marking that will ensure that the marking is present until the item is incorporated into a completed vessel, and the Authorized Inspector has signed the data report.

UIG-120 DATA REPORTS

(a) Form U-1B, Manufacturer's Supplementary Data Report for Graphite Pressure Vessels, shall be completed and certified by the Manufacturer, and shall be signed by the Authorized Inspector for each graphite pressure vessel marked with the Certification Mark with the U Designator. Form U-1B shall be completed as otherwise required for Data Reports as specified in UG-120.

(b) Form U-1B shall be attached to and referenced on the applicable Data Report specified in UG-120.

UIG-121 RECORDS

The Manufacturer shall maintain records of the procedures employed in fabricating vessels and vessel parts and in cementing parts together. The Manufacturer shall also maintain records of the tests and their results by which the Procedure Specifications were qualified for fabrication. The Manufacturer shall maintain the records of design calculations, certified material test reports, visual examination, the procedure specifications that detail the materials used, fabrication procedures and quality control records. All records shall be dated and shall be certified by the Manufacturer and made available to the Authorized Inspector. The Manufacturer shall keep these records on file for at least 5 yr after production has ceased.

UIG-125 PRESSURE RELIEF DEVICES

The provisions of UG-125 through UG-140 shall apply. The user shall make provisions for the reaction forces from pressure relief devices on graphite components.

--`,,,``,,```,,,,`,``,`,``,,`,,```-`-`,,`,,`,`,,`---

Provided by IHS under license with ASME

No reproduction or networking permitted without license from IHS

Licensee=Chevron Phillips Chemical Co LP/5956674001
Not for Resale, 11/09/2014 20:41:36 MST

FORM CMQ CERTIFIED MATERIAL QUALIFICATION FORM
(Used in the Construction of Graphite Pressure Vessels)

Certified material qualification no. _____

Qualification of certified material specification (CMS) no. _____

Certified material manufacturer _____ Date _____

Materials:

Raw material manufacturer _____

Material _____

Grade _____

Specification no. _____

Impregnation agent manufacturer _____

Material _____

Grade _____

Specification no. _____

GENERAL NOTE: Test program to certify requirements per Table UIG-6-1.

	Block	Tube Material	Graphite Compound
Tensile strength at room temperature	10 test samples _____	10 test samples _____	10 test samples _____
Tensile strength at maximum allowable material temperature after 1 hr exposure	10 test samples _____	10 test samples _____	10 test samples _____
Flexural strength at room temperature	N/A	10 test samples _____	N/A
Compressive strength room temperature	10 test samples _____	10 test samples _____	10 test samples _____
Coefficient of permeability at room temperature	10 test samples _____	10 test samples _____	10 test samples _____
Coefficient of thermal expansion	10 test samples _____	10 test samples _____	10 test samples _____

NOTES:

(1) All graphite block tensile and compressive samples are tested across grain, and all tube samples are tested with grain.

(2) All test results shall meet the requirements of Table UIG-6-1.

Certified by _____ Date _____

(03/09)

Provided by IHS under license with ASME

No reproduction or networking permitted without license from IHS

Licensee=Chevron Phillips Chemical Co LP/5956674001
Not for Resale, 11/09/2014 20:41:36 MST

FORM CMQ CERTIFIED MATERIAL QUALIFICATION FORM
(Used in the Construction of Graphite Pressure Vessels) (Cont'd)

TEST PROCEDURES AND RESULTS

(a) Flexural strength: See the test method for determining the flexural strength of certified materials using three point loading in Mandatory Appendix 36 (tube).

1. Test performed at _____

By _____ Date _____

	Flexural Strength, psi (MPa)		
Sample No.		**Tube Material**	
1			
2			
3			
4			
5			
6			
7			
8			
9			
10			
Average value			
Test deviation in % from average value			
Permissible deviation		±20%	
UIG-6, minimum value, psi (MPa)		5,700 (39.3)	

(03/09)

Provided by IHS under license with ASME
No reproduction or networking permitted without license from IHS
Licensee=Chevron Phillips Chemical Co LP/5956674001
Not for Resale, 11/09/2014 20:41:36 MST

FORM CMQ CERTIFIED MATERIAL QUALIFICATION FORM
(Used in the Construction of Graphite Pressure Vessels) (Cont'd)

(b) Tensile Strength: See test method in Mandatory Appendix 37.

(1) Fig. UIG-76-1 Block
Fig. UIG-76-5 Tubes

(2) Test Performed at _____

By _____ Date _____

	Tensile Strength, psi (MPa)					
	Room Temperature			Maximum Material Temperature		
Sample No.	Block	Tube	Compound	Block	Tube	Compound
1						
2						
3						
4						
5						
6						
7						
8						
9						
10						
Average value						
Test deviation in % from average value						
Permissible deviation	±20%	±20%	±20%	±20%	±20%	±20%
UIG-6, minimum value, psi (MPa)	2,500 (17.2)	3,800 (26.2)	1,500 (10.3)	2,000 (13.8)	3,000 (20.7)	900 (6.2)

(03/09)

--`,,,``,,,```,,,,`,`,`,,`,,,,```-`-`,,`,,`,`,,`---
Provided by IHS under license with ASME
No reproduction or networking permitted without license from IHS
Licensee=Chevron Phillips Chemical Co LP/5956674001
Not for Resale, 11/09/2014 20:41:36 MST

FORM CMQ CERTIFIED MATERIAL QUALIFICATION FORM
(Used in the Construction of Graphite Pressure Vessels) (Cont'd)

(c) Compressive Strength: See Mandatory Appendix 38 for determining the compressive strength of certified materials.

(1) Test performed at _____

By _____ Date _____

	Compressive Strength, psi (MPa)		
Sample No.	**Block Material**	**Tube Material**	**Graphite Compound Material**
1			
2			
3			
4			
5			
6			
7			
8			
9			
10			
Average value			
Test deviation in % from average value			
Permissible deviation	±20%	±20%	±20%
UIG-6, minimum value, psi (MPa)	6,500 (45)	10,000 (69)	4,500 (31)

(03/09)

--`,,,``,,``,,,,`,``,`,,`,,`,,``-`-`,,`,,`,`,,`---
Provided by IHS under license with ASME
No reproduction or networking permitted without license from IHS
Licensee=Chevron Phillips Chemical Co LP/5956674001
Not for Resale, 11/09/2014 20:41:36 MST

FORM CMQ CERTIFIED MATERIAL QUALIFICATION FORM
(Used in the Construction of Graphite Pressure Vessels) (Cont'd)

(d) Coefficient of Permeability: See Mandatory Appendix 39 for determining the coefficient of permeability of certified materials.

(1) Test performed at _____

By _____ Date _____

	Permeation Rate in in.^{2}/sec (mm^2/s)		
Sample No.	**Block**	**Tube Material**	**Graphite Compound Material**
1			
2			
3			
4			
5			
6			
7			
8			
9			
10			
UIG-6, maximum value, psi (MPa)	4.5×10^{-6} in.^{2}/sec (2.90×10^{-3} mm^2/s)	4.5×10^{-6} in.^{2}/sec (2.90×10^{-3} mm^2/s)	4.5×10^{-6} in.^{2}/sec (2.90×10^{-3} mm^2/s)

(03/09)

Provided by IHS under license with ASME
No reproduction or networking permitted without license from IHS
Licensee=Chevron Phillips Chemical Co LP/5956674001
Not for Resale, 11/09/2014 20:41:36 MST

FORM CMQ CERTIFIED MATERIAL QUALIFICATION FORM
(Used in the Construction of Graphite Pressure Vessels) (Cont'd)

(e) Coefficient of Linear Thermal Expansion: The test method for determining the coefficient of linear thermal expansion is described in Mandatory Appendix 40.

(1) Test temperature: room temperature to 300°F (149°C)

(2) Test performed at _____

By _____ Date _____

	Coefficient of Thermal Expansion (in./in./°F)		
Sample No.	**Block Material**	**Tube Material**	**Graphite Compound Material**
1			
2			
3			
4			
5			
6			
7			
8			
9			
10			

(03/09)

Provided by IHS under license with ASME
No reproduction or networking permitted without license from IHS
Licensee=Chevron Phillips Chemical Co LP/5956674001
Not for Resale, 11/09/2014 20:41:36 MST

FORM CMQ CERTIFIED MATERIAL QUALIFICATION FORM
(Used in the Construction of Graphite Pressure Vessels) (Cont'd)

Record of Qualification Results

CMS no. _____

CMQ no. _____

(1) Physical properties at room temperature:

Physical Properties		Value
Flexural strength, tube	psi (MPa)	
Flexural strength, graphite compound	psi (MPa)	
Tensile strength, block	psi (MPa)	
Tensile strength, tube	psi (MPa)	
Tensile strength, graphite compound	psi (MPa)	
Compressive strength, block	psi (MPa)	
Compressive strength, tube	psi (MPa)	
Compressive strength, graphite compound	psi (MPa)	
Coefficient of permeability	in.^{2}/sec (mm^2/s)	
Coefficient of thermal expansion	in./in./°F (mm/mm/°C)	

(2) Maximum material temperature for this certified material _____

(3) Decrease in tensile strength over temperature range:

The tensile strength decrease shall be considered linear between room temperature and the maximum material temperature.

For this certified material the decrease is _____% per each 10°F (°C) rise above room temperature.

(4) Strength relationship between tensile, flexural, and compressive strength:

Flexural strength _____ psi (MPa) (tubes only)

Tensile strength _____ psi (MPa)

Compressive strength _____ psi (MPa)

(5) Correlation factors: Flexural strength / tensile strength _____

(Tubes only) Flexural strength / compressive strength _____

(03/09)

Provided by IHS under license with ASME

No reproduction or networking permitted without license from IHS

Licensee=Chevron Phillips Chemical Co LP/5956674001
Not for Resale, 11/09/2014 20:41:36 MST

FORM CCQ CERTIFIED CEMENT QUALIFICATION FORM
(Used in the Construction of Graphite Pressure Vessels)

Certified cement qualification (CCQ) no. _____

Qualification of certified material specification (CCS) no. _____

Cementing technician _____ _____ _____
(Name) (Mark or Symbol No.) (Date)

Cement:

Manufacturer _____ _____ _____
(Name) (Mark or Symbol No.) (Date)

Designation _____

Joint configuration

BLOCK JOINT Fig. UIG-76-2 (10 samples)
(Drawing #)

Testing:

(a) Test results shall meet the requirements of Table UIG-6-1.
(b) The qualification results shall be recorded.

	Tested Tensile Strength, psi (MPa)	
Sample No.	**At Room Temperature**	**At Maximum Material Temperature**
1		
2		
3		
4		
5		
6		
7		
8		
9		
10		
Average, psi (MPa)		
Test deviation in % from average value		
Permissible deviation	±20%	±20%
UIG-6, minimum value, psi (MPa)	1,500 (10.3)	900 (6.2)

(03/09)

Provided by IHS under license with ASME
No reproduction or networking permitted without license from IHS
Licensee=Chevron Phillips Chemical Co LP/5956674001
Not for Resale, 11/09/2014 20:41:36 MST

FORM CCQ CERTIFIED CEMENT QUALIFICATION (Cont'd)

Essential Variables:

	Filler Material	Resin	Accelerator
Composition (% by weight)			
Material			
Curing conditions	_____ minutes @ _____ °F (°C)		

(03/09)

--`,,,``,,,```,,,,`,`,``,,`,,`,```-`-`,,`,,`,`,,`---

Provided by IHS under license with ASME

No reproduction or networking permitted without license from IHS

Licensee=Chevron Phillips Chemical Co LP/5956674001
Not for Resale, 11/09/2014 20:41:36 MST

FORM CPQ CEMENTING PROCEDURE QUALIFICATION FORM

Cementing procedure specification (CPS) no. _____
(A change in any essential variable requires a new CPS)

Cement _____
(Manufacturer and I.D. No.)

Joint configuration _____
(Drawing No.)

Specimen for Tensile Test of Cemented Joints:

Block material joint:	Fig. UIG-76-2: 10 samples
Tube to tube sheet joint:	Fig. UIG-76-3: 5 samples
Tube to tube joint:	Fig. UIG-76-4: 5 samples

Cementing Technician:

_____
(Name) (Mark) (Report No.) (Date)

Cementing Operation:

(a) Surface preparation per drawing of specimen _____

(b) Cement preparation per instruction no. _____

(c) Cementing instruction no. _____

(d) Treatment after cementing per instruction no. _____

Inspection of Test Specimen:

Visual examination per instruction no. _____

Test Results:

Tensile strength of cemented joints per _____

Test temperature: Room temperature

Sample quantity: _____ Per Fig. _____

Load speed: Per Mandatory Appendix 37

(03/09)

Provided by IHS under license with ASME
No reproduction or networking permitted without license from IHS
Licensee=Chevron Phillips Chemical Co LP/5956674001
Not for Resale, 11/09/2014 20:41:36 MST

FORM CPQ CEMENTING PROCEDURE QUALIFICATION FORM (Cont'd) (Back)

	Tensile Strength, psi (MPa)		
Sample No.	**Block Joint Material**	**Tube to Tubesheet Joint**	**Tube to Tube Joint**
1			
2			
3			
4			
5			
6			
7			
8			
9			
10			
Average value			
Test deviation in % from average value			
Permissible deviation, %	±20%	±20%	±20%
UIG-6, minimum tensile strength of cemented joints	1,500 (10.3)	1,500 (10.3)	1,500 (10.3)

(03/09)

Provided by IHS under license with ASME
No reproduction or networking permitted without license from IHS
Licensee=Chevron Phillips Chemical Co LP/5956674001
Not for Resale, 11/09/2014 20:41:36 MST

FORM CTQ CEMENTING TECHNICIAN QUALIFICATION FORM
(Used in Cementing Parts of Graphite Pressure Vessels)

Name of technician _____

Cementing procedure specification (CPS) no. _____

Sample No.	Tensile Strength, psi (MPa)
1	
2	
3	
4	
UIG-6, minimum value	1,500 psi (10.3 MPa) (See Fig. UIG-76-2)

Test report no. _____

We certify that the statements made in this report are correct:

Date _____ Signed _____
(Manufacturer's representative)

(03/09)

Provided by IHS under license with ASME
No reproduction or networking permitted without license from IHS
Licensee=Chevron Phillips Chemical Co LP/5956674001
Not for Resale, 11/09/2014 20:41:36 MST

MANDATORY APPENDIX 1
SUPPLEMENTARY DESIGN FORMULAS

1-1 THICKNESS OF CYLINDRICAL AND SPHERICAL SHELLS

(a) The following equations, in terms of the outside radius, are equivalent to and may be used instead of those given in UG-27(c) and UG-27(d):

(1) For cylindrical shells (circumferential stress),

$$t = \frac{PR_o}{SE + 0.4P} \quad \text{or} \quad P = \frac{SEt}{R_o - 0.4t} \tag{1}$$

where

R_o = outside radius of the shell course under consideration

(2) For spherical shells,

$$t = \frac{PR_o}{2SE + 0.8P} \quad \text{or} \quad P = \frac{2SEt}{R_o - 0.8t} \tag{2}$$

Other symbols are as defined in UG-27.

1-2 CYLINDRICAL SHELLS

(a) See below.

(1) Circumferential Stress (Longitudinal Joints). When the thickness of the cylindrical shell under internal design pressure exceeds one-half of the inside radius, or when P exceeds $0.385SE$, the following equations shall apply. The following equations may be used in lieu of those given in UG-27(c):

When P is known and t is desired,

$$t = R\left(\exp\left[\frac{P}{SE}\right] - 1\right) = R_o\left(1 - \exp\left[\frac{-P}{SE}\right]\right) \tag{1}$$

Where t is known and P is desired,

$$P = SE \log_e\left(\frac{R + t}{R}\right) = SE \log_e\left(\frac{R_o}{R_o - t}\right) \tag{2}$$

(2) Longitudinal Stress (Circumferential Joints). When the thickness of the cylindrical shell under internal design pressure exceeds one-half of the inside radius, or when P exceeds $1.25SE$, the following equations shall apply:

When P is known and t is desired,

$$t = R\left(Z^{1/2} - 1\right) = R_o\frac{\left(Z^{1/2} - 1\right)}{Z^{1/2}} \tag{3}$$

where

$$Z = \left(\frac{P}{SE} + 1\right)$$

When t is known and P is desired,

$$P = SE\left(Z - 1\right) \tag{4}$$

where

$$Z = \left(\frac{R + t}{R}\right)^2 = \left(\frac{R_o}{R}\right)^2 = \left(\frac{R_o}{R_o - t}\right)^2$$

Symbols are as defined in UG-27 and 1-1.

1-3 SPHERICAL SHELLS

When the thickness of the shell of a wholly spherical vessel or of a hemispherical head under internal design pressure exceeds $0.356R$, or when P exceeds $0.665SE$, the following equations shall apply. The following equations may be used in lieu of those given in UG-27(d).

When P is known and t is desired,

$$t = R\left(\exp\left[\frac{0.50 \cdot P}{SE}\right] - 1\right) = R_o\left(1 - \exp\left[\frac{-0.50 \cdot P}{SE}\right]\right) \tag{1}$$

When t is known and P is desired,

$$P = 2.0 \cdot SE \log_e\left(\frac{R + t}{R}\right) = 2.0 \cdot SE \log_e\left(\frac{R_o}{R_o - t}\right) \tag{2}$$

Symbols are as defined in UG-27 and 1-1.

Provided by IHS under license with ASME
No reproduction or networking permitted without license from IHS
Licensee=Chevron Phillips Chemical Co LP/5956674001
Not for Resale, 11/09/2014 20:41:36 MST

(13) 1-4 FORMULAS FOR THE DESIGN OF FORMED HEADS UNDER INTERNAL PRESSURE

(a) The equations of this paragraph provide for the design of formed heads of proportions other than those given in UG-32, in terms of inside and outside diameter.

The equations in (c) and (d) given below shall be used for $t/L \geq 0.002$. For $t/L < 0.002$, the rules of (f) shall also be met.

(b) The symbols defined below are used in the equations of this paragraph (see Figure 1-4):

t = minimum required thickness of head after forming

t_s = minimum specified thickness of head after forming, in. (mm). t_s shall be $\geq t$

P = internal design pressure (see UG-21)

D = inside diameter of the head skirt; or inside length of the major axis of an ellipsoidal head; or inside diameter of a cone head at the point under consideration measured perpendicular to the longitudinal axis

D_o = outside diameter of the head skirt; or outside length of the major axis of an ellipsoidal head; or outside diameter of a cone head at the point under consideration measured perpendicular to the longitudinal axis

S = maximum allowable working stress, as given in Subsection C except as limited by footnote 1 to 1-4(c) and (d), UG-24, UG-32(e), and UW-12

E = lowest efficiency of any Category A joint in the head (for hemispherical heads this includes head-to-shell joint). For welded vessels, use the efficiency specified in UW-12

r = inside knuckle radius

L = inside spherical or crown radius for torispherical and hemispherical heads

L = K_1D for ellipsoidal heads in which K_1 is obtained from Table UG-37

L_o = outside spherical or crown radius

L/r = ratio of the inside crown radius to the inside knuckle radius, used in Table 1-4.2

M = a factor in the equations for torispherical heads depending on the head proportion L/r

h = one-half of the length of the minor axis of the ellipsoidal head, or the inside depth of the ellipsoidal head measured from the tangent line (head-bend line)

K = a factor in the equations for ellipsoidal heads depending on the head proportion $D/2h$

$D/2h$ = ratio of the major to the minor axis of ellipsoidal heads, which equals the inside diameter of the skirt of the head divided by twice the inside height of the head, and is used in Table 1-4.1

α = one-half of the included (apex) angle of the cone at the centerline of the head

E_T = modulus of elasticity at maximum design temperature, psi. The value of E_T shall be taken from applicable Table TM, Section II, Part D

S_y = yield strength at maximum design temperature, psi. The value of S_y shall be taken from Table Y-1, Section II, Part D

(c) Ellipsoidal Heads [90]

$$t = \frac{PDK}{2SE - 0.2P} \text{ or } P = \frac{2SEt}{KD + 0.2t} \tag{1}$$

$$t = \frac{PD_oK}{2SE + 2P(K - 0.1)}$$

or

$$P = \frac{2SEt}{KD_o - 2t(K - 0.1)} \tag{2}$$

where

$$K = \frac{1}{6}\left[2 + \left(\frac{D}{2h}\right)^2\right]$$

Numerical values of the factor K are given in Table 1-4.1.

From Table 1-4.1, K = 1.0. Substituting in eq. (1),

$$P = \frac{2 \times 10,200 \times 1.0 \times 0.5}{[1 \times 30 + (0.2 \times 0.5)]} = 339 \text{ psi}$$

(d) Torispherical Heads[90]

$$t = \frac{PLM}{2SE - 0.2P} \text{ or } P = \frac{2SEt}{LM + 0.2t} \tag{3}$$

$$t = \frac{PL_oM}{2SE + P(M - 0.2)}$$

or

$$P = \frac{2SEt}{ML_o - t(M - 0.2)} \tag{4}$$

where

$$M = \frac{1}{4}\left(3 + \sqrt{\frac{L}{r}}\right)$$

Numerical values of the factor M are given in Table 1-4.2.

Provided by IHS under license with ASME
No reproduction or networking permitted without license from IHS
Licensee=Chevron Phillips Chemical Co LP/5956674001
Not for Resale, 11/09/2014 20:41:36 MST

Figure 1-4
Principal Dimensions of Typical Heads

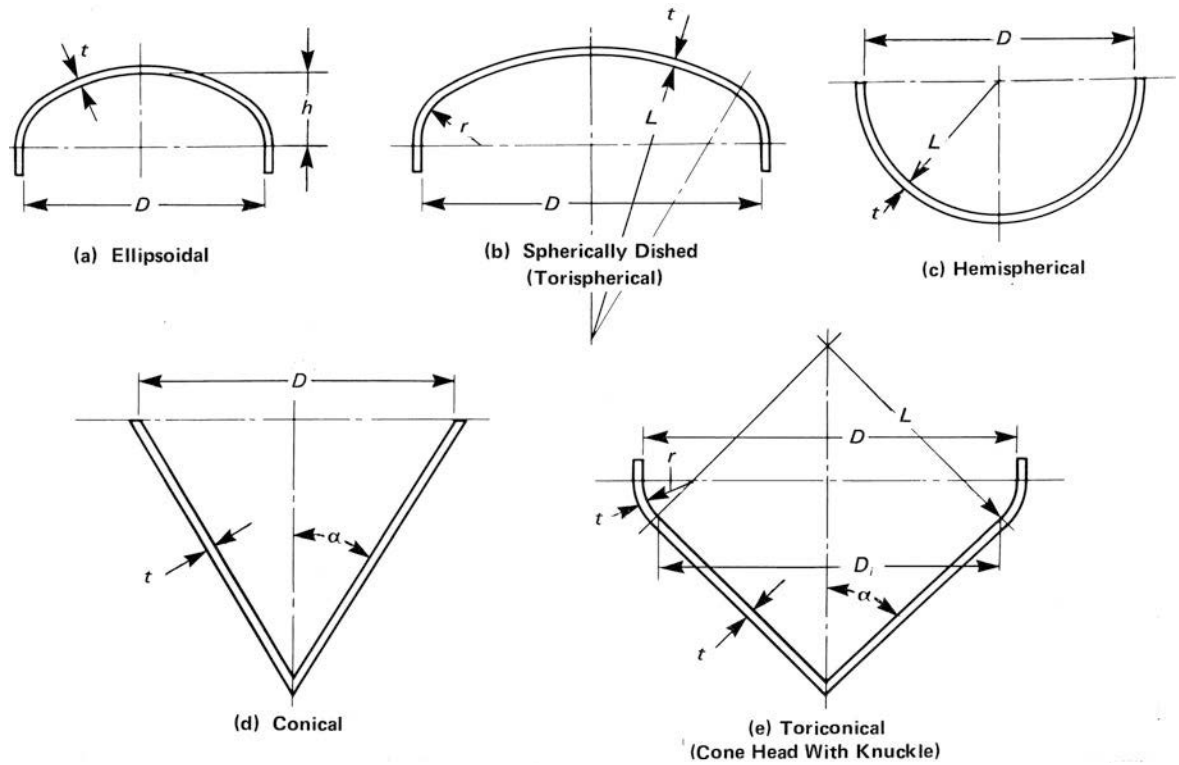

(e) Conical Heads

$$t = \frac{PD}{2 \cos\alpha \left(SE - 0.6P\right)}$$

or

$$P = \frac{2SEt \cos\alpha}{D + 1.2t \cos\alpha} \qquad (5)$$

$$t = \frac{PD_o}{2 \cos\alpha \left(SE + 0.4P\right)}$$

or

$$P = \frac{2SEt \cos\alpha}{D_o - 0.8t \cos\alpha} \qquad (6)$$

(f) Design of Heads With t_s/L < 0.002. The following rules shall be used when the maximum design temperature is less than or equal to the temperature limit given in Table 1-4.3. See U-2(g) for maximum design temperature exceeding the temperature limit given in Table 1-4.3

(1) Torispherical Heads With t_s/L < 0.002. The minimum required thickness of a torispherical head having $0.0005 \le t_s/L < 0.002$ shall be larger of the thickness calculated by the equations in UG-32(e), (d), or by the equations given below.

(-a) Calculate a coefficient, C_1.

Table 1-4.1
Values of Factor *K*

$D/2h$	3.0	2.9	2.8	2.7	2.6	2.5	2.4	2.3	2.2	2.1	2.0
K	1.83	1.73	1.64	1.55	1.46	1.37	1.29	1.21	1.14	1.07	1.00
$D/2h$	1.9	1.8	1.7	1.6	1.5	1.4	1.3	1.2	1.1	1.0	...
K	0.93	0.87	0.81	0.76	0.71	0.66	0.61	0.57	0.53	0.50	...

GENERAL NOTE: Use nearest value of $D/2h$; interpolation unnecessary.

Provided by IHS under license with ASME
No reproduction or networking permitted without license from IHS
Licensee=Chevron Phillips Chemical Co LP/5956674001
Not for Resale, 11/09/2014 20:41:36 MST

Table 1-4.2
Values of Factor *M*

L/r	1.0	1.25	1.50	1.75	2.00	2.25	2.50	2.75	3.00	3.25	3.50
M	1.00	1.03	1.06	1.08	1.10	1.13	1.15	1.17	1.18	1.20	1.22
L/r	4.0	4.5	5.0	5.5	6.0	6.5	7.0	7.5	8.0	8.5	9.0
M	1.25	1.28	1.31	1.34	1.36	1.39	1.41	1.44	1.46	1.48	1.50
L/r	9.5	10.00	10.5	11.0	11.5	12.0	13.0	14.0	15.0	16.0	$16^2/_3$ [Note (1)]
M	1.52	1.54	1.56	1.58	1.60	1.62	1.65	1.69	1.72	1.75	1.77

GENERAL NOTE: Use nearest value of L/r; interpolation unnecessary.

NOTE:
(1) Maximum ratio allowed by UG-32(j) when L equals the outside diameter of the skirt of the head.

$$C_1 = 9.31\,r/D - 0.086,\ \text{for}\ r/D \le 0.08$$
$$C_1 = 0.692r/D + 0.605,\ \text{for}\ r/D > 0.08$$

(-b) Calculate the elastic buckling stress, S_e.

$$S_e = C_1 E_T (t_s/r)$$

(-c) Calculate a coefficient, C_2.

$$C_2 = 1.25,\ \text{for}\ r/D \le 0.08$$
$$C_2 = 1.46 - 2.6r/D,\ \text{for}\ r/D > 0.08$$

(-d) Calculate values of constants a, b, β, and ϕ.

$$a = 0.5D - r$$
$$b = L - r$$
$$\beta = \arccos(a/b),\ \text{radians}$$
$$\phi = \left(\sqrt{Lt_s}\right)/r,\ \text{radians}$$

Table 1-4.3
Maximum Metal Temperature

Table in Which Material Is Listed	Temperature, °F
Table UCS-23	700
Table UNF-23.1	300
Table UNF-23.2	150
Table UNF-23.3	900
Table UNF-23.4	600
Table UNF-23.5	600
Table UHA-23	800
Table UHT-23	700

(-e) Calculate the value of c.

If ϕ is less than β, then

$$c = a/\left[\cos(\beta - \phi)\right]$$

If ϕ is equal to or greater than β, then

$$c = a$$

Determine the value of R_e.

$$R_e = c + r$$

(-f) Calculate the value of internal pressure expected to produce elastic buckling, P_e.

$$P_e = \frac{S_e t_s}{C_2 R_e\left[(0.5R_e\ /\ r) - 1\right]}$$

(-g) Calculate the value of internal pressure expected to result in yield stress at the point of maximum stress, P_y.

$$P_y = \frac{S_y t_s}{C_2 R_e\left[(0.5R_e\ /\ r) - 1\right]}$$

(-h) Calculate the value of internal pressure expected to result in knuckle failure, P_{ck}.

$$P_{ck} = 0.6P_e,\ \text{for}\ P_e/P_y \le 1.0$$
$$P_{ck} = 0.408P_y + 0.192P_e,\ \text{for}\ 1.0 < P_e/P_y \le 8.29$$
$$P_{ck} = 2.0P_y,\ \text{for}\ P_e/P_y > 8.29$$

Provided by IHS under license with ASME
No reproduction or networking permitted without license from IHS
Licensee=Chevron Phillips Chemical Co LP/5956674001
Not for Resale, 11/09/2014 20:41:36 MST

(-i) Calculate the value $P_{ck}/1.5$. If $P_{ck}/1.5$ is equal to or greater than the required internal design pressure P, then the design is complete. If $P_{ck}/1.5$ is less than the required internal design pressure P, then increase the thickness and repeat the calculations.

(2) Design of Ellipsoidal Heads With $t_s/L < 0.002$. The minimum required thickness of an ellipsoidal head having $0.0005 \le t_s/L < 0.002$ shall be larger of the thicknesses calculated by the equations in UG-32(d), (c), or by the equations in (1). In using (1) equations, the value of L is to be obtained from Table UG-37 and the value of r is to be obtained from Table 1-4.4.

(13) 1-5 RULES FOR CONICAL REDUCER SECTIONS AND CONICAL HEADS UNDER INTERNAL PRESSURE

(a) The equations of (d) and (e) below provide for the design of reinforcement, if needed, at the large and small ends for conical reducer sections and conical heads where all the elements have a common axis and the half-apex angle α ≤ 30 deg. Subparagraph (g) below provides for special analysis in the design of cone-to-cylinder intersections with or without reinforcing rings where α is greater than 30 deg.

In the design of reinforcement at the large and small ends of cones and conical reducers, the requirements of UG-41 shall be met.

(b) Nomenclature

A_{rL} = required area of reinforcement at large end of cone
A_{rs} = required area of reinforcement at small end of cone
A_{eL} = effective area of reinforcement at large end intersection
A_{es} = effective area of reinforcement at small end intersection

Table 1-4.4
Values of Knuckle Radius, *r*

$D/2h$	r/D
3.0	0.10
2.8	0.11
2.6	0.12
2.4	0.13
2.2	0.15
2.0	0.17
1.8	0.20
1.6	0.24
1.4	0.29
1.2	0.37
1.0	0.50

GENERAL NOTE: Interpolation permitted for intermediate values.

E_s = modulus of elasticity of cylinder material
E_c = modulus of elasticity of cone material
E_r = modulus of elasticity of reinforcing ring material

NOTE: The modulus of elasticity shall be taken from the applicable Table TM in Section II, Part D. When a material is not listed in the TM tables, the requirements of U-2(g) shall be applied.

E_1 = efficiency of longitudinal joint in cylinder. For compression (such as at large end of cone), E_1 = 1.0 for butt welds.
E_2 = efficiency of longitudinal joint in cone. For compression, E_2 = 1.0 for butt welds.
f_1 = axial load per unit circumference at large end due to wind, dead load, etc., excluding pressure
f_2 = axial load per unit circumference at small end due to wind, dead load, etc., excluding pressure
P = internal design pressure (see UG-21)
Q_L = algebraical sum of $PR_L/2$ and f_1
Q_s = algebraical sum of $PR_s/2$ and f_2
R_s = inside radius of small cylinder at small end of cone
R_L = inside radius of large cylinder at large end of cone
S_s = allowable stress of cylinder material at design temperature
S_c = allowable stress of cone material at design temperature
S_r = allowable stress of reinforcing ring material at design temperature
t = minimum required thickness of cylinder at cone-to-cylinder junction
t_c = nominal thickness of cone at cone-to-cylinder junction
t_r = minimum required thickness of cone at cone-to-cylinder junction
t_s = nominal thickness of cylinder at cone-to-cylinder junction
α = half-apex angle of cone or conical section, deg.
Δ = angle indicating need for reinforcement at cone-to-cylinder junction having a half-apex angle α ≤ 30 deg. When Δ ≥ α, no reinforcement is required at the junction (see Tables 1-5.1 and 1-5.2), deg.
y = cone-to-cylinder factor
= S_sE_s for reinforcing ring on shell
= S_cE_c for reinforcing ring on cone

(c) For conical reducers and conical heads, the following values shall be determined at large end and again at the small end in order that both the large end and the small end can be examined:

(1) When a cylinder having a minimum length of $2.0\sqrt{R_L t_s}$ is attached to the large end of the cone, determine P/S_sE_1 and then determine Δ at the large end from Table 1-5.1.

NOTE: If a cylinder is not present or does not meet the minimum length requirement, Δ is not calculated.

Provided by IHS under license with ASME
No reproduction or networking permitted without license from IHS
Licensee=Chevron Phillips Chemical Co LP/5956674001
Not for Resale, 11/09/2014 20:41:36 MST

Table 1-5.1
Values of Δ for Junctions at the Large Cylinder for $\alpha \leq 30$ deg

P/S_sE_1	0.001	0.002	0.003	0.004	0.005
Δ, deg	11	15	18	21	23
P/S_sE_1	0.006	0.007	0.008	0.009 [Note (1)]	...
Δ, deg	25	27	28.5	30	...

NOTE:
(1) Δ = 30 deg for greater values of P/S_sE_1.

(2) When a cylinder having a minimum length of $1.4\sqrt{R_s t_s}$ is attached to the small end of the cone, determine P/S_sE_1 and then determine Δ at the small end from Table 1-5.2.

(3) Determine k:

k = 1 when additional area of reinforcement is not required
= y/S_rE_r when a stiffening ring is required, but k is not less than 1.0

(d) Reinforcement shall be provided at the large end of the cone when required by the following:

(1) For cones attached to a cylinder having a minimum length of $2.0\sqrt{R_L t_s}$, reinforcement shall be provided at the junction of the cone with the large cylinder for conical heads and reducers without knuckles when the value of Δ obtained from Table 1-5.1, using the appropriate ratio P/S_sE_1, is less than α. Interpolation may be made in the Table.

The required area of reinforcement shall be at least equal to that indicated by the following formula when Q_L is in tension:

$$A_{rL} = \frac{kQ_LR_L}{S_sE_1}\left(1 - \frac{\Delta}{\alpha}\right)\tan\alpha \qquad (1)$$

Table 1-5.2
Values of Δ for Junctions at the Small Cylinder for $\alpha \leq 30$ deg

P/S_sE_1	0.002	0.005	0.010	0.02
Δ, deg	4	6	9	12.5
P/S_sE_1	0.04	0.08	0.10	0.125 [Note (1)]
Δ, deg	17.5	24	27	30

NOTE:
(1) Δ = 30 deg for greater values of P/S_sE_1.

At the large end of the cone-to-cylinder juncture, the $PR_L/2$ term is in tension. When f_1 is in compression and the quantity is larger than the $PR_L/2$ term, the design shall be in accordance with U-2(g). The calculated localized stresses at the discontinuity shall not exceed the stress values specified in (g)(1) and (g)(2).

The effective area of reinforcement can be determined in accordance with the following formula:

$$A_{eL} = (t_s - t)\sqrt{R_L t_s} + (t_c - t_r)\sqrt{R_L t_c/\cos\alpha} \qquad (2)$$

Any additional area of reinforcement that is required shall be situated within a distance of $\sqrt{R_L t_s}$ from the junction of the reducer and the cylinder. The centroid of the added area shall be within a distance of $0.25 \times \sqrt{R_L t_s}$ from the junction.

(2) For cones attached to flat covers, flanges, or other components where the length of cylinder, if present, is less than $2.0\sqrt{R_L t_s}$, the required reinforcement shall be at least equal to that indicated by the following formula:

$$A_{rL} = \frac{kQ_LR_L}{S_cE_2}\tan\alpha \qquad (3)$$

The effective area of reinforcement can be determined in accordance with the following formula:

$$A_{eL} = (t_c - t_r)\sqrt{R_L t_c/\cos\alpha} \qquad (4)$$

Any additional area of reinforcement that is required shall be added to the cone.

(e) Reinforcement shall be provided at the small end of the cone when required by the following:

(1) For cones attached to a cylinder having a minimum length of $1.4\sqrt{R_s t_s}$, reinforcement shall be provided at the junction of the conical shell of a reducer without a flare and the small cylinder when the value of Δ obtained from Table 1-5.2, using the appropriate ratio P/S_sE_1, is less than α.

The required area of reinforcement shall be at least equal to that indicated by the following formula when Q_s is in tension:

$$A_{rs} = \frac{kQ_sR_s}{S_sE_1}\left(1 - \frac{\Delta}{\alpha}\right)\tan\alpha \qquad (5)$$

At the small end of the cone-to-cylinder juncture, the $PR_s/2$ term is in tension. When f_2 is in compression and the quantity is larger than the $PR_s/2$ term, the design shall be in accordance with U-2(g). The calculated localized stresses at the discontinuity shall not exceed the stress values specified in (g)(1) and (g)(2).

Provided by IHS under license with ASME
No reproduction or networking permitted without license from IHS
Licensee=Chevron Phillips Chemical Co LP/5956674001
Not for Resale, 11/09/2014 20:41:36 MST

The effective area of reinforcement can be determined in accordance with the following formula:

$$A_{es} = 0.78\sqrt{R_s t_s}\left[\left(t_s - t\right) + \left(t_c - t_r\right) / \cos\alpha\right] \qquad (6)$$

Any additional area of reinforcement which is required shall be situated within a distance of $\sqrt{R_s t_s}$ from the junction, and the centroid of the added area shall be within a distance of $0.25\sqrt{R_s t_s}$ from the junction.

(2) For cones attached to flat covers, flanges, or other components where the length of cylinder, if present, is less than $1.4\sqrt{R_s t_s}$, the required reinforcement shall be at least equal to that indicated by the following formula:

$$A_{rS} = \frac{kQ_s R_s}{S_c E_2}\tan\alpha$$

The effective area of reinforcement can be determined in accordance with the following formula:

$$A_{eS} = \left(t_c - t_r\right)\sqrt{R_s t_c / \cos\alpha}$$

Any additional area of reinforcement that is required shall be added to the cone.

(f) Reducers not described in UG-36(e)(5), such as those made up of two or more conical frustums having different slopes, may be designed in accordance with (g).

(g) When the half-apex angle α is greater than 30 deg (0.52 rad), cone-to-cylinder junctions without a knuckle may be used, with or without reinforcing rings, if the design is based on special analysis, such as the beam-on-elastic-foundation analysis of Timoshenko, Hetenyi, or Watts and Lang. See U-2(g). When such an analysis is made, the calculated localized stresses at the discontinuity shall not exceed the following values:

(1) Membrane hoop stress plus average discontinuity hoop stress shall not be greater than 1.5*S*, where the "average discontinuity hoop stress" is the average hoop stress across the wall thickness due to the discontinuity at the junction, disregarding the effect of Poisson's ratio times the longitudinal stress at the surfaces.

(2) Membrane longitudinal stress plus discontinuity longitudinal stress due to bending shall not be greater than S_{PS} [see UG-23(e)].

The angle joint (see 3-2) between the cone and cylinder shall be designed equivalent to a double butt-welded joint, and because of the high bending stress, there shall be no weak zones around the angle joint. The thickness of the cylinder may have to be increased to limit the difference in thickness so that the angle joint has a smooth contour.

1-6 DISHED COVERS (BOLTED HEADS)

(a) Dished heads with bolting flanges, both concave and convex to the pressure and conforming to the several types illustrated in Figure 1-6, shall be designed in accordance with the equations which follow.

(b) The symbols used in the equations of this paragraph are defined as follows:

t = minimum required thickness of head plate after forming
L = inside spherical or crown radius
r = inside knuckle radius
P = internal pressure (see UG-21) for the pressure on concave side, and external pressure for the pressure on convex side [see UG-28(f)]
S = maximum allowable stress value (see UG-23)
T = flange thickness
M_o = the total moment determined as in 2-6 for heads concave to pressure and 2-11 for heads convex to pressure; except that for heads of the type shown in Figure 1-6 sketch (d), H_D and h_D shall be as defined below, and an additional moment $H_r h_r$ (which may add or subtract) shall be included where

H_r = radial component of the membrane load in the spherical segment acting at the intersection of the inside of the flange ring with the centerline of the dished cover thickness
= $H_D \cot \beta_1$
h_r = lever arm of force H_r about centroid of flange ring
H_D = axial component of the membrane load in the spherical segment acting at the inside of the flange ring
= $0.785\ B^2 P$
h_D = radial distance from the bolt circle to the inside of the flange ring
β_1 = angle formed by the tangent to the centerline of the dished cover thickness at its point of intersection with the flange ring, and a line perpendicular to the axis of the dished cover
= $\arcsin\left(\frac{B}{2L + t}\right)$

NOTE: Since $H_r h_r$ in some cases will subtract from the total moment, the moment in the flange ring when the internal pressure is zero may be the determining loading for flange design.

A = outside diameter of flange
B = inside diameter of flange
C = bolt circle, diameter

(c) It is important to note that the actual value of the total moment M_o may calculate to be either plus or minus for both the heads concave to pressure and the heads convex to pressure. However, for use in all of the equations that follow, the absolute values for both P and M_o are used.

(d) Heads of the type shown in Figure 1-6 sketch (a):

Provided by IHS under license with ASME
No reproduction or networking permitted without license from IHS
Licensee=Chevron Phillips Chemical Co LP/5956674001
Not for Resale, 11/09/2014 20:41:36 MST

(13)

Figure 1-6
Dished Covers With Bolting Flanges

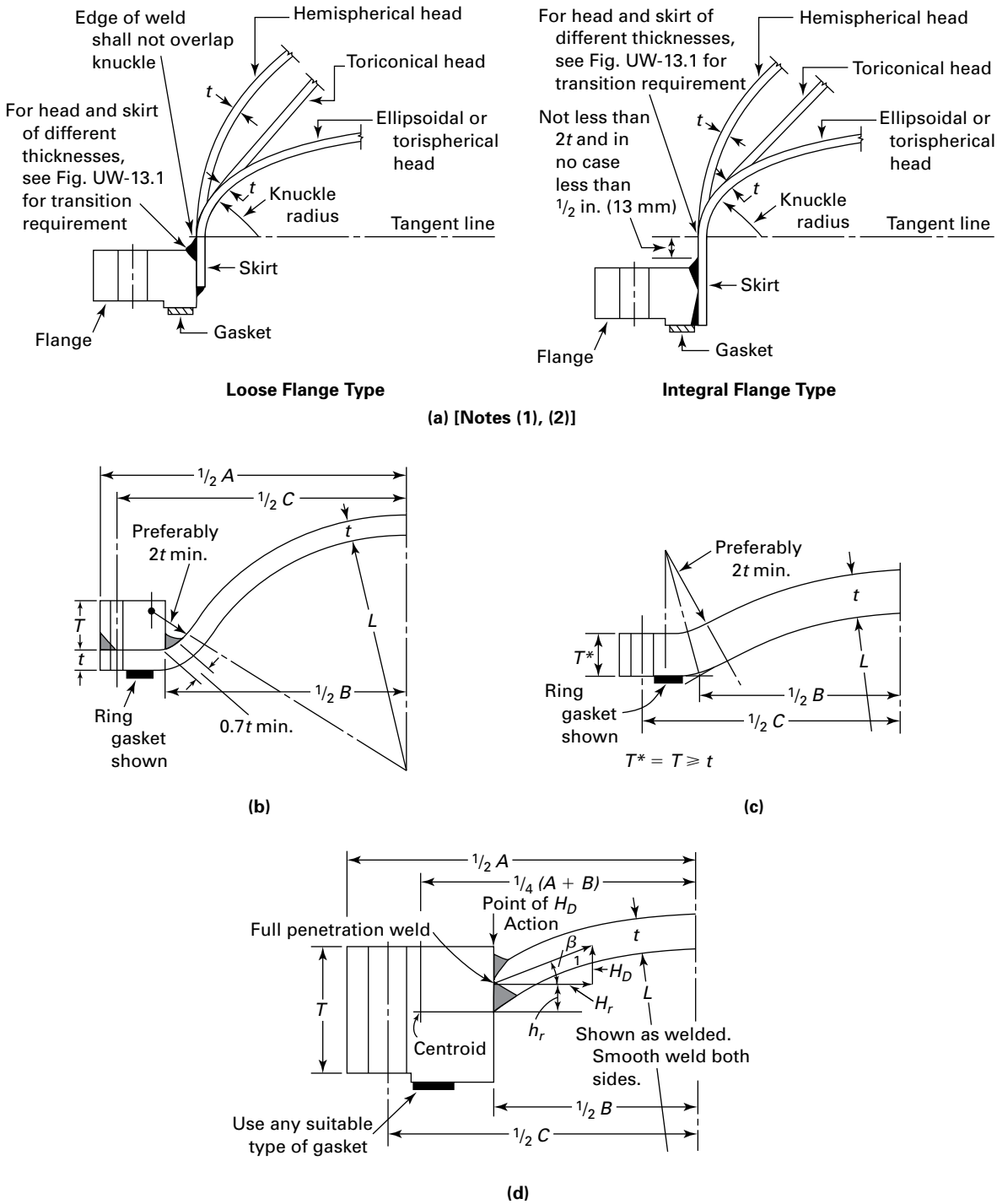

NOTES:

(1) Welding details as shown are for illustrating the distance between the toe of the fillet weld and the tangent line of the head. Welding details shall be per Figure 2-4.

(2) An optional flange can be designed as loose type or integral type. When an optional flange is attached to a formed head per this sketch, the distance between the toe of the fillet weld and the tangent line of the head shall be as shown.

Provided by IHS under license with ASME
No reproduction or networking permitted without license from IHS
Licensee=Chevron Phillips Chemical Co LP/5956674001
Not for Resale, 11/09/2014 20:41:36 MST

(1) the thickness of the head t shall be determined by the appropriate formula in UG-32 for pressure on concave side, and UG-33 for pressure on convex side; the thickness of the skirt shall be determined by the formula for cylindrical shell in UG-27 for pressure on concave side and UG-28 for pressure on convex side;

(2) the head radius L or the knuckle radius r shall comply with the limitations given in UG-32;

(3) the flange shall comply at least with the requirements of Figure 2-4 and shall be designed in accordance with the provisions of 2-1 through 2-8 for pressure on concave side, and 2-11 for pressure on convex side. When a slip-on flange conforming to the standards listed in Table U-3 is used, design calculations per Mandatory Appendix 2 need not be done provided the design pressure-temperature is within the pressure-temperature rating permitted in the flange standard.

(e) Heads of the type shown in Figure 1-6 sketch (b) (no joint efficiency factor is required):

(1) head thickness

(-a) for pressure on concave side,

$$t = \frac{5PL}{6S} \tag{1}$$

(-b) for pressure on convex side, the head thickness shall be determined based on UG-33(c) using the outside radius of the spherical head segment;

(2) flange thickness for ring gasket

$$T = \sqrt{\frac{M_o}{SB}\left[\frac{A+B}{A-B}\right]} \tag{2}$$

(3) flange thickness for full face gasket

$$T = 0.6\sqrt{\frac{P}{S}\left[\frac{B(A+B)(C-B)}{A-B}\right]} \tag{3}$$

NOTE: The radial components of the membrane load in the spherical segment are assumed to be resisted by its flange.

(f) Heads of the type shown in Figure 1-6 sketch (c) (no joint efficiency factor is required):

(1) head thickness

(-a) for pressure on concave side,

$$t = \frac{5PL}{6S} \tag{4}$$

(-b) for pressure on convex side, the head thickness shall be determined based on UG-33(c) using the outside radius of the spherical head segment;

(2) flange thickness for ring gasket for heads with round bolting holes

$$T = Q + \sqrt{\frac{1.875M_o(C+B)}{SB(7C-5B)}} \tag{5}$$

where

$$Q = \frac{PL}{4S}\left(\frac{C+B}{7C-5B}\right)$$

(3) flange thickness for ring gasket for heads with bolting holes slotted through the edge of the head

$$T = Q + \sqrt{\frac{1.875M_o(C+B)}{SB(3C-B)}} \tag{6}$$

where

$$Q = \frac{PL}{4S}\left(\frac{C+B}{3C-B}\right)$$

(4) flange thickness for full-face gasket for heads with round bolting holes

$$T = Q + \sqrt{Q^2 + \frac{3BQ(C-B)}{L}} \tag{7}$$

where

$$Q = \frac{PL}{4S}\left(\frac{C+B}{7C-5B}\right)$$

(5) flange thickness for full-face gasket for heads with bolting holes slotted through the edge of the head

$$T = Q + \sqrt{Q^2 + \frac{3BQ(C-B)}{L}} \tag{8}$$

where

$$Q = \frac{PL}{4S}\left(\frac{C+B}{3C-B}\right)$$

(6) the required flange thickness shall be T as calculated in (2), (3), (4), or (5) above, but in no case less than the value of t calculated in (1) above.

(g) Heads of the type shown in Figure 1-6 sketch (d) (no joint efficiency factor is required):

(1) head thickness

(-a) for pressure on concave side,

$$t = \frac{5PL}{6S} \tag{9}$$

(-b) for pressure on convex side, the head thickness shall be determined based on UG-33(c) using the outside radius of the spherical head segment;

Provided by IHS under license with ASME
No reproduction or networking permitted without license from IHS
Licensee=Chevron Phillips Chemical Co LP/5956674001
Not for Resale, 11/09/2014 20:41:36 MST

(2) flange thickness

$$T = F + \sqrt{F^2 + J} \tag{10}$$

where

$$F = \frac{PB\sqrt{4L^2 - B^2}}{8S(A - B)}$$

and

$$J = \left(\frac{M_o}{SB}\right)\left(\frac{A + B}{A - B}\right)$$

(h) These equations are approximate in that they do not take into account continuity between the flange ring and the dished head. A more exact method of analysis which takes this into account may be used if it meets the requirements of U-2.

(13) 1-7 LARGE OPENINGS IN CYLINDRICAL AND CONICAL SHELLS

(a) Openings exceeding the dimensional limits given in UG-36(b)(1) shall be provided with reinforcement that complies with the following rules. Two-thirds of the required reinforcement shall be within the following limits:

(1) parallel to vessel wall: the larger of three-fourths times the limit in UG-40(b)(1), or equal to the limit in UG-40(b)(2);

(2) normal to vessel wall: the smaller of the limit in UG-40(c)(1), or in UG-40(c)(2).

(b) In addition to meeting the requirements of (a),

(1) openings for radial nozzles that exceed the limits in UG-36(b)(1) and that also are within the range defined by the following limits shall meet the requirements in (2), (3), and (4) below:

(-a) vessel diameters greater than 60 in. (1 520 mm) I.D.;

(-b) nozzle diameters that exceed 40 in. (1 020 mm) I.D. and also exceed $3.4\sqrt{Rt}$; the terms R and t are defined in Figures 1-7-1 and 1-7-2;

(-c) the ratio R_n/R does *not* exceed 0.7; for nozzle openings with R_n/R exceeding 0.7, refer to U-2(g).

The rules are limited to radial nozzles in cylindrical and conical shells (with the half-apex angle equal to or less than 30 deg) that do not have internal projections, and do not include any analysis for stresses resulting from externally applied mechanical loads. For such cases, U-2(g) shall apply.

(2) The membrane stress S_m as calculated by eq. (4)(1) or (4)(2) below shall not exceed S, as defined in UG-37 for the applicable materials at design conditions. The maximum combined membrane stress S_m and bending stress S_b shall not exceed $1.5S$ at design conditions. S_b shall be calculated by eq. (4)(5) below.

(3) Evaluation of combined stresses from pressure and external loads shall be made in accordance with U-2(g).

(4) For membrane stress calculations, use the limits defined in Figure 1-7-1, and comply with the strength of reinforcement requirements of UG-41. For bending stress calculation, the greater of the limits defined in Figure 1-7-1 or Figure 1-7-2 may be used. The strength reduction ratio requirements of UG-41 need not be applied, provided that the allowable stress ratio of the material in the nozzle neck, nozzle forging, reinforcing plate, and/or nozzle flange divided by the shell material allowable stress is at least 0.80.

NOTE: The bending stress S_b calculated by eq. (5) is valid and applicable only at the nozzle neck-shell junction. It is a primary bending stress because it is a measure of the stiffness required to maintain equilibrium at the longitudinal axis junction of the nozzle-shell intersection due to the bending moment calculated by eq. (3).

Case A (see Figure 1-7-1)

$$S_m = P\left(\frac{R(R_n + t_n + \sqrt{R_m t}) + R_n(t + t_e + \sqrt{R_{nm} t_n})}{A_s}\right) \tag{1}$$

Case B (see Figure 1-7-1)

$$S_m = P\left(\frac{R(R_n + t_n + \sqrt{R_m t}) + R_n(t + \sqrt{R_{nm} t_n})}{A_s}\right) \tag{2}$$

Cases A and B (See Figure 1-7-1 or Figure 1-7-2)

$$M = \left(\frac{R_n^3}{6} + RR_n e\right)P \tag{3}$$

$$a = e + t/2 \tag{4}$$

$$S_b = \frac{Ma}{I} \tag{5}$$

(5) Nomenclature. Symbols used in Figures 1-7-1 and 1-7-2 are as defined in UG-37(a) and as follows:

A_s = shaded (cross-hatched) area in Figure 1-7-1, Case A or Case B
a = distance between neutral axis of the shaded area in Figure 1-7-1 or Figure 1-7-2 and the inside of vessel wall
e = distance between neutral axis of the shaded area and midwall of the shell
I = moment of inertia of the larger of the shaded areas in Figure 1-7-1 or Figure 1-7-2 about neutral axis
P = internal or external pressure
R_m = mean radius of shell
R_{nm} = mean radius of nozzle neck

Provided by IHS under license with ASME
No reproduction or networking permitted without license from IHS
Licensee=Chevron Phillips Chemical Co LP/5956674001
Not for Resale, 11/09/2014 20:41:36 MST

Figure 1-7-1

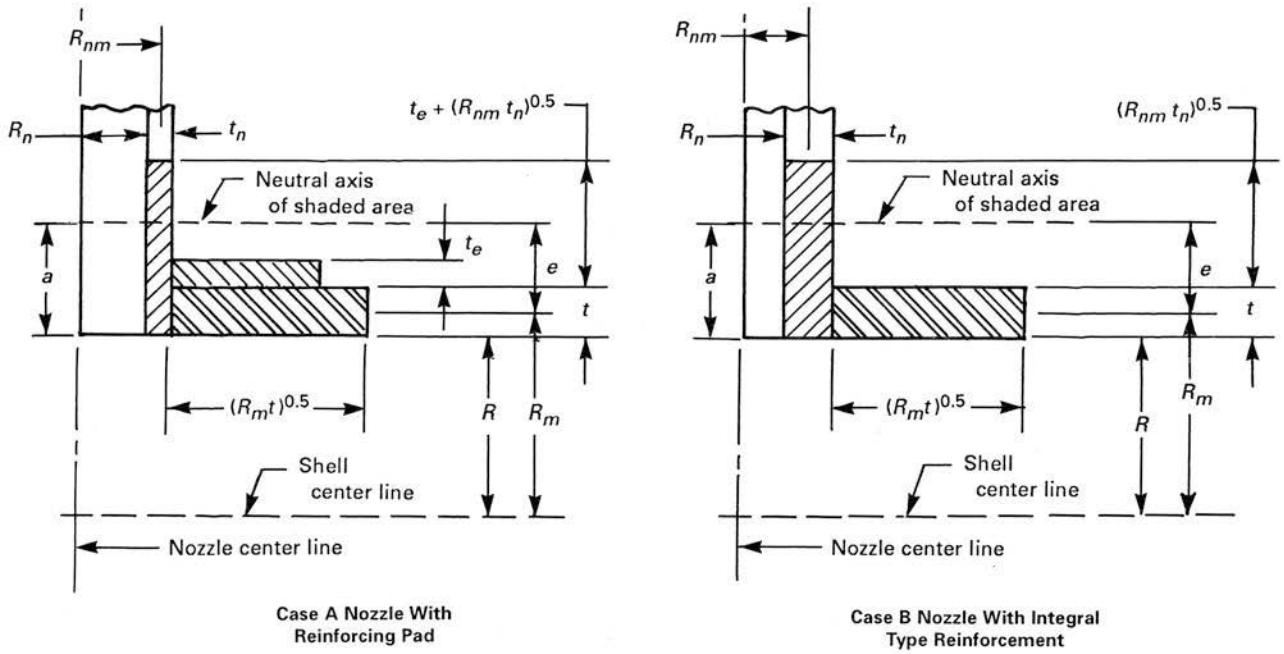

S_b = bending stress at the intersection of inside of the nozzle neck and inside of the vessel shell along the vessel shell longitudinal axis

S_m = membrane stress calculated by eq. (4)(1) or eq. (4)(2)

S_y = yield strength of the material at test temperature, see Table Y-1 in Subpart 1 of Section II, Part D

(c) In the design and fabrication of large openings, the Manufacturer should consider details that may be appropriate to minimize distortion and localized stresses around the opening. For example, reinforcement often may be advantageously obtained by use of heavier shell plate for a vessel course or inserted locally around the opening; weld may be ground to concave contour and the inside corners of the opening rounded to a generous radius to reduce stress concentrations. The user and the Manufacturer should agree on the extent and type of nondestructive examination of welds that may be appropriate for the intended service conditions and the materials of construction. Proof testing may be appropriate in extreme cases of large openings approaching full vessel diameter, openings of unusual shape, etc.

1-8 RULES FOR REINFORCEMENT OF CONES AND CONICAL REDUCERS UNDER EXTERNAL PRESSURE (13)

(a) The equations of (b) and (c) below provide for the design of reinforcement, if needed, at the cone-to-cylinder junctions for reducer sections and conical heads where all the elements have a common axis and the half-apex angle α ≤ 60 deg. Subparagraph (e) below provides for special analysis in the design of cone-to-cylinder intersections with or without reinforcing rings where α is greater than 60 deg.

In the design of reinforcement for a cone-to-cylinder juncture, the requirements of UG-41 shall be met.

The nomenclature given below is used in the equations of the following subparagraphs:

A = factor determined from Figure G and used to enter the applicable material chart in Subpart 3 of Section II, Part D

A_{eL} = effective area of reinforcement at large end intersection

A_{es} = effective area of reinforcement at small end intersection

A_{rL} = required area of reinforcement at large end of cone

A_{rs} = required area of reinforcement at small end of cone

A_s = cross-sectional area of the stiffening ring

A_T = equivalent area of cylinder, cone, and stiffening ring, where

Provided by IHS under license with ASME
No reproduction or networking permitted without license from IHS
Licensee=Chevron Phillips Chemical Co LP/5956674001
Not for Resale, 11/09/2014 20:41:36 MST

Figure 1-7-2

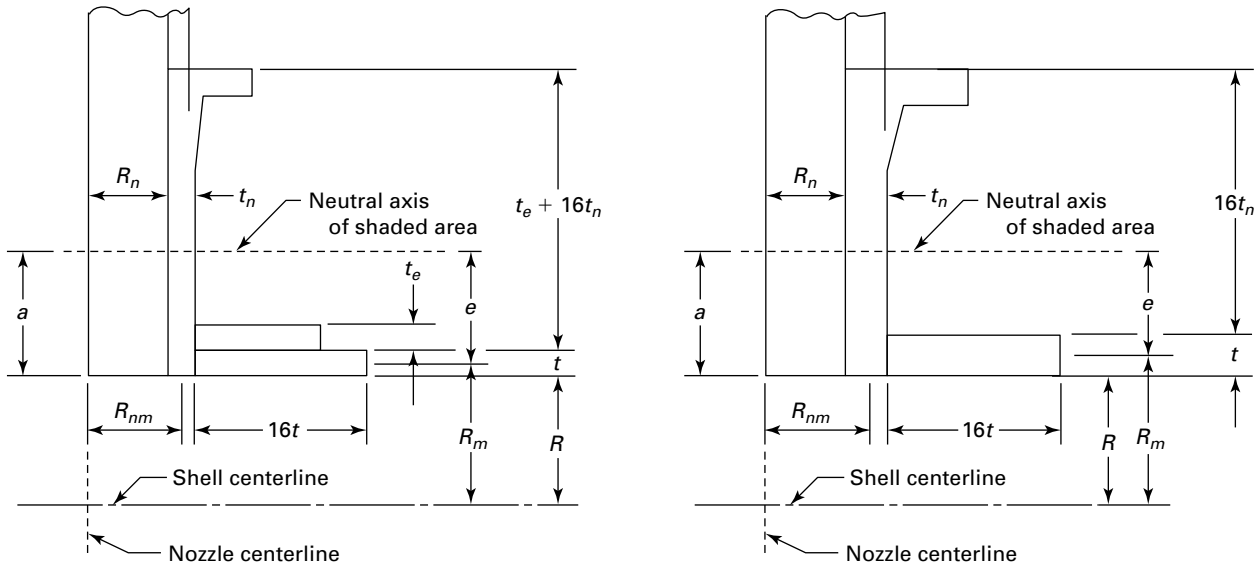

Case A: Nozzle With Reinforcing Pad

Case B: Nozzle With Integral Type Reinforcement

GENERAL NOTE: When any part of a flange is located within the greater of the $\sqrt{R_{nm}t_n} + t_e$ or $16t_n + t_e$ limit as indicated in Figure 1-7-1 or Figure 1-7-2 Case A, or the greater of $\sqrt{R_{nm}t_n}$ or $16t_n$ for Figure 1-7-1 or Figure 1-7-2 Case B, the flange may be included as part of the section that resists bending moment.

$$A_{TL} = \frac{L_L t_s}{2} + \frac{L_c t_c}{2} + A_s \text{ for large end}$$

$$A_{TS} = \frac{L_s t_s}{2} + \frac{L_c t_c}{2} + A_s \text{ for small end}$$

B = factor determined from the applicable material chart in Subpart 3 of Section II, Part D for maximum design metal temperature [see UG-20(c)]

D_L = outside diameter of large end of conical section under consideration

D_o = outside diameter of cylindrical shell (In conical shell calculations, the value of D_s and D_L should be used in calculations in place of D_o depending on whether the small end D_s, or large end D_L, is being examined.)

D_s = outside diameter at small end of conical section under consideration

E_1 = efficiency of longitudinal joint in cylinder. For compression (such as at small end of cone), E_1 = 1.0 for butt welds.

E_2 = efficiency of longitudinal joint in cone. For compression, E_2 = 1.0 for butt welds.

E_c = modulus of elasticity of cone material

E_r = modulus of elasticity of stiffening ring material

E_s = modulus of elasticity of shell material

E_x = E_c, E_r, or E_s

NOTE: The modulus of elasticity shall be taken from the applicable Table TM in Section II, Part D. When a material is not listed in the TM tables, the requirements of U-2(g) shall be applied.

f_1 = axial load per unit circumference at large end due to wind, dead load, etc., excluding pressure

f_2 = axial load per unit circumference at small end due to wind, dead load, etc., excluding pressure

I = available moment of inertia of the stiffening ring cross section about its neutral axis parallel to the axis of the shell

I' = available moment of inertia of combined shell-cone or ring-shell-cone cross section about its neutral axis parallel to the axis of the shell. The nominal shell thickness t_s shall be used, and the width of the shell which is taken as contributing to the moment of inertia of the combined section shall not be greater than $1.10\sqrt{Dt_s}$ and shall be taken as lying one-half on each side of the cone-to-cylinder junction or of the centroid of the ring. Portions of the shell plate shall not be considered as contributing area to more than one stiffening ring.

CAUTION: Stiffening rings may be subject to lateral buckling. This should be considered in addition to the requirements for I_s and I'_s [see U-2(g)].

Provided by IHS under license with ASME
No reproduction or networking permitted without license from IHS
Licensee=Chevron Phillips Chemical Co LP/5956674001
Not for Resale, 11/09/2014 20:41:36 MST

I_s = required moment of inertia of the stiffening ring cross section about its neutral axis parallel to the axis of the shell

I'_s = required moment of inertia of the combined shell-cone or ring-shell-cone cross section about its neutral axis parallel to the axis of the shell

k = 1 when additional area of reinforcement is not required

= y/S_rE_r when a stiffening ring is required, but k is not less than 1.0

L = axial length of cone

L_c = length of cone between stiffening rings measured along surface of cone, in. (mm). For cones without intermediate stiffeners,

$$L_c = \sqrt{L^2 + (R_L - R_s)^2}$$

L_L = design length of a vessel section taken as the largest of the following:

(a) the center-to-center distance between the cone-to-large-shell junction and an adjacent stiffening ring on the large shell;

(b) the distance between the cone-to-large-shell junction and one-third the depth of head on the other end of the large shell if no other stiffening rings are used.

L_s = design length of a vessel section taken as the largest of the following:

(a) the center-to-center distance between the cone-to-small-shell junction and adjacent stiffening ring on the small shell;

(b) the distance between the cone-to-small-shell junction and one-third the depth of head on the other end of the small shell if no other stiffening rings are used.

NOTE: If the stiffeners should be so located that the maximum permissible effective shell sections overlap on either or both sides of a stiffener, the effective shell section for that stiffener shall be shortened by one-half of each overlap.

P = external design pressure

Q_L = algebraical sum of $PR_L/2$ and f_1

Q_s = algebraical sum of $PR_s/2$ and f_2

R_L = outside radius of large cylinder

R_s = outside radius of small cylinder

S_c = allowable stress of cone material at design temperature

S_r = allowable stress of stiffening ring material at design temperature

S_s = allowable stress of cylinder material at design temperature

t = minimum required thickness of cylinder at cone-to-cylinder junction [see UG-28(c)]

t_c = nominal thickness of cone at cone-to-cylinder junction

t_r = minimum required thickness of cone at cone-to-cylinder junction

t_s = nominal thickness of cylinder at cone-to-cylinder junction

y = cone-to-cylinder factor

= S_sE_s for stiffening ring on shell

= S_cE_c for stiffening ring on cone

α = one-half the included (apex) angle of the cone at the centerline of the head

Δ = value to indicate need for reinforcement at cone-to-cylinder intersection having a half-apex angle $\alpha \leq 60$ deg. When $\Delta \geq \alpha$, no reinforcement is required at the junction (see Table 1-8.1) .

(b) Reinforcement shall be provided at the large end of the cone when required by (1) or (2). When the large end of the cone is considered a line of support, the moment of inertia for a stiffening ring shall be determined in accordance with (3).

(1) For cones attached to a cylinder having a minimum length of $2.0\sqrt{R_L t_s}$, reinforcement shall be provided at the junction of the cone with the large cylinder for conical heads and reducers without knuckles when the value of Δ obtained from Table 1-8.1 using the appropriate ratio P/S_sE_1 is less than α. Interpolation may be made in the Table.

The required area of reinforcement shall be at least equal to that indicated by the following formula when Q_L is in compression:

$$A_{rL} = \frac{kQ_L R_L \tan\alpha}{S_s E_1}\left[1 - \frac{1}{4}\left(\frac{PR_L - Q_L}{Q_L}\right)\frac{\Delta}{\alpha}\right] \qquad (1)$$

At the large end of the cone-to-cylinder juncture, the $PR_L/2$ term is in compression. When f_1 is in tension and the quantity is larger than the $PR_L/2$ term, the design shall be in accordance with U-2(g). The calculated localized stresses at the discontinuity shall not exceed the stress values specified in 1-5(g)(1) and 1-5(g)(2).

Table 1-8.1
Values of Δ for Junctions at the Large Cylinder for $\alpha \leq 60$ deg

$P/S_s E_1$	0	0.002	0.005	0.010	0.02
Δ, deg	0	5	7	10	15
$P/S_s E_1$	0.04	0.08	0.10	0.125	0.15
Δ, deg	21	29	33	37	40
$P/S_s E_1$	0.20	0.25	0.30	0.35	[Note (1)]
Δ, deg	47	52	57	60	

NOTE:
(1) Δ = 60 deg for greater values of *P/SE.*

Provided by IHS under license with ASME
No reproduction or networking permitted without license from IHS
Licensee=Chevron Phillips Chemical Co LP/5956674001
Not for Resale, 11/09/2014 20:41:36 MST

The effective area of reinforcement can be determined in accordance with the following formula:

$$A_{eL} = 0.55\sqrt{D_L t_s}\left(t_s + t_c/\cos\alpha\right) \quad (2)$$

Any additional area of stiffening which is required shall be situated within a distance of $\sqrt{R_L t_s}$ from the junction of the reducer and the cylinder. The centroid of the added area shall be within a distance of $0.25 \times \sqrt{R_L t_s}$ from the junction.

(2) For cones attached to flat covers, flanges, or other components where the length of cylinder, if present, is less than $2.0\sqrt{R_L t_s}$, the required reinforcement shall be at least equal to that indicated by the following formula:

$$A_{rL} = \frac{kQ_L D_L}{2S_c E_2}\tan\alpha$$

The effective area of reinforcement can be determined in accordance with the following formula:

$$A_{eL} = 0.55\sqrt{(D_L t_c)}\,(t_c/\cos\alpha)$$

Any additional area of reinforcement that is required shall be added to the cone.

(3) When the cone-to-cylinder or knuckle-to-cylinder juncture is a line of support, the moment of inertia for a stiffening ring at the large end shall be determined by the procedure in Steps 1 through 8 below.

For cones attached to flat covers, flanges, or other components where the length of the cylinder, if present, is less than $1.4\sqrt{R_L t_s}$, length L_L in the formulas for A_{TL} and M shall be zero.

Step 1. Assuming that the shell has been designed and D_L, L_L, and t are known, select a member to be used for the stiffening ring and determine cross-sectional area A_{TL}. Then calculate factor B using the following formula. If F_L is a negative number, the design shall be in accordance with U-2(g):

$$B = {}^{3}\!/_{4}\left(\frac{F_L D_L}{A_{TL}}\right)$$

where

$$F_L = PM + f_1 \tan\alpha$$

$$M = \frac{-R_L\tan\alpha}{2} + \frac{L_L}{2} + \frac{R_L^2 - R_s^2}{3R_L\tan\alpha}$$

Step 2. Enter the right-hand side of the applicable material chart in Subpart 3 of Section II, Part D for the material under consideration at the value of B determined by Step 1. If different materials are used for the shell and stiffening ring, use the material chart resulting in the larger value of A in Step 4 below.

Step 3. Move horizontally to the left to the material/temperature line for the design metal temperature. For values of B falling below the left end of the material/temperature line, see Step 5 below.

Step 4. Move vertically to the bottom of the chart and read the value of A.

Step 5. For value of B falling below the left end of the material/temperature line for the design temperature, the value of A can be calculated using the formula $A = 2B/E_x$. For value of B above the material/ temperature line for the design temperature, the design shall be either per U-2(g) or by changing the cone or cylinder configuration, stiffening ring location on the shell, and/or reducing the axial compressive force to reduce the B value to below or at the material/temperature line for the design temperature. For values of B having multiple values of A, such as when B falls on a horizontal portion of the curve, the smallest value of A shall be used.

Step 6. Compute the value of the required moment of inertia from the equations for I_s or I'_s. For the circumferential stiffening ring only,

$$I_s = \frac{AD_L^2 A_{TL}}{14.0}$$

For the shell-cone or ring-shell-cone section,

$$I'_s = \frac{AD_L^2 A_{TL}}{10.9}$$

Step 7. Determine the available moment of inertia of the ring only I or the shell-cone or ring-shell-cone I'.

Step 8. When the ring only is used,

$$I \geq I_s$$

and when the shell-cone or ring-shell-cone is used,

$$I' \geq I'_s$$

If the equation is not satisfied, a new section with a larger moment of inertia must be selected, and the calculation shall be done again until the equation is met.

The requirements of UG-29(b), UG-29(c), UG-29(d), UG-29(e), and UG-29(f) and UG-30 are to be met in attaching stiffening rings to the shell.

(c) Reinforcement shall be provided at the small end of the cone when required by (1) or (2). When the small end of the cone is considered a line of support, the moment of inertia for a stiffening ring shall be determined in accordance with (3).

(1) For cones attached to a cylinder having a minimum length of $1.4\sqrt{R_s t_s}$, reinforcement shall be provided at the junction of the conical shell of a reducer without a

Provided by IHS under license with ASME
No reproduction or networking permitted without license from IHS
Licensee=Chevron Phillips Chemical Co LP/5956674001
Not for Resale, 11/09/2014 20:41:36 MST

flare and the small cylinder. The required area of reinforcement shall be at least equal to that indicated by the following formula when Q_s is in compression:

$$A_{rs} = \frac{kQ_s R_s \tan\alpha}{S_s E_1} \tag{3}$$

At the small end of the cone-to-cylinder juncture, the $PR_s/2$ term is in compression. When f_2 is in tension and the quantity is larger than the $PR_s/2$ term, the design shall be in accordance with U-2(g). The calculated localized stresses at the discontinuity shall not exceed the stress values specified in 1-5(g)(1) and 1-5(g)(2).

The effective area of reinforcement can be determined in accordance with the following formula:

$$A_{es} = 0.55\sqrt{D_s t_s}\left[\left(t_s - t\right) + \left(t_c - t_r\right)/\cos\alpha\right] \tag{4}$$

Any additional area of stiffener which is required shall be situated within a distance of $\sqrt{R_s t_s}$ from the junction, and the centroid of the added area shall be within a distance of $0.25\sqrt{R_s t_s}$ from the junction.

(2) For cones attached to flat covers, flanges, or other components where the length of cylinder, if present, is less than $1.4\sqrt{R_s t_s}$, the required reinforcement shall be at least equal to that indicated by the following formula:

$$A_{rS} = \frac{kQ_s D_s}{2S_c E_2}\tan\alpha$$

The effective area of reinforcement can be determined in accordance with the following formula:

$$A_{eS} = 0.55\sqrt{(D_s t_c)}\left(t_c - t_r\right)/\cos\alpha$$

Any additional area of reinforcement that is required shall be added to the cone or the flange.

(3) When the cone-to-cylinder or knuckle-to-cylinder juncture is a line of support, the moment of inertia for a stiffening ring at the small end shall be determined by the procedure in Steps 1 through 8 below.

For cones attached to flat covers, flanges, or other components where the length of the cylinder, if present, is less than $1.4\sqrt{R_s t_s}$, length L_s in the formulas for A_{TS} and N shall be zero.

Step 1. Assuming that the shell has been designed and D_s, L_s, and t are known, select a member to be used for the stiffening ring and determine cross-sectional area A_{TS}. Then calculate factor B using the following formula. If F_s is a negative number, the design shall be in accordance with U-2(g):

$$B = \frac{3}{4}\left(\frac{F_s D_s}{A_{TS}}\right)$$

where

$$F_s = PN + f_2 \tan\alpha$$

$$N = \frac{R_s \tan\alpha}{2} + \frac{L_s}{2} + \frac{R_L^2 - R_s^2}{6R_s \tan\alpha}$$

Step 2. Enter the right-hand side of the applicable material chart in Subpart 3 of Section II, Part D for the material under consideration at the value of B determined by Step 1. If different materials are used for the shell and stiffening ring, use the material chart resulting in the larger value of A in Step 4 below.

Step 3. Move horizontally to the left to the material/temperature line for the design metal temperature. For values of B falling below the left end of the material/temperature line, see Step 5 below.

Step 4. Move vertically to the bottom of the chart and read the value of A.

Step 5. For values of B falling below the left end of the material/temperature line for the design temperature, the value of A can be calculated using the formula $A = 2B/E_x$. For value of B above the material/ temperature line for the design temperature, the design shall be either per U-2(g) or by changing the cone or cylinder configuration, stiffening ring location on the shell, and/or reducing the axial compressive force to reduce the B value to below or at the material/ temperature line for the design temperature. For values of B having multiple values of A, such as when B falls on a horizontal portion of the curve, the smallest value of A shall be used.

Step 6. Compute the value of the required moment of inertia from the equations for I_s or I'_s.

For the circumferential stiffening ring only,

$$I_s = \frac{AD_s^2 A_{TS}}{14.0}$$

For the shell-cone or ring-shell-cone section,

$$I'_s = \frac{AD_s^2 A_{TS}}{10.9}$$

Step 7. Determine the available moment of inertia of the ring only I or the shell-cone or ring-shell-cone I'.

Provided by IHS under license with ASME
No reproduction or networking permitted without license from IHS
Licensee=Chevron Phillips Chemical Co LP/5956674001
Not for Resale, 11/09/2014 20:41:36 MST

Step 8. When the ring only is used,

$$I \geq I_s$$

and when the shell-cone or ring-shell-cone is used:

$$I' \geq I'_s$$

If the equation is not satisfied, a new section with a larger moment of inertia must be selected, and the calculation shall be done again until the equation is met.

The requirements of UG-29(b), UG-29(c), UG-29(d), UG-29(e), and UG-29(f) and UG-30 are to be met in attaching stiffening rings to the shell.

(d) Reducers not described in UG-36(e)(5), such as those made up of two or more conical frustums having different slopes, may be designed in accordance with (e).

(e) When the half-apex angle α is greater than 60 deg (1.1 rad), cone-to-cylinder junctions without a knuckle may be used, with or without reinforcing rings, if the design is based on special analysis, such as the beam-on-elastic-foundation analysis of Timoshenko, Hetenyi, or Watts and Lang. See U-2(g). The effect of shell and cone buckling on the required area and moment of inertia at the joint is to be taken into consideration in the analysis. When such an analysis is made, the calculated localized stresses at the discontinuity shall not exceed the following values:

(1) Membrane hoop stress plus average discontinuity hoop stress shall not be greater than 1.5*S*.

(2) Membrane longitudinal stress plus discontinuity longitudinal stress due to bending shall not be greater than S_{PS} [see UG-23(e)], where the "average discontinuity hoop stress" is the average hoop stress across the wall thickness due to the discontinuity at the junction, disregarding the effect of Poisson's ratio times the longitudinal stress at the surfaces.

1-9 ALTERNATIVE RULES FOR REINFORCEMENT OF OPENINGS UNDER INTERNAL PRESSURE

(a) Vessel openings in cylindrical and conical shells other than openings described in UG-36(c)(3) subjected to internal pressure with a configuration as described in UW-16(c)(1) may be designed for internal pressure using the following rules in lieu of the internal pressure requirements of UG-37.

The nomenclature given below is used in the equations of the following subparagraphs with reference to Figure 1-9:

B_1 = 162 for $t_n/t \leq 1.0$
= 54 for $t_n/t > 1.0$
B_2 = 210 for $t_n/t \leq 1.0$
= 318 for $t_n/t > 1.0$
d_m = mean diameter of connecting pipe [see (b)(8)]
D_m = mean diameter of cylindrical vessel. For conical shells, the inside shell diameter as used above is the cone diameter at the center of the opening.
t_p = nominal wall thickness of connecting pipe
t_n = nominal wall thickness of nozzle
t = nominal wall thickness of vessel
t_r = required thickness of vessel wall calculated per UG-27(c)(1), with E = 1.00
L = axial length of nozzle with thickness t_n
λ = $(d_m/D_m)(D_m/t)^{1/2}$

(b) The following conditions shall be met:

(1) Use of these rules is limited to temperatures where time-dependent properties do not control the allowable stress. See Section II, Part D, Table 1A Notes (Time-Dependent Properties).

(2) Material shall be limited to those listed in Table UCS-23 or Table UHA-23. The ratio of the specified minimum yield strength to the specified minimum tensile strength (YS/TS) shall be ≤0.80.

(3) The openings shall not exceed 24 in. (600 mm) inside diameter.

(4) The ratio of opening diameter to vessel diameter (d_m/D_m) and the ratio of vessel diameter to vessel thickness (D_m/t) shall meet the following limits:

(-a) For $(d_m/D_m) > 0.5$ $(D_m/t) \leq 100$

(-b) For $(d_m/D_m) \leq 0.5$ $(D_m/t) \leq 250$

(5) The opening is in a cylindrical or conical shell. It shall be located not less than 1.8 $(D_m t)^{1/2}$ from any other gross structural discontinuity such as a head or stiffener.

(6) The spacing between the centerlines of the openings and any other opening is not less than three times their average diameter.

Figure 1-9

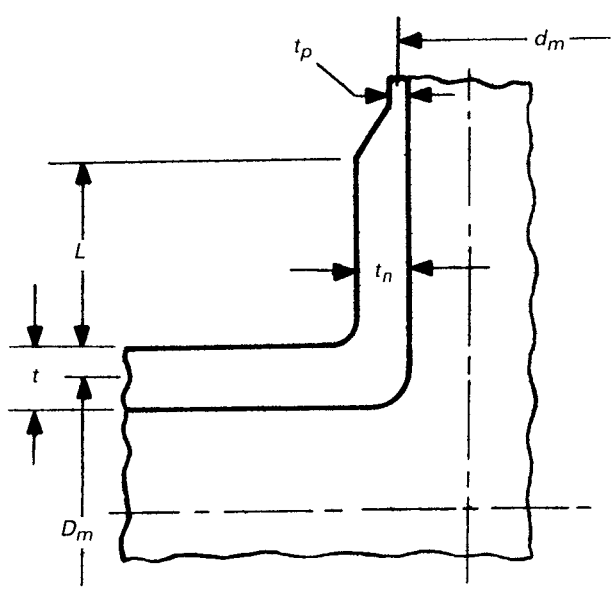

Provided by IHS under license with ASME
No reproduction or networking permitted without license from IHS
Licensee=Chevron Phillips Chemical Co LP/5956674001
Not for Resale, 11/09/2014 20:41:36 MST

(7) The opening is circular in cross section and the nozzle axis is normal to the surface of the cylindrical vessel. These rules do not apply to laterals, nonuniform-wall nozzles, or pad reinforcements.

(8) If $L < 0.5\ (d_m t_n)^{1/2}$, use $t_n = t_p$ in eqs. (10)(1) and (10)(2) below.

(9) The rules of UG-45 shall be met.

(10) The opening shall satisfy eqs. (1) and (2), as follows:

$$\frac{2 + 2\left(\frac{d_m}{D_m}\right)^{3/2}\left(\frac{t_n}{t}\right)^{1/2} + 1.25\lambda}{1 + \left(\frac{d_m}{D_m}\right)^{1/2}\left(\frac{t_n}{t}\right)^{3/2}} \le 2.95\left(\frac{t}{t_r}\right) \tag{1}$$

$$\frac{\left[B_1\left(\frac{t_n}{t}\right)^2 + 228\left(\frac{t_n}{t}\right)\left(\frac{d_m}{D_m}\right) + B_2\right]\lambda + 155}{108\lambda^2 + \left[228\left(\frac{d_m}{D_m}\right)^2 + 228\right]\lambda + 152} \ge (0.93 + 0.005\lambda)\left(\frac{t_r}{t}\right) \tag{2}$$

1-10 ALTERNATIVE METHOD FOR DESIGN OF REINFORCEMENT FOR OPENINGS IN CYLINDRICAL AND CONICAL SHELLS UNDER INTERNAL PRESSURE

The rules of this Mandatory Appendix may be used in lieu of the rules in UG-37 and 1-7, as applicable, for the design of reinforcement for openings in cylindrical or conical vessels under internal pressure. When these rules are used, the requirements UG-40 and UG-42 are not applicable. Likewise, the weld strength requirements of UG-41 shall be satisfied by U-2(g).

(a) Nomenclature

A_1 = area contributed by the vessel wall
A_2 = area contributed by the nozzle outside the vessel wall
A_3 = area contributed by the nozzle inside the vessel wall
A_{41} = area contributed by the outside nozzle fillet weld
A_{42} = area contributed by the pad to vessel fillet weld
A_{43} = area contributed by the inside nozzle fillet weld
A_5 = area contributed by the reinforcing pad
A_p = area resisting pressure, used to determine the nozzle opening discontinuity force
A_T = total area within the assumed limits of reinforcement
α = one-half of the apex angle of a conical shell
D_i = inside diameter of a shell
D_X = distance from the cylinder centerline to the nozzle centerline
d_n = inside diameter of the nozzle
E = the weld joint factor; E = 1.0 if the nozzle does not intersect a weld seam
F_a = shell attachment factor
F_p = nozzle attachment factor
f_N = force from internal pressure in the nozzle outside of the vessel
f_S = force from internal pressure in the shell
f_Y = discontinuity force from internal pressure
F_P = nozzle attachment factor
L_{41} = weld leg length of the outside nozzle fillet weld
L_{42} = weld leg length of the pad to vessel fillet weld
L_{43} = weld leg length of the inside nozzle fillet weld
L_H = effective length of nozzle wall outside the vessel
L_I = effective length of nozzle wall inside the vessel
L_R = effective length of the vessel wall
L_{pr1} = nozzle projection from the outside of the vessel wall
L_{pr2} = nozzle projection from the inside of the vessel wall
L_{pr3} = length of variable thickness, t from the outside of the vessel wall
P = internal or external design pressure
P_{max} = nozzle maximum allowable pressure
P_L = maximum local primary membrane stress at the nozzle intersection
R = inside radius of the vessel shell including any corrosion allowance
R_{eff} = effective pressure radius
R_n = nozzle inside radius
R_{nc} = radius of the nozzle opening in the vessel along the long chord
S_{allow} = allowable local primary membrane stress
S = the allowable stress of the nozzle and shell material given in Section II, Part D at design temperature
σ_{avg} = average primary membrane stress
σ_{circ} = general primary membrane stress
θ = angle between the nozzle centerline and the vessel centerline
t = nominal thickness of the vessel wall
t_e = thickness of the reinforcing pad
t_{eff} = effective thickness used in the calculation of pressure stress near the nozzle opening
t_n = nominal thickness of the nozzle wall
t_{n2} = nominal wall thickness of the thinner portion of a variable thickness nozzle
W = width of the reinforcing pad

(b) Pressure Area Design of Nozzle Reinforcement in Cylindrical and Conical Shells

(1) Radial Nozzle in a Cylindrical Shell. The maximum local primary membrane stress and the nozzle maximum allowable working pressure shall be determined using the following equations. See Figures 1-10-1 through 1-10-6 for details.

Provided by IHS under license with ASME
No reproduction or networking permitted without license from IHS
Licensee=Chevron Phillips Chemical Co LP/5956674001
Not for Resale, 11/09/2014 20:41:36 MST

Step 1. Calculate the limit of reinforcement along the vessel wall:

For integrally reinforced nozzles:

$$L_R = 8t \tag{1}$$

For nozzles with reinforcing pads:

$$L_R = 8t \text{ for } t_e < 0.5t \text{ or} W < 2t \tag{2}$$

$$L_R = 10t \text{ for } t_e \geq 0.5t \text{ and } W < 8\left(t + t_e\right) \tag{3}$$

$$L_R = 8\left(t + t_e\right) \text{ for } t_e \geq 0.5t \text{ and } W \geq 8\left(t + t_e\right) \tag{4}$$

Step 2. Calculate the limit of reinforcement along the nozzle wall projecting outside the vessel surface:

$$L_{H1} = t + 0.78\sqrt{R_n t_n} \tag{5}$$

$$L_{H2} = L_{pr1} + t \tag{6}$$

$$L_{H3} = 8\left(t + t_e\right) \tag{7}$$

$$L_H = \min\left[L_{H1}, L_{H2}, L_{H3}\right] \tag{8}$$

If the nozzle neck has a variable wall thickness (see Figure 1-10-2) and $L_H > L_{pr3} + t$, then the limit of reinforcement is modified as follows:

$$L_{H4} = L_{pr3} + t + 0.78\left(\frac{t_{n2}}{t_n}\right)\sqrt{R_n t_{n2}} \tag{9}$$

$$L_H = \min\left[L_{H1}, L_{H2}, L_{H4}\right] \tag{10}$$

Step 3. Calculate the limit of reinforcement along the nozzle wall projecting inside the vessel surface, if applicable:

$$L_{I1} = 0.78\sqrt{R_n t_n} \tag{11}$$

$$L_{I2} = L_{pr2} \tag{12}$$

$$L_{I3} = 8\left(t + t_e\right) \tag{13}$$

$$L_I = \min\left[L_{I1}, L_{I2}, L_{I3}\right] \tag{14}$$

Step 4. Determine the total available area near the nozzle opening:

$$A_T = A_1 + A_2 + A_3 + A_{41} + A_{42} + A_{43} + A_5 \tag{15}$$

where

$$A_1 = tL_R \max\left(\frac{\lambda}{4}, 1\right) \tag{16}$$

$$\lambda = \min\left[\frac{\left(d_n + t_n\right)}{\sqrt{\left(D_i + t_{\text{eff}}\right)t_{\text{eff}}}}, 10\right] \tag{17}$$

$$A_2 = t_n L_H \text{ for } L_H \leq L_{pr3} + t \tag{18}$$

$$A_2 = t_n\left(L_{pr3} + t\right) + 0.78\left(\frac{t_{n2}{}^2}{t_n}\right)\sqrt{R_n t_{n2}} \quad \text{for } L_H > L_{pr3} + t \tag{19}$$

$$A_3 = t_n L_I \tag{20}$$

$$A_{41} = 0.5L_{41}^2 \tag{21}$$

$$A_{42} = 0.5L_{42}^2 \tag{22}$$

$$A_{43} = 0.5L_{43}^2 \tag{23}$$

$$A_{5a} = Wt_e \tag{24}$$

$$A_{5b} = L_R t_e \tag{25}$$

$$A_5 = \min\left[A_{5a}, A_{5b}\right] \tag{26}$$

Step 5. Determine the effective radius of the shell as follows:

For cylindrical shells:

$$R_{eff} = \frac{D_i}{21} \tag{27}$$

For conical shells R_{eff} is the inside radius of the conical shell at the nozzle centerline to cone junction. The radius is measured normal to the longitudinal axis of the conical shell.

Step 6. Determine the applicable forces:

$$f_N = PR_n\left(L_H - t\right) \tag{28}$$

$$f_S = PR_{eff}\left(L_R + t_n\right) \tag{29}$$

$$f_Y = PR_{eff}R_{nc} \tag{30}$$

Provided by IHS under license with ASME

No reproduction or networking permitted without license from IHS

Licensee=Chevron Phillips Chemical Co LP/5956674001
Not for Resale, 11/09/2014 20:41:36 MST

Figure 1-10-1
Nomenclature for Reinforced Openings

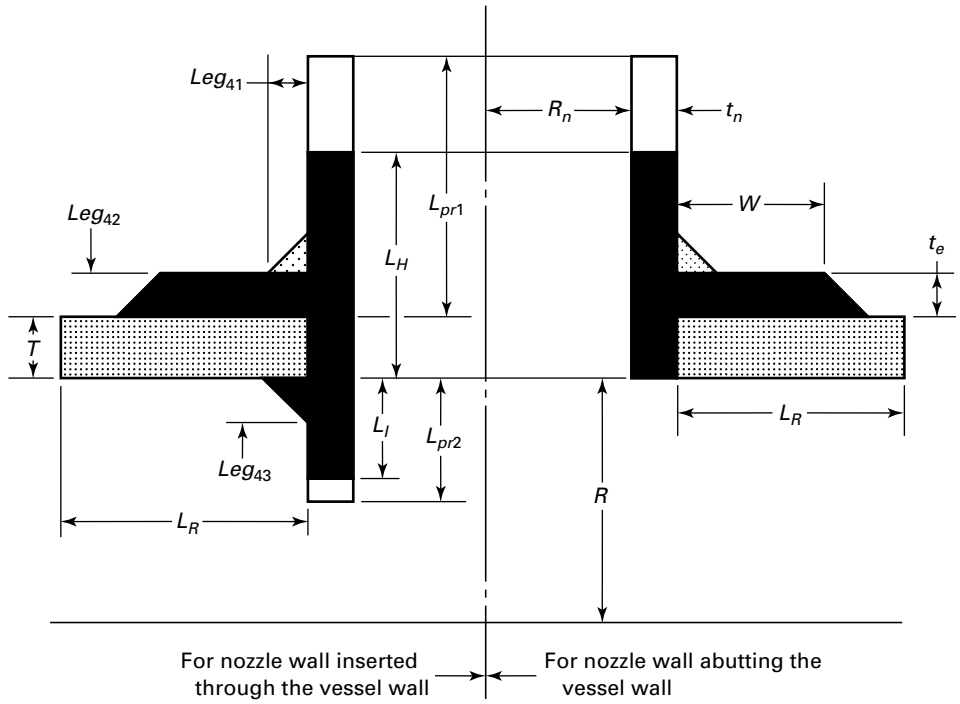

Determine the contributing areas as applicable where L_R, L_H, and L_I are determined from the procedures in 1-10(b)(1).

$= A_1 = tL_R \max\left(\frac{\lambda}{4}, 1\right)$	Area contributed by shell
$= A_2 = t_n L_H$ for $L_H \leq L_{pr3} + t$	Area contributed by nozzle projecting outward
$A_2 = t_n (L_{pr3} + t) + 0.78 \left(\frac{t_{n2}^2}{t_n}\right) \sqrt{R_n t_{n2}}$ for $L_H > L_{pr3} + t$	
$= A_3 = t_n L_I$	Area contributed by nozzle projecting inward
$= A_{41} = 0.5\, L_{41}^2$	Area contributed by outward weld
$= A_{42} = 0.5\, L_{42}^2$	Area contributed by pad to vessel weld
$= A_{43} = 0.5\, L_{43}^2$	Area contributed by inward weld
$= A_5 = \text{MIN}\,[W t_e, L_R t_e]$	Area contributed by reinforcing pad
$A_T = A_1 + A_2 + A_3 + A_{41} + A_{42} + A_{43} + A_5$	Total area contributed

GENERAL NOTE: Do not include any area that falls outside of the limits defined by L_H, L_R, and L_I. For example, if $W \geq L_R$ and $L_R = A_{42} = 0$.

Provided by IHS under license with ASME
No reproduction or networking permitted without license from IHS
Licensee=Chevron Phillips Chemical Co LP/5956674001
Not for Resale, 11/09/2014 20:41:36 MST

Figure 1-10-2
Nomenclature for Variable Thickness Openings

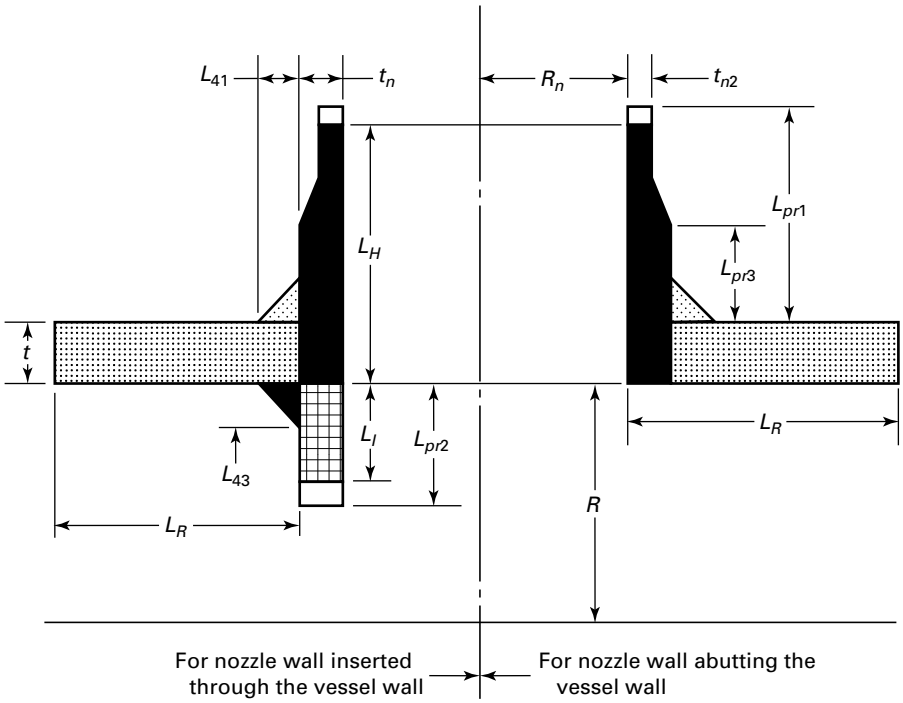

Figure 1-10-3
Radial Nozzle in a Cylindrical Shell

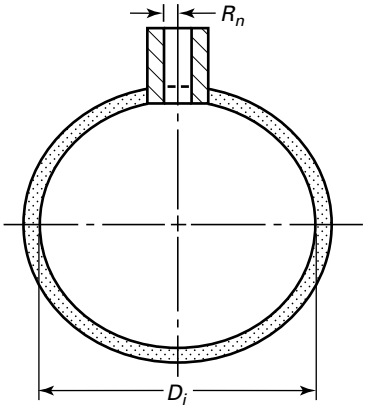

Figure 1-10-4
Nozzle in a Cylindrical Shell Oriented at an Angle From the Longitudinal Axis

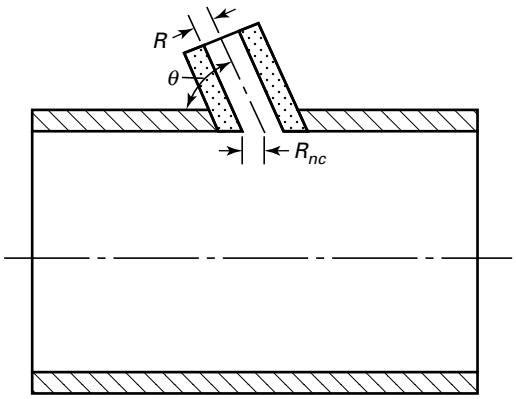

Provided by IHS under license with ASME
No reproduction or networking permitted without license from IHS
Licensee=Chevron Phillips Chemical Co LP/5956674001
Not for Resale, 11/09/2014 20:41:36 MST

Figure 1-10-5
Radial Nozzle in a Conical Shell

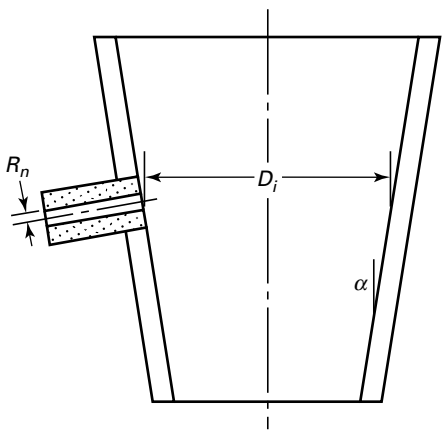

Step 7. Determine the effective thickness for nozzles in cylindrical or conical shells as follows:

$$t_{eff} = 1 \tag{31}$$

If $t_e \geq 0.5t$ and $W \geq 8\ (t + t_e)$ then the effective thickness is modified as follows:

$$t_{eff} = t + t_e \tag{32}$$

Step 8. Determine the average local primary membrane stress and the general primary membrane stress in the vessel:

$$\sigma_{avg} = \frac{(f_N + f_S + f_Y)}{A_T} \tag{33}$$

$$\sigma_{circ} = \frac{PR_{eff}}{t_{eff}} \tag{34}$$

Step 9. Determine the maximum local primary membrane stress at the nozzle intersection:

$$P_L = \max\left[2\sigma_{avg} - \sigma_{circ}, \sigma_{circ}\right] \tag{35}$$

Step 10. The calculated maximum local primary membrane stress should satisfy the following:

$$P_L \leq S_{allow} \tag{36}$$

For nozzles subjected to internal pressure, the allowable stress is:

$$S_{allow} = 1.5SE \tag{37}$$

Step 11. Determine the maximum allowable working pressure of the nozzle:

$$P_{\max_1} = \frac{S_{allow}}{2\left(\frac{A_p}{A_T}\right) - \left(\frac{R_{eff}}{t_{eff}}\right)} \tag{38}$$

where

$$P_{\max_2} = S\left[\frac{t}{R_{eff}}\right] \tag{39}$$

$$A_p = R_n(L_H - t) + R_{eff}(L_R + t_n + R_{nc}) \tag{40}$$

$$P_{\max} = \min\left[P_{\max_1}, P_{\max_2}\right] \tag{41}$$

(2) Nozzle in a Cylindrical Shell Oriented at an Angle From the Longitudinal Axis. The maximum local primary membrane stress and the nozzle maximum allowable working pressure shall be determined following Steps (1)1 through (1)10, but substituting the following (see Figure 1-10-4):

$$R_{nc} = \frac{R_n}{\sin\theta} \tag{42}$$

(3) Radial Nozzle in a Conical Shell. The maximum local primary membrane stress and the nozzle maximum allowable working pressure shall be determined following Steps (1)1 through (1)10, but substituting the following (see Figure 1-10-5):

$$f_s = \frac{P}{\cos\alpha}\left[R_{eff} + \left(\frac{L_R + t_n + R_{nc}}{2}\right)\sin\alpha\right](L_R + t_n) \tag{43}$$

$$f_Y = \frac{P\left(R_{eff} + \frac{R_{nc}}{2}\sin\alpha\right)R_{nc}}{\cos\alpha} \tag{44}$$

$$\sigma_{circ} = \frac{P\left[R_{eff} + (L_R + t_n + R_{nc})\sin\alpha\right]}{t_{eff}\cos\alpha} \tag{45}$$

$$P_{max} = \frac{S_{allow}}{2\left(\frac{A_p}{A_T}\right) - \frac{R_{eff} + (L_R + t_n + R_{nc})\sin\alpha}{t_{eff}\cos\alpha}} \tag{46}$$

Provided by IHS under license with ASME
No reproduction or networking permitted without license from IHS
Licensee=Chevron Phillips Chemical Co LP/5956674001
Not for Resale, 11/09/2014 20:41:36 MST

$$A_p = R_n(L_H - t) + \left[R_{eff} + \left(\frac{L_R + t_n + R_{nc}}{2}\right)\sin\alpha\right] \times \left(\frac{L_R + t_n}{\cos\alpha}\right) + \frac{R_{nc}\left(R_{eff} + 0.5R_{nc}\sin\alpha\right)}{\cos\alpha} \quad (47)$$

(4) Nozzle in a Conical Shell Oriented Perpendicular to the Longitudinal Axis. The maximum local primary membrane stress and the nozzle maximum allowable working pressure shall be determined following (3), but substituting the following (see Figure 1-10-6):

$$R_{nc} = \frac{R_n}{\cos\alpha} \quad (48)$$

(c) Spacing Requirements for Nozzles. If the limits of reinforcement determined in accordance with Steps (b)(1)1 through (b)(1)10 for nozzles in cylindrical or conical shells do not overlap, no additional analysis is required. If the limits of reinforcement overlap, the design shall be evaluated in accordance with U-2(g).

(d) Caution to the Designer. Appendix 1-7(b) design methods are particularly applicable to large bolted flanged nozzles in relatively thin (D_i / t > 100) vessels when the vessel nozzle flange is located close to the nozzle/shell intersection. The nozzle/shell intersection in these cases is more flexible and the usual assumption of axial-only strain may not be valid. This flexing results in strain redistribution around the nozzle circumference. Strain redistribution may cause distortion (ovaling) of the nozzle neck and flange such that a proper seal at the bolted flange connection cannot be obtained or maintained. Flanged connections with a minimum projection from flange face to outside surface of shell less than $3.0\sqrt{R_n t_n}$ may be affected by ovaling distortion and should be considered by the designer as permitted by U-2(g) or by the rules in Appendix 1-7(b).

For radial openings in shell having D_i/t greater than 200 and the nozzle I.D. (d_n) greater than 40 in. (1000 mm), consideration should be given in design of reinforcement using the method in Appendix 1-7(b) or the rules of U-2(g).

Figure 1-10-6
Nozzle in a Conical Shell Oriented Perpendicular to Longitudinal Axis

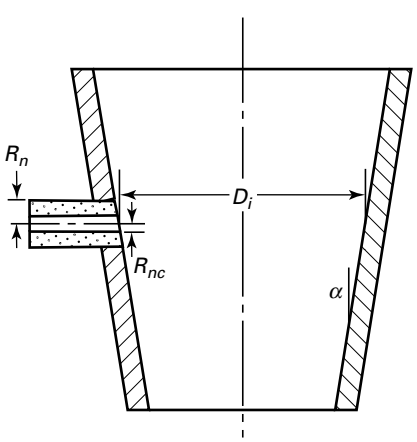

Provided by IHS under license with ASME
No reproduction or networking permitted without license from IHS
Licensee=Chevron Phillips Chemical Co LP/5956674001
Not for Resale, 11/09/2014 20:41:36 MST

MANDATORY APPENDIX 2
RULES FOR BOLTED FLANGE CONNECTIONS WITH RING TYPE GASKETS

GENERAL

2-1 SCOPE

(a) The rules in Mandatory Appendix 2 apply specifically to the design of bolted flange connections with gaskets that are entirely within the circle enclosed by the bolt holes and with no contact outside this circle, and are to be used in conjunction with the applicable requirements in Subsections A, B, and C of this Division. The hub thickness of weld neck flanges designed to this Appendix shall also comply with the minimum thickness requirements in Subsection A of this Division. These rules are not to be used for the determination of the thickness of supported or unsupported tubesheets integral with a bolting flange as illustrated in Figure UW-13.2 sketches (h) through (l) or Figure UW-13.3 sketch (c). Nonmandatory Appendix S provides discussion on Design Considerations for Bolted Flanged Connections.

These rules provide only for hydrostatic end loads and gasket seating. The flange design methods outlined in 2-4 through 2-8 are applicable to circular flanges under internal pressure. Modifications of these methods are outlined in 2-9 and 2-10 for the design of split and noncircular flanges. see 2-11 for flanges with ring type gaskets subject to external pressure, 2-12 for flanges with nut-stops, and 2-13 for reverse flanges. Rules for calculating rigidity factors for flanges are provided in 2-14. Recommendations for qualification of assembly procedures and assemblers are in 2-15. Proper allowance shall be made if connections are subject to external loads other than external pressure.

(b) The design of a flange involves the selection of the gasket (material, type, and dimensions), flange facing, bolting, hub proportions, flange width, and flange thickness. See Note in 2-5(c)(1). Flange dimensions shall be such that the stresses in the flange, calculated in accordance with 2-7, do not exceed the allowable flange stresses specified in 2-8. Except as provided for in 2-14(a), flanges designed to the rules of this Appendix shall also meet the rigidity requirements of 2-14. All calculations shall be made on dimensions in the corroded condition.

(c) It is recommended that bolted flange connections conforming to the standards listed in UG-44 be used for connections to external piping. These standards may be used for other bolted flange connections and dished covers within the limits of size in the standards and the pressure–temperature ratings permitted in UG-44. The ratings in these standards are based on the hub dimensions given or on the minimum specified thickness of flanged fittings of integral construction. Flanges fabricated from rings may be used in place of the hub flanges in these standards provided that their strength, calculated by the rules in this Appendix, is not less than that calculated for the corresponding size of hub flange.

(d) Except as otherwise provided in (c) above, bolted flange connections for unfired pressure vessels shall satisfy the requirements in this Appendix.

(e) The rules of this Appendix should not be construed to prohibit the use of other types of flanged connections provided they are designed in accordance with good engineering practice and method of design is acceptable to the Inspector. Some examples of flanged connections which might fall in this category are as follows:

(1) flanged covers as shown in Figure 1-6;

(2) bolted flanges using full-face gaskets;

(3) flanges using means other than bolting to restrain the flange assembly against pressure and other applied loads.

2-2 MATERIALS

(a) Materials used in the construction of bolted flange connections shall comply with the requirements given in UG-4 through UG-14.

(b) Flanges made from ferritic steel and designed in accordance with this Appendix shall be full-annealed, normalized, normalized and tempered, or quenched and tempered when the thickness of the flange section exceeds 3 in. (75 mm).

(c) Material on which welding is to be performed shall be proved of good weldable quality. Satisfactory qualification of the welding procedure under Section IX is considered as proof. Welding shall not be performed on steel that has a carbon content greater than 0.35%. All welding on flange connections shall comply with the requirements for postweld heat treatment given in this Division.

(d) Fabricated hubbed flanges shall be in accordance with the following:

(1) Hubbed flanges may be machined from a hot rolled or forged billet or forged bar. The axis of the finished flange shall be parallel to the long axis of the original billet or bar. (This is not intended to imply that the axis of the finished flange and the original billet must be concentric.)

Provided by IHS under license with ASME
No reproduction or networking permitted without license from IHS
Licensee=Chevron Phillips Chemical Co LP/5956674001
Not for Resale, 11/09/2014 20:41:36 MST

(2) Hubbed flanges [except as permitted in (1) above] shall not be machined from plate or bar stock material unless the material has been formed into a ring, and further provided that:

(-a) in a ring formed from plate, the original plate surfaces are parallel to the axis of the finished flange. (This is not intended to imply that the original plate surface be present in the finished flange.)

(-b) the joints in the ring are welded butt joints that conform to the requirements of this Division. Thickness to be used to determine postweld heat treatment and radiography requirements shall be the lesser of

$$t \text{ or } \frac{(A-B)}{2}$$

where these symbols are as defined in 2-3.

(-c) the back of the flange and the outer surface of the hub are examined by either the magnetic particle method as per Mandatory Appendix 6 or the liquid penetrant method as per Mandatory Appendix 8.

(e) Bolts, studs, nuts, and washers shall comply with the requirements in this Division. It is recommended that bolts and studs have a nominal diameter of not less than $^1/_2$ in. (13 mm). If bolts or studs smaller than $^1/_2$ in. (13 mm) are used, ferrous bolting material shall be of alloy steel. Precautions shall be taken to avoid over-stressing small-diameter bolts.

2-3 NOTATION

The symbols described below are used in the equations for the design of flanges (see also Figure 2-4):

A = outside diameter of flange or, where slotted holes extend to the outside of the flange, the diameter to the bottom of the slots

A_b = cross-sectional area of the bolts using the root diameter of the thread or least diameter of unthreaded position, if less

A_m = total required cross-sectional area of bolts, taken as the greater of A_{m1} and A_{m2}

A_{m1} = total cross-sectional area of bolts at root of thread or section of least diameter under stress, required for the operating conditions

= W_{m1} / S_b

A_{m2} = total cross-sectional area of bolts at root of thread or section of least diameter under stress, required for gasket seating

= W_{m2} / S_a

a = nominal bolt diameter

B = inside diameter of flange. When B is less than $20g_1$, it will be optional for the designer to substitute B_1 for B in the formula for longitudinal stress S_H.

B_s = bolt spacing. The bolt spacing may be taken as the bolt circle circumference divided by the number of bolts or as the chord length between adjacent bolt locations.

B_{sc} = bolt spacing factor

B_{smax} = maximum bolt spacing

B_1 = $B + g_1$ for loose type flanges and for integral type flanges that have calculated values h / h_o and g_1 / g_o which would indicate an f value of less than 1.0, although the minimum value of f permitted is 1.0.

= $B + g_o$ for integral type flanges when f is equal to or greater than one

b = effective gasket or joint-contact-surface seating width [see Note in 2-5(c)(1)]

b_o = basic gasket seating width (from Table 2-5.2)

C = bolt-circle diameter

C_b = conversion factor

= 0.5 for U.S. Customary calculations; 2.5 for SI calculations

c = basic dimension used for the minimum sizing of welds equal to t_n or t_x, whichever is less

d = factor

$$d = \frac{U}{V} h_o g_o^2 \text{ for integral type flanges}$$

$$d = \frac{U}{V_L} h_o g_o^2 \text{ for loose type flanges}$$

e = factor

$$e = \frac{F}{h_o} \text{ for integral type flanges}$$

$$e = \frac{F_L}{h_o} \text{ for loose type flanges}$$

F = factor for integral type flanges (from Figure 2-7.2)

F_L = factor for loose type flanges (from Figure 2-7.4)

f = hub stress correction factor for integral flanges from Figure 2-7.6 (When greater than one, this is the ratio of the stress in the small end of hub to the stress in the large end.) (For values below limit of figure, use f = 1.)

G = diameter at location of gasket load reaction. Except as noted in sketch (1) of Figure 2-4, G is defined as follows (see Table 2-5.2):
When $b_o \le {}^1/_4$ in. (6 mm), G = mean diameter of gasket contact face
When $b_o > {}^1/_4$ in. (6 mm), G = outside diameter of gasket contact face less $2b$,

g_o = thickness of hub at small end

(a) for optional type flanges calculated as integral and for integral type flanges per Figure 2-4, illustration (7), $g_o = t_n$

(b) for other integral type flanges, g_o = the smaller of t_n or the thickness of the hub at the small end

g_1 = thickness of hub at back of flange

H = total hydrostatic end force

= $0.785G^2 P$

Provided by IHS under license with ASME
No reproduction or networking permitted without license from IHS
Licensee=Chevron Phillips Chemical Co LP/5956674001
Not for Resale, 11/09/2014 20:41:36 MST

H_D = hydrostatic end force on area inside of flange
= $0.785B^2 P$

H_G = gasket load (difference between flange design bolt load and total hydrostatic end force)
= $W-H$

H_p = total joint-contact surface compression load
= $2b \times 3.14\ GmP$

H_T = difference between total hydrostatic end force and the hydrostatic end force on area inside of flange
= $H-H_D$

h = hub length

h_D = radial distance from the bolt circle, to the circle on which H_D acts, as prescribed in Table 2-6

h_G = radial distance from gasket load reaction to the bolt circle
= $(C-G)/2$

h_o = factor
= $\sqrt{Bg_o}$

h_T = radial distance from the bolt circle to the circle on which H_T acts as prescribed in Table 2-6

K = ratio of outside diameter of flange to inside diameter of flange
= A/B

L = factor
= $\frac{te+1}{T} + \frac{t^3}{d}$

M_D = component of moment due to H_D,
= $H_D h_D$

M_G = component of moment due to H_G,
= $H_G h_G$

M_o = total moment acting upon the flange, for the operating conditions or gasket seating as may apply (see 2-6)

M_T = component of moment due to H_T
= $H_T h_T$

m = gasket factor, obtain from Table 2-5.1 [see Note 1, 2-5(c)(1)]

N = width used to determine the basic gasket seating with b_o, based upon the possible contact width of the gasket (see Table 2-5.2)

P = internal design pressure (see UG-21). For flanges subject to external design pressure, see 2-11.

R = radial distance from bolt circle to point of intersection of hub and back of flange. For integral and hub flanges,

$R = \frac{C-B}{2} - g_1$

S_a = allowable bolt stress at atmospheric temperature (see UG-23)

S_b = allowable bolt stress at design temperature (see UG-23)

S_f = allowable design stress for material of flange at design temperature (operating condition) or atmospheric temperature (gasket seating), as may apply (see UG-23)

S_H = calculated longitudinal stress in hub

S_n = allowable design stress for material of nozzle neck, vessel or pipe wall, at design temperature (operating condition) or atmospheric temperature (gasket seating), as may apply (see UG-23)

S_R = calculated radial stress in flange

S_T = calculated tangential stress in flange

T = factor involving K (from Figure 2-7.1)

t = flange thickness

t_n = nominal thickness of shell or nozzle wall to which flange or lap is attached

t_x = two times the thickness g_0, when the design is calculated as an integral flange or two times the thickness of shell nozzle wall required for internal pressure, when the design is calculated as a loose flange, but not less than $^1/_4$ in. (6 mm)

U = factor involving K (from Figure 2-7.1)

V = factor for integral type flanges (from Figure 2-7.3)

V_L = factor for loose type flanges (from Figure 2-7.5)

W = flange design bolt load, for the operating conditions or gasket seating, as may apply [see 2-5(e)]

W_{m1} = minimum required bolt load for the operating conditions [see 2-5(c)]. For flange pairs used to contain a tubesheet for a floating head or a U-tube type of heat exchangers, or for any other similar design, W_{m1} shall be the larger of the values as individually calculated for each flange, and that value shall be used for both flanges.

W_{m2} = minimum required bolt load for gasket seating [see 2-5(c)]. For flange pairs used to contain a tubesheet for a floating head or U-tube type of heat exchanger, or for any other similar design where the flanges or gaskets are not the same, W_{m2} shall be the larger of the values calculated for each flange and that value shall be used for both flanges.

w = width used to determine the basic gasket seating width b_0, based upon the contact width between the flange facing and the gasket (see Table 2-5.2)

Y = factor involving K (from Figure 2-7.1)

y = gasket or joint-contact-surface unit seating load, [see Note 1, 2-5(c)]

Z = factor involving K (from Figure 2-7.1)

2-4 CIRCULAR FLANGE TYPES

(a) For purposes of computation, there are three types:

(1) Loose Type Flanges. This type covers those designs in which the flange has no direct connection to the nozzle neck, vessel, or pipe wall, and designs where the method of attachment is not considered to give the

Provided by IHS under license with ASME
No reproduction or networking permitted without license from IHS
Licensee=Chevron Phillips Chemical Co LP/5956674001
Not for Resale, 11/09/2014 20:41:36 MST

mechanical strength equivalent of integral attachment. see Figure 2-4 sketches (1), (1a), (2), (2a), (3), (3a), (4), (4a), (4b), and (4c) for typical loose type flanges and the location of the loads and moments. Welds and other details of construction shall satisfy the dimensional requirements given in Figure 2-4 sketches (1), (1a), (2), (2a), (3), (3a), (4), (4a), (4b), and (4c).

(2) Integral Type Flanges. This type covers designs where the flange is cast or forged integrally with the nozzle neck, vessel or pipe wall, butt welded thereto, or attached by other forms of arc or gas welding of such a nature that the flange and nozzle neck, vessel or pipe wall is considered to be the equivalent of an integral structure. In welded construction, the nozzle neck, vessel, or pipe wall is considered to act as a hub. see Figure 2-4 sketches (5), (6), (6a), (6b), and (7) for typical integral type flanges and the location of the loads and moments. Welds and other details of construction shall satisfy the dimensional requirements given in Figure 2-4 sketches (5), (6), (6a), (6b), and (7).

(3) Optional Type Flanges. This type covers designs where the attachment of the flange to the nozzle neck, vessel or pipe wall is such that the assembly is considered to act as a unit, which shall be calculated as an integral flange, except that for simplicity the designer may calculate the construction as a loose type flange provided none of the following values is exceeded:

$$g_o = {}^5\!/_8 \text{ in.} (16 \text{ mm})$$
$$B/g_o = 300$$
$$P = 300 \text{ psi } (2 \text{ MPa})$$
$$\text{operating temperature} = 700°\text{F } (370°\text{C})$$

See Figure 2-4 sketches (8), (8a), (9), (9a), (10), (10a), and (11) for typical optional type flanges. Welds and other details of construction shall satisfy the dimensional requirements given in Figure 2-4 sketches (8), (8a), (9), (9a), (10), (10a), and (11).

2-5 BOLT LOADS

(a) General Requirements

(1) In the design of a bolted flange connection, calculations shall be made for each of the two design conditions of operating and gasket seating, and the more severe shall control.

(2) In the design of flange pairs used to contain a tubesheet of a heat exchanger or any similar design where the flanges and/or gaskets may not be the same, loads must be determined for the most severe condition of operating and/or gasket seating loads applied to each side at the same time. This most severe condition may be gasket seating on one flange with operating on the other, gasket seating on each flange at the same time, or operating on each flange at the same time. Although no specific rules are given for the design of the flange pairs, after the loads for the most severe conditions are determined, calculations shall be made for each flange following the rules of Mandatory Appendix 2.

(3) Recommended minimum gasket contact widths for sheet and composite gaskets are provided in Table 2-4.

(b) Design Conditions

(1) Operating Conditions. The conditions required to resist the hydrostatic end force of the design pressure tending to part the joint, and to maintain on the gasket or joint-contact surface sufficient compression to assure a tight joint, all at the design temperature. The minimum load is a function of the design pressure, the gasket material, and the effective gasket or contact area to be kept tight under pressure, per eq. (c)(1)(1) below, and determines one of the two requirements for the amount of the bolting A_{m1}. This load is also used for the design of the flange, per eq. (d)(3) below.

(2) Gasket Seating. The conditions existing when the gasket or joint-contact surface is seated by applying an initial load with the bolts when assembling the joint, at atmospheric temperature and pressure. The minimum initial load considered to be adequate for proper seating is a function of the gasket material, and the effective gasket or contact area to be seated, per eq. (c)(2)(2) below, and determines the other of the two requirements for the amount of bolting A_{m2}. For the design of the flange, this load is modified per eq. (e)(4) below to take account of the operating conditions, when these govern the amount of bolting required A_m, as well as the amount of bolting actually provided A_b.

(c) Required Bolt Loads. The flange bolt loads used in calculating the required cross-sectional area of bolts shall be determined as follows.

(1) The required bolt load for the operating conditions W_{m1} shall be sufficient to resist the hydrostatic end force H exerted by the maximum allowable working pressure on the area bounded by the diameter of gasket reaction, and, in addition, to maintain on the gasket or joint-contact surface a compression load H_p, which experience has shown to be sufficient to assure a tight joint. (This compression load is expressed as a multiple m of the internal pressure. Its value is a function of the gasket material and construction.)

NOTE: Tables 2-5.1 and 2-5.2 give a list of many commonly used gasket materials and contact facings, with suggested values of *m*, *b*, and *y* that have proved satisfactory in actual service. These values are suggested only and are not mandatory.

The required bolt load for the operating conditions W_{m1} is determined in accordance with eq. (1).

$$W_{m1} = H + H_p = 0.785G^2P + (2b \times 3.14GmP) \qquad (1)$$

(2) Before a tight joint can be obtained, it is necessary to seat the gasket or joint-contact surface properly by applying a minimum initial load (under atmospheric temperature conditions without the presence of internal

Provided by IHS under license with ASME
No reproduction or networking permitted without license from IHS
Licensee=Chevron Phillips Chemical Co LP/5956674001
Not for Resale, 11/09/2014 20:41:36 MST

Figure 2-4
Types of Flanges (13)

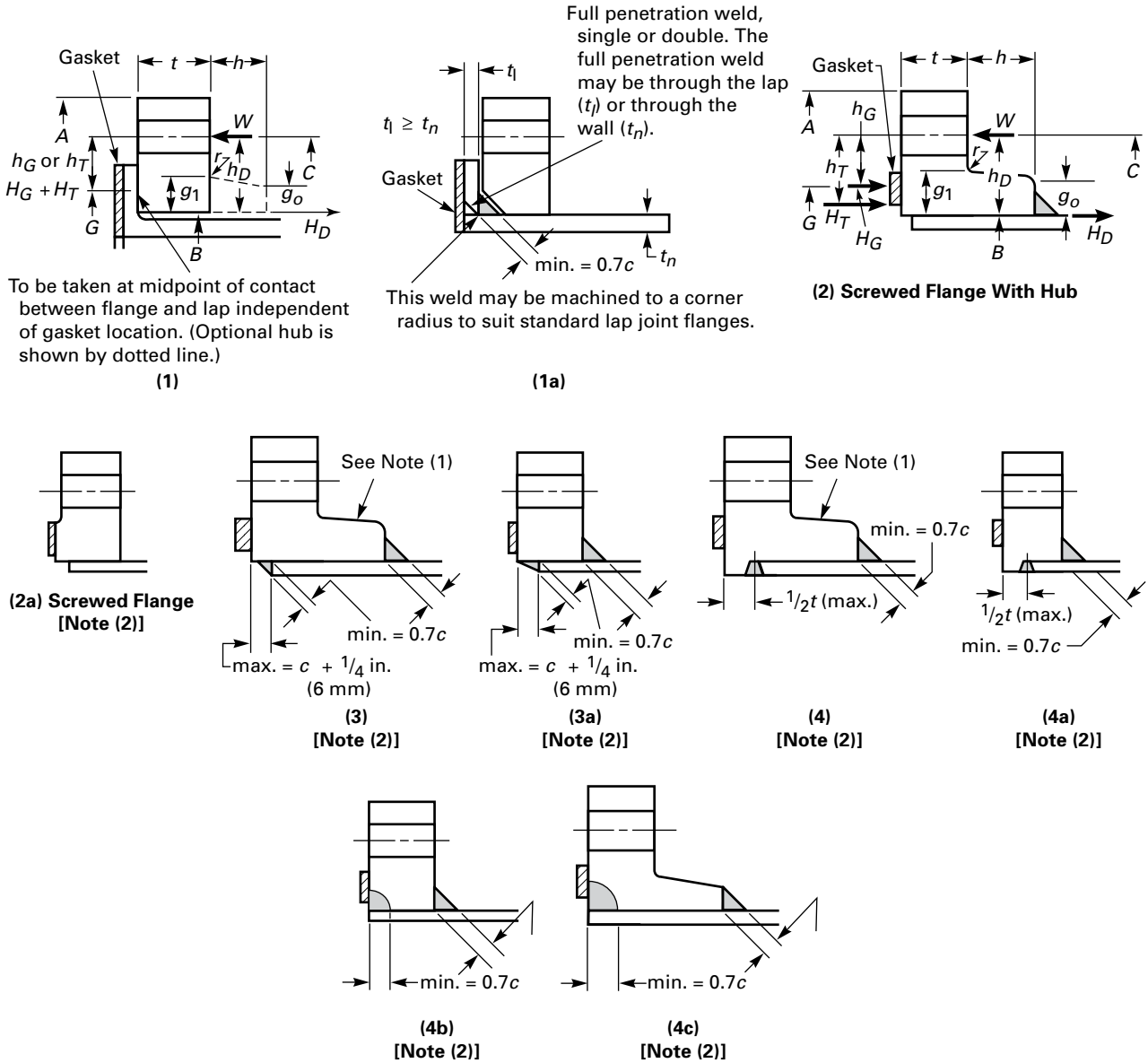

Loose-Type Flanges [Notes (3) and (4)]

Provided by IHS under license with ASME
No reproduction or networking permitted without license from IHS
Licensee=Chevron Phillips Chemical Co LP/5956674001
Not for Resale, 11/09/2014 20:41:36 MST

Figure 2-4
Types of Flanges (Cont'd)

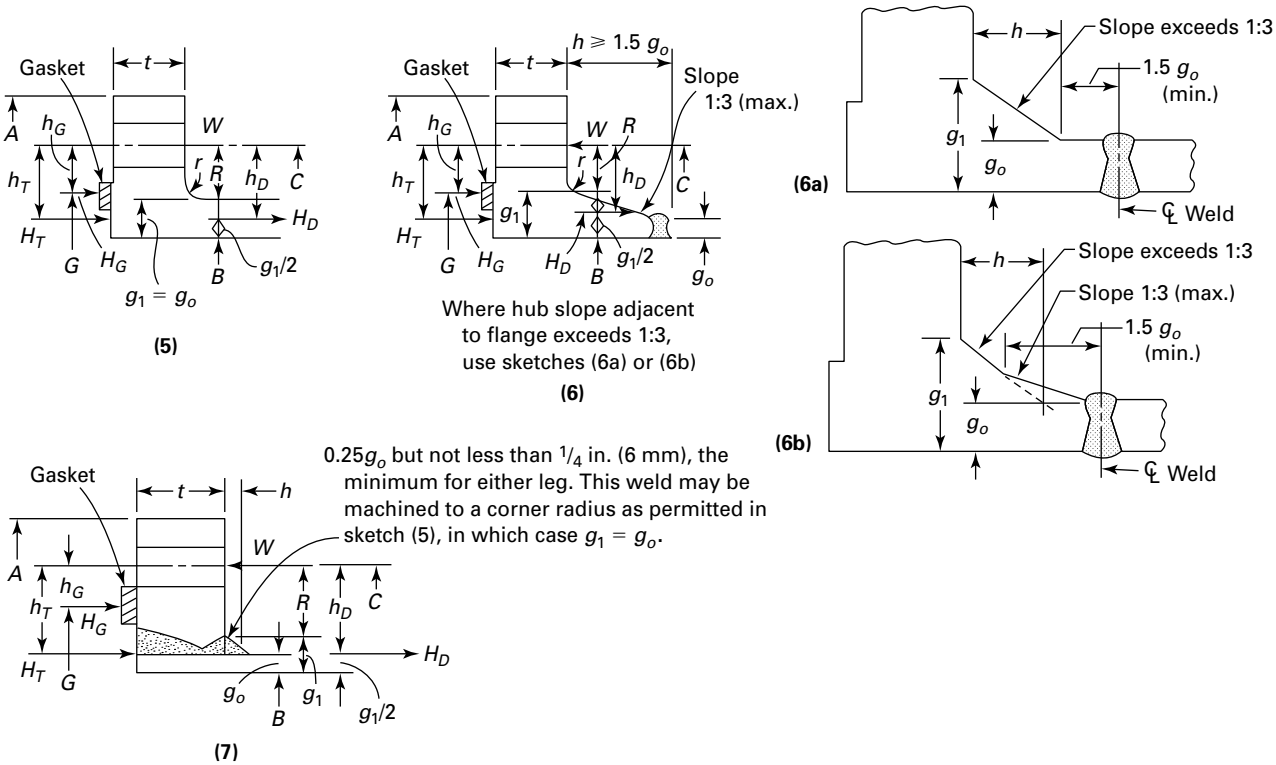

Integral-Type Flanges [Notes (3) and (4)]

Provided by IHS under license with ASME
No reproduction or networking permitted without license from IHS
Licensee=Chevron Phillips Chemical Co LP/5956674001
Not for Resale, 11/09/2014 20:41:36 MST

Figure 2-4
Types of Flanges (Cont'd)

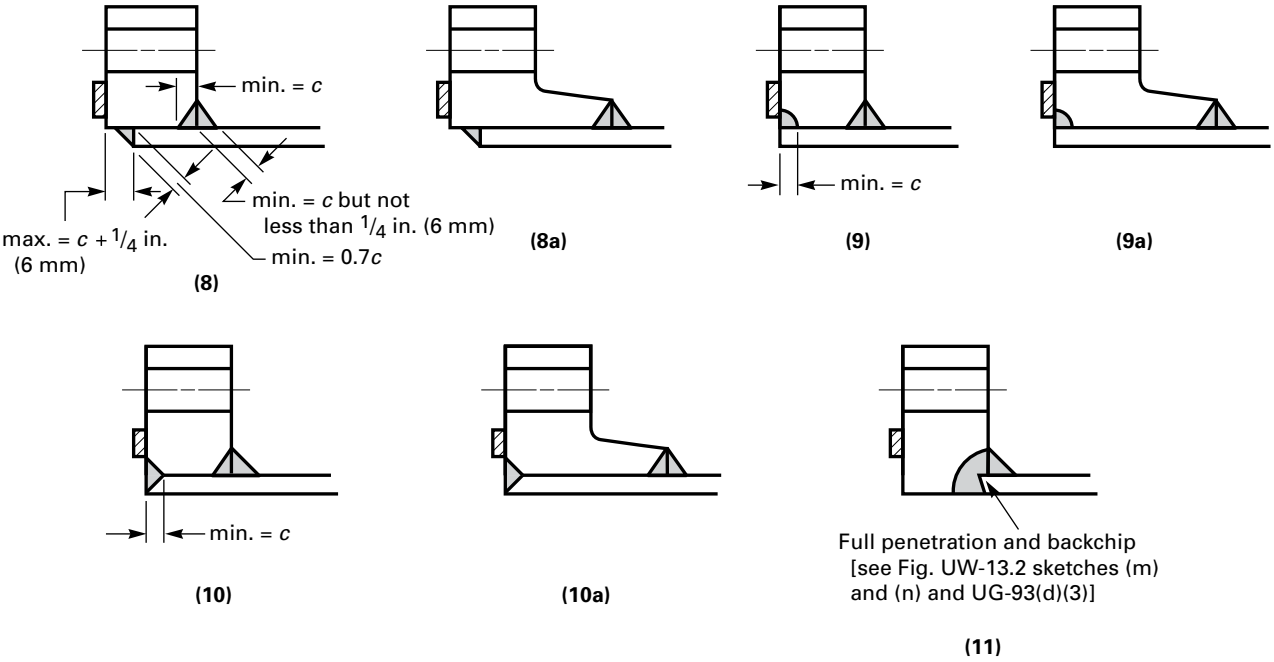

Optional-Type Flanges [Notes (5), (6), and (7)]

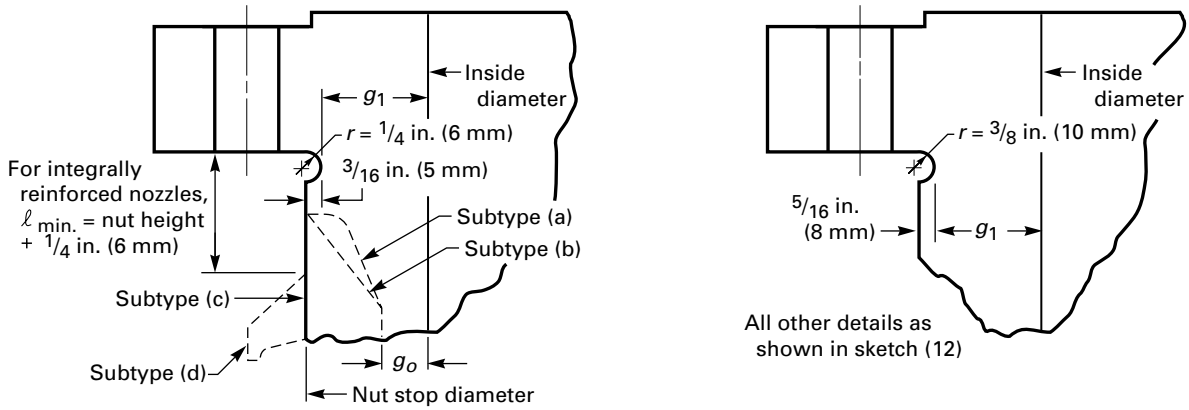

(12) For Flanged Nozzles 18 in. (460 mm) and Smaller Nominal Size

(12a) For Flanged Nozzles Over 18 in. (460 mm) Nominal Size

Flanges With Nut Stops [Note (8)]

NOTES:
(1) For hub tapers 6 deg or less, use $g_o = g_1$.
(2) Loading and dimensions for sketches (2a), (3), (3a), (4), (4a), (4b), and (4c) not shown are the same as for sketch (2).
(3) Fillet radius r to be at least 0.25 g_1 but not less than $^3/_{16}$ in. (5 mm).

Provided by IHS under license with ASME
No reproduction or networking permitted without license from IHS
Licensee=Chevron Phillips Chemical Co LP/5956674001
Not for Resale, 11/09/2014 20:41:36 MST

Figure 2-4
Types of Flanges (Cont'd)

NOTES (CONT'D):
(4) Facing thicknesses or groove depths greater than $^1/_{16}$ in. (1.5 mm) shall be in excess of the required minimum flange thickness, t; those equal to or less than $^1/_{16}$ in. (1.5 mm) may be included in the overall flange thickness.
(5) Optional-type flanges may be calculated as either loose or integral type. See 2-4.
(6) Loadings and dimensions not shown in sketches (8), (8a), (9), (9a), (10), and (10a) are the same as shown in sketch (2) when the flange is calculated as a loose-type flange, and as shown in sketch (7) when the flange is calculated as an integral-type flange.
(7) The groove and fillet welds between the flange back face and the shell given in sketch (8) also apply to sketches (8a), (9), (9a), (10), and (10a).
(8) For subtypes (a) and (b), g_o is the thickness of the hub at the small end. For subtypes (c) and (d), $g_o = g_1$.

pressure), which is a function of the gasket material and the effective gasket area to be seated. The minimum initial bolt load required for this purpose W_{m2} shall be determined in accordance with eq. (2).

$$W_{m2} = 3.14bGy \tag{2}$$

The need for providing sufficient bolt load to seat the gasket or joint-contact surfaces in accordance with eq. (2) will prevail on many low-pressure designs and with facings and materials that require a high seating load, and where the bolt load computed by eq. (1)(1) for the operating conditions is insufficient to seat the joint. Accordingly, it is necessary to furnish bolting and to pretighten the bolts to provide a bolt load sufficient to satisfy both of these requirements, each one being individually investigated. When eq. (2) governs, flange proportions will be a function of the bolting instead of internal pressure.

(3) Bolt loads for flanges using gaskets of the self-energizing type differ from those shown above.

(-a) The required bolt load for the operating conditions W_{m1} shall be sufficient to resist the hydrostatic end force H exerted by the maximum allowable working pressure on the area bounded by the outside diameter of the gasket. H_p is to be considered as 0 for all self-energizing gaskets except certain seal configurations which generate axial loads which must be considered.

(-b) $W_{m2} = 0$.

Table 2-4
Recommended Minimum Gasket Contact Widths for Sheet and Composite Gaskets

Flange ID	Gasket Contact Width
24 in. (600 mm) < ID ≤ 36 in. (900 mm)	1 in. (25 mm)
36 in. (900 mm) < ID < 60 in. (1500 mm)	$1^1/_4$ in. (32 mm)
ID ≥ 60 in. (1500 mm)	$1^1/_2$ (38 mm)

Self-energizing gaskets may be considered to require an inconsequential amount of bolting force to produce a seal. Bolting, however, must be pretightened to provide a bolt load sufficient to withstand the hydrostatic end force H.

(d) Total Required and Actual Bolt Areas, A_m and A_b. The total cross-sectional area of bolts A_m required for both the operating conditions and gasket seating is the greater of the values for A_{m1} and A_{m2}, where $A_{m1} = W_{m1}/S_b$ and $A_{m2} = W_{m2}/S_a$. A selection of bolts to be used shall be made such that the actual total cross-sectional area of bolts A_b will not be less than A_m. For vessels in lethal service or when specified by the user or his designated agent, the maximum bolt spacing shall not exceed the value calculated in accordance with eq. (3).

$$B_{s\,\max} = 2a + \frac{6t}{m + 0.5} \tag{3}$$

(e) Flange Design Bolt Load W. The bolt loads used in the design of the flange shall be the values obtained from eqs. (4) and (5). For operating conditions,

$$W = W_{m1} \tag{4}$$

For gasket seating,

$$W = \frac{(A_m + A_b)S_a}{2} \tag{5}$$

S_a used in eq. (5)shall be not less than that tabulated in the stress tables (see UG-23). In addition to the minimum requirements for safety, eq. (5) provides a margin against abuse of the flange from overbolting. Since the margin against such abuse is needed primarily for the initial, bolting-up operation which is done at atmospheric temperature and before application of internal pressure, the flange design is required to satisfy this loading only under such conditions.

NOTE: Where additional safety against abuse is desired, or where it is necessary that the flange be suitable to withstand the full available bolt load A_bS_a, the flange may be designed on the basis of this latter quantity.

Provided by IHS under license with ASME
No reproduction or networking permitted without license from IHS
Licensee=Chevron Phillips Chemical Co LP/5956674001
Not for Resale, 11/09/2014 20:41:36 MST

Table 2-5.1
Gasket Materials and Contact Facings
Gasket Factors *m* for Operating Conditions and Minimum Design Seating Stress *y*

Gasket Material	Gasket Factor *m*	Min. Design Seating Stress *y*, psi (MPa)	Sketches	Facing Sketch and Column in Table 2-5.2
Self-energizing types (O rings, metallic, elastomer, other gasket types considered as self-sealing)	0	0 (0)	...	...
Elastomers without fabric or high percent of mineral fiber:				
Below 75A Shore Durometer	0.50	0 (0)		(1a), (1b), (1c), (1d), (4), (5); Column II
75A or higher Shore Durometer	1.00	200 (1.4)		
Mineral fiber with suitable binder for operating conditions:				
1/8 in. (3.2 mm) thick	2.00	1,600 (11)		(1a), (1b), (1c), (1d), (4), (5); Column II
1/16 in. (1.6 mm) thick	2.75	3,700 (26)		
1/32 in. (0.8 mm) thick	3.50	6,500 (45)		
Elastomers with cotton fabric insertion	1.25	400 (2.8)		(1a), (1b), (1c), (1d), (4), (5); Column II
Elastomers with mineral fiber fabric insertion (with or without wire reinforcement):				
3-ply	2.25	2,200 (15)		(1a), (1b), (1c), (1d), (4), (5); Column II
2-ply	2.50	2,900 (20)		
1-ply	2.75	3,700 (26)		
Vegetable fiber	1.75	1,100 (7.6)	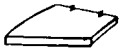	(1a), (1b), (1c), (1d), (4), (5); Column II
Spiral-wound metal, mineral fiber filled:				
Carbon	2.50	10,000 (69)		(1a), (1b); Column II
Stainless, Monel, and nickel-base alloys	3.00	10,000 (69)		
Corrugated metal, mineral fiber inserted, or corrugated metal, jacketed mineral fiber filled:				
Soft aluminum	2.50	2,900 (20)		(1a), (1b); Column II
Soft copper or brass	2.75	3,700 (26)		
Iron or soft steel	3.00	4,500 (31)		
Monel or 4–6% chrome	3.25	5,500 (38)		
Stainless steels and nickel-base alloys	3.50	6,500 (45)		
Corrugated metal:				
Soft aluminum	2.75	3,700 (26)	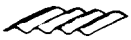	(1a), (1b), (1c), (1d); Column II
Soft copper or brass	3.00	4,500 (31)		
Iron or soft steel	3.25	5,500 (38)		
Monel or 4–6% chrome	3.50	6,500 (45)		
Stainless steels and nickel-base alloys	3.75	7,600 (52)		
Flat metal, jacketed mineral fiber filled:				
Soft aluminum	3.25	5,500 (38)		(1a), (1b), (1c), [Note (1)] (1d) [Note (1)]; (2) [Note (1)]; Column II
Soft copper or brass	3.50	6,500 (45)		
Iron or soft steel	3.75	7,600 (52)		
Monel	3.50	8,000 (55)		
4–6% chrome	3.75	9,000 (62)		
Stainless steels and nickel-base alloys	3.75	9,000 (62)	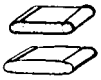	

Provided by IHS under license with ASME
No reproduction or networking permitted without license from IHS
Licensee=Chevron Phillips Chemical Co LP/5956674001
Not for Resale, 11/09/2014 20:41:36 MST

Table 2-5.1
Gasket Materials and Contact Facings
Gasket Factors *m* for Operating Conditions and Minimum Design Seating Stress *y* (Cont'd)

Gasket Material	Gasket Factor *m*	Min. Design Seating Stress *y*, psi (MPa)	Sketches	Facing Sketch and Column in Table 2-5.2
Grooved metal:				
Soft aluminum	3.25	5,500 (38)		(1a), (1b), (1c), (1d), (2), (3); Column II
Soft copper or brass	3.50	6,500 (45)		
Iron or soft metal	3.75	7,600 (52)		
Monel or 4–6% chrome	3.75	9,000 (62)		
Stainless steels and nickel-base alloys	4.25	10,100 (70)		
Solid flat metal:				
Soft aluminum	4.00	8,800 (61)		(1a), (1b), (1c), (1d), (2), (3), (4), (5); Column I
Soft copper or brass	4.75	13,000 (90)		
Iron or soft steel	5.50	18,000 (124)		
Monel or 4–6% chrome	6.00	21,800 (150)		
Stainless steels and nickel-base alloys	6.50	26,000 (180)		
Ring joint:				
Iron or soft steel	5.50	18,000 (124)	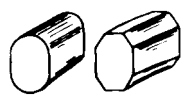	(6); Column I
Monel or 4–6% chrome	6.00	21,800 (150)		
Stainless steels and nickel-base alloys	6.50	26,000 (180)		

GENERAL NOTE: This Table gives a list of many commonly used gasket materials and contact facings with suggested design values of m and y that have generally proved satisfactory in actual service when using effective gasket seating width b given in Table 2-5.2. The design values and other details given in this Table are suggested only and are not mandatory.

NOTE:
(1) The surface of a gasket having a lap should not be against the nubbin.

2-6 FLANGE MOMENTS

In the calculation of flange stress, the moment of a load acting on the flange is the product of the load and its moment arm. The moment arm is determined by the relative position of the bolt circle with respect to that of the load producing the moment (see Figure 2-4). No consideration shall be given to any possible reduction in moment arm due to cupping of the flanges or due to inward shifting of the line of action of the bolts as a result thereof. It is recommended that the value of h_G $[(C-G)/2]$ be kept to a minimum to reduce flange rotation at the sealing surface.

For the operating conditions, the total flange moment M_o is the sum of the three individual moments M_D, M_T, and M_G, as defined in 2-3 and based on the flange design load of eq. 2-5(e)(4) with moment arms as given in Table 2-6.

For gasket seating, the total flange moment M_o is based on the flange design bolt load of eq. 2-5(e)(5), which is opposed only by the gasket load, in which case

$$M_o = W\frac{(C-G)}{2} \tag{6}$$

For vessels in lethal service or when specified by the user or his designated agent, the bolt spacing correction shall be applied in calculating the flange stress in 2-7, 2-13(c), and 2-13(d). The flange moment M_o without correction for bolt spacing is used for the calculation of the rigidity index in 2-14.

When the bolt spacing exceeds $2a + t$, multiply M_O by the bolt spacing correction factor B_{SC} for calculating flange stress

where

$$B_{SC} = \sqrt{\frac{B_S}{2a+t}} \tag{7}$$

Provided by IHS under license with ASME
No reproduction or networking permitted without license from IHS
Licensee=Chevron Phillips Chemical Co LP/5956674001
Not for Resale, 11/09/2014 20:41:36 MST

Table 2-5.2
Effective Gasket Width

Facing Sketch (Exaggerated)	Basic Gasket Seating Width b_o	
	Column I	Column II
(1a) 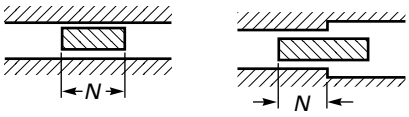	$\frac{N}{2}$	$\frac{N}{2}$
(1b) 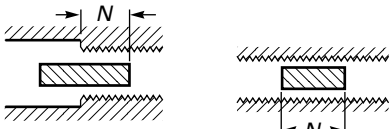 See Note (1)		
(1c) 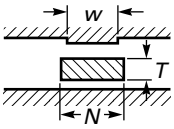 $w \le N$	$\frac{w+T}{2}; \left(\frac{w+N}{4}\max\right)$	$\frac{w+T}{2}; \left(\frac{w+N}{4}\max\right)$
(1d) 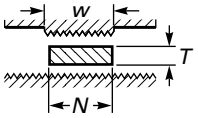 See Note (1) $w \le N$		
(2) $^1/_{64}$ in. (0.4 mm) nubbin 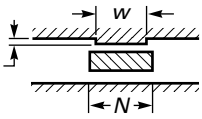 $w \le N/2$	$\frac{w+N}{4}$	$\frac{w+3N}{8}$
(3) $^1/_{64}$ in. (0.4 mm) nubbin 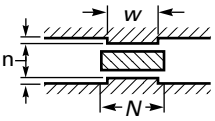 $w \le N/2$	$\frac{N}{4}$	$\frac{3N}{8}$
(4) 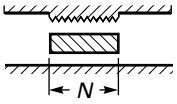 See Note (1)	$\frac{3N}{8}$	$\frac{7N}{16}$
(5) 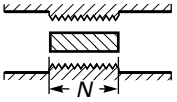 See Note (1)	$\frac{N}{4}$	$\frac{3N}{8}$
(6) 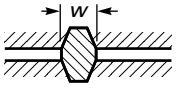	$\frac{w}{8}$	. . .

Effective Gasket Seating Width, *b*

$b = b_o$, when $b_o \le {}^1/_4$ in. (6 mm); $b = C_b\sqrt{b_o}$, when $b_o > {}^1/_4$ in. (6 mm)

Provided by IHS under license with ASME
No reproduction or networking permitted without license from IHS
Licensee=Chevron Phillips Chemical Co LP/5956674001
Not for Resale, 11/09/2014 20:41:36 MST

Table 2-5.2
Effective Gasket Width (Cont'd)

Location of Gasket Load Reaction

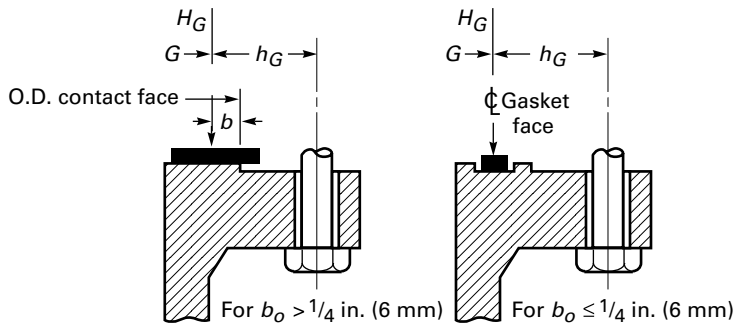

GENERAL NOTE: The gasket factors listed only apply to flanged joints in which the gasket is contained entirely within the inner edges of the bolt holes.

NOTE:
(1) Where serrations do not exceed $1/64$ in. (0.4 mm) depth and $1/32$ in. (0.8 mm) width spacing, sketches (1b) and (1d) shall be used.

Table 2-6
Moment Arms for Flange Loads Under Operating Conditions

	h_D	h_T	h_G
Integral type flanges [see Figure 2-4 sketches (5), (6), (6a), (6b), and (7)] and optional type flanges calculated as integral type [see Figure 2-4 sketches (8), (8a), (9), (9a), (10), (10a), and (11)]	$R + 0.5g_1$	$\frac{R + g_1 + h_G}{2}$	$\frac{C - G}{2}$
Loose type, except lap-joint flanges [see Figure 2-4 sketches (2), (2a), (3), (3a), (4), and (4a)]; and optional type flanges calculated as loose type [see Figure 2-4 sketches (8), (8a), (9), (9a), (10), (10a), and (11)]	$\frac{C - B}{2}$	$\frac{h_D + h_G}{2}$	$\frac{C - G}{2}$
Lap-type flanges [see Figure 2-4 sketches (1) and (1a)]	$\frac{C - B}{2}$	$\frac{C - G}{2}$	$\frac{C - G}{2}$

--`,,,``,,```,,,,`,``,`,``,,`,,```-`-`,,`,,`,`,,`---
Provided by IHS under license with ASME
No reproduction or networking permitted without license from IHS
Licensee=Chevron Phillips Chemical Co LP/5956674001
Not for Resale, 11/09/2014 20:41:36 MST

2-7 CALCULATION OF FLANGE STRESSES

The stresses in the flange shall be determined for both the operating conditions and gasket seating condition, whichever controls, in accordance with the following equations:

(a) for integral type flanges [Figure 2-4 sketches (5), (6), (6a), (6b), and (7)], for optional type flanges calculated as integral type [Figure 2-4 sketches (8), (8a), (9), (9a), (10), (10a), and (11)], and for loose type flanges with a hub which is considered [Figure 2-4 sketches (1), (1a), (2), (2a), (3), (3a), (4), (4a), (4b), and (4c)]:

Longitudinal hub stress

$$S_H = \frac{f M_o}{L g_1^2 B} \tag{8}$$

Radial flange stress

$$S_R = \frac{(1.33te + 1)M_o}{L t^2 B} \tag{9}$$

Tangential flange stress

$$S_T = \frac{Y M_o}{t^2 B} - Z S_R \tag{10}$$

(b) for loose type flanges without hubs and loose type flanges with hubs which the designer chooses to calculate without considering the hub [Figure 2-4 sketches (1), (1a), (2), (2a), (3), (3a), (4), (4a), (4b), and (4c)] and optional type flanges calculated as loose type [Figure 2-4 sketches (8), (8a), (9), (9a), (10), (10a), and (11)]:

$$\begin{aligned} S_T &= \frac{Y M_o}{t^2 B} \\ S_R &= 0 \\ S_H &= 0 \end{aligned} \tag{11}$$

2-8 ALLOWABLE FLANGE DESIGN STRESSES

(a) The flange stresses calculated by the equations in 2-7 shall not exceed the following values:

(1) longitudinal hub stress S_H not greater than S_f for cast iron[91] and, except as otherwise limited by (-a) and (-b) below, not greater than $1.5S_f$ for materials other than cast iron:

(-a) longitudinal hub stress S_H not greater than the smaller of $1.5S_f$ or $1.5S_n$ for optional type flanges designed as integral [Figure 2-4 sketches (8), (8a), (9), (9a), (10), (10a), and (11)], also integral type [Figure 2-4 sketch (7)] where the neck material constitutes the hub of the flange;

(-b) longitudinal hub stress S_H not greater than the smaller of $1.5S_f$ or $2.5S_n$ for integral type flanges with hub welded to the neck, pipe or vessel wall [Figure 2-4 sketches (6), (6a), and (6b)].

(2) radial flange stress S_R not greater than S_f;

(3) tangential flange stress S_T not greater than S_f;

(4) also $(S_H + S_R)/2$ not greater than S_f and $(S_H + S_T)/2$ not greater than S_f.

(b) For hub flanges attached as shown in Figure 2-4 sketches (2), (2a), (3), (3a), (4), (4a), (4b), and (4c), the nozzle neck, vessel or pipe wall shall not be considered to have any value as a hub.

(c) In the case of loose type flanges with laps, as shown in Figure 2-4 sketches (1) and (1a), where the gasket is so located that the lap is subjected to shear, the shearing stress shall not exceed 0.8 S_n for the material of the lap, as defined in 2-3. In the case of welded flanges, shown in Figure 2-4 sketches (3), (3a), (4), (4a), (4b), (4c), (7), (8), (8a), (9), (9a), (10), and (10a) where the nozzle neck, vessel, or pipe wall extends near to the flange face and may form the gasket contact face, the shearing stress carried by the welds shall not exceed 0.8 S_n. The shearing stress shall be calculated on the basis of W_{m1} or W_{m2} as defined in 2-3, whichever is greater. Similar cases where flange parts are subjected to shearing stress shall be governed by the same requirements.

2-9 SPLIT LOOSE FLANGES[92]

Loose flanges split across a diameter and designed under the rules given in this Appendix may be used under the following provisions.

(a) When the flange consists of a single split flange or flange ring, it shall be designed as if it were a solid flange (without splits), using 200% of the total moment M_o as defined in 2-6.

(b) When the flange consists of two split rings each ring shall be designed as if it were a solid flange (without splits), using 75% of the total moment M_o as defined in 2-6. The pair of rings shall be assembled so that the splits in one ring shall be 90 deg from the splits in the other ring.

(c) The splits should preferably be midway between bolt holes.

Provided by IHS under license with ASME
No reproduction or networking permitted without license from IHS
Licensee=Chevron Phillips Chemical Co LP/5956674001
Not for Resale, 11/09/2014 20:41:36 MST

Figure 2-7.1
Values of *T*, *U*, *Y*, and *Z*
(Terms Involving *K*)

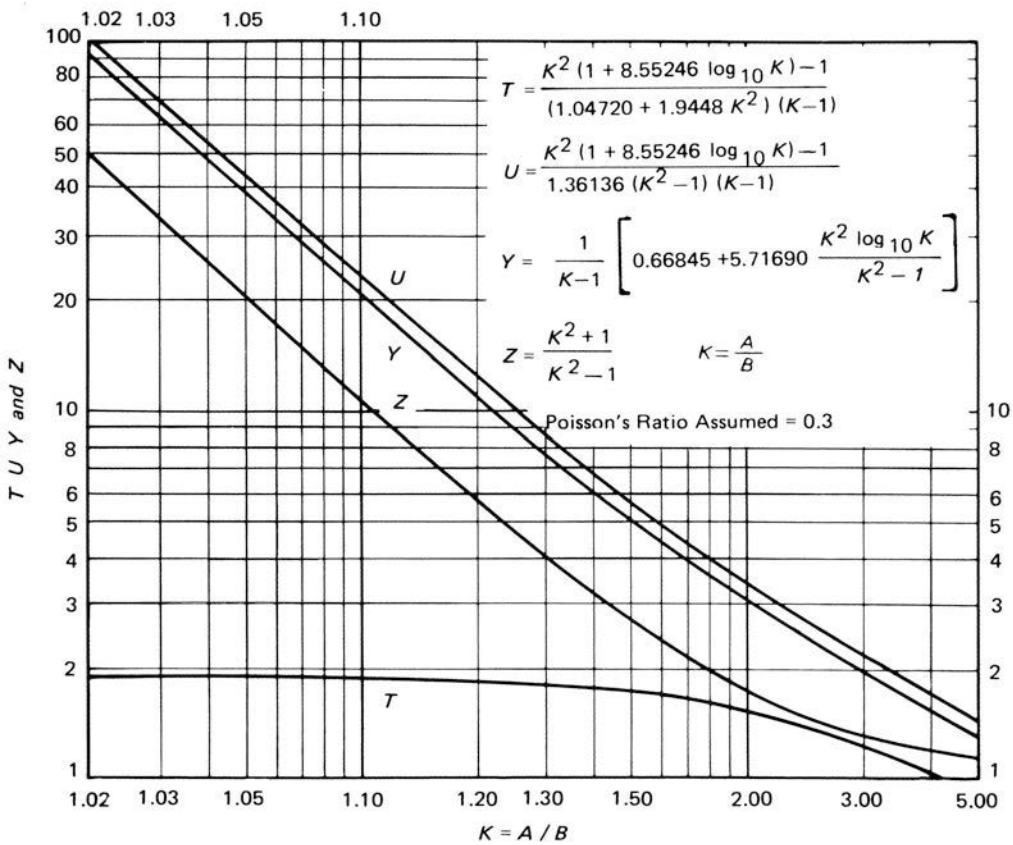

Provided by IHS under license with ASME
No reproduction or networking permitted without license from IHS
Licensee=Chevron Phillips Chemical Co LP/5956674001
Not for Resale, 11/09/2014 20:41:36 MST

Figure 2-7.2
Values of *F* (Integral Flange Factors)

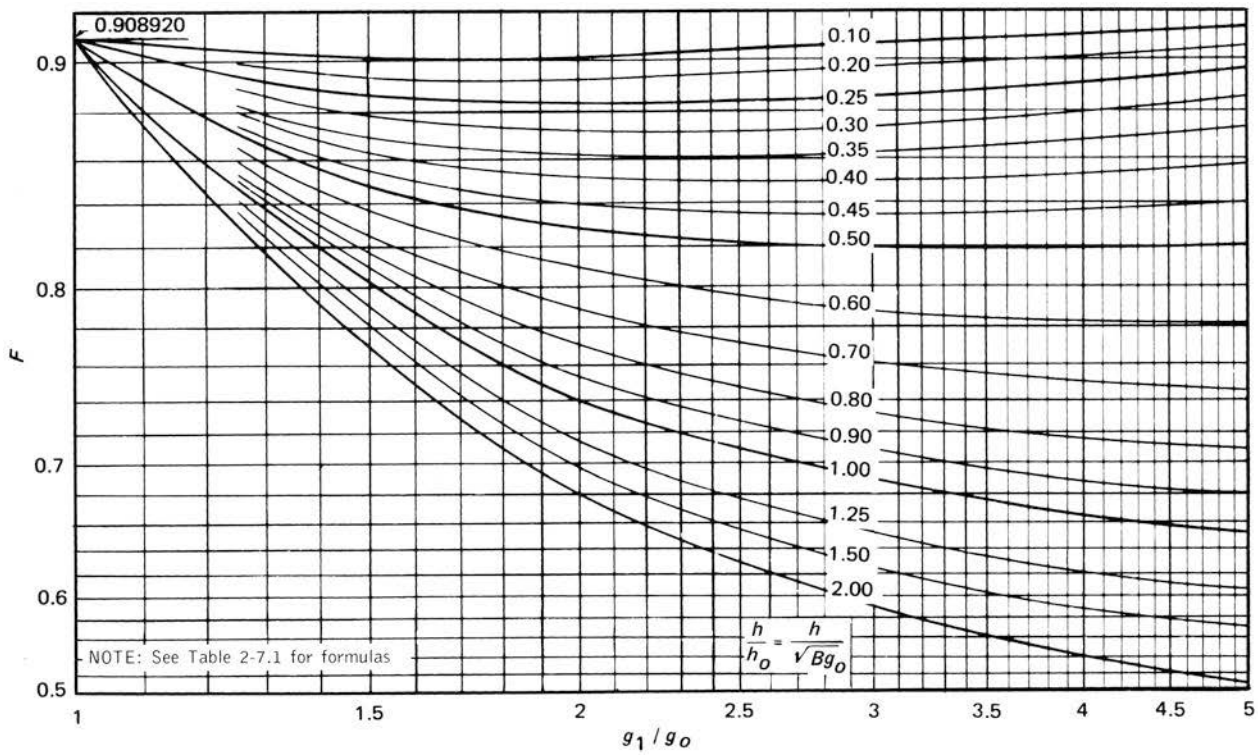

Provided by IHS under license with ASME
No reproduction or networking permitted without license from IHS
Licensee=Chevron Phillips Chemical Co LP/5956674001
Not for Resale, 11/09/2014 20:41:36 MST

Figure 2-7.3
Values of *V* (Integral Flange Factors)

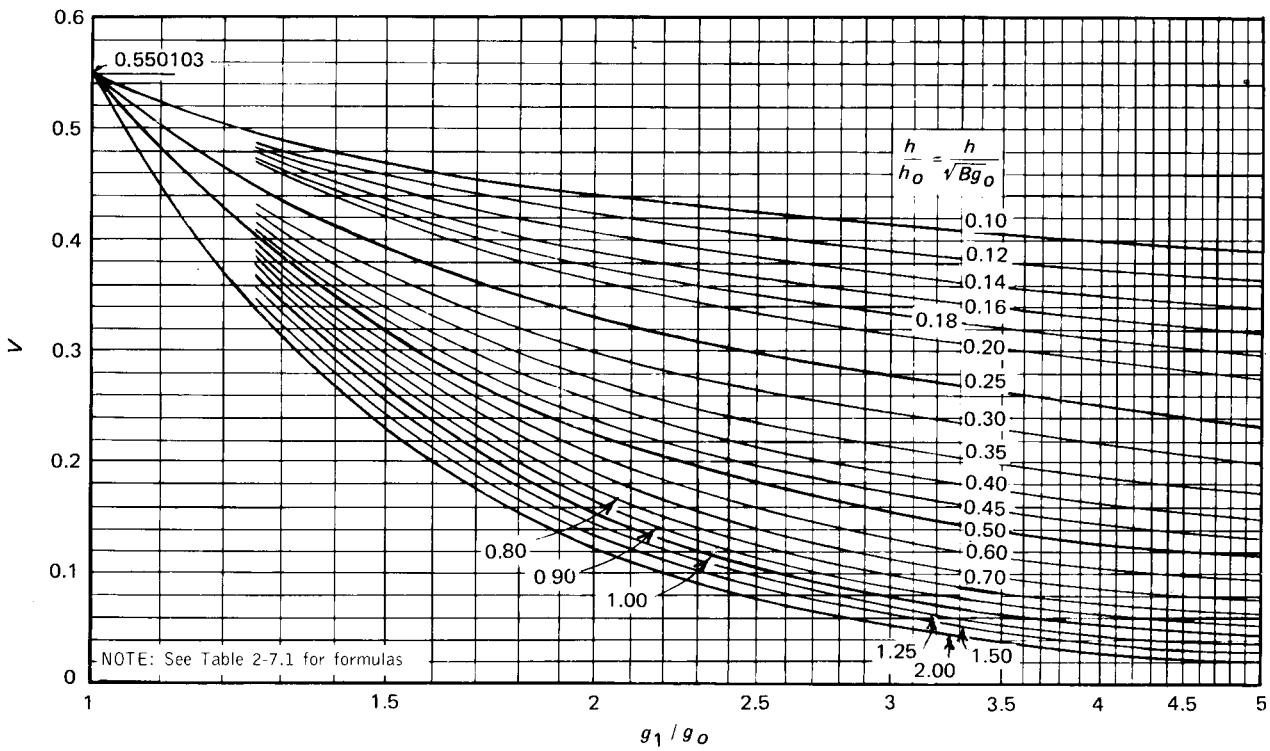

Provided by IHS under license with ASME
No reproduction or networking permitted without license from IHS
Licensee=Chevron Phillips Chemical Co LP/5956674001
Not for Resale, 11/09/2014 20:41:36 MST

Figure 2-7.4
Values of F_L (Loose Hub Flange Factors)

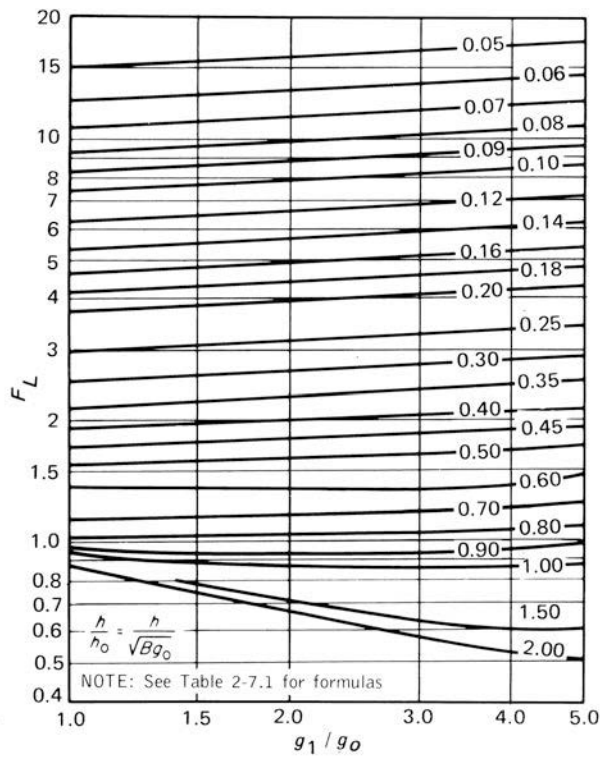

Figure 2-7.5
Values of V_L (Loose Hub Flange Factors)

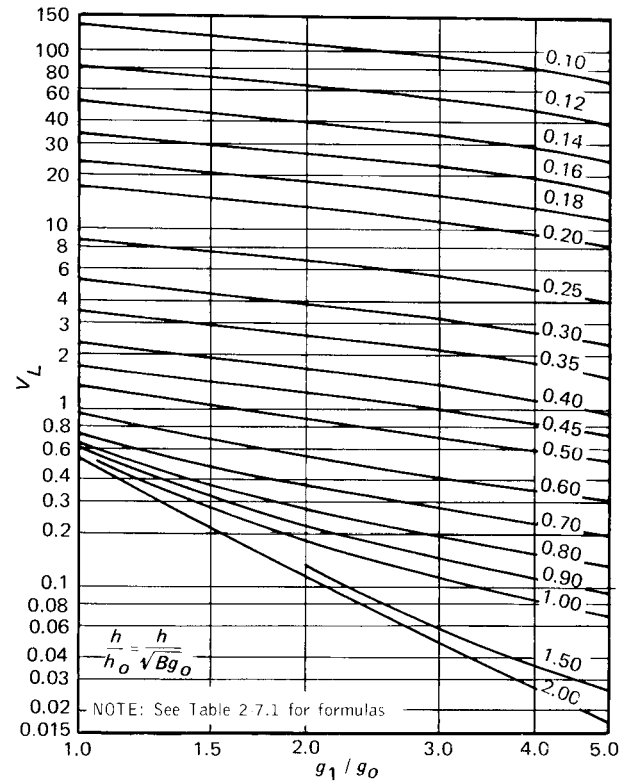

Provided by IHS under license with ASME
No reproduction or networking permitted without license from IHS
Licensee=Chevron Phillips Chemical Co LP/5956674001
Not for Resale, 11/09/2014 20:41:36 MST

Figure 2-7.6
Values of *f*
(Hub Stress Correction Factor)

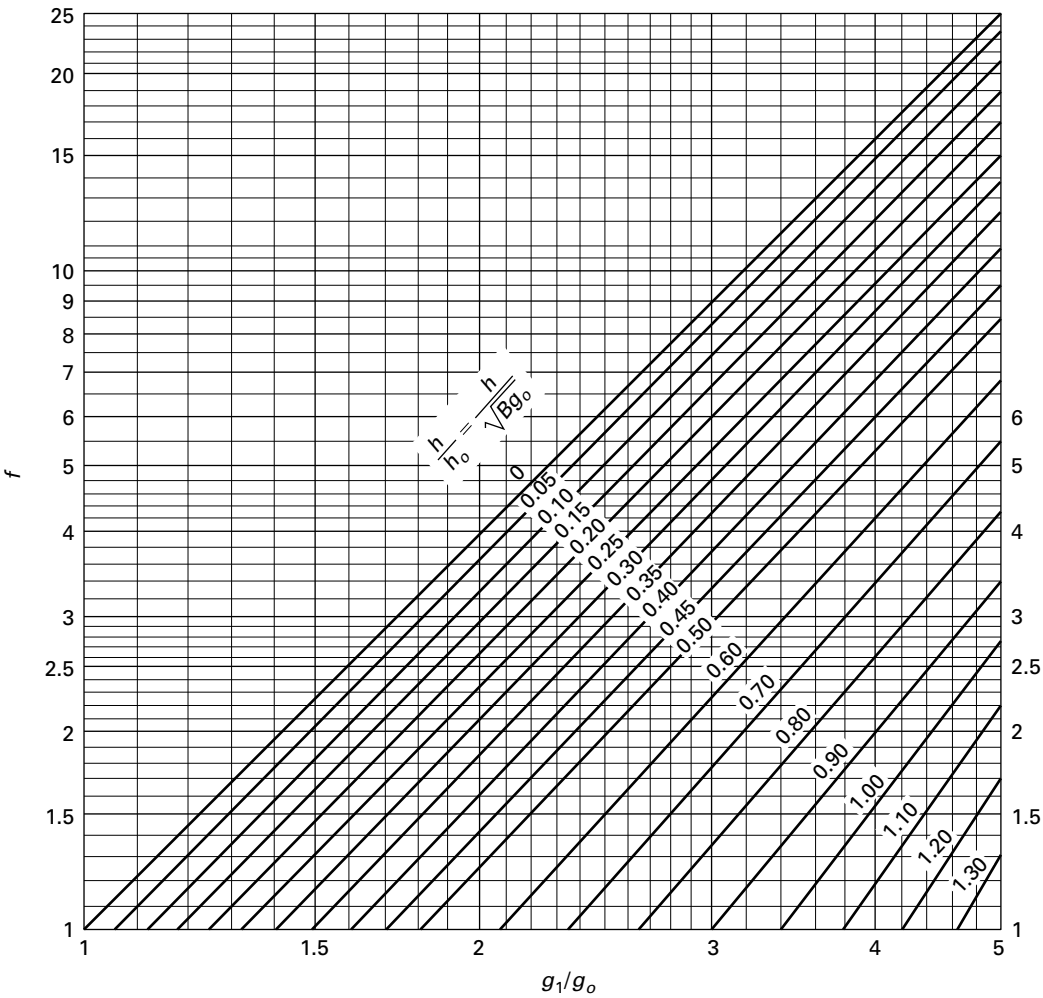

f = 1 (minimum)
= 1 for hubs of uniform thickness (g_1/g_0 = 1)
= 1 for loose hubbed flanges

GENERAL NOTE: See Table 2-7.1 for equations.

--`,,,``,,,

Table 2-7.1
Flange Factors in Formula Form

Integral Flange

Factor F per Figure 2-7.2 is then solved by

$$F = -\frac{E_6}{\left(\frac{C}{2.73}\right)^{\frac{1}{4}}\frac{(1+A)^3}{C}}$$

Factor V per Figure 2-7.3 is then solved by

$$V = \frac{E_4}{\left(\frac{2.73}{C}\right)^{\frac{1}{4}}(1+A)^3}$$

Factor f per Figure 2-7.6 is then solved by

$$f = C_{36}/(1+A)$$

The values used in the above equations are solved using Eqs. (1) through (45) below based on the values g_1, g_o, h, and h_o as defined by 2-3. When $g_1 = g_o$, $F = 0.908920$, $V = 0.550103$, and $f = 1$; thus Eqs. (1) through (45) need not be solved.

Loose Hub Flange

Factor F_L per Figure 2-7.4 is solved by

$$F_L = -\frac{C_{18}\left(\frac{1}{2}+\frac{A}{6}\right) + C_{21}\left(\frac{1}{4}+\frac{11A}{84}\right) + C_{24}\left(\frac{1}{70}+\frac{A}{105}\right) - \left(\frac{1}{40}+\frac{A}{72}\right)}{\left(\frac{C}{2.73}\right)^{\frac{1}{4}}\frac{(1+A)^3}{C}}$$

Factor V_L per Figure 2-7.5 is solved by

$$V_L = \frac{\frac{1}{4} - \frac{C_{24}}{5} - \frac{3C_{21}}{2} - C_{18}}{\left(\frac{2.73}{C}\right)^{\frac{1}{4}}(1+A)^3}$$

Factor f per Figure 2-7.6 is set equal to 1.

$$f = 1$$

The values used in the above equations are solved using Eqs. (1) through (5), (7), (9), (10), (12), (14), (16), (18), (20), (23), and (26) below based on the values of g_1, g_o, h, and h_o as defined by 2-3.

Equations

(1) $A = (g_1/g_o) - 1$
(2) $C = 43.68(h/h_o)^4$
(3) $C_1 = 1/3 + A/12$
(4) $C_2 = 5/42 + 17A/336$
(5) $C_3 = 1/210 + A/360$
(6) $C_4 = 11/360 + 59A/5040 + (1 + 3A)/C$
(7) $C_5 = 1/90 + 5A/1008 - (1 + A)^3/C$
(8) $C_6 = 1/120 + 17A/5040 + 1/C$
(9) $C_7 = 215/2772 + 51A/1232 + (60/7 + 225A/14 + 75A^2/7 + 5A^3/2)/C$
(10) $C_8 = 31/6930 + 128A/45{,}045 + (6/7 + 15A/7 + 12A^2/7 + 5A^3/11)/C$
(11) $C_9 = 533/30{,}240 + 653A/73{,}920 + (1/2 + 33A/14 + 39A^2/28 + 25A^3/84)/C$
(12) $C_{10} = 29/3780 + 3A/704 - (1/2 + 33A/14 + 81A^2/28 + 13A^3/12)/C$
(13) $C_{11} = 31/6048 + 1763A/665{,}280 + (1/2 + 6A/7 + 15A^2/28 + 5A^3/42)/C$
(14) $C_{12} = 1/2925 + 71A/300{,}300 + (8/35 + 18A/35 + 156A^2/385 + 6A^3/55)/C$
(15) $C_{13} = 761/831{,}600 + 937A/1{,}663{,}200 + (1/35 + 6A/35 + 11A^2/70 + 3A^3/70)/C$
(16) $C_{14} = 197/415{,}800 + 103A/332{,}640 - (1/35 + 6A/35 + 17A^2/70 + A^3/10)/C$
(17) $C_{15} = 233/831{,}600 + 97A/554{,}400 + (1/35 + 3A/35 + A^2/14 + 2A^3/105)/C$
(18) $C_{16} = C_1 C_7 C_{12} + C_2 C_8 C_3 + C_3 C_8 C_2 - (C_3{}^2 C_7 + C_8{}^2 C_1 + C_2{}^2 C_{12})$
(19) $C_{17} = [C_4 C_7 C_{12} + C_2 C_8 C_{13} + C_3 C_8 C_9 - (C_{13} C_7 C_3 + C_8{}^2 C_4 + C_{12} C_2 C_9)]/C_{16}$
(20) $C_{18} = [C_5 C_7 C_{12} + C_2 C_8 C_{14} + C_3 C_8 C_{10} - (C_{14} C_7 C_3 + C_8{}^2 C_5 + C_{12} C_2 C_{10})]/C_{16}$
(21) $C_{19} = [C_6 C_7 C_{12} + C_2 C_8 C_{15} + C_3 C_8 C_{11} - (C_{15} C_7 C_3 + C_8{}^2 C_6 + C_{12} C_2 C_{11})]/C_{16}$
(22) $C_{20} = [C_1 C_9 C_{12} + C_4 C_8 C_3 + C_3 C_{13} C_2 - (C_3{}^2 C_9 + C_{13} C_8 C_1 + C_{12} C_4 C_2)]/C_{16}$
(23) $C_{21} = [C_1 C_{10} C_{12} + C_5 C_8 C_3 + C_3 C_{14} C_2 - (C_3{}^2 C_{10} + C_{14} C_8 C_1 + C_{12} C_5 C_2)]/C_{16}$
(24) $C_{22} = [C_1 C_{11} C_{12} + C_6 C_8 C_3 + C_3 C_{15} C_2 - (C_3{}^2 C_{11} + C_{15} C_8 C_1 + C_{12} C_6 C_2)]/C_{16}$
(25) $C_{23} = [C_1 C_7 C_{13} + C_2 C_9 C_3 + C_4 C_8 C_2 - (C_3 C_7 C_4 + C_8 C_9 C_1 + C_2{}^2 C_{13})]/C_{16}$
(26) $C_{24} = [C_1 C_7 C_{14} + C_2 C_{10} C_3 + C_5 C_8 C_2 - (C_3 C_7 C_5 + C_8 C_{10} C_1 + C_2{}^2 C_{14})]/C_{16}$
(27) $C_{25} = [C_1 C_7 C_{15} + C_2 C_{11} C_3 + C_6 C_8 C_2 - (C_3 C_7 C_6 + C_8 C_{11} C_1 + C_2{}^2 C_{15})]/C_{16}$
(28) $C_{26} = -(C/4)^{1/4}$
(29) $C_{27} = C_{20} - C_{17} - 5/12 + C_{17} C_{26}$
(30) $C_{28} = C_{22} - C_{19} - 1/12 + C_{19} C_{26}$
(31) $C_{29} = -(C/4)^{1/2}$
(32) $C_{30} = -(C/4)^{3/4}$
(33) $C_{31} = 3A/2 - C_{17} C_{30}$
(34) $C_{32} = 1/2 - C_{19} C_{30}$
(35) $C_{33} = 0.5 C_{26} C_{32} + C_{28} C_{31} C_{29} - (0.5 C_{30} C_{28} + C_{32} C_{27} C_{29})$
(36) $C_{34} = 1/12 + C_{18} - C_{21} - C_{18} C_{26}$
(37) $C_{35} = -C_{18}(C/4)^{3/4}$
(38) $C_{36} = (C_{28} C_{35} C_{29} - C_{32} C_{34} C_{29})/C_{33}$
(39) $C_{37} = [0.5 C_{26} C_{35} + C_{34} C_{31} C_{29} - (0.5 C_{30} C_{34} + C_{35} C_{27} C_{29})]/C_{33}$
(40) $E_1 = C_{17} C_{36} + C_{18} + C_{19} C_{37}$

Provided by IHS under license with ASME
No reproduction or networking permitted without license from IHS
Licensee=Chevron Phillips Chemical Co LP/5956674001
Not for Resale, 11/09/2014 20:41:36 MST

Table 2-7.1
Flange Factors in Formula Form (Cont'd)

Integral Flange	Loose Hub Flange
(41) $E_2 = C_{20}C_{36} + C_{21} + C_{22}C_{37}$	
(42) $E_3 = C_{23}C_{36} + C_{24} + C_{25}C_{37}$	
(43) $E_4 = 1/4 + C_{37}/12 + C_{36}/4 - E_3/5 - 3E_2/2 - E_1$	
(44) $E_5 = E_1(1/2 + A/6) + E_2(1/4 + 11A/84) + E_3(1/70 + A/105)$	
(45) $E_6 = E_5 - C_{36}\,(7/120 + A/36 + 3A/C) - 1/40 - A/72 - C_{37}(1/60 + A/120 + 1/C)$	

2-10 NONCIRCULAR SHAPED FLANGES WITH CIRCULAR BORE

The outside diameter A for a noncircular flange with a circular bore shall be taken as the diameter of the largest circle, concentric with the bore, inscribed entirely within the outside edges of the flange. Bolt loads and moments, as well as stresses, are then calculated as for circular flanges, using a bolt circle drawn through the centers of the outermost bolt holes.

2-11 FLANGES SUBJECT TO EXTERNAL PRESSURES

(a) The design of flanges for external pressure only [see UG-99(f)][93] shall be based on the equations given in 2-7 for internal pressure except that for operating conditions:

$$M_o = H_D(h_D - h_G) + H_T(h_T - h_G) \tag{10}$$

For gasket seating,

$$M_o = W h_G \tag{11}$$

where

$$W = \frac{A_{m2} + A_b}{2} S_a \tag{11a}$$

$$H_D = 0.785 B^2 P_e \tag{11b}$$

$$H_T = H - H_D \tag{11c}$$

$$H = 0.785 G^2 P_e \tag{11d}$$

P_e = external design pressure

See 2-3 for definitions of other symbols. S_a used in eq. (11a) shall be not less than that tabulated in the stress tables (see UG-23).

(b) When flanges are subject at different times during operation to external or internal pressure, the design shall satisfy the external pressure design requirements given in (a) above and the internal pressure design requirements given elsewhere in this Appendix.

NOTE: The combined force of external pressure and bolt loading may plastically deform certain gaskets to result in loss of gasket contact pressure when the connection is depressurized. To maintain a tight joint when the unit is repressurized, consideration should be given to gasket and facing details so that excessive deformation of the gasket will not occur. Joints subject to pressure reversals, such as in heat exchanger floating heads, are in this type of service.

2-12 FLANGES WITH NUT-STOPS (13)

(a) When flanges are designed per this Appendix, or are fabricated to the dimensions of ASME B16.5 or other acceptable standards [see UG-44(b)], except that the dimension R is decreased to provide a nut-stop, the fillet radius relief shall be as shown in Figure 2-4 sketches (12) and (12a) except that:

(1) for flanges designed to this Appendix, the minimum dimension g_1 must be the lesser of $2t$ (t from UG-27) or $4r$, but in no case less than $^1/_2$ in. (13 mm), where

r = the radius of the undercut

(2) for ASME B16.5 or other standard flanges, the dimension of the hub g_o shall be increased as necessary to provide a nut-stop.

2-13 REVERSE FLANGES

(a) Flanges with the configuration as indicated in Figure 2-13.1 shall be designed as integral reverse flanges and those in Figure 2-13.2 shall be designed as loose ring type reverse flanges. These flanges shall be designed in conformance with the rules in 2-3 through 2-8, but with the modifications as described in the following. Mandatory use of these rules is limited to $K \le 2$. When $K > 2$, results become increasingly conservative and U-2(g) may be used.

(1) Integral Type Reverse Flange. The shell-to-flange attachment of integral type reverse flanges may be attached as shown in Figure 2-4 sketches (5) through (11), as well as Figure UW-13.2 sketches (a) and (b). The requirements of 2-4(a)(3) apply to Figure 2-4 sketches (8) through (11) as well as Figure UW-13.2 sketches (a) and (b).

(2) Loose Ring Type Reverse Flange. The shell-to-flange attachment of loose ring type reverse flanges may be attached as shown in Figure 2-4 sketches (3a), (4a), (8), (9), (10), and (11) as well as Figure UW-13.2 sketches (c) and (d). When Figure UW-13.2 sketches (c) and (d) are

Provided by IHS under license with ASME
No reproduction or networking permitted without license from IHS
Licensee=Chevron Phillips Chemical Co LP/5956674001
Not for Resale, 11/09/2014 20:41:36 MST

Figure 2-13.1
Reverse Flange

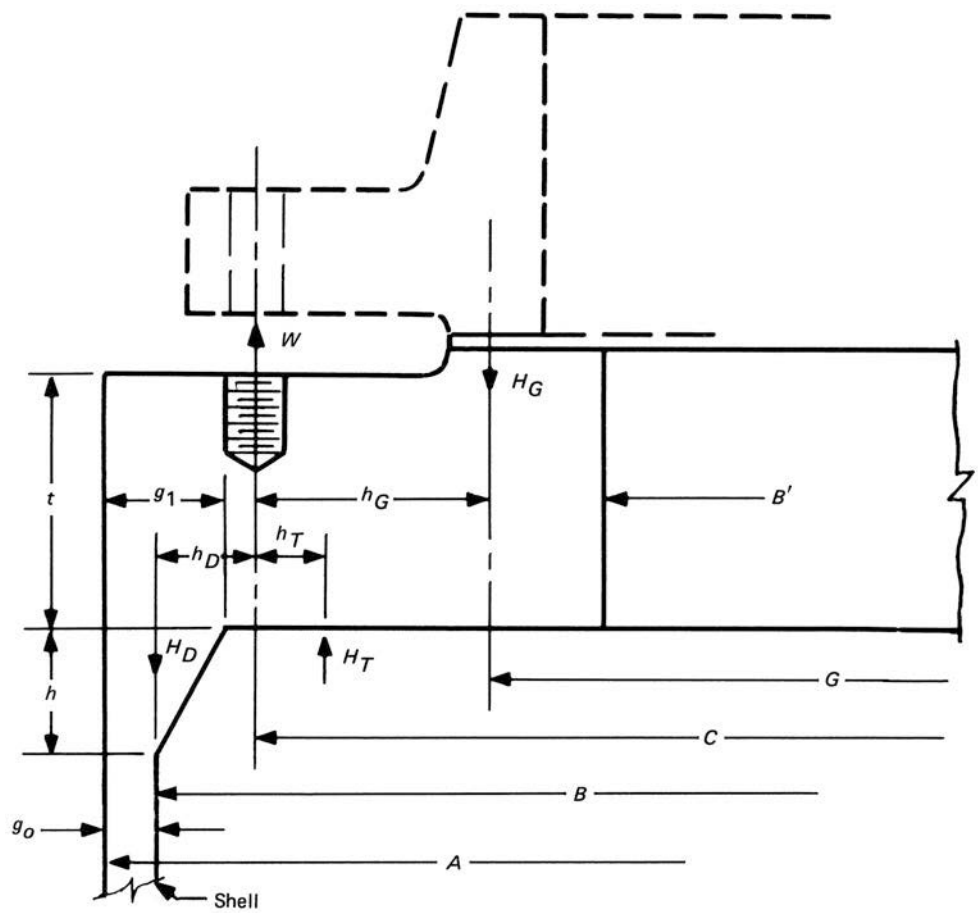

used, the maximum wall thickness of the shell shall not exceed $^3/_8$ in. (10 mm), and the maximum design metal temperature shall not exceed 650°F (340°C).

The symbols and definitions in this paragraph pertain specifically to reverse flanges. Except as noted in (b) below, the symbols used in the equations of this paragraph are defined in 2-3.

The equations for S_H, S_R, and S_{T1} correspond, respectively, to eqs. 2-7(a)(8), 2-7(a)(9), and 2-7(a)(10), in direction, but are located at the flange *outside* diameter. The sole stress at the flange inside diameter is a tangential stress and is given by the formula for S_{T2}.

(b) Notation

B = inside diameter of shell
B' = inside diameter of reverse flange
d_r = $U_r h_{or} g_o^2 / V$
e_r = F / h_{or}
F = factor (use h_{or} for h_o in Figure 2-7.2)
f = factor (use h_{or} for h_o in Figure 2-7.6)
H = total hydrostatic end force on attached component
= $0.785G^2 P$
H_D = hydrostatic end force on area inside of flange
= $0.785B^2 P$
H_T = difference between hydrostatic end force on attached component and hydrostatic end force on area inside of flange
= $H - H_D$
h_D = radial distance from the bolt circle to the circle on which H_D acts
= $(C + g_1 - 2g_o - B) / 2$ for integral type reverse flanges
= $(C - B) / 2$ for loose ring type reverse flanges
h_{or} = factor
= $\sqrt{Ag_o}$
h_T = radial distance from the bolt circle, to the circle on which H_T acts
= $\frac{1}{2}\left(C - \frac{B+G}{2}\right)$
K = ratio of outside diameter of flange to inside diameter of flange
= A/B'

Provided by IHS under license with ASME
No reproduction or networking permitted without license from IHS
Licensee=Chevron Phillips Chemical Co LP/5956674001
Not for Resale, 11/09/2014 20:41:36 MST

Figure 2-13.2
Loose Ring Type Reverse Flange

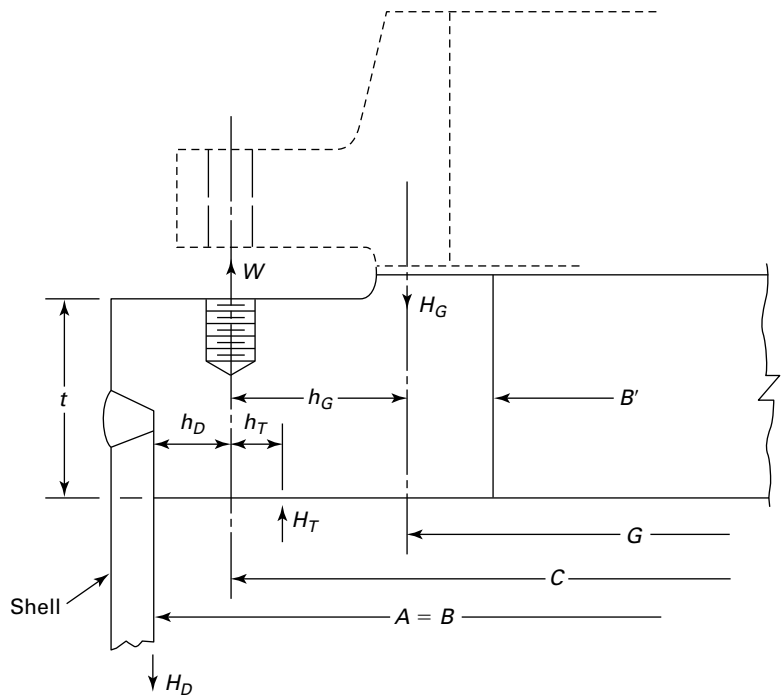

L_r = factor

$= \dfrac{te_r + 1}{T_r} + \dfrac{t^3}{d_r}$

M_o = total moment acting on the flange, for the operating conditions or gasket seating as may apply

= algebraic sum of M_D, M_T, and M_G. Values of load H_T and moment arm h_D are negative; value of moment arm h_T may be positive as in Figure 2-13.1, or negative. If M_o is negative, use its absolute value in calculating stresses to obtain positive stresses for comparison with allowable stresses.

$T_r = \left(\dfrac{Z + 0.3}{Z - 0.3}\right)\alpha_r T$

$U_r = \alpha_r U$

V = factor (use h_{or} for h_o in Figure 2-7.3)

$Y_r = \alpha_r Y$

$\alpha_r = \left[1 + \dfrac{0.668(K + 1)}{Y}\right] / H^2$

(c) For Integral Type Reverse Flanges

(1) Stresses at the Outside Diameter

$$S_H = f M_o \ / \ L_r g_1{}^2 B'$$

$$S_R = (1.33te_r + 1)M_o \ / \ L_r t^2 B'$$

$$S_{T1} = \left(Y_r M_o \ / \ t^2 B'\right) - Z S_R(0.67te_r + 1) \ / \ 1.33te_r + 1)$$

(2) Stress at Inside Diameter B′

$$S_{T2} = \left(M_o \ / \ t^2 B'\right)\left[Y - \frac{2K^2\left(1 + {}^2\!/_3 te_r\right)}{(K^2 - 1)L_r}\right]$$

(d) For Loose Ring Type Reverse Flanges

$$S_T = Y M_o \ / \ t^2 B'$$

$$S_R = 0 \quad S_H = 0$$

Provided by IHS under license with ASME
No reproduction or networking permitted without license from IHS
Licensee=Chevron Phillips Chemical Co LP/5956674001
Not for Resale, 11/09/2014 20:41:36 MST

(13) 2-14 FLANGE RIGIDITY

(a) Flanges that have been designed based on allowable stress limits alone may not be sufficiently rigid to control leakage. This paragraph provides a method of checking flange rigidity. The rigidity factors provided in Table 2-14 have been proven through extensive user experience for a wide variety of joint design and service conditions. The use of the rigidity index does not guarantee a leakage rate within established limits. The use of the factors must be considered as only part of the system of joint design and assembly requirements to ensure leak tightness. Successful service experience may be used as an alternative to the flange rigidity rules for fluid services that are nonlethal and nonflammable and designed within the temperature range of −20°F (−29°C) to 366°F (186°C) without exceeding design pressures of 150 psi (1 035 kPa).

(b) The notation is as follows:

E = modulus of elasticity for the flange material at design temperature (operating condition) or at atmospheric temperature (gasket seating condition), psi

J = rigidity index ≤ 1

K_I = rigidity factor for integral or optional flange types = 0.3

K_L = rigidity factor for loose-type flanges = 0.2

Experience has indicated that K_I and K_L provided above are sufficient for most services; other values may be used with the User's agreement.

Other notation is defined in 2-3 for flanges and 2-13 for reverse flanges.

(c) The rigidity criterion for an integral type flange and for a loose type flange without a hub is applicable to the reverse flanges in Figures 2-13.1 and 2-13.2, respectively. The values of h_{or} shall be substituted for h_o, and the value L_r shall be substituted for the value L in the rigidity equation for integral type flanges. Also substitute h_{or} for h_o in determining the factor V in the equation for integral type flanges.

(d) If the value of J, when calculated by the appropriate formula above, is greater than 1.0, the thickness of the flange, t, shall be increased and J recalculated until $J \leq 1$ for both gasket seating and operating conditions.

2-15 QUALIFICATION OF ASSEMBLY PROCEDURES AND ASSEMBLERS

It is recommended that flange joints designed to this Appendix be assembled by qualified procedures and by qualified assemblers. ASME PCC-1 may be used as a guide.

Table 2-14
Flange Rigidity Factors

Flange Type	Rigidity Criterion
Integral type flanges and optional type flanges designed as integral type flanges	$J = \frac{52.14 V M_o}{L E g_o^2 K_I h_o} \leq 1.0$
Loose type flanges with hubs	$J = \frac{52.14 V_L M_o}{L E g_o^2 K_L h_o} \leq 1.0$
Loose type flanges without hubs and optional flanges designed as loose type flanges	$J = \frac{109.4 M_o}{E t^3 K_L (\ln K)} \leq 1.0$

Provided by IHS under license with ASME
No reproduction or networking permitted without license from IHS
Licensee=Chevron Phillips Chemical Co LP/5956674001
Not for Resale, 11/09/2014 20:41:36 MST

MANDATORY APPENDIX 3 DEFINITIONS

3-1 INTRODUCTION

This Appendix contains definitions of terms generally used in this Division. Definitions relating to specific applications, such as for layered vessels, may be found in related parts of this Division.

(13) 3-2 DEFINITIONS OF TERMS

acceptance by the Inspector, accepted by the Inspector: an indication that the Inspector has reviewed a subject in accordance with his duties as required by the rules of this Division and after such review is able to sign the Certificate of Inspection for the applicable Manufacturer's Data Report Form.

ASME Designated Organization: an entity authorized by ASME to perform administrative functions on its behalf.

ASME Designee: an individual authorized by ASME to perform administrative functions on its behalf.

basic material specification: a description of the identifying characteristics of a material (product form, ranges of composition, mechanical properties, methods of production, etc.) together with the sampling, testing, and examination procedures to be applied to production lots of such material to verify acceptable conformance to the intended characteristics.

bolt: a threaded fastener with a head on one end.

calculated test pressure: the requirements for determining the test pressure based on calculations are outlined in UG-99(c) for the hydrostatic test and in UG-100(b) for the pneumatic test. The basis for calculated test pressure in either of these paragraphs is the highest permissible internal pressure as determined by the design equations, for each element of the vessel using nominal thicknesses with corrosion allowances included and using the allowable stress values given in Subpart 1 of Section II, Part D for the temperature of the test.

Certificate of Authorization: a document issued by the Society that authorizes the use of the ASME Certification Mark and appropriate designator for a specified time and for a specified scope of activity.

certificate of compliance: a document that states that the material represented has been manufactured, sampled, tested, and inspected in accordance with the requirements of the material specification (including year of issue) and any other requirements specified in the purchase order or contract shown on the certificate, and has been found to meet such requirements. This document may be combined with a Material Test Report as a single document.

Certification Designator (Designator): the symbol used in conjunction with the Certification Mark for the scope of activity described in a Manufacturer's Certificate of Authorization.

Certification Mark: An ASME symbol identifying a product as meeting Code Requirements.

Certification Mark Stamp: a metallic stamp issued by the Society for use in impressing the Certification Mark.

clad vessel: a vessel made from a base material having a corrosion resistant material either integrally bonded or weld metal overlaid to the base of less resistant material.

construction: an all-inclusive term comprising material, design, fabrication, examination, inspection, testing, certification, and overpressure protection.

design pressure: the pressure used in the design of a vessel component together with the coincident design metal temperature, for the purpose of determining the minimum permissible thickness or physical characteristics of the different zones of the vessel. When applicable, static head shall be added to the design pressure to determine the thickness of any specific zone of the vessel (see UG-21).

design temperature: see UG-20.

efficiency of a welded joint: the efficiency of a welded joint is expressed as a numerical (decimal) quantity and is used in the design of a joint as a multiplier of the appropriate allowable stress value taken from the applicable table in Subpart 1 of Section II, Part D (see UW-12).

full vacuum (FV): a condition where the internal absolute pressure is 0 psi (0 kPa) and the external absolute pressure on the vessel is 15 psi (100 kPa)(see UG-116).

joints: for the purpose of this Division, the following definitions are applicable:

(a) *angle joint*: a joint between two members located in intersecting planes with an angle greater than 30 deg but less than 90 deg.

(b) *butt joint*: a joint between two members located in intersecting planes between 0 deg and 30 deg, inclusive.

Provided by IHS under license with ASME
No reproduction or networking permitted without license from IHS
Licensee=Chevron Phillips Chemical Co LP/5956674001
Not for Resale, 11/09/2014 20:41:36 MST

(c) corner joint: a joint between two members located in intersecting planes at approximately 90 deg.

layered vessel: a vessel having a shell and/or heads made up of two or more separate layers.

lined vessel: a vessel having a corrosion resistant lining attached intermittently to the vessel wall.

liquid penetrant examination (PT): a method of nondestructive examination that provides for the detection of imperfections open to the surface in ferrous and nonferrous materials that are nonporous. Typical imperfections detectable by this method are cracks, seams, laps, cold shuts, and laminations.

magnetic particle examination (MT): a method of detecting cracks and similar imperfections at or near the surface in iron and the magnetic alloys of steel. It consists of properly magnetizing the material and applying finely divided magnetic particles that form patterns indicating the imperfections.

material: any substance or product form covered by a specification in Section II, Parts A, B, or C, or any other substance or product form permitted for use in pressure vessel construction by this Division.

material manufacturer: the organization responsible for the production of products meeting the requirements of the material specification, and accepting the responsibility for any statements or data in any required certificate of compliance or Material Test Report representing the material.

Material Test Report: a document in which the results of tests, examinations, repairs, or treatments required by the material specification to be reported are recorded, including those of any supplementary requirements or other requirements stated in the order for the material. This document may be combined with a certificate of compliance as a single document. When preparing a Material Test Report, a material manufacturer may transcribe data produced by other organizations, provided he accepts responsibility for the accuracy and authenticity of the data.

maximum allowable stress value: the maximum unit stress permissible for any specified material that may be used in the design equations given in this Division (see UG-23).

maximum allowable working pressure: the maximum gage pressure permissible at the top of a completed vessel in its normal operating position at the designated coincident temperature for that pressure. This pressure is the least of the values for the internal or external pressure to be determined by the rules of this Division for any of the pressure boundary parts, including the static head thereon, using nominal thicknesses exclusive of allowances for corrosion and considering the effects of any combination of loadings listed in UG-22 that are likely to occur (see UG-98) at the designated coincident temperature [see UG-20(a)]. It is the basis for the pressure setting of the pressure relieving devices protecting the vessel. The design pressure may be used in all cases in which calculations are not made to determine the value of the maximum allowable working pressure.

membrane stress: the component of normal stress that is uniformly distributed and equal to the average value of stress across the thickness of the section under consideration.

normal operation: operation within the design limits for which the vessel has been stamped. [See UG-116(a).] Any coincident pressure and temperature during a specific operation are permissible, provided they do not constitute a more severe condition than that assumed in the design of the vessel.

operating or working temperature: the temperature that will be maintained in the metal of the part of the vessel being considered for the specified operation of the vessel (see UG-20 and UG-23).

operating pressure: the pressure at the top of a vessel at which it normally operates. It shall not exceed the maximum allowable working pressure, and it is usually kept at a suitable level below the setting of the pressure relieving devices to prevent their frequent opening (see M-9).

porosity: gas pockets or voids in metal.

primary stress: a stress developed by the imposed loading that is necessary to satisfy the simple laws of equilibrium of external and internal forces and moments. Primary stress can be either membrane or bending stress.

Primary membrane stress may be of two types: general and local. A general primary membrane stress is one that is so distributed in the structure that no redistribution of load occurs as a result of yielding. A local primary membrane stress is one that is produced by pressure or other mechanical loading and that is associated with a primary and/or discontinuity effect. Examples of primary stress are

(a) general membrane stress in a circular cylinder or a spherical shell due to internal pressure or to distributed loads;

(b) bending stress in the central portion of a flat head due to pressure.

radiographic examination (RT): a method of detecting imperfections in materials by passing X-ray or nuclear radiation through the material and presenting their image on a recording medium.

safety valve set pressure: see ASME PTC 25.

spiral weld: a weld joint having a helical seam [see UW-3(a)].

stationary pressure vessel: a pressure vessel to be installed and operated as a fixed geographical location.

Provided by IHS under license with ASME
No reproduction or networking permitted without license from IHS
Licensee=Chevron Phillips Chemical Co LP/5956674001
Not for Resale, 11/09/2014 20:41:36 MST

stud: a threaded fastener without a head, with threads on one end or both ends, or threaded full length.

thickness of vessel wall:

(a) *design thickness*: the sum of the required thickness and the corrosion allowance (see UG-25).

(b) *required thickness*: that computed by the equations in this Division before corrosion allowance is added (see UG-22).

(c) *nominal thickness*: except as defined in UW-40(f) and modified in UW-11(g), the nominal thickness is the thickness selected as commercially available, and supplied to the Manufacturer. For plate material, the nominal thickness shall be, at the Manufacturer's option, either the thickness shown on the Material Test Report {or material Certificate of Compliance [UG-93(a)(1)]} before forming, or the measured thickness of the plate at the joint or location under consideration.

ultrasonic examination (UT): a method for detecting imperfections in materials by passing ultrasonic vibrations (frequencies normally 1 to 5 MHz) through the material.

vessel Manufacturer: any Manufacturer who constructs an item such as a pressure vessel, vessel component, or part in accordance with rules of this Division and who holds an ASME Certificate of Authorization to apply the Certification Mark and the appropriate Designator to such an item.

Provided by IHS under license with ASME
No reproduction or networking permitted without license from IHS
Licensee=Chevron Phillips Chemical Co LP/5956674001
Not for Resale, 11/09/2014 20:41:36 MST

MANDATORY APPENDIX 4
ROUNDED INDICATIONS CHARTS ACCEPTANCE STANDARD FOR RADIOGRAPHICALLY DETERMINED ROUNDED INDICATIONS IN WELDS

4-1 APPLICABILITY OF THESE STANDARDS

These standards are applicable to ferritic, austenitic, and nonferrous materials.

Table 4-1

Customary Units			
	Maximum Size of Acceptable Rounded Indication, in.		Maximum Size of Nonrelevant Indication, in.
Thickness t, in.	Random	Isolated	
Less than $\frac{1}{8}$	$\frac{1}{4}\,t$	$\frac{1}{3}\,t$	$\frac{1}{10}\,t$
$\frac{1}{8}$	0.031	0.042	0.015
$\frac{3}{16}$	0.047	0.063	0.015
$\frac{1}{4}$	0.063	0.083	0.015
$\frac{5}{16}$	0.078	0.104	0.031
$\frac{3}{8}$	0.091	0.125	0.031
$\frac{7}{16}$	0.109	0.146	0.031
$\frac{1}{2}$	0.125	0.168	0.031
$\frac{9}{16}$	0.142	0.188	0.031
$\frac{5}{8}$	0.156	0.210	0.031
$\frac{11}{16}$	0.156	0.230	0.031
$\frac{3}{4}$ to 2, incl.	0.156	0.250	0.031
Over 2	0.156	0.375	0.063
SI Units			
	Maximum Size of Acceptable Rounded Indication, mm		Maximum Size of Nonrelevant Indication, mm
Thickness t, mm	Random	Isolated	
Less than 3	$\frac{1}{4}\,t$	$\frac{1}{3}\,t$	$\frac{1}{10}\,t$
3	0.79	1.07	0.38
5	1.19	1.60	0.38
6	1.60	2.11	0.38
8	1.98	2.64	0.79
10	2.31	3.18	0.79
11	2.77	3.71	0.79
13	3.18	4.27	0.79
14	3.61	4.78	0.79
16	3.96	5.33	0.79
17	3.96	5.84	0.79
19.0 to 50, incl.	3.96	6.35	0.79
Over 50	3.96	9.53	1.60

GENERAL NOTE: This Table contains examples only.

4-2 TERMINOLOGY

(a) Rounded Indications. Indications with a maximum length of three times the width or less on the radiograph are defined as rounded indications. These indications may be circular, elliptical, conical, or irregular in shape and may have tails. When evaluating the size of an indication, the tail shall be included. The indication may be from any imperfection in the weld, such as porosity, slag, or tungsten.

(b) Aligned Indications. A sequence of four or more rounded indications shall be considered to be aligned when they touch a line parallel to the length of the weld drawn through the center of the two outer rounded indications.

(c) Thickness t. t is the thickness of the weld, excluding any allowable reinforcement. For a butt weld joining two members having different thicknesses at the weld, t is the thinner of these two thicknesses. If a full penetration weld includes a fillet weld, the thickness of the throat of the fillet shall be included in t.

4-3 ACCEPTANCE CRITERIA

(a) Image Density. Density within the image of the indication may vary and is not a criterion for acceptance or rejection.

(b) Relevant Indications. (see Table 4-1 for examples.) Only those rounded indications which exceed the following dimensions shall be considered relevant.

(1) $\frac{1}{10}t$ for t less than $\frac{1}{8}$ in. (3 mm)

(2) $\frac{1}{64}$ in. for t from $\frac{1}{8}$ in. to $\frac{1}{4}$ in. (3 mm to 6 mm), incl.

(3) $\frac{1}{32}$ in. for t greater than $\frac{1}{4}$ in. to 2 in. (6 mm to 50 mm), incl.

(4) $\frac{1}{16}$ in. for t greater than 2 in. (50 mm)

(c) Maximum Size of Rounded Indication. (See Table 4-1 for examples.) The maximum permissible size of any indication shall be $\frac{1}{4}t$, or $\frac{5}{32}$ in. (4 mm), whichever is smaller; except that an isolated indication separated from an adjacent indication by 1 in. (25 mm) or more may be $\frac{1}{3}t$, or $\frac{1}{4}$ in. (6 mm), whichever is less. For t greater than 2 in. (50 mm) the maximum permissible size of an isolated indication shall be increased to $\frac{3}{8}$ in. (10 mm).

Provided by IHS under license with ASME
No reproduction or networking permitted without license from IHS
Licensee=Chevron Phillips Chemical Co LP/5956674001
Not for Resale, 11/09/2014 20:41:36 MST

Figure 4-1
Aligned Rounded Indications

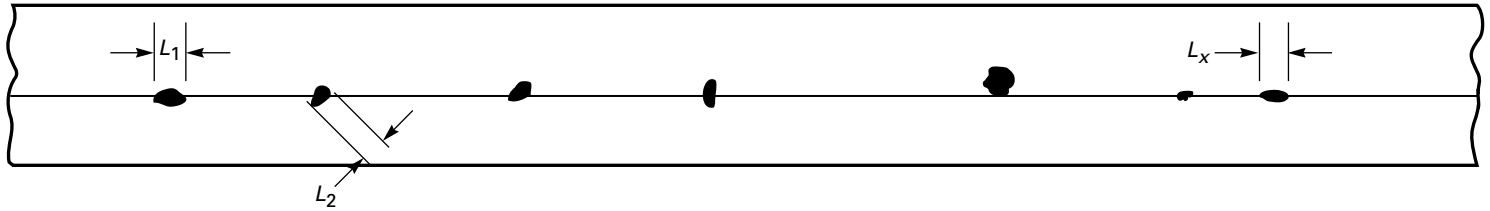

GENERAL NOTE: Sum of L_1 to L_x shall be less than t in a length of $12t$.

Provided by IHS under license with ASME
No reproduction or networking permitted without license from IHS
Licensee=Chevron Phillips Chemical Co LP/5956674001
Not for Resale, 11/09/2014 20:41:36 MST

Provided by IHS under license with ASME
No reproduction or networking permitted without license from IHS

Figure 4-2
Groups of Aligned Rounded Indications

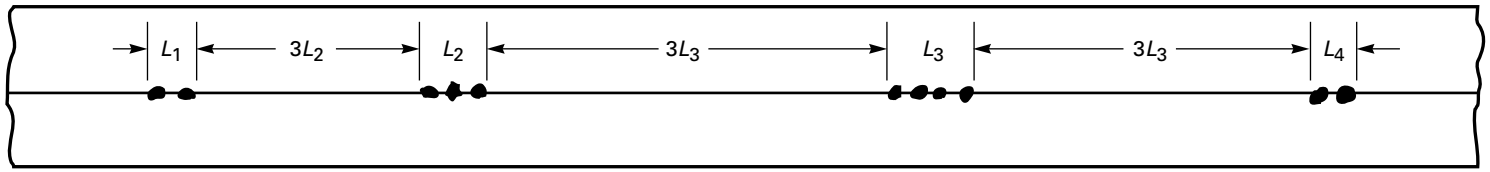

GENERAL NOTE: Sum of the group lengths shall be less than t in a length of $12t$.

Maximum Group Length

L = $^1/_4$ in. (6 mm) for t less than $^3/_4$ in. (19 mm)
L = $^1/_3 t$ for t $^3/_4$ in. (19 mm) to $2^1/_4$ in. (57 mm)
L = $^3/_4$ in. (19 mm) for t greater than $2^1/_4$ in. (57 mm)

Minimum Group Spacing

$3L$ where L is the length of the longest adjacent group being evaluated.

Licensee=Chevron Phillips Chemical Co LP/5956674001
Not for Resale, 11/09/2014 20:41:36 MST

(d) Aligned Rounded Indications. Aligned rounded indications are acceptable when the summation of the diameters of the indications is less than t in a length of $12t$. see Figure 4-1. The length of groups of aligned rounded indications and the spacing between the groups shall meet the requirements of Figure 4-2.

(e) Spacing. The distance between adjacent rounded indications is not a factor in determining acceptance or rejection, except as required for isolated indications or groups of aligned indications.

(f) Rounded Indication Charts. The rounded indications characterized as imperfections shall not exceed that shown in the charts. The charts in Figures 4-3 through 4-8 illustrate various types of assorted, randomly dispersed and clustered rounded indications for different weld thicknesses greater than $^1/_8$ in. (3 mm). These charts represent the maximum acceptable concentration limits for rounded indications. The charts for each thickness range represent full-scale 6 in. (150 mm) radiographs, and shall not be enlarged or reduced. The distributions shown are not necessarily the patterns that may appear on the radiograph, but are typical of the concentration and size of indications permitted.

(g) Weld Thickness t Less Than $^1/_8$ in. (3 mm). For t less than $^1/_8$ in. (3 mm) the maximum number of rounded indications shall not exceed 12 in a 6 in. (150 mm) length of weld. A proportionally fewer number of indications shall be permitted in welds less than 6 in. (150 mm) in length.

(h) Clustered Indications. The illustrations for clustered indications show up to four times as many indications in a local area, as that shown in the illustrations for random indications. The length of an acceptable cluster shall not exceed the lesser of 1 in. (25 mm) or $2t$. Where more than one cluster is present, the sum of the lengths of the clusters shall not exceed 1 in. (25 mm) in a 6 in. (150 mm) length weld.

Figure 4-3
Charts for t Equal to $^1/_8$ in. to $^1/_4$ in. (3 mm to 6 mm), Inclusive

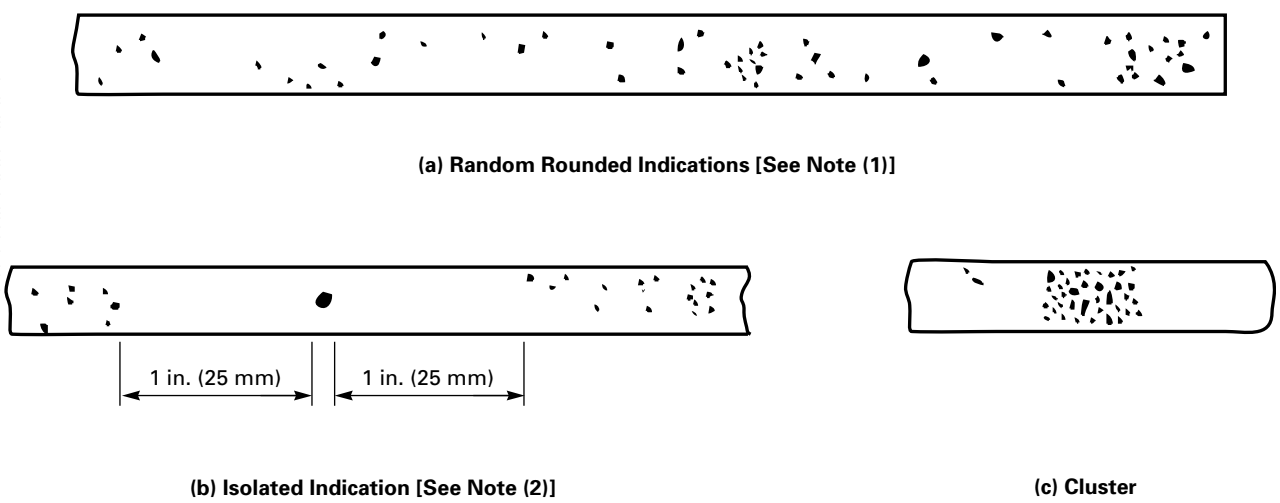

(a) Random Rounded Indications [See Note (1)]

(b) Isolated Indication [See Note (2)]

(c) Cluster

NOTES:
(1) Typical concentration and size permitted in any 6 in. (150 mm) length of weld.
(2) Maximum size per Table 4-1.

Provided by IHS under license with ASME
No reproduction or networking permitted without license from IHS
Licensee=Chevron Phillips Chemical Co LP/5956674001
Not for Resale, 11/09/2014 20:41:36 MST

Figure 4-4
Charts for *t* Over ¼ in. to ⅜ in. (6 mm to 10 mm), Inclusive

(a) Random Rounded Indications [See Note (1)]

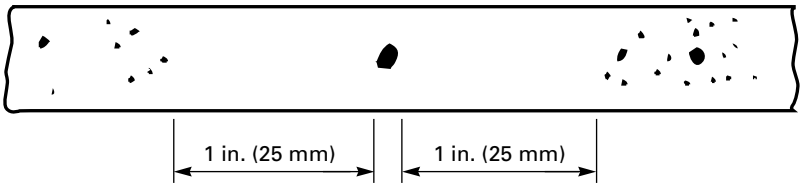

(b) Isolated Indication [See Note (2)]

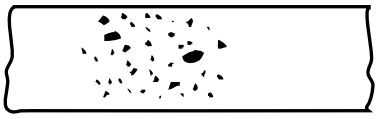

(c) Cluster

NOTES:
(1) Typical concentration and size permitted in any 6 in. (150 mm) length of weld.
(2) Maximum size per Table 4-1.

Provided by IHS under license with ASME
No reproduction or networking permitted without license from IHS
Licensee=Chevron Phillips Chemical Co LP/5956674001
Not for Resale, 11/09/2014 20:41:36 MST

Figure 4-5
Charts for *t* Over 3/8 in. to 3/4 in. (10 mm to 19 mm), Inclusive

(a) Random Rounded Indications [See Note (1)]

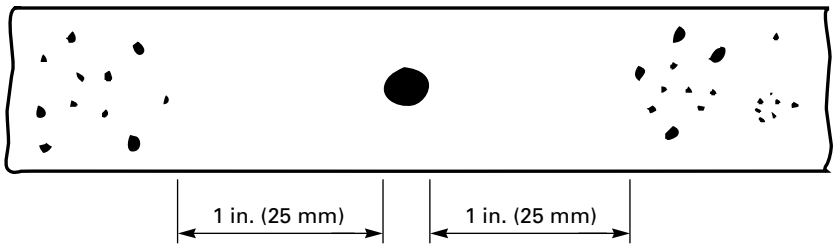

(b) Isolated Indication [See Note (2)]

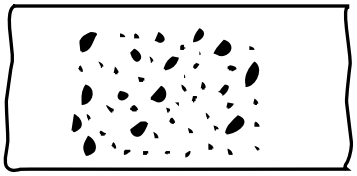

(c) Cluster

NOTES:
(1) Typical concentration and size permitted in any 6 in. (150 mm) length of weld.
(2) Maximum size per Table 4-1.

Provided by IHS under license with ASME
No reproduction or networking permitted without license from IHS
Licensee=Chevron Phillips Chemical Co LP/5956674001
Not for Resale, 11/09/2014 20:41:36 MST

Figure 4-6
Charts for *t* Over ¾ in. to 2 in. (19 mm to 50 mm), Inclusive

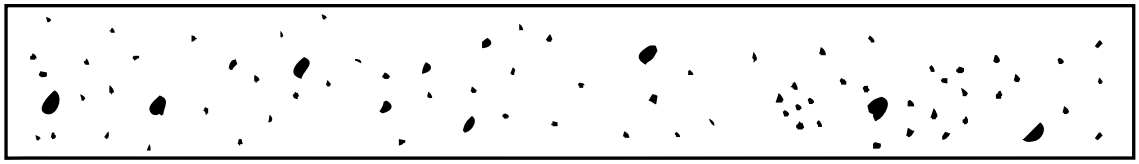

(a) Random Rounded Indications [See Note (1)]

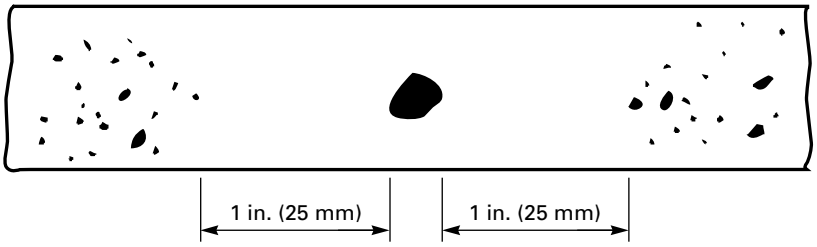

(b) Isolated Indication [See Note (2)]

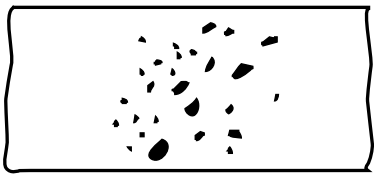

(c) Cluster

NOTES:
(1) Typical concentration and size permitted in any 6 in. (150 mm) length of weld.
(2) Maximum size per Table 4-1.

Provided by IHS under license with ASME
No reproduction or networking permitted without license from IHS
Licensee=Chevron Phillips Chemical Co LP/5956674001
Not for Resale, 11/09/2014 20:41:36 MST

Figure 4-7
Charts for *t* Over 2 in. to 4 in. (50 mm to 100 mm), Inclusive

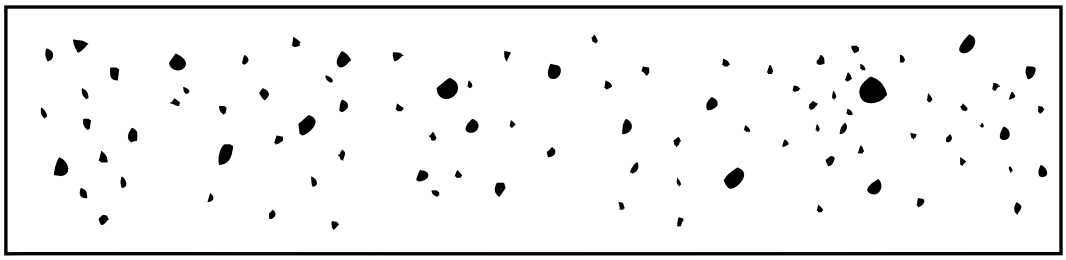

(a) Random Rounded Indications [See Note (1)]

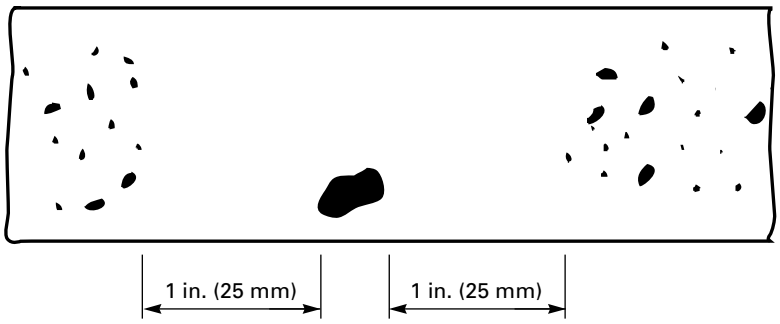

(b) Isolated Indication [See Note (2)]

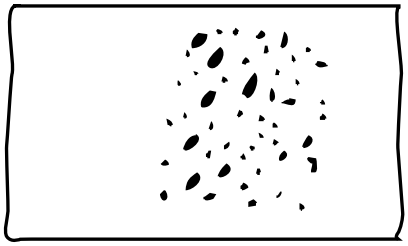

(c) Cluster

NOTES:
(1) Typical concentration and size permitted in any 6 in. (150 mm) length of weld.
(2) Maximum size per Table 4-1.

Provided by IHS under license with ASME
No reproduction or networking permitted without license from IHS
Licensee=Chevron Phillips Chemical Co LP/5956674001
Not for Resale, 11/09/2014 20:41:36 MST

Figure 4-8
Charts for *t* Over 4 in. (100 mm)

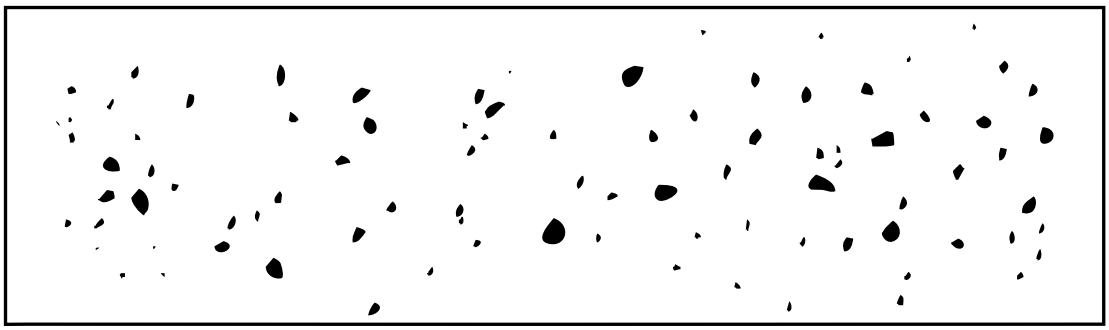

(a) Random Rounded Indications [See Note (1)]

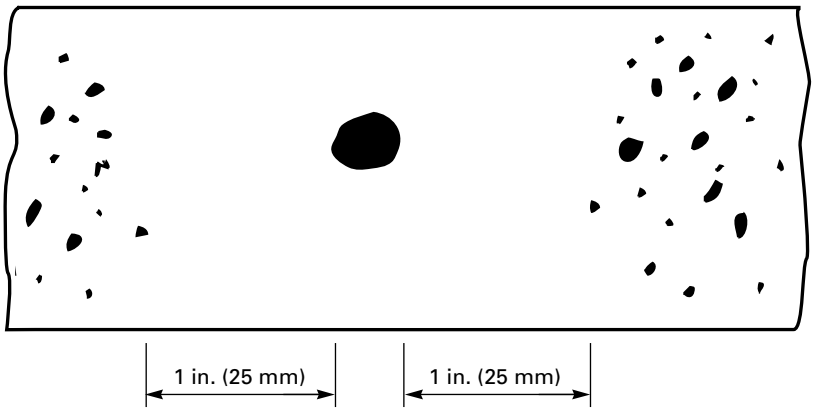

(b) Isolated Indication [See Note (2)]

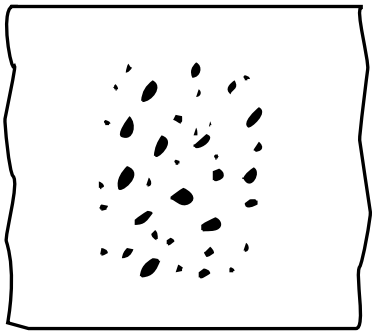

(c) Cluster

NOTES:
(1) Typical concentration and size permitted in any 6 in. (150 mm) length of weld.
(2) Maximum size per Table 4-1.

Provided by IHS under license with ASME
No reproduction or networking permitted without license from IHS
Licensee=Chevron Phillips Chemical Co LP/5956674001
Not for Resale, 11/09/2014 20:41:36 MST

MANDATORY APPENDIX 5
FLANGED-AND-FLUED OR FLANGED-ONLY EXPANSION JOINTS

5-1 GENERAL

(a) Flanged-and-flued or flanged-only expansion joints used as an integral part of heat exchangers or other pressure vessels shall be designed to provide flexibility for thermal expansions and also function as pressure containing elements. The rules in this Appendix are intended to apply to typical single layer flanged-and-flued or flanged only elements shown in Figure 5-1 and are limited to applications involving only axial deflections.

The suitability of the expansion joint for the specified design, pressure, and temperature shall be determined by methods described in this Appendix.

(b) In all vessels with expansion joints, the hydrostatic end force caused by pressure and/or the joint spring force shall be contained by adequate restraining elements (i.e., tube bundle, tubesheets or shell, external bolting, anchors, etc.). The average primary membrane stress [see UG-23(c)] in these restraining elements shall not exceed the maximum allowable stress at the design temperature for the material given in the tables given in Subpart 1 of Section II, Part D.

(c) Joint flexible elements shall not be extended, compressed, rotated, or laterally offset to accommodate connecting parts which are not properly aligned, unless such movements have been accounted for in the design under the provisions of U-2(g).

(d) The rules of this Appendix do not address cyclic loading conditions. As such, this Appendix does not require a cyclic life determination. The User is cautioned that the design of some expansion joints (especially flanged-only joints) may be governed by cyclic loading. If cyclic loading [see UG-22(e)] is specified for a vessel containing the expansion joint, see U-2(g).

(e) This Division does not contain rules to cover all details of design and construction of expansion joints. The criteria in this Appendix are therefore established to cover most common forms of flanged-and-flued or flanged-only expansion joints, but it is not intended to limit configuration or details to those illustrated or otherwise described herein. For designs which differ from the basic concepts of this Appendix (e.g., multilayer, asymmetric geometries or loadings, etc.), the design requirements of U-2(g) apply.

Figure 5-1
Typical Flanged-and-Flued or Flanged-Only Flexible Elements

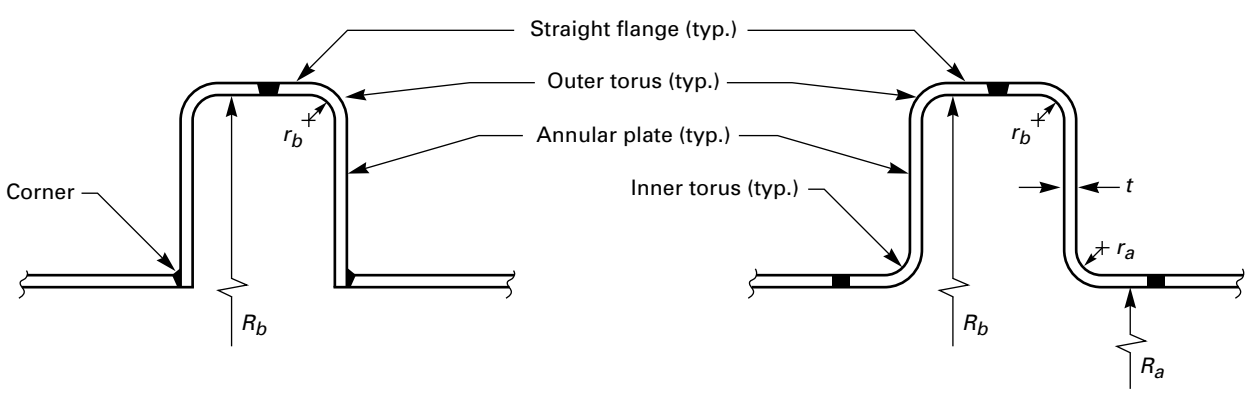

GENERAL NOTE: r_a, $r_b \geq 3t$.

R_a, R_b = inside radius of expansion joint straight flange
t = thickness of expansion joint flexible element

Provided by IHS under license with ASME
No reproduction or networking permitted without license from IHS
Licensee=Chevron Phillips Chemical Co LP/5956674001
Not for Resale, 11/09/2014 20:41:36 MST

(f) Elastic moduli, yield strengths, and allowable stresses shall be taken at the design temperatures. However, for cases involving thermal loading, it is permitted to use the operating metal temperature instead of the design temperature.

5-2 MATERIALS

Materials for pressure retaining components shall conform to the requirements of UG-4. For carbon and low alloy steels, minimum thickness exclusive of corrosion allowance shall be 0.125 in. (3 mm) for all pressure containing parts. The minimum thickness for high alloy steel shall conform to requirements of UG-16.

5-3 DESIGN

The design of expansion joints shall conform to the requirements of Part UG and those of (a) through (f) below.

(a) Except as permitted by UHX-17(a), the design of expansion joint flexible elements shall satisfy the following stress limits [see (b) below]. These stress limits shall be met in both the corroded and noncorroded conditions.

(1) Mechanical Loads Only. Mechanical loads include pressure and pressure-induced axial deflection. The maximum stress in the joint is limited to 1.5S [where S is the maximum allowable stress value (see UG-23) for the joint material].

(2) Thermally Induced Displacements Only. The maximum stress in the joint is limited to S_{PS} [see UG-23(e)].

(3) Mechanical Loads Plus Thermally Induced Displacements. The maximum stress in the joint is limited to S_{PS}.

(b) The calculation of the individual stress components and their combination shall be performed by a method of stress analysis that can be shown to be appropriate for expansion joints.

(c) The knuckle radius r_a or r_b of any formed element shall not be less than three times the element thickness t as shown in Figure 5-1.

(d) The spring rate of the expansion joint assembly may be determined either by calculation or by testing.

(e) Thinning of any flexible element as a result of forming operations shall be considered in the design and specifications of material thickness.

(f) Extended straight flanges between the inner and outer torus of flexible elements are permissible. Extended straight flanges with lengths in excess of $0.5\sqrt{Rt_f}$ shall satisfy all the requirements of UG-27 where

R = inside radius of expansion joint straight flange at the point of consideration
= R_a or R_b
t_f = uncorroded thickness of expansion joint straight flange

5-4 FABRICATION

(a) Longitudinal and circumferential weld seams shall be butt-type full penetration welds; Type (1) of Table UW-12.

(b) Longitudinal welds shall be ground flush and smooth on both sides prior to being formed into expansion elements.

Figure 5-2
Typical Nozzle Attachment Details Showing Minimum Length of Straight Flange

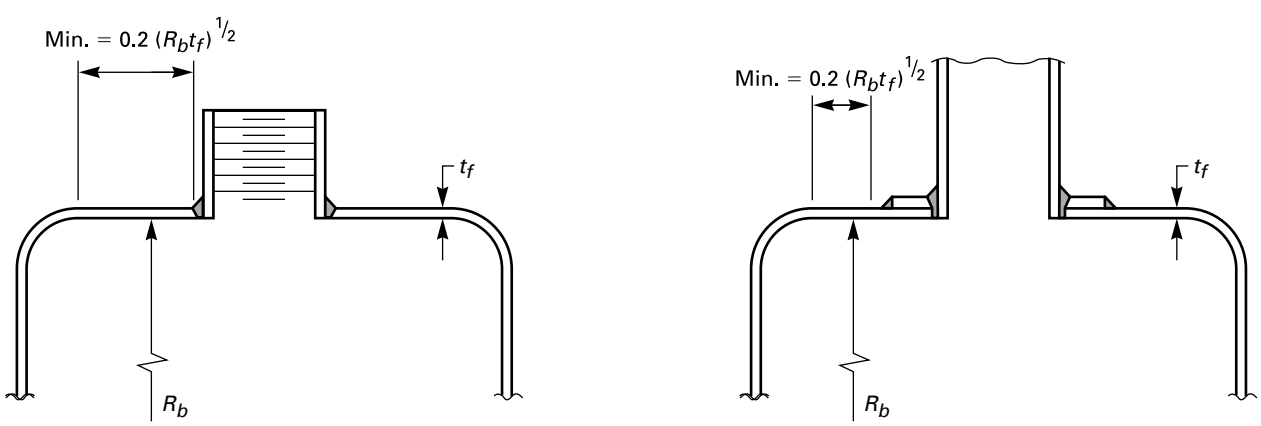

(a) Nonreinforced Nozzle **(b) Reinforced Nozzle**

R_b = inside radius of expansion joint straight flange
t_f = uncorroded thickness of expansion joint straight flange

Provided by IHS under license with ASME
No reproduction or networking permitted without license from IHS
Licensee=Chevron Phillips Chemical Co LP/5956674001
Not for Resale, 11/09/2014 20:41:36 MST

(c) Other than the shell attachment welds and flange welds, no circumferential welds are permitted in the fabrication of the flexible elements, i.e., inner torus, annular plate, and outer torus, unless the welds are ground flush and fully radiographed.

(d) Flexible elements shall be attached to the shell using full penetration circumferential welds.

(e) Nozzles, backing strips, clips, or other attachments shall not be located in highly stressed areas of the expansion joint, i.e., inner torus, annular plate, and outer torus. Nozzles or other attachments located in the outer straight flange shall satisfy the axial spacing requirements of Figure 5-2.

(f) Alignment tolerances of the completed expansion joint attached to the shell shall meet the tolerances specified by UW-33.

5-5 INSPECTION AND TESTS

(a) Expansion joint flexible elements shall be visually examined and found free of unacceptable surface conditions, such as notches, crevices, and weld spatter, which may serve as points of local stress concentration. Suspect surface areas shall be further examined by the magnetic particle or liquid penetrant method in accordance with Mandatory Appendix 6 or 8.

(b) Longitudinal welds shall be 100% radiographed in accordance with UW-51. All full penetration butt type welds shall be examined 100% on both sides by the magnetic particle or liquid penetrant method in accordance with Mandatory Appendix 6 or 8 after forming.

(c) The circumferential welds within the expansion joint and attaching the expansion joint to the shell shall be examined 100% on both sides, where accessible, by the magnetic particle or liquid penetrant method in accordance with Mandatory Appendix 6 or 8. The accessibility of welds shall be subject to the acceptance of the Inspector.

(d) The completed expansion joint shall be pressure tested in accordance with UG-99 or UG-100. The pressure testing may be performed as a part of the final vessel hydrostatic pressure test provided the joint is accessible for inspection during pressure testing.

(e) Expansion joint restraining elements shall also be pressure tested in accordance with UG-99 or UG-100 as a part of the initial expansion joint pressure test or as a part of the final vessel hydrostatic pressure test after installation of the joint.

(f) In addition to inspecting the expansion joint for leaks and structural integrity during the pressure test, expansion joints shall be inspected before, during, and after the pressure test for visible permanent distortion.

5-6 MARKING AND REPORTS

The expansion joint Manufacturer, whether the vessel Manufacturer or a parts Manufacturer, shall have a valid ASME Code U Certificate of Authorization and shall complete the appropriate Data Report in accordance with UG-120.

(a) The Manufacturer responsible for the expansion joint design shall include the following additional data and statements on the appropriate Data Report:

(1) uncorroded and corroded spring rate

(2) axial movement (+ and −) and associated loading condition, if applicable

(3) that the expansion joint has been constructed to the rules of this Appendix

(b) A parts Manufacturer shall identify the vessel for which the expansion joint is intended on the Partial Data Report.

(c) Markings shall not be stamped on the flexible elements of the expansion joint.

Provided by IHS under license with ASME
No reproduction or networking permitted without license from IHS
Licensee=Chevron Phillips Chemical Co LP/5956674001
Not for Resale, 11/09/2014 20:41:36 MST

MANDATORY APPENDIX 6
METHODS FOR MAGNETIC PARTICLE EXAMINATION (MT)

6-1 SCOPE

(a) This Appendix provides for procedures which shall be followed whenever magnetic particle examination is specified in this Division.

(b) Article 7 of Section V shall be applied for the detail requirements in methods and procedures, and the additional requirements specified within this Appendix.

(c) Magnetic particle examination shall be performed in accordance with a written procedure, certified by the Manufacturer to be in accordance with the requirements of T-150 of Section V.

(d) Documentation showing that the required examinations have been performed and that the results are acceptable shall be made available to the Inspector.

6-2 CERTIFICATION OF COMPETENCY FOR NONDESTRUCTIVE EXAMINATION PERSONNEL

The manufacturer shall certify that each magnetic particle examiner meets the following requirements:

(a) He/she has vision, with correction if necessary, to enable him/her to read a Jaeger Type No. 2 Standard Chart at a distance of not less than 12 in., and is capable of distinguishing and differentiating contrast between colors used. These requirements shall be checked annually.

(b) He/she is competent in the techniques of the magnetic particle examination method for which he/she is certified, including making the examination and interpreting and evaluating the results, except that where the examination method consists of more than one operation, he/she may be certified as being qualified only for one or more of these operations.

6-3 EVALUATION OF INDICATIONS

Indications will be revealed by retention of magnetic particles. All such indications are not necessarily imperfections, however, since excessive surface roughness, magnetic permeability variations (such as at the edge of heat affected zones), etc., may produce similar indications.

An indication of an imperfection may be larger than the imperfection that causes it; however, the size of the indication is the basis for acceptance evaluation. Only indications which have any dimension greater than $^{1}/_{16}$ in. (1.5 mm) shall be considered relevant.

(a) A linear indication is one having a length greater than three times the width.

(b) A rounded indication is one of circular or elliptical shape with a length equal to or less than three times its width.

(c) Any questionable or doubtful indications shall be reexamined to determine whether or not they are relevant.

6-4 ACCEPTANCE STANDARDS

These acceptance standards shall apply unless other more restrictive standards are specified for specific materials or applications within this Division.

All surfaces to be examined shall be free of:

(a) relevant linear indications;

(b) relevant rounded indications greater than $^{3}/_{16}$ in. (5 mm);

(c) four or more relevant rounded indications in a line separated by $^{1}/_{16}$ in. (1.5 mm) or less, edge to edge.

6-5 REPAIR REQUIREMENTS

The defect shall be removed or reduced to an imperfection of acceptable size. Whenever an imperfection is removed by chipping or grinding and subsequent repair by welding is not required, the excavated area shall be blended into the surrounding surface so as to avoid sharp notches, crevices, or corners. Where welding is required after removal of an imperfection, the area shall be cleaned and welding performed in accordance with a qualified welding procedure.

(a) Treatment of Indications Believed Nonrelevant. Any indication which is believed to be nonrelevant shall be regarded as an imperfection unless it is shown by reexamination by the same method or by the use of other nondestructive methods and/or by surface conditioning that no unacceptable imperfection is present.

(b) Examination of Areas From Which Imperfections Have Been Removed. After a defect is thought to have been removed and prior to making weld repairs, the area shall be examined by suitable methods to ensure it has been removed or reduced to an acceptably sized imperfection.

--`,,,``,,``,,,

(c) Reexamination of Repair Areas. After repairs have been made, the repaired area shall be blended into the surrounding surface so as to avoid sharp notches, crevices, or corners and reexamined by the magnetic particle method and by all other methods of examination that were originally required for the affected area, except that, when the depth of repair is less than the radiographic sensitivity required, reradiography may be omitted.

--`,,,``,,``,,,

MANDATORY APPENDIX 7
EXAMINATION OF STEEL CASTINGS

7-1 SCOPE

This Appendix covers examination requirements that shall be observed for all steel castings to which a 100% quality factor is to be applied in accordance with UG-24(a)(5). Except for applications involving lethal service, steel castings made to an accepted standard, such as ASME B16.5, are not required to comply with the provisions of this Appendix.

7-2 EXAMINATION TECHNIQUES

Examination techniques shall be carried out in accordance with the following:

(a) Magnetic particle examinations shall be per Mandatory Appendix 6 except that acceptance standards shall be as given in 7-3(a)(3) of this Appendix.

(b) Liquid penetrant examinations shall be per Mandatory Appendix 8 except that acceptance standards shall be as given in 7-3(a)(4) of this Appendix.

(c) Radiographic examinations shall be per Article 2 of Section V with acceptance standards as given in 7-3(a)(1) or 7-3(b)(3) of this Appendix.

(1) A written radiographic examination procedure is not required. Demonstration of density and penetrameter image requirements on production or technique radiographs shall be considered satisfactory evidence of compliance with Article 2.

(2) The requirements of T-285 of Article 2 of Section V are to be used only as a guide. Final acceptance of radiographs shall be based on the ability to see the prescribed penetrameter image and the specified hole or the designated wire or a wire penetrameter.

(d) Ultrasonic examinations shall be per Article 5 of Section V with acceptance standards as given in 7-3(b)(3) of this Appendix.

7-3 EXAMINATION REQUIREMENTS

All steel castings shall be examined in accordance with (a) or (b) as applicable.

(a) All castings having a maximum body thickness less than $4^1/_2$ in. (115 mm) shall be examined as follows:

(1) All critical sections[17] shall be radiographed. For castings having radiographed thicknesses up to 2 in. (51 mm), the radiographs shall be compared to those in ASTM E446, Standard Reference Radiographs for Steel Castings up to 2 in. (51 mm) in Thickness. The maximum acceptable severity levels for imperfections shall be as follows:

	Maximum Severity Level	
Imperfection Category	Thicknesses <1 in.	Thicknesses 1 in. to <2 in.
A — Gas porosity	1	2
B — Sand and slag	2	3
C — Shrinkage (four types)	1	3
D — Cracks	0	0
E — Hot tears	0	0
F — Inserts	0	0
G — Mottling	0	0

For castings having radiographed thicknesses from 2 in. to $4^1/_2$ in. (51 mm to 114 mm), the radiographs shall be compared to those in ASTM E186, Standard Reference Radiographs for Heavy-Walled [2-in. to $4^1/_2$-in. (51-mm to 114-mm)] Steel Castings. The maximum acceptable severity levels for imperfections shall be as follows:

Imperfection Category	Maximum Severity Level
A — Gas porosity	2
B — Sand and slag inclusions	2
C — Shrinkage	
Type 1	1
Type 2	2
Type 3	3
D — Cracks	0
E — Hot tear	0
F — Inserts	0

(2) All surfaces including machined gasket seating surfaces shall be examined by the magnetic particle or the liquid penetrant method. When the casting specification requires heat treatment, these examinations shall be conducted after that heat treatment.

(3) Surface indications determined by magnetic particle examination shall be compared with those indicated in ASTM E125, Reference Photographs for Magnetic Particle Indications on Ferrous Castings, and shall be removed if they exceed the following limits:

Type	Degree
I. Linear discontinuities (hot tears and cracks)	All
II. Shrinkage	2
III. Inclusions	3
IV. Chills and chaplets	1
V. Porosity	1

Provided by IHS under license with ASME
No reproduction or networking permitted without license from IHS
Licensee=Chevron Phillips Chemical Co LP/5956674001
Not for Resale, 11/09/2014 20:41:36 MST

(4) Surface indications determined by liquid penetrant examination are unacceptable if they exceed the following limits:

(-a) all cracks and hot tears;

(-b) any group of more than six linear indications other than those in (a) above in any rectangular area of $1\frac{1}{2}$ in. × 6 in. (38 mm × 150 mm) or less or any circular area having a diameter of $3\frac{1}{2}$ in. (88 mm) or less, these areas being taken in the most unfavorable location relative to the indications being evaluated;

(-c) other linear indications more than $\frac{1}{4}$ in. (6 mm) long for thicknesses up to $\frac{3}{4}$ in. (19 mm) inclusive, more than one-third of the thickness in length for thicknesses from $\frac{3}{4}$ in. to $2\frac{1}{4}$ in. (19 mm to 57 mm), and more than $\frac{3}{4}$ in. (19 mm) long for thicknesses over $2\frac{1}{4}$ in. (57 mm) (aligned acceptable imperfections separated from one another by a distance equal to the length of the longer imperfection are acceptable);

(-d) all indications of nonlinear imperfections which have any dimension exceeding $\frac{3}{16}$ in. (5 mm).

(5) When more than one casting of a particular design is produced, each of the first five shall be examined to the full extent prescribed herein. When more than five castings are being produced, examinations as prescribed shall be performed on the first five and on one additional casting for each additional five castings produced. If any of these additional castings proves to be unacceptable, each of the remaining four castings of that group shall be examined fully.

(b) All castings having maximum body thickness $4\frac{1}{2}$ in. (114 mm) and greater and castings of lesser thickness which are intended for severe service applications[94] shall be examined as follows.

(1) Each casting shall be subjected to 100% visual examination and to complete surface examination by either the magnetic particle or the liquid penetrant method. When the casting specification requires heat treatment, these examinations shall be conducted after that heat treatment. Acceptability limits for surface imperfections shall be as given in (a)(3) and (a)(4) above.

(2) All parts of castings up to 12 in. (300 mm) in thickness shall be subjected to radiographic examination and the radiographs compared to those given in ASTM E280, Standard Reference Radiographs for Heavy-Walled [$4\frac{1}{2}$-in. to 12-in. (114-mm to 305-mm)] Steel Castings. The maximum acceptable severity levels for imperfections shall be as follows:

Imperfection Category	Maximum Severity Level
A — Gas porosity	2
B — Sand and slag inclusions	2
C — Shrinkage	
Type 1	2
Type 2	2
Type 3	2
D — Cracks	0
E — Hot tears	0
F — Inserts	0

(3) For castings having a maximum thickness in excess of 12 in. (300 mm), all thicknesses which are less than 12 in. (300 mm) shall be examined radiographically in accordance with the preceding paragraph. All parts of such castings having thicknesses in excess of 12 in. (300 mm) shall be examined ultrasonically in accordance with Article 5 of Section V. Any imperfections which do not produce indications exceeding 20% of the straight beam back reflection or do not reduce the height of the back reflection by more than 30% during a total movement of the transducer of 2 in. (50 mm) in any direction shall be considered acceptable. Imperfections exceeding these limits shall be repaired unless proved to be acceptable by other examination methods.

7-4 REPAIRS (13)

(a) Whenever an imperfection is repaired, the excavated areas shall be examined by the magnetic particle or liquid penetrant method to ensure it has been removed or reduced to an acceptable size.

(b) Whenever a surface imperfection is repaired by removing less than 5% of the intended thickness of metal at that location, welding need not be employed in making repairs. Where this is the case, the excavated area shall be blended into the surrounding surface so as to avoid any sharp contours.

(c) Castings of nonweldable materials which contain imperfections in excess of acceptable limits as given in 7-3 shall be rejected.

(d) For any type of defect, if the repair will entail removal of more than 75% of the thickness or a length in any direction of 6 in. (150 mm) or more, approval of the user or his designated agent responsible for purchasing the casting shall be obtained prior to making repairs.

(e) The finished surface of all repair welds shall be examined by the magnetic particle or liquid penetrant method. When subsequent heat treatment is required, this examination of the repaired area shall be conducted after heat treatment.

(f) See below.

(1) Except as provided in (2) and (3) below, all weld repairs shall be examined by radiography.

(2) Where the depth of repair is less than 1 in. or 20% of the section thickness, whichever is the lesser, and where the repaired section cannot be radiographed effectively, the first layer of each $\frac{1}{4}$ in. (6 mm) thickness of deposited weld metal shall be examined by the magnetic particle or the liquid penetrant method.

(3) Weld repairs which are made as a result of ultrasonic examination shall be reexamined by the same method when completed.

(g) When repair welding is done after the casting has been heat treated and when required by either the rules of this Section or the requirements of the casting specification, the repaired casting shall be postweld heat treated.

Provided by IHS under license with ASME
No reproduction or networking permitted without license from IHS
Licensee=Chevron Phillips Chemical Co LP/5956674001
Not for Resale, 11/09/2014 20:41:36 MST

(h) All welding shall be performed using procedure qualifications in accordance with Section IX. The procedure qualification shall be performed on a test specimen of the same P-Number and same group as the production casting. The test specimen shall be subjected to the same heat treatment both before and after welding as will be applied to the production casting. All welders and operators performing this welding shall be qualified in accordance with Section IX.

7-5 IDENTIFICATION AND MARKING

Each casting shall be marked with the manufacturer's name and casting identification, including the applicable casting quality factor and material identification. The manufacturer shall furnish reports of the chemical and mechanical properties and certification that each casting conforms to all applicable requirements of this Appendix. The certification for castings for lethal service shall indicate the nature, location, and extent of any repairs.

Provided by IHS under license with ASME
No reproduction or networking permitted without license from IHS
Licensee=Chevron Phillips Chemical Co LP/5956674001
Not for Resale, 11/09/2014 20:41:36 MST

MANDATORY APPENDIX 8
METHODS FOR LIQUID PENETRANT EXAMINATION (PT)

NOTE: Satisfactory application of this method of examination requires special skills in the techniques involved and in interpreting the results. The requirements specified herein presume application by suitably experienced personnel.

8-1 SCOPE

(a) This Appendix describes methods which shall be employed whenever liquid penetrant examination is specified in this Division.

(b) Article 6 of Section V shall be applied for detail requirements in methods, procedures and qualifications, unless specified within this Appendix.

(c) Liquid penetrant examination shall be performed in accordance with a written procedure, certified by the Manufacturer to be in accordance with the requirements of T-150 of Section V.

(d) Documentation showing that the required examinations have been performed and that the results are acceptable shall be made available to the Inspector.

8-2 CERTIFICATION OF COMPETENCY OF NONDESTRUCTIVE EXAMINATION PERSONNEL

The manufacturer shall certify that each liquid penetrant examiner meets the following requirements.

(a) He has vision, with correction if necessary, to enable him to read a Jaeger Type No. 2 Standard Chart at a distance of not less than 12 in. (300 mm), and is capable of distinguishing and differentiating contrast between colors used. These requirements shall be checked annually.

(b) He is competent in the techniques of the liquid penetrant examination method for which he is certified, including making the examination and interpreting and evaluating the results, except that, where the examination method consists of more than one operation, he may be certified as being qualified only for one or more of these operations.

8-3 EVALUATION OF INDICATIONS

An indication of an imperfection may be larger than the imperfection that causes it; however, the size of the indication is the basis for acceptance evaluation. Only indications with major dimensions greater than $^{1}/_{16}$ in. (1.5 mm) shall be considered relevant.

(a) A linear indication is one having a length greater than three times the width.

(b) A rounded indication is one of circular or elliptical shape with the length equal to or less than three times the width.

(c) Any questionable or doubtful indications shall be reexamined to determine whether or not they are relevant.

8-4 ACCEPTANCE STANDARDS

These acceptance standards shall apply unless other more restrictive standards are specified for specific materials or applications within this Division.

All surfaces to be examined shall be free of:

(a) relevant linear indications;

(b) relevant rounded indications greater than $^{3}/_{16}$ in. (5 mm);

(c) four or more relevant rounded indications in a line separated by $^{1}/_{16}$ in. (1.5 mm) or less (edge to edge).

8-5 REPAIR REQUIREMENTS

Unacceptable imperfections shall be repaired and reexamination made to assure removal or reduction to an acceptable size. Whenever an imperfection is repaired by chipping or grinding and subsequent repair by welding is not required, the excavated area shall be blended into the surrounding surface so as to avoid sharp notches, crevices, or corners. Where welding is required after repair of an imperfection, the area shall be cleaned and welding performed in accordance with a qualified welding procedure.

(a) Treatment of Indications Believed Nonrelevant. Any indication which is believed to be nonrelevant shall be regarded as an imperfection unless it is shown by reexamination by the same method or by the use of other nondestructive methods and/or by surface conditioning that no unacceptable imperfection is present.

(b) Examination of Areas From Which Defects Have Been Removed. After a defect is thought to have been removed and prior to making weld repairs, the area shall be examined by suitable methods to ensure it has been removed or reduced to an acceptably sized imperfection.

Provided by IHS under license with ASME
No reproduction or networking permitted without license from IHS
Licensee=Chevron Phillips Chemical Co LP/5956674001
Not for Resale, 11/09/2014 20:41:36 MST

(c) Reexamination of Repair Areas. After repairs have been made, the repaired area shall be blended into the surrounding surface so as to avoid sharp notches, crevices, or corners and reexamined by the liquid penetrant method and by all other methods of examination that were originally required for the affected area, except that, when the depth of repair is less than the radiographic sensitivity required, reradiography may be omitted.

Provided by IHS under license with ASME
No reproduction or networking permitted without license from IHS
Licensee=Chevron Phillips Chemical Co LP/5956674001
Not for Resale, 11/09/2014 20:41:36 MST

MANDATORY APPENDIX 9
JACKETED VESSELS

9-1 SCOPE

(a) The rules in Mandatory Appendix 9 cover minimum requirements for the design, fabrication, and inspection of the jacketed portion of a pressure vessel. The *jacketed portion of the vessel* is defined as the inner and outer walls, the closure devices, and all other penetrations or parts within the jacket which are subjected to pressure stresses. Parts such as nozzle closure members and stiffening or stay rings are included.

(b) All other Parts of this Division shall apply unless otherwise stated in this Appendix.

(c) Where the internal design pressure is 15 psi (100 kPa) or less, and any combination of pressures and vacuum in the vessel and jacket will produce a total external pressure greater than 15 psi (100 kPa) on the inner vessel wall, then the entire jacket shall be interpreted as within the scope of this part.

(d) For the purpose of this Appendix, jackets are assumed to be integral pressure chambers, attached to a vessel for one or more purposes such as:

(1) to heat the vessel and its contents;

(2) to cool the vessel and its contents;

(3) to provide a sealed insulation chamber for the vessel.

(e) As stated in U-2(g), this Division does not contain rules to cover all details of design and construction. These rules are therefore established to cover most common jacket types, but are not intended to limit configurations to those illustrated or otherwise described herein.

(f) Half-pipe jackets are not within the scope of this Appendix.

9-2 TYPES OF JACKETED VESSELS

This Appendix shall apply to jacketed vessels having jackets which cover the shell or heads as illustrated in Figure 9-2 and partial jackets as illustrated in Figure 9-7. Jackets, as shown in Figure 9-2, shall be continuous circumferentially for Types 1, 2, 4, or 5 shown and shall be circular in cross section for Type 3. The use of any combination of the types shown is permitted on any one vessel provided the individual requirements for each are met. Nozzles or other openings in Type 1, 2, 4, or 5 jackets that also penetrate the vessel shell or head shall be designed in accordance with UG-37(d)(2). Dimpled jackets are not covered in this Appendix (see UW-19).

9-3 MATERIALS

Materials used in the fabrication of jackets shall be in accordance with Subsection A.

9-4 DESIGN OF JACKET SHELLS AND JACKET HEADS

Design shall comply with the applicable requirements of Subsection A except where otherwise provided for in this Appendix.

(a) Shell and head thickness shall be determined by the appropriate formula given in Subsection A. In consideration of the loadings given in UG-22, particular attention to the effects of local internal and external loads and expansion differentials at design temperatures shall be given. Where vessel supports are attached to the jacket, consideration shall be given to the transfer of the supported load of the inner vessel and contents.

(b) The requirements for inspection openings as prescribed in UG-46 shall apply to jackets except that the maximum size of opening need not exceed 2 in. (50 mm) pipe size (DN 50) for all diameter vessels.

(c) The use of impingement plates or baffles at the jacket inlet connection to reduce erosion of the inner wall shall be considered for media where vapors are condensed, i.e., steam.

(d) Jacketed vessels may be designed utilizing braced and stayed surfaces as given in UG-47 provided the jacket wall in addition to meeting the requirements of UG-47(a) also meets the applicable requirements of UG-27(c) and UG-27(d) and UG-32. This paragraph is not intended to apply to dimpled jackets. (see UW-19.)

9-5 DESIGN OF CLOSURE MEMBER OF JACKET TO VESSEL

(a) This paragraph gives rules for the design of closure members shown herein. Closures of geometries other than those illustrated may be used if the strength requirements of UG-101 are met.

(b) Symbols used in Figures 9-5 and 9-6 are as follows:

t_s = nominal thickness of inner vessel wall

t_{rj} = required minimum thickness of outer jacket wall

t_{rc} = required minimum thickness of closure member as determined herein

t_c = nominal thickness of closure member

Provided by IHS under license with ASME
No reproduction or networking permitted without license from IHS
Licensee=Chevron Phillips Chemical Co LP/5956674001
Not for Resale, 11/09/2014 20:41:36 MST

Figure 9-2
Some Acceptable Types of Jacketed Vessels

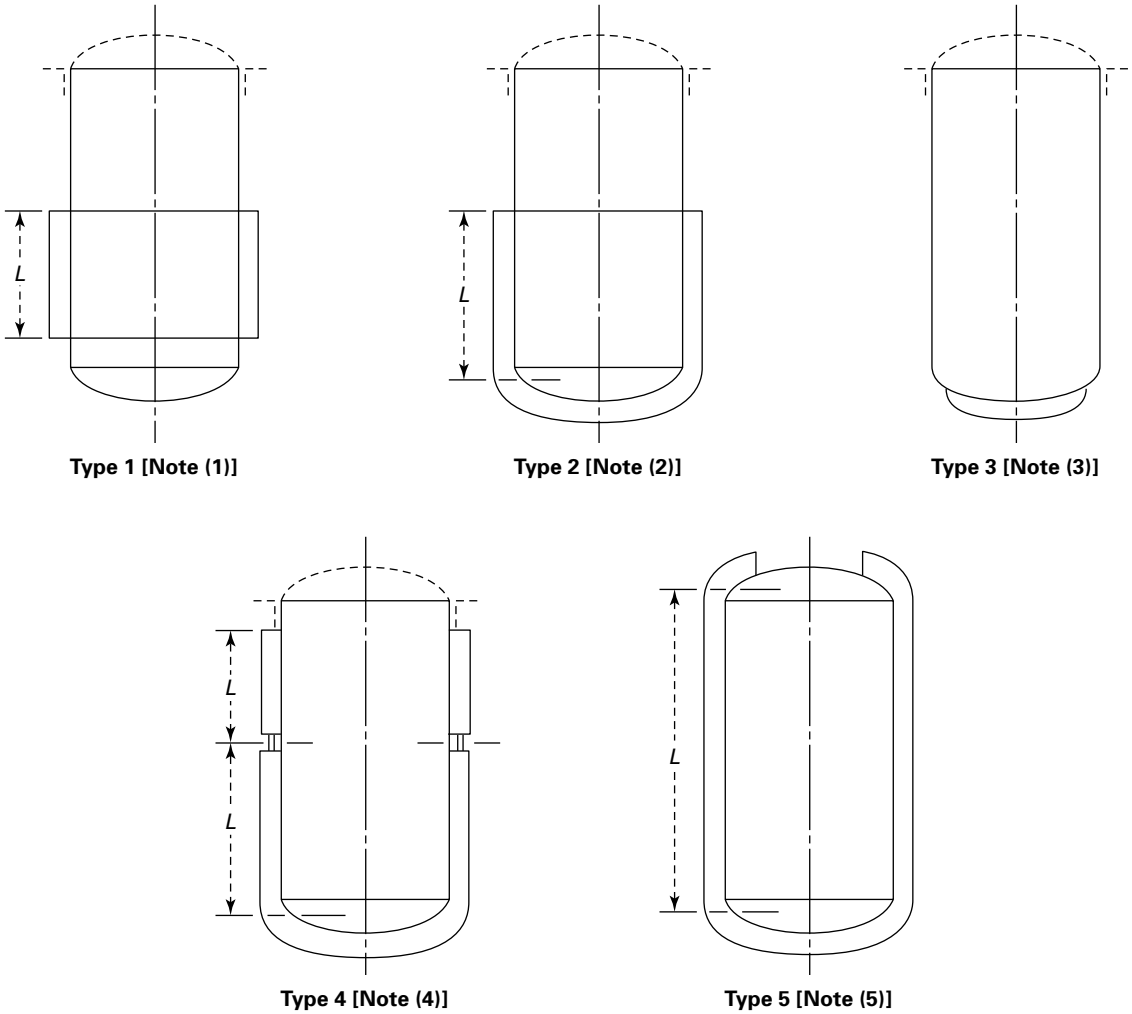

NOTES:
(1) Jacket of any length confined entirely to cylindrical shell.
(2) Jacket covering a portion of cylindrical shell and one head.
(3) Jacket covering a portion of head.
(4) Jacket with addition of stay or equalizer rings to the cylindrical shell portion to reduce effective length.
(5) Jacket covering cylindrical shell and any portion of either head.

Provided by IHS under license with ASME
No reproduction or networking permitted without license from IHS
Licensee=Chevron Phillips Chemical Co LP/5956674001
Not for Resale, 11/09/2014 20:41:36 MST

t_j = nominal thickness of outer jacket wall
t_n = nominal thickness of nozzle wall
r = corner radius of torus closures
R_s = outside radius of inner vessel
R_j = inside radius of jacket
R_p = radius of opening in the jacket at the jacket penetration
P = internal design pressure (see UG-21) in jacket chamber
S = maximum allowable stress value (see UG-23)
j = jacket space. Inside radius of jacket minus outside radius of inner vessel.
a, b, c, Y, Z = minimum weld dimensions for attachment of closure member to inner vessel measured as shown in Figures 9-5 and 9-6
L = design length of a jacket section as shown in Figure 9-2. This length is determined as follows:

(a) the distance between inner vessel head-bend lines plus one-third of the depth of each inner vessel head if there are no stiffening rings nor jacket closures between the head-bend lines;

(b) the center-to-center distance between any two adjacent stiffening rings or jacket closures; or

(c) the distance from the center of the first stiffening ring or the jacket closure to the jacketed inner head-bend line plus one-third of the inner vessel head, all measured parallel to the axis of the vessel

For the design of a closure member or stiffening ring, the greater adjacent L shall be used.

(13) *(c)* Jacket closures shown in Figure 9-5 shall conform to the following requirements:

(1) Closures of the type shown in Figure 9-5 sketch (a) that are used on Types 1, 2, and 4 jacketed vessels as shown in Figure 9-2 shall have t_{rc} of at least equal to t_{rj} and corner radius r shall not be less than $3t_c$. This closure design is limited to a maximum thickness t_{rc} of $^5/_8$ in. (16 mm). When this construction is used on Type 1 jacketed vessels, the weld dimension Y shall be not less than $0.7t_c$; and when used on Types 2 and 4 jacketed vessels, the weld dimension Y shall be not less than $0.83t_c$.

(2) Closures of the type shown in Figure 9-5 sketches (b-1), (b-2), and (b-3) shall have t_{rc} at least equal to t_{rj}. In addition for sketch (b-3), the t_{rc} shall be not less than the following:[95]

$$t_{rc} = 0.707j\sqrt{P/S}$$

A groove weld attaching the closure to the inner vessel and fully penetrating the closure thickness t_c may be used with any of the types of jacketed vessels shown in Figure 9-2. However, a fillet weld having a minimum throat dimension of $0.7t_c$ may also be used to join the closure of the inner vessel on Type 1 jacketed vessels of Figure 9-2.

(3) Closures of the type shown in Figure 9-5 sketch (c) shall be used only on Type 1 jacketed vessels shown in Figure 9-2. The closure thickness t_{rc} shall be determined by eq. UG-32(g)(4), but shall be not less than t_{rj}. The angle θ shall be limited to 30 deg maximum.

(4) Closures of the types shown in Figure 9-5 sketches (d-1), (d-2), (e-1), and (e-2) shall be used only on Type 1 jacketed vessels as shown in Figure 9-2 and with the further limitation that t_{rj} does not exceed $^5/_8$ in. (16 mm). The required minimum thickness for the closure bar shall be the greater of the following:[95]

$$t_{rc} = 2t_{rj}$$

$$t_{rc} = 0.707j\sqrt{P\ /\ S}$$

Fillet weld sizes shall be as follows:

Y shall be not less than the smaller of $0.75t_c$ or $0.75t_s$

Z shall not be less than t_j

(5) Closure bar and closure bar to inner vessel welds of the types shown in Figure 9-5 sketches (f-1), (f-2), and (f-3) may be used on any of the types of jacketed vessels shown in Figure 9-2. For Type 1 jacketed vessels, the required minimum closure bar thickness shall be determined from the equations of (4). For all other types of jacketed vessels, the required minimum closure bar thickness and the maximum allowable width of the jacket space shall be determined from the following formulas:[95]

$$t_{rc} = 1.414\sqrt{(PR_s\,j)\ /\ S}$$

$$j = \frac{2St_s^{\,2}}{PR_j} - 0.5\left(t_s + t_j\right)$$

Weld sizes connecting the closure bar to the inner vessel shall be as follows:

Y = not less than the smaller of $1.5t_c$ or $1.5t_s$ and shall be measured as the sum of dimensions a and b as shown in the appropriate sketch of Figure 9-5; in addition, $a,b \geq$ min.[$^1/_4$ in. (6 mm), t_c,t_s]
Z = minimum fillet size necessary when used in conjunction with a groove weld or another fillet weld to maintain the minimum required Y dimension

(6) Jacket to closure bar attachment welds shown in Figure 9-5 sketches (g-1), (g-2), and (g-3) may be used on any of the types of jacketed vessels shown in Figure 9-2. Attachment welds shown in Figure 9-5 sketches (g-4), (g-5), and (g-6), may be used on any of the types of jacketed vessels shown in Figure 9-2 where t_{rj} does not exceed $^5/_8$ in. (16 mm).

Provided by IHS under license with ASME
No reproduction or networking permitted without license from IHS
Licensee=Chevron Phillips Chemical Co LP/5956674001
Not for Resale, 11/09/2014 20:41:36 MST

Figure 9-5 (13)
Some Acceptable Types of Jacket Closures

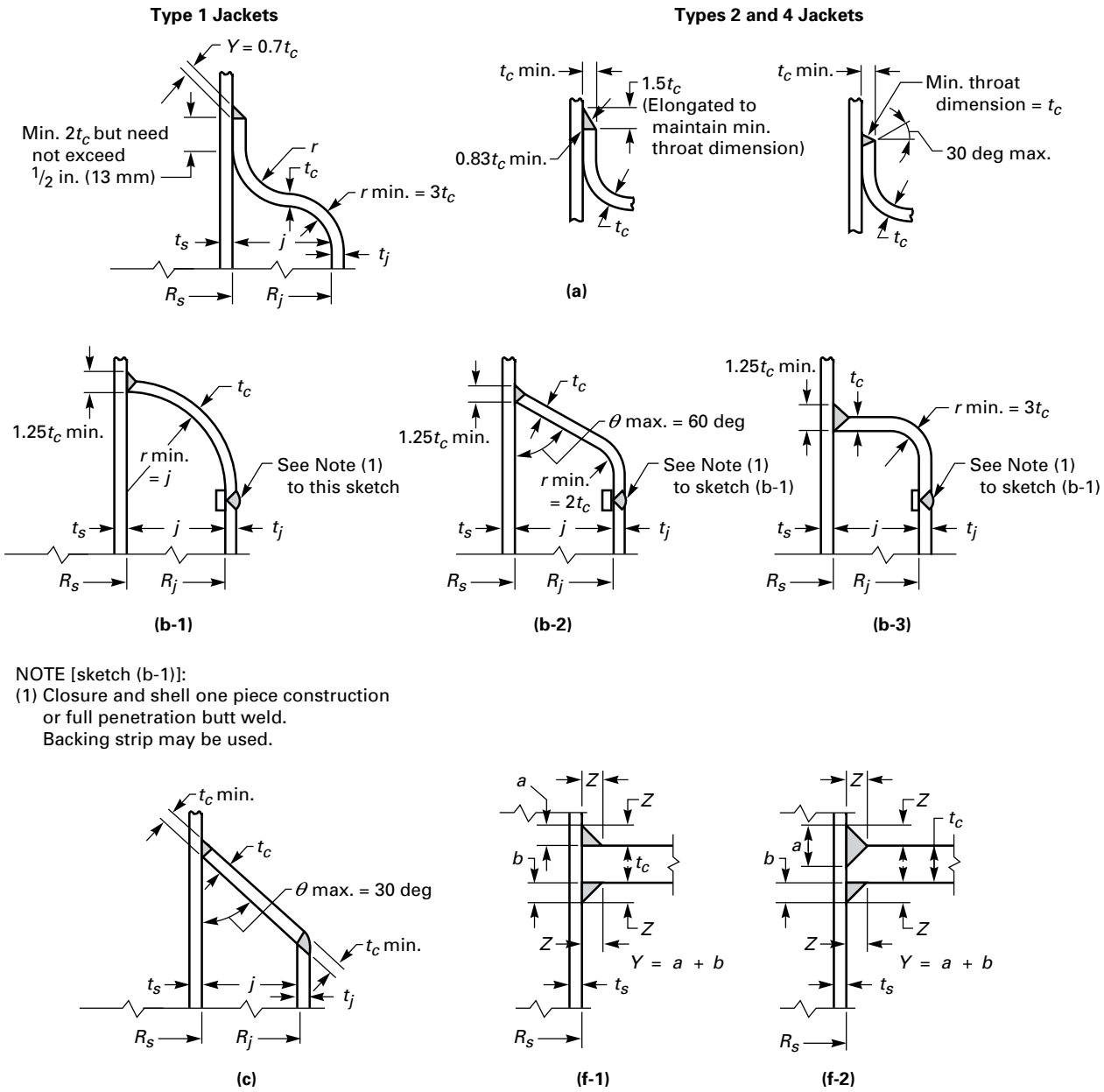

Provided by IHS under license with ASME
No reproduction or networking permitted without license from IHS
Licensee=Chevron Phillips Chemical Co LP/5956674001
Not for Resale, 11/09/2014 20:41:36 MST

Figure 9-5
Some Acceptable Types of Jacket Closures (Cont'd)

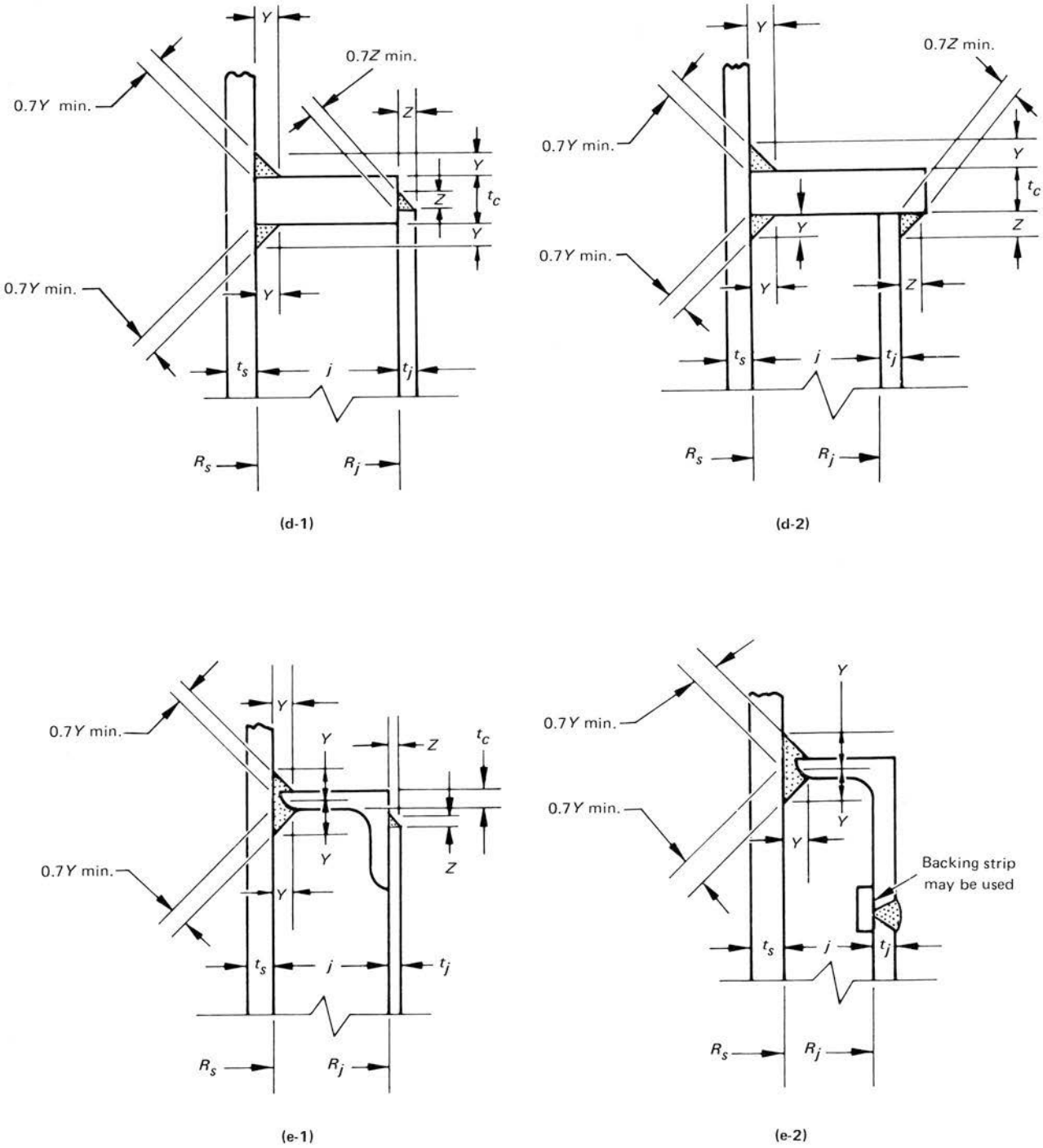

Provided by IHS under license with ASME
No reproduction or networking permitted without license from IHS
Licensee=Chevron Phillips Chemical Co LP/5956674001
Not for Resale, 11/09/2014 20:41:36 MST

Figure 9-5
Some Acceptable Types of Jacket Closures (Cont'd)

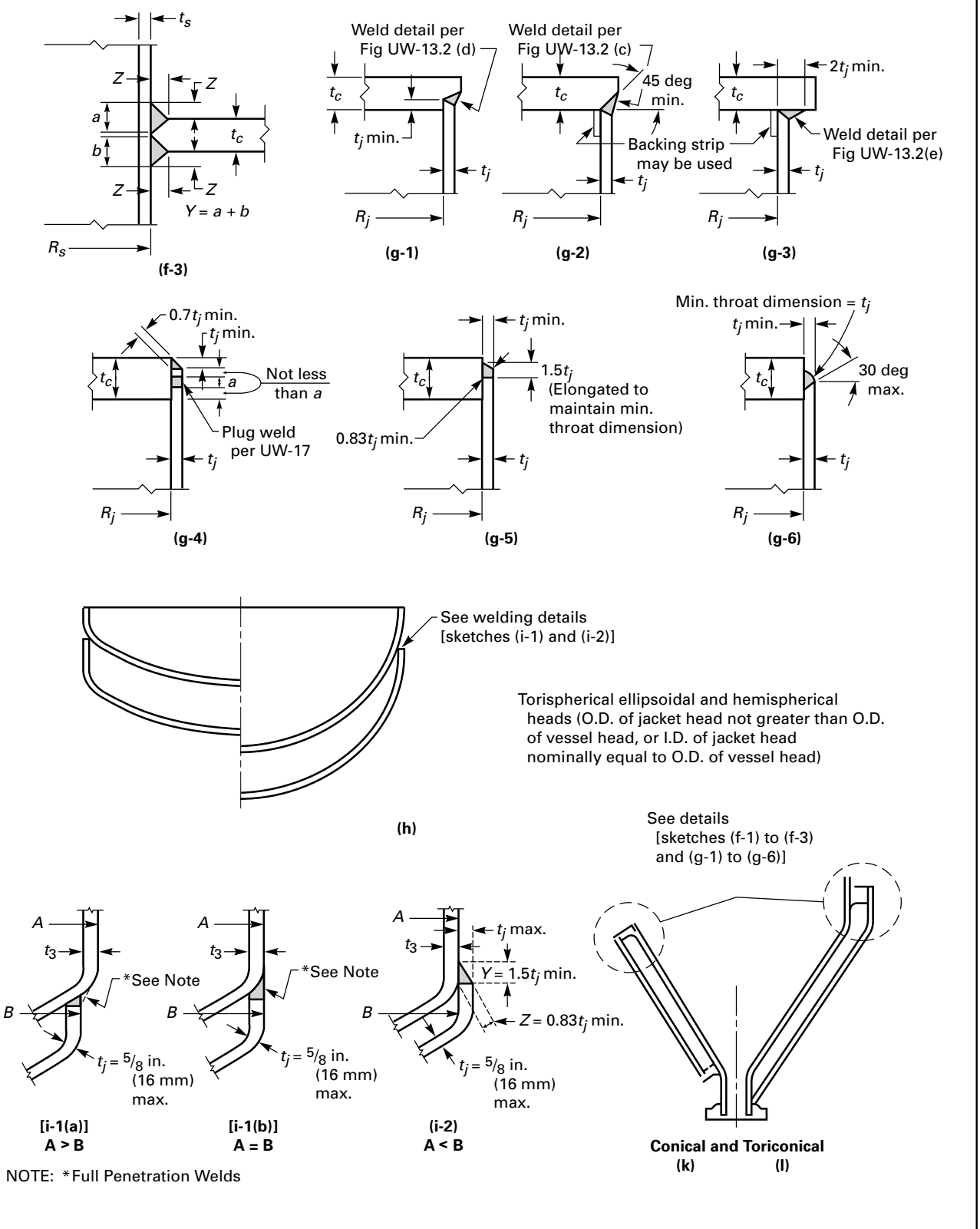

NOTE: *Full Penetration Welds

Provided by IHS under license with ASME
No reproduction or networking permitted without license from IHS
Licensee=Chevron Phillips Chemical Co LP/5956674001
Not for Resale, 11/09/2014 20:41:36 MST

(7) Closures shown in Figure 9-5 sketch (h) used on Type 3 jacketed vessels shown in Figure 9-2 shall have attachment welds in accordance with Figure 9-5 sketch (i-1) or (i-2). This construction is limited to jackets where t_{rj} does not exceed $^5/_8$ in. (16 mm).

(8) Closures for conical or toriconical jackets shown in Figure 9-5 sketches (k) and (l) shall comply with the requirements for Type 2 jacketed vessels shown in Figure 9-2.

(d) Any radial welds in closure members shall be butt welded joints penetrating through the full thickness of the member and shall be ground flush where attachment welds are to be made.

(e) Where the inner vessel must meet the requirements of UW-2, the attachment welds of the jacket to the inner vessel need not be welded for their full thickness nor radiographed. These attachment welds shall be postweld heat treated where required by UW-2 except as may be exempted by the notes to Tables UCS-56-1 through UCS-56-11. The remainder of the jacket need not comply with UW-2 when the inner vessel alone is subjected to the service restrictions. The diameter limitations of UW-12 and UW-13 do not apply to the jacket attachment welds.

(f) Closures for any type of staybolted jacket may be designed in accordance with the requirements of Type 1 jackets shown in Figure 9-2 provided the entire jacket is staybolted to compensate for pressure end forces.

9-6 DESIGN OF PENETRATIONS THROUGH JACKETS

(a) The design of openings through the jacket space shall be in accordance with the rules given in UG-36 through UG-45.

(b) Reinforcements of the opening in the jacket shall not be required for penetrations shown in Figure 9-6 since the opening is stayed by virtue of the nozzle or neck of the closure member.

(c) The jacket penetration closure member minimum thickness considers only pressure membrane loading. Axial pressure loadings and secondary loadings given in UG-22 shall be considered in the design [see (d)(6)].

(d) Jacket penetration closure member designs shown in Figure 9-6 shall conform to the following requirements:

(1) The nozzle wall may be used as the closure member as shown in Figure 9-6 sketch (a), where jacket is welded to nozzle wall.

(2) The minimum required thickness t_{rc} for designs Figure 9-6, sketches (b) and (d) shall be calculated as a shell under external pressure per UG-28.

(3) The minimum required thickness t_{rc} for design Figure 9-6 sketch (c) shall be equal to t_{rj}.

(4) For designs Figure 9-6 sketches (e-1) and (e-2), the thickness required of the closure member attached to the inner vessel t_{rc1} shall be calculated as a shell under external pressure per UG-28. The required thickness of the flexible member t_{rc2} shall be determined from one of the following expressions:

$$t_{rc2} = \frac{Pr}{SE - 0.6P}$$

(when no tubular section exists between jacket and torus)

$$t_{rc2} = \frac{PR_p}{SE - 0.6P}$$

(when tubular section exists between jacket and torus)

where

E = weld efficiency from Table UW-12 for circumferential weld in the torus for equation using r, or for any weld in opening closure member for equation using R_p, radius of penetration

(5) The minimum thickness t_{rc} for design (f) shall be calculated as a shell of radius R_p under external pressure per UG-28.

(6) Designs (b), (c), (d), and (e) of Figure 9-6 provide for some flexibility and are designed on a similar basis to that of expansion joints under the conditions of U-2(g) in combination with UG-22 and UG-23. Only pressure membrane loading is considered in establishing the minimum thickness of the penetration closure member, and it is not the intent that the combination of direct localized and secondary bending stress need be held to the Code-tabulated allowable stress values. It is recognized by UG-23(c) that high localized and secondary bending stresses may exist in Code vessels.

(e) All radial welds in opening sealer membranes shall be butt welded joints penetrating through the full thickness of the member.

(f) Closure member welds shall be circular, elliptical, or obround in shape where possible. Rectangular member welds are permissible provided that corners are rounded to a suitable radius.

9-7 DESIGN OF PARTIAL JACKETS

(a) Partial jackets are jackets which encompass less than the full circumference of the vessel. Some variations are shown in Figure 9-7.

(b) The rules for construction of jacketed vessels given in preceding paragraphs shall apply to partial jackets with the following exceptions:

(1) Stayed partial jackets shall be designed and constructed in accordance with UG-47. Closure members shall conform to 9-5.

Provided by IHS under license with ASME
No reproduction or networking permitted without license from IHS
Licensee=Chevron Phillips Chemical Co LP/5956674001
Not for Resale, 11/09/2014 20:41:36 MST

Figure 9-6
Some Acceptable Types of Penetration Details

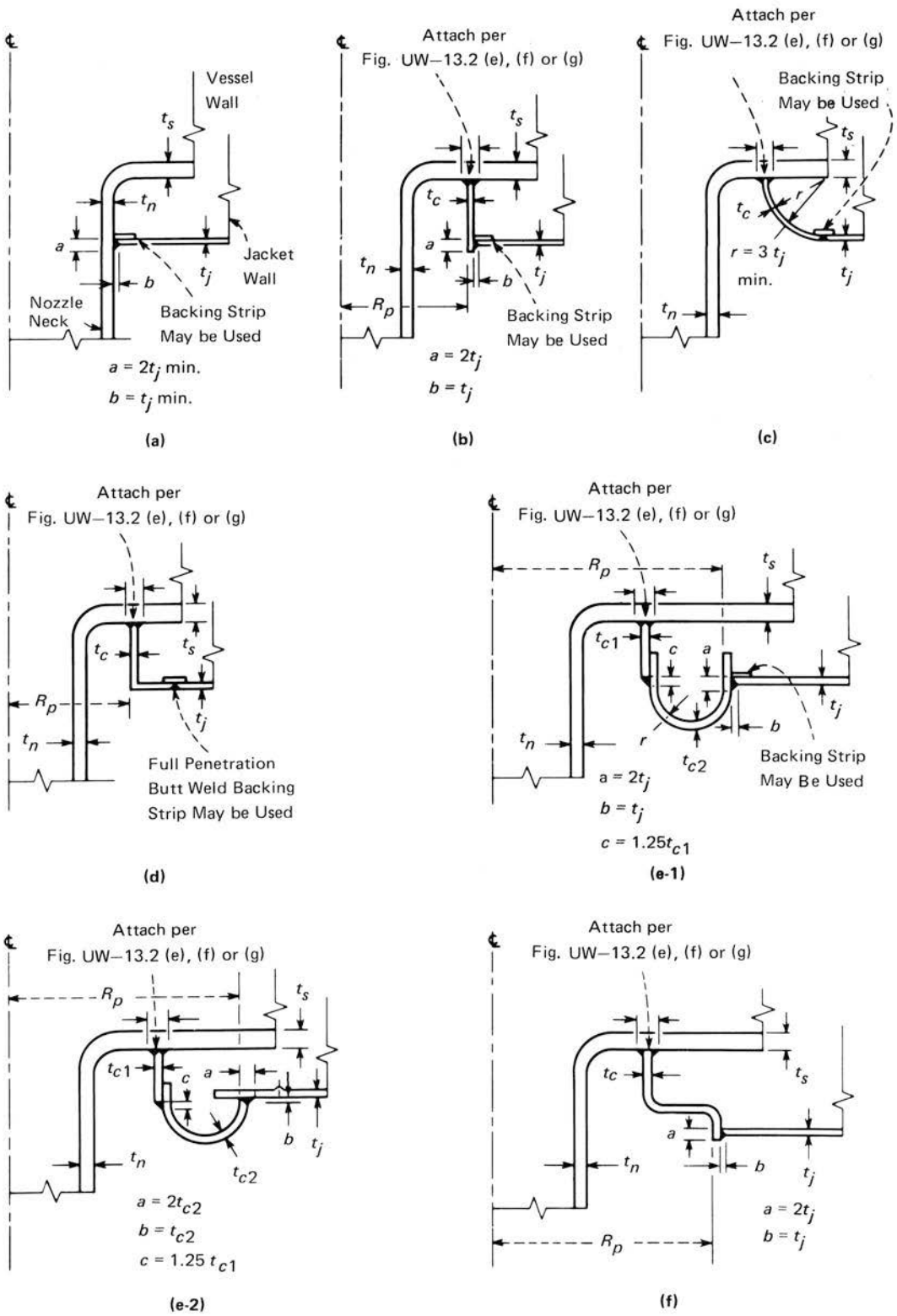

Provided by IHS under license with ASME
No reproduction or networking permitted without license from IHS
Licensee=Chevron Phillips Chemical Co LP/5956674001
Not for Resale, 11/09/2014 20:41:36 MST

Figure 9-7

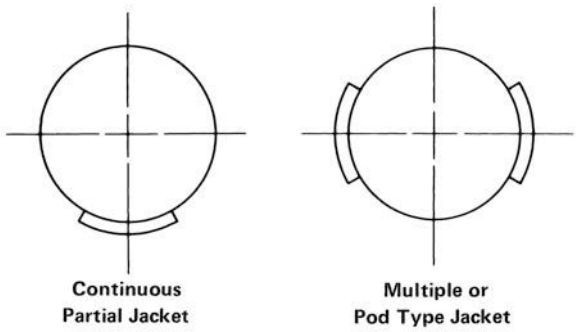

(2) Partial jackets that by virtue of their service or configuration do not lend themselves to staybolt construction may be fabricated by other means providing they are designed using appropriate stress values and are proof tested in accordance with UG-101(p).

9-8 FABRICATION

(a) Fabrication of vessels shall be in accordance with applicable Parts of Subsection A and Subsection B, Part UW. The requirements of UW-13(e) do not apply to closure rings.

(b) This Appendix covers fabrication of jacketed vessels by welding. Other methods of fabrication are permitted provided the requirements of applicable parts of this Division are met.

(c) Where only the inner vessel is subjected to lethal service, the requirements of UW-2 shall apply only to welds in the inner vessel and those welds attaching the jacket to the inner vessel. Welds attaching the jacket to the inner vessel need not be radiographed and may be fillet welded. Postweld heat treatment shall be as required by Tables UCS-56-1 through UCS-56-11.

9-10 INSPECTION

Inspection and testing shall be carried out as stated in Subsection A.

Provided by IHS under license with ASME
No reproduction or networking permitted without license from IHS
Licensee=Chevron Phillips Chemical Co LP/5956674001
Not for Resale, 11/09/2014 20:41:36 MST

MANDATORY APPENDIX 10
QUALITY CONTROL SYSTEM

10-1 GENERAL

The Manufacturer or Assembler shall have and maintain a quality control system which will establish that all Code requirements,[4] including material, design, fabrication, examination (by the Manufacturer or Assembler), and for vessels and vessel parts, inspection (by the Authorized Inspector), will be met. The Quality Control Systems of Certificate Holders with UM, UV, or UD Designators shall include duties of a Certified Individual, as required by this Division. The Certified Individual authorized to provide oversight may also serve as the Certificate Holder's authorized representative responsible for signing data reports or certificates of conformance. Provided that Code requirements are suitably identified, the system may include provisions for satisfying any requirements by the Manufacturer, Assembler, or user which exceed minimum Code requirements and may include provisions for quality control of non-Code work. In such systems, the Manufacturer of vessels or vessel parts may make changes in parts of the system which do not affect the Code requirements without securing acceptance by the Inspector. [See UG-117(d).] Before implementation, revisions to quality control systems of Manufacturers and Assemblers of pressure relief valves shall have been found acceptable to the ASME designated organization if such revisions affect Code requirements.

The system that the Manufacturer or Assembler uses to meet the requirements of this Division must be one suitable for his own circumstances. The necessary scope and detail of the system shall depend on the complexity of the work[96] performed and on the size and complexity of the Manufacturer's organization.[97] A written description of the system the Manufacturer or Assembler will use to produce a Code item shall be available for review. Depending upon the circumstances, the description may be brief or voluminous.

The written description may contain information of a proprietary nature relating to the Manufacturer's or Assembler's processes. Therefore, the Code does not require any distribution of this information except for the Inspector, ASME Designee, or an ASME designated organization as covered by 10-15(c) and 10-16(c). It is intended that information learned about the system in connection with the evaluation will be treated as confidential and that all loaned descriptions will be returned to the Manufacturer or Assembler upon completion of the evaluation.

10-2 OUTLINE OF FEATURES TO BE INCLUDED IN THE WRITTEN DESCRIPTION OF THE QUALITY CONTROL SYSTEM

The following is a guide to some of the features which should be covered in the written description of the Quality Control System and which is equally applicable to both shop and field work.

10-3 AUTHORITY AND RESPONSIBILITY

The authority and responsibility of those in charge of the Quality Control System shall be clearly established. Persons performing quality control functions shall have sufficient and well-defined responsibility, the authority, and the organizational freedom to identify quality control problems and to initiate, recommend and provide solutions.

10-4 ORGANIZATION

An organization chart showing the relationship between management and engineering, purchasing, manufacturing, construction, inspection, and quality control is required to reflect the actual organization. The purpose of this chart is to identify and associate the various organizational groups with the particular function for which they are responsible. The Code does not intend to encroach on the Manufacturer's right to establish, and from time to time to alter, whatever form of organization the Manufacturer considers appropriate for its Code work.

10-5 DRAWINGS, DESIGN CALCULATIONS, AND SPECIFICATION CONTROL

The Manufacturer's or Assembler's Quality Control System shall provide procedures which will ensure that the latest applicable drawings, design calculations, specifications, and instructions, required by the Code, as well as authorized changes, are used for manufacture, examination, inspection, and testing.

Provided by IHS under license with ASME
No reproduction or networking permitted without license from IHS
Licensee=Chevron Phillips Chemical Co LP/5956674001
Not for Resale, 11/09/2014 20:41:36 MST

10-6 MATERIAL CONTROL

The Manufacturer or Assembler shall include a system of receiving control which will ensure that the material received is properly identified and has documentation including required Certificates of Compliance or Material Test Reports to satisfy Code requirements as ordered. The required Certificates of Compliance or Material Test Reports may be electronically transmitted from the material manufacturer or supplier to the Certificate Holder. The material control system shall ensure that only the intended material is used in Code construction.

10-7 EXAMINATION AND INSPECTION PROGRAM

The Manufacturer's or Assembler's Quality Control System shall describe the fabrication operations, including examinations, sufficiently to permit the Inspector, ASME Designee, or an ASME designated organization to determine at what stages specific inspections are to be performed.

10-8 CORRECTION OF NONCONFORMITIES

There shall be a system agreed upon with the Inspector for correction of nonconformities. A nonconformity is any condition which does not comply with the applicable rules of this Division. Nonconformities must be corrected or eliminated in some way before the completed component can be considered to comply with this Division.

10-9 WELDING

The Quality Control System shall include provisions for indicating that welding conforms to requirements of Section IX as supplemented by this Division. Manufacturers intending to use AWS Standard Welding Procedures shall describe control measures used to assure that welding meets the requirements of this Division and Section IX.

10-10 NONDESTRUCTIVE EXAMINATION

The Quality Control System shall include provisions for identifying nondestructive examination procedures the Manufacturer or Assembler will apply to conform with the requirements of this Division.

10-11 HEAT TREATMENT

The Quality Control System shall provide controls to insure that heat treatments as required by the rules of this Division are applied. Means shall be indicated by which the Inspector, ASME Designee, or an ASME designated organization can satisfy himself that these Code heat treatment requirements are met. This may be by review of furnace time–temperature records or by other methods as appropriate.

10-12 CALIBRATION OF MEASUREMENT AND TEST EQUIPMENT

The Manufacturer or Assembler shall have a system for the calibration of examination, measuring, and test equipment used in fulfillment of requirements of this Division.

10-13 RECORDS RETENTION (13)

(a) The Manufacturer or Assembler shall have a system for the maintenance of radiographs (UW-51), Manufacturer's Data Reports (UG-120), and Certificates of Compliance/Conformance (UG-120) as required by this Division.

(b) The Manufacturer or Assembler shall maintain the documents outlined below for a period of at least 3 years:

(1) Manufacturer's Partial Data Reports

(2) manufacturing drawings

(3) design calculations, including any applicable Proof Test Reports

(4) Material Test Reports and/or material certifications

(5) Pressure parts documentation and certifications

(6) Welding Procedure Specifications and Procedure Qualification Records

(7) Welder/Welding Operator Performance Qualification Records for each welder who welded on the vessel

(8) RT and UT reports

(9) repair procedure and records

(10) process control sheets

(11) heat treatment records and test results

(12) postweld heat treatment records

(13) nonconformances and dispositions

(14) hydrostatic test records

(c) For manufacturers of vessels or vessels bearing the UM Designator constructed under the provisions of UG-90(c)(2) rules, the records listed in (b) above, for six representative vessels per year, shall be maintained as follows:

(1) vessels bearing the UM Designator for a period of 1 year

(2) vessels constructed under the provisions of UG-90(c)(2) rules for a period of 3 years

10-14 SAMPLE FORMS

The forms used in the Quality Control System and any detailed procedures for their use shall be available for review. The written description shall make necessary references to these forms.

Provided by IHS under license with ASME
No reproduction or networking permitted without license from IHS
Licensee=Chevron Phillips Chemical Co LP/5956674001
Not for Resale, 11/09/2014 20:41:36 MST

10-15 INSPECTION OF VESSELS AND VESSEL PARTS

(a) Inspection of vessels and vessel parts shall be by the Inspector as defined in UG-91.

(b) The written description of the Quality Control System shall include reference to the Inspector.

(c) The Manufacturer shall make available to the Inspector, at the Manufacturer's plant or construction site, a current copy of the written description of the Quality Control System.

(d) The Manufacturer's Quality Control System shall provide for the Inspector at the Manufacturer's plant to have access to all drawings, calculations, specifications, procedures, process sheets, repair procedures, Proof Test Reports, records, test results, and any other documents as necessary for the Inspector to perform his duties in accordance with this Division. The Manufacturer may provide such access either to his own files of such documents or by providing copies to the Inspector.

10-16 INSPECTION OF PRESSURE RELIEF VALVES

(a) Inspection of manufacturing and/or assembly of pressure relief valves shall be by a representative from an ASME designated organization as described in UG-136(c).

(b) The written description of the Quality Control System shall include reference to the ASME designated organization.

(c) The valve Manufacturer or Assembler shall make available to a representative from an ASME designated organization, at the Manufacturer's or Assembler's plant, a current copy of the written description of the applicable Quality Control System.

(d) The valve Manufacturer's or Assembler's Quality Control System shall provide for a representative from an ASME designated organization to have access to all drawings, calculations, specifications, procedures, process sheets, repair procedures, records, test results, and any other documents as necessary for the ASME Designee or a representative from an ASME designated organization to perform his duties in accordance with this Division. The Manufacturer may provide such access either to his own files of such documents or by providing copies to the ASME Designee.

10-17 CERTIFICATIONS

(a) Methods other than written signature may be used for indicating certifications, authorizations, and approvals where allowed and as described elsewhere in this Division.

(b) Where other methods are employed, controls and safeguards shall be provided and described to ensure the integrity of the certification, authorization, and approval.

Provided by IHS under license with ASME
No reproduction or networking permitted without license from IHS
Licensee=Chevron Phillips Chemical Co LP/5956674001
Not for Resale, 11/09/2014 20:41:36 MST

MANDATORY APPENDIX 11
CAPACITY CONVERSIONS FOR SAFETY VALVES

11-1

The capacity of a safety or relief valve in terms of a gas or vapor other than the medium for which the valve was officially rated shall be determined by application of the following formulas:[98]

For steam,

$$W_s = C_N KAP$$

where

C_N = 51.5 for U.S. Customary calculations
C_N = 5.25 for SI calculations

For air,

$$W_a = CKAP\sqrt{\frac{M}{T}}$$

(U.S. Customary Units)

C = 356
M = 28.97 mol. wt.
T = 520 when W_a is the rated capacity

(SI Units)

C = 27.03
M = 28.97 mol. wt.
T = 293 when W_a is the rated capacity

For any gas or vapor,

$$W = CKAP\sqrt{\frac{M}{T}}$$

where

W_s = rated capacity, lb/hr (kg/h) of steam
W_a = rated capacity, converted to lb/hr (kg/h) of air at 60°F (20°C), inlet temperature
W = flow of any gas or vapor, lb/hr
C = constant for gas or vapor which is function of the ratio of specific heats, $k = c_p/c_v$ (see Figure 11-1)
K = coefficient of discharge [see UG-131(d) and UG-131(e)]
A = actual discharge area of the safety valve, sq in. (sq mm)
P = (set pressure × 1.10) plus atmospheric pressure, psia (MPa_{abs})
M = molecular weight
T = absolute temperature at inlet [(°F + 460) (K)]

These formulas may also be used when the required flow of any gas or vapor is known and it is necessary to compute the rated capacity of steam or air.

Molecular weights of some of the common gases and vapors are given in Table 11-1.

For hydrocarbon vapors, where the actual value of k is not known, the conservative value k = 1.001 has been commonly used and the formula becomes

$$W = CKAP\sqrt{\frac{M}{T}}$$

where

C = 315 for U.S. Customary calculations
C = 23.95 for SI calculations

When desired, as in the case of light hydrocarbons, the compressibility factor Z may be included in the formulas for gases and vapors as follows:

$$W = CKAP\sqrt{\frac{M}{ZT}}$$

EXAMPLE 1

GIVEN: A safety valve bears a certified capacity rating of 3,020 lb/hr of steam for a pressure setting of 200 psi.

PROBLEM: What is the relieving capacity of that valve in terms of air at 100°F for the same pressure setting?

SOLUTION:

For steam

$$W_s = 51.5KAP$$

$$3,020 = 51.5KAP$$

$$KAP = \frac{3,020}{51.5} = 58.5$$

Provided by IHS under license with ASME
No reproduction or networking permitted without license from IHS
Licensee=Chevron Phillips Chemical Co LP/5956674001
Not for Resale, 11/09/2014 20:41:36 MST

Figure 11-1
Constant C for Gas or Vapor Related to Ratio of Specific Heats ($k = c_p/c_v$)

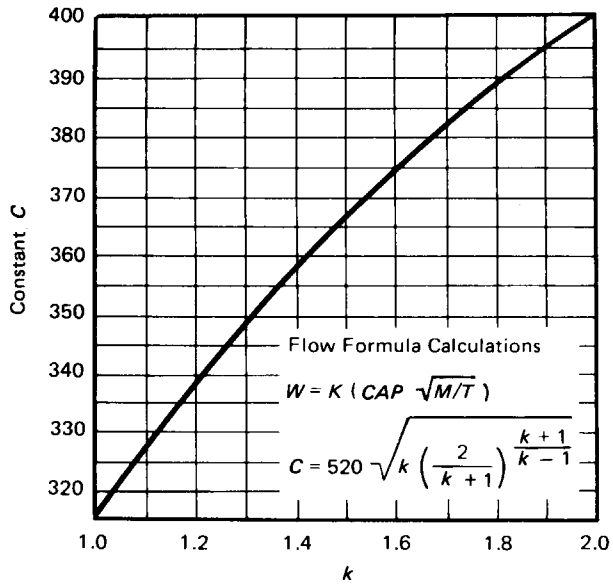

k	Constant C	k	Constant C	k	Constant C
1.00	315	1.26	343	1.52	366
1.02	318	1.28	345	1.54	368
1.04	320	1.30	347	1.56	369
1.06	322	1.32	349	1.58	371
1.08	324	1.34	351	1.60	372
1.10	327	1.36	352	1.62	374
1.12	329	1.38	354	1.64	376
1.14	331	1.40	356	1.66	377
1.16	333	1.42	358	1.68	379
1.18	335	1.44	359	1.70	380
1.20	337	1.46	361	2.00	400
1.22	339	1.48	363	2.20	412
1.24	341	1.50	364	. . .	. . .

Figure 11-1M
Constant C for Gas or Vapor Related to Ratio of Specific Heats ($k = c_p/c_v$)

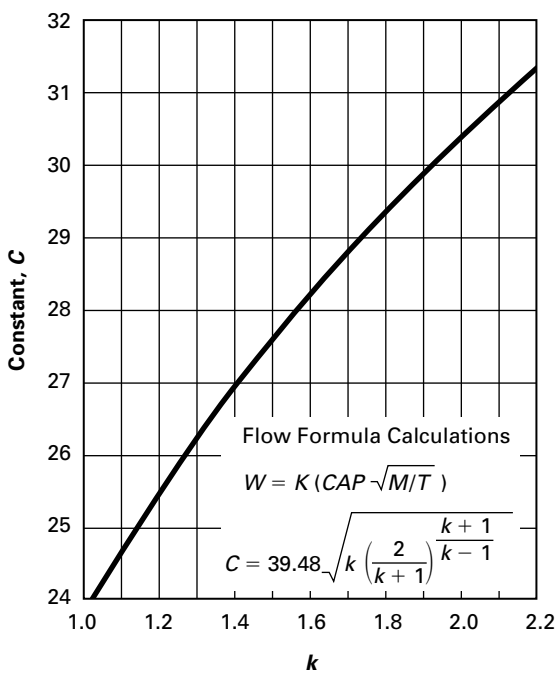

k	Constant C	k	Constant C	k	Constant C
1.001	23.95	1.26	26.05	1.52	27.80
1.02	24.12	1.28	26.20	1.54	27.93
1.04	24.30	1.30	26.34	1.56	28.05
1.06	24.47	1.32	26.49	1.58	28.17
1.08	24.64	1.34	26.63	1.60	28.29
1.10	24.81	1.36	26.76	1.62	28.40
1.12	24.97	1.38	26.90	1.64	28.52
1.14	25.13	1.40	27.03	1.66	28.63
1.16	25.29	1.42	27.17	1.68	28.74
1.18	25.45	1.44	27.30	1.70	28.86
1.20	25.60	1.46	27.43	2.00	30.39
1.22	25.76	1.48	27.55	2.20	31.29
1.24	25.91	1.50	27.68	. . .	. . .

Provided by IHS under license with ASME
No reproduction or networking permitted without license from IHS
Licensee=Chevron Phillips Chemical Co LP/5956674001
Not for Resale, 11/09/2014 20:41:36 MST

Table 11-1
Molecular Weights of Gases and Vapors

Air	28.97	Freon 22	86.48
Acetylene	26.04	Freon 114	170.90
Ammonia	17.03	Hydrogen	2.02
Butane	58.12	Hydrogen Sulfide	34.08
Carbon Dioxide	44.01	Methane	16.04
Chlorine	70.91	Methyl Chloride	50.48
Ethane	30.07	Nitrogen	28.02
Ethylene	28.05	Oxygen	32.00
Freon 11	137.371	Propane	44.09
Freon 12	120.9	Sulfur Dioxide	64.06

For air

$$W_a = CKAP\sqrt{\frac{M}{T}}$$
$$= 356KAP\sqrt{\frac{28.97}{460+100}}$$
$$= (356)(58.5)\sqrt{\frac{28.97}{560}}$$
$$= 4,750 \text{ lb/hr}$$

EXAMPLE 2

GIVEN: It is required to relieve 5,000 lb/hr of propane from a pressure vessel through a safety valve set to relieve at a pressure of P_s, psi, and with an inlet temperature at 125°F.

PROBLEM: What total capacity in pounds of steam per hour in safety valves must be furnished?

SOLUTION:

For propane,

$$W = CKAP\sqrt{\frac{M}{T}}$$

The value of C is not definitely known. Use the conservative value, C = 315.

$$5,000 = 315KAP\sqrt{\frac{44.09}{460+125}}$$
$$KAP = 57.7$$

For steam,

$$W_s = 51.5KAP = (51.5)(57.7)$$
$$= 2,970 \text{ lb/hr set to relieve at } P_s, \text{ psi}$$

EXAMPLE 3

GIVEN: It is required to relieve 1,000 lb/hr of ammonia from a pressure vessel at 150 °F.

PROBLEM: What is the required total capacity in pounds of steam per hour at the same pressure setting?

SOLUTION:

For ammonia,

$$W = CKAP\sqrt{\frac{M}{T}}$$

Manufacturer and user agree to use k = 1.33; from Figure 11-1, C = 350.

$$1,000 = 350KAP\sqrt{\frac{17.03}{460+150}}$$
$$KAP = 17.10$$

For steam,

$$W_s = 51.5KAP = 51.5 \times 17.10$$
$$= 880 \text{ lb / hr}$$

EXAMPLE 4

GIVEN: A safety valve bearing a certified rating of 10,000 ft^3/min of air at 60°F and 14.7 psia (atmospheric pressure).

PROBLEM: What is the flow capacity of this safety valve in pounds of saturated steam per hour for the same pressure setting?

SOLUTION:

For air: Weight of dry air at 60°F and 14.7 psia is 0.0766 lb/ft^3.

$$W_a = 10,000 \times 0.0766 \times 60 = 45,960 \text{ lb/hr}$$
$$45,960 = 356KAP\sqrt{\frac{28.97}{460+60}}$$
$$KAP = 546$$

For steam,

$$W_s = 51.5KAP = (51.5)(546)$$
$$= 28,200 \text{ lb/hr}$$

NOTE: Before converting the capacity of a safety valve from any gas to steam, the requirements of UG-131(b) must be met.

Provided by IHS under license with ASME
No reproduction or networking permitted without license from IHS
Licensee=Chevron Phillips Chemical Co LP/5956674001
Not for Resale, 11/09/2014 20:41:36 MST

11-2

(a) Since it is realized that the saturated water capacity is configuration sensitive, the following applies only to those safety valves that have a nozzle type construction (throat to inlet diameter ratio of 0.25 to 0.80 with a continuously contoured change and have exhibited a coefficient K_D in excess of 0.90). No saturated water rating shall apply to other types of construction.

NOTE: The manufacturer, user, and Inspector are all cautioned that for the following rating to apply, the valve shall be continuously subjected to saturated water. If, after initial relief the flow media changes to quality steam, the valve shall be rated as per dry saturated steam. Valves installed on vessels or lines containing steam–water mixture shall be rated on dry saturated steam.

(b) To determine the saturated water capacity of a valve currently rated under UG-131 and meeting the requirements of (a) above, refer to Figure 11-2. Enter the graph at the set pressure of the valve, move vertically upward to the saturated water line and read horizontally the relieving capacity. This capacity is the theoretical, isentropic value arrived at by assuming equilibrium flow and calculated values for the critical pressure ratio.

Figure 11-2M
Flow Capacity Curve for Rating Nozzle-Type Safety Valves on Saturated Water (Based on 10% Overpressure)

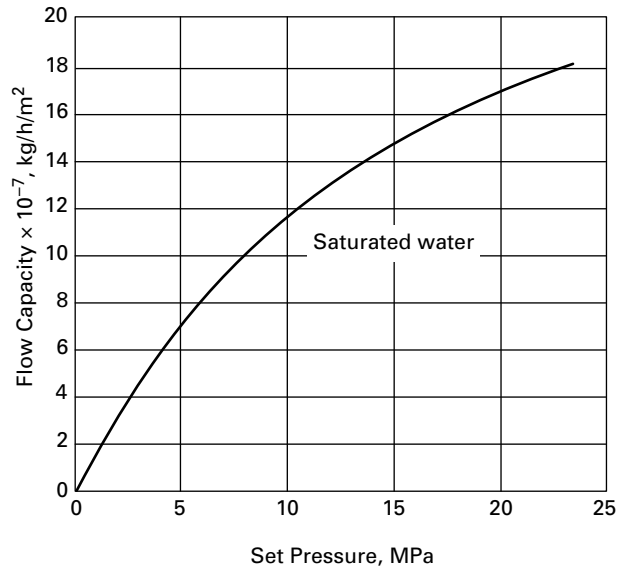

Figure 11-2
Flow Capacity Curve for Rating Nozzle-Type Safety Valves on Saturated Water (Based on 10% Overpressure)

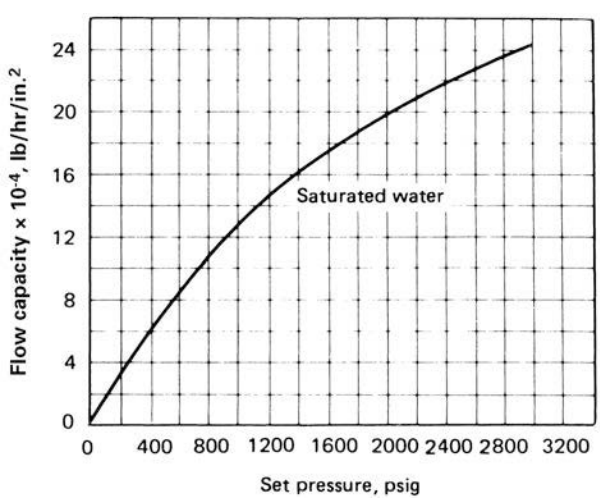

Provided by IHS under license with ASME
No reproduction or networking permitted without license from IHS
Licensee=Chevron Phillips Chemical Co LP/5956674001
Not for Resale, 11/09/2014 20:41:36 MST

MANDATORY APPENDIX 12
ULTRASONIC EXAMINATION OF WELDS (UT)

12-1 SCOPE

(a) This Appendix describes methods which shall be employed when ultrasonic examination of welds is specified in this Division.

(b) Article 4 of Section V shall be applied for detail requirements in methods, procedures and qualifications, unless otherwise specified in this Appendix.

(c) Ultrasonic examination shall be performed in accordance with a written procedure, certified by the Manufacturer to be in accordance with the requirements of T-150 of Section V.

12-2 CERTIFICATION OF COMPETENCE OF NONDESTRUCTIVE EXAMINER

Personnel performing and evaluating ultrasonic examinations required by this Division shall meet the requirements of UW-54.

12-3 ACCEPTANCE–REJECTION STANDARDS

These Standards shall apply unless other standards are specified for specific applications within this Division.

Imperfections which produce a response greater than 20% of the reference level shall be investigated to the extent that the operator can determine the shape, identity, and location of all such imperfections and evaluate them in terms of the acceptance standards given in (a) and (b) below.

(a) Indications characterized as cracks, lack of fusion, or incomplete penetration are unacceptable regardless of length.

(b) Other imperfections are unacceptable if the indications exceed the reference level amplitude and have lengths which exceed:

(1) $\frac{1}{4}$ in. (6 mm) for t up to $\frac{3}{4}$ in. (19 mm);

(2) $\frac{1}{3}t$ for t from $\frac{3}{4}$ in. to $2\frac{1}{4}$ in. (19 mm to 57 mm);

(3) $\frac{3}{4}$ in. (19 mm) for t over $2\frac{1}{4}$ in. (57 mm).

where t is the thickness of the weld excluding any allowable reinforcement. For a butt weld joining two members having different thicknesses at the weld, t is the thinner of these two thicknesses. If a full penetration weld includes a fillet weld, the thickness of the throat of the fillet shall be included in t.

12-4 REPORT OF EXAMINATION

The Manufacturer shall prepare a report of the ultrasonic examination and a copy of this report shall be retained by the Manufacturer as required by this Division (10-13). The report shall contain the information required by Section V. In addition, a record of repaired areas shall be noted as well as the results of the reexamination of the repaired areas. The Manufacturer shall also maintain a record of all reflections from uncorrected areas having responses that exceed 50% of the reference level. This record shall locate each area, the response level, the dimensions, the depth below the surface, and the classification.

Provided by IHS under license with ASME
No reproduction or networking permitted without license from IHS
Licensee=Chevron Phillips Chemical Co LP/5956674001
Not for Resale, 11/09/2014 20:41:36 MST

MANDATORY APPENDIX 13
VESSELS OF NONCIRCULAR CROSS SECTION

13-1 SCOPE

(a) The rules in Mandatory Appendix 13 cover minimum requirements for the design, fabrication, and inspection of single wall vessels having a rectangular or obround cross section. The rules of this Appendix apply to the walls and parts of the vessels subject to pressure stresses including stiffening, reinforcing and staying members.

(b) All other parts of this Division shall apply unless otherwise stated in this Appendix.

(c) As stated in U-2(g), this Division does not contain rules to cover all details of design and construction. These rules are, therefore, established to cover some common types of noncircular cross section vessels but are not intended to limit configurations to those illustrated or otherwise described herein.

(d) In 13-18 special consideration is given to the calculation of applied and allowable stresses when the structure contains butt welded joints or row of holes at locations other than at side plate midlengths.

13-2 TYPES OF VESSELS

The design equations given in this Appendix shall apply to the single wall vessels as illustrated in Figure 13-2(a) for vessels of rectangular cross section, in Figure 13-2(b) for vessels having an obround cross section, and in Figure 13-2(c) for vessels of circular section with a single diametral stay plate.

(a) Rectangular Vessels. Figure 13-2(a) illustrates some basic types of vessels as follows:

(1) Figure 13-2(a) sketch (1) shows a vessel of rectangular cross section in which the opposite sides have the same wall thickness. Two opposite sides may have a wall thickness different than that of the other two opposite sides.

(2) Figure 13-2(a) sketch (2) shows a vessel of rectangular cross section in which two opposite members have the same thickness and the other two members have two different thicknesses.

(3) Figure 13-2(a) sketch (3) shows a vessel of rectangular cross section having uniform wall thickness and corners bent to a radius. For corners that are cold formed, the provisions of UG-79 and UCS-79 or UHT-79 shall apply.

(4) Figure 13-2(a) sketch (4) shows a vessel of rectangular cross section [as in (1) above] but reinforced by welded-on members.

(5) Figure 13-2(a) sketch (5) shows a vessel of rectangular cross section [as in (3) above] but externally reinforced by members welded to the flat surfaces of the vessel.

(6) Figure 13-2(a) sketch (6) shows a vessel of rectangular cross section with chamfered corner segments joined to the adjacent sides by small curved segments with constant radii and with external reinforcing members welded to the flat sides of the vessel.

(7) Figure 13-2(a) sketch (7) shows a vessel of rectangular cross section [as in (1) above] but having two opposite sides stayed at midlength.

(8) Figure 13-2(a) sketch (8) shows a vessel of rectangular cross section [as in (1) above] but having two opposite sides stayed at the third points.

(9) Figure 13-2(a) sketches (9) and (10) show vessels of rectangular cross section [as in (1) above] but having two opposite sides stayed such that the compartments have different dimensions. There is no restriction on the number of staying members used.

(b) Obround Vessels. Figure 13-2(b) illustrates some basic types of vessels as follows:

(1) Figure 13-2(b) sketch (1) shows a vessel of obround cross section in which the opposite sides have the same wall thickness. The flat side walls may have a different thickness than the wall thickness of the semicylindrical parts.

(2) Figure 13-2(b) sketch (2) shows a vessel of obround cross section [as in (1) above] but reinforced by welded-on members.

(3) Figure 13-2(b) sketch (3) shows a vessel of obround cross section [as in (1) above] but having the flat side plates stayed at midlength.

(c) Stayed Vessel of Circular Cross Section. Figure 13-2(c) illustrates a vessel of circular cross section containing a single diametral staying plate that also acts as a pressure surface when the two compartments of the vessel are subject to different internal pressures.

13-3 MATERIALS

Materials used in the fabrication of vessels described herein shall be in accordance with Subsection A.

Provided by IHS under license with ASME
No reproduction or networking permitted without license from IHS
Licensee=Chevron Phillips Chemical Co LP/5956674001
Not for Resale, 11/09/2014 20:41:36 MST

Figure 13-2(a)
Vessels of Rectangular Cross Section

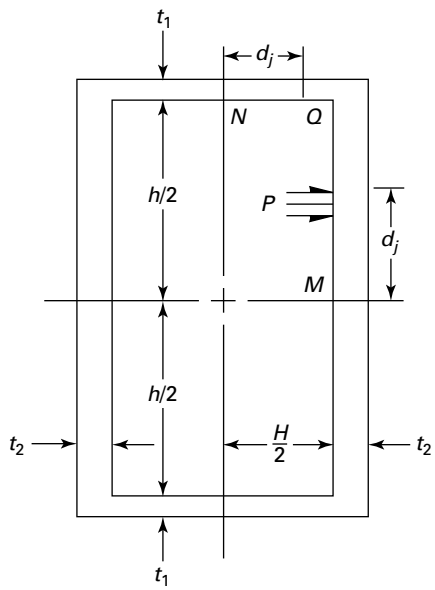

(1)

[See Notes (1) and (2)]

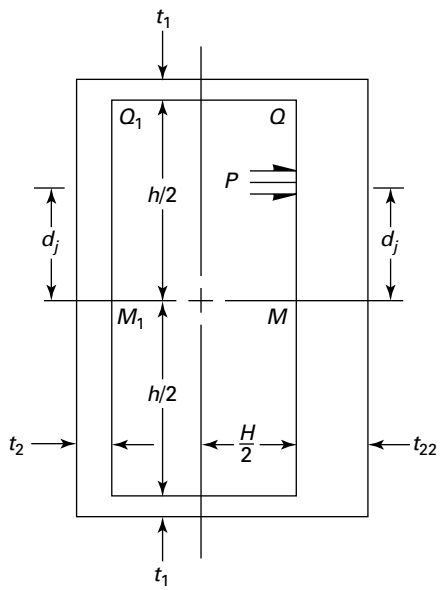

(2)

[See Notes (1) and (2)]

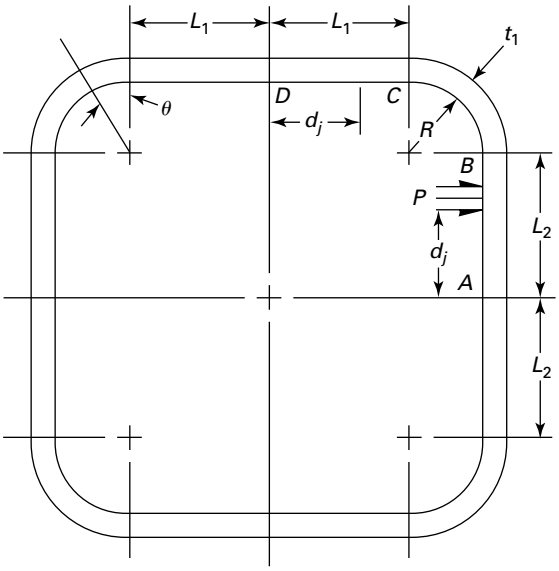

(3)

[See Notes (1) and (2)]

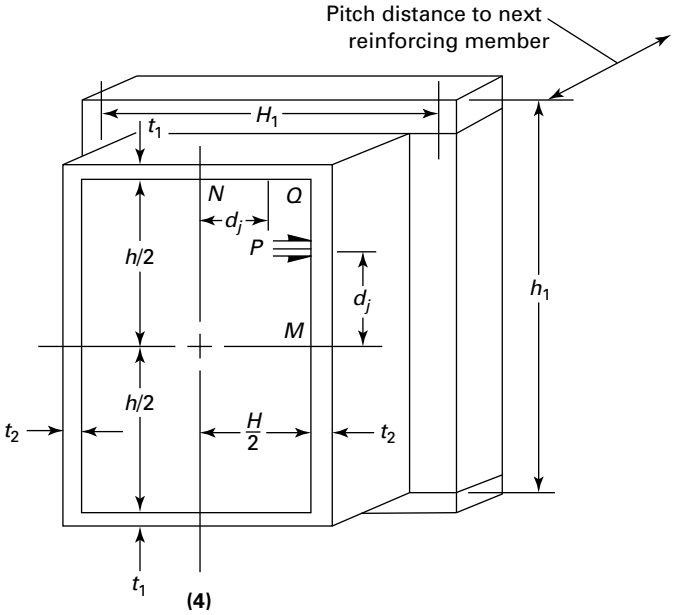

(4)

[See Notes (1) and (2)]

Provided by IHS under license with ASME
No reproduction or networking permitted without license from IHS
Licensee=Chevron Phillips Chemical Co LP/5956674001
Not for Resale, 11/09/2014 20:41:36 MST

Figure 13-2(a)
Vessels of Rectangular Cross Section (Cont'd)

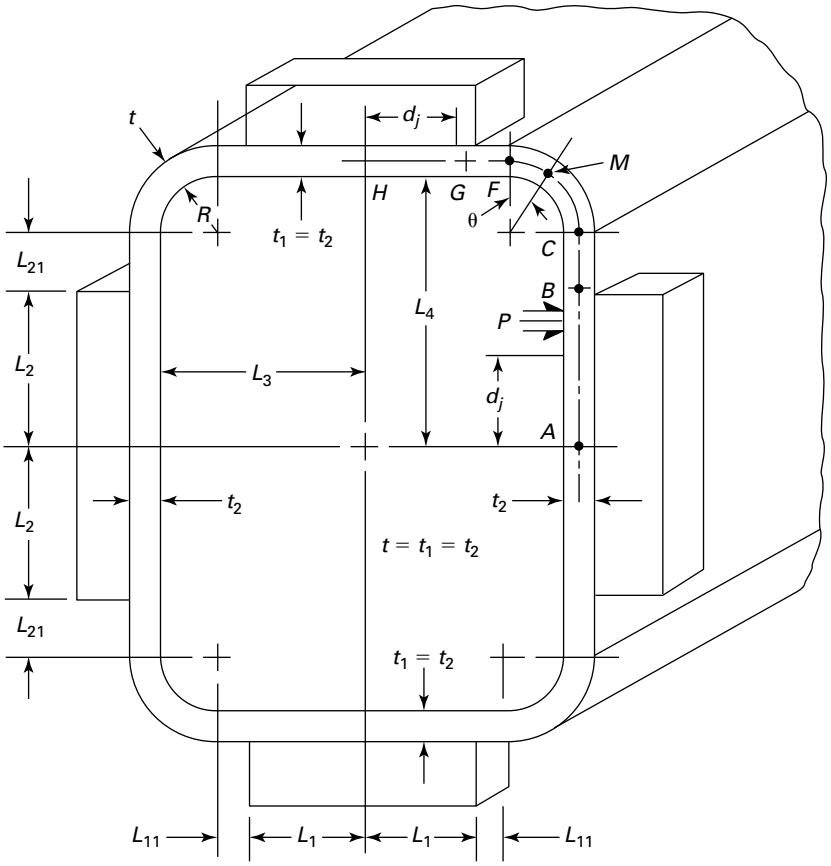

(5)
(See Note (2)]

--`,,,``,,```,,,,,`,`,`,`,,`,,`,,```-`-`,,`,,`,`,`,,`---

Provided by IHS under license with ASME

No reproduction or networking permitted without license from IHS

Licensee=Chevron Phillips Chemical Co LP/5956674001
Not for Resale, 11/09/2014 20:41:36 MST

Figure 13-2(a)
Vessels of Rectangular Cross Section (Cont'd)

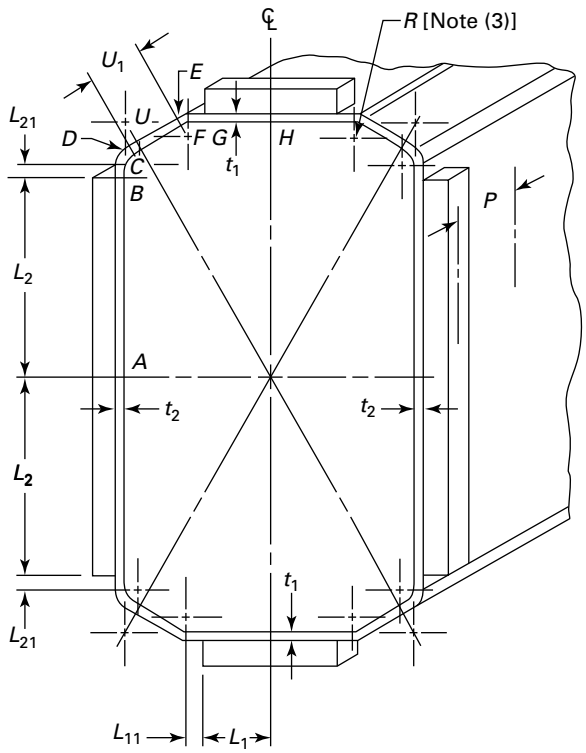

(6a)

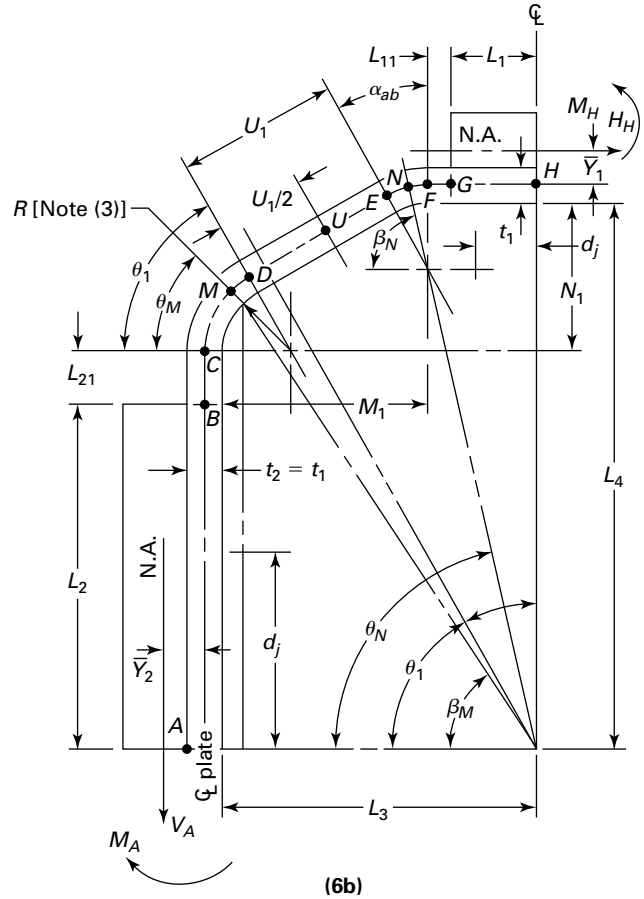

(6b)

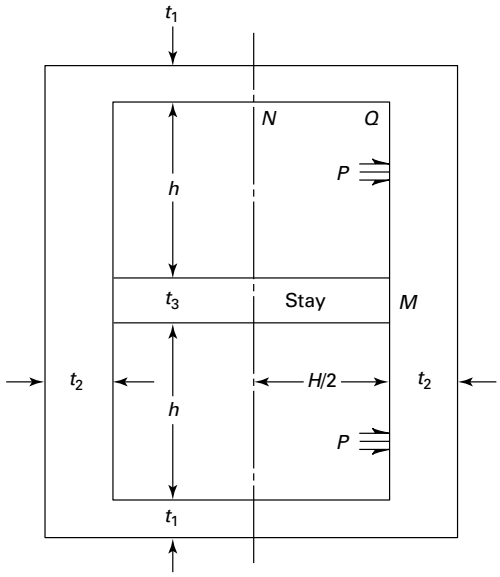

(7)
(See Notes (1) and (4))

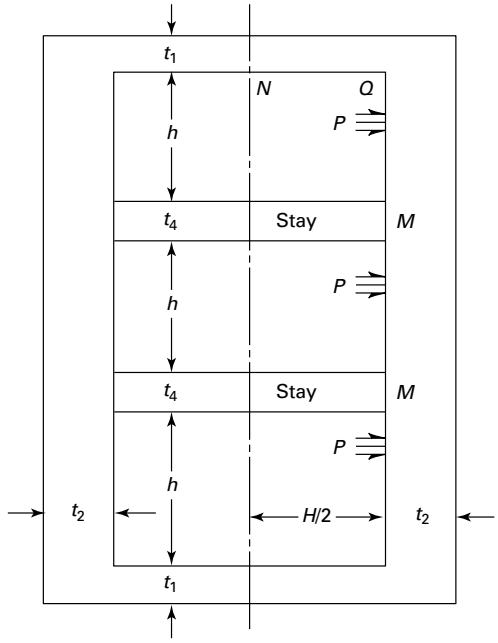

(8)
(See Notes (1) and (4))

Provided by IHS under license with ASME
No reproduction or networking permitted without license from IHS
Licensee=Chevron Phillips Chemical Co LP/5956674001
Not for Resale, 11/09/2014 20:41:36 MST

Figure 13-2(a)
Vessels of Rectangular Cross Section (Cont'd)

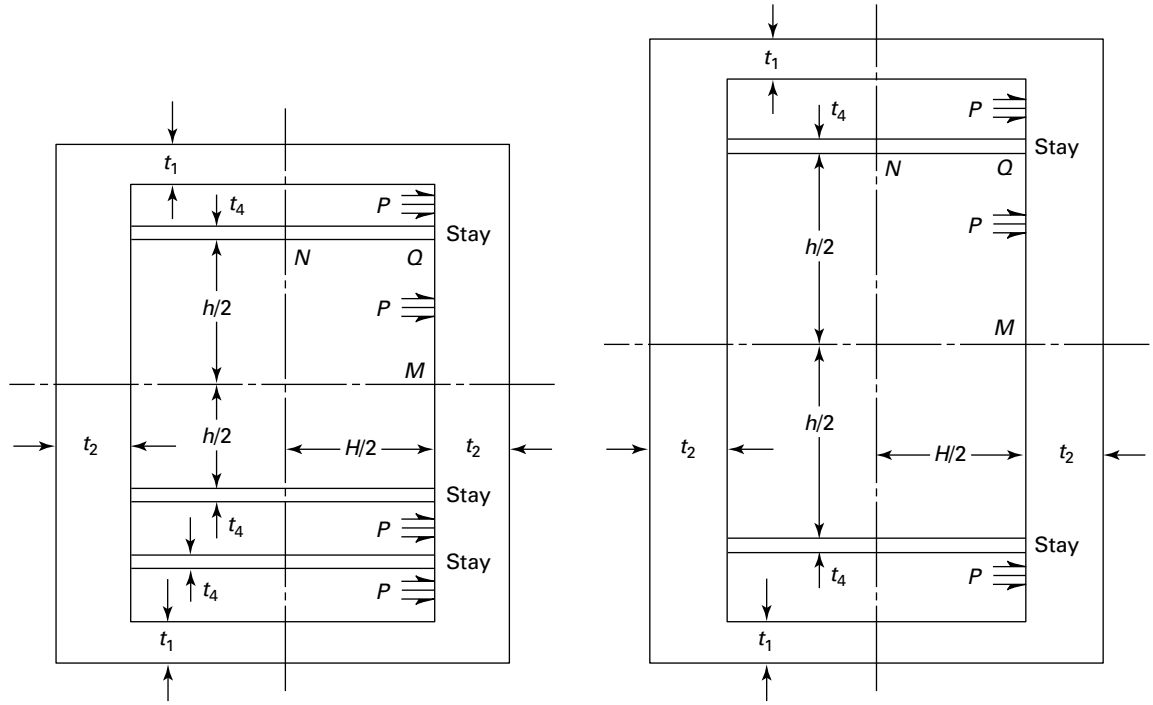

(9)
(See Notes (1), (4), and (5)]

(10)
(See Notes (1), (4), and (5)]

NOTES:
(1) See UW-13 for corner joints.
(2) See 13-18 for weld efficiency calculations.
(3) The radius must be the same in eight places.
(4) See UG-47, UG-48, UG-49, and UW-19 for stay bars.
(5) The compartments in sketches (9) and (10) have different dimensions.

13-4 DESIGN OF VESSELS OF NONCIRCULAR CROSS SECTION

Design shall comply with the applicable requirements of Subsection A except where otherwise provided for in this Appendix.

(a) Wall thicknesses of parts of vessels described herein shall be determined by the appropriate formulas or methods given in Subsection A and in this Appendix. Since, in a rectangular or obround vessel, the walls can have different thicknesses, many of the formulas contained herein require solution by assuming a thickness, or thicknesses, and solving for stress which is then compared with the allowable stress value.

(b) Design according to this Appendix is based on both membrane and bending stresses. Membrane stresses due to pressure and mechanical loads shall not exceed the design stress S, the value contained in the allowable stress tables (see UG-23). At the weld joint, these membrane stresses shall not exceed an allowable design stress SE, where E is a joint efficiency factor [see 13-5, 13-18, UW-12, and UG-23(c)]. The joint efficiency factor E shall also be applied to the allowable design stress for evaluation of the calculated bending stress S_b at the location of the joint only. see 13-1(d), 13-5 footnote 1, and 13-8(b).

Any combination of membrane plus bending tension or compression stress induced by pressure and/or mechanical loads, shall not exceed the following limits:

(1) for plate section of rectangular cross section, 1.5 times the allowable design stress SE;

(2) for other cross sections (such as composite reinforced bar or shapes and plate sections, etc.), the lesser of:

(-a) 1.5 times the design stress SE; or

(-b) two-thirds times the yield strength S_y of the material at the design temperature (see 13-5 for S_y) except that due to the relatively low yield strength of some materials listed in Table UNF-23.3 or Table UHA-23, higher stress values were established in Section II, Part D at temperatures where the short-time tensile properties govern to permit the use of these alloys where slightly greater deformation is acceptable. These higher stress values exceed $^2/_3$ but do not exceed 90% of the yield strength at

Provided by IHS under license with ASME
No reproduction or networking permitted without license from IHS
Licensee=Chevron Phillips Chemical Co LP/5956674001
Not for Resale, 11/09/2014 20:41:36 MST

Figure 13-2(b)
Vessels of Obround Cross Section

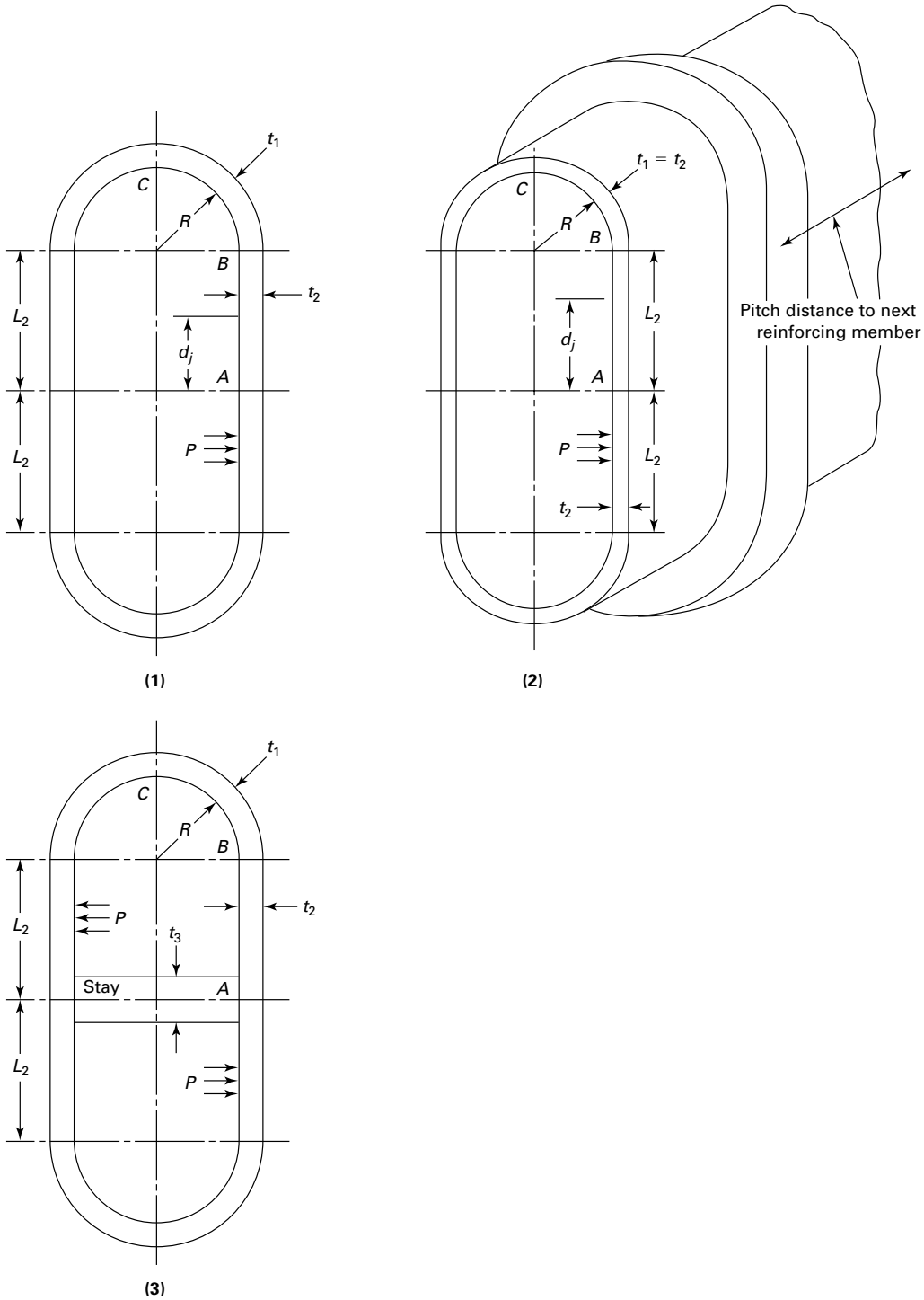

GENERAL NOTES:
(a) See UW-13 for corner joints.
(b) See UG-47, UG-48, UG-49, and UW-19 for stay bars.
(c) See 13-8 for weld efficiency calculations.

Provided by IHS under license with ASME
No reproduction or networking permitted without license from IHS
Licensee=Chevron Phillips Chemical Co LP/5956674001
Not for Resale, 11/09/2014 20:41:36 MST

Figure 13-2(c)
Vessel of Circular Cross Section With Central Dividing Plate

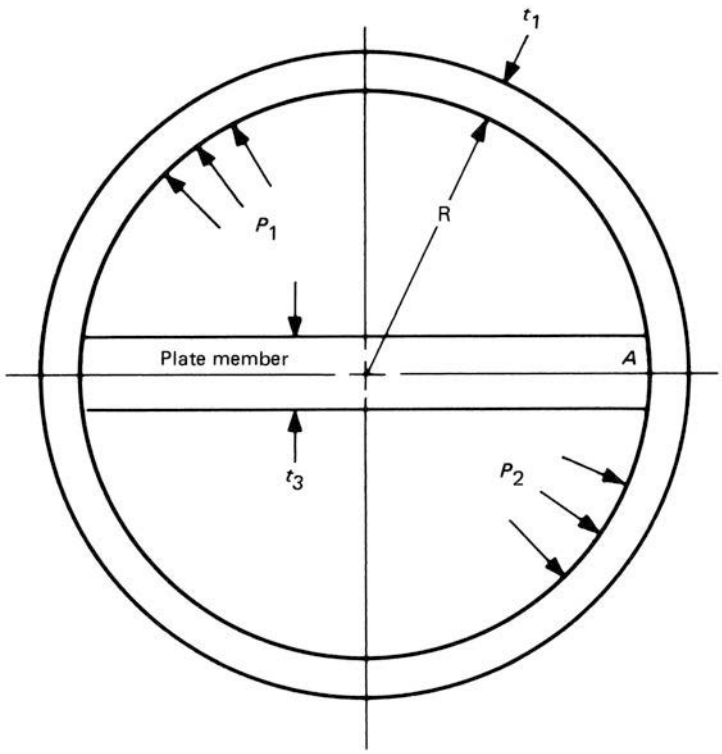

GENERAL NOTE: See UW-13 for corner joints.

temperature. Use of these stresses may result in dimensional changes due to permanent strain. These stress values are not recommended for the flanges of gasketed joints or other applications where slight amounts of distortion can cause leakage or malfunction. For these materials, the yield strength limits may be:

(-1) 90% of yield strength at design temperature, but not more than;

(-2) two-thirds of the specified minimum yield strength for the material at room temperature.

(c) The total stresses (membrane plus bending) at each cross section for vessels with and without reinforcements shall be calculated as follows:

(1) For vessels without reinforcements and for vessels with reinforcements which have the same allowable stress S (from the tables in Subpart 1 of Section II, Part D) and the same yield stress S_y at the design temperature, there are two values of bending stresses to be determined at each cross section. There is one stress value for the outermost surface of the shell plate or the reinforcement (when used) and one stress value for the inner surface of the shell plate.

The sign convention necessary to establish the proper algebraic sign of the stresses for combining membrane and bending stresses to obtain the total stresses is as follows:

(-a) for both membrane and bending stresses:

(-1) plus (+) signifies tension stress; and

(-2) minus (−) signifies compression stress.

(-b) for bending stress:

(-1) c_o = term is always negative;

(-2) c_i = term is always positive.

A positive bending moment produces compression in the outermost fibers of the cross section. The bending moment at the midpoint of the long side of vessels without stays will always be negative.

At each cross section, the membrane stress is added algebraically to the bending stress at both the outermost surface of the shell plate or reinforcement (when used) and the innermost surface of the shell plate to obtain two values of total stress. The total stresses at the section shall be compared to the allowable design stress calculated as specified in (b).

(2) When the reinforcing members and the shell plate do not have the same S and S_y values at the design temperature, the total stress shall be determined at the innermost and outermost fibers for each material. The appropriate c values (with proper signs, 13-5) for the

Provided by IHS under license with ASME
No reproduction or networking permitted without license from IHS
Licensee=Chevron Phillips Chemical Co LP/5956674001
Not for Resale, 11/09/2014 20:41:36 MST

composite section properties shall be used in the bending equations. The total stresses at the innermost and outermost fibers for each material shall be compared to the allowable design stress (b) for each material.

(d) Particular attention shall be given to the effects of local internal and external loads and expansion differentials at design temperature, including reactions at supporting lugs, piping, and other types of attachments, as specified in UG-22.

(e) Except as otherwise specified in this Appendix, vessel parts of noncircular cross section subject to external pressure shall be designed in accordance with U-2(g).

(f) The end closures for vessels of this type shall be designed in accordance with the provisions of U-2(g) and/or UG-101 except in cases where the ends are flat plates subject to rating under the rules of UG-34. Unstayed flat heads used as welded end plates for vessels described in this Appendix shall conform to the rules of UG-34 except that a C factor of 0.20 shall be used in all cases.

(g) The requirements for ligaments prescribed in UG-53 shall apply except as modified in 13-6 for the case of multidiameter holes in plates. [See 13-18(b).]

The ligament efficiencies e_m and e_b shall only be applied to the calculated stresses for the plates containing the ligaments.

(1) When e_m and e_b are less than the joint efficiency E (see 13-5 and UW-12), which would be used if there were no ligaments in the plate, the membrane and bending stresses calculated based on the gross area of the section shall be divided by e_m and e_b, respectively, to obtain the stresses based on the net area for the section. The allowable design stresses for membrane and membrane plus bending shall be calculated as described in (b) using E = 1.0.

(2) When e_m and e_b are greater than the joint efficiency E, which would be used if there were no ligaments in the plate, the stresses shall be calculated as if there were no ligaments in the plate. The allowable design stresses for membrane and membrane plus bending shall be calculated as described in (b) using the appropriate E factor required by UW-12.

(h) The design equations in this Appendix are based on vessels in which the length L_v to side dimension (H or h) ratio (aspect ratio) is greater than 4. These equations are conservatively applicable to vessels of aspect ratio less than 4 and may thus be used as specified in this Appendix. Vessel sideplates with aspect ratios less than 4 are strengthened by the interaction of the end closures and may be designed in accordance with the provisions of U-2(g) by using established techniques of structural analysis. Membrane and bending stresses shall be determined throughout the structure and shall not exceed the allowable values established in this Appendix. Short unreinforced or unstayed vessels of rectangular cross section having an aspect ratio not greater than 2.0 may be designed in accordance with 13-18(b) and 13-18(c).

(i) Bolted full-side or end plates and flanges may be provided for vessels of rectangular cross section. Many acceptable configurations are possible. Therefore, rules for specific designs are not provided, and these parts shall be designed in accordance with the provisions of UG-34 for unstayed flat plates and U-2(g) for the flange assembly. Analysis of the components must consider gasket reactions, bolting forces, and resulting moments, as well as pressure and other mechanical loading.

(j) Openings may be provided in vessels of noncircular cross section as follows:

(1) Openings in noncircular vessels do not require reinforcement other than that inherent in the construction, provided they meet the conditions given in UG-36(c)(3).

(2) As a minimum, the reinforcement of other openings in noncircular vessels shall comply with UG-39, except the required thickness to be used in the reinforcement calculations shall be the thickness required to satisfy the stress criteria in (b). Compensation for openings in noncircular vessels must account for the bending strength as well as the membrane strength of the side with the opening. In addition, openings may significantly affect the stresses in adjacent sides. Because many acceptable configurations are possible, rules for specific designs are not provided [see U-2(g)].

(k) For vessels without reinforcements and for vessels with stay plates and stay rods (paras. 13-7, 13-9, 13-10, 13-12, and 13-13), the moments of inertia are calculated on a per-unit-width basis. That is, $I = bt^3/12$, where b = 1.0. For vessels with reinforcements that do not extend around the corners of the vessel (para. 13-8 and 13-11), the moments of inertia are calculated using the traditional definition, $I = pt_2/12$. For width of cross section for vessels with reinforcements, see para. 13-8(d). For unreinforced vessels of rectangular cross section (para. 13-7), the given moments are defined on a per-unit-width basis. That is, M_A and M_r have dimensions (length × force/length) = force.

13-5 NOMENCLATURE

Symbols used in this Appendix are as follows:

A = $R(2\gamma + \pi\alpha_2)$
A_1 = cross-sectional area of reinforcing member only attached to plate of thickness t_1
A_2 = cross-sectional area of reinforcing member attached to plate of thickness t_2
A_3 = $r(2\gamma_1 + \pi)$
B = $R^2(\gamma^2 + \pi\gamma\alpha_2 + 2\alpha_2)$
C = plate coefficient, UG-47
C_1 = $R^2(2\gamma^2 + 3\gamma\pi\alpha_2 + 12\alpha_2)$
C_2 = $r^2(2\gamma_1{}^2 + 3\pi\gamma_1 + 12)$
D_1 = $R^3(\gamma^3 + 2\pi\gamma^2\alpha_2 + 12\gamma\alpha_2 + 2\pi\alpha_2)$
D_E = equivalent uniform diameter of multidiameter hole

Provided by IHS under license with ASME
No reproduction or networking permitted without license from IHS
Licensee=Chevron Phillips Chemical Co LP/5956674001
Not for Resale, 11/09/2014 20:41:36 MST

E = joint efficiency factor as required by UW-12 for all Category A butt joints (see UW-3) and to any Category C or D butt[99] joints. The joint efficiency factor is used as described in 13-4(b) and 13-4(g) to calculate the allowable design membrane and membrane plus bending stresses.

E_1 = $R^3(4\gamma^3 + 6\pi\gamma^2\alpha_2 + 24\gamma\alpha_2 + 3\pi\alpha_2)$

E_2 = modulus of elasticity at design temperature

E_3 = modulus of elasticity at ambient temperature

NOTE: The modulus of elasticity shall be taken from the applicable Table TM in Section II, Part D. When a material is not listed in the TM tables, the requirements of U-2(g) shall be applied.

F = $(3AD_1 - 2BC_1)/(AE_1 - 6B^2)$

H = inside length of short side of rectangular vessel

= $2(L_1 + L_{11})$ for equations in 13-8(d) for Figure 13-2(a) sketches (5) and (6)

H_1 = centroidal length of reinforcing member on short side of rectangular vessel

H_0 = outside length of short side of rectangular vessel

I = moment of inertia

I_e = moment of inertia about axis parallel to long side of rectangular vessel and passing through centroid of cross-sectional area

I_1 = moment of inertia of strip of thickness[100] t_1

I_2 = moment of inertia of strip of thickness[100] t_2

I_3 = moment of inertia of strip of thickness[100] t_3

I_{11} = moment of inertia of combined reinforcing member and effective width of plate w of thickness t_1

I_{21} = moment of inertia of combined reinforcing member and effective width of plate w of thickness t_2

I_{22} = moment of inertia of strip of thickness[100] t_{22}

J = plate parameter, Table 13-8(d)

J_1 = plate parameter, Table 13-13(c)

K = vessel parameter $(I_2/I_1)\alpha$

K_1 = $2k_2 + 3$

K_2 = $3k_1 + 2k_2$

K_3 = factor for unreinforced rectangular vessel [Figure 13-2(a) sketch (3)]

K_4 = factor for reinforced rectangular vessel [Figure 13-2(a) sketch (5)]

L_1 = half-length of short side of rounded or chamfered corner vessel without reinforcements; half-length of reinforcement on short side of reinforced vessel

L_2 = half-length of long side plate of obround and rounded or chamfered corner rectangular vessels without reinforcements; half-length of reinforcement on long side of reinforced vessel

L_3, L_4 = dimensions of rectangular vessel [Figure 13-2(a) sketches (5) and (6)]

L_{21}, L_{11} = dimensions of rectangular vessel [Figure 13-2(a) sketches (5) and (6)]

L_v = length of vessel

M = bending moment

M_j = bending moment at weld joint[101]

M_A, M_M = bending moment at midpoint of long side.[101] Positive sign results in a compression stress in the outermost fibers in the cross section.

N = $K_1K_2 - k_2^2$

P = internal design pressure (see UG-21)

P_e = external design pressure

P_1, P_2 = internal design pressures in two-compartment vessel [Figure 13-2(c)] where $P_1 > P_2$

R = inside radius

R_1 = least radius of gyration of noncircular cross-sectional vessel

S = allowable tensile stress values (see UG-23)

S_b = bending stress (+ = tension, - = compression)

S_m = membrane stress

S_T = total stress ($S_m + S_b$)

S_y = yield strength of material at design temperature from Table Y-1 in Subpart 1 of Section II, Part D

T_o = length of hole of diameter d_o

T_1 = length of hole of diameter d_1

T_2 = length of hole of diameter d_2

T_n = length of hole of diameter d_n

$\bar{X}$ = distance from base of plate to neutral axis

$\bar{Y}_1$ = distance between centroid of reinforced cross section with I_{11} and centerline of shell plate with t_1 [Figure 13-2(a) sketch (6)]

$\bar{Y}_2$ = distance between centroid of reinforced cross section with I_{21} and centerline of shell plate with t_2 [Figure 13-2(a) sketch (6)]

Z = plate parameter, UG-34

b_o = $p - d_o$ (Figure 13-6)

b_1 = $p - d_1$ (Figure 13-6)

b_2 = $p - d_2$ (Figure 13-6)

b_n = $p - d_n$ (Figure 13-6)

c = distance from neutral axis of cross section to extreme fibers (see c_i and c_o). The appropriate c_i or c_o value shall be substituted for the c term in the stress equations.

c_i = distance from neutral axis of cross section of plate, composite section, or section with multi-diameter holes (see 13-6) to the inside surface of the vessel. Sign is always positive (+).

c_o = distance from neutral axis of cross section of plate, composite section, or section with multi-diameter holes (see 13-6) to the extreme outside surface of the section. Sign is always negative (−).

$\pm c_x$ = distance from neutral axis of cross section to any intermediate point. Sign is positive (+) when inward and sign is negative (−) when outward.

Provided by IHS under license with ASME
No reproduction or networking permitted without license from IHS
Licensee=Chevron Phillips Chemical Co LP/5956674001
Not for Resale, 11/09/2014 20:41:36 MST

d_o = diameter of hole of length T_o (pitch diameter for threaded hole) (Figure 13-6)
d_1 = diameter of hole of length T_1 (pitch diameter for threaded hole) (Figure 13-6)
d_2 = diameter of hole of length T_2 (pitch diameter for threaded hole) (Figure 13-6)
d_j = distance from midlength of plate to weld joint or centerline of row of holes in the straight segment of the plate
d_n = diameter of hole of length T_n (pitch diameter for threaded hole) (Figure 13-6)
e_b = bending ligament efficiency [see 13-4(g), 13-6, and 13-18(b)]
e_m = membrane ligament efficiency [see 13-4(g), 13-6, and 13-18(b)]
h = inside length of long side of unstayed rectangular vessel; or dimension perpendicular to the H dimension in stayed vessels as shown in Figure 13-2(a) sketches (7), (8), (9), and (10), in which case h may be greater than, equal to, or less than H,
= $2(L_2 + L_{21})$ for equations in 13-8(d) for Figure 13-2(a) sketches (5) and (6)
= $2L_2$ for equations in 13-8(d) for Figure 13-2(b) sketch (2)
h_1 = centroidal length of reinforcing member on long side of rectangular vessel
h_o = outside length of long side of rectangular vessel
k = reinforcement member parameter
= $(I_{21}/I_{11})\alpha_1$
k_1 = I_{22}/I_2
k_2 = $I_{22}\alpha/I_1$
p = pitch distance; distance between reinforcing members; plate width between edges of reinforcing members
r = radius to centroidal axis of reinforcement member on obround vessel
t = plate thickness
t_1 = thickness of short-side plates of vessel
t_2 = thickness of long-side plates of vessel
t_{22} = thickness of long-side plates of vessel
t_3 = thickness or diameter of staying member
t_4 = thickness or diameter of staying member
t_5 = thickness of end closure plate or head of vessel
w = width of plate included in moment of inertia calculation of reinforced section
$\bar{y}$ = distance from geometric center of end plate to centroid of cross-sectional area of a rectangular vessel. If both long-side plates are of equal thickness t_e, then $\bar{y}$ = 0.
α = rectangular vessel parameter
= H/h
α_1 = rectangular vessel reinforcement parameter
= H_1/h_1
α_2 = I_2/I_1
α_3 = L_2/L_1
γ = L_2/R
γ_1 = L_2/r
θ = angle
ϕ = R/L_1
Δ = material parameter associated with w [Table 13-8(e)]
β = h/p, H/p, or $2R/p$
π = 3.1415
ν = Poisson's ratio

13-6 LIGAMENT EFFICIENCY OF MULTIDIAMETER HOLES IN PLATES

In calculations made according to this Appendix for the case of a plate with uniform diameter holes, the ligament efficiency factors e_m and e_b for membrane and bending stresses, respectively, are considered to be the same. See 13-4(g) and 13-18(b) for application of ligament efficiency factors. In the case of multidiameter holes, the neutral axis of the ligament may no longer be at midthickness of the plate; in this case, for bending loads, the stress is higher at one of the plate surfaces than at the other surface.

(a) Ligament Efficiency of Plate With Multidiameter Holes Subject to Membrane Stress. Figure 13-6 shows a plate with multidiameter holes. In the case of membrane stresses, the ligament efficiency is as follows:

$$e_m = (p - D_E)/p \tag{1}$$

where

$$D_E = \frac{1}{t}\left(d_o T_o + d_1 T_1 + d_2 T_2 + \ldots\ldots + d_n T_n\right) \tag{2}$$

(b) Ligament Efficiency of Plate With Multidiameter Holes Subject to Bending Stress. Figure 13-6 shows a plate with multidiameter holes. In the case of bending loads, the ligament efficiency is given by

$$e_b = (p - D_E)/p \tag{3}$$

where

$$D_E = p - \frac{6I}{t^2 c} \tag{4}$$

Provided by IHS under license with ASME
No reproduction or networking permitted without license from IHS
Licensee=Chevron Phillips Chemical Co LP/5956674001
Not for Resale, 11/09/2014 20:41:36 MST

Figure 13-6
Plate With Multidiameter Hole Pattern

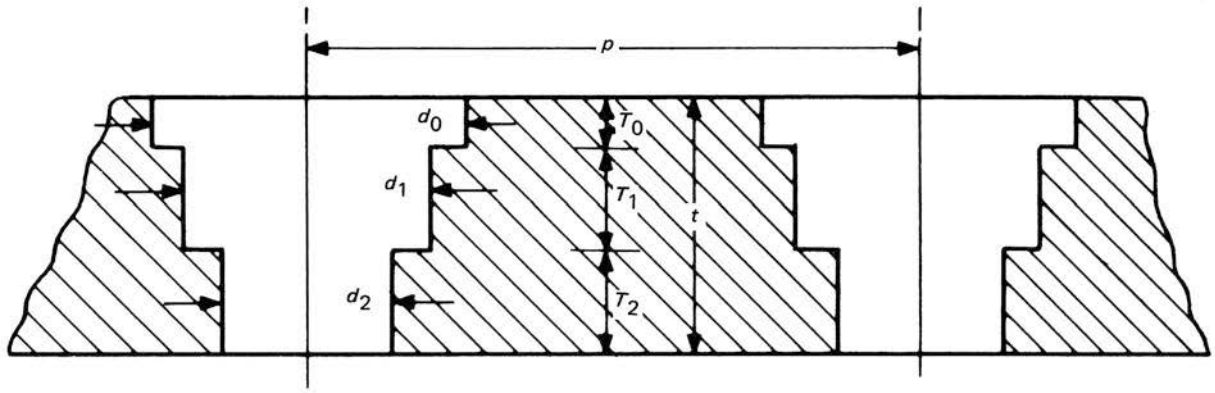

$$I = \frac{1}{12}\left(b_o T_o^3 + b_1 T_1^3 + b_2 T_2^3 + \ldots + b_n T_n^3\right) + b_o T_o\left(\frac{T_o}{2} + T_1 + T_2 + \ldots + T_n - \bar{X}\right)^2 + b_1 T_1\left(\frac{T_1}{2} + T_2 + \ldots + T_n - \bar{X}\right)^2 + b_2 T_2\left(\frac{T_2}{2} + \ldots + T_n - \bar{X}\right)^2 + b_n T_n\left(\bar{X} - \frac{T_n}{2}\right)^2 \quad (5)$$

$$\bar{X} = \left[b_o T_o\left(\frac{T_o}{2} + T_1 + T_2 + \ldots + T_n\right) + b_1 T_1\left(\frac{T_1}{2} + T_2 + \ldots + T_n\right) + b_2 T_2\left(\frac{T_2}{2} + \ldots + T_n\right) + b_n T_n\left(\frac{T_n}{2}\right)\right] \times \left(b_o T_o + b_1 T_1 + b_2 T_2 + \ldots + b_n T_n\right)^{-1} \quad (6)$$

c = the larger of $\bar{X}$ or $\left(t - \bar{X}\right)$

13-7 UNREINFORCED VESSELS OF RECTANGULAR CROSS SECTION (13)

For the equations in these paragraphs, the moments and moments of inertia are calculated on a per-unit-width basis. That is, $I = bt^3/12$, where b = 1.0. The moments M_A and M_r have dimensions (force × length/length) = force. See para. 13-4(k).

(a) Vessel per Figure 13-2(a) Sketch (1)

(1) Membrane Stress

Short-side plates:

$$S_m = PH/2t_1 \quad (1)$$

Long-side plates:

$$S_m = Ph/2t_2 \quad (2)$$

(2) Bending Stress

Short-side plates:

$$\left(S_b\right)_N = \frac{Pc}{12I_1}\left[-1.5H^2 + h^2\left(\frac{\left(1 + \alpha^2 K\right)}{1 + K}\right)\right] \quad (3)$$

$$\left(S_b\right)_Q = \frac{Ph^2 c}{12I_1}\left(\frac{1 + \alpha^2 K}{1 + K}\right) \quad (4)$$

Long-side plates:

$$\left(S_b\right)_M = \frac{Ph^2 c}{12I_2}\left[-1.5 + \left(\frac{\left(1 + \alpha^2 K\right)}{1 + K}\right)\right] \quad (5)$$

Provided by IHS under license with ASME
No reproduction or networking permitted without license from IHS
Licensee=Chevron Phillips Chemical Co LP/5956674001
Not for Resale, 11/09/2014 20:41:36 MST

$$\left(S_b\right)_Q = \frac{Ph^2c}{12I_2}\left(\frac{1+\alpha^2K}{1+K}\right) \tag{6}$$

(3) Total Stress

Short-side plates:

$$\left(S_T\right)_N = \text{eq.}(1) + \text{eq.}(3) \tag{7}$$

$$\left(S_T\right)_Q = \text{eq.}(1) + \text{eq.}(4) \tag{8}$$

Long-side plates:

$$\left(S_T\right)_M = \text{eq.}(2) + \text{eq.}(5) \tag{9}$$

$$\left(S_T\right)_Q = \text{eq.}(2) + \text{eq.}(6) \tag{10}$$

(b) Vessel per Figure 13-2(a) Sketch (2). In this type of vessel, the maximum stress occurs either at the corners of the vessel or at the midpoint of the long sides.

(1) Membrane Stress

Short-side plates:

$$S_m = Ph/2t_1 \tag{11}$$

Long-side plates:

$$\left(S_m\right)_{t2} = \frac{P}{8NHt_2}\left\{4NH^2 - 2h^2\left[\left(K_2+k_2\right) - k_1\left(K_1+k_2\right) + \alpha^2k_2\left(K_2-K_1\right)\right]\right\} \tag{12A}$$

$$\left(S_m\right)_{t22} = \frac{P}{8NHt_{22}}\left\{4NH^2 - 2h^2\left[-\left(K_2+k_2\right) + k_1\left(K_1+k_2\right) - \alpha^2k_2\left(K_2-K_1\right)\right]\right\} \tag{12B}$$

(2) Bending Stress

Short-side plates:

$$\left(S_b\right)_Q = \frac{Pch^2}{4NI_1}\times\left[\left(K_2-k_1k_2\right) + \alpha^2k_2\left(K_2-k_2\right)\right] \tag{13}$$

$$\left(S_b\right)_{Q_1} = \frac{Pch^2}{4NI_1}\times\left[\left(K_1k_1-k_2\right) + \alpha^2k_2\left(K_1-k_2\right)\right] \tag{14}$$

Long-side plates

$$\left(S_b\right)_M = \frac{Pch^2}{8NI_{22}}\left\{2\left[\left(K_2-k_1k_2\right) + \alpha^2k_2\left(K_2-k_2\right)\right] - N\right\} \tag{15}$$

$$\left(S_b\right)_{M_1} = \frac{Pch^2}{8NI_2}\left\{2\left[\left(K_1k_1-k_2\right) + \alpha^2k_2\left(K_1-k_2\right)\right] - N\right\} \tag{16}$$

$$\left(S_b\right)_Q = \frac{Pch^2}{4NI_{22}}\left[\left(K_2-k_1k_2\right) + \alpha^2k_2\left(K_2-k_2\right)\right] \tag{17}$$

$$\left(S_b\right)_{Q_1} = \frac{Pch^2}{4NI_2}\left[\left(K_1k_1-k_2\right) + \alpha^2k_2\left(K_1-k_2\right)\right] \tag{18}$$

(3) Total Stress

Short-side plates:

$$\left(S_T\right)_Q = \text{eq.}(11) + \text{eq.}(13) \tag{19}$$

$$\left(S_T\right)_{Q_1} = \text{eq.}(11) + \text{eq.}(14) \tag{20}$$

Long-side plates:

$$\left(S_T\right)_M = \text{eq.}(12\text{B}) + \text{eq.}(15) \tag{21}$$

$$\left(S_T\right)_{M_1} = \text{eq.}(12\text{A}) + \text{eq.}(16) \tag{22}$$

$$\left(S_T\right)_Q = \text{eq.}(12\text{B}) + \text{eq.}(17) \tag{23}$$

$$\left(S_T\right)_{Q_1} = \text{eq.}(12\text{A}) + \text{eq.}(18) \tag{24}$$

(c) Vessel per Figure 13-2(a) Sketch (3)

(1) Membrane Stress

Short-side plates:

$$\left(S_m\right)_C = \left(S_m\right)_D = \frac{P\left(R+L_2\right)}{t_1} \tag{25}$$

Long-side plates:

$$\left(S_m\right)_A = \left(S_m\right)_B = \frac{P\left(L_1+R\right)}{t_1} \tag{26}$$

Corner sections:

$$\left(S_m\right)_{B-C} = \frac{P}{t_1}\left(\sqrt{L_2{}^2 + L_1{}^2} + R\right) \tag{27}$$

Provided by IHS under license with ASME
No reproduction or networking permitted without license from IHS
Licensee=Chevron Phillips Chemical Co LP/5956674001
Not for Resale, 11/09/2014 20:41:36 MST

(2) Bending Stress

Short-side plates:

$$(S_b)_C = \frac{c}{2I_1} \times \left[2M_A + P\left(2RL_2 - 2RL_1 + L_2^2\right)\right] \quad (28)$$

$$(S_b)_D = \frac{c}{2I_1}\left[2M_A + P\left(L_2^2 + 2RL_2 - 2RL_1 - L_1^2\right)\right] \quad (29)$$

Long-side plates:

$$(S_b)_A = \frac{M_A c}{I_1} \quad (30)$$

$$(S_b)_B = \frac{c}{2I_1}\left(2M_A + PL_2^2\right) \quad (31)$$

Corner sections:

$$(S_b)_{B-C} = \frac{M_r c}{I_1} = \frac{c}{2I_1}\left(2M_A + P\left\{2R\left[L_2\cos\theta - L_1(1-\sin\theta)\right] + L_2^2\right\}\right) \quad (32)$$

where $(S_b)_{B\text{-}C}$ maximum at

$$\theta = \tan^{-1}(L_1/L_2)$$

(3) Total Stress

Short-side plates:

$$(S_T)_C = \text{eq.}(25) + \text{eq.}(28) \quad (33)$$

$$(S_T)_D = \text{eq.}(25) + \text{eq.}(29) \quad (34)$$

Long-side plates:

$$(S_T)_A = \text{eq.}(26) + \text{eq.}(30) \quad (35)$$

$$(S_T)_B = \text{eq.}(26) + \text{eq.}(31) \quad (36)$$

Corner sections:

$$(S_T)_{B-C} = \text{eq.}(27) + \text{eq.}(32) \quad (37)$$

where

$$M_A = PK_3 \quad (38)$$

$$M_r = M_A + P\left\{R\left[L_2\cos\theta - L_1(1-\sin\theta)\right] + L_2^2/2\right\} \quad (39)$$

$$K_3 = -L_1^2\left(6\phi^2\alpha_3 - 3\pi\phi^2 + 6\phi^2 + \alpha_3^3 + 3\alpha_3^2 - 6\phi - 2 + 1.5\pi\phi\alpha_3^2 + 6\phi\alpha_3\right) \times \left[3(2\alpha_3 + \pi\phi + 2)\right]^{-1} \quad (40)$$

13-8 REINFORCED VESSELS OF RECTANGULAR CROSS SECTION (13)

(a) In the type of construction shown on Figure 13-2(a) sketches (4), (5) and (6), the analyses are similar to those in 13-7(a) and 13-7(c), but in addition the spacing of the reinforcing members and the adequacy of the composite reinforced section must be determined. see 13-4(c) for the procedure for determining total stresses that must not be more than the allowable design stress calculated according to the methods given in 13-4(b).

(b) The rules of this paragraph cover only the types of reinforced rectangular cross section vessels shown in Figure 13-2(a) sketches (4), (5) and (6) where welded-on reinforcement members are in a plane perpendicular to the long axis of the vessel; however, the spacing between reinforcing members need not be uniform. All reinforcement members attached to two opposite plates shall have the same moment of inertia. For any other type of reinforced rectangular cross section vessel, see U-2.

For the vessel type shown on Figure 13-2(a) sketch (4) when the side plate thicknesses are equal, the plates may be formed to a radius at the corners. The analysis is, however, carried out in the same manner as if the corners were not rounded. For corners which are cold formed, the provisions of UG-79 and UCS-79 or UHT-79 shall apply. For the special case where $L_1 = 0$, the analysis is for an obround shell with continuous external rectangular frame reinforcement; see 13-11(b).

Reinforcing members shall be placed on the outside of the vessel and shall be attached to the plates of the vessel by welding on each side of the reinforcing member. For continuous reinforcement, welding may be either continuous or intermittent. The total length of intermittent welding on each side of the reinforcing member shall be not less than one-half the length being reinforced on the shell. Welds on opposite sides of the reinforcing member may be either staggered or in-line and the distance between intermittent welds shall be no more than eight times the plate thickness of the plate being reinforced as shown in Figure UG-30. For assuring the composite section properties, for noncontinuous reinforcements, the welds must be capable of developing the necessary shear.[102]

(c) The end closures for vessels of this type shall be designed in accordance with the provisions in 13-4(f).

(d) Distance Between Reinforcing Members

(1) The basic maximum distance between reinforcing member centerlines shall be determined by eq. UG-47(a)(1). This distance is then used to calculate a value of β for the short side H and for the long side h. A

Provided by IHS under license with ASME
No reproduction or networking permitted without license from IHS
Licensee=Chevron Phillips Chemical Co LP/5956674001
Not for Resale, 11/09/2014 20:41:36 MST

value J is then obtained for each value from Table 13-8(d). The values thus obtained are used in the applicable eqs. (5)(1a) through (5)(1d) to determine the values of p_1 and p_2. The maximum distance between any reinforcing member center lines shall not be greater than the least of the values computed using eqs. (5)(1a) through (5)(1d).

(2) Equation (5)(2) is used to compute the maximum effective width of the shell plate which can be used in computing the effective moments of inertia I_{11} and I_{21} of the composite section (reinforcement and shell plate acting together) at locations where the shell plate is in compression.

(3) The allowable effective width of the shell plate w shall not be greater than the least value of p computed using the applicable eqs. (5)(1a) through (5)(1d) nor greater than the actual value of p if the actual value of p is less than that permitted by eqs. (5)(1a) through (5)(1d). One-half of w shall be considered to be effective on each side of the reinforcing member centerline, but the effective widths shall not overlap. The effective width shall not be greater than the actual width available. At locations, other than in the corner regions [see (d)(4) below], where the shell plate is in tension, w equal to the actual pitch distance may be used in computing the moments of inertia of the composite section.

(4) The equations given in this Appendix for calculation of stresses do not include the effects of high localized stresses. In the corner regions of some configurations meeting Figure 13-2(a) sketch (4) conditions, the localized stresses may significantly exceed the calculated stress. Only a very small width of the shell plate may be effective in acting with the composite section in the corner regions. The designer shall consider the effect of the high stress regions in the Figure 13-2(a) sketch (4) type vessels for the loadings in UG-22 to show compliance with UG-23 and this Appendix using recognized analysis methods as permitted by U-2(g).

(5) In the equations for calculating stresses, the value of p is the sum of one-half the distances to the next reinforcing member on each side.

$$\text{For } H \geq p, p_1 = t_1\sqrt{SJ/P} \tag{1a}$$

$$\text{For } H < p, p_1 = (t_1/\beta)\sqrt{SJ/P} \tag{1b}$$

$$\text{For } h \geq p, p_2 = t_2\sqrt{SJ/P} \tag{1c}$$

$$\text{For } h < p, p_2 = (t_2/\beta)\sqrt{SJ/P} \tag{1d}$$

$$w = \frac{(t)(\Delta)}{\sqrt{S_y}} \tag{2}$$

(e) Vessel per Figure 13-2(a) Sketch (4)

(1) Membrane Stress

Short-side members:

$$S_m = \frac{Php}{2(A_1 + pt_1)} \tag{3}$$

Long-side members:

$$S_m = \frac{PHp}{2(A_2 + pt_2)} \tag{4}$$

(2) Bending Stress

Short-side members:

$$(S_b)_N = \frac{Ppc}{24I_{11}} \times \left[-3H^2 + 2h^2\left(\frac{1 + \alpha_1{}^2k}{1 + k}\right)\right] \tag{5}$$

$$(S_b)_Q = \frac{Ph^2pc}{12I_{11}}\left(\frac{1 + \alpha_1{}^2k}{1 + k}\right) \tag{6}$$

Long-side members:

$$(S_b)_M = \frac{Ph^2pc}{24I_{21}}\left[-3 + 2\left(\frac{1 + \alpha_1{}^2k}{1 + k}\right)\right] \tag{7}$$

$$(S_b)_Q = \frac{Ph^2pc}{12I_{21}}\left(\frac{1 + \alpha_1{}^2k}{1 + k}\right) \tag{8}$$

Table 13-8(d)

β or $1/\beta$ (Whichever Is Larger)	Stress Parameter, J
1.0	4.9
1.1	4.3
1.2	3.9
1.3	3.6
1.4	3.3
1.5	3.1
1.6	2.9
1.7	2.8
1.8	2.6
1.9	2.5
2.0	2.4
3.0	2.1
≥ 4.0	2.0

Provided by IHS under license with ASME
No reproduction or networking permitted without license from IHS
Licensee=Chevron Phillips Chemical Co LP/5956674001
Not for Resale, 11/09/2014 20:41:36 MST

(3) Total Stress

Short-side members:

$$(S_T)_N = \text{eq.}(3) + \text{eq.}(5) \tag{9}$$

$$(S_T)_Q = \text{eq.}(3) + \text{eq.}(6) \tag{10}$$

Long-side members:

$$(S_T)_M = \text{eq.}(4) + \text{eq.}(7) \tag{11}$$

$$(S_T)_Q = \text{eq.}(4) + \text{eq.}(8) \tag{12}$$

(f) Vessel per Figure 13-2(a) Sketch (5)

(1) Membrane Stress. For this type of construction, where the reinforcement is not continuous, the membrane stress is based on the plate thickness only.

Short-side plates:

$$S_m = \frac{P(L_2 + L_{21} + R)}{t_1} \tag{13}$$

Long-side plates:

$$S_m = \frac{P(L_1 + L_{11} + R)}{t_2} \tag{14}$$

Corner sections:

$$S_m = \frac{P}{t_1}\left[\sqrt{(L_2 + L_{21})^2 + (L_1 + L_{11})^2} + R\right] \tag{15}$$

(2) Bending Stress

Short-side members:

$$(S_b)_F = \frac{c}{I_1}\left\{M_A + pP\left[\frac{(L_2 + L_{21})^2}{2} + R(L_2 + L_{21} - L_1 - L_{11})\right]\right\} \tag{16}$$

$$(S_b)_G = \frac{c}{I_1}\left\{M_A + \frac{pP}{2} \times \left[L_2^2 + 2L_2L_{21} + L_{21}^2 - 2L_1L_{11} - L_{11}^2 + 2R(L_2 + L_{21} - L_1 - L_{11})\right]\right\} \tag{17}$$

$$(S_b)_H = \frac{c}{I_{11}}\left\{M_A + \frac{pP}{2}\left[(L_2 + L_{21})^2 + 2R(L_2 + L_{21} - L_1 - L_{11}) - (L_1 + L_{11})^2\right]\right\} \tag{18}$$

Long-side members:

$$(S_b)_A = \frac{M_A c}{I_{21}} \tag{19}$$

$$(S_b)_B = \frac{c}{I_2}\left(M_A + \frac{pPL_2^2}{2}\right) \tag{20}$$

$$(S_b)_C = \frac{c}{I_2}\left[M_A + \frac{pP}{2}(L_2 + L_{21})^2\right] \tag{21}$$

Corner sections:

$$(S_b)_{C-F} = \frac{M_r c}{I_1} \tag{22}$$

where $(S_b)_{C-F}$ maximum occurs at Section M for $M_M = M_r$ maximum when

$$\theta = \tan^{-1}\left(\frac{L_1 + L_{11}}{L_2 + L_{21}}\right)$$

(3) Total Stress

Short-side members:

$$(S_T)_F = \text{eq.}(13) + \text{eq.}(16) \tag{23}$$

$$(S_T)_G = \text{eq.}(13) + \text{eq.}(17) \tag{24}$$

$$(S_T)_H = \text{eq.}(13) + \text{eq.}(18) \tag{25}$$

Long-side members:

$$(S_T)_A = \text{eq.}(14) + \text{eq.}(19) \tag{26}$$

$$(S_T)_B = \text{eq.}(14) + \text{eq.}(20) \tag{27}$$

$$(S_C)_C = \text{eq.}(14) + \text{eq.}(21) \tag{28}$$

Corner sections:

$$(S_T)_{C-F} = \text{largest of eq. (13), (14), or (15) plus maximum value of eq. (22)} \tag{29}$$

where

$$M_A = pPK_4$$

Provided by IHS under license with ASME
No reproduction or networking permitted without license from IHS
Licensee=Chevron Phillips Chemical Co LP/5956674001
Not for Resale, 11/09/2014 20:41:36 MST

$$M_r = M_A + pP\left\{\left(L_2 + L_{21}\right)\left(\frac{L_2 + L_{21}}{2} + R\cos\theta\right) + \left(1 - \sin\theta\right)\left[R^2 - R\left(L_1 + L_{11} + R\right)\right]\right\} \quad (30)$$

$$\begin{aligned} K_4 = \Big[& -3RL_2\left(4R + \pi L_2\right) - L_{21}\left(12R^2 + 3\pi RL_{21} + 2L_{21}{}^2\right) \\ & + 12RL_{11}{}^2 - 6L_2L_{21}\left(L_2 + L_{21} + \pi R + 2L_{11}\right) \\ & - 6L_2L_{11}\left(2R + L_2\right) - 6L_{21}L_{11}\left(2R + L_{21}\right) \\ & + 6L_1L_{11}\left(2R + L_{11}\right) + 6R^2\left(\pi - 2\right)\left(L_1 + L_{11}\right) \\ & + 4L_{11}{}^3 - 2L_2{}^3\left(l_1 / l_{21}\right) \\ & - 2\left(l_1/l_{11}\right)\Big(6L_2L_{21}L_1 + 3L_2{}^2L_1 + 3L_{21}{}^2L_1 \\ & - 6L_1{}^2L_{11} - 3L_1L_{11}{}^2 - 6RL_1{}^2 - 2L_1{}^3 + 6RL_2L_1 \\ & + 6RL_{21}L_1 - 6RL_1L_{11}\Big)\Big] \\ \times & \left\{6\left[2L_{21} + 2L_{11} + \pi R + 2L_1\left(l_1/l_{11}\right) + 2L_2\left(l_1/l_{21}\right)\right]\right\}^{-1} \end{aligned} \quad (31)$$

(g) Vessels per Figure 13-2(a) Sketch (5) Modified. Figure 13-2(a) sketch (5) shows a vessel with rounded corners and noncontinuous reinforcement. Some modifications of this construction are:

(1) continuous reinforcement where the reinforcement follows the contour of the vessel. In this case the analysis is carried out the same as for Figure 13-2(a) sketch (4), per (e).

(2) continuous reinforcement where the reinforcement is a rectangular frame as in Figure 13-2(a) sketch (4). The analysis is carried out, as in (g)(1) above, per (e).

(h) Vessel per Figure 13-2(a) Sketch (6). This type vessel is similar to that shown in Figure 13-2(a) sketch (5) except for the corner geometry. The corner region consists of a flat, chamfered segment joined to the adjacent sides by curved segments with constant radii. The chamfered segments must be perpendicular to diagonal lines drawn through the points where the sides would intersect if they were extended.

(1) The following terms are used to simplify the membrane and bending stress equations given in (h) for the reinforced vessel with chamfered corners shown in Figure 13-2(a) sketch 6:

$$\begin{aligned}
A_C &= t_1 p \\
A_{DE} &= \{L_4 - [L_2 + L_{21} + R \tan(\theta_1/2.0)]\} \sin\theta_1 \\
C_3 &= L_2 + L_{21} + R \sin\theta_1 \\
C_{E1} &= C_3 + N_1 - R \\
C_{E2} &= E_{\theta 1} + M_1 - R \\
C_M &= L_2 + L_{21} + R \sin\theta_M \\
C_N &= L_4 - R + R \sin\beta_N \\
D_2 &= 6.0 L_4 \bar{Y}_2 \\
D_3 &= L_4 - R \\
D_4 &= L_1 + L_{11} + R \cos\theta_1 \\
E_{\theta 1} &= R(1.0 - \cos\theta_1) \\
E_M &= R(1.0 - \cos\theta_M) \\
F_1 &= R(1.0 - \sin\theta_1) \\
F_N &= R(1.0 - \sin\beta_N) \\
G_1 &= R \cos\theta_1 \\
G_N &= R \cos\beta_N \\
H_{\theta 1} &= R \sin\theta_1 \\
J_2 &= \bar{Y}_2 + t_1/2.0 + M_1 \\
K_5 &= L_2 + L_{21} \\
M_1 &= L_3 - (L_1 + L_{11}) \\
N_1 &= L_4 - (L_2 + L_{21}) \\
O_{DE} &= \sqrt{\left(L_3{}^2 + L_4{}^2\right)} - A_{DE} \\
O_K &= L_1 + L_{11} + R \cos\beta_N \\
S_1 &= 2.0\, R + t_1 \\
U_1 &= \sqrt{\left(M_1 - R\right)^2 + \left(N_1 - R\right)^2} \\
U_2 &= U_1 / 2.0 \\
U_{2X} &= U_2 \sin\theta_1 \\
U_{2Y} &= U_2 \cos\theta_1 \\
V_1 &= t_1 \sin\theta_1 \\
V_N &= t_1 \sin\beta_N \\
V_A &= pP\, L_3 \\
V_M &= t_1 \sin\theta_M \\
W &= Pp / 2.0 \\
W_1 &= t_1 \cos\theta_1 \\
W_M &= t_1 \cos\theta_M \\
W_N &= t_1 \cos\beta_N
\end{aligned}$$

See Figure 13-2(a) sketch (6) for locations for the following terms:

$$\begin{aligned}
\alpha_{ab} &= \tan^{-1}(L_3/L_4) \\
\beta_M &= \tan^{-1}[C_M/(L_3 - E\theta_1)] \\
\beta_N &= \tan^{-1}[(L_4 - R)/(L_1 + L_{11})] \\
\theta_1 &= \tan^{-1}(L_4/L_3) \\
\theta_M &= \tan^{-1}\{-K_5S_1/[2.0\, R^2 - RS_1 - L_3t_1]\} \\
\theta_N &= \tan^{-1}(C_N/O_K)
\end{aligned}$$

(2) Membrane Stress. When the reinforcement is not continuous, the membrane stress is based on the plate area only:

Long-side plates A to C:

$$\left(S_m\right)_A = \left(S_m\right)_B = \left(S_m\right)_C = PpL_3 / A_c \quad (1)$$

Corner section C to D:

$$\left(S_m\right)_M = \left(Pp/A_c\right)\sqrt{C_M{}^2 + \left(L_3 - E_M\right)^2} \times \cos\left(\theta_M - \beta_M\right) \quad (2)$$

Flat corner section D to E:

$$\left(S_m\right)_D = \left(S_m\right)_U = \left(S_m\right)_E = PpO_{DE} / A_c \quad (3)$$

Provided by IHS under license with ASME
No reproduction or networking permitted without license from IHS
Licensee=Chevron Phillips Chemical Co LP/5956674001
Not for Resale, 11/09/2014 20:41:36 MST

Corner section E to F:

$$(S_m)_N = (Pp/A_c)\sqrt{\left(C_N{}^2 + O_K{}^2\right)}\cos\left(\theta_N - \beta_N\right) \tag{4}$$

Short side plates F to H:

$$(S_m)_F = (S_m)_G = (S_m)_H = PpL_4 \ / A_c \tag{5}$$

(3) Bending Stress. Equations are given for calculating the bending stress at each of the sections identified by letters A through H, and at U (at the midpoint of the flat corner segment), and at the section of maximum bending moment between sections C and D and between sections E and F. The bending stress is calculated using the equation:

$$S_b = Mc \ / I \tag{6}$$

where M is the bending moment at the section, c is the distance from the neutral axis to the extreme fiber of the section, and I is the moment of inertia of the section. The appropriate c_i or c_o value must be substituted for the c term to calculate the stresses at the inner and outer surfaces, respectively.

All the bending stress equations contain the term M_A for the bending moment at section A. The equation for M_A is:

$$M_A = pPK_8 \tag{7}$$

where

$$K_8 = K_{N8} \ / K_{D8} \tag{8}$$

$$K_{N8} = K_{AB} + K_{BC} + K_{CD} + K_{DE} + K_{EF} + K_{FG} + K_{GH} \tag{9}$$

$$\begin{aligned} K_{D8} = -6.0\big[&(I_1/I_{21})L_2 + L_{21} + R\pi/2 + U_1 + L_{11} \\ &+ (I_1/I_{11})L_1\big] \end{aligned} \tag{10}$$

$$K_{AB} = (I_1/I_{21})\Big|\, L_2{}^3 - D_2L_2 \tag{11}$$

$$K_{BC} = 3.0L_2L_{11}K_5 + L_{21}{}^3 - D_2L_{11} \tag{12}$$

$$\begin{aligned} K_{CD} = 3.0R\theta_1\big[&K_5{}^2 + 2.0R^2 + R\,t_1 - L_3(S_1 + 2.0\bar{Y}_2)\big] \\ &+ 3.0K_5E_{\theta 1}S_1 + 3.0H_{\theta 1}S_1(L_3 - R) \end{aligned} \tag{13}$$

$$\begin{aligned} K_{DE} = 3.0U_1\big(&C_3{}^2 + C_3V_1 + E_{\theta 1}{}^2 - E_{\theta 1}W_1\big) \\ &-6.0L_3U_1\big[\bar{Y}_2 + (t_1/2.0)(1.0 - \cos\theta_1) + E_{\theta 1}\big] \\ &+ 3.0U_1{}^2\big[C_3\cos\theta_1 + \sin\theta_1(E_{\theta 1} - L_3)\big] + U_1{}^3 \end{aligned} \tag{14}$$

$$\begin{aligned} K_{EF} = 3.0R\alpha_{ab}\big(&D_3{}^2 + M_1{}^2 - 2.0L_3J_2 + R^2 + R\,t_1\big) \\ &+ 3G_1D_3S_1 + 3F_1S_1 \times (L_3 - M_1) \end{aligned} \tag{15}$$

$$\begin{aligned} K_{FG} = 3.0L_{11}\big(&L_4{}^2 + L_4\,t_1 + M_1{}^2 - 2.0L_3J_2\big) \\ &+3.0(M_1 - L_3)L_{11}{}^2 + L_{11}{}^3 \end{aligned} \tag{16}$$

$$\begin{aligned} K_{GH} = (I_1/I_{11})\big\{&3.0L_1\big[L_4{}^2 + 2.0L_4\bar{Y}_1 + L_4\,t_1 \\ &+ (M_1 + L_{11})^2 - 2.0L_3 \times (J_2 + L_{11})\big] - 2.0L_1{}^3\big\} \end{aligned} \tag{17}$$

Each of the equations K_{AB} through K_{GH} above represents terms associated with each segment of the vessel between lettered sections.

The equations for the bending stresses at each lettered section are as follows

$$(S_b)_A = M_Ac/I_{21} \tag{18}$$

$$(S_b)_B = (c/I_1)\left(M_A - V_A\,\bar{Y}_2 + W\,L_2{}^2\right) \tag{19}$$

$$(S_b)_C = (c/I_1)\left(M_A + W\,K_5{}^2 - 2.0L_3W\bar{Y}_2\right) \tag{20}$$

$$\begin{aligned} (S_{bD}) = (c_1/I_1)\big\{&M_A + W\big[C_3{}^2 + C_3\,V_1 + E_{\theta 1}{}^2 - E_{\theta 1}W_1 \\ &- L_3(2.0E_{\theta 1} + t_1 - W_1 + 2.0\bar{Y}_2)\big]\big\} \end{aligned} \tag{21}$$

$$\begin{aligned} (S_b)_{U2} = (c/I_1)\big\{&M_A + W\big[(C_3 + U_{2Y})^2 + (C_3 + U_{2Y})V_1 \\ &+ (E_{\theta 1} + U_{2X})^2 - (E_{\theta 1} + U_{2X})W_1 - 2.0L_3(\bar{Y}_2 \\ &+ (t_1/2)(1.0 - \cos\theta_1) + E_{\theta 1} + U_{2X})\big]\big\} \end{aligned} \tag{22}$$

$$\begin{aligned} (S_b)_E = (c/I_1)\big\{&M_A + W\big[C_{E1}{}^2 + C_{E1}V_1 + C_{E2}{}^2 - C_{E2} \\ &W_1 - 2L_3(\bar{Y}_2 + (t_1/2)(1 - \cos\theta_1) + C_{E2})\big]\big\} \end{aligned} \tag{23}$$

$$(S_b)_F = (c/I_1)\big[M_A + W\big(L_4{}^2 + L_4\,t_1 + M_1{}^2 - 2.0L_3J_2\big)\big] \tag{24}$$

$$\begin{aligned} (S_b)_G = (c/I_1)\big\{&M_A + W\big[L_4{}^2 + L_4t_1 + (M_1 + L_{11})^2 \\ &- 2.0\,L_3 \times (J_2 + L_{11})\big]\big\} \end{aligned} \tag{25}$$

$$\begin{aligned} (S_b)_H = (c/I_{11})\big\{&M_A + W\big[L_4{}^2 + L_4t_1 + 2.0L_4\,\bar{Y}_1 - L_3{}^2 \\ &- 2.0L_3 \times (\bar{Y}_2 + t_1/2)\big]\big\} \end{aligned} \tag{26}$$

Provided by IHS under license with ASME
No reproduction or networking permitted without license from IHS
Licensee=Chevron Phillips Chemical Co LP/5956674001
Not for Resale, 11/09/2014 20:41:36 MST

The maximum stress between sections C and D occurs at section M defined by the angle θ_M:

$$\theta_M = \tan^{-1}\left[-K_5 S_1 / \left(2R^2 - RS_1 - L_3 t_1\right)\right] \tag{27}$$

$$\left(s_b\right)_M = \left(c/I_1\right)\left\{M_A + W\left[C_M{}^2 + C_M V_M + E_M{}^2 - E_M W_M - L_3\left(2.0E_M + t_1 - W_M + 2.0\bar{Y}_2\right)\right]\right\} \tag{28}$$

The maximum stress between sections E and F occurs at section N defined by the angle β_N:

$$\beta_N = \tan^{-1}\left[\left(L_4 - R\right)/\left(L_1 + L_{11}\right)\right] \tag{29}$$

$$\left(S_b\right)_N = \left(c/I_1\right)\left\{M_A + W\left[\left(L_4 - F_N\right)^2 + V_N\left(L_4 - F_N\right) + \left(M_1 - G_N\right)^2 - W_N\left(M_1 - G_N\right) - L_3\left(2.0\bar{Y}_2 + t_1 + 2.0M_1 - 2.0G_N - W_N\right)\right]\right\} \tag{30}$$

See Table 13-18.1 for equations to calculate the stress at any location between sections A and C and between sections F and H.

(4) Total Stress. The total stress at any point in a section is the sum of the membrane stress and the bending stress at the point:

$$\left(S_T\right)_i = \left(S_m\right)_i = \left(S_b\right)_i \tag{31}$$

where i is any of the sections identified by letters. The signs of the stresses must be considered when calculating the total stresses. The stresses must be calculated at both the inner and outer surfaces for the reinforced sections [see 13-4(c)]. The maximum tensile stress on a section will occur at the surface where the stress due to the bending moment is a tensile stress since the membrane stress is a tensile stress.

13-9 STAYED VESSELS OF RECTANGULAR CROSS SECTION [FIGURE 13-2(A) SKETCHES (7) AND (8)]

For the equations in these paragraphs, the moments of inertia are calculated on a per-unit-width basis. That is, $I = bt^3/12$, where $b = 1.0$. See para. 13-4(k)).

(a) Three types of stayed construction are considered as shown on Figure 13-2(a) sketches (7) through (10). In these types of construction the staying members may be plates welded to the side plates for the entire length of the vessel; or, the stays may be bars of circular cross section fastened to the side plates on a uniform pitch. For the former case, the stay plates shall not be constructed so as to create pressure containing partitions (see UG-19 for vessels containing more than one independent pressure chamber). For the latter case the rules of UG-47(a), UG-48, UG-49, and UG-50 must be met. End plates are subject to the rules of 13-4(f).

Table 13-8(e)

Material	Effective Width Coefficient, Δ [Note (1)] $\sqrt{\text{psi}}$	$\sqrt{\text{MPa}}$
Carbon steel	6,000	498
Austenitic stainless steel	5,840	485
Ni–Cr–Fe	6,180	513
Ni–Fe–Cr	6,030	501
Aluminum	3,560	296
Nickel–copper	5,720	475
Unalloyed titanium	4,490	373

NOTE:
(1) These coefficients are based on moduli of elasticity at ambient temperature for the materials in Table NF-1 of Subpart 2 of Section II, Part D. For different modulus values, calculate Δ as follows:

$$\Delta = \left(\Delta\right)_{\text{tabulated}}\sqrt{E_2 / E_3}$$

(b) Vessel Stayed by a Single Plate. Figure 13-2(a) sketch (7) shows a vessel with a central stay plate.

(1) Membrane Stress

Short-side plates:

$$S_m = \frac{Ph}{4t_1}\left\{4 - \left[\frac{2 + K\left(5 - \alpha^2\right)}{1 + 2K}\right]\right\} \tag{1}$$

Long-side plates:

$$S_m = PH/2t_2 \tag{2}$$

Stay plate:

$$S_m = \frac{Ph}{2t_3}\left[\frac{2 + K\left(5 - \alpha^2\right)}{1 + 2K}\right] \tag{3}$$

(2) Bending Stress

Short-side plates:

$$\left(S_b\right)_N = \frac{Pc}{24I_1}\left[-3H^2 + 2h^2\left(\frac{1 + 2\alpha^2 K}{1 + 2K}\right)\right] \tag{4}$$

Provided by IHS under license with ASME
No reproduction or networking permitted without license from IHS
Licensee=Chevron Phillips Chemical Co LP/5956674001
Not for Resale, 11/09/2014 20:41:36 MST

$$(S_b)_Q = \frac{Ph^2c}{12I_1}\left(\frac{1 + 2\alpha^2K}{1 + 2K}\right) \quad (5)$$

Long-side plates:

$$(S_b)_M = \frac{Ph^2c}{12I_2}\left[\frac{1 + K(3 - \alpha^2)}{1 + 2K}\right] \quad (6)$$

$$(S_b)_Q = \frac{Ph^2c}{12I_2}\left(\frac{1 + 2\alpha^2K}{1 + 2K}\right) \quad (7)$$

(3) Total Stress

Short-side plates:

$$(S_T)_N = \text{eq.}(1) + \text{eq.}(4) \quad (8)$$

$$(S_T)_Q = \text{eq.}(1) + \text{eq.}(5) \quad (9)$$

Long-side plates:

$$(S_T)_M = \text{eq.}(2) + \text{eq.}(6) \quad (10)$$

$$(S_T)_Q = \text{eq.}(2) + \text{eq.}(7) \quad (11)$$

Stay plate:

$$S_T = \text{eq.}(3) \quad (12)$$

(c) Vessel Stayed With Two Plates

(1) Membrane Stress

Short-side plates:

$$S_m = \frac{Ph}{2t_1}\left\{3 - \left[\frac{6 + K(11 - \alpha^2)}{3 + 5K}\right]\right\} \quad (13)$$

Long-side plates:

$$S_m = PH/2t_2 \quad (14)$$

Stay plates:

$$S_m = \frac{Ph}{2t_4}\left[\frac{6 + K(11 - \alpha^2)}{3 + 5K}\right] \quad (15)$$

(2) Bending Stress

Short-side plates:

$$(S_b)_N = \frac{Pc}{24I_1}\left[-3H^2 + 2h^2\left(\frac{3 + 5\alpha^2K}{3 + 5K}\right)\right] \quad (16)$$

$$(S_b)_Q = \frac{Ph^2c}{12I_1}\left(\frac{3 + 5\alpha^2K}{3 + 5K}\right) \quad (17)$$

Long-side plates:

$$(S_b)_M = \frac{Ph^2c}{12I_2}\left[\frac{3 + K(6 - \alpha^2)}{3 + 5K}\right] \quad (18)$$

$$(S_b)_Q = \frac{Ph^2c}{12I_2}\left(\frac{3 + 5\alpha^2K}{3 + 5K}\right) \quad (19)$$

(3) Total Stress

Short-side plates:

$$(S_T)_N = \text{eq.}(13) + \text{eq.}(16) \quad (20)$$

$$(S_T)_Q = \text{eq.}(13) + \text{eq.}(17) \quad (21)$$

Long-side plates:

$$(S_T)_M = \text{eq.}(14) + \text{eq.}(18) \quad (22)$$

$$(S_T)_Q = \text{eq.}(14) + \text{eq.}(19) \quad (23)$$

Stay plates:

$$S_T = \text{eq.}(15) \quad (24)$$

(d) Vessel Stayed by Single Row of Circular Bars on Uniform Pitch. The maximum pitch distance is determined per eq. UG-47(a)(1).

(1) Membrane Stress

Short-side plates:

$$S_m = Ph/t_1 \quad (25)$$

Long-side plates:

$$S_m = PH/2t_2 \quad (26)$$

Provided by IHS under license with ASME
No reproduction or networking permitted without license from IHS
Licensee=Chevron Phillips Chemical Co LP/5956674001
Not for Resale, 11/09/2014 20:41:36 MST

Stay bars:

$$S_m = \frac{2Php}{\pi t_3^2}\left[\frac{2 + K(5 - \alpha^2)}{1 + 2K}\right] \quad (27)$$

(2) Bending Stress

Short-side plates:

$$(S_b)_N = \frac{Pc}{24I_1}\left[-3H^2 + 2h^2\left(\frac{1 + 2\alpha^2 K}{1 + 2K}\right)\right] \quad (28)$$

$$(S_b)_Q = \frac{Ph^2c}{12I_1}\left(\frac{1 + 2\alpha^2 K}{1 + 2K}\right) \quad (29)$$

Long-side plates:

$$(S_b)_M = \frac{Ph^2c}{12I_2}\left[\frac{1 + K(3 - \alpha^2)}{1 + 2K}\right] \quad (30)$$

$$(S_b)_Q = \frac{Ph^2c}{12I_2}\left(\frac{1 + 2\alpha^2 K}{1 + 2K}\right) \quad (31)$$

(3) Total Stress

Short-side plates:

$$(S_T)_N = \text{eq.}(25) + \text{eq.}(28) \quad (32)$$

$$(S_T)_Q = \text{eq.}(25) + \text{eq.}(29) \quad (33)$$

Long-side plates:

$$(S_T)_M = \text{eq.}(26) + \text{eq.}(30) \quad (34)$$

$$(S_T)_Q = \text{eq.}(26) + \text{eq.}(31) \quad (35)$$

Stay bars:

$$S_T = \text{eq.}(27) \quad (36)$$

(4) In the event that $h > p$, then a pressure rating shall be computed per eq. UG-47(a)(2) with h substituted for p. If this value of pressure P is less than the original selected pressure, then this new calculated pressure shall be the pressure rating for the vessel.

(e) Vessel Stayed by Double Row of Bars. The maximum pitch distance is determined by eq. UG-47(a)(1).

(1) Membrane Stress

Short-side plates:

$$S_m = Ph/t_1 \quad (37)$$

Long-side plates:

$$S_m = PH/2t_2 \quad (38)$$

Stay bars:

$$S_m = \frac{2Php}{\pi t_4^2}\left[\frac{6 + K(11 - \alpha^2)}{3 + 5K}\right] \quad (39)$$

(2) Bending Stress

Short-side plates:

$$(S_b)_N = \frac{Pc}{24I_1}\left[-3H^2 + 2h^2\left(\frac{3 + 5\alpha^2 K}{3 + 5K}\right)\right] \quad (40)$$

$$(S_b)_Q = \frac{Ph^2c}{12I_1}\left(\frac{3 + 5\alpha^2 K}{3 + 5K}\right) \quad (41)$$

Long-side plates:

$$(S_b)_M = \frac{Ph^2c}{12I_2}\left[\frac{3 + K(6 - \alpha^2)}{3 + 5K}\right] \quad (42)$$

$$(S_b)_Q = \frac{Ph^2c}{12I_2}\left(\frac{3 + 5\alpha^2 K}{3 + 5K}\right) \quad (43)$$

(3) Total Stress

Short-side plates:

$$(S_T)_N = \text{eq.}(37) + \text{eq.}(40) \quad (44)$$

$$(S_T)_Q = \text{eq.}(37) + \text{eq.}(41) \quad (45)$$

Long-side plates:

$$(S_T)_M = \text{eq.}(38) + \text{eq.}(42) \quad (46)$$

$$(S_T)_Q = \text{eq.}(38) + \text{eq.}(43) \quad (47)$$

Stay bars:

$$S_T = \text{eq.}(39) \quad (48)$$

--`,,,`-`-`,,`,,`,`,,`---
Provided by IHS under license with ASME
No reproduction or networking permitted without license from IHS
Licensee=Chevron Phillips Chemical Co LP/5956674001
Not for Resale, 11/09/2014 20:41:36 MST

(f) Vessels of Rectangular Cross Section Having Two or More Compartments of Unequal Size [Figure 13-2(a) Sketches (9) and (10)]. Typical rectangular cross section vessels having unequal compartments are shown on Figure 13-2(a) sketches (9) and (10). These types of vessels shall be qualified using either of the two methods given below:

(1) by applying the provisions of U-2(g) and using techniques of structural analysis for rigid frames, such as moment distribution, consistent deformation, slope-deflection, etc. Membrane and bending stresses shall be calculated throughout the structure and shall not exceed the allowable values established in this Appendix. For end plate analysis, see 13-4(e).

(2) by selecting the compartment having the maximum dimensions and then analyzing the structure per (b) above for the case of a two-compartment vessel and per (c) above for the case of a vessel with more than two compartments. For example, if the vessel has two unequal compartments, use the geometry shown in Figure 13-2(a) sketch (7) with each compartment having the maximum dimension of the actual vessel. For a vessel with more than two compartments, use the geometry shown in Figure 13-2(a) sketch (8) with three compartments having the maximum dimensions of the actual vessel (thus, a five- or six-compartment vessel for example would be analyzed as if it had only three compartments).

(13) 13-10 UNREINFORCED VESSELS HAVING AN OBROUND CROSS SECTION [FIGURE 13-2(B) SKETCH (1)]

For the equations in these paragraphs, the moments of inertia are calculated on a per-unit-width basis. That is, $I = bt^3/12$, where $b = 1.0$. See para. 13-4(k).

(a) Membrane Stress

Semicylindrical sections:

$$(S_m)_B = PR/t_1 \tag{1}$$

$$(S_m)_C = P(R + L_2)/t_1 \tag{2}$$

Side plates:

$$S_m = PR/t_2 \tag{3}$$

(b) Bending Stress

Semicylindrical sections:

$$(S_b)_B = \frac{PL_2c}{6I_1}(3L_2 - C_1/A) \tag{4}$$

$$(S_b)_C = \frac{PL_2c}{6I_1}\left[3(L_2 + 2R) - C_1/A\right] \tag{5}$$

Side plates:

$$(S_b)_A = PL_2C_1c/6AI_2 \tag{6}$$

$$(S_b)_B = \frac{PL_2c}{6I_2}(3L_2 - C_1/A) \tag{7}$$

(c) Total Stress

Semicylindrical sections:

$$(S_T)_B = \text{eq.}(1) + \text{eq.}(4) \tag{8}$$

$$(S_T)_C = \text{eq.}(2) + \text{eq.}(5) \tag{9}$$

Side plates:

$$(S_T)_A = \text{eq.}(3) + \text{eq.}(6) \tag{10}$$

$$(S_T)_B = \text{eq.}(3) + \text{eq.}(7) \tag{11}$$

13-11 REINFORCED VESSELS OF OBROUND CROSS SECTION [FIGURE 13-2(B) SKETCH (2)] (13)

(a) In the type of construction shown in Figure 13-2(b) sketch (2), the analysis is similar to that in 13-10, but in addition, the spacing of the reinforcing members and the adequacy of the reinforced section must be determined.

(b) The rules of this part of this Appendix cover only the type of reinforced obround cross section vessel shown in Figure 13-2(b) sketch (2) where welded-on reinforcement [see 13-8(b)] either following the contour of the vessel or being in the form of a rectangular frame, is continuous in a plane perpendicular to the longitudinal axis of the vessel; however, the spacing between reinforcing members need not be uniform. In the case where the reinforcement is in the form of a rectangular frame, the analysis is carried out the same as if the reinforcement followed the contour of the vessel. All reinforcement members must have the same moment of inertia. For any other type of reinforced obround cross section vessel, see U-2.

(c) The end closures for vessels of this type shall be designed in accordance with the provisions in 13-4(f).

(d) Distance Between Reinforcing Members. The distance between reinforcing members and the effective width of plate w shall be determined by the procedure given in 13-8(d) except that eqs. 13-8(d)(5)(1a) and 13-8(d)(5)(1b) are not applicable.

(e) Strength of Composite Plate and Reinforcing Member

(1) Membrane Stress

Provided by IHS under license with ASME
No reproduction or networking permitted without license from IHS
Licensee=Chevron Phillips Chemical Co LP/5956674001
Not for Resale, 11/09/2014 20:41:36 MST

Semicylindrical sections:

$$(S_m)_B = \frac{PRp}{A_1 + pt_1} \quad (1)$$

$$(S_m)_C = \frac{P(R + L_2)p}{A_1 + pt_1} \quad (2)$$

Side plates:

$$S_m = \frac{PRp}{A_1 + pt_1} \quad (3)$$

(2) Bending Stress

Semicylindrical sections:

$$(S_b)_B = \frac{PL_2pc}{6I_{11}}(3L_2 - C_2/A_3) \quad (4)$$

$$(S_b)_C = \frac{PL_2pc}{6I_{11}}\left[3(L_2 + 2r) - C_2/A_3\right] \quad (5)$$

Side plates:

$$(S_b)_A = \frac{PL_2pc}{6I_{11}}(-C_2/A_3) \quad (6)$$

$$(S_b)_B = \frac{PL_2pc}{6I_{11}}(3L_2 - C_2/A_3) \quad (7)$$

(3) Total Stress

Semicylindrical sections:

$$(S_T)_B = \text{eq.}(1) + \text{eq.}(4) \quad (8)$$

$$(S_T)_C = \text{eq.}(2) + \text{eq.}(5) \quad (9)$$

Side plates:

$$(S_T)_A = \text{eq.}(3) + \text{eq.}(6) \quad (10)$$

$$(S_T)_B = \text{eq.}(3) + \text{eq.}(7) \quad (11)$$

(13) 13-12 STAYED VESSELS OF OBROUND CROSS SECTION [FIGURE 13-2(B) SKETCH (3)]

For the equations in these paragraphs, the moments of inertia are calculated on a per-unit-width basis. That is, $I = bt^3/12$, where $b = 1.0$. See para. 13-4(k)).

(a) The type of stayed construction considered in this Appendix is shown on Figure 13-2(b) sketch (3). The staying member may be a plate welded to the side plates for the entire length of the vessel, or the stays can be bars of circular cross section fastened to the side plates on a uniform pitch. For the former case, the stay plates shall not be constructed so as to create pressure containing partitions (see UG-19 for vessels containing more than one independent pressure chamber). For the latter case, the rules of UG-47(a), UG-48, UG-49, and UG-50 must be met. End plates are subject to the rules of 13-4(f).

(b) Vessel Stayed by a Single Plate. Figure 13-2(b) sketch (3) shows a vessel with a central stay plate.

(1) Membrane Stress

Semicylindrical sections:

$$(S_m)_B = \frac{PR}{t_1} \quad (1)$$

$$(S_m)_C = \frac{P}{2t_1}\left[2(R + L_2) - L_2\right] = F \quad (2)$$

Side plates:

$$S_m = PR/t_2 \quad (3)$$

Stay plate:

$$S_m = PL_2F/t_3 \quad (4)$$

(2) Bending Stress

Semicylindrical sections:

$$(S_b)_B = \frac{PL_2c}{2I_1A}\left[F(B - AL_2) - \frac{C_1}{3} + AL_2\right] \quad (5)$$

$$(S_b)_C = \frac{PL_2c}{2I_1A}\left[F(B - AL_2 - AR) + A(L_2 + 2R) - \frac{C_1}{3}\right] \quad (6)$$

Side plates:

$$(S_b)_A = \frac{PL_2c}{2I_2A}(BF - C_1/3) \quad (7)$$

$$(S_b)_B = \frac{PL_2c}{2I_2A}\left[F(B - AL_2) - \frac{C_1}{3} + AL_2\right] \quad (8)$$

(3) Total Stress

Semicylindrical sections:

$$(S_T)_B = \text{eq.}(1) + \text{eq.}(5) \quad (9)$$

Provided by IHS under license with ASME
No reproduction or networking permitted without license from IHS
Licensee=Chevron Phillips Chemical Co LP/5956674001
Not for Resale, 11/09/2014 20:41:36 MST

$$(S_T)_C = \text{eq.}(2) + \text{eq.}(6) \quad (10)$$

Side plates:

$$(S_T)_A = \text{eq.}(3) + \text{eq.}(7) \quad (11)$$

$$(S_T)_B = \text{eq.}(3) + \text{eq.}(8) \quad (12)$$

Stay plate:

$$S_T = \text{eq.}(4) \quad (13)$$

(c) Vessel Stayed by Single Row of Circular Cross Section Bars on Uniform Pitch [Figure 13-2(b) Sketch (3)]. The maximum pitch distance is determined per eq. UG-47(a)(1).

(1) Membrane Stress

Semicylindrical sections:

$$(S_m)_B = PR/t_1 \quad (14)$$

$$(S_m)_C = \frac{P}{2t_1}\left[2(R + L_2) - L_2F\right] \quad (15)$$

Side plates:

$$S_m = PR/t_2 \quad (16)$$

Stay bars:

$$S_m = \frac{4PL_2Fp}{\pi t_3^2} \quad (17)$$

(2) Bending Stress

Semicylindrical sections:

$$(S_b)_B = \frac{PL_2c}{2I_1A}\left[F(B - AL_2) - \frac{C_1}{3} + AL_2\right] \quad (18)$$

$$(S_b)_C = \frac{PL_2c}{2I_1A}\left[F(B - AL_2 - AR) + A(L_2 + 2R) - \frac{C_1}{3}\right] \quad (19)$$

Side plates:

$$(S_b)_A = \frac{PL_2c}{2I_2A}(BF - C_1/3) \quad (20)$$

$$(S_b)_B = \frac{PL_2c}{2I_2A}\left[F(B - AL_2) - \frac{C_1}{3} + AL_2\right] \quad (21)$$

(3) Total Stress

Semicylindrical sections:

$$(S_T)_B = \text{eq.}(14) + \text{eq.}(18) \quad (22)$$

$$(S_T)_C = \text{eq.}(15) + \text{eq.}(19) \quad (23)$$

Side plates:

$$(S_T)_A = \text{eq.}(16) + \text{eq.}(20) \quad (24)$$

$$(S_T)_B = \text{eq.}(16) + \text{eq.}(21) \quad (25)$$

Stay bars:

$$(S_T) = \text{eq.}(17) \quad (26)$$

(4) In the event that $(L_2 + R/2) > p$, then compute a possible new pressure rating per 13-9(d)(4).

13-13 VESSELS OF CIRCULAR CROSS SECTION HAVING A SINGLE DIAMETRAL STAYING MEMBER [FIGURE 13-2(C)] (13)

For the equations in these paragraphs, the moments of inertia are calculated on a per-unit-width basis. That is, $I = bt^3/12$, where $b = 1.0$. See para. 13-4(k).

(a) The cylindrical shell and diametral stay plate are sized such that the various vessel members will not be overstressed when there is full pressure in both vessel compartments or when there is full pressure in one compartment and zero pressure in the other compartment. End closure plates or heads are subject to the rules of 13-4(f) and shall be designed for the maximum pressure condition in the compartments. Stresses need to be computed only at the shell-plate junction since this is the location of maximum stress.

(b) For the case of equal pressure in both compartments, stresses are as follows:

(1) Membrane Stress

Shell section:

$$S_m = P_1R/t_1 \quad (1)$$

Diametral plate:

$$S_m = \frac{2\pi P_1 t_1^2}{3Rt_3(\pi^2 - 8)} \quad (2)$$

Provided by IHS under license with ASME
No reproduction or networking permitted without license from IHS
Licensee=Chevron Phillips Chemical Co LP/5956674001
Not for Resale, 11/09/2014 20:41:36 MST

(2) Bending Stress

Shell section:

$$S_b = \frac{c}{I_1}\left[\frac{2P_1 t_1^2}{3(\pi^2 - 8)}\right] \quad (3)$$

(3) Total Stress

Shell section:

$$S_T = \text{eq.}(1) + \text{eq.}(3) \quad (4)$$

Diametral plate:

$$S_T = \text{eq.}(2) \quad (5)$$

(c) For the case of unequal pressures in the compartments, stresses are as follows, where P is the maximum value P_1 or P_2:

(1) Membrane Stress

Shell section:

$$S_m = PR/t_1 \quad (6)$$

Diametral plate:

$$S_m = \frac{\pi t_1^2 (P_1 + P_2)}{3Rt_3(\pi^2 - 8)} \quad (7)$$

(2) Bending Stress

Shell section:

$$s_b = \frac{c}{3I_1}\left[P_1\left(\frac{2t_1^2}{\pi^2 - 8}\right) + (P_1 - P_2)\frac{3R^2}{6 + (t_3/t_1)^3}\right] \quad (8)$$

Diametral plate:

For $L_v \le 2R$,

$$S_b = \frac{J_1 c}{I_3}\left[(P_1 - P_2)L_v^2\right] \quad (9)$$

For $L_v > 2R$,

$$S_b = \frac{J_1 c}{I_3}\left[(P_1 - P_2)(4R^2)\right] \quad (10)$$

where J_1 is given in Table 13-13(c).

(3) Total Stress

Shell section:

$$S_T = \text{eq.}(6) + \text{eq.}(8) \quad (11)$$

Table 13-13(c)

Ratio of Long to Short Side of Plate Element	Plate Parameter J_1
1.0	0.0513
1.1	0.0581
1.2	0.0639
1.3	0.0694
1.4	0.0755
1.5	0.0812
1.6	0.0862
1.7	0.0908
1.8	0.0948
1.9	0.0985
2.0	0.1017
3.0	0.1189
4.0	0.1235
≥ 5.0	0.1246

Diametral plate:

$$S_T = \text{eq.}(7) + \text{eq.}(9) \text{ or } (10) \quad (12)$$

13-14 VESSELS OF NONCIRCULAR CROSS SECTION SUBJECT TO EXTERNAL PRESSURE

Rectangular cross section vessels per Figure 13-2(a) sketches (1) and (2) subject to external pressure shall meet the following requirements:

(a) The stresses shall be calculated in accordance with 13-7(a) and 13-7(b) except that P_e shall be substituted for P. These stresses shall meet the allowable stress criteria as for the case of internal pressure in accordance with 13-4.

(b) The four side plates and the two end plates shall be checked for stability in accordance with eq. (1). In the following equations, the plate thickness t and the modulus of elasticity E_2 must be adjusted if the plate is perforated. In equations for S_{mA} and S_{mB}, multiply t by e_m; in equations for S_{crA} and S_{crB}, no adjustment of t shall be made.

A = subscript to identify stress or load acting in direction parallel to long dimension of panel being considered

B = subscript to identify stress or load acting in direction parallel to short dimension of panel being considered

S_{mA} = compression stress applied to short edge of side panels due to external pressure on the end plates [see Figure 13-14(b)]

Provided by IHS under license with ASME
No reproduction or networking permitted without license from IHS
Licensee=Chevron Phillips Chemical Co LP/5956674001
Not for Resale, 11/09/2014 20:41:36 MST

S_{mB} = compression stress applied to long edge of side panels and end panels due to external pressure on the adjacent side plates [see Figure 13-14(b)]

K_A; K_B = plate buckling coefficients, obtained from Figure 13-14(a), as used in equations for calculating S_{crA} and S_{crB}, respectively

S_{crA}; S_{crB} = plate buckling stress when panel is subjected to stresses on two opposite edges in directions indicated by subscripts A and B [see Figure 13-14(b)]

$$\frac{2S_{mA}}{S_{crA}} + \frac{2S_{mB}}{S_{crB}} \leq 1.0 \qquad (1)$$

where

S_{crA} = S'_{crA} when $S'_{crA} \leq S_y/2$
= S''_{crA} when $S'_{crA} > S_y/2$
S_{crB} = S'_{crB} when $S'_{crB} \leq S_y/2$
= S''_{crB} when $S'_{crB} > S_y/2$

Short-side plates:

$$S_{mA} = \frac{P_e h H}{2(t_1 H + t_2 h)} \qquad (2)$$

Figure 13-14(a)

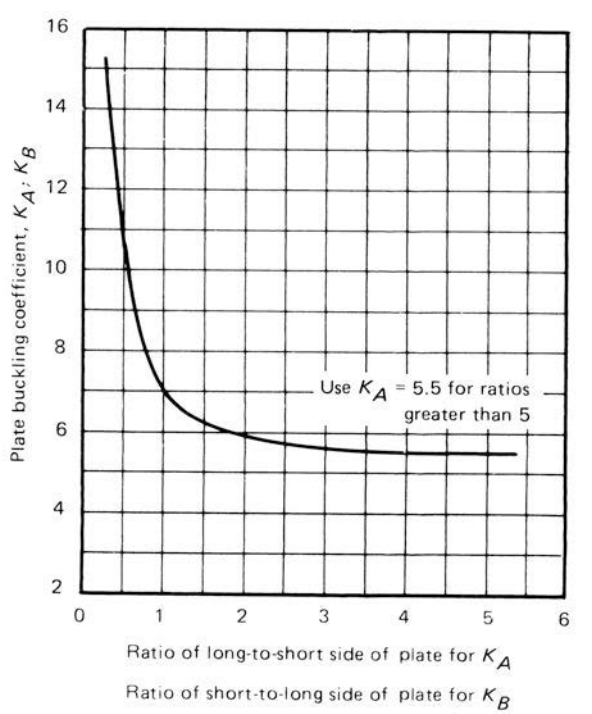

GENERAL NOTE: When ratio is less than 0.258, use K_B = 1.0 and L_v = (short side dimension, H or h) in equations for calculating S'_{crB}.

Figure 13-14(b)
Orientation of Panel Dimensions and Stresses

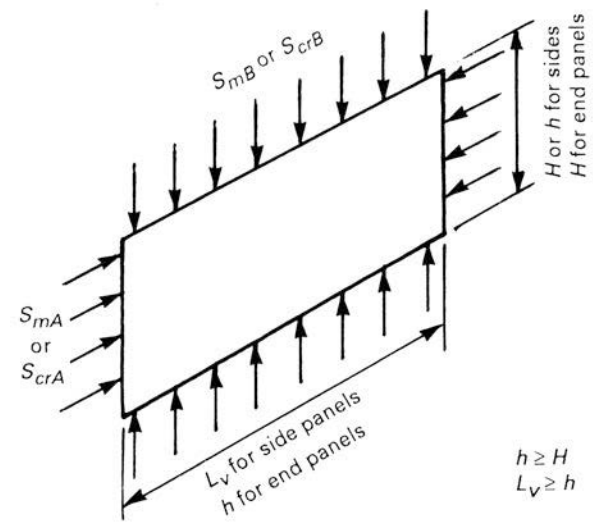

NOTE: These equations apply to vessels in which the long-side plates are of equal thickness. If thicknesses are not equal, replace $2t_2$ with $(t_2 + t_{22})$.

$$S_{mB} = P_e h / 2t_1 \qquad (3)$$

$$S'_{crA} = \frac{\pi^2 E_2}{12(1-\nu^2)}\left(\frac{t_1}{H}\right)^2 K_A \qquad (4A)$$

$$S''_{crA} = S_y - S_y^2 / 4S'_{crA} \qquad (4B)$$

$$S'_{crB} = \frac{\pi^2 E_2}{12(1-\nu^2)}\left(\frac{t_1}{L_v}\right)^2 K_B \qquad (5A)$$

$$S''_{crB} = S_y - \frac{S_y^2}{4S_{crB}} \qquad (5B)$$

Long-side plates:

$$S_{mA} = \frac{P_e h H}{2(t_1 H + t_2 h)} \qquad (6)$$

NOTE: These equations apply to vessels in which the long-side plates are of equal thickness. If thicknesses are not equal, replace $2t_2$ with $(t_2 + t_{22})$.

$$S_{mB} = \frac{P_e H}{2t_2} \qquad (7)$$

Provided by IHS under license with ASME
No reproduction or networking permitted without license from IHS
Licensee=Chevron Phillips Chemical Co LP/5956674001
Not for Resale, 11/09/2014 20:41:36 MST

NOTE: These equations apply to vessels in which the long-side plates are of equal thickness. If thicknesses are unequal, then use eqs. 13-7(b)(1)(12A) and 13-7(b)(1)(12B).

$$S'_{crA} = \frac{\pi^2 E_2}{12(1-\nu^2)}\left(\frac{t_2}{h}\right)^2 K_A \tag{8A}$$

$$S''_{crA} = S_y - \frac{S_y{}^2}{4S'_{crA}} \tag{8B}$$

$$S'_{crB} = \frac{\pi^2 E_2}{12(1-\nu^2)}\left(\frac{t_2}{L_v}\right)^2 K_B \tag{9A}$$

$$S''_{crB} = S_y - \frac{S_y{}^2}{4S'_{crB}} \tag{9B}$$

End plates:

$$S_{mA} = \frac{P_e H L_v}{2(t_2 L_v + t_5 H)} \tag{10}$$

NOTE: These equations apply to vessels in which the long-side plates are of equal thickness. If thicknesses are not equal, replace $2t_2$ with $(t_2 + t_{22})$.

$$S_{mB} = \frac{P_e h L_v}{2(t_1 L_v + t_5 h)} \tag{11}$$

$$S'_{crA} = \frac{\pi^2 E_2}{12(1-\nu^2)}\left(\frac{t_5}{H}\right)^2 K_A \tag{12A}$$

$$S''_{crA} = S_y - \frac{S_y{}^2}{4S'_{crA}} \tag{12B}$$

$$S'_{crB} = \frac{\pi^2 E_2}{12(1-\nu^2)}\left(\frac{t_5}{h}\right)^2 K_B \tag{13A}$$

$$S''_{crB} = S_y - \frac{S_y{}^2}{4S'_{crB}} \tag{13B}$$

(c) In addition to checking each of the four side plates and the two end plates for stability in accordance with eq. (b)(1) above, the cross section shall be checked for column stability in accordance with eq. (14) as follows:

$$\frac{S_a}{F_a} + \frac{S_b}{(1 - S_d/F'_e)S} \le 1.0 \tag{14}$$

where

$$S_a = \frac{P_e h_o H_o}{2(t_1 H_o + t_2 h_o)} \tag{15}$$

NOTE: These equations apply to vessels in which the long-side plates are of equal thickness. If thicknesses are not equal, replace $2t_2$ with $(t_2 + t_{22})$.

when

$$2L_v/R_1 \le C_c$$

$$F_a = \frac{\left[1 - \frac{(2L_v/R_1)^2}{2C_c^2}\right]S_y}{\frac{5}{3} + \frac{3(2L_v/R_1)}{8C_c} - \frac{(2L_v/R_1)^3}{8C_c^3}} \tag{16A}$$

when

$$2L_v/R_1 > C_c$$

$$F_a = \frac{12\pi^2 E_2}{23(2L_v/R_1)^2} \tag{16B}$$

$$C_c = \sqrt{\frac{2\pi^2 E_2}{S_y}} \tag{17}$$

$$S_b = \frac{M c_1}{I_e} \tag{18}$$

$$M = P_e h_o H_o \bar{y} \tag{19}$$

$$F'_e = \frac{12\pi^2 E_2}{23(2L_v/R_1)^2} \tag{20}$$

13-15 FABRICATION

(a) Fabrication of vessels shall be in accordance with applicable parts of Subsection A and Subsection B, Part UW, except as otherwise provided for in this Appendix. Category A joints (see UW-3) may be of Type No. (3) of Table UW-12 when the thickness does not exceed $^5/_8$ in. (16 mm).

Provided by IHS under license with ASME
No reproduction or networking permitted without license from IHS
Licensee=Chevron Phillips Chemical Co LP/5956674001
Not for Resale, 11/09/2014 20:41:36 MST

(b) This Appendix covers fabrication of vessels by welding. Other methods of fabrication are permissible provided the requirements of applicable parts of this Section are met.

13-16 INSPECTION

Inspection and testing shall be carried out as stated in Subsection A.

(13) 13-17 EXAMPLES

See UG-16(f).

13-18 SPECIAL CALCULATIONS

(a) Weld Efficiency. Cases may arise where application of the weld efficiency factor E (13-5) at non-welded locations results in unnecessarily increased plate thicknesses. If the butt weld occurs at one of the locations for which equations are provided in this Appendix, then no relief can be provided. However, if the weld occurs at some intermediate location, it is permissible to calculate the bending stress at the weld location. Then, if the total stress at the joint location is within the limits of the allowable design stress SE[see 13-4(b)], using the appropriate E factor, the design will be considered satisfactory for the conditions imposed.

Consider Figure 13-2(a) sketch (1) to have, instead of a butt joint at locations M and/or N, a joint between locations M and Q and a distance d_j from location M. Since bending stress is given by $M(c/I)$, eq. 13-7(a)(2)(5) can be written

$$(S_b)_M = M_M\left(\frac{c}{I}\right) = \frac{Ph^2c}{12I_2}\left[-1.5 + \frac{(1+\alpha^2K)}{1+K}\right]$$

from which the bending moment at M is

$$M_M = \frac{Ph^2}{12}\left[-1.5 + \frac{(1+\alpha^2K)}{1+K}\right]$$

The counter-moment at distance d_j from M is $Pd_j^2/2$ so that the total moment at the joint is

$$M_j = \frac{Ph^2}{12}\left[-1.5 + \frac{(1+\alpha^2K)}{1+K}\right] + \frac{Pd_j^2}{2}$$

The bending stress is then

$$(S_b)_j = M_j\left(\frac{c}{I}\right) = \frac{Pc}{12I_2}\left\{h^2\left[-1.5 + \left(\frac{1+\alpha^2K}{1+K}\right)\right] + 6d_j^2\right\}$$

and the total stress (bending plus membrane) is

$$(S_T)_j = S_m + (S_b)_j$$

where $(S_b)_j$ may be either positive or negative depending on whether the inside or the outside surface is considered. See 13-4(b) and 13-5.

$$(S_T)_j = \frac{PH}{2t_2} + \frac{Pc}{12I_2}\left\{h^2\left[-1.5 + \left(\frac{1+\alpha^2K}{1+K}\right)\right] + 6d_j^2\right\}$$

NOTE: For the equations within (a), the moments of inertia are calculated on a per-unit-width basis. That is, $I = bt^3/12$, where $b = 1.0$. The moments M_M and M_j have dimensions (force × length/length) = force. See para. 13-4(k).

A summary of equations for various geometries is given in Table 13-18.1.

(b) Ligament Efficiencies. The applied membrane and bending stresses at a location containing a row of holes are higher than at the location without holes. When there are no holes at the location where the highest bending moments occur, e.g., at the midpoint of the sides and in the corner regions in vessels without stays, the application of the ligament efficiency factors may result in an unnecessary increase in required plate thickness.

Rows of holes may be located in regions of relatively low bending moments to keep the required plate thickness to a minimum. Therefore, it is permissible to calculate the stresses at the center line of each row of holes closest to the locations where the highest bending moments occurs, i.e., at the midpoint of the sides and at the corners. If the diameter of all the holes are not the same, the stresses must be calculated for each set of e_m and e_b values.

The applied gross area stresses may be calculated using the same procedure as for calculating the stresses at a joint [refer to (a) above]. The value of d_j to be used in the equations is the distance from the midpoint of the side to the plane containing the centerlines of the holes.

The net area stresses are calculated according to the procedures in 13-4(g). The total (net area) stresses are determined by the methods given in 13-4(c) and compared with the allowable design stresses according to 13-4(g) and 13-4(b).

(c) Vessels per Figure 13-2(a) sketch (1) with aspect ratios of L_v/H or L_v/h between 1.0 and 2.0 and with flat heads welded to the sides visible in the sketch, may be designed in accordance with the rules of (1), (2), and (3) below. For such vessels with aspect ratios of L_v/H or L_v/h less than 1.0, the axis of the vessel shall be rotated so that the largest dimension becomes the length L_v, and new ratios L_v/H and L_v/h are 1.0 or larger. All stresses shall be recalculated using the new orientation.

(1) Membrane Stress. Equations 13-7(a)(1)(1) and 13-7(a)(1)(2) shall be used to determine the membrane stresses.

Provided by IHS under license with ASME
No reproduction or networking permitted without license from IHS
Licensee=Chevron Phillips Chemical Co LP/5956674001
Not for Resale, 11/09/2014 20:41:36 MST

(2) Bending Stress. Equations 13-7(a)(2)(3), 13-7(a)(2)(4), 13-7(a)(2)(5), and 13-7(a)(2)(6) multiplied by the plate parameters of Table 13-18(b) shall be used to determine the bending stresses as follows:

Short-side plates:

$$(S_b)_N = \text{eq.}(3) \times J_2$$

$$(S_b)_Q = \text{eq.}(4) \times J_3$$

Long-side plates:

$$(S_b)_M = \text{eq.}(5) \times J_2$$

$$(S_b)_Q = \text{eq.}(6) \times J_3$$

(3) Total Stress

Short-side plates:

$$(S_T)_N = \text{eq.}(1) + \text{eq.}(3)$$

$$(S_T)_Q = \text{eq.}(1) + \text{eq.}(4)$$

Long-side plates:

$$(S_T)_M = \text{eq.}(2) + \text{eq.}(5)$$

$$(S_T)_Q = \text{eq.}(2) + \text{eq.}(6)$$

(d) Vessels per Figure 13-2(a) sketch (2) with aspect ratios of L_v/H or L_v/h between 1.0 and 2.0, and with flat heads welded to the sides visible in the sketch, may be designed in accordance with the rules of (1), (2), and (3) below. For such vessels with aspect ratios of L_v/H or L_v/h less than 1.0, the axis of the vessel shall be rotated so that the largest dimension becomes the length L_v, and new ratios L_v/H and L_v/h are 1.0 or larger. All stresses shall be recalculated using the new orientation.

(1) Membrane Stress. Equations 13-7(b)(1)(11), 13-7(b)(1)(12A), and 13-7(b)(1)(12B) shall be used to determine the membrane stresses.

(2) Bending Stress. Equations 13-7(b)(2)(13), 13-7(b)(2)(14), 13-7(b)(2)(15), 13-7(b)(2)(16), 13-7(b)(2)(17), and 13-7(b)(2)(18) multiplied by the plate parameters of Table 13-18(b) shall be used to determine the bending stress as follows:

Short-side plates:

$$(S_b)_Q = \text{eq.}(13) \times J_3$$

$$(S_b)_{Q1} = \text{eq.}(14) \times J_3$$

Long-side plates:

$$(S_b)_M = \text{eq.}(15) \times J_2$$

$$(S_b)_{M1} = \text{eq.}(16) \times J_2$$

$$(S_b)_Q = \text{eq.}(17) \times J_3$$

$$(S_b)_{Q1} = \text{eq.}(18) \times J_3$$

(3) Total Stress

Short-side plates:

$$(S_T)_Q = \text{eq.}(11) + \text{eq.}(13)$$

$$(S_T)_{Q1} = \text{eq.}(11) + \text{eq.}(14)$$

Long-side plates:

$$(S_T)_M = \text{eq.}(12\text{B}) + \text{eq.}(15)$$

$$(S_T)_{M1} = \text{eq.}(12\text{A}) + \text{eq.}(16)$$

$$(S_T)_Q = \text{eq.}(12\text{B}) + \text{eq.}(17)$$

$$(S_T)_{Q1} = \text{eq.}(12\text{A}) + \text{eq.}(18)$$

Provided by IHS under license with ASME
No reproduction or networking permitted without license from IHS
Licensee=Chevron Phillips Chemical Co LP/5956674001
Not for Resale, 11/09/2014 20:41:36 MST

Table 13-18.1

Figure 13-2	Location of Weld Between	Bending Stress at Joint ± $(S_b)_j$, psi (MPa)	Notes
13-2(a) sketch (1)	M and Q	$\frac{Pc}{12I_2}\left\{h_2\left[-1.5+\left(\frac{1+\alpha^2K}{1+K}\right)\right]+6d_j^2\right\}$	(1)
13-2(a) sketch (1)	N and Q	$\frac{Pc}{12I_1}\left[-1.5H^2+h^2\frac{\left(1+\alpha^2K\right)}{1+K}+6d_j^2\right]$	(1)
13-2(a) sketch (2)	M and Q	$\frac{Pc}{2I_{22}}\left\{\frac{h^2}{2N}\left[\left(K_2-k_1k_2\right)+\alpha^2k_2\left(K_2-k_2\right)\right]-\frac{h^2}{4}+d_j^2\right\}$	(1)
13-2(a) sketch (2)	M_1 and Q_1	$\frac{Pc}{2I_2}\left\{\frac{h^2}{2N}\left[\left(K_1k_1-k_2\right)+\alpha^2k_2\left(K_1-k_2\right)\right]-\frac{h^2}{4}+d_j^2\right\}$	(1)
13-2(a) sketch (3)	A and B	$\frac{c}{I_1}\left(M_A+\frac{Pd_j^2}{2}\right)$	(1), (2)
13-2(a) sketch (3)	D and C	$\frac{c}{I_1}\left[M_A+\frac{P}{2}\left(L_2^2+2RL_2-2RL_1-L_1^2+d_j^2\right)\right]$	(1), (2)
13-2(a) sketch (4)	M and Q	$\frac{Pph^2c}{24I_{11}}\left[-3+2\left(\frac{1+\alpha_1^2k}{1+k}\right)+\frac{12d_j^2}{h^2}\right]$	
13-2(a) sketch (4)	N and Q	$\frac{Ppc}{24I_{11}}\left[-3H^2+2h^2\left(\frac{1+\alpha_1^2k}{1+k}\right)+12d_j^2\right]$	
13-2(a) sketch (5)	A and B	$\frac{c}{I_{21}}\left(M_A+P\frac{pd_j^2}{2}\right)$	
13-2(a) sketch (5)	B and C	$\frac{c}{I_2}\left(M_A+P\frac{pd_j^2}{2}\right)$	
13-2(a) sketch (5)	H and G	$\frac{c}{I_{11}}\left\{M_A+P\frac{p}{2}\left[\left(L_2+L_{21}\right)^2+2R\left(L_2+L_{21}-L_1-L_{11}\right)-\left(L_1+L_{11}\right)^2+d_j^2\right]\right\}$	
13-2(a) sketch (5)	G and F	$\frac{c}{I_1}\left\{M_A+P\frac{p}{2}\left[L_2{}^2+2L_2L_{21}+L_{21}{}^2-2L_1L_{11}-L_{11}{}^2+2R\left(L_2+L_{21}-L_1-L_{11}\right)+d_j^2\right]\right\}$	
13-2(a) sketch (6)	A and B	$(c/I_{21})\left[M_A+Ppd_j^2/2\right]$	
13-2(a) sketch (6)	B and C	$(c/I_1)\left[M_A+Ppd_j^2/2\right]$	
13-2(a) sketch (6)	F and G	$(c/I_1)[M_A+W[L_4{}^2+L_4t_1+2.0L_4\,\bar{Y}_1-L_3{}^2-2.0L_3\,(\bar{Y}_2+t_1/2)]+Ppd_j^2/2]$	
13-2(a) sketch (6)	H and G	$(c/I_{11})[M_A+W[L_4{}^2+L_4t_1+2.0L_4\,\bar{Y}_1-L_3{}^2-2.0L_3\,(\bar{Y}_2+t_1/2)]+Ppd_j^2/2]$	
13-2(b) sketch (1)	A and B	$\frac{Pc}{I_2}\left(\frac{-L_2C_1}{6A}+\frac{d_j^2}{2}\right)$	(1)
13-2(b) sketch (2)	A and B	$\frac{Ppc}{I_{11}}\left(\frac{-L_2C_2}{6A_3}+\frac{d_j^2}{2}\right)$	

NOTES:
(1) For this equation, the moments of inertia are calculated on a per-unit-width basis. That is, $I = bt^3/12$, where $b = 1.0$. See para. 13-4(k).
(2) For this equation, moment M_A has dimensions, force × length/length = force. See para. 13-4(k).

Provided by IHS under license with ASME
No reproduction or networking permitted without license from IHS
Licensee=Chevron Phillips Chemical Co LP/5956674001
Not for Resale, 11/09/2014 20:41:36 MST

Table 13-18(b)

L_v/H or L_v/h	J_2	J_3
1.0	0.56	0.62
1.1	0.64	0.70
1.2	0.73	0.77
1.3	0.79	0.82
1.4	0.85	0.87
1.5	0.89	0.91
1.6	0.92	0.94
1.7	0.95	0.96
1.8	0.97	0.97
1.9	0.99	0.99
2.0	1.00	1.00

Provided by IHS under license with ASME
No reproduction or networking permitted without license from IHS
Licensee=Chevron Phillips Chemical Co LP/5956674001
Not for Resale, 11/09/2014 20:41:36 MST

MANDATORY APPENDIX 14
INTEGRAL FLAT HEADS WITH A LARGE, SINGLE, CIRCULAR, CENTRALLY LOCATED OPENING

14-1 SCOPE

(a) In accordance with UG-39(c)(1), flat heads which have a single, circular, centrally located opening that exceeds one-half of the head diameter shall be designed according to the rules which follow. The shell-to-flat head juncture shall be either integral, as shown in Figure UG-34 sketches (a), (b-1), (b-2), (d), and (g), or a butt weld, or a full penetration corner weld similar to the joints shown in Figure UW-13.2 sketches (a), (b), (c), (d), (e), and (f). When Figure UW-13.2 sketches (c) and (d) are used, the maximum wall thickness of the shell shall not exceed $^3/_8$ in. (10 mm) and the maximum design metal temperature shall not exceed 650°F (345°C). The central opening in the flat head may have a nozzle which is integral or integrally attached by a full penetration weld or may have an opening without an attached nozzle or hub. For openings in which the nozzle is attached with non-integral welds (i.e., a double fillet or partial penetration weld) use the design rules for an opening without an attached nozzle or hub.

(b) A general arrangement of an integral flat head with or without a nozzle attached at the central opening is shown in Figure 14-1.

(c) The head thickness does not have to be calculated by UG-34 rules. The thickness which satisfies all the requirements of this Appendix meets the requirements of the Code.

14-2 NOMENCLATURE

Except as given below, the symbols used in the equations of this Appendix are defined in 2-3.

A = outside diameter of flat head and shell
B_n = diameter of central opening (for nozzle, this is inside diameter and for opening without nozzle, diameter of opening)
B_s = inside diameter of shell (measured below tapered hub, if one exists)
$(E\theta)^*$ = slope of head with central opening or nozzle times the modulus of elasticity, disregarding the interaction of the integral shell at the outside diameter of the head, psi (MPa)
M_H = moment acting at shell-to-flat head juncture
P = internal design pressure (see UG-21)
t = flat head nominal thickness

B_1, F, S_H, S_R, S_T, V, f, g_o, g_1, and h_o are defined in 2-3. These terms may refer to either the shell-to-flat head juncture or to the central opening-to-flat head juncture and depend upon details at those junctures.

14-3 DESIGN PROCEDURE

(a) Disregard the shell attached to the outside diameter of the flat head and then analyze the flat head with a central opening (with or without a nozzle) in accordance with these rules.

(1) Calculate the operating moment M_o according to 2-6. (There is no M_o for gasket seating to be considered.) The formulas in Mandatory Appendix 2 for loads (2-3) and moment arms (Table 2-6) shall be used directly with the following definitions and terms substituted for terms in Mandatory Appendix 2:

Let $C = G$ = inside diameter of shell B_s; $B = B_n$, where B_n is as shown in Figure 14-1 depending on an integral nozzle or no nozzle.

The moment arm h_g in Table 2-6 will be equal to zero when using the rules of this Appendix. The M_G moment will therefore be equal to zero.

(2) With $K = A/B_n$, use 2-7 to calculate the stresses S_H, S_R, and S_T. The S_H and S_R stresses are equal to zero for the case of an opening without a nozzle.

(b) Calculate $(E\theta)^*$:

(1) for an integrally attached nozzle,

$$(E\theta)^* = \frac{0.91\left(g_1/g_o\right)^2 B_1 V}{f h_o} S_H$$

(2) for an opening without a nozzle or with a nozzle or hub attached with a non-integral weld,

$$(E\theta)^* = (B_n/t)S_T$$

where g_o, g_1, B_1, V, f, h_o, and B_n all pertain to the opening in the flat head as described in (a).

Provided by IHS under license with ASME
No reproduction or networking permitted without license from IHS
Licensee=Chevron Phillips Chemical Co LP/5956674001
Not for Resale, 11/09/2014 20:41:36 MST

Figure 14-1
Integral Flat Head With Large Central Opening

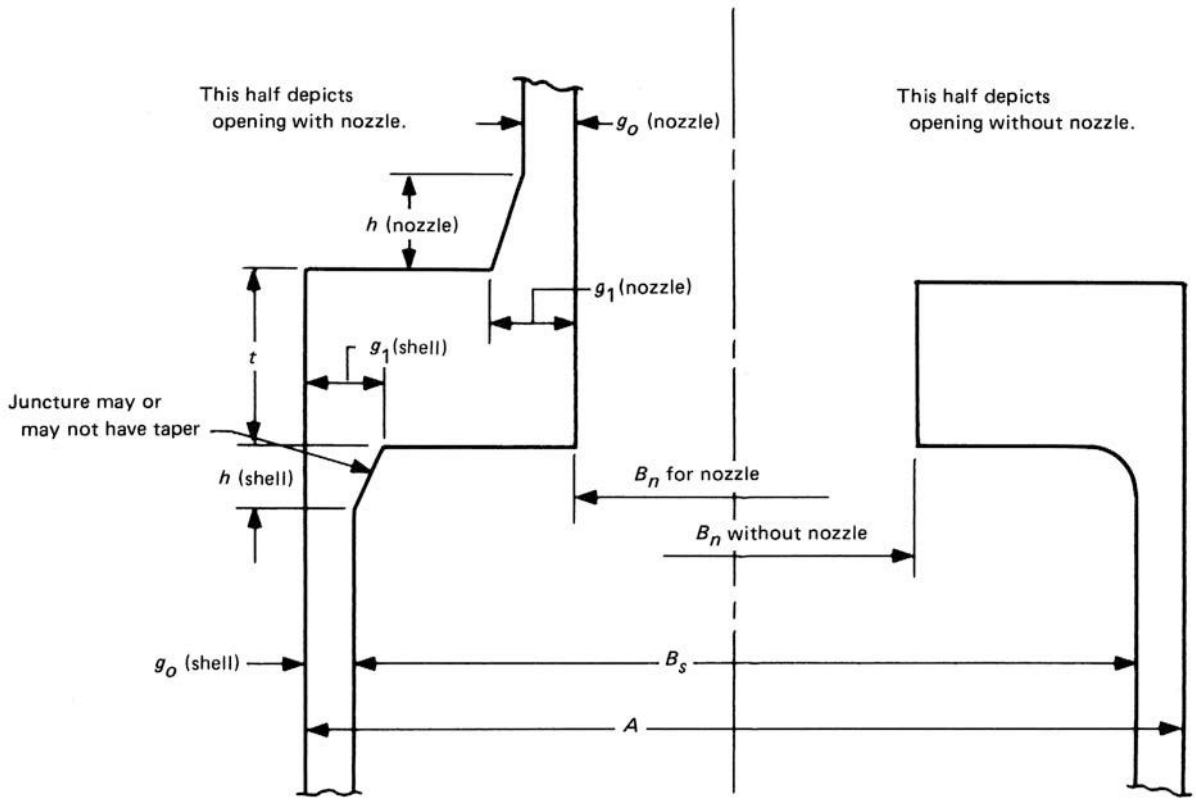

(**13**)

Figure 14-2

DELETED

Provided by IHS under license with ASME
No reproduction or networking permitted without license from IHS
Licensee=Chevron Phillips Chemical Co LP/5956674001
Not for Resale, 11/09/2014 20:41:36 MST

(c) Calculate M_H:

$$M_H = \frac{(E\theta)^*}{\frac{1.74 h_o V}{g_o^3 B_1} + \frac{(E\theta)^*}{M_o}(1 + Ft/h_o)}$$

where h_o, V, g_o, B_1, and F refer to the shell attached to the outside diameter of the flat head.

(d) Calculate X_1:

$$X_1 = \frac{M_o - M_H(1 + Ft/h_o)}{M_o}$$

where F and h_o refer to the shell.

(e) Calculate stresses at head/shell juncture and opening/head juncture as follows:

(1) Head/Shell Juncture

Longitudinal hub stress in shell

$$S_{HS} = (X_1)(E\theta)^* \frac{1.10 h_o f}{(g_1/g_o)^2 B_s V}$$

where h_o, f, g_o, g_1, B_s, and V refer to the shell.

Radial stress at outside diameter

$$S_{RS} = \frac{1.91 M_H(1 + Ft/h_o)}{B_s t^2} + \frac{0.64 F M_H}{B_s h_o t}$$

where B_s, F, and h_o refer to the shell.

Tangential stress at outside diameter

$$S_{TS} = \frac{(X_1)(E\theta)^* t}{B_s} - \frac{0.57(1 + Ft/h_o)M_H}{B_s t^2} + \frac{0.64 F Z M_H}{B_s h_o t}$$

where B_s, F, and h_o refer to the shell, and

$$Z = \frac{K^2 + 1}{K^2 - 1}$$

(2) Opening/Head Juncture

Longitudinal hub stress in central opening

$$S_{HO} = X_1 S_H$$

Radial stress at central opening

$$S_{RO} = X_1 S_R$$

Tangential stress at diameter of central opening

$$S_{TO} = X_1 S_T + \frac{0.64 F Z_1 M_H}{B_s h_o t}$$

where F, B_s, and h_o refer to the shell, and

$$Z_1 = \frac{2K^2}{K_2 - 1}$$

(f) The calculated stresses above shall meet the allowable stresses in 2-8.

14-4 DATA REPORTS

When all the requirements of this Division and the supplemental requirements of this Appendix have been met, the following notation shall be entered on the Manufacturer's Data Report under Remarks, "Constructed in Conformance with Mandatory Appendix 14, Integral Flat Heads with a Large, Single, Circular, Centrally Located Opening."

14-5 (13)

DELETED

Provided by IHS under license with ASME
No reproduction or networking permitted without license from IHS
Licensee=Chevron Phillips Chemical Co LP/5956674001
Not for Resale, 11/09/2014 20:41:36 MST

(13) **Figure 14-3**

DELETED

Provided by IHS under license with ASME
No reproduction or networking permitted without license from IHS
Licensee=Chevron Phillips Chemical Co LP/5956674001
Not for Resale, 11/09/2014 20:41:36 MST

(13)

MANDATORY APPENDIX 16

DELETED

Provided by IHS under license with ASME

No reproduction or networking permitted without license from IHS

Licensee=Chevron Phillips Chemical Co LP/5956674001
Not for Resale, 11/09/2014 20:41:36 MST

MANDATORY APPENDIX 17
DIMPLED OR EMBOSSED ASSEMBLIES

17-1 SCOPE

(a) The rules in this Appendix cover minimum requirements for the design, fabrication, and inspection of pressure vessel assemblies limited to the following types:

(1) dimpled or embossed prior to welding;

(2) dimpled or embossed form achieved by using hydraulic or pneumatic pressure after welding.

(b) Welding processes covered under the rules of this Appendix include "weld-through" processes in which welding is done by penetrating through one or more members into, but not through, another member (see Figures 17-1 through 17-6). These welding processes are as follows:

(1) resistance spot welding;

(2) resistance seam welding;

(3) gas-metal arc spot welding in which a spot weld is produced between two overlapping metal parts by heating with a timed electric arc between a consumable metal electrode and the work. The spot weld is made without preparing a hole in either member or with a hole in the dimpled or embossed member. Filler metal is obtained from the consumable electrode, and shielding is obtained from a single gas, a gas mixture (which may contain an inert gas), or a gas and a flux. see Figure 17-4.

(4) machine, automatic, or semiautomatic gas tungsten arc seam welding without the addition of filler metal;

(5) machine, automatic, or semiautomatic gas tungsten-arc spot welding without the addition of filler metal;

(6) machine or automatic plasma arc seam welding without the addition of filler metal;

(7) machine or automatic submerged-arc seam welding with filler metal obtained from the electrode and shielding provided by the flux.

(c) Welding processes covered under the rules of this Appendix defined as "complete penetration" processes in which welding penetrates through all members to be joined (see Figure 17-17) are as follows:

(1) machine or automatic laser beam seam welding without the addition of filler metal

(2) plasma arc seam welding with or without the addition of filler metal

(d) For the purposes of specifying special requirements and degree of inspection, the weld joints made by the processes covered under the rules of this Appendix shall be considered as Category C joints.

(e) Embossed or dimpled assemblies may be made in one or more of the following manners:

(1) two embossed or two dimpled plates welded together as shown in Figures 17-1 and 17-2 or an embossed or dimpled plate welded to a plain plate as shown in Figures 17-3, 17-4, and 17-5 using a welding process described in (b)(1), (b)(2), (b)(3), (b)(4), (b)(5), (b)(6), (b)(7), or (c) above;

(2) two outer embossed or two outer dimpled plates welded to a third, intermediate plate, frame, or series of spacers to form a three-ply assembly as shown in Figure 17-6 using a welding process described in (b)(1) or (b)(2) above.

(f) Dimpled or Embossed Assemblies, which consist of a dimpled or embossed plate welded to another like plate or to a plain plate and for which the welded attachment is made by fillet welds around holes or slots, shall be constructed in accordance with the requirements of UW-19(c).

(g) The minimum thickness limitations of UG-16(b) do not apply to Dimpled and Embossed Assemblies designed to this Appendix.

17-2 SERVICE RESTRICTIONS

(a) Assemblies as defined in this Appendix shall not be used for the containment of substances defined as lethal by UW-2(a).

(b) Assemblies defined in 17-1(a)(2) shall not be used as unfired steam boilers or as vessels subject to direct firing.

(c) *Low Temperature Operation*. Welds made in accordance with 17-1(b)(1) and 17-1(b)(2) do not require impact test qualification when joining permitted Part UHA and Part UNF materials.

17-3 MATERIALS

Materials used in the pressure containing parts of vessels covered by this Appendix shall be limited to those permitted by other parts of this Section or Division and qualified for welding per 17-7.

Provided by IHS under license with ASME
No reproduction or networking permitted without license from IHS
Licensee=Chevron Phillips Chemical Co LP/5956674001
Not for Resale, 11/09/2014 20:41:36 MST

Figure 17-1
Two Embossed Plates

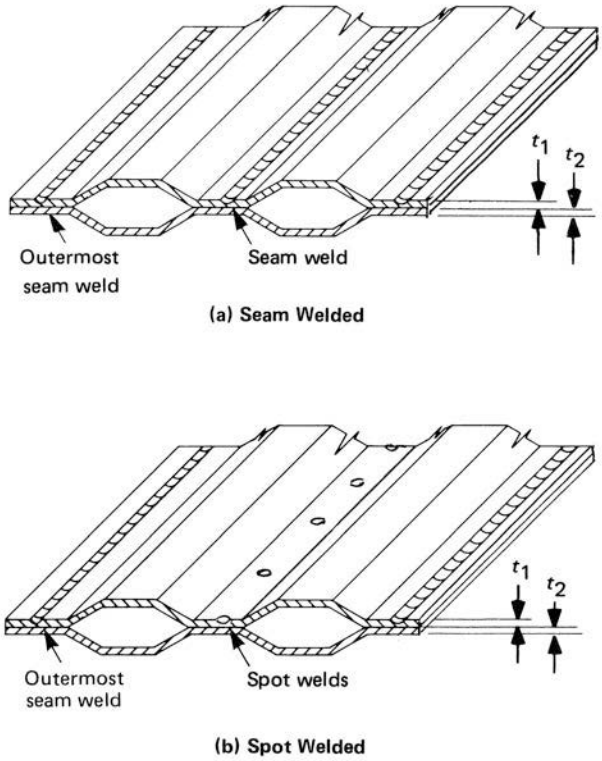

Figure 17-3
Embossed Plate to Plain Plate

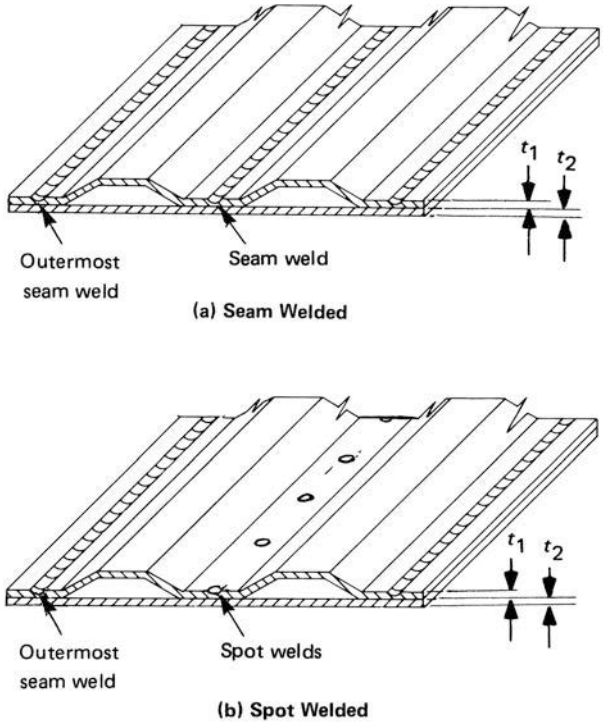

Figure 17-2
Two Dimpled Plates

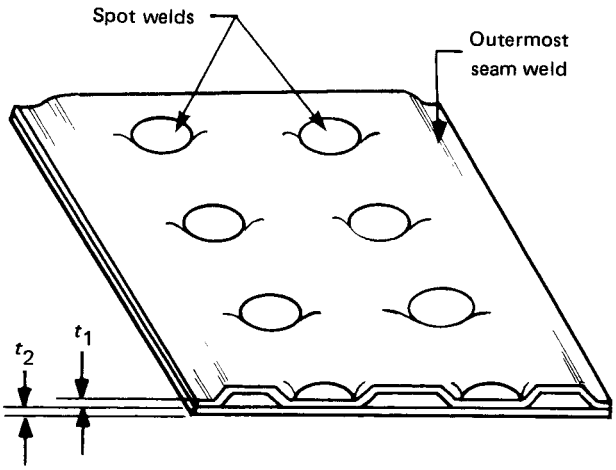

Provided by IHS under license with ASME
No reproduction or networking permitted without license from IHS
Licensee=Chevron Phillips Chemical Co LP/5956674001
Not for Resale, 11/09/2014 20:41:36 MST

17-4 THICKNESS LIMITATIONS

The range of thickness of pressure containing parts which may be welded under the provisions of this Appendix shall be limited to that qualified by the welding procedure under the provisions of 17-7. The nominal thickness for plate shall not be less than 0.045 in. (1.1 mm).

(13) 17-5 MAXIMUM ALLOWABLE WORKING PRESSURE (MAWP)

The MAWP shall be the lowest pressure established by (a) and (b) below.

(a) Proof Test

(1) For assemblies constructed under the provision of 17-1(a)(1), a proof test shall be conducted in accordance with UG-101. In using the formulas for calculating the MAWP, a value of 0.8 shall be used for E, the weld joint efficiency factor. This test may be a separate test or part of the test in 17-7(a)(1)(-a).

(2) For assemblies constructed under the provisions of 17-1(a)(2), a proof test shall be conducted in accordance with the requirements of UG-101 of this Division using the bursting test procedures of UG-101(m) except provisions of UG-101(c) need not be followed provided that, when performing the proof test, the application of pressure is continuous until burst or until the proof test is stopped. In using the formulas for calculating the maximum allowable working pressure, a value of 0.80 shall be used for E, the weld joint efficiency factor. If the spot-welded and seam-welded sheets are formed to any shape other than flat plates prior to the inflating process which results in the dimpled formation, the proof tested vessel or representative panel shall be of a configuration whose curvature is to a radius no greater than that which will be used in production vessels. The representative panel shall utilize the same weld details as will be used in the final construction.

(b) Calculations

(1) For assemblies using plain plate welded in accordance with 17-1(b)(2), 17-1(b)(4), 17-1(b)(6), 17-1(b)(7), and 17-1(c), calculate the MAWP or minimum thickness of the plain plate by the following formulas:

$$P = \frac{3St^2}{p^2} \tag{1}$$

$$t = p\sqrt{\frac{P}{3S}} \tag{2}$$

where

P = internal design pressure (see UG-21), psi (kPa)
p = maximum pitch measured between adjacent seam weld center lines, in. (mm)
S = maximum allowable stress value given in Section II, Part D, psi (kPa)
t = minimum thickness of plate, in. (mm)

(2) For assemblies using plain plate welded in accordance with 17-1(b)(1), 17-1(b)(3), and 17-1(b)(5), calculate the MAWP of the plain plate in accordance with the requirements for braced and stayed surfaces. see UG-47.

17-6 DESIGN LIMITATIONS

For assemblies constructed under the provisions of 17-1(a)(2), the following design limitations shall apply:

(a) A change in any of the following variables will require requalification of the design using the proof test of 17-5(a)(2):

Figure 17-4
Arc-Spot-Welded Two-Layer Assembly

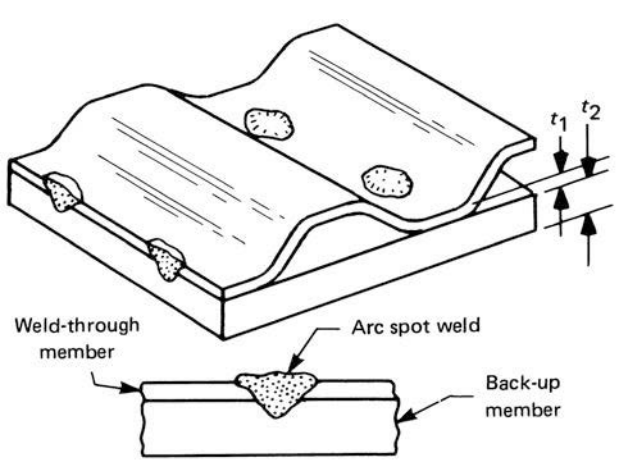

Figure 17-5
Dimpled Plate Welded to Plain Plate

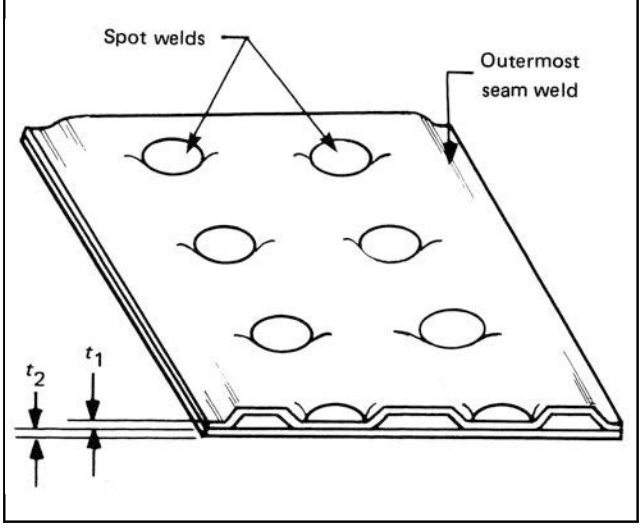

Provided by IHS under license with ASME
No reproduction or networking permitted without license from IHS
Licensee=Chevron Phillips Chemical Co LP/5956674001
Not for Resale, 11/09/2014 20:41:36 MST

(1) an increase in the spot or seam pitch exceeding $^1/_{16}$ in. (1.5 mm);

(2) a change in the specification, type, thickness, or grade of material for either sheet or both sheets;

(3) a change in the electrode size or electrode material;

(4) in formed construction when the radius of the curvature is less than the radius in the proof section [see 17-5(a)(2)].

(b) A test panel duplicating that used to establish the maximum allowable working pressure shall be inflated to a pressure at least 5% greater than the maximum forming pressure to be used in production. The rate of pressurization shall be the same as that used in the burst test. The panel shall be sectioned to show at least six spot welds (see Figure 17-14). The weld cross sections shall be subjected to macroetch examinations and shall show no cracks. The maximum pillow heights measured, as shown in Figure 17-15, of vessels made in production shall not exceed 95% of the maximum pillow height of this duplicate test panel. The maximum forming pressure shall not exceed 80% of the burst pressure.

Figure 17-6
Three-Ply Assemblies

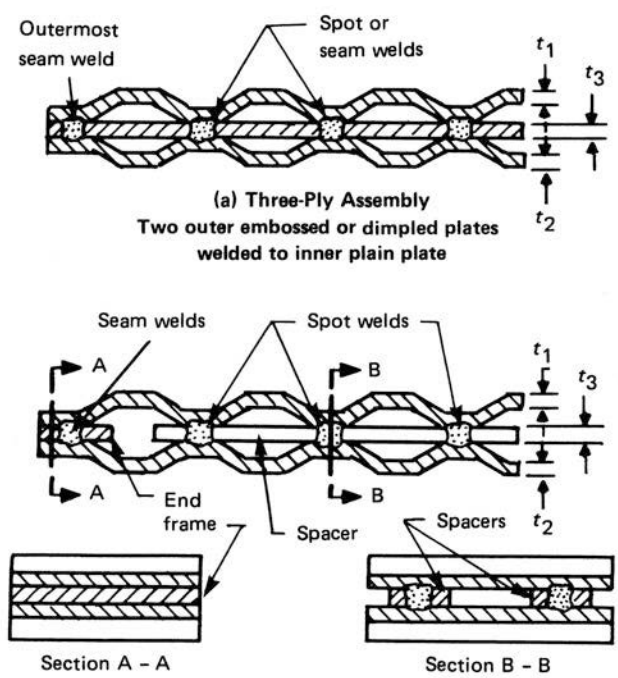

(b) Three-Ply Assembly
Two outer embossed plates welded to inner end frame and spacers

17-7 WELDING CONTROL

(a) In lieu of the Procedure Qualification requirements of Section IX, the following requirements shall be met. Performance Qualification for assemblies constructed under the provisions of 17-1(a)(1) shall be performed in accordance with Section IX or the following requirements.

(1) Proof Testing for Procedure and Performance Qualification

(-a) For assemblies constructed under the provisions of 17-1(a)(1), a pressure proof test to destruction shall be conducted on a finished vessel or representative panel. The test shall be conducted as specified in UG-101(m). If a representative panel is used, it shall be rectangular in shape and at least 5 pitches in each direction, but not less than 24 in. (600 mm) in either direction.

(-b) For assemblies constructed under the provisions of 17-1(a)(2), a pressure proof test to destruction as set forth in 17-5(a)(2) shall be conducted on a finished vessel or representative panel. This test may be a separate test or a part of the test in 17-5(a)(2). If a representative panel is used, it shall be rectangular in shape and at least 5 pitches in each direction but not less than 24 in. (600 mm) in either direction.

(-c) Duplicate parts or geometrically similar parts that are fabricated using the same welding process, and meet the requirements of UG-101(d)(1) or UG-101(d)(2), need not be tested.

(2) Workmanship Samples

(-a) For assemblies for two-ply joints constructed under the provisions of 17-1(b)(1), 17-1(b)(2), 17-1(b)(4), 17-1(b)(5), 17-1(b)(6), 17-1(b)(7), or (c), three single spot welded specimens or one seam welded specimen, as shown in Figures 17-7 and 17-8, shall be made immediately before and after the, welding of the proof test vessel.

Similarly, for assemblies for three-ply joints constructed under the provisions of 17-1(b)(1) and/or 17-1(b)(2), three single spot welded specimens and/or one seam welded specimen, as shown in Figures 17-9 and 17-10 for three-ply joints shall be made immediately

Figure 17-7
Single-Spot-Weld Tension Specimen, Two-Ply Joint

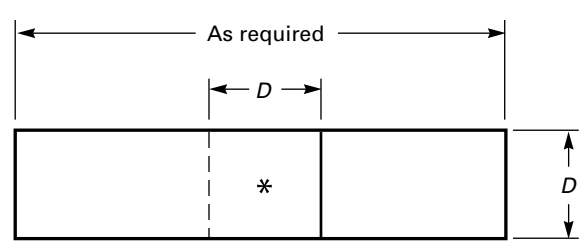

GENERAL NOTE: 1 in. (25 mm) $\leq D \leq 1^1/_4$ in. (32 mm).

Provided by IHS under license with ASME
No reproduction or networking permitted without license from IHS
Licensee=Chevron Phillips Chemical Co LP/5956674001
Not for Resale, 11/09/2014 20:41:36 MST

before and after welding of the proof test vessel. These test specimens shall be representative of the manufacturing practice employed in the fabrication of the proof test vessel.

When resistance welding and a difference in the amount of magnetic material in the throat of the machine or the part geometry preclude the welding of satisfactory test specimens at the same machine settings as those used for the proof test vessel, sufficient material shall be placed in the throat of the welding machine to compensate for the difference in size of the proof test panel and the small test specimens.

The spot welded specimens shall be subjected to tensile loading for ultimate strength and be visually inspected for nugget size, electrode indentation, and evidence of defects. The seam weld specimens shall be similarly tested for ultimate strength and prepared for macrographic examination to reveal nugget size, spacing, penetration, soundness, and surface condition. In addition, a typical spot welded sample and seam welded sample shall be cut from the proof test vessel or panel after failure. A portion of each sample shall be sectioned for macroetch examination.

Also for two-ply assemblies constructed under the provisions of 17-1(b)(4), 17-1(b)(6), 17-1(b)(7), or 17-1(c), additional test specimens as shown in Figure 17-13 shall be made; one immediately before and one immediately after the welding of the proof test vessel, using the same plate thicknesses and material grade used in the proof test vessel. These welds shall be representative of the manufacturing practice employed in the fabrication of the proof test vessel and of the practice to be used for the production vessels. One cross section shall be taken from each weld test assembly, as shown in Figure 17-13, and shall be suitably polished and etched to show clearly the demarcation between the weld metal and the base metal. The etched macrosections shall reveal sound weld metal with complete fusion along the bond line and complete freedom from cracks in the weld metal and the heat affected base metals. The width of the weld at the interface shall be measured and recorded as a workmanship reference value.

Bend tests shall be made on each of the test weld assemblies, as shown in Figure 17-13. The bend specimens shall be tested in accordance with QW-160, Section IX, except that after bending, the convex surface of the specimens, in the weld and the heat affected base metal, shall show not more than two cracks or other open defects, neither of which shall measure more than $^1/_{16}$ in. (1.5 mm) in length in any direction.

One cross section from each of any two welds constructed under the provisions of 17-1(b)(4), 17-1(b)(6), 17-1(b)(7), or 17-1(c) shall be cut from the proof test vessel after failure and these shall be subjected to macroetch examination as above.

(-b) For assemblies constructed under the provision of 17-1(b)(3), a test block of five or more arc-spot welds, as shown in Figure 17-11, shall be made immediately before and after welding of the proof test vessel, using the same plate thickness and material of the same specification and grade as used in the proof test vessel. These welds shall be representative of the manufacturing practice employed in the fabrication of the proof test vessel and of the practice to be used for the production vessels. The arc-spot welds shall be visually inspected for surface soundness, fusion, and external nugget shape and size D_o. At least three welds from each test block shall be cross-sectioned and suitably etched to show clearly the demarcation between the weld metal and the base metal. The etched macrosections shall reveal sound weld metal with complete fusion along the bond line and complete freedom from cracks in the weld metal and the heat affected base metals. The nugget diameter D_i at the faying surface shall be reasonably consistent in all specimens, and the penetration P_2 into the backup member shall be less than the thickness t_2 of that member. At least two welds from each test block shall be broken in tension or peel-tested. In addition to the test-block welds, five or more typical arc-spot weld samples shall be cut from the proof test vessel, after it has been tested to destruction, for cross sectioning and macroscopic examination for nugget size, penetration, and configuration. Any combination of carbon steels P-No. 1 material listed in Table UCS-23 shall be considered as a similar-material combination. Any combination of stainless steels listed in Table UHA-23 shall be considered as a similar-material combination. Any combination of nonferrous materials listed in Tables UNF-23.1 through UNF-23.5 shall be considered as a similar-material combination. For qualification of arc-spot welds in dissimilar combinations of carbon steels, stainless steels, and SB-168 (Ni–Cr–Fe alloy), an additional block of four arc-spot welds shall be prepared for bend tests, as shown in Figure 17-12, immediately before and after the welding of the proof test vessel. The bend specimens shall be tested in accordance with QW-466, Section IX, except that after bending, the convex surface of the specimens, in the weld and the heat affected base metal, shall show not more than two cracks or other open defects, neither of which shall measure more than $^1/_{16}$ in. (1.5 mm) in length in any direction.

(b) Machine Settings and Controls

(1) For vessels constructed under the provisions of this Appendix, all applicable parameters used in the making of the proof test vessel and workmanship samples shall be recorded. Parameters to be recorded are as follows:

(-a) all Essential, Nonessential, and Supplementary Essential (if required) Variables listed in Section IX for procedure qualifications of the applicable process;

(-b) all preheat, postweld heat treatments, and inspection procedures;

Provided by IHS under license with ASME
No reproduction or networking permitted without license from IHS
Licensee=Chevron Phillips Chemical Co LP/5956674001
Not for Resale, 11/09/2014 20:41:36 MST

(-c) applicable material specification, including type, grade, and thickness of the material welded;

(-d) parameters recorded above shall be included in a written Welding Procedure Specification and will serve as procedure and performance qualifications for future production.

(2) Except for minor variations permitted by the welding variables in Section IX, the settings recorded per (1) above shall be used in the fabrication of all vessels in a given production run. See 17-8(a)(1).

(3) If equipment other than that used for the initial proof test vessel and the workmanship samples is to be used in production, each additional machine and welding procedure shall be qualified in full accordance with (1) above. The performance of the additional proof test vessels shall substantiate the allowable working pressure previously established for the specific pressure vessel design. In assemblies welded per 17-1(b)(3), any major component change or replacement of welding equipment previously qualified shall require requalification. (Routine maintenance and replacement of expendable items, such as contact tubes and shielding nozzles, are excluded.)

(c) Miscellaneous Welding Requirements

(1) Lap joints may only be resistance spot or seam welded per 17-1(b)(1) or 17-1(b)(2); or machine, automatic, or semiautomatic gas tungsten-arc welded per 17-1(b)(4) or 17-1(b)(5); or machine or automatic plasma-arc welded per 17-1(b)(6); or machine or automatic submerged-arc welded per 17-1(b)(7); or machine or automatic laser beam welded per 17-1(c).

(2) For assemblies welded per 17-1(b)(3), the gas metal arc-spot welding equipment used in the qualification tests and in production shall be semiautomatic (with a timed arc) or fully automatic. Manual arc-spot welding where the welder has manual control of arc time is not permitted under the rules of this Appendix, nor are edge or fillet type arc-spot welds. All gas metal arc-spot welding shall be done in the downhand position, with the work, at the location of the spot weld, in a substantially horizontal plane. The required size and spacing of the gas metal arc-spot welds shall be demonstrated by calculation and by the pressure proof test [see 17-5(a)].

(3) For assemblies constructed under the provisions of 17-1(a)(2), and having sheets formed within dies where the dies control the shape of the pillow (Figure 17-15) and restrain the welds so that the bending in the sheet is outside of the heat affected zone, the welding may be done before or after forming; and the requirements and limitations of 17-6(b) do not apply.

(d) Welding other than that permitted by this Appendix, used for the attachment of nozzles, tubes and fittings, for the closing of peripheral seams, for the making of plug and slot welds, or for the fillet welding of holes and slots, shall be conducted in accordance with the requirements of this Division.

17-8 QUALITY CONTROL

(a) Definitions

(1) production run — a group of vessels or assemblies all produced during the same 24 hr day using the same welding processes, materials, and material thicknesses

(2) peel test — a test performed in accordance with Figure 17-16

(3) tension test — a destructive test performed in a tension test machine employing specimens shown in Figures 17-7, 17-8, 17-9, 17-10, and 17-11

(b) Test Requirements. At the beginning of each production run, at least one test shall be made as follows:

(1) For assemblies constructed under 17-1(b)(1), 17-1(b)(2), 17-1(b)(4), 17-1(b)(5), 17-1(b)(6), 17-1(b)(7), or (c), either a peel test, a tension test, or a macroetch examination shall be performed. The acceptance criteria for the peel and tension tests shall be that the parent metal adjacent to the weld must fail before the weld itself fails. The macroetch examination shall be performed on one test specimen by cross sectioning and examining the weld in accordance with 17-7(a)(2)(-b).

(2) For assemblies constructed under 17-1(b)(3), a macroetch examination shall be performed in accordance with 17-7(a)(2)(-b) except that only one weld need be cross sectioned and examined.

17-9 RECORDS

As specified in 17-7(b), records shall be maintained for all data obtained during the fabrication of the proof test vessels and the workmanship samples. Such records shall

Figure 17-8
Seam-Weld Specimen for Tension and Macrosection, Two-Ply Joint

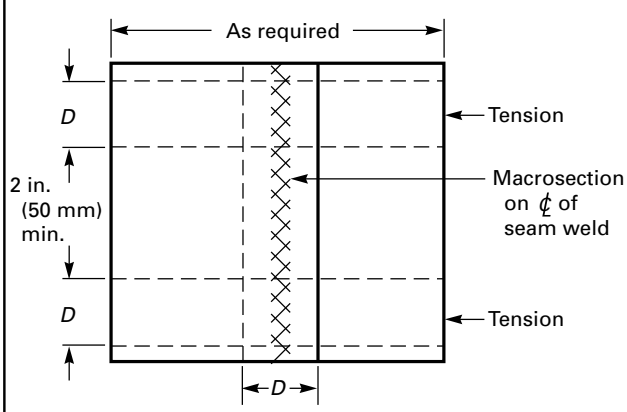

GENERAL NOTE: 1 in. (25 mm) ≤ D ≤ $1^1/_4$ in. (32 mm).

Provided by IHS under license with ASME
No reproduction or networking permitted without license from IHS
Licensee=Chevron Phillips Chemical Co LP/5956674001
Not for Resale, 11/09/2014 20:41:36 MST

also be kept for production work welded in accordance with 17-1(b)(3), 17-1(b)(4), 17-1(b)(5), 17-1(b)(6), 17-1(b)(7), and 17-1(c).

17-10 DATA REPORTS

When all the requirements of this Division and the supplemental requirements of this Appendix have been met, the following notation shall be entered on the Manufacturer's Data Report under Remarks: "Constructed in Conformance with Mandatory Appendix 17, Dimpled or Embossed Assemblies."

Figure 17-10
Seam-Weld Specimen for Tension and Macrosection for Three-Ply Joint

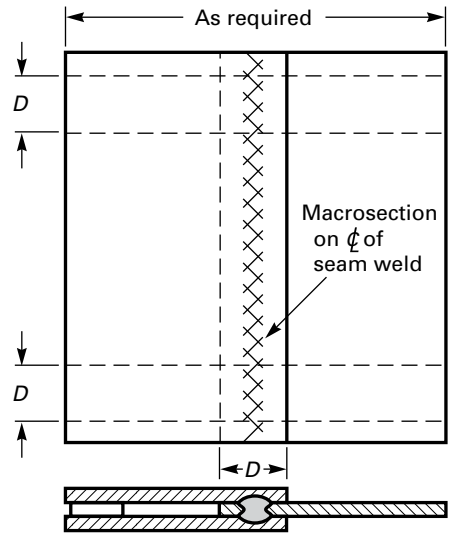

GENERAL NOTE: 1 in. (25 mm) ≤ D ≤ $1^1/_4$ in. (32 mm).

Figure 17-9
Single Spot-Weld Tension Specimen for Three-Ply Joint

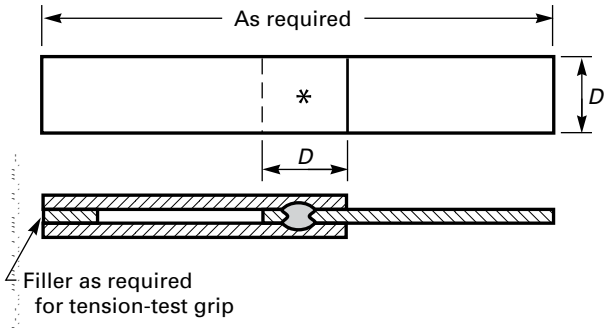

GENERAL NOTE: 1 in. (25 mm) ≤ D ≤ $1^1/_4$ in. (32 mm).

Provided by IHS under license with ASME
No reproduction or networking permitted without license from IHS
Licensee=Chevron Phillips Chemical Co LP/5956674001
Not for Resale, 11/09/2014 20:41:36 MST

Figure 17-11
Gas Metal Arc-Spot-Weld Block for Macrosections and Strength Tests

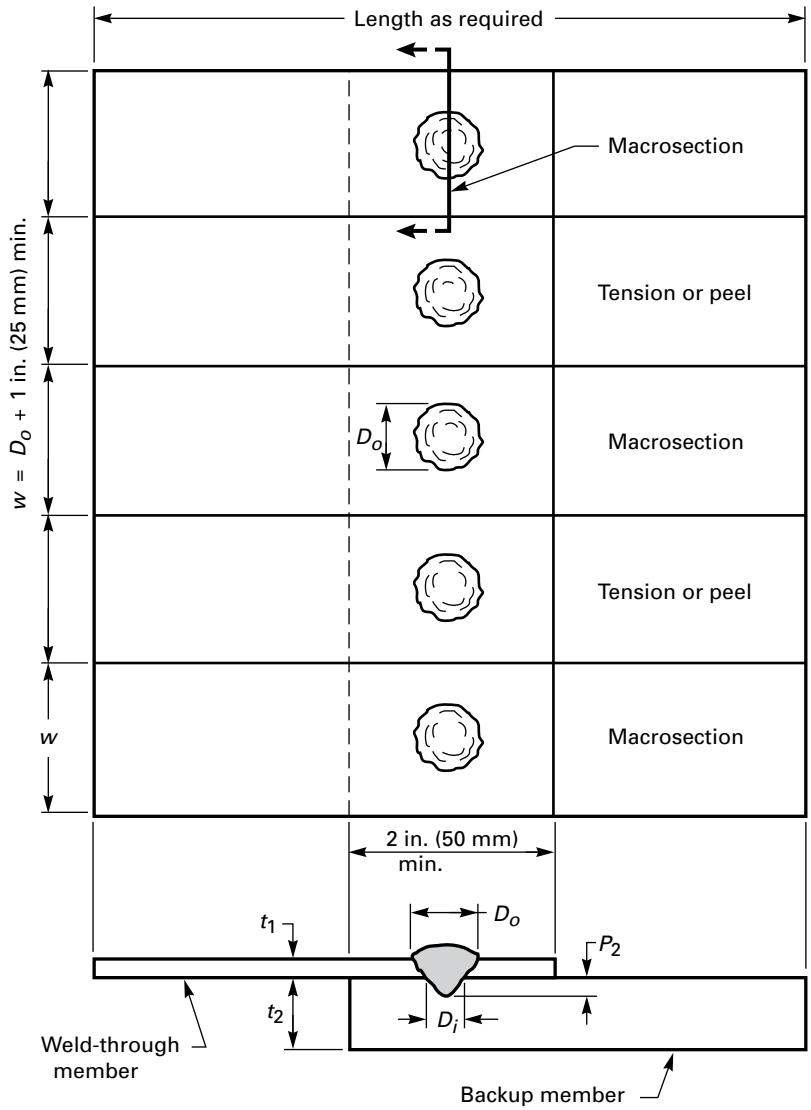

Provided by IHS under license with ASME
No reproduction or networking permitted without license from IHS
Licensee=Chevron Phillips Chemical Co LP/5956674001
Not for Resale, 11/09/2014 20:41:36 MST

Figure 17-12
Gas Metal Arc-Spot-Weld Block for Bend Tests

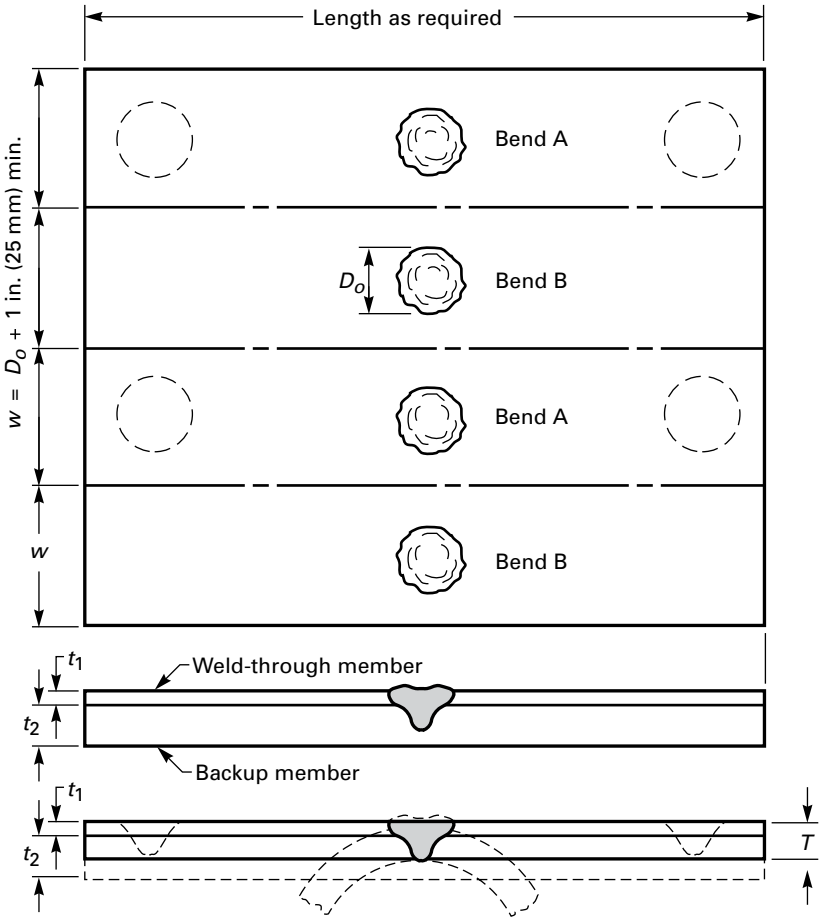

Bend A: Grind arc-spot weld reinforcement flush, and machine backup member to bend-specimen thickness *T*, if required. Bend in direction indicated.

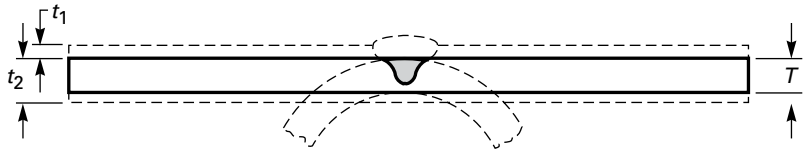

Bend B: Remove weld-through member, grind smooth at arc-spot-weld (faying surface), and machine backup member to bend-specimen thickness *T*, if required. Bend in direction indicated.

Provided by IHS under license with ASME
No reproduction or networking permitted without license from IHS
Licensee=Chevron Phillips Chemical Co LP/5956674001
Not for Resale, 11/09/2014 20:41:36 MST

Figure 17-13
Gas Tungsten-Arc Seam Weld, Plasma-Arc Seam Weld, Submerged-Arc Seam Weld, and Laser Beam Seam Weld Test Specimen for Bend Tests

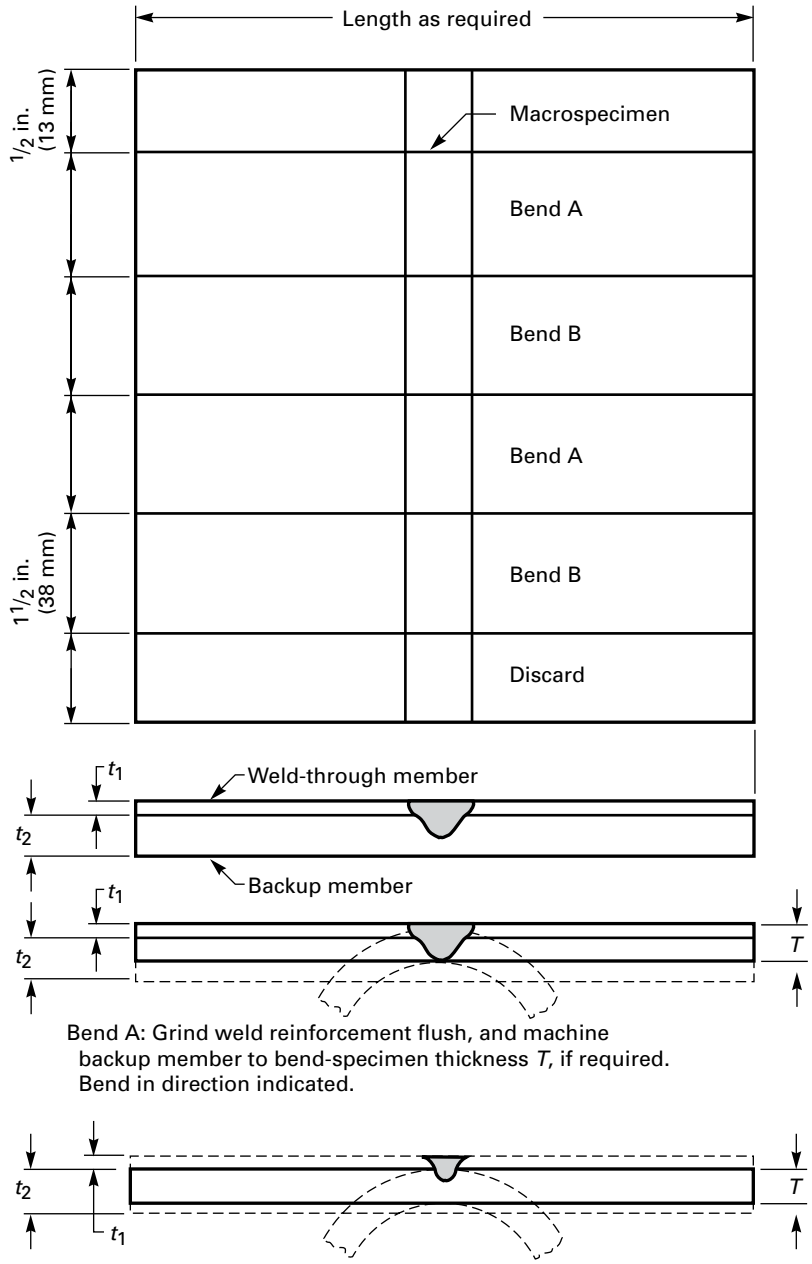

GENERAL NOTE: Refer to Section IX, QW-462.3 and QW-466.

Provided by IHS under license with ASME
No reproduction or networking permitted without license from IHS
Licensee=Chevron Phillips Chemical Co LP/5956674001
Not for Resale, 11/09/2014 20:41:36 MST

Figure 17-14

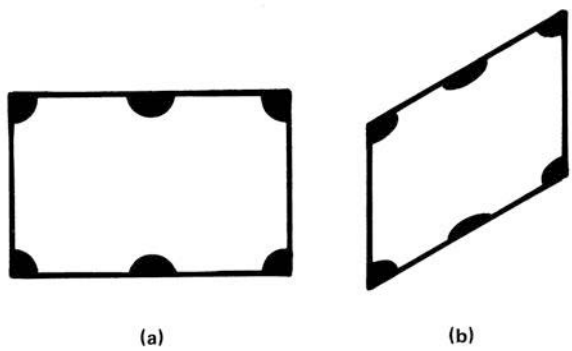

Figure 17-15

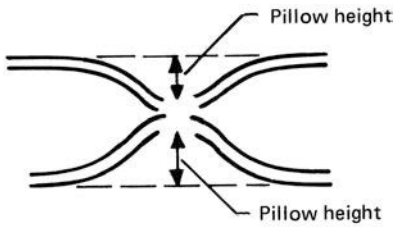

Figure 17-16
Peel Test

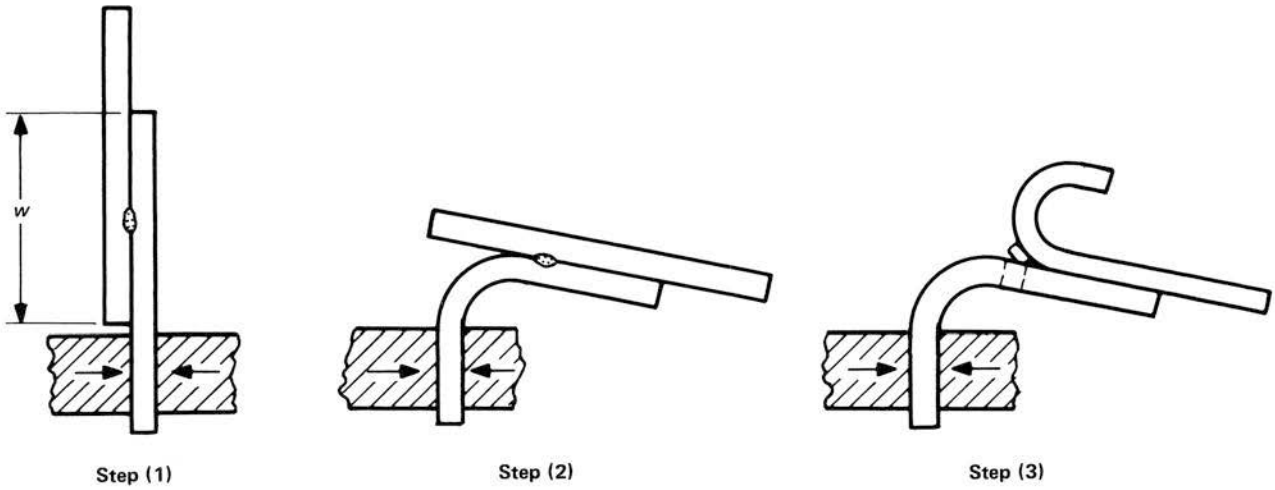

Step 1: Grip specimen in vise or other suitable device.

Step 2: Bend specimen (This step may not be required if the gripped portion of the specimen is greatly thicker than the other portion.)

Step 3: Peel pieces apart with suitable tool until they are separated.

--`,,`,`,,`,```,,,,`,`,`,`,,`,,```,`,`,,`,,`,`,,`---

Provided by IHS under license with ASME

No reproduction or networking permitted without license from IHS

Licensee=Chevron Phillips Chemical Co LP/5956674001
Not for Resale, 11/09/2014 20:41:36 MST

Figure 17-17
Complete Penetration Welding Per 17-1(c)

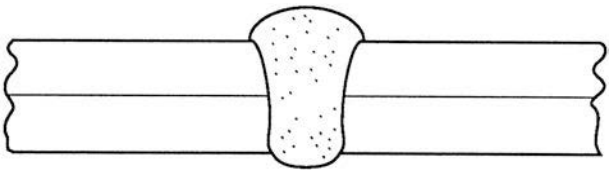

--`,,,``,,,```,,,,`,```,,,`,```,,,`,```-`-`,,`,,`,`,,`---

Provided by IHS under license with ASME

No reproduction or networking permitted without license from IHS

Licensee=Chevron Phillips Chemical Co LP/5956674001
Not for Resale, 11/09/2014 20:41:36 MST

MANDATORY APPENDIX 18
ADHESIVE ATTACHMENT OF NAMEPLATES

18-1 SCOPE

(a) The rules in this Appendix cover minimum requirements for the use of adhesive systems for the attachment of nameplates, limited to:

(1) the use of pressure-sensitive acrylic adhesives that have been preapplied by the nameplate manufacturer to a nominal thickness of at least 0.005 in. (0.13 mm) and that are protected with a moisture-stable liner;

(2) use for vessels with design temperatures within the range of −40°F to 300°F (−40°C to 150°C), inclusive;

(3) application to clean, bare metal surfaces, with attention being given to removal of antiweld spatter compound that may contain silicone;

(4) use of prequalified application procedures as outlined in 18-2;

(5) use of the preapplied adhesive within an interval of 2 years after adhesive application.

18-2 NAMEPLATE APPLICATION PROCEDURE QUALIFICATION

(a) The Manufacturer's Quality Control System [see U-2(h)] shall define that written procedures, acceptable to the Inspector, for the application of adhesive-backed nameplates shall be prepared and qualified.

(b) The application procedure qualification shall include the following essential variables, using the adhesive and nameplate manufacturers' recommendations where applicable:

(1) description of the pressure-sensitive acrylic adhesive system employed, including generic composition;

(2) the qualified temperature range [the cold box test temperature shall be −40°F (−40°C) for all applications];

(3) materials of nameplate and substrate when the mean coefficient of expansion at design temperature of one material is less than 85% of that for the other material;

(4) finish of the nameplate and substrate surfaces;

(5) the nominal thickness and modulus of elasticity at application temperature of the nameplate when nameplate preforming is employed. A change of more than 25% in the quantity [(nameplate nominal thickness)^2 × nameplate modulus of elasticity at application temperature] will require requalification.

(6) the qualified range of preformed nameplate and companion substrate contour combinations when preforming is employed;

(7) cleaning requirements for the substrate;

(8) application temperature range and application pressure technique;

(9) application steps and safeguards.

(c) Each procedure used for nameplate attachment by pressure-sensitive acrylic adhesive systems shall be qualified for outdoor exposure in accordance with Standard UL-969, Marking and Labeling Systems, with the following additional requirements:

(1) Width of nameplate test strip shall not be less than 1 in. (25 mm).

(2) Nameplates shall have an average adhesion of not less than 8 lb/in. (36 N/25 mm) of width after all exposure conditions, including low temperature.

(d) Any change in (b) above shall require requalification.

(e) Each lot or package of nameplates shall be identified with the adhesive application date.

Provided by IHS under license with ASME
No reproduction or networking permitted without license from IHS
Licensee=Chevron Phillips Chemical Co LP/5956674001
Not for Resale, 11/09/2014 20:41:36 MST

MANDATORY APPENDIX 19 ELECTRICALLY HEATED OR GAS-FIRED JACKETED STEAM KETTLES

19-1 SCOPE

The rules in Mandatory Appendix 19 provide additional requirements for electrically heated or gas-fired jacketed steam kettles constructed under the rules of this Division.

19-2 SERVICE RESTRICTIONS

No steam or water shall be withdrawn from the jacket for use external to the vessel and the operating pressure of the jacket shall not exceed 50 psi (350 kPa).

19-3 MATERIALS

When in contact with products of combustion, austenitic stainless steel parts shall be of either the low carbon or stabilized grades. Structural grade carbon steel, SA-36 and SA-283 (Grades A, B, C, and D), shall not be used for any pressure part.

19-4 DESIGN

Welded Categories A and B joints in contact with products of combustion shall be of Type No. 1 of Table UW-12.

19-5 INSPECTION AND STAMPING

Electrically heated or gas-fired jacketed steam kettles shall be inspected by an Inspector and shall not be marked with the Certification Mark with the UM Designator regardless of volume [see U-1(j)].

19-6 PRESSURE RELIEF

The capacity of the safety valve in pounds of steam per hour shall be at least equal to the Btu per hour rating of the burner divided by 1000 or the kilowatt rating of the electric heating element multiplied by 3.5.

19-7 APPURTENANCES AND CONTROLS

The jacket shall be furnished with the following minimum appurtenances and controls [see U-2(a)(4)]:

(a) a pressure gage;

(b) a water gage glass; or alternatively, for electrically heated jacketed steam kettles with immersion type heating elements, a low level warning light;

(c) a separate connection, fitted with a stop valve, for venting air or adding water to the jacket (the water may be added while the vessel is not under pressure);

(d) an electric heater control or automatic gas valve controlled by pressure or temperature to maintain the steam pressure in the jacket below the safety valve setting;

(e) a low water cutoff that will cut off the fuel to the burner or power to the electric heating element if the water in the jacket drops below the lowest permissible water level established by the manufacturer;

(f) a safety pilot control that will cut off the fuel to both the main burner and the pilot burner in case of pilot flame failure.

19-8 DATA REPORTS

When all the requirements of this Division and the supplemental requirements of this Appendix have been met, the following notation shall be entered on the Manufacturer's Data Report under Remarks, "Constructed in Conformance with Mandatory Appendix 19, Electrically Heated or Gas-Fired Jacketed Steam Kettles."

Provided by IHS under license with ASME
No reproduction or networking permitted without license from IHS
Licensee=Chevron Phillips Chemical Co LP/5956674001
Not for Resale, 11/09/2014 20:41:36 MST

MANDATORY APPENDIX 20
HUBS MACHINED FROM PLATE

20-1 SCOPE

This Appendix covers the requirements for hubs of tubesheets, lap joint stub ends, and flat heads machined from plate when the hub length is in the through thickness direction of the plate.

20-2 MATERIAL

Plate shall be manufactured by a process that produces material having through thickness properties which are at least equal to those specified in the material specification. Such plate can be, but is not limited to, that produced by methods such as electroslag (ESR) and vacuum arc remelt (VAR). The plate must be tested and examined in accordance with the requirements of the material specification and the additional requirements specified in the following paragraphs:

Test specimens, in addition to those required by the material specifications, shall be taken in a direction parallel to the axis of the hub and as close to the hub as practical, as shown in Figure UW-13.3. At least two tensile test specimens shall be taken from the plate in the proximity of the hub with one specimen taken from the center third of the plate width as rolled, and the second specimen taken at 90 deg around the circumference from the other specimen. Both specimens shall meet the tensile and yield requirements of the SA material specification. All dimensional requirements of Figure UW-13.3 shall apply.

Subsize test specimens conforming to the requirements of Figure 4 of SA-370 may be used if necessary, in which case the value for "elongation in 2 in. (50 mm)," required by the material specification, shall apply to the gage length specified in Figure 4.

The reduction-of-area shall not be less than 30%. (For those materials for which the material specification requires a reduction-of-area value greater than 30%, the higher value must be met.)

20-3 EXAMINATION REQUIREMENTS

Each part shall be examined as follows:

(a) Before and after machining, the part, regardless of thickness, shall be ultrasonically examined by the straight beam technique in accordance with SA-388. The examination shall be in two directions approximately at right angles, that is, from the cylindrical or flat rectangular surfaces of the hub and in the axial direction of the hub.

The part shall be unacceptable:

(1) if the examination results show one or more indications accompanied by loss of back reflection larger than 60% of the reference back reflection;

(2) if the examination results show indications larger than 40% of the reference back reflection when accompanied by a 40% loss of back reflection.

(b) Before welding the hub of the tubesheet or flat head to the adjacent shell, the hub shall be examined by magnetic particle or liquid penetrant methods in accordance with Mandatory Appendix 6 or Mandatory Appendix 8.

(c) After welding, the weld and the area of the hub for at least $^1/_2$ in. (13 mm) from the edge of the weld shall be 100% radiographed in accordance with UW-51. As an alternative, the weld and hub area adjacent to the weld may be ultrasonically examined in accordance with Mandatory Appendix 12.

20-4 DATA REPORTS

When all the requirements of this Division and the supplemental requirements of this Appendix have been met, the following notation shall be entered on the Manufacturer's Data Report under Remarks: "Constructed in Conformance with Mandatory Appendix 20, Hubs Machined From Plate."

Provided by IHS under license with ASME
No reproduction or networking permitted without license from IHS
Licensee=Chevron Phillips Chemical Co LP/5956674001
Not for Resale, 11/09/2014 20:41:36 MST

MANDATORY APPENDIX 21
JACKETED VESSELS CONSTRUCTED OF WORK-HARDENED NICKEL

21-1 SCOPE

Jacketed vessels having an inner shell constructed of nickel sheet or plate that meets the requirements of SB-162 and that has been work-hardened by a planishing operation over its entire surface during fabrication, with a corresponding increase in strength against collapse, shall meet the requirements of this Division, provided that the additional provisions which follow are met.

21-2 DESIGN REQUIREMENTS

(a) The maximum size of any vessel shall be 8 ft (2.4 m) I.D.

(b) The maximum operating temperature shall not exceed 400°F (205°C).

(c) Any cylindrical skirt (flange) on a hemispherical head that is subject to external pressure shall be designed as a cylinder.

(d) The thickness of the inner shell of each vessel shall be such as to withstand without failure a hydrostatic test pressure in the jacket space of not less than three times the desired maximum allowable working pressure.

(e) In no case shall the thickness of the inner shell or head be less than that determined from the external pressure chart Figure NFA-4 in Subpart 3 of Section II, Part D.

(f) The required moment of inertia of stiffening rings shall be determined from the appropriate chart in Subpart 3 of Section II, Part D for the material used for the rings.

(g) The outer shell and head shall be designed for increased strength, if necessary, to accommodate the test pressure specified in (d) above, in order to avoid rejection of the vessel under UG-99(d).

21-3 FABRICATION

Any butt weld that is subject to the external pressure shall be ground flush with the base metal, and the deposited weld metal and the heat affected zone shall be work-hardened in the same manner as the base metal.

21-4 DATA REPORTS

When all the requirements of this Division and the supplemental requirements of this Appendix have been met, the following notation shall be entered on the Manufacturer's Data Report under Remarks, "Constructed in Conformance with Mandatory Appendix 21, Jacketed Vessels Constructed of Work-Hardened Nickel."

Provided by IHS under license with ASME
No reproduction or networking permitted without license from IHS
Licensee=Chevron Phillips Chemical Co LP/5956674001
Not for Resale, 11/09/2014 20:41:36 MST

MANDATORY APPENDIX 22
INTEGRALLY FORGED VESSELS

22-1 SCOPE

This Appendix covers the minimum requirements for the design, fabrication, and inspection of special integrally forged pressure vessels having a higher allowable stress value than that for vessels under Part UF provided additional requirements specified in this Appendix are met.

22-2 MATERIAL

The forging material shall comply with SA-372 Grade A; B; C; D; E Class 55, 65, or 70; F Class 55 or 70; G Class 55 or 70; H Class 55 or 70; J Class 55, 65, or 70; L; or M Class A or B.

22-3 DESIGN

(a) A maximum allowable stress value of one-third the minimum tensile strength specified in the material specification (Section II) for the grade shall be used.

(b) The maximum inside diameter of the shell shall not exceed 24 in. (600 mm).

(c) The design metal temperatures shall be as given in UG-20, except the maximum temperature shall not exceed 200°F (95°C). All other requirements of UG-20 shall be met.

(d) The vessel shall be of streamlined design, as shown in Figure 22-1, with the following features:

(1) The shell portion shall have no stress raisers, such as openings, welded attachments, or stamping, except for identification stamping on the forging material prior to heat treatment.

(2) The integral heads shall be hot formed, concave to the pressure, and so shaped and thickened as to provide details of design and construction of the center openings which will be as safe as those provided by the rules of this Division; the center openings shall not exceed the lesser of 50% of the inside diameter of the vessel or NPS 3 (DN 80); other openings in the head shall not exceed NPS $^3/_4$ (DN 20); openings shall be placed at a point where the calculated membrane stress, without holes, is not more than one-sixth of the specified minimum tensile strength.

(3) The vessel shall have no welding, except for seal welding of threaded connections performed either before or after heat treatment in accordance with UF-32.

Figure 22-1
Typical Sections of Special Seamless Vessels

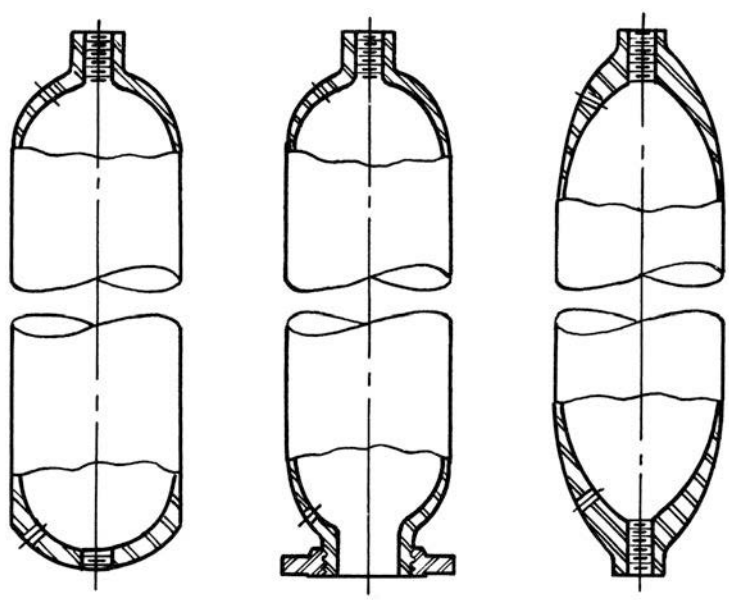

Provided by IHS under license with ASME
No reproduction or networking permitted without license from IHS
Licensee=Chevron Phillips Chemical Co LP/5956674001
Not for Resale, 11/09/2014 20:41:36 MST

22-4 HEAT TREATMENT

(a) The completed vessel, after all forging operations, shall be heat treated by one of the applicable methods outlined in SA-372.

(b) The tensile properties shall be determined by the testing method outlined in SA-372.

(c) When liquid quenched and tempered, each vessel shall be hardness tested as outlined in UF-31(b)(1)(-b).

(d) After heat treatment, the outside surface of each vessel, regardless of the type of heat treatment used, shall be subjected to the magnetic particle test or the liquid penetrant test as outlined in UF-31(b)(1)(-a).

22-5 MARKING

(a) The vessel shall be stamped on the thickened head portion with both the maximum allowable working pressure based on that for vessels under Part UF and also the maximum allowable working pressure based on a stress equal to one-third the specified minimum tensile strength.

(b) The words "Mandatory Appendix 22" shall be stamped following the latter pressure in (a) above.

22-6 DATA REPORTS

When all the requirements of this Division and the supplemental requirements of this Appendix have been met, the following notation shall be entered on the Manufacturer's Data Report under Remarks: "Constructed in Conformance with Mandatory Appendix 22, Integrally Forged Vessels."

Provided by IHS under license with ASME
No reproduction or networking permitted without license from IHS
Licensee=Chevron Phillips Chemical Co LP/5956674001
Not for Resale, 11/09/2014 20:41:36 MST

MANDATORY APPENDIX 23
EXTERNAL PRESSURE DESIGN OF COPPER, COPPER ALLOY, AND TITANIUM ALLOY CONDENSER AND HEAT EXCHANGER TUBES WITH INTEGRAL FINS

23-1 SCOPE

The rules in this Appendix cover the proof test procedure and criteria for determining the maximum allowable external working pressure of copper, copper alloy, and titanium alloy condenser and heat exchanger tubes with helical fins that are integrally extended from the tube wall as an alternative to the requirements of UG-8(b)(4). This Appendix may only be used when the specified corrosion allowance for the tubes is zero. In addition, when using SB-543, this Appendix may only be used when the finning operations are performed after the tubes have been welded, tested, and inspected according to SB-543.

23-2 MATERIALS

(a) Copper and copper alloy tubes shall meet SB-359, SB-543, or SB-956.

(b) Titanium alloy tubes shall meet SB-338.

23-3 TEST PROCEDURE

(a) Test three full size specimens to failure (visible collapse) by external hydrostatic pressure.

(b) The maximum allowable working pressure P shall be determined by

$$P = F\left(\frac{B}{3}\right)\left(\frac{Y_s}{Y_a}\right)$$

where

B = minimum collapse pressure, psi (kPa)

F = factor to adjust for change in strength due to design temperature

= S/S_2

S = maximum allowable stress value for the tube material at design temperature, as given in the tables referenced in UG-23 but not to exceed S_2, psi

S_2 = maximum allowable stress value for the tube material at test temperature, as given in the tables referenced in UG-23, psi

Y_a = actual average yield strength determined from the unfinned length of the three specimens tested at room temperature, psi (kPa)

Y_s = specified minimum yield strength at room temperature, psi (kPa)

23-4 CRITERIA

(a) The design of copper and copper alloy finned tubes to this Appendix shall meet the following requirements:

(1) Design temperature shall be limited to the maximum temperature listed in Section II, Part D, Table 1B corresponding to the time independent allowable stress, or the maximum temperature shown on the external pressure chart for the corresponding material, whichever is less.

(2) Tubes shall have external and/or internal integrally extended helical fins and the sum of external plus internal fins shall be at least 10 fins/in. (10 fins/25 mm).

(3) Dimensions and permissible variations shall be as specified in Item 15 of SB-359 or SB-956.

(b) The design of titanium alloy finned tubes to this Appendix shall meet the following requirements:

(1) Design temperature shall not exceed 600°F (315°C).

(2) Tubes shall have external integrally extended helical fins only and shall have at least 10 fins/in. (10 fins/25 mm).

(3) Dimensions and permissible variations shall be as specified in item 15 of SB-359 (Specification for Copper and Copper-Alloy Seamless Condenser and Heat Exchanger Tubes With Integral Fins).

(c) Additional requirements for copper, copper alloy, and titanium alloy tubes designed to this Appendix are as follows.

(1) Test specimens shall be identical in fin geometry and pitch to production tubes.

(2) Test specimens of 50 outside diameters or more in length shall qualify all totally finned lengths.

(3) Unfinned length at the ends or at an intermediate section shall qualify that length and all lesser unfinned lengths.

(4) Nominal wall thickness under the fin and at the unfinned area shall qualify all thicker wall sections but with no increase in P.

(5) Outside diameter of the finned section shall not exceed the outside diameter of the unfinned section.

Provided by IHS under license with ASME
No reproduction or networking permitted without license from IHS
Licensee=Chevron Phillips Chemical Co LP/5956674001
Not for Resale, 11/09/2014 20:41:36 MST

(6) Tests shall be done in accordance with 23-3, witnessed by and subjected to the acceptance of the Inspector.

23-5 DATA REPORTS

When all the requirements of this Division and the supplemental requirements of this Appendix have been met, the following notation shall be entered on the Manufacturer's Data Report under Remarks: "Constructed in Conformance with Mandatory Appendix 23, External Pressure Design of Copper, Copper Alloy, and Titanium Alloy Condenser and Heat Exchanger Tubes With Integral Fins."

Provided by IHS under license with ASME
No reproduction or networking permitted without license from IHS
Licensee=Chevron Phillips Chemical Co LP/5956674001
Not for Resale, 11/09/2014 20:41:36 MST

MANDATORY APPENDIX 24
DESIGN RULES FOR CLAMP CONNECTIONS

24-1 SCOPE

(a) The rules in this Appendix apply specifically to the design of clamp connections for pressure vessels and vessel parts and shall be used in conjunction with the applicable requirements in Subsections A, B, and C of this Division. These rules shall not be used for the determination of thickness of supported or unsupported tubesheets integral with a hub nor for the determination of thickness of covers. These rules provide only for hydrostatic end loads, assembly, and gasket seating. Consideration shall be given to loads other than pressure, such as piping loads, that may act on the clamp connection. (See UG-22.)

(b) The design of a clamp connection involves the selection of the gasket, bolting, hub, and clamp geometry. Bolting shall be selected to satisfy the requirements of 24-4. Connection dimensions shall be such that the stresses in the clamp and the hub, calculated in accordance with 24-6 and 24-7, do not exceed the allowable stresses specified in Table 24-8. All calculations shall be made on dimensions in the corroded condition. Calculations for assembly, gasket seating, and operating conditions are required.

(c) It is recommended that either a pressure energized and/or low seating load gasket be used to compensate for possible nonuniformity in the gasket seating force distribution. Hub faces shall be designed such as to have metal-to-metal contact outside the gasket seal diameter. This may be provided by recessing the hub faces or by use of a metal spacer (see Figure 24-1). The contact area shall be sufficient to prevent yielding of either the hub face or spacer under both operating and assembly loads.

(d) It is recognized that there are clamp designs that utilize no wedging action during assembly since clamping surfaces are parallel to the hub faces. Such designs are acceptable and shall satisfy the bolting and corresponding clamp and hub requirements of a clamp connection designed for a total included clamping angle of 10 deg.

(e) The design method used herein to calculate stresses, loads, and moments may also be used in designing clamp connections of shapes differing from those shown in Figures 24-1 and 24-2, and for clamps consisting of more than two circumferential segments. The design formulas used herein may be modified when designing clamp connections of shape differing from those shown in Figures 24-1 and 24-2, provided that the basis for the modifications is in accordance with U-2(g). However, the requirements of (f) below shall be complied with for all clamp connections.

(f) Clamps designed to the rules of this Appendix shall be provided with a bolt retainer. The retainer shall be designed to hold the clamps together independently in the operating condition in case of failure of the primary bolting. Clamp hub friction shall not be considered as a retainer method. Multiple bolting (two or more bolts per lug) is an acceptable alternative for meeting this requirement. See UG-35.2(b)(2) for additional guidance for bolt retainers and redundant bolting.

24-2 MATERIALS

(a) Materials used in the construction of clamp connections shall comply with the requirements given in UG-5 through UG-14.

(b) Hubs made from ferritic steel and designed in accordance with the rules herein shall be given a normalizing or full-annealing heat treatment when the thickness of the hub neck section exceeds 3 in. (75 mm).

(c) Cast steel hubs and clamps shall be examined and repaired in accordance with Mandatory Appendix 7.

(d) Hubs and clamps shall not be machined from plate.

(e) Bolts and studs shall comply with UG-12. Minimum diameter shall be $^1/_2$ in. (13 mm). Nuts and washers shall comply with UG-13.

24-3 NOTATION

The notation below is used in the formulas for the design of clamp-type connections (see also Figures 24-1 and 24-2).

A = outside diameter of hub

A_{bL} = total cross-sectional area of the bolts per clamp lug using the smaller of the root diameter of the thread or least diameter of unthreaded portion. Cross-sectional area of bolt retainer shall not be included in calculation of this area. When multiple bolting is used in lieu of bolt retainer, the total cross-sectional area of all the bolts per clamp lug shall be used.

A_c = total effective clamp cross-sectional area
= $A_1 + A_2 + A_3$

A_1 = partial clamp area
= $(C_w - 2C_t)C_t$

A_2 = partial clamp area
= $1.571C_t^{\ 2}$

A_3 = partial clamp area

Provided by IHS under license with ASME
No reproduction or networking permitted without license from IHS
Licensee=Chevron Phillips Chemical Co LP/5956674001
Not for Resale, 11/09/2014 20:41:36 MST

Figure 24-1
Typical Hub and Clamp

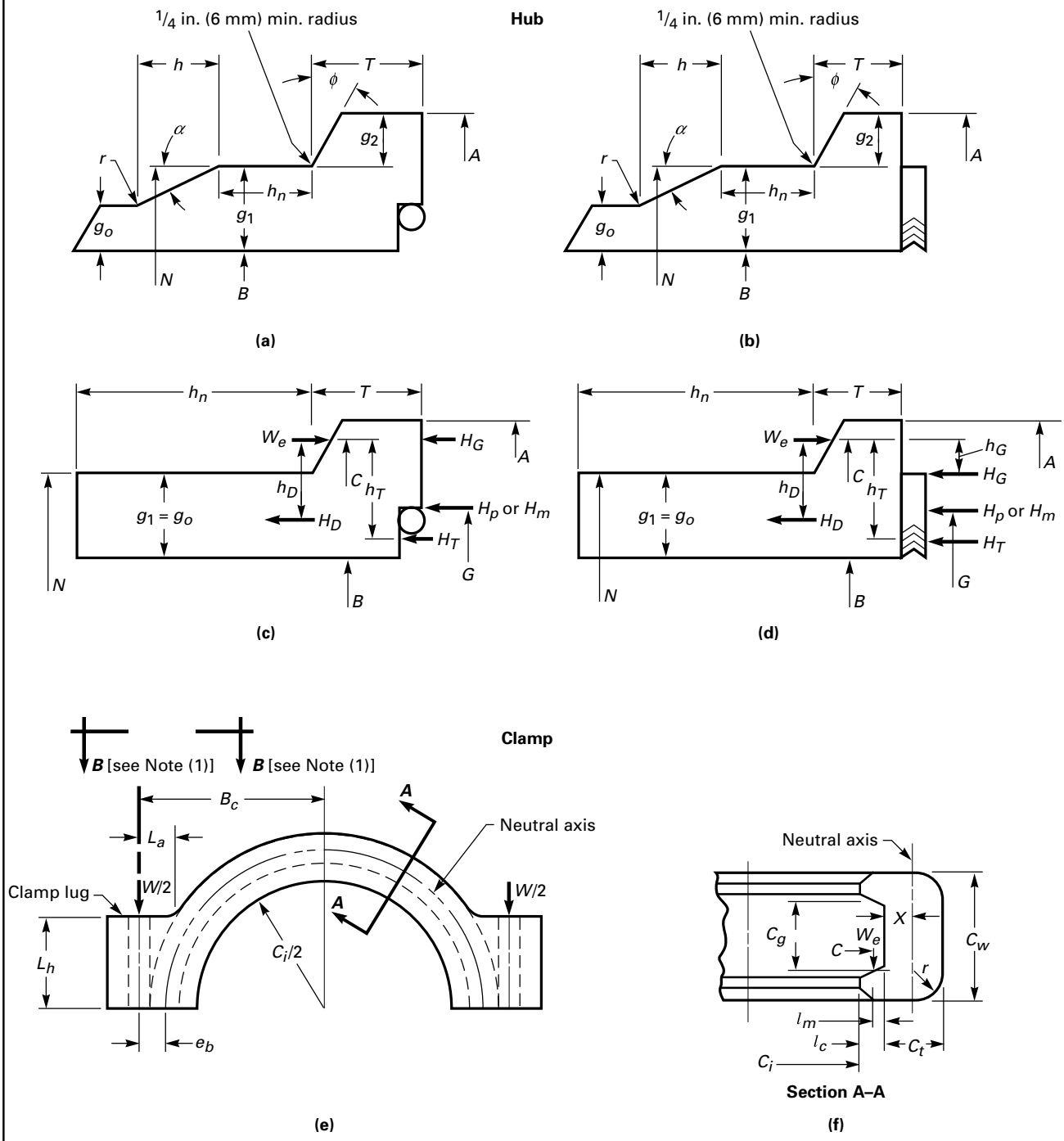

NOTE:
(1) See Fig. 24-2 for Section B-B

--`,,,``,,,```,,,,`,``,,`,,,```-`-`,,`,,`,`,,`---
Provided by IHS under license with ASME
No reproduction or networking permitted without license from IHS
Licensee=Chevron Phillips Chemical Co LP/5956674001
Not for Resale, 11/09/2014 20:41:36 MST

Figure 24-2
Typical Clamp Lug Configurations

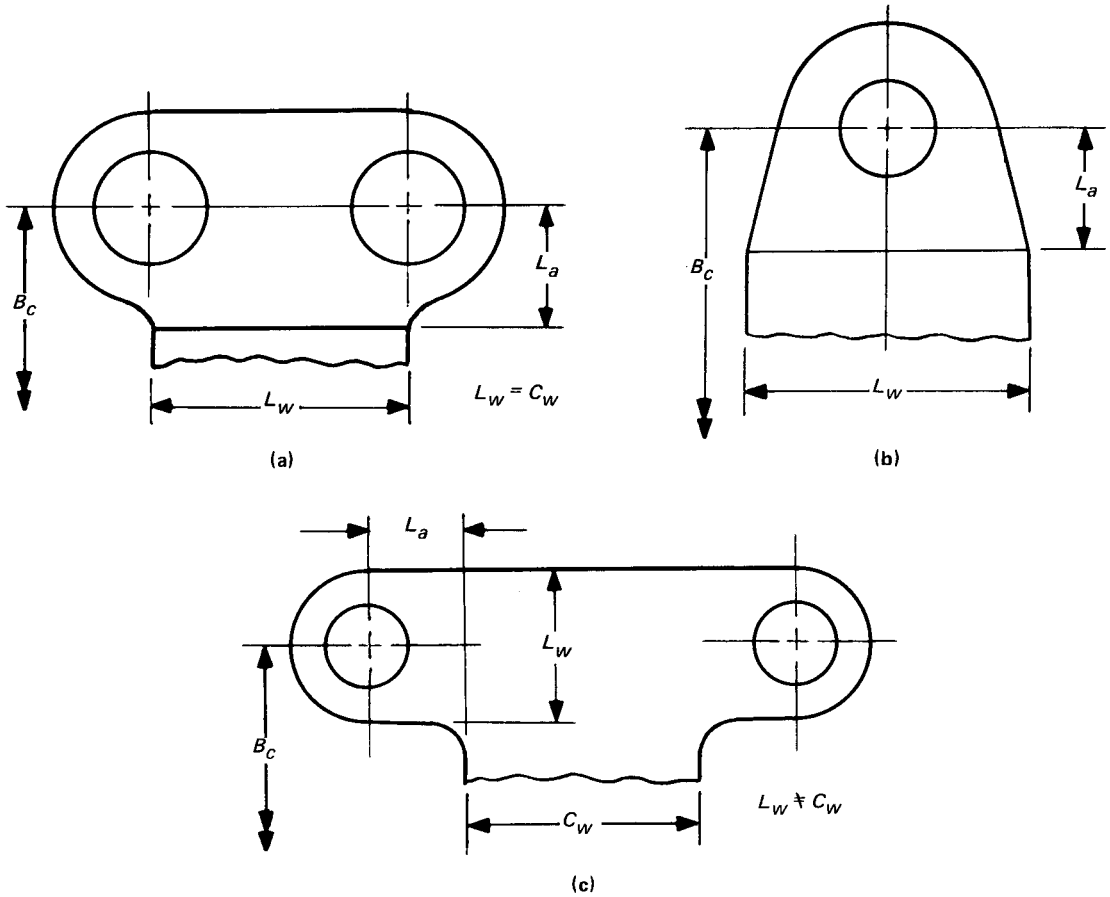

GENERAL NOTE: see 24-1(f) for retainer requirements.

$= (C_w - C_g)l_c$

A_{m1} = total cross-sectional area of bolts per clamp lug at root of thread or section of least diameter under stress, required for the operating conditions

$= W_{m1}/2S_b$

A_{m2} = total cross-sectional area of bolts per clamp lug at root of thread or section of least diameter under stress, required for gasket seating

$= W_{m2}/2S_a$

A_{m3} = total cross-sectional area of bolts per clamp lug at root of thread or section of least diameter under stress, required for assembly conditions

$= W_{m3}/2S_a$

A_{mL} = total required cross-sectional area of bolts per clamp lug taken as the greater of A_{m1}, A_{m2}, or A_{m3}

b = effective gasket or joint-contact-surface seating width (see Table 2-5.2)

b_o = basic gasket or joint-contact-surface seating width (see Table 2-5.2)

B = inside diameter of hub

B_c = radial distance from connection centerline to center of bolts [see Figure 24-1 sketch (e)]

C = diameter of effective clamp-hub reaction circle

$= (A + C_i)/2$

C_i = inside diameter of clamp

C_g = effective clamp gap determined at diameter C

C_t = effective clamp thickness (C_t shall be equal to or greater than r)

C_w = clamp width

e_b = radial distance from center of the bolts to the centroid of the clamp cross section

$= B_c - (C_i/2) - l_c - X$

f = hub stress correction factor from Figure 2-7.6. (This is the ratio of the stress in the small end of the hub to the stress in the large end.) (For values below limit of the figure, use f = 1.0.)

g_o = thickness of hub neck at small end

g_1 = thickness of hub neck at intersection with hub shoulder

g_2 = height of hub shoulder (g_2 shall not be larger than T.)

Provided by IHS under license with ASME
No reproduction or networking permitted without license from IHS
Licensee=Chevron Phillips Chemical Co LP/5956674001
Not for Resale, 11/09/2014 20:41:36 MST

$\bar{g}$ = radial distance from the hub inside diameter B to the hub shoulder ring centroid

$$= \frac{T g_1^2 + h_2 g_2 (2g_1 + g_2)}{2(T g_1 + h_2 g_2)}$$

G = diameter at location of gasket load reaction. Except as noted in Figure 24-1, G is defined as follows (see Table 2-5.2):
(a) when $b_o \leq 1/4$ in. (6 mm), G = mean diameter of gasket or joint contact face;
(b) when $b_o > 1/4$ in. (6 mm), G = outside diameter of gasket contact face less $2b$

h = hub taper length

h_D = radial distance from effective clamp-hub reaction circle to the circle on which H_D acts
= $[C - (B + g_1)]/2$

h_G = radial distance from effective clamp-hub reaction circle to the circle on which H_G acts in. (mm) (for full face contact geometries, $h_G = 0$)

h_n = hub neck length [minimum length of h_n is $0.5g_1$ or $1/4$ in. (6 mm), whichever is larger]

$h_o = \sqrt{Bg_o}$

h_T = radial distance from effective clamp-hub reaction circle to the circle on which H_T acts
= $[C - (B + G)/2]/2$

h_2 = average thickness of hub shoulder
= $T - (g_2 \tan \phi)/2$

$\bar{h}$ = axial distance from the hub face to the hub shoulder ring centroid

$$= \frac{T^2 g_1 + h_2^2 g_2}{2(T g_1 + h_2 g_2)}$$

H = total hydrostatic end force
= $0.785\ G^2 P$

H_D = hydrostatic end force on bore area
= $0.785\ B^2 P$

H_G = difference between total effective axial clamping preload and the sum of total hydrostatic end force and total joint contact surface compression
= $[1.571\ W/\tan(\phi + \mu)] - (H + H_p)$

H_m = total axial gasket seating requirements for make-up ($3.14bGy$ or the axial seating load for self-energizing gaskets, if significant)

H_p = total joint contact surface compression load
= $2b \times 3.14GmP$
= (For self-energized gaskets, use $H_p = 0$ or actual retaining load if significant.)

H_T = difference between total hydrostatic end force and hydrostatic end force on bore area
= $H - H_D$

I_c = moment of inertia of clamp relative to neutral axis of entire section

$$= \left(\frac{A_1}{3} + \frac{A_2}{4}\right) C_t^2 + \frac{A_3 l_c^2}{3} - A_c X^2$$

I_h = moment of inertia of hub shoulder relative to its neutral axis

$$= \frac{g_1 T^3}{3} + \frac{g_2 h_2^3}{3} - (g_2 h_2 + g_1 T)\bar{h}^2$$

L_a = distance from W to the point where the clamp lug joins the clamp body [see Figure 24-1 sketch (e)]

L_h = clamp lug height [see Figure 24-1 sketch (e)]

L_w = clamp lug width (see Figure 24-2)

l_c = effective clamp lip length

l_m = effective clamp lip moment arm
= $l_c - (C - C_t)/2$

m = gasket factor from Table 2-5.1

M_D = moment due to H_D
= $H_D h_D$

M_F = offset moment
= $H_D (g_1 - g_o)/2$

M_G = moment due to H_G
= $H_G h_G$

M_H = reaction moment at hub neck

$$= M_o \left\{ 1 + \frac{1.818}{\sqrt{Bg_1}} \times \left[T - \bar{h} + \frac{3.305 I_h}{g_1^2 (B/2 + \bar{g})} \right] \right\}$$

M_o = total rotational moment on hub (see 24-5)

M_P = pressure moment
= $3.14 \times PBT\ (T/2 - \bar{h})$

M_R = radial clamp equilibriating moment
= $1.571\ W\ \{\bar{h} - T + [(C - N) \tan \phi]/2\}$

M_T = moment due to H_T
= $H_T h_T$

N = outside diameter of hub neck

P = internal design pressure (see UG-21)

Q = reaction shear force at hub neck
= $1.818 M_H / \sqrt{Bg_1}$

r = clamp or hub cross section corner radius
= $1/4$ in. (6 mm) min., C_t max.

S_a = allowable bolt stress at room temperature

S_b = allowable bolt stress at design temperature

S_{OH} = allowable design stress for hub material at (operating condition) design temperature

S_{AH} = allowable design stress for hub material at (assembly condition) room temperature

S_{OC} = allowable design stress for clamp material at (operating condition) design temperature

S_{AC} = allowable design stress for clamp material at (assembly condition) room temperature

S_1 = hub longitudinal stress on outside at hub neck

S_2 = maximum Lamé hoop stress at bore of hub

S_3 = maximum hub shear stress at shoulder

S_4 = maximum radial hub shear stress in neck

S_5 = clamp longitudinal stress at clamp body inner diameter

S_6 = clamp tangential stress at clamp body outer diameter

S_7 = maximum shear stress in clamp lips

Provided by IHS under license with ASME
No reproduction or networking permitted without license from IHS
Licensee=Chevron Phillips Chemical Co LP/5956674001
Not for Resale, 11/09/2014 20:41:36 MST

S_8 = clamp lug bending stress
S_9 = effective bearing stress between clamp and hub
T = thickness of hub shoulder per Figure 24-1
W = total design bolt load required for operating or assembly conditions, as applicable
W_e = total effective axial clamping preload on one clamp lip and hub shoulder (gasket seating or assembly)
= 1.571 W /tan ($\phi + \mu$)
W_{m1} = minimum required total bolt load for the operating conditions [see 24-4(b)(1)]
W_{m2} = minimum required total bolt load for gasket seating [see 24-4(b)(2)]
W_{m3} = minimum required total bolt load for assembly [see 24-4(b)(3)]
X = clamp dimension to neutral axis per Figure 24-1 sketch (f)

$$= \left[\left(\frac{C_w}{2} - \frac{C_t}{3}\right)C_t^2 - \frac{\left(C_w - C_g\right)}{2} l_c^2\right] / A_c$$

y = gasket seating stress (from Table 2-5.1)
Z = clamp-hub taper angle, deg (for gasket seating and preload, $Z = \phi + \mu$; for operating, $Z = \phi - \mu$) [see 24-4(b)(4)]
α = hub transition angle, deg
= 45 deg max.
μ = friction angle, deg
ϕ = clamp shoulder angle, deg
= 40 deg max.

(13) 24-4 BOLT LOADS

(a) General. During assembly of the clamp connection, the design bolt load W is resolved into an effective clamp preload W_e, which is a function of the clamp-hub taper angle ϕ and the friction angle μ. An appropriate friction angle shall be established by the Manufacturer, based on test results for both assembly and operating conditions.

(b) Calculations. In the design of bolting for a clamp connection, complete calculations shall be made for three separate and independent sets of conditions that are defined as follows:

(1) The required bolt load for the operating conditions W_{m1} shall be sufficient to resist the hydrostatic end force H exerted by the design pressure acting on the area bounded by the diameter of gasket reaction plus a gasket compressive load H_p which experience has shown to be sufficient to assure a tight joint. The minimum operating bolt load W_{m1} shall be determined in accordance with eq. (1):

$$W_{m1} = 0.637\left(H + H_p\right)\tan\left(\phi - \mu\right) \quad (1)$$

(2) Before a tight joint can be obtained, it is necessary to seat the gasket or joint-contact surface properly by applying a minimum initial load (under atmospheric temperature conditions without the presence of internal pressure), which is a function of the gasket material and the effective gasket area to be seated. The minimum initial bolt load required for gasket seating W_{m2} shall be determined in accordance with eq. (2):

$$W_{m2} = 0.637H_m \tan\left(\phi + \mu\right) \quad (2)$$

(3) To assure proper preloading of the clamp connection against operating conditions, an assembly bolt load W_{m3} shall be determined in accordance with eq. (3):

$$W_{m3} = 0.637\left(H + H_p\right)\tan\left(\phi + \mu\right) \quad (3)$$

(4) In eq. (1)(1), credit for friction is allowed based on clamp connection geometry and experience, but the bolt load shall not be less than that determined using a ϕ-μ value of 5 deg. Friction is also considered in determining bolt loads by eqs. (2)(2) and (3)(3), but the μ factor used shall not be less than 5 deg.

(c) Required Bolt Area. The total cross-sectional area of bolting A_{mL} required shall be the greater of the values for operating conditions A_{m1}, gasket seating conditions A_{m2}, or assembly condition A_{m3}. Bolt bending in the assembly shall be avoided by utilization of spherically seated nuts and/or washers.

(d) Clamp Connection Design Bolt Load W. The bolt load used in the design of the clamp connection shall be the value obtained from eqs. (4) and (5).

Operating conditions:

$$W = W_{m1} \quad (4)$$

Assembly conditions:

$$W = \left(A_{mL} + A_{bL}\right)S_a \quad (5)$$

Alternatively, if controlled bolting (e.g., bolt tensioning or torque control) techniques are used to assemble the clamp, the assembly design bolt load may be taken as

$$W = 2A_{mL} \cdot S_a \quad (6)$$

In addition, the Manufacturer shall provide to the User a copy of the bolting instructions that were used. It is recommended that the Manufacturer refer to ASME PCC-1, Guidelines for Pressure Boundary Bolted Flange Joint Assembly.

It is cautioned that bolt loads in excess of those calculated using eq. (6) can overstress the clamp.

24-5 HUB MOMENTS

The moments used in determining hub stresses are the products of loads and moment arms illustrated in Figure 24-1 and defined in 24-3.

Provided by IHS under license with ASME
No reproduction or networking permitted without license from IHS
Licensee=Chevron Phillips Chemical Co LP/5956674001
Not for Resale, 11/09/2014 20:41:36 MST

In addition, reaction moments due to hub eccentricities and bearing pressure are considered.

For the operating condition, the design moment M_o is the sum of six individual moments: M_D, M_G, M_T, M_F, M_P, and M_R. The bolt load W used is that from eq. 24-4(d)(4).

For assembly, the design moment M_o is based on the design bolt load of eq. 24-4(d)(5):

$$M_o = \frac{0.785W(C-G)}{\tan(\phi+\mu)} \tag{7}$$

24-6 CALCULATION OF HUB STRESSES

The stresses in the hub shall be determined for both the operating and the assembly condition.

(a) The reaction moment M_H and the reaction shear Q are defined in 24-3 and shall be calculated at the hub neck for rotational moment M_o.

(b) Hub stresses shall be calculated from the following equations:

Hub longitudinal stress

$$S_1 = f\left[\frac{PB^2}{4g_1(B+g_1)} + \frac{1.91M_H}{g_1^2(B+g_1)}\right] \tag{8}$$

Hub hoop stress

$$S_2 = P\left(\frac{N^2+B^2}{N^2-B^2}\right) \tag{9}$$

Hub axial shear stress

$$S_3 = \frac{075\,W}{T(B+2g_1)\tan Z} \tag{10}$$

Hub radial shear stress

$$S_4 = \frac{0.477\,Q}{g_1(B+g_1)} \tag{11}$$

24-7 CALCULATION OF CLAMP STRESSES

The stresses in the clamp shall be determined for both the operating and the assembly conditions. Clamp stresses shall be calculated from the following equations:

Clamp longitudinal stress

$$S_5 = \frac{W}{2C\tan Z}\left[\frac{1}{C_t} + \frac{3(C_t+2l_m)}{C_t^2}\right] \tag{12}$$

Clamp tangential stress

$$S_6 = \frac{W}{2}\left[\frac{1}{A_c} + \frac{|e_b|(C_t-X)}{I_c}\right] \tag{13}$$

Clamp lip shear stress

$$S_7 = \frac{1.5\,W}{(C_w-C_g)\,C\tan Z} \tag{14}$$

Clamp lug bending stress

$$S_8 = 3W\frac{L_a}{L_w L_h^2} \tag{15}$$

In addition, a bearing stress calculation shall be made at the clamp-to-hub contact by eq. (16):

$$S_9 = \frac{W}{(A-C_i)\,C\tan Z} \tag{16}$$

24-8 ALLOWABLE DESIGN STRESSES FOR CLAMP CONNECTIONS

Table 24-8 gives the allowable stresses that are to be used with the equations of 24-6 and 24-7.

Table 24-8
Allowable Design Stress for Clamp Connections

Stress Category	Allowable Stress
S_1	1.5 S_{OH} or 1.5 S_{AH}
S_2	S_{OH}
S_3	0.8 S_{OH} or 0.8 S_{AH}
S_4	0.8 S_{OH} or 0.8 S_{AH}
S_5	1.5 S_{OC} or 1.5 S_{AC}
S_6	1.5 S_{OC} or 1.5 S_{AC}
S_7	0.8 S_{OC} or 0.8 S_{AC}
S_8	S_{OC} or S_{AC}
S_9	[Note (1)]

NOTE:
(1) 1.6 times the lower of the allowable stresses for hub material (S_{OH}, S_{AH}) and clamp material (S_{OC}, S_{AC}).

Provided by IHS under license with ASME
No reproduction or networking permitted without license from IHS
Licensee=Chevron Phillips Chemical Co LP/5956674001
Not for Resale, 11/09/2014 20:41:36 MST

MANDATORY APPENDIX 25 ACCEPTANCE OF TESTING LABORATORIES AND AUTHORIZED OBSERVERS FOR CAPACITY CERTIFICATION OF PRESSURE RELIEF VALVES

25-1 SCOPE

These rules cover the requirements for ASME acceptance of testing laboratories and Authorized Observers for conducting capacity certification tests of pressure relief valves.

25-2 TEST FACILITIES AND SUPERVISION

The tests shall be conducted at a place where the testing facilities, methods, procedures, and person supervising the tests (Authorized Observer) meet the applicable requirements of ASME PTC 25. The tests shall be made under the supervision of and certified by an Authorized Observer. The testing facilities, methods, procedures, and the qualifications of the Authorized Observer shall be subject to the acceptance of ASME on recommendation from a representative from an ASME designated organization. Acceptance of the testing facility is subject to review within each 5 year period. The testing laboratory shall have available for reference a copy of ASME PTC 25 and this Section VIII, Division 1.

25-3 ACCEPTANCE OF TESTING FACILITY

Before a recommendation is made to the ASME Boiler and Pressure Vessel Committee on the acceptability of a testing facility, a representative from an ASME designated organization shall review the applicant's Quality Control System and testing facility and shall witness test runs. Before a favorable recommendation can be made to ASME, the testing facility must meet all applicable requirements of ASME PTC 25. Uncertainty in final flow measurement results shall not exceed ±2%. To determine the uncertainty in final flow measurements, the results of flow tests on an object tested at the applicant's testing laboratory will be compared to flow test results on the same object tested at a designated ASME accepted testing laboratory.

25-4 QUALITY CONTROL SYSTEM

The applicant shall prepare a Quality Control Manual describing his quality control system which will clearly establish the authority and responsibility of those in charge of the Quality Control System. The manual shall include a description of the testing facility, testing arrangements, pressure, size and capacity limitations, and the testing medium used. An organization chart showing the relationship among the laboratory personnel is required to reflect the actual organization.

The Quality Control Manual shall include as a minimum the applicable requirements of this Division and ASME PTC 25, including but not limited to a description of the Quality Control Manual and document control, the procedure to be followed when conducting tests, the methods by which test results are to be calculated, how test instruments and gages are to be calibrated and the frequency of their calibration, and methods of identifying and resolving nonconformities. Sample forms shall be included. If testing procedure specifications or other similar documents are referenced, the Quality Control Manual shall describe the methods of their approval and control.

25-5 TESTING PROCEDURES

(a) Flow tests shall be conducted at the applicant's facility, including the testing of one or more valves and other flow devices (nozzle orifice or other object with a fixed flow path) in accordance with the methods specified by this Division and ASME PTC 25. The capacity of the devices to be tested shall fall within the testing capability of the laboratory being evaluated and a designated ASME accepted testing laboratory. The representative from an ASME designated organization will observe the procedures and methods of tests, and the recording of results.

(b) The devices tested at the applicant's facility will then be tested at a designated ASME accepted testing laboratory to confirm the test results obtained. Agreement between the results of the two laboratories shall be within ±2%.

The purpose of comparing test results at the two laboratories is to check not only procedures, but also all test instruments and equipment of the applicant's facility over the capacity and pressure range proposed. Since the capabilities of each laboratory are different, a specific number of tests cannot be predetermined. The number will be in accordance with the flow capability and measurement techniques available at the laboratory being evaluated.

Provided by IHS under license with ASME
No reproduction or networking permitted without license from IHS
Licensee=Chevron Phillips Chemical Co LP/5956674001
Not for Resale, 11/09/2014 20:41:36 MST

Provided the above tests and comparisons are found acceptable, a representative from an ASME designated organization will submit a report to the Society recommending the laboratory be accepted for the purpose of conducting capacity certification tests. If a favorable recommendation cannot be given, a representative from an ASME designated organization will provide, in writing to the Society, the reasons for such a decision.

25-6 AUTHORIZED OBSERVERS

A representative from an ASME designated organization shall review and evaluate the experience and qualifications of persons who wish to be designated as Authorized Observers. Following such review and evaluation, a representative from an ASME designated organization shall make a report to the Society. If a favorable recommendation is not made, full details shall be provided in the report.

Persons designated as Authorized Observers by the ASME Boiler and Pressure Vessel Committee shall supervise capacity certification tests only at testing facilities specified by ASME.

Provided by IHS under license with ASME
No reproduction or networking permitted without license from IHS
Licensee=Chevron Phillips Chemical Co LP/5956674001
Not for Resale, 11/09/2014 20:41:36 MST

MANDATORY APPENDIX 26
BELLOWS EXPANSION JOINTS

26-1 SCOPE

The rules in this Appendix cover the minimum requirements for the design of bellows expansion joints used as an integral part of heat exchangers or other pressure vessels. These rules apply to single or multiple layer bellows expansion joints, unreinforced, reinforced or toroidal, as shown in Figure 26-1-1, subject to internal or external pressure and cyclic displacement. The bellows shall consist of single or multiple identically formed convolutions. They may be as formed (not heat-treated), or annealed (heat-treated). The suitability of an expansion joint for the specified design pressure, temperature, and axial displacement shall be determined by the methods described herein.

(13) 26-2 CONDITIONS OF APPLICABILITY

The design rules of this Appendix are applicable only when the following conditions of applicability are satisfied:

(a) The bellows shall be such that $Nq \leq 3D_b$.

(b) The bellows nominal thickness shall be such that $nt \leq 0.2$ in. (5.0 mm).

(c) The number of plies shall be such that $n \leq 5$.

(d) The displacement shall be essentially axial. However angular and/or lateral deflection inherent in the fit-up of the expansion joint to the pressure vessel is permissible provided the amount is specified and is included in the expansion joint design [see 26-4.1(d)].

(e) These rules are valid for design temperatures (see UG-20) up to 800°F (425°C).

(f) The fatigue equations given in 26-6.6.3.2, 26-7.6.3.2, and 26-8.6.3.2 are valid for austenitic chromium-nickel stainless steels, UNS N066XX and UNS N04400. For other materials, the fatigue evaluation shall meet the requirements of 26-4.2.2.

(g) The length of the cylindrical shell on each side of the bellows shall not be less than $1.8\sqrt{D_s t_s}$. The length shall be taken from the beginning of the end convolution [point A in Figure 26-1-2, illustrations (a) and (b)], except that for internally attached toroidal bellows, the length shall be taken from the extremity of the shell [point B in Figure 26-1-2, illustration (b)].

26-3 NOMENCLATURE (13)

Symbols used in this Appendix are as follows (see Figure 26-1-1):

A = cross-sectional metal area of one convolution

$$A = \left[2\pi r_m + 2\sqrt{\left\{\frac{q}{2} - 2r_m\right\}^2 + \{w - 2r_m\}^2}\right] n t_p$$

A_f = cross-sectional metal area of one reinforcing fastener

A_r = cross-sectional metal area of one bellows reinforcing member for U-shaped bellows, and cross-sectional metal area of one reinforcing collar for toroidal bellows based on length L_r

A_{rt} = cross-sectional metal area of one reinforcing collar for toroidal bellows based on overall length

A_{tc} = cross-sectional metal area of one tangent collar

A_{ts} = cross-sectional metal area of shell based on length L_s

B_1, B_2, B_3 = coefficients used for toroidal bellows, given by Table 26-8

C_p, C_f, C_d = coefficients for U-shaped convolutions, given by Figure 26-4, 26-5, and 26-6

C_r = convolution height factor for reinforced bellows

$$= 0.3 - \left(\frac{100}{K_c P^{1.5} + 320}\right)^2$$

where

K_c = 0.6 if P is expressed in psi
= 1,048 if P is expressed in MPa

C_1, C_2 = coefficients given by equations, used to determine coefficients C_p, C_f, C_d

$$C_1 = \frac{2r_m}{w}$$

$$C_2 = \frac{1.82 r_m}{\sqrt{D_m t_p}}$$

Provided by IHS under license with ASME
No reproduction or networking permitted without license from IHS
Licensee=Chevron Phillips Chemical Co LP/5956674001
Not for Resale, 11/09/2014 20:41:36 MST

(13)

Figure 26-1-1
Typical Bellows Expansion Joints

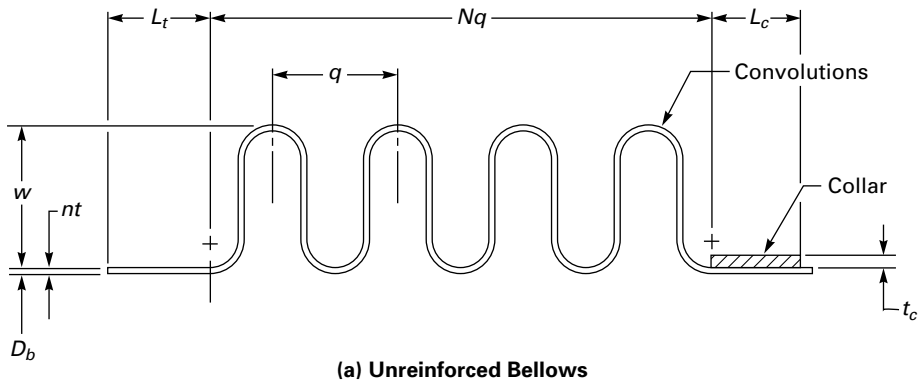

(a) Unreinforced Bellows

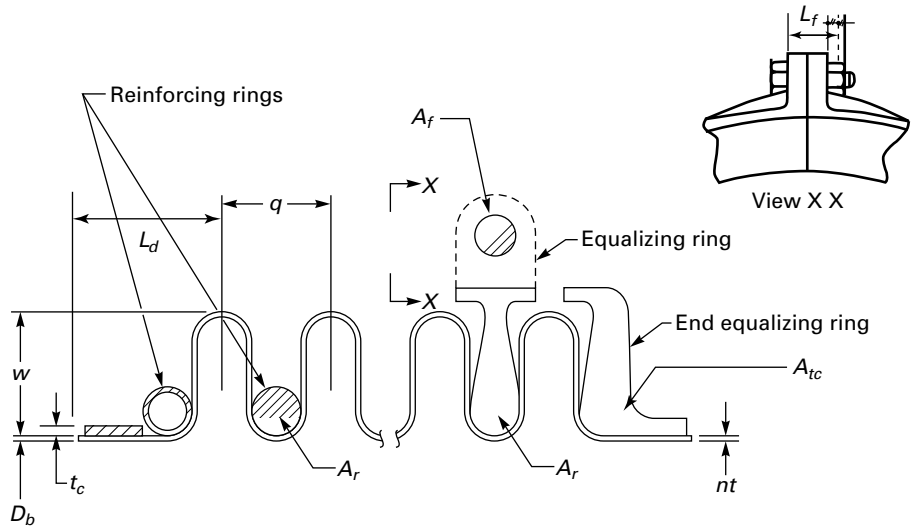

(b) Reinforced Bellows

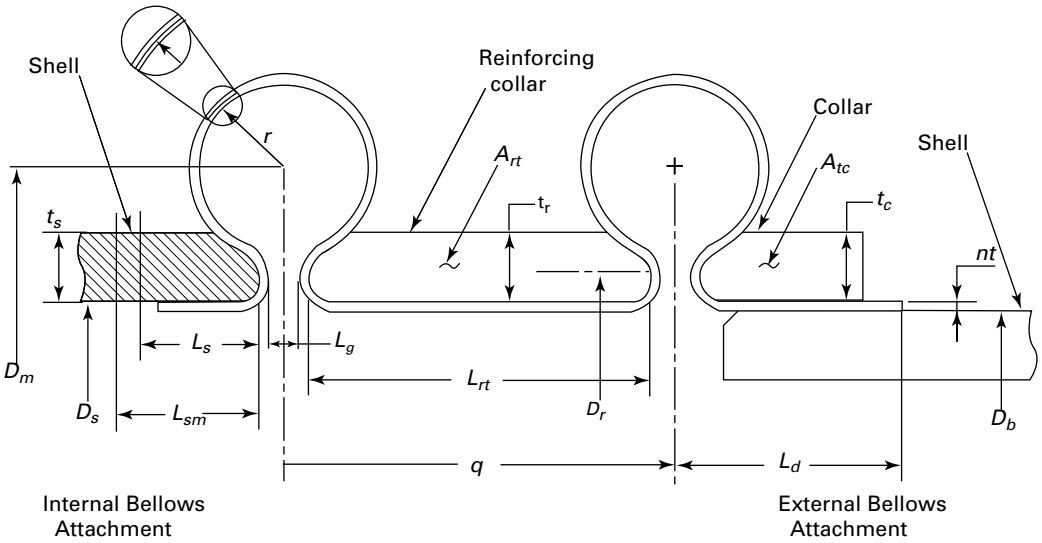

(c) Toroidal Bellows

Provided by IHS under license with ASME
No reproduction or networking permitted without license from IHS
Licensee=Chevron Phillips Chemical Co LP/5956674001
Not for Resale, 11/09/2014 20:41:36 MST

(13)

Figure 26-1-2
Starting Points for the Measurement of the Length of Shell on Each Side of the Bellows

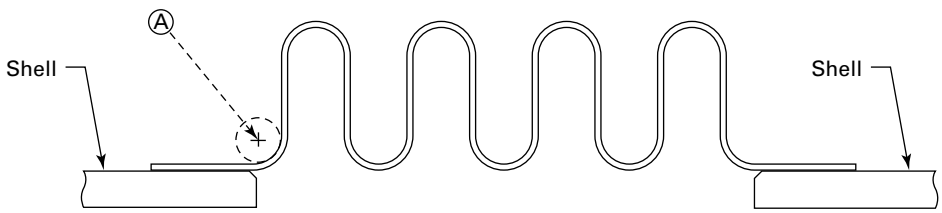

(a) U-Shaped Bellows

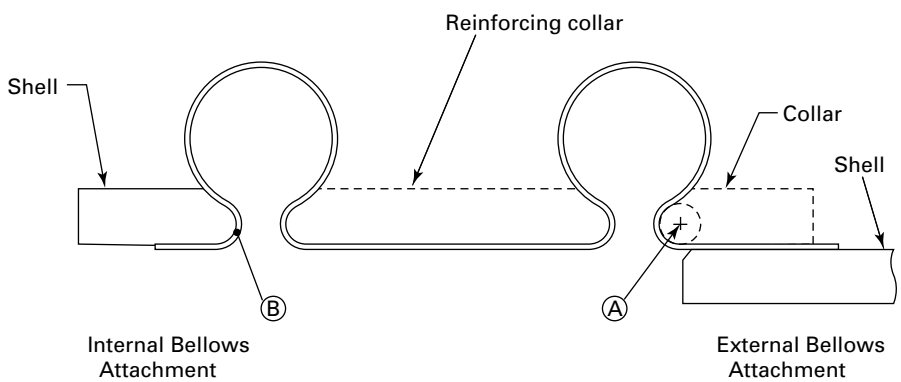

(b) Toroidal Bellows

C_{wc} = longitudinal weld joint efficiency of tangent collar (see UW-12)

C_{wr} = longitudinal weld joint efficiency of reinforcing member (see UW-12)

C_{ws} = longitudinal weld joint efficiency of shell (see UW-12)

D_b = inside diameter of bellows convolution and end tangents

D_c = mean diameter of tangent collar

$$D_c = D_b + 2nt + t_c$$

D_m = mean diameter of bellows convolution
= $D_b + w + nt$ for U-shaped bellows

D_r = mean diameter of reinforcing collar for toroidal bellows

D_s = inside diameter of cylindrical shell or weld end on which the bellows is attached

E_b = modulus of elasticity of bellows material at design temperature

E_c = modulus of elasticity of collar material at design temperature

E_f = modulus of elasticity of reinforcing fastener material at design temperature

E_r = modulus of elasticity of reinforcing ring member material at design temperature

E_o = modulus of elasticity of bellows material at room temperature

H = resultant total internal pressure force acting on the bellows and reinforcement
= $PD_m q$

K_b = bellows axial stiffness

K_f = forming method factor
= 1.0 for expanding mandrel or roll forming
= 0.6 for hydraulic, elastomeric, or pneumatic tube forming

k = factor considering the stiffening effect of the attachment weld and the end convolution on the pressure capacity of the end tangent

$$k = \mathrm{MIN}\left[\left(\frac{L_t}{1.5\sqrt{D_b t}}\right), (1.0)\right]$$

L_c = bellows collar length

L_d = length from attachment weld to the center of the first convolution for externally attached bellows

Provided by IHS under license with ASME
No reproduction or networking permitted without license from IHS
Licensee=Chevron Phillips Chemical Co LP/5956674001
Not for Resale, 11/09/2014 20:41:36 MST

L_f = effective length of one reinforcing fastener. Distance between the mating face of the bolt head and mid-thickness of the nut or distance between mid-thickness of the two nuts, as applicable

L_g = maximum distance across the inside opening of a toroidal convolution considering all movements

L_r = effective reinforcing collar length

= $\sqrt{D_r t_r}/3$

L_{rt} = overall length of reinforcing collar

L_s = effective shell length

= $\sqrt{[(D_s + t_s)t_s]}/3$

L_{sm} = minimum required shell length having thickness t_s

L_t = end tangent length

N = number of convolutions

N_{alw} = allowable number of fatigue cycles

N_{spe} = specified number of fatigue cycles

n = number of plies

P = design pressure (see UG-21)

NOTE: If the MAWP of the bellows is significantly greater than the required design pressure of the vessel, use of the larger MAWP may adversely affect the allowable number cycles that the bellows can experience.

q = convolution pitch (see Figure 26-1-1)

R = ratio of the internal pressure force resisted by the bellows to the internal pressure force resisted by the reinforcement. Use R_1 or R_2 as designated in the equations.

= R_1 for integral reinforcing ring members

$$R_1 = \frac{A\,E_b}{A_r\,E_r}$$

= R_2 for reinforcing ring members joined by fasteners

$$R_2 = \frac{A\,E_b}{D_m}\left(\frac{L_f}{A_f E_f} + \frac{D_m}{A_r\,E_r}\right)$$

r = mean radius of toroidal bellows convolution

r_m = mean radius of U-shaped bellows convolution

S = allowable stress of bellows material at design temperature

S_c = allowable stress of collar material at design temperature

S_f = allowable stress of reinforcing fastener material at design temperature

S_r = allowable stress of reinforcing ring member material at design temperature

S_s = allowable stress of shell material at design temperature

S_t = total stress range due to cyclic displacement

S_1 = circumferential membrane stress in bellows tangent, due to pressure P

S_1' = circumferential membrane stress in collar, due to pressure P

S_1''' = circumferential membrane stress in shell, due to pressure, P, for internally attached toroidal bellows

S_2 = circumferential membrane stress in bellows, due to pressure P

S_2' = circumferential membrane stress in reinforcing member, due to pressure P

S_2'' = membrane stress in fastener, due to pressure member P

S_3 = meridional membrane stress in bellows, due to pressure P

S_4 = meridional bending stress in bellows, due to pressure P

S_5 = meridional membrane stress in bellows, due to total equivalent axial displacement range Δq

S_6 = meridional bending stress in bellows, due to total equivalent axial displacement range Δq

t = nominal thickness of one ply

t_c = collar thickness

t_p = thickness of one ply, corrected for thinning during forming

$$t_p = t\sqrt{\frac{D_b}{D_m}}$$

t_r = reinforcing collar thickness

t_s = nominal thickness of shell or weld end

w = convolution height

Y_{sm} = yield strength multiplier depending upon material

= $1 + 9.94(K_f\varepsilon_f) - 7.59(K_f\varepsilon_f)^2 - 2.4(K_f\varepsilon_f)^3 + 2.21(K_f\varepsilon_f)^4$ for austenitic stainless steel

= $1 + 6.8(K_f\varepsilon_f) - 9.11(K_f\varepsilon_f)^2 + 9.73(K_f\varepsilon_f)^3 - 6.43(K_f\varepsilon_f)^4$ for nickel alloys

= 1.0 for other materials

If Y_{sm} is less than 1.0, then Y_{sm} = 1.0

If Y_{sm} is greater than 2.0, then Y_{sm} = 2.0

Δq = total equivalent axial displacement range per convolution

ε_f = bellows forming strain

$$= \sqrt{\left[\ln\left(1 + \frac{2w}{D_b}\right)\right]^2 + \left[\ln\left(1 + \frac{nt_p}{2r_m}\right)\right]^2}$$

Provided by IHS under license with ASME
No reproduction or networking permitted without license from IHS
Licensee=Chevron Phillips Chemical Co LP/5956674001
Not for Resale, 11/09/2014 20:41:36 MST

for bellows formed from cylinders with an inside diameter of D_b if forming is performed 100% to the outside of the initial cylinder

$$= \sqrt{\left[\ln\left(1 + \frac{w}{D_b}\right)\right]^2 + \left[\ln\left(1 + \frac{nt_p}{2r_m}\right)\right]^2}$$

for bellows formed from cylinders with an inside diameter of D_m if forming is performed 50% to the inside and 50% to the outside of the initial cylinder

ν_b = Poisson's ratio of bellows material

Main subscripts:

b = for bellows
c = for collars
p = for ply
r = for reinforced
t = for end tangent

NOTE: No subscript is used for the bellows convolutions.

26-4 DESIGN CONSIDERATIONS

(13) 26-4.1 GENERAL

(a) Expansion joints shall be designed to provide flexibility for thermal expansion and also to function as a pressure containing element.

(b) The vessel manufacturer shall specify the design conditions and requirements for the detailed design and manufacture of the expansion joint. Use of Specification Sheet Form 26-1 or Form 26-1M is recommended.

(c) In all vessels with integral expansion joints, the hydrostatic end force caused by pressure and/or the joint spring force shall be resisted by adequate restraint elements (e.g., exchanger tubes or shell, external restraints, anchors, etc.). The stress [see UG-23(c)] in these restraining elements shall not exceed the maximum allowable stress at the design temperature for the material given in the tables referenced by UG-23.

(d) The expansion joints shall be provided with bars or other suitable members for maintaining the proper overall length dimension during shipment and vessel fabrication. Expansion bellows shall not be extended, compressed, rotated, or laterally offset to accommodate connecting parts, which are not properly aligned, unless the design considers such movements. see 26-9.

(e) The minimum thickness limitations of UG-16(b) and UHT-16(b) do not apply to bellows designed to this Appendix.

(f) As stated in U-2(g), this Division does not contain rules to cover all details of design and construction. The criteria in this Appendix are, therefore, established to cover common expansion joint types, but it is not intended to limit configurations or details to those illustrated or otherwise described herein. However, when evaluating designs which differ from the basic concepts of this Appendix (e.g., asymmetric geometries or loadings, external pressure, etc.), the design shall comply with the requirements of U-2(g).

(g) Bellows longitudinal weld seams shall have a joint efficiency of 1.0.

(h) Bellows circumferential attachment welds, shells or shell weld ends, and collars shall be in accordance with Figure 26-13, as applicable.

(i) The elastic moduli, yield strength, and allowable stresses shall be taken at the design temperatures. However, when performing the fatigue evaluation in accordance with 26-6.6 (unreinforced bellows), 26-7.6 (reinforced bellows), and 26-8.6 (toroidal bellows), it is permitted to use the operating metal temperature instead of the design temperature.

(13) **Figure 26-2**
Dimensions to Determine I_{xx}

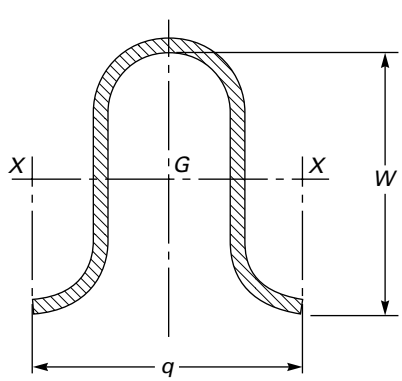

26-4.2 FATIGUE (13)

26-4.2.1 Cumulative Damage. If there are two or more types of stress cycles, which produce significant stresses, their cumulative effect shall be evaluated as given below.

(a) Designate the specified number of times each type of stress cycle of Types 1, 2, 3, etc., will be repeated during the life of the expansion joint as n_1, n_2, n_3, etc., respectively. In determining n_1, n_2, n_3, etc., consideration shall be given to the superposition of cycles of various origins, which produce a total stress difference range greater than the stress difference ranges of the individual cycles. For example, if one type of stress cycle produces 1,000 cycles of a stress difference variation from zero to +60,000 psi and another type of stress cycle produces 10,000 cycles of a stress difference variation from zero to−50,000 psi, the two types of cycle to be considered are defined by the following parameters:

Type 1 cycle:

n_1 = 1,000

Provided by IHS under license with ASME
No reproduction or networking permitted without license from IHS
Licensee=Chevron Phillips Chemical Co LP/5956674001
Not for Resale, 11/09/2014 20:41:36 MST

S_{t1} = |60,000| + |−50,000| = 110,000 psi

Type 2 cycle:

n_2 = 10,000 − 1,000 = 9,000
S_{t2} = |0| + |−50,000| = 50,000 psi

(b) For each value S_{t1}, S_{t2}, S_{t3}, etc., use the applicable design fatigue curve to determine the maximum number of repetitions which would be allowable if this type of cycle were the only one acting. Call these values N_1, N_2, N_3, etc.

(c) For each type of stress cycle, calculate the usage factors U_1, U_2, U_3, etc., from

$U_1 = n_1 / N_1$
$U_2 = n_2 / N_2$
$U_3 = n_3 / N_3$, etc.

(d) Calculate the cumulative usage factor U from:

$U = U_1 + U_2 + U_3 + ...$

(e) The cumulative usage factor U shall not exceed 1.0.

26-4.2.2 Fatigue Correlation Testing. In complying with the requirements of 26-6.6 (unreinforced bellows), 26-7.6 (reinforced bellows), or 26-8.6 (toroidal bellows), the calculation and relation to fatigue life may be performed by any method based on the theory of elasticity. However, the method must be substantiated by correlation with proof or strain gage testing (UG-101) on a consistent series of bellows of the same basic design (annealed and as formed bellows are considered as separate designs) by the manufacturer to demonstrate predictability of rupture pressure and cyclic life.

The substantiation of any analytical procedure shall be based on data obtained from five separate tests on bellows of the same basic design. When substantiating bellows designs with more than two convolutions in series, the test data shall have been obtained from bellows with a minimum of three convolutions.

When compared with the data obtained from the calculation procedure, the test data shall demonstrate that the rupture pressure of the bellows is equal to or greater than three times the maximum allowable working pressure at room temperature.

When S_t along with the other appropriate factors are used in the cycle life equations in 26-6.6 (unreinforced bellows), 26-7.6 (reinforced bellows), or 26-8.6 (toroidal bellows), the specified number of fatigue cycles, N_{spe}, shall be less than the calculated cycles to failure based on the data obtained by testing. The allowable number of fatigue cycles, N_{alw}, may not be increased above that obtained from the equations in 26-6.6, 26-7.6, or 26-8.6 regardless of the test results. The substantiation of analytical procedures shall be available for review by the Inspector.

26-5 MATERIALS

Pressure-retaining component materials including the restraining elements covered by 26-4.1(c) shall comply with the requirements of UG-4.

26-6 DESIGN OF U-SHAPED UNREINFORCED BELLOWS

26-6.1 SCOPE

These rules cover the design of bellows having unreinforced U-shaped convolutions.

Each half convolution consists of a sidewall and two tori of nearly the same radius (at the crest and root of the convolution), in the neutral position, so that the convolution profile presents a smooth geometrical shape as shown in Figure 26-1-1.

26-6.2 CONDITIONS OF APPLICABILITY (13)

These conditions of applicability apply in addition to those listed in 26-2.

(a) A variation of 10% between the crest convolution radius r_{ic} and the root convolution radius r_{ir} is permitted (see Figure 26-3 for the definitions of r_{ic} and r_{ir}).

(b) The torus radius shall be such that $r_i \geq 3t$, where

$$r_i = \frac{r_{ic} + r_{ir}}{2}$$

A smaller torus radius may be used provided the rules of 26-4.2.2 are followed and the increased bending stress due to curvature is accounted for in the fatigue correlation testing.

(c) The offset angle of the sidewalls, α, in the neutral position shall be such that − 15 ≤ α ≤ +15 deg (see Figure 26-3).

(d) The convolution height shall be such that

$$w \leq \frac{D_b}{3}$$

26-6.3 INTERNAL PRESSURE CAPACITY

26-6.3.1 End Tangent. The circumferential membrane stress due to pressure

$$S_1 = \frac{1}{2}\frac{(D_b + nt)^2 L_t E_b k}{nt\,(D_b + nt)\,L_t E_b + t_c D_c L_c E_c k} P$$

shall comply with $S_1 \leq S$.

Provided by IHS under license with ASME
No reproduction or networking permitted without license from IHS
Licensee=Chevron Phillips Chemical Co LP/5956674001
Not for Resale, 11/09/2014 20:41:36 MST

(13)

Figure 26-3
Possible Convolution Profile in the Neutral Position

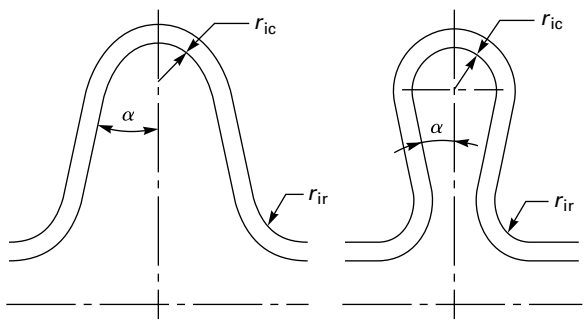

26-6.3.2 Collar. The circumferential membrane stress due to pressure

$$S'_1 = \frac{1}{2}\frac{D_c^2 L_t E_c k}{nt\left(D_b + nt\right)L_t E_b + t_c D_c L_c E_c k}P$$

shall comply with $S'_1 \le C_{wc}\, S_c$.

26-6.3.3 Bellows Convolutions.

(a) The circumferential membrane stress due to pressure

(1) for end convolutions

$$S_{2,E} = \frac{1}{2}\frac{qD_m + L_t\left(D_b + nt\right)}{A + nt_p L_t + t_c L_c}P$$

shall comply with $S_{2,E} \le S$;

(2) for intermediate convolutions

$$S_{2,I} = \frac{1}{2}\frac{qD_m}{A}P$$

shall comply with $S_{2,I} \le S$.

(b) The meridional membrane stress due to pressure is given by

$$S_3 = \frac{w}{2nt_p}P$$

(c) The meridional bending stress due to pressure is given by

$$S_4 = \frac{1}{2n}\left(\frac{w}{t_p}\right)^2 C_p P$$

(13) *(d)* The meridional membrane and bending stresses shall comply with

$$S_3 + S_4 \le K_m S$$

where

K_m = $1.5Y_{sm}$ for as-formed bellows
= 1.5 for annealed bellows

26-6.4 INSTABILITY DUE TO INTERNAL PRESSURE

26-6.4.1 Column Instability. The allowable internal design pressure to avoid column instability is given by:

$$P_{sc} = 0.34\,\frac{\pi K_b}{Nq}$$

The internal pressure shall not exceed P_{sc}: $P \le P_{sc}$.

26-6.4.2 In-Plane Instability. The allowable internal design pressure based on in-plane instability is given by

$$P_{si} = \left(\pi - 2\right)\frac{AS_y^*}{D_m q\sqrt{\alpha}}$$

where

$$\alpha = 1 + 2\delta^2 + \sqrt{1 - 2\delta^2 + 4\delta^4}$$

with

$$\delta = \frac{1}{3}\frac{S_4}{S_{2,I}}$$

and S_y^* is the effective yield strength at design temperature (unless otherwise specified) of bellows material in the as-formed or annealed conditions.

In the absence of values for S_y^* in material standards, the following values shall be used:

S_y^* = 2.3 S_y for as-formed bellows
S_y^* = 0.75 S_y for annealed bellows

where S_y is the yield strength of bellows material at design temperature, given by Section II-D, Table Y-1. For materials not listed in Section II-D, Table Y-1, see UG-28.

Higher values of S_y^* may be used if justified by representative tests.

The internal pressure shall not exceed P_{si}: $P \le P_{si}$.

26-6.5 EXTERNAL PRESSURE STRENGTH

26-6.5.1 External Pressure Capacity. The rules of 26-6.3 shall be applied taking P as the absolute value of the external pressure.

Provided by IHS under license with ASME
No reproduction or networking permitted without license from IHS
Licensee=Chevron Phillips Chemical Co LP/5956674001
Not for Resale, 11/09/2014 20:41:36 MST

Figure 26-4
Coefficient C_p

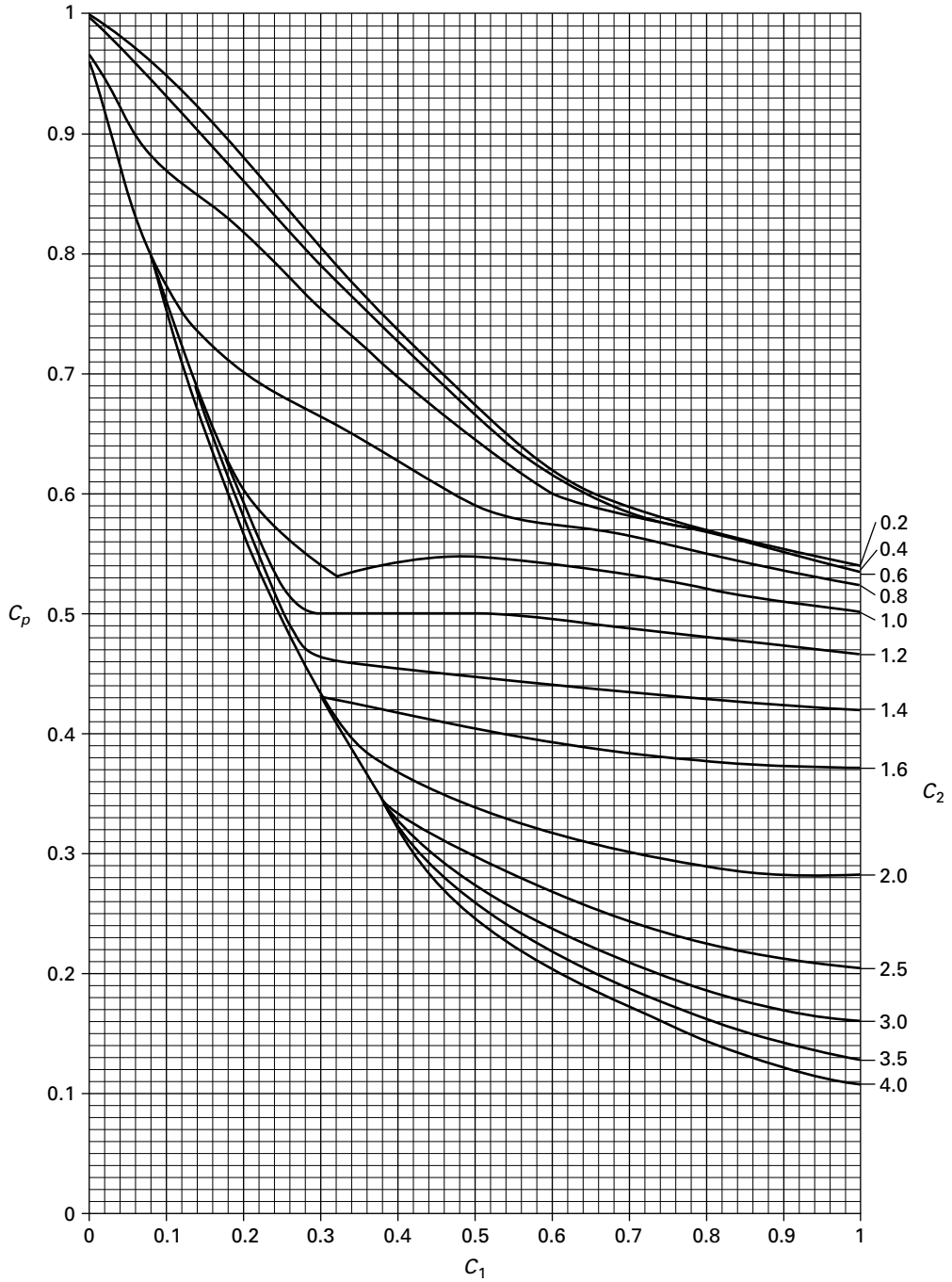

GENERAL NOTE: Paragraph 26-15 gives polynomial approximations for these curves when $0.2 \le C_2 \le 4.0$.

Provided by IHS under license with ASME
No reproduction or networking permitted without license from IHS
Licensee=Chevron Phillips Chemical Co LP/5956674001
Not for Resale, 11/09/2014 20:41:36 MST

Figure 26-5
Coefficient C_f

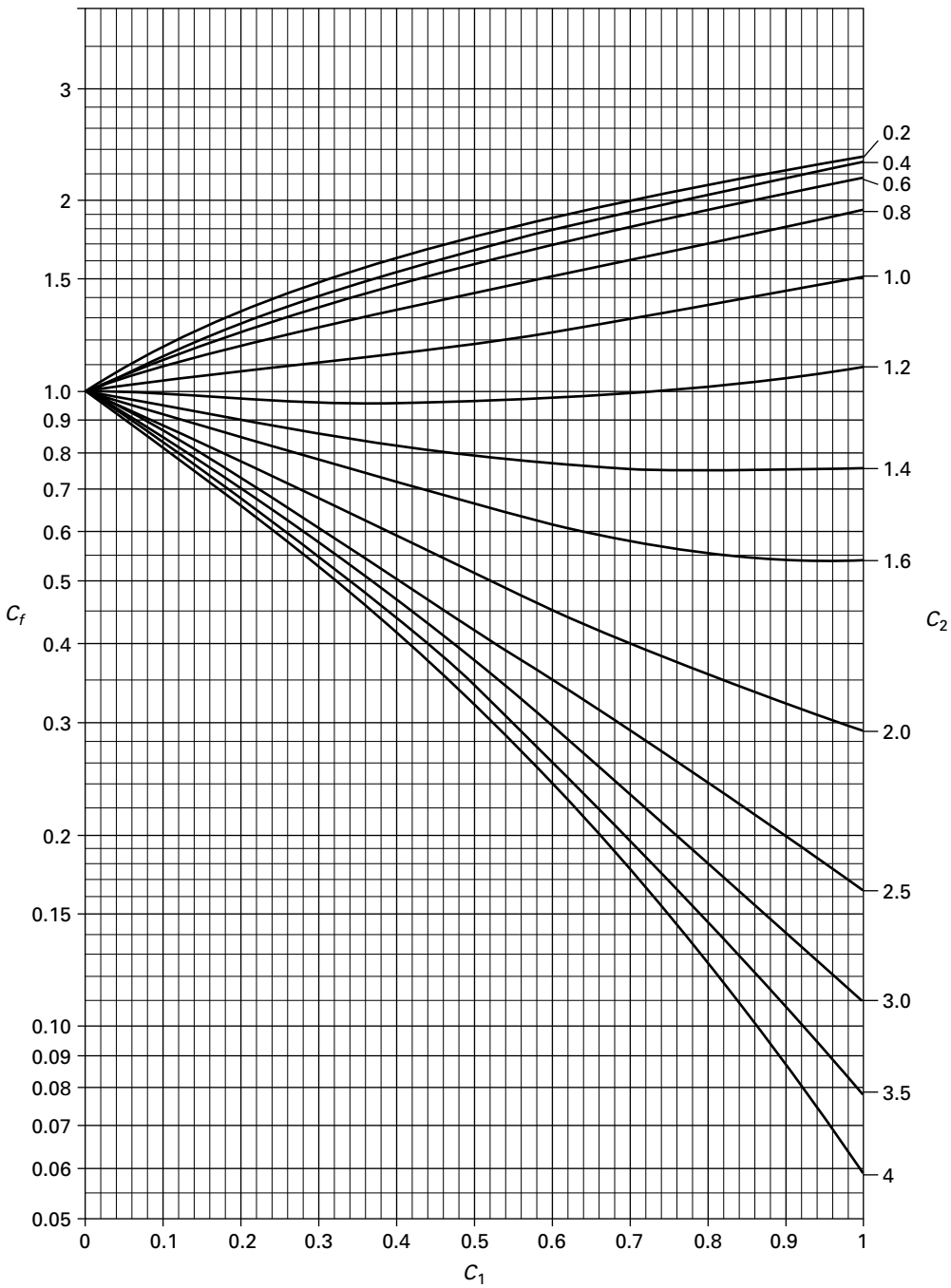

GENERAL NOTE: Paragraph 26-15 gives polynomial approximations for these curves when $0.2 \leq C_2 \leq 4.0$.

Provided by IHS under license with ASME
No reproduction or networking permitted without license from IHS
Licensee=Chevron Phillips Chemical Co LP/5956674001
Not for Resale, 11/09/2014 20:41:36 MST

NOTE: When the expansion bellows is submitted to vacuum, the design shall be performed assuming that only the internal ply resists the pressure. The pressure stress equations of 26-6.3 shall be applied with $n = 1$.

26-6.5.2 Instability Due to External Pressure. This design shall be performed according to the rules of UG-28 by replacing the bellows with an equivalent cylinder, using:

(a) an equivalent outside diameter D_{eq} given by

$$D_{eq} = D_b + w + 2e_{eq}$$

(b) an equivalent thickness e_{eq} given by

$$e_{eq} = \sqrt[3]{12\left(1 - v_b^2\right)\frac{I_{xx}}{q}}$$

where I_{xx} is the moment of inertia of one convolution cross section relative to the axis passing by the center of gravity and parallel to the axis of the bellows (see Figure 26-2).

NOTE: If $L_t = 0$, then I_{xx} is given by

$$I_{xx} = nt_p\left[\frac{(2w-q)^3}{48} + 0.4q(w-0.2q)^2\right]$$

26-6.6 FATIGUE EVALUATION

26-6.6.1 Calculation of Stresses Due to the Total Equivalent Axial Displacement Range Δq of Each Convolution.

(a) Meridional membrane stress:

$$S_5 = \frac{1}{2}\frac{E_b t_p^2}{w^3 C_f}\Delta q$$

(b) Meridional bending stress:

$$S_6 = \frac{5}{3}\frac{E_b t_p}{w^2 C_d}\Delta q$$

26-6.6.2 Calculation of Total Stress Range Due to Cyclic Displacement.

$$S_t = 0.7\left[S_3 + S_4\right] + \left[S_5 + S_6\right]$$

26-6.6.3 Calculation of Allowable Number of Cycles.

26-6.6.3.1 General.

(a) The specified number of cycles N_{spe} shall be stated as consideration of the anticipated number of cycles expected to occur during the operating life of the bellows. The allowable number of cycles N_{alw}, as derived in this subclause, shall be at least equal to N_{spe}: $N_{alw} \geq N_{spe}$

The allowable number of cycles given by the following formulas includes a reasonable safety factor (3 on cycles and 1.25 on stresses) and represents the maximum number of cycles for the operating condition considered. Therefore, an additional safety factor should not be applied. An overly conservative estimate of cycles can necessitate a greater number of convolutions and result in a bellows more prone to instability.

(b) If the bellows is subjected to different cycles of pressure or displacement, such as those produced by startup or shutdown, their cumulative damage shall be considered as in 26-4.2.1.

(c) For fatigue correlation testing, see 26-4.2.2.

26-6.6.3.2 Fatigue Equation. The following equations are valid for: (13)

(a) austenitic chromium-nickel stainless steels, UNS N066XX and UNS N04400 for metal temperatures not exceeding 800°F (425°C).

(b) U-shaped unreinforced bellows, as-formed or annealed.

The allowable number of cycles N_{alw} is given by the following:

$$\text{If} \quad K_g\frac{E_o}{E_b}S_t \geq 65{,}000\ \text{psi}(448\ \text{MPa}):$$

$$N_{alw} = \left(\frac{K_o}{K_g\frac{E_o}{E_b}S_t - S_o}\right)^2$$

If S_t is expressed in psi, $K_o = 5.2 \times 10^6$ and $S_o = 38{,}300$.
If S_t is expressed in MPa, $K_o = 35\ 850$ and $S_o = 264$.

$$\text{If} \quad K_g\frac{E_o}{E_b}S_t < 65{,}000\ \text{psi}(448\ \text{MPa})$$

$$N_{alw} = \left(\frac{K_o}{K_g\frac{E_o}{E_b}S_t - S_o}\right)^2$$

If S_t is expressed in psi, $K_o = 6.7 \times 10^6$ and $S_o = 30{,}600$.
If S_t is expressed in MPa, $K_o = 46\ 200$ and $S_o = 211$.

If $K_g\frac{E_o}{E_b}S_t \leq 37{,}300$ psi (257.2 MPa), then $N_{alw} = 10^6$ cycles.

In the above formulas,

Provided by IHS under license with ASME
No reproduction or networking permitted without license from IHS
Licensee=Chevron Phillips Chemical Co LP/5956674001
Not for Resale, 11/09/2014 20:41:36 MST

K_g = fatigue strength reduction factor that accounts for geometrical stress concentration factors due to thickness variations, weld geometries, surface notches, and other surface or environmental conditions. The range K_g is $1.0 \le K_g \le 4.0$ with its minimum value for smooth geometrical shapes and its maximum for 90 deg welded corners and fillet welds. Fatigue strength reduction factors may be determined from theoretical, experimental, or photoelastic studies. A factor has already been included in the above equations for N to account for normal effects of size, environment, and surface finish. For expansion bellows without circumferential welds and meeting all the design and examination requirements of this Appendix, a K_g of 1.0 may be used.

26-6.7 AXIAL STIFFNESS

The theoretical axial stiffness of a bellows comprising N convolutions may be evaluated by the following formula:

$$K_b = \frac{\pi}{2\left(1 - v_b^2\right)} \frac{n}{N} E_b D_m \left(\frac{t_p}{w}\right)^3 \frac{1}{C_f}$$

This formula is valid only in the elastic range.

NOTE: Outside of the elastic range, lower values can be used, based upon manufacturer's experience or representative test results.

26-7 DESIGN OF U-SHAPED REINFORCED BELLOWS

26-7.1 SCOPE

These rules cover the design of bellows having U-shaped convolutions with rings to reinforce the bellows against internal pressure.

Each convolution consists of a sidewall and two tori of the same radius (at the crest and root of the convolution), in the neutral position, so that the convolution profile presents a smooth geometrical shape as shown in Figure 26-1-1.

(13) 26-7.2 CONDITIONS OF APPLICABILITY

The following conditions of applicability apply in addition to those listed in 26-2.

(a) A variation of 10% between the crest convolution radius r_{ic} and the root convolution radius r_{ir} is permitted (see Figure 26-3 for definitions of r_{ic} and r_{ir}).

(b) The torus radius shall be such that $r_i \ge 3t$, where

$$r_i = \frac{r_{ic} + r_{ir}}{2}$$

A smaller torus radius may be used provided that the rules of 26-4.2.2 are followed and the increased bending stress due to curvature is accounted for in the fatigue correlation testing.

(c) The offset angle of the sidewalls, α, in the neutral position shall be such that $-15 \le \alpha \le +15$ deg (see Figure 26-3).

(d) The convolution height shall be such that:

$$w \le \frac{D_b}{3}$$

26-7.3 INTERNAL PRESSURE CAPACITY (13)

26-7.3.1 End Tangent. The circumferential membrane stress due to pressure

$$S_1 = \frac{1}{2} \frac{\left(D_b + nt\right)^2 L_d E_b}{(nt\, L_t + A/2)(D_b + nt)E_b + A_{tc} D_c E_c} P$$

shall comply with $S_1 \le S$.

26-7.3.2 Collar. The circumferential membrane stress due to pressure

$$S_1' = \frac{1}{2} \frac{(D_c)^2 L_d E_b}{(nt\, L_t + A/2)(D_b + nt)E_b + A_{tc} D_c E_c} P$$

shall comply with $S_1' \le C_{wc}\, S_c$.

26-7.3.3 Bellows Convolutions.

(a) The circumferential membrane stress due to pressure

$$S_2 = \frac{H}{2A}\left(\frac{R}{R+1}\right)$$

where

R = R_1 for integral reinforcing ring members
= R_2 for reinforcing fasteners

shall comply with $S_2 \le S$.

NOTE: In the case of reinforcing members that are made in sections and joined by fasteners in tension, this equation assumes that the structure used to retain the fastener does not bend so as to permit the reinforcing member to expand diametrically. In addition, the end reinforcing members must be restrained against the longitudinal annular pressure load of the bellows.

(b) The meridional membrane stress due to pressure is given by

$$S_3 = 0.85 \frac{w - 4C_r r_m}{2nt_p} P$$

Provided by IHS under license with ASME
No reproduction or networking permitted without license from IHS
Licensee=Chevron Phillips Chemical Co LP/5956674001
Not for Resale, 11/09/2014 20:41:36 MST

Figure 26-6
Coefficient C_d

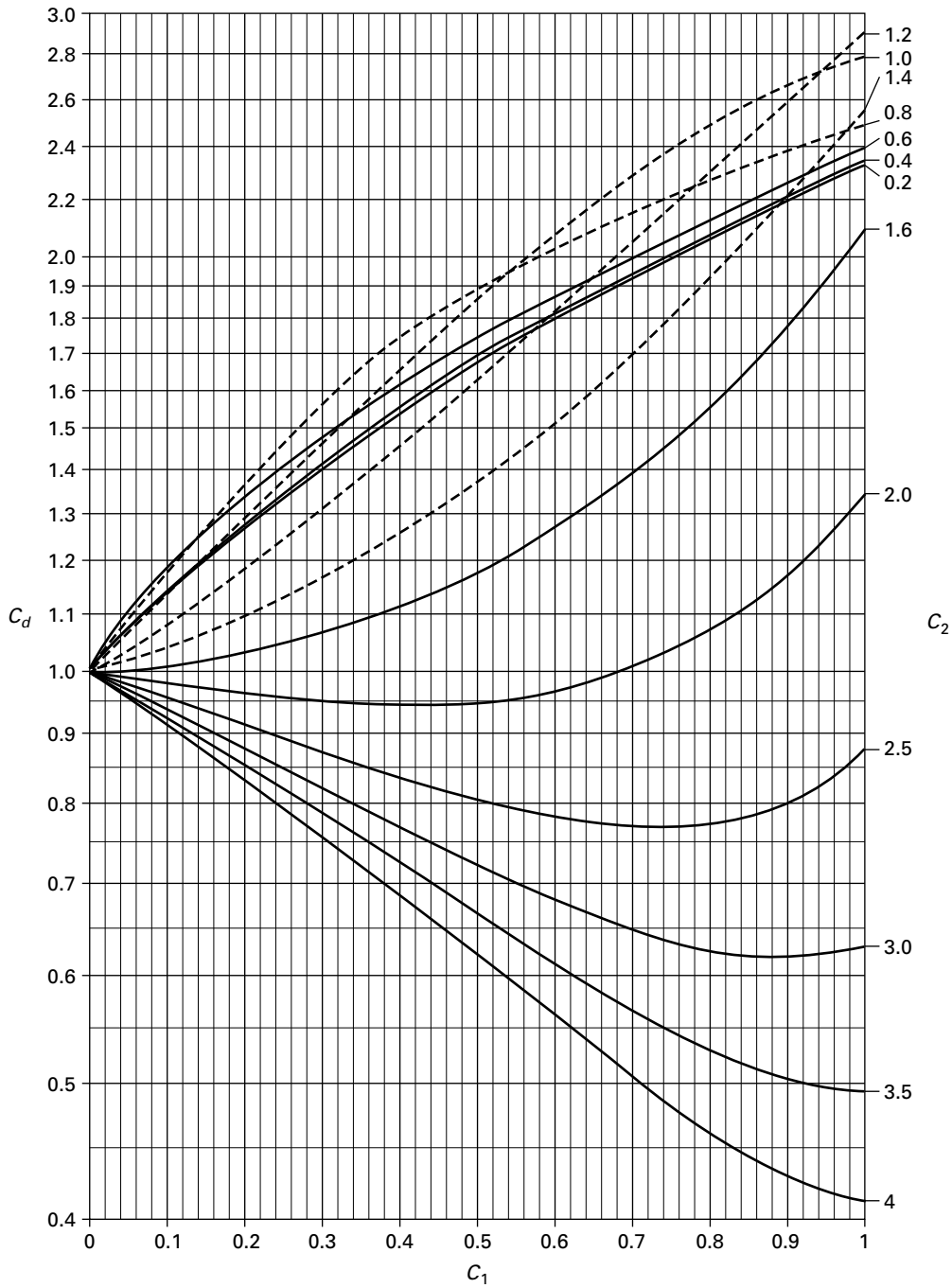

GENERAL NOTE: Paragraph 26-15 gives polynomial approximations for these curves when $0.2 \le C_2 \le 4.0$.

Provided by IHS under license with ASME
No reproduction or networking permitted without license from IHS
Licensee=Chevron Phillips Chemical Co LP/5956674001
Not for Resale, 11/09/2014 20:41:36 MST

(c) The meridional bending stress due to pressure is given by

$$S_4 = \frac{0.85}{2n}\left(\frac{w - 4C_r r_m}{t_p}\right)^2 C_p P$$

(d) The meridional membrane and bending stresses shall comply with: $S_3 + S_4 \le K_m S$

where

K_m = $1.5Y_{sm}$ for as-formed bellows
= 1.5 for annealed bellows

26-7.3.4 Reinforcing Ring Member. The cirumferential membrane stress due to pressure

$$S_2' = \frac{H}{2A_r}\left(\frac{1}{R_1 + 1}\right)$$

shall comply with $S_2' \le C_{wr} S_r$.

NOTE: In the case of equalizing rings, this equation provides only the simple membrane stress and does not include the bending stress caused by the eccentric fastener location. Elastic analysis and/or actual tests can determine these stresses.

26-7.3.5 Reinforcing Fastener. The membrane stress due to pressure

$$S_2'' = \frac{H}{2A_f}\left(\frac{1}{R_2 + 1}\right)$$

shall comply with $S_2'' \le S_f$.

26-7.4 INSTABILITY DUE TO INTERNAL PRESSURE

26-7.4.1 Column Instability. The allowable internal design pressure to avoid column instability is given by

$$P_{sc} = 0.3\frac{\pi K_b}{N_q}$$

and shall comply with $P \le P_{sc}$.

26-7.4.2 In-Plane Instability. Reinforced bellows are not prone to in-plane instability.

26-7.5 EXTERNAL PRESSURE STRENGTH

26-7.5.1 External Pressure Capacity. The rules of 26-6.3 relative to unreinforced bellows shall be applied taking P as the absolute value of the external pressure.

NOTE: When the expansion bellows is exposed to vacuum, the analysis shall be performed assuming that only the internal ply resists the pressure. The pressure stress equations of 26-6.3 shall be applied with n = 1.

26-7.5.2 Instability Due to External Pressure. The circumferential instability of a reinforced bellows shall be calculated in the same manner as for unreinforced bellows. see 26-6.5.2.

26-7.6 FATIGUE EVALUATION

26-7.6.1 Calculation of Stresses Due to the Total Equivalent Axial Displacement Range of Δq of Each Convolution. (13)

(a) Meridional membrane stress:

$$S_5 = \frac{1}{2}\frac{E_b t_p^2}{(w - 4C_r r_m)^3 C_f}\Delta q$$

(b) Meridional bending stress:

$$S_6 = \frac{5}{3}\frac{E_b t_p}{(w - 4C_r r_m)^2 C_d}\Delta q$$

26-7.6.2 Calculation of Total Stress Range.

$$S_t = 0.7\left[S_3 + S_4\right] + \left[S_5 + S_6\right]$$

26-7.6.3 Calculation of Allowable Number of Cycles.

26-7.6.3.1 General.

(a) The specified number of cycles N_{spe} shall be stated as consideration of the anticipated number of cycles expected to occur during the operating life of the bellows. The allowable number of cycles N_{alw}, as derived in this subclause, shall be at least equal to N_{spe}: $N_{alw} \ge N_{spe}$.

The allowable number of cycles given by the following formulas includes a reasonable safety factor (3 on cycles and 1.25 on stresses) and represents the maximum number of cycles for the operating condition considered. Therefore, an additional safety factor should not be applied. An overly conservative estimate of cycles can necessitate a greater number of convolutions and result in a bellows more prone to instability.

(b) If the bellows is submitted to different cycles of pressure or displacement, such as those produced by startup or shutdown, their cumulative damage shall be considered as in 26-4.2.1.

(c) For fatigue correlation testing, see 26-4.2.2.

26-7.6.3.2 Fatigue Equation. The following equations are valid for: (13)

(a) austenitic chromium-nickel stainless steels, UNS N066XX and UNS N04400, for metal temperatures not exceeding 800°F (425°C)

(b) U-shaped reinforced bellows, as-formed or annealed

Provided by IHS under license with ASME
No reproduction or networking permitted without license from IHS
Licensee=Chevron Phillips Chemical Co LP/5956674001
Not for Resale, 11/09/2014 20:41:36 MST

The allowable number of cycles N_{alw} is given by the following:

$$\text{If} \quad K_g \frac{E_o}{E_b} S_t \geq 82,200 \text{ psi} (567 \text{ MPa}) :$$

$$N_{alw} = \left(\frac{K_o}{K_g \frac{E_o}{E_b} S_t - S_o} \right)^2$$

If S_t is expressed in psi, $K_o = 6.6 \times 10^6$ and $S_o = 48{,}500$. If S_t is expressed in MPa, $K_o = 45\ 505$ and $S_o = 334$.

$$\text{If} \quad K_g \frac{E_o}{E_b} S_t < 82,200 \text{ psi} (567 \text{ MPa}) :$$

$$N_{alw} = \left(\frac{K_o}{K_g \frac{E_o}{E_b} S_t - S_o} \right)^2$$

If S_t is expressed in psi, $K_o = 8.5 \times 10^6$ and $S_o = 38{,}800$. If S_t is expressed in MPa, $K_o = 58\ 605.4$ and $S_o = 267.5$.

If $K_g \frac{E_o}{E_b} S_t \leq 47{,}300$ psi (326.1 MPa), then $N_{alw} = 10^6$ cycles.

In the above equations,

K_g = fatigue strength reduction factor that accounts for geometrical stress concentration factors due to thickness variations, weld geometries, surface notches, and other surface or environmental conditions. The range K_g is $1.0 \leq K_g \leq 4.0$ with its minimum value for smooth geometrical shapes and its maximum for 90 deg welded corners and fillet welds. Fatigue strength reduction factors may be determined from theoretical, experimental, or photoelastic studies. A factor has already been included in the above equations for N to account for normal effects of size, environment, and surface finish. For expansion bellows without circumferential welds and meeting all the design and examination requirements of this Appendix, a K_g of 1.0 may be used.

(13) 26-7.7 AXIAL STIFFNESS

The theoretical axial stiffness of a bellows comprising N convolutions may be evaluated by the following formula:

$$K_b = \frac{\pi}{2\left(1 - \nu_b^2\right)} \frac{n}{N} E_b D_m \left(\frac{t_p}{w - 4C_r r_m} \right)^3 \frac{1}{C_f}$$

This formula is valid only in the elastic range.

NOTE: Outside of the elastic range lower values can be used, based upon manufacturer's experience or representative test results.

26-8 DESIGN OF TOROIDAL BELLOWS

26-8.1 SCOPE (13)

These rules cover the design of bellows having toroidal convolutions. The bellows can be attached to the shell either externally or internally. Each convolution consists of a torus of radius r as shown in Figure 26-1-1.

26-8.2 CONDITIONS OF APPLICABILITY (13)

The following conditions of applicability apply in addition to those listed in 26-2:

(a) The type of attachment to the shell (external or internal) shall be the same on both sides.

(b) Distance L_g shall be less than $0.75r$ in the maximum extended position.

(c) For internally attached bellows, the length of the shell on each side of the bellows having thickness t_s shall be at least equal to $L_{sm} = 1.8\sqrt{D_s t_s}$.

26-8.3 INTERNAL PRESSURE CAPACITY (13)

26-8.3.1 End Tangent. For externally attached bellows, the circumferential membrane stress due to pressure

$$S_1 = \frac{1}{2} \frac{(D_b + nt)^2 L_d E_b}{D_c E_c A_{tc}} P$$

shall comply with $S_1 \leq S$.

26-8.3.2 Tangent Collar or Shell.

(a) For externally attached bellows, the circumferential membrane stress in the collar due to pressure

$$S_1' = \frac{1}{2} \frac{D_c L_d}{A_{tc}} P$$

shall comply with $S_1' \leq C_{wc} S_c$.

(b) For internally attached bellows, the circumferential membrane stress in the shell due to pressure

$$S_1''' = \frac{(D_s + t_s)(L_s + 0.5L_g + nt)}{2A_{ts}} P$$

shall comply with $S_1''' \leq C_{ws} S_s$.

26-8.3.3 Bellows Convolutions.

(a) The circumferential membrane stress due to pressure

$$S_2 = \frac{r}{2nt_p} P$$

shall comply with $S_2 \leq S$.

Provided by IHS under license with ASME
No reproduction or networking permitted without license from IHS
Licensee=Chevron Phillips Chemical Co LP/5956674001
Not for Resale, 11/09/2014 20:41:36 MST

Figure 26-7
Bellows Subjected to an Axial Displacement *x*

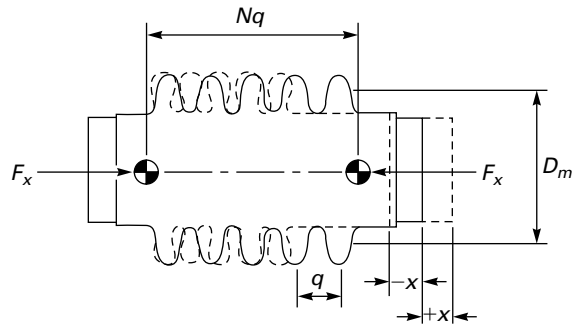

(b) The meridional membrane stress due to pressure

$$S_3 = \frac{r}{nt_p}\left(\frac{D_m - r}{D_m - 2r}\right)P$$

shall comply with $S_3 \le S$.

26-8.3.4 Reinforcing Collars. The circumferential membrane stress due to pressure

$$S_2' = \frac{D_r(L_{rt} + L_g + 2nt)}{2A_{rt}}P$$

if $L_{rt} \le 2\sqrt{D_r t_r}/3$

$$S_2' = \frac{D_r(L_r + 0.5L_g + nt)}{2A_r}P$$

if $L_{rt} > 2\sqrt{D_r t_r}/3$

shall comply with $S_2' \le C_{wr}S_r$.

26-8.4 INSTABILITY DUE TO INTERNAL PRESSURE

26-8.4.1 Column Instability. The allowable internal design pressure to avoid column instability is given by

$$P_{sc} = \frac{0.15\pi K_b}{Nr}$$

26-8.4.2 In-Plane Instability. Toroidal bellows are not subject to in-plane instability.

26-8.5 EXTERNAL PRESSURE STRENGTH

26-8.5.1 External Pressure Capacity. The rules of 26-8.3 shall be applied taking P as the absolute value of the external pressure and using $A_c = 0$ in the equations.

NOTE: When the expansion bellows is exposed to vacuum, the analysis shall be performed assuming that only the internal ply resists the pressure. The pressure stress equations of 26-8.3 shall be applied with $n = 1$.

26-8.5.2 Instability Due to External Pressure. Instability due to external pressure is not covered by the present rules.

26-8.6 FATIGUE EVALUATION

26-8.6.1 Calculation of Stress Due to the Total Equivalent Axial Displacement Range Δq of Each Convolution.

(a) Meridional membrane stress:

$$S_5 = \frac{E_b t_p^2 B_1}{34.3r^3}\Delta q$$

(b) Meridional bending stress:

$$S_6 = \frac{E_b t_p B_2}{5.72r^2}\Delta q$$

26-8.6.2 Calculation of Total Stress Range.

$$S_t = 3S_3 + S_5 + S_6$$

26-8.6.3 Calculation of Allowable Number of Cycles.

26-8.6.3.1 General.

(a) The specified number of cycles N_{spe} shall be stated as consideration of the anticipated number of cycles expected to occur during the operating life of the bellows. The allowable number of cycles N_{alw}, as derived in this subclause, shall be at least equal to N_{spe}: $N_{alw} \ge N_{spe}$.

The allowable number of cycles given by the following formulas includes a reasonable safety factor (3 on cycles and 1.25 on stresses) and represents the maximum number of cycles for the operating condition considered. Therefore, an additional safety factor should not be applied. An overly conservative estimate of cycles can necessitate a greater number of convolutions and result in a bellows more prone to instability.

Provided by IHS under license with ASME
No reproduction or networking permitted without license from IHS
Licensee=Chevron Phillips Chemical Co LP/5956674001
Not for Resale, 11/09/2014 20:41:36 MST

(b) If the bellows is submitted to different cycles of pressure or displacement, such as those produced by startup or shutdown, their cumulative damage shall be considered as in 26-4.2.1.

(c) For fatigue correlation testing, see 26-4.2.2.

(13) **26-8.6.3.2 Fatigue Equation.** The following equations are valid for:

(a) austenitic chromium-nickel stainless steels, UNS N066XX and UNS N04400, for metal temperatures not exceeding 800°F (425°C);

(b) toroidal reinforced bellows, as-formed or annealed.

The allowable number of cycles N_{alw} is given by the following:

$$\text{If} \quad K_g \frac{E_o}{E_b} S_t \geq 65{,}000 \text{ psi} (448 \text{ MPa}) :$$

$$N_{alw} = \left(\frac{K_o}{K_g \frac{E_o}{E_b} S_t - S_o} \right)^2$$

If S_t is expressed in psi, $K_o = 5.2 \times 10^6$ and $S_o = 38{,}300$. If S_t is expressed in MPa, $K_o = 35\ 850$ and $S_o = 264$.

$$\text{If} \quad K_g \frac{E_o}{E_b} S_t < 65{,}000 \text{ psi} (448 \text{ MPa}) :$$

$$N_{alw} = \left(\frac{K_o}{K_g \frac{E_o}{E_b} S_t - S_o} \right)^2$$

If S_t is expressed in psi, $K_o = 6.7 \times 10^6$ and $S_o = 30{,}600$. If S_t is expressed in MPa, $K_o = 46\ 200$ and $S_o = 211$.

If $K_g \frac{E_o}{E_b} S_t \leq 37{,}300$ psi (257.2 MPa), then $N_{alw} = 10^6$ cycles.

In the above formulas,

K_g = fatigue strength reduction factor that accounts for geometrical stress concentration factors due to thickness variations, weld geometries, surface notches, and other surface or environmental conditions. The range K_g is $1.0 \leq K_g \leq 4.0$ with its minimum value for smooth geometrical shapes and its maximum for 90 deg welded corners and fillet welds. Fatigue strength reduction factors may be determined from theoretical, experimental, or photoelastic studies. A factor has already been included in the above equations for N to account for normal effects of size, environment, and surface finish. For expansion bellows without circumferential welds and meeting all the design and examination requirements of this Appendix, a K_g of 1.0 may be used.

26-8.7 AXIAL STIFFNESS

The theoretical axial stiffness of a bellows comprising N convolutions may be evaluated by the following formula:

$$K_b = \frac{1}{12\left(1 - \nu_b^2\right)} \frac{n}{N} E_b D_m \left(\frac{t_p}{r} \right)^3 B_3$$

This formula is valid only in the elastic range.

NOTE: Outside of the elastic range lower values can be used, based upon manufacturer's experience or representative test results.

26-9 BELLOWS SUBJECTED TO AXIAL, LATERAL, OR ANGULAR DISPLACEMENTS

26-9.1 GENERAL

The purpose of this subclause is to determine the equivalent axial displacement of an expansion bellows subjected at its ends to:

(a) an axial displacement from the neutral position: x in extension ($x > 0$), or in compression ($x < 0$)

(b) a lateral deflection from the neutral position: y ($y > 0$)

(c) an angular rotation from the neutral position: θ ($\theta > 0$)

Table 26-8
Tabular Values for Coefficients B_1, B_2, B_3

$\frac{6.61r^2}{D_m t_p}$	B_1	B_2	B_3
0	1.0	1.0	1.0
1	1.1	1.0	1.1
2	1.4	1.0	1.3
3	2.0	1.0	1.5
4	2.8	1.0	1.9
5	3.6	1.0	2.3
6	4.6	1.1	2.8
7	5.7	1.2	3.3
8	6.8	1.4	3.8
9	8.0	1.5	4.4
10	9.2	1.6	4.9
11	10.6	1.7	5.4
12	12.0	1.8	5.9
13	13.2	2.0	6.4
14	14.7	2.1	6.9
15	16.0	2.2	7.4
16	17.4	2.3	7.9
17	18.9	2.4	8.5
18	20.3	2.6	9.0
19	21.9	2.7	9.5
20	23.3	2.8	10.0

Provided by IHS under license with ASME
No reproduction or networking permitted without license from IHS
Licensee=Chevron Phillips Chemical Co LP/5956674001
Not for Resale, 11/09/2014 20:41:36 MST

Figure 26-8
Bellows Subjected to a Lateral Deflection *y*

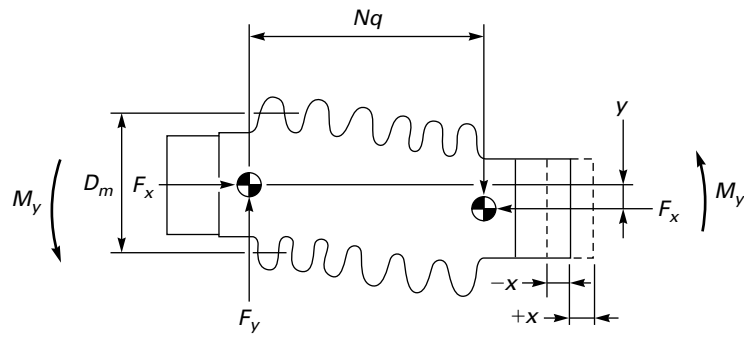

26-9.2 AXIAL DISPLACEMENT

When the ends of the bellows are subjected to an axial displacement x (see Figure 26-7) , the equivalent axial displacement per convolution is given by

$$\Delta q_x = \frac{1}{N}x$$

where

x = positive for extension ($x > 0$)
= negative for compression ($x < 0$)

Values of x in extension and compression may be different.

The corresponding axial force F_x applied to the ends of the bellows is given by

$$F_x = K_b x$$

26-9.3 LATERAL DEFLECTION

When the ends of the bellows are subjected to a lateral deflection y (see Figure 26-8), the equivalent axial displacement per convolution is given by

$$\Delta q_y = \frac{3D_m}{N(Nq + x)}y$$

where y shall be taken positive.

The corresponding lateral force F_y applied to the ends of the bellows is given by

$$F_y = \frac{3K_b D_m^2}{2(Nq + x)^2}y$$

The corresponding moment M_y applied to the ends of the bellows is given by

$$M_y = \frac{3K_b D_m^2}{4(Nq + x)}y$$

26-9.4 ANGULAR ROTATION

When the ends of the bellows are subjected to an angular rotation θ (see Figure 26-9), the equivalent axial displacement per convolution is given by

$$\Delta q_\theta = \frac{D_m}{2N}\theta$$

where θ, expressed in radians, shall be taken positive.

The corresponding moment M_θ applied to the ends of the bellows is given by

$$M_\theta = \frac{K_b D_m^2}{8}\theta$$

26-9.5 TOTAL EQUIVALENT AXIAL DISPLACEMENT RANGE PER CONVOLUTION

26-9.5.1 Equivalent Axial Displacement Per Convolution. The equivalent axial displacement per convolution, in extension or compression, is given by:

$$\Delta q_e = \Delta q_x + \Delta q_y + \Delta q_\theta \quad \text{(extended convolution)}$$

$$\Delta q_c = \Delta q_x - \Delta q_y - \Delta q_\theta \quad \text{(compressed concolution)}$$

26-9.5.2 Bellows Installed Without Cold Spring. This subclause applies when the bellows is submitted to displacements (see Figure 26-10):

(a) from the neutral position ($x_0 = 0, y_0 = 0, \theta_0 = 0$)

(b) to the operating position (x_1, y_1, θ_1)

Provided by IHS under license with ASME
No reproduction or networking permitted without license from IHS
Licensee=Chevron Phillips Chemical Co LP/5956674001
Not for Resale, 11/09/2014 20:41:36 MST

Figure 26-9
Bellows Subjected to an Angular Rotation θ

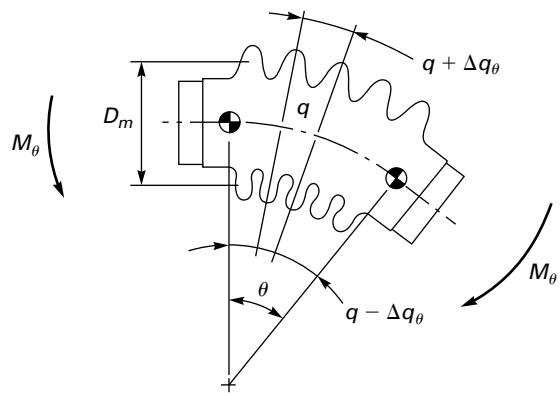

The equivalent axial displacement per convolution, in extension or compression, is given by:

$$\Delta q_{e,1} = \Delta q_{x,1} + \Delta q_{y,1} + \Delta q_{\theta,1} \quad \text{(extension)}$$

$$\Delta q_{c,1} = \Delta q_{x,1} - \Delta q_{y,1} - \Delta q_{\theta,1} \quad \text{(compression)}$$

If $x > 0$: first formula controls.

If $x < 0$: second formula controls.

The total equivalent axial displacement range is given by:

$$\Delta q = \max.\left[\left|\Delta q_{e,1}\right|, \left|\Delta q_{c,1}\right|\right]$$

26-9.5.3 Bellows Installed With Cold Spring. This subclause applies when the bellows is submitted to displacements (see Figure 26-11):

(a) from an initial position (x_0, y_0, θ_0), which is not the neutral position

$$\Delta q_{e,0} = \Delta q_{x,0} + \Delta q_{y,0} + \Delta q_{\theta,0} \quad \text{(extension)}$$

$$\Delta q_{c,0} = \Delta q_{x,0} - \Delta q_{y,0} - \Delta q_{\theta,0} \quad \text{(compression)}$$

(b) to the operating position (x_1, y_1, θ_1)

$$\Delta q_{e,1} = \Delta q_{x,1} + \Delta q_{y,1} + \Delta q_{\theta,1} \quad \text{(extension)}$$

$$\Delta q_{c,1} = \Delta q_{x,1} - \Delta q_{y,1} - \Delta q_{\theta,1} \quad \text{(compression)}$$

The total equivalent axial displacement range is given by:

$$\Delta q = \max.\left[\left|\Delta q_{e,1} - \Delta q_{c,0}\right|, \left|\Delta q_{c,1} - \Delta q_{e,0}\right|\right]$$

26-9.5.4 Bellows Operating Between Two Operating Positions. This subclause applies when the bellows is submitted to displacements (see Figure 26-12):

(a) from the operating position 1 (x_1, y_1, θ_1)

$$\Delta q_{e,1} = \Delta q_{x,1} + \Delta q_{y,1} + \Delta q_{\theta,1} \quad \text{(extension)}$$

$$\Delta q_{c,1} = \Delta q_{x,1} - \Delta q_{y,1} - \Delta q_{\theta,1} \quad \text{(compression)}$$

(b) to the operating position 2 (x_2, y_2, θ_2)

$$\Delta q_{e,2} = \Delta q_{x,2} + \Delta q_{y,2} + \Delta q_{\theta,2} \quad \text{(extension)}$$

$$\Delta q_{c,2} = \Delta q_{x,2} - \Delta q_{y,2} - \Delta q_{\theta,2} \quad \text{(compression)}$$

The total equivalent axial displacement range is given by:

$$\Delta q = \max.\left[\left|\Delta q_{e,2} - \Delta q_{c,1}\right|, \left|\Delta q_{c,2} - \Delta q_{e,1}\right|\right]$$

An initial cold spring [initial position (0)] has no effect on the results.

26-10 FABRICATION (13)

(a) Longitudinal weld seams shall be butt-type full penetration welds; Type (1) of Table UW-12.

(b) Circumferential welds attaching the bellows to the shell or weld end elements shall be full penetration groove welds or full fillet welds as shown in Figure 26-13.

Provided by IHS under license with ASME
No reproduction or networking permitted without license from IHS
Licensee=Chevron Phillips Chemical Co LP/5956674001
Not for Resale, 11/09/2014 20:41:36 MST

(c) Other than the attachment welds, no circumferential welds are permitted in the fabrication of bellows convolutions.

(d) U-shaped unreinforced and reinforced bellows shall be manufactured to the tolerances listed in Table 26-10-1.

(e) Toroidal bellows shall be manufactured to the tolerances shown in Figure 26-14.

(13)

Table 26-10-1
U-Shaped Unreinforced and Reinforced Bellows Manufacturing Tolerances

Bellows Dimension, in. (mm)	
Convolution Pitch, *q*	**Manufacturing Tolerance, in. (mm)**
≤0.5 (≤12.7)	±0.063 (±1.6)
>0.5 to 1.0 (>12.7 to 25.4)	±0.125 (±3.2)
>1.0 to 1.5 (>25.4 to 38.1)	±0.188 (±4.7)
>1.5 to 2.0 (>38.1 to 50.8)	±0.250 (±6.4)
>2.0 (>50.8)	±0.313 (±7.9)
Convolution Height, *w*	
≤0.5 (≤12.7)	±0.031 (±0.8)
>0.5 to 1.0 (>12.7 to 25.4)	±0.063 (±1.6)
>1.0 to 1.5 (>25.4 to 38.1)	±0.094 (±2.4)
>1.5 to 2.0 (>38.1 to 50.8)	±0.125 (±3.2)
>2.0 to 2.5 (>50.8 to 63.5)	±0.156 (±4.0)
>2.5 to 3.0 (>63.5 to 76.2)	±0.188 (±4.7)
>3.0 to 3.5 (>76.2 to 88.9)	±0.219 (±5.6)
>3.5 to 4.0 (>88.9 to 101.6)	±0.250 (±6.4)
>4.0 (>101.6)	±0.281 (±7.1)
Convolution Inside Diameter, *Db*	
≤8.625 (≤219)	±0.063 (±1.6)
>8.625 to 24.0 (>219 to 610)	±0.125 (±3.2)
>24.0 to 48.0 (>610 to 1 219)	±0.188 (±4.7)
>48.0 to 60.0 (>1 219 to 1 524)	±0.250 (±6.4)
>60.0 (>1 524)	±0.313 (±7.9)

Figure 26-10
Cyclic Displacements

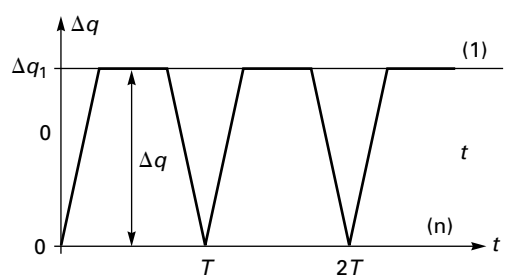

Legend:

(1) = operating position Δq_1
(n) = neutral position

Provided by IHS under license with ASME
No reproduction or networking permitted without license from IHS
Licensee=Chevron Phillips Chemical Co LP/5956674001
Not for Resale, 11/09/2014 20:41:36 MST

26-11 EXAMINATION

(a) Expansion joint flexible elements shall be visually examined and found free of unacceptable surface conditions, such as notches, crevices, material buildup or upsetting, and weld spatter, which may serve as points of local stress concentration. Suspect surface areas shall be further examined by the liquid penetrant method.

(b) Bellows butt-type welds shall be examined 100% on both sides by the liquid penetrant method before forming. This examination shall be repeated after forming to the maximum extent possible considering the physical and visual access to the weld surfaces after forming.

(c) The circumferential attachment welds between the bellows and the weld ends shall be examined 100% by the liquid penetrant method.

(d) Liquid penetrant examinations shall be in accordance with Mandatory Appendix 8, except that linear indications shall be considered relevant if the dimension exceeds $0.25t_m$, but not less than 0.010 in. (0.25 mm), where t_m is the minimum bellows wall thickness before forming.

26-12 PRESSURE TEST REQUIREMENTS

(13) 26-12.1 DESIGN REQUIREMENTS

The designer shall consider the possibility of instability of the bellows due to internal pressure if the test pressure exceeds the value determined using the following applicable equation. In such a case, the designer shall redesign the bellows to satisfy the test condition.

(a) for unreinforced bellows

$$P_{t,s} = 1.5\,\mathrm{MIN}\left[(P_{sc}), (P_{si})\right]$$

(b) for reinforced and toroidal bellows

$$P_{t,s} = 1.5(P_{sc})$$

26-12.2 TEST REQUIREMENTS

(a) The completed expansion joint shall be pressure tested in accordance with UG-99 or UG-100. The pressure testing may be performed as a part of the final vessel pressure test, provided the joint is accessible for inspection during pressure testing.

(b) Expansion joint restraining elements [see 26-4.1(c)] shall also be pressure tested in accordance with UG-99 or UG-100 as a part of the initial expansion joint pressure test or as a part of the final vessel pressure test after installation of the joint.

(c) In addition to inspecting the expansion joint for leaks and structural integrity during the pressure test, expansion joints shall be inspected before, during, and after the pressure test for visible permanent distortion.

26-13 MARKING AND REPORTS

The expansion joint Manufacturer, whether the vessel Manufacturer or a parts Manufacturer, shall have a valid ASME Code U Certificate of Authorization and shall complete the appropriate Data Report in accordance with UG-120.

(a) The Manufacturer responsible for the expansion joint design shall include the following additional data and statements on the appropriate Data Report:

(1) spring rate

(2) axial movement (+ and −), associated design life in cycles, and associated loading condition, if applicable

(3) that the expansion joint has been constructed to the rules of this Appendix

(b) A parts Manufacturer shall identify the vessel for which the expansion joint is intended on the Partial Data Report.

(c) Markings shall not be stamped on the flexible elements of the expansion joint.

Figure 26-11
Cyclic Displacements

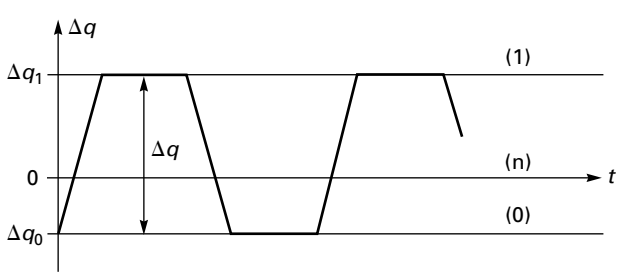

Legend:

(0) = initial position Δq_0
(1) = operating position Δq_1
(n) = neutral position

Figure 26-12
Cyclic Displacements

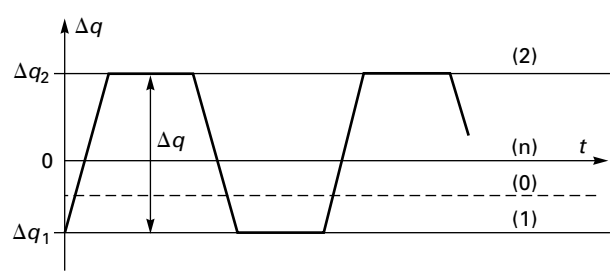

Legend:

(0) = initial position 0
(n) = neutral position
(1) = operating position 1
(2) = operating position 2

Provided by IHS under license with ASME
No reproduction or networking permitted without license from IHS
Licensee=Chevron Phillips Chemical Co LP/5956674001
Not for Resale, 11/09/2014 20:41:36 MST

Figure 26-13
Some Typical Expansion Bellows to Weld End Details

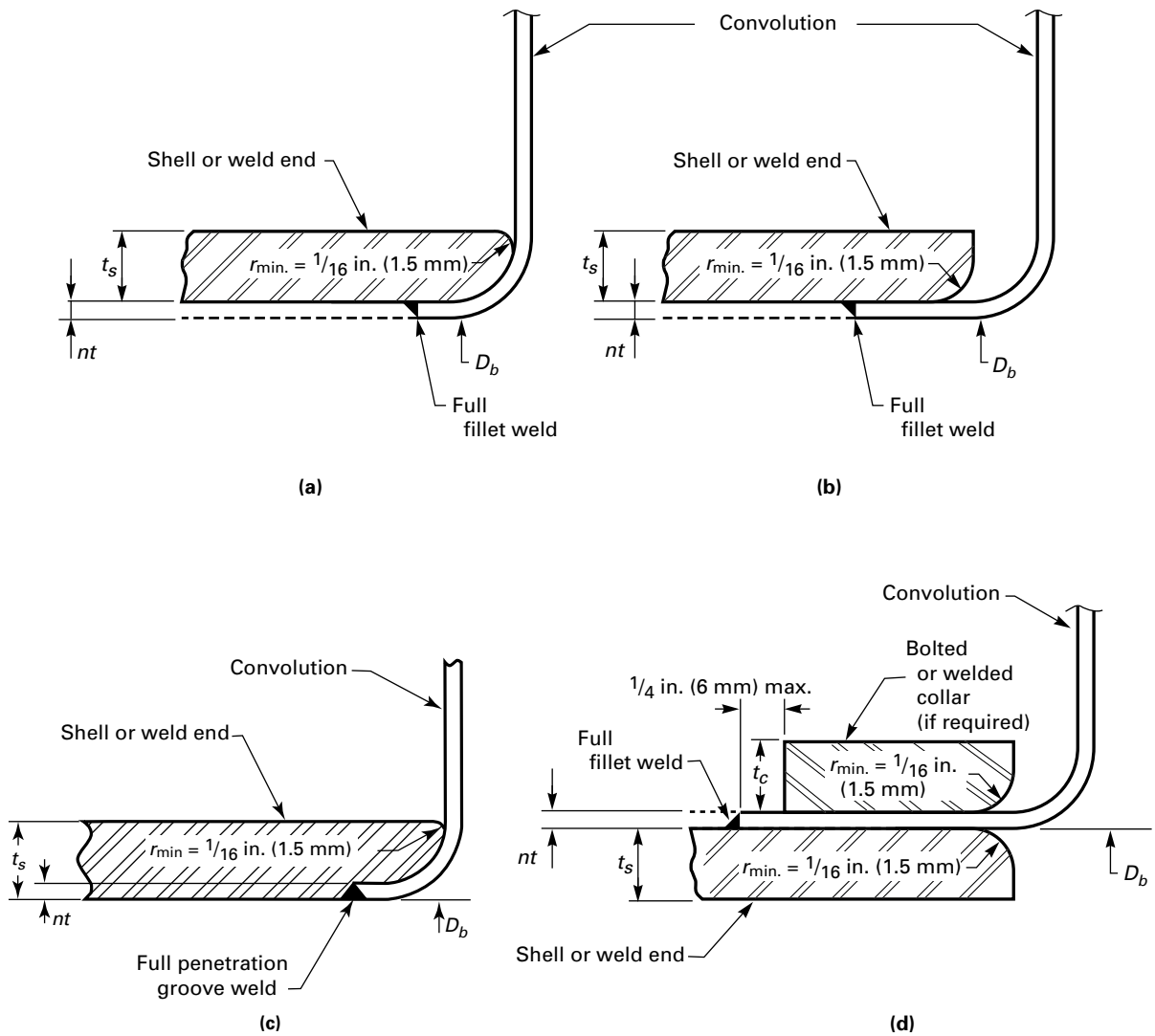

(13) 26-14 EXAMPLES

See UG-16(f).

26-15 POLYNOMIAL APPROXIMATION FOR COEFFICIENTS C_p, C_f, C_d

26-15.1 COEFFICIENT C_p

$$C_p = \alpha_0 + \alpha_1 C_1 + \alpha_2 C_1^2 + \alpha_3 C_1^3 + \alpha_4 C_1^4 + \alpha_5 C_1^5$$

Coefficients α_i are given by Table 26-15.1a if $C_1 \leq 0.3$ or Table 26-15.1b if $C_1 > 0.3$.

26-15.2 COEFFICIENTS C_f

$$C_f = \beta_0 + \beta_1 C_1 + \beta_2 C_1^2 + \beta_3 C_1^3 + \beta_4 C_1^4 + \beta_5 C_1^5$$

Coefficients β_i are given by Table 26-15.2.

26-15.3 COEFFICIENT C_d

Coefficients γ_i are given by Table 26-15.3.

Provided by IHS under license with ASME
No reproduction or networking permitted without license from IHS
Licensee=Chevron Phillips Chemical Co LP/5956674001
Not for Resale, 11/09/2014 20:41:36 MST

(13)

Figure 26-14
Toroidal Bellows Manufacturing Tolerances

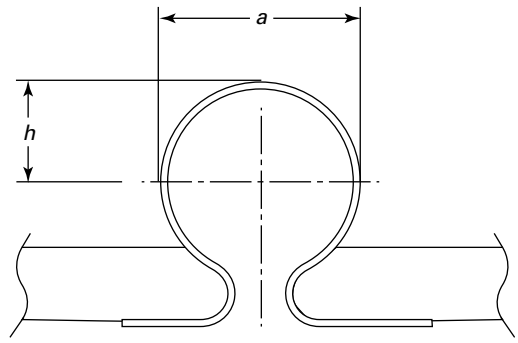

$$0.8 \le \frac{a}{2h} \le 1.2$$

Table 26-15.1a
Polynomial Coefficients α_i for the Determination of C_p When $C_1 \le 0.3$

C_2	α_0	α_1	α_2	α_3	α_4	α_5
0.2	1.001	−0.448	−1.244	1.932	−0.398	−0.291
0.4	0.999	−0.735	0.106	−0.585	1.787	−1.022
0.6	0.961	−1.146	3.023	−7.488	8.824	−3.634
0.8	0.955	−2.708	7.279	14.212	−104.242	133.333
1	0.95	−2.524	10.402	−93.848	423.636	−613.333
1.2	0.95	−2.296	1.63	16.03	−113.939	240
1.4	0.95	−2.477	7.823	−49.394	141.212	−106.667
1.6	0.95	−2.027	−5.264	48.303	−139.394	160
2	0.95	−2.073	−3.622	29.136	−49.394	13.333
2.5	0.95	−2.073	−3.622	29.136	−49.394	13.333
3	0.95	−2.073	−3.622	29.136	−49.394	13.333
3.5	0.95	−2.073	−3.622	29.136	−49.394	13.333
4	0.95	−2.073	−3.622	29.136	−49.394	13.333

Table 26-15.1b
Polynomial Coefficients α_i for the Determination of C_p When $C_1 > 0.3$

C_2	α_0	α_1	α_2	α_3	α_4	α_5
0.2	1.001	−0.448	−1.244	1.932	−0.398	−0.291
0.4	0.999	−0.735	0.106	−0.585	1.787	−1.022
0.6	0.961	−1.146	3.023	−7.488	8.824	−3.634
0.8	0.622	1.685	−9.347	18.447	−15.991	5.119
1	0.201	2.317	−5.956	7.594	−4.945	1.299
1.2	0.598	−0.99	3.741	−6.453	5.107	−1.527
1.4	0.473	−0.029	−0.015	−0.03	0.016	0.016
1.6	0.477	−0.146	−0.018	0.037	0.097	−0.067
2	0.935	−3.613	9.456	−13.228	9.355	−2.613
2.5	1.575	−8.646	24.368	−35.239	25.313	−7.157
3	1.464	−7.098	17.875	−23.778	15.953	−4.245
3.5	1.495	−6.904	16.024	−19.6	12.069	−2.944
4	2.037	−11.037	28.276	−37.655	25.213	−6.716

Provided by IHS under license with ASME
No reproduction or networking permitted without license from IHS
Licensee=Chevron Phillips Chemical Co LP/5956674001
Not for Resale, 11/09/2014 20:41:36 MST

Table 26-15.2
Polynomial Coefficients β_i for the Determination of C_f

C_2	β_0	β_1	β_2	β_3	β_4	β_5
0.2	1.006	2.375	−3.977	8.297	−8.394	3.194
0.4	1.007	1.82	−1.818	2.981	−2.43	0.87
0.6	1.003	1.993	−5.055	12.896	−14.429	5.897
0.8	1.003	1.338	−1.717	1.908	0.02	−0.55
1	0.997	0.621	−0.907	2.429	−2.901	1.361
1.2	1	0.112	−1.41	3.483	−3.044	1.013
1.4	1	−0.285	−1.309	3.662	−3.467	1.191
1.6	1.001	−0.494	−1.879	4.959	−4.569	1.543
2	1.002	−1.061	−0.715	3.103	−3.016	0.99
2.5	1	−1.31	−0.829	4.116	− 4.36	1.55
3	0.999	−1.521	−0.039	2.121	−2.215	0.77
3.5	0.998	−1.896	1.839	−2.047	1.852	−0.664
4	1	−2.007	1.62	−0.538	−0.261	0.249

Table 26-15.3
Polynomial Coefficients γ_i for the Determination of C_d

C_2	γ_0	γ_1	γ_2	γ_3	γ_4	γ_5
0.2	1	1.151	1.685	−4.414	4.564	−1.645
0.4	0.999	1.31	0.909	−2.407	2.273	−0.706
0.6	1.003	2.189	−3.192	5.928	−5.576	2.07
0.8	1.005	1.263	5.184	−13.929	13.828	−4.83
1	1.001	0.953	3.924	−8.773	10.44	−4.749
1.2	1.002	0.602	2.11	−3.625	5.166	−2.312
1.4	0.998	0.309	1.135	−1.04	1.296	−0.087
1.6	0.999	0.12	0.351	−0.178	0.942	−0.115
2	1	−0.133	−0.46	1.596	−1.521	0.877
2.5	1	−0.323	−1.118	3.73	−4.453	2.055
3	1	−0.545	−0.42	1.457	−1.561	0.71
3.5	1	−0.704	−0.179	0.946	−1.038	0.474
4	1.001	−0.955	0.577	−0.462	0.181	0.08

Provided by IHS under license with ASME
No reproduction or networking permitted without license from IHS
Licensee=Chevron Phillips Chemical Co LP/5956674001
Not for Resale, 11/09/2014 20:41:36 MST

FORM 26-1 SPECIFICATION SHEET FOR ASME SECTION VIII, DIVISION 1 APPENDIX 26 BELLOWS EXPANSION JOINTS

Date _____ / _____ / _____ Applicable ASME Code Edition _____

1. Item Number _____ Vessel Manufacturer _____
2. Drawing/Tag/Serial/Job Number _____ Vessel Owner _____
3. Quantity _____ Installation Location _____
4. Size _____ O.D. _____ I.D. in. Expansion Joint Overall Length _____ in.

5. Internal Pressure: Design _____ psig
6. External Pressure: Design _____ psig
7. Vessel Manufacturer Hydrotest Pressure: Internal _____ psig External _____ psig

8. Temperature: Design _____ °F Operating ____ °F Upset _____ °F
9. Vessel Rating: MAWP _____ psig MDMT _____ °F Installed Position: Horiz. ___ Vert. ___

10. Design Movements: Axial Compression (−) ____ in. Axial Extension (+) ____ in. Lateral ____ in. Angular ____ deg
11. Specified Number of Cycles _____

12. Shell Material _____ Bellows Material _____
13. Shell Thickness _____ in. Shell Corrosion Allowance: Internal _____ in. External _____ in.
14. Shell Radiography: None / Spot / Full
15. End Preparation: Square Cut ___ Outside Bevel ___ Inside Bevel ___ Double Bevel ___ (Describe in Line 23 if special)
16. Heat Exchanger Tube Length Between Inner Tubesheet Faces _____ in.

17. Maximum Bellows Spring Rate: N Y - _____ lb/in.
18. Internal Liner: N Y - Material _____
19. Drain Holes in Liner: N Y - Quantity/Size _____
20. Liner Flush With Shell I.D.: N Y - Telescoping Liners? N ____ Y ____
21. External Cover: N Y - Material _____
22. Preproduction Approvals Required: N Y - Drawings / Bellows Calculations / Weld Procedures
23. Additional Requirements (e.g., bellows preset, ultrasonic inspection):

U-2 Partial Data Report required per Appendix 26 para. 26–13. Temporary shipping bars are required to maintain assembly length during shipment and vessel fabrication only, and ARE NOT to be used during vessel hydrotest for expansion joint pressure restraint [see para. 26–4.1 (c) and (d)].

11/06

Provided by IHS under license with ASME
No reproduction or networking permitted without license from IHS
Licensee=Chevron Phillips Chemical Co LP/5956674001
Not for Resale, 11/09/2014 20:41:36 MST

FORM 26-1M SPECIFICATION SHEET FOR ASME SECTION VIII, DIVISION 1 APPENDIX 26 BELLOWS EXPANSION JOINTS

Date _____ / _____ / _____ Applicable ASME Code Edition _____

1. Item Number _____ Vessel Manufacturer _____
2. Drawing/Tag/Serial/Job Number _____ Vessel Owner _____
3. Quantity _____ Installation Location _____
4. Size _____ O.D. _____ I.D. mm Expansion Joint Overall Length _____ mm

5. Internal Pressure: Design _____ MPa
6. External Pressure: Design _____ MPa
7. Vessel Manufacturer Hydrotest Pressure: Internal _____ MPa External _____ MPa

8. Temperature: Design _____ °C Operating _____ °C Upset _____ °C
9. Vessel Rating: MAWP _____ MPa MDMT _____ °C Installed Position: Horiz. ___ Vert. ___

10. Design Movements: Axial Compression (−) _____ mm Axial Extension (+) ____ mm Lateral ___ mm Angular ___ deg
11. Specified Number of Cycles _____

12. Shell Material _____ Bellows Material _____
13. Shell Thickness _____ mm Shell Corrosion Allowance: Internal _____ mm External _____ mm
14. Shell Radiography: None / Spot / Full
15. End Preparation: Square Cut ___ Outside Bevel ___ Inside Bevel ___ Double Bevel ___ (Describe in Line 23 if special)
16. Heat Exchanger Tube Length Between Inner Tubesheet Faces _____ mm

17. Maximum Bellows Spring Rate: N Y - _____ N/ mm
18. Internal Liner: N Y - Material _____
19. Drain Holes in Liner: N Y - Quantity/Size _____
20. Liner Flush With Shell I.D.: N Y - Telescoping Liners? N ____ Y____
21. External Cover: N Y - Material _____
22. Preproduction Approvals Required: N Y - Drawings / Bellows Calculations / Weld Procedures
23. Additional Requirements (e.g., bellows preset, ultrasonic inspection):

U-2 Partial Data Report required per Appendix 26 para. 26–13. Temporary shipping bars are required to maintain assembly length during shipment and vessel fabrication only, and ARE NOT to be used during vessel hydrotest for expansion joint pressure restraint [see para. 26–4.1 (c) and (d)].

11/06

Provided by IHS under license with ASME
No reproduction or networking permitted without license from IHS
Licensee=Chevron Phillips Chemical Co LP/5956674001
Not for Resale, 11/09/2014 20:41:36 MST

MANDATORY APPENDIX 27
ALTERNATIVE REQUIREMENTS FOR GLASS-LINED VESSELS

27-1 SCOPE

The rules of this Appendix cover acceptable alternative requirements that are applicable to glass-lined (enameled-lined) vessels. All applicable requirements in this Division are mandatory except as modified herein.

27-2 PERMISSIBLE OUT-OF-ROUNDNESS OF CYLINDRICAL SHELLS UNDER INTERNAL PRESSURE

If the out-of-roundness of a glass lined cylindrical vessel exceeds the limits in UG-80(a)(1), UG-80(a)(2), or in both, and the condition cannot be corrected, the maximum allowable working pressure may be calculated as follows:

(a) The out-of-roundness, as determined by the maximum difference between any two diameters for any cross section, shall not exceed 3%.

(b) The shell shall be certified for a lower internal pressure by the following formula:

$$\text{Reduced pressure } P' = P\left[\frac{1.25}{\frac{S_b}{S} + 1}\right]$$

and in which

$$S_b = \frac{1.5PR_1t(D_1 - D_2)}{t^3 + 3\frac{P}{E}R_1R_a{}^2}$$

where

E = modulus of elasticity at design temperature. The modulus of elasticity shall be taken from the applicable Table TM in Section II, Part D. When a material is not listed in the TM tables, the requirements of U-2(g) shall be applied.

D_1 *and* D_2 = the inside diameters, maximum and minimum, respectively, as measured for the critical section, and for one additional section in each direction therefrom at a distance not exceeding $0.2D_2$. The average of the three readings for D_1 and D_2, respectively, shall be inserted in the formula.

P' = reduced maximum allowable working pressure to be stamped on the nameplate of the vessel and shown on the Manufacturer's Data Report

P = maximum allowable working pressure for shell meeting the requirements of UG-80(a)(1)

NOTE: Use $P' = P$ when $S_b \leq 0.25S$

R_a = average radius to middle of shell wall at critical section
= $\frac{1}{4}(D_1 + D_2) + t/2$

R_1 = average inside radius at critical section
= $\frac{1}{4}(D_1 + D_2)$

S = design stress value at metal service temperature

S_b = bending stress at metal service temperature

t = nominal thickness of vessel shell

27-3 PERMISSIBLE TOLERANCE FOR HEMISPHERICAL OR 2:1 ELLIPSOIDAL HEADS

If a hemispherical or 2:1 ellipsoidal head exceeds the tolerance limits in UG-81(a) and the condition cannot be corrected, the head may be used providing the following requirements are met:

(a) The inner surface of the head shall not deviate outside the specified shape by more than 3% of D nor inside the specified shape by more than 3% of D, where D is the nominal inside diameter of the vessel shell at the point of attachment. Such deviations shall be measured perpendicular to the specified shape and shall not be abrupt.

(b) The provisions of UG-81(c), UG-81(d), and UG-81(e) shall be met. UG-81(b) shall be met as regards the remaining spherical portions of the head.

(c) Deviations that exceed the limits in UG-81(a) shall be outside of any areas used for reinforcing of openings.

(d) A comparative analysis shall be made between the distorted shape and the undistorted shape to demonstrate that the design margins of the Code for internal pressure and, as appropriate, external pressure have been met [see U-2(g)].

27-4 HYDROSTATIC TEST

The hydrostatic test pressure for glass-lined vessels shall be at least equal to, but need not exceed, the maximum allowable working pressure to be marked on the

Provided by IHS under license with ASME
No reproduction or networking permitted without license from IHS
Licensee=Chevron Phillips Chemical Co LP/5956674001
Not for Resale, 11/09/2014 20:41:36 MST

vessel; the hydrostatic test pressure for jackets of glass-lined vessels shall be at least equal to, but need not exceed, the maximum allowable working pressure to be marked on the jacket.

27-5 HEAT TREATMENT OF TEST SPECIMENS

(a) Except when impact testing per UCS-66 is required, and in lieu of the requirements of UCS-85, the plate, forging, pipe, and strip steels used in the production of glass-lined vessels may be represented by test specimens that meet the following requirements:

(1) the test specimens shall be heat treated two times, first to a temperature of 1675°F ± 25°F (915°C ± 15°C), and then to a temperature that is nominally equal to the last (lowest) temperature of the glassing cycle. The minimum holding time for each heat treatment shall be $^1/_2$ hr/in. (1 min/mm) of thickness;

(2) the materials shall be limited to SA-106, SA-285, SA-414, SA-516, and SA-836; and

(3) the multiple temperature cycles used in the glassing operation shall be within the range of 1450°F to 1700°F (790°C to 925°C), with at least one cycle being above the upper transformation temperature of the material. The vessel is to be held at temperature approximately $^1/_2$ hr/in. ($^1/_2$ hr/25 mm) of thickness, and still-air-cooled to ambient.

(b) SA-106, SA-285, SA-414 Grades A and B, and SA-516 materials used in the production of glass-lined vessels may be exempt from the simulated test requirements of UCS-85 when the following requirements are met:

(1) the requirements of (a)(3) above;

(2) the carbon content of the materials shall not exceed 0.25% by heat analysis;

(3) the tensile strength and yield strength of the material, as represented by mill test specimens, shall be at least 10% higher than the minimum specified by the material specification;

(4) impact testing per UCS-66 is not required.

27-6 LOW TEMPERATURE OPERATION

Materials used in the fabrication of glass lined vessels shall follow the impact testing requirements or exemptions as defined within this Division with the exceptions listed below.

(a) SA-285 Grade C, for glass lined vessels, may be assigned to Curve B in Figure UCS-66 under the following conditions:

(1) the maximum carbon content limit is 0.18%; and

(2) the glass operation shall be per 27-5(a)(3).

(b) Stainless steel vessels fabricated from SA-240 316L plate, SA-182 F316L forgings, SA-312 TP316L pipe, and SA-213 TP316L tubing may be exempted from production impact tests per UHA-51, provided the following conditions are met:

(1) The Welding Procedure Qualification shall include impact tests in accordance with UHA-51(b). Each heat or lot of consumable welding electrodes shall be so tested. The test specimens shall be subjected to the glass lined 316L stainless steel vessel glassing cycle temperature, time, and cooling rates, and a number of cycles that is equal to or greater than that of the production vessels.

(2) The impact testing shall be done at a temperature not warmer than the MDMT of the vessels. The MDMT of the vessels shall be no colder than −155°F (−104°C).

(3) The multiple temperature cycles used in the glassing operation shall be within the range of 1400°F to 1700°F (760°C to 927°C). The vessel is to be held at temperature approximately $^1/_2$ hr/in. of thickness (0.20 hr/cm of thickness) per cycle, and still-air-cooled (nonquench) to ambient.

(4) As an alternative to (1) through (3) above, impact testing is not required when the coincident ratio of design stress [see footnote (3) of UHA-51] in tension to allowable tensile stress is less than 0.35, provided that the welding electrodes are certified to SFA-5.4 Grade 316L-15 with a ferrite number not to exceed 3, and provided that the MDMT of the vessels is no colder than −200°F (−129°C).

27-7 POSTWELD HEAT TREATMENT

The heat treatment provided in the temperature cycle for the glassing operation may be used in lieu of the postweld heat treatment requirements of UW-40 and UCS-56. The weld qualification test specimens required by UW-28 and Section IX shall be heat treated per 27-5(a)(1). Inner vessels which are so heat treated need not be again postweld heat treated after the attachment to the jacket, if the joining welds do not require postweld heat treatment.

27-8 DATA REPORTS

When all the requirements of this Division, as modified by the alternative requirements of this Appendix, have been met, the following notation shall be entered on the Manufacturer's Data Report under Remarks: "Constructed in Conformance With Mandatory Appendix 27, Alternative Requirements for Glass-Lined Vessels."

Provided by IHS under license with ASME
No reproduction or networking permitted without license from IHS
Licensee=Chevron Phillips Chemical Co LP/5956674001
Not for Resale, 11/09/2014 20:41:36 MST

MANDATORY APPENDIX 28
ALTERNATIVE CORNER WELD JOINT DETAIL FOR BOX HEADERS FOR AIR-COOLED HEAT EXCHANGERS

28-1 GENERAL

For box headers for air-cooled heat exchangers using a multipass corner weld joint constructed in accordance with Figure 28-1, the rules of UW-13(e)(4) and Figure UW-13.2 shall be supplemented as described below.

(13) 28-2 SUPPLEMENTARY REQUIREMENTS

This Appendix only replaces the requirement "$a + b$ not less than $2t_s$" of UW-13(e)(4) and the weld joint geometry of Figure UW-13.2. All other rules in the Code pertaining to welded joints shall apply.

In addition, the following shall apply:

(a) A sample corner weld joint shall be prepared to qualify the weld procedure, and a sample corner weld joint shall be prepared to qualify each welder or welding operator. The Manufacturer shall prepare the sample corner weld joint with nominal thickness and configuration matching that to be employed with the following tolerances:

(1) the sample thinner plate shall match the thickness of the production thinner plate within ±$^1/_4$ in. (±6 mm);

(2) the sample thicker plate shall be at least 1.5 times the thickness of the sample thinner plate.

The sample shall be sectioned, polished, and etched to clearly delineate the line of fusion. Acceptability shall be determined by measurements of the line of fusion for use in the calculations for compliance with Figure 28-1. The sample shall be free from slag, cracks, and lack of fusion. A sample corner weld shall be prepared for each P-Number, except that a sample prepared to qualify a joint made from material with a given value for K [see (d)] may be used to qualify a joint made from material having an equal or higher value for K but not vice versa.

(b) This sample corner weld joint is an addition to the Welding Procedure Specification Qualification and the Welder and Welding Operator Performance Qualification requirements of Section IX. The following essential variables apply for both the procedure and performance qualification, in addition to those of Section IX:

(1) a change in the nominal size of the electrode or electrodes used and listed in the PQR;

(2) a change in the qualified root gap exceeding ±$^1/_{16}$ in. (±1.5 mm);

(3) addition or deletion of nonmetallic retainers or nonfusing metal retainers;

(4) a change in the SFA specification filler metal classification or to a weld metal or filler metal composition not covered in the specifications;

(5) the addition of other welding positions than those qualified;

(6) for fill passes, a change in amperage exceeding ±25 amp, change in voltage exceeding ±3 V;

(7) a change in contact tube to work distance exceeding $^1/_4$ in. (6 mm);

(8) a change from single electrode to multiple electrodes, or vice versa;

(9) a change in the electrode spacing;

(10) a change from manual or semiautomatic to machine or automatic welding or vice versa.

(c) After production welding, the back side of the weld shall be subjected to a visual examination to assure that complete fusion and penetration have been achieved in the root, except where visual examination is locally prevented by an internal member covering the weld.

(d) K, the ratio of through-thickness (Z direction) tensile strength to the specified minimum tensile strength, shall be taken as 0.6. Higher values for K, but not higher than 1.0, may be used if through-thickness tensile strength is determined in accordance with Specification SA-770. The test results, including the UTS in addition to the reduction in area, shall be reported on the Material Test Report, in addition to the information required by Specification SA-20 when the testing in accordance with Specification SA-770 is performed by the material manufacturer. If the testing is performed by the vessel Manufacturer, the test result shall be reported on the Manufacturer's Data Report. See UG-93(b) and UG-93(c).

(e) The maximum value of t_s (see Figure 28-1) shall be limited to 3 in. (75 mm).

(f) Both members may be beveled as shown in Figure 28-1 sketch (b). When the bevel angle (α) is large enough to satisfy the UW-13(e)(4) requirements, the alternative rules of this Appendix do not apply. When the bevel angle (α) results in weld fusion dimensions that do not satisfy the UW-13(e)(4) requirement that $a + b$ is not less than $2t_s$, the following shall be satisfied:

(1) The angle (α) shall be equal to or greater than 15 deg.

Provided by IHS under license with ASME
No reproduction or networking permitted without license from IHS
Licensee=Chevron Phillips Chemical Co LP/5956674001
Not for Resale, 11/09/2014 20:41:36 MST

Figure 28-1

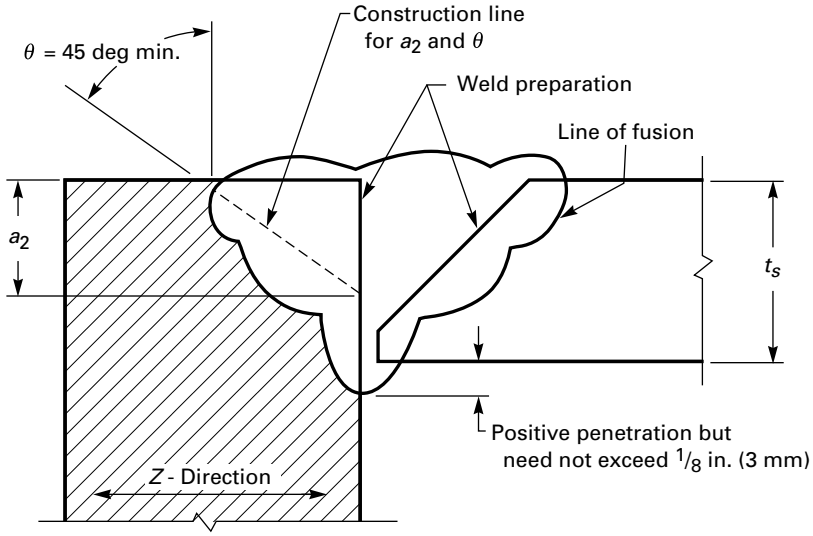

K	a_2/t_s Not Less Than
0.6	0.29
0.7	0.23
0.8	0.17
0.9	0.09
1.0	0

(a) Details for One Member Beveled

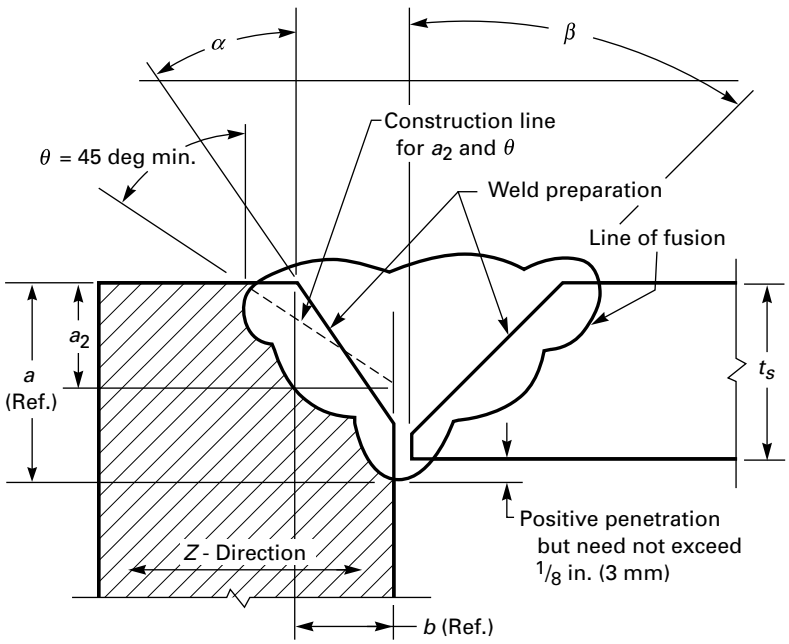

K	Min. a_2/t_s for α Not Less Than 15 deg	Min. a_2/t_s for α Not Less Than 30 deg	Min. a_2/t_s for α Not Less Than 45 deg
0.6	0.85	0.55	0.29
0.7	0.81	0.47	0.23
0.8	0.74	0.38	0.17
0.9	0.58	0.23	0.09
1.0	0	0	0

See sketch (a) above for table with values of K and a_2/t_s

(b) Details for Both Members Beveled

GENERAL NOTE: Interpolation for α and k is permitted.

Provided by IHS under license with ASME
No reproduction or networking permitted without license from IHS
Licensee=Chevron Phillips Chemical Co LP/5956674001
Not for Resale, 11/09/2014 20:41:36 MST

(2) The dimension a_2 shall be measured from the projected surface of the plate being attached as shown in Figure 28-1 sketch (b).

(3) The angle (β) shall be equal to or greater than 15 deg.

(4) When a_2/t_s is equal to or exceeds the value corresponding to the K shown in the table in Figure 28-1(b), the requirements in (a) and (b) need not be satisfied. When a_2/t_s is less than this value, all other requirements of this Appendix shall be satisfied.

(g) When all the requirements of this Division and the supplemental requirements of this Appendix have been met, the following notation shall be entered in the Manufacturer's Data Report under Remarks: "Constructed in conformance with Mandatory Appendix 28."

Provided by IHS under license with ASME

No reproduction or networking permitted without license from IHS

Licensee=Chevron Phillips Chemical Co LP/5956674001
Not for Resale, 11/09/2014 20:41:36 MST

MANDATORY APPENDIX 30
RULES FOR DRILLED HOLES NOT PENETRATING THROUGH VESSEL WALL

30-1 SCOPE

Partially drilled radial holes in cylindrical and spherical shells may be used provided they are 2.0 in. (50 mm) or less in diameter and the shell diameter to thickness ratio $D/t \geq 10$. The acceptance criterion for the depth of the hole is the plot of the ratio $t_{\min}/t$ versus d/D that is on or above the curve in Figure 30-1.

30-2 SUPPLEMENTARY REQUIREMENTS

In addition, the following conditions shall be met:

(a) The minimum remaining wall thickness $t_{\min}$ shall not be less than 0.25 in. (6 mm).

(b) The calculated average shear stress, $\tau = Pd/4t_{\min}$, in the remaining wall shall not exceed $0.8S$.

(1) Unless the provisions of U-2(g) are satisfied, the centerline distance between any two such drilled holes or between a partially drilled hole and an unreinforced opening shall satisfy the requirements of UG-36(c)(3)(-c) and UG-36(c)(3)(-d).

(2) Unless the provisions of U-2(g) are satisfied, partially drilled holes shall not be placed within the limits of reinforcement of a reinforced opening.

(c) The outside edge of the hole shall be chamfered; for flat bottom holes, the inside bottom corner of the hole shall have a minimum radius of the lesser of $^1/_4$ in. (6 mm) or $d/4$.

(d) These rules are not applicable to studded connections (see UG-43) and telltale holes (UG-25).

Figure 30-1
Thickness Ratio Versus Diameter Ratio

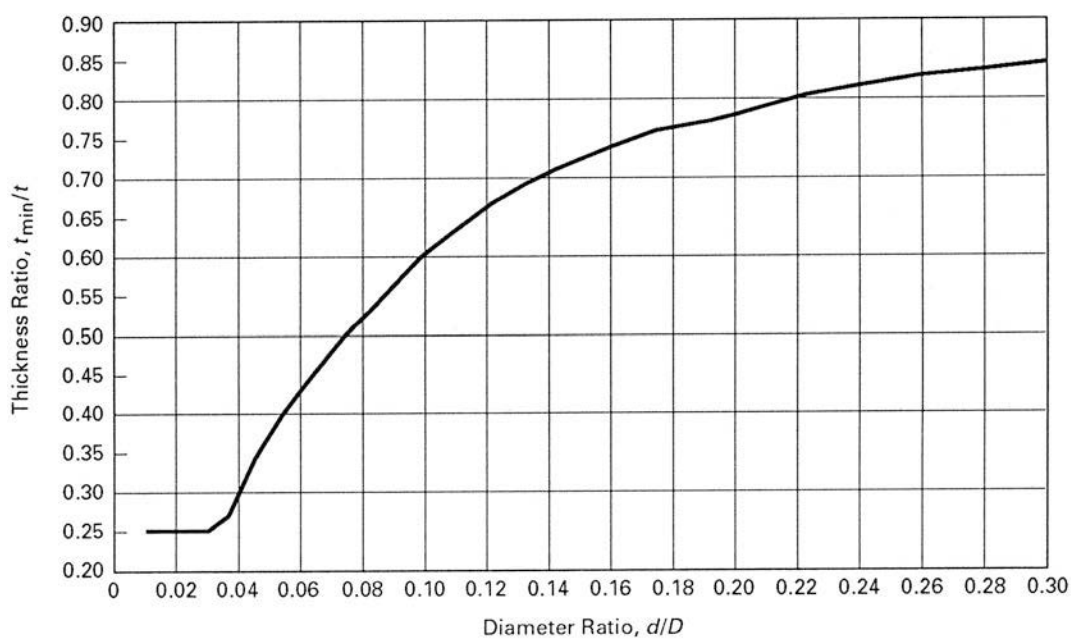

Provided by IHS under license with ASME
No reproduction or networking permitted without license from IHS
Licensee=Chevron Phillips Chemical Co LP/5956674001
Not for Resale, 11/09/2014 20:41:36 MST

30-3 NOMENCLATURE

Symbols used in this Appendix are as follows:

D = vessel inside diameter
d = diameter of drilled hole
P = design pressure (see UG-21)
S = maximum allowable stress value
t = nominal thickness in corroded condition
t_{min} = remaining wall thickness

Provided by IHS under license with ASME
No reproduction or networking permitted without license from IHS
Licensee=Chevron Phillips Chemical Co LP/5956674001
Not for Resale, 11/09/2014 20:41:36 MST

MANDATORY APPENDIX 31
RULES FOR CR–MO STEELS WITH ADDITIONAL REQUIREMENTS FOR WELDING AND HEAT TREATMENT

31-1 SCOPE

This Appendix covers special fabrication and testing rules for a group of materials for which tightly controlled welding and heat treatment procedures are of particular importance. The materials and appropriate specifications covered by this Appendix are listed in Table 31-1.

The requirements of this Appendix are in addition to the rules in other parts of this Division for carbon and low alloy steels. In cases of conflicts, the rules in this Appendix shall govern.

This Appendix number shall be shown on the Manufacturer's Data Report Form.

31-2 POSTWELD HEAT TREATMENT

(a) $2\frac{1}{4}$*Cr–1Mo–*$\frac{1}{4}$*V, 3Cr–1Mo–*$\frac{1}{4}$*V–Ti–B, and 3Cr–1Mo–*$\frac{1}{4}$*V–Cb–Ca Materials*. The final postweld heat treatment shall be in accordance with the requirements of this Division for P-No. 5C materials.

(b) $2\frac{1}{4}$*Cr–1Mo Materials*. The final postweld heat treatment temperature shall be in accordance with the requirement of this Division for P-No. 5A materials except that the permissible minimum normal holding temperature is 1,200°F (650°C), and the holding time shall be 1 hr/in. up to a nominal thickness of 5 in. (125 mm). For thicknesses over 5 in. (125 mm), the holding time shall be 5 hr plus 15 min for each additional inch over 5 in. (125 mm).

31-3 TEST SPECIMEN HEAT TREATMENT

(a) In fulfilling the requirements of UCS-85(b), two sets of tension specimens and one set of Charpy impact specimens shall be tested. One set each of the tension specimens shall be exposed to heat treatment Condition A. The second set of tension specimens and the set of Charpy impact specimens shall be exposed to heat treatment Condition B.

Table 31-1
Material Specifications

Nominal Composition	Type/ Grade	Specification No.	Product Form
$2\frac{1}{4}$Cr–1Mo	Grade 22, Cl. 3	SA-508	Forgings
	Grade 22, Cl. 3	SA-541	Forgings
	Type B, Cl. 4	SA-542	Plates
$2\frac{1}{4}$Cr–1Mo–$\frac{1}{4}$V	Grade F22V	SA-182	Forgings
	Grade F22V	SA-336	Forgings
	Grade 22V	SA-541	Forgings
	Type D, Cl. 4a	SA-542	Plates
	Grade 22V	SA-832	Plates
3Cr–1Mo–$\frac{1}{4}$V–Ti–B	Grade F3V	SA-182	Forgings
	Grade F3V	SA-336	Forgings
	Grade 3V	SA-508	Forgings
	Grade 3V	SA-541	Forgings
	Type C, Cl. 4a	SA-542	Plates
	Grade 21V	SA-832	Plates
3Cr–1Mo–$\frac{1}{4}$V–Cb–Ca	Grade F3VCb	SA-182	Forgings
	Grade F3VCb	SA-336	Forgings
	Grade 3VCb	SA-508	Forgings
	Grade 3VCb	SA-541	Forgings
	Type E, Cl. 4a	SA-542	Plates
	Grade 23V	SA-832	Plates

Provided by IHS under license with ASME
No reproduction or networking permitted without license from IHS
Licensee=Chevron Phillips Chemical Co LP/5956674001
Not for Resale, 11/09/2014 20:41:36 MST

Figure 31-1

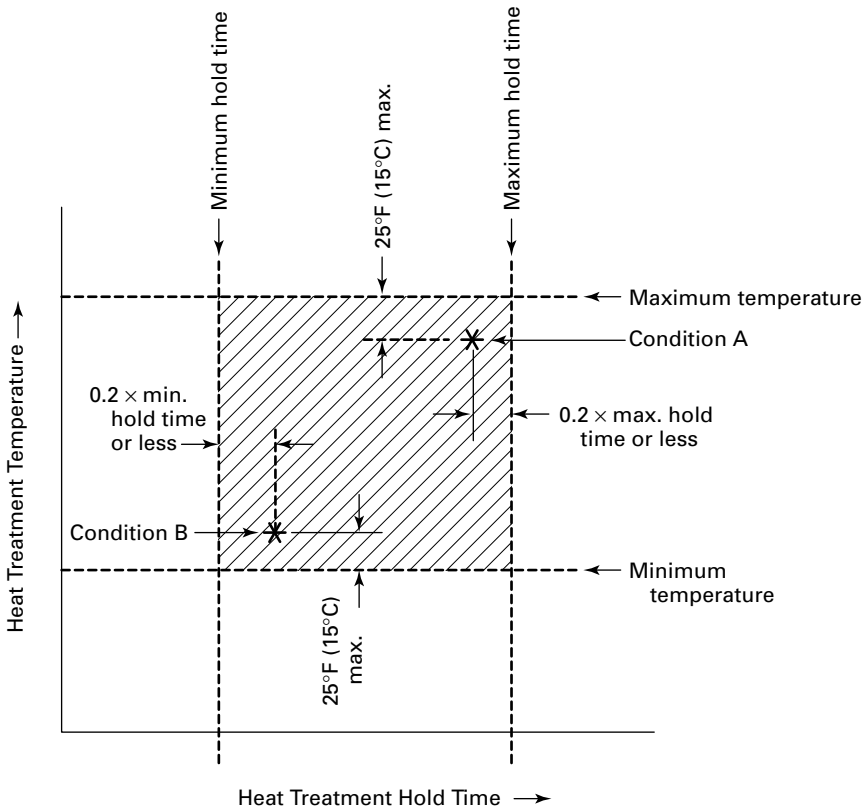

Condition A: Temperature shall be no lower than the actual maximum vessel-portion temperature, less 25°F (15°C). Time at temperature shall be no less than 80% of the actual hold time of the vessel-portion exposed to the maximum vessel-portion temperature.

Condition B: Temperature shall be no higher than the actual minimum vessel-portion temperature, plus 25°F (15°C). Time at temperature shall be no more than 120% of the actual hold time of the vessel-portion exposed to the minimum vessel-portion temperature.

(b) Suggested procedure for establishing test specimen heat treatment parameters:

(1) Establish maximum and minimum temperatures and hold times for the vessel/component heat treatment based on experience/equipment.

(2) Determine Conditions A and B for the test specimen heat treatments.

(3) Vessel heat treatment temperature and hold time limitations and test specimen Conditions A and B are shown in Figure 31-1 (shaded area).

Table 31-2
Composition Requirements for 2¼Cr–1Mo–¼V Weld Metal

Welding Process	C	Mn	Si	Cr	Mo	P	S	V	Cb
SAW	0.05–0.15	0.50–1.30	0.05–0.35	2.00–2.60	0.90–1.20	0.015 max.	0.015 max.	0.20–0.40	0.010–0.040
SMAW	0.05–0.15	0.50–1.30	0.20–0.50	2.00–2.60	0.90–1.20	0.015 max.	0.015 max.	0.20–0.40	0.010–0.040
GTAW	0.05–0.15	0.30–1.10	0.05–0.35	2.00–2.60	0.90–1.20	0.015 max.	0.015 max.	0.20–0.40	0.010–0.040
GMAW	0.05–0.15	0.30–1.10	0.20–0.50	2.00–2.60	0.90–1.20	0.015 max.	0.015 max.	0.20–0.40	0.010–0.040

Provided by IHS under license with ASME
No reproduction or networking permitted without license from IHS
Licensee=Chevron Phillips Chemical Co LP/5956674001
Not for Resale, 11/09/2014 20:41:36 MST

31-4 WELD PROCEDURE QUALIFICATION AND WELD CONSUMABLES TESTING

(a) Welding procedure qualifications using a production weld consumable shall be made for material welded to itself or to other materials. The qualifications shall conform to the requirements of Section IX, and the maximum tensile strength at room temperature shall be 110 ksi (760 MPa) (for heat treatment Conditions A and B). Welding shall be limited to submerged-arc (SAW) and shielded metal-arc (SMAW) processes for 3Cr–1Mo–$^1/_4$V–Ti–B materials only. Gas tungsten-arc (GTAW) process may also be used for 3Cr–1Mo–$^1/_4$V–Cb–Ca material.

(b) Weld metal from each heat or lot of electrodes and filler-wire–flux combination shall be tested. The minimum and maximum tensile properties shall be met in PWHT Conditions A and B. The minimum CVN impact properties shall be met in PWHT Condition B. Testing shall be in general conformance with SFA-5.5 for covered electrodes and SFA-5.23 for filler-wire–flux combinations.

(c) Duplicate testing in the PWHT Condition A and PWHT Condition B (see 31-3) is required. The minimum tensiles and CVN impact properties for the base material shall be met. CVN impact testing is only required for Condition B.

For 2$^1/_4$Cr–1Mo–$^1/_4$V material, the weld metal shall meet the composition requirements listed in Table 31-2. For all other materials, the minimum carbon content of the weld metal shall be 0.05%.

31-5 TOUGHNESS REQUIREMENTS

The minimum toughness requirements for base metal, weld metal, and heat affected zone, after exposure to the simulated postweld heat treatment Condition B, shall be as follows:

Number of Specimens	Impact Energy, ft-lb
Average of 3	40
Only one in set	35 min.

GENERAL NOTE: Full size Charpy V-notch, transverse, tested at the MDMT.

If the material specification or other parts of this Division have more demanding toughness requirements, they shall be met.

Provided by IHS under license with ASME
No reproduction or networking permitted without license from IHS
Licensee=Chevron Phillips Chemical Co LP/5956674001
Not for Resale, 11/09/2014 20:41:36 MST

MANDATORY APPENDIX 32
LOCAL THIN AREAS IN CYLINDRICAL SHELLS AND IN SPHERICAL SEGMENTS OF SHELLS

32-1 SCOPE

The rules of this Appendix permit acceptable Local Thin Areas (LTAs) in cylindrical shells or spherical segments of shells (such as spherical vessel, hemispherical heads, and the spherical portion of torispherical and ellipsoidal heads) under internal pressure be less than the required thickness required by UG-16, UG-27, or UG-32 as applicable. Local thin areas on the inside or outside of cylindrical shells or spherical segments of shells designed for internal pressure are acceptable, provided they meet the requirements in this Appendix.

32-2 GENERAL REQUIREMENTS

(a) The Manufacturer shall maintain records of the calculations and the location and extent of all LTAs that are evaluated using this Appendix, and provide such information to the purchaser or the User or the User's designated agent if requested. This information shall be documented in the design calculations made to meet the requirements of this Appendix.

(b) The maximum design temperature shall not exceed the maximum temperature limits specified in Table 1-4.3.

(c) This Appendix shall not be applied to Part UF vessels.

(d) The provisions of this Appendix do not apply to corrosion-resistant linings or overlays.

(e) All other applicable requirements of this Division shall be met.

32-3 NOMENCLATURE

C = projected circumferential length of LTA in a cylindrical shell, in.

D = per UG-32

D_L = maximum dimension of LTA in a spherical segment, in.

L = projected axial length of LTA in a cylindrical shell, in.

LTA = local thin area

R = inside radius for cylindrical shell or spherical segment, for ellipsoidal heads $R = K_oD$ where K_o is from Table UG-33.1, in.

t = required thickness per UG-27(c), UG-27(d), UG-32(d), UG-32(e), or UG-32(f), as applicable, but not less than thickness requirements of UG-16, in.

t_L = minimum thickness of LTA, in.

θ = see Figure 32-3

32-4 SINGLE LOCAL THIN AREAS IN CYLINDRICAL SHELLS

(a) Single LTA shall satisfy the following equations:

$$\frac{t_L}{t} \geq 0.9 \tag{1}$$

$$L \leq \sqrt{Rt} \tag{2}$$

$$C \leq 2\sqrt{Rt} \tag{3}$$

$$t - t_L \leq \frac{3}{16}\text{ in.} \tag{4}$$

(b) Any edge of an LTA shall not be closer than $2.5\sqrt{Rt}$ from a structural discontinuity such as a head or stiffener.

(c) For openings meeting UG-36(c)(3), the minimum axial distance between the edge of the LTA and the center of the opening shall be equal to or greater than the inside diameter of the opening plus $\sqrt{Rt}$.

(d) For openings not meeting UG-36(c)(3), the minimum axial distance between the edge of the LTA and the reinforcement limit of the opening shall be equal to or greater than $\sqrt{Rt}$.

(e) The blend between the LTA and the thicker surface shall be with a taper length not less than three times the LTA depth as shown in Figure 32-3, sketch (b). The minimum bottom blend radius shall be equal to or greater than two times the LTA depth as shown in Figure 32-3, sketch (b).

(f) The longitudinal stresses on the LTA from mechanical loads other than internal pressure shall not exceed $0.3S$.

(g) The thickness at the LTA shall meet the requirements of UG-23(b) and/or UG-28 as applicable.

Provided by IHS under license with ASME
No reproduction or networking permitted without license from IHS
Licensee=Chevron Phillips Chemical Co LP/5956674001
Not for Resale, 11/09/2014 20:41:36 MST

Figure 32-3
Nomenclature

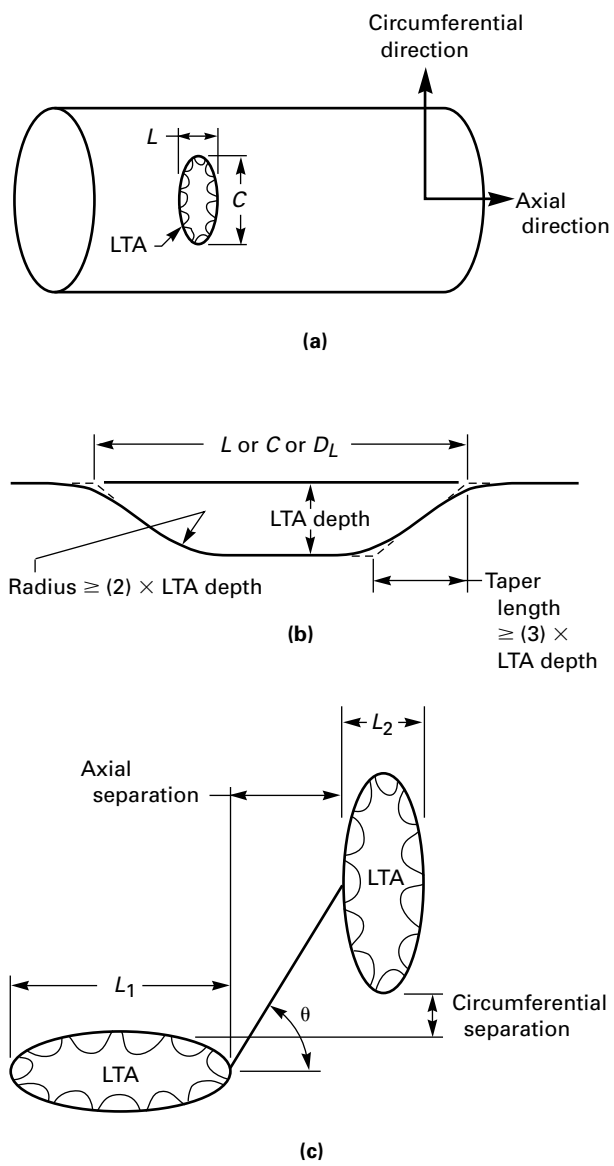

32-5 MULTIPLE LOCAL THIN AREAS IN CYLINDRICAL SHELLS

(a) A pair of local areas with finished axial length, L_1 and L_2 [see Figure 32-3, sketch (c)] are acceptable if the individual LTA satisfies the requirements of 32-4 above and one of the following conditions [(1) or (2)] is met.

(1) When θ ≤ 45 deg, the minimum axial separation [see Figure 32-3, sketch (c)] shall be the greater of:

$$\frac{(1.0 + 1.5\cos\theta)(L_1 + L_2)}{2} \text{ or } 2t$$

(2) When θ > 45 deg, both of the following shall be met:

(-a) The minimum axial separation shall be equal to or greater than:

$$\frac{2.91\cos\theta\,(L_1 + L_2)}{2}$$

(-b) The minimum circumferential separation shall be equal to or greater than $2t$.

(b) Multiple pairs of LTA are acceptable, provided all pairs meet the rules of a single pair specified in (a).

(c) Multiple local thin areas may be combined as a single LTA. The resultant single LTA is acceptable if it satisfies the rules of 32-4.

32-6 SINGLE LOCAL THIN AREAS IN SPHERICAL SEGMENTS OF SHELLS

(a) The single LTA shall satisfy the following equations:

$$\frac{t_L}{t} \geq 0.9 \tag{5}$$

$$D_L \leq \sqrt{Rt} \tag{6}$$

$$t - t_L \leq \frac{3}{16}\text{ in.} \tag{7}$$

(b) For openings meeting UG-36(c)(3), the minimum distance between the edge of the LTA and the center of the opening shall be equal to or greater than the inside diameter of the opening plus $\sqrt{Rt}$.

(c) For openings not meeting UG-36(c)(3), the minimum distance between the edge of the LTA and the reinforcement limit of the opening shall be equal to or greater than $\sqrt{Rt}$.

(d) The edges of a LTA shall not be closer than $2.5\sqrt{Rt}$ from a structural discontinuity.

(e) A constant thickness junction between head and cylindrical shell is not considered to be a structural discontinuity for LTA rules.

(f) The blend between the LTA and the thicker surface shall be with a taper length not less than three times the LTA depth. The minimum bottom blend radius shall be equal to or greater than two times the LTA depth. The blend requirements are shown in Figure 32-3, sketch (b).

(g) The LTA for a torispherical head must lie entirely within the spherical portion of the head. See Figure 32-6.1.

(h) The LTA for an ellipsoidal head must lie entirely within a circle, the center of which coincides with the axis of the vessel and the diameter of which is equal to 80% of the shell inside diameter. see Figure 32-6.2.

Provided by IHS under license with ASME
No reproduction or networking permitted without license from IHS
Licensee=Chevron Phillips Chemical Co LP/5956674001
Not for Resale, 11/09/2014 20:41:36 MST

Figure 32-6.1
Limits for Torispherical Head

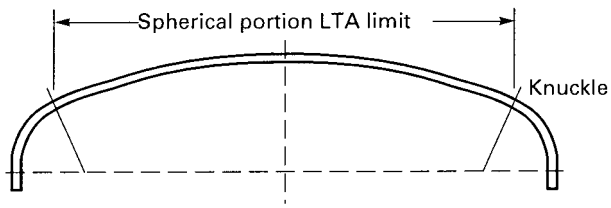

(i) The LTA for a hemispherical head is acceptable within any portion of the head except as limited by (d). see Figure 32-6.3.

(j) The thickness at the LTA shall meet the requirements of UG-28(d) or UG-33 as applicable.

(k) The provisions of this Appendix do not apply to the torus portion of either a torispherical or ellipsoidal head, to flat heads, or to conical heads.

32-7 MULTIPLE LOCAL THIN AREAS IN SPHERICAL SEGMENTS OF SHELLS

(a) Multiple LTAs may be combined and evaluated as a single LTA. The encompassed areas of the combined LTAs shall be within the D_L dimension.

(b) Each LTA in the encompassed area shall meet the rules of 32-6.

(c) Multiple LTAs may be treated as single LTAs provided their edges are no closer than $2.5\sqrt{Rt}$.

Figure 32-6.2
Limits for Ellipsoidal Head

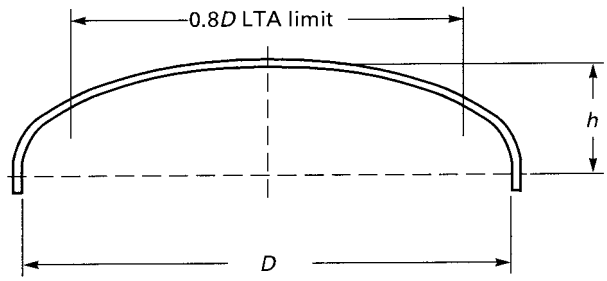

32-8 DATA REPORTS

When all the requirements of this Division and supplemental requirements of this Appendix have been met, the following notation shall be entered on the Manufacturer's Data Report under Remarks: "Constructed in Conformance With Mandatory Appendix 32, Local Thin Areas in Cylindrical Shells and in Spherical Segments of Shells."

Provided by IHS under license with ASME
No reproduction or networking permitted without license from IHS
Licensee=Chevron Phillips Chemical Co LP/5956674001
Not for Resale, 11/09/2014 20:41:36 MST

Figure 32-6.3
Limits for Hemispherical Head

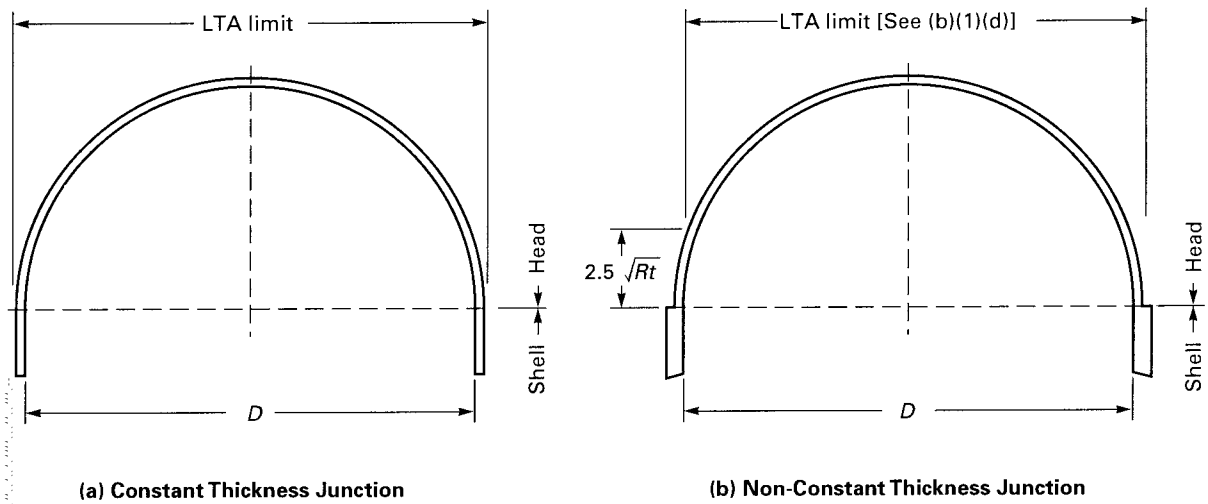

Provided by IHS under license with ASME
No reproduction or networking permitted without license from IHS
Licensee=Chevron Phillips Chemical Co LP/5956674001
Not for Resale, 11/09/2014 20:41:36 MST

MANDATORY APPENDIX 33
STANDARD UNITS FOR USE IN EQUATIONS

Table 33-1
Standard Units for Use in Equations

Quantity	U.S. Customary Units	SI Units
Linear dimensions (e.g., length, height, thickness, radius, diameter)	inches (in.)	millimeters (mm)
Area	square inches (in.^{2})	square millimeters (mm^2)
Volume	cubic inches (in.^{3})	cubic millimeters (mm^3)
Section modulus	cubic inches (in.^{3})	cubic millimeters (mm^3)
Moment of inertia of section	inches^4 (in.^{4})	millimeters^4 (mm^4)
Mass (weight)	pounds mass (lbm)	kilograms (kg)
Force (load)	pounds force (lbf)	newtons (N)
Bending moment	inch-pounds (in.-lb)	newton-millimeters (Ṅmm)
Pressure, stress, stress intensity, and modulus of elasticity	pounds per square inch (psi)	megapascals (MPa)
Energy (e.g., Charpy impact values)	foot-pounds (ft-lb)	joules (J)
Temperature	degrees Fahrenheit (°F)	degrees Celsius (°C)
Absolute temperature	Rankine (R)	kelvin (K)
Fracture toughness	ksi square root inches (ksi$\sqrt{\text{in.}}$)	MPa square root meters (MPa$\sqrt{\text{m}}$)
Angle	degrees or radians	degrees or radians
Boiler capacity	Btu/hr	watts (W)

--`,,,``,,``,,,

MANDATORY APPENDIX 34
REQUIREMENTS FOR USE OF HIGH SILICON STAINLESS STEELS FOR PRESSURE VESSELS

34-1 SCOPE

(a) This Appendix covers rules for the use of high silicon stainless steel materials. The materials and appropriate specifications covered by this Appendix are listed in Table 34-1. High silicon materials are those stainless steel materials with silicon in the range of 3.7% – 6.0%.

(b) The requirements of this Appendix are in addition to the rules in other parts of this Division on high alloy steels. In cases of conflict, the rules of this Appendix shall govern.

(c) This Appendix number shall be shown on the Manufacturer's Data Report.

(13) 34-2 HEAT TREATMENT

17.5Cr–17.5Ni–5.3Si and 18Cr–15Ni–4Si: Materials shall be solution annealed at a temperature of 2,010°F to 2,140°F (1 100°C to 1 170°C) followed by rapid cooling.

17.5Cr–17.5Ni–5.3Si and 18Cr–15Ni–4Si: Heat treatment after forming is neither required nor prohibited. If heat treatment is used, it shall be performed at a temperature of 2,010°F to 2,140°F (1 100°C to 1 170°C) followed by rapid cooling.

34-3 WELD PROCEDURE QUALIFICATION

(a) Welding procedure qualifications using production-weld consumable shall be made for material welded to itself or to other materials. The qualifications shall conform to Section IX and additional requirements in Table 34-2.

(b) Welding of *18CR–20Ni–5.5Si* materials is limited to the GTAW and GMAW processes.

(c) Welding of *17.5Cr–17.5Ni–5.3Si* and *18Cr–15Ni–4Si* materials is limited to GMAW, GTAW, SMAW, and PAW.

34-4 TOUGHNESS REQUIREMENTS

Minimum design metal temperature for the materials in this Appendix shall be limited to −50°F (−46°C) and warmer.

34-5 ADDITIONAL REQUIREMENTS

(a) The rules of Subsection C, Part UHA for austenitic stainless steels shall apply.

(b) The additional requirements shown in Table 34-2 shall apply to these materials.

Table 34-1
Material Specifications

Nominal Composition	UNS	Specification	Product Form
18Cr–15Ni–4Si	S30600	SA-479	Bars and shapes
		SA-182	Forged flanges and fittings
		SA-240	Plate, sheet, and strip
		SA-312	Seamless and welded pipe
18Cr–20Ni–5.5Si	S32615	SA-479	Bars and shapes
		SA-240	Plate, sheet, and strip
		SA-213	Seamless tubing
		SA-312	Seamless and welded pipe
17.5Cr–17.5Ni–5.3Si	S30601	SA-240	Plate, sheet, and strip

--`,,,``,,,```,,,,`,``,,,,,,,,```-`-`,,`,,`,`,,`---
Provided by IHS under license with ASME
No reproduction or networking permitted without license from IHS
Licensee=Chevron Phillips Chemical Co LP/5956674001
Not for Resale, 11/09/2014 20:41:36 MST

Table 34-2
Additional Requirements

Nominal Composition	UNS	Requirements
18Cr–15Ni–4Si	S30600	Plate material shall not exceed 2 in. (50 mm) and bars and tube material shall not exceed 4 in. (100 mm) dia. Dimension "A" for the bend test jig in QW-466 shall be 4t [(1½ in. (38 mm) for ⅜ in. (10 mm) thick specimen)].
18Cr–20Ni–5.5Si	S32615	Grain size of the material, determined in accordance with ASTM Methods E112, Plate II, shall be No. 3 or finer. The maximum nominal thickness of the weld shall be limited to ½ in. (13 mm).
17.5Cr–17.5Ni–5.3Si	S30601	Maximum thickness of the material at the welds shall not exceed 1 in. (25 mm). Dimension "A" for the bend test jig in QW-466 shall be 4t [(1½ in. (38 mm) for ⅜ in. (10 mm) thick specimen)].

Provided by IHS under license with ASME
No reproduction or networking permitted without license from IHS
Licensee=Chevron Phillips Chemical Co LP/5956674001
Not for Resale, 11/09/2014 20:41:36 MST

MANDATORY APPENDIX 35
RULES FOR MASS PRODUCTION OF PRESSURE VESSELS

35-1 INTRODUCTION

This Appendix provides detailed requirements for the mass production of pressure vessels bearing the U Designator at a rate of production that makes it impracticable for the Inspector [see UG-91(a)(1)] to perform the duties normally assigned under UG-90(c)(1). The provisions of this Appendix allow the Manufacturer to assume responsibility for carrying out some of the Inspector's normally assigned duties by the development, acceptance, and implementation of a detailed inspection and quality control procedure as described in 35-4. The objective of such a procedure is to ensure that Code compliance and pressure integrity of mass-produced pressure vessels remains essentially identical to vessels constructed under UG-90(c)(1). The Inspector must be satisfied the inspection and quality control procedure and the Quality Control System are being fully implemented, and completed vessels meet the applicable requirements of this Division.[4]

35-2 SCOPE

This Appendix provides rules allowing the Manufacturer of mass-produced pressure vessels bearing the U Designator to assume responsibility for carrying out some of the Inspector's duties normally assigned under UG-90(c)(1), in addition to the responsibilities normally assigned to the Manufacturer in UG-90(b). A mass-production program for pressure vessel fabrication may be implemented when the requirements of this Appendix are met.

35-3 GENERAL

(a) Mass production is defined as the construction of multiple pressure vessels at a rate of production that makes it impracticable for the Inspector to perform all of the duties normally assigned under UG-90(c)(1). The Inspector and/or the Authorized Inspection Agency (AIA) shall determine the acceptability of applying the mass-production inspection and quality control procedure to the construction of any vessel or series of vessels.

(b) Construction of two or more pressure vessels per shift at a rate of production that affords the Inspector sufficient opportunity to perform the required duties given in UG-90(c)(1) does not qualify for mass production.

(c) The rules of UG-90(c)(1) shall be applied when constructing lethal service vessels, unfired steam boilers, or direct fired pressure vessels.

(d) Pressure vessels constructed under this Appendix shall be identical, except for differences in fitting sizes and locations, shell lengths, and the location and configuration of nonpressure attachments.

(e) The design and construction of pressure vessels fabricated under this Appendix shall be reviewed and accepted by the Inspector in accordance with the Certificate Holder's Quality Control System [see 10-5].

(f) There is no size limitation on mass-produced pressure vessels.

(g) Mass-produced pressure vessels meeting both (d) above and the incremental requirements of UW-52(b)(1) may be used to establish the 50 ft (15 m) linear weld increment requirements for spot radiography.

35-4 QUALITY CONTROL PROCEDURES

(a) The Manufacturer and the Authorized Inspection Agency (AIA) of record shall collaborate on the preparation of a detailed inspection and quality control procedure describing how some of the duties of the Inspector will be assumed by the Manufacturer. The inspection and quality control procedure, along with the Quality Control System, shall be submitted by the Manufacturer to the AIA of record and the legal jurisdiction [see UG-117(f)] for review and acceptance. The Manufacturer shall then submit the inspection and quality control procedure and the Quality Control System to the ASME Designee for final acceptance in writing prior to implementation. The final approved version of the inspection and quality control procedure shall be included in the Manufacturer's written Quality Control System [see UG-117(e)].

(b) The inspection and quality control procedure shall be implemented at the location of the Manufacturer named on the Certificate of Authorization. An Inspector employed and designated by the AIA of record shall be assigned at each Manufacturer's location where mass production of pressure vessels is being performed. The assigned Inspector shall perform the required duties, including verification and oversight of implementation of the inspection and quality control procedure as stated in (c) below. A minimum of one full-time (40 hr per week) Inspector shall be present during mass-production operations to perform the required duties. The Inspector shall be present at all times during mass-production operations

Provided by IHS under license with ASME
No reproduction or networking permitted without license from IHS
Licensee=Chevron Phillips Chemical Co LP/5956674001
Not for Resale, 11/09/2014 20:41:36 MST

when operating less than 40 hr per week. When multiple shift mass-production operations are taking place, the required Inspector presence beyond the full-time requirement shall be a matter of agreement between the AIA of record and the Manufacturer, as set forth in the accepted inspection and quality control procedure. Manufacturing personnel who implement the inspection and quality control procedure shall be trained and qualified for their assigned duties in accordance with the Manufacturer's Quality Control System. All training and qualification documentation shall be maintained in accordance with the Manufacturer's Quality Control System.

(c) The Inspector shall perform all duties specifically assigned, and any necessary intermittent and unannounced inprocess inspections and other inspection activities required to ensure pressure vessels have been designed and constructed in accordance with the requirements of this Division prior to applying the Certification Mark. The Inspector's duties shall, as a minimum, include verifying that

(1) the Manufacturer has a valid Certificate of Authorization [UG-117(a)] and is working to a Quality Control System [UG-117(e)]

(2) the applicable design calculations are available [U-2(b), U-2(c), 10-5, and 10-15(d)]

(3) materials used in the construction of the vessel comply with the requirements of UG-4 through UG-14 (UG-93)

(4) all welding and brazing procedures have been qualified (UW-28, UW-47, and UB-42)

(5) all welders, welding operators, brazers, and brazing operators have been qualified (UW-29, UW-48, and UB-43)

(6) the heat treatments, including PWHT, have been performed (UG-85, UW-10, UW-40, UW-49, and UF-52)

(7) material imperfections repaired by welding were acceptably repaired [UG-78, UW-52(d)(2)(-c), UF-37, and UF-47(c)]

(8) required volumetric nondestructive examinations, impact tests, and other tests have been performed and that the results are acceptable (UG-84, UW-50, UW-51, and UW-52)

(9) the inspection and quality control procedure is being implemented effectively, by monitoring all aspects of its implementation completely each calendar year

(10) the vessel is in compliance with all the provisions of this Division, to the best of his knowledge and belief, prior to signing the Certificate of Inspection on the Manufacturer's Data Report

(d) In addition to the responsibilities of the Manufacturer found in UG-90(b), the Manufacturer is responsible for the following duties, as provided in the inspection and quality control procedure described in (a) above:

(1) verifying that weld defects were acceptably repaired [UW-51(c) and UW-52(c)]

(2) making a visual examination of the vessel to confirm that the material identification numbers have been properly transferred (UG-77 and UG-94)

(3) making a visual examination of the vessel to confirm that there are no material or dimensional defects (UG-95, UG-96, and UG-97)

(4) verifying that required surface nondestructive examinations and other tests have been performed and that the results are acceptable (UG-93 and UB-44)

(5) performing internal and external examinations, and verifying that the hydrostatic or pneumatic tests have been performed (UG-96, UG-97, UG-99, UG-100, and UG-101)

(6) verifying that the required marking is provided (UG-115) and that any nameplate has been attached to the proper vessel

(e) When the Manufacturer wishes to make revisions to the inspection and quality control procedure affecting compliance with the requirements of this Division, the Manufacturer shall submit the revised inspection and quality control procedure to the AIA of record and the legal jurisdiction for review and acceptance. The Manufacturer shall then submit the accepted revisions to the inspection and quality control procedure to the ASME Designee for final acceptance in writing prior to implementation.

35-5 DATA REPORTS

(a) Forms U-1 (or U-1A) prepared by the Manufacturer for pressure vessels constructed under a mass-production program shall include under "Remarks" the statement: "Constructed under the provisions of UG-90(c)(2)." The Data Reports shall be certified by the Manufacturer and Inspector when the completed vessels are found to be in compliance with the requirements of this Division.

(b) Same-day construction of identical mass-produced pressure vessels may be reported on a single Form U-1 (or U-1A) when the requirements of UG-120(a) are met.

35-6 PNEUMATIC TESTING[103]

Mass-produced pressure vessels that otherwise qualify for exemption from impact testing per UG-20(f) may be pneumatically tested as described below in lieu of the hydrostatic test requirements of UG-20(f)(2):

(a) The maximum allowable working pressure to be stamped on the vessel shall not exceed 500 psig (3.5 MPa).

(b) Materials used for pressure-retaining portions of the vessel, and for non-pressure parts attached to pressure parts by welds having a throat thickness greater than $^1/_4$ in. (6 mm), shall be restricted to those listed in the notes of Figure UCS-66.

(c) The following thickness limitations apply:

(1) For butt joints, the nominal thickness at the thickest welded joint shall not exceed $^1/_2$ in. (13 mm).

Provided by IHS under license with ASME
No reproduction or networking permitted without license from IHS
Licensee=Chevron Phillips Chemical Co LP/5956674001
Not for Resale, 11/09/2014 20:41:36 MST

(2) For corner joints or lap welds, the thinner of the two parts joined shall not exceed $\frac{1}{2}$ in. (13 mm).

(3) ASME B16.5 ferritic steel flanges used at design metal temperatures no colder than −20°F (−29°C) may be used without thickness limitation.

(d) The minimum metal temperature during the pneumatic test shall be maintained at least 30°F (18°C) above that given on Figure UCS-66 for the governing material classification and thickness combination in UCS-66(a).

(e) The UW-50 NDE requirements are not applicable for mass-produced pressure vessels.

(f) The pneumatic test pressure shall be at least equal to 1.3 times the maximum allowable working pressure to be stamped on the vessel, multiplied by the lowest ratio (for the materials of which the vessel is constructed) of the stress value S for the test temperature of the vessel to the stress value S for the design temperature (see UG-21). In no case shall the pneumatic test pressure exceed 1.3 times the basis for calculated test pressure as defined in Mandatory Appendix 3, section 2 by more than 10%. The pressure in the vessel shall be gradually increased to not more than one-half of the test pressure. Thereafter, the test pressure shall be increased in steps of approximately one-tenth of the test pressure until the required test pressure has been reached. Then the pressure shall be reduced to a value equal to the test pressure divided by 1.3 and held for a sufficient time to permit inspection of the vessel. This inspection may be performed as a separate test. The visual inspection of the vessel at the required test pressure divided by 1.3 may be waived provided

(1) a suitable gas leak test is applied

(2) substitution of the gas leak test is by agreement reached between Manufacturer and Inspector

(3) all welded seams that will be hidden by assembly are given a visual examination for workmanship prior to assembly

(13) 35-7 HYDROSTATIC TESTING

Single-chamber pressure vessels, constructed by a Manufacturer under the provisions of UG-90(c)(2), may be pressure tested separately from their removable covers in a test fixture, and the corresponding bolted blind flange closures pressure tested only on a quality control basis, provided all of the following requirements are met:

(a) Only one end of the pressure vessel may consist of a bolted flat blind flange closure. The bolted flat blind flange closure and attachment flange shall comply with the following requirements:

(1) All requirements of ASME B16.5 for bolted flanges shall be met.

(2) As an alternative to (1), a fabricated flat blind flange may be used provided it is dimensionally identical to an ASME B16.5 flange or designed in accordance with Mandatory Appendix 2 and UG-34. A flange dimensionally identical to ASME B16.5 shall use the pressure–temperature rating for the flange construction material and class. A cover and flange designed in accordance with Mandatory Appendix 2 and UG-34 shall be designed to 1.14 times the vessel MAWP at the design temperature. The vessel shell shall not exceed 30 in. (760 mm) outside diameter. In addition, the ASME B16.5 surface finish and machining requirements shall be met.

(3) The MAWP of the vessel shall not exceed 500 psi (3.45 MPa), and the maximum design temperature shall not exceed 650°F (343°C).

(4) No welding shall be permitted on the flat blind flanges.

(b) The pressure vessel with open end shall be tested in a fixture that will permit achieving the test pressure required by UG-99. The vessel shall be mounted to the test fixture in such a manner that the structural integrity and leak tightness of the body flange is established.

(c) One out of every 200 vessels, selected at random, from each day's production shall be pressure tested per the rules of UG-99 with its removable cover, service gasket, and service bolting installed. If this quality control vessel fails the test, then all vessels produced in that day's production shall be so tested. All vessels in the subject production lot shall consist of identical vessels and design conditions.

(d) The vessel shall not be constructed and stamped for "lethal" service.

(e) The test fixture shall be designed such that the stress developed in the vessel during the hydrostatic test using the test fixture shall be the same as the stress developed in the vessel when tested with its removable cover.

--`,,,``,,``,,,,`,`,`,,`,,```-`-`,,`,,`,`,,`---
Provided by IHS under license with ASME
No reproduction or networking permitted without license from IHS
Licensee=Chevron Phillips Chemical Co LP/5956674001
Not for Resale, 11/09/2014 20:41:36 MST

MANDATORY APPENDIX 36
STANDARD TEST METHOD FOR DETERMINING THE FLEXURAL STRENGTH OF CERTIFIED MATERIALS USING THREE-POINT LOADING

36-1 SCOPE

This test method outlines the determination of the flexural strength of Certified Material, as required by UIG-84, using a simple beam in three-point loading at room temperature. This method is restricted to tubes.

36-2 TERMINOLOGY

For definitions relating to certified materials, see UIG-3.

flexural strength: a measure of the ultimate load capacity of a specified beam in bending.

36-3 APPARATUS

(a) The three-point loading fixture shall consist of bearing blocks, which ensure that forces applied to the beam are normal and without eccentricity.

(b) The bearing block diameter shall be between $^1/_{10}$ and $^1/_{20}$ of the specimen support span. A hardened bearing block, or its equivalent, is necessary to prevent distortion of the loading member.

(c) The direction of loads and reactions may be maintained parallel by the use of linkages, rocker bearings, and flexure plates. Eccentricity of loading can be avoided by the use of spherical bearings. Provision must be made in the fixture design for relief of torsional loading to less than 5% of the nominal specimen strength.

36-4 TEST SPECIMEN

(a) Size. The test specimen shall have a length to diameter ratio greater than or equal to 5 as shown in Figure 36-4-1.

(b) Measurements. All dimensions shall be measured to the nearest 5%.

36-5 PROCEDURE

(a) Center the load applying bearing surface and the test specimen on the bearing blocks. The support span shall be greater than or equal to five times the tube outside diameter.

(b) The load applying bearing surface shall make contact with the upper surface of the test specimen. Load and support bearing blocks must be parallel to each other and perpendicular to the test surface. Use a loading rate of 0.05 in./min. (1.3 mm/min.) or less on screw-driven testing machines. On other test devices load the specimen at a uniform rate such that fracture occurs in 5 sec or more.

36-6 TEST DATA RECORD

(a) Measurements to 0.001 in. shall be made to determine the average inside and outside diameters at the section of failure.

(b) The load at failure must be recorded to an accuracy of ±2% of the full-scale value.

36-7 CALCULATION

(a) Calculate the flexural strength as follows:

$$S = \frac{PLD_o}{8I}$$

and

$$I = \frac{\pi}{64}\left(D_o^4 - D_i^4\right)$$

where

D_i = inside diameter, in. (mm)

D_o = outside diameter, in. (mm)

I = moment of inertia, in.^{4} (mm^4)

L = support span length, in. (mm)

P = maximum applied load, lb (N)

S = flexural strength, psi (MPa)

(b) If fracture occurs in less than 5 sec, the results shall be discarded but reported.

36-8 REPORT

(a) The report of each test shall include the following:

(1) specimen identification

(2) average outside diameter to the nearest 0.001 in. (0.025 mm)

Provided by IHS under license with ASME
No reproduction or networking permitted without license from IHS
Licensee=Chevron Phillips Chemical Co LP/5956674001
Not for Resale, 11/09/2014 20:41:36 MST

Figure 36-4-1
Test Specimen Arrangement

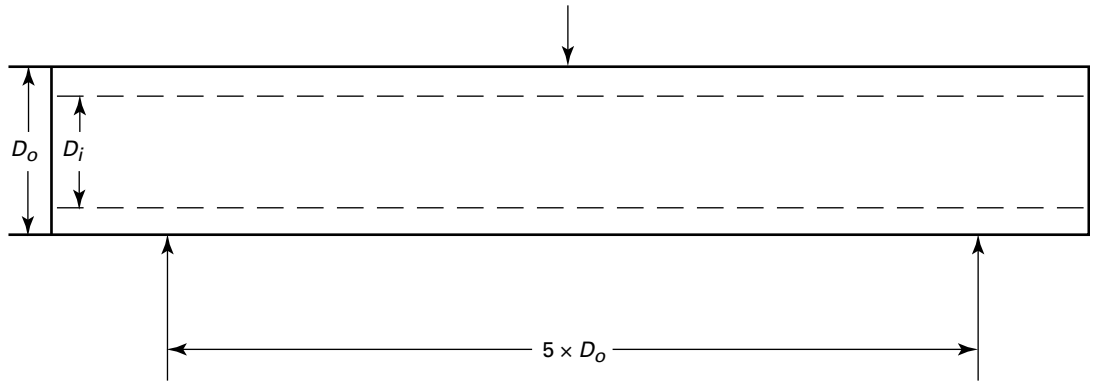

(3) average inside diameter to the nearest 0.001 in. (0.025 mm)

(4) span length, in. (mm)

(5) rate of loading, in./min (mm/min)

(6) maximum applied load, lb (N)

(7) flexural strength calculated to the nearest 10 psi (0.07 MPa)

(8) defects in specimen

(9) failure mode and location

Provided by IHS under license with ASME
No reproduction or networking permitted without license from IHS
Licensee=Chevron Phillips Chemical Co LP/5956674001
Not for Resale, 11/09/2014 20:41:36 MST

MANDATORY APPENDIX 37
STANDARD TEST METHOD FOR DETERMINING THE TENSILE STRENGTH OF CERTIFIED IMPREGNATED GRAPHITE MATERIALS

37-1 SCOPE

This test method outlines the method of determination of the tensile strength of Certified Carbon and Graphite Materials, as required by UIG-84, using cylindrical specimens at designated temperature.

37-2 TERMINOLOGY

For definitions relating to certified materials, see UIG-3.

tensile strength: a measure of the ultimate load capacity, resistance to elongation, measured in the longitudinal length of the material.

37-3 APPARATUS

(a) The testing machine shall have a load measurement capacity such that the breaking load of the test specimen falls between 10% and 90% of the scale capacity. This range must be linear to within 1% over 1% increments. The requirements of the machine shall conform to the practices of the ASTM E4. Standard Practices for Force Verification of Testing Machines.

(b) The percent error for forces within the range of forces of the testing machine shall not exceed ±1%. Repeatability errors shall not be greater than 1%.

37-4 TEST SPECIMENS

(a) Preparation. The test specimens shall be prepared to the configurations shown in Figures UIG-76-1 through UIG-76-4.

(b) Fracture Zone. The acceptable fracture zone of the specimens shall be as shown in Figures UIG-76-1 through UIG-76-5.

(c) Measurements. To determine the cross sectional area, the diameter of the specimen at the narrowest point shall be used. The diameter shall be recorded to the nearest 0.001 in. (0.02 mm).

(d) Orientation. The specimen shall be marked on the end to denote its (grain) orientation with respect to the parent stock.

37-5 PROCEDURE

(a) Load Applier. Center the test specimen in the load applying, gripping devices.

(b) Speed of Testing. Test speed shall be defined in terms of free running.

The speed shall be 0.020 in. ± 10% (0.508 mm ± 10%) per min.

37-6 TEST DATA RECORD

(a) Measurement to 0.001 in. (0.02 mm) shall be made to determine the average gage diameter of the specimen in the region of the fracture zone.

(b) The load at failure shall be measured to an accuracy of ±1%.

(c) If any part of the fracture takes place outside of the acceptable fracture zone as defined in 37-4(b), the test shall be discarded, but reported.

37-7 CALCULATIONS

(a) Calculate the tensile strength as follows:

$$S_t = \frac{P_{\max}}{A}$$

where

A = cross-sectional area of the specimen's smallest diameter of the gage section of the specimen, in. (mm)

$P_{\max}$ = maximum applied load, lb (N)

S_t = tensile strength, psi (MPa)

(b) The cross-sectional area is given by the following equation:

$$A = \frac{\pi D^2}{4}$$

where

D = minimum diameter of the gage section of the specimen, in. (mm)

Provided by IHS under license with ASME
No reproduction or networking permitted without license from IHS
Licensee=Chevron Phillips Chemical Co LP/5956674001
Not for Resale, 11/09/2014 20:41:36 MST

37-8 REPORTS

(a) The report of each test shall include the following:

(1) sample identification

(2) minimum gage diameter to the nearest 0.001 in.

(3) rate of loading

(4) maximum applied load

(5) tensile strength calculated to the nearest 10 psi

(6) defects in specimens

(7) orientation of specimen, with or against the grain

(8) failure mode and location

Provided by IHS under license with ASME

No reproduction or networking permitted without license from IHS

Licensee=Chevron Phillips Chemical Co LP/5956674001
Not for Resale, 11/09/2014 20:41:36 MST

MANDATORY APPENDIX 38
STANDARD TEST METHOD FOR COMPRESSIVE STRENGTH OF IMPREGNATED GRAPHITE

38-1 SCOPE

(a) This test method covers the determination of the compressive strength of impervious carbon and graphite at room temperature.

(b) This Standard does not purport to address all of the safety concerns, if any, associated with its use. It is the responsibility of the user of this Standard to establish appropriate safety and health practices and determine the applicability of regulatory limitations prior to use.

38-2 REFERENCED DOCUMENTS

(a) ASTM Standards

(1) C 709 Terminology Relating to Manufactured Carbon and Graphite

(2) E 4 Practices for Force Verification of Testing Machines

(3) E 177 Practice for Use of the Terms Precision and Bias in ASTM Test Methods

(4) E 691 Practice for Conducting an Interlaboratory Test Study to Determine the Precision of a Test Method

38-3 TERMINOLOGY

see UIG-3 for definitions of terms related to manufactured impregnated graphite.

38-4 SIGNIFICANCE AND USE

Impregnated graphite can usually support higher loads in compression than in any other mode of stress. The compressive strength test, therefore, provides a measure of the maximum load-bearing capability of carbon and graphite objects and the results are used to generate material flexural-compression strength ratios.

38-5 APPARATUS

(a) Test machine, conforming to Practice E4 and to the requirements for speed of testing prescribed in Section 8 of this test method.

(b) All load-bearing machine and fixture surfaces shall have a minimum hardness of 45 HRC and surface finish of 16 μin. (0.4 μm) rms maximum. Surfaces in contact with the specimen shall be flat to less than 0.0005 in./in. (0.0005 mm/mm).

(c) Examples of arrangements of the load train are shown schematically in Figs. 1 and 2 in ASTM C695.

38-6 SAMPLING

Samples may be taken from locations and orientations that satisfy the objectives of the test.

38-7 TEST SPECIMEN

The test specimen shall be a $^3/_4$ in. (19 mm) cube or an O.D./I.D. tube with height equal to the tube O.D. with ends machined to yield planar and parallel faces. These faces shall be perpendicular to within 0.001 in. (0.025 mm) of a length total indicator reading. Reasonable care should be exercised to ensure that all edges are sharp and without chips or other flaws.

38-8 PROCEDURE

(a) Center the specimen in the machine between the contact surfaces. The deviation of the specimen axis from the machine axis shall be less than 5% of the specimen length. Centering can be assisted by appropriate circles marked on the contact surfaces.

(b) Place an appropriate guard around the specimen to deflect flying fragments at failure.

(c) Apply the load continuously, and without shock until ultimate failure.

(d) If the test machine is equipped with a load or strain pacing device, a constant load or strain rate may be used.

38-9 CALCULATION

Calculate the compressive strength of each specimen as follows:

$$C = \frac{W}{A}$$

Provided by IHS under license with ASME
No reproduction or networking permitted without license from IHS
Licensee=Chevron Phillips Chemical Co LP/5956674001
Not for Resale, 11/09/2014 20:41:36 MST

where

A = calculated area of the gage section of the specimen, in^2 (mm^2)

C = compressive strength of specimen, psi (MPa)

W = total load on the specimen at failure, lbf (N)

38-10 REPORT

(a) The report shall include the following:

(1) type of testing machine, hydraulic or screw

(2) type and size of contact blocks

(3) general description of material being tested

(4) dimensions, location, and orientation of specimens

(5) details of specimen preparation

(6) rate of crosshead or platen movement, or load rate, or strain rate

(7) load of failure, failure mode, and compressive strength of each specimen, and material tested

(8) mean compressive strength and standard deviation for material tested

38-11 PRECISION AND BIAS

(a) Precision. The precision statements given in this section are based on the comparison of the mean strength by the Student "t" test and carrying out the statistical analysis of the data obtained in a round robin as recommended by Practice E 691. The round robin was carried out on two materials.

(b) Comparison of the Means. The comparison of the means by the Student "t" test leads to the conclusion that the average strength values measured by each laboratory on each material is considered statistically equal at 95% confidence level.

Provided by IHS under license with ASME

No reproduction or networking permitted without license from IHS

Licensee=Chevron Phillips Chemical Co LP/5956674001
Not for Resale, 11/09/2014 20:41:36 MST

MANDATORY APPENDIX 39
TESTING THE COEFFICIENT OF PERMEABILITY OF IMPREGNATED GRAPHITE

39-1 SCOPE AND FIELD OF APPLICATION

The vacuum-decay method specified in this standard serves to determine the coefficient of permeability of test specimens made from carbon and graphite materials (solid matter) at room temperature. With this method using air as experimental gas, coefficients of permeability between about 10^1 and 10^{-9} in.^{2}/sec can be determined. The coefficient of permeability gives the admittance of gas through solid materials.

39-2 CONCEPT

(a) Coefficient of Permeability

The coefficient of permeability *k(L)* is the volume of air flow through the test specimen divided by its cross section at a constant pressure difference.

$$k(L) = \frac{dV}{dt} p \frac{1}{A} \frac{1}{\Delta p}$$

where

A = the effective cross section of the test specimen in the direction of flow, in.^{2} (mm^2)

dV/dt = the volume airflow within a time period, in.^{3}/sec (mm^3/s)

l = the effective length of the test specimen in the direction of flow, in. (mm)

p = the average pressure $(p_a + p_i)/2$, lb/in.^{2} (MPa)

where

p_a = the pressure of the air entering the test specimen

p_i = the pressure of the air leaving the test specimen

Δp = the pressure difference $p_a - p_i$, lb/in.^{2} (MPa)

(b) Vacuum-Decay Method

The vacuum-decay method uses air as experimental gas to measure the coefficient of permeability, *k(L)*, by determination of the pressure increase in a constant volume.

$$k(L) = \frac{dp_i}{dt} V \frac{1}{A} \frac{1}{\Delta p}$$

where

A = the effective cross section of the test specimen, in.^{2} (mm^2)

dp_i/dt = the rate of the pressure increase in the measuring volume within a time period.

P = the average pressure difference $p - p_i$, lb/in.^{2} (MPa)

V = the measuring volume, in.^{3} (mm^3). The measuring volume is the volume in which the pressure of air as experimental gas varies during the test. In the case of tubular test specimens, the measuring volume is the sum of the cavity volumes of the vacuum device and the test specimen. The pore volume of the test specimen is not taken into account.

p_a = the pressure of air entering the test specimen

p_i = the pressure of air leaving the test specimen, to be calculated from $p_i = (p_{11} + p_{12})/2$, where

p_{11} = the pressure of the air entering the test specimen at the beginning of the measurement

p_{12} = the pressure of the air leaving the test specimen at the end of the measurement

39-3 PRINCIPLE

In an evacuated measuring volume, which is separated from the outside air by the test specimen, the time dependent pressure increase caused by the inflowing air is determined. The coefficient of permeability is calculated from this pressure increase (vacuum-decay), from the pressure difference over the test specimen, the dimensions of the test specimen, and the measuring volume.

39-4 APPARATUS

Vacuum apparatus (see schematic diagram in Figure 39-4-1)

39-5 SPECIMENS

Where tubular specimens are used, the surfaces to be sealed must be machined in a way that an efficient seal is guaranteed.

39-6 PROCEDURE

Coefficient of permeability *k(L)* is the volume of air flow through the test specimen divided by its cross section at a constant pressure difference.

Provided by IHS under license with ASME
No reproduction or networking permitted without license from IHS
Licensee=Chevron Phillips Chemical Co LP/5956674001
Not for Resale, 11/09/2014 20:41:36 MST

Figure 39-4-1
Schematic Diagram of Vacuum Apparatus

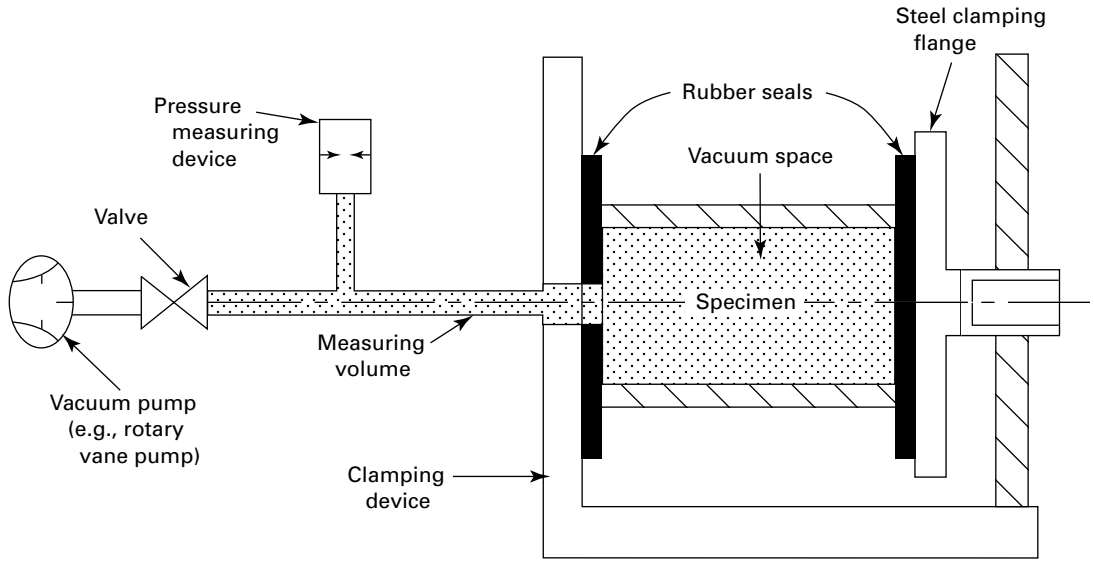

$$k(L) = \frac{\Delta p_i}{\Delta t} V \frac{\ln \frac{d_a}{d_i}}{2\pi l_2} \frac{1}{\Delta p}$$

where

l_2 = the length of the tube, in. (mm)
d_i = the inner diameter of the tube, in. (mm)
d_a = the outer diameter of the tube, in. (mm)
p_a = the pressure of the air entering the test specimen, psi (MPa)
p_i = $(p_{11} + p_{12})/2$, lb^2/in. (MPa)
p_{11} = the pressure of the air leaving the test specimen at beginning of measurement, time t_1
p_{12} = the pressure of the air leaving the test specimen at end of measurement, time t_2 is the measuring volume, in.^{3} (mm^3)
Δp = the pressure difference, $p_{12} - p_{11}$, psi (MPa)
Δt = the period of time (measuring time), $t_2 - t_1$, sec, psi (MPa)

39-7 TEST REPORT

(a) The following shall be specified in the test report with reference to this Standard:

(1) type, number, and designation of specimens

(2) time for evacuation, and drying conditions

(3) pressures p_{11} and p_{12}

(4) measuring time

(5) coefficient of permeability *k(L)* of the specimens, in in.^{2}/sec (mm^2/s), written in powers of 10, rounded to the nearest 0.1 in.^{2}/sec [for example, *k(L)* = 0.015 in.^{2}/sec, written as *k(L)* = 1.5 × 10^{-2} in.^{2}/sec (2.3 × 10^{-5} mm^2/s)], as

(-a) individual values

(-b) mean value

(6) agreed conditions deviating from this Standard

(7) test date

39-8 PRECISION

The relative uncertainty of the measurement is about 10%.

Provided by IHS under license with ASME
No reproduction or networking permitted without license from IHS
Licensee=Chevron Phillips Chemical Co LP/5956674001
Not for Resale, 11/09/2014 20:41:36 MST

MANDATORY APPENDIX 40
THERMAL EXPANSION TEST METHOD FOR GRAPHITE AND IMPREGNATED GRAPHITE

40-1 SCOPE

This method shall be used to determine thermal expansion factors for

(a) characterization of material with the grain direction (W.G.) and against the grain (A.G.)

(b) thermal or mechanical calculation in material application

40-2 TEST METHOD

The method gives minimum requirements for determination of real expansion of material under temperature effect, depending on used equipment, test specimen, testing processing, and subsequent calculations.

40-3 EQUIPMENT

(a) Typical equipment (Dilatometer) for determination of material thermal expansion is described in Figure 40-3-1.

(b) Material used for pushing rods and support must be the same. The thermal expansion factor of this material must be determined in the range of applicable temperature measurement. This material must have a significantly smaller value of thermal expansion factor than the tested material to improve the accuracy of results.

(c) The equipment must be calibrated, according to the Manufacturer's recommended practice.

40-4 TEST SPECIMEN

(a) The size of specimen is in accordance with the ability of used equipment and manufacturer's recommendation.

(b) The section must be regular all along the specimen length, the end parts are to be parallel, with good finished surfaces to allow efficient contact to measuring touch.

(c) The test specimen is identified to grain direction and material grade and impregnation type, if any.

Figure 40-3-1
Typical Equipment (Dilometer) for Thermal Expansion Test

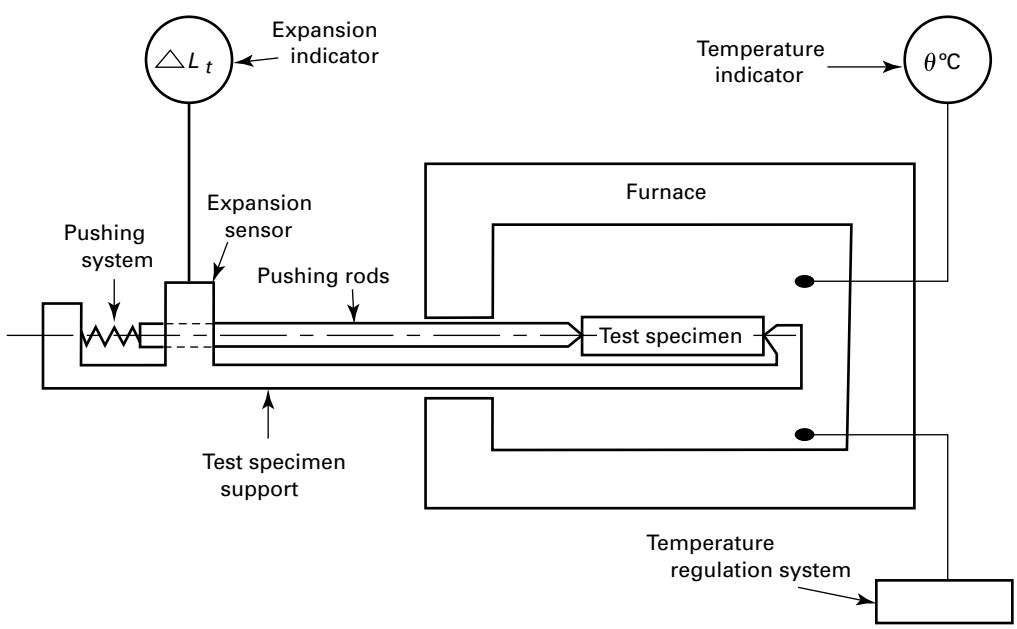

Provided by IHS under license with ASME
No reproduction or networking permitted without license from IHS
Licensee=Chevron Phillips Chemical Co LP/5956674001
Not for Resale, 11/09/2014 20:41:36 MST

40-5 TESTING PROCESS

(a) Testing Parameters

v = heating rate, less than 90°F/hr (50°C/h)
ΔL_t = recorded expansion, in. (mm)
θ_o = the initial temperature of the material, assumed to be room temperature, 72°F ± 4°F (22°C ± 2°C
θ_M = maximum test temperature, typically 36°F (20°C) over θ_m
θ_m = maximum design temperature for the material to be tested, °F (°C)

(b) Positioning of cleaned specimen into the support with minimum allowable pressure contact
(c) Recording of test curve $\Delta L_t = f(\theta)$

40-6 THERMAL EXPANSION FACTOR

The following thermal expansion factors may be determined after test:
(a) Linear average factor from θ_o to $\theta_m = \alpha_{om}$, °F^{-1} (°C^{-1})
(b) Factor at $\theta_m = \alpha_m$, °F^{-1} (°C^{-1})
Graphic use of recording curve is given in Figure 40-6-1.

40-6.1 LINEAR AVERAGE FACTOR FROM θ_o TO θ_m

(a) Expansion Parameters

$\Delta L_{r\theta}$ = recorded expansion at 4°F (2°C), in. (mm) interval
L_O = original length of test specimen, in. (mm)
$\Delta L_{s\theta}$ = expansion of specimen supports at 4°F (2°C) interval, in. (mm), according to equipment manufacturer's procedure
ΔL_θ = material expansion at 4°F (2°C), in. (mm)

(b) Calculation

The material expansion at 4°F (2°C) intervals shall be determined as follows:

$$\Delta L_\theta = \Delta L_{r\theta} - \Delta L_{s\theta}$$

$$\frac{\Delta L_\theta}{L_o} = \frac{\Delta L_{r\theta}}{L_o} - \frac{\Delta L_{S\theta}}{L_o}$$

$$\alpha_{o/m} = \frac{\Delta L_\theta / L_o}{\theta_o - \theta_m}, {}^\circ\mathrm{F}^{-1}\left({}^\circ\mathrm{C}^{-1}\right)$$

Figure 40-6-1
Typical Recording Curve in Thermal Expansion Test, $\Delta L_t = f(\theta)$

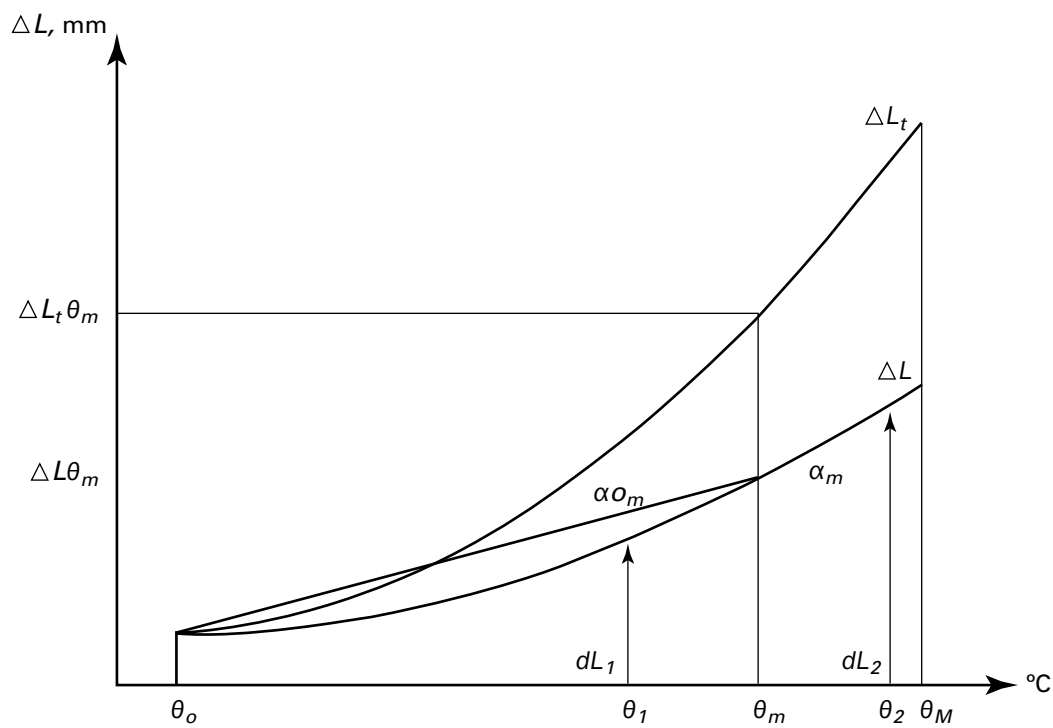

Provided by IHS under license with ASME
No reproduction or networking permitted without license from IHS
Licensee=Chevron Phillips Chemical Co LP/5956674001
Not for Resale, 11/09/2014 20:41:36 MST

40-6.2 FACTOR AT θ_m

(a) This factor is given by the slope of a tangent line to the material expansion curve on θ_m point.

(b) This factor may be determined by graphic construction as indicated on Figure 40-6-1.

$$\alpha_m = \frac{dL_2 - dL_1}{2d\theta L_o}, {}^\circ\mathrm{F}^{-1}\left({}^\circ\mathrm{C}^{-1}\right)$$

where

dL_1 = obtained by construction on θ_1 point

dL_2 = obtained by construction on θ_2 point

$d\theta = (\theta_M - \theta_m)$, °F (°C)

$\theta_1 = (\theta_M - d\theta)$, °F (°C)

$\theta_2 = (\theta_m + d\theta)$, °F (°C)

40-6.3 REPORT

The following information shall be included in the report:

(a) identification of test and recording

(b) type of equipment-support and pushing rod material, pushing level

(c) test specimen dimensions, material grade/impregnation, grain direction

(d) heating rate, origin and maximal operating temperature

(e) test results α_{0m} and/or α_m; usually in E^{-6}, $^\circ\mathrm{F}^{-1}$ ($^\circ\mathrm{C}^{-1}$) unit

(f) name, title, and date

Provided by IHS under license with ASME

No reproduction or networking permitted without license from IHS

Licensee=Chevron Phillips Chemical Co LP/5956674001
Not for Resale, 11/09/2014 20:41:36 MST

MANDATORY APPENDIX 41
ELECTRIC IMMERSION HEATER ELEMENT SUPPORT PLATES

41-1 SCOPE

41-1.1 The rules in this Mandatory Appendix cover the design of electric immersion heater element support plates, hereafter referred to as EIH support plates. EIH support plates are gasketed with a mating flange (Figure 41-1.1-1).

41-1.2 The rules of UG-34 and UG-39 are not applicable to EIH support plates constructed in accordance with this Mandatory Appendix.

41-2 MATERIALS AND METHODS OF FABRICATION

41-2.1 Materials and methods of fabrication for EIH support plates shall be in accordance with Subsections A, B, and C.

41-2.2 Welding or brazing heater elements to the EIH support plate shall be in accordance with Part UW or Part UB.

Figure 41-1.1-1
EIH Support Plate Gasketed With Mating Flange

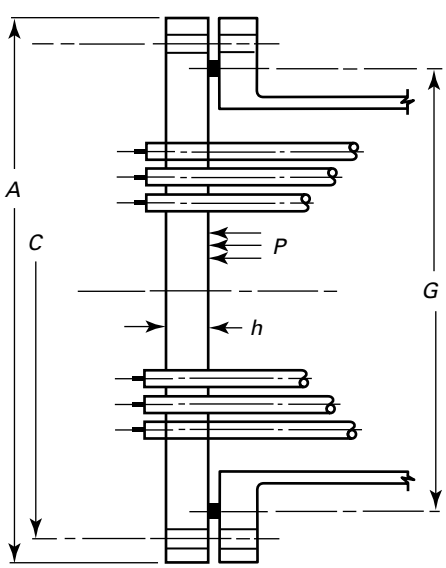

41-3 TERMINOLOGY

EIH Support Plate: consists of an unstayed circular flat plate that is attached by bolting to a mating flange. EIH support plates are used as both a support for electric immersion heater elements and a pressure retaining closure of a pressure vessel. The EIH support plate contains multiple openings in a uniform pattern that subsequently will have tubular electric heating elements inserted and attached to the support plate as an assembly.

41-4 CONDITIONS OF APPLICABILITY FOR EIH SUPPORT PLATES

The EIH support plate shall be flat and circular. It shall be of uniform thickness, except that the flanged extension may differ in thickness as determined in 41–7, Step 1. The EIH support plate shall be uniformly perforated over a nominally circular area, in either radial triangular, equilateral triangular, or square patterns. [See Figure 41-4-1, illustration (a), (b), or (c).]

41-5 NOMENCLATURE

The symbols described below are used for the design of the EIH support plate.

A = outside diameter of EIH support plate
C = bolt circle diameter (see Mandatory Appendix 2)
D_o = diameter of outer drilled element hole limit circle [see Figure 41-4-1, illustration (a), (b), or (c)]
d = diameter of holes in element pattern
E = modulus of elasticity for EIH support plate material at design temperature. The modulus of elasticity shall be taken from the applicable Table TM in Section II, Part D. When a material is not listed in the TM tables, the requirements of U-2(g) shall be applied.
E^* = effective modulus of elasticity of EIH support plate in perforated region
G = diameter of gasket load reaction (see Mandatory Appendix 2)
h = thickness of the center of the EIH support plate, including raised face if present.
h_g = gasket moment arm, equal to the radial distance from the center line of the bolts (bolt circle) to the line of the gasket reaction as shown in Mandatory Appendix 2, Table 2-5.2

Provided by IHS under license with ASME
No reproduction or networking permitted without license from IHS
Licensee=Chevron Phillips Chemical Co LP/5956674001
Not for Resale, 11/09/2014 20:41:36 MST

Figure 41-4-1
Typical EIH Support Plate and Element Geometry

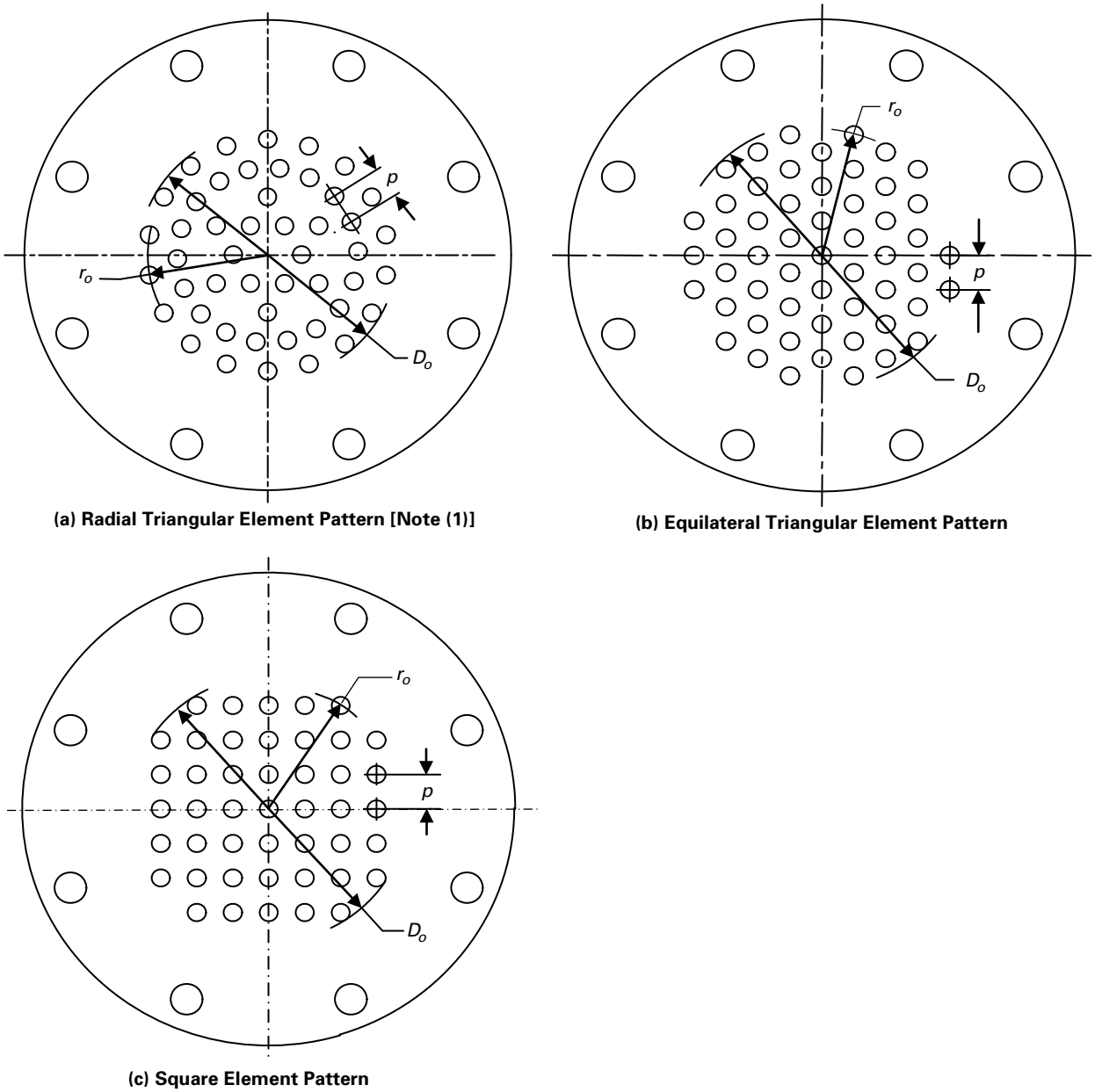

(a) Radial Triangular Element Pattern [Note (1)]

(b) Equilateral Triangular Element Pattern

(c) Square Element Pattern

NOTE:
(1) p = minimum spacing

--`,,,`,,`,,`,,,,,`,`,`,`,,`,,`,,`,,,`-`-`,,`,,`,`,,`,`---
Provided by IHS under license with ASME
No reproduction or networking permitted without license from IHS
Licensee=Chevron Phillips Chemical Co LP/5956674001
Not for Resale, 11/09/2014 20:41:36 MST

h_r = minimum required thickness of the EIH support plate flanged extension. See Figure 41-5-1.
P = design pressure
p = minimum pitch of element holes in any direction [Figure 41-4-1, illustration (a), (b), or (c)]
r_o = radius to the center of the outermost drilled hole
S = allowable stress for EIH support plate material at design temperature
S_a = allowable stress for the EIH support plate material at atmospheric temperature
W = EIH support plate flanged extension bolt load for the gasket seating condition. Use Formula 5 of Mandatory Appendix 2, para. 2-5(e).
W_{m1} = EIH support plate flanged extension bolt load for operating conditions. Use Formula 1 of Mandatory Appendix 2, para. 2-5(c).
μ = ligament efficiency
ν^* = effective Poisson's ratio in perforated region of EIH support plate

41-6 DESIGN CONSIDERATIONS

41-6.1 Electric heating elements are not considered to contribute to the strength of the EIH support plate.

41-6.2 As the calculation procedure is iterative, a value, h, shall be assumed for the EIH support plate thickness to calculate and check that the maximum stresses in the EIH support plate are within the maximum permissible stress limits.

41-6.3 When the electric heating element bundle is mounted horizontally, consideration should be given to properly supporting the electric heating element bundle to prevent undue stress on the EIH support plate and the element-to-plate attachments.

41-6.4 ASME B16.5 and ASME 16.47 flanges may be used as EIH support plates if designed in accordance with the rules of this Mandatory Appendix. The pressure–temperature tables in ASME B16.5 and ASME 16.47 are not applicable when the EIH support plate is designed to this Mandatory Appendix.

41-7 CALCULATION PROCEDURE

Step 1. Calculate EIH support plate flanged extension.

(a) When the EIH support plate is grooved for a peripheral gasket, the net thickness of the EIH support plate under the groove shall not be less than the thickness, h_r. Figure 41-5-1 depicts thickness h_r for some representative flanged extension configurations.

(b) Calculate the minimum required thickness of the EIH support plate flanged extension, h_r, as follows:

$$h_r = \mathrm{MAX}\left[\sqrt{\frac{1.9Wh_g}{S_aG}}, \sqrt{\frac{1.9W_{m1}h_g}{SG}}\right]$$

Step 2. Calculate EIH support plate characteristics. Calculate ligament efficiency, μ:

$$\mu = \frac{p-d}{p}$$

Calculate h/p.

Determine the values of E^*, E^*/E, and ν^* relative to h/p using either Figure UHX-11.3 (equilateral triangular pattern) or Figure UHX-11.4 (square pattern) in Part UHX substituting μ for μ^*.

NOTE: For radial triangular hole patterns [(Figure 41-4-1, illustration (a)] use Figure UHX-11.3 for equilateral triangular patterns based on the minimum distance (pitch) between any two holes.

Step 3. Calculate D_o.

$$D_o = 2r_o + d$$

Figure 41-5-1
Some Representative Configurations Describing the Minimum Required Thickness of the EIH Support Plate Flanged Extension, h_r

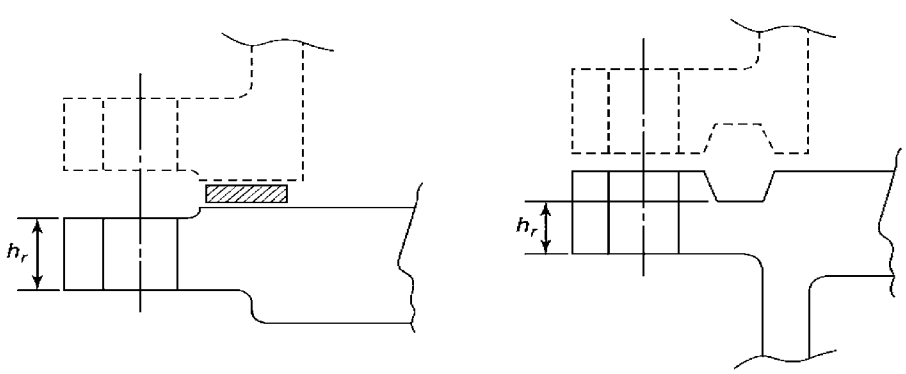

(a) Raised Face (b) Grooved for Ring Gasket

Provided by IHS under license with ASME
No reproduction or networking permitted without license from IHS
Licensee=Chevron Phillips Chemical Co LP/5956674001
Not for Resale, 11/09/2014 20:41:36 MST

Step 4. Calculate diameter ratio ρ.

$$\rho = \frac{G}{D_o}$$

Step 5. Calculate moment, M_{TS}, due to pressure, P, acting on the unperforated EIH support plate rim:

$$M_{TS} = \frac{D_o^2}{16}\left[(\rho - 1)(\rho^2 + 1)P\right]$$

Step 6. Calculate diameter ratio, K.

$$K = \frac{A}{D_o}$$

Step 7. Calculate coefficient, F.

$$F = \frac{1 - \nu^*}{E^*}(E \ln K)$$

Step 8. Calculate moment, M^*, acting on the unperforated EIH support plate rim.

$$M^* = M_{TS} + \frac{Wh_g}{\pi D_o}$$

Step 9. Calculate the maximum bending moments acting on the EIH support plate at the periphery, M_p, and at the center, M_o.

$$M_p = \frac{M^* - \frac{D_o^2}{32}FP}{1 + F}$$

$$M_o = M_p + \frac{D_o^2}{64}(3 + \nu^*)P$$

Step 10. Determine the maximum bending moment acting on the EIH support plate.

$$M = \text{MAX}\left[\,|M_p|, |M_o|\,\right]$$

Step 11. Calculate the EIH support plate bending stress, σ

$$\sigma = \frac{6M}{\mu h^2}$$

If $\sigma \le 2S$, the assumed EIH support plate thickness is acceptable for bending. Otherwise, increase the assumed thickness, h, and return to Step 2.

Step 12. Calculate the average shear stress, τ, in the EIH support plate at the outer edge of the perforated region.

$$\tau = \left(\frac{1}{4\mu}\right)\left(\frac{D_o}{h}\right)P$$

If $\tau \le 0.8S$, the assumed EIH support plate thickness is acceptable for shear. Otherwise, increase the assumed thickness, h, and return to Step 2.

41-8 PRESSURE TEST REQUIREMENT

The EIH support plate shall be subjected to a pressure test in accordance with UG-99 or UG-100.

41-9 DATA REPORTS

When all the requirements of this Mandatory Appendix have been met, the following notation shall be entered on the Manufacturer's Data Report under Remarks: "Construction in Conformance with Mandatory Appendix 41, Electric Immersion Heater Element Support Plates."

41-10 EXAMPLE

An example illustrating the use of the design rules given in this Mandatory Appendix is shown as follows.

41-10.1 DATA SUMMARY

41-10.1.1 The design pressure is 500 psi at the design temperature of 500°F.

41-10.1.2 The mating flange is an ASME B16.5, NPS-8, CI 300 flange. Therefore, an ASME B16.5, NPS-8, CI 300 blind flange is chosen to construct the EIH support plate. The flange thickness according to the specification is 1.62 in. thick in the center and 1.56 in. thick in the extension. The flange outside diameter is 15.00 in. with a bolt circle of 13.0 in. and (12) $^7/_8$ in. SA-193-B7 bolts. The material of the flange is SA-350 Grade LF2 (K03011) with a 0.125 in. corrosion allowance. There are 48 – 0.500 in. diameter element insertion holes drilled in an equilateral triangle pattern with a minimum pitch of 0.98425 in. The radius to the center of the outermost element hole center is 3.445 in.

41-10.1.3 The gasket is 10.5 in. OD and 9 in. ID and has a gasket factor, m, of 2.0 and the minimum design seating stress, y, of 2,500 psi.

41-10.1.4 Data Summaries. The data summaries consist of those variables in the nomenclature, 41-5 that are applicable to this configuration.

d = 0.500 in.
E = 27.3×10^6 psi at 500°F, Table TM-1 of Section II, Part D
G = 9.888 in.

Provided by IHS under license with ASME
No reproduction or networking permitted without license from IHS
Licensee=Chevron Phillips Chemical Co LP/5956674001
Not for Resale, 11/09/2014 20:41:36 MST

h = 1.62 in.
h_g = 1.556 in.
P = 500 psi
p = 0.98425 in.
r_o = 3.445 in.
S = 19,600 psi at 500°F, Table 1A, Section II-D
S_a = 20,000 psi at atmospheric temperature, Table 1A, Section II-D
W = 91,537 lb [Formula 5, Mandatory Appendix 2, para. 2-5(e)]
W_{m1} = 57,377 lb [Formula 1, Mandatory Appendix 2, para. 2-5(c)]

41-10.1.5 Calculation Results.

Step 1. Calculate EIH support plate flanged extension.

h_r = 1.170 in. required for gasket seating
h_r = 0.936 in. required for design condition
Actual h_r = 1.557 in.
The thickness of the flanged bolting extension is adequate.

Step 2. Calculate EIH Support plate characteristics. Calculate μ.

$$\mu = 0.492$$

Calculate h/p.

$$h/p = 1.519$$

Determine E^*, E^*/E, and ν^* per 41–7, Step 2.

$$E^*/E = 0.554$$

$$E^* = 15.1 \times 10^6 \text{ psi}$$

$$\nu^* = 0.294$$

Step 3. Calculate D_o per 41–7, Step 3.

$$D_o = 7.390 \text{ in.}$$

Step 4. Calculate diameter ratio ρ, per 41–7, Step 4.

$$\rho = 1.338$$

Step 5. Calculate moment, M_{TS}, due to pressure, P, per 41–7, Step 5.

$$M_{TS} = 1,609 \text{ in.-lb/in.}$$

Step 6. Calculate diameter ratio, K, per 41–7, Step 6.

$$K = 2.030$$

Step 7. Calculate coefficient, F, per 41–7, Step 7.

$$F = 0.904$$

Step 8. Calculate moment, M^*, acting on the unperforated EIH support plate rim per 41–7, Step 8.

$$M^* = 7,744 \text{ in.-lb/in.}$$

Step 9. Calculate the maximum bending moments acting on the EIH support plate at the periphery, M_p. and at the center, M_o. per 41–7, Step 9.

$$M_p = 3,662 \text{ in.-lb/in.}$$

$$M_o = 5,067 \text{ in.-lb/in.}$$

Step 10. Determine the maximum bending moment per 41–7, Step 10.

$$M = 5,067 \text{ in.-lb/in.}$$

Step 11. Calculate EIH support plate bending stress σ per 41–7, Step 11.

$$\sigma = 27,657 \text{ psi } (\leq 2S \text{ [39,200 psi]}$$

Step 12. Calculate average shear τ in the EIH support plate at outer edge of perforated area per 41–7, Step 12.

$$\tau = 1,256 \text{ psi } [\leq 0.8S \text{ (15,680 psi)}]$$

Since the calculated EIH support plate stresses are within design stress limits, the assumed thickness is adequate.

Provided by IHS under license with ASME
No reproduction or networking permitted without license from IHS
Licensee=Chevron Phillips Chemical Co LP/5956674001
Not for Resale, 11/09/2014 20:41:36 MST

MANDATORY APPENDIX 42
DIFFUSION BONDING

42-1 GENERAL

This Mandatory Appendix establishes the requirements for procedure specifications for diffusion bonding in the construction of microchannel heat exchangers.

42-2 DIFFUSION BONDING PROCEDURE SPECIFICATION (DBPS)

A DBPS is a written document that provides the instruction for diffusion bonding.

The manufacturer is responsible for ensuring that production diffusion bonding is performed in accordance with a qualified DBPS that meets the requirements of this Mandatory Appendix.

The DBPS shall address as a minimum the specific variables, both essential and nonessential variables, as provided in this Mandatory Appendix, for each diffusion bonding process to be used.

42-3 DIFFUSION BONDING PROCEDURE QUALIFICATION RECORD (PQR)

The purpose of qualifying a DBPS is to demonstrate that the bonded joint proposed for construction will achieve a suitable bond for its intended application. The PQR establishes the suitability of the diffusion process to produce the required bonded joint, but does not address the skill of the bonding operator/s.

The PQR documents the essential and nonessential variables observed while producing the test bond joint, and the results of the associated mechanical testing and examination.

In addition, the PQR shall document other specific information required by this Mandatory Appendix for each process qualified.

42-4 DIFFUSION BONDING PERFORMANCE QUALIFICATION (DBPQ)

The purpose of a DBPQ is to demonstrate the operator applying the joining process is capable of producing a diffusion bond that meets all mechanical requirements of the specification. The operator shall produce a test bond joint under the supervision and control of the Manufacturer while following a qualified DBPS.

A qualified diffusion bonding operator is qualified to any diffusion bonding procedure specification qualified in accordance with this Mandatory Appendix. The number and type of test are specified in 42-6.

42-5 DIFFUSION BONDING VARIABLES

Variables are divided into essential and nonessential variables that apply to each diffusion bonding process.

Essential variables are those in which a change is considered to affect the mechanical properties of the bonded joint and shall require requalification of the DBPS.

Nonessential variables are those in which a change is not considered to affect the mechanical properties, and are included in the DBPS for instructional purposes. Nonessential variables may be changed at the Manufacturer's discretion without requalification.

42-5.1 ESSENTIAL VARIABLES FOR ALL DIFFUSION BONDING PROCESSES

The essential variables applicable for all diffusion bonding processes are defined in Table 42-5.1-1.

The Manufacturer may define additional essential variables.

42-5.2 NONESSENTIAL VARIABLES

The nonessential variables for all diffusion bonding processes are listed in Table 42-5.1-1. The Manufacturer may specify additional, nonessential variables applicable for each process.

42-6 MECHANICAL TESTING OF DBPQ AND DBPS DIFFUSION BONDED BLOCKS

The DBPQ and DBPS shall be qualified by mechanically testing a diffusion bonded test block whose bond was established following the proposed DBPS. The DBPQ test block shall be a minimum thickness to allow at least 50 bond lines to be tested and a length × width of 8 in. × 8 in. (200 mm × 200 mm).

The mechanical properties in the through bond and parent metal direction shall comply with those defined in the DBPS.

Provided by IHS under license with ASME
No reproduction or networking permitted without license from IHS
Licensee=Chevron Phillips Chemical Co LP/5956674001
Not for Resale, 11/09/2014 20:41:36 MST

Table 42-5.1-1

Number	Variable	Essential	Nonessential
1	Material grade	X	...
2	Material sheet finish per material specification	X	...
3	Method of preparing base metal surface prior to diffusion bonding	X	...
4	Bonding minimum temperature / minimum time parameters	X	...
5	Bonding atmosphere	X	...
6	Post bond heat treatment	X	...
7	Post bond heat treatment time, temperature, and minimum cooling rate	X	...
8	Minimum block compression (original stack height compared to bonded height)	X	...
9	Test block dimensions	...	X
10	Sample location	...	X

42-6.1 NUMBER OF TEST SAMPLES

A minimum of three test samples for through bond testing and three test samples shall be taken perpendicular to the through bond samples for parent metal direction.

42-6.2 MECHANICAL TESTING

(a) Mechanical testing shall be conducted as per the requirements specified in the original material specification.

(b) Microstructural evaluation shall be conducted in accordance with the requirements of ASTM E3. The sample shall be polished and etched. The etched macro sample shall show complete fusion along the bond line and complete freedom from cracks in the bond and parent metal.

42-7 PRODUCTION DIFFUSION BOND EXAMINATION

Production diffusion bond joints shall be examined in the following sequence:

(a) ultrasonic examination of areas within $T/2$ of external attachment welds on the endplate in accordance with ASME Section V, Article 5, T-571.1 and SA-435/SA-435M including supplementary requirement S1 (T is the thickness of the attachment).

(b) liquid penetrant examination in accordance with ASME Section V, Article 6, after machining. Acceptance criteria: no rejectable defects.

(c) visual examination in accordance with ASME Section V, Article 9. Acceptance criteria: no unbonded areas.

(d) Hydrostatic testing shall be applied in accordance with UG-99, or pneumatic testing may be applied in lieu of hydrostatic testing in accordance with UG-100.

42-8 DESIGN

Design calculations prepared in accordance with Appendix 13, para. 13-9 shall apply a joint factor of 0.7 in the through bond direction at the bond interface.

Alternatively, proof testing in accordance with UG-101 may be used.

Provided by IHS under license with ASME
No reproduction or networking permitted without license from IHS
Licensee=Chevron Phillips Chemical Co LP/5956674001
Not for Resale, 11/09/2014 20:41:36 MST

(13)

MANDATORY APPENDIX 43 ESTABLISHING GOVERNING CODE EDITIONS AND CASES FOR PRESSURE VESSELS AND PARTS

43-1 GENERAL

(a) After Code revisions are approved by ASME, they may be used beginning with the date of issuance shown on the Code. Except as noted in (b) below, revisions become mandatory 6 months after the date of issuance. Code Cases are permissible and may be used beginning with the date of approval by ASME. Only Code Cases that are specifically identified as being applicable to this Section may be used. At the time a Code Case is applied, only the latest revision may be used. Code Cases that have been incorporated into this Section or have been annulled shall not be used.

(b) Changes in the Code and Code Cases that have been published prior to completion of the pressure vessel or part may include details critical to the intended service conditions of the pressure vessel and therefore should be considered by the Manufacturer. Application of such changes shall be a matter of agreement between the Manufacturer and the user. Specific incorporated Code provisions from later editions that have been applied to construction shall be noted in the "Remarks" section of the Manufacturer's Data Report.

43-2 CONSTRUCTION

(a) The Manufacturer of any complete vessel or part has the responsibility of ensuring through proper Code certification that all work performed complies with the effective Code Edition that is to be stamped with the ASME Certification Mark required by this Section (see UG-120).

(b) Except as provided in (c), the Code Edition used for construction of a pressure vessel and parts shall be either the Edition that is mandatory on the date the pressure vessel or part is contracted for by the Manufacturer, or a published Edition issued by ASME prior to the contract date, which is not yet mandatory [refer to 43-1(a)].

(c) Existing pressure parts that have been stamped and certified to an earlier or later Edition than those established for construction of the pressure vessel or part, and that have never been placed in service (i.e., they were placed in stock for future use), may be used provided they are acceptable to the Manufacturer as described in (a).

(d) It is permitted to use overpressure protection requirements from the Edition in effect when the vessel is placed in service.

43-3 MATERIALS

For parts subject to stress due to pressure, the Manufacturer shall use material conforming to one of the specifications listed as approved for use in the Edition specified for construction, or as approved for use in the Guideline for Acceptable ASTM Editions or in the Guideline for Acceptable Non-ASTM Editions in Section II, Part A or Part B.

--`,,,``,,``,,,,,`,``,`,``,,`,,`-`-`,,`,,`,`,,`---
Provided by IHS under license with ASME
No reproduction or networking permitted without license from IHS
Licensee=Chevron Phillips Chemical Co LP/5956674001
Not for Resale, 11/09/2014 20:41:36 MST

(13)

MANDATORY APPENDIX 44
COLD STRETCHING OF AUSTENITIC STAINLESS STEEL PRESSURE VESSELS

44-1 SCOPE

This Mandatory Appendix provides requirements for designing and constructing cold-stretched austenitic stainless steel vessels.

44-2 GENERAL REQUIREMENTS

(a) The use of this Mandatory Appendix is contingent upon approval from the user or the user's designated agent.

(b) Vessel wall thickness shall not exceed 1.2 in. (30 mm).

(c) Minimum design metal temperature (MDMT) shall not be colder than −320°F (−196°C).

(d) Maximum design temperature shall not exceed 120°F (50°C).

(e) Pressure vessels designed using the rules specified in this Mandatory Appendix are limited to single-diameter cylindrical shells with dished heads, spherical shells, and nozzles without a reinforcing pad. The shells and heads shall have a uniform nominal thickness.

(f) The minimum specified ultimate tensile strength (UTS) of the weld filler metal used in construction shall not be less than the minimum specified UTS for the base metals of the weld joint.

(g) Nozzles and opening reinforcement components shall be designed using the rules of this Division and applying the allowable stress values specified in Section II, Part D.

(h) The rules specified in this Mandatory Appendix are applicable for vessels designed for internal pressure only and shall not be used for vessels designed for external pressure.

(i) Nozzle size shall not exceed NPS 6 (DN 150) except as noted in (j).

(j) Nozzle size shall not exceed NPS 8 (DN 200) at the center of heads.

(k) All Category A weld joints shall be Type No. 1. All Category B weld joints shall be Type No. 1 or Type No. 2.

44-3 NOMENCLATURE

P = design pressure
P_c = cold-stretching pressure
S = allowable design stress in tension

44-4 MATERIALS AND ALLOWABLE DESIGN STRESS

The austenitic stainless steels listed in Table 44-4-1 are allowed in the vessel construction. The value of allowable design stress, S, in tension shall not exceed the value listed in Table 44-4-1.

44-5 DESIGN

(a) Wall thicknesses shall be calculated according to the applicable rules of this Division before cold stretching. The maximum design stress value shall be as shown in Table 44-4-1.

(b) Nominal diameters may be used in the design calculations. No allowance is necessary for the possible increase in diameter due to cold stretching.

(c) P_c shall be between 1.5 and 1.6 times P (inclusive).

(d) The inside knuckle radius of formed torispherical heads shall not be less than 10% of the inside crown radius of the head.

(e) Butt welded joints shall be fully radiographed per UW-51 or examined by ultrasonic examination in accordance with UW-51(a)(4).

(f) All nozzles shall be attached with full-penetration welds.

(g) The thickness of a support pad shall not exceed the thickness of the shell at the attachment location.

(h) Full-thickness fillet welds shall be provided at support-pad attachment locations.

Table 44-4-1
Allowable Materials and Design Stress

Material	Allowable Design Stress, S, in Tension, ksi (MPa)
SA-240, Type 304 stainless steel	39.3 (270)
SA-240, Type 304L stainless steel	36.0 (247)
SA-240, Type 304N stainless steel	42.7 (293)
SA-240, Type 316 stainless steel	39.3 (270)
SA-240, Type 316L stainless steel	36.0 (247)
SA-240, Type 316LN stainless steel	39.3 (270)
SA-240, Type 316N stainless steel	42.7 (293)

Provided by IHS under license with ASME
No reproduction or networking permitted without license from IHS
Licensee=Chevron Phillips Chemical Co LP/5956674001
Not for Resale, 11/09/2014 20:41:36 MST

44-6 FABRICATION PROCESS

44-6.1 WELDING AND EXAMINATION

(a) For all Category A joints, the reinforcement shall not exceed 10% of the plate thickness or 0.125 in. (3 mm), whichever is less. The weld deposits shall blend smoothly into the base metal without undercut or abrupt transition. All attachment welds shall be continuous and have a smooth contour with no undercut permitted.

(b) Welder and welding operator identification shall be marked with a paint pen or maintained by weld maps. Direct stamping of the vessel is not permitted. All marking methods shall be approved by the Authorized Inspector. Stamping of the ASME Certification Mark shall be on a nameplate attached to a standoff plate.

(c) All butt joints shall be radiographically examined in accordance with UW-51. Radiographic examinations shall be performed prior to cold stretching. As an alternative to the radiographic examination, ultrasonic examination may be used in accordance with UW-51(a)(4).

(d) In areas such as nozzle-to-shell attachment locations, abrupt changes in thickness or contour, and other similar structural discontinuities, high local stress and strain concentrations are anticipated during the cold-stretching process. To check for potential crack formation in these areas, after depressurization of the vessel following cold stretching, all Category A weld joints and all attachment welds shall be examined externally for their entire lengths using the liquid penetrant method in accordance with Mandatory Appendix 8. If rejectable defects are detected in the above inspections, all Category B weld joints and attachment welds shall be examined in the same manner.

(e) Renewed cold stretching shall be performed if cold-stretched parts of the vessel have been welded after cold stretching, except for attachment or tack welds less than 0.25 in. (6 mm) in length. Such welds shall be examined as described in (d).

(f) Except when renewed cold stretching is to be performed, the pressure test required by UG-99 or UG-100 shall be applied after all welding on the pressure-retaining parts. The provisions of UG-99(c) shall not be used.

(g) Impact Test Requirements

(1) The cold-stretched base materials listed in Table 44-4-1 need not be impact tested when used in vessels constructed in accordance with this Mandatory Appendix.

(2) The Welding Procedure Qualification shall include impact tests of welds and heat affected zones (HAZs) made in accordance with UG-84(h) and with requirements of UHA-51(a) at MDMT. The specimens shall be tested from the welded cold-stretched plate. The welded plate shall be cold stretched by applying tensile stress across the welded joint equal to or greater than 1.5 times the allowable design stress listed in Table 44-4-1. The Welding Procedure Qualification impact tests need not be conducted for MDMT of −55°F (−48°C) and warmer.

(3) The vessel (production) impact tests in accordance with UHA-51(h) are not required for vessels constructed in accordance with this Mandatory Appendix.

44-6.2 COLD-STRETCHING OPERATION

The cold-stretching operation shall be performed using the following rules. These rules shall include the steps described in (a) through (e).

(a) Fill the vessel with water, using adequate high-point venting to ensure complete filling. Allow the vessel to sit with the vents open for at least 15 min to allow any air dissolved in the water to escape. After venting, finish filling the vessel completely and close the vents, top off, and seal the vessel.

(b) Prior to applying the cold-stretching pressure, the circumference of all shell courses shall be measured where the largest increase in cross section is expected. All measurements shall be made with instruments that have been calibrated to an accuracy of ±0.05%. This shall be used to establish a baseline dimensional value. Additional measurements of the vessel while under P_c shall be taken as necessary to calculate the strain rate. The strain rate during the cold-stretching operation shall be calculated over the full circumference. Alternatively, the strain rate may also be determined by recording time, pressure, and the elongation of circumference.

(c) The cold-stretching operation shall be carried out as follows:

(1) The pressure shall be increased until P_c is reached. P_c shall be maintained until the calculated strain rate has dropped to less than 0.1%/hr.

(2) The minimum holding time under P_c shall be not less than 1 hr, except as described in (d).

(3) The calculated strain rate shall be determined by repeated or continuous measurements of the circumference while the vessel is under P_c as described in (b). The required maximum strain rate of 0.1%/hr shall be met during the last half hour.

CAUTION: Pressurized equipment contains stored energy capable of sudden release in the event of a catastrophic failure. The potential hazard is greater as the pressure is increased. A "safety zone" should be established and maintained around the vessel while cold-stretching pressure is applied. Special care shall be taken to minimize the time personnel remain within the "safety zone" while taking the required measurements.

NOTE: The total time under P_c required to achieve the desired strain may be substantial. The amount of time the vessel is subjected to P_c may be reduced somewhat if a 5% higher P_c is applied during the first 30 min to 1 hr to accelerate strain formation.

(d) For pressure vessels having a diameter not more than 79 in. (2 000 mm), the time under pressure may be reduced to 30 min, provided the strain rate of 0.1%/hr is met during the last 15 min.

Provided by IHS under license with ASME
No reproduction or networking permitted without license from IHS
Licensee=Chevron Phillips Chemical Co LP/5956674001
Not for Resale, 11/09/2014 20:41:36 MST

(e) The strengthening operation replaces the final pressure testing of the vessel. Should later pressure testing be required, the requirements of UG-99 or UG-100 shall be applied.

(f) The cold-stretching process shall be witnessed by the Authorized Inspector.

(g) If the vessel requires welded repair, renewed cold stretching shall be carried out in accordance with the rules of 44-6.2.

44-6.3 COLD-STRETCHING PROCEDURE RECORD

A written record shall be prepared containing at least the following information:

(a) pressurizing sequence specifying pressure readings and time

(b) circumference measurement before, during, and after pressurization; or alternatively, time, pressure, and the elongation of circumference

(c) strain-rate calculations

(d) notes of any significant changes of shape and size relevant to the functioning of the vessel

(e) information for renewed cold stretching according to 44-6.1(e) and 44-6.2(g).

44-7 STAMPING AND CERTIFICATION

(a) The Certification Mark on the nameplate shall include marking with "CS" under the Certification Mark, indicating the vessel was constructed using cold-stretching methods.

(b) The Manufacturer shall indicate in the Remarks section of the Manufacturer's Data Report: "This vessel has been constructed using cold-stretching processes in accordance with Mandatory Appendix 44."

Provided by IHS under license with ASME

No reproduction or networking permitted without license from IHS

Licensee=Chevron Phillips Chemical Co LP/5956674001
Not for Resale, 11/09/2014 20:41:36 MST

NONMANDATORY APPENDIX A BASIS FOR ESTABLISHING ALLOWABLE LOADS FOR TUBE-TO-TUBESHEET JOINTS

A-1 GENERAL

(a) This Appendix provides a basis for establishing allowable tube-to-tubesheet joint loads, except for the following:

(1) Tube-to-tubesheet joints having full strength welds as defined in accordance with UW-20.2(a) shall be designed in accordance with UW-20.4 and do not require shear load testing.

(2) Tube-to-tubesheet joints having partial strength welds as defined in accordance with UW-20.2(b) and designed in accordance with UW-18(d) or UW-20.5 do not require shear load testing.

(b) The rules of this Appendix are not intended to apply to U-tube construction.

(c) Tubes used in the construction of heat exchangers or similar apparatus may be considered to act as stays which support or contribute to the strength of the tubesheets in which they are engaged. Tube-to-tubesheet joints shall be capable of transferring the applied tube loads. The design of tube-to-tubesheet joints depends on the type of joint, degree of examination, and shear load tests, if performed. Some acceptable geometries and combinations of brazed, welded, and mechanical joints are described in Table A-2. Some acceptable types of welded joints are illustrated in Figure A-2.

(1) Geometries, including variations in tube pitch, fastening methods, and combinations of fastening methods, not described or shown, may be used provided qualification tests have been conducted and applied in compliance with the procedures set forth in A-3 and A-4.

(2) Materials for welded or brazed tube-to-tubesheet joints that do not meet the requirements of UW-5 or UB-5, but in all other respects meet the requirements of Section VIII, Division 1, may be used if qualification tests of the tube-to-tubesheet joint have been conducted and applied in compliance with the procedures set forth in A-3 and A-4.

(d) Some combinations of tube and tubesheet materials, when welded, result in welded joints having lower ductility than required in the material specifications. Appropriate tube-to-tubesheet joint geometry, welding method, and/or heat treatment shall be used with these materials to minimize this effect.

(e) In the selection of joint type, consideration shall be given to the mean metal temperature of the joint at operating temperatures (see 3-2) and differential thermal expansion of the tube and tubesheet which may affect the joint integrity. The following provisions apply for establishing maximum operating temperature for tube-to-tubesheet joints:

(1) Tube-to-tubesheet joints made by welding shall be limited to the maximum temperature for which there are allowable stresses for the tube or tubesheet material in Tables 1A or 1B of Section II, Part D.

(2) Tube-to-tubesheet joints made by brazing shall be limited to temperatures in conformance with the requirements of Part UB.

(3) Tube-to-tubesheet joints that depend on friction between the tube and the tube hole, such as joint types i, j, and k as listed in Table A-2, shall be limited to temperatures as determined by the following:

(-a) The operating temperature of the tube-to-tubesheet joint shall be within the tube and tubesheet time-independent properties of Section II, Part D, Table 1A or 1B.

(-b) The maximum operating temperature is based on the interface pressure that exists between the tube and tubesheet. The maximum operating temperature is limited such that the interface pressure due to expanding the tube at joint fabrication plus the interface pressure due to differential thermal expansion, (P_o + P_T), does not exceed 58% of the smaller of the tube or tubesheet yield strength listed in Table Y-2 of Section II, Part D at the operating temperature. If the tube or tubesheet yield strength is not listed in Table Y-2, the operating temperature limit shall be determined as described in (-d) below. The interface pressure due to expanding the tube at fabrication or the interface pressure due to differential thermal expansion may be determined analytically or experimentally.

(-c) Due to differential thermal expansion, the tube may expand less than the tubesheet. For this condition, the interfacial pressure, P_T, is a negative number.

(-d) When the maximum temperature is not determined by (-b) above, or the tube expands less than or equal to the tubesheet, joint acceptability shall be determined by shear load tests described in A-3. Two sets of specimens shall be tested. The first set shall be tested at the proposed operating temperature. The second set shall be tested at room temperature after heat soaking at the proposed operating temperature for 24 hr. The proposed operating temperature is acceptable if the provisions of A-5 are satisfied.

Provided by IHS under license with ASME
No reproduction or networking permitted without license from IHS
Licensee=Chevron Phillips Chemical Co LP/5956674001
Not for Resale, 11/09/2014 20:41:36 MST

(f) The Manufacturer shall prepare written procedures for joints that are expanded (whether welded and expanded or expanded only) for joint strength. The Manufacturer shall establish the variables that affect joint repeatability in these procedures. The procedures shall provide detailed descriptions or sketches of enhancements, such as grooves, serrations, threads, and coarse machining profiles. The Manufacturer shall make these written procedures available to the Authorized Inspector.

A-2 MAXIMUM AXIAL LOADINGS

The maximum allowable axial load in either direction on tube-to-tubesheet joints shall be determined in accordance with the following:

For joint types a, b, b-1, c, d, e,

$$L_{\max} = A_t S_a f_r \tag{1}$$

For joint types f, g, h,

$$L_{\max} = A_t S_a f_e f_r f_y \tag{2}$$

For joint types i, j, k,

$$L_{\max} = A_t S_a f_e f_r f_y f_T \tag{3}$$

where

A_t = tube cross-sectional area
= $\pi(d_o - t)t$
d_o = nominal tube outside diameter
f_e = factor for the length of the expanded portion of the tube. An expanded joint is a joint between tube and tubesheet produced by applying expanding force inside the portion of the tube to be engaged in the tubesheet. Expanding force shall be set to values necessary to effect sufficient residual interface pressure between the tube and hole for joint strength.
= MIN[(l/d_o), (1.0)] for expanded tube joints without enhancements
= 1.0 for expanded tube joints with enhancements
f_r = tube joint efficiency, which is set equal to the value of f_r (test) or f_r (no test)
f_r *(test)* = tube joint efficiency calculated from results of tests in accordance with A-4 or taken from Table A-2 for tube joints qualified by test, whichever is less, except as permitted in A-3(k)
f_r *(no test)* = tube joint efficiency taken from Table A-2 for tube joints not qualified by test
f_T = factor to account for the increase or decrease of tube joint strength due to radial differential thermal expansion at the tube-to-tubesheet joint
= $(P_o + P_T)/P_o$
f_y = factor for differences in the mechanical properties of tubesheet and tube materials
= MIN[$(S_y/S_{y,t})$, (1.0)] for expanded joints. When f_y is less than 0.60, qualification tests in accordance with A-3 and A-4 are required.
k = 1.0 for loads due to pressure-induced axial forces
= 1.0 for loads due to thermally induced or pressure plus thermally induced axial forces on welded-only joints where the thickness through the weld throat is less than the nominal tube wall thickness t
= 2.0 for loads due to thermally induced or pressure plus thermally induced axial forces on all other tube-to-tubesheet joints
ℓ = length of the expanded portion of the tube
L_{max} = maximum allowable axial load in either direction on tube-to-tubesheet joint
P_o = interface pressure between the tube and tubesheet that remains after expanding the tube at fabrication. This pressure may be established analytically or experimentally, but shall consider the effect of change in material strength at operating temperature
P_T = interface pressure between the tube and tubesheet due to differential thermal growth. This pressure may be established analytically or experimentally
S = maximum allowable stress value as given in the applicable part of Section II, Part D. For a welded tube or pipe, use the allowable stress for the equivalent seamless product. When the allowable stress for the equivalent seamless product is not available, divide the allowable stress of the welded product by 0.85.
S_a = allowable stress for tube material
= kS
S_y = yield strength for tubesheet material at T from Table Y-1 in Section II, Part D. When a yield strength value is not listed in Table Y-1, one may be obtained by using the procedure in UG-28(c)(2), Step 3.
$S_{y,t}$ = yield strength for tube material at T from Table Y-1 in Section II, Part D. When a yield strength value is not listed in Table Y-1, one may be obtained by using the procedure in UG-28(c)(2), Step 3.
T = tubesheet design temperature
t = nominal tube wall thickness

Provided by IHS under license with ASME
No reproduction or networking permitted without license from IHS
Licensee=Chevron Phillips Chemical Co LP/5956674001
Not for Resale, 11/09/2014 20:41:36 MST

A-3 SHEAR LOAD TEST

(a) Flaws in the specimen may affect results. If any test specimen develops flaws, the retest provisions of (k) below shall govern.

(b) If any test specimen fails because of mechanical reasons, such as failure of testing equipment or improper specimen preparation, it may be discarded and another specimen taken from the same heat.

(c) The shear load test subjects a full-size specimen of the tube joint under examination to a measured load sufficient to cause failure. In general, the testing equipment and methods are given in the Methods of Tension Testing of Metallic Materials (ASTM E8). Additional fixtures for shear load testing of tube-to-tubesheet joints are shown in Figure A-3.

(d) The test block simulating the tubesheet may be circular, square or rectangular in shape, essentially in general conformity with the tube pitch geometry. The test assembly shall consist of an array of tubes such that the tube to be tested is in the geometric center of the array and completely surrounded by at least one row of adjacent tubes. The test block shall extend a distance of at least one tubesheet ligament beyond the edge of the peripheral tubes in the assembly.

(e) All tubes in the test block array shall be from the same heat and shall be installed using identical procedures.

(1) The finished thickness of the test block may be less but not greater than the tubesheet it represents. For expanded joints, made with or without welding, the expanded area of the tubes in the test block may be less but not greater than that for the production joint to be qualified.

(2) The length of the tube used for testing the tube joint need only be sufficient to suit the test apparatus. The length of the tubes adjacent to the tube joint to be tested shall not be less than the thickness of the test block to be qualified.

(f) The procedure used to prepare the tube-to-tubesheet joints in the test specimens shall be the same as used for production.

Table A-2
Efficiencies f_r

Type Joint	Description [Note (1)]	Notes	f_r (Test) [Note (2)]	f_r (No Test)
a	Welded only, $a \geq 1.4t$	(3)	1.00	0.80
b	Welded only, $t \leq a < 1.4t$	(3)	0.70	0.55
b-1	Welded only, $a < t$	(4)	0.70	. . .
c	Brazed, examined	(5)	1.00	0.80
d	Brazed, not fully examined	(6)	0.50	0.40
e	Welded, $a \geq 1.4t$, and expanded	(3)	1.00	0.80
f	Welded, $a < 1.4t$, and expanded, enhanced with two or more grooves	(3) (7) (8) (9)	0.95	0.75
g	Welded, $a < 1.4t$, and expanded, enhanced with single groove	(3) (7) (8) (9)	0.85	0.65
h	Welded, $a < 1.4t$, and expanded, not enhanced	(3) (7) (8)	0.70	0.50
i	Expanded, enhanced with two or more grooves	(7) (8) (9)	0.90	0.70
j	Expanded, enhanced with single groove	(7) (8) (9)	0.80	0.65
k	Expanded, not enhanced	(7) (8)	0.60	0.50

GENERAL NOTE: The joint efficiencies listed in this Table apply only to allowable loads and do not indicate the degree of joint leak tightness.

NOTES:
(1) For joint types involving more than one fastening method, the sequence used in the joint description does not necessarily indicate the order in which the operations are performed.
(2) The use of the f_r (test) factor requires qualification in accordance with A-3 and A-4.
(3) The value of f_r (no test) applies only to material combinations as provided for under Section IX. For material combinations not provided for under Section IX, f_r shall be determined by test in accordance with A-3 and A-4.
(4) For f_r (no test), refer to UW-20.2(b).
(5) A value of 1.00 for f_r (test) or 0.80 for f_r (no test) can be applied only to joints in which visual examination assures that the brazing filler metal has penetrated the entire joint [see UB-14(a)] and the depth of penetration is not less than three times the nominal thickness of the tube wall.
(6) A value of 0.50 for f_r (test) or 0.40 for f_r (no test) shall be used for joints in which visual examination will not provide proof that the brazing filler metal has penetrated the entire joint [see UB-14(b)].
(7) When $d_o/(d_o - 2t)$ is less than 1.05 or greater than 1.410, f_r shall be determined by test in accordance with A-3 and A-4.
(8) When the nominal pitch (center-to-center distance of adjacent tube holes) is less than $d_o + 2t$, f_r shall be determined by test in accordance with A-3 and A-4.
(9) The Manufacturer may use other means to enhance the strength of expanded joints, provided, however, that the joints are tested in accordance with A-3 and A-4.

Provided by IHS under license with ASME
No reproduction or networking permitted without license from IHS
Licensee=Chevron Phillips Chemical Co LP/5956674001
Not for Resale, 11/09/2014 20:41:36 MST

Figure A-2
Some Acceptable Types of Tube-to-Tubesheet Welds

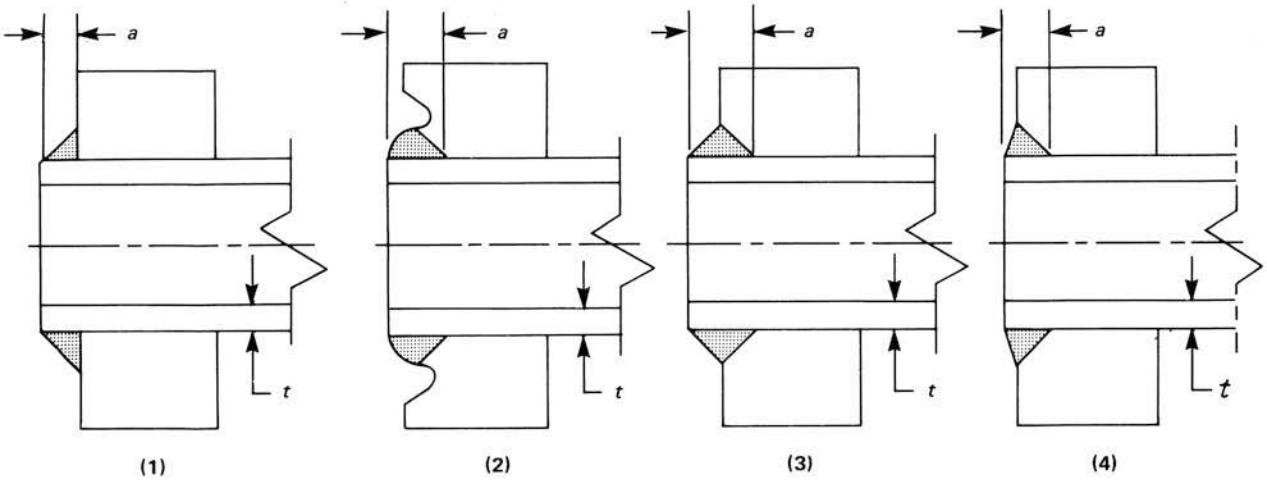

Some acceptable weld geometries where *a* is not less than 1.4*t*.

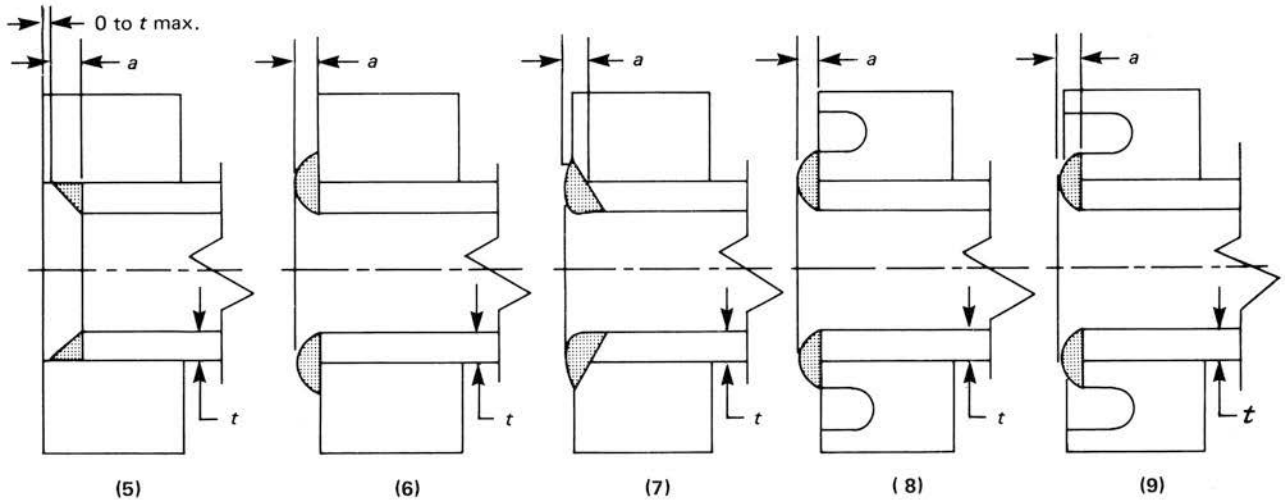

Some acceptable weld geometries where *a* is less than 1.4*t*.

Provided by IHS under license with ASME
No reproduction or networking permitted without license from IHS
Licensee=Chevron Phillips Chemical Co LP/5956674001
Not for Resale, 11/09/2014 20:41:36 MST

Figure A-3
Typical Test Fixtures for Expanded or Welded Tube-to-Tubesheet Joints

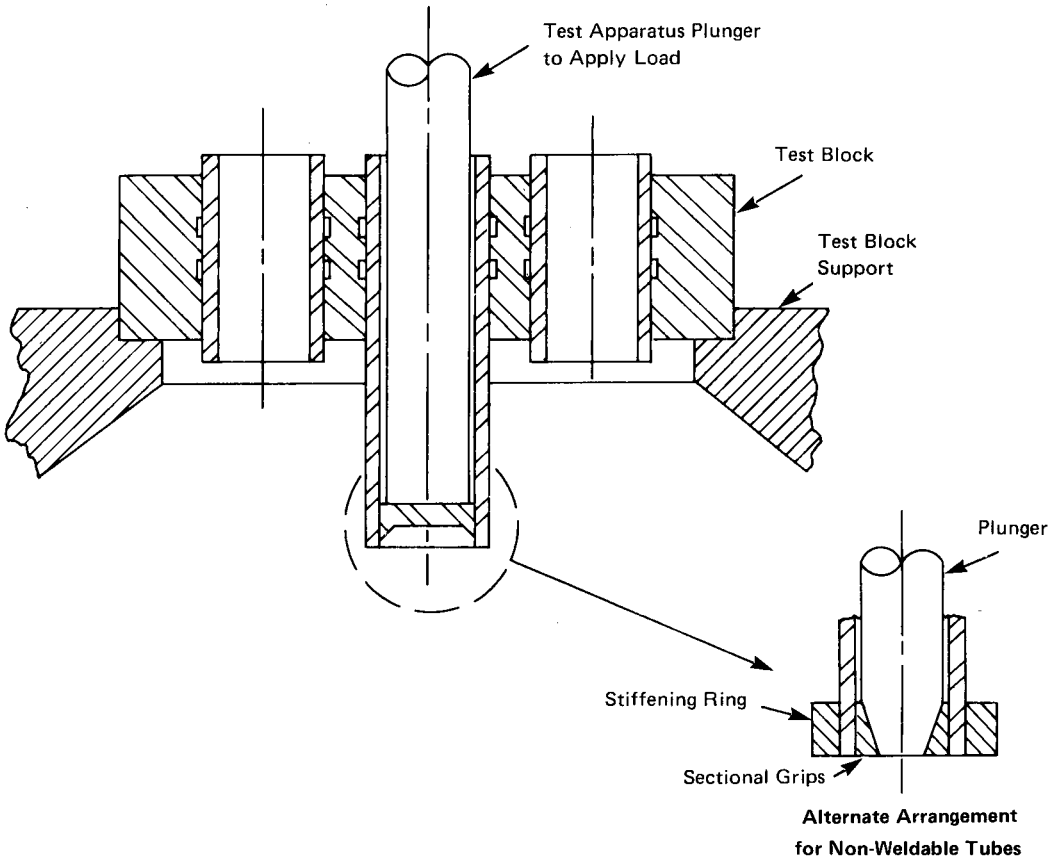

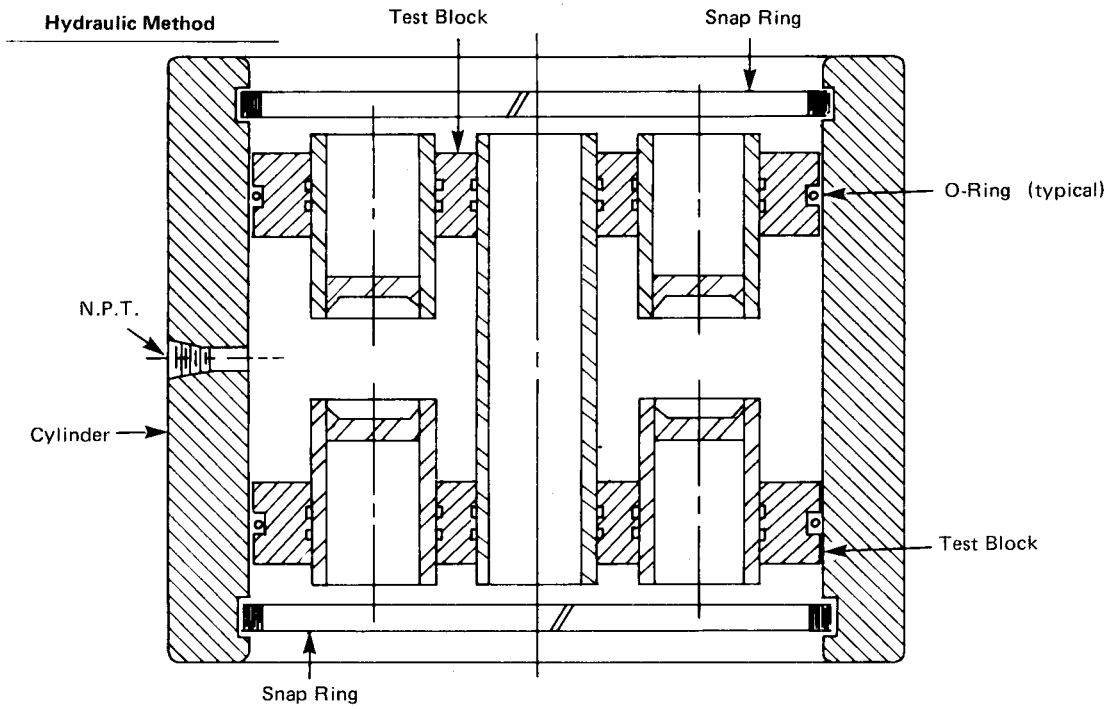

Provided by IHS under license with ASME
No reproduction or networking permitted without license from IHS
Licensee=Chevron Phillips Chemical Co LP/5956674001
Not for Resale, 11/09/2014 20:41:36 MST

(g) The tube-to-tubesheet joint specimens shall be loaded until mechanical failure of the joint or tube occurs. The essential requirement is that the load be transmitted axially.

(h) Any speed of testing may be used provided load readings can be determined accurately.

(i) The reading from the testing device shall be such that the applied load required to produce mechanical failure of the tube-to-tubesheet joint can be determined.

(j) For determining f_r (test) for joint types listed in Table A-2, a minimum of three specimens shall constitute a test. The value of f_r (test) shall be calculated in accordance with A-4(a) using the lowest value of L (test). In no case shall the value of f_r (test) using a three specimen test exceed the value of f_r (test) given in Table A-2. If the value of f_r (test) so determined is less than the value for f_r (test) given in Table A-2, retesting shall be performed in accordance with (k) below, or a new three specimen test shall be performed using a new joint configuration or fabrication procedure. All previous test data shall be rejected. To use a value of f_r (test) greater than the value given in Table A-2, a nine-specimen test shall be performed in accordance with (k) below.

(k) For joint types not listed in Table A-2, to increase the value of f_r (test) for joint types listed in Table A-2, or to retest joint types listed in Table A-2, the tests to determine f_r (test) shall conform to the following:

(1) A minimum of nine specimens from a single tube shall be tested. Additional tests of specimens from the same tube are permitted provided all test data are used in the determination of f_r (test). If a change in the joint design or its manufacturing procedure is necessary to meet the desired characteristics, complete testing of the modified joint shall be performed.

(2) In determining the value of f_r (test), the mean value of L (test) shall be determined and the standard deviation, sigma, about the mean shall be calculated. The value of f_r (test) shall be calculated using the value of L (test) corresponding to −2sigma, using the applicable equation in A-4. In no case shall f_r (test) exceed 1.0.

A-4 ACCEPTANCE STANDARDS FOR f_r DETERMINED BY TEST

(a) The value of f_r (test) shall be calculated as follows: For joint types a, b, b-1, c, d, e,

$$f_r(\text{test}) = \frac{L(\text{test})}{A_t S_T} \tag{4}$$

For joint types f, g, h, i, j, k,

$$f_r(\text{test}) = \frac{L(\text{test})}{A_t S_T f_e f_y} \tag{5}$$

where

L *(test)* = axial load at which failure of the test specimens occurs [refer to A-3(j) or A-3(k), as applicable]

S_T = tensile strength for tube material from material test report

A_t, f_e, f_y, and f_r (test) are as defined in A-2.

(b) The value of f_r (test) shall be used for f_r in the equation for $L_{\max}$.

A-5 ACCEPTANCE STANDARDS FOR PROPOSED OPERATING TEMPERATURES DETERMINED BY TEST

The proposed operating conditions shall be acceptable if both of the following conditions are satisfied:

$$L_1(\text{test}) \geq A_t f_e f_y S_T \left(S_u / S_{\text{ua}}\right. \tag{6}$$

$$L_2(\text{test}) \geq A_t f_e f_y S_T \tag{7}$$

where

L_1 *(test)* = lowest axial load at which failure occurs at operating temperature

L_2 *(test)* = lowest axial load at which failure of heat soaked specimen tested at room temperature occurs

S_u = tensile strength for tube material at operating temperature taken from Table U in Section II, Part D

S_{ua} = tensile strength for tube material at room temperature taken from Table U in Section II, Part D

A_t, f_e, and f_y are as defined in A-2. S_T is as defined in A-4.

Provided by IHS under license with ASME
No reproduction or networking permitted without license from IHS
Licensee=Chevron Phillips Chemical Co LP/5956674001
Not for Resale, 11/09/2014 20:41:36 MST

NONMANDATORY APPENDIX C SUGGESTED METHODS FOR OBTAINING THE OPERATING TEMPERATURE OF VESSEL WALLS IN SERVICE

C-1

At least three thermocouples shall be installed on vessels that are to have contents at temperatures above that at which the allowable stress value of the material is less than its allowable stress value at 100°F (40°C). One of the thermocouples shall be on the head that will be subject to the higher temperature, and the other two shall be on the shell in the zone of maximum temperature. For a number of vessels in similar service in the same plant, thermocouples need be attached to one vessel only of each group or battery, provided that each vessel has a suitable temperature measuring device to show the temperature of the entering fluid, in order that a comparison of the operation of the different vessels can be made and any abnormal operation immediately detected. Thermocouples shall be attached to the outside surface of the vessel by inserting the terminals separately in two small holes drilled into the shell approximately $^1/_2$ in. (13 mm) center-to-center and firmly securing them therein, or by some other equally satisfactory method.

C-2

In lieu of the provisions in the preceding paragraph, it shall be optional to provide a thermocouple or other temperature measuring device for obtaining the temperature of the fluid in the zone of the vessel having the highest temperature. In this case, the metal temperature shall be assumed to be the same as the maximum fluid temperature.

Provided by IHS under license with ASME
No reproduction or networking permitted without license from IHS
Licensee=Chevron Phillips Chemical Co LP/5956674001
Not for Resale, 11/09/2014 20:41:36 MST

NONMANDATORY APPENDIX D SUGGESTED GOOD PRACTICE REGARDING INTERNAL STRUCTURES

D-1

Pressure vessels that have heavy internal structures such as trays and baffles are subject to damage due to failure of the connections that support the structures.

D-2

The designer should have this possible hazard in mind and provide supports of sufficient strength with due allowance for corrosion.

D-3

The following are some suggestions that should be considered in the design of internal structures:

(a) Connections to the vessel wall should be designed to prevent excessive tensile stress outward from the wall face due to the connection. (See UG-55.)

(b) Structures should rest on top of their supports in preference to being suspended from them.

(c) Additional metal should be provided when corrosion is expected. The corrosion allowance need not be the same as in the vessel if the supports and structures can be replaced more readily and economically than the vessel.

(d) Corrosion resistant metals may be used in the fabrication of the structures and supports.

Provided by IHS under license with ASME

No reproduction or networking permitted without license from IHS

Licensee=Chevron Phillips Chemical Co LP/5956674001
Not for Resale, 11/09/2014 20:41:36 MST

NONMANDATORY APPENDIX E SUGGESTED GOOD PRACTICE REGARDING CORROSION ALLOWANCE[104]

E-1

From the standpoint of corrosion, pressure vessels may be classified under one of the following groups:

(a) vessels in which corrosion rates may be definitely established from information available to the designer regarding the chemical characteristics of the substances they are to contain. Such information may, in the case of standard commercial products, be obtained from published sources, or, where special processes are involved, from reliable records compiled from results of previous observations by the user or others under similar conditions of operation.

(b) vessels in which corrosion rates, while known to be relatively high, are either variable or indeterminate in magnitude;

(c) vessels in which corrosion rates, while indeterminate, are known to be relatively low;

(d) vessels in which corrosion effects are known to be negligible or entirely absent.

E-2

When the rate of corrosion is closely predictable, additional metal thickness over and above that required for the initial operating conditions should be provided, which should be at least equal to the expected corrosion loss during the desired life of the vessel.

E-3

When corrosion effects are indeterminate prior to design of the vessel, although known to be inherent to some degree in the service for which the vessel is to be used, or when corrosion is incidental, localized, and/or variable in rate and extent, the designer must exercise his best judgment in establishing a reasonable maximum excess shell thickness. This minimum allowance may, of course, be increased according to the designer's judgment.

E-4

When corrosion effects can be shown to be negligible or entirely absent, no excess thickness need be provided.

E-5

When a vessel goes into corrosive service without previous service experience, it is recommended that service inspections be made at frequent intervals until the nature and rate of corrosion in service can be definitely established. The data thus secured should determine the subsequent intervals between service inspections and the probable safe operating life of the vessel.

E-6

For parts which are essential to vessel strength such as stiffener rings, the attachment of the part to the shell must provide adequate corrosion allowance or protection to assure the required strength throughout the service life. Some attachments, such as intermittent welds, require protection on both face and root sides; alternatively, continuous welds or a suitably sized seal weld between the strength welds will provide protection for the root side.

Provided by IHS under license with ASME
No reproduction or networking permitted without license from IHS
Licensee=Chevron Phillips Chemical Co LP/5956674001
Not for Resale, 11/09/2014 20:41:36 MST

NONMANDATORY APPENDIX F
SUGGESTED GOOD PRACTICE REGARDING LININGS

F-1

When protective linings are used, the amount of additional shell thickness provided to compensate for corrosion effects will depend largely on the nature of the protective material itself, as well as on the degree of knowledge available regarding its resistivity under the intended operating conditions.

F-2

(a) When corrosion resistant metal linings are used, either as a surface layer integral with the shell plate, or in deposited form as applied with a so-called metal gun, or in sheet form mechanically attached, the base plate may be only as thick as required for design operating conditions, provided, however, the thickness of such lining is sufficient to afford an estimated life equal at least to twice the length of the initial inspection period and that application of the material is such as to preclude any possibility of contact between the corrosive agent and the steel shell by infiltration or seepage through or past the lining.

(b) Before strip lining or joint covering strips are applied to carbon steel base plate, the surface shall be closely inspected to assure that it is properly prepared and that it is free of all foreign matter, rust, scale, and moisture. It may be necessary to sand-blast or to hot-air dry the surface, or both.

F-3

No paint of any type should be considered as a permanent protection. When paint is applied to the inside of a vessel, corrosion allowance should be added to the wall thickness of the vessel as if it were unprotected.

F-4

When the test fluid seeps behind the applied liner, there is danger that the fluid will remain in place until the vessel is put in service. In cases where the operating temperature of the vessel is above the boiling point of the test fluid, the vessel should be heated slowly for a sufficient time to drive out all test fluid from behind the applied liner without damage to the liner. This heating operation may be performed at the vessel manufacturing plant or at the plant where the vessel is being installed. After the test fluid is driven out, the lining should be repaired by welding.

Provided by IHS under license with ASME

No reproduction or networking permitted without license from IHS

Licensee=Chevron Phillips Chemical Co LP/5956674001
Not for Resale, 11/09/2014 20:41:36 MST

NONMANDATORY APPENDIX G
SUGGESTED GOOD PRACTICE REGARDING PIPING REACTIONS AND DESIGN OF SUPPORTS AND ATTACHMENTS

G-1

A vessel supported in a vertical or horizontal position will have concentrated loads imposed on the shell in the region where the supports are attached. Primary and secondary stresses due to other loadings, such as the weight of water present for hydrostatic test, may exceed that due to normal internal pressure. Calculations to resist the forces involved are not given here because they involve so many variables depending upon the size and weight of vessels, the temperature of service, the internal pressure, the arrangement of the supporting structure, and the piping attached to the vessel as installed.

G-2

The details of supports should conform to good structural practice, bearing in mind the following items (see *Manual for Steel Construction*, latest edition, by the American Institute of Steel Construction).

(a) All supports should be designed to prevent excessive localized stresses due to temperature changes in the vessel or deformations produced by the internal pressure.

(b) External stays in ring girders, or any internal framing that may support other internal parts, may also exert a stiffening effect on the shell.

(c) Columns supporting field assembled vessels and bearing loads which may produce high secondary stresses in the vessel wall should be so designed at the attachment to the wall that no high stress concentration can occur near changes in shape, gusset plates if any, or at ends of attachment welds. It is preferable to use details permitting continuous welds extending completely around the periphery of the attachment and to avoid intermittent or deadend welds at which there may be local stress concentration. A thicker wall plate at the support may serve to reduce secondary stresses and, if desired, a complete ring of thicker wall plates may be installed.

(d) When superimposed forces on the vessel wall occurring at the attachment for principal struts or gussets and supports of any kind can produce high bending stresses, and when thicker wall plates do not seem appropriate, an oval or circular reinforcing plate may be used. The attachment of such reinforcing plates should be designed to minimize flexing of the plate under forces normal to the surface of the vessel.

G-3

Vertical vessels may be supported on a number of posts without substantial ring girder bracing them around the shell, provided they attach to the shell where the latter is reinforced in an equivalent manner by the head of the vessel or by an intermediate partition.

G-4

Where vertical vessels are supported by lugs, legs, or brackets attached to the shell, the supporting members under these bearing attachments should be as close to the shell as possible to minimize local bending stresses in the shell.

G-5

For large and heavy vertical vessels to be supported by skirts, the conditions of loading under hydrostatic tests, before pressure is applied, or for any possible combination of loadings (see UG-22) under the highest expected metal temperature in service for the normal operating pressure, shall be compared in determining the best location for the line of skirt attachment. In applying UG-22 and UG-23(a) to vertical vessels supported on skirts, the following shall be considered in addition to pressure effects:

(a) the skirt reaction:

(1) the weight of vessel and contents transmitted in compression to the skirt by the shell above the level of the skirt attachment;

(2) the weight of vessel and contents transmitted to the skirt by the weight in the shell below the level of skirt attachment;

(3) the load due to externally applied moments and forces when these are a factor, e.g., wind, earthquake, or piping loads.

(b) the stress in the vessel wall due to the effects enumerated in (a) above. Localized longitudinal bending and circumferential compressive stresses of high order may exist in the metal of the shell and skirt near the circle of the skirt attachment if the skirt reaction is not substantially tangent to the vessel wall. When the skirt is attached below the head tangent line, localized stresses are introduced in proportion to the component of the skirt reaction which is normal to the head surface at the point of

Provided by IHS under license with ASME
No reproduction or networking permitted without license from IHS
Licensee=Chevron Phillips Chemical Co LP/5956674001
Not for Resale, 11/09/2014 20:41:36 MST

attachment; when the mean diameter of skirt and shell approximately coincide and a generous knuckle radius is used (e.g., a 2:1 ellipsoidal head), the localized stresses are minimized and are not considered objectionable. In other cases an investigation of local effects may be warranted depending on the magnitude of the loading, location of skirt attachment, etc., and an additional thickness of vessel wall or compression rings may be necessary.

G-6

Horizontal vessels may be supported by means of saddles[105] or equivalent leg supports. For other than very small vessels, the bearing afforded by the saddles shall extend over at least one-third of the circumference of the shell.

Supports should be as few in number as possible, preferably two in the length of the vessel. The vessel may be reinforced by stiffening rings at intermediate sections.[106]

G-7

Large horizontal storage tanks for gases under pressure may be supported by any combination of hangers, with ring girders, stiffeners, and such other reinforcement as may be necessary to prevent stresses in the shell in excess of those allowed by UG-23 and to prevent excessive distortion due to the weight of the vessel when the internal pressure is near atmospheric.

G-8

Certain attachments may serve to mount a pump, compressor, motor, internal combustion engine, mixer, or any other rotating or reciprocating equipment upon a vessel. Such equipment can cause cyclic forces to act upon the attachment, upon the attachment weld to the vessel, upon the vessel shell, and upon the vessel supports. For such cyclic loading, the practices advocated in G-2(c) and G-2(d) above are of particular importance. It is important to avoid resonance between the cyclic forces imposed by the equipment and the natural frequency of the vessel with the equipment in place.

G-9

Additional guidance on the design of supports, attachments and piping reactions may be found in the following references:

(a) British Standard BS-5500, Specification for Fusion Welded Pressure Vessels (Advanced Design and Construction) for Use in the Chemical, Petroleum, and Allied Industries;

(b) Welding Research Council Bulletin #107, Local Stresses in Spherical and Cylindrical Shells Due to External Loadings;

(c) Welding Research Council Bulletin #198, Part 1, Secondary Stress Indices for Integral Structural Attachments to Straight Pipes; Part 2, Stress Indices at Lug Supports on Piping Systems;

(d) Welding Research Council Bulletin 297, Local Stresses in Spherical and Cylindrical Shells Due to External Loadings, Supplement to WRC-107.

Provided by IHS under license with ASME
No reproduction or networking permitted without license from IHS
Licensee=Chevron Phillips Chemical Co LP/5956674001
Not for Resale, 11/09/2014 20:41:36 MST

NONMANDATORY APPENDIX H GUIDANCE TO ACCOMMODATE LOADINGS PRODUCED BY DEFLAGRATION

H-1 SCOPE

When an internal vapor-air or dust-air deflagration is defined by the user or his designated agent as a load condition to be considered in the design, this Appendix provides guidance for the designer to enhance the ability of a pressure vessel to withstand the forces produced by such conditions.

H-2 GENERAL

Deflagration is the propagation of a combustion zone at a velocity that is less than the speed of sound in the unreacted medium, whereas detonation is the propagation of a combustion zone at a velocity that is greater than the speed of sound in the unreacted medium. A detonation can produce significant dynamic effects in addition to pressure increases of great magnitude and very short duration, and is outside the scope of this Appendix. This Appendix only addresses the lower and slower loadings produced by deflagrations that propagate in a gas-phase.

The magnitude of the pressure rise produced inside the vessel by a deflagration is predictable with reasonable certainty. Unvented deflagration pressures can be predicted with more certainty than vented deflagration pressures. Methods are provided in the references listed in H-5 to bound this pressure rise. Other methods may also be used to determine pressure rise.

H-3 DESIGN LIMITATIONS

The limits of validity for deflagration pressure calculations are described in References (1) and (2).

H-4 DESIGN CRITERIA

H-4.1 SAFETY MARGIN

As described in NFPA-69 [see Reference [1]], a vessel may be designed to withstand the loads produced by a deflagration:

(a) without significant permanent deformation; or

(b) without rupture [see Reference [3]].

A decision between these two design criteria should be made by the user or his designated agent based upon the likelihood of the occurrence and the consequences of significant deformation. It is noted that either (a) or (b) above will result in stresses for a deflagration that are larger than the basic Code allowable stress listed in Section II, Part D. Because of this, appropriate design details and nondestructive examination requirements shall be agreed upon between the user and designer.

These two criteria are very similar in principle to the Level C and Level D criteria, respectively, contained in Section III, Subsection NB for use with Class 1 vessels [see References [4] and [5]]. The limited guidance in NFPA 69 requires the application of technical judgments made by knowledgeable designers experienced in the selection and design of appropriate details. The Level C and Level D criteria in Section III provide detailed methodology for design and analysis. The successful use of either NFPA 69 or Section III criteria for deflagration events requires the selection of materials of construction that will not fail because of brittle fracture during the deflagration pressure excursions.

H-4.2 LIKELIHOOD OF OCCURRENCE

For vapor-air and dust-air combustion, various methods of reducing the likelihood of occurrence are described in Reference [2]. It is good engineering practice to minimize the likelihood of occurrence of these events, regardless of the capability of the vessel to withstand them.

H-4.3 CONSEQUENCES OF OCCURRENCE

In deciding between designing to prevent significant permanent deformation [see H-4.1(a)] or designing to prevent rupture [see H-4.1(b)], the consequences of significant distortion of the pressure boundary should be considered. Either the aforementioned NFPA or Section III design criteria may be used: Each has been used successfully.

H-4.4 STRAIN CONCENTRATION

When developing a design to withstand either of the criteria cited above, the designer should avoid creating weak sections in the vessel at which strain can be concentrated. Examples of design details to avoid are partial-penetration pressure boundary welds, cone to cylinder junctions without transition knuckles, large openings in heads or cylindrical shells which require special design consideration [see UG-36(b)(1)], etc.

Provided by IHS under license with ASME
No reproduction or networking permitted without license from IHS
Licensee=Chevron Phillips Chemical Co LP/5956674001
Not for Resale, 11/09/2014 20:41:36 MST

H-5 REFERENCES

[1] National Fire Protection Association (NFPA) 69, Standard on Explosion Prevention Systems, Chapter 5, Deflagration Pressure Containment, issue effective with the applicable Addenda of the ASME Boiler and Pressure Vessel Code.

[2] National Fire Protection Association (NFPA) 68, Guide for Venting of Deflagrations, issue effective with the applicable Addenda of the ASME Boiler and Pressure Vessel Code.

[3] B.F. Langer, PVRC Interpretive Report of Pressure Vessel Research, Section 1 — Design Considerations, 1.4 Bursting Strength, Welding Research Council Bulletin 95, April 1964.

[4] ASME Boiler and Pressure Vessel Code, Section III, Division 1, NB-3224, Level C Service Limits.

[5] ASME Boiler and Pressure Vessel Code, Section III, Division 1, NB-3225 and Nonmandatory Appendix F, Level D Service Limits.

Provided by IHS under license with ASME

No reproduction or networking permitted without license from IHS

Licensee=Chevron Phillips Chemical Co LP/5956674001
Not for Resale, 11/09/2014 20:41:36 MST

NONMANDATORY APPENDIX K SECTIONING OF WELDED JOINTS

K-1 ETCH TESTS

(a) Carbon and Low Alloy Steels. Etching solutions suitable for carbon and low alloy steels, together with directions for their use, are suggested as follows:

(1) Hydrochloric Acid. Hydrochloric (muriatic) acid and water equal parts by volume. The solution should be kept at or near the boiling temperature during the etching process. The specimens are to be immersed in the solution for a sufficient period of time to reveal all lack of soundness that might exist at their cross-sectional surfaces.

(2) Ammonium Persulfate. One part of ammonium persulfate to nine parts of water by weight. The solution should be used at room temperature and should be applied by vigorously rubbing the surface to be etched with a piece of cotton saturated with the solution. The etching process should be continued until there is a clear definition of the structure in the weld.

(3) Iodine and Potassium Iodide. One part of powdered iodine (solid form), two parts of powdered potassium iodide, and ten parts of water, all by weight. The solution should be used at room temperature and brushed on the surface to be etched until there is a clear definition of outline of the weld.

(4) Nitric Acid. One part of nitric acid and three parts of water by volume.

CAUTION: Always pour the acid into the water. Nitric acid causes bad stains and severe burns.

The solution may be used at room temperature and applied to the surface to be etched with a glass stirring rod. The specimens may also be placed in a boiling solution of the acid but the work should be done in a well-ventilated room. The etching process should be continued for a sufficient period of time to reveal all lack of soundness that might exist at the cross-sectional surfaces of the weld.

(b) The appearance of the etched specimens may be preserved by washing them in clear water after etching, removing the excess water, immersing them in ethyl alcohol, and then drying them. The etched surface may then be preserved by coating it with a thin clear lacquer.

(c) Aluminum Alloy. The following etching solution is suggested for revealing the macrostructure of welded aluminum alloy specimens:

Hydrochloric acid (conc.)	15 ml
Hydrofluoric acid (48%)	10 ml
Water	85 ml

This solution is used at room temperature and etching is accomplished by either swabbing or immersion of the specimen. The surface to be etched should be smoothed by filing or machining or by grinding on No. 180 Aloxite paper. With different alloys and tempers the etching period will vary from 15 sec to several minutes and should be continued until the desired contrast is obtained.

K-2 CLOSURE OF OPENINGS RESULTING FROM SECTIONING

(a) Holes in welded joints left by the removal of trepanned plug specimens may be closed by any welding method approved by the authorized inspector. Some suggested methods for closing round plug openings by welding are as follows:

(1) Insert and weld in special plugs, of which some acceptable types are shown in Figure K-2. Type (a) is adapted to welding from both sides and should be used wherever that method is practicable, and Types (b) and (c) when access is possible only from one side. The diameter of the filler plug shall be such as to make a snug fit in the hole to be filled. Each layer of weld metal as deposited shall be thoroughly peened to reduce residual stresses. The $^1/_4$ in. (6 mm) hole in the center of the plugs shown in Figure K-2 may afterwards be closed by any reasonable method. Plain plugs without a hole may be used.

(2) For joints where the thickness of the thinner plate at the joint is not greater than one-third of the diameter of the hole, place a backing plate on the inside of the shell over the opening and fill the hole completely with weld metal applied from the outside of the shell. Rebuild fillet welds where cut.

(3) For joints where the thickness of the thinner plate at the joint is not less than one-third, nor greater than two-thirds the diameter of the hole, fill the hole completely with weld metal applied from both sides of the shell. Rebuild fillet welds where cut.

(4) For butt joints where the thickness of the thinner plate at the joint does not exceed $^7/_8$ in. (22 mm), chip a groove on one side of the plate each way along the seam from the hole. The groove at the opening shall have sufficient width to provide a taper to the bottom of the hole, and the length of the groove on each side of the opening is to have a slope of approximately one to three. Use a backing plate on the side opposite that on which the

Provided by IHS under license with ASME
No reproduction or networking permitted without license from IHS
Licensee=Chevron Phillips Chemical Co LP/5956674001
Not for Resale, 11/09/2014 20:41:36 MST

Figure K-2
Some Acceptable Types of Filler Plugs

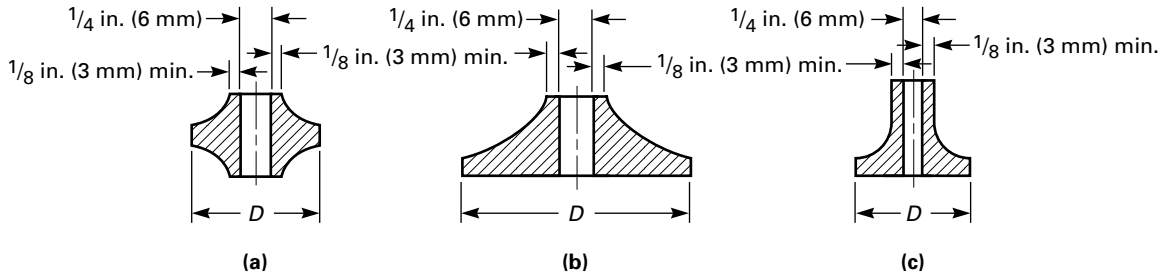

chipping is done or a thin disk [not over 1/8 in. (3 mm) thick] at the bottom of the hole and fill the groove and the hole with weld metal.

(5) For butt joints, and for plates of any thickness, chip a groove on both sides of the plate each way along the seam from the hole. The groove at the opening shall have sufficient width to provide a taper to the middle of the plate, and the length of the groove on each side of the opening is to have a slope of approximately one to three. Place a thin disk [not over 1/8 in. (3 mm) thick] in the hole at the middle of the plate and fill the grooves and the hole on both sides with weld metal.

(b) The following is a suggested method for closing openings cut with a spherical saw: For butt welded joints place a backing plate, where necessary, on the inside of the vessel shell over the opening. For lap-welded joints, a part of the parent plate remaining opposite the removed weld will usually serve as a backing plate. Fill the opening completely with the weld metal. Rebuild fillet welds where cut.

K-3 PREHEATING

Where gas welding is employed, the area surrounding the plugs shall be preheated prior to welding.

Provided by IHS under license with ASME
No reproduction or networking permitted without license from IHS
Licensee=Chevron Phillips Chemical Co LP/5956674001
Not for Resale, 11/09/2014 20:41:36 MST

(13)

NONMANDATORY APPENDIX L
APPLICATION OF RULES FOR JOINT EFFICIENCY IN SHELLS AND HEADS OF VESSELS WITH WELDED JOINTS

VESSELS UNDER INTERNAL PRESSURE

L-1 APPLICATION OF RULES FOR JOINT EFFICIENCY IN SHELLS AND HEADS OF VESSELS WITH WELDED JOINTS

L-1.1 Introduction

This Appendix provides guidelines for establishing the appropriate joint efficiency for vessels of welded construction. The joint efficiencies are applied in various design formulas which determine either the minimum required design thicknesses of vessel parts or the maximum allowable working pressure for a given thickness.

L-1.2 Requirements for Radiography

Radiography is mandatory for certain vessel services and material thicknesses (UW-11). When radiography is not mandatory, the degree of radiography is optional, and the amount of radiography must be determined by the user or his designated agent (U-2).

Whether radiography is mandatory or optional, the amount of radiography performed on each butt weld together with the type of weld (UW-12) will determine the joint efficiency to be applied in the various design formulas.

L-1.3 Application of Joint Efficiency Factors

The longitudinal and circumferential directions of stress are investigated separately to determine the most restrictive condition governing stresses in the vessel. [see UG-23(c).] In terms of the application of joint efficiencies, each weld joint is considered separately, and the joint efficiency for that weld joint is then applied in the appropriate design formula for the component under consideration.

L-1.4 Flow Charts

Figures L-1.4.1 and L-1.4-2 provide step-by-step guidelines for determining required joint efficiencies for various components. Alternatively, Figures L-1.4-3 and L-1.4-4 provide guidelines for determining joint efficiencies for weld categories. Generally, the designer should consider the following points:

L-1.4.1 Is radiography mandatory due to service or material thickness?

L-1.4.2 Are weld types mandated? For example, UW-2 restricts weld types to Types 1 or 2 for weld Categories A and B. If not, select types appropriate.

L-1.4.3 If radiography is not mandatory, the amount of radiography performed is optional. The user or his designated agent shall determine the extent of radiography to be performed, or at his option, may permit the vessel manufacturer to select the extent of radiography.

L-1.4.4 Does the degree of radiography performed on the Category B weld joints in a cylindrical or conical shell affect the joint efficiency used on the Category A weld joints? Remember, the minimum required thickness for a cylindrical or conical shell is calculated separately for the circumferential and longitudinal directions and the larger of these two thicknesses calculated selected.

L-11 NAMEPLATE SAMPLES

See Figures L-11-1, L-11-2, and L-11-3 for nameplate samples.

Provided by IHS under license with ASME
No reproduction or networking permitted without license from IHS
Licensee=Chevron Phillips Chemical Co LP/5956674001
Not for Resale, 11/09/2014 20:41:36 MST

Figure L-1.4.1
Joint Efficiency and Weld Joint Type — Cylinders and Cones

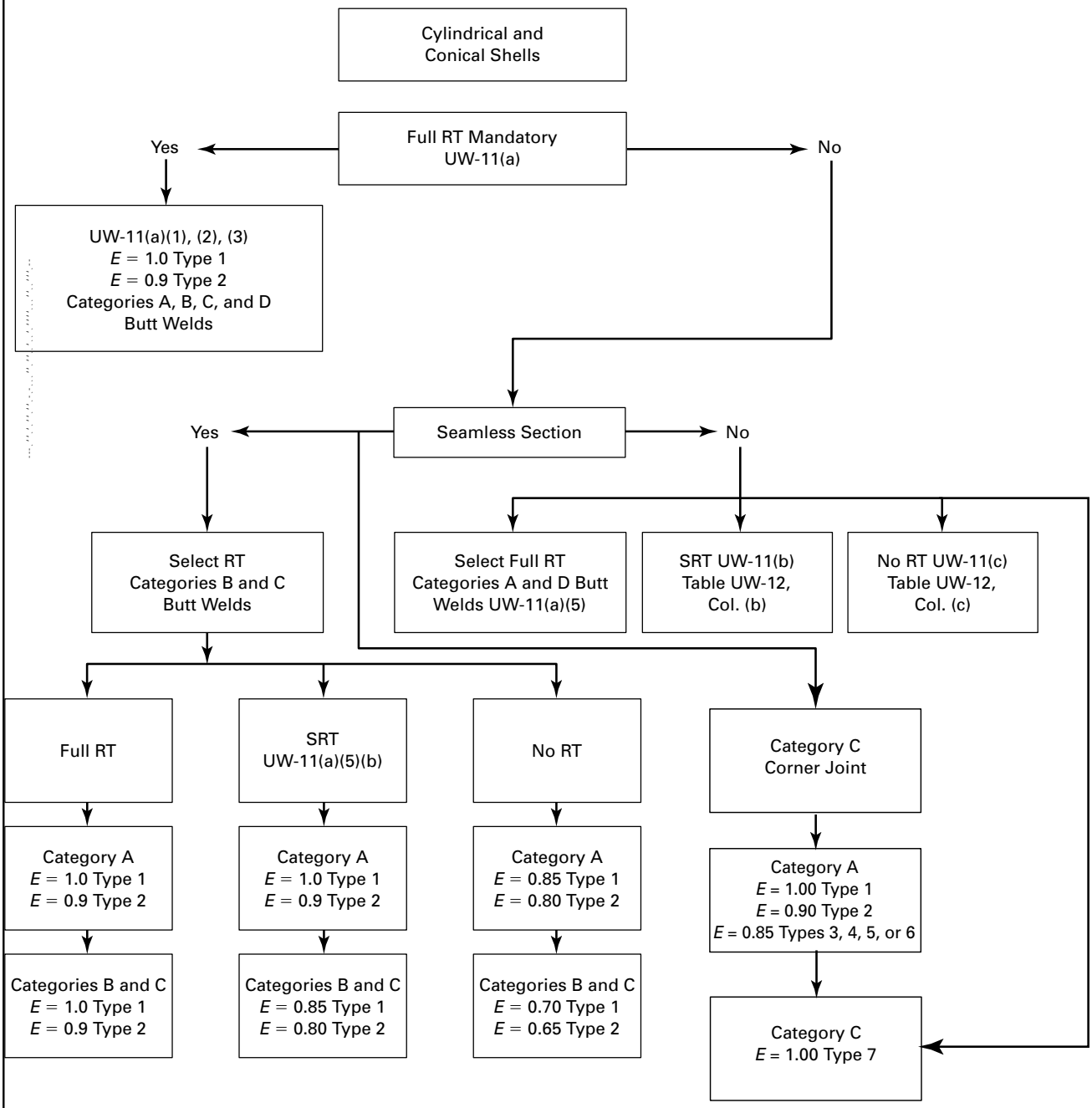

GENERAL NOTES:

(a) Thickness required for longitudinal stress in conical sections is as follows: $t = PD/[4 \cos(\alpha)(SE + 0.4P)]$.

(b) See UW-11(a)(4) for Categories B and C butt welds in nozzles and communicating chambers equal to or less than NPS 10 and thickness $1\frac{1}{8}$ in. (30 mm) or less.

(c) Type 2 joints not allowed for Category A weld joints for UW-2(c) designs.

(d) Type 2 joints allowed for Category A weld joints for UW-2(b) designs for austenitic stainless steel Type 304.

Provided by IHS under license with ASME
No reproduction or networking permitted without license from IHS
Licensee=Chevron Phillips Chemical Co LP/5956674001
Not for Resale, 11/09/2014 20:41:36 MST

Figure L-1.4-2
Joint Efficiency and Weld Joint Type — Heads

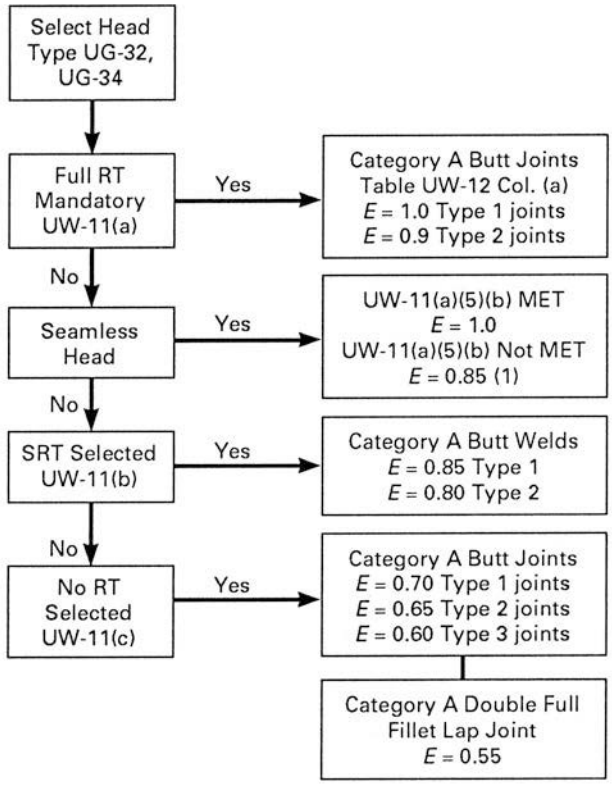

NOTES:
(1) See UW-12(d) when head-to-shell attachment weld is Type No. 3, 4, 5, or 6.

Provided by IHS under license with ASME
No reproduction or networking permitted without license from IHS
Licensee=Chevron Phillips Chemical Co LP/5956674001
Not for Resale, 11/09/2014 20:41:36 MST

Figure L-1.4-3
Joint Efficiencies for Categories A and D Welded Joints in Shells, Heads, or Cones

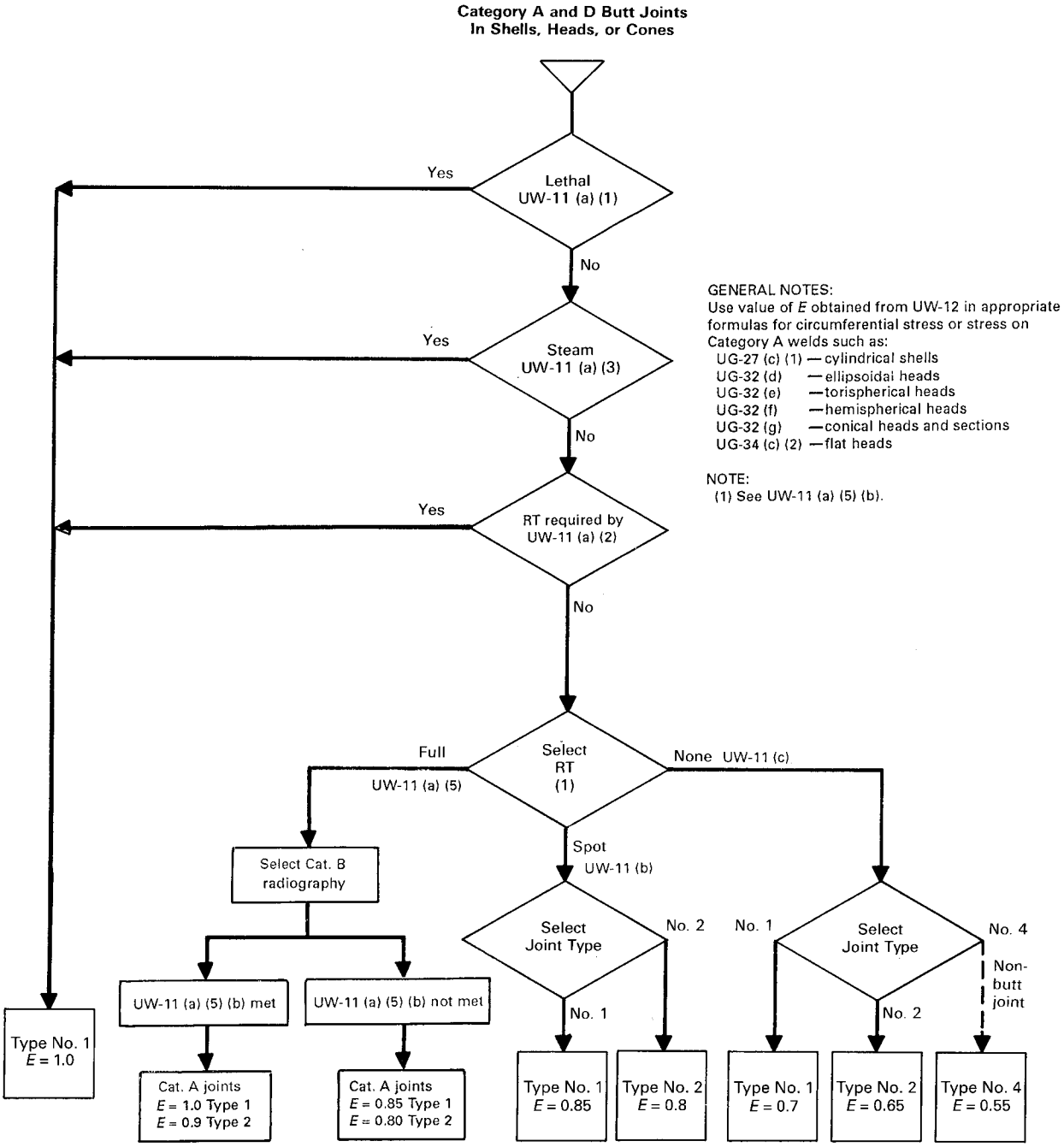

GENERAL NOTES:
Use value of *E* obtained from UW-12 in appropriate formulas for circumferential stress or stress on Category A welds such as:
UG-27 (c) (1) — cylindrical shells
UG-32 (d) — ellipsoidal heads
UG-32 (e) — torispherical heads
UG-32 (f) — hemispherical heads
UG-32 (g) — conical heads and sections
UG-34 (c) (2) — flat heads

NOTE:
(1) See UW-11 (a) (5) (b).

Provided by IHS under license with ASME
No reproduction or networking permitted without license from IHS
Licensee=Chevron Phillips Chemical Co LP/5956674001
Not for Resale, 11/09/2014 20:41:36 MST

Figure L-1.4-4
Joint Efficiencies for Categories B and C Welded Joints in Shells or Cones

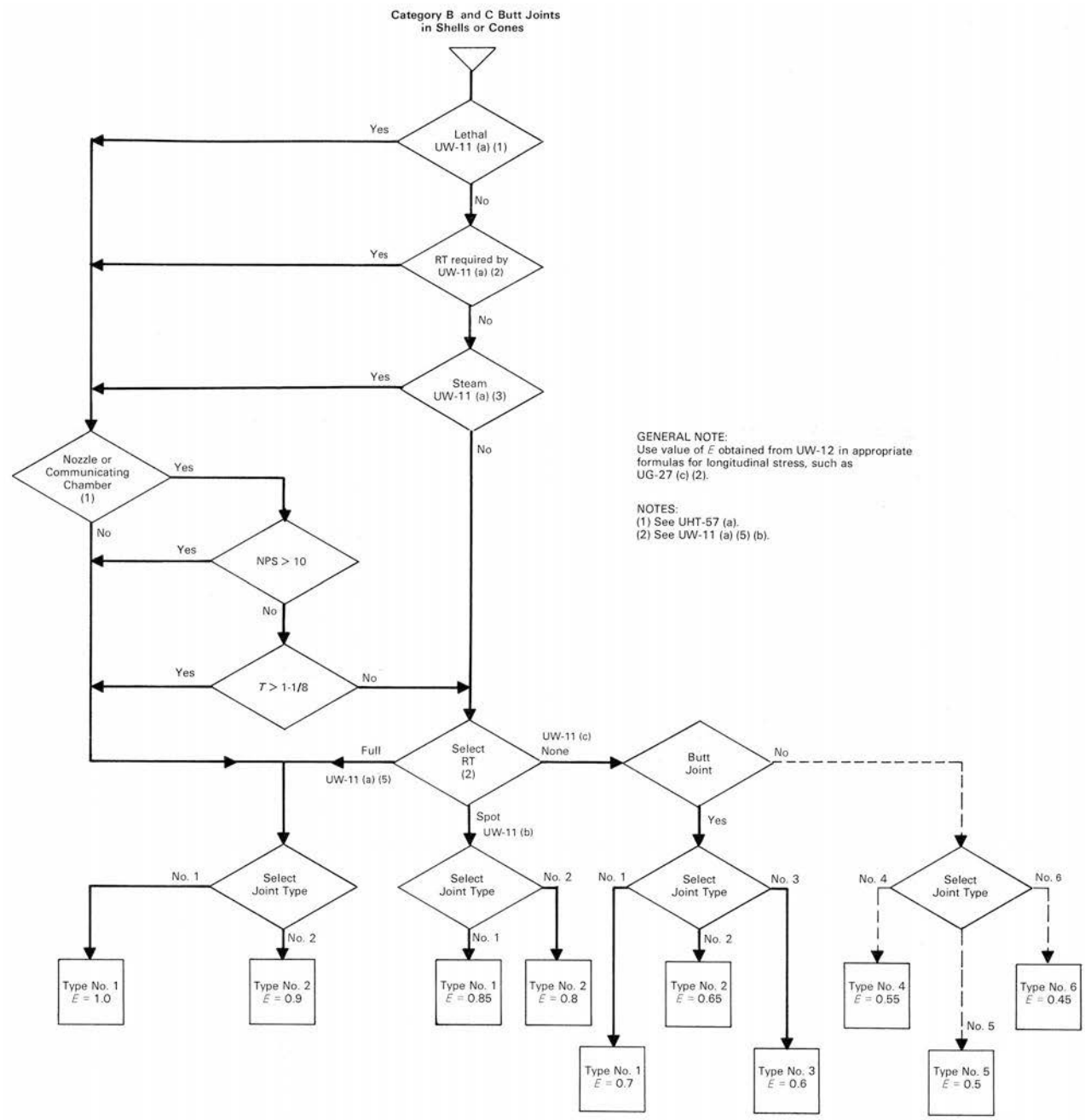

Provided by IHS under license with ASME
No reproduction or networking permitted without license from IHS
Licensee=Chevron Phillips Chemical Co LP/5956674001
Not for Resale, 11/09/2014 20:41:36 MST

Figure L-11-1
Single-Chamber Pressure Vessel

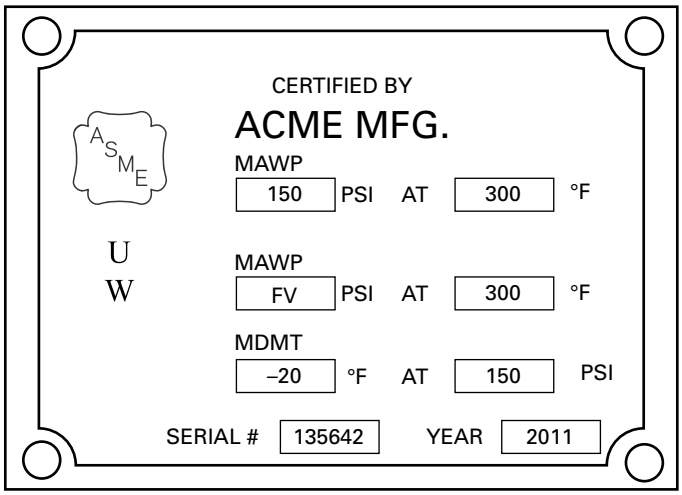

(a)

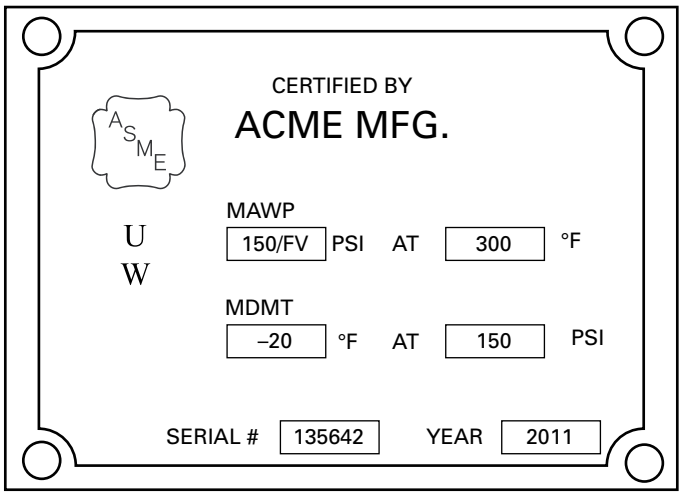

(b) Alternative Nameplate

Provided by IHS under license with ASME
No reproduction or networking permitted without license from IHS
Licensee=Chevron Phillips Chemical Co LP/5956674001
Not for Resale, 11/09/2014 20:41:36 MST

Figure L-11-2
Single-Chamber Pressure Vessel Operating With Partial Vacuum

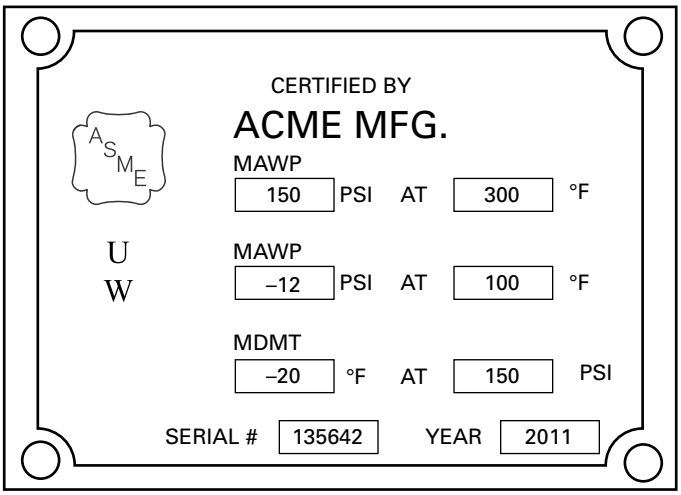

GENERAL NOTE: Because the MAWP (internal) has a different designated coincident temperature than the MAWP (external), these values must be listed on the nameplate on separate lines.

Figure L-11-3
Shell and Tube Exchanger, With Shell and Tube Operating as Independent Chambers

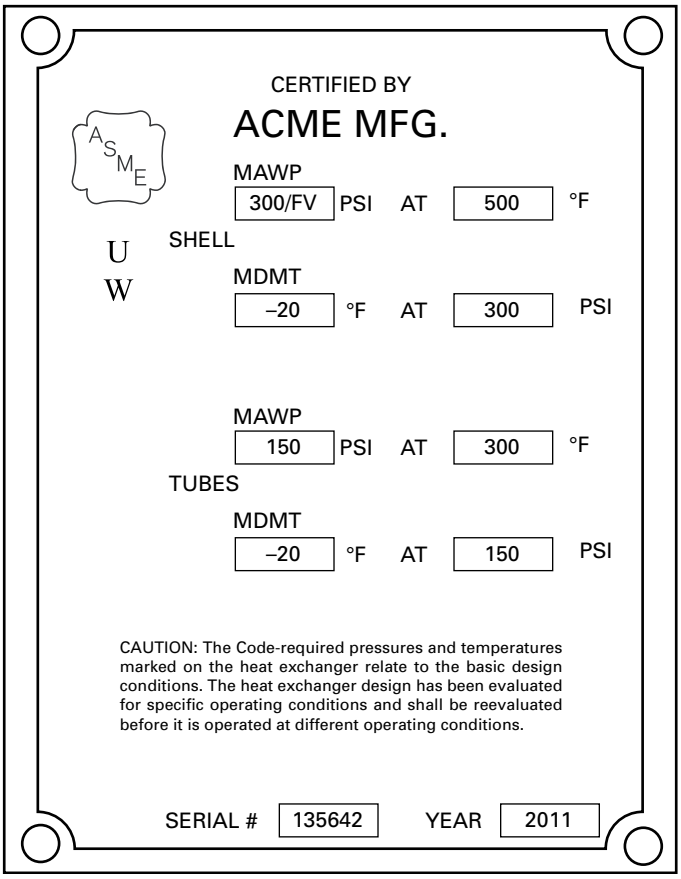

GENERAL NOTE: See UHX-19.

Provided by IHS under license with ASME
No reproduction or networking permitted without license from IHS
Licensee=Chevron Phillips Chemical Co LP/5956674001
Not for Resale, 11/09/2014 20:41:36 MST

NONMANDATORY APPENDIX M INSTALLATION AND OPERATION

M-1 INTRODUCTION

(a) The rules in this Appendix are for general information only, because they pertain to the installation and operation of pressure vessels, which are the prerogative and responsibility of the law enforcement authorities in those states and municipalities which have made provision for the enforcement of Section VIII.

(b) It is permissible to use any departures suggested herein from provisions in the mandatory parts of this Division when granted by the authority having legal jurisdiction over the installation of pressure vessels.

M-2 CORROSION

(a) Vessels subject to external corrosion shall be so installed that there is sufficient access to all parts of the exterior to permit proper inspection of the exterior, unless adequate protection against corrosion is provided or unless the vessel is of such size and is so connected that it may readily be removed from its permanent location for inspection.

(b) Vessels having manholes, handholes, or cover plates to permit inspection of the interior shall be so installed that these openings are accessible.

(c) In vertical cylindrical vessels subject to corrosion, to insure complete drainage, the bottom head, if dished, should preferably be concave to pressure.

M-3 MARKING ON THE VESSEL

The marking required by this Division shall be so located that it will be accessible after installation and when installed shall not be covered with insulation or other material that is not readily removable [see UG-116(j)].

M-4 PRESSURE RELIEVING DEVICES

The general provisions for the installation of pressure relieving devices are fully covered in UG-135. The following paragraphs contain details in arrangement of stop valves for shutoff control of pressure relief devices which are sometimes necessary to the continuous operation of processing equipment of such a complex nature that the shutdown of any part of it is not feasible. There are also rules with regard to the design of inlet and discharge piping to and from pressure relief devices, which can only be general in nature because the design engineer must fit the arrangement and proportions of such a system to the particular requirements in the operation of the equipment involved.

M-5 STOP VALVES LOCATED IN THE RELIEF PATH

M-5.1 GENERAL

(a) Stop valve(s) located within the relief path is not allowed except as provided for in M-5.5, M-5.6, M-5.7, and M-5.8, and only when specified by the user. The responsibilities of the user are summarized in M-5.3. The specific requirements in M-5.5, M-5.6, M-5.7, and M-5.8 are not intended to allow for normal operation above the maximum allowable working pressure.

(b) The *pressure relief path* shall be designed such that the pressure in the equipment being protected does not exceed its maximum allowable working pressure before the pressure at the pressure relief device reaches its set pressure and the pressure does not exceed the limits of UG-125(c).

M-5.2 DEFINITIONS

administrative controls: procedures that, in combination with mechanical locking elements, are intended to ensure that personnel actions do not compromise the overpressure protection of the equipment. They include, as a minimum, Documented Operation and Maintenance Procedures, and Training of Operator and Maintenance Personnel in these procedures.

full area stop valve: a valve in which the flow area of the valve is equal to or larger than the inlet flow area of the pressure relief device.

management system: the collective application of administrative controls, valve operation controls, and valve failure controls, in accordance with the applicable requirements of this Division.

mechanical locking elements: elements that when installed on a stop valve, provide a physical barrier to the operation of the stop valve, such that the stop valve is not capable of being operated unless a deliberate action is taken to remove or disable the element. Such elements, when used in combination with adminstrative controls, ensure that the equipment overpressure protection is not compromised by personnel actions. Examples of mechanical

Provided by IHS under license with ASME
No reproduction or networking permitted without license from IHS
Licensee=Chevron Phillips Chemical Co LP/5956674001
Not for Resale, 11/09/2014 20:41:36 MST

locking elements include locks (with or without chains) on the stop valve handwheels, levers, or actuators, and plastic or metal straps (car seals) that are secured to the valve in such a way that the strap must be broken to operate the stop valve.

pressure relief path: consists of all equipment, pipe, fittings, and valves in the flow path between any protected equipment and its pressure relieving device, and between the pressure relieving device and the discharge point of the relieving stream. Stop valves within a pressure relief path include, but are not limited to, those located directly upstream and downstream of the Pressure Relief Device (PRD) that may be provided exclusively for PRD maintenance.

valve failure controls: measure taken in valve design, configuration, and/or orientation for the purpose of preventing an internal failure of a stop valve from closing and blocking the pressure relief path. An example of valve failure controls is the installation of gate valves with the valve stem oriented at or below the horizontal position.

valve operation controls: devices used to ensure that stop valves within the pressure relief path are in their proper (open/closed) position. They include the following:

(a) mechanical interlocks which are designed to prevent valve operations which could result in the blocking of a pressure relief path before an alternative pressure relief path is put into service. Mechanical interlocks include physical linkages such as shaft or lever between stop valves and key based interlocking systems.

(b) instrumented interlocks which function similar to mechanical interlocks, except that instrument permissives and/or overrides are used instead of mechanical linkages/devices to prevent valve positions that block the pressure relief path.

(c) three-way valves designed to prevent a flow path from being blocked without another flow path being simultaneously opened.

M-5.3 RESPONSIBILITES

The User has the responsibility to establish and maintain a management system that ensures a vessel is not operated without overpressure protection. These responsibilities include, but are not limited to, the following:

(a) Deciding and specifying if the overpressure protection system will allow the use of stop valve(s) located in the relief path.

(b) Establishing the pressure relief philosophy and the administrative controls requirements.

(c) Establishing the required level of reliability, redundancy, and maintenance of instrumented interlocks, if used.

NOTE: The procedures contained in ISA S-84, "Application of Safety Instrumented Systems for the Process Industries," or IEC 61508, "Functional Safety of Electrical/Electronic/Programmable Electronic Safety-Related Systems," may be used for this purpose and analysis.

(d) Establishing procedures to ensure that the equipment is adequately protected against overpressure.

(e) Ensuring that authorization to operate identified valves is clear and that personnel are adequately trained for this task.

(f) Establishing management systems to ensure that administrative controls are effective.

(g) Establishing the analysis procedures and basis to be used in determining the potential levels of pressure if the stop valve(s) were closed.

(h) Ensuring that the analysis described in (g) is conducted by personnel who are qualified and experienced with the analysis procedure.

(i) Ensuring that the other system components are acceptable for the potential levels of pressure established in (g).

(j) Ensuring that the results of the analysis described in (g) are documented and are reviewed and accepted in writing by the individual responsible for operation of the vessel and valves.

(k) Ensuring that the administrative controls are reviewed and accepted in writing by the individual responsible for operation of the vessel and valves.

M-5.4 REQUIREMENTS OF PROCEDURES/ MANAGEMENT SYSTEM

(a) Procedures shall specify that valves requiring mechanical locking elements and/or valve operation controls and/or valve failure controls shall be documented and clearly identified as such.

(b) The Management System shall document the administrative controls (training and procedures), the valve controls, and the performance of the administrative controls in an auditable form for management review.

M-5.5 STOP VALVES PROVIDED IN SYSTEMS FOR WHICH THE PRESSURE ORIGINATES EXCLUSIVELY FROM AN OUTSIDE SOURCE

A vessel or system [see UG-133(c)] for which the pressure originates from an outside source exclusively may have individual pressure relieving devices on each vessel, or connected to any point on the connecting piping, or on any one of the vessels to be protected. Under such an arrangement, there may be stop valve(s) between any vessel and the pressure relieving devices, and these stop valve(s) need not have any administrative controls, valve operation controls, or valve failure controls, provided that the stop valves also isolate the vessel from the source of pressure.

Provided by IHS under license with ASME
No reproduction or networking permitted without license from IHS
Licensee=Chevron Phillips Chemical Co LP/5956674001
Not for Resale, 11/09/2014 20:41:36 MST

M-5.6 STOP VALVE(S) PROVIDED UPSTREAM OR DOWNSTREAM OF THE PRESSURE RELIEF DEVICE EXCLUSIVELY FOR MAINTENANCE OF THAT DEVICE

Full area stop valve(s) may be provided upstream and/or downstream of the pressure relieving device for the purpose of inspection, testing, and repair of the pressure relieving device or discharge header isolation, provided that, as a minimum, the following requirements are complied with:

(a) Administrative controls are provided to prevent unauthorized valve operation.

(b) Valves are provided with mechanical locking elements.

(c) Valve failure controls are provided to prevent accidental valve closure due to mechanical failure.

(d) Procedures are in place to provide pressure relief protection during the time when the system is isolated from its pressure relief path. These procedures shall ensure that when the system is isolated from its pressure relief path, an authorized person shall continuously monitor the pressure conditions of the vessel and shall be capable of responding promptly with documented, pre-defined actions, either stopping the source of overpressure or opening alternative means of pressure relief. This authorized person shall be dedicated to this task and shall have no other duties when performing this task.

(e) The system shall be isolated from its pressure relief path only for the time required to test, repair, and or replace the pressure relief device.

M-5.7 STOP VALVE(S) PROVIDED IN THE PRESSURE RELIEF PATH WHERE THERE IS NORMALLY PROCESS FLOW

Stop valve(s), excluding remotely operated valves and process control valves, may be provided in the relief path where there is normally a process flow, provided the requirements in (a) and (b), as a minimum, are complied with. These requirements are based on the potential overpressure scenarios involving accidental closure of a single stop valve within the relief path [see M-5.3(g)]. The accidental closure of these stop valve(s) in the pressure relief system need not be considered in setting the design pressure per UG-21.

(a) The flow resistance of the valve in the full open position does not reduce the relieving capacity below that required by the rules of this Division.

(b) The closure of the valve will be readily apparent to the operators such that corrective action, in accordance with documented operating procedures, is required, and

(1) if the pressure due to closure of the valve can not exceed 116% of MAWP, then no administrative controls, mechanical locking elements, valve operation controls, or valve failure controls are required, or

(2) if the pressure due to closure of the valve can not exceed the following:

(-a) the documented test pressure, multiplied by the ratio of the stress value at the design temperature to the stress value at the test temperature, or

(-b) if the test pressure is calculated per UG-99(c) in addition to the ratio in (-a), the test pressure shall also be multiplied by the ratio of the nominal thickness minus the corrosion allowance to the nominal thickness then, as a minimum, administrative controls and mechanical locking elements are required, or

(3) if the pressure due to closure of the valve could exceed the pressure in (2), then the user shall either

(-a) eliminate the stop valve, or

(-b) apply administrative controls, mechanical locking elements, valve failure controls, and valve operation controls, or

(-c) provide a pressure relief device to protect the equipment that could be overpressured due to closure of the stop valve

M-5.8 STOP VALVES PROVIDED IN THE RELIEF PATH OF EQUIPMENT WHERE THERE IS NORMALLY PROCESS FLOW AND WHERE FIRE IS THE ONLY POTENTIAL SOURCE OF OVERPRESSURE

Full area stop valve(s) located in the relief path of equipment where there is normally process flow and where fire is the only potential source of overpressure do not require physical elements such as locks or car seals, valve operation controls, or valve failure controls provided the user has documented operating procedures requiring that equipment isolated from its pressure relief path is depressured and free of liquids.

M-6 INLET PRESSURE DROP FOR HIGH LIFT, TOP GUIDED SAFETY, SAFETY RELIEF, AND PILOT OPERATED PRESSURE RELIEF VALVES IN COMPRESSIBLE FLUID SERVICE

(a) The nominal pipe size of all piping, valves and fittings, and vessel components between a pressure vessel and its safety, safety relief, or pilot operated pressure relief valves shall be at least as large as the nominal size of the device inlet, and the flow characteristics of the upstream system shall be such that the cumulative total of all nonrecoverable inlet losses shall not exceed 3% of the valve set pressure. The inlet pressure losses will be based on the valve nameplate capacity corrected for the characteristics of the flowing fluid.

(b) When two or more required safety, safety relief, or pilot operated pressure relief valves are placed on one connection, the inlet internal cross-sectional area of this connection shall be either sized to avoid restricting flow to the pressure relief valves or made at least equal to

Provided by IHS under license with ASME
No reproduction or networking permitted without license from IHS
Licensee=Chevron Phillips Chemical Co LP/5956674001
Not for Resale, 11/09/2014 20:41:36 MST

the combined inlet areas of the safety valves connected to it. The flow characteristics of the upstream system shall meet the requirements of (a) above with all valves relieving simultaneously.

M-7 DISCHARGE LINES FROM PRESSURE RELIEF DEVICES

(a) Where it is feasible, the use of a short discharge pipe or vertical riser, connected through long-radius elbows from each individual device, blowing directly to the atmosphere, is recommended. Such discharge pipes shall be at least of the same size as the valve outlet. Where the nature of the discharge permits, telescopic (sometimes called "broken") discharge lines, whereby condensed vapor in the discharge line, or rain, is collected in a drip pan and piped to a drain, are recommended.[107]

(b) When discharge lines are long, or where outlets of two or more devices having set pressures within a comparable range are connected into a common line, the effect of the back pressure that may be developed therein when certain devices operate must be considered [see UG-135(f)]. The sizing of any section of a common-discharge header downstream from each of the two or more pressure relieving devices that may reasonably be expected to discharge simultaneously shall be based on the total of their outlet areas, with due allowance for the pressure drop in all downstream sections. Use of specially designed devices suitable for use on high or variable back pressure service should be considered.

(c) The flow characteristics of the discharge system of high lift, top-guided safety, safety relief, or pilot operated pressure relief valves in compressible fluid service shall be such that the static pressure developed at the discharge flange of a conventional direct spring loaded valve will not exceed 10% of the set pressure when flowing at stamp capacity. Other valve types exhibit various degrees of tolerance to back pressure and the manufacturer's recommendation should be followed.

(d) All discharge lines shall be run as direct as is practicable to the point of final release for disposal. For the longer lines, due consideration shall be given to the advantage of long-radius elbows, avoidance of closeup fittings, and the minimizing of excessive line strains by expansion joints and well-known means of support to minimize line-sway and vibration under operating conditions.

(e) Provisions should be made in all cases for adequate drainage of discharge lines.

NOTE: It is recognized that no simple rule can be applied generally to fit the many installation requirements, which vary from simple short lines that discharge directly to the atmosphere to the extensive manifold discharge piping systems where the quantity and rate of the product to be disposed of requires piping to a distant safe place.

M-8 PRESSURE DROP, NONRECLOSING PRESSURE RELIEF DEVICES

Piping, valves and fittings, and vessel components comprising part of a nonreclosing device pressure relieving system shall be sized to prevent the vessel pressure from rising above the allowable overpressure.

M-9 GENERAL ADVISORY INFORMATION ON THE CHARACTERISTICS OF PRESSURE RELIEF DEVICES DISCHARGING INTO A COMMON HEADER

Because of the wide variety of types and kinds of pressure relief devices, it is not considered advisable to attempt a description in this Appendix of the effects produced by discharging them into a common header. Several different types of pressure relief devices may conceivably be connected into the same discharge header and the effect of back pressure on each type may be radically different. Data compiled by the manufacturers of each type of pressure relief device used should be consulted for information relative to its performance under the conditions anticipated.

M-10 PRESSURE DIFFERENTIALS FOR PRESSURE RELIEF VALVES

Due to the variety of service conditions and the various designs of safety and safety relief valves, only general guidance can be given regarding the differential between the set pressure of the valve (see UG-134) and the operating pressure of the vessel. Operating difficulty will be minimized by providing an adequate differential for the application. The following is general advisory information on the characteristics of the intended service and of the safety or safety relief valves that may bear on the proper pressure differential selection for a given application. These considerations should be reviewed early in the system design since they may dictate the MAWP of the system.

(a) Consideration of the Process Characteristics in the Establishment of the Operating Margin to Be Provided. To minimize operational problems, it is imperative that the user consider not only normal operating conditions of fluids, pressures, and temperatures, but also start-up and shutdown conditions, process upsets, anticipated ambient conditions, instrument response times, pressure surges due to quick closing valves, etc. When such conditions are not considered, the pressure relieving device may become, in effect, a pressure controller, a duty for which it is not designed. Additional consideration should be given to hazard and pollution associated with the release of the fluid. Larger differentials may be appropriate for fluids which are toxic, corrosive, or exceptionally valuable.

Provided by IHS under license with ASME
No reproduction or networking permitted without license from IHS
Licensee=Chevron Phillips Chemical Co LP/5956674001
Not for Resale, 11/09/2014 20:41:36 MST

(b) Consideration of Safety Relief Valve Characteristics. The blowdown characteristic and capability is the first consideration in selecting a compatible valve and operating margin. After a self-actuated release of pressure, the valve must be capable of reclosing above the normal operating pressure. For example, if the valve is set at 100 psig (700 kPa) with a 7% blowdown, it will close at 93 psig (641 kPa). The operating pressure must be maintained below 93 psig (641 kPa) in order to prevent leakage or flow from a partially open valve. Users should exercise caution regarding the blowdown adjustment of large spring-loaded valves. Test facilities, whether owned by Manufacturers, repair houses, or users, may not have sufficient capacity to accurately verify the blowdown setting. The settings cannot be considered accurate unless made in the field on the actual installation.

Pilot-operated valves represent a special case from the standpoints of both blowdown and tightness. The pilot portion of some pilot-operating valves can be set at blowdowns as short as 2%. This characteristic is not, however, reflected in the operation of the main valve in all cases. The main valve can vary considerably from the pilot depending on the location of the two components in the system. If the pilot is installed remotely from the main valve, significant time and pressure lags can occur, but reseating of the pilot assures reseating of the main valve. The pressure drop in the connecting piping between the pilot and the main valve must not be excessive; otherwise, the operation of the main valve will be adversely affected.

The tightness of the main valve portion of these combinations is considerably improved above that of conventional valves by pressure loading the main disk or by the use of soft seats or both.

Despite the apparent advantages of pilot-operated valves, users should be aware that they should not be employed in abrasive or dirty service, in applications where coking, polymerization, or corrosion of the wetted pilot parts can occur, or where freezing or condensation of the lading fluid at ambient temperatures is possible. For all applications the valve Manufacturer should be consulted prior to selecting a valve of this type.

Tightness capability is another factor affecting valve selection, whether spring loaded or pilot operated. It varies somewhat depending on whether metal or resilient seats are specified, and also on such factors as corrosion or temperature. The required tightness and test method should be specified to comply at a pressure no lower than the normal operating pressure of the process. A recommended procedure and acceptance standard is given in API 527. It should also be remembered that any degree of tightness obtained should not be considered permanent. Service operation of a valve almost invariably reduces the degree of tightness.

Application of special designs such as O-rings or resilient seats should be reviewed with the valve Manufacturer.

The anticipated behavior of the valves includes allowance for a plus-or-minus tolerance on set pressure which varies with the pressure level. Installation conditions, such as back pressure, variations, and vibrations, influence selection of special types and an increase in differential pressure.

(c) General Recommendations. The following pressure differentials are recommended unless the safety or safety relief valve has been designed or tested in a specific or similar service and a smaller differential has been recommended by the Manufacturer.

A minimum difference of 5 psi (35 kPa) is recommended for set pressures to 70 psi (485 kPa). In this category, the set pressure tolerance is ±2 psi (±13.8 kPa) [UG-134(d)(1)], and the differential to the leak test pressure is 10% or 5 psi (35 kPa), whichever is greater.

A minimum differential of 10% is recommended for set pressures from 71 psi to 1,000 psi (490 kPa to 6.9 MPa). In this category, the set pressure tolerance is ±3% and the differential to the leak test pressure is 10%.

A minimum differential of 7% is recommended for set pressures above 1,000 psi (6.9 MPa). In this category, the set pressure tolerance is ±3% and the differential to the leak test pressure should be 5%. Valves having small seat sizes will require additional maintenance when the pressure differential approaches these recommendations.

M-11 INSTALLATION OF SAFETY AND SAFETY RELIEF VALVES

Spring loaded safety and safety relief valves normally should be installed in the upright position with the spindle vertical. Where space or piping configuration preclude such an installation, the valve may be installed in other than the vertical position provided that:

(a) the valve design is satisfactory for such position;

(b) the media is such that material will not accumulate at the inlet of the valve; and

(c) drainage of the discharge side of the valve body and discharge piping is adequate.

M-12 REACTION FORCES AND EXTERNALLY APPLIED LOADS

(a) Reaction Thrust. The discharge of a pressure relief device imposes reactive flow forces on the device and associated piping. The design of the installation may require computation of the bending moments and stresses in the piping and vessel nozzle. There are momentum effects and pressure effects at steady state flow as well as transient dynamic loads caused by opening.

(b) External Loads. Mechanical forces may be applied to the pressure relief device by discharge piping as a result of thermal expansion, movement away from anchors, and weight of any unsupported piping. The resultant bending moments on a closed pressure relief device may cause

--`,,,`-`-`,,`,,`,`,,`---
Provided by IHS under license with ASME
No reproduction or networking permitted without license from IHS
Licensee=Chevron Phillips Chemical Co LP/5956674001
Not for Resale, 11/09/2014 20:41:36 MST

device leakage, device damage, and excessive stress in inlet piping. The design of the installation should consider these possibilities.

M-13 SIZING OF PRESSURE RELIEF DEVICES FOR FIRE CONDITIONS

(a) Excessive pressure may develop in pressure vessels by vaporization of the liquid contents and/or expansion of vapor content due to heat influx from the surroundings, particularly from a fire. Pressure relief systems for fire conditions are usually intended to release only the quantity of product necessary to lower the pressure to a predetermined safe level, without releasing an excessive quantity. This control is especially important in situations where release of the contents generates a hazard because of flammability or toxicity. Under fire conditions, consideration must also be given to the possibility that the safe pressure level for the vessel will be reduced due to heating of the vessel material, with a corresponding loss of strength. For some fire situations, there may be an insufficient rise in pressure to activate a pressure relief device. The user should consult other references, which provide guidelines for protecting vessels from the effects of fire.

(b) Several formulas have evolved over the years for calculating the pressure relief capacity required under fire conditions. The major differences involve heat flux rates. There is no single formula yet developed which takes into account all of the many factors which could be considered in making this determination. When fire conditions are a consideration in the design of a pressure vessel, the following references which provide recommendations for specific installations may be used:

API Recommended Practice 520, Sizing, Selection, and Installation of Pressure-Relieving Systems in Refineries, Part I — Sizing and Selection, Seventh Edition, Jaunary 2000, American Petroleum Institute, Washington, DC

API Recommended Practice 521, Guide for Pressure-Relieving and Depressuring Systems, Fourth Edition, March 1997, American Petroleum Institute, Washington, DC

API Standard 2000, Venting Atmospheric and Low-Pressure Storage Tanks (Nonrefrigerated and Refrigerated), Fifth Edition, April 1998, American Petroleum Institute, Washington, DC

AAR Standard M-1002, Specifications for Tank Cars, 1978, Association of American Railroads, Washington, DC

Safety Relief Device Standards: S-1.1, Cylinders for Compressed Gases; S-1.2, Cargo and Portable Tanks; and S-1.3, Compressed Gas Storage Containers, Compressed Gas Association, Arlington, VA

NFPA Code Nos. 30, 58, 59, and 59A, National Fire Protection Association, 1 Batterymarch Park, Quincy, MA 02169-7471

Pressure-Relieving Systems for Marine Cargo Bulk Liquid Containers, 1973, National Academy of Sciences, Washington, DC

Bulletin E-2, How to Size Safety Relief Devices, Phillips Petroleum Company, Bartlesville, OK

A Study of Available Fire Test Data as Related to Tank Car Safety Device Relieving Capacity Formulas, 1971, Phillips Petroleum Company, Bartlesville, OK

M-14 PRESSURE INDICATING DEVICE

If a pressure indicating device is provided to determine the vessel pressure at or near the set pressure of the relief device, one should be selected that spans the set pressure of the relief device and is graduated with an upper limit that is neither less than 1.25 times the set pressure of the relief device nor more than twice the maximum allowable working pressure of the vessel. Additional devices may be installed if desired.

Provided by IHS under license with ASME
No reproduction or networking permitted without license from IHS
Licensee=Chevron Phillips Chemical Co LP/5956674001
Not for Resale, 11/09/2014 20:41:36 MST

NONMANDATORY APPENDIX P
BASIS FOR ESTABLISHING ALLOWABLE STRESS VALUES FOR UCI, UCD, AND ULT MATERIALS

P-1

The values in Tables UCI-23, UCD-23, and ULT-23 are established by the Committee only. In the determination of allowable stress values for these materials, the Committee is guided by successful experience in service, insofar as evidence of satisfactory performance is available. Such evidence is considered equivalent to test data where operating conditions are known with reasonable certainty. In the evaluation of new materials, the Committee is guided to a certain extent by the comparison of test information with available data on successful applications of similar materials.

(a) Nomenclature

S_T = specified minimum tensile strength at room temperature, ksi

R_T = ratio of the average temperature dependent trend curve value of tensile strength to the room temperature tensile strength

S_Y = specified minimum yield strength at room temperature

R_Y = ratio of the average temperature dependent trend curve value of yield strength to the room temperature yield strength

S_{Ravg} = average stress to cause rupture at the end of 100,000 hr

S_{Rmin} = minimum stress to cause rupture at the end of 100,000 hr

S_C = average stress to produce a creep rate of 0.01%/1,000 hr

NA = not applicable

The maximum allowable stress for Tables ULT-23, UCI-23, and UCD-23 shall be the lowest value obtained from the criteria in Table P-1.

The stress criteria, mechanical properties considered, and the factors applied to establish the maximum allowable stresses for other stress tables are given in Mandatory Appendix 1 of Section II, Part D.

Provided by IHS under license with ASME
No reproduction or networking permitted without license from IHS
Licensee=Chevron Phillips Chemical Co LP/5956674001
Not for Resale, 11/09/2014 20:41:36 MST

Table P-1
Criteria for Establishing Allowable Stress Values

Product/ Material	Table	Below Room Temperature		Room Temperature and Above			
		Tensile Strength	Yield Strength	Tensile Strength		Yield Strength	
Cast iron	UCI-23	$\frac{S_T}{10}$	NA	$\frac{S_T}{10}$	$\frac{1.1}{10}S_T R_T$	NA	NA
Nodular iron	UCD-23	$\frac{S_T}{5}$	$^2/_3 S_Y$	$\frac{S_T}{5}$	$\frac{1.1}{5}S_T R_T$	$^2/_3 S_Y$	$^2/_3 S_Y R_Y$
Wrought or cast ferrous and nonferrous	ULT-23	$\frac{S_T R_T}{3.5}$	$^2/_3 S_Y R_Y$	NA	NA	NA	NA

--`,,,``,,``,,,,``,,,,

NONMANDATORY APPENDIX R PREHEATING

INTRODUCTION

Preheating may be employed during welding to assist in completion of the welded joint. The need for and temperature of preheat are dependent on a number of factors, such as the chemical analysis, degree of restraint of the parts being joined, elevated physical properties, and heavy thicknesses. Mandatory rules for preheating are, therefore, not given in this Division except as required in the footnotes that provide for exemptions to postweld heat treatment in Tables UCS-56-1 through UCS-56-11 and Tables UHA-32-1 through UHA-32-6. Some practices used for preheating are given below as a general guide for the materials listed by P-Numbers in Section IX. It is cautioned that the preheating temperatures listed below do not necessarily insure satisfactory completion of the welded joint and requirements for individual materials within the P-Number listing may have preheating more or less restrictive than this general guide. The procedure specification for the material being welded specifies the minimum preheating requirements under Section IX weld procedure qualification requirements.

The heat of welding may assist in maintaining preheat temperatures after the start of welding and for inspection purposes, temperature checks can be made near the weld. The method or extent of application of preheat is not therefore, specifically given. Normally when materials of two different P-Number groups are joined by welding, the preheat used will be that of the material with the higher preheat specified on the procedure specified on the procedure specification.

R-1 P-NO. 1 GROUP NOS. 1, 2, AND 3

(a) 175°F (79°C) for material which has both a specified maximum carbon content in excess of 0.30% and a thickness at the joint in excess of 1 in. (25 mm);

(b) 50°F (10°C) for all other materials in this P-Number.

R-2 P-NO. 3 GROUP NOS. 1, 2, AND 3

(a) 175°F (79°C) for material which has either a specified minimum tensile strength in excess of 70,000 psi (480 MPa) or a thickness at the joint in excess of $^5/_8$ in. (16 mm);

(b) 50°F (10°C) for all other materials in this P-Number.

R-3 P-NO. 4 GROUP NOS. 1 AND 2

(a) 250°F (121°C) for material which has either a specified minimum tensile strength in excess of 60,000 psi (410 MPa) or a thickness at the joint in excess of $^1/_2$ in. (13 mm);

(b) 50°F (10°C) for all other materials in this P-Number.

R-4 P-NOS. 5A AND 5B GROUP NO. 1

(a) 400°F (204°C) for material which has either a specified minimum tensile strength in excess of 60,000 psi (410 MPa), or has both a specified minimum chromium content above 6.0% and a thickness at the joint in excess of $^1/_2$ in. (13 mm);

(b) 300°F (149°C) for all other materials in these P-Numbers.

R-5 P-NO. 6 GROUP NOS. 1, 2, AND 3

400°F (204°C)

R-6 P-NO. 7 GROUP NOS. 1 AND 2

None

R-7 P-NO. 8 GROUP NOS. 1 AND 2

None

R-8 P-NO. 9 GROUPS

250°F (121°C) for P-No. 9A Group No. 1 materials
300°F (149°C) for P-No. 9B Group No. 1 materials

R-9 P-NO. 10 GROUPS

175°F (79°C) for P-No. 10A Group No. 1 materials
250°F (121°C) for P-No. 10B Group No. 2 materials
175°F (79°C) for P-No. 10C Group No. 3 materials
250°F (121°C) for P-No. 10F Group No. 6 materials

For P-No. 10C Group No. 3 materials, preheat is neither required nor prohibited, and consideration shall be given to the limitation of interpass temperature for various thicknesses to avoid detrimental effects on the mechanical properties of heat treated material.

For P-No. 10D Group No. 4 and P-No. 10I Group No. 1 materials, 300°F (149°C) with interpass temperature maintained between 350°F and 450°F (177°C and 232°C)

Provided by IHS under license with ASME
No reproduction or networking permitted without license from IHS
Licensee=Chevron Phillips Chemical Co LP/5956674001
Not for Resale, 11/09/2014 20:41:36 MST

R-10 P-NO. 11 GROUPS

(a) P-No. 11A Group
Group No. 1 — None (see Note)
Group No. 2 — Same as for P-No. 5 (see Note)
Group No. 3 — Same as for P-No. 5 (see Note)
Group No. 4 — 250°F (121°C)
(b) P-No. 11B Group
Group No. 1 — Same as for P-No. 3 (see Note)
Group No. 2 — Same as for P-No. 3 (see Note)
Group No. 3 — Same as for P-No. 3 (see Note)
Group No. 4 — Same as for P-No. 3 (see Note)
Group No. 5 — Same as for P-No. 3 (see Note)
Group No. 6 — Same as for P-No. 5 (see Note)
Group No. 7 — Same as for P-No. 5 (see Note)

NOTE: Consideration shall be given to the limitation of interpass temperature for various thicknesses to avoid detrimental effects on the mechanical properties of heat treated materials.

R-11 P-NO. 15E GROUP NO. 1

(a) 400°F (205°C) for material that has either a specified minimum tensile strength in excess of 60,000 psi (410 MPa) or has both a specified minimum chromium content above 6.0% and a thickness at the joint in excess of ½ in. (13 mm).

(b) 300°F (150°C) for all other materials in this grouping.

Provided by IHS under license with ASME
No reproduction or networking permitted without license from IHS
Licensee=Chevron Phillips Chemical Co LP/5956674001
Not for Resale, 11/09/2014 20:41:36 MST

NONMANDATORY APPENDIX S
DESIGN CONSIDERATIONS FOR BOLTED FLANGE CONNECTIONS

S-1 BOLTING

The primary purpose of the rules for bolted flange connections in Appendices 2 and Y is to ensure safety, but there are certain practical matters to be taken into consideration in order to obtain a serviceable design. One of the most important of these is the proportioning of the bolting, i.e., determining the number and size of the bolts.

In the great majority of designs the practice that has been used in the past should be adequate, viz., to follow the design rules in Appendices 2 and Y and tighten the bolts sufficiently to withstand the test pressure without leakage. The considerations presented in the following discussion will be important only when some unusual feature exists, such as a very large diameter, a high design pressure, a high temperature, severe temperature gradients, an unusual gasket arrangement, and so on.

The maximum allowable stress values for bolting given in Table 3 of Section II, Part D are design values to be used in determining the minimum amount of bolting required under the rules. However, a distinction must be kept carefully in mind between the design value and the bolt stress that might actually exist or that might be needed for conditions other than the design pressure. The initial tightening of the bolts is a prestressing operation, and the amount of bolt stress developed must be within proper limits, to insure, on the one hand, that it is adequate to provide against all conditions that tend to produce a leaking joint, and on the other hand, that it is not so excessive that yielding of the bolts and/or flanges can produce relaxation that also can result in leakage.

The first important consideration is the need for the joint to be tight in the hydrostatic test. An initial bolt stress of some magnitude greater than the design value therefore must be provided. If it is not, further bolt strain develops during the test, which tends to part the joint and thereby to decompress the gasket enough to allow leakage. The test pressure is usually $1^1/_2$ times the design pressure, and on this basis it may be thought that 50% extra bolt stress above the design value will be sufficient. However, this is an oversimplification because, on the one hand, the safety factor against leakage under test conditions in general need not be as great as under operating conditions. On the other hand, if a stress–strain analysis of the joint is made, it may indicate that an initial bolt stress still higher than $1^1/_2$ times the design value is needed. Such an analysis is one that considers the changes in bolt elongation, flange deflection, and gasket load that take place with the application of internal pressure, starting from the prestressed condition. In any event, it is evident that an initial bolt stress higher than the design value may and, in some cases, must be developed in the tightening operation, and it is the intent of this Division that such a practice is permissible, provided it includes necessary and appropriate provision to insure against excessive flange distortion and gross crushing of the gasket.

It is possible for the bolt stress to decrease after initial tightening, because of slow creep or relaxation of the gasket, particularly in the case of the "softer" gasket materials. This may be the cause of leakage in the hydrostatic test, in which case it may suffice merely to retighten the bolts. A decrease in bolt stress can also occur in service at elevated temperatures, as a result of creep in the bolt and/or flange or gasket material, with consequent relaxation. When this results in leakage under service conditions, it is common practice to retighten the bolts, and sometimes a single such operation, or perhaps several repeated at long intervals, is sufficient to correct the condition. To avoid chronic difficulties of this nature, however, it is advisable when designing a joint for high temperature service to give attention to the relaxation properties of the materials involved, especially for temperatures where creep is the controlling factor in design. This prestress should not be the controlling factor in design. This prestress should not be confused with initial bolt stress S_t used in the design of Nonmandatory Appendix Y flanges.

In the other direction, excessive initial bolt stress can present a problem in the form of yielding in the bolting itself, and may occur in the tightening operation to the extent of damage or even breakage. This is especially likely with bolts of small diameter and with bolt materials having a relatively low yield strength. The yield strength of mild carbon steel, annealed austenitic stainless steel, and certain of the nonferrous bolting materials can easily be exceeded with ordinary wrench effort in the smaller bolt sizes. Even if no damage is evident, any additional load generated when internal pressure is applied can produce further yielding with possible leakage. Such yielding can also occur when there is very little margin between initial bolt stress and yield strength.

An increase in bolt stress, above any that may be due to internal pressure, might occur in service during startup or other transient conditions, or perhaps even under normal operation. This can happen when there is an appreciable differential in temperature between the flanges and the bolts, or when the bolt material has a different coefficient

Provided by IHS under license with ASME
No reproduction or networking permitted without license from IHS
Licensee=Chevron Phillips Chemical Co LP/5956674001
Not for Resale, 11/09/2014 20:41:36 MST

of thermal expansion than the flange material. Any increase in bolt load due to this thermal effect, superposed on the load already existing, can cause yielding of the bolt material, whereas any pronounced decrease due to such effects can result in such a loss of bolt load as to be a direct cause of leakage. In either case, retightening of the bolts may be necessary, but it must not be forgotten that the effects of repeated retightening can be cumulative and may ultimately make the joint unserviceable.

In addition to the difficulties created by yielding of the bolts as described above, the possibility of similar difficulties arising from yielding of the flange or gasket material, under like circumstances or from other causes, should also be considered.

Excessive bolt stress, whatever the reason, may cause the flange to yield, even though the bolts may not yield. Any resulting excessive deflection of the flange, accompanied by permanent set, can produce a leaking joint when other effects are superposed. It can also damage the flange by making it more difficult to effect a tight joint thereafter. For example, irregular permanent distortion of the flange due to uneven bolt load around the circumference of the joint can warp the flange face and its gasket contact surface out of a true plane.

The gasket, too, can be overloaded, even without excessive bolt stress. The full initial bolt load is imposed entirely on the gasket, unless the gasket has a stop ring or the flange face detail is arranged to provide the equivalent. Without such means of controlling the compression of the gasket, consideration must be given to the selection of gasket type, size and material that will prevent gross crushing of the gasket.

From the foregoing, it is apparent that the bolt stress can vary over a considerable range above the design stress value. The design stress values for bolting in Table 3 of Section II, Part D have been set at a conservative value to provide a factor against yielding. At elevated temperatures, the design stress values are governed by the creep rate and stress-rupture strength. Any higher bolt stress existing before creep occurs in operation will have already served its purpose of seating the gasket and holding the hydrostatic test pressure, all at atmospheric temperature, and is not needed at the design pressure and temperature.

Theoretically, the margin against flange yielding is not as great. The design values for flange materials may be as high as five-eighths or two-thirds of the yield strength. However, the highest stress in a flange is usually the bending stress in the hub or shell, and is more or less localized. It is too conservative to assume that local yielding is followed immediately by overall yielding of the entire flange. Even if a "plastic hinge" should develop, the ring portion of the flange takes up the portion of the load the hub and shell refuse to carry. Yielding is far more significant if it occurs first in the ring, but the limitation in the rules on the combined hub and ring stresses provides a safeguard. In this connection, it should be noted that a dual set of stresses is given for some of the materials in Table 3 of Section II, Part D, and that the lower values should be used in order to avoid yielding in the flanges.

Another very important item in bolting design is the question of whether the necessary bolt stress is actually realized, and what special means of tightening, if any, must be employed. Most joints are tightened manually by ordinary wrenching, and it is advantageous to have designs that require no more than this. Some pitfalls must be avoided, however. The probable bolt stress developed manually, when using standard wrenches, is

$$S = \frac{45,000}{\sqrt{d}}$$

where

d = the nominal diameter of the bolt
S = the bolt stress

It can be seen that smaller bolts will have excessive stress unless judgment is exercised in pulling up on them. On the other hand, it will be impossible to develop the desired stress in very large bolts by ordinary hand wrenching. Impact wrenches may prove serviceable, but if not, resort may be had to such methods as preheating the bolt, or using hydraulically powered bolt tensioners. With some of these methods, control of the bolt stress is possible by means inherent in the procedure, especially if effective thread lubricants are employed, but in all cases the bolt stress can be regulated within reasonable tolerances by measuring the bolt elongation with suitable extensometer equipment. Ordinarily, simple wrenching without verification of the actual bolt stress meets all practical needs, and measured control of the stress is employed only when there is some special or important reason for doing so.

Provided by IHS under license with ASME
No reproduction or networking permitted without license from IHS
Licensee=Chevron Phillips Chemical Co LP/5956674001
Not for Resale, 11/09/2014 20:41:36 MST

NONMANDATORY APPENDIX T
TEMPERATURE PROTECTION

(a) Any pressure vessel in a service where it can be damaged by overheating should be provided with means by which the metal temperature can be controlled within safe limits or a safe shutdown can be effected.

(b) It is recognized that it is impracticable to specify detailed requirements to cover the multiplicity of means to prevent the operation of pressure vessels at overtemperature. Any means that in principle will provide compliance with (a) above will meet the intent of this Division.

Provided by IHS under license with ASME
No reproduction or networking permitted without license from IHS
Licensee=Chevron Phillips Chemical Co LP/5956674001
Not for Resale, 11/09/2014 20:41:36 MST

NONMANDATORY APPENDIX W
GUIDE FOR PREPARING MANUFACTURER'S DATA REPORTS

(13) W-1 GUIDE FOR PREPARING MANUFACTURER'S DATA REPORTS

(a) The instructions contained in this Appendix are to provide general guidance for the Manufacturer in preparing Data Reports as required in UG-120.

(b) Manufacturer's Data Reports required by ASME Code rules are not intended for pressure vessels that do not meet the provisions of the Code, including those of special design or construction that require and receive approval by jurisdictional authorities under the laws, rules, and regulations of the respective State or municipality in which the vessel is to be installed.

(c) The instructions for the Data Reports are identified by parenthesized numbers corresponding to circled numbers on the sample Forms in this Nonmandatory Appendix (see Table W-3).

(d) Where more space than has been provided for on the Form is needed for any item, indicate in the space, "See remarks," "See attached Form U-4," or "See attached Form U-5," as appropriate.

(e) For fixed tubesheet heat exchangers, Form U-5 shall be completed.

(f) Any quantity to which units apply shall be entered on the Manufacturer's Data Report with the chosen units.

W-2 GUIDE FOR PREPARING SUPPLEMENTAL DATA REPORTS FOR PARTS CONSTRUCTED OF GRAPHITE

This Supplementary Data Report shall be completed for pressure vessels or parts that are constructed of graphite. This Supplementary Data Report shall be attached and referenced in the primary Form U-1, Form U-1A, Form U-2, or Form U-2A Manufacturer's Data Report.

Fill in information identical to that shown on the Manufacturer's Data Report Form to which this sheet is supplementary.

Indicate the type of Certificate of Authorization, number, expiration date, and signature of the company representative.

Provided by IHS under license with ASME
No reproduction or networking permitted without license from IHS
Licensee=Chevron Phillips Chemical Co LP/5956674001
Not for Resale, 11/09/2014 20:41:36 MST

(13)

FORM U-1 MANUFACTURER'S DATA REPORT FOR PRESSURE VESSELS
As Required by the Provisions of the ASME Boiler and Pressure Vessel Code Rules, Section VIII, Division 1

1. Manufactured and certified by (1) _____
(Name and address of Manufacturer)
2. Manufactured for (2) _____
(Name and address of Purchaser)
3. Location of installation (3) _____
(Name and address)
4. Type (4) _____ (5) _____ (8) _____
(Horizontal, vertical, or sphere) (Tank, separator, jkt. vessel, heat exch., etc.) (Manufacturer's serial number)
(9) _____ (10) _____ (12) _____ _____
(CRN) (Drawing number) (National Board number) (Year built)
5. ASME Code, Section VIII, Div. 1 (13) _____ (14) _____ (15) _____
[Edition and Addenda, if applicable (date)] (Code Case number) [Special service per UG-120(d)]

Items 6–11 incl. to be completed for single wall vessels, jackets of jacketed vessels, shell of heat exchangers, or chamber of multichamber vessels.

6. Shell: (a) Number of course(s) (16) _____ (b) Overall length (17) _____

Course(s)			Material	Thickness		Long. Joint (Cat. A)			Circum. Joint (Cat. A, B & C)			Heat Treatment	
No.	Diameter	Length	Spec./Grade or Type	Nom.	Corr.	Type	Full, Spot, None	Eff.	Type	Full, Spot, None	Eff.	Temp.	Time
	(18)	(19)	(20)	(21)	(22)	(23)	(24)		(25)	(26)		(27)	

Body Flanges on Shells												
									Bolting			
No.	Type	ID	OD	Flange Thk	Min Hub Thk	Material	How Attached	Location	Num & Size	Bolting Material	Washer (OD, ID, thk)	Washer Material
						(20)			(32)	(32)		

7. Heads: (a) (20) (27) _____ (b) _____
(Material spec. number, grade or type) (H.T. — time and temp.) (Material spec. number, grade or type) (H.T. — time and temp.)

	Location (Top, Bottom, Ends)	Thickness		Radius		Elliptical Ratio	Conical Apex Angle	Hemispherical Radius	Flat Diameter	Side to Pressure		Category A		
		Min.	Corr.	Crown	Knuckle					Convex	Concave	Type	Full, Spot, None	Eff.
(a)		(28)	(22)	(29)	(30)								(31)	
(b)														

Body Flanges on Heads												
									Bolting			
	Location	Type	ID	OD	Flange Thk	Min Hub Thk	Material	How Attached	Num & Size	Bolting Material	Washer (OD, ID, thk)	Washer Material
(a)												
(b)							(20)		(32)	(32)		

8. Type of jacket (33) _____ Jacket closure (34) _____
(Describe as ogee and weld, bar, etc.)
If bar, give dimensions _____ If bolted, describe or sketch.
9. MAWP (35) _____ _____ at max. temp. (36) _____ _____ Min. design metal temp. (37) _____ at _____.
(Internal) (External) (Internal) (External)
10. Impact test (38) _____ at test temperature of (38) _____.
[Indicate *yes* or *no* and the component(s) impact tested]
11. Hydro., pneu., or comb. test pressure (39) _____ Proof test (40) _____

Items 12 and 13 to be completed for tube sections.

12. Tubesheet (20) _____ (18) _____ (21) _____ (22) _____ _____
[Stationary (material spec. no.)] [Diameter (subject to press.)] (Nominal thickness) (Corr. allow.) [Attachment (welded or bolted)]
(20) _____ (18) _____ (21) _____ (22) _____ _____
[Floating (material spec. no.)] (Diameter) (Nominal thickness) (Corr. allow.) (Attachment)
13. Tubes (20) _____ _____ _____ _____ _____
(Material spec. no., grade or type) (O.D.) (Nominal thickness) (Number) [Type (straight or U)]

(07/13)

--`,,,``,,,```,,,,`,`,``,`,,`,,```-`-`,,`,,`,`,,`---
Provided by IHS under license with ASME
No reproduction or networking permitted without license from IHS
Licensee=Chevron Phillips Chemical Co LP/5956674001
Not for Resale, 11/09/2014 20:41:36 MST

FORM U-1 (Cont'd)

Items 14–18 incl. to be completed for inner chambers of jacketed vessels or channels of heat exchangers.

14. Shell: (a) No. of course(s) _____ (b) Overall length _____

Course(s)			Material	Thickness		Long. Joint (Cat. A)			Circum. Joint (Cat. A, B & C)			Heat Treatment	
No.	Diameter	Length	Spec./Grade or Type	Nom.	Corr.	Type	Full, Spot, None	Eff.	Type	Full, Spot, None	Eff.	Temp.	Time

Body Flanges on Shells												
									Bolting			
No.	Type	ID	OD	Flange Thk	Min Hub Thk	Material	How Attached	Location	Num & Size	Bolting Material	Washer (OD, ID, thk)	Washer Material
						(20)			(32)	(32)		

15. Heads: (a) _____ (b) _____
(Material spec. number, grade or type) (H.T. — time and temp.) (Material spec. number, grade or type) (H.T. — time and temp.)

	Location (Top, Bottom, Ends)	Thickness		Radius		Elliptical Ratio	Conical Apex Angle	Hemispherical Radius	Flat Diameter	Side to Pressure		Category A		
		Min.	Corr.	Crown	Knuckle					Convex	Concave	Type	Full, Spot, None	Eff.
(a)														
(b)														

Body Flanges on Heads												
									Bolting			
	Location	Type	ID	OD	Flange Thk	Min Hub Thk	Material	How Attached	Num & Size	Bolting Material	Washer (OD, ID, thk)	Washer Material
(a)												
(b)							(20)		(32)	(32)		

16. MAWP _____ (Internal) _____ (External) at max. temp. _____ (Internal) _____ (External) Min. design metal temp. _____ at _____ .

17. Impact test _____ at test temperature of (38) _____ .
[Indicate *yes* or *no* and the component(s) impact tested]

18. Hydro., pneu., or comb. test pressure (39) _____ Proof test (40) _____

19. Nozzles, inspection, and safety valve openings:

Purpose (Inlet, Outlet, Drain, etc.)	No.	Diameter or Size	Type	Material		Nozzle Thickness		Reinforcement Material	Attachment Details		Location (Insp. Open.)
				Nozzle	Flange	Nom.	Corr.		Nozzle	Flange	
				(20)	(20)						
(41)		(42)	(43)	(44)	(45)	(46)		(47)	(48) (49)	(48) (49)	(50)

20. Supports: Skirt (51) _____ (Yes or no) Lugs (51) _____ (Number) Legs (51) _____ (Number) Others (51) _____ (Describe) Attached (51) _____ (Where and how)

21. Manufacturer's Partial Data Reports properly identified and signed by Commissioned Inspectors have been furnished for the following items of the report (list the name of part, item number, Manufacturer's name, and identifying number):
(52) _____

22. Remarks _____
(53) _____

(07/13)

Provided by IHS under license with ASME
No reproduction or networking permitted without license from IHS
Licensee=Chevron Phillips Chemical Co LP/5956674001
Not for Resale, 11/09/2014 20:41:36 MST

FORM U-1 (Cont'd)

(58) **CERTIFICATE OF SHOP COMPLIANCE**

We certify that the statements in this report are correct and that all details of design, material, construction, and workmanship of this vessel conform to the ASME BOILER AND PRESSURE VESSEL CODE, Section VIII, Division 1.

U Certificate of Authorization Number _____ Expires _____

Date _____ Name _____ (Manufacturer) Signed _____ (Representative)

(60) **CERTIFICATE OF SHOP INSPECTION**

I, the undersigned, holding a valid commission issued by the National Board of Boiler and Pressure Vessel Inspectors and employed by _____ of _____ have inspected the pressure vessel described in this Manufacturer's Data Report on _____ , and state that, to the best of my knowledge and belief, the Manufacturer has constructed this pressure vessel in accordance with ASME BOILER AND PRESSURE VESSEL CODE, Section VIII, Division 1. By signing this certificate neither the Inspector nor his/her employer makes any warranty, expressed or implied, concerning the pressure vessel described in this Manufacturer's Data Report. Furthermore, neither the Inspector nor his/her employer shall be liable in any manner for any personal injury or property damage or a loss of any kind arising from or connected with this inspection.

Date _____ Signed _____ (Authorized Inspector) Commissions _____ (62) [National Board (incl. endorsements)]

(64) **CERTIFICATE OF FIELD ASSEMBLY COMPLIANCE**

We certify that the statements in this report are correct and that the field assembly construction of all parts of this vessel conforms with the requirements of ASME BOILER AND PRESSURE VESSEL CODE, Section VIII, Division 1. U Certificate of Authorization Number _____ Expires _____ .

Date _____ Name _____ (Assembler) Signed _____ (Representative)

(65) **CERTIFICATE OF FIELD ASSEMBLY INSPECTION**

I, the undersigned, holding a valid commission issued by the National Board of Boiler and Pressure Vessel Inspectors and employed by _____ of _____ , have compared the statements in this Manufacturer's Data Report with the described pressure vessel and state that parts referred to as data items _____ (66) _____ , not included in the certificate of shop inspection, have been inspected by me and to the best of my knowledge and belief, the Manufacturer has constructed and assembled this pressure vessel in accordance with the ASME BOILER AND PRESSURE VESSEL CODE, Section VIII, Division 1. The described vessel was inspected and subjected to a hydrostatic test of _____. By signing this certificate neither the Inspector nor his/her employer makes any warranty, expressed or implied, concerning the pressure vessel described in this Manufacturer's Data Report. Furthermore, neither the Inspector nor his/her employer shall be liable in any manner for any personal injury or property damage or a loss of any kind arising from or connected with this inspection.

Date _____ Signed _____ (Authorized Inspector) Commissions _____ (62) [National Board (incl. endorsements)]

(07/13)

Provided by IHS under license with ASME

No reproduction or networking permitted without license from IHS

Licensee=Chevron Phillips Chemical Co LP/5956674001
Not for Resale, 11/09/2014 20:41:36 MST

(13)

FORM U-1A MANUFACTURER'S DATA REPORT FOR PRESSURE VESSELS
(Alternative Form for Single Chamber, Completely Shop or Field Fabricated Vessels Only)
As Required by the Provisions of the ASME Boiler and Pressure Vessel Code Rules, Section VIII, Division 1

1. Manufactured and certified by (1) (Name and address of Manufacturer)
2. Manufactured for (2) (Name and address of Purchaser)
3. Location of installation (3) (Name and address)
4. Type (5) (Horizontal or vertical, tank) (8) (Manufacturer's serial number) (9) (CRN) (10) (Drawing number) (12) (National Board number) ____ (Year built)
5. ASME Code, Section VIII, Division 1 (13) [Edition and Addenda, if applicable (date)] (14) (Code Case numbers) (15) [Special service per UG-120(d)]
6. Shell (20) (Material spec. number, grade) (21) (Nominal thickness) (22) (Corr. allow.) (18) (Inner diameter) (17) [Length (overall)]

Body Flanges on Shells												
									Bolting			
No.	Type	ID	OD	Flange Thk	Min Hub Thk	Material	How Attached	Location	Num & Size	Bolting Material	Washer (OD, ID, thk)	Washer Material
						(20)			(32)	(32)		

7. Seams (23) [Long. (welded, dbl., sngl., lap, butt)] (24) [R.T. (spot or full)] (24) (Eff., %) (27) (H.T. temp.) (27) (Time, hr) (25) [Girth (welded, dbl., sngl., lap, butt)] (26) [R.T. (spot or full)] (26) (Eff., %) (16) (No. of courses)
8. Heads: (a) Material (17) (27) (31) (Spec. no., grade) (b) Material ____ (Spec. no., grade)

	Location (Top, Bottom, Ends)	Minimum Thickness	Corrosion Allowance	Crown Radius	Knuckle Radius	Elliptical Ratio	Conical Apex Angle	Hemispherical Radius	Flat Diameter	Side to Pressure (Convex or Concave)
(a)		(28)	(22)	(29)	(30)					
(b)										

Body Flanges on Heads												
									Bolting			
	Location	Type	ID	OD	Flange Thk	Min Hub Thk	Material	How Attached	Num & Size	Bolting Material	Washer (OD, ID, thk)	Washer Material
(a)												
(b)							(20)		(32)	(32)		

9. MAWP (35) (Internal) ____ (External) at max. temp. (36) (Internal) ____ (External) .
   Min. design metal temp. (37) at ____ . Hydro., pneu., or comb. test pressure (39) .
   Proof test (40) .
10. Nozzles, inspection, and safety valve openings:

Purpose (Inlet, Outlet, Drain etc.)	No.	Diameter or Size	Type	Material		Nozzle Thickness		Reinforcement Material	Attachment Details		Location (Insp. Open.)
				Nozzle	Flange	Nom.	Corr.		Nozzle	Flange	
				(20)	(20)						
(41)		(42)	(43)	(44)	(45)	(46)		(47)	(48) (49)	(48) (49)	(50)

11. Supports: Skirt (51) (Yes or no) Lugs ____ (Number) Legs ____ (Number) Other ____ (Describe) Attached ____ (Where and how)
12. Remarks: Manufacturer's Partial Data Reports properly identified and signed by Commissioned Inspectors have been furnished for the following items of the report: ____ (Name of part, item number, Manufacturer's name and identifying stamp)
    (38) (52) (53)

(07/13)

Provided by IHS under license with ASME
No reproduction or networking permitted without license from IHS
Licensee=Chevron Phillips Chemical Co LP/5956674001
Not for Resale, 11/09/2014 20:41:36 MST

FORM U-1A (Back)

(58)

CERTIFICATE OF SHOP/FIELD COMPLIANCE

We certify that the statements made in this report are correct and that all details of design, material, construction, and workmanship of this vessel conform to the ASME BOILER AND PRESSURE VESSEL CODE, Section VIII, Division 1. "U" Certificate of Authorization Number _____(58)_____ expires _____ .

Date _____ Co. name _____(58)_____ (Manufacturer) Signed _____(58)_____ (Representative)

(60)

CERTIFICATE OF SHOP/FIELD INSPECTION

Vessel constructed by _____ at _____ .

I, the undersigned, holding a valid commission issued by the National Board of Boiler and Pressure Vessel Inspectors and employed by _____ have inspected the component described in this Manufacturer's Data Report on _____ , and state that, to the best of my knowledge and belief, the Manufacturer has constructed this pressure vessel in accordance with ASME BOILER AND PRESSURE VESSEL CODE, Section VIII, Division 1. By signing this certificate neither the Inspector nor his/her employer makes any warranty, expressed or implied, concerning the pressure vessel described in this Manufacturer's Data Report. Furthermore, neither the Inspector nor his/her employer shall be liable in any manner for any personal injury or property damage or a loss of any kind arising from or connected with this inspection.

Date _____ Signed _____(60)_____ (Authorized Inspector) Commissions _____(62)_____ [National Board (incl. endorsements)]

(07/13)

Provided by IHS under license with ASME

No reproduction or networking permitted without license from IHS

Licensee=Chevron Phillips Chemical Co LP/5956674001
Not for Resale, 11/09/2014 20:41:36 MST

(13)

FORM U-1B MANUFACTURER'S SUPPLEMENTARY DATA REPORT FOR GRAPHITE PRESSURE VESSELS (As Required by the Provisions of the ASME Code Rules, Section VIII, Division 1)

1. Manufactured and certified by _____ (1) _____
(Name and address of Manufacturer)

2. Manufactured for _____ (2) _____
(Name and address of Purchaser)

3. Location of installation _____ (3) _____
(Name and address)

4. Type _____ (4) _____ (Horizontal, vertical) Use _____ (5) _____ (Tank, vessel, heat exch., etc.) Manufacturer's serial no. _____ (8) _____ (Manufacturer's serial no.)

CRN no. _____ (9) _____ (CRN) Dwg no. _____ (10) _____ (Drawing number) National Board no. _____ (12) _____ (National Board number) Year built _____

5. ASME Code Section VIII, Div. 1 edition/addenda _____ (13) _____ [Edition and Addenda (date)] Code case _____ (14) _____ (Code Case number)

6. Graphite components:

Item	Material Designation	Compressive Strength	Tensile Strength	CMTR No.
(7)				

(54)

Certificate of Authorization: Type _____ No. _____ Expires _____

Date _____ Name _____ Signed _____

Date _____ Signed _____ Commissions and endorsements _____ (62) _____

(07/13)

Provided by IHS under license with ASME
No reproduction or networking permitted without license from IHS
Licensee=Chevron Phillips Chemical Co LP/5956674001
Not for Resale, 11/09/2014 20:41:36 MST

(13)

FORM U-2 MANUFACTURER'S PARTIAL DATA REPORT
A Part of a Pressure Vessel Fabricated by One Manufacturer for Another Manufacturer
As Required by the Provisions of the ASME Boiler and Pressure Vessel Code Rules, Section VIII, Division 1

1. Manufactured and certified by (1)
(Name and address of Manufacturer)

2. Manufactured for (2)
(Name and address of Purchaser)

3. Location of installation (3) (56)
(Name and address)

4. Type (7) [Description of vessel part (shell, two-piece head, tube bundle)] (8) (Manufacturer's serial number) (9) (CRN)

(12) (National Board number) (10) (Drawing number) (11) (57) (Drawing prepared by) (Year built)

5. ASME Code, Section VIII, Div. 1 (13) [Edition and Addenda, if applicable (date)] (14) (Code Case number) (15) (56) [Special service per UG-120(d)]

Items 6–11 incl. to be completed for single wall vessels, jackets of jacketed vessels, shell of heat exchangers, or chamber of multichamber vessels.

6. Shell: (a) Number of course(s) (16) (b) Overall length (17)

Course(s)			Material	Thickness		Long. Joint (Cat. A)			Circum. Joint (Cat. A, B & C)			Heat Treatment	
No.	Diameter	Length	Spec./Grade or Type	Nom.	Corr.	Type	Full, Spot, None	Eff.	Type	Full, Spot, None	Eff.	Temp.	Time
	(18)	(19)	(20)	(21)	(22)	(23)	(24)		(25)	(26)		(27)	

Body Flanges on Shells												
									Bolting			
No.	Type	ID	OD	Flange Thk	Min Hub Thk	Material	How Attached	Location	Num & Size	Bolting Material	Washer (OD, ID, thk)	Washer Material
						(20)			(32)	(32)		

7. Heads: (a) (20) (27) (Material spec. number, grade or type) (H.T. — time and temp.) (b) (Material spec. number, grade or type) (H.T. — time and temp.)

	Location (Top, Bottom, Ends)	Thickness		Radius		Elliptical Ratio	Conical Apex Angle	Hemispherical Radius	Flat Diameter	Side to Pressure		Category A		
		Min.	Corr.	Crown	Knuckle					Convex	Concave	Type	Full, Spot, None	Eff.
(a)		(28)	(22)	(29)	(30)								(31)	
(b)														

Body Flanges on Heads												
									Bolting			
	Location	Type	ID	OD	Flange Thk	Min Hub Thk	Material	How Attached	Num & Size	Bolting Material	Washer (OD, ID, thk)	Washer Material
(a)												
(b)							(20)		(32)	(32)		

8. Type of jacket (33) Jacket closure (34) (Describe as ogee & weld, bar, etc.)

If bar, give dimensions _____ If bolted, describe or sketch.

9. MAWP (35) (56) (Internal) _____ (External) at max. temp. (36) (Internal) _____ (External) . Min. design metal temp. (37) at _____ .

10. Impact test (38) [Indicate *yes* or *no* and the component(s) impact tested] at test temperature of (38) .

11. Hydro., pneu., or comb. test pressure (39) Proof test (40)

Items 12 and 13 to be completed for tube sections.

12. Tubesheet (20) [Stationary (material spec. no.)] (18) [Diameter (subject to pressure)] (21) (Nominal thickness) (22) (56) (Corr. allow.) [Attachment (welded or bolted)]

(20) [Floating (material spec. no.)] (18) (Diameter) (21) (Nominal thickness) (22) (56) (Corr. allow.) (Attachment)

13. Tubes (20) (Material spec. no., grade or type) (O.D.) (Nominal thickness) (Number) [Type (straight or U)]

(07/13)

Provided by IHS under license with ASME
No reproduction or networking permitted without license from IHS
Licensee=Chevron Phillips Chemical Co LP/5956674001
Not for Resale, 11/09/2014 20:41:36 MST

FORM U-2 (Cont'd)

Items 14–18 incl. to be completed for inner chambers of jacketed vessels or channels of heat exchangers.

14. Shell: (a) No. of course(s) _____ (b) Overall length _____

Course(s)			Material	Thickness		Long. Joint (Cat. A)			Circum. Joint (Cat. A, B & C)			Heat Treatment	
No.	Diameter	Length	Spec./Grade or Type	Nom.	Corr.	Type	Full, Spot, None	Eff.	Type	Full, Spot, None	Eff.	Temp.	Time
	18	19	20	21	22	23	24		25	26		27	

Body Flanges on Shells												
									Bolting			
No.	Type	ID	OD	Flange Thk	Min Hub Thk	Material	How Attached	Location	Num & Size	Bolting Material	Washer (OD, ID, thk)	Washer Material
						20			32	32		

15. Heads: (a) _____ (b) _____
(Material spec. number, grade or type) (H.T. — time and temp.) (Material spec. number, grade or type) (H.T. — time and temp.)

	Location (Top, Bottom, Ends)	Thickness		Radius		Elliptical Ratio	Conical Apex Angle	Hemispherical Radius	Flat Diameter	Side to Pressure		Category A		
		Min.	Corr.	Crown	Knuckle					Convex	Concave	Type	Full, Spot, None	Eff.
(a)														
(b)														

Body Flanges on Heads												
									Bolting			
	Location	Type	ID	OD	Flange Thk	Min Hub Thk	Material	How Attached	Num & Size	Bolting Material	Washer (OD, ID, thk)	Washer Material
(a)												
(b)							20		32	32		

16. MAWP _____ _____ at max. temp. _____ _____. Min. design metal temp. _____ at _____.
(Internal) (External) (Internal) (External)

17. Impact test _____ 38 _____ at test temperature of _____ 38 _____.
[Indicate *yes* or *no* and the component(s) impact tested]

18. Hydro., pneu., or comb. test pressure _____ Proof test _____

19. Nozzles, inspection and safety valve openings:

Purpose (Inlet, Outlet, Drain, etc.)	No.	Diameter or Size	Type	Material		Nozzle Thickness		Reinforcement Material	Attachment Details		Location (Insp. Open.)
				Nozzle	Flange	Nom.	Corr.		Nozzle	Flange	
				20	20						
41		42	43	44	45	46		47	48 49	48 49	50

20. Identification or part(s) 68

Name of Part	Quantity	Line No.	Mfr's. Identification No.	Mfr's. Drawing No.	CRN	National Board No.	Year Built
69		70	71	10	9	12	

21. Supports: Skirt _____ 51 _____ Lugs _____ 51 _____ Legs _____ 51 _____ Others _____ 51 _____ Attached _____ 51 _____
(Yes or no) (Number) (Number) (Describe) (Where and how)

22. Remarks _____
53

(07/13)

Provided by IHS under license with ASME
No reproduction or networking permitted without license from IHS
Licensee=Chevron Phillips Chemical Co LP/5956674001
Not for Resale, 11/09/2014 20:41:36 MST

FORM U-2 (Cont'd)

(58) **CERTIFICATE OF SHOP/FIELD COMPLIANCE**

We certify that the statements in this report are correct and that all details of material, construction, and workmanship of this pressure vessel part conform to the ASME BOILER AND PRESSURE VESSEL CODE, Section VIII, Division 1.

U Certificate of Authorization Number _____ Expires _____

Date _____ Name _____ (Manufacturer) Signed _____ (Representative)

(60) **CERTIFICATE OF SHOP/FIELD INSPECTION**

I, the undersigned, holding a valid commission issued by the National Board of Boiler and Pressure Vessel Inspectors and employed by _____ of _____ have inspected the pressure vessel part described in this Manufacturer's Data Report on _____, and state that, to the best of my knowledge and belief, the Manufacturer has constructed this pressure vessel part in accordance with ASME BOILER AND PRESSURE VESSEL CODE, Section VIII, Division 1. By signing this certificate neither the Inspector nor his/her employer makes any warranty, expressed or implied, concerning the pressure vessel part described in this Manufacturer's Data Report. Furthermore, neither the Inspector nor his/her employer shall be liable in any manner for any personal injury or property damage or a loss of any kind arising from or connected with this inspection.

Date _____ Signed _____ (Authorized Inspector) Commissions _____ (63) [National Board (incl. endorsements)]

(07/13)

Provided by IHS under license with ASME
No reproduction or networking permitted without license from IHS
Licensee=Chevron Phillips Chemical Co LP/5956674001
Not for Resale, 11/09/2014 20:41:36 MST

(13)

FORM U-2A MANUFACTURER'S PARTIAL DATA REPORT (ALTERNATIVE FORM)
A Part of a Pressure Vessel Fabricated by One Manufacturer for Another Manufacturer
As Required by the Provisions of the ASME Boiler and Pressure Vessel Code Rules, Section VIII, Division 1

1. Manufactured and certified by (1) _____
(Name and address of Manufacturer)
2. Manufactured for (2) _____
(Name and address of Purchaser)
3. Location of installation (3) (56) _____
(Name and address)
4. Type (7) _____ [Description of vessel part (shell, two-piece head, tube bundle)] (8) _____ (Manufacturer's serial number) (9) _____ (CRN)
(12) _____ (National Board number) (10) _____ (Drawing umber) (11) (57) _____ (Drawing prepared by) _____ (Year built)
5. ASME Code, Section VIII, Div. 1 (13) _____ (Edition and Addenda, if applicable (date)) (14) _____ (Code Case number) (15) (56) _____ [Special service per UG-120(d)]
6. Shell: (a) Number of course(s) (16) _____ (b) Overall length (17) _____

Course(s)			Material	Thickness		Long. Joint (Cat. A)			Circum. Joint (Cat. A, B & C)			Heat Treatment	
No.	Diameter	Length	Spec./Grade or Type	Nom.	Corr.	Type	Full, Spot, None	Eff.	Type	Full, Spot, None	Eff.	Temp.	Time
	(18)	(19)	(20)	(21)	(22)	(23)	(24)		(25)	(26)		(27)	
				(56)									

Body Flanges on Shells												
									Bolting			
No.	Type	ID	OD	Flange Thk	Min Hub Thk	Material	How Attached	Location	Num & Size	Bolting Material	Washer (OD, ID, thk)	Washer Material
						(20)			(32)	(32)		

7. Heads: (a) (20) (27) _____ (Material spec. number, grade or type) (H.T. — time and temp.) (b) _____ (Material spec. number, grade or type) (H.T. — time and temp.)

	Location (Top, Bottom, Ends)	Thickness		Radius		Elliptical Ratio	Conical Apex Angle	Hemispherical Radius	Flat Diameter	Side to Pressure		Category A		
		Min.	Corr.	Crown	Knuckle					Convex	Concave	Type	Full, Spot, None	Eff.
(a)		(28)	(22)	(29)	(30)								(31)	
(b)			(56)											

Body Flanges on Heads												
									Bolting			
	Location	Type	ID	OD	Flange Thk	Min Hub Thk	Material	How Attached	Num & Size	Bolting Material	Washer (OD, ID, thk)	Washer Material
(a)												
(b)							(20)		(32)	(32)		

8. MAWP (35) (56) _____ (Internal) _____ (External) at max. temp. (36) _____ (Internal) _____ (External). Min. design metal temp. (37) (56) _____ at _____.
9. Impact test (38) _____ [Indicate *yes* or *no* and the component(s) impact tested] at test temperature of (38) _____.
10. Hydro., pneu., or comb. test pressure (39) _____ Proof test (40) _____
11. Nozzles, inspection, and safety valve openings:

Purpose (Inlet, Outlet, Drain, etc.)	No.	Diameter or Size	Type	Material		Nozzle Thickness		Reinforcement Material	Attachment Details		Location (Insp. Open.)
				Nozzle	Flange	Nom.	Corr.		Nozzle	Flange	
				(20)	(20)						
(41)		(42)	(43)	(44)	(45)	(46)		(47)	(48) (49)	(48) (49)	(50)

12. Identification of part(s) (68)

Name of Part	Quantity	Line No.	Mfr's. Identification No.	Mfr's. Drawing No.	CRN	National Board No.	Year Built
(69)		(70)	(71)	(10)	(9)	(12)	

13. Supports: Skirt (51) _____ (Yes or no) Lugs (51) _____ (Number) Legs (51) _____ (Number) Other (51) _____ (Describe) Attached (51) _____ (Where and how)
14. Remarks (53) _____

(07/13)

Provided by IHS under license with ASME
No reproduction or networking permitted without license from IHS
Licensee=Chevron Phillips Chemical Co LP/5956674001
Not for Resale, 11/09/2014 20:41:36 MST

FORM U-2A (Back)

(58) **CERTIFICATE OF SHOP/FIELD COMPLIANCE**

We certify that the statements made in this report are correct and that all details of material, construction, and workmanship of this pressure vessel part conform to the ASME BOILER AND PRESSURE VESSEL CODE, Section VIII, Division 1.

U Certificate of Authorization No. _____ Expires _____

Date _____ Name _____ (Manufacturer) Signed _____ (Representative)

(60) **CERTIFICATE OF SHOP/FIELD INSPECTION**

I, the undersigned, holding a valid commission issued by the National Board of Boiler and Pressure Vessel Inspectors and employed by _____ of _____ have inspected the pressure vessel part described in this Manufacturer's Data Report on _____, and state that, to the best of my knowledge and belief, the Manufacturer has constructed this pressure vessel part in accordance with ASME BOILER AND PRESSURE VESSEL CODE, Section VIII, Division 1. By signing this certificate neither the Inspector nor his/her employer makes any warranty, expressed or implied, concerning the pressure vessel part described in this Manufacturer's Data Report. Furthermore, neither the Inspector nor his/her employer shall be liable in any manner for any personal injury or property damage or a loss of any kind arising from or connected with this inspection.

Date _____ Signed _____ (Authorized Inspector) Commissions _____ (63) [National Board (incl. endorsements)]

(07/13)

Provided by IHS under license with ASME

No reproduction or networking permitted without license from IHS

Licensee=Chevron Phillips Chemical Co LP/5956674001
Not for Resale, 11/09/2014 20:41:36 MST

FORM U-3 MANUFACTURER'S CERTIFICATE OF COMPLIANCE COVERING PRESSURE VESSELS TO BE STAMPED WITH THE UM DESIGNATOR [SEE U-1(i)] As Required by the Provisions of the ASME Boiler and Pressure Vessel Code Rules, Section VIII, Division 1 (13)

1. Manufactured and certified by (1) _____ (Name and address of Manufacturer)
2. Manufactured for (2) _____ (Name and address of Purchaser)
3. Location of installation (3) _____ (Name and address)
4. Type (4) _____ (Horizontal, vertical, or sphere) (5) _____ (Tank, separator, jkt. vessel, heat exch., etc.) (6) _____ (Capacity) (8) _____ (Manufacturer's serial number)
   (9) _____ (CRN) (10) _____ (Drawing number) (12) _____ (National Board number) _____ (Year built)
5. ASME Code, Section VIII, Div. 1 (13) _____ [Edition and Addenda, if applicable (date)] (14) _____ (Code Case number)

Items 6–11 incl. to be completed for single wall vessels, jackets of jacketed vessels, shell of heat exchangers, or chamber of multichamber vessels.

6. Shell: (a) Number of course(s) (16) _____ (b) Overall length (17) _____

Course(s)			Material	Thickness		Long. Joint (Cat. A)			Circum. Joint (Cat. A, B & C)			Heat Treatment	
No.	Diameter	Length	Spec./Grade or Type	Nom.	Corr.	Type	Full, Spot, None	Eff.	Type	Full, Spot, None	Eff.	Temp.	Time
	(18)	(19)	(20)	(21)	(22)	(23)	(24)		(25)	(26)		(27)	

Body Flanges on Shells												
									Bolting			
No.	Type	ID	OD	Flange Thk	Min Hub Thk	Material	How Attached	Location	Num & Size	Bolting Material	Washer (OD, ID, thk)	Washer Material
						(20)			(32)	(32)		

7. Heads: (a) (20) (27) _____ (Material spec. number, grade or type) (H.T. — time and temp.) (b) _____ (Material spec. number, grade or type) (H.T. — time and temp.)

	Location (Top, Bottom, Ends)	Thickness		Radius		Elliptical Ratio	Conical Apex Angle	Hemispherical Radius	Flat Diameter	Side to Pressure		Category A		
		Min.	Corr.	Crown	Knuckle					Convex	Concave	Type	Full, Spot, None	Eff.
(a)		(28)	(22)	(29)	(30)								(31)	
(b)														

Body Flanges on Heads												
									Bolting			
	Location	Type	ID	OD	Flange Thk	Min Hub Thk	Material	How Attached	Num & Size	Bolting Material	Washer (OD, ID, thk)	Washer Material
(a)												
(b)							(20)		(32)	(32)		

8. Type of jacket (33) _____ Jacket closure (34) _____ (Describe as ogee and weld, bar, etc.)
   If bar, give dimensions _____ If bolted, describe or sketch.
9. MAWP (35) _____ (Internal) _____ (External) at max. temp. (36) _____ (Internal) _____ (External) Min. design metal temp. (37) _____ at _____.
10. Impact test (38) _____ [Indicate *yes* or *no* and the component(s) impact tested] at test temperature of (38) _____.
11. Hydro., pneu., or comb. test pressure (39) _____ Proof test (40) _____

Items 12 and 13 to be completed for tube sections.

12. Tubesheet (20) _____ [Stationary (material spec. no.)] (18) _____ [Diameter (subject to press.)] (21) _____ (Nominal thickness) (22) _____ (Corr. allow.) _____ [Attachment (welded or bolted)]
    (20) _____ [Floating (material spec. no.)] (18) _____ (Diameter) (21) _____ (Nominal thickness) (22) _____ (Corr. allow.) _____ (Attachment)
13. Tubes (20) _____ (Material spec. no., grade or type) _____ (O.D.) _____ (Nominal thickness) _____ (Number) _____ [Type (straight or U)]

(07/13)

Provided by IHS under license with ASME
No reproduction or networking permitted without license from IHS
Licensee=Chevron Phillips Chemical Co LP/5956674001
Not for Resale, 11/09/2014 20:41:36 MST

FORM U-3 (Back)

Items 14–18 incl. to be completed for inner chambers of jacketed vessels or channels of heat exchangers.

14. Shell: (a) No. of course(s) _____ (b) Overall length _____

Course(s)			Material	Thickness		Long. Joint (Cat. A)			Circum. Joint (Cat. A, B & C)			Heat Treatment	
No.	Diameter	Length	Spec./Grade or Type	Nom.	Corr.	Type	Full, Spot, None	Eff.	Type	Full, Spot, None	Eff.	Temp.	Time

Body Flanges on Shells												
									Bolting			
No.	Type	ID	OD	Flange Thk	Min Hub Thk	Material	How Attached	Location	Num & Size	Bolting Material	Washer (OD, ID, thk)	Washer Material
						(20)			(32)	(32)		

15. Heads: (a) _____ (Material spec. number, grade or type) (H.T. — time and temp.) (b) _____ (Material spec. number, grade or type) (H.T. — time and temp.)

	Location (Top, Bottom, Ends)	Thickness		Radius		Elliptical Ratio	Conical Apex Angle	Hemispherical Radius	Flat Diameter	Side to Pressure		Category A		
		Min.	Corr.	Crown	Knuckle					Convex	Concave	Type	Full, Spot, None	Eff.
(a)														
(b)														

Body Flanges on Heads												
									Bolting			
	Location	Type	ID	OD	Flange Thk	Min Hub Thk	Material	How Attached	Num & Size	Bolting Material	Washer (OD, ID, thk)	Washer Material
(a)												
(b)							(20)		(32)	(32)		

16. MAWP _____ (Internal) _____ (External) at max. temp. _____ (Internal) _____ (External) Min. design metal temp. _____ at _____ .

17. Impact test _____ [Indicate *yes* or *no* and the component(s) impact tested] at test temperature of (38) _____ .

18. Hydro., pneu., or comb. test pressure (39) _____ Proof test (40) _____

19. Nozzles, inspection, and safety valve openings:

Purpose (Inlet, Outlet, Drain, etc.)	No.	Diameter or Size	Type	Material		Nozzle Thickness		Reinforcement Material	Attachment Details		Location (Insp. Open.)
				Nozzle	Flange	Nom.	Corr.		Nozzle	Flange	
				(20)	(20)						
(41)		(42)	(43)	(44)	(45)	(46)		(47)	(48) (49)	(48) (49)	(50)

20. Supports: Skirt (51) _____ (Yes or no) Lugs (51) _____ (Number) Legs (51) _____ (Number) Others (51) _____ (Describe) Attached (51) _____ (Where and how)

21. Manufacturer's Partial Data Reports properly identified and signed by Commissioned Inspectors have been furnished for the following items of the report (list the name of part, item number, Manufacturer's name, and identifying number):

(52) _____

22. Remarks _____

(53) _____

(58)

CERTIFICATE OF SHOP COMPLIANCE

We certify that the statements in this report are correct and that all details of design, material, construction, and workmanship of this vessel conform to the ASME BOILER AND PRESSURE VESSEL CODE, Section VIII, Division 1.

UM Certificate of Authorization Number _____ Expires _____

Date _____ Name _____ (Manufacturer) Signed _____ (Representative)

Signed (67) _____ (Certified individual)

(07/13)

Provided by IHS under license with ASME

No reproduction or networking permitted without license from IHS

Licensee=Chevron Phillips Chemical Co LP/5956674001
Not for Resale, 11/09/2014 20:41:36 MST

FORM U-3A MANUFACTURER'S CERTIFICATE OF COMPLIANCE (ALTERNATIVE FORM) COVERING PRESSURE VESSELS TO BE STAMPED WITH THE UM DESIGNATOR [SEE U-1(j)] As Required by the Provisions of the ASME Boiler and Pressure Vessel Code Rules, Section VIII, Division 1 (13)

1. Manufactured and certified by (1) (Name and address of Manufacturer)
2. Manufactured for (2) (Name and address of Purchaser)
3. Location of installation (56) (3) (Name and address)
4. Type (4) (Horizontal, vertical, or sphere) (5) (Tank, separator, etc.) (6) (Capacity) (8) (Manufacturer's serial number) (9) (CRN) (10) (Drawing number) (12) (National Board Number) (Year built)
5. ASME Code, Section VIII, Div. 1 (13) [Edition and Addenda, if applicable (date)] (14) (Code Case number)
6. Shell: (a) Number of course(s) (16) (b) Overall length (17)

Course(s)			Material	Thickness		Long. Joint (Cat. A)			Circum. Joint (Cat. A, B, and C)			Heat Treatment	
No.	Diameter	Length	Spec./Grade or Type	Nom.	Corr.	Type	Full, Spot, None	Eff.	Type	Full, Spot, None	Eff.	Temp.	Time
	(18)	(19)	(20)	(21)	(22)	(23)	(24)		(25)	(26)		(27)	

Body Flanges on Shells												
									Bolting			
No.	Type	ID	OD	Flange Thk	Min Hub Thk	Material	How Attached	Location	Num & Size	Bolting Material	Washer (OD, ID, thk)	Washer Material
						(20)			(32)	(32)		

7. Heads: (a) (20) (27) (Material spec. number, grade or type) (H.T. — time and temp.) (b) (Material spec. number, grade or type) (H.T. — time and temp.)

	Location (Top, Bottom, Ends)	Thickness		Radius		Elliptical Ratio	Conical Apex Angle	Hemispherical Radius	Flat Diameter	Side to Pressure		Category A		
		Min.	Corr.	Crown	Knuckle					Convex	Concave	Type	Full, Spot, None	Eff.
(a)		(28)	(22)	(29)	(30)								(31)	
(b)														

Body Flanges on Heads												
									Bolting			
	Location	Type	ID	OD	Flange Thk	Min Hub Thk	Material	How Attached	Num & Size	Bolting Material	Washer (OD, ID, thk)	Washer Material
(a)												
(b)							(20)		(32)	(32)		

8. Type of jacket (33) Jacket closure (34) (Describe as ogee & weld, bar, etc.)
   If bar, give dimensions; if bolted, describe or sketch
9. MAWP (35) (Internal) (External) at max. temp. (36) (Internal) (External). Min. design metal temp. (37) at .
10. Impact test (38) [Indicate *yes* or *no* and the component(s) impact tested] at test temperature of (38).
11. Hydro., pneu., or comb. test pressure (39) Proof test (40)
12. Nozzles, inspection, and safety valve openings:

Purpose (Inlet, Outlet, Drain, etc.)	No.	Diameter or Size	Type	Material		Nozzle Thickness		Reinforcement Material	Attachment Details		Location (Insp. Open.)
				Nozzle	Flange	Nom.	Corr.		Nozzle	Flange	
				(20)	(20)						
(41)		(42)	(43)	(44)	(45)	(46)		(47)	(48) (49)	(48) (49)	(50)

13. Supports: Skirt (51) (Yes or no) Lugs (51) (No.) Legs (51) (No.) Others (51) (Describe) Attached (51) (Where and how)
14. Manufacturer's Partial Data Reports properly identified and signed by Commissioned Inspectors have been furnished for the following items of the report (list the name of part, item number, Manufacturer's name and identifying number):
    (52)
15. Remarks
    (53)

(07/13)

--`,,`,,`,`,,`,,,,`,`,`,`,,`,,`,,`,,`,,`,`,`,`,`,`,,`,,`,`,,`,`---

Provided by IHS under license with ASME

No reproduction or networking permitted without license from IHS

Licensee=Chevron Phillips Chemical Co LP/5956674001
Not for Resale, 11/09/2014 20:41:36 MST

FORM U-3A (Back)

(59)

CERTIFICATE OF SHOP COMPLIANCE

We certify that the statements made in this report are correct and that all details of design, material, construction, and workmanship of this vessel conform to the ASME BOILER AND PRESSURE VESSEL CODE, Section VIII, Division 1.

UM Certificate of Authorization Number _____ Expires _____

Date _____ Name _____ (Manufacturer) Signed _____ (Representative)

Signed _____ (67) (Certified Individual)

(07/13)

Provided by IHS under license with ASME

No reproduction or networking permitted without license from IHS

Licensee=Chevron Phillips Chemical Co LP/5956674001
Not for Resale, 11/09/2014 20:41:36 MST

FORM U-4 MANUFACTURER'S DATA REPORT SUPPLEMENTARY SHEET
As Required by the Provisions of the ASME Boiler and Pressure Vessel Code Rules, Section VIII, Division 1

(13)

1. Manufactured and certified by _____ (1) (54)
(Name and address of Manufacturer)

2. Manufactured for _____ (2) (54)
(Name and address of Purchaser)

3. Location of installation _____ (3) (54)
(Name and address)

4. Type _____ (4) (54) (Horizontal, vertical, or sphere) _____ (5) (54) (Tank, separator, heat exch., etc.) _____ (8) (54) (Manufacturer's serial number)
_____ (9) (54) (CRN) _____ (10) (54) (Drawing number) _____ (12) (54) (National Board number) _____ (Year built)

Data Report Item Number	Remarks
(54)	(55)

(54)
Certificate of Authorization: Type _____ No. _____ Expires _____

Date _____ Name _____ (Manufacturer) Signed _____ (Representative)

Date _____ Name _____ (Authorized Inspector) Commissions _____ (62) (63) [National Board (incl. endorsements)]

(07/13)

--`,,,``,,``,,,,`,``,``,,`,,`,,```-`-`,,`,,`,`,,`---
Provided by IHS under license with ASME
No reproduction or networking permitted without license from IHS
Licensee=Chevron Phillips Chemical Co LP/5956674001
Not for Resale, 11/09/2014 20:41:36 MST

(13)

FORM U-5 MANUFACTURER'S DATA REPORT SUPPLEMENTARY SHEET
SHELL-AND-TUBE HEAT EXCHANGERS
As Required by the Provisions of the ASME Boiler and Pressure Vessel Code Rules, Section VIII, Division 1

1. Manufactured and certified by _____ (1) (54)
(Name and address of Manufacturer)

2. Manufactured for _____ (2) (54)
(Name and address of Purchaser)

3. Location of installation _____ (3) (54)
(Name and address)

4. Type _____ (4) (54) (Horizontal, vertical, or sphere) _____ (8) (54) (Manufacturer's serial number) _____ (9) (54) (CRN)

_____ (10) (54) (Drawing number) _____ (12) (54) (National Board number) _____ (Year built)

FIXED SHELL-AND-TUBE HEAT EXCHANGER DATA							
Name of Condition	Design/Operating Pressure Ranges		Maximum Design/Operating Metal Temperature				Axial Differential Thermal Expansion Range (min./max.)
	Shell Side (min./max.)	Tube Side (min./max.)	Shell	Channel	Tubes	Tubesheet	
	(units)	(units)	(units)	(units)	(units)	(units)	(units)
Design	(35)	(35)	(36)	(36)	(36)	(36)	0
(72)	(72)	(72)	(72)	(72)	(72)	(72)	(72)

Data Report Item Number	Remarks
(54)	(55)

(54)

Certificate of Authorization: Type _____ No. _____ Expires _____

Date _____ Name _____ (Manufacturer) Signed _____ (Representative)

Date _____ Name _____ (Authorized Inspector) Commissions _____ (62) (63) [National Board (incl. endorsements)]

(07/13)

Provided by IHS under license with ASME
No reproduction or networking permitted without license from IHS
Licensee=Chevron Phillips Chemical Co LP/5956674001
Not for Resale, 11/09/2014 20:41:36 MST

Provided by IHS under license with ASME
No reproduction or networking permitted without license from IHS

(13)

Table W-3
Instructions for the Preparation of Manufacturer's Data Reports

Applies to Form									Ref. to Circled Nos. in Forms U-1 Through	
U-1	U-1A	U-1B	U-2	U-2A	U-3	U-3A	U-4	U-5	U-5	Instruction
X	X	X	X	X	X	X	X	X	(1)	Name and street address of manufacturer as listed on ASME Certificate of Authorization.
X	X	X	...	...	X	X	X	X	(2)	Name and address of purchaser.
X	X	X	X	X	X	X	X	X	(3)	Name of user, and address where vessel is to be installed. If not known, so indicate (e.g., "not known" or "built for stock").
X	X	X	...	...	X	X	X	X	(4)	Type of installation intended (horizontal, vertical, or sphere).
X	X	X	...	...	X	X	X	...	(5)	Description or application of vessel (tank, separator, jacketed kettle, heat exchanger, etc.)
...	...	...	...	...	X	X	...	...	(6)	Indicate vessel capacity. See U-1(j).
...	...	X	X	X	...	...	...	...	(7)	Description of vessel part (i.e., shell, two-piece head, tube bundle).
X	X	X	X	X	X	X	X	X	(8)	Manufacturer's serial number. See UG-116(a)(5).
X	X	X	X	X	X	X	X	X	(9)	Canadian registration number, where applicable.
X	X	X	X	X	X	X	X	X	(10)	Indicate drawing number(s), including applicable revision number, that cover general assembly and list of materials. For Canadian registered vessels, the number of the drawing approved by the provincial authorities.
...	...	...	X	X	...	...	...	...	(11)	Organization that prepared drawing, if other than the Manufacturer listed in No. 1.
X	X	X	X	X	X	X	X	X	(12)	Where applicable, the National Board number from the Manufacturer's Series of National Board numbers sequentially without skips or gaps. National Board numbers shall not be used for user-inspected vessels.
X	X	X	X	X	X	X	...	...	(13)	ASME Code, Section VIII, Division 1, Edition (e.g., 1989) and Addenda (e.g., A89, A90, etc.), if applicable, used for construction.
X	X	X	X	X	X	X	...	...	(14)	All Code Case numbers and revisions used for construction must be listed. Where more space is needed use "Remarks" section or list on a supplemental page.
X	X	...	X	X	...	...	...	...	(15)	Note any special service by Code paragraph as specified in UG-120(d) (e.g., lethal, low temperature, unfired steam boiler, direct fired).
X	X	...	X	X	X	X	...	...	(16)	Total number of courses or sections between end closures (heads) required to make one shell. In the "No." blocks in the table below, under "Courses," indicate the number of courses with identical information.
X	X	...	X	X	X	X	...	...	(17)	Length of the shell (courses), excluding heads.
X	X	...	X	X	X	X	...	...	(18)	Indicate the dimensions of the course(s) as follows:
...	...	...	...	...	...	...	...	...	...	(a) cylindrical as inside or outside diameter;
...	...	...	...	...	...	...	...	...	...	(b) transition as inside or outside diameter at the largest and smallest ends;
...	...	...	...	...	...	...	...	...	...	(c) squares or rectangle as the largest width and height;
...	...	...	...	...	...	...	...	...	...	(d) all other shapes define as appropriate or attach a sketch or drawing.
...	...	...	...	...	...	...	...	...	...	Where more space is needed use "Remarks" section or list on a supplemental page.
X	...	...	X	X	X	X	...	...	(19)	Length of each course(s) in the shell.

Licensee=Chevron Phillips Chemical Co LP/5956674001
Not for Resale, 11/09/2014 20:41:36 MST

Table W-3
Instructions for the Preparation of Manufacturer's Data Reports (Cont'd)

Applies to Form									Ref. to Circled Nos. in Forms U-1 Through U-5	Instruction
U-1	U-1A	U-1B	U-2	U-2A	U-3	U-3A	U-4	U-5		
X	X	...	X	X	X	X	...	...	(20)	Show the complete ASME specification number and grade of the actual material used in the vessel. Material is to be as designated in Section VIII, Division 1 (e.g., "SA-285C"). Exceptions: A specification number for a material not identical to an ASME specification may be shown only if such material meets the criteria in the Code in conjunction with the Foreword of this Section. When material is accepted through a Code Case, the applicable Case number shall be shown.
X	X	...	X	X	X	X	...	...	(21)	Thickness is the nominal thickness of the material used in the fabrication of the vessel shell. It includes corrosion allowance.
X	X	...	X	X	X	X	...	...	(22)	State corrosion allowance (see UG-25).
X	X	...	X	X	X	X	...	...	(23)	Type of longitudinal joint (e.g., Type 1, 2, 3, 4, 5, or 6) per Table UW-12. In case of brazing, explain type of joint per Figure UB-16. If seamless, indicate joint type as S, E for electric resistance welded, and W for autogenously welded.
X	X	...	X	X	X	X	...	...	(24)	Category A (longitudinal) welds — identify degree of examination (radiographic or if applicable ultrasonic) employed: full, spot, or none (see UW-11). Also identify the joint efficiency associated with the circumferential stress calculations from Table UW-12 or para. UW-12. Where more space is needed, use"Remarks" section, supplemental page, or RT map, as applicable. In the case of parts, there is no need to identify the joint efficiency associated with these welds. (See Note (31) for heads of welded construction joints.)
X	X	...	X	X	X	X	...	...	(25)	Type of circumferential joint (e.g., Type 1, 2, 3, 4, 5, 6, 7, or 8) per Table UW-12. In the case of brazing, explain type of joint per Figure UB-16. For multiple course vessel, the Category B welds in the shell and head-to-shell joint (Category A, B, C) shall be listed bottom to top or left to right as shown on drawing listed in (10).
X	X	...	X	X	X	X	...	...	(26)	Categories A, B, and C (circumferential) welds — Identify degree of examination (radiographic or if applicable ultrasonic) employed: full, spot, or none (see UW-11) or spot radiography in accordance with UW-11(a)(5). Also identify the joint efficiency associated with the longitudinal stress calculations from Table UW-12. Where more space is needed, use "Remarks" section, supplemental page, or RT map, as applicable. In the case of parts, there is no need to identify the joint efficiency associated with these welds.
X	X	...	X	X	X	X	...	...	(27)	When heat treatment is performed by the Manufacturer, such as postweld heat treatment, annealing, or normalizing, give the holding temperature and time. Explain any special cooling procedure under "Remarks."
X	X	...	X	X	X	X	...	...	(28)	Specified minimum thickness of the head after forming. It includes corrosion allowance.
X	X	...	X	X	X	X	...	...	(29)	Indicate the crown radius (inside or outside) for torispherical heads.
X	X	...	X	X	X	X	...	...	(30)	Indicate the knuckle radius (inside or outside) for torispherical or toriconical heads.
X	X	...	X	X	X	X	...	...	(31)	For heads of welded construction joints, indicate the following:
...	...	...	...	...	...	...	...	...	...	(a) type of joint in the head (Category A), e.g., Type 1, 2, 3, etc., per Table UW-12; in the case of brazing, explain the type of joint per Figure UB-16.

Provided by IHS under license with ASME
No reproduction or networking permitted without license from IHS
Licensee=Chevron Phillips Chemical Co LP/5956674001
Not for Resale, 11/09/2014 20:41:36 MST

Provided by IHS under license with ASME
No reproduction or networking permitted without license from IHS

Table W-3
Instructions for the Preparation of Manufacturer's Data Reports (Cont'd)

Applies to Form									Ref. to Circled Nos. in Forms U-1 Through	
U-1	U-1A	U-1B	U-2	U-2A	U-3	U-3A	U-4	U-5	U-5	Instruction
...	...	...	...	...	...	...	...	...	...	(b) identify degree of examination (radiographic or if applicable ultrasonic) employed: full, spot, or none. Where more space is needed, use "Remarks" section, supplemental page, RT map, as applicable.
X	X	...	X	X	X	X	...	...	(32)	Bolts used to secure removable head or heads of vessel. Indicate the number, size, material specification (grade/type).
X	...	...	X	...	X	X	...	...	(33)	Note type of jacket by reference to Figure 9-2, where applicable.
X	...	...	X	...	X	X	...	...	(34)	Explain type of jacket closures used by reference to Figure 9-5.
X	X	...	X	X	X	X	...	X	(35)	Show maximum allowable working pressure (internal or external) for which vessel is constructed. See UG-118.
X	X	...	X	X	X	X	...	X	(36)	Show maximum temperature permitted for vessel at MAWP. See (35).
X	X	...	X	X	X	X	...	...	(37)	Indicate the minimum design metal temperature (MDMT).
X	X	...	X	X	X	X	...	...	(38)	Indicate if impact testing was conducted (yes or no) and the component(s) that were impact tested and the impact test temperature. Where more space is needed, use "Remarks" section or list on a supplement page. If no, indicate applicable paragraph(s) [such as UG-20(f), UCS-66(a), UCS-66(b), or UCS-66(c), and UHA-51 or UHT-6].
X	X	...	X	X	X	X	...	...	(39)	Indicate the type of test used (pneumatic, hydrostatic, or combination test, as applicable) and specify test pressure at the top of the vessel in the test position. Indicate under "Remarks" if the vessel was tested in the vertical position.
X	...	...	X	X	X	X	...	...	(40)	When proof test is required by Code rules, indicate type (e.g., brittle-coating, bursting, etc.), specific Code requirements satisfied (UG-101, Mandatory Appendix 9, Mandatory Appendix 17), proof test pressure, and acceptance date by the Inspector. Subsequent Data Reports shall indicate under "Remarks" the test date, type and acceptance date by the Inspector.
X	X	...	X	X	X	X	...	...	(41)	Nozzles, inspection, and safety valve openings; list all openings, regardless of size and use. Where more space is needed, list them on a supplemental page.
X	X	...	X	X	X	X	...	...	(42)	Indicate nozzles by size (NPS) and inspection openings by inside dimensions.
X	X	...	X	X	X	X	...	...	(43)	Data entries with description acceptable to the Inspector. For all types of nozzles an abbreviation may be used to define any generic name. Some typical abbreviations: Flanged fabricated nozzle — Cl. 150 flg. Long weld neck flange — Cl. 300 lwn. Weld end fabricated nozzle — w.e. Lap joint flange — Cl. 150 lap jnt. Socket weld nozzle — Cl. 3000 sw.
X	X	...	X	X	X	X	...	...	(44)	Show the material for the nozzle neck.
X	...	...	X	X	X	X	...	...	(45)	Show the material for the flange.

Licensee=Chevron Phillips Chemical Co LP/5956674001
Not for Resale, 11/09/2014 20:41:36 MST

Provided by IHS under license with ASME
No reproduction or networking permitted without license from IHS

Table W-3
Instructions for the Preparation of Manufacturer's Data Reports (Cont'd)

Applies to Form									Ref. to Circled Nos. in Forms U-1 Through U-5	Instruction
U-1	U-1A	U-1B	U-2	U-2A	U-3	U-3A	U-4	U-5		
X	X	...	X	X	X	X	...	...	(46)	Nominal thickness applies to nozzle neck thickness.
X	...	...	X	X	X	X	...	...	(47)	Show the complete ASME specification number and grade of the actual material used for the reinforcement material (pad). Material is to be as designated in Section VIII, Division 1. Exceptions: A specification number for a material not identical to an ASME specification may be shown only if such material meets the criteria in the Code and in conjunction with the Foreword of this Section. When material is accepted through a Code Case, the applicable Case number shall be shown.
X	X	...	X	X	X	X	...	...	(48)	Data entries with description acceptable to the Inspector. A code identification of Figure UW-16.1 (sketch no.) may be used to define the type of attachment.
X	...	...	X	X	X	X	...	...	(49)	Categories C and D welds — Identify degree of examination (radiographic or if applicable ultrasonic) employed: full, spot, or none (see UW-11). Also identify the joint efficiency associated with the weld from Table UW-12. When more space is needed, use “Remarks” section supplemental page or RT map, as applicable.
X	X	...	X	X	X	X	...	...	(50)	"Location" applies to inspection openings only.
X	X	...	X	X	X	X	...	...	(51)	Describe:
...	...	...	...	...	...	...	...	...	...	(a) type of support (skirt, lugs, etc.);
...	...	...	...	...	...	...	...	...	...	(b) location of support (top, bottom, side, etc.);
...	...	...	...	...	...	...	...	...	...	(c) method of attachment (bolted, welded, etc.).
X	X	...	...	...	X	X	...	...	(52)	To be completed when one or more parts of the vessel are furnished by others and certified on Data Report U-2 or U-2A. The part manufacturer’s name and serial number required by UG-116 should be indicated.
X	X	...	X	X	X	X	...	...	(53)	Space for additional comments including any Code restrictions on the vessel, or any unusual requirements that have been met, such as those in U-2(g), UG-11, UG-19(a)(2), UG-19(a)(3), UG-46, UG-53, UG-79, UG-90(c)(2), UG-99(e)(2), UG-115, UG-119(g), UG-120(b), UG-120(d), UCS-56(f)(1), UCL-55, and UHX-19.3 or in other notes to this Table. Indicate stiffening rings when used. See W-1(d) or W-1(e) when additional space is needed. List any pressure-retaining covers and their attaching bolting and nuts. The minimum information shall include the material specification, material grade, size, and thread designation.
...	...	X	...	...	...	...	X	X	(54)	Fill in information identical to that shown on the Data Report Form to which this sheet is supplementary. Indicate the type of Certificate of Authorization, number, expiration date, and signature of the company representative.
...	...	...	...	...	...	...	X	X	(55)	Fill in information for which there was insufficient space on the Data Report Form as indicated by the notation “See attached Form U-4” or “See attached Form U-5” on the Data Report. See W-1(d) or W-1(e). Identify the applicable Data Report item number.
...	...	...	X	X	...	...	...	...	(56)	Indicate data, if known.

Licensee=Chevron Phillips Chemical Co LP/5956674001
Not for Resale, 11/09/2014 20:41:36 MST

Provided by IHS under license with ASME
No reproduction or networking permitted without license from IHS

Table W-3
Instructions for the Preparation of Manufacturer's Data Reports (Cont'd)

Applies to Form									Ref. to Circled Nos. in Forms U-1 Through	
U-1	U-1A	U-1B	U-2	U-2A	U-3	U-3A	U-4	U-5	U-5	Instruction
...	...	...	X	X	...	...	...	...	(57)	Indicate the extent, if any, of the design function performed, UG-120(c)(2).
X	X	...	X	X	...	...	...	...	(58)	Certificate of Shop/Field Compliance block is to show the name of the Manufacturer as shown on his ASME Code Certificate of Authorization. This should be signed in accordance with the organizational authority defined in the Quality Control System (10-4).
...	...	...	...	...	X	X	...	...	(59)	Manufacturer's authorization number to use the Certification Mark with the UM Designator from his Certificate of Authorization.
X	X	...	X	X	...	...	...	...	(60)	Certificate of Shop/Field Inspection block is to be completed by the Manufacturer and signed by the Authorized Inspector who performs the inspection.
X	...	...	X	X	...	...	...	...	(61)	Deleted.
X	X	X	...	...	...	...	X	X	(62)	The Inspector's National Board Commission number and endorsement must be shown.
...	...	...	X	X	...	...	X	X	(63)	The Inspector's National Board Commission number and endorsement must be shown.
X	...	...	...	...	...	...	...	...	(64)	Certificate of Field Assembly Compliance block for field work or assembly is to be signed by the Manufacturer's representative in charge of field fabrication. This should be signed in accordance with the organizational authority defined in the quality control system (10-4).
X	...	...	...	...	...	...	...	...	(65)	Certificate of Field Assembly Inspection block is for the Authorized Inspector to sign for any field construction or assembly work. See (61) for National Board Commission number requirements.
X	...	...	...	...	...	...	...	...	(66)	Indicate those items inspected in the field that were not inspected in the shop.
...	...	...	...	...	X	X	...	...	(67)	Signature of Certified Individual indicates Certification Mark with the appropriate Designator has been applied in accordance with the requirements of Section VIII, Division 1.
...	...	...	X	X	...	...	...	...	(68)	Identification of individual parts documented by the Form U-2 or Form U-2A. See UG-116(h)(2).
...	...	...	X	X	...	...	...	...	(69)	Show the name of the part.
...	...	...	X	X	...	...	...	...	(70)	Show data line number of Form U-2 or Form U-2A for the named part.
...	...	...	X	X	...	...	...	...	(71)	Show the manufacturer's serial number or other identifying number stamped on the part.
...	...	...	...	...	...	...	...	X	(72)	Fill in the data required by UHX-19.3.2.

GENERAL NOTE: Any quantity to which units apply shall be entered on the Manufacturer's Data Report with the chosen units.

Licensee=Chevron Phillips Chemical Co LP/5956674001
Not for Resale, 11/09/2014 20:41:36 MST

INTENTIONALLY LEFT BLANK

Provided by IHS under license with ASME

No reproduction or networking permitted without license from IHS

Licensee=Chevron Phillips Chemical Co LP/5956674001
Not for Resale, 11/09/2014 20:41:36 MST

Figure W-3.1
Example of the Use of Form U-4 (13)

FORM U-4 MANUFACTURER'S DATA REPORT SUPPLEMENTARY SHEET
As Required by the Provisions of the ASME Code Rules, Section VIII, Division 1

1. Manufactured and certified by _____ (1) (54)
(Name and address of Manufacturer)

2. Manufactured for _____ (2) (54)
(Name and address of Purchaser)

3. Location of installation _____ (3) (54)
(Name and address)

4. Type: _____ (4) (54) (Horiz., vert., or sphere) _____ (5) (54) (Tank, separator, heat exh., etc.) _____ (8) (54) (Mfg's. serial No.)

_____ (9) (54) (CRN) _____ (10) (54) (Drawing No.) _____ (12) (54) (Nat'l. Bd. No.) _____ (Year built)

Data Report Item Number (A) (B) (55) Remarks

Form U-1

Item 6 (Shell)

(a) Layered Construction Type: (Concentric Wrapped, Spiral Wrapped, Coil Wound, Shrink Fit, etc.) Nom. Layer

Location	Material	Layer Thk.	Nom. Thk. Tot.	No. Courses	NDE
(a) Inner Shell:					
(b) Dummy Layer:	(20)	(F)	(21)	(16)	(C)
(c) Dummy Layer:					
(d) Layers:					
(e) Overwraps:					

Item 7 (Heads)

(a) Layered Construction Type: (Formed, Machined, Segmental, etc.)

Location	Material	Layer Thk.	Nom. Thk. Tot.	Smls./Welded	NDE
(1) Inner Head:					
(2) Dummy Layer:	(20)	(F)	(21)	(E) (31)	(C)
(3) Layers:					

(b) Layered Construction Type:

(1) Inner Head:					
(2) Dummy Layer:					
(3) Layers:					

Item 22 (Remarks)

Vent Holes	Diam. Hole	Staggered Layers or Radial Through
(a) Layered Shell:	(G)	(H)
(b) Layered Head:		

Gaps Have Been Controlled According to the Provisions of Paragraph: (See ULW-77 and ULW-78)

(I) (J) (B)

(54) Certificate of Authorization: Type _____ No. _____ Expires _____

Date _____ Name _____ (Manufacturer) Signed _____ (Representative)

Date _____ Name _____ (Authorized Inspector) Commission _____ (82) (83) [Nat'l Board (incl. endorsement)]

EXAMPLE

Provided by IHS under license with ASME
No reproduction or networking permitted without license from IHS
Licensee=Chevron Phillips Chemical Co LP/5956674001
Not for Resale, 11/09/2014 20:41:36 MST

Table W-3.1
Supplementary Instructions for the Preparation of Manufacturer's Data Reports for Layered Vessels

Ref. to Circled Letters in Form U-4	Instruction
(A)	Letter symbols indicate instructions that supplement the instructions of Table W-3.
(B)	The form in Figure W-3.1 is not available preprinted as shown. It is intended as an example of suggested use of Form U-4 for reporting data for a vessel of layered construction. It is intended that the Manufacturer develop his own arrangement to provide supplementary data that describes his vessel.
(C)	Note the NDE performed (RT, PT, MT, UT).
(D)	Applies only when heads are of layered construction.
(E)	Indicate if seamless or welded.
(F)	When more than one layer thickness is used, add lines as needed.
(G)	Indicate diameter of vent holes in the layers.
(H)	Indicate whether vent holes are in random locations in each layer, or are drilled through all layers.
(I)	Indicate locations of nozzles and openings; layered shell; layered head.
(J)	Indicate method of attachment and reinforcement of nozzles and openings in layered shells and layered heads. Refer to figure number if applicable.

GENERAL NOTE: Any quantity to which units apply shall be entered on the Manufacturer's Data Report with the chosen units.

Provided by IHS under license with ASME
No reproduction or networking permitted without license from IHS
Licensee=Chevron Phillips Chemical Co LP/5956674001
Not for Resale, 11/09/2014 20:41:36 MST

(13)

FORM UV-1 MANUFACTURER'S OR ASSEMBLER'S CERTIFICATE OF CONFORMANCE FOR PRESSURE RELIEF VALVES

As Required by the Provisions of the ASME Boiler and Pressure Vessel Code Rules, Section VIII, Division 1

1. Manufactured (or assembled) by ①

2. Table of Certification Mark stamped items:

I.D. #	Year Built	NB Cert. #	Qty.	Type	Size	Set Pressure	Capacity	Test Fluid	Date	CI Name	CI Signature
②	③	④	⑤	⑥	⑦	⑧	⑨	⑩	⑪	⑫	⑬

3. Remarks ⑭

CERTIFICATE OF SHOP COMPLIANCE

By the signature of the Certified Individual (CI) noted above, we certify that the statements made in this report are correct and that all details for design, material, construction, and workmanship of the pressure relief devices conform with the requirements of Section VIII, Division 1 of the ASME BOILER AND PRESSURE VESSEL CODE.

UV Certificate of Authorization No. ⑮ Expires ⑯

Date ⑰ Signed ⑱ (responsible representative) Name ⑱ (Manufacturer or Assembler)

(07/13)

Provided by IHS under license with ASME
No reproduction or networking permitted without license from IHS
Licensee=Chevron Phillips Chemical Co LP/5956674001
Not for Resale, 11/09/2014 20:41:36 MST

(13)

FORM UD-1 MANUFACTURER'S CERTIFICATE OF CONFORMANCE FOR NONRECLOSING PRESSURE RELIEF DEVICES

As Required by the Provisions of the ASME Boiler and Pressure Vessel Code Rules, Section VIII, Division 1

1. Manufactured by _____ (1) _____

2A. Table of Certification Mark stamped activation components:

Lot #	Year Built	NB Cert. #	Qty.	Activation Component Material	Type	Size	Marked Burst or Set Pressure	Specified Temp.	Min. Net Flow Area	Certified Flow Resistance	Capacity	Date	CI Name	CI Signature
(2)	(3)	(4)	(5)	(19)	(6)	(7)	(20)	(21)	(22)	(23)	(9)	(11)	(12)	(13)

2B. Table of Certification Mark stamped nonreclosing pressure relief device holder or body:

Year Built	Qty.	Holder or Body Material	Type	Size	Pin to Pin Device Identifier	Date	CI Name	CI Signature
(3)	(5)	(19)	(6)	(7)	(24)	(11)	(12)	(13)

3. Remarks _____ (14) _____

CERTIFICATE OF SHOP COMPLIANCE

By the signature of the Certified Individual (CI) noted above, we certify that the statements made in this report are correct and that all details for design, material, construction, and workmanship of the rupture disk or pin devices conform with the requirements of Section VIII, Division 1 of the ASME BOILER AND PRESSURE VESSEL CODE.

UD Certificate of Authorization No. _____ (15) _____ Expires _____ (16) _____

Date _____ (17) _____ Signed _____ (18) _____ Name _____ (18) _____
(responsible representative) (Manufacturer)

(07/13)

--`,,,``,,,```,,,,`,``,``,,`,,```-`-`,,`,,`,`,,`---

Provided by IHS under license with ASME

No reproduction or networking permitted without license from IHS

Licensee=Chevron Phillips Chemical Co LP/5956674001
Not for Resale, 11/09/2014 20:41:36 MST

Table W-3.2
Supplementary Instructions for the Preparation of Manufacturer's or Assembler's Certificate of Conformance Forms UV-1 and UD-1

Ref. to Circled Nos. in Forms UV-1 and UD-1	Instruction
(1)	Name and address of Manufacturer or Assembler.
(2)	Pressure relief device Manufacturer's or Assembler's unique identification number, such as serial number, work order number, or lot number.
(3)	The year built or the pressure relief device Manufacturer's or Assembler's date code.
(4)	The NB Certification Number.
(5)	The quantity of identical devices for this line item.
(6)	The Manufacturer's Design or Type Number as marked on the nameplate.
(7)	The inlet size of the pressure relief device.
(8)	The nameplate set pressure of the pressure relief device.
(9)	The nameplate capacity of the pressure relief device, as applicable.
(10)	The fluid used for testing the pressure relief device.
(11)	The date of completion of production of the pressure relief device.
(12)	The name or unique ID Stamp of the Certified Individual.
(13)	The signature of the Certified Individual. Required for each line item.
(14)	Include any applicable remarks (referencing the identification number) that may pertain, such as identification of a Code Case that requires marking on the device.
(15)	The number of the pressure relief device Manufacturer's or Assembler's Certificate of Authorization.
(16)	Expiration date of the pressure relief device Manufacturer's or Assembler's Certificate of Authorization.
(17)	Date signed by the pressure relief device Manufacturer or Assembler's authorized representative.
(18)	The Certificate of Compliance block is to show the name of the Manufacturer or Assembler as shown on his/her ASME Code Certificate of Authorization. This shall be signed in accordance with organizational authority defined in the Quality Control System (see 10-4).
(19)	The material of the activation component and/or activation component holder or body, as applicable.
(20)	The marked burst or set pressure of the rupture disk or pin.
(21)	The specified temperature of the rupture disk or pin.
(22)	The minimum net flow area of the rupture disk or pin device, as applicable.
(23)	The certified flow resistance (one or more as applicable) K_{RG}, K_{RL}, K_{RGL} of the device, as applicable.
(24)	Pin-to-pin device identifier, as applicable.

GENERAL NOTE: Any quantity to which units apply shall be entered on the Manufacturer's Data Report with the chosen units.

Provided by IHS under license with ASME
No reproduction or networking permitted without license from IHS
Licensee=Chevron Phillips Chemical Co LP/5956674001
Not for Resale, 11/09/2014 20:41:36 MST

NONMANDATORY APPENDIX Y
FLAT FACE FLANGES WITH METAL-TO-METAL CONTACT OUTSIDE THE BOLT CIRCLE

Y-1 GENERAL

(a) The rules in this Appendix apply to circular, bolted flanged connections where the assemblage is comprised of identical or nonidentical flange pairs, and where the flanges are flat faced and are in uniform metal-to-metal contact across their entire face during assembly before the bolts are tightened or after a small amount of preload is applied to compress a gasket. The rules also apply when a pair of identical flat faced flanges are separated by a metal spacer. The rules are not intended for cases where the faces are intentionally made nonparallel to each other such that initial contact is at the bore.

Construction details for attachment and configuration of the flange are not covered in this Appendix. Minimum weld sizes and geometric limitations given in Figure 2-4 and Figure UW-13.2 apply to Nonmandatory Appendix Y flanges. Similarly, when applying the rules of this Appendix, use of the graphs in Mandatory Appendix 2 for obtaining applicable design parameters is necessary; namely, Figures 2-7.1 through 2-7.6.

(b) It is assumed that a self-sealing gasket is used approximately in-line with the wall of attached pipe or vessel. The rules provide for hydrostatic end loads only and assume that the gasket seating loads are small and may in most cases be neglected. It is also assumed that the seal generates a negligible axial load under operating conditions. If such is not the case, allowance shall be made for a gasket load H_G dependent on the size and configuration of the seal and design pressure. Proper allowance shall be made if connections are subject to external forces or external pressure.

(c) As with flanges with ring type gaskets, the stress in the bolts may vary appreciably with pressure. There is an additional bolt stress generated due to a prying effect resulting from the flanges interacting beyond the bolt circle. As a result, fatigue of the bolts and other parts comprising the flanged connection may require consideration and adequate pretensioning of the bolts may be necessary. It is important to note that the operating bolt stress is relatively insensitive to changes in prestress up to a certain point and that thereafter the two stresses are essentially the same. This is a desirable characteristic of Nonmandatory Appendix Y flanges; it means that if the assembly stress (prestress) in the bolts is close to the operating design stress σ_b, then subsequent applications of pressure loadings ranging from zero to full load will have no significant effect on the actual operating stress in the bolts.

Unlike Mandatory Appendix 2 flanges and their bolts which are stressed during assembly (although some readjustment in the stresses may occur during pressurization), Nonmandatory Appendix Y flanges become stressed during pressurization; however, the effect of pressurization on the operating stress in the bolts depends upon the extent to which the bolts are stressed during assembly.

(d) In the case of identical flange pairs, the analytical procedure described in this Appendix considers the flanges to be continuous, annular plates whose flexural characteristics can be approximated by beam theory by considering the flanges to be comprised of a series of discrete, radial beams. For nonidentical flange pairs, beam theory is supplemented by the theory of rigid body rotation so as to preserve equilibrium of moments and forces. Moments associated with beam theory are designated as *balanced moments*, whereas moments used when the theory of rigid body rotations is applied are designated as *unbalanced moments*. Balanced and unbalanced moments are designated M_b and M_u, respectively. When no subscript appears, a balanced moment is intended, i.e., in the equations for the analysis of identical flange pairs (Y-6.1).

(e) A reduction in flange-to-flange contact forces beyond the bolt circle occurs when the flanges are stiff with respect to the bolting and, in the extreme, flange separation occurs. The rules in this Appendix provide little insight into the problem except when the reduction in the contact force is due to the flange-hub interaction moment. The problem is considered to be of little practical significance when the nuts are tightened during assembly using ordinary wrenching techniques.

(f) The design procedure is based on the assumption that the flanges are in tangential contact at their outside diameter or at some lesser distance h_C from the bolt circle. [see Y-4(a)(2) and Y-8 when

$$h_C < h_{C\max}$$

for additional requirements.] The diameter of the circle where the flanges are in tangential contact is a design variable, the smaller the diameter of the contact circle

Provided by IHS under license with ASME
No reproduction or networking permitted without license from IHS
Licensee=Chevron Phillips Chemical Co LP/5956674001
Not for Resale, 11/09/2014 20:41:36 MST

$$C + 2h_C$$

the greater the required prestress in the bolts, the higher the ratio of prestress to operating bolt stress, S_i/σ_b, and the smaller the flange separation at the gasket. The requirement of tangential contact, even when it is assumed to occur at the outside diameter

$$\left(C + 2h_{C\max}\right)$$

of the flanges, automatically yields a high ratio of S_i/σ_b which means that the possibility of flange separation or an appreciable decrease in the flange-to-flange contact forces is no longer a problem even when the flanges are stiff with respect to the bolts.

(g) The equation for the calculated strain length l of the bolts is generally applicable. However, variations in the thickness of material actually clamped by each bolt, such as sleeves, collars, or multiple washers placed between a flange and the bolt heads or nuts, or by counterboring, must be considered in establishing a value of l for use in the design equations. A large increase in l may cause the flanges to become abnormally stiff with respect to such bolts and the provision of tangential contact may not yield a sufficiently high value of the ratio S_i/σ_b unless h_C is reduced to cause an increase in the ratio.

(h) Most of the calculated stresses are bending only so that tensile and compressive stresses of the same magnitude occur on opposite surfaces at the point under consideration. However, when a membrane stress occurs in conjunction with a bending stress, the combined stress represents the maximum absolute value at the point and may be tension or compression (denoted by a − sign).

Y-2 MATERIALS

The rules in 2-2 apply.

Y-3 NOTATION

(a) The symbols described below are used in the formulas for the design of flanges:

A = outside diameter of flange

A_b = cross-sectional area of the bolts using the root diameter of the thread or least diameter of unthreaded portion, if less

A_m = total required cross-sectional area of bolts, taken as the greater of A_{m1} and A_{m2}

A_{m1} = total cross-sectional area of bolts at root of thread or section of least diameter under stress, required for the operating conditions

= W_{m1}/S_b

$\overline{AR}$ = bolt hole aspect ratio used in calculating bolt-hole flexibility factor r_B

= $\dfrac{nD}{\pi C}$

a = shape factor

= $(A + C)/2B_1$

B = inside diameter of flange. When B is less than $20g_1$, it will be optional for the designer to substitute B_1 for B in the formula for longitudinal stress S_H.

B_1 = $B + g_1$ for loose type flanges and for integral type flanges that have calculated values h/h_0 and g_1 / g_0 which would indicate an f value of less than 1.0, although the minimum value of f permitted is 1.0

= $B + g_0$ for integral type flanges when f is equal to or greater than one

= B for Category 3 (loose type) flanges

b = effective gasket or joint-contact-surface seating width [see Note 1, 2-5(c)(1)]

b_0 = basic gasket seating width, in. (from Table 2-5.2)

C = bolt circle diameter

C_1 = factor

$$= -\left(0.748 - 1.567J_S \log\frac{A}{B_1}\right) \div \left(1 + 1.3J_S\right) \qquad (1)$$

C_2 = factor

$$= \left[\frac{\pi}{32}\left(PB_1^3\right) - 1.3J_P M_P\right] \div \left(1 + 1.3J_S\right) \qquad (2)$$

C_3 = factor

$$= -\left(0.575 - 1.206J_S \log\frac{A}{B_1}\right) \div \left(J_S + t_1^3/F_1'\right) \qquad (3)$$

NOTE: $C_3 = C_4 = 0$ when $F'_1 = 0$.

C_4 = factor

$$= -\left(J_P M_P\right) \div \left(J_S + t_1^3/F_1'\right) \qquad (4)$$

NOTE: $C_3 = C_4 = 0$ when $F'_1 = 0$.

c = basic dimension used for the minimum sizing of welds, equal to t_n or t_x, whichever is less

D = diameter of bolt hole

d = factor

= $\dfrac{U}{V}h_0 g_0^2$ for integral type flanges for integral type flanges

= $\dfrac{U}{V_L}h_0 g_0^2$ for loose type flanges for loose type flanges

d_b = nominal diameter of bolt

E = modulus of elasticity of flange material, corrected for operating temperature. The modulus of elasticity shall be taken from the applicable Table TM in Section II, Part D. When a material is not listed in the TM tables, the requirements of U-2(g) shall be applied.

E_I^* = factor

Provided by IHS under license with ASME
No reproduction or networking permitted without license from IHS
Licensee=Chevron Phillips Chemical Co LP/5956674001
Not for Resale, 11/09/2014 20:41:36 MST

$= E_I t_I^3$

E_{II}^* = factor

$= E_{II} t_{II}^3$

e = factor

$= \frac{F}{h_0}$ for integral type flanges

$= \frac{F_L}{h_0}$ for loose type flanges

F = factor for integral type flanges (from Figure 2-7.2)

F_L = factor for loose type flanges (from Figure 2-7.4)

F' = $g_0^2 (h_0 + Ft)/V$ for Category 1, Class 1 assembly (5a)

$= g_0^2 (h_0 + F_L t)/V_L$ for Category 2, Class 1 assembly (5b)

= 0 for Category 3, Class 1 assembly (5c)

F_I' = $g_0^2 (h_0 + Ft_I)/V$ for Category 1, Class 3 assembly (6a)

$= g_0^2 (h_0 + F_L t_I)/V_L$ for Category 2, Class 3 assembly (6b)

= 0 for Category 3, Class 3 assembly (6c)

f = hub stress correction factor for integral flanges from Figure 2-7.6. (When greater than 1, this is the ratio of the stress in the small end of hub to the stress in the large end.) (For values below limit of the Figure, use f = 1.)

G = diameter at location of gasket load reaction

= mean diameter of gasket

g_0 = thickness of hub at small end

g_1 = thickness of hub at back of flange

H = total hydrostatic end force

$= 0.785\ G^2 P$

H_C = contact force between mating flanges

H_D = hydrostatic end force on area inside of flange

$= 0.785\ B^2 P$

H_G = gasket load due to seating pressure, plus axial force generated by self-sealing of gasket

H_p = total joint-contact-surface compression load

$= 2b \times 3.14\ GmP$

H_T = difference between total hydrostatic end force and the hydrostatic end force on area inside of flange

$= H - H_D$

h = hub length

h_C = radial distance from bolt circle to flange-spacer or flange-flange bearing circle where tangential contact occurs. Tangential contact exists from the selected value of h_C to $h_{C\max}$

h_{Cmax} = radial distance from bolt circle to outer edge of flange or spacer, whichever is less

h_D = radial distance from the bolt circle, to the circle on which H_D acts, as prescribed in Table 2-6

h_G = radial distance from gasket load reaction to the bolt circle

$= \frac{C - G}{2}$

h_0 = factor

$= \sqrt{Bg_0}$

h_T = radial distance from the bolt circle to the circle on which H_T acts as prescribed in Table 2-6

$J_S = \frac{1}{B_1}\left[\frac{2h_D}{\beta} + \frac{h_C}{a}\right] + \pi r_B$

$J_P = \frac{1}{B_1}\left[\frac{h_D}{\beta} + \frac{h_C}{a}\right] + \pi r_B$

K = ratio of outside diameter of flange to inside diameter of flange

$= A/B$

L = factor

$= \frac{te + 1}{T} + \frac{t^3}{d}$

l = calculated strain length of bolt

$= 2t + t_s + (\frac{1}{2} d_b$ for each threaded end for a Class 1 assembly)

$= t_I + t_{II} + (\frac{1}{2} d_b$ for each threaded end for a Class 3 assembly)

M_b = balanced moment acting at diameter B_1 of flange

M_D = component of moment due to H_D

$= H_D h_D$

M_G = component of moment due to H_G

$= H_G h_G$

M_H = moment acting on end of hub, pipe, or shell, at its junction with back face of flange ring

M_P = moment due to H_D, H_T, H_G

$= H_D h_D + H_T h_T + H_G h_G$

M_S = total moment on flange ring due to continuity with hub, pipe, or shell

$= M_H + Qt/2$ where

t = thickness of the flange under consideration (t, t_I, or t_{II}, as applicable)

M_T = component of moment due to H_T

$= H_T h_T$

M_u = unbalanced moment acting at diameter B_1 of flange

m = gasket factor; obtain from Table 2-5.1 [see Note in 2-5(c)(1)]

N = width used to determine the basic gasket seating with b_0, based upon the possible contact width of the gasket (see Table 2-5.2)

n = number of bolts

P = internal design pressure (see UG-21)

Q = shear force between flange ring and end of hub, pipe, or shell, positive as indicated in Figure Y-3.2 sketch (b)

Provided by IHS under license with ASME
No reproduction or networking permitted without license from IHS
Licensee=Chevron Phillips Chemical Co LP/5956674001
Not for Resale, 11/09/2014 20:41:36 MST

Figure Y-3.1

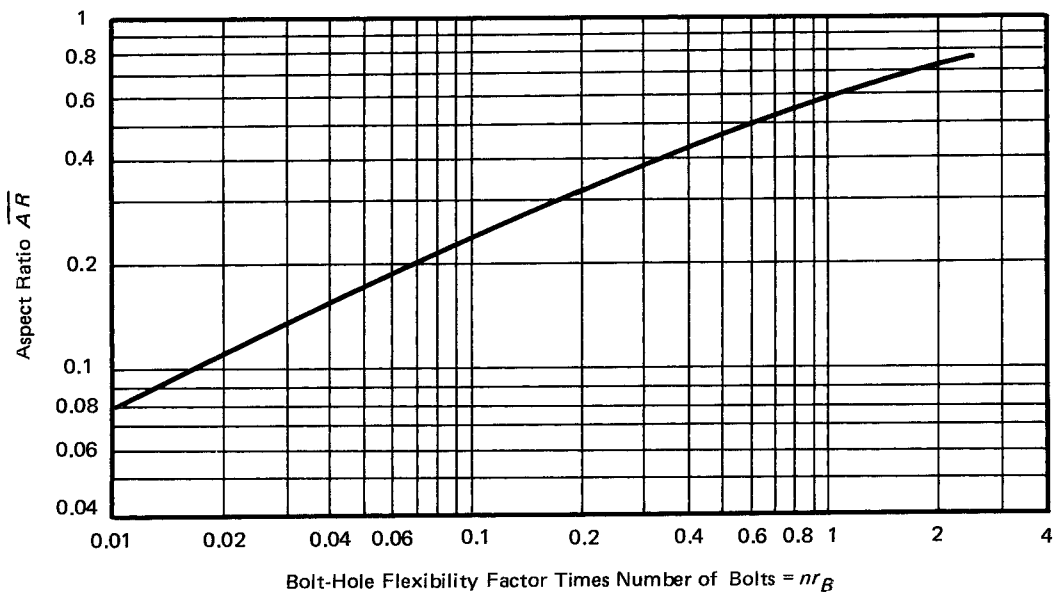

R = radial distance from bolt circle to point of intersection of hub and back of flange, in. For integral and hub flanges,

$$R = \frac{C - B}{2} - g_1$$

r_B = $$\frac{1}{n}\left(\frac{4}{\sqrt{1 - \overline{AR}^2}} \tan^{-1} \sqrt{\frac{1 + \overline{AR}}{1 - \overline{AR}}} - \pi - 2\overline{AR}\right)$$

(see Figure Y-3.1 for a curve of nr_B vs $\overline{AR}$. In the above equation for r_B, $\tan^{-1}$ must be expressed in radians.)

r_E = elasticity factor
= modulus of elasticity of flange material divided by modulus of elasticity of bolting material, corrected for operating temperature

r_S = initial bolt stress factor
= $1 - S_i/\sigma_b$

S_a = allowable bolt stress at atmospheric temperature (see UG-23)

S_b = allowable bolt stress at design temperature (see UG-23)

S_f = allowable design stress for material of flange at design temperature (operating condition) or atmospheric temperature (gasket seating), as may apply (see UG-23)

S_H = calculated longitudinal stress in hub

S_i = initial bolt stress (always less than S_b)

S_n = allowable design stress for material of nozzle neck, vessel or pipe wall, at design temperature (operating condition) or atmospheric temperature (gasket seating), as may apply (see UG-23)

S_R = calculated radial stress in flange

S_T = calculated tangential stress in flange

T = factor involving K (from Figure 2-7.1)

t = flange thickness of an identical flange pair in a Class 1 assembly

t_I = thickness of the nonreducing flange in a Class 3 assembly (see Y-5.1)

t_{II} = thickness of the reducer or flat circular head in a Class 3 assembly (see Y-5.1)

t_i = two times the thickness g_0, when the design is calculated as an integral flange or two times the thickness of shell or nozzle wall required for internal pressure, when the design is calculated as a loose flange, but not less than $^1/_4$ in. (6 mm)

t_n = nominal thickness of shell or nozzle wall to which flange or lap is attached

t_s = thickness of spacer

U = factor involving K (from Figure 2-7.1)

V = factor for integral type flanges (from Figure 2-7.3)

V_L = factor for loose type flanges (from Figure 2-7.5)

W = flange design bolt load, for the operating conditions or gasket seating, as may apply (Y-4)

W_{m1} = minimum required bolt load for the operating conditions (see Y-4)

Provided by IHS under license with ASME
No reproduction or networking permitted without license from IHS
Licensee=Chevron Phillips Chemical Co LP/5956674001
Not for Resale, 11/09/2014 20:41:36 MST

Figure Y-3.2
Flange Dimensions and Forces

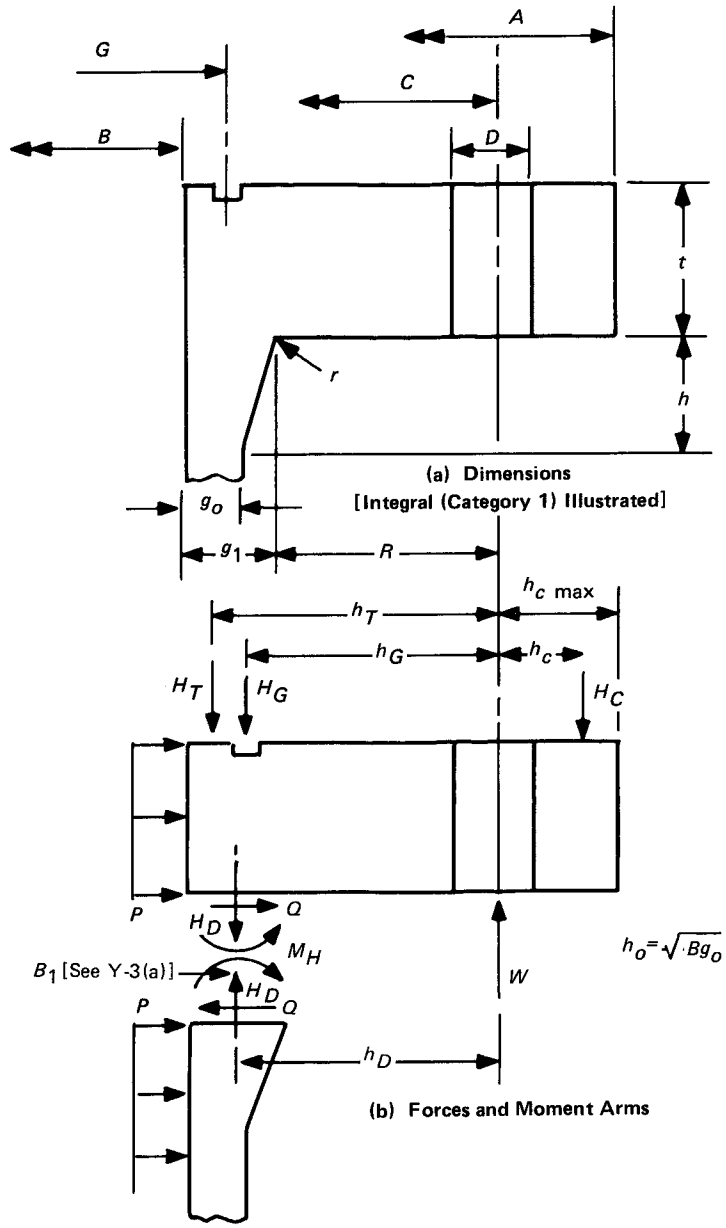

Provided by IHS under license with ASME
No reproduction or networking permitted without license from IHS
Licensee=Chevron Phillips Chemical Co LP/5956674001
Not for Resale, 11/09/2014 20:41:36 MST

w = width used to determine the basic gasket seating width b_0, based upon the contact width between the flange facing and the gasket (see Table 2-5.2)
X = factor
= $E_I^* / (E_I^* + E_{II}^*)$
Y = factor involving K (from Figure 2-7.1)
y = gasket or joint-contact-surface unit seating load [see Note in 2-5(c)(1)]
Z = factor involving K (from Figure 2-7.1)
β = shape factor for full face metal-to-metal contact flanges
= $(C + B_1)/2B_1$
θ_A = slope of flange face at outside diameter, rad
θ_B = slope of flange face at inside diameter, rad
θ_{rb} = change in slope which flange pair undergoes due to an unbalanced moment, rad

(b) Subscripts I and II where noted are used to distinguish between the flanges in a nonidentical flange pair (Class 2 or 3 assemblies). B_1 without a subscript always refers to Flange I (the nonreducing flange) in a Class 2 or 3 assembly.

(c) Unless otherwise noted, B_1, J_s, J_p, F_1' [eqs. (6a), (6b), and (6c) of (a)], and M_p are based on the dimensions of the nonreducing flange (Flange I) in a Class 2 or 3 assembly.

(d) All logarithms are to base 10.

Y-4 BOLT LOADS

(a) Required Bolt Load. The flange bolt load used in calculating the required cross-sectional area of bolts shall be determined as follows.

(1) The required bolt load for the operating condition W_{m1} shall be sufficient to resist the sum of the hydrostatic end force H exerted by the maximum allowable working pressure on the area bounded by the diameter of the gasket reaction, and the contact force H_C exerted by the mating flange on the annular area where the flange faces are in contact. To this shall be added the gasket load H_G for those designs where gasket seating requirements are significant.

(2) Before the contact force H_C can be determined, it is necessary to obtain a value for its moment arm h_C. Due to the interaction between bolt elongation and flange deflection, h_C involves the flange thickness t, operating bolt stress σ_b, initial bolt prestress factor r_s, and calculated strain length l, elasticity factor r_E, and total moment loading on the flange. This Appendix is based on starting a design by assuming a value for h_C and then calculating the value of the initial bolt stress S_i which satisfies the assumption.

Although the distance h_C from the bolt circle to the flange-to-flange contact circle is a design variable, for the purpose of this Appendix the use of

$$h_C < h_{C\max}$$

to optimize stresses is considered to be a special situation requiring controlled bolt tightening and verification (see Y-8). Except in special instances, setting h_C equal to $h_{C\max}$ should be satisfactory. It is inherent in the computational process that the flanges will be in tangential contact between the selected bearing circle

$$C + 2h_C$$

and the outside diameter of the flanges

$$C + 2h_{C\max}$$

(3) The hub–flange interaction moment M_s, which acts on the flange, is expressed by eqs. Y-6.1(7), Y-6.3(a)(19), and Y-6.3(a)(20); for Category 3 flanges

$$M_s = 0$$

The contact force H_C is determined by eqs. Y-6.1(9) or Y-6.3(a)(27).

(4) The required bolt load for operating conditions is determined in accordance with the following equation:

$$W_{m1} = H + H_C + H_G$$

(b) Total Required and Actual Bolt Areas, and Flange Design Bolt Load. The total required cross-sectional area of bolts A_m equals W_{m1} / S_b. A selection of bolts to be used shall be made such that the actual total cross-sectional area of bolts A_b will not be less than A_m. The flange design bolt load W shall be taken equal to W_{m1}.

Y-5 CLASSIFICATION OF ASSEMBLIES AND CATEGORIZATION OF INDIVIDUAL FLANGES

It is necessary to classify the different types of flanged assemblies and to further categorize each flange which comprises the assembly under consideration.

Y-5.1 CLASSIFICATION OF A NONMANDATORY APPENDIX Y ASSEMBLY

Since the flanges comprising an assembly are in contact outside the bolt circle, the behavior of one flange is influenced by the stiffness of the other. For the purpose of computation it is helpful to classify an assembly consisting of different types of flanges according to the way the flanges influence the deformation of the assembly.

(a) Class 1 Assembly.[108] A pair of flanges which are bolted together and which are nominally identical with respect to shape, dimensions, physical properties, and

Provided by IHS under license with ASME
No reproduction or networking permitted without license from IHS
Licensee=Chevron Phillips Chemical Co LP/5956674001
Not for Resale, 11/09/2014 20:41:36 MST

allowable stresses[109] except that one flange of the pair may contain a gasket groove. (A Class 1 assembly is also referred to as an identical flange pair.) Figure Y-5.1.1 illustrates configuration of a Class 1 assembly.

(b) Class 2 Assembly. Any assemblage which does not fit the description of Class 1 where, in the case of reducers, the inside diameter of the reducing flange exceeds one-half of the bolt circle diameter. Figure Y-5.1.2 illustrates configuration of a Class 2 assembly.

Figure Y-5.1.1
Class 1 Flange Assembly (Identical Flange Pairs)

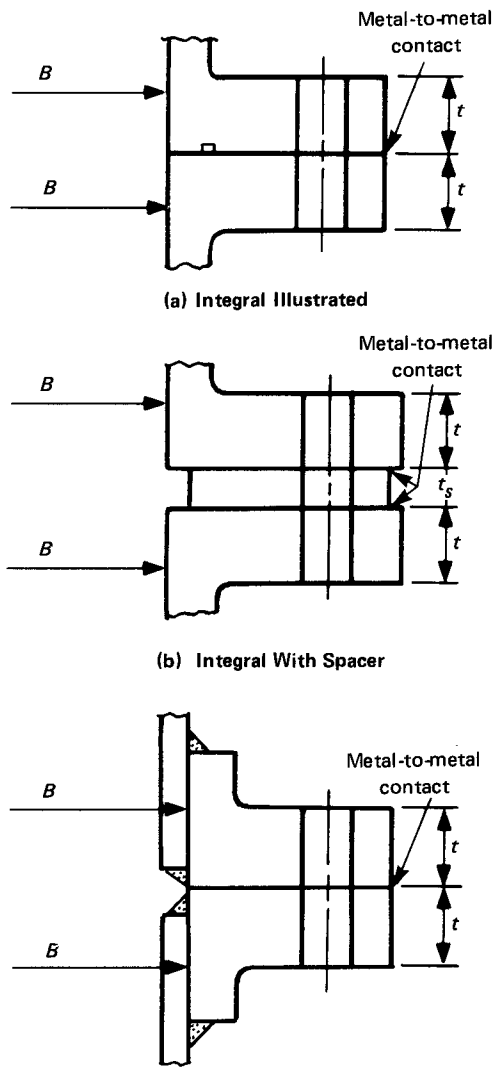

NOTES:
(1) Category 1 flanges illustrated in sketch (a) and (b); Category 2 flanges illustrated in sketch (c).
(2) Permitted weld details are in accordance with Figs. 2-4 and UW-13.2.

Figure Y-5.1.2
Class 2 Flange Assembly

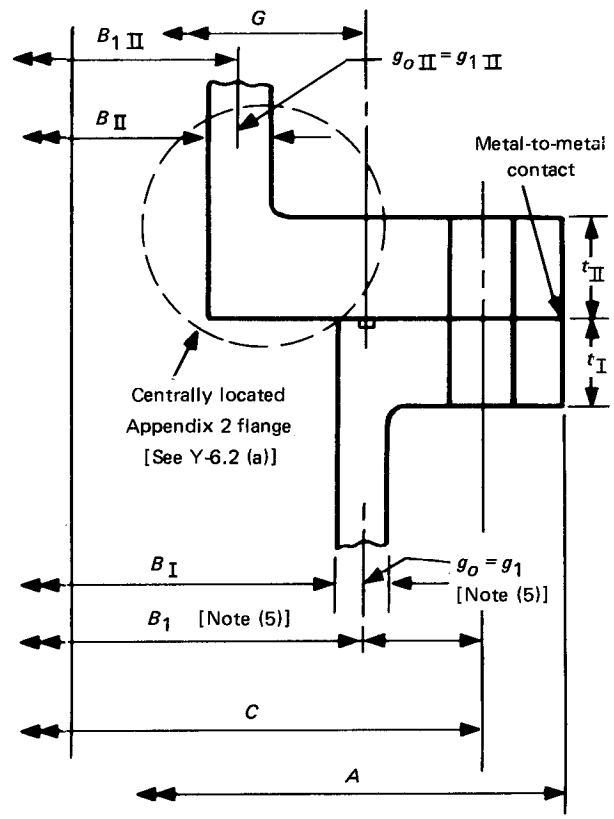

NOTES:
(1) Category 1 flanges illustrated. Categories II and III permitted.
(2) For purposes of analysis of Flange II by method in Y-6.2(a), assume $A_{II} = G_{II} = C_{II} = B_1$
(3) $B_{II} > C/2$
(4) Permitted weld details are in accordance with Figs. 2-4 and UW-13.2.
(5) See Y-3 (b) and (c).

(c) Class 3 Assembly. Any assemblage consisting of a reducer or a flat circular head without an opening or with a central, reinforced opening provided the diameter of the opening in the reducing flange or flat cover is less than one-half of the bolt circle diameter. In the analysis the reducing flange is considered to be the equivalent of a flat circular head without an opening. Figure Y-5.1.3 illustrates configuration of a Class 3 assembly.

Y-5.2 CATEGORIZATION OF A NONMANDATORY APPENDIX Y FLANGE

In addition to classifying an assembly, the individual flanges (except the reducing flange or flat circular head) must be categorized for the purpose of computation as loose type, integral type, or optional type. This can be done

Provided by IHS under license with ASME
No reproduction or networking permitted without license from IHS
Licensee=Chevron Phillips Chemical Co LP/5956674001
Not for Resale, 11/09/2014 20:41:36 MST

Figure Y-5.1.3
Class 3 Flange Assembly

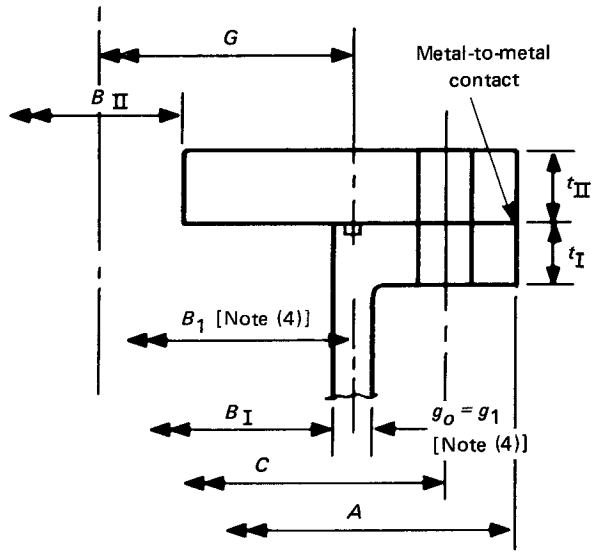

NOTES:
(1) Category I flange illustrated. Categories II and III permitted.
(2) $B_{II} \leq C/2$
(3) Permitted weld details are in accordance with Figs. 2-4 and UW-13.2
(4) See Y-3 (b) and (c).

using 2-4; Figure 2-4 is suitable by considering the flanges as flat faced (as a result of removing the raised gasket surface by machining and recessing the gasket in a groove) and by adding a flange-to-flange contact force H_C at some distance h_C outside the bolt circle. Since certain design options exist depending upon the Category of the flange, the following categories include both the type of flange and the various design options:

(a) Category 1 Flange. An integral flange or an optional flange calculated as an integral flange.

(b) Category 2 Flange. A loose type flange with a hub where credit is taken for the strengthening effect of the hub.

(c) Category 3 Flange. A loose type flange with a hub where no credit is taken for the strengthening effect of the hub, a loose type flange without a hub, or an optional-type flange calculated as a loose type without a hub. Substitute B for B_1 in the applicable equation for this category of flange.

Y-6 FLANGE ANALYSIS

(a) In order to calculate the stresses in the flanges and bolts of a flanged assembly, classify the assemblage in accordance with Y-5.1 and then categorize each flange per Y-5.2.

(b) The method of analyzing various classes and categories of flanges is basically the same. Although many equations appear to be identical, subtle differences do exist and care must be exercised in the analysis. To minimize the need for numerous footnotes and repetitive statements throughout the text, the formulas to be used in analyzing the various classes of assemblies and categories of flanges are given in Table Y-6.1. In general, the terms should be calculated in the same order as they are listed in the table. It is important to refer to the table before starting an analysis since only a limited number of the equations contained in this Appendix are used in the design of a particular pair of flanges. Some of the numbered equations appear in Y-3(a) along with general purpose, unnumbered expressions.

(c) Subscripts I and II refer to the nonreducing flange and the reducer (or flat circular head), respectively, of a Class 3 assembly and of a Class 2 assembly designed using the method of Y-6.2(a).

Provided by IHS under license with ASME
No reproduction or networking permitted without license from IHS
Licensee=Chevron Phillips Chemical Co LP/5956674001
Not for Resale, 11/09/2014 20:41:36 MST

Y-6.1 THE ANALYSIS OF A CLASS 1 ASSEMBLY

The following equations are used for the analysis of Category 1, 2, and 3 flanges of a Class 1 assembly in accordance with Table Y-6.1:

Flange Moment Due to Flange-Hub Interaction

$$M_S = \frac{J_P F' M_P}{t^3 + J_S F'} \tag{7}$$

Slope of Flange at Inside Diameter Times E

$$E\theta_B = \frac{5.46}{\pi t^3}\left(J_S M_S + J_P M_P\right) \tag{8}$$

Contact Force Between Flanges at h_C

$$H_C = \left(M_P + M_S\right) \ / \ h_C \tag{9}$$

Bolt Load at Operating Conditions

$$W_{m1} = H + H_G + H_C \tag{10}$$

Operating Bolt Stress

$$\sigma_b = W_{m1} \ / \ A_b \tag{11}$$

Design Prestress in Bolts

$$S_i = \sigma_b - \frac{1.159 h_C{}^2\left(M_P + M_S\right)}{a t^3 l r_E B_1} \tag{12}$$

Table Y-6.1
Summary of Applicable Equations for Different Classes of Assemblies and Different Categories of Flanges

Class	Category [Note (1)]	Applicable Equations
1	1	(5a), (7)–(13), (14a), (15a), (16a)
1	2	(5b), (7)–(13), (14b), (15b), (16b)
1	3	(5c), (7)–(13), (14c), (15c), (16c)
2	All	See Y-6.2
3	1	(1)–(4), (6a), (17)–(31), (32a), (33a), (34a), (35)–(38)
3	2	(1)–(4), (6b), (17)–(31), (32b), (33b), (34b), (35)–(38)
3	3	(1)–(4), (6c), (17)–(31), (32c), (33c), (34c), (35)–(38)

NOTE:
(1) Of the nonreducing flange in a Class 2 or Class 3 assembly.

Radial Flange Stress at Bolt Circle

$$S_R = \frac{6\left(M_P + M_S\right)}{t^2\left(\pi C - nD\right)} \tag{13}$$

Radial Flange Stress at Inside Diameter

$$S_R = -\left(\frac{2Ft}{h_0 + Ft} + 6\right)\frac{M_S}{\pi B_1 t^2} \tag{14a}$$

$$S_R = -\left(\frac{2F_L t}{h_0 + F_L t} + 6\right)\frac{M_S}{\pi B_1 t^2} \tag{14b}$$

$$S_R = 0 \tag{14c}$$

Tangential Flange Stress at Inside Diameter

$$S_T = \frac{tE\theta_B}{B_1} + \left(\frac{2FtZ}{h_0 + Ft} - 1.8\right)\frac{M_S}{\pi B_1 t^2} \tag{15a}$$

$$S_T = \frac{tE\theta_B}{B_1} + \left(\frac{2F_L tZ}{h_0 + F_L t} - 1.8\right)\frac{M_S}{\pi B_1 t^2} \tag{15b}$$

$$S_T = \frac{tE\theta_B}{B_1} \tag{15c}$$

Longitudinal Hub Stress

$$S_H = \frac{h_0 E\theta_B f}{0.91\left(g_1/g_0\right)^2 B_1 V} \tag{16a}$$

$$S_H = \frac{h_0 E\theta_B}{0.91\left(g_1/g_0\right)^2 B_1 V_L} \tag{16b}$$

$$S_H = 0 \tag{16c}$$

Y-6.2 THE ANALYSIS OF A CLASS 2 ASSEMBLY

(a) The assembly may be analyzed using a variation of the analysis for a Class 3 assembly (Y-6.3) that accounts for the interaction of nonidentical flanges and the stiffening effect of an integral nozzle or hub centrally located in the reducing flange.

Provided by IHS under license with ASME
No reproduction or networking permitted without license from IHS
Licensee=Chevron Phillips Chemical Co LP/5956674001
Not for Resale, 11/09/2014 20:41:36 MST

(1) The central nozzle of Flange II with diameter B_{II} shall be assumed for analysis purposes as an Mandatory Appendix 2 flange with outside diameter A, bolt circle C, and gasket circle G all equal to B_1 of Flange I. See Figure Y-5.1.2.

(2) In addition, it is necessary to categorize the centrally located Mandatory Appendix 2 flange (nozzle plus the associated over plate to diameter B_1) as a Category 1, 2, or 3 flange in accordance with Y-5.2.

(3) The moment due to pressure shall be designated M_p' where

$$M_p' = H_D' h_D' + H_T' h_T'$$

$$H_D' = 0.785 B_{II}^2 P$$

$$H_T' = 0.785 P\left(B_1^2 - B_{II}^2\right)$$

For Category 1, 2, or 3 flanges [(2) above],

$$h_T' = \frac{B_1 - B_{II}}{4}$$

For Category 1 or 2 flanges [(2) above],

$$h_D' = \frac{B_1 - B_{II} - g_{1II}}{2}$$

For Category 3 flanges [(2) above],

$$h_D' = \frac{B_1 - B_{II}}{2}$$

(4) The rules in Y-6.3 and the summary of Table Y-6.1 for the analysis of a Class 3 assembly apply to the analysis of a Class 2 assembly with the following additions and substitutions:

C_5 and C_6 and all the symbols in equations in (-a) and (-b) below pertain only to the centrally located Mandatory Appendix 2 flange [nozzle plus the associated cover of thickness t_{II} to diameter B_1 defined in (1) above]. All terms in equations in (-c) and (-d) below, except C_5 and C_6, refer to the nonreducing flange (Flange I).

C_1 and C_2 of equations in (-c) and (-d) below replace C_1 and C_2 of eqs. Y-3(a)(1) and Y-3(a)(2).

(-a) Let

$$C_5 = M_p'$$

(-b) Let

$$C_6 = \frac{0.829}{\log\left(B_1/B_{1II}\right)}$$

for Category 3 flanges [see (2) above]. Let

$$C_6 = \frac{0.91 t_{II}^3 V}{L h_0 g_0^2}$$

for Category 1 or 2 flanges [see (2) above].

(-c) Let

$$C_1 = [1 - 2.095 J_S \log(A/B_1)] \div (-C_6 - 1.738 J_S)$$

(-d) Let

$$C_2 = (1.738 J_P M_P - C_5 C_6) \div (-C_6 - 1.738 J_S)$$

(-e) Replace eq. Y-6.3(a)(26) with:

$$E_{II}\theta_{BII} = \frac{5.46}{\pi t_{II}^3}\left(J_S M_{bII} + J_P M_P\right) + \left(E_{II}^* \theta_{rbII}\right)/t_{II}^3$$

(-f) Delete eq. Y-6.3(a)(38). Subparagraphs (1), (2), and (3) above apply only for calculating $C_5(M_p')$ and C_6, and subsequently when using (5) below for calculating the stresses in and adjacent to the nozzle in Flange II.

(5) Stresses in the centrally located nozzle of Flange II shall be calculated in accordance with the following equations after M_{SII} has been found using (4) above. All terms, such as e, Y, and Z, apply to the centrally located Mandatory Appendix 2 flange as defined in (1) and (2) above.

For Category 1 or 2 flanges [(2) above]:

Longitudinal Hub Stress

$$S_{HII} = \frac{f\left(M_p' - M_{SII}\right)}{L g_{1II}^2 B_{II}}$$

Radial Flange Stress Adjacent to Central Nozzle

$$S_{RII} = \frac{\left(1.33 t_{II} e + 1\right)\left(M_p' - M_{SII}\right)}{L t_{II}^2 B_{II}}$$

Tangential Flange Stress Adjacent to Central Nozzle

$$S_{TII} = \frac{Y\left(M_p' - M_{SII}\right)}{t_{II}^2 B_{II}} - Z S_{RII}$$

For Category 3 Flanges [(2) above]:

Tangential Flange Stress Adjacent to Central Nozzle

$$S_{TII} = \frac{Y\left(M_p' - M_{SII}\right)}{t_{II}^2 B_{II}}$$

Provided by IHS under license with ASME
No reproduction or networking permitted without license from IHS
Licensee=Chevron Phillips Chemical Co LP/5956674001
Not for Resale, 11/09/2014 20:41:36 MST

Radial and Longitudinal Hub Stress

$$S_{RII} = 0$$
$$S_{HII} = 0$$

(6) The stresses in Flange I and the remaining stresses in Flange II shall be calculated in accordance with Y-6.3 except as modified by (4).

(b) As an alternative to the method in (a) above and at the option of the designer, the assembly may be analyzed as if it is one flange of an identical pair in a Class 1 assembly using the procedure in Y-6.1. All stresses shall satisfy Y-7. The same value of h_C shall be used in both calculations and the strain length l of the bolts shall be based on the thickness of the flange under consideration. This method is more conservative and more bolting may be required than the method in (a) above.

(c) The central nozzle or opening in Flange II of a Class 2 assembly determined by the rules in (a) or (b) above meets the general requirements of this Division and of this Appendix. The rules for determining thickness and reinforcing requirements of UG-34 and UG-39, respectively, are not applicable.

Y-6.3 THE ANALYSIS OF A CLASS 3 ASSEMBLY

(a) The following equations are used for the analysis of Category 1, 2, and 3 nonreducing flanges and the reducer (or flat circular head) of a Class 3 assembly:

Rigid Body Rotation of Flanges Times E^*

$$E_I{}^*\theta_{rb\,I} = \frac{X(C_4 - C_2)}{1.206\log(A/B_1) - XC_3 - (1-X)C_1} \tag{17}$$

$$E_{II}{}^*\theta_{rb\,II} = -E_I{}^*\theta_{rb\,I}(E_{II}{}^*/E_I{}^*) \tag{18}$$

Total Flange Moment at Diameter B_1

$$M_{S\,I} = C_3(E_I{}^*\theta_{rb\,I}) + C_4 \tag{19}$$

$$M_{S\,II} = C_1(E_{II}{}^*\theta_{rb\,II}) + C_2 \tag{20}$$

Unbalanced Flange Moment at Diameter B_1

$$M_{u\,I} = 1.206E_I{}^*\theta_{rb\,I}\log(A/B_1) \tag{21}$$

$$M_{u\,II} = 1.206E_{II}{}^*\theta_{rb\,II}\log(A/B_1) \tag{22}$$

Balanced Flange Moment at Diameter B_1

$$M_{b\,I} = M_{S\,I} - M_{u\,I} \tag{23}$$

$$M_{b\,II} = M_{S\,II} - M_{u\,II} \tag{24}$$

Slope of Flange at Diameter B_1 Times E

$$E_I\theta_{B\,I} = \frac{5.46}{\pi t_I{}^3}(J_S M_{b\,I} + J_P M_P) + E_I{}^*\theta_{rb}/t_I{}^3 \tag{25}$$

$$E_{II}\theta_{B\,II} = \frac{-1.337\left(M_{S\,II} - \pi P B_1{}^3/32\right)}{t_{II}{}^3} \tag{26}$$

Contact Force Between Flanges at h_C

$$H_C = (M_P + M_{b\,I})/h_C \tag{27}$$

Bolt Load at Operating Conditions

$$W_{m1} = H + H_G + H_C \tag{28}$$

Operating Bolt Stress

$$\sigma_b = W_{m1}/A_b \tag{29}$$

Design Prestress in Bolts

$$S_i = \sigma_b - \frac{1.159h_C{}^2(M_P + M_{b\,I})}{2(1-X)at_I{}^3 lr_{E1}B_1} \tag{30}$$

Radial Stress in Flange I at Bolt Circle

$$S_{R\,I} = \frac{6(M_P + M_{S\,I})}{t_I{}^2(\pi C - nD)} \tag{31}$$

Radial Stress in Flange I at Inside Diameter

$$S_{R\,I} = -\left(\frac{2Ft_I}{h_0 + Ft_I} + 6\right)\frac{M_{S\,I}}{\pi B_1 t_I{}^2} \tag{32a}$$

$$S_{R\,I} = -\left(\frac{2F_L t_I}{h_0 + F_L t_I} + 6\right)\frac{M_{S\,I}}{\pi B_1 t_I{}^2} \tag{32b}$$

$$S_{R\,I} = 0 \tag{32c}$$

Provided by IHS under license with ASME
No reproduction or networking permitted without license from IHS
Licensee=Chevron Phillips Chemical Co LP/5956674001
Not for Resale, 11/09/2014 20:41:36 MST

Tangential Stress in Flange I at Inside Diameter

$$S_{T\mathrm{I}} = \frac{t_1 E_1 \theta_{B\,\mathrm{I}}}{B_1} + \left(\frac{2F t_1 Z}{h_0 + F t_1} - 1.8\right)\frac{M_{S\,\mathrm{I}}}{\pi B_1 t_1^2} \tag{33a}$$

$$S_{T\mathrm{I}} = \frac{t_1 E_1 \theta_{B\,\mathrm{I}}}{B_1} + \left(\frac{2F_L t_1 Z}{h_0 + F_L t_1} - 1.8\right)\frac{M_{S\,\mathrm{I}}}{\pi B_1 t_1^2} \tag{33b}$$

$$S_{T\mathrm{I}} = \frac{t_1 E_1 \theta_{B\,\mathrm{I}}}{B_1} \tag{33c}$$

Longitudinal Hub Stress in Flange I

$$S_{H\mathrm{I}} = \frac{h_0 E_1 \theta_{B\mathrm{I}} f}{0.91\left(g_1/g_0\right)^2 B_1 V} \tag{34a}$$

$$S_{H\mathrm{I}} = \frac{h_0 E_1 \theta_{B\,\mathrm{I}}}{0.91\left(g_1/g_0\right)^2 B_1 V_L} \tag{34b}$$

$$S_{H\mathrm{I}} = 0 \tag{34c}$$

Radial Stress in Flange II at Bolt Circle

$$S_{R\,\mathrm{II}} = \frac{6\left(M_P + M_{S\,\mathrm{II}}\right)}{t_{\mathrm{II}}^2\left(\pi C - nD\right)} \tag{35}$$

Radial Stress in Flange II at Diameter B_1

$$S_{R\,\mathrm{II}} = \frac{6M_{S\,\mathrm{II}}}{\pi B_1 t_{\mathrm{II}}^2} \tag{36}$$

Tangential Stress in Flange II at Diameter B_1

$$S_{T\mathrm{II}} = \frac{t_{\mathrm{II}} E_{\mathrm{II}} \theta_{B\,\mathrm{II}}}{B_1} - \frac{1.8M_{S\,\mathrm{II}}}{\pi B_1 t_{\mathrm{II}}^2} \tag{37}$$

Radial and Tangential Stress at Center of Flange II

$$S_{R\,\mathrm{II}} = S_{T\mathrm{II}} = \frac{0.3094PB_1^2}{t_{\mathrm{II}}^2} - \frac{6M_{S\,\mathrm{II}}}{\pi B_1 t_{\mathrm{II}}^2} \tag{38}$$

(b) The thickness of Flange II of a Class 3 assembly determined by the above rules shall be used in lieu of the thickness that is determined by UG-34. However, any centrally located opening in Flange II shall be reinforced to meet the rules of UG-39(b).

Y-7 ALLOWABLE FLANGE DESIGN STRESSES

The stresses calculated by the above equations, whether tensile or compressive (–), shall not exceed the following values for all classes of assemblies:[110]

(a) operating bolt stress σ_b not greater than S_b for the design value of S_t;

(b) longitudinal hub stress S_H not greater than S_f for Category 1 and 2 cast iron flanges except as otherwise limited by (1) and (2) below and not greater than 1.5 S_f for materials other than cast iron:

(1) longitudinal hub stress S_H not greater than the smaller of 1.5 S_f or 1.5 S_n for Category 1 flanges where the pipe or shell constitutes the hub;

(2) longitudinal hub stress S_H not greater than the smaller of 1.5 S_f or 2.5S_n for integral Nonmandatory Appendix Y flanges (Category 1) similar to the Mandatory Appendix 2 flanges shown as Figure 2-4, sketches (6), (6a), and (6b).

(c) radial stress S_R not greater than S_f;

(d) tangential stress S_T not greater than S_f;

(e) also, $(S_H + S_R)/2$ not greater than S_f and $(S_H + S_T)/2$ not greater than S_f;

(f) S_R and S_T at the center of the reducing flange in a Class 3 assembly [see eq. 13-7(c)(3)(38)] shall not exceed S_f.

Y-8 PRESTRESSING THE BOLTS

The design rules of this Appendix provide for tangential contact between the flanges at $h_{C\max}$ or some lesser value h_C beyond the bolt circle. As in the case of Mandatory Appendix 2 flanges, a Nonmandatory Appendix Y flange must be designed so that the calculated value of the operating bolt stress σ_b does not exceed S_b. Also, as in the case of Mandatory Appendix 2 flanges, ordinary wrenching techniques without verification of the actual initial bolt stress (assembly stress) is considered to meet all practical needs with control and verification reserved for special applications. For the purposes of this Appendix the use of

$$h_C < h_{C\max}$$

to optimize stresses is considered to be a special application unless it is also shown that all of the requirements of this Appendix are also satisfied when

$$h_C = h_{C\max}$$

Provided by IHS under license with ASME
No reproduction or networking permitted without license from IHS
Licensee=Chevron Phillips Chemical Co LP/5956674001
Not for Resale, 11/09/2014 20:41:36 MST

Y-9 ESTIMATING FLANGE THICKNESSES AND BOLTING

(a) The following simple equations are offered for calculating approximate values of t, t_{I}, t_{II}, and A_b before applying the rules in Y-4 through Y-8. The equations are not intended to replace the rules; however, they should significantly reduce the amount of work required to achieve a suitable design. Since the flanges are in metal-to-metal contact and interact, the stresses in one flange are influenced by the stiffness of the mating flange and theoretically an unlimited number of designs can be found which satisfy the rules. In practice, however, economics, engineering judgment, and dimensional constraints will show which is the"best" design. It should be noted that the equations in Table Y-9.1 assume that both flanges comprising an assembly have essentially the same modulus of elasticity and allowable stress.

(b) Equations for Trial Flange Thickness and Bolting

$$t_a = 2.45\sqrt{\frac{M_p}{(\pi C - nD)S_f}} \tag{39}$$

$$t_b = 0.56B_1\sqrt{P/S_f} \tag{40}$$

t_c = greater of t_a or t_b

$$t_d = t_a + \frac{(B_1 - B_{\mathrm{II}})}{(B_1 - 0.5C)}(t_b - t_a) \tag{41}$$

$t_e = t_a$ when $t_b < t_a$
$t_e = t_d$ when $t_b > t_a$

$$A_b' = \left[H + 2M_p/(A - C)\right] \div S_b \tag{42}$$

$$t_f = 2.45\sqrt{\frac{H_1 l_1 + H_2 l_2}{(\pi C - nD)S_f}} \tag{43}$$

$$A_b^* = 0.95\left[\frac{2(H_1 l_1 + H_2 l_2)}{(A - C)} + 0.785G^2P\right] \div S_b \tag{44}$$

where

$H_1 = 0.785B_{\mathrm{II}}^2P$
$H_2 = 0.785\ (G^2 - B_{\mathrm{II}}^2)P$
$l_1 = (C - B_{\mathrm{II}})/2$
$l_2 = (C - G)/2 + (G - B_{\mathrm{II}})/4$
t_g = smaller of t_c or t_f

$$t_a = 2.45\sqrt{\frac{M_p}{(\pi C - nD)S_f}} \tag{39}$$

$$t_b = 0.56B_1\sqrt{P/S_f} \tag{40}$$

$$t_c = \text{greater of} t_a \text{or} t_b t_d = t_a + \frac{(B_1 - B_{\mathrm{II}})}{(B_1 - 0.5C)}(t_b - t_a) \tag{41}$$

$$\begin{aligned} t_e &= t_a \text{when} t_b < t_a t_e = t_d \text{when} t_b > t_a A_b' \\ &= \left[H + 2M_p/(A - C)\right] \div S_b \end{aligned} \tag{42}$$

$$t_f = 2.45\sqrt{\frac{H_1 l_1 + H_2 l_2}{(\pi C - nD)S_f}} \tag{43}$$

$$A_b^* = 0.95\left[\frac{2(H_1 l_1 + H_2 l_2)}{(A - C)} + 0.785G^2P\right] \div S_b \tag{44}$$

where

$H_1 = 0.785B_{\mathrm{II}}^2P$

Table Y-9.1
Trial Flange Thickness and Area of Bolting for Various Classes of Assemblies and Flange Categories

Class (Assembly)	Category of Flanges: Nonreducing	Category of Flanges: Reducing	Suggested Trial Values: t or t_I	Suggested Trial Values: t_{II}	A_b
1	1 or 2	...	$0.9t_a$	...	$0.9A_b'$
	3	...	t_a	...	A_b'
2	1 or 2	1 or 2	t_a	t_e	A_b'
	3	3	$1.1t_a$	$1.1t_c$	$1.1A_b'$
	3	1 or 2	t_a	t_c	A_b'
	1 or 2	3	$1.1t_g$	$1.1t_g$	A_b^*
3	1, 2, or 3	...	$1.1t_a$	$1.1t_c$	$1.05A_b'$

Provided by IHS under license with ASME
No reproduction or networking permitted without license from IHS
Licensee=Chevron Phillips Chemical Co LP/5956674001
Not for Resale, 11/09/2014 20:41:36 MST

$H_2 = 0.785\ (G^2 - B_{II}^2)P$
$l_1 = (C - B_{II})/2$
$l_2 = (C - G)/2 + (G - B_{II})/4$
t_g = smaller of t_c or t_f

(c) Trial Values of t, t_I, t_{II}, and A_b. The simple equations given in Table Y-9.1 should yield relatively good trial values of t, t_I, t_{II}, and A_b but they do not assure that the"first trial design" will meet the requirements of Y-6 through Y-7. As a result, it becomes necessary to select new trial values and reanalyze. In order to assist the designer in selecting the second trial values, the following comments concerning the behavior of different classes of Nonmandatory Appendix Y flanges are offered:

(1) The hub of a Category 1 or 2 flange of a Class 1 assembly reduces the radial stress at the bolt circle (due to a negative hub–flange interaction moment) and the longitudinal hub stress. As a result, a pair of Category 1 or Category 2 flanges will be thinner than a pair of identical Category 3 flanges.

(2) Increasing the thickness of the reducing flange of a Class 3 assembly, when the nonreducing flange is Category 1 and 2, generally reduces the significant stresses in both flanges comprising the assembly. When the stress in Flange I (nonreducing) is excessive, increasing t_I will generally be more effective in reducing the stresses; however, a nominal increase of the stresses in Flange II will occur due to the additional restraint provided by increasing t_I. When the stress in Flange I is excessive and only marginally acceptable in Flange II, both t_I and t_{II} should be increased with the emphasis placed on t_I.

(3) A Category 3 reducing flange bolted to a Category 1 or 2 nonreducing flange produces a large overturning moment which tends to rotate Flange I in a negative direction. As a result, the radial stress at the bolt circle in Flange I will often be excessive due to a large, positive hub–flange interaction moment. As a result, it is usually necessary to increase t_I so that $t_I = t_{II}$. The same problem does not occur when Flange I is Category 3 since there exists no hub–flange interaction moment. When Flange I is an optional type treated as a loose-type (Category 3), a hub–flange interaction moment actually exists but is disregarded in the analysis by assigning the flange to Category 3.

(4) When the longitudinal hub stress of a Category 1 or 2 flange is excessive, it can be reduced by increasing the size of the hub, or g_0 when $g_1 = g_0$; however, this will cause an increase in the radial stress at the flange–hub junction. When S_H is excessive and S_R is marginally acceptable, an increase in the thickness of the flange is indicated in which case it may or may not be necessary to alter the size of the hub.

(5) When the longitudinal stress in the hub of the nonreducing flange of a Class 2 or Class 3 assembly is low compared to the allowable stress and the radial stress at the bolt circle is excessive, increasing S_H by making the hub smaller (more flexible) will often reduce the radial stress at the bolt circle to S_f. If it does not, an increase in t_I is indicated.

Y-10

Additional guidance on the design of flat faced metal-to-metal contact flanges can be found in the following references:

(a) Schneider, R. W., and Waters, E. O., The Background of ASME Code Case 1828: A Simplified Model of Analyzing Part B Flanges, *Journal of Pressure Vessel Technology*, ASME, Vol. 100, No. 2, May 1978, pp. 215–219;

Schneider, R. W., and Waters, E. O., The Application of ASME Code Case 1828, *Journal of Pressure Vessel Technology*, ASME, Vol. 101, No. 1, February 1979, pp. 87–94.

It should be noted that the rules in Nonmandatory Appendix Y were formerly contained in Code Case 1828, A Simplified Method for Analyzing Flat Face Flanges with Metal-to-Metal Contact Outside the Bolt Circle/Section VIII, Division 1.

Provided by IHS under license with ASME
No reproduction or networking permitted without license from IHS
Licensee=Chevron Phillips Chemical Co LP/5956674001
Not for Resale, 11/09/2014 20:41:36 MST

(13)

NONMANDATORY APPENDIX DD
GUIDE TO INFORMATION APPEARING ON CERTIFICATE OF AUTHORIZATION

ITEM [Note (1)]	DESCRIPTION
(1)	– The name of the Manufacturer or Assembler. – The full street address, city, state or province, country, and zip code.
(2)	This entry describes the scope and limitations, if any, on use of the Certification Mark and Designators. Illustrated below are some examples of Scope statements. **Certification Mark with the U Designator** – Manufacture of pressure vessels at the above location only. – Manufacture of pressure vessels at the above location only. (This authorization includes mass produced pressure vessels.) – Manufacture of pressure vessels at the above location only. (This authorization does not cover welding or brazing.) – Manufacture of pressure vessels at the above location and field sites controlled by the above location. (This authorization does not cover impregnated graphite.) – Manufacture of pressure vessels at the above location and field sites controlled by the above location. (This authorization does not cover welding or brazing.) – Manufacture of pressure vessels at field sites controlled by the above location. – Manufacture of pressure vessels at field sites controlled by the above location. (This authorization does not cover welding or brazing.) – Manufacture of pressure vessels (cast iron only) at the above location only. – Manufacture of pressure vessels at the above location and field sites controlled by the above location. (This authorization includes mass produced pressure vessels at the above location only.) – To be provided in a future publication. – Manufacture of pressure vessel parts at the above location only. – Manufacture of pressure vessel parts at the above location and field sites controlled by the above location. – Manufacture of pressure vessel parts at field sites controlled by the above location. – Manufacture of pressure vessel parts (cast iron only) at the above location only. – Manufacture of pressure vessels (cast iron only) at the above location only. (This authorization does not cover welding or brazing.) – Manufacture of pressure vessels at the above location only. (This authorization includes impregnated graphite pressure vessels.) – Manufacture of pressure vessel parts (impregnated graphite only) at the above location only. **Certification Mark with the UM Designator** – Manufacture of miniature pressure vessels at the above location only. – Manufacture of miniature pressure vessels at the above location only. (This authorization does not cover welding or brazing.) – Manufacture of miniature pressure vessels (cast iron only) at the above location only. – Manufacture of miniature pressure vessels at the above location and field sites controlled by the above location. **Certification Mark with the UV Designator** – Manufacture of pressure vessel pressure relief valves at the above location only. – Manufacture of pressure vessel pressure relief valves at the above location only. (This authorization does not cover welding or brazing.) – Assembly of pressure vessel pressure relief valves at the above location only. (This authorization does not cover welding or brazing.) – Manufacture of pressure vessel pressure relief valves and assembly of pressure vessel pressure relief valves at the above location only. (The assembly of valves does not cover welding or brazing.) – Manufacture of pressure vessel pressure relief valves and assembly of pressure vessel pressure relief valves at the above location only. (This authorization does not cover welding or brazing.) – Manufacture of pressure vessel pressure relief devices at the above location only. **Certification Mark with the UD Designator** – Manufacture of pressure vessel pressure relief devices at the above location only. – Manufacture of pressure vessel pressure relief devices at the above location only. (This authorization does not cover welding or brazing.) – Manufacture of pressure vessel pressure relief device holders at the above location only. – Manufacture of pressure vessel pressure relief device holders at the above location only. (This authorization does not cover welding or brazing.) – Manufacture of pressure vessel pressure relief devices and pressure vessel pressure relief device holders at the above location only.
(3)	The date authorization was granted by the Society to use the indicated Certification Mark with the appropriate Designator.
(4)	The date authorization to use the Certification Mark and Designator will expire.
(5)	A unique Certificate number assigned by the Society.

Provided by IHS under license with ASME
No reproduction or networking permitted without license from IHS
Licensee=Chevron Phillips Chemical Co LP/5956674001
Not for Resale, 11/09/2014 20:41:36 MST

ITEM [Note (1)]	DESCRIPTION
(6)	Certification Mark and Designator granted by the Society, i.e., U pressure vessels, UM miniature vessels, UV pressure relief valves, UD pressure relief devices.
(7), (8)	The signatures of the current chairman and director.

NOTE:
(1) The parenthesized numbers under "Item" correspond to the circled numbers that appear in Figure DD-1.

Provided by IHS under license with ASME
No reproduction or networking permitted without license from IHS
Licensee=Chevron Phillips Chemical Co LP/5956674001
Not for Resale, 11/09/2014 20:41:36 MST

(13)

Figure DD-1
Sample Certificate of Authorization

The American Society of Mechanical Engineers

SYMBOL ①

CERTIFICATE OF AUTHORIZATION

This certificate accredits the named company as authorized to use the indicated symbol of the American Society of Mechanical Engineers (ASME) for the scope of activity shown below in accordance with the applicable rules of the ASME Boiler and Pressure Vessel Code. The use of the Certification Mark and the authority granted by this Certificate of Authorization are subject to the provisions of the agreement set forth in the application. Any construction stamped with this symbol shall have been built strictly in accordance with the provisions of the ASME Boiler and Pressure Vessel Code.

COMPANY ②

SCOPE ③

AUTHORIZED ④

EXPIRES ⑤

CERTIFICATE NUMBER ⑥

⑦

CHAIRMAN OF THE BOILER
AND PRESSURE VESSEL COMMITTEE

⑧

DIRECTOR, ASME ACCREDITATION
AND CERTIFICATION

SAMPLE

Provided by IHS under license with ASME
No reproduction or networking permitted without license from IHS
Licensee=Chevron Phillips Chemical Co LP/5956674001
Not for Resale, 11/09/2014 20:41:36 MST

NONMANDATORY APPENDIX EE
HALF-PIPE JACKETS

EE-1 GENERAL

The calculation procedure in this Appendix shall be used only if both of the following conditions apply:

(a) There is positive pressure inside the shell or head.

(b) There is positive pressure inside the half-pipe jacket.

EE-2 HALF-PIPE JACKETS

The maximum permissible pressure P' in half-pipe jackets shall be determined from the following formula:

$$P' = F/K \tag{1}$$

where

P' = permissible jacket pressure, psi

F = $1.5S - S'$
(F shall not exceed 1.5 S)

S = maximum allowable tensile stress at design temperature of shell or head material, psi

S' = actual longitudinal tensile stress in shell or head due to internal pressure and other axial forces, psi. When axial forces are negligible, S' shall be taken as $PR/2t$. When the combination of axial forces and pressure stress ($PR/2t$) is such that S' would be a negative number, then S' shall be taken as zero.

K = factor obtained from Figure EE-1, Figure EE-2, or Figure EE-3

P = internal design pressure (see UG-21) in vessel, psi

R = inside shell or head radius, in.

D = $2R$

The minimum thickness of a half-pipe jacket, when the thickness does not exceed one-half of the inside pipe radius or P does not exceed $0.385S_1$, is given by

$$T = \frac{P_1 r}{0.85S_1 - 0.6P_1} \tag{2}$$

where

T = minimum thickness of half-pipe jacket, in.

r = inside radius of jacket defined in Figure EE-4, in.

S_1 = allowable tensile stress of jacket material at design temperature, psi

P_1 = design pressure in jacket, psi. (P_1 shall not exceed P'.)

The fillet weld attaching the half-pipe jacket to the vessel shall have a throat thickness not less than the smaller of the jacket or shell thickness. Through thickness jacket welds with a fillet shall be considered when the jacket is in cyclic service.

EE-3 JACKETS WITH OTHER GEOMETRIES (13)

For other jacket geometries such as shown in Figure EE-5, the permissible pressure P' may be obtained from the rules of UG-47 for stayed construction or 9-5 for jacketed vessels.

Provided by IHS under license with ASME
No reproduction or networking permitted without license from IHS
Licensee=Chevron Phillips Chemical Co LP/5956674001
Not for Resale, 11/09/2014 20:41:36 MST

Figure EE-1
NPS 2 Pipe Jacket

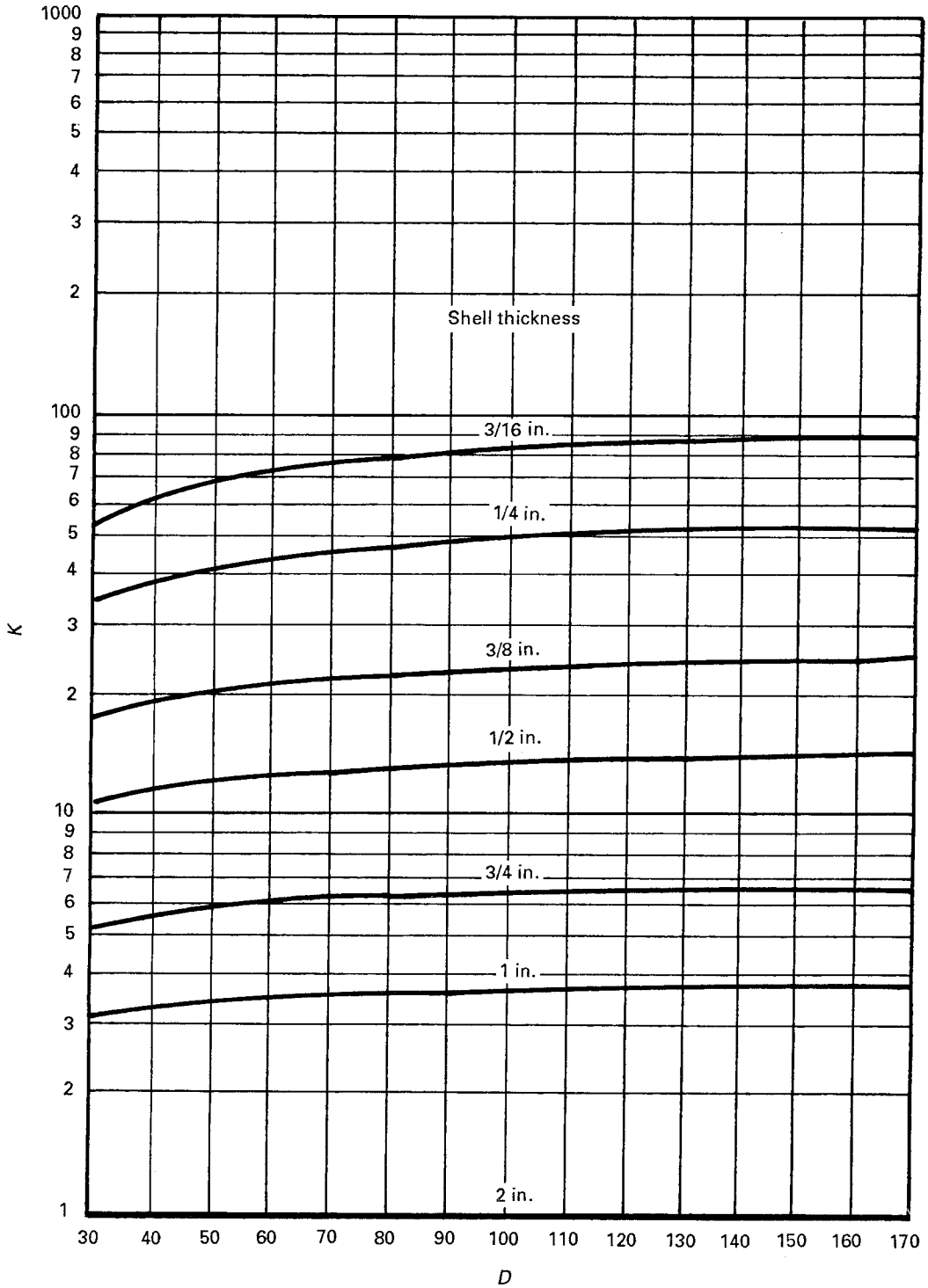

Provided by IHS under license with ASME
No reproduction or networking permitted without license from IHS
Licensee=Chevron Phillips Chemical Co LP/5956674001
Not for Resale, 11/09/2014 20:41:36 MST

Figure EE-2
NPS 3 Pipe Jacket

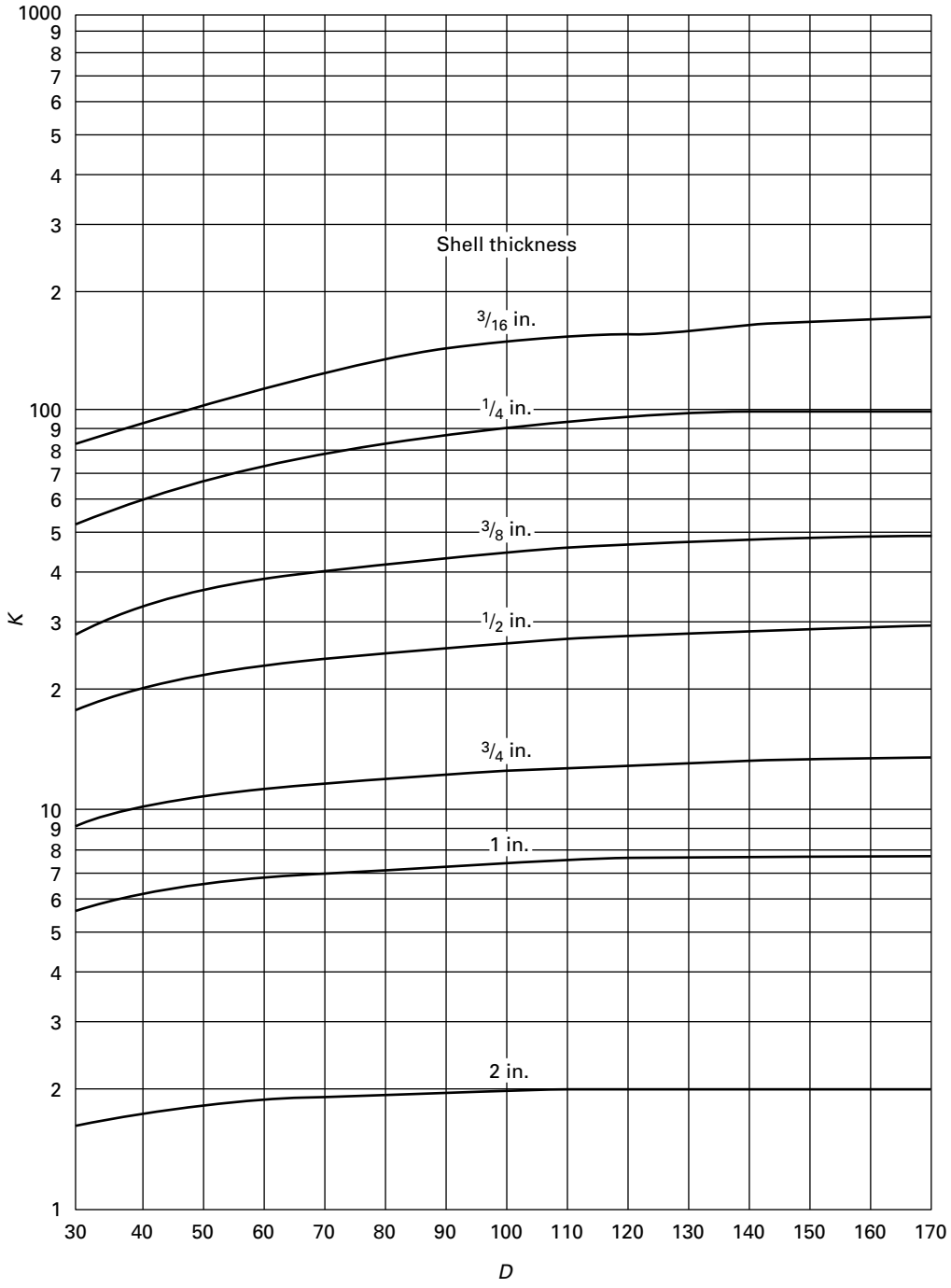

Provided by IHS under license with ASME
No reproduction or networking permitted without license from IHS
Licensee=Chevron Phillips Chemical Co LP/5956674001
Not for Resale, 11/09/2014 20:41:36 MST

Figure EE-3
NPS 4 Pipe Jacket

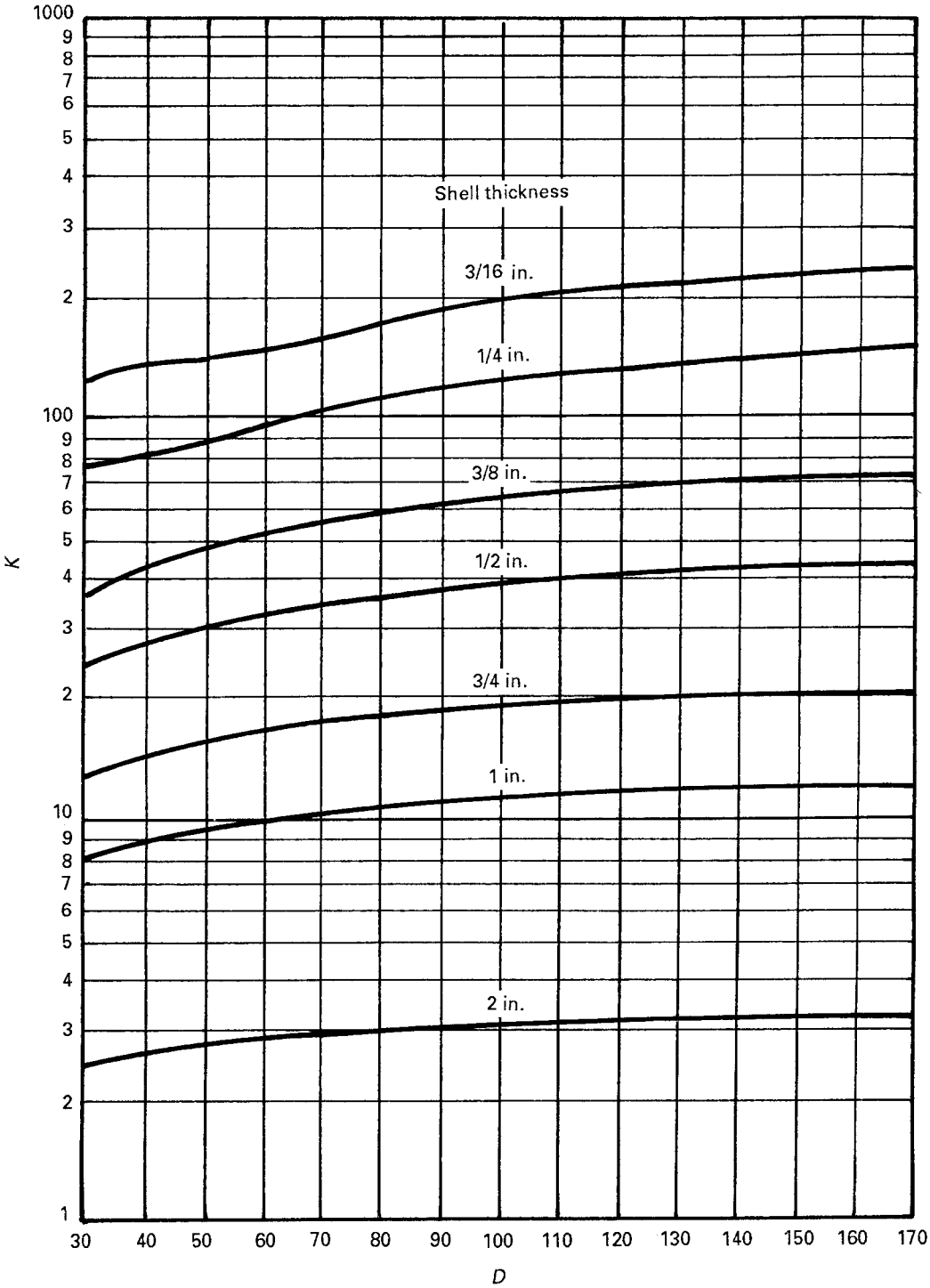

Provided by IHS under license with ASME
No reproduction or networking permitted without license from IHS
Licensee=Chevron Phillips Chemical Co LP/5956674001
Not for Resale, 11/09/2014 20:41:36 MST

Figure EE-4

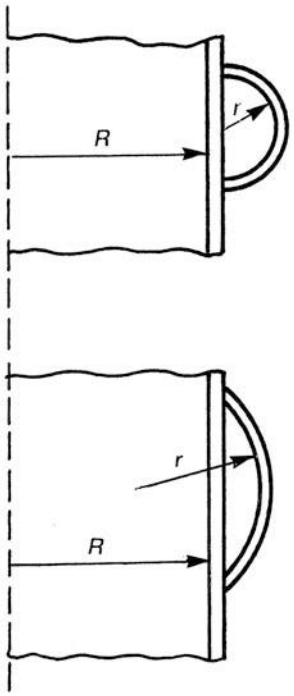

Figure EE-5

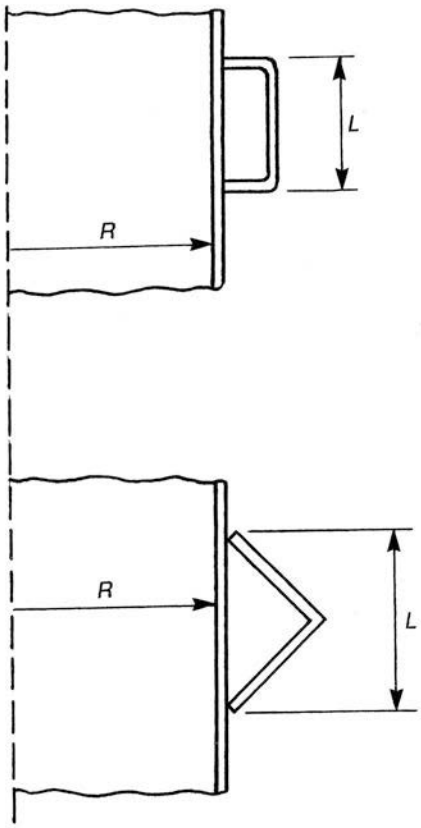

Provided by IHS under license with ASME
No reproduction or networking permitted without license from IHS
Licensee=Chevron Phillips Chemical Co LP/5956674001
Not for Resale, 11/09/2014 20:41:36 MST

(13)

NONMANDATORY APPENDIX FF
GUIDE FOR THE DESIGN AND OPERATION OF QUICK-ACTUATING (QUICK-OPENING) CLOSURES

FF-1 INTRODUCTION

This Appendix provides guidance in the form of recommendations for the installation, operation, and maintenance of quick-actuating closures. This guidance is primarily for the use of the Owner and the user. The safety of the quick-actuating closure is the responsibility of the user. This includes the requirement for the user to provide training for all operating personnel, follow safety procedures, periodically inspect the closure, provide scheduled maintenance, and have all necessary repairs made in a timely fashion.

This Appendix also contains guidance for use by the Designer. The rules specific to the design and construction of quick-actuating closures are found in para. UG-35.2 of this Division.

The Manufacturer should supply to the Owner a copy(s) of the Installation, Operational, and Maintenance Manual for the quick-actuating closure which should, as a minimum, address the requirements described in this Appendix. The Owner should supply a copy of the Installation, Operational, and Maintenance Manual to the user.

FF-2 RESPONSIBILITIES

It is the responsibility of the user to ensure that the sensing and safety devices and equipment specified by the Manufacturer are properly installed before initial operation, and maintained during subsequent operation. Provision of written operation and maintenance procedures and training of personnel are also the responsibility of the Owner or user.

The user must not remove any devices furnished or specified by the Manufacturer of the vessel, and any repairs or replacements must be the same as, or equal to the original equipment furnished or specified by the Manufacturer.

The rules of this Division do not require these safety devices to be supplied by the Manufacturer of the vessel or of the quick-actuating closure.

FF-3 DESIGN

Code rules cannot be written to address each specific design; therefore, engineering judgment exercised by a qualified designer with the necessary experience is required to achieve a safe design.

Because of the multiple requirements imposed on the design, it should be prepared by a designer with suitable experience and training in the design of quick-actuating closures.

The design must be safe, reliable, and allow for quick and safe opening and closing. Therefore, sensing and safety devices and equipment are integral and vitally important parts of the closure, and are to be furnished or specified by the Manufacturer of the vessel or the quick-actuating closure. These devices must never be removed by the user.

It should be noted that there is a higher likelihood of personnel being close to the vessel and the closure when accidents during opening occur, especially those due to violations of operating procedures. An example is attempting to pry open the closure when they believe the vessel has been depressurized and when it may not be.

The passive safety features described below can help to protect against such actions, but most can still be subverted. Protection against subversion of safety features is covered under Inspection, Training, and Administrative Controls, below.

Some suggestions, which are not mandatory and which are not necessarily applicable to each design, are provided below for illustrative purposes.

Structural elements in the vessel and the closure are designed using required design margins. However, it is also important to provide the features listed below for the prevention of erroneous opening.

(a) Passive Actuation. A passively actuated safety feature or device does not require the operator to take any action to provide safety. An example is a pressure relief valve in a vessel, or a pressure-actuated locking device in a quick-actuating closure.

(b) Redundancy. A redundant safety feature or device is one of two or more features or devices that perform the same safety function. Two pressure-actuated locking devices in parallel are an example appliable to quick-actuating closures. Another example is two or more independent holding elements, the failure of one of which not reducing the capability to withstand pressure loadings below an acceptable level.

(c) Fail-Safe Behavior. If a device or element fails, it should fail in a safe mode. An example applicable to quick-actuating closures is a normally-closed electrical interlock that stays locked if power fails.

Provided by IHS under license with ASME
No reproduction or networking permitted without license from IHS
Licensee=Chevron Phillips Chemical Co LP/5956674001
Not for Resale, 11/09/2014 20:41:36 MST

(d) Multiple Lines of Defense. This can consist of any combination of two or more items from the list above. They should consist, at the very least, of warnings or alarms to keep operators and other personnel away from a quick-actuating closure.

Pressure controls and sensors that operate well at 50 or 100 psi (350 or 700 kPa) or at a much greater pressure often do not operate well at very low pressure. For example, they may not sense a small, static head of hot water. Certain accidents can occur because of release of hot fluid under static head alone, or under very low pressure. To protect against such accidents, separate controls and sensors may be used to maintain operating pressure on the one hand, and others may be required to prevent inappropriate opening at low pressures.

It may be necessary or desirable to utilize electrical or electronic devices and interlocks. If these are used, careful installation, operating, and maintenance instructions (see below) will be required.

The effects of repetitive loading must be considered, as required by UG-22. There are two phenomena that are of major concern. The first is the wear produced by repetitive actuation of the mechanism. This can generally be mitigated by routine maintenance. The second is fatigue damage produced in the vessel or in the closure by repetitive actuation of the mechanism or by repetitive pressurization and depressurization.

The Code does not provide explicit guidance for the evaluation or mitigation of wear. As well as proper maintenance, the selection of suitable materials for mating wear surfaces and control of contract stresses is necessary during the design process to properly control wear.

FF-4 INSTALLATION

The Manufacturer should provide clear instructions for the installation of the quick-actuating closure itself and any adjustments that are necessary in the field. An example is adjustment of wedges or clamps. Instructions, preferably including schematics and drawings, should be provided for the installation, adjustment, and checkout of interlocks and warning devices.

FF-5 MAINTENANCE

Vessels with quick-actuating closures are commonly installed in industrial environments subject to dirt, moisture, abrasive materials, etc. These environmental factors are detrimental to safe and reliable operation of mechanical, electrical, and electronic sensors and safety devices. Therefore, the user should establish a suitable cleaning and maintenance interval, and a means to verify that the equipment has been properly cleaned and maintained.

Specifically, accidents have occurred because gaskets have stuck, and have released suddenly when pried open. Many soft gaskets (60–70 Shore A Scale) have a combined shelf life and operating life of as little as six months. Aging can change the properties of the gasket material and change the gasket dimensions, impeding its proper function.

FF-6 INSPECTION

It is recommended that the user inspect the completed installation including the pressure gauges before it is permitted to operate. Records of this inspection should be retained.

It is recommended that the user establishes and documents a periodic in-service inspection program, and that this program is followed and documented.

FF-7 TRAINING (13)

Many accidents involving quick-actuating closures have occurred because the operators have been unfamiliar with the equipment or its safety features. The greater safety inherent in current designs has sometimes been produced by the use of sophisticated mechanical, electrical, and electronic control devices. To ensure these features produce the maximum safety, personnel should be properly trained in their operation and maintenance.

Note that accidents may occur because hot fluid remains present in the vessel at atmospheric pressure or 2 psig to 3 psig (15 kPa to 20 kPa) gage. When the vessel is forced open while under this pressure, injuries may occur. Such specific accident-sources should be guarded against by training and by administrative procedures.

It is important that sound written operating procedures, understandable by the operating personnel and multilingual if necessary, exist for the quick-actuating closure, and that the operators be trained in the proper use of all interlocks, sensing devices, and manual closure mechanisms.

Provision of written operation and maintenance procedures and training of personnel are the responsibility of the user.

As part of the training program, testing should be performed to assure that the trainee understands the material he or she is trained in. Records should be retained by the user.

FF-8 ADMINISTRATIVE CONTROLS

The user should provide administrative controls over training, cleanliness, operation, periodic inspection, and maintenance of equipment with quick-actuating closures. Records should be retained by the user.

Provided by IHS under license with ASME
No reproduction or networking permitted without license from IHS
Licensee=Chevron Phillips Chemical Co LP/5956674001
Not for Resale, 11/09/2014 20:41:36 MST

NONMANDATORY APPENDIX GG GUIDANCE FOR THE USE OF U.S. CUSTOMARY AND SI UNITS IN THE ASME BOILER AND PRESSURE VESSEL CODE

GG-1 USE OF UNITS IN EQUATIONS

The equations in this Nonmandatory Appendix are suitable for use only with either the U.S. Customary or the SI units provided in Mandatory Appendix 33, or with the units provided in the nomenclature associated with that equation. It is the responsibility of the individual and organization performing the calculations to ensure that appropriate units are used. Either U.S. Customary or SI units may be used as a consistent set. When SI units are selected, U.S. Customary values in referenced specifications may be converted to SI values to at least three significant figures for use in calculations and other aspects of construction.

GG-2 GUIDELINES USED TO DEVELOP SI EQUIVALENTS

The following guidelines were used to develop SI equivalents:

(a) SI units are placed in parentheses after the U.S. Customary units in the text.

(b) In general, separate SI tables are provided if interpolation is expected. The table designation (e.g., table number) is the same for both the U.S. Customary and SI tables, with the addition of suffix "M" to the designator for the SI table, if a separate table is provided. In the text, references to a table use only the primary table number (i.e., without the "M"). For some small tables, where interpolation is not required, SI units are placed in parentheses after the U.S. Customary unit.

(c) Separate SI versions of graphical information (charts) are provided, except that if both axes are dimensionless, a single figure (chart) is used.

(d) In most cases, conversions of units in the text were done using hard SI conversion practices, with some soft conversions on a case-by-case basis, as appropriate. This was implemented by rounding the SI values to the number of significant figures of implied precision in the existing U.S. Customary units. For example, 3,000 psi has an implied precision of one significant figure. Therefore, the conversion to SI units would typically be to 20 000 kPa. This is a difference of about 3% from the "exact" or soft conversion of 20 684.27 kPa. However, the precision of the conversion was determined by the Committee on a case-by-case basis. More significant digits were included in the SI equivalent if there was any question. The values of allowable stress in Section II, Part D generally include three significant figures.

(e) Minimum thickness and radius values that are expressed in fractions of an inch were generally converted according to the following table:

Fraction, in.	Proposed SI Conversion, mm	Difference, %
1/32	0.8	−0.8
3/64	1.2	−0.8
1/16	1.5	5.5
3/32	2.5	−5.0
1/8	3	5.5
5/32	4	−0.8
3/16	5	−5.0
7/32	5.5	1.0
1/4	6	5.5
5/16	8	−0.8
3/8	10	−5.0
7/16	11	1.0
1/2	13	−2.4
9/16	14	2.0
5/8	16	−0.8
11/16	17	2.6
3/4	19	0.3
7/8	22	1.0
1	25	1.6

(f) For nominal sizes that are in even increments of inches, even multiples of 25 mm were generally used. Intermediate values were interpolated rather than converting and rounding to the nearest mm. See examples in the following table. [Note that this table does not apply to nominal pipe sizes (NPS), which are covered below.]

Size, in.	Size, mm
1	25
1 1/8	29
1 1/4	32
1 1/2	38
2	50
2 1/4	57
2 1/2	64
3	75
3 1/2	89
4	100
4 1/2	114
5	125
6	150
8	200

Provided by IHS under license with ASME
No reproduction or networking permitted without license from IHS
Licensee=Chevron Phillips Chemical Co LP/5956674001
Not for Resale, 11/09/2014 20:41:36 MST

Table continued

Size, in.	Size, mm
12	300
18	450
20	500
24	600
36	900
40	1 000
54	1 350
60	1 500
72	1 800

Size or Length, ft	Size or Length, m
3	1
5	1.5
200	60

(g) For nominal pipe sizes, the following relationships were used:

U.S. Customary Practice	SI Practice
NPS 1/8	DN 6
NPS 1/4	DN 8
NPS 3/8	DN 10
NPS 1/2	DN 15
NPS 3/4	DN 20
NPS 1	DN 25
NPS 1 1/4	DN 32
NPS 1 1/2	DN 40
NPS 2	DN 50
NPS 2 1/2	DN 65
NPS 3	DN 80
NPS 3 1/2	DN 90
NPS 4	DN 100
NPS 5	DN 125
NPS 6	DN 150
NPS 8	DN 200
NPS 10	DN 250
NPS 12	DN 300
NPS 14	DN 350
NPS 16	DN 400
NPS 18	DN 450
NPS 20	DN 500
NPS 22	DN 550
NPS 24	DN 600
NPS 26	DN 650
NPS 28	DN 700
NPS 30	DN 750
NPS 32	DN 800
NPS 34	DN 850
NPS 36	DN 900
NPS 38	DN 950
NPS 40	DN 1000
NPS 42	DN 1050
NPS 44	DN 1100
NPS 46	DN 1150
NPS 48	DN 1200
NPS 50	DN 1250
NPS 52	DN 1300
NPS 54	DN 1350
NPS 56	DN 1400
NPS 58	DN 1450

Table continued

U.S. Customary Practice	SI Practice
NPS 60	DN 1500

(h) Areas in square inches (in.^{2}) were converted to square mm (mm^2) and areas in square feet (ft^2) were converted to square meters (m^2). See examples in the following table:

Area (U.S. Customary)	Area (SI)
1 in.^{2}	650 mm^2
6 in.^{2}	4 000 mm^2
10 in.^{2}	6 500 mm^2
5 ft^2	0.5 m^2

(i) Volumes in cubic inches (in.^{3}) were converted to cubic mm (mm^3) and volumes in cubic feet (ft^3) were converted to cubic meters (m^3). See examples in the following table:

Volume (U.S. Customary)	Volume (SI)
1 in.^{3}	16 000 mm^3
6 in.^{3}	100 000 mm^3
10 in.^{3}	160 000 mm^3
5 ft^3	0.14 m^3

(j) Although the pressure should always be in MPa for calculations, there are cases where other units are used in the text. For example, kPa is used for small pressures. Also, rounding was to one significant figure (two at the most) in most cases. See examples in the following table. (Note that 14.7 psi converts to 101 kPa, while 15 psi converts to 100 kPa. While this may seem at first glance to be an anomaly, it is consistent with the rounding philosophy.)

Pressure (U.S. Customary)	Pressure (SI)
0.5 psi	3 kPa
2 psi	15 kPa
3 psi	20 kPa
10 psi	70 kPa
14.7 psi	101 kPa
15 psi	100 kPa
30 psi	200 kPa
50 psi	350 kPa
100 psi	700 kPa
150 psi	1 MPa
200 psi	1.5 MPa
250 psi	1.7 MPa
300 psi	2 MPa
350 psi	2.5 MPa
400 psi	3 MPa
500 psi	3.5 MPa
600 psi	4 MPa
1,200 psi	8 MPa
1,500 psi	10 MPa

Provided by IHS under license with ASME
No reproduction or networking permitted without license from IHS
Licensee=Chevron Phillips Chemical Co LP/5956674001
Not for Resale, 11/09/2014 20:41:36 MST

(k) Material properties that are expressed in psi or ksi (e.g., allowable stress, yield and tensile strength, elastic modulus) were generally converted to MPa to three significant figures. See example in the following table:

Strength (U.S. Customary)	Strength (SI)
95,000 psi	655 MPa

(l) In most cases, temperatures (e.g., for PWHT) were rounded to the nearest 5°C. Depending on the implied precision of the temperature, some were rounded to the nearest 1°C or 10°C or even 25°C. Temperatures colder than 0°F (negative values) were generally rounded to the nearest 1°C. The examples in the table below were created by rounding to the nearest 5°C, with one exception:

Temperature, °F	Temperature, °C
70	20
100	38
120	50
150	65
200	95
250	120
300	150
350	175
400	205
450	230
500	260
550	290
600	315
650	345
700	370
750	400
800	425
850	455
900	480
925	495
950	510
1,000	540
1,050	565
1,100	595
1,150	620
1,200	650
1,250	675
1,800	980
1,900	1 040
2,000	1 095
2,050	1 120

GG-3 SOFT CONVERSION FACTORS

The following table of "soft" conversion factors is provided for convenience. Multiply the U.S. Customary value by the factor given to obtain the SI value. Similarly, divide the SI value by the factor given to obtain the U.S. Customary value. In most cases it is appropriate to round the answer to three significant figures.

U.S. Customary	SI	Factor	Notes
in.	mm	25.4	...
ft	m	0.3048	...
in.^{2}	mm^2	645.16	...
ft^2	m^2	0.09290304	...
in.^{3}	mm^3	16,387.064	...
ft^3	m^3	0.02831685	...
U.S. gal	m^3	0.003785412	...
U.S. gal	liters	3.785412	...
psi	MPa	0.0068948	Used exclusively in equations
...	(N/mm^2)	...	...
psi	kPa	6.894757	Used only in text and for nameplate
psi	bar	0.06894757	...
ft-lb	J	1.355818	...
°F	°C	$\frac{5}{9} \times (°F - 32)$	Not for temperature difference
°F	°C	$\frac{5}{9}$	For temperature differences only
R	K	$\frac{5}{9}$	Absolute temperature
lbm	kg	0.4535924	...
lbf	N	4.448222	...
in.-lb	N·mm	112.98484	Use exclusively in equations
ft-lb	N·m	1.3558181	Use only in text
$\text{ksi}\sqrt{\text{in.}}$	$\text{MPa}\sqrt{\text{m}}$	1.0988434	...
Btu/hr	W	0.2930711	Use for boiler rating and heat transfer
lb/ft^3	kg/m^3	16.018463	...

Provided by IHS under license with ASME
No reproduction or networking permitted without license from IHS
Licensee=Chevron Phillips Chemical Co LP/5956674001
Not for Resale, 11/09/2014 20:41:36 MST

NONMANDATORY APPENDIX HH
TUBE EXPANDING PROCEDURES AND QUALIFICATION

HH-1 GENERAL

This Appendix establishes requirements for procedure specifications for expanded tube-to-tubesheet joints

(a) designed using the test joint efficiencies, f_r (test), listed in Table A-2 of Nonmandatory Appendix A;

(b) designed using the no-test joint efficiencies, f_r (no test), listed in Table A-2 of Nonmandatory Appendix A; and

(c) used in tubesheets designed in accordance with the rules of Part UHX when the effective tube hole diameter depends upon the expanded depth of the tube ($\rho > 0$).

Leak tightness of expanded joints is not a consideration in Part UHX and Nonmandatory Appendix A, and is therefore not considered in Nonmandatory Appendix HH.

HH-2 SCOPE

The rules in this Appendix apply to preparation and qualification of tube expanding procedures for the types of expanding processes permitted in this Appendix.

HH-3 TERMS AND DEFINITIONS

Some of the more common terms relating to tube expanding are as follows:

explosive expanding: uniform pressure expanding in which the force of an explosion is applied to the length of tube to be expanded.

groove: an annular machined depression in a tube hole.

hybrid expanding: hydroexpanding or explosive expanding to a percent wall reduction that ensures maintenance of tube-hole contact, followed by roller expanding to the final percent wall reduction.

hydroexpanding: uniform pressure expanding in which hydraulic pressure is applied to the length of tube to be expanded.

near contact kinetic expanding: see *explosive expanding*.

parallel tube roller: tube rolling tool in which the taper angle of the mandrel and the taper angle of the hardened pins are approximately equal and opposite, thereby causing the pins to bear uniformly on the tube surface.

percent wall reduction: reduction in tube wall thickness due to expanding, expressed as a percent of the measured thickness of the tube.

progressive rolling: step rolling in which the first step begins at or near the front face of the tubesheet and successive steps progress toward the rear face.

prosser: see *segmental expander*.

prossering: expanding tubes with a segmental expander.

regressive rolling: step rolling in which the first step begins at or near the rear face of the tubesheet and successive steps progress toward the front face.

roller expanding: expanding by inserting a tube rolling tool into a tube aligned with a tube hole.

segmental expander: thick-walled, flanged cylinder with a tapered interior wall, cut axially into segments and held together by bands. A mandrel with a reverse taper in contact with the taper of the interior of the cylinder is thrust forward, forcing the segments outward to contact and expand the tube. The flange bears against the tube end or tubesheet face to maintain the position of the expander relative to the tube.

self-feeding rolling tool: tube rolling tool with the slots in the cage at an angle with the tool centerline such that rotating the mandrel in a clockwise direction causes the tool to feed into the tube and reversing the direction causes it to back out.

serrations: parallel, narrow grooves machined in a tube hole or on the exterior of a tube end.

step rolling: tube rolling in which successive, overlapping applications of the tube roller are applied in order to roll tubes into tubesheets thicker than approximately 2 in. (50 mm).

torque control: an electronic, hydraulic control or cam-operated reversing mechanism that causes a rolling tool driver to reverse direction when a preset level of torque is reached.

transition zone: region of an expanded joint in which the expanded part of the tube transitions to the unexpanded part.

tube end enhancement: treatment to that part of the tube O.D. to be expanded into a tubesheet hole to increase the strength of the expanded tube-to-tubesheet joint.

Provided by IHS under license with ASME
No reproduction or networking permitted without license from IHS
Licensee=Chevron Phillips Chemical Co LP/5956674001
Not for Resale, 11/09/2014 20:41:36 MST

tube expanding: process of expanding a tube to a fully plastic state into contact with the surrounding metal of a tube hole that creates residual interface pressure between the tube and tube hole when the expanding tool is withdrawn.

tube hole enhancement: treatment to the tube hole to increase the strength of an expanded tube-to-tubesheet joint. Enhancements may be by means of grooves or serrations.

tube rolling tool: tool consisting of a slotted cylindrical cage that holds hardened pins into which a hardened tapered mandrel is thrust and rotated, to expand the tube.

two-stage expanding: explosive, hydraulic, or roller expanding in which in the first stage all the tubes are expanded into firm contact with the holes, followed by a second stage of expanding to the final specified percent wall reduction.

uniform pressure expanding: tube expanding by applying force equally on the surfaces of the length of tube to be expanded.

HH-4 TUBE EXPANDING PROCEDURE SPECIFICATION (TEPS)

A TEPS is a written document that provides the tube expander operator with instructions for making production tube-to-tubesheet joint expansions in accordance with Code requirements (see Form QEXP-1). The Manufacturer is responsible for ensuring that production tube expanding is performed in accordance with a qualified TEPS that meets the requirements of HH-7.

NOTE: The instructions for completing Form QEXP-1 are provided in Table QEXP-1. The instructions are identified by parenthesized numbers corresponding to circled numbers in the form.

The TEPS shall address, as a minimum, the specific variables, both essential and nonessential, as provided in HH-7.1 for each process to be used in production expanding.

HH-5 TUBE EXPANDING PROCEDURE QUALIFICATION

The purpose for qualifying a TEPS is to demonstrate that the expanded joint proposed for construction will be suitable for its intended application. The tube expanding procedure qualification establishes the suitability of the expanded joint, not the skill of the tube expander operator.

HH-5.1 NO TEST QUALIFICATION

Tube expanding procedures not required to be qualified by HH-5.2 may be used for expanded tube joints meeting HH-1(b) or HH-1(c) without a qualification test, provided the Manufacturer maintains records indicating that the tube joints expanded using the tube expanding procedures were successfully tested in accordance with UG-99 or UG-100.

HH-5.2 TEST QUALIFICATION

Tube expanding procedures to be used for expanded tube joints meeting HH-1(a) shall be qualified by the Manufacturer in accordance with the requirements of A-1 and A-3, and the qualification shall be documented in accordance with HH-5.3.

HH-5.3 TUBE EXPANDING PROCEDURE QUALIFICATION RECORD (TEPQR) FOR TEST JOINT EFFICIENCIES

The TEPQR documents what occurred during expanding the test specimen and the results of the testing in accordance with the requirements of A-1 and A-3 of Nonmandatory Appendix A. In addition, the TEPQR shall document the essential variables and other specific information identified in HH-7 for each process used.

HH-6 TUBE EXPANDING PERFORMANCE QUALIFICATION (TEPQ)

The purpose of performing a TEPQ is to demonstrate that the operator of the equipment is qualified to make an expanded joint of the type specified in the TEPS.

HH-6.1 NO TEST QUALIFICATION

A tube expander operator not required to be qualified by HH-6.2 is qualified to expand tube joints meeting HH-1(b) or HH-1(c) provided the Manufacturer maintains records indicating that tube joints expanded by the operator were successfully tested in accordance with UG-99 or UG-100.

HH-6.2 TEST QUALIFICATION

A tube expander operator is qualified to expand tube joints using tube expanding procedures that have been qualified in accordance with HH-5.2, provided the operator, under the direction of the Manufacturer, has prepared at least one specimen that meets the requirements of A-1 and A-3 for the applicable procedure.

HH-7 TUBE EXPANDING VARIABLES

Variables are subdivided into essential variables that apply to all expanding processes, and essential and nonessential variables that apply to each expanding process. Essential variables are those in which a change, as described in specific variables, is considered to affect the mechanical properties of the expanded joint, and shall require requalification of the TEPS. Nonessential variables are those that may be changed at the Manufacturer's discretion and are included in the TEPS for instruction purposes.

Provided by IHS under license with ASME
No reproduction or networking permitted without license from IHS
Licensee=Chevron Phillips Chemical Co LP/5956674001
Not for Resale, 11/09/2014 20:41:36 MST

HH-7.1 ESSENTIAL VARIABLES FOR ALL EXPANDING PROCESSES

The following essential variables shall be specified for all expanding processes. The Manufacturer may define additional essential variables.

(a) method of measuring and controlling tube hole diameter

(b) limit of percentage of tube holes that deviate from the specified diameter tolerance and maximum tolerance of hole-diameter deviation

(c) limiting ratio of tube diameter to tube wall thickness

(d) minimum ratio of tubesheet thickness to tube diameter

(e) minimum ratio of drilling pitch to tube diameter

(f) details of tube and/or tube hole treatments for joint strength enhancement, including surface finish of tube holes, tube-hole and tube end serrations, and tube hole annular grooves

(g) tube-to-hole diametral clearance prior to expanding (fit)

(h) range of modulus of elasticity of tube material

(i) range of modulus of elasticity of tubesheet material

(j) range of specified minimum tube yield stresses listed in Section II

(k) maximum permissible increase of tube yield stress above the minimum yield stress specified in Section II

(l) specified minimum tubesheet yield stress listed in Section II

(m) minimum ratio of tubesheet to tube yield stress;[111] a ratio below 0.6 requires shear load testing

(n) minimum and maximum percent wall reduction[112]

(o) for welded tube joints where tubes are to be expanded after welding, the method of fixing tube position before welding, the setback from the front face of the tubesheet to onset of expanding, the treatment of weld and tube-end shrinkage before inserting the expanding mandrel, and any post-expansion heat treatment

(p) for tubes to be expanded before welding, the procedure to be used to remove all traces of lubricants and moisture from the surfaces to be welded

(q) distance from front face of tubesheet to commencement of expanding

(r) distance from rear face of tubesheet to end of expanding

(s) unrolled length between front and rear expansion

(t) lubrication and cooling of the expanding mandrel

(u) measured actual amount of expansion

(v) range of tube wall thickness

HH-7.2 ESSENTIAL VARIABLES FOR ROLLER EXPANDING

The following are essential variables for roller expanding:

(a) tool driver type (electrical, air, hydraulic), power or torque rating

(b) number and length of overlapping steps

(c) direction of rolling (progressive or regressive)

(d) speed of rotation

(e) tool type (parallel or nonparallel)

(f) cage and pin length

(g) number of pins in the cage

(h) cage slot angle or tool manufacturer's tool number

(i) frequency of verifying percent wall reduction

(j) for tubes to be expanded after welding, amount of setback before expanding mandrel insertion due to weld and tube-end shrinkage

HH-7.3 ESSENTIAL VARIABLES FOR HYDRAULIC EXPANDING

The following are essential variables for hydraulic expanding:

(a) hydraulic mandrel details or mandrel manufacturer's mandrel number(s)

(b) hydraulic expanding pressure

(c) precision of pressure control

(d) number of applications of hydraulic pressure

(e) permissible + and − deviation from specified hydraulic expanding pressure

HH-7.4 ESSENTIAL VARIABLES FOR EXPLOSIVE EXPANDING

The following are essential variables for explosive expanding:

(a) number of applications of explosive force

(b) number of tubes to be simultaneously expanded

(c) tube supports in surrounding holes

(d) post-expanding tube-end cleaning

(e) size of the explosive load

(f) buffer material

(g) outside diameter of the buffer material

(h) inside diameter of the buffer material

(i) theoretical expanded O.D. of the tube based on original cross-sectional area and expanded I.D. of the tube as compared to the tubesheet hole diameter

HH-7.5 ESSENTIAL VARIABLES FOR HYBRID EXPANDING

The essential variables for hybrid expanding are the variables listed in HH-7.4 for the initial explosive expanding or HH-7.3 for the initial hydraulic expanding and the following:

(a) the range of percent wall reduction to be achieved by the initial expanding

Provided by IHS under license with ASME
No reproduction or networking permitted without license from IHS
Licensee=Chevron Phillips Chemical Co LP/5956674001
Not for Resale, 11/09/2014 20:41:36 MST

(b) the range of total percent wall reduction to be achieved by the initial expanding and final rolling

HH-7.6 NONESSENTIAL VARIABLES

The Manufacturer shall specify nonessential variables for each process.

Provided by IHS under license with ASME
No reproduction or networking permitted without license from IHS
Licensee=Chevron Phillips Chemical Co LP/5956674001
Not for Resale, 11/09/2014 20:41:36 MST

FORM QEXP-1 TUBE EXPANDING PROCEDURE SPECIFICATION (TEPS)

Company Name:			By:		
Tube Expanding Procedure Specification No.		Date		Supporting TEPQR No.(s)	
Revision No.		Date			
Expanding Process(es)		Driver Type(s)			
(Rolling, Hydroexpanding, Explosive Expanding, Hybrid Expanding)		(Electric, Air, Hydraulic, Hydroexpanded, Explosive)			

JOINTS

Measurement and Control of Tube Hole		Tube Pitch	
Tube Hole Diameter and Tolerance		Maximum Tube to Hole Clearance Before Expanding	
Ratio Tube Diameter/Tube Wall Thickness		Minimum Ratio Drilling Pitch/Tube Diameter	
Maximum % Wall Reduction		Minimum % Wall Reduction	
Maximum Permissible Deviation from Specified Hole Diameter		Maximum Permissible % of Holes that Deviate	
Details of Tube End Hole Enhancement and/or Tube End Enhancement		Minimum Ratio Tubesheet Thickness/Tube Diameter	
Method of Fixing Tubes in Position		Length of Expansion	
Setback from Front Tubesheet Face Before Start of Expanding		Setback from Rear Tubesheet Face after Expanding	
Method of Removing Weld Droop		Method of Tube End and Hole Cleaning	
Other Joint Details:			

EXPANDING EQUIPMENT

Manufacturer(s), Model No.(s), Range of Tube Diameters and Thicknesses, Maximum Torque Output or Pressure.

Expanding Tool Model and Description			
Expanded Length per Application of Expanding Mandrel		No. of Applications/ Expanded Length	
Torque or Pressure Calibration System and Frequency		Explosive Charge and No.(s) of Applications	

PROPERTIES

Range of Tube Elastic Modulus			Range of Plate Elastic Modulus		
Range of Tube Yield Stress (Mill Test Report Values)	Min.			Max.	
Range of Tubesheet Yield Stress (Mill Test Report Values)	Min.			Max.	
Minimum Tubesheet Yield Stress/Tube Yield Stress Note: Values below 0.6 require shear load testing					

TUBES

Diameter Range		Thickness Range		Maximum Ratio Tube Diameter/Thickness	
Material Specifications					

TUBESHEETS

Thickness Range		Minimum Ratio of Tubesheet Thickness to Tube Diameter	
Material Specifications			

REMARKS

Provided by IHS under license with ASME
No reproduction or networking permitted without license from IHS
Licensee=Chevron Phillips Chemical Co LP/5956674001
Not for Resale, 11/09/2014 20:41:36 MST

QEXP-1 TUBE EXPANDING PROCEDURE SPECIFICATION (TEPS)

1	Company Name:	1			By:	2
2	Tube Expanding Procedure Specification No.	3	Date	4	Supporting TEPQR No.(s)	5
3	Revision No.	6	Date	7		
4	Expanding Process(es)	8	Driver Type(s)	9		

JOINTS

5	Measurement and Control of Tube Hole	10	Tube Pitch	11
6	Tube Hole Diameter and Tolerance	12	Maximum Tube to Hole Clearance Before Expanding	13
7	Ratio Tube Diameter/Tube Wall Thickness	14	Minimum Ratio Drilling Pitch/Tube Diameter	15
8	Maximum % Wall Reduction	16	Minimum % Wall Reduction	17
9	Maximum Permissible Deviation from Specified Hole Diameter	18	Maximum Permissible % of Holes that Deviate	19
10	Details of Tube End Hole Enhancement and/or Tube End Enhancement	20	Minimum Ratio Tubesheet Thickness/Tube Diameter	21
11	Method of Fixing Tubes in Position	22	Length of Expansion	23
12	Setback from Front Tubesheet Face Before Start of Expanding	24	Setback from Rear Tubesheet Face After Expanding	25
13	Method of Removing Weld Droop	26	Method of Tube End and Hole Cleaning	27
14	Other Joint Details: 28			

EXPANDING EQUIPMENT

15	Manufacturer(s), Model No.(s), Range of Tube Diameters and Thicknesses, Maximum Torque Output or Pressure. 29			
16	Expanding Tool Model and Description	30		
17	Expanded Length per Application of Expanding Mandrel	31	No. of Applications/ Expanded Length	32
18	Torque or Pressure Calibration System and Frequency	33	Explosive Charge and No.(s) of Applications	34

PROPERTIES

19	Range of Tube Elastic Modulus	35	Range of Plate Elastic Modulus	36	
20	Range of Tube Yield Stress (mill test report values)	Min. 37	Max.	38	
21	Range of Tubesheet Yield Stress (mill test report values)	Min. 39	Max.	40	
22	Minimum Tubesheet Yield Stress/Tube Yield Stress NOTE: Values below 0.6 require shear load testing.	41			

TUBES

23	Diameter Range	42	Thickness Range	43	Maximum Ratio Tube Diameter/Thickness	44
24	Material Specifications	45				

TUBESHEETS

25	Thickness Range	46	Minimum Ratio of Tubesheet Thickness to Tube Diameter	47
26	Material Specifications	48		
27	**REMARKS:**	49, 50, 51		

05/08

--`,,,``,,```,,,,`,```,,`,,```-`-`,,`,,`,`,,`---
Provided by IHS under license with ASME
No reproduction or networking permitted without license from IHS
Licensee=Chevron Phillips Chemical Co LP/5956674001
Not for Resale, 11/09/2014 20:41:36 MST

Table QEXP-1
Instructions for Filling Out TEPS Form

Ref. to Circled Nos. in Form QEXP-1	Explanation of Information to Be Provided
(1)	Show Manufacturer's name and address.
(2)	Show TEPS author's names.
(3)	Show Manufacturer's TEPS number.
(4)	Show applicable date of TEPS.
(5)	Insert number of supporting Tube Expanding Procedure Qualification Record (TEPQR).
(6)	Show revision number if any.
(7)	Insert date of revision if any.
(8)	Describe expanding process as torque-controlled expanding, hydraulic expanding, or explosive expanding. If hybrid expanding is to be performed, describe sequence, e.g., "hybrid expanding (hydraulic expanding to 3% wall reduction followed by torque-controlled roller expanding to 6% to 8% total wall reduction)."
(9)	Describe as hydraulic, explosive, air-driven torque controlled, electric torque controlled, or hydraulic torque controlled drive. If hybrid expanded, describe as hydraulic or explosive expanded + torque controlled air, torque controlled electric, or torque controlled hydraulic torque controlled drive.
(10)	Describe measuring equipment, e.g., "go–no/go gage," "internal 3 point micrometer," or similar measuring device. All equipment used for measurements shall be calibrated.
(11)	Minimum centerline distance between tube holes.
(12)	Show hole size and plus/minus tolerance.
(13)	Show diametrical clearance, e.g., 0.014 in. (for minimum of 96%) and 0.022 in. (for maximum of 4%).
(14)	Minimum and maximum ratio of tube O.D. to tube wall (O.D./t) for this TEPS.
(15)	Fill in nominal ratio of drilling pitch to tube diameter.
(16)	Fill in maximum percent wall reduction to which the TEPS applies.
(17)	Fill in minimum percent wall reduction to which the TEPS applies.
(18)	Enter maximum permissible deviation of hole from specified drilling size and tolerance, e.g., 0.01 in.
(19)	Enter maximum percent of holes that may deviate by the amount shown in (18).
(20)	Describe enhancements for joint strength, e.g., "(2) $^1/_8$ in. wide × $^1/_{64}$ in. grooves set 1 in. from inlet face with $^1/_2$ in. land between."
(21)	Fill in the maximum and minimum ratios of tubesheet thickness to tube diameter.
(22)	Describe how the tube will be fixed in position before expanding, e.g., "nose roll" or "hydraulically preset."
(23)	Fill in the length of tube end to be expanded into the hole, e.g., "tubesheet thickness - $^3/_{16}$ in." If hybrid expansion is to be performed, show length of expansion for each step.
(24)	Fill in the distance from the front face of the tubesheet to the point where expanding will begin.
(25)	Fill in the distance from the rear face of the tubesheet to the point where expanding will end.
(26)	If tube is welded to front face of tubesheet, describe how any weld metal that impedes access of the expanding tool(s) will be removed.
(27)	Describe how tube ends will be cleaned before expanding, e.g., "solvent wash and clean with felt plugs."
(28)	Describe any other pertinent details, e.g., "tubes to be welded to front face of tubesheet before expanding."
(29)	Show expanding tool manufacturer, e.g., name hydraulic expanding system or model no., "range of tube diameters $^1/_2$ in. to 2 in., range of thicknesses 0.028 in. to 0.109 in., maximum hydraulic pressure 60,000 psi."

--`,,,`-`-`,,`,,`,`,,`---
Provided by IHS under license with ASME
No reproduction or networking permitted without license from IHS
Licensee=Chevron Phillips Chemical Co LP/5956674001
Not for Resale, 11/09/2014 20:41:36 MST

Table QEXP-1
Instructions for Filling Out TEPS Form (Cont'd)

Ref. to Circled Nos. in Form QEXP-1	Explanation of Information to Be Provided
(30)	Fill in roller expanding tool or hydraulic mandrel number. If explosive expanding, fill in drawing number that describes the charges. If hybrid expanding, show this information for Steps 1 and 2.
(31)	Describe expanded length per application, e.g., "2 in. (roller length)."
(32)	Show number of applications of expanding tool, e.g., "two applications required for roll depth." If hydraulic or explosive expanding, show length of expansion per application of hydraulic expanding pressure or explosive charge, e.g., "tubesheet thickness - $^{5}/_{8}$ in."
(33)	Describe the system used to calibrate and control the rolling torque and frequency of verification. Alternatively, describe the use of production control holes and expansions.
(34)	Describe the explosive charge and whether it will be single- or two-stage explosive expansion.
(35)	List the minimum and maximum elastic modulus of the tubes for this TEPS.
(36)	List the minimum and maximum elastic modulus of the tubesheet(s) for this TEPS.
(37)	List minimum permissible tube yield stress.
(38)	List maximum permissible tube yield stress.
(39)	List minimum permissible tubesheet yield stress.
(40)	List maximum permissible tubesheet yield stress.
(41)	Show the minimum ratio of tubesheet to tube yield stresses.
(42)	List the range of tube diameters to which this TEPS applies.
(43)	List the range of tube thicknesses to which this TEPS applies.
(44)	Show the maximum ratio of tube diameter to thickness to which this TEPS applies.
(45)	Show the tube specification number, e.g., "SA-688 TP304N."
(46)	Show the range of tubesheet thicknesses to which this TEPS applies, e.g., 1 in. to 5 in.
(47)	Show the minimum ratio of tubesheet thickness to tube diameter to which this TEPS applies.
(48)	Show the tubesheet material specification numbers, e.g., "SA-350 LF2."
(49)	Describe pertinent job-specific information.
(50)	Describe such things as bundle setup and sequence of expansion operation. Refer to drawing numbers and manufacturer's standards as appropriate.
(51)	Refer to any attachment or supplement to the TEPS form.

Provided by IHS under license with ASME
No reproduction or networking permitted without license from IHS
Licensee=Chevron Phillips Chemical Co LP/5956674001
Not for Resale, 11/09/2014 20:41:36 MST

FORM QEXP-2 SUGGESTED FORMAT FOR TUBE-TO-TUBESHEET EXPANDING PROCEDURE QUALIFICATION RECORD FOR TEST QUALIFICATION (TEPQR)

Company name _____

Procedure Qualification Record number _____ Date _____

TEPS no. _____

Expanding process(es) _____
(Rolling, hydroexpanding, explosive expanding, hybrid expanding)

Driver types _____
(Electric, air-driven, hydraulic, other)

Expanded tube length _____
(If there is a gap in the expanded zone, record the total expanded length)

Tube pitch _____

Joints (HH-7)

Sketch of Test Array

Tubesheet Material(s)

Material spec. _____ Type or grade _____

Diameter and thickness of test specimen _____ Hole diameter and pitch arrangement _____

No. and location of joints to be tested _____

No. and description of annular grooves _____

Hole surface finish _____

Yield stress (from mill test report) _____

Other _____

Testing Apparatus _____
(Manufacturer, type, calibration date)

Rate of loading to avoid impact _____
[Maximum $^1/_2$ in. (13 mm) per minute]

Tube Material(s) _____

Material spec. _____ Type or grade _____

Diameter and thickness (min./avg.) _____

Yield stress (from mill test report) _____

Other _____

(10/06)

Provided by IHS under license with ASME
No reproduction or networking permitted without license from IHS
Licensee=Chevron Phillips Chemical Co LP/5956674001
Not for Resale, 11/09/2014 20:41:36 MST

FORM QEXP-2 (Back)

Shear Load Test (See Appendix A, Fig. A-3)

Tube No.	Position in Array	Diameter	Thickness	Cross-Sectional Area	Test Temp.	L_1 (test)	Manner of Failure

Tube No.	Position in Array	Diameter	Thickness	Cross-Sectional Area	Ambient Temp.	L_2 (test)	Manner of Failure

Mean value of L_1 (test) _____ Mean value of L_2 (test) _____

Standard deviation _____ Standard deviation _____ Satisfactory (see Appendix A, A-5) _____

f_r (test) (see Appendix A, A-4) _____

Operator's name _____ Clock no. _____

Manufacturer _____

Date _____ By _____

Remarks:

10/06

Provided by IHS under license with ASME
No reproduction or networking permitted without license from IHS
Licensee=Chevron Phillips Chemical Co LP/5956674001
Not for Resale, 11/09/2014 20:41:36 MST

(13)

NONMANDATORY APPENDIX JJ FLOWCHARTS ILLUSTRATING TOUGHNESS TESTING REQUIREMENTS AND EXEMPTIONS FROM TOUGHNESS TESTING BY THE RULES OF UHA-51

JJ-1 UHA-51 TOUGHNESS TEST REQUIREMENTS FOR HIGH ALLOY VESSELS

JJ-1.1 INTRODUCTION

This Nonmandatory Appendix provides guidelines for determining toughness test requirements for austenitic, austenitic-ferritic duplex, ferritic chromium, and martensitic stainless steel vessels in accordance with the toughness test rules in UHA-51.

NOTE: The term "toughness testing" is used as an all-inclusive generic reference to any and all toughness testing required by this Division, whether it be impact testing, drop testing, ASTM E1820 J_{IC} testing, or some other referenced testing method.

JJ-1.2 FLOWCHARTS

Figures JJ-1.2-1 through JJ-1.2-5 provide step-by-step guidelines for determining the conditions where exemptions from toughness tests are permitted and, when toughness tests are required, the applications that are required to be toughness tested by UHA-51 rules.

Figures JJ-1.2-1 through JJ-1.2-4 illustrate test requirement guidelines for austenitic base material and HAZ, welding procedure qualification, welding consumable preuse testing, and production impact testing. Figure JJ-1.2-5 provides guidelines of applicable requirements for application of the duplex, ferritic chromium, and martensitic material grades.

Provided by IHS under license with ASME
No reproduction or networking permitted without license from IHS
Licensee=Chevron Phillips Chemical Co LP/5956674001
Not for Resale, 11/09/2014 20:41:36 MST

Figure JJ-1.2-1
Austenitic Stainless Steel Base Metal and HAZ Toughness Testing Requirements

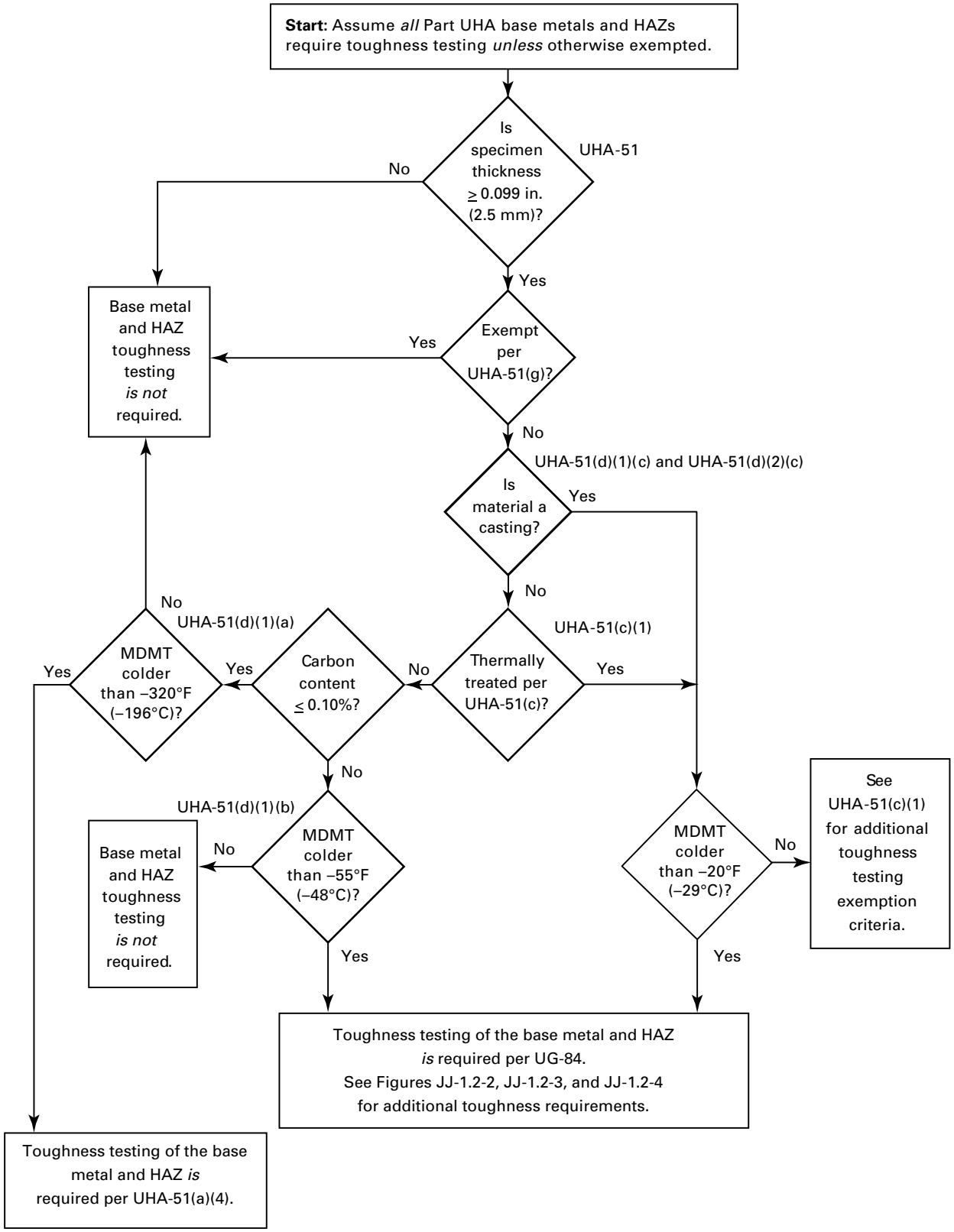

Provided by IHS under license with ASME
No reproduction or networking permitted without license from IHS
Licensee=Chevron Phillips Chemical Co LP/5956674001
Not for Resale, 11/09/2014 20:41:36 MST

Figure JJ-1.2-2
Welding Procedure Qualification With Toughness Testing Requirements for Austenitic Stainless Steel

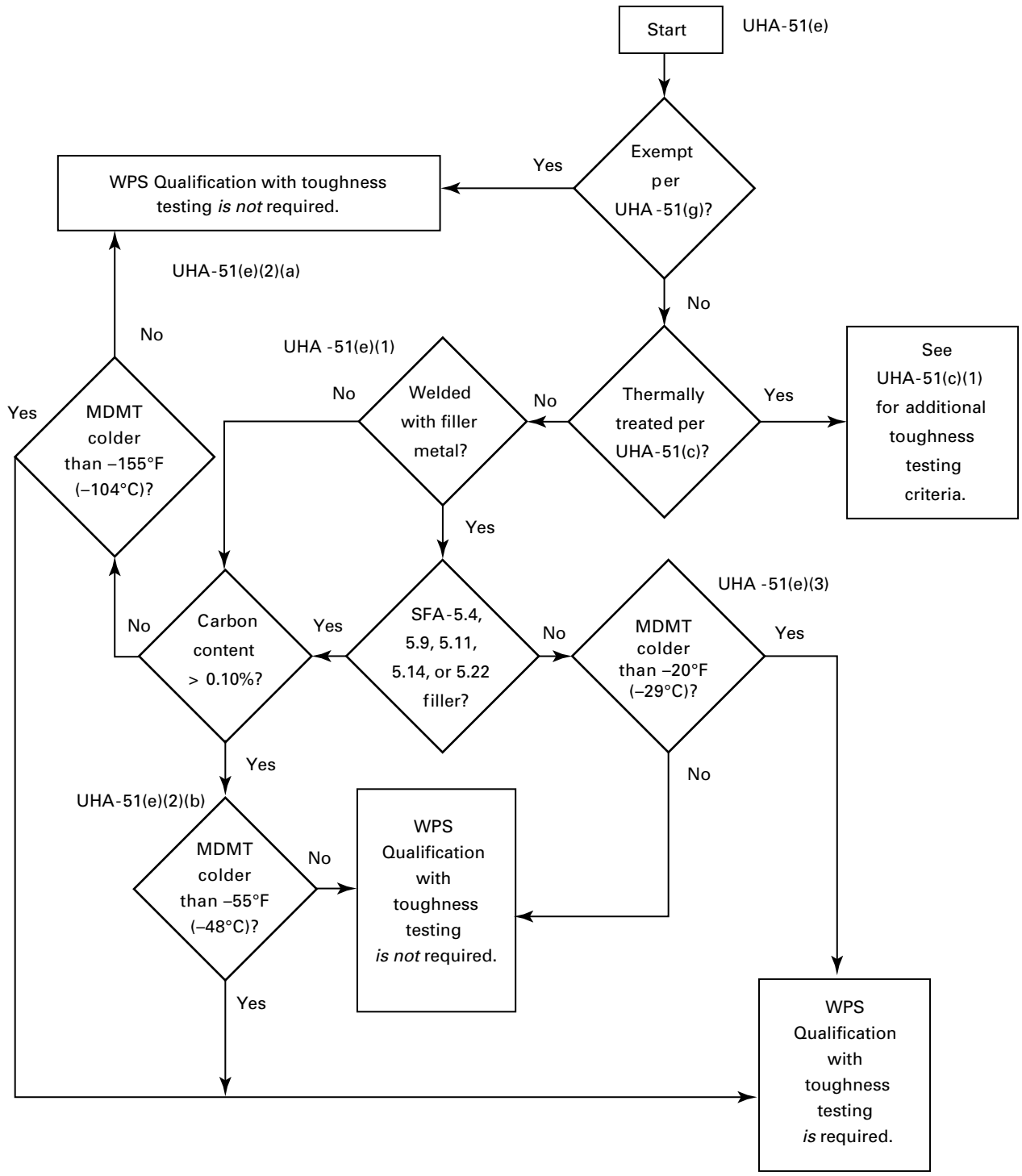

GENERAL NOTES:
(a) For additional testing requirements for MDMTs colder than −320°F (−196°C), see UHA-51(a)(4).
(b) For filler metal pre-use testing requirements, see UHA-51(f) and Figure JJ-1.2-3.
(c) For production toughness testing requirements, see UHA-51(h) and UHA-51(i) and Figure JJ-1.2-4.

Provided by IHS under license with ASME
No reproduction or networking permitted without license from IHS
Licensee=Chevron Phillips Chemical Co LP/5956674001
Not for Resale, 11/09/2014 20:41:36 MST

Figure JJ-1.2-3
Welding Consumable Pre-Use Testing Requirements for Austenitic Stainless Steel

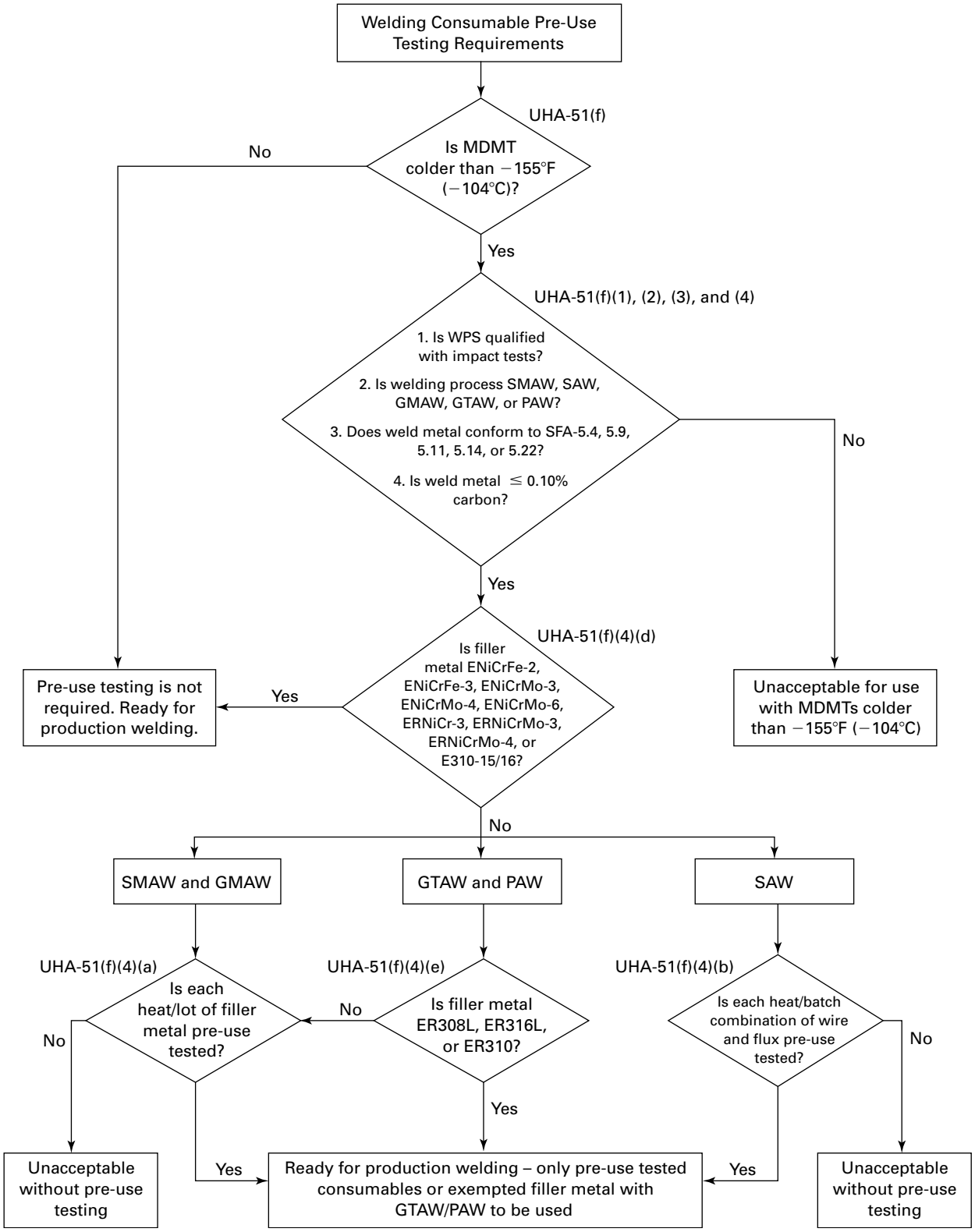

Provided by IHS under license with ASME
No reproduction or networking permitted without license from IHS
Licensee=Chevron Phillips Chemical Co LP/5956674001
Not for Resale, 11/09/2014 20:41:36 MST

Figure JJ-1.2-4
Production Toughness Testing Requirements for Austenitic Stainless Steel

Provided by IHS under license with ASME
No reproduction or networking permitted without license from IHS
Licensee=Chevron Phillips Chemical Co LP/5956674001
Not for Resale, 11/09/2014 20:41:36 MST

Figure JJ-1.2-5
Austenitic-Ferritic Duplex, Ferritic Chromium, and Martensitic Stainless Steel Toughness Testing Requirements

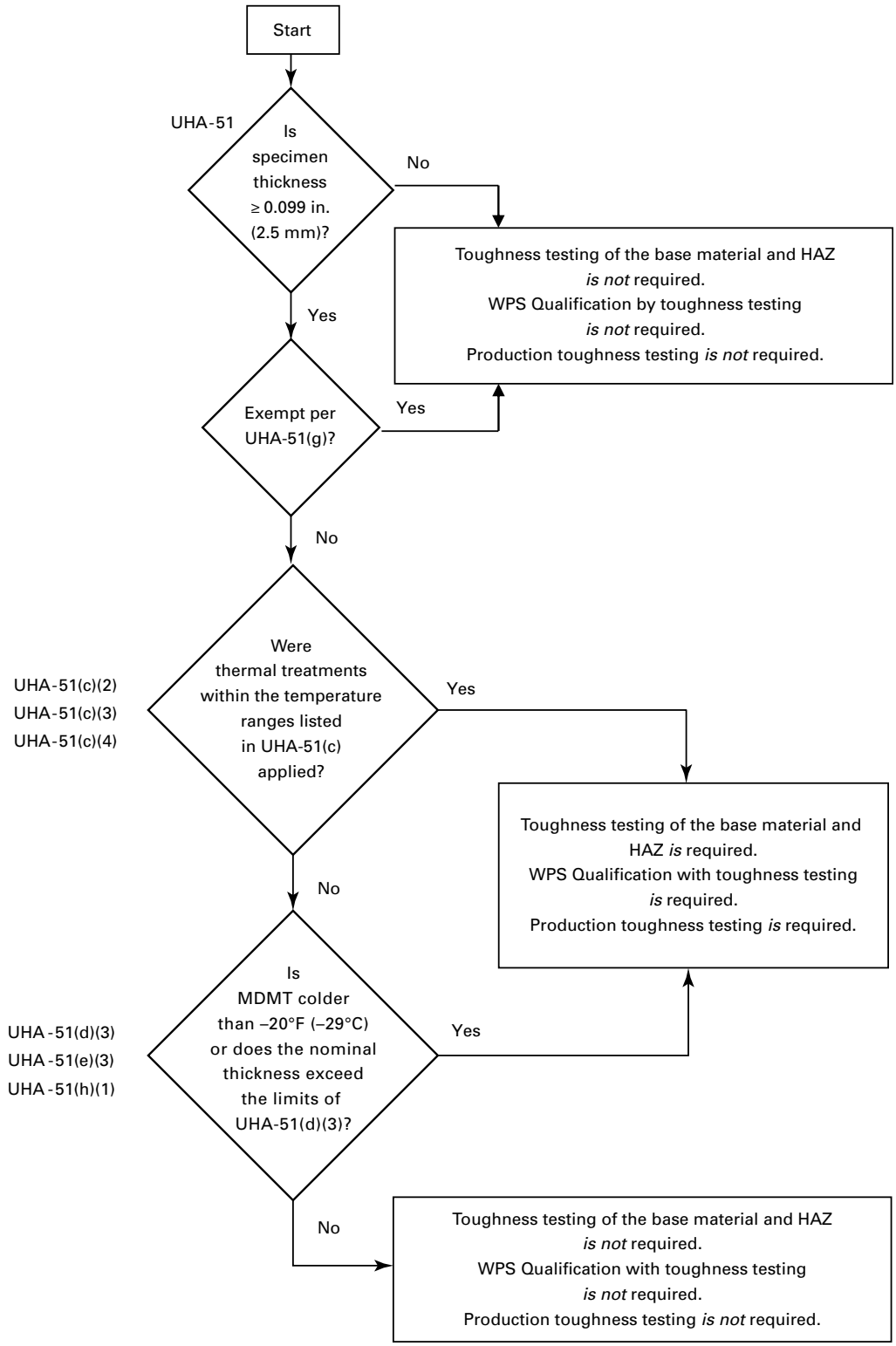

Provided by IHS under license with ASME
No reproduction or networking permitted without license from IHS
Licensee=Chevron Phillips Chemical Co LP/5956674001
Not for Resale, 11/09/2014 20:41:36 MST

NONMANDATORY APPENDIX KK
GUIDE FOR PREPARING USER'S DESIGN REQUIREMENTS

KK-1 GUIDE FOR PREPARING USER'S DESIGN REQUIREMENTS FORM

KK-2 INTRODUCTION

(a) The instructions contained in this Nonmandatory Appendix are to provide general guidance for the User [see U-2(a)] in preparing User's Design Requirements as recommended in U-2(a).

(b) User's Design Requirements Forms are neither required nor prohibited for pressure vessels constructed in accordance with U-1(j) or UG-90(c)(2).

(c) The instructions for the User's Design Requirements Forms are identified by parenthesized numbers corresponding to circled numbers on the sample forms in this Nonmandatory Appendix.

(d) Where more space than has been provided for on the form is needed for any item, indicate in the space, "See General Notes" or "See additional form," as appropriate.

(e) Any quantity to which units apply shall be entered on the User's Design Requirements Form with the chosen units.

Provided by IHS under license with ASME
No reproduction or networking permitted without license from IHS
Licensee=Chevron Phillips Chemical Co LP/5956674001
Not for Resale, 11/09/2014 20:41:36 MST

FORM U-DR-1 USER'S DESIGN REQUIREMENTS FOR SINGLE CHAMBER PRESSURE VESSELS

Owner: (1)	Operator: (2)	Country of Installation: (3)	State/Province of Installation: (3)	City of Installation: (3)

Service: (4)	Liquid Level: _____ (5) Specific Gravity: _____	Item No.: (6)
Diameter (in.): (7)	Length, Tangent-to-Tangent: (8)	Type: (9) Vertical ☐ Horizontal ☐ Sphere ☐
National Board (10) Registration Required: Yes ☐ No ☐ Canadian (11) Registration Required: Yes ☐ No ☐	Special Service: (12) Lethal (L) ☐ Direct Firing (DF) ☐ Unfired Steam Boiler (UB) ☐	Overpressure Protection: (13) Valve ☐ Rupture Disk ☐ Other ☐ System Design ☐

OPERATING CONDITIONS: (14)	Minimum Pressure	Maximum Pressure	Minimum Temperature	Maximum Temperature
Case 1				
Case 2				

DESIGN CONDITIONS: (16)	Pressure	Temperature
Internal Design Pressure:		
External Design Pressure:		
MAWP Internal: (17)	Same as Design Pressure ☐	Calculated by Manufacturer: ☐
MAWP External:	Same as Design Pressure ☐	Calculated by Manufacturer: ☐
Minimum Design Metal Temperature (MDMT) – Case 1 (18)	Deg @	Due to: Process ☐ Other ☐ Ambient Temperature ☐
Minimum Design Metal Temperature (MDMT) – Case 2	Deg @	Due to: Process ☐ Other ☐ Ambient Temperature ☐

Corrosion Allowance: (19)	Shell		Heads		Nozzles		Jacket		Coil		Supports		Internals	Corrosive Service?	
	Int.	Ext.	Int.	Ext.	Int.	Ext.	Int.	Ext.	Int.	Ext.	Int.	Ext.		Yes	No
														☐	☐

Cyclic Service: Yes ☐ No ☐ (20)	_____ Cycles per _____	Design Life _____ years	Fatigue Analysis? Yes ☐ No ☐	
Wind Loading: ASCE 7 ☐ (21) UBC ☐ IBC ☐ Other ☐ None ☐	Wind Speed	Classification Category	Exposure Category	Topographic Factor / Elevation
Seismic Loading: ASCE 7 ☐ (22) UBC ☐ IBC ☐ Other ☐ None ☐	Soil Profile Classification: (22) _____	PWHT: Per Code ☐ Process Required ☐	Other Loadings per UG-22: (23) Temp. Gradients ☐ Deflagration ☐ Diff. Thermal Exp. ☐	
Insulated: Yes ☐ No ☐ (24) By Manufacturer ☐ By Others ☐	Type / Thickness External _____ _____ Internal _____	Density _____ _____	Coating Specification: _____ (25) Permitted Prior to Pressure Test Yes ☐ No ☐	
Vessel Support: Legs ☐ Skirt ☐ Lugs ☐ Saddles ☐ (26)	Fireproofing: Yes ☐ No ☐	Type: (27)	Rating (hr):	

MATERIALS (28)

Component	Specification	Component	Specification
Shell		Ellipsoidal Head	
Hemispherical Head		Torispherical Head	
Toriconical Head		Conical Head	
Nozzles		Flanges	
Stiffener Rings		Pressure Retaining Bolts	
Attachments		Internals	
Reinforcing Pads		Other _____	

NOZZLE SCHEDULE (29)

Description	Number Required	Size	Flange Type	Class	Description	Number Required	Size	Flange Type	Class

07/10

Provided by IHS under license with ASME
No reproduction or networking permitted without license from IHS
Licensee=Chevron Phillips Chemical Co LP/5956674001
Not for Resale, 11/09/2014 20:41:36 MST

FORM U-DR-1 (Back)

WELDED PRESSURE JOINT REQUIREMENTS		
DESIGN BASIS:	SHELL AND CONE THICKNESS BASED ON: JOINT EFFICIENCY E = _____ (30)	HEAD THICKNESS BASED ON: JOINT EFFICIENCY E = _____ (31)

JOINT LOCATION UW-3		TYPE OF JOINT (32) (Use Types as Described in UW-12)	NDE WITH COMMENTS (33)
Category A			
Category B	Head-to-Shell		
	Other		
Category C	Body Flanges		
	Nozzle Flanges		
Category D			

BODY FLANGE REQUIREMENTS (34)

Description	Type	Facing/Surface Finish	Gasket Style	Joint Assembly (See ASME PCC-1)

SKETCH (35)

GENERAL NOTES (36)

CERTIFICATION (37)

We certify that the statements made in this form are accurate and represent all details of design as per the user or his designated agent [see U-2(a), Footnote 4]

Date: _____

User: _____

Signed: _____
(Representative)

Registration Identification: _____
(Optional)

(38)

Registration Seal (Optional)

03/08

Provided by IHS under license with ASME
No reproduction or networking permitted without license from IHS
Licensee=Chevron Phillips Chemical Co LP/5956674001
Not for Resale, 11/09/2014 20:41:36 MST

FORM U-DR-2 USER'S DESIGN REQUIREMENTS FOR MULTI-CHAMBER PRESSURE VESSELS

Owner: (1)	Operator: (2)	Country of Installation: (3)	State/Province of Installation: (3)	City of Installation: (3)
Service: (4)	Liquid Level: Chamber 1 _____ Chamber 2 _____ (5) Specific Gravity: Chamber 1 _____ Chamber 2 _____			Item No.: _____ (6)
Diameter: (7)	Shell Length, Tangent-to-Tangent: (7)	Type: Jacket ☐ Internal Coil ☐ Shell and Tube ☐ (9)		
National Board (10) Registration Required: Yes ☐ No ☐	Canadian (11) Registration Required: Yes ☐ No ☐	Special Service: (12) Lethal (L) ☐ Direct Firing (DF) ☐ Unfired Steam Boiler (UB) ☐	Overpressure Protection: (13) Valve ☐ Rupture Disk ☐ Other ☐ System Design ☐	

OPERATING CONDITIONS: (14)	Minimum Pressure	Maximum Pressure	Minimum Temperature	Maximum Temperature
Chamber 1 – Case 1				
Chamber 2 – Case 1				
Chamber 1 – Case 2				
Chamber 2 – Case 2				

DESIGN CONDITIONS: (16)	Chamber 1		Chamber 2	
Internal Design Pressure:	@		@	
External Design Pressure:	@		@	
MAWP Internal: (17)	Same as Design Pressure: ☐	Calculated by Manufacturer: ☐	Same as Design Pressure: ☐	Calculated by Manufacturer: ☐
MAWP External:	Same as Design Pressure: ☐	Calculated by Manufacturer: ☐	Same as Design Pressure: ☐	Calculated by Manufacturer: ☐
Minimum Design Metal Temperature (MDMT) – Case 1 (18)	@		Due to: Process ☐ Other ☐ Ambient Temperature ☐	
Minimum Design Metal Temperature (MDMT) – Case 2	@		Due to: Process ☐ Other ☐ Ambient Temperature ☐	

Corrosion Allowance: (19)	Shell		Heads		Nozzles		Jacket		Coil		Supports		Tubesheet		Tubes	
Corrosive Service? Yes ☐ No ☐	Int.	Ext.	Int.	Ext.	Int.	Ext.	Int.	Ext.	Int.	Ext.	Int.	Ext.	SS	TS	Int.	Ext.

Cyclic Service: Yes ☐ No ☐ (20) _____ Cycles per _____ Design Life _____ years Fatigue Analysis? Yes ☐ No ☐

Wind Loading: ASCE 7 ☐ (21) UBC ☐ IBC ☐ Other ☐ None ☐	Wind Speed	Classification Category	Exposure Category	Topographic Factor	Elevation

Seismic Loading: ASCE 7 ☐ (22) UBC ☐ IBC ☐ Other ☐ None ☐	Soil Profile Classification: (22) _____	PWHT: Per Code ☐ Process Required ☐	Other Loadings per UG-22: (23) Temp. Gradients ☐ Deflagration ☐ Diff. Thermal Exp. ☐

Insulated: Yes ☐ No ☐ (24) By Manufacturer ☐ By Others ☐	Type: Thickness Chamber 1 _____ _____ Chamber 2 _____	Density _____ _____	Coating Specification: _____ (25) Permitted Prior to Pressure Test Yes ☐ No ☐

Vessel Support: Legs ☐ Skirt ☐ Lugs ☐ Saddles ☐ (26)	Fireproofing: Yes ☐ No ☐	Type: (27)	Rating (hr):

MATERIALS (28)

Component	Specification	Component	Specification
Shell		Ellipsoidal Head	
Hemispherical Head		Torispherical Head	
Toriconical Head		Conical Head	
Nozzles		Flanges	
Stiffener Rings		Pressure Retaining Bolts	
Attachments		Internals	
Reinforcing Pads		Coil	
Jacket		Tubes	
Tubesheet		Other _____	

NOZZLE SCHEDULE (29)

Description	Number Required	Size	Flange Type	Class	Description	Number Required	Size	Flange Type	Class

07/10

Provided by IHS under license with ASME
No reproduction or networking permitted without license from IHS
Licensee=Chevron Phillips Chemical Co LP/5956674001
Not for Resale, 11/09/2014 20:41:36 MST

FORM U-DR-2 (Back)

WELDED PRESSURE JOINT REQUIREMENTS		
DESIGN BASIS:	SHELL AND CONE THICKNESS BASED ON: JOINT EFFICIENCY E = _____ (30)	DISHED HEAD THICKNESS BASED ON: JOINT EFFICIENCY E = _____ (31)

JOINT LOCATION UW-3		TYPE OF JOINT (32) (Use Types as Described in UW-12)	NDE WITH COMMENTS (33)
Category A			
Category B	Head-to-Shell		
	Other		
Category C	Body Flanges		
	Nozzle Flanges		
	Tubesheets		
Category D			

BODY FLANGE REQUIREMENTS (34)

Description	Type	Facing/Surface Finish	Gasket Style	Joint Assembly (See ASME PCC-1)

SKETCH (35)

GENERAL NOTES (36)

CERTIFICATION (37)

We certify that the statements made in this form are accurate and represent all details of design as per the user or his designated agent [see U-2(a), Footnote 4]

Date: _____

User: _____

Signed: _____
(Representative)

Registration Identification: _____
(Optional)

(38)

Registration Seal (Optional)

03/08

Provided by IHS under license with ASME
No reproduction or networking permitted without license from IHS
Licensee=Chevron Phillips Chemical Co LP/5956674001
Not for Resale, 11/09/2014 20:41:36 MST

(13)

Table KK-1
Instructions for the Preparation of User's Design Requirements

Applies to Form		Ref. to Circled Nos. in Forms U-DR-1 and U-DR-2	Instruction
U-DR-1	U-DR-2		
X	X	(1)	Insert the name of the owner of the vessel.
X	X	(2)	Insert the name of the vessel operator if different than the owner.
X	X	(3)	Location where the vessel will be installed, if known.
X	X	(4)	Service the vessel will be used for, if known.
X	X	(5)	Specific gravity of the contents, if known.
X	X	(6)	Item number of the vessel, if known.
X	X	(7)	Dimensional information; indicate if inside or outside diameter.
X		(8)	Type of single-chamber pressure vessel.
	X	(9)	Type of multi-chamber pressure vessel.
X	X	(10)	National Board registration requirements.
X	X	(11)	Canadian registration requirements.
X	X	(12)	Special service requirements; see UW-2.
X	X	(13)	Overpressure protection requirements, if known.
X	X	(14)	Operating conditions, if known. See U-2(a). May or may not be coincident conditions. If more space is required, list them on a supplemental page.
X		(15)	Show the Design Pressure for internal and external design.
	X	(16)	Show the Design Pressure for each chamber for internal and external design. Include a description of each chamber.
X	X	(17)	Indicate if the Manufacture is required to calculate MAWP or use Design Pressure and Design Temperature.
X	X	(18)	Show the MDMT and basis for each case.
X	X	(19)	Show the Corrosion Allowance for each of the stated components, and if the vessel is in Corrosive Service.
X	X	(20)	Show if the vessel is in Cyclic Service and if so, if a Fatigue Analysis is required. Indicate in General Notes any additional required information for pressure cycles, thermal cycles, etc.
X	X	(21)	Show wind loading information.
X	X	(22)	Show seismic loading information.
X	X	(23)	Indicate any other loadings per UG-22 for design consideration.
X	X	(24)	Show any insulation information.
X	X	(25)	Show required specification for painting. Indicate if Manufacturer may paint prior to performing pressure testing.
X	X	(26)	Indicate type of support to be used.
X	X	(27)	Show any fireproofing information as applicable.
X	X	(28)	Show materials for components.
X	X	(29)	Nozzle information. List all openings; if more space is required, list them on a supplemental page.
X	X	(30)	Show the joint efficiency requirements for the shell thickness determination.
X	X	(31)	Show the joint efficiency requirements for the head thickness determination.
X	X	(32)	Show the joint type required for each category weld. See UW-12.
X	X	(33)	Indicate NDE required for each joint type.
X	X	(34)	Show Body Flange information.
X	X	(35)	Provide a sketch with dimensions, if known.
X	X	(36)	Provide any additional information. For example, indicate if electrochemically etched marking is acceptable in accordance with UG-118.
X	X	(37)	Sign and certify, if required.
X	X	(38)	Example: Professional Engineer's Seal.

GENERAL NOTE: Any quantity to which units apply shall be entered on the User's Design Requirements Form with the chosen units.

Provided by IHS under license with ASME
No reproduction or networking permitted without license from IHS
Licensee=Chevron Phillips Chemical Co LP/5956674001
Not for Resale, 11/09/2014 20:41:36 MST

NONMANDATORY APPENDIX LL
GRAPHICAL REPRESENTATIONS OF $F_{t,\min}$ AND $F_{t,\max}$

The curves in Figures LL-1 and LL-2 are graphical representations of $F_{t,\min}$ and $F_{t,,\max}$, respectively, for $\nu^* = 0.4$ when $P_e \neq 0$. They are sufficiently accurate to be used for other values of ν^*. For values of X_a and Q_3 beyond those given by the curves, see Table UHX-13.2.

Provided by IHS under license with ASME

No reproduction or networking permitted without license from IHS

Licensee=Chevron Phillips Chemical Co LP/5956674001
Not for Resale, 11/09/2014 20:41:36 MST

Figure LL-1
Graphical Representation of $F_{t,\min}$

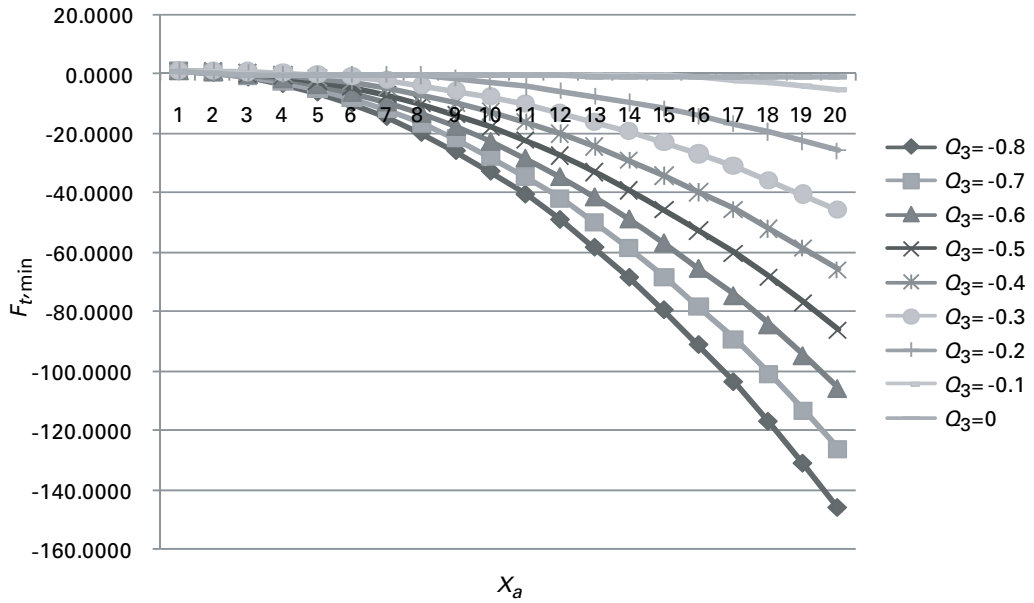

(a) $-0.8 \leq Q_3 \leq 0$

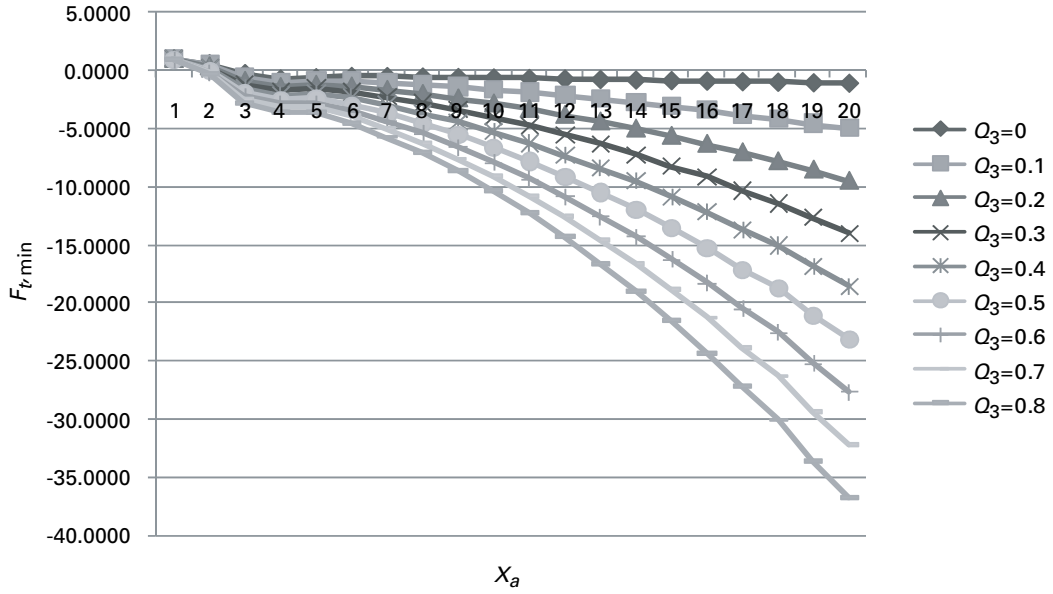

(b) $0 \leq Q_3 \leq 0.8$

Provided by IHS under license with ASME
No reproduction or networking permitted without license from IHS
Licensee=Chevron Phillips Chemical Co LP/5956674001
Not for Resale, 11/09/2014 20:41:36 MST

Figure LL-2
Graphical Representation of $F_{t,\max}$

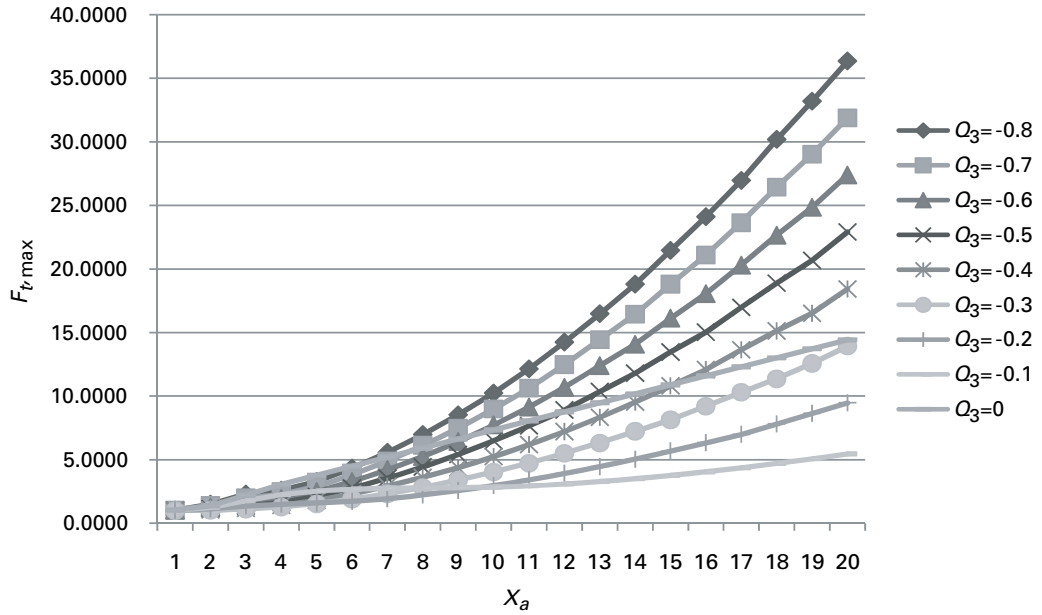

(a) $-0.8 \leq Q_3 \leq 0$

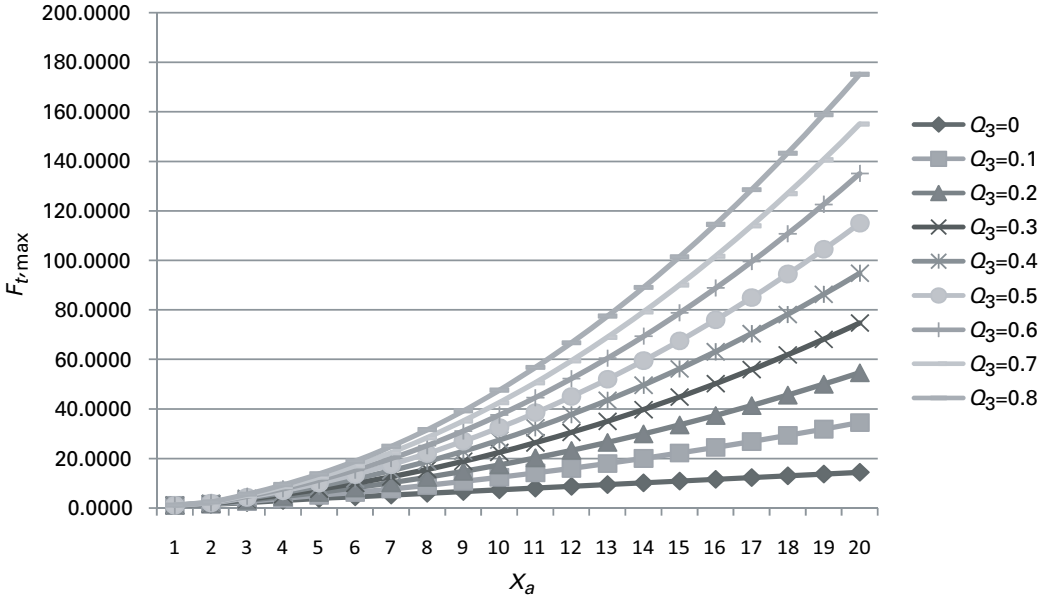

(b) $0 \leq Q_3 \leq 0.8$

Provided by IHS under license with ASME
No reproduction or networking permitted without license from IHS
Licensee=Chevron Phillips Chemical Co LP/5956674001
Not for Resale, 11/09/2014 20:41:36 MST

NONMANDATORY APPENDIX MM ALTERNATIVE MARKING AND STAMPING OF GRAPHITE PRESSURE VESSELS

MM-1 GENERAL REQUIREMENTS

(a) This procedure may be used to apply the Certification Mark to the graphite part.

(b) The required data as defined in UIG-116 shall be $^{5}/_{32}$ in. (4 mm) high, minimum.

(c) The Certification Mark stamp shall be used to make the impression in the cement.

(13) **MM-2 APPLICATION OF THE CERTIFICATION MARK**

(a) The graphite surface shall be clean and smooth.

(b) Apply a thin to medium coating of cement onto a small section of the Code part. The mixed cement should have a thick consistency (toothpaste).

(c) Apply heat to the cement so that it begins to form a skin (cement is still soft, not cured).

(d) Apply a thinned coat of a release agent (such as Antisieze) to the tip of the Certification Mark stamp.

(e) Before the cement hardens, firmly press the Certification Mark stamp into the cement all the way to the bottom, and pull the stamp straight out of the cement.

(f) Do not disturb the impression.

(g) Cure the impression as required.

(h) When cured, confirm that the impression is legible.

(i) The impression may be washed to remove excess release agent.

MM-3 APPLICATION OF CHARACTERS DIRECTLY TO GRAPHITE

(a) Use a very thin template of a flexible material (e.g., stainless steel; flexible and easily cleaned).

(b) Place and hold the template over a clean smooth surface.

(c) Hold the template securely and trowel over with approved cement to fill all of the template area.

(d) Carefully lift the template from the graphite part and examine the detail of the characters.

(e) If the characters are incorrect or damaged, wipe off the cement with a compatible solvent and reapply.

(f) If acceptable, cure the cement.

(g) As an alternative to (a) through (f) above, the graphite surface may also be marked with a scribe or a tool.

NOTE: The preceding methods may be applied jointly to identify the graphite part and to transfer the Certification Mark stamp.

MM-4 ACCEPTANCE CRITERION

The stamping must be legible and acceptable to the Authorized Inspector.

Provided by IHS under license with ASME
No reproduction or networking permitted without license from IHS
Licensee=Chevron Phillips Chemical Co LP/5956674001
Not for Resale, 11/09/2014 20:41:36 MST

(13)

NONMANDATORY APPENDIX NN GUIDANCE TO THE RESPONSIBILITIES OF THE USER AND DESIGNATED AGENT

NN-1 INTRODUCTION

This Nonmandatory Appendix provides a directory for locating the specific Code-assigned responsibilities and other considerations assigned to the user or his designated agent as applicable to the pressure vessel under consideration. These responsibilities and considerations are grouped into 11 categories as defined in NN-6(a), and the Code paragraphs relevant to each category are detailed in Tables NN-6-1 through NN-6-11. Also, as an aid in understanding how these responsibilities and considerations are carried out, two common scenarios (see NN-4) with associated examples (see NN-5) are provided.

NN-2 INFORMATION REGARDING THE "USER" DESIGNATION

(a) The user is responsible for providing, or causing to be provided, the information pertinent to the design requirements for the pressure vessel to be constructed.

(1) It is important to note that a "user" as defined in this Division is an entity that defines the design conditions and parameters of the pressure vessel under consideration and communicates these conditions and parameters to the Manufacturer. It is also important to note that a user or a designated agent does not possess a Certificate of Authorization and is therefore not under the authority of ASME in a manner similar to that of a Manufacturer that possesses a Certificate of Authorization. Those who purchase a fully operational air compressor with a properly installed pressure relief device are not a "user" as referenced in this Division.

(2) The requirement for a pressure relief valve has been a long-standing, well established rule in this Division. However, the "user" is not required to actually perform the installation of the overpressure protection system in accordance with UG-125(a) since the user may delegate this activity to his designated agent; however, the user retains the responsibility to ensure that it is done prior to initial operation.

(3) There may be some regulatory bodies and jurisdictions having authority over the installation of fully operational pressure vessels that recognize the ASME Section VIII, Division 1 rules which are directed to the user or his designated agent.

(4) See Tables NN-6-1 through NN-6-11 for a full listing of paragraphs covering user and user-related responsibilities as well as associated collaborative and interactive provisions that may apply.

(b) The Code provides guidance to the user in the form of recommendations and responsibilities for the user to consider after the vessel or vessel system has been Code Stamped and is fully operational. These are as follows:

(1) by reference in UG-35.2(e), to meet the user requirements in Nonmandatory Appendix FF relating to installation, operational, and maintenance considerations for quick-opening closures

(2) by reference in UG-125(d), to meet the user requirements and considerations specified in Nonmandatory Appendix M

NN-3 INFORMATION REGARDING THE USER'S "DESIGNATED AGENT"

(a) The designated agent may be

(1) a design agency specifically engaged by the user

(2) the Manufacturer of a system for a specific service that includes a pressure vessel as a part that is purchased by the user, or

(3) an organization that offers pressure vessels for sale or lease for specific services

(b) The user may select more than one designated agent to obtain the most experience-based advice in several areas of expertise when needed (e.g., design, metallurgy, fabrication, pressure relief).

(c) A designated agent may be self-appointed as such by accepting certain responsibilities of a designated agent, as in the case of vessels designed, manufactured (built) for stock, and intended for operation in a specific application.

(d) See Tables NN-6-5 through NN-6-8 and Table NN-6-10 for a full listing of paragraphs covering the responsibilities and collaborative and interactive provisions for user's designated agent(s).

Provided by IHS under license with ASME
No reproduction or networking permitted without license from IHS
Licensee=Chevron Phillips Chemical Co LP/5956674001
Not for Resale, 11/09/2014 20:41:36 MST

NN-4 COMMON SCENARIOS INVOLVING THE "USER" OR "DESIGNATED AGENT" RESPONSIBILITIES

The following list, although not all-inclusive, outlines common scenarios that reflect the collaborative actions of the user, designated agent, and Manufacturer in the performance of their Code responsibilities (see NN-6):

(a) A *user specifies* a pressure vessel, and a Manufacturer constructs the vessel. The user ensures the required overpressure protection system is properly installed and places the vessel in service. [See NN-5(a).]

(b) A *user appoints a designated agent*, the designated agent specifies a pressure vessel, and a Manufacturer constructs the vessel. The user ensures that the required overpressure protection system is properly installed and places the vessel in service. [See NN-5(b).]

NN-5 EXAMPLES ILLUSTRATING THE NN-4 COMMON SCENARIOS INVOLVING THE "USER OR HIS DESIGNATED AGENT"

(a) Example 1. A *user specifies* a pressure vessel, and a Manufacturer constructs the vessel. The user ensures the required overpressure protection system is properly installed and places the vessel in service.

(1) Given

(-a) an organization that requires a pressure vessel

(-b) a Manufacturer that can provide a pressure vessel

(2) Actions

(-a) The organization develops a specification using Code requirements and assigned responsibilities and guidelines, including matters of agreement between the organization and the Manufacturer. The organization specifies the required overpressure protection system.

(-b) The Manufacturer constructs the pressure vessel and delivers it to the organization.

(-c) The organization installs the pressure vessel, ensures the required overpressure protection system is properly installed, and provides the required documentation and approvals if overpressure protection by system design is used, and places the pressure vessel in service.

The organization is the user required to fulfill Code responsibilities. The Manufacturer is the Manufacturer required to fulfill Code responsibilities.

(b) Example 2. A *user appoints a designated agent*, the designated agent specifies a pressure vessel, and a Manufacturer constructs the vessel. The user ensures the required overpressure protection system is properly installed and places the vessel in service.

(1) Given

(-a) an organization that requires a pressure vessel

(-b) an agent acting on behalf of the organization

(-c) a Manufacturer that can provide a pressure vessel

(2) Actions

(-a) The organization appoints an agent to act on its behalf.

(-b) The designated agent develops a specification using Code requirements and assigned responsibilities and guidelines, including matters of agreement between the organization, the designated agent, and the Manufacturer. The designated agent also sizes the pressure-relieving device, or specifies overpressure protection by system design at the instruction of the organization.

(-c) The Manufacturer constructs the pressure vessel and delivers it to the organization.

(-d) The organization installs the pressure vessel, ensures the overpressure protection system is properly installed, and provides the required documentation and approvals if overpressure by system design is used, and places the pressure vessel in service.

The organization is the user required to fulfill Code requirements. The designated agent is the Code-designated agent required to fulfill Code requirements. The Manufacturer is the Manufacturer required to fulfill Code requirements.

NN-6 SPECIFIC CODE-ASSIGNED RESPONSIBILITIES

(a) The Code-assigned responsibilities that relate to the user or his designated agent have been grouped into eleven categories, as follows:

(1) Responsibilities of the User

(2) Matters of Agreement Between the User and the Manufacturer

(3) The Manufacturer's Responsibility to the User

(4) Recommendations to the User

(5) Responsibilities of the User or His Designated Agent

(6) Matters of Agreement Between the User or His Designated Agent and the Manufacturer

(7) The Manufacturer's Responsibility to the User or His Designated Agent

(8) Recommendations to the User or His Designated Agent

(9) Cautionary Advice Provided to the User

(10) Guidance to Code Users or Their Designated Agents

(11) User–Manufacturer Rules

Provided by IHS under license with ASME
No reproduction or networking permitted without license from IHS
Licensee=Chevron Phillips Chemical Co LP/5956674001
Not for Resale, 11/09/2014 20:41:36 MST

(b) See Tables NN-6-1 through NN-6-11 for the Code-assigned responsibilities and applicable paragraphs for each of the categories listed in (a). The category number given in (a) corresponds to the designator of the relevant table.

(c) Users, designated agents, and Manufacturers should become familiar with the Code-assigned responsibilities and associated rules to ensure that the responsibilities applicable to their activities are covered when preparing (user or his designated agent) or reviewing (Manufacturer) Form U-DR-1 or U-DR-2, as applicable; see Nonmandatory Appendix KK, Guide for Preparing User's Design Requirements. See also U-2(a) and U-2(b).

Provided by IHS under license with ASME
No reproduction or networking permitted without license from IHS
Licensee=Chevron Phillips Chemical Co LP/5956674001
Not for Resale, 11/09/2014 20:41:36 MST

Table NN-6-1
Responsibilities of the User

Responsibility	Code Reference	Additional Information
Refer to pertinent supplementary documents	Foreword, second paragraph	...
Overpressure protection	UG-125(a)(2)	...
	UG-129(c)(6)	...
	UG-140(a)(1)	...
	UG-140(a)(2)	...
	UG-140(b)(3)	...
	UG-140(b)(5)	...
	M-5.1(a)	...
	M-5.3	...
	M-5.7(b)(3)	...
	M-5.8	...
	M-10(a)	...
	M-10(b)	...
Quick-opening closures	UG-35.2(c)(1)	...
	UG-35.2(e)	Provides reference to Nonmandatory Appendix FF that covers installation, operational, and maintenance recommendations for the user
	FF-1	...
	FF-2	...
	FF-3	...
	FF-5	...
	FF-6	...
	FF-7	...
	FF-8	...
Proof tests	UG-101(a)(4)(-a)	...
Materials of construction	UG-77(b)	...
	UNF-15(b)	...
	UNF-65	...
	UHA-42	...
	UCL-11(b)	...
	UCL-12	...
	UCL-25(a)	...
Heat exchanger design	UHX-12.4(a)	...
	UHX-13.4	...
	UHX-13.8.1(c)	...
	UHX-14.6.1(c)	...

Provided by IHS under license with ASME
No reproduction or networking permitted without license from IHS
Licensee=Chevron Phillips Chemical Co LP/5956674001
Not for Resale, 11/09/2014 20:41:36 MST

Table NN-6-2
Matters of Agreement Between the User and the Manufacturer

Responsibility	Code Reference	Additional Information
Use of calculated test pressure	UG-99(c)	...
Permit painting or coating of pressure-retaining welds prior to hydrostatic pressure test	UG-99(k)	Document permission on Form U-DR-1 or Form U-DR-2
Permit painting or coating of pressure-retaining welds prior to pneumatic pressure testing	UG-100(e)	Document permission on Form U-DR-1 or Form U-DR-2
Welded joints examined by sectioning	UW-41	...
Weld repair	UW-51(b)	...
Postweld heat treatment	UNF-56(b)	...
	UNF-56(e)(1)	...
Weld metal composition	UCL-32	...
Flange rigidity	2-14(b)	2-14(a)
Weld repair	UW-51(b)	...
Postweld heat treatment	UNF-56(b)	...
	UNF-56(e)(1)	...
Weld metal composition	UCL-32	...
Flange rigidity	2-14(b)	See also 2-14(a)
Example 3, Constant “c”	11-1	...

Table NN-6-3
The Manufacturer's Responsibility to the User

Responsibility	Code Reference	Additional Information
Installation, operational, and maintenance requirements to the user in the form of recommendations	Nonmandatory Appendix FF	...
Manufacturer’s submittal of data report to the user	UG-120(a)(3)(-a)	...
Quality control system	10-1	...

Table NN-6-4
Recommendations to the User

Responsibility	Code Reference	Additional Information
Conditions of service	UNF-4	...
Fabrication	UHA-108	...
Corrosion rates	M-10(b)	...
Pilot-operated pressure relief valves	M-10(b)	...
Sizing of pressure relief devices for fire conditions	M-13(a)	...
Quick-opening closures	Nonmandatory Appendix FF	Covering installation, operational, and maintenance guidance for the user in the form of recommendations

Provided by IHS under license with ASME
No reproduction or networking permitted without license from IHS
Licensee=Chevron Phillips Chemical Co LP/5956674001
Not for Resale, 11/09/2014 20:41:36 MST

Table NN-6-5
Responsibilities of the User or His Designated Agent

Responsibility	Code Reference	Additional Information
Selection of code rules	Foreword	...
Establish design requirements	U-2(a)	See also 1(b) of "Submittal of Technical Inquiries to the Boiler and Pressure Vessel Standards Committees" in the front matter
	U-2(a)(1)	...
	U-2(a)(2)	...
	U-2(a)(3)	...
	U-2(a)(4)	...
	U-2(b)(2)	...
	Nonmandatory Appendix KK	...
Minimum thickness	UG-16(b)(2)	...
Loadings	UG-22	...
Specify corrosion allowance	UG-25(a)	...
Specify maximum allowable external pressure	UG-28(f)	...
Overpressure protection	UG-125(a)(1)	...
	UG-125(a)(3)	...
Determine if contents are lethal	UW-2(a)	...
Design temperature calculations	UW-2(d)(3)	...
Establish welded pressure joint requirements	UW-12	See also L-1.2 and L-1.4.3

Table NN-6-6
Matters of Agreement Between the User or His Designated Agent and the Manufacturer

Responsibility	Code Reference	Additional Information
Degree of NDE beyond Code requirements	U-2(a)(5)	...
Design loads to be considered	U-2(b)(2)	...
Degree of corrosion resistance	UG-136(b)(2)	...

Provided by IHS under license with ASME
No reproduction or networking permitted without license from IHS
Licensee=Chevron Phillips Chemical Co LP/5956674001
Not for Resale, 11/09/2014 20:41:36 MST

Table NN-6-7
The Manufacturer's Responsibility to the User or His Designated Agent

Responsibility	Code Reference	Additional Information
Obtain all applicable design requirements	U-2(b)(2)	...
Submit data reports	UG-120(a)(1)(-b)	Vessels manufactured for stock; see also Table W-3, Reference No. (3)
	UG-120(c)(1)	...
Prior notification of weld repair	UCS-56(f)(1)	...
	UNF-56(e)(3)(-a)	...
Supplemental marking	UHX-19.2	...
Obtain approval before making casting repairs	7-4(d)	...
Provide calculations, location, and extent of local thin areas, if requested	32-2(a)	...
	Table W-3, Reference No. (3)	...

Table NN-6-8
Recommendations to the User or His Designated Agent

Responsibility	Code Reference	Additional Information
Assure himself regarding materials of construction	UG-4(f)	...

Table NN-6-9
Cautionary Advice Provided to the User

Responsibility	Code Reference	Additional Information
General	U-2(a)	Input from Manufacturer
	U-4(b)	Units of measurement
	1(b) of "Submittal of Technical Inquiries to the Boiler and Pressure Vessel Standards Committees" in the front matter	Code Case acceptance
Inelastic straining due to creep	[Note (1)]	...
Painting before pressure testing	UG-99(k)	...
	UG-100(e)	...
Pressure relief devices	UG-127(a)(1)	[Note (2)]
	UG-127(a)(3)(-b)(-4)	[Note (3)]
	UG-127(a)(3)(-c)(-1)	[Note (4)]
	UG-135(b)(2)	[Note (5)]
	11-2	See in-text Note in 11-2(a)
	M-10(b)	...
Expansion joint design	5-1(d)	...

NOTES:
(1) For Code reference, see endnote[14].
(2) For additional information, see endnote[47].
(3) For additional information, see endnote[53].
(4) For additional information, see endnote[55].
(5) For additional information, see endnote[62].

Provided by IHS under license with ASME
No reproduction or networking permitted without license from IHS
Licensee=Chevron Phillips Chemical Co LP/5956674001
Not for Resale, 11/09/2014 20:41:36 MST

Table NN-6-10
Guidance Code to Users and Their Designated Agents

Responsibility	Code Reference	Additional Information
Submittal of technical inquiries	1(b) of "Submittal of Technical Inquiries to the Boiler and Pressure Vessel Standards Committees" in the front matter	...
Guidance to accommodate deflagration loadings	H-1	...
Design criteria selection for deflagration loadings	H-4.1	...
Guide for preparing user's design requirements	Nonmandatory Appendix KK	...
	Forms U-DR-1 and U-DR-2	...
	Table KK-1	...

Table NN-6-11
User–Manufacturer Rules

Responsibility	Code Reference	Additional Information
Inspection by user-inspector	UG-91(a)(2)	...
User's inspector marking	UG-116(a)(1)(-a)	...
	Table W-3, Reference No. (12)	...

Provided by IHS under license with ASME
No reproduction or networking permitted without license from IHS
Licensee=Chevron Phillips Chemical Co LP/5956674001
Not for Resale, 11/09/2014 20:41:36 MST

ENDNOTES

1 The water may contain additives provided the flash point of the aqueous solution at atmospheric pressure is 185°F or higher. The flash point shall be determined by the methods specified in ASTM D93 or in ASTM D56, whichever is appropriate.

2 Requirements for pressure vessels for human occupancy are covered by ASME PVHO-1.

3 These requirements for design, fabrication, testing, and material for nonpressure part attachments do not establish the length, size, or shape of the attachment material. Pads and standoffs are permitted and the scope can terminate at the next welded or mechanical joint.

4 See UG-90(b) and UG-90(c)(1) for summaries of the responsibilities of the Manufacturer and the duties of the Inspector.

5 Guidance for conversion of units from U.S. Customary to SI is found in Nonmandatory Appendix GG.

6 In some instances the limitations of the scope clause in the material specifications are based on a very realistic maximum. It is recommended that the designer and/or fabricator confer with the material manufacturer or supplier before proceeding, thus assuring himself that except for size or thickness, all requirements of the material specification will be met and so certified.

7 The term "plate" for the purpose of this usage includes sheet and strip also.

8 Pipe and tubing fabricated by fusion welding, with filler metal added, may not be used in Code construction unless it is fabricated in accordance with Code rules as a pressure part.

9 The pressure differential method is described in "Materials Research Standards," Vol. 1, No. 7, July 1961, published by ASTM.

10 When a pressure vessel is expected to operate at more than one pressure and temperature condition, other values of maximum allowable working pressure with the coincident permissible temperature may be added as required. See UG-20(b).

11 It is recommended that a suitable margin be provided above the pressure at which the vessel will be normally operated to allow for probable pressure surges in the vessel up to the setting of the pressure relieving devices (see UG-134).

12 For the basis on which the tabulated stress values have been established, see Mandatory Appendix 1 of Section II, Part D.

13 See 3-2 Definition of Terms.

14 The user of the Code is cautioned that for elevated metal temperatures when high membrane stress and/or high bending stress exist in the section, some inelastic straining due to creep in excess of the limits allowed by the criteria of Mandatory Appendix 1 of Section II, Part D may occur.

15 UG-23(d) permits an increase in allowable stress when earthquake or wind loading is considered in combination with other loads and pressure defined in UG-22. The 1.2 increase permitted is equivalent to a load reduction factor of 0.833. Some standards which define applicable load combinations do not permit an increase in allowable stress, however a load reduction factor (typically 0.75) is applied to multiple transient loads (e.g., wind plus live load, seismic plus live load, etc.).

16 *Pilot casting* — Any one casting, usually one of the first from a new pattern, poured of the same material and using the identical foundry procedure (risering, gating, pouring, and melting) as the castings it is intended to represent. Any pilot casting or castings taken to represent a lot and the castings of that lot shall be poured from a heat of metal from which the castings on the current order are poured.

Provided by IHS under license with ASME
No reproduction or networking permitted without license from IHS
Licensee=Chevron Phillips Chemical Co LP/5956674001
Not for Resale, 11/09/2014 20:41:36 MST

17 Critical sections: For static castings, the sections where imperfections are usually encountered are abrupt changes in section and at the junctions of risers, gates, or feeders to the casting. For centrifugal castings, *critical sections* shall be interpreted to be any abrupt changes of section, the circumference for a distance of at least 3 in. (75 mm) from each end, and one additional circumferential band at least 3 in. (75 mm) wide and including the area of the most severe indication detected by other examination methods.

18 Formulas in terms of the outside radius and for thicknesses and pressures beyond the limits fixed in this paragraph are given in 1-1 to 1-3.

19 For pipe, the inside radius R is determined by the nominal outside radius minus the nominal wall thickness.

20 These formulas will govern only when the circumferential joint efficiency is less than one-half the longitudinal joint efficiency, or when the effect of supplementary loadings (UG-22) causing longitudinal bending or tension in conjunction with internal pressure is being investigated.

21 It is recommended that a suitable margin be provided when establishing the maximum allowable external working pressure to allow for pressure variations in service.

22 In order to ensure that a finished head is not less than the minimum thickness required, it is customary to use a thicker plate to take care of possible thinning during the process of forming. The neck of an opening in a head with an integrally flanged opening will thin out due to the fluing operation. This is permissible provided the neck thickness is not less than the thickness required for a cylindrical shell subject to internal and/or external pressure, as applicable, and having an inside diameter equal to the maximum diameter of the opening [see UG-38(a) and UG-46(j)].

23 Formulas in terms of outside dimensions and for heads of other proportions are given in 1-4.

24 Special consideration shall be given to the design of shells, nozzle necks or flanges to which noncircular heads or covers are attached [see U-2(g)].

25 The formulas provide safe construction as far as stress is concerned. Greater thicknesses may be necessary if deflection would cause leakage at threaded or gasketed joints.

26 The rules governing openings as given in this Division are based on the stress intensification created by the existence of a hole in an otherwise symmetrical section. External loadings such as those due to the thermal expansion or unsupported weight of connecting piping have not been evaluated. These factors should be given attention in unusual designs or under conditions of cyclic loading.

27 The opening made by a pipe or a circular nozzle, the axis of which is not perpendicular to the vessel wall or head, may be considered an elliptical opening for design purposes.

28 An obround opening is one which is formed by two parallel sides and semicircular ends.

29 In the corroded condition, see UG-16(e).

30 All dimensions given, for size of vessel on which inspection openings are required, are nominal.

31 Dimensions referred to are nominal.

32 The minimum cross section is usually at the root of the thread.

33 The rules in this paragraph apply to ligaments between tube holes and not to single openings. They may give lower efficiencies in some cases than those for symmetrical groups which extend a distance greater than the inside diameter of the shell as covered in (e) above. When this occurs, the efficiencies computed by the rules under (b) above shall govern.

34 Where applicable for Part UCS materials, the impact test temperature may be adjusted in accordance with UG-84(b)(2) and Table UG-84.4.

35 Whenever *Authorized Inspection Agency* or *AIA* is used in this Code, it shall mean an Authorized Inspection Agency accredited by ASME in accordance with the requirements in the latest edition of ASME QAI-1.

36 The maximum allowable working pressure may be assumed to be the same as the design pressure when calculations are not made to determine the maximum allowable working pressure.

Provided by IHS under license with ASME

No reproduction or networking permitted without license from IHS

Licensee=Chevron Phillips Chemical Co LP/5956674001
Not for Resale, 11/09/2014 20:41:36 MST

37 In some cases it is desirable to test vessels when partly filled with liquids. For such vessels a combined hydrostatic and pneumatic test may be used as an alternative to the pneumatic test of this paragraph, provided the liquid level is set so that the maximum stress including the stress produced by pneumatic pressure at any point in the vessel (usually near the bottom) or in the support attachments, does not exceed 1.3 times the allowable stress value of the material multiplied by the applicable joint efficiency. After setting the liquid level to meet this condition, the test is conducted as prescribed in (b) and (c) above.
Air or gas is hazardous when used as a testing medium. It is therefore recommended that special precautions be taken when air or gas is used for test purposes.

38 Examples of the use of modeling techniques are found in UG-127(a)(2)(-a)(-1)(+b) and UG-131(d)(2)(-b), or refer to textbooks on the subject.

39 The maximum allowable working pressure (external) is required only when specified as a design condition.

40 The application forms and related information and instructions may be obtained by writing to the Secretary, ASME Boiler and Pressure Vessel Committee, Two Park Avenue, New York, NY 10016.

41 See UG-90(c)(2) for additional requirements applicable to mass produced pressure vessel fabrication.

42 For the purpose of these rules, gases are considered to be substances having a vapor pressure greater than 40 psia (300 kPa absolute) at 100°F (40°C).

43 Normally this temperature should not be less than 115°F (45°C).

44 A *pressure relief valve* is a pressure relief device which is designed to reclose and prevent the further flow of fluid after normal conditions have been restored. A *nonreclosing pressure relief device* is a pressure relief device designed to remain open after operation.

45 A *safety valve* is a pressure relief valve actuated by inlet static pressure and characterized by rapid opening or pop action. A *relief valve* is a pressure relief valve actuated by inlet static pressure which opens in proportion to the increase in pressure over the opening pressure. A *safety relief valve* is a pressure relief valve characterized by rapid opening or pop action, or by opening in proportion to the increase in pressure over the opening pressure, depending on application. A *pilot operated pressure relief valve* is a pressure relief valve in which the major relieving device is combined with and is controlled by a self-actuated auxiliary pressure relief valve.

46 A *rupture disk device* is a nonreclosing pressure relief device actuated by inlet static pressure and designed to function by the bursting of a pressure containing disk. A *rupture disk* is the pressure containing and pressure sensitive activation component of a rupture disk device. Rupture disks may be designed in several configurations, such as plain flat, prebulged, or reverse buckling. A *rupture disk holder* is the structure that encloses and clamps the rupture disk in position.

47 The *manufacturing design range* is a range of pressure within which the marked burst pressure must fall to be acceptable for a particular requirement as agreed upon between the rupture disk Manufacturer and the user or his designated agent. The manufacturing design range must be evaluated in conjunction with the specified burst pressure to ensure that the marked burst pressure of the rupture disk will always be within applicable limits of UG-134. Users are cautioned that certain types of rupture disks have manufacturing ranges that can result in a marked burst pressure greater than the specified burst pressure.

48 The specified disk temperature supplied to the rupture disk Manufacturer shall be the temperature of the disk when the disk is expected to burst.

49 A *lot of rupture disks* is those disks manufactured of a material at the same time, of the same size, thickness, type, heat, and manufacturing process including heat treatment.

50 The *minimum net flow area* is the calculated net area after a complete activation of the rupture disk or pin device with appropriate allowance for any structural members which may reduce the net flow area through the device. The net flow area for sizing purposes shall not exceed the nominal pipe size area of the rupture disk device.

51 The *certified flow resistance* K_R is a dimensionless factor used to calculate the velocity head loss that results from the presence of a nonreclosing pressure relief device in a pressure relief system.

52 Use of a rupture disk device in combination with a pressure relief valve shall be carefully evaluated to ensure that the media being handled and the valve operational characteristics will result in opening of the valve coincident with the bursting of the rupture disk.

Provided by IHS under license with ASME
No reproduction or networking permitted without license from IHS
Licensee=Chevron Phillips Chemical Co LP/5956674001
Not for Resale, 11/09/2014 20:41:36 MST

53 Users are warned that a rupture disk will not burst at its design pressure if back pressure builds up in the space between the disk and the pressure relief valve which will occur should leakage develop in the rupture disk due to corrosion or other cause.

54 This use of a rupture disk device in series with the pressure relief valve is permitted to minimize the loss by leakage through the valve of valuable or of noxious or otherwise hazardous materials, and where a rupture disk alone or disk located on the inlet side of the valve is impracticable, or to prevent corrosive gases from a common discharge line from reaching the valve internals.

55 Users are warned that many types of pressure relief valves will not open at the set pressure if pressure builds up in the space between the pressure relief valve disk and the rupture disk device. A specially designed pressure relief valve such as a diaphragm valve, pilot operated valve, or a valve equipped with a balancing bellows above the disk may be required.

56 Some adverse effects resulting from leakage may include obstructing the flow path, corrosion of pressure relief valve components, and undesirable bursts of the outlet side rupture disk.

57 A *pin device* is a nonreclosing pressure relief device actuated by inlet static or differential pressure and designed to function by the activation of a load bearing section of a pin that supports a pressure containing member. A *pin* is the load bearing activation component of a pin device its crosssectional area is not limited to a circular shape. A *pin device body* is the structure that encloses the pressure containing members.

58 The specified temperature supplied to the pin manufacturer shall be the temperature of the pin when an emergency condition exists and the pin is expected to activate.

59 Vacuum relief devices are not covered by Certification Mark requirements.

60 Pressure relief device capacities flow resistances are published in "Pressure Relief Device Certifications." This publication may be obtained from the National Board of Boiler and Pressure Vessel Inspectors, 1055 Crupper Avenue, Columbus, OH 43229.

61 The *set pressure* is the value of increasing inlet static pressure at which a pressure relief device displays one of the operational characteristics as defined by opening pressure, popping pressure, start-to-leak pressure, burst pressure, breaking pressure or buckling pressure. (The applicable operating characteristic for a specific device design is specified by the device Manufacturer.)

62 Users are warned that the proper operation of nonreclosing pressure relief devices depends upon following the Manufacturer's installation instructions closely with regard to the flow direction marked on the device. Some device designs will burst at pressures much greater than their marked burst pressure when installed with the process pressure on the vent side of the device.

63 The User may specify a higher test pressure commensurate with the back pressure anticipated in service.

64 The *pin temperature* may be different from the operating temperature for devices where the pin is isolated from operating conditions.

65 By "lethal substances" are meant poisonous gases or liquids of such a nature that a very small amount of the gas or of the vapor of the liquid mixed or unmixed with air is dangerous to life when inhaled. For purposes of this Division, this class includes substances of this nature which are stored under pressure or may generate a pressure if stored in a closed vessel.

66 *Communicating chambers* are defined as appurtenances to the vessel which intersect the shell or heads of a vessel and form an integral part of the pressure containing enclosure, e.g., sumps.

67 *Side plates of a flat-sided vessel* are defined as any of the flat plates forming an integral part of the pressure containing enclosure.

68 One test specimen may represent a group of forgings provided they are of the same design, are from the same heat of material and are forged in the same manner.

69 *Welder* includes brazer, welding operator, and brazing operator.

70 *explosive welding* — a solid state welding process wherein coalescence is produced by the application of pressure by means of an explosion.

Provided by IHS under license with ASME
No reproduction or networking permitted without license from IHS
Licensee=Chevron Phillips Chemical Co LP/5956674001
Not for Resale, 11/09/2014 20:41:36 MST

71 Examination shall be by magnetic particle or liquid penetrant methods when the material is ferromagnetic, or by the liquid penetrant method when the material is nonmagnetic.

72 It is not the intent of this paragraph to require measurement of reductions in thickness due to the welding process. If a disagreement between the Manufacturer and the Inspector exists as to the acceptability of any reduction in thickness, the depth shall be verified by actual measurement.

73 Concavity due to the welding process on the root side of a single welded circumferential butt weld is permitted when the resulting thickness of the weld is at least equal to the thickness of the thinner member of the two sections being joined and the contour of the concavity is smooth.

74 Furnace gas temperature measurement alone is not considered sufficiently accurate.

75 Recommended Practice No. SNT-TC-1A, Personnel Qualification and Certification in Nondestructive Testing, ACCP, ASNT Central Certification Program, and CP-189 are published by the American Society for Nondestructive Testing, Inc., 1711 Arlingate Plaza, Caller #28518, Columbus, Ohio 43228-0518.

76 Flux residues can be extremely corrosive as well as interfering with visual inspection.

77 Low alloy steels — those alloy steels listed in Table UCS-23.

78 See Mandatory Appendix I of Section II, Part D for the basis on which the allowable stress values have been established.

79 The rates of heating and cooling need not be less than 100°F/hr (56°C/h). However, in all cases consideration of closed chambers and complex structures may indicate reduced rates of heating and cooling to avoid structural damage due to excessive thermal gradients.

80 No provisions of this paragraph waive other requirements of this Division, such as UW-2(a), UW-2(d), UW-10, and UCS-56.

81 This is defined in Section V, SE-142, 4.1.1 and A-1(a).

82 Thermal treatments of materials are not intended to include warming to temperatures not exceeding 600°F (315°C), thermal cutting, or welding.

83 Either base metal or weld metal.

84 Calculated stress from pressure and nonpressure loadings, including those listed in UG-22 which result in general primary membrane tensile stress.

85 By "lethal substances" are meant poisonous gases or liquids of such a nature that a very small amount of the gas or of the vapor of the liquid mixed or unmixed with air is dangerous to life, when inhaled. For purposes of this Division, this class includes substances of this nature which are stored under pressure or may generate a pressure if stored in a closed vessel.

86 It is the intent that cast ductile irons with an elongation of less than 15% in 2 in. (50 mm) be treated as cast iron and that vessels or pressure parts of such material be designed and fabricated in accordance with the rules in Part UCI.

87 Buttered means buildup overlay welding.

88 Temper bead welding technique is done when the final beads of welding are made over-flush, deposited only on previous beads of welding for tempering purposes without making contact with the base metal, and then removing these final beads.

89 Layer wash is defined as the indications resulting from slight weld penetration at the layer interfaces.

90 Ellipsoidal heads designed under $K > 1.0$ and all torispherical heads made of materials having a specified minimum tensile strength exceeding 70,000 psi (485 MPa) shall be designed using a value of S equal to 20,000 psi (138 MPa) at room temperature and reduced in proportion to the reduction in maximum allowable stress values at temperature for the material as shown in the appropriate table (see UG-23).

91 When the flange material is cast iron, particular care should be taken when tightening the bolts to avoid excessive stress that may break the flange. The longitudinal hub stress has been limited to S_f in order to minimize any cracking of flanges. An attempt should be made to apply no greater torque than is needed to assure tightness during the hydrostatic test.

Provided by IHS under license with ASME
No reproduction or networking permitted without license from IHS
Licensee=Chevron Phillips Chemical Co LP/5956674001
Not for Resale, 11/09/2014 20:41:36 MST

92 Loose flanges of the type shown in Figure 2-4 sketch (1) are of the split design when it is necessary to install them after heat treatment of a stainless steel vessel, or when for any reason it is desired to have them completely removable from the nozzle neck or vessel.

93 When internal pressure occurs only during the required pressure test, the design may be based on external pressure, and auxiliary devices such as clamps may be used during the application of the required test pressure.

94 The Code as currently written provides minimum requirements for construction and it is recognized to be the responsibility of the designing engineer to determine when the intended service is of a nature that requires supplementary requirements to ensure safety; consequently, the designer should determine when the service warrants that this class of inspection be specified for steel castings of less than 4 in. (100 mm) nominal body thickness.

95 The coefficients of these formulas include a factor that effectively increases the allowable stress for such construction to $1.5S$.

96 The complexity of the work includes factors such as design simplicity versus complexity, the types of materials and welding procedures used, the thickness of materials, the types of nondestructive examinations applied, and whether heat treatments are applied.

97 The size and complexity of the organization includes factors such as the number of employees, the experience level of employees, the number of Code items produced, and whether the factors defining the complexity of the work cover a wide or narrow range.

98 Knowing the official rating capacity of a safety valve which is stamped on the valve, it is possible to determine the overall value of KA in either of the following formulas in cases where the value of these individual terms is not known:

Official Rating in Steam	Official Rating in Air
$KA = \dfrac{W_s}{51.5P}$	$KA = \dfrac{W_a}{CP}\sqrt{\dfrac{T}{M}}$

This value for KA is then substituted in the above formulas to determine the capacity of the safety valve in terms of the new gas or vapor.

99 Use $E = 1.0$ for Category C and D joints that are not butt welded since stresses in these joints are controlled by the applicable rules for sizing such joints. See Figures UG-34 and UW-13.2

100 $I = bt^3/12$ where $b = 1.0$ for vessels without reinforcements and for vessels with stay plates or stay rods. $I = pt^3/12$ for vessels with reinforcements that do not extend around the corners of the vessel [see Figure 13-2(a) sketches (5) and (6)].

101 For unreinforced vessels of rectangular cross section (para. 13-7 and parts of para. 13-18), the given moments are defined on a per-unit-width basis. That is, moments have dimensions [Length × Force/Length] = [Force].

102 See Manual of Steel Construction, AISC, American Institute of Steel Construction, Inc., One East Wacker Drive, Chicago, IL 60601-1802.

103 Air or gas is hazardous when used as a testing medium. It is therefore recommended the vessel be tested in such a manner as to ensure personnel safety from a release of the total internal energy of the vessel. See also ASME PCC-2, Article 5.1, Mandatory Appendix 3 “Safe Distance Calculations for Pneumatic Pressure Test” and Mandatory Appendix 2 “Stored Energy Calculations for Pneumatic Pressure Test.”

104 When using high alloys and nonferrous materials either for solid wall or clad or lined vessels, refer to UHA-6, UCL-3, and UNF-4, as appropriate.

105 See “Stresses in Large Cylindrical Pressure Vessels on Two Saddle Supports,” p. 959, *Pressure Vessels and Piping: Design and Analysis, A Decade of Progress*, Volume Two, published by ASME.

106 See Transactions ASCE, Volume 98 — 1931 “Design of Large Pipe Lines.”

Provided by IHS under license with ASME
No reproduction or networking permitted without license from IHS
Licensee=Chevron Phillips Chemical Co LP/5956674001
Not for Resale, 11/09/2014 20:41:36 MST

107 This construction has the further advantage of not transmitting discharge-pipe strains to the valve. In these types of installation, the back pressure effect will be negligible, and no undue influence upon normal valve operation can result.

108 A Nonmandatory Appendix Y flange bolted to a rigid foundation may be analyzed as a Class 1 assembly by substituting $2l$ for l in eq. Y-6.1(12) of Y-6.1.

109 Where the flanges are identical dimensionally and have the same elastic modulus E, but have different allowable stresses S_f, the assembly may be analyzed as a Class 1 assembly provided the calculated stresses are evaluated against the lower allowable stress.

110 The symbols for the various stresses in the case of a Class 3 assembly also carry the subscript I or II. For example, S_{H1} represents the longitudinal hub stress in Flange I of the Class 3 assembly.

111 Manufacturers are cautioned to calculate the minimum ratio based upon mill test values of the tube and tubesheet.

112 The Manufacturer may correlate rolling torque, hydraulic expanding pressure, or explosive charge with shear load tests. For explosive expanding, the Manufacturer may correlate interference of fit.

Provided by IHS under license with ASME

No reproduction or networking permitted without license from IHS

Licensee=Chevron Phillips Chemical Co LP/5956674001
Not for Resale, 11/09/2014 20:41:36 MST

INTENTIONALLY LEFT BLANK

--`,,,``,,,```,,,,`,``,`,``,,`,```-`-`,,`,,`,`,,`---

Provided by IHS under license with ASME

No reproduction or networking permitted without license from IHS

Licensee=Chevron Phillips Chemical Co LP/5956674001
Not for Resale, 11/09/2014 20:41:36 MST

INDEX

Abrasion, allowance for, UG-25, UG-26
Accessibility, pressure vessels, M-2
Access openings, UG-46
Allowance for corrosion, erosion, or abrasion, UG-25, UG-26, UB-13, UCS-25, UCL-25
Applied lining, tightness, UCL-51
Approval of new materials, UG-4, App. B
Articles in Section V
  Article 1, T-150, 6-1, 8-1, 12-2
  Article 2, UW-51
  Article 5, 12-1
  Article 6, 8-1
  Article 7, 6-1
Attachments
  lugs and fitting, UG-82
  lugs for platforms, ladders, etc., UG-55
  nonpressure parts, UW-28, UHT-85
  nozzles, UW-16
  pipe and nozzle necks to vessel walls, UG-43, UHT-18
  stiffening rings to shell, UG-30, UHT-28, UHT-30
Backing strip, Table UW-12, UW-16, UW-35
Bending stress, welded joints, UW-9
Bend test, UHA-52
Blind flanges, UG-34
Bolted flange connections, UG-44, Apps. 2 and Y
  bolt loads, 2-5
  bolt stresses, App. S
  design of, Apps. 2, S, and Y
  flange moments, 2-6
  flange stresses, 2-7, App. S
  materials, UG-4 to UG-13, UCD-12, 2-2
  studs, 2-2
  tightness of, App. S
  types of attachment, 2-4
Bolts, UG-12, UCS-10, UNF-12, UCI-12, UCD-12, 2-2, App. S
Braced and stayed surfaces, UG-47
Brazed connections for nozzles, UB-17 to UB-19
Brazed joints, efficiency of, UB-14
  maximum service temperature, UB-12
  strength of, UB-10
Brazing, cleaning of braced surfaces, UB-34
  fabrication by, UB-1, UB-30 to UB-37
  filler metal, UB-6, UB-15
  fluxes, UB-7
  heads into shells, UB-16
  operating temperature, UB-2
Buttstraps, curvature, UB-33
  forming ends of, UG-79
  thickness and corrosion allowance, UB-13
  welding ends of, UB-33
Carbon in material for welding, UF-5, UCS-5
Cast ductile iron vessels, design, UCD-16
  pressure–temperature limitations, UCD-3
  service restrictions, UCD-2
Castings
  carbon steel, UCS-8
  defects, UG-24
  impact test, UG-84, UHT-6
  inspection, UG-24
  quality factor, UG-24
  specifications, UG-7, UCS-8, UNF-8, UCD-5
Cast iron circular dished heads, UCI-35
Cast iron pipe fittings, UCI-3
Cast iron standard parts, small, UG-11
Cast iron vessels, corners and fillets, UCI-37
  head design, UCI-32, UCI-33
  hydrostatic test, UCI-99
  nozzles and fittings, UCI-36
  pressure–temperature limitations, UCI-3
Certificate of Authorization for Certification Mark with appropriate Designator, UG-116
Certification of material, UG-93
Certification of Nondestructive Personnel
  liquid penetrant examination, 8-2
  magnetic particle examination, 6-2
  radiographic examination, UW-51
  ultrasonic examination, 12-2
Chip marks on integrally forged vessels, UF-32
Circumferential joints, alignment tolerance, UHT-20
  assembling, UW-9, UB-16
  brazing, UB-16
  vessels subjected to external pressure, UG-28
Clad material, inserted strips, UCL-33
  examination, UCL-36
Clad plate, UCL-11
Cleaning of brazed surfaces, UB-34
  of welded surfaces, UW-32
Clearance between surfaces to be brazed, UB-35
Combination, of different materials, UB-5
  of methods of fabrication, U-2, UG-17
Computed working pressure from hydrostatic tests, UG-101, UCI-101, UCD-101
Conical heads, UG-32, UHT-33, 1-5
Conical sections, UHT-19
Connections, bolted flange (see Bolted flange connections)
  brazed, UB-19 to UB-21
  clamp, App. 24
  expanded, UG-43
  from vessels to safety valves, UG-135
  studded, UG-43
  threaded, UG-43
  welded, UW-15, UW-16, UHT-17, UHT-18
Cooling, after postweld heat treating, UW-40, UHT-56, Table UHT-56
Corrosion allowance, UG-16(e), UG-25, UB-13, UCS-25, UCL-25, UHT-25, App. E
Corrosion resistant linings, UG-26
Corrugated shells, UCS-28
Corrugating paper machinery, UF-7
Cover plates, UG-34
  on manholes and handholes, UG-46
  spherically dished, UG-35, 1-6
Cracking, stress corrosion, UHA-103
Cutting plates, UG-76, UW-31, UHT-83
Cylindrical shells, supplementary loading, UG-22

Provided by IHS under license with ASME
No reproduction or networking permitted without license from IHS
Licensee=Chevron Phillips Chemical Co LP/5956674001
Not for Resale, 11/09/2014 20:41:36 MST

thickness, UG-27, UHT-27, UCI-29
transition in, UG-36
Data Report, Guide for preparation, App. W
Defects in welded vessels, repair, UW-38, UHT-85
Definitions, 3-1
Design, brazed vessels, UB-9
carbon and low alloy steel vessels, UCS-16
cast ductile iron vessels, UCD-16
cast iron vessels, UCI-16
clad vessels, UCL-20
ferritic steel vessels with properties enhanced by heat treatment, UHT-16
forged vessels, UF-12
high alloy steel vessels, UHA-20
loadings, UG-22
multichamber vessels, UG-19
nonferrous vessels, UNF-16
welded vessels, UW-8, UHT-1, UHT-16
Design pressure, UG-21
Diameter exemption, U-1
Dimensions, checking of, UG-96
Discharge of safety valve, UG-133, UG-134
Dished heads (see Formed heads)
Disks, rupture, UG-127
Dissimilar weld metal, UG-18, UHA-107, UCL-31
Distortion, of welded vessels, UG-80
supports to prevent, UG-27, UG-28
Drainage, discharge from safety and relief valves, UG-134
of vessels subject to corrosion, UG-25, M-2
Drop-weight tests, UHT-6
Eccentricity of shells, UG-80
edges of plates, metal removal from, UHT-83
tapered, UW-9
Efficiency, around openings for welded attachments, UW-15
welded, UW-12
Elasticity, modulus of, Table TM of Section II, Part D, Subpart 2
Electric resistance welding, UW-12
Ellipsoidal heads, UG-32, UG-33, 1-4, UHT-32, UHT-33
Erosion, allowance for, UG-25
Etching, of sectioned specimens, K-1
solutions for examination of materials, K-1
Evaporators, U-1
Examination, of sectioned specimens, UW-52
of welded joints, UW-51, UW-52, UNF-57, UNF-58, UHT-57, UHT-83
Exemptions, diameter and volume, U-1
Expanded connections, UG-43
External pressure, tube and pipe, UG-31
External pressure vessels, UG-28 to UG-30, UG-33, UG-80, UCD-28, UHT-27, UHT-29, UHT-30, UHT-33
allowable working pressure for, UG-28
charts, Section II, Part D, Subpart 3
design of heads for, UG-33, UCS-33, UNF-33, UHA-31, UCI-33, UHT-33
joints in shells of, UG-28, UHT-17
reducers, UG-36
reinforcement for openings, UG-37, UHT-17
stiffening rings in shells, UCS-29, App. L
supports for, UG-29, G-1
thickness of shell, UG-28, UCS-28, UNF-28, UHA-28, UCI-28, UHT-27, UCL-26
Fabrication, brazed vessels, UB-30
carbon and low alloy steel vessels, UCS-75
cast ductile iron vessels, UCD-75
cast iron vessels, UCI-75
clad vessels, UCL-30
ferritic steel vessels with tensile properties enchanced by heat treatment, UHT-75
forged vessels, UF-26
high alloy steel vessels, UHA-40
nonferrous vessels, UNF-75
welded vessels, UW-26, UHT-1, UHT-75
Ferritic steel vessels with tensile properties enhanced by heat treatment, design, UHT-16
fabrication, UHT-75
head design, UHT-33
heat treatment, UHT-80
heat treatment verification tests, UHT-81
marking, UHT-86
materials, UHT-1, UHT-5, UHT-40
stamping, UHT-115
welded joints, UHT-17
welding, UHT-82
Field assembly of vessels, U-1, U-2
Filler plugs for trepanned holes, K-2
Fillet welds, UW-18, UW-36, UCL-46
Fired process tubular heaters, U-1
Fitting attachments, UG-82, UHT-18
Flange connections, UG-44
Flange contact facings, 2-3
Flanges, bolted design, Apps. 2 and S
of formed heads for welding, UW-13
type of attachment, 2-4
Flat heads and covers, unstayed, UG-34
reinforcement of openings, UG-39
Flat spots on formed heads, UG-32
Flued openings, UG-38
Forged parts, small, UG-11
Forged vessels, heat treatment, UF-31
localized thin areas, UF-30
welding, UF-32
Forgings, UG-6, UF-6, UCS-7, UNF-7
identification of, UF-47
ultrasonic examination, UF-55
Form, Manufacturer's Data Report, App. W
Partial Report, App. W
Formed heads, UG-32, UG-33, UCS-33, UHT-32, UHT-33
flued openings in, UG-38
insertion of, welded vessels, UW-13
joint efficiency, UG-32
knuckle radius, UG-32, UHT-19
length of skirt, UG-32, UG-33, UW-13, UHT-19
on welded vessels, UW-13
reinforcement for openings, UG-37
Forming, ends of shell plates and buttstraps, UG-79
forged heads, UF-28
shell sections and heads, UG-79, UCS-79, UNF-77, UHT-79
Furnaces, temperatures for postweld heat treatment, UW-40
Furnaces for heat treating, UHT-80
temperature control of, UHT-80
Galvanized vessels, UG-99
Gasket materials, 2-3, Table 2-5.1
Girth joints (see Circumferential joints)
Handhole and manhole openings, UG-46
Head flange (skirt) length, UG-32, UG-33, UW-13
Head joints, brazing, UB-16
welded, UW-13 (see also Heads and shells; Joints)
Head openings, entirely in spherical portion, UG-37
Heads, concave and convex, UG-32, UG-33, UCI-32, UCI-33, UCD-32, UCD-33, UHT-32, UHT-33
flat (see Flat heads)
forged, UF-13 to UF-28
formed (see Formed heads)

--`,,,``,,,```,,,,`,``,,`,,`,,```-`-`,,`,,`,`,,`---
Provided by IHS under license with ASME
No reproduction or networking permitted without license from IHS
Licensee=Chevron Phillips Chemical Co LP/5956674001
Not for Resale, 11/09/2014 20:41:36 MST

forming, UG-79, UCS-79, UNF-77, UHT-79
thickness, after forming, UG-32, UG-33, UHT-79
Heads, design, conical, UG-32, UHT-33, 1-5
ellipsoidal, UG-32, UG-33, UHT-32, UHT-33, 1-4
hemispherical, UG-32, UG-33, UHT-32, UHT-33, 1-4
spherically dished, UG-32, UG-33, UCD-35, 1-6
toriconical, UG-32, UF-13, 1-5
torispherical, UG-32, UG-33, 1-4
torispherical, knuckle radius, UG-32
Heads and shells, external pressure, out-of-roundness, UG-80, UG-81
openings through or near welded joints, UW-14
roundness tolerance, UG-80, UG-81
Heat exchangers, U-1
Heat treatment, by fabricator, UG-85, UCS-85
carbon and low alloy steel vessels, UCS-85
ferritic steel vessels with tensile properties enhanced by heat treatment, UHT-80
forged vessels, UF-31
furnaces, UHT-80
high alloy vessels, UHA-105
of test specimens, UG-85, UCS-85
verification tests of, UHT-81
Hemispherical heads, UG-32, 1-4
High pressure vessels, U-1
Holes, for screw stays, UG-83
for trepanning plug sections, refilling, K-2
telltale, UG-25, UCL-25
unreinforced, in welded joints, UW-14
Hubs, on flanges, 2-2
Hydrostatic proof tests, UG-101, UCI-101, UCD-101
destructive, UG-101, UCI-101, UCD-101
prior pressure application, UG-101
Hydrostatic test, cast iron vessels, UCI-99
combined with pneumatic, UG-100
enameled vessels, UG-99
external pressure vessels, UG-99
galvanized vessels, UG-99
standard, UG-99, UCL-52, UCD-99
welded vessels, UG-99, UW-50
Identification, of forgings, UF-47
of plates, UG-77, UG-85, UG-94, UHT-86
of welds, UW-37
Identification markers, radiographs, UW-51
Impact test, certification, UG-84
properties, UG-84, UHT-6
specimens, UG-84, UHT-5, UHT-6, UHT-81, UHT-82
temperature, UHT-5
Inspection, before assembling, UG-90 to UG-102
brazed vessels, UB-40, UB-44
carbon and low alloy steel, UCS-90
cast ductile iron vessels, UCD-90
cast iron vessels, UCI-90
clad vessels, UCL-50
during fabrication, UG-95, UG-97
ferritic steel vessels with tensile properties enhanced by heat treatment, UHT-90
fitting up, UG-96
forged vessels, UF-45 to UF-54
heat treatment, forgings, UF-52
high alloy steel vessels, UHA-50
magnetic particle, UW-50, UHT-57, UHT-83
material, UG-93, UG-94
nonferrous vessels, UNF-90
plate, UG-93 to UG-95
postweld heat treatment, UW-49, UF-52
pressure vessels, accessibility, M-2
quality control, UG-90
sectioning of welded joints, UW-41
spot examination, UW-52
steel castings, UG-24, 7-1
surfaces exposed and component parts, UG-95, UG-46
test specimens, UF-53
vessels, UG-90, UG-97, UW-46, UHT-90
vessels exempted from, U-1
welded vessels, UW-46 to UW-52
Inspection openings, UG-46
Inspection, access to plant, UG-92
control of stamping, UG-116
duties, U-2, UG-90
facilities, UG-92
qualification, UG-91
reports, UG-120
Installation, pressure-relieving devices, UG-134, UHT-125, M-4 to M-8
pressure vessel, M-1
Integral cast iron dished heads, UCI-35
Integrally finned tubes, UG-8
Internal structures, D-1 to D-3
Jacketed vessels, UG-28, 9-1 to 9-10
Joints, brazed, UB-16
circumferential (see Circumferential joints)
efficiency, brazed, UB-14
welded, UW-11, UW-12
electric resistance, butt welding, UG-31
in cladding and applied linings, UCL-31
in vessels subjected to external pressure, UG-28
lap (see Lap joints)
longitudinal (see Longitudinal joints)
tube-to-tubesheet, App. A
Jurisdictional review, U-2
Knuckles, radius, UG-32, UHT-19
transition section, UG-36, UHT-19
Lap joints, amount of overlap, UW-9, UB-16
brazed, UB-16
longitudinal under external pressure, UG-28
welded, UW-9
Laws covering pressure vessels, U-1
Lethal gases or liquids, UW-2, UCI-2
Ligaments, efficiency of, L-8
Limitation on welded vessels, UW-2
Limit of out-of-roundness of shells, UG-80
Linings, UG-26, UCL-12
corrosion resistant, F-1 to F-3
Liquid penetrant examination, UG-93, UW-42, UHT-57, UHT-83, App.8
Loadings, UG-22
Local postweld heat treatment, UW-40
Longitudinal joints, alignment tolerance, UHT-20
brazing, UB-16
vessels subjected to external pressure, UG-28
Low temperature operation, UCS-65
Low temperature vessels, brazed, UB-22
for gases and liquids, UCS-65 to 67, UNF-65, UCL-27
impact test requirements, UG-84, UHA-51
impact tests, when not required, UCS-66
marking, UG-116
materials, UG-84
testing of materials, UG-84
Lugs for ladders, platforms, and other attachments, UG-55
Magnetic particle inspection, UG-93, UHT-57, UHT-83, 6-1 to 6-4
Manholes, and handholes, UG-46
cover plates for, UG-34

Provided by IHS under license with ASME
No reproduction or networking permitted without license from IHS
Licensee=Chevron Phillips Chemical Co LP/5956674001
Not for Resale, 11/09/2014 20:41:36 MST

minimum vessel diameter requiring, UG-46
Manufacturer, responsibility of, UG-90, UW-26
Manufacturer's Data Report (see Data Report)
Manufacturer's stamps, UG-77, UG-94
Marking, castings, UG-24
materials, UG-94, UHT-86
plates, UG-10, UG-77, UG-85, UG-94, UHT-86
standard pressure parts, UG-11
valves and fittings, UG-11
with Certification Mark, UG-116, UHT-115
Markings, transfer after cutting plates, UG-77, UG-94
Mass produced vessels, UG-90
Materials, approval of new, UG-4, App. B
approval of repairs, UG-78, UCI-78
brazed vessels, UB-5
carbon and low alloy steel vessels, UCS-5
cast ductile iron, UCD-5
castings, UG-7
cast iron vessels, UCI-5
certification, UG-93
clad vessels, UCL-10
combination of, UG-18, UHT-40
ferritic steel vessels with tensile properties enhanced by heat treatment, UHT-5
forged vessels, UF-5
forgings, UG-6
for nonpressure parts, UG-5
heat treatment of, UG-85, UCS-85, UHT-80
high alloy steel vessels, UHA-11
inspection of, UG-93, UG-95
nonferrous vessels, UNF-5
pipe and tubes, UG-8
plate, UG-5
rods and bars, UCS-12
specification for, UG-4, UG-23, UCS-23, UNF-23, UHA-23, UCI-23, UCD-5, UHT-5, UHT-23
standard pressure, parts, UG-11
unidentified, UG-10
use of, over thickness listed in Section II, UG-5
welded vessels, UW-5
Measurement, dimensional, UG-96
of out-of-roundness of shells, UG-80
Metal temperature, determination, C-1
control of, App. T
Mill undertolerance, UG-16
Minimum thickness of plate, UG-16, UCS-16, UNF-16, UHA-20, UCL-20, UHT-16
Miscellaneous pressure parts, UG-11
Multichamber vessels, design, UG-19
Multiple safety valves, UG-134
Nameplates, UG-117, UG-118, UHT-115
New materials, UG-4, B-1
Noncircular vessels, App. 13
examples, 13-16
ligament efficiency, 13-6
nomenclature, 13-5
obround design, 13-10, 13-11, 13-12
rectangular design, 13-7, 13-9
reinforcement, 13-8
Nonpressure parts, attachment of, UG-55, UHT-85
Notch ductility test, UHT-5
Nozzle openings, reinforced, UG-36, UHT-18
unreinforced, UG-36
vessels subjected to external pressure, UG-37
Nozzles, attachment of, to shell, UG-43, UHT-18
minimum thickness of neck, UG-45, UHT-18 (see also Connections)
Nuts and washers, UG-13, UCS-11, UNF-13
Offset of edges of plates at joints, UW-33, UHT-20
Openings, adjacent to welds, UW-14
closure of, K-2
for connections to brazed vessels, UB-19
for drainage, UG-25
head (see Openings, head and shell)
in flat heads, UG-39
inspection, UG-46
manhole (see Manholes)
nozzle (see Nozzle openings)
shell (see Openings, head and shell)
through welded joints, UW-14
Openings, head and shell, computation of, L-7
not requiring additional reinforcement, UG-36
reinforced, size, UG-36, UHT-18
reinforcement for adjacent openings, UG-42
reinforcement of, UG-37, UHT-18
requiring additional reinforcement, UG-36
shapes permissible, UG-36
unreinforced, size, UG-36
Outlets, discharge, pressure relieving devices, UG-134
Out-of-roundness, UG-80, UG-81, UF-27
Overpressure limit for vessels, UG-125
Partial Data Report, Manufacturer's, UG-120
Parts, miscellaneous, UG-11
Peening, UW-39
Pipe connections, openings for, UG-43
Pipe fittings, vessels built of, UG-44, UCS-9
Pipes and tubes, UG-8, UG-31, UCS-9, UNF-9
Pipe used for shells, UCS-27
Piping external to vessel, U-1
Plate, curvature, UB-33
measurement, dimensional check, UG-96
Plate edges, cutting, UG-76, UG-93, UW-31, UHT-83
exposed left unwelded, UG-76
inspection of, UG-95
Plates, alignment, UW-31, UHT-20
cover, UG-34
cutting, UG-76, UG-93, UW-31, UHT-83
forming, UG-79, UCS-79, UNF-77, UHT-79
heat treatment, UG-85
identification, UG-77, UG-94, UHT-86
impact test, UG-84, UHT-5, UHT-6, UHT-81
inspection, UG-93 to UG-95
laying out, UG-77
less than 1/4 in. thickness, UG-77
markings, transfer after cutting, UG-77, UG-94
minimum thickness, UG-16, UCS-16, UNF-16, UHA-20, UCI-20, UHT-5, UHT-79
repair of defects, UG-78, UCI-78
specifications, UG-5, UCS-6, UNF-6, UHT-5
structural carbon steel, UCS-6
Plug welds, UW-17
Pneumatic test, pressure, UG-100
yielding, UG-100
Porosity, welded joints, UW-51, App. 4
Porosity charts, 4-1
Postweld heat treatment, connections for nozzles and attachments, UHT-56
cooling after, UW-40, UHT-56
furnace temperature, UW-40
inspection, UW-49
local, UW-40
requirements, UCS-56, UHT-56

Provided by IHS under license with ASME
No reproduction or networking permitted without license from IHS
Licensee=Chevron Phillips Chemical Co LP/5956674001
Not for Resale, 11/09/2014 20:41:36 MST

temperature range, UHT-56
welded vessels, UW-10, UW-40, UHA-32, UCL-34, UHT-56
Postheat treatment, UHT-79, UHT-82
Preheating, App. R
Preparation of plates for welding, UW-31, UW-32
Pressure, design, UG-21
limits, U-1
(see also Working pressure, allowable)
Pressure parts, miscellaneous, UG-11
Pressure relieving devices, discharge, UG-134
installation and operation, UG-134, M-4 to M-9
rupture disks, UG-127
setting, UG-133
Pressure vessels, exempted from inspection, U-1
Product form of specification, UG-15
Proof test, hydrostatic (see Hydrostatic proof test)
Qualification, of brazers, UB-43
of welders, UW-29
of welding procedure, UCL-40 to UCL-46
Quality Control System, U-2, App. 10
Quenching and tempering, UHT-80 to UHT-82
Quick-actuating closures, UG-35
Radiograph factor, UW-12
Radiographing, examination by, UW-11, UW-51, UHT-57
partial, UW-11, UW-12
quality factors, UW-11, UW-12
requirements, UCS-57, UHA-33, UCL-35, UHT-57
spot examination, UW-52
retests, UW-11, UW-52
thickness, mandatory minimum, UW-11, UCS-57
Radiographs, acceptance by inspector, UW-51, UW-52
gamma rays, radium capsule, UW-51
interpretation by standard procedure, UW-51, UW-52
rounded indications, App. 4
Reaming holes for screw stays, UG-83
Reducer sections, rules for, 1-5
Reinforcement, defined limits, UG-40
head and shell openings, UG-37, UG-39
large openings, UG-36, 1-7
multiple openings, UG-42
nozzle openings, UG-37 to UG-42, UHT-18
of openings in shells, computation of, L-7
openings subject to rapid pressure fluctuation, UG-36
strength, UG-41
Relief devices, UG-125 to UG-134 (see also Pressure relieving devices; Safety and relief valves)
Relief valves (see Safety and relief valves)
Relieving capacity of safety valves, UG-132
Repairs, approval of defects in material, UG-78, UF-32, UF-46, UCI-78, UCD-78
defective brazing, UB-37
defects in forgings, UF-37
defects in welds, UW-38, UW-51, UW-52, UF-38, UHT-57
Responsibility of manufacturer, UG-90, UW-26
Retention of Records
radiographs, UW-51
Manufacturer's Data Reports, UG-120
Retests, forgings, UF-54
impact specimens, UG-84, UHT-6
joints, welded, UW-52
Rods, bars, and shapes, UG-14, UCS-12, UNF-14
Rolled parts, small, UG-11, UHT-6
Rupture disks, UG-125, UG-127, UG-129, UG-133, UG-134
Safety, safety relief, and pressure relief valves, adjustable blowdown, capacity, certification, UG-131, UG-132
capacity, conversion, 11-1
connection to vessels, UG-135
construction, UG-126
discharge pipe, UG-135
indirect operation, UG-126
installation, M-10
installation on vessels in service, UG-135
liquid relief, UG-128, UG-130
marking, UG-129
minimum requirements, UG-136
pressure setting, UG-134
protective devices, UG-125 to UG-134
for unfired steam boiler, UG-125
spring loaded, UG-126
springs, adjustment, UG-134
stop valves adjacent to, UG-135
test, UG-131
Scope, U-1
Sectioning, closing holes left by, K-2
etching plugs taken, K-1
examination by, UW-41
Service restrictions, UW-2, UB-3
Shapes, special, UG-19
Shell plates, forming ends of, UG-79
Shells, allowable working pressure, UG-27
computation of openings in, L-7
forming, UG-79, UCS-79, UNF-77, UHT-79
made from pipe, UCS-27
stiffening rings, UG-29, UG-30, UCS-29, UHT-29 to UHT-30
thickness, UG-27, UG-28, UCS-28, UCD-28, UHT-27, UHT-79
transition section, UG-36, UHT-19
Sigma-phase formation, UHA-104
SI Units, conversion factors, App. GG
Skirts, length on heads, UG-32, UG-33, UW-13, UHT-19
support of vessels, G-5
Slag inclusions in welds, UW-51, UW-52
Special constructions, UG-19, UG-116, UG-120
Specifications for materials, UG-5, UG-23, UCS-23, UNF-23, UHA-23, UCI-23, UCD-5, UHT-5, UHT-23
Spherical sections of vessels, UG-32, UG-33
Spherical shells, thickness, UG-27, UHT-27
Spot examination of welded joints, UW-52
Springs for safety valves, UG-126, UG-133
Stamping, location of, UG-116
multipressure vessels, UG-19, UG-116
omission of, UHT-86
safety valve, UG-131
with Certification Mark, UG-116, UHT-115
Stamps, Certificate of Authorization, UG-116
low stress, UGT-86
not to be covered, M-3
to be visible on plates, UG-77, UHT-86
Static head, in setting safety valves, effect of, on limiting stresses, UG-98
Stayed surface, UG-47
Staying formed heads, UG-32
Stays and staybolts, adjacent to edges of staybolted surface, UG-49
allowable stress, UG-50
area supported, UG-47, UG-50
dimensions, UG-50
ends, UG-48, UW-19
location, UG-49
pitch, UG-47
screw, holes for, UG-83
upset for threading, UG-48
welded, UW-19

Provided by IHS under license with ASME
No reproduction or networking permitted without license from IHS
Licensee=Chevron Phillips Chemical Co LP/5956674001
Not for Resale, 11/09/2014 20:41:36 MST

Steam generating vessels, unfired, U-1
Steel, carbon content, UCS-5
Stenciling plates for identification, UG-77
Stiffening rings, attachment to shell, UG-30, UF-5, UHT-30
for vessels under external pressure, UG-29, UG-30, UCS-29, UHT-28, UHT-29
Stiffness, support of large vessels for, UG-27, UG-28
Stop valves, adjacent to safety and relief valves, UG-134, M-5, M-6
Strength, of brazed joints, UB-10
Stress corrosion cracking, UHA-103
Stress values, attachment welds, UW-15
basis for establishing, P-1
carbon and low alloy steel, Table UCS-23
cast ductile iron, Table UCD-23
cast iron, Table UCI-23
ferritic steels with tensile properties enhanced by heat treatment, Table UHT-23
high alloy steel, Table UHA-23
nonferrous metals, Tables UNF-23.1 through UNF-23.5
Stud bolt threads, UG-12
Studded connections, UG-43, UG-44
Supplementary design formulas, 1-1 to 1-7
Supports, design, UG-54, G-1, G-9
pressure vessels, UG-54, UG-82
temperature, free movement under, G-2
types of steel permissible for, UG-5
vessels subjected to external pressure, UG-29, UHT-29, G-1
Surface weld metal buildup, UW-42
Tables, effective gasket width b, Table 2-5.2
gasket materials and contact facings, Table 2-5.1
maximum allowable efficiencies for arc and gas welded joints, Table UW-12
minimum number of pipe threads for connections, Table UG-43
molecular weights of gases and vapors, Table 11-1
of stress values, carbon and low alloy steel, Table UCS-23
cast ductile iron, Table UCD-23
cast iron, Table UCI-23
ferritic steels with tensile properties enhanced by heat treatment, Table UHT-23
high alloy steel, Table UHA-23
nonferrous metals, Table UNF-23.1
welded carbon low alloy pipe and tubes, Table UCS-27
of values, factor K, Table 1-4.1
factor M, Table 1-4.2
factor , Tables 1-5.1, 1-5.2
postweld heat treatment requirements, Table UCS-56, UHA-32, Table UHT-56
recommended temperature ranges for heat treatment, Table UHA-105
spherical radius factor K1, Table UG-37
Telltale holes, UG-25, UCL-25
in opening reinforcement, UW-15
Temperature, definitions, 3-1
design, UG-20
determination, C-1
free movement of vessel on supports, G-2
heat treatment, Tables UCS-56, UHT-56
limitations, of brazed vessels, UB-2
of cast ductile iron, UCD-3
of postweld heat treating, UW-40, UCS-56, UHA-32, UHT-56
metal, control of, App. T
operating or working, definitions, 3-1
zones of different, UG-20
Termination point of a vessel, U-1
Test coupons, UHT-81

Provided by IHS under license with ASME
No reproduction or networking permitted without license from IHS
Licensee=Chevron Phillips Chemical Co LP/5956674001
Not for Resale, 11/09/2014 20:41:36 MST

INTENTIONALLY LEFT BLANK

Provided by IHS under license with ASME

No reproduction or networking permitted without license from IHS

Licensee=Chevron Phillips Chemical Co LP/5956674001
Not for Resale, 11/09/2014 20:41:36 MST

2013 ASME Boiler and Pressure Vessel Code

AN INTERNATIONAL CODE

The ASME Boiler and Pressure Vessel Code (BPVC) is "An International Historic Mechanical Engineering Landmark," widely recognized as a model for codes and standards worldwide. Its development process remains open and transparent throughout, yielding "living documents" that have improved public safety and facilitated trade across global markets and jurisdictions for nearly a century.

ASME also provides BPVC users with integrated suites of related offerings:

- referenced standards
- related standards and guidelines
- conformity assessment programs
- training and development courses
- ASME Press books and journals
- conferences and proceedings

You gain unrivaled insight direct from the BPVC source, along with the professional quality and real-world solutions you have come to expect from ASME.

For additional information and to order:
Phone: 1.800.THE.ASME (1.800.843.2763)
Email: customercare@asme.org
Website: go.asme.org/bpvc13

ISBN 978-0-7918-3472-5

600081

--`,,,``,,``,,```,,,,`,``,`,``,,`,,```-`-`,,`,,`,`,,`---

Provided by IHS under license with ASME

No reproduction or networking permitted without license from IHS

Licensee=Chevron Phillips Chemical Co LP/5956674001
Not for Resale, 11/09/2014 20:41:36 MST