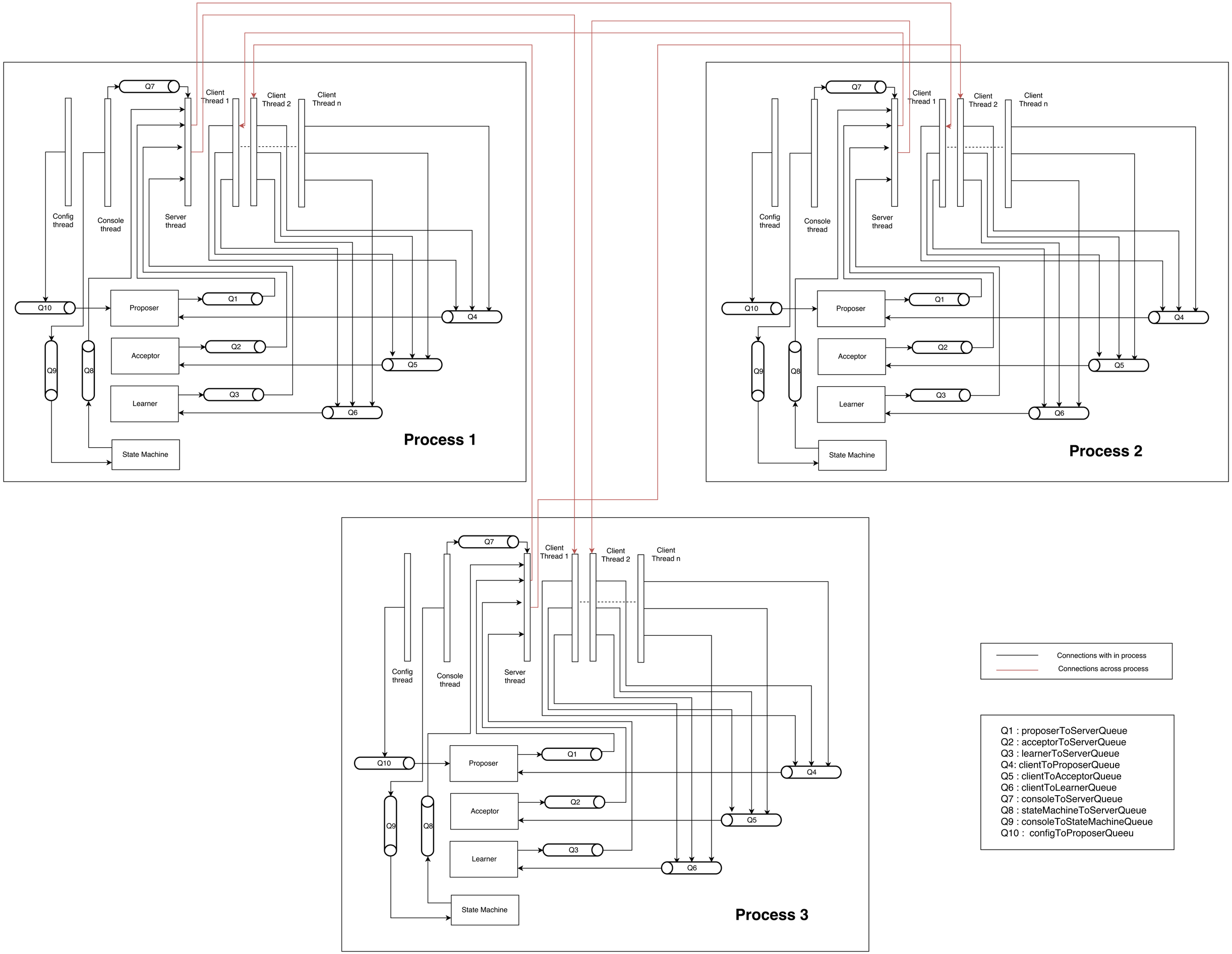
Process 1
Process 2
Process 3
Q1
Q2
Q3
Q4
Q5
Q6
Q7
Q8
Q9
Q10
Proposer
Acceptor
Learner
State Machine
Config thread
Console thread
Server thread
Client Thread 1
Client Thread 2
Client Thread n
Connections with in process
Connections across process
Q1 : proposerToServerQueue
Q2 : acceptorToServerQueue
Q3 : learnerToServerQueue
Q4: clientToProposerQueue
Q5 : clientToAcceptorQueue
Q6 : clientToLearnerQueue
Q7 : consoleToServerQueue
Q8 : stateMachineToServerQueue
Q9 : consoleToStateMachineQueue
Q10 : configToProposerQueeu