Wireless MIDI Bridge V1
Top-Level System Architechture

Modes
- Wireless BLE MIDI Bridge
- Wired USB passthrough

MODE_SEL truth table

MODE_SEL = 1 -> WIRELESS
- USB data: Keyboard <-> ESP32
- Keyboard VBUS: BOOST_5V
- BLE: ON
- USB host: ON

MODE_SEL = 0 -> PASSTHROUGH
- USB data: Keyboard <-> Upstream USB-C (direct passthrough)
- Keyboard VBUS: VBUS_IN
- BLE: OFF
- USB host: OFF

Power behavior

Wireless mode:
- Battery powers system
- Upstream USB-C may charge battery

Passthrough mode:
- Upstream USB-C powers system
- Battery does not power system
- Battery may still charge

ESP32 inactive in passthrough mode
(no USB host / BLE)

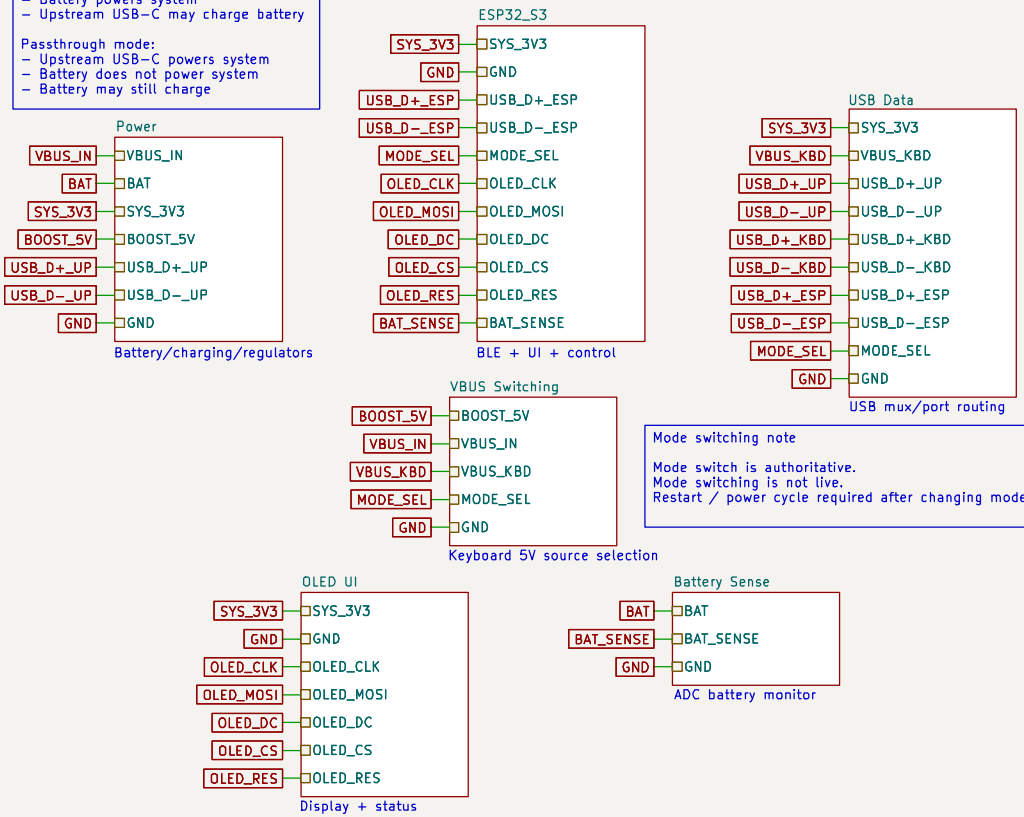

Port definitions

Upstream USB-C:
- Charging input
- Computer connection in passthrough mode

Keyboard USB-C:
- MIDI controller connection
- Routed to ESP32 in wireless mode
- Routed to upstream USB-C in passthrough mode

Mode switching note

Mode switch is authoritative.
Mode switching is not live.
Restart / power cycle required after changing mode.

ávega systems

Sheet: /
File: midi2BLE.kicad_sch

Title: midi2BLE_Top_Level

Size: A4	Date: 2026-04-11	Rev: 1
KiCad E.D.A. 10.0.0		Id: 1/7

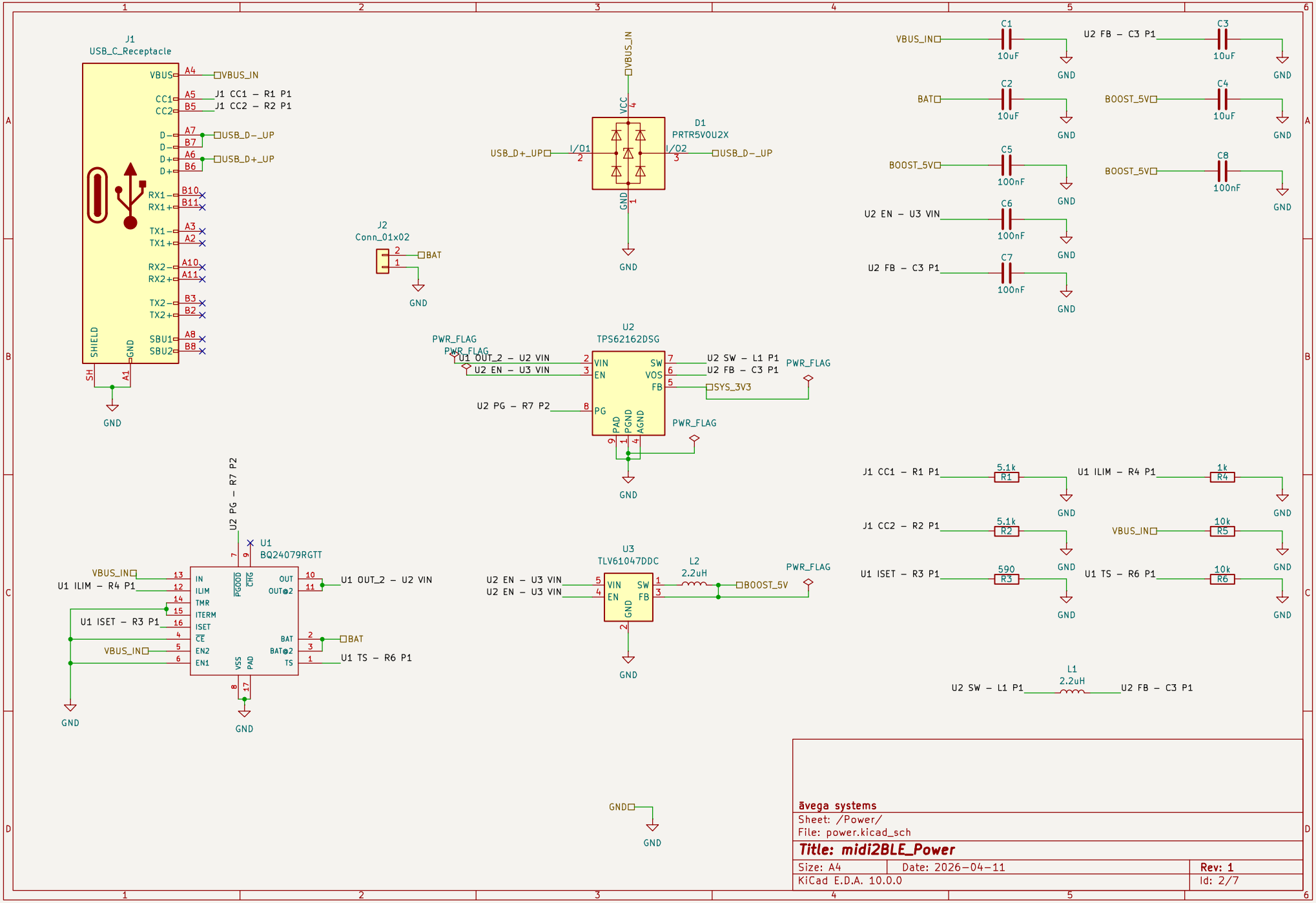
J1
USB_C_Receptacle
VBUS
CC1
CC2
D−
D+
RX1−
RX1+
TX1−
TX1+
RX2−
RX2+
TX2−
TX2+
SBU1
SBU2
SHIELD
GND
SH
A4
A5
B5
A7
B7
A6
B6
B10
B11
A3
A2
A10
A11
B3
B2
A8
B8
A1
VBUS_IN
J1 CC1 − R1 P1
J1 CC2 − R2 P1
USB_D−_UP
USB_D+_UP
J2
Conn_01x02
BAT
D1
PRTR5V0U2X
VCC
I/O1
I/O2
USB_D+_UP
USB_D−_UP
C1
10uF
C2
10uF
C3
10uF
C4
10uF
C5
100nF
C6
100nF
C7
100nF
C8
100nF
U2 FB − C3 P1
BOOST_5V
U2 EN − U3 VIN
U2
TPS62162DSG
PWR_FLAG
U1 OUT_2 − U2 VIN
U2 EN − U3 VIN
U2 PG − R7 P2
VIN
EN
PG
SW
VOS
FB
PAD
PGND
AGND
U2 SW − L1 P1
SYS_3V3
U1
BQ24079RGTT
IN
ILIM
TMR
ITERM
ISET
CE
EN2
EN1
PGOOD
CHG
OUT
OUT@2
BAT
BAT@2
TS
VSS
PAD
U1 ILIM − R4 P1
U1 ISET − R3 P1
U1 TS − R6 P1
U3
TLV61047DDC
L2
2.2uH
L1
2.2uH
J1 CC1 − R1 P1
J1 CC2 − R2 P1
U1 ISET − R3 P1
R1
5.1k
R2
5.1k
R3
590
R4
1k
R5
10k
R6
10k
U1 ILIM − R4 P1
U1 TS − R6 P1
U2 SW − L1 P1
U2 FB − C3 P1
āvega systems
Sheet: /Power/
File: power.kicad_sch
Title: midi2BLE_Power
Size: A4
Date: 2026−04−11
Rev: 1
KiCad E.D.A. 10.0.0
Id: 2/7

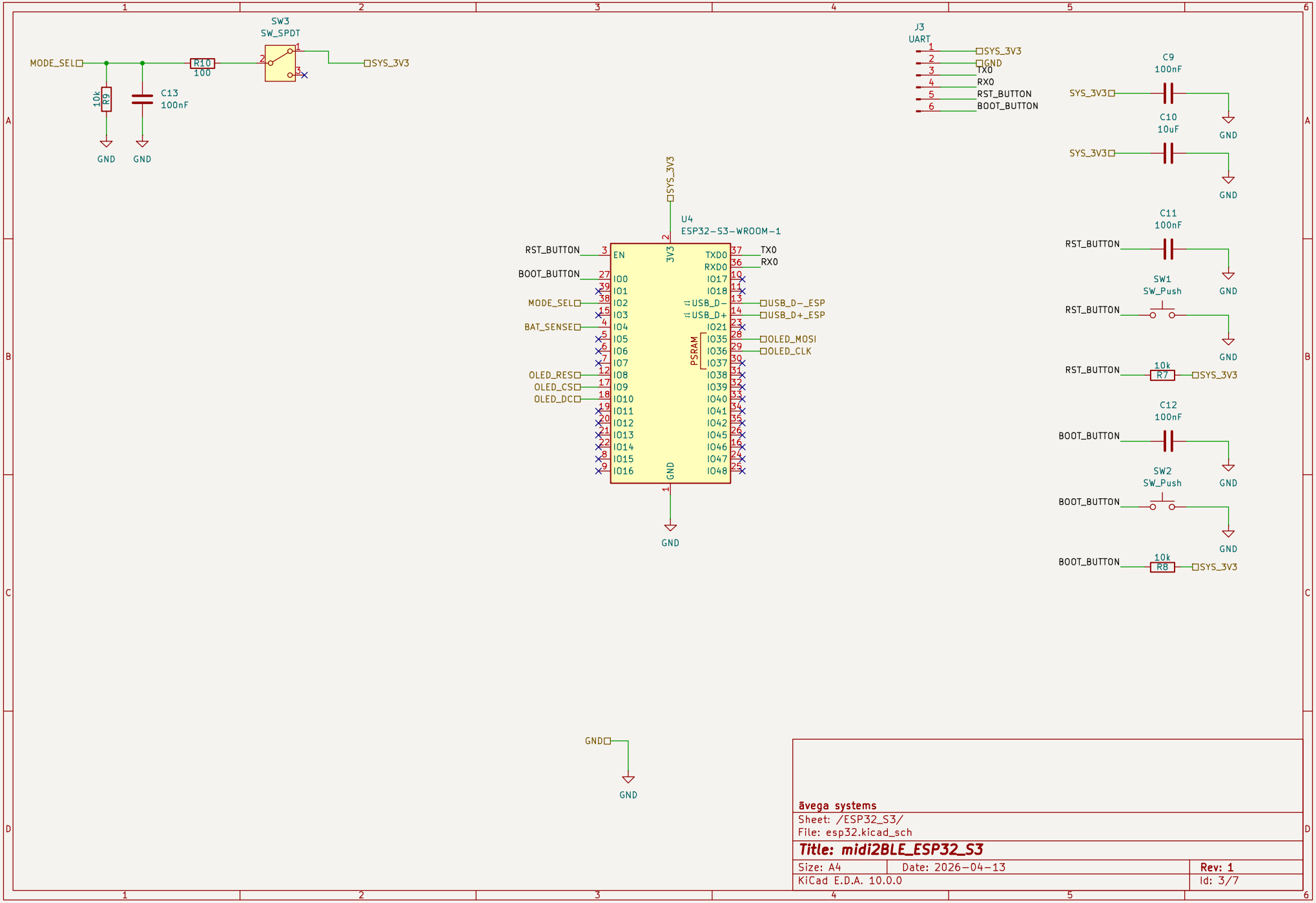

āvega systems
Sheet: /ESP32_S3/
File: esp32.kicad_sch

Title: midi2BLE_ESP32_S3

Size: A4	Date: 2026-04-13	Rev: 1
KiCad E.D.A. 10.0.0		Id: 3/7

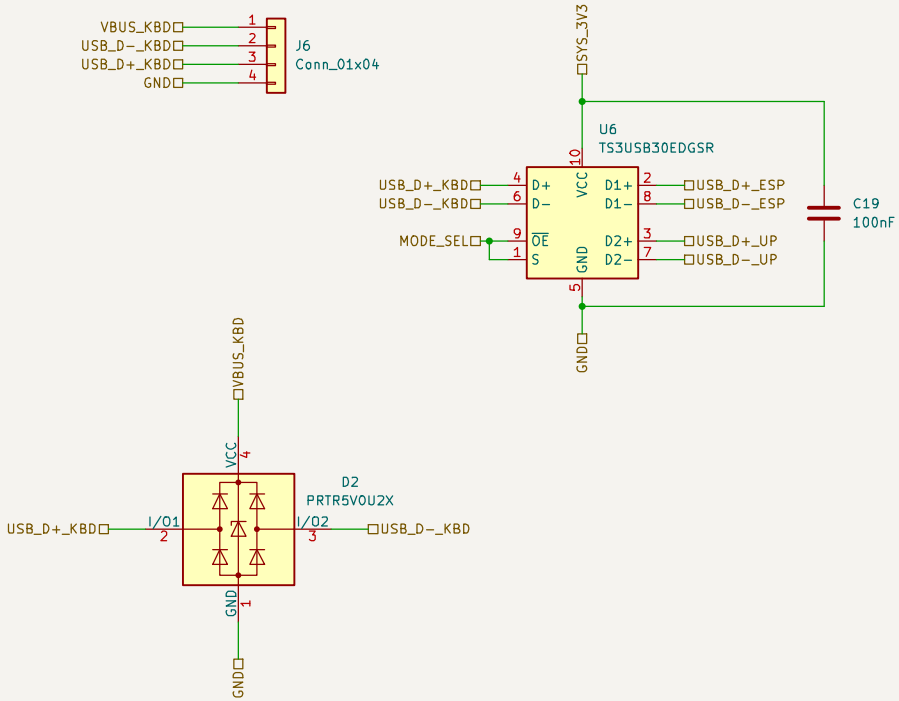

āvega sytems

Sheet: /USB Data/

File: usb_data.kicad_sch

Title: midi2BLE_USB_data

Size: A4	Date: 2026-04-14	Rev: 1
KiCad E.D.A. 10.0.0		Id: 4/7

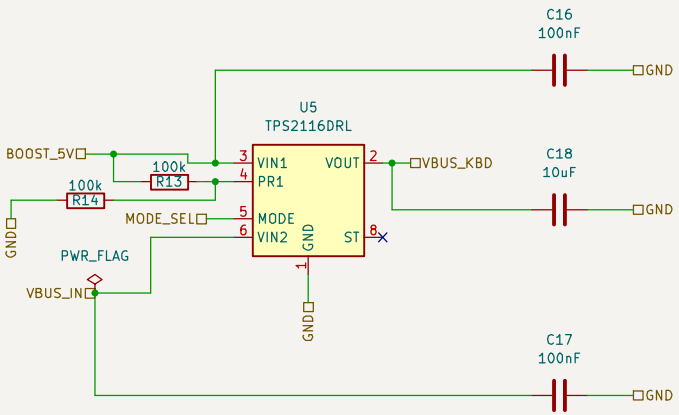

ävega systems

Sheet: /VBUS Switching/

File: vbus_switching.kicad_sch

Title: midi2BLE_VBUS_Switching

Size: A4	Date: 2026-04-13	Rev: 1
KiCad E.D.A. 10.0.0		Id: 5/7

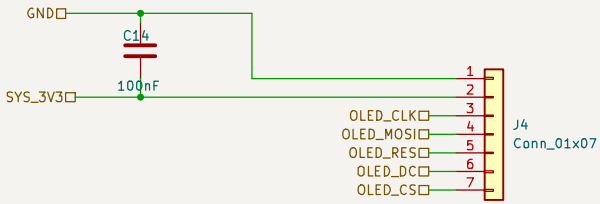

ãvega systems

Sheet: /OLED UI/

File: oled_ui.kicad_sch

Title: midi2BLE_OLED_UI

Size: A4	Date: 2026-04-13	Rev: 1
KiCad E.D.A. 10.0.0		Id: 6/7

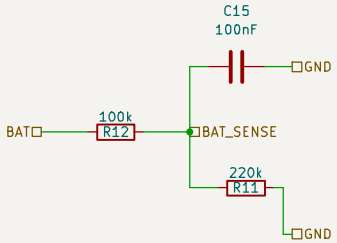

ávega systems

Sheet: /Battery Sense/

File: battery_sense.kicad_sch

Title: midi2BLE_Battery_Sense

Size: A4	Date: 2026-04-13	Rev: 1
KiCad E.D.A. 10.0.0		Id: 7/7