Project Report

Student Name: Deepak
UID:24MCA20427
Branch: MCA
Section/Group: 2A
Semester: 4th
Date of Performance: 18/04/2026
Subject Name: IOT LAB
Subject Code: 24CAP-751

Aim: To design and develop an IOT-based Room Security System using Motion Sensor, DHT Semsor and NodeMCU, which enables real time monitoring and update the status on Blynk Cloud.

Objectives:

1. To develop a Room Security System using a DHT, Motion Sensor and NodeMCU that works together and store the data on Cloud.
2. Motion Detection for Security.
3. Low-Cost Smart Security Solution.

Components Required:

Sno	Name of Component	Qty.
1.	NodeMCU (ESP8266)	1
2.	PIR Motion Sensor	1
3.	DHT Sensor	1
4.	LED	2
5.	Resistor (220 Ohm)	2
6.	Breadboard	1
7.	Jumping Wires	17
8.	Buzzer	1

Details of Components:

1. NodeMCU:

The NodeMCU board is a low-cost, open-source IoT platform widely recognized for its user-friendly approach to building Internet-connected projects. Based on the ESP8266 WiFi chip, it combines a microcontroller with WiFi capabilities, enabling developers to create connected devices with ease.

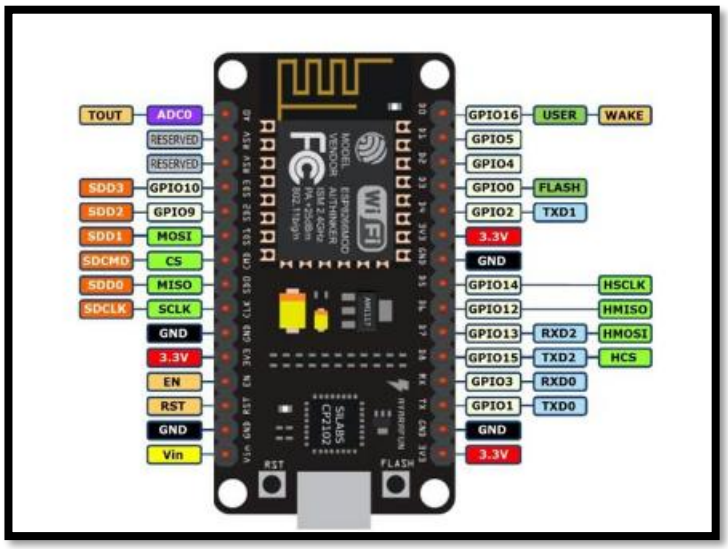

2. Motion Sensor (PIR):

The PIR (Passive Infrared) Motion Sensor is a low-cost electronic device used to detect motion in its surroundings by sensing infrared radiation emitted by objects, especially the human body. It is widely used in security systems and automation applications. The sensor operates passively, meaning it does not emit any energy but detects changes in infrared levels in its field of view.

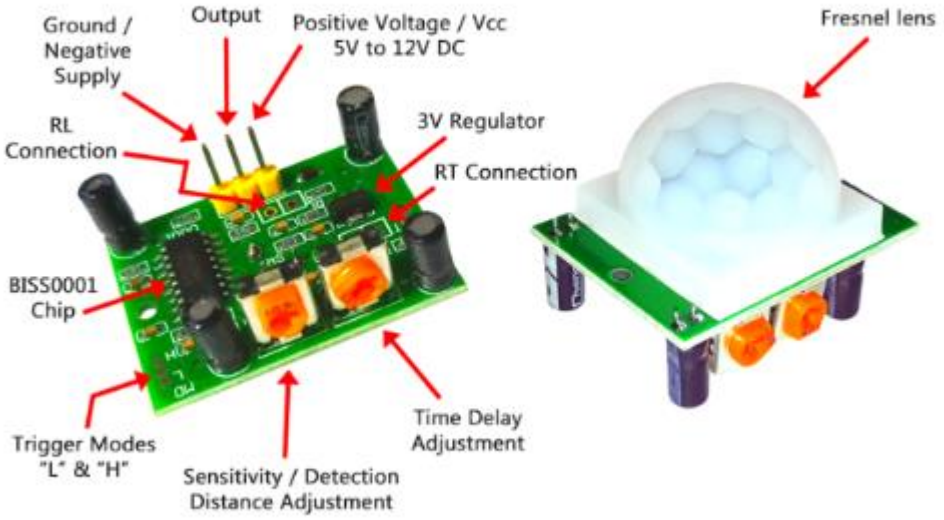

Working Principle of Motion Sensor (PIR):

1. The PIR sensor contains a pyroelectric material that detects infrared radiation.
2. It continuously monitors the surrounding area for heat changes.
3. When a human or object enters its range, there is a sudden change in infrared radiation.
4. This change is detected by the sensor's internal circuitry.
5. The sensor converts this change into an electrical signal.
6. The output pin becomes HIGH (1) when motion is detected.
7. When no motion is present, the output remains LOW (0).

3. DHT Sensor :

The DHT sensor is a digital temperature and humidity sensor used for measuring environmental conditions. It is widely used in IoT projects due to its low cost, reliability, and ease of interfacing with microcontrollers like NodeMCU. The sensor provides calibrated digital output for both temperature and humidity.

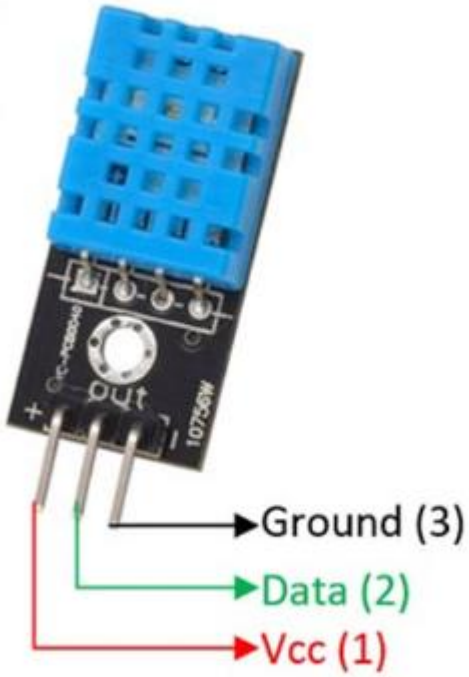

Working Principle of DHT Sensor (DHT11):

1. The DHT sensor consists of a humidity sensing component and a thermistor.
2. The humidity sensor measures moisture using capacitive sensing.
3. The thermistor detects temperature by changes in resistance.
4. These analog signals are processed by an internal microcontroller.
5. The microcontroller converts the data into a digital signal.
6. The sensor sends this data through a single data pin to the NodeMCU.
7. The microcontroller (NodeMCU) reads and displays the values on the cloud/app.

Block Diagram of Designed Model:

The Sensors(DHT and Motion Sensor) are connected to the NodeMCU and NodeMCU is Connected to WiFi. The Board is connected to Blynk app which enables the real time monitoring and updates the data on the cloud storage.

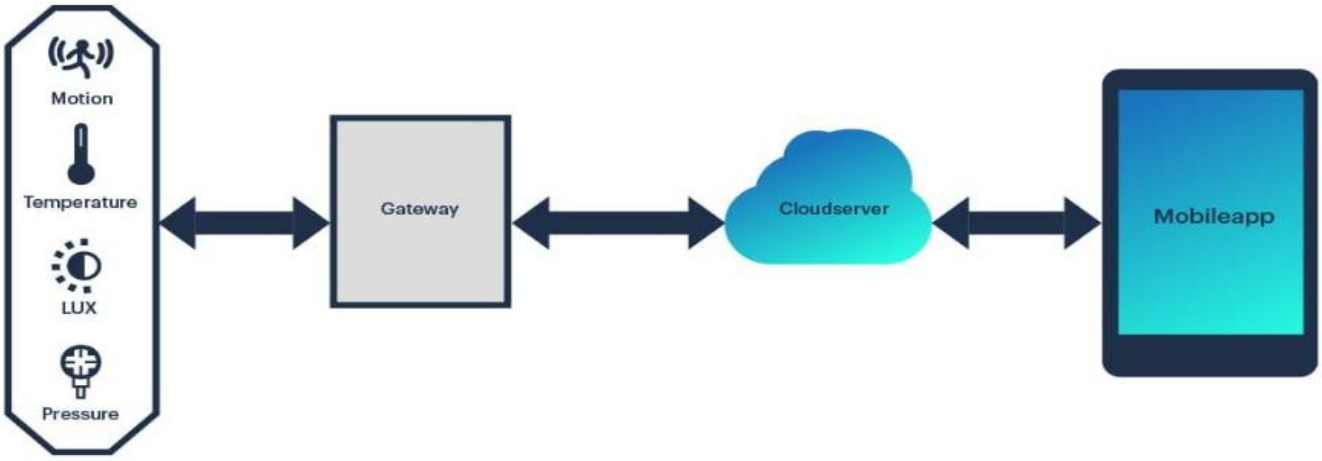

Working of Designed Model:

- The system is powered ON and the NodeMCU (ESP8266) connects to the WiFi network.
- The PIR motion sensor continuously monitors the room for any movement.
- If any human motion is detected, the PIR sensor sends a HIGH signal to the NodeMCU.
- The NodeMCU processes this signal and triggers an alert/notification.
- At the same time, the DHT sensor measures the temperature and humidity of the room.

- The sensor sends this environmental data to the NodeMCU in digital form.
- The NodeMCU uploads both motion status and DHT readings to the Blynk Cloud using WiFi.
- The Blynk Cloud updates the data in real time on the mobile application dashboard.
- If motion is detected, the user receives an instant notification on their smartphone.
- The user can monitor room conditions (motion, temperature, humidity) remotely from anywhere.

Pictures of Prototype: (Clear Image Required)

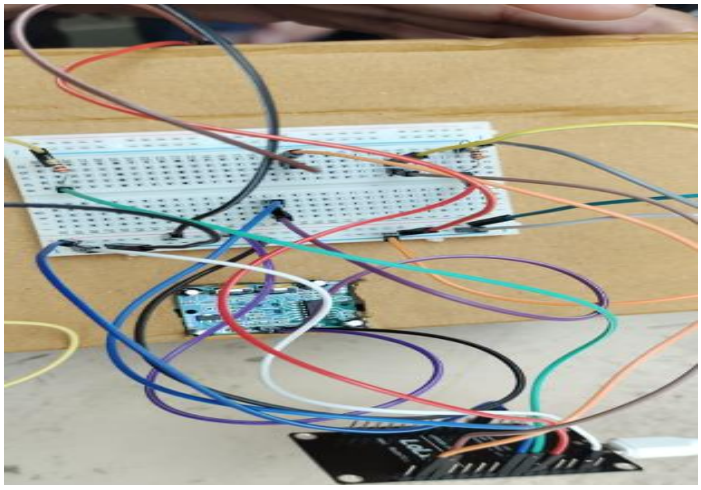

Output of Deigned Model/Prototype :

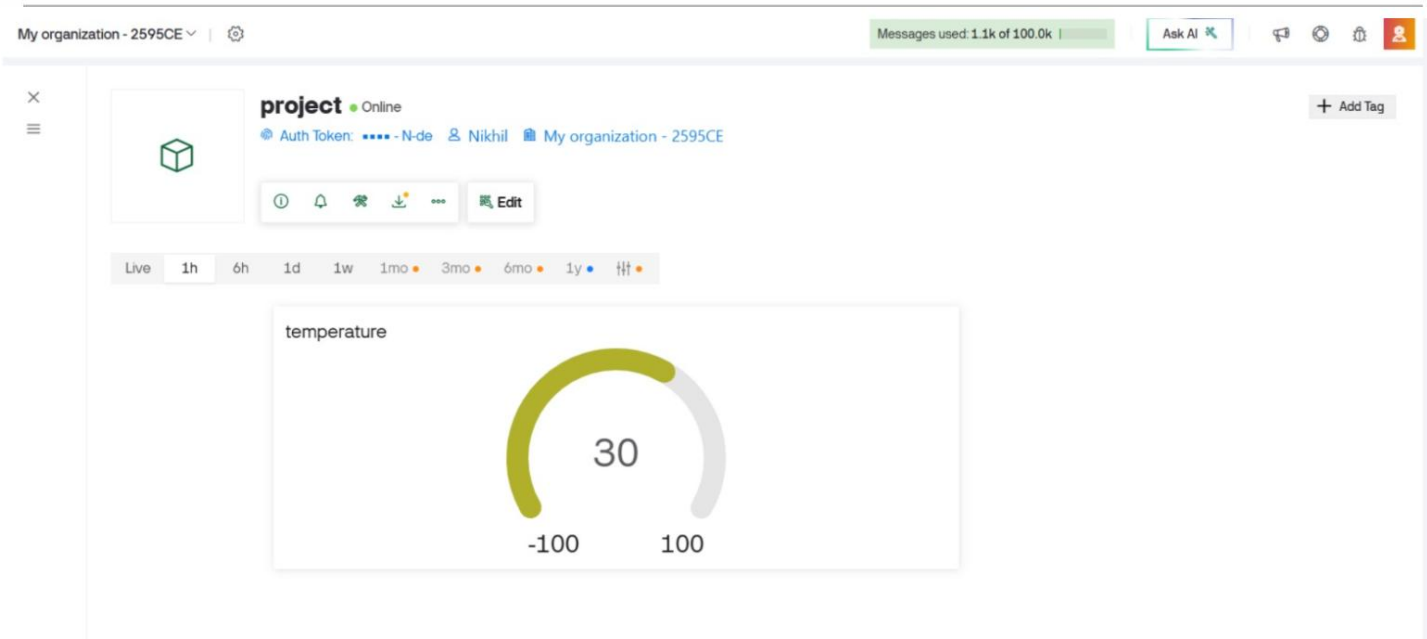

Learning outcomes (What I have learnt):

1. Gained knowledge of how IoT systems work using sensors, microcontrollers, and cloud platforms.
2. Learned to program and interface NodeMCU (ESP8266) with different sensors.
3. Understood working and interfacing of PIR Motion Sensor and DHT Sensor.
4. Learned how to send and visualize real-time data using Blynk Cloud.