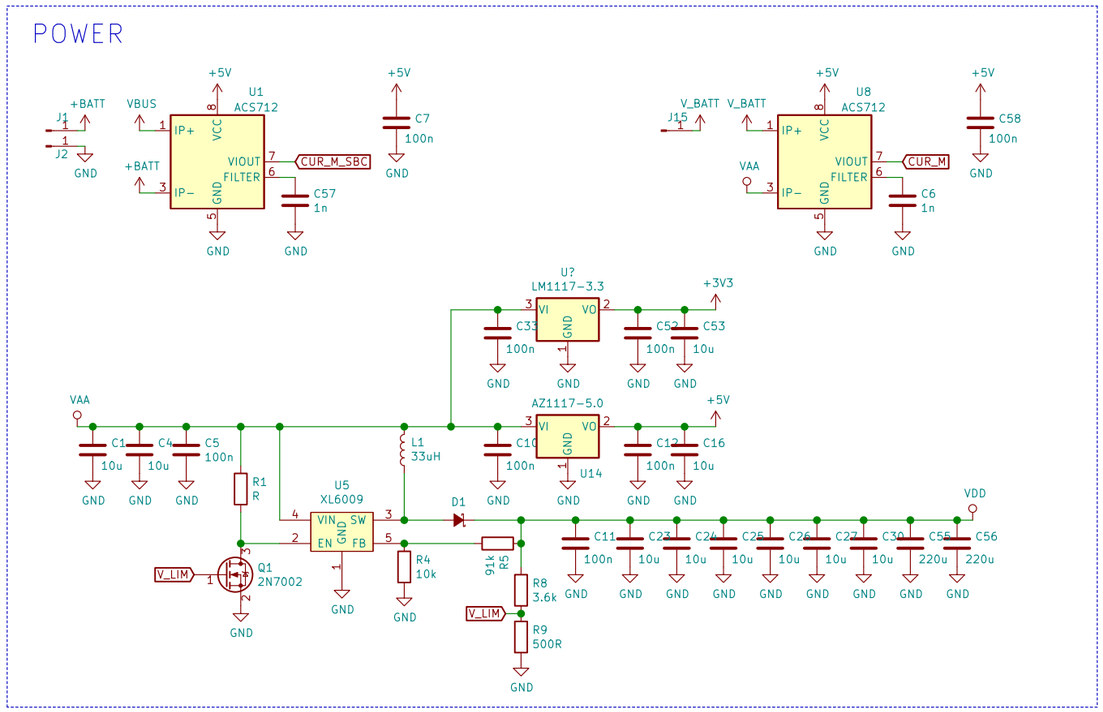

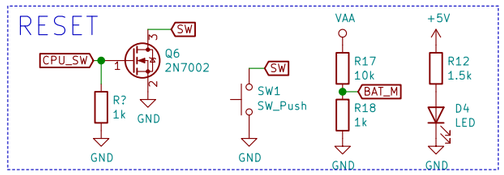

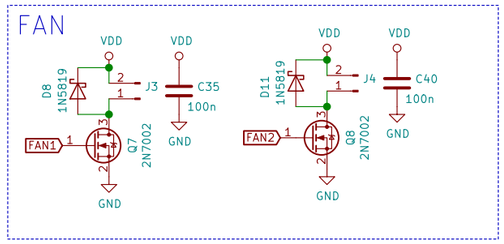

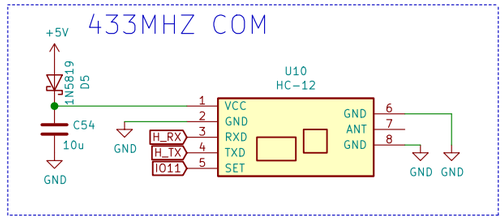

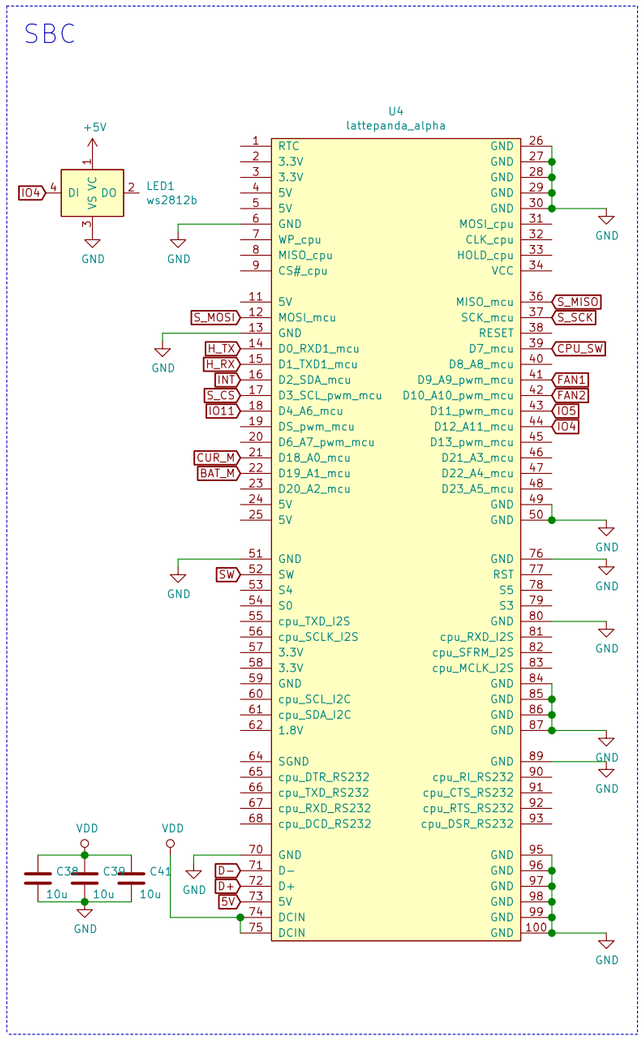

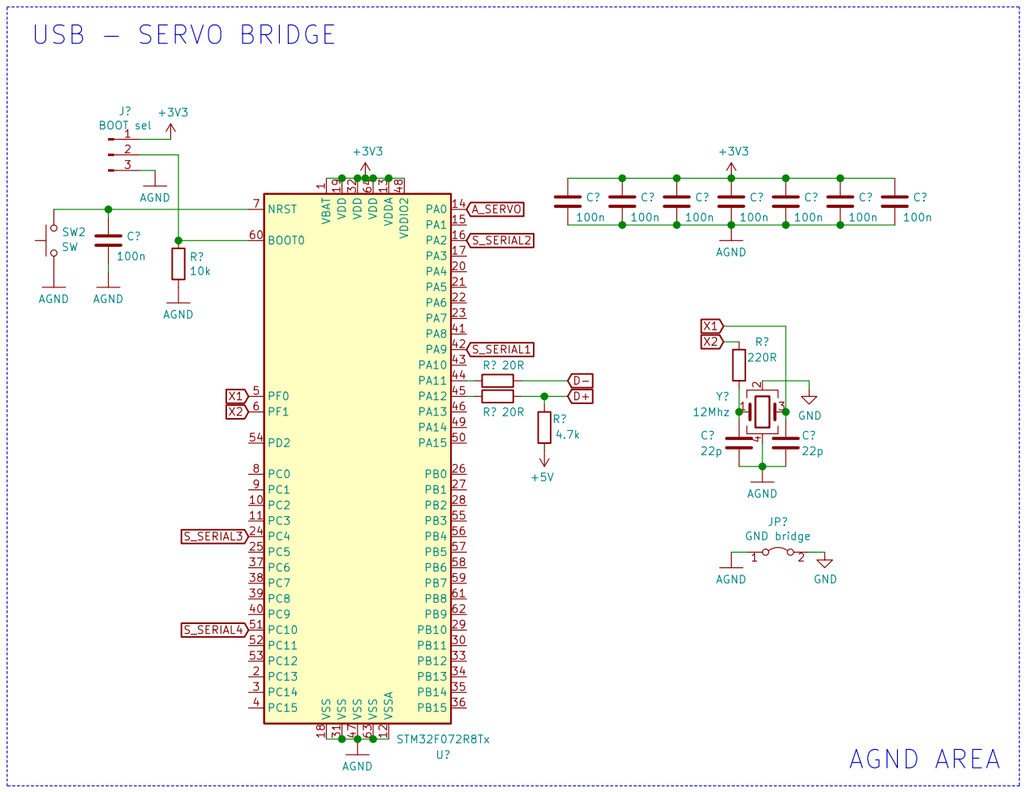

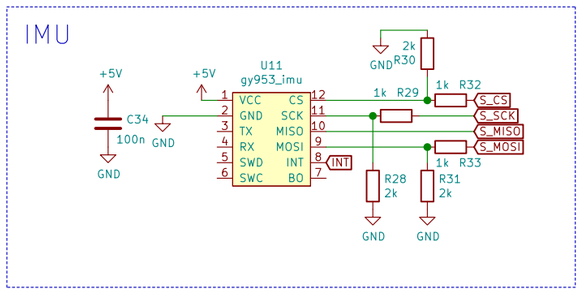

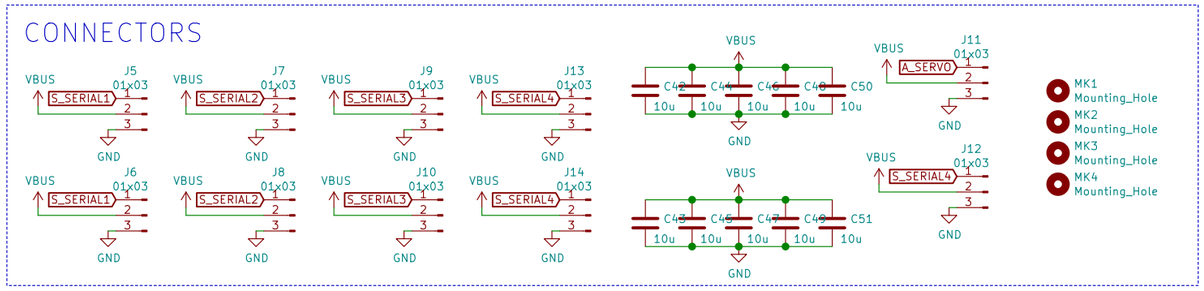

Designed by Nik

Sheet: /
File: Nightmare V2 pcb V6.sch

Title:

Size: A3	Date:	Rev:
KiCad E.D.A. kicad 5.1.6		Id: 1/1