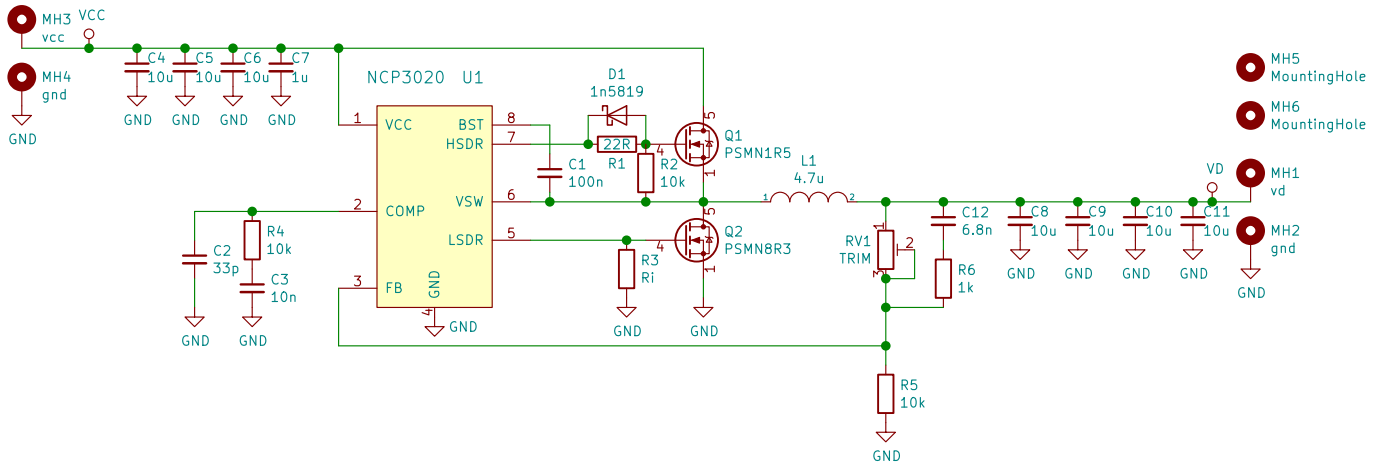

made by niklas sallali

Sheet: /
File: hexapod buck.sch

Title:

Size: User	Date:	Rev:
KiCad E.D.A. kicad (5.0.0)		Id: 1/1