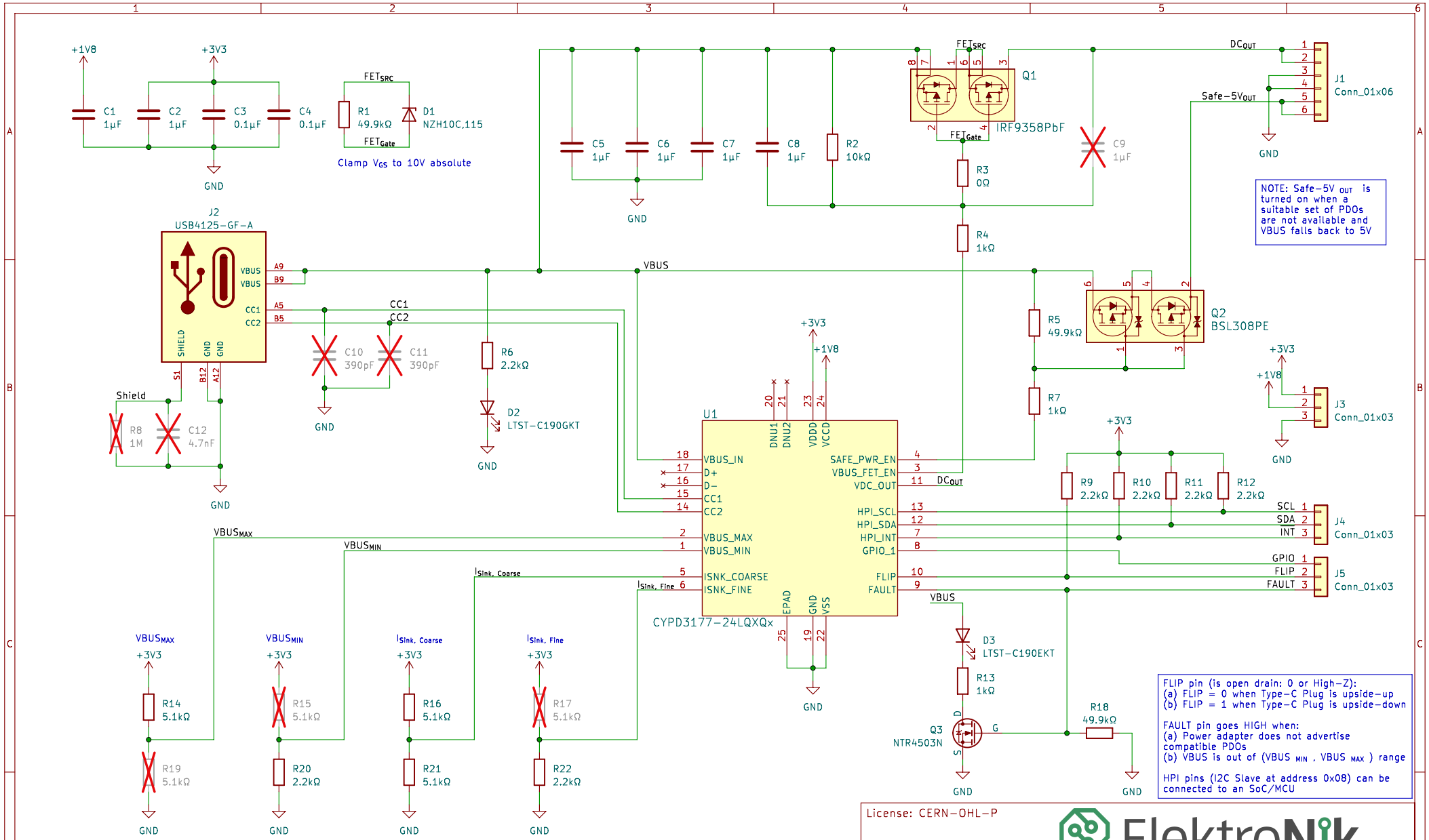

+3V3 Ratio	0/6	1/6	2/6	3/6	4/6	>5/6
Req. Voltage	5V	9V	12V	15V	19V	20V
Pull-Up	open	5.1kΩ	5.1kΩ	5.1kΩ	5.1kΩ	0kΩ*
Pull-Down	0kΩ*	1kΩ	2.4kΩ	5.1kΩ	10kΩ	open

+3V3 Ratio	0/6	1/6	2/6	3/6	4/6	>5/6
Coarse Current	0A	1A	2A	3A	4A	5A
Fine Current	0A	0.25A	0.5A	0.75A	0.9A	
Pull-Up	open	5.1kΩ	5.1kΩ	5.1kΩ	5.1kΩ	0kΩ*
Pull-Down	0kΩ*	1kΩ	2.4kΩ	5.1kΩ	10kΩ	open

* When pullup-pulldown combination is 0-none or none-0, use any resistor instead of 0-ohm

License: CERN-OHL-P

Author: Nikolai Zoller
Company: ElektroNik Zoller

Sheet:
File: CYPD3177_Power-Board.kicad_sch

Title: CYPD3177_Power-Board

Size: A4	Date: 2023-05-20	**Rev: A**
KiCad E.D.A. kicad 7.0.2		Id: 1/1