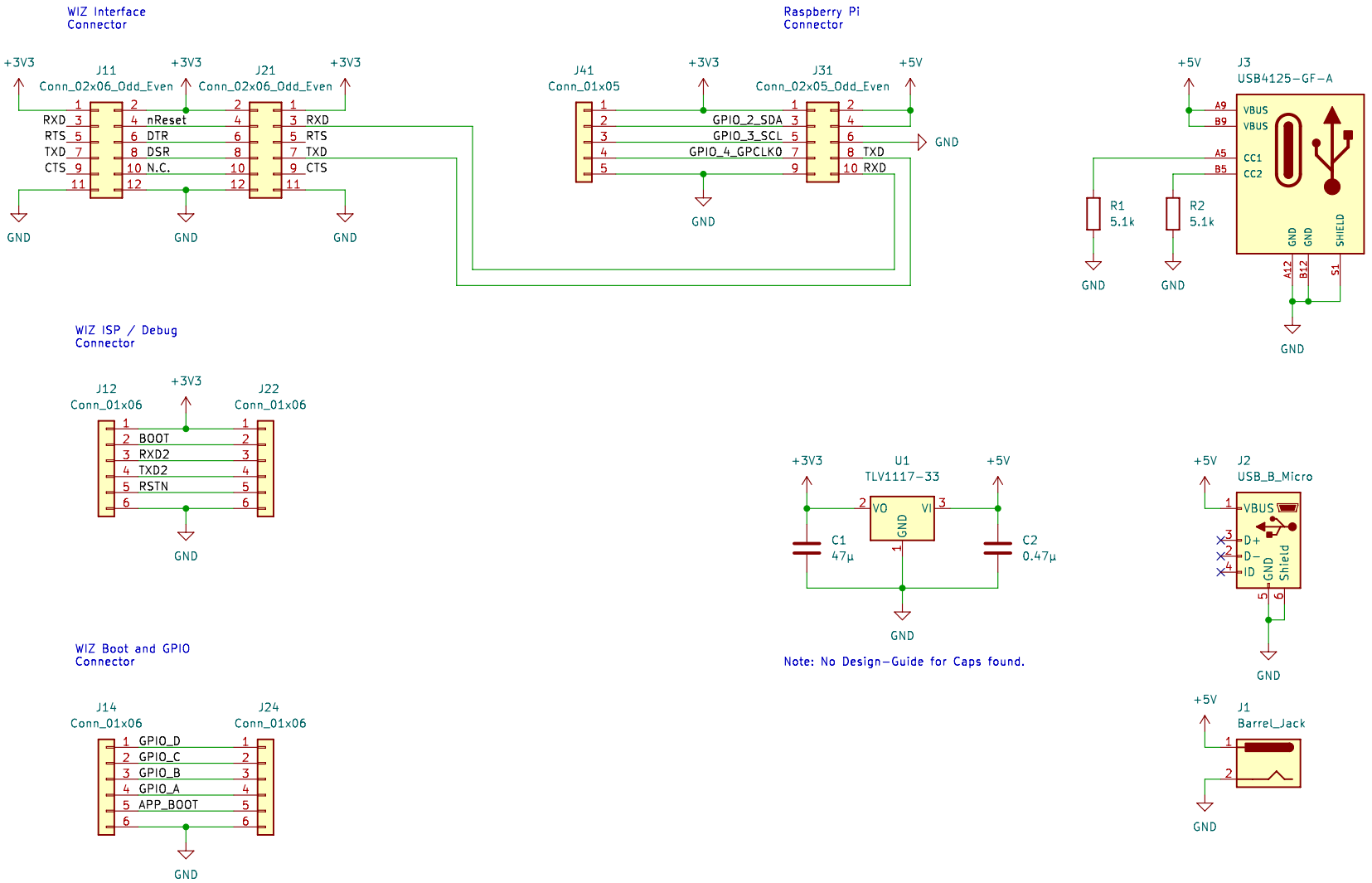

https://creativecommons.org/licenses/by-nc/4.0/
Licence: CC BY-NC 4.0

Author: Nikolai Zoller
ElektroNik Zoller

Sheet: /
File: ZigbeeZwaveEthernetadapter.kicad_sch

Title: ZigbeeZwaveEthernetadapter

Size: A4	Date: 2023-01-15	**Rev: A**
KiCad E.D.A. kicad (6.0.10)		Id: 1/1