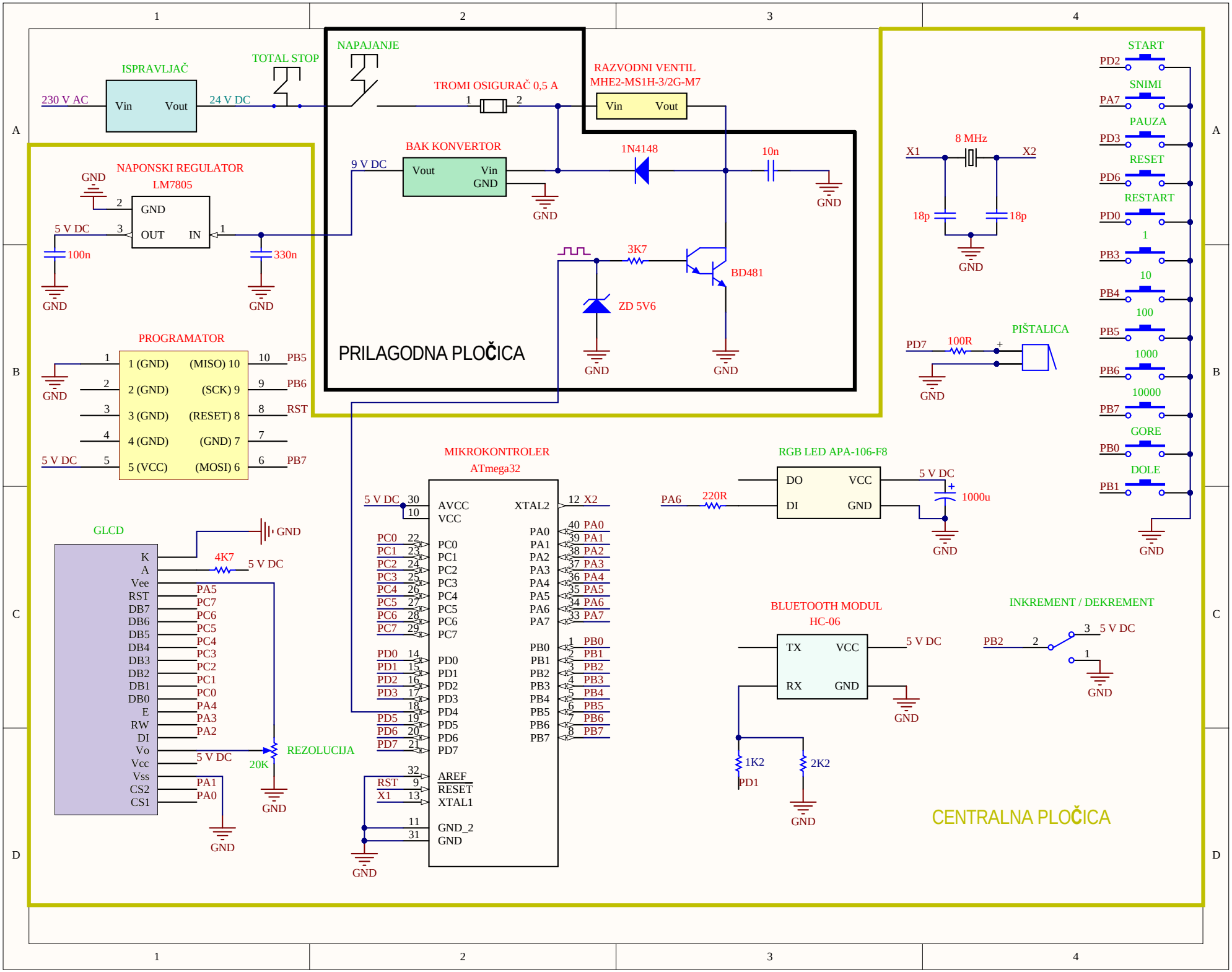
ISPRAVLJAČ
230 V AC
Vin
Vout
24 V DC
TOTAL STOP
NAPAJANJE
TROMI OSIGURAČ 0,5 A
RAZVODNI VENTIL
MHE2-MS1H-3/2G-M7
BAK KONVERTOR
9 V DC
1N4148
10n
NAPONSKI REGULATOR
LM7805
GND
OUT
IN
5 V DC
100n
330n
3K7
BD481
ZD 5V6
PRILAGODNA PLOČICA
8 MHz
X1
X2
18p
PIŠTALICA
PD7
100R
START
PD2
SNIMI
PA7
PAUZA
PD3
RESET
PD6
RESTART
PD0
1
PB3
10
PB4
100
PB5
1000
PB6
10000
PB7
GORE
PB0
DOLE
PB1
PROGRAMATOR
(GND)
(MISO)
(SCK)
(RESET)
(MOSI)
(VCC)
PB5
PB6
RST
PB7
MIKROKONTROLER
ATmega32
AVCC
VCC
XTAL2
X2
PC0
PC1
PC2
PC3
PC4
PC5
PC6
PC7
PD0
PD1
PD2
PD3
PD4
PD5
PD6
PD7
PA0
PA1
PA2
PA3
PA4
PA5
PA6
PA7
PB0
PB1
PB2
PB3
PB4
PB5
PB6
PB7
AREF
RESET
XTAL1
GND_2
GND
RGB LED APA-106-F8
DO
DI
VCC
GND
PA6
220R
1000u
GLCD
K
A
Vee
RST
DB7
DB6
DB5
DB4
DB3
DB2
DB1
DB0
E
RW
DI
Vo
Vcc
Vss
CS2
CS1
4K7
REZOLUCIJA
20K
BLUETOOTH MODUL
HC-06
TX
RX
1K2
2K2
INKREMENT / DEKREMENT
PB2
CENTRALNA PLOČICA