ResearchGate

See discussions, stats, and author profiles for this publication at: https://www.researchgate.net/publication/362350771

Manufacturing Processes of Car Alloy Wheels

Article · July 2022

DOI: 10.6084/m9.figshare.20406930

CITATIONS
0

READS
6,517

1 author:

Mohsen Soori
Final International University

109 PUBLICATIONS **3,361** CITATIONS

SEE PROFILE

All content following this page was uploaded by Mohsen Soori on 30 July 2022.

The user has requested enhancement of the downloaded file.

Manufacturing Processes of Car Alloy Wheels

Mohsen Soori

Department of Aeronautical Engineering, University of Kyrenia, Kyrenia, North Cyprus, Via Mersin 10, Turkey

E-Mails: Mohsen.soori@gmail.com, Mohsen.soori@kyrenia.edu.tr

Abstract:

Passenger cars are using the alloy wheels due to lighter wheels in order to reduce fuel consumption. The alloy wheels are usually made from light and strong alloys such as aluminum and magnesium which can improve the performances of braking system to increase safety of the driving. They are produced by casting, machining and forging operations. The production process can be analyzed and modified to increase efficiency of part production. Finite element analysis can be used to find the static and dynamic stress of the wheel in actual working conditions. Process of machining operations using turning machine tools can also be analyzed to be modified. The optimization process can be used to increase rigidity of the produced alloy wheels. New alloys properties can be tested using virtual simulation to increase performances of the alloy wheels. To increase quality of produced parts, thermal model of the low-pressure die-cast in alloy wheel production process is analyzed. So, more added value in manufacturing process of alloy wheels can be achieved.

Keywords: Alloy wheels, Casting, CNC machining operations, Finite Element Method, Optimization

1- Introduction

Alloy wheels are made of an alloy of light metals, namely aluminum, nickel, magnesium, or a combination of these metals. They offer performance advantages over steel wheels, as they are often several pounds lighter per wheel - less weight means quicker acceleration and faster stopping. Less weight also means less strain on suspension components. In extreme driving conditions, alloy wheels are better able to dissipate heat away from brake components than their steel counterparts. To produce the allow wheels, the casting operations are used. Aluminum wheels are manufactured through a process of pouring molten aluminum into a mold.

Casting is the process of wheel manufacturing when aluminum is heated until it is molten. In such condition it is poured into a mold where it acquires its final shape with the help of vacuum. When it is cooled, it is possible to make modifications like drilling or trimming. Casting wheels are considered to be quick and inexpensive in terms of manufacturing. However, they have a major disadvantage- the nature of its manufacturing results in occurrence of porosity. To eliminate this disadvantage manufacturers, have to design heavier wheels that allows creating of structure integrity. The shape of the wheel is formed through a process of gravity or pressure casting. It is shown in the figures 1 and 2.

Fig. 1. Providing the molten alloys for the casting operation.

Fig. 2. Casting operation of wheel alloys.

Forged wheels are manufactured from a solid piece of metal called billet. The billet is heated and undergoes intense pressure to be changed. In other words, forged wheels are one-piece wheels. The forging process is, however, slightly more complicated. In this case, a special forging alloy blank is systematically pressed at approximately 500°C, with

up to 2000 tons of pressure force into a form which is not as versatile as the one employed in die casting. The drillings also take place at this very point in the process. The rim bowl is now finished having been done by roller milling process. The maintenance of temperature through the process is vital for the manufacturing quality and the solution annealing at the end. A silver removal treatment called “burnishing” then follows along with another round of spray painting, and this is quite similar to the die cast rim production. The lower weight through less wall thickness is decisive, and moreover increases the rigidity. Forged wheels are stronger because of grain refinement due to thermal cycle and process of deformation. Consistent forging allows achieving the same structural integrity with less material in comparison to cast wheels. However, considering the price of equipment needed to manufacture forged wheels, this type of wheels is more expensive than cast wheels.

Advantages of cast wheels can be presented as,

- Wide range of alloy choice;
- Less expensive due to less expensive tooling process;
- No limits in casting weight;
- It is easy to produce complicated parts;

Advantages of forged wheels can be presented as,

- Better performance and handle due to forging process;
- The manufacturing process excludes occurrence of cavities, porosity, and shrinkage;
- Mechanically stronger wheels because of tight grain structure. It also ensures better wear resistance.

The produced alloy wheels are entered to the heat treatment process to increase strength of parts. The wheels are heated to the 500° C and then entereted to the 80° C water for quenching to increase the strength and stability of metals. Next, the machining operations are used to create accurate wheel alloys. It is shown at the figure 3.

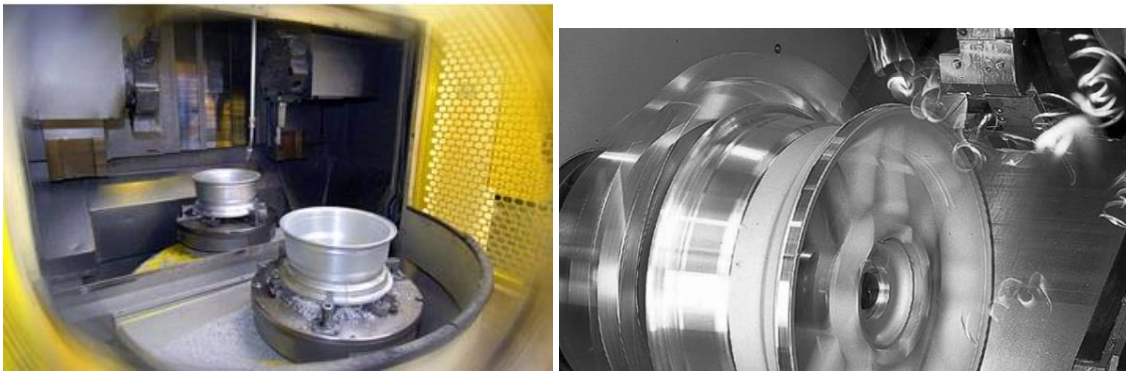

Fig. 3. Machining operations of wheel alloys.

Produced wheel alloys is then controlled by using the CMM machines to obtain the dimensions of the produced parts. It is shown on the figure 4.

Fig. 4. Quality control of produced alloy wheels using the CMM.

Soori et al. provide virtual machining methodologies to assess and improve cnc machining in virtual worlds [1-4]. A review in advanced virtual machining systems is presented by Soori and Arezoo in order to increase the impacts of virtual simulation and analysis to efficiency enhancement of part production [5]. A review in machining induced residual stress in presented by Soori and Arezoo [6] in order to be analyzed and minimized. To minimize chord errors in 5-axis cnc milling operations of turbine blades, advanced NURBS interpolation algorithms is presented by Soori and Arezoo [7]. To analyse and modify the process of part production in virtual environments, virtual product development is presented by Soori [8]. Advances in Web-Based Decision Support Systems is presented by Dastres and Soori [9] to enhance the effects of web of data in decision support systems. A Review in Recent Development of Network Threats and Security Measures is presented by Dastres and Soori [10] in order to decrease the probability of accessing the secured data by the hackers. To analyze and modify the applications of the Artificial Neural Network Systems in different processing units, a review in recent development of Artificial Neural Network is presented by Dastres and Soori [11]. A review in advanced digital signal processing systems is presented by Dastres and Soori [12] to develop the capabilities and applications of signal processing in different industries.

Soori et al. provides a review of current developments in friction stir welding techniques in order to examine and improve efficiency in the process of component manufacturing employing welding procedures [13]. Soori and Asamel have explored implementations of virtual machining systems to reduce residual stress and deflection error throughout turbine blade five-axis milling processes [14]. Soori and Asmael created implementations of virtualized machining system in evaluating and decreasing the cutting temperature throughout milling operations of hard to cut components [15].

Soori et al. proposed an improved virtual machining method to improve surface properties throughout five-axis milling operations of turbine blades [16]. Soori and Asmael devised virtual milling techniques to reduce deflection

error during five-axis milling processes of impeller blades [17]. Soori and Asmael provided a summary of existing developments from published articles in order to examine and improve the parameter optimization technique of machining processes [18]. Dastres et al. give a study of Radio Frequency Identification (RFID) based wireless manufacturing systems to improve energy utilization efficiency, data quality and availability across the supply chain, and precision and dependability during the component production process[19].

To develop the decision support systems in the data warehouse management, advances in web-based decision support systems is studied by Dastres and Soori [20]. To develop the applications of the artificial neural networks in different areas such as risk analysis systems, drone control, welding quality analysis and computer quality analysis, a review in recent development and applications of the systems is presented by Dastres and Soori [11]. Applications of the information communication technology in the environmental protection is presented by Dastres and Soori [21] in order to decrease the effects of technology development to the natural disaster.

In this essay, the production process of alloy wheel is presented in order to be modified. In the section 2, recent research works related to development of the alloy wheel production is reviewed.

2- Recent research and development in manufacturing process of alloy wheels.

In this section, the research works related to the production process of alloy wheels are presented.

2-1 Computer Simulation of Casting Process of Aluminum Wheels

Hsu and Yu [22] presented the simulation and analysis of the casting operation in production process Aluminum Wheels. In this research, a casting simulation software is used to simulate the casting process of aluminum wheels. The casting simulation is done iteratively till the mold temperature converges to a stable temperature. A “shrinkage index” (SI) is defined to provide a quantified index of casting quality of aluminum wheels, based on the phenomenon of liquid entrapped at the joints of rim and spokes of the wheel where shrinkage cavity usually happens. This shrinkage index shows good correlation with the aluminum wheel leakage test results. This paper also discusses the influence of cooling process parameters on SI, including initial mold temperature, and geometry of the wheel, which verifies engineers’ empirical data. This iterative simulation process and SI can be used to predict the casting quality of aluminum wheels and to find the optimal parameters of the casting process. The figure 5 shows the CAD models of casting molds for an aluminum disc wheel.

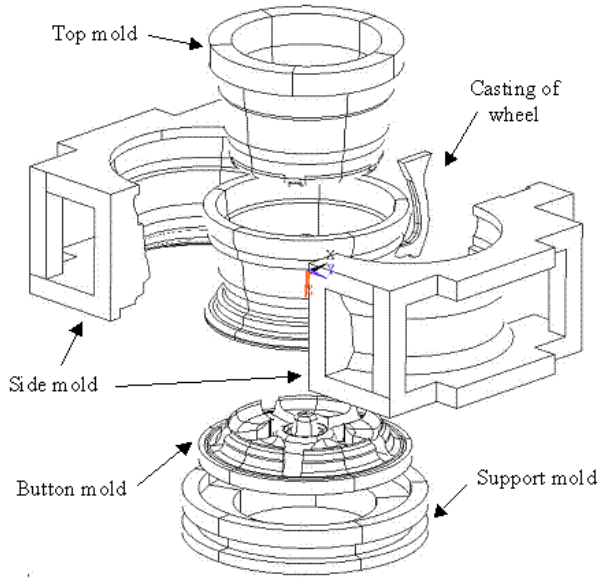

Fig. 5. CAD models of casting molds for an aluminum disc wheel [22].

The finite element model of an aluminum wheel and its molds is presented in the figure 6.

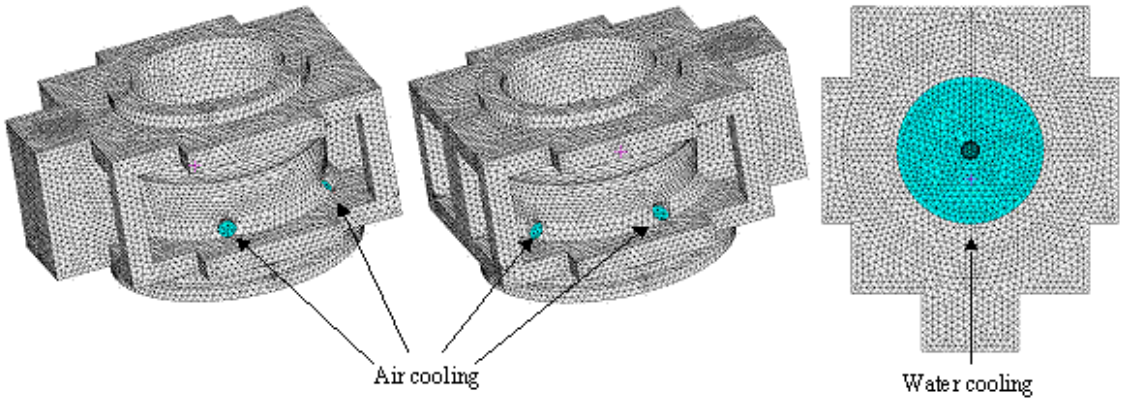

Fig. 6. The finite element model of an aluminum wheel and its molds [22].

Temperature distributions of mold during the casting process is shown in the figure 5.

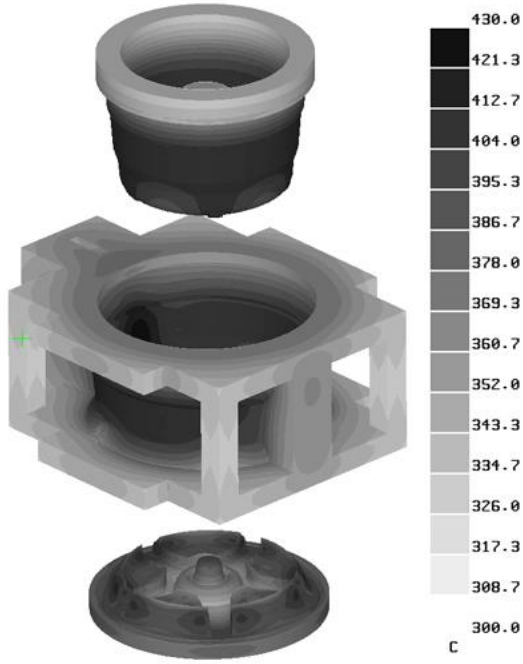

Fig. 7. Temperature distributions of mold during the casting process [22].

2-2 Casting defects in low-pressure die-cast aluminum alloy wheel

Defects in automotive aluminium alloy casting continue to challenge metallurgists and production engineers as greater emphasis is placed on product quality and production cost. A range of casting-related defects found in low-pressure die-cast aluminium wheels were examined metallographically in samples taken from several industrial wheel-casting facilities. The defects examined include macro- and micro- porosity, entrained oxide films, and exogenous oxide inclusions. Particular emphasis is placed on the impact of these defects with respect to the three

main casting-related criteria by which automotive wheel quality are judged: wheel cosmetics, air-tightness, and wheel mechanical performance. Zhang et al. [23] presented the challenges related to the casting operations in low-pressure die-cast aluminum alloy wheels to increase efficiency in process of alloy wheels production.

2-3 Process capability improvement for aluminum alloy wheel machining

Hence, aluminium alloy wheel machining constitutes an important area of study for improvement of process capability. In this process more prominence is laid on prevention of defects rather than simply detecting and rejecting the defect in the usual traditional end inspection quality check. Sharma et al. [24] developed the machining operations in the alloy wheel production process.

This paper first enlists the generic problems of alloy wheel machining and subsequently details on the process improvement of the identified critical-to-quality machining characteristic of A356 aluminium alloy wheel machining process. The causal factors are traced using the Ishikawa diagram and prioritization of corrective actions is done through process failure modes and effects analysis. Process monitoring charts are employed for improving the process capability index of the process, at the industrial benchmark of four sigma level, which is equal to the value of 1.33. The procedure adopted for improving the process capability levels is the define-measure-analyze-improve-control (DMAIC) approach. By following the DMAIC approach, the C_p, C_{pk} and C_{pm} showed signs of improvement from an initial value of 0.66, −0.24 and 0.27, to a final value of 4.19, 3.24 and 1.41, respectively. Alloy wheel machining drawing with center hole diameter of ø50.000 is shown in the figure 8.

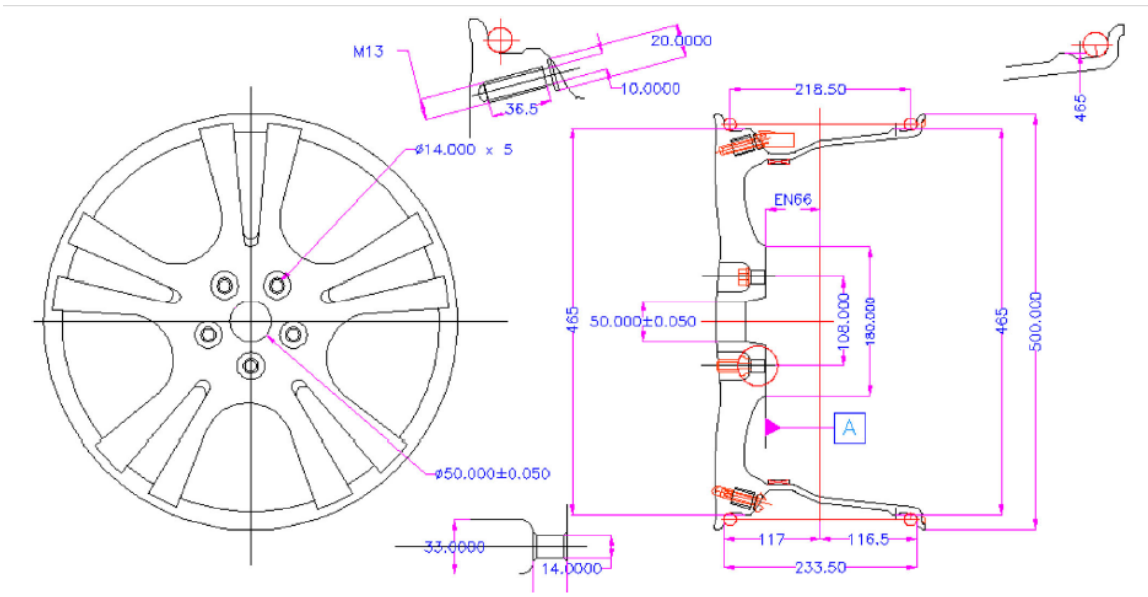

Fig. 8. Alloy wheel machining drawing with center hole diameter of ø50.000 (±0.050) [24].

2-4 Analysis of Static Stress in an Alloy Wheel of the Passenger car

Optimization of Dynamic Cornering Fatigue Test Process of Aluminum Alloy Wheels Aluminum wheels are most commonly used wheel type for passenger cars for decades.

Static Stress in an Alloy Wheel of the Passenger car is analyzed and decrease by Nallusamy et al. [25] to increase quality as well as safety of the produced alloy wheel. A356 alloy (including alloying elements of 7% Si and 0.3% Mg) is used and a T6 heat treatment is applied for the wheels. A lot of proofing tests are applied on a wheel in order to ensure its reliability and to guarantee passenger safety. Dynamic cornering fatigue test is the most widely used fatigue performance evaluation method for passenger car wheels. Test is basically applied on the wheel by stretching and bending of the wheel spokes with an oscillating force applied at the far end of a shaft connected to the offset surface of the wheel. This test lasts for 2 to 200 hours depending on the desired number of cycles without a crack or the number of crack initiation cycle (fatigue life). Therefore, for a laboratory conducting more than 1500 fatigue tests a year, minimization of test duration without changing applied stress on wheels increases the productivity and improves testing capacity. This study includes the investigations and applications to accelerate the dynamic cornering fatigue test of wheels experimentally. Applied stress levels for regular and accelerated tests were compared by using strain gage recordings experimentally.

2-5 Optimization of Rigidity of Aluminum Alloy Wheels

Kocaturk et al. [26] presented the optimization procedures for rigidity parameters of the aluminum alloy wheels. Cast aluminium alloy wheels are widely used in passenger cars for decades due to their high specific strength, high ductility, and high impact resistance. As a safety part, it is subjected to a lot of proofing tests such as fatigue, impact, rigidity, modal analysis etc. Rigidity of a wheel spoke is mainly related to its fatigue performance and has a big impact on handling and driving performance of a car. Therefore, in this study, rigidity of an aluminium alloy wheel was investigated numerically. As a result of good agreement between experimental and numerical result, study continued with the multi-objective optimization of geometrical parameters for the wheel with objectives of maximizing rigidity with minimum mass increase of the wheel. In the study ANSYS Workbench was used in the finite element simulations, and experimental design and statistical analysis was conducted by using Minitab Statistical Software.

2-6 Analysis of Alloy properties for the Manufacture of Automotive Wheels

In order to increase performances of produced alloy wheels in actual working conditions, an analysis research work for alloy properties is developed by Kaba et al. [27]. The heat-treated AlSi7Mg0.3 alloy is the standard wheel alloy as it offers the best compromise between fatigue strength and elongation. Alloys with less than 7 wt% Si may also be of interest for the manufacture of aluminium wheels to limit Si poisoning that impairs grain refinement. Hence, the potential of AlSi5Mg0.3 alloy was investigated as it could offer superior mechanical properties owing to a smaller grain structure. AlSi5Mg0.3 alloy does indeed exhibit smaller grains but fails to offer higher mechanical properties. AlSi7Mg0.3 alloy with a smaller dendritic structure but coarser grains are superior. The higher fluidity of the latter is believed to offer better feeding characteristics, which in turn improves the soundness of the casting and thus leads to superior structural quality and mechanical properties. An overall industrial assessment favours the standard Al7Si0.3 Mg alloy in the manufacture of light alloy wheels.

2-7 Simulation of Inner Rim Compression Test of Aluminum Alloy Wheels

Kara and Daysal [28] developed the simulation and analysis for casting operations of aluminum alloy wheels. The Aluminum alloy wheels are the most commonly used wheel type for passenger cars for decades. Generally, A356 alloy (including alloying elements of 7% Si and 0.3% Mg) is used and a T6 heat treatment (solutionizing and artificial

aging) is applied for the wheels. The most commonly used casting method is the Low Pressure Die Casting method for the wheels. As a cast product, wheels are one of the most important safety parts of a car along with a huge visual impact on the car. Therefore, a lot of proofing tests are applied on a wheel in order to ensure its reliability and to guarantee passenger safety. Inner rim compression test of aluminum alloy wheels is one of these important mechanical tests which is a quasi-static deformation test to determine the fracture and failure behavior of the wheel. In this test, wheel is fixed at its offset surface using lug nuts and a crosshead applies the load with an offset from the inner rim position applying the biggest stress to the valve hole section. This study comprises the efforts of simulation of this test. In the study, ABAQUS finite element software is used and results were compared with experimentally obtained results.

2-8 Analysis of the forging processes for 6061 aluminum-alloy wheels

To develop the capabilities of the forging process in aluminum alloy wheel production, Kim et al. [29] presented an analysis study. The metal forming processes of aluminum-alloy wheel forging at elevated temperatures are analyzed by the finite element method. A coupled thermo-mechanical model for the analysis of plastic deformation and heat transfer is adapted in the finite element formulation. In order to consider the strain-rate effects on material properties and the flow stress dependence on temperatures, the rigid visco-plasticity is applied to the simulation. Several process conditions were applied to the simulation such as punch speed, rim thickness, and the depth of die cavity. Experiment for a simplified small-scale model is carried out and compared with the simulation in terms of forging load to verify the validity of the formulation adapted in this study. Then, various processes with full-scale model for a 6061 aluminum-alloy wheel are simulated. Material flow, pressure distributions exerted on the die wall, temperature distributions and forging loads are summarized as basic data for process design and selection of a proper press equipment. The figure 9 shows the wheel configuration just after forging process.

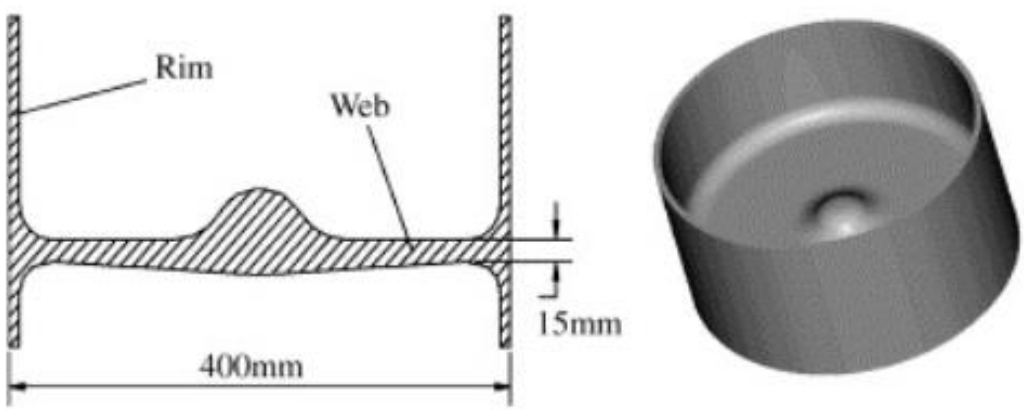

Fig. 9. Wheel configuration just after forging [29].

2-9 Development of a 3-D thermal model of the low-pressure die-cast (LPDC) process of A356 aluminum alloy wheels

Zhang et al. [30] presented the thermal model for the low-pressure die-cast process in order to increase alloy wheels production capacities. A mathematical model of the low-pressure die casting process for the production of A356 aluminum alloy wheels has been developed to predict the evolution of temperature within the wheel and die under

the auspices of a collaborative research agreement between researchers at the University of British Columbia and a North American wheel casting facility. The heat transfer model represents a three-dimensional, 30° slice of the wheel and die, and was developed within the commercial finite-element package, ABAQUS. Extensive temperature measurements in the die and in the wheel taken over several cycles in the casting process were used to develop key process boundary conditions and validate the model. The predicted and measured temperatures agree very well, with the maximum difference less than 20 °C at the majority of locations examined. A heat flux analysis conducted with the model has identified the complex path that the heat follows within the die and wheel during the solidification process. A solidification path analysis conducted with the model showed the presence of a hot spot in the rim/spoke junction area, which was confirmed by the observation of macro-porosity in a sectioned wheel. 30° section mesh of a wheel and die (wheel differentiated by fine mesh size compared to die) is shown in the figure 10.

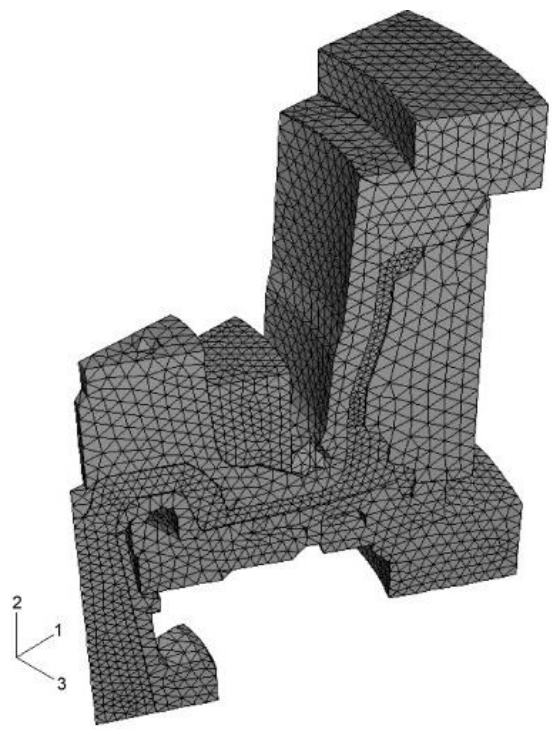

Fig. 10. 30° section mesh of a wheel and die (wheel differentiated by fine mesh size compared to die) [30].

Contour plot of temperatures in the (a) wheel and (b) die prior to die-open is presented in the figure 11.

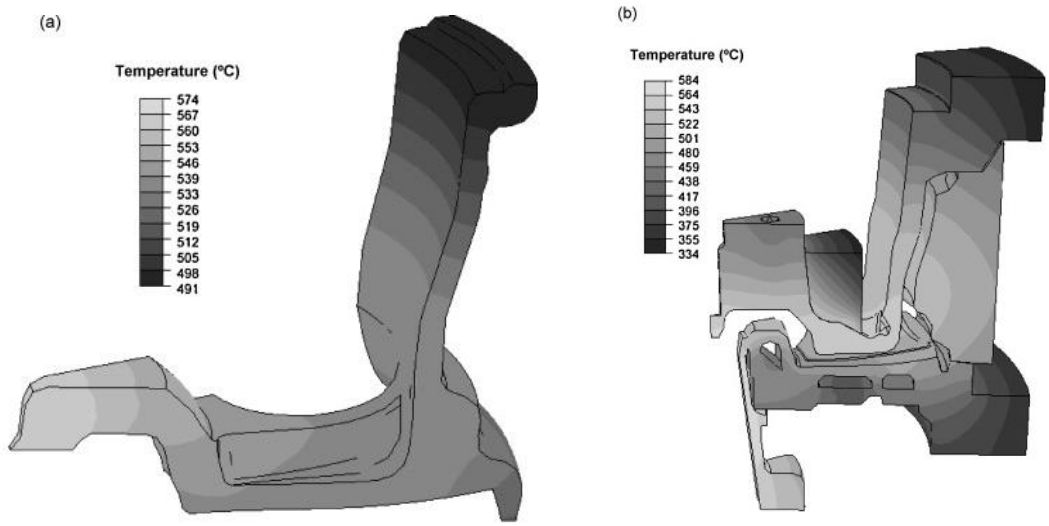

Fig. 11. Contour plot of temperatures in the (a) wheel and (b) die prior to die-open [30].

2-10 Precision forging technology for aluminum alloy

To increase accuracy of produced alloy wheels using forging technology, Deng et al. [31] presented a case study. Aluminium alloy is a preferred metal material for lightweight part manufacturing in aerospace, automobile, and weapon industries due to its good physical properties, such as low density, high specific strength, and good corrosion resistance. However, during forging processes, underfilling, folding, broken streamline, crack, coarse grain, and other macro- or microdefects are easily generated because of the deformation characteristics of aluminium alloys, including narrow forgeable temperature region, fast heat dissipation to dies, strong adhesion, high strain rate sensitivity, and large flow resistance. Thus, it is seriously restricted for the forged part to obtain precision shape and enhanced property. In this paper, progresses in precision forging technologies of aluminium alloy parts were reviewed. Several advanced precision forging technologies have been developed, including closed die forging, isothermal die forging, local loading forging, metal flow forging with relief cavity, auxiliary force or vibration loading, casting-forging hybrid forming, and stamping-forging hybrid forming. High-precision aluminium alloy parts can be realized by controlling the forging processes and parameters or combining precision forging technologies with other forming technologies. The development of these technologies is beneficial to promote the application of aluminium alloys in manufacturing of lightweight parts.

2-11 Finite element simulation and experimental validation of the cracking phenomenon in aluminum alloy wheels

Otarawanna et al. [32] developed finite element analysis in order to predict and prevent the cracking phenomena in the aluminum alloy wheels. The impact test is a mandatory mechanical test used to ensure the structural integrity of alloy wheels produced. In the impact test, a specified mass is dropped from a specified height onto the wheel-tire assembly. In the wheel manufacturing industry, finite element analysis (FEA) is often used to reduce time and cost associated with the wheel design process. This study aims to find suitable methods for modelling the wheel impact test by FEA. In this research, two modelling methods (with and without the tire) were used to simulate the impact test of a passenger-car wheel model. The wheel impact test was performed in order to validate the real test results with the FEA results. The results in this work suggest that both modelling methods are capable of predicting the

cracking phenomenon in the wheel. Contour of the von Mises stress obtained from the simulation without the tire at 850 kg is shown in the figure 12.

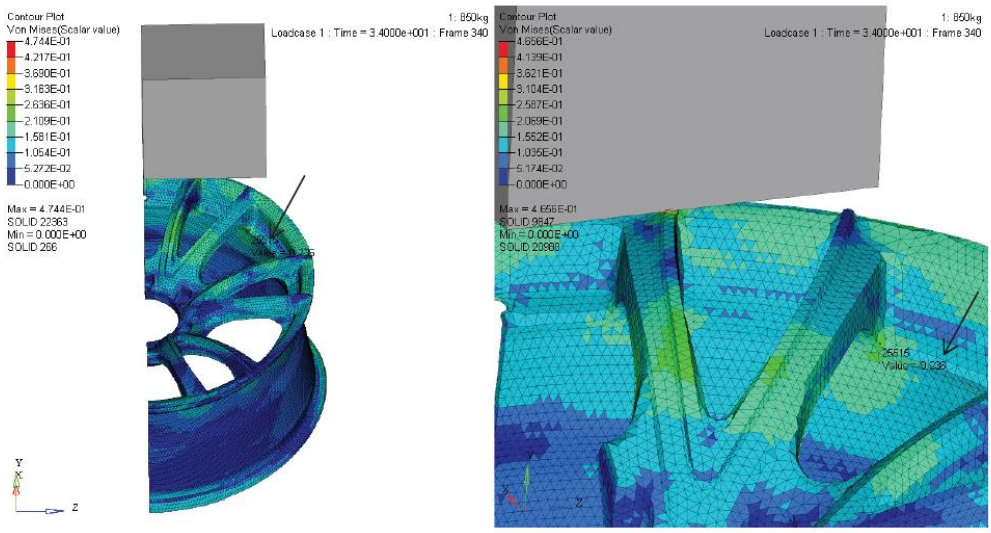

Fig. 12. Contour of the von Mises stress obtained from the simulation without the tire at 850 kg. Arrows mark the location where the von Mises stress is maximum (ignoring the direct impact region) [32].

2-12 Effect of Cooling Process on Porosity in the Aluminum Alloy Automotive Wheel During Low-Pressure Die Casting

Sui et al. [33] presented the analysis and experimental study to decrease the Porosity in the Aluminum Alloy Automotive Wheel Low-Pressure Die Casting using the cooling process. Experiments were conducted to verify the feasibility of cooling process for one aluminium alloy wheel during low-pressure die casting, and the results showed there were some microporosity defects in the junctions of small spokes. Numerical simulation was implemented, and the rational cooling and insulation process was determined by analysing the solidification times of different stages at some locations of casting. The simulation and experimental results both demonstrated the insulation spots had a good effect on prolonging solidification time at the location with thin wall thickness, preventing the feeding paths cut-off prematurely and decreasing the size of porosity defects distinctly. Effect of the cooling and insulation process in removing the microporosity defects in the junctions of alloy wheels is shown in the figure 13.

Fig. 13. Effect of the cooling and insulation process in removing the macroporosity defects in the junctions of prodcuced alloy wheels [33].

3- Conclusion

In the present study, the process of alloy wheel production is presented and analyzed. Recent research work for developing the production process is then discussed. Computer simulation and analysis is used to increase the alloy wheels production process capabilities. Defects in automotive aluminium alloy casting is analysed and decreased to increase quality of produced parts. aluminum alloy wheel machining operations are studied to improve the machining efficiency in the production process. Static stress in the alloy wheel production process is analyzed [6] to increase safety of produced parts. Rigidity of aluminum alloy wheels is analyzed and optimized to increase performances of produced parts in actual working condition. Alloy properties for the manufacture of automotive wheels is studied to develop the new produced wheels using the advanced alloys.

Simulation and analysis for casting operations of aluminum alloy wheels is developed to increase production capacities. The forging processes in production process of alloy wheels is simulated and analyzed to modify the manufacturing process. Thermal model of the low-pressure die-cast is analyzed to increase quality of produced parts. The forging technology for aluminum alloy is analyzed to increase accuracy of part production. The cracking phenomenon in aluminum alloy wheels is analyzed using the finite element method to increase the production capabilities. Moreover, the cooling methodologies in porosity of the Aluminum alloy automotive wheel during Low-Pressure die casting is studied to increase the quality of produced parts.

The alloy wheel production process can be accurately analyzed and modified using virtual simulation in order to increase accuracy as well as efficiency in manufacturing process. The optimization procedures can be applied to the simulated production process to boost level of production capabilities. Also, finite element method can be applied to predict the stress, strain and cracking phenomena in the production operation. As a result, accuracy as well as efficiency in process of car alloy wheels can be enhanced by using the simulation and modification of the manufacturing process in digital environments.

References

1. Soori M, Arezoo B, Habibi M (2017) Accuracy analysis of tool deflection error modelling in prediction of milled surfaces by a virtual machining system. International Journal of Computer Applications in Technology 55 (4):308-321
2. Soori M, Arezoo B, Habibi M (2014) Virtual machining considering dimensional, geometrical and tool deflection errors in three-axis CNC milling machines. Journal of Manufacturing Systems 33 (4):498-507
3. Soori M, Arezoo B, Habibi M (2013) Dimensional and geometrical errors of three-axis CNC milling machines in a virtual machining system. Computer-Aided Design 45 (11):1306-1313
4. Soori M, Arezoo B, Habibi M (2016) Tool deflection error of three-axis computer numerical control milling machines, monitoring and minimizing by a virtual machining system. Journal of Manufacturing Science and Engineering 138 (8)
5. Soori M, Arezoo B (2020) Virtual Machining Systems for CNC Milling and Turning Machine Tools: A Review. International Journal of Engineering and Future Technology 18 (1):56-104
6. Soori M, Arezoo B A Review in Machining-Induced Residual Stress.
7. Soori M, Arezoo B (2022) NURBS Interpolation Algorithm to Minimize Chord Error in 5-Axis CNC Milling Operations of Turbine Blades.
8. Soori M (2019) Virtual product development. GRIN Verlag,
9. Dastres R, Soori M (2021) Advances in Web-Based Decision Support Systems. International Journal of Engineering and Future Technology

10. Dastres R, Soori M (2021) A Review in Recent Development of Network Threats and Security Measures. International Journal of Computer and Information Engineering 15 (1):75-81
11. Dastres R, Soori M (2021) Artificial Neural Network Systems. International Journal of Imaging and Robotics (IJIR) 21 (2):13-25
12. Dastres R, Soori M (2021) A Review in Advanced Digital Signal Processing Systems. International Journal of Electrical and Computer Engineering 15 (3):122-127
13. Soori M, Asmael M, Solyalı D (2020) Recent Development in Friction Stir Welding Process: A Review. SAE International Journal of Materials and Manufacturing (5):18
14. Soori M, Asmael M (2021) Virtual Minimization of Residual Stress and Deflection Error in Five-Axis Milling of Turbine Blades. Strojniski Vestnik/Journal of Mechanical Engineering 67 (5):235-244
15. Soori M, Asmael M (2021) Cutting temperatures in milling operations of difficult-to-cut materials. Journal of New Technology and Materials 11 (1):47-56
16. Soori M, Asmael M, Khan A, Farouk N (2021) Minimization of surface roughness in 5-axis milling of turbine blades. Mechanics Based Design of Structures and Machines:1-18. doi:10.1080/15397734.2021.1992779
17. Soori M, Asmael M (2021) MINIMIZATION OF DEFLECTION ERROR IN FIVE AXIS MILLING OF IMPELLER BLADES. Facta Universitatis, series: Mechanical Engineering. doi:10.22190/FUME210822069S
18. Soori M, Asmael M (2022) A Review of the Recent Development in Machining Parameter Optimization. Jordan Journal of Mechanical & Industrial Engineering 16 (2):205-223
19. Dastres R, Soori M, Asmael M (2022) RADIO FREQUENCY IDENTIFICATION (RFID) BASED WIRELESS MANUFACTURING SYSTEMS, A REVIEW. Independent Journal of Management & Production 13 (1):258-290
20. Dastres R, Soori M (2021) Advances in Web-Based Decision Support Systems. International Journal of Engineering and Future Technology 19 (1):1-15
21. Dastres R, Soori M (2021) The Role of Information and Communication Technology (ICT) in Environmental Protection. International Journal of Tomography and Simulation 35 (1):24-37
22. Hsu Y-L, Yu C-C (2006) Computer simulation of casting process of aluminium wheels-a case study. Proceedings of the Institution of Mechanical Engineers, Part B: Journal of Engineering Manufacture 220 (2):203-211
23. Zhang B, Cockcroft S, Maijer D, Zhu J, Phillion A (2005) Casting defects in low-pressure die-cast aluminum alloy wheels. Jom 57 (11):36-43
24. Sharma G, Rao PS, Babu BS (2018) Process capability improvement through DMAIC for aluminum alloy wheel machining. Journal of Industrial Engineering International 14 (2):213-226
25. Nallusamy S, Prabu NM, Balakannan K, Majumdar G Analysis of Static Stress in an Alloy Wheel of the Passengercar. In: International Journal of Engineering Research in Africa, 2015. Trans Tech Publ, pp 17-25
26. Kocaturk O, Elagoz FY, Kara A Optimization of Rigidity of Aluminum Alloy Wheels. In: Fracture, Fatigue and Wear, 2018. Springer, pp 814-819
27. Kaba M, Donmez A, Cukur A, Kurban A, Cubuklusu H, Birol Y (2018) AlSi5Mg0. 3 Alloy for the manufacture of automotive wheels. International Journal of Metalcasting 12 (3):614-624
28. Kara A, Daysal O Simulation of Inner Rim Compression Test of Aluminum Alloy Wheels. In: Key Engineering Materials, 2018. Trans Tech Publ, pp 379-384
29. Kim Y, Ryou T, Choi H, Hwang B (2002) An analysis of the forging processes for 6061 aluminum-alloy wheels. Journal of Materials Processing Technology 123 (2):270-276

30. Zhang B, Maijer D, Cockcroft S (2007) Development of a 3-D thermal model of the low-pressure die-cast (LPDC) process of A356 aluminum alloy wheels. Materials Science and Engineering: A 464 (1-2):295-305
31. Deng L, Wang X, Jin J, Xia J (2018) Precision forging technology for aluminum alloy. Frontiers of Mechanical Engineering 13 (1):25-36
32. Otarawanna S, Uttamung P, Malatip A Finite element simulation and experimental validation of the cracking phenomenon in aluminium alloy wheels during the impact test. In: AIP Conference Proceedings, 2018. vol 1. AIP Publishing LLC, p 020303
33. Sui D, Cui Z, Wang R, Hao S, Han Q (2016) Effect of cooling process on porosity in the aluminum alloy automotive wheel during low-pressure die casting. International Journal of Metalcasting 10 (1):32-42

View publication stats