ResearchGate

See discussions, stats, and author profiles for this publication at: https://www.researchgate.net/publication/330993732

Design and Control of 6 DOF Robotic Manipulator

Thesis · May 2018

DOI: 10.13140/RG.2.2.28474.85440

CITATIONS
3

READS
30,823

4 authors, including:

Muhammad Bilal
University of Melbourne
10 PUBLICATIONS **18** CITATIONS

SEE PROFILE

Muhammad Osama Khan
Dewan Cement Limited, Karachi, Pakistan
1 PUBLICATION **3** CITATIONS

SEE PROFILE

All content following this page was uploaded by Muhammad Bilal on 10 February 2019.

The user has requested enhancement of the downloaded file.

Design and Control of 6 DOF Robotic Manipulator

Authors

Muhammad Bilal	2014-MC-103
Muhammad Osama Khan	2014-MC-181
Awais Mughal	2013-MC-111
Noman Ali	2014-MC-147

Supervisor

Engr. Abdullah Tahir

Co-Advisor

Engr. Dilruba Siddiqi

DEPARTMENT OF MECHATRONICS & CONTROL ENGINEERING

FACULTY OF MECHAINCAL, MECHATRONICS & MANUFACTURING ENGINEERING

UNIVERSITY OF ENGINEERING AND TECHNOLOGY LAHORE

FAISALABAD CAMPUS

May 2018

بسم الله الرحمن الرحيم

Design and Control of 6 DOF Robotic Manipulator

Authors

Muhammad Bilal	2014-MC-103
Muhammad Osama khan	2014-MC-181
Awais Mughal	2013-MC-111
Noman Ali	2014-MC-147

A thesis submitted in partial fulfillment of the requirement for the degree of

B.Sc. Mechatronics & Control Engineering

Thesis Supervisor:

Engr. Abdullah Tahir

Lecturer (Industrial Tour Coordinator)

Mechatronics and Control Engineering Department

External Examiner's Signature: _____

Thesis Supervisor's Signature: _____

DEPARTMENT OF MECHATRONICS & CONTROL ENGINEERING

FACULTY OF MECHAINCAL, MECHATRONICS & MANUFACTURING ENGINEERING

UNIVERSITY OF ENGINEERING AND TECHNOLOGY LAHORE

FAISALABAD CAMPUS

May 2018

ABSTRACT

Multi-degree of freedom robots are playing very important role in different application of automation. They are providing much more accuracy in carrying out a typical procedure as compared to the manual work done by human. In recent years the design, fabrication and development of robotic arms have been active research areas in robotics all around the world. This project describe a mechanical system, design concept and prototype implementation of a 6 DOF robotic arm, which should perform industrial task such as pick and place of fragile objects operation. This robot arm being controlled by micro-controller has base, shoulder, elbow, wrist rotation and a functional gripper. Gripper has been built as end-effector and is capable of grasping diverse objects within own workspace of the arm possible. PID controller is implemented on each motor. The microcontroller implement forward kinematics and position control of DC motors. The design aims to provide fine manipulation in performing pick and place task, while still maintaining the simplicity of design.

Keywords: Manipulator, CCS, VS, Kinematics

UNDERTAKING

We certify that research work titled "*Design and Control of 6 DOF Robotic Manipulator*" is our own work. The work has not been presented elsewhere for assessment. Where material has been used from other sources it has been properly acknowledged / referred.

Signature of Students

Muhammad Bilal 2014-MC-103

Signature: _____

Noman Ali 2014-MC-147

Signature: _____

Muhammad Osama khan 2014-MC-181

Signature: _____

Awais Mughal 2013-MC-111

Signature: _____

ACKNOWLEGEMENT

All praises and thanks are to Almighty **Allah**, the most beneficent and merciful. We offer our humblest thanks and praises to our Holy Prophet **Hazrat Muhammad (S.A.W)** whose moral and spiritual teaching is a forever source of guidance and knowledge for humanity as a whole enlightened. We would like to express our gratitude and appreciation to Supervisor, **Engr. Abdullah Tahir** and Co-Advisor **Engr. Dilruba Siddiqi** whose help, stimulating suggestion and engagement, helped us to coordinate our project. His illustration advice and keen interest was helpful for us in the completion of this project. His influence and support were key elements of our project.

Table of Contents

ABSTRACT ..... **I**
UNDERTAKING ..... **II**
ACKNOWLEGEMENT ..... **III**
Chapter 1 Introduction **1**
1.1 Introduction to Robotics 1
1.2 History of Robots 1
1.3 Objectives 2
1.4 Application of Robotic Manipulators 3
1.5 Components of Manipulator 3
1.6 Configuration of Robots 4
1.7 Characteristics of Robot 5
Chapter 2 Mechanical Design **6**
2.1 SolidWorks Design 6
2.1.1 Joints Angle 11
2.2 Motion Transmission 12
2.3 Material Selection 13
Chapter 3 Kinematics and Dynamics of Manipulator **14**
3.1 Forward Kinematics 14
3.1.1 Workspace 16
3.2 Inverse Kinematics 16
3.3 Velocity Jacobain 17
3.4 Singularities 17
Chapter 4 Hardware and Software Modules **19**
4.1 Tiva C Launchpad Controller 19
4.2 Actuators 20
4.3 Sensors 22
4.4 Motor Driver 23
4.5 MATLAB 23

4.6 Visual Studio 24

4.7 Code Composer Studio 25

4.8 Circuit Diagram 26

4.1.8 Schematics Diagram 26

Chapter 5 Simulation and Hardware Implementation **28**

5.1 DC Motor Transfer Function 28

5.1.1 PID Tuning using MATLAB 30

5.2.1 PID Controller Implementation 31

5.2 Simulation 39

5.1.2 Forward Kinematics Simulation Results 39

5.3 Forward Kinematics Implementation 42

Project Cost **45**

Conclusion **46**

Appendix **47**

List of Figures

Figure 1: Free Body Diagram 6
Figure 2: Complete CAD Model 7
Figure 3: Base CAD Model 8
Figure 4: Bottom Drawing 8
Figure 5: Base Side Part Drawing 8
Figure 6: Top Plate of base 8
Figure 7: Shoulder Motor Pulley mechanism 9
Figure 8: Shoulder Side Part Drawing 9
Figure 9: Elbow CAD Model 9
Figure 10: Elbow Part Drawing 10
Figure 11: Spherical Wrist CAD Model 10
Figure 12: Wrist Part Drawing 10
Figure 13: End-Effector 11
Figure 14: Actual Picture of Manipulator 11
Figure 15: G2T and G3T Belt-Pulley mounted on Motor 12
Figure 16: Free Body Diagram 15
Figure 17: Workspace Front View (Units inch) 16
Figure 18: Workspace X-Y view (Unit inch) 16
Figure 19: Singular Configuration 18
Figure 20: Tiva C Launchpad 19
Figure 21: Free Body diagram 20
Figure 22: Quadrature Encoder 22
Figure 23: Limit Switch 23
Figure 24: Force Sensor 23
Figure 25: L298 Motor Driver 23
Figure 26: GUI 24
Figure 27: Forward Kinematics Window 24
Figure 28: Inverse Kinematics Window 25
Figure 29: CCS Environment 25
Figure 30: Circuit Diagram 26
Figure 31: Schematic Diagram 26
Figure 32: Controller Connections 27

Figure 33: General Block Diagram 28
Figure 34: System Identification Toolbox 29
Figure 35: Step response 29
Figure 36: PID Tuner 30
Figure 37: Bode Plot 31
Figure 38: Step Response 31
Figure 39: Root Locus of Motor 31
Figure 40: Step Response of Base Joint Motor 33
Figure 41: Bode Plot of Base Joint Motor 33
Figure 42: Root Locus of Base Joint Motor 33
Figure 43: Bode Plot of Shoulder Joint Motor 34
Figure 44: Step Response of Shoulder Joint Motor 34
Figure 45: Root Locus of Shoulder Joint Motor 35
Figure 46: Step Response of Elbow Joint Motor 36
Figure 47: Bode Plot of Elbow Joint Motor 36
Figure 48: Root Locus of Elbow Joint Motor 36
Figure 49: Step Response Wrist 2nd Joint Motor 37
Figure 50: Bode Plot Wrist 2nd Joint Motor 37
Figure 51: Root Locus Wrist 2nd Joint Motor 38
Figure 52: Step Response Wrist 3rd Joint Motor 39
Figure 53: Bode Plot Wrist 3rd Joint Motor 39
Figure 54: Root Locus of Wrist 3rd Joint Motor 39
Figure 55: Home Position 40
Figure 56: Base Joint Rotation 40
Figure 57: Shoulder Joint Rotation 41
Figure 58: Elbow Joint Rotation 41
Figure 59: Home Position 42
Figure 60: Shoulder Joint Movement 42
Figure 61: Elbow Joint Movement 43
Figure 62: wrist 1st joint Movement 43
Figure 63: Wrist 2nd Joint Movement 44
Figure 64: End-effector Movement 44

CHAPTER 1

INTRODUCTION

1.1 Introduction to Robotics

Robotics is an interdisciplinary branch of engineering that comprises the formation, design, building, and action of robots. This field overlays with mechanical-, mechatronics-, electrical engineering, computer science, electronics, AI, Nano-technology and bio-engineering. In addition, Robotics deal with the computer systems for their control, sensory response, and information processing.

"A Robot is a reprogrammable multifunctional manipulator designed to move materials, parts, tools, or specialized devices through variable programmed motions for the performance of a variety of tasks" [Robot Institute of America, RIA]

OR

"A goal oriented machine that can sense, plan and act" [Peter Corke]

These different fields knowledge are utilize to build machines that can work like human. Robots operate in different environment and can be used for various purpose where human cannot perform any task.

Robots can be of any kind/shape but some are built to correspond humans in look. Such robots plan to replicate walking, lifting, speech, cognition, and primarily something an individual's will do. Several of today's robots unit stimulated naturally, contributive to the field of bio-inspired artificial intelligence.

Well it's a system that contains feedback sensors, control systems, manipulators, power source and software all operating collectively to perform a task. Designing, building, programming and testing a robots could be a combination mechanical-, mechatronics-, electrical engineering, computer science, electronics, AI, Nano-technology and bio-engineering. In some cases biology, medicine, chemistry may additionally be concerned.

1.2 History of Robots

Robot word derived from "Robota" a Czech word meaning 'work'. Sir Isaac Asimov is frequently specified the first person to usage the term robotics in his story in 1940s. In story, He recommended 03 laws to monitor the performance of robots. Sir Isaac

Asimov proposed three philosophical laws for robotics which continued to the present given as

- **Robot First Law**
  A Robot must not harm a human being or, through inaction, allow one to come to harm.
- **Robot Second Law**
  A Robot must always obey human beings unless it is in conflict with higher order law.
- **Robot Third Law**
  A Robot must protect itself from harm unless that is in conflict with a higher order law.
- **Zeroth Law**
  A Robot must not injure humanity or, through action, allow humanity to come to harm.

Following are the list of Robots

- In 1954 First programmable robot is presented by George Devol
- In 1971 Stanford University presented Stanford Arm
- In 1974 Cincinnati Milacron presents the T3 robot with computer control
- In 1978 Unimation presents the PUMA robot
- In 1979 Japan presents SCARA Robot
- In 1996 Honda expose its Humanoid robot

1.3 Objectives

- To design and control 6 DOF Robotic manipulator (Articulated + spherical wrist) which grasp fragile object to move it to desired location as well as regulating internal forces of object. Using force sensor (tactile sensor which is based on resistive principle) allows actuator to maintain constant gripping force on object to avoid damaging of object.
- To apply PID controller for position control of actuators which allows manipulator to precisely place objects at desired location.
- To develop graphical user interface (GUI) working as HMI taking commands from user and transferring to manipulator.

1.4 Application of Robotic Manipulators

Among many other applications, some applications are:

- They can be used for Military purpose.
- They can perform group task.
- They are widely used in industry even number of robots as compared to labor increasing day by day. World top industries are fully automated like IBM etc.
- They are used in hospital to monitor different action. Robots can easily perform stitching and various surgical operations.
- They can b serve as a cooker and play role of a waiter in restaurant.
- They can play sports with human.
- They can be used for agricultural purpose.
- Nano-robots are perform operation at Nano level like in medical to remove blood blockage in vessel
- Swarm robotics

1.5 Components of Manipulator

There are following main components of manipulator

- **End Effector**

  End-effector is a robot device or tool that connect with the robot arm. End-effector is part of manipulator which interact with the environment. It may be of different types

  - Most common type of end effector is gripper.
  - Force/Torque Sensors end effector
  - Any type of material Abstraction Tools.
  - Welding Torches.

- **Actuators**

  Any device which perform any action called actuators. In robotics, actuators deals motor which cause movement of the manipulator. Different types of actuators is used for said purpose, for example most commonly actuators used are DC, Stepper and DC Servo motors.

- **Sensors**

  Any device which convert electrical signal into physical signal that can be measurable called sensor. Depend on requirement multiple sensor are available

to use. Feedback sensor are used for locating manipulator current position. Sensors attached with end effector are used for interaction with environment.

- **Controller**

  Controller are the main unit of any robot or controlled machine. Multiple controller are can be used for said purpose PIC micro-controller, Raspberry Pi, Tiva C Launchpad, Arduino etc.

- **Software**

  Software are also the main tool of manipulator. Multiple Software are available to controlled manipulator. For example RACS - Robot Arm Control Software, ArmCtrl, Arm Link etc.

1.6 Configuration of Robots

There are five basic configuration of robots which are:

- **Cartesian Configuration (PPP)**

  A Cartesian robot, also known as a Cartesian coordinate robot, is a common type of industrial robot. It has three "arms" that each function along linear axes of control. Each of these axes is at a right angle to the other two.

- **Cylindrical Configuration (RPP)**

  Cylindrical robot consist of one revolute and two prismatic joint. Mainly used for cylindrical operation.

- **Spherical Configuration (RRP)**

  Spherical arm presented by Stanford University and consist of two revolute and one prismatic joint. All three joints are mutually perpendicular to each other.

- **Articulated/Anthropomorphic Configuration (RRR)**

  The articulated or jointed arm robot (or sometime called Anthropomorphic arms) thoroughly look like human arm. It consist of three revolute joint.

- **SCARA Configuration (RRP)**

  SCARA (stands for selective complaint articulated robotic assembly) mainly consist of two revolute and one prismatic joint which are parallel to each other.

1.7 Characteristics of Robot

Following table characteristics of robot

Workspace	Workspace define total volume covered by manipulator
Payload	How much weight manipulator can pick is represent by payload.
Controller Resolution	The smallest increment that controller can sense
Precision	How many times manipulator achieve same position is represented by precision.
Accuracy	Accuracy deal how much manipulator close to exact position
Repeatability	Repeatability deal how much manipulator reach to same position after repeating process.

CHAPTER 2

MECHANICAL DESIGN

Mechanical Design can be introduce as the procedure through which resources or energy is transformed into suitable mechanical forms, or the mechanism which provide useful actions as per the requirements of users/human beings. Mechanical design provide establishment of the completely new machine or it can lead to up-grade or enhancement of the current machines.

It's desired to design 6 DOF robotic manipulator which carry fragile object from one place to desired place. Articulated + spherical manipulator is selected for said purpose because it's mostly used in industry. Using CAD software's for analyze forces/torque that how much torque/forces is required at each joint to move manipulator and to find stresses that how much each element can bear without deflection or damaging.

2.1 SolidWorks Design

Robotic Manipulators mainly consist of an assembly of joints and links. Joints can be defined as the connection between two links while links can be defined as the rigid segments that construct the mechanism. End-effector is a device which interact with the environment. Free body diagram as shown in figure 1.

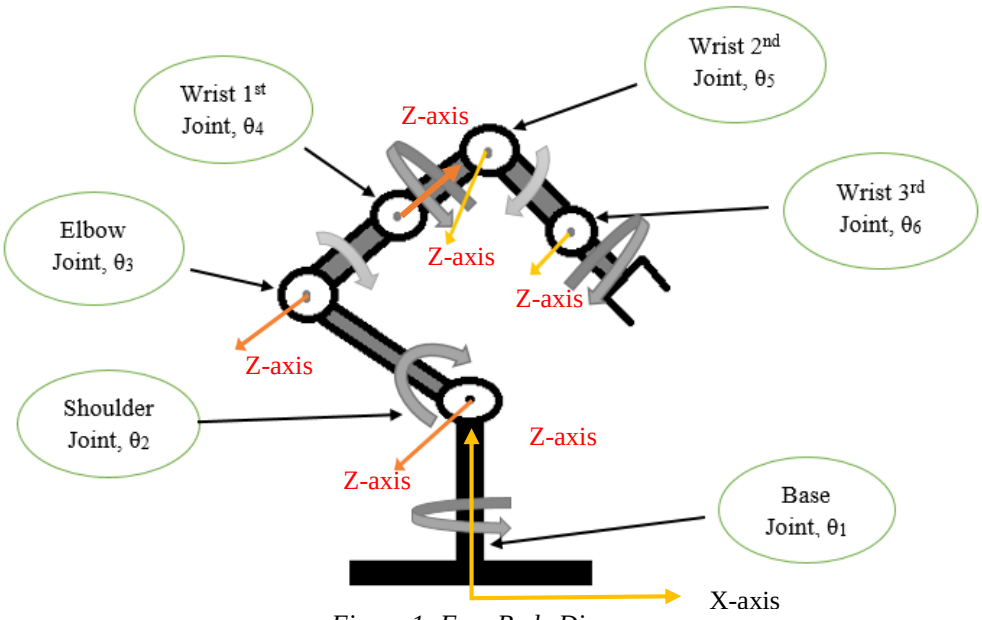

Figure 1: Free Body Diagram

Multiple CAD software are available for designing, solid works is preferred for designing manipulator. Solid works allow a numerous features to design and calculate important parameters.

- **Six DOF Manipulator CAD Model**

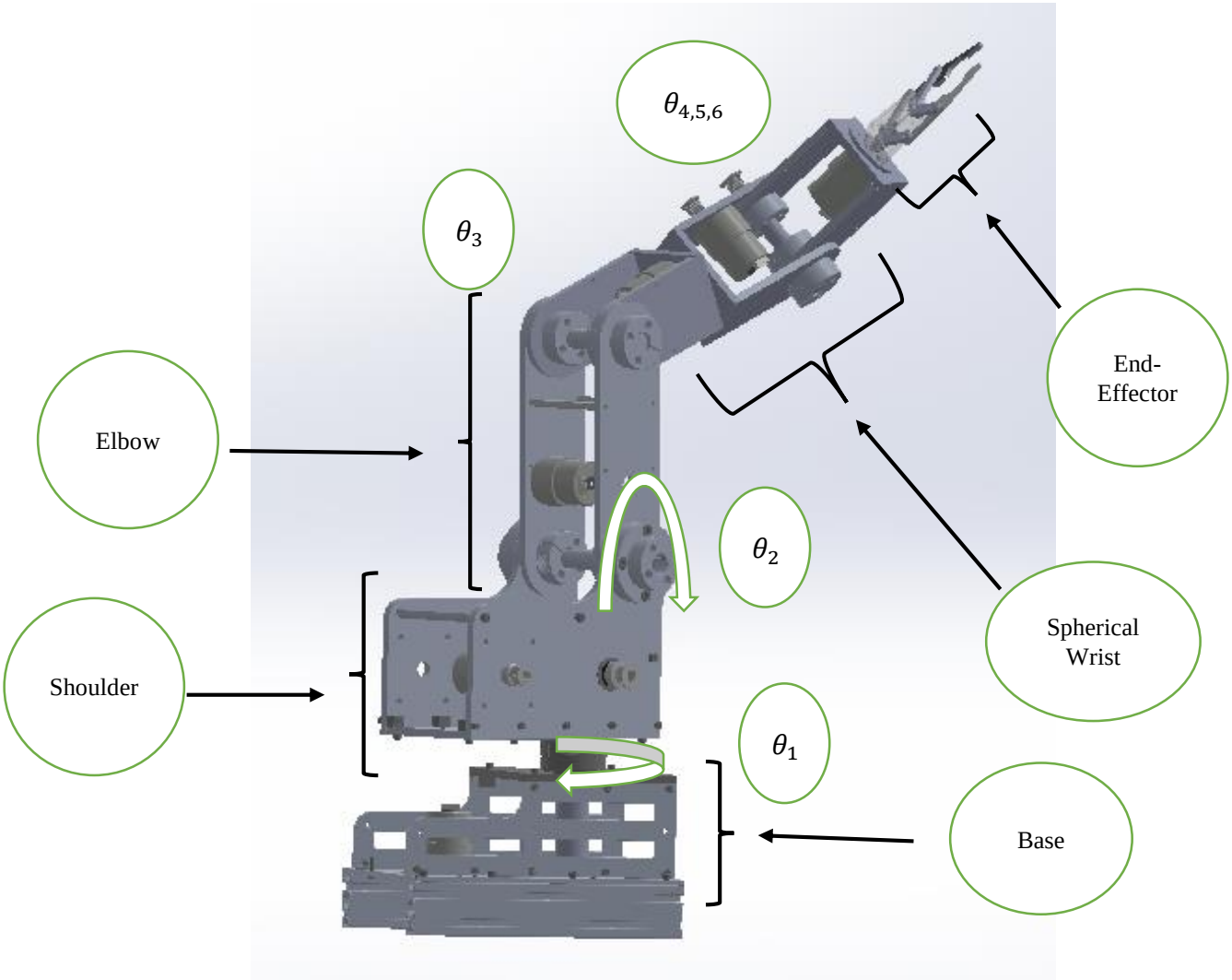

Figure 2: Complete CAD Model

- **Base CAD Model**

Figure 1 represent base model of our project. Belt-pulley is used for rotation transmission. Because to increase motor torque as well as direct coupling of motor is not favorable.

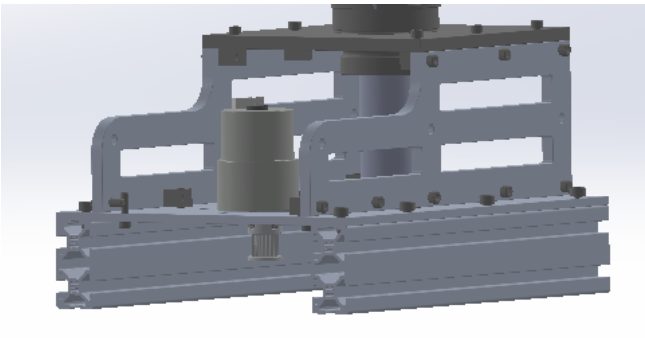

Figure 3: Base CAD Model

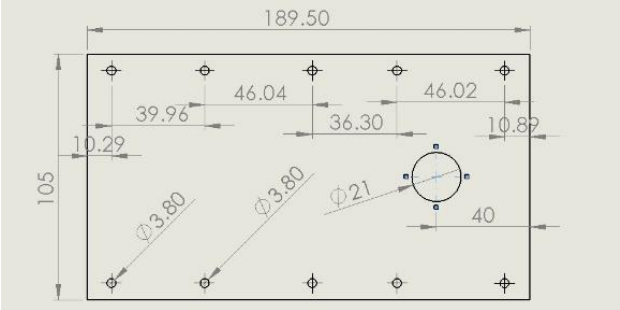

Figure 4: Bottom Drawing

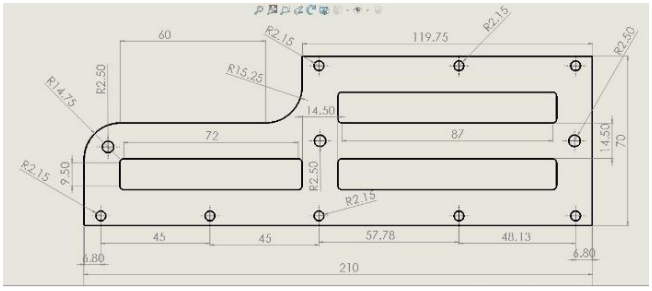

Figure 5: Base Side Part Drawing

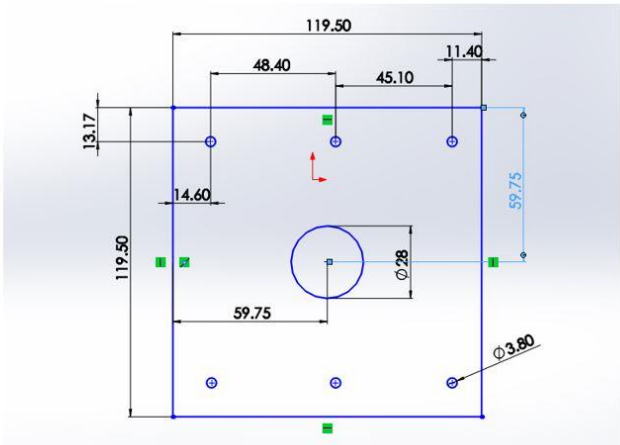

Figure 6: Top Plate of base

- **Shoulder CAD Model**

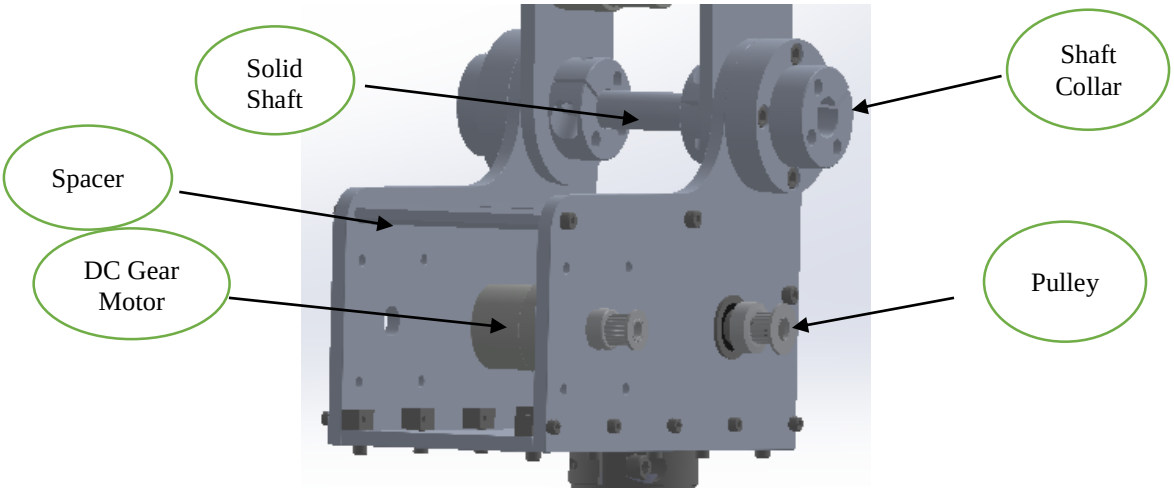

Figure 7: Shoulder Motor Pulley mechanism

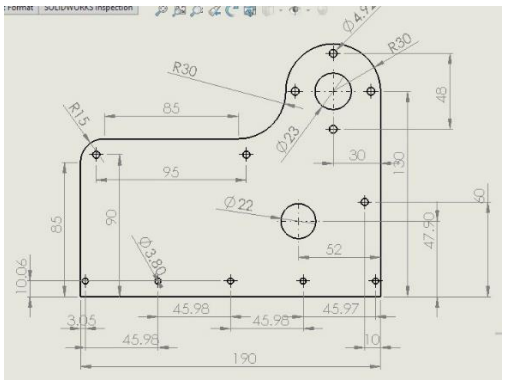

Figure 8: Shoulder Side Part Drawing

- **Elbow CAD Model**

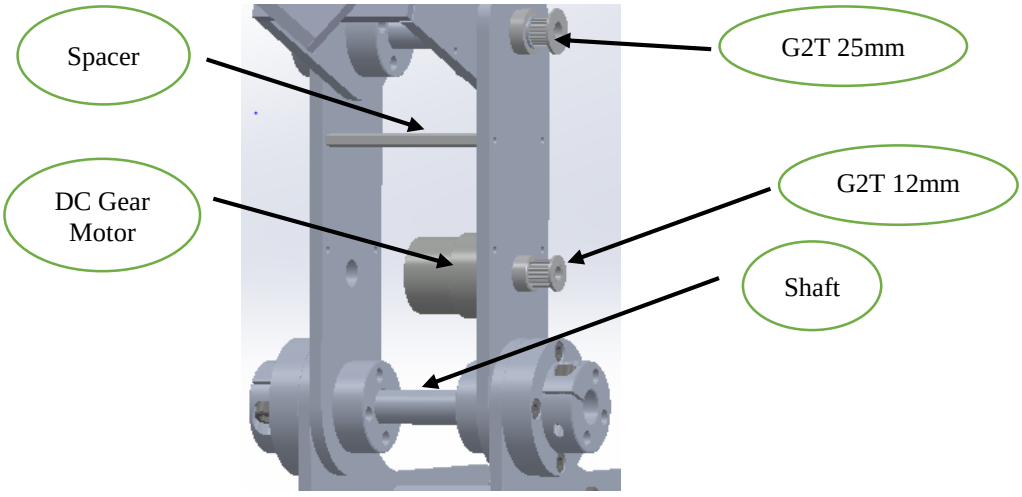

Figure 9: Elbow CAD Model

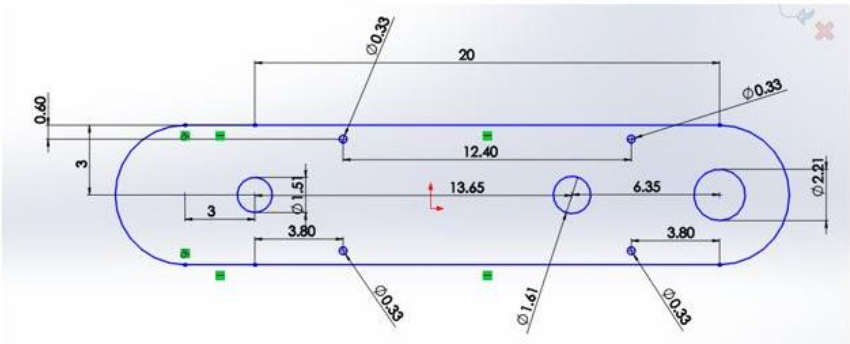

Figure 10: Elbow Part Drawing

- **Spherical Wrist CAD Model**

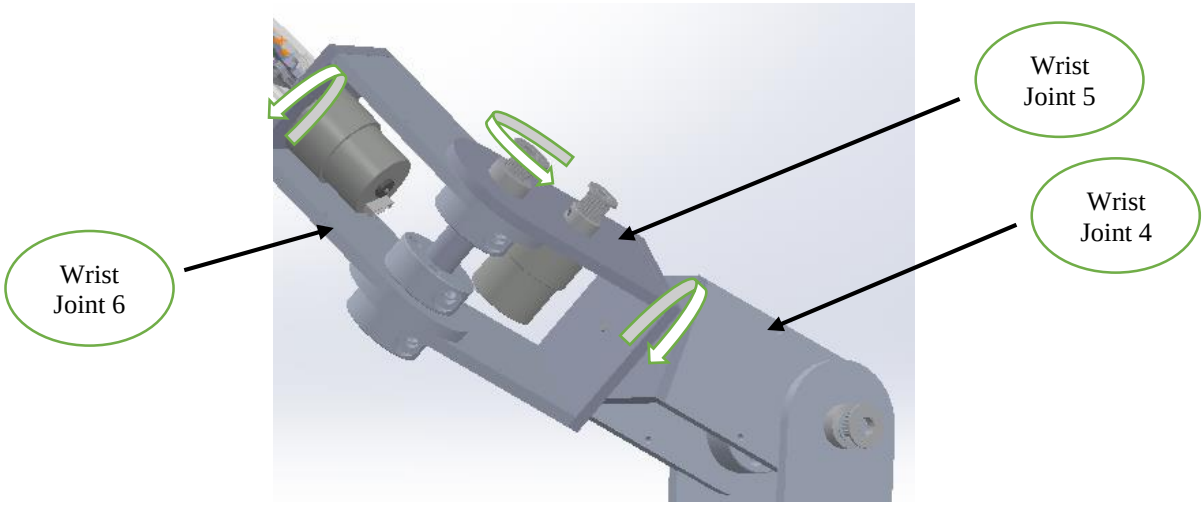

Figure 11: Spherical Wrist CAD Model

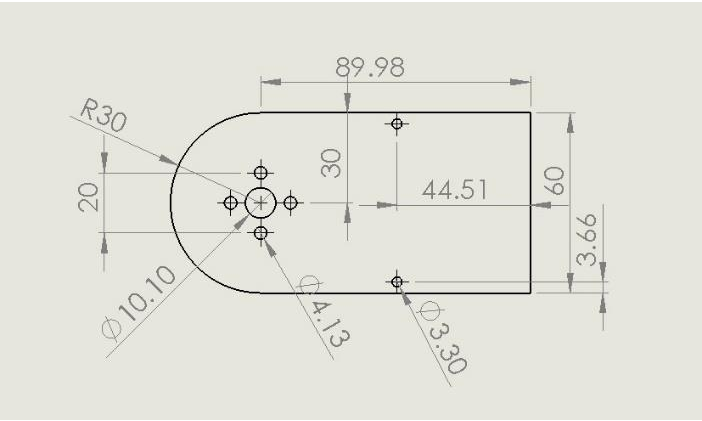

Figure 12: Wrist Part Drawing

- **End-effector CAD Model**

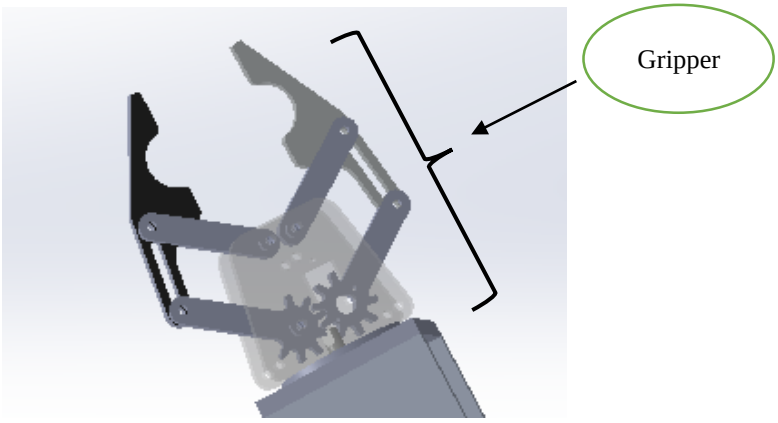

Figure 13: End-Effector

- **Actual Picture of Robotic Manipulator**

Figure 14: Actual Picture of Manipulator

2.1.1 Joints Angle

The angle of joint i (i = 1, 2..., 6), θ_i, is measured about the z axis associated with the given joint using the right-hand rule. Note that the direction of rotation for each joint is indicated on the robot's body. The mechanical limits of the robot's joints are as follows:

$$\boldsymbol{-45 < \theta_1 < +45} \qquad \boldsymbol{0 < \theta_2 < +80}$$

$$\boldsymbol{0 < \theta_3 < +60} \qquad -90 < \theta_4 < +90$$

$$\boldsymbol{-90 < \theta_5 < +90} \qquad -90 < \theta_6 < +90$$

2.2 Motion Transmission

Timing belt-pulley is used for motion transmission. Also for increasing motor torque it's favorable. Gt2 (2mm Pitch) belt is used for actuators mounted on elbow, base and wrist because load effect is low as compared to shoulder. Gt3 belt (3mm Pitch) is used for shoulder transmission due to load capacity on shoulder motor is greater than remaining actuators.

G3T: Ratio is **1: 3.57**

G2T: Ratio is **1:2.08**

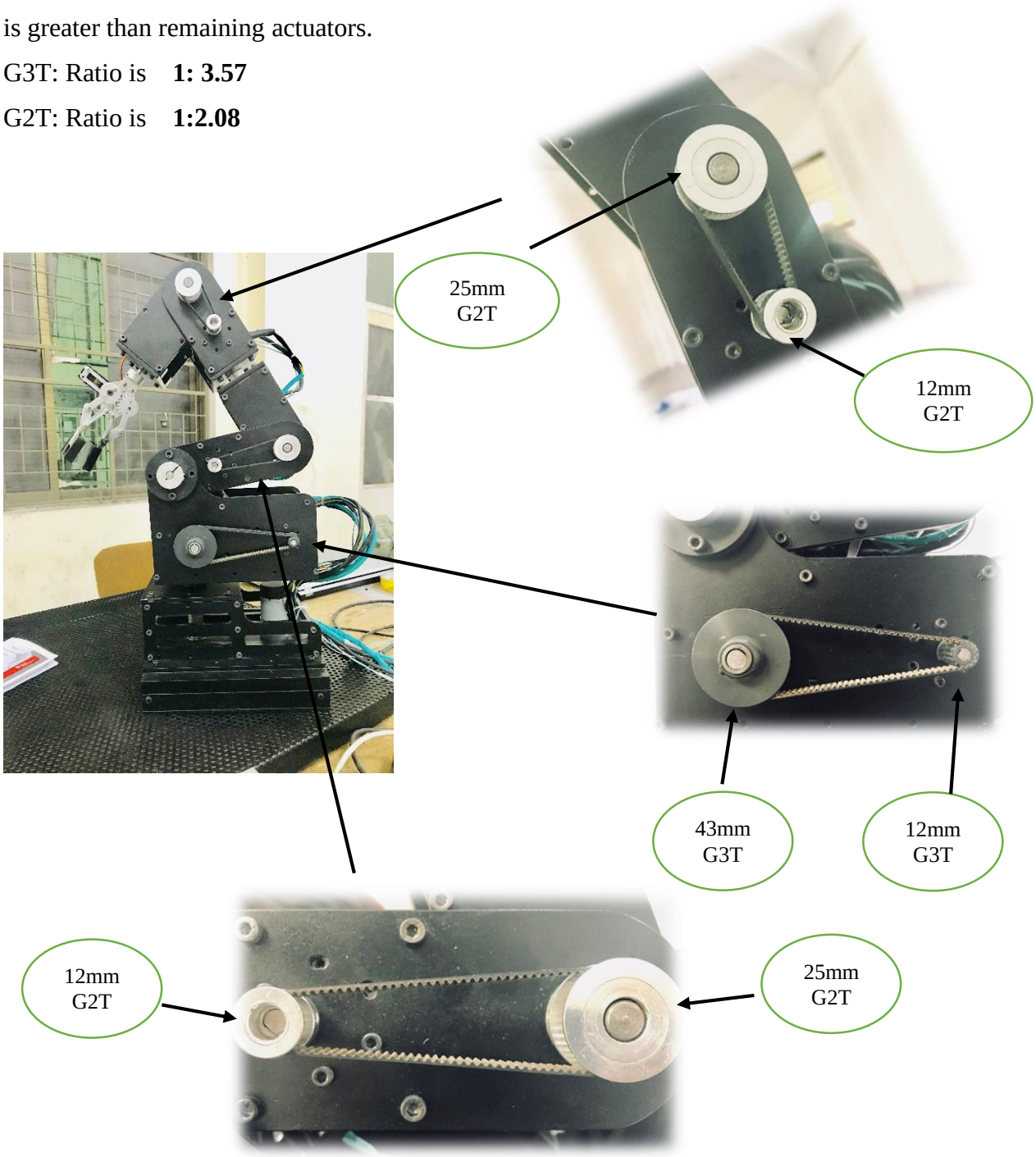

Figure 15: G2T and G3T Belt-Pulley mounted on Motor

2.3 Material Selection

In the process of designing any equipment or any physical object, material selection is an important consideration. During product designing, main goal of selection is on the basis of minimal cost while achieving desired strength goal. Various materials are available but aluminum is preferable for manipulator because it have following useful specification

- **Density**

  As compared to steel or copper, aluminum have a density around 1/3. Aluminum have high strength to weight ratio make it more suitable for structural material.

- **Strength**

  Pure aluminum doesn't have sufficient strength but combination of elements with aluminum makes it a high strength alloy. As compared to steel, at low temperature steel become brittle while aluminum is well suited for such environment.

- **Corrosion Resistance**

  Aluminum show inert behavior when exposed to air due to layer of oxide.

- **Thermal Conductivity**

  As compared to steel, thermal conductivity of aluminum is about three times greater than of steel.

CHAPTER 3

KINEMATICS AND DYNAMICS OF MANIPULATOR

Kinematics is the branch of science that examines the movement of manipulator links without regard to the forces that cause it. In that case the motion is determined with trajectory, i.e. position, velocity, acceleration, jerk and additional higher derivative terms.

Dynamics deals the relation between the applied forces/torques and the resulting motion of an industrial manipulator.

3.1 Forward Kinematics

Forward kinematics deal with the problem of finding end-effector pose (position + orientation) with given joints variables. There are two method used for solving forward kinematics.

- Homogenous transformation
- Denavit–Hartenberg Representation

Most commonly method used for solving forward kinematics is DH transformation which based on four parameter

α	*alpha is a twist angle between current z-axis and previous z-axis*
θ	*Amount of rotation around the current z-axis needed to align the previous x-axis with the current x-axis.*
d	*distance along z-axis*
a	*link length which measure between current x-axis and previous x-axis*

Using convention, each homogeneous transformation Ai is represented as a product of four basic transformations matrices

$$Ai = Rot_{z,\theta i} * Trans_{z,di} * Trans_{x,ai} * Rot_{x,\alpha i}$$

$$A_i=\begin{bmatrix} c\theta i & -s\theta i & 0 & 0 \\ s\theta i & c\theta i & 0 & 0 \\ 0 & 0 & 1 & 0 \\ 0 & 0 & 0 & 1 \end{bmatrix}\begin{bmatrix} 1 & 0 & 0 & 0 \\ 0 & 1 & 0 & 0 \\ 0 & 0 & 1 & di \\ 0 & 0 & 0 & 1 \end{bmatrix}\begin{bmatrix} 1 & 0 & 0 & ai \\ 0 & 1 & 0 & 0 \\ 0 & 0 & 1 & 0 \\ 0 & 0 & 0 & 1 \end{bmatrix}\begin{bmatrix} 1 & 0 & 0 & 0 \\ 0 & c\alpha i & -s\alpha i & 0 \\ 0 & s\alpha i & c\alpha i & 0 \\ 0 & 0 & 0 & 1 \end{bmatrix}$$

$$A_i=\begin{bmatrix} c\theta i & -s\theta i c\alpha i & s\alpha i s\theta & aic\theta i \\ s\theta i & c\theta i c\alpha i & -c\theta i s\alpha i & ais\theta i \\ 0 & s\alpha i & c\alpha i & di \\ 0 & 0 & 0 & 1 \end{bmatrix}$$ general form of DH matrices

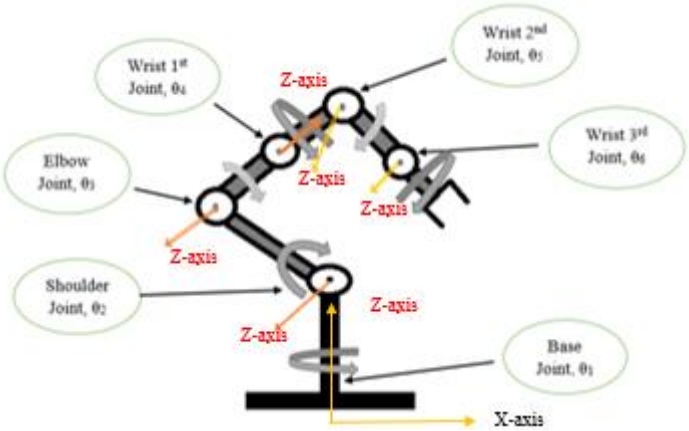

Figure 16: Free Body Diagram

- **D-H Table**

Table 3-1: DH Parameter Table

Link Number	Alpha (α)	Link length(a)	Joint offset (d)	Theta(θ)	Offset
1	pi/2	0	10	*	0
2	0	6	0	*	Pi/1.09
3	-pi/2	0	0	*	-7pi/6
4	pi/2	0	6	*	0
5	-pi/2	0	0	*	-pi/1.6
6	0	0	6	*	0

Orientation Matrix

$$T=\begin{bmatrix} r_{11} & r_{12} & r_{13} & r_{14} \\ r_{21} & r_{22} & r_{23} & r_{24} \\ r_{31} & r_{32} & r_{33} & r_{34} \\ r_{41} & r_{42} & r_{43} & r_{44} \end{bmatrix}$$

Translation vector

Transformation matrix are represented in appendix A

3.1.1 Workspace

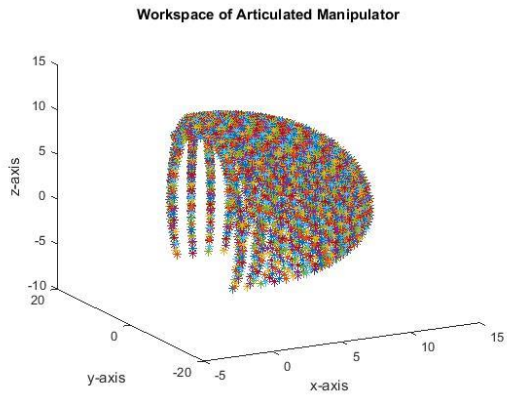

Figure 17: Workspace Front View (Units inch)

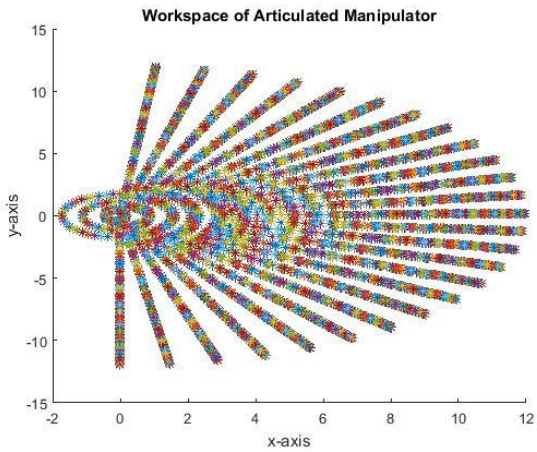

Figure 18: Workspace X-Y view (Unit inch)

3.2 Inverse Kinematics

Inverse kinematics deals the problem of finding joints variable given end-effector pose. For six DOF we decouple manipulator into two parts

- Inverse Position
- Inverse Orientation

Inverse position kinematics deals with the finding 1st three joints while rest of three (spherical wrist joint) deal by inverse orientation. Inverse position kinematics and orientation are mathematically solved in Appendix D

3.3 Velocity Jacobain

Jacobain matrix help in find out relationship between linear and angular velocity of end effector to joints velocity. From forward kinematics equations, partial derivative of x and y with respect to q1 and q2 yield matrix called Jacobain matrix. The jacobain is a matrix that is a function of joint position that linearly relate joint velocity to tool point velocity. Jacobian matrix is represented by notation J

$$\begin{bmatrix} v \\ \omega \end{bmatrix} = J(q_1, q_2, \dots \dots, q_n) \begin{bmatrix} q_1 \\ q_2 \\ \vdots \\ q_n \end{bmatrix}$$

$$v = linear\ velocity$$

$$\omega = angular\ velocity$$

Prismatic joint contribute only linear velocity to end-effector while revolute joint contribute both linear as well as angular velocity to end-effector. Velocity jacobian calculation are represent in Appendix F

3.4 Singularities

Singular configurations of a manipulator can be determined by using jacobain matrix. A configuration in which manipulator lose one or more degree of freedom is said to be singular configuration. There are many solutions to avoid singularity, for example to design manipulator in such a way that end-effector cannot pass through these points which leads to singular configuration. It can also be compensated by defining specific variable through programming.

Singularity of 6 DOF can by find out by decoupling it into two portion, first three joints and spherical wrist joints.

$$J = \begin{bmatrix} J_A & J_w \end{bmatrix} = \begin{bmatrix} J_{11} & J_{12} \\ J_{21} & J_{22} \end{bmatrix} = \begin{bmatrix} J_{11} & 0 \\ J_{21} & J_{22} \end{bmatrix}$$

In case of spherical wrist, due to revolute joint, linear velocity J_v (J_{11}) term is zero. So arm singularity can be calculated using relation

$$\det(J_{11}) = 0$$

While for wrist singularity use relation

$$\det(J_{22}) = 0$$

For derivation, see Appendix G

Singular configuration is avoided by defining specific angle. For first three joints, we define zero angle and as same defined for spherical wrist.

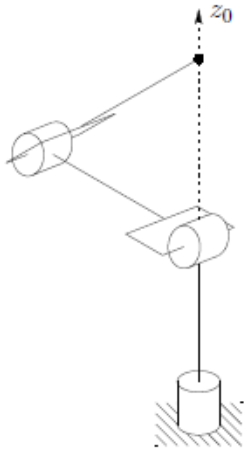

Figure 19: Singular Configuration

CHAPTER 4

HARDWARE AND SOFTWARE MODULES

This chapter deal with the discussion of important hardware and software modules used in designing and controlling of our manipulator. Main hardware components used in project are

- Controller
- Actuators
- Sensors

It's a software program that permits hardware to interconnect and control with the computer software. Software used in this project are

- Code Composer Studio
- MATLAB
- Visual Studio

4.1 Tiva C Launchpad Controller

Multiple controllers are available in market for said purpose. Tiva-C tm4c123gxl Launch Pads is preferable which are inexpensive self-contained, single-board microcontrollers, featuring an ARM Cortex-M4F 32-bit CPU operating at 80 to 120 MHz, manufactured by Texas Instruments. Stated micro-controller contain two encoder modules and 16 PWM pins. There are many editor available like Kiel, eclipse, code composer studio and many more. We choose code composer studio for programming.

Figure 20: Tiva C Launchpad

4.2 Actuators

The projected manipulator uses electromechanical actuators which are suitable for manipulator such as surface finishing, force control applications and application where accuracy is necessary. Six permanent magnet dc motor 12V with incremental encoder is used in project. Three actuators are used for wrist while rest of three for base, shoulder and elbow. Following are the specification of mounted DC gear motor.

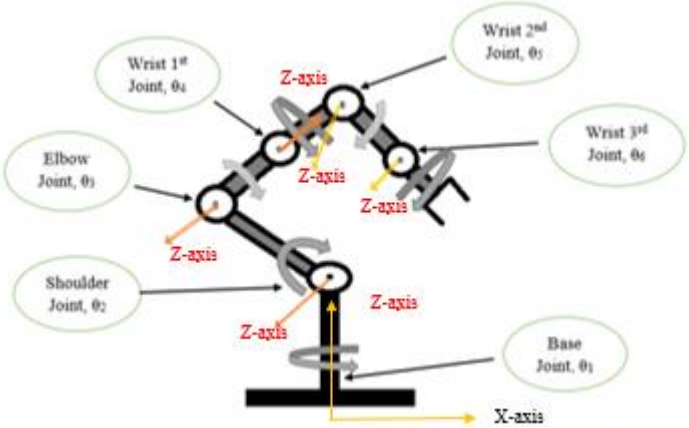

Figure 21: Free Body diagram

Table 4-1: Motor Specifications

Motors	Gear Ratio	Stall Torque (Kg.cm)	Stall Current (A)	RPM	Encoder Resolution (CPR)
Base	43.8:1	12	7	251	32
Shoulder	270:1	80	6	40	32
Elbow	168:1	58	5	80	32
Wrist 1	131:1	18	5	80	32
Wrist 2	100:1	16	5	100	32
Wrist 3	43.8:1	12	7	251	32

Now calculating a factor of each motor to track exact rotation/angle at each end points. Factor is necessary because of using different ratio pulleys for transmission.

- **Base Motor**

Motor Gear ratio = 43.8:1

Pulley ratio = 2.08:1

To find out gear ratio between encoder and shaft, means one revolution of shaft equal to how many revolution of encoder. We perform calculation as

$$43.8 \times 2.08 = 91.104$$

Now we multiply 272.48 with encoder resolution factor which is 32 to calculate total bits

$$91.104 \times 32 = 2915.328\ bits$$

$$360\ degree = 2915.328\ bits$$

$$1\ bit = \frac{360}{2915.328} = \mathbf{0.1234}$$

This factor will multiply with current encoder position to get exact position/angle of shaft.

- **Shoulder Motor**

Motor Gear ratio = 270:1

Pulley ratio = 3.57:1

$$encoder\ and\ shaft\ gear\ ratio = 270 \times 3.57 = 963.9$$

$$963.9 \times 32 = 30844.8\ bits$$

$$360\ degree = 30844.8\ bits$$

$$1\ bit = \frac{360}{30844.8} = \mathbf{0.01167}$$

This factor will multiply with current encoder position to get exact position/angle of shaft.

- **Elbow Motor**

Motor Gear ratio = 168:1

Pulley ratio = 2.08:1

$$encoder\ and\ shaft\ gear\ ratio = 168 \times 2.08 = 349.8$$

$$349.8 \times 32 = 11182.8\ bits$$

$$360\ degree = 11182.8\ bits$$

$$1\ bit = \frac{360}{11182.8} = \mathbf{0.0324}$$

This factor will multiply with current encoder position to get exact position/angle of shaft.

- **First Wrist Motor**

Motor Gear ratio = 131:1

$$131 \times 32 = 4192\ bits$$

$$360\ degree = 4192\ bits$$

$$1\ bit = \frac{360}{4192} = \mathbf{0.08587}$$

This factor will multiply with current encoder position to get exact position/angle of shaft.

- **Second Wrist Motor**

Motor Gear ratio = 100:1

Pulley ratio = 2.08:1

$$encoder\ and\ shaft\ gear\ ratio = 100 \times 2.08 = 208$$

$$208 \times 32 = 6656\ bits$$

$$360\ degree = 6656\ bits$$

$$1\ bit = \frac{360}{6656} = \mathbf{0.0540}$$

This factor will multiply with current encoder position to get exact position/angle of shaft.

- **Third Wrist Motor**

Motor Gear ratio = 43.8:1

$$43.8 \times 32 = 1401.6\ bits$$

$$360\ degree = 1401.6\ bits$$

$$1\ bit = \frac{360}{1401.6} = \mathbf{0.2568}$$

This factor will multiply with current encoder position to get exact position/angle of shaft

4.3 Sensors

DC gear motor is used with built in incremental encoder which generate pulse for each incremental step of motor rotation. Two channel or quadrature type encoder is used which detect direction of rotation as well. These encoder serve as a feedback for position information. Resolution of each encoder is 32 CPR.

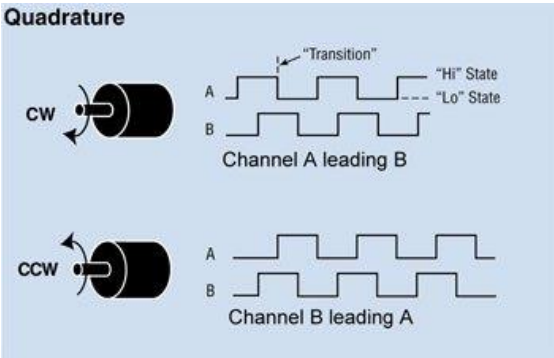

Figure 22: Quadrature Encoder

Limit switches is used for protecting mechanical damaging, stop manipulator at home position as power ON and protect the manipulator to move outside from its workspace. Force sensor is used for detecting applied gripping force to pick fragile object and move to desired location.

Figure 24: Force Sensor

Figure 23: Limit Switch

4.4 Motor Driver

Motor driver is used for controlling motor direction as well as speed. L298 driver is widely used for controlling DC motor. See appendix for datasheet of L298 driver.

- Operating supply voltage up to 40 V
- Dc current up to 4 A
- Over temperature protection
- High noise immunity

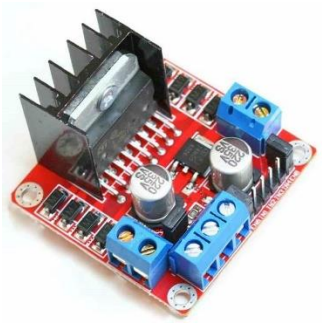

Figure 25: L298 Motor Driver

4.5 MATLAB

MATLAB has a various advantages in field of engineering. It provide multiple toolbox to simulate or implementation various problems. For stated purpose we used following toolbox

- PID Tuner
- System identification Toolbox
- SISO Toolbox

PID tuner is used for calculating PID parameters values, system identification toolbox is used for finding unknown transfer function of DC gear motor and SISO toolbox is also used for plot bode, step response of our system.

4.6 Visual Studio

Basic purpose of using visual studio IDE is for window application and it is best suitable for C++ coding environment. Here VS is used for graphical user interface (GUI) to communicate data with controller through serial communication. Following figure represent GUI

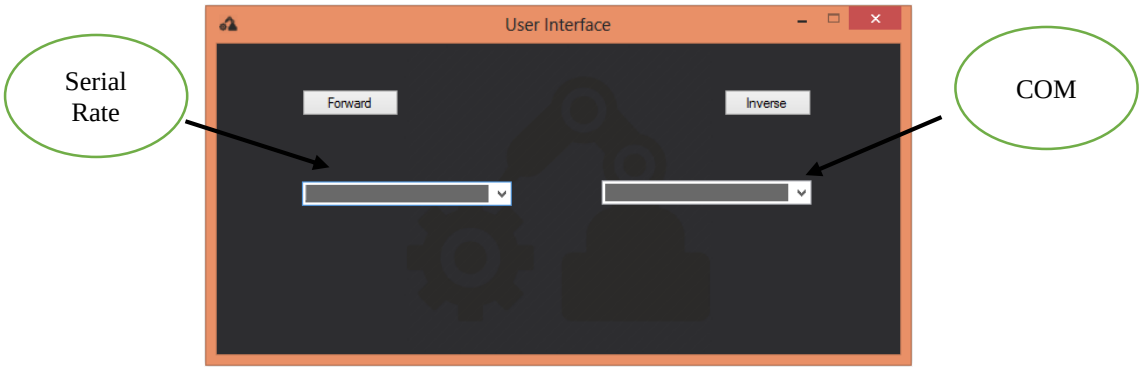

Figure 26: GUI

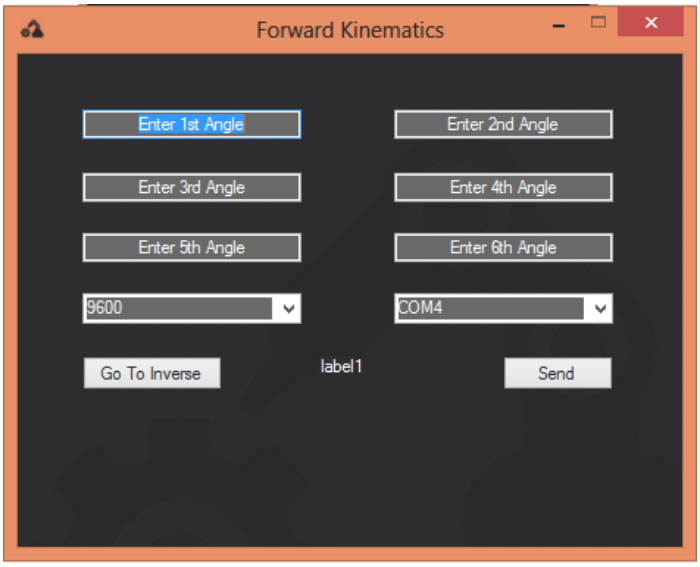

Figure 27: Forward Kinematics Window

Figure 28: Inverse Kinematics Window

4.7 Code Composer Studio

Code composer studio is best IDE for Texas instruments. Like visual studio it provide multiple features which makes programs easily understandable. Most useful feature of CCS is to provide Debug mode thorough which we can easily observe variables variation. PID parameter can be easily tune. Following graph shown main environment of CCS

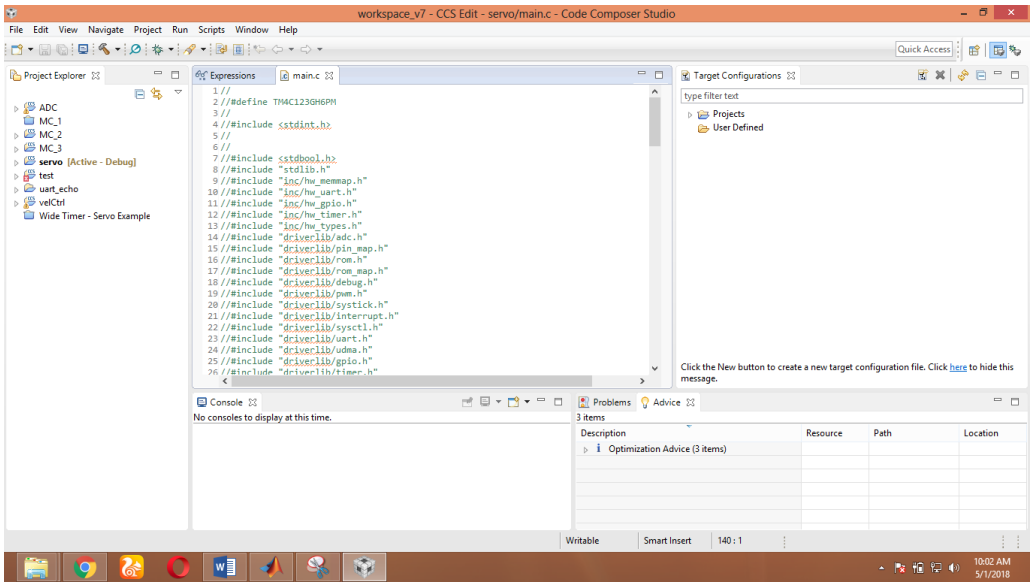

Figure 29: CCS Environment

4.8 Circuit Diagram

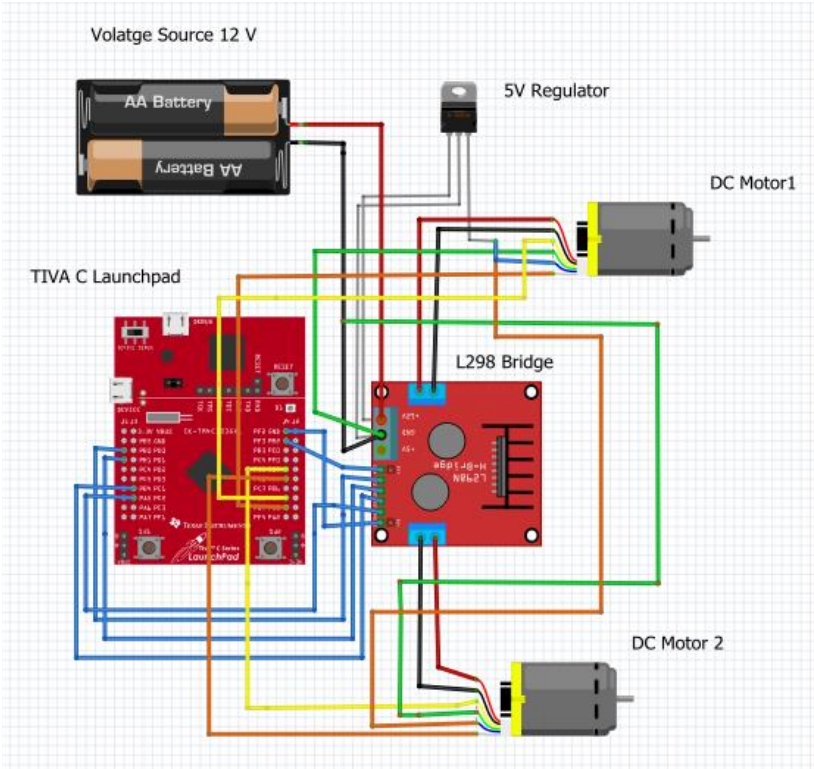

Figure 30: Circuit Diagram

4.1.8 Schematics Diagram

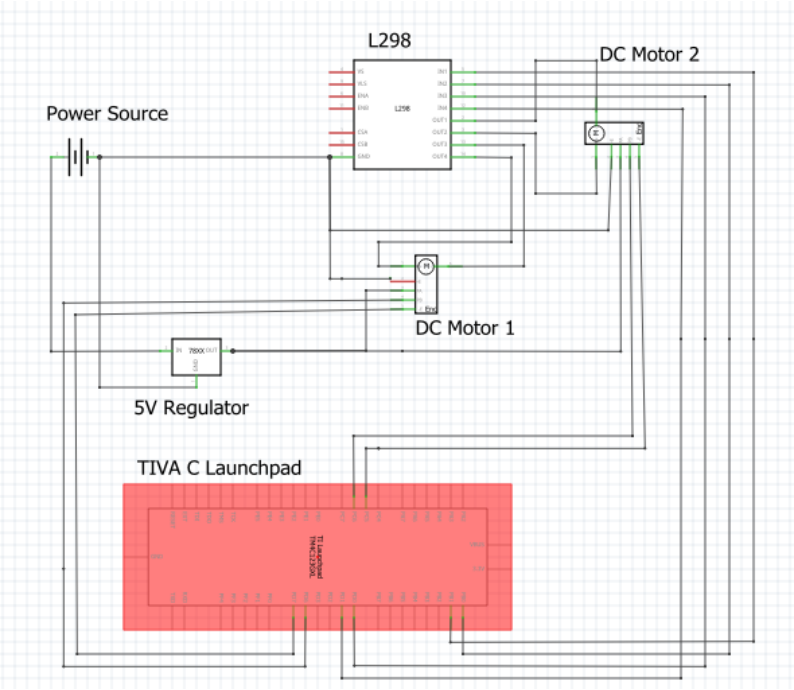

Figure 31: Schematic Diagram

Connection Between Micro-controllers for communication are given as

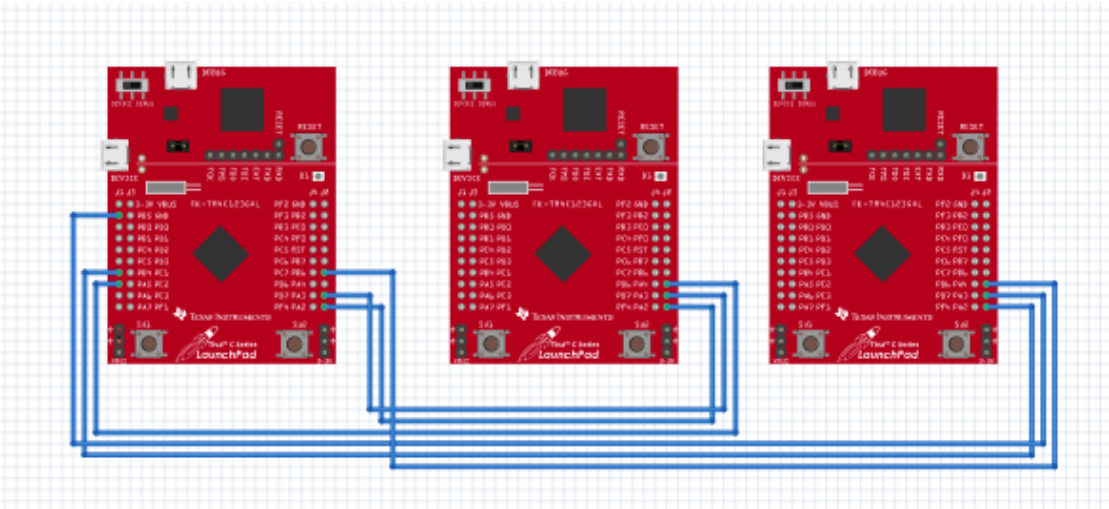

Figure 32: Controller Connections

CHAPTER 5

SIMULATION AND HARDWARE IMPLEMENTATION

This chapter deal with the interfacing hardware modules explained in chapter 5 with software modules explained in chapter 6. PID controller is used for position control of dc motor. DC motor transfer function is identified using MATLAB system identification toolbox and then find out PID parameters using PID Tuner in MATLAB.

General Block Diagram

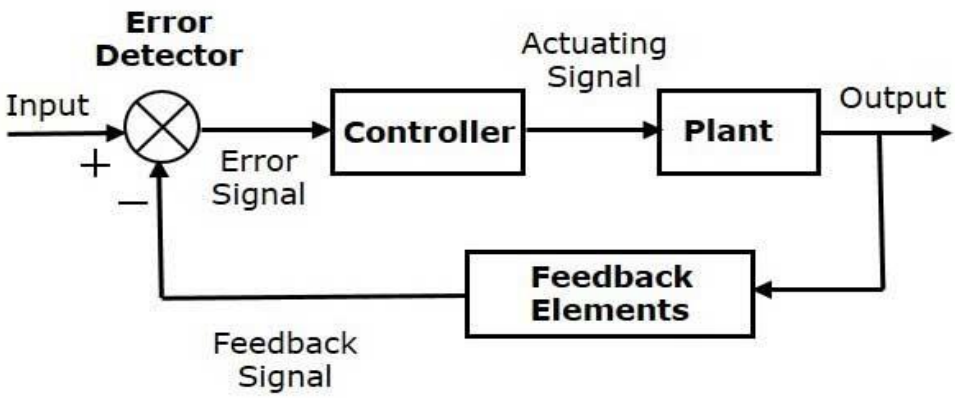

Figure 33: General Block Diagram

Controller maybe of any type for example PID, FOPID, Lead/lag compensator, digital controller. But PID controller is preferable in project because its simplicity, simple algorithm.

Here plant show DC motor which is represented by transfer function. DC motor transfer function can be find out using different technique. Next section explain method that how it can find unknown motor transfer function.

5.1 DC Motor Transfer Function

Simple experiment is performed by applying various input voltage and check output rpm using tachometer (A device used for measuring rpm). By finding input/output relation provide 100 sample data.

System identification toolbox require two type of data, estimation data and validation data. Prior data used for finding transfer function while validation data used for verification. MATLAB Code are shown in Appendix B

System Identification of Motor Using MATLAB Toolbox

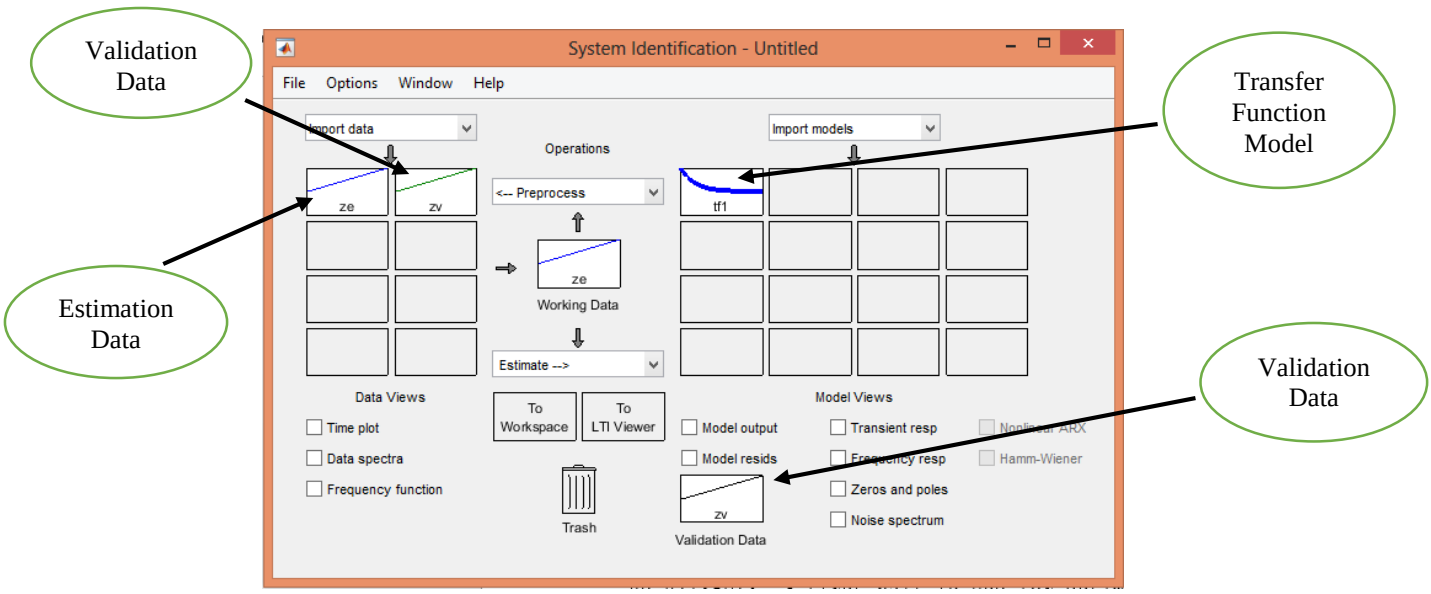

Figure 34: System Identification Toolbox

First Wrist Motor Transfer Function

By right click on transfer function model as shown in figure 29, we get TF as

$$Transfer_Function = \frac{144s + 72.35}{s^2 + 16.04s + 8.052}$$

Step Response

Step response of transfer function is shown in figure 30

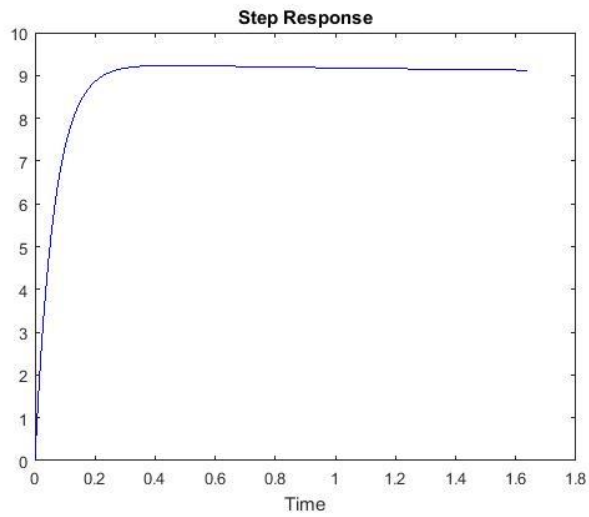

Figure 35: Step response

5.1.1 PID Tuning using MATLAB

By implementing PID Controller, following results obtain as shown in figure 22.

Step involved in implementing PID are as follow

- Import plant transfer function
- Select PID type
- Adjust response time
- Adjust transient response

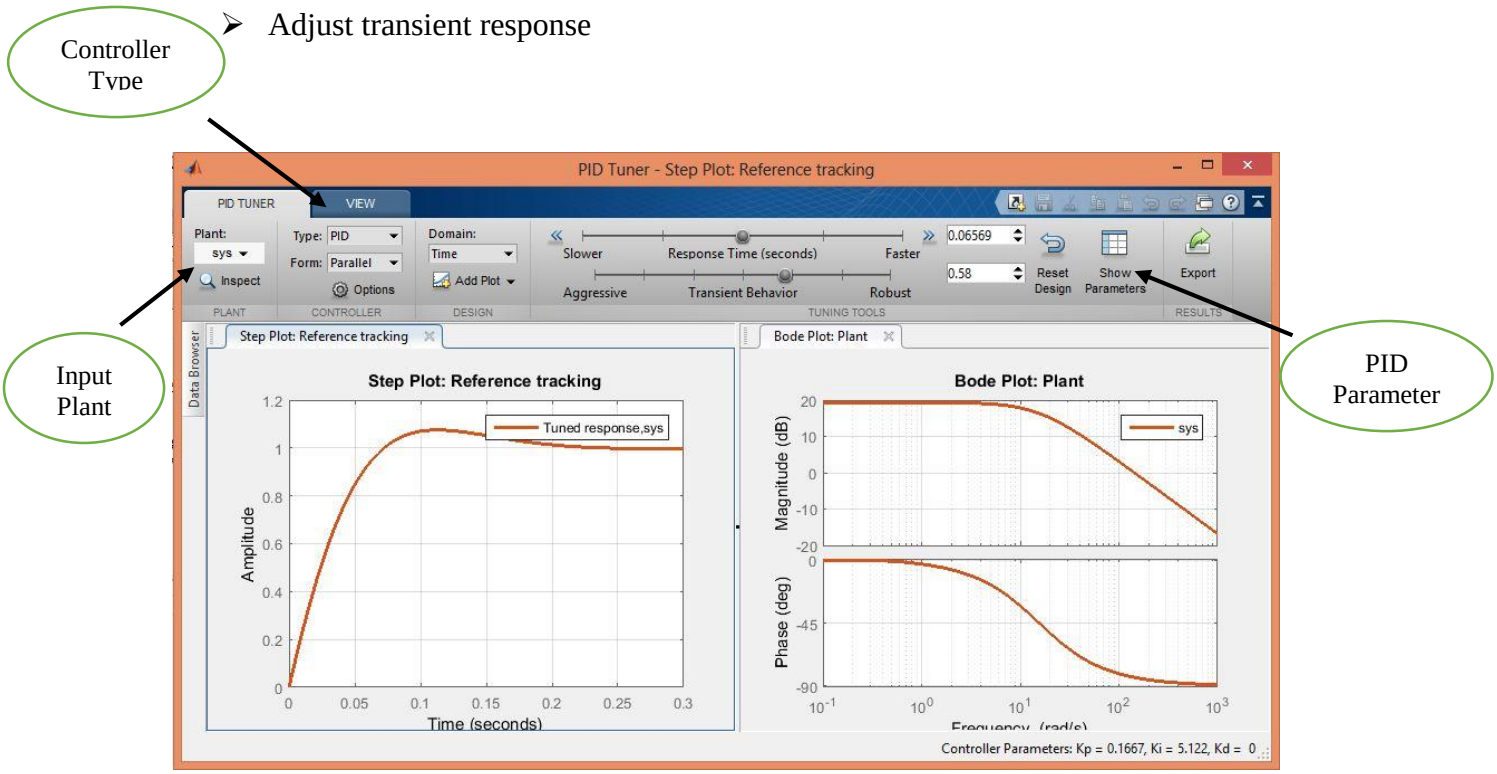

Figure 36: PID Tuner

LHS plot show step response of controlled system while RHS show bode plot of controlled system. Comparing step response of a system using PID and without using PID. The difference can be observed by comparing figure 30 and 31.

$$(Plant * PID_controller)_transfer_Function = \frac{8.409\times10^{4}\,s^{2} + 2.599\times10^{6}\,s + 1.282\times10^{6}}{s^{4} + 3496s^{3} + 5.583\times10^{4}\,s^{2} + 2.802\times10^{4}s}$$

$$Colsedloop_transfer_function = \frac{8.409\times10^{6}s^{2} + 2.599\times10^{6}s + 1.282\times10^{6}}{s^{4} + 3496s^{3} + 1.399\times10^{5}\,s^{2} + 2.627\times10^{6}\,s + 1.282\times10^{6}}$$

Closed loop TF Step Response and Bode Plot

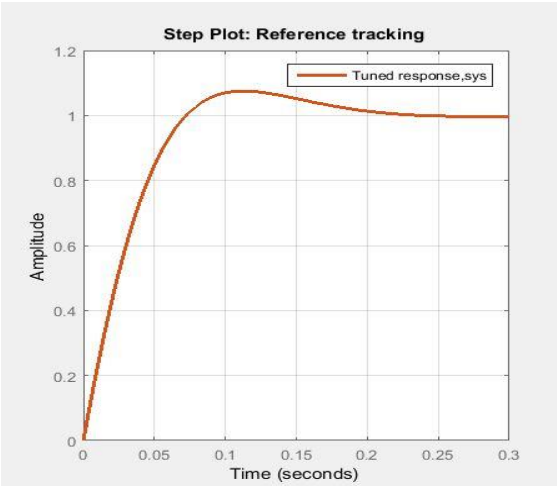

Figure 38: Step Response

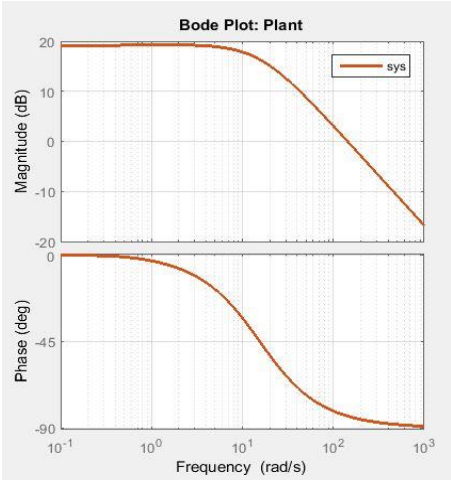

Figure 37: Bode Plot

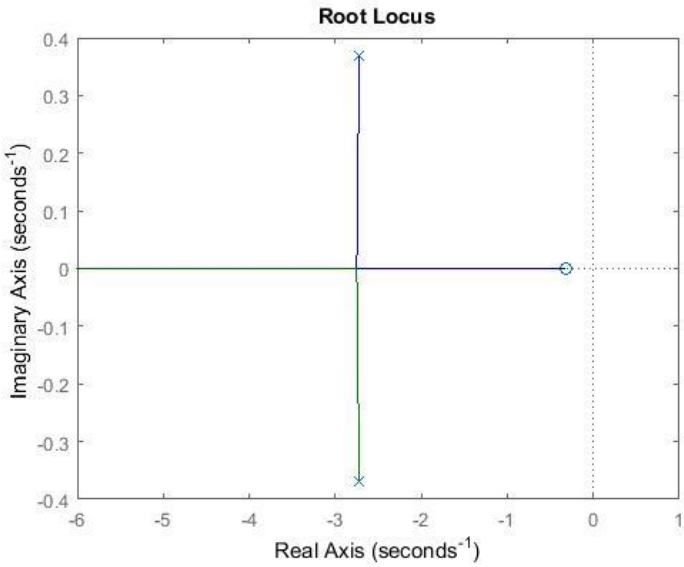

Figure 39: Root Locus of Motor

5.2.1 PID Controller Implementation

PID controller is used to implement position control of DC motor. The main algorithm of PID are represented in appendix C. Following table show PID parameters values of six motors.

Table 5-1: PID Parameters Values

Motor	Kp	Kd	Ki
Base Motor	100	400	0.00001
Shoulder Motor	120	550	0.00006
Elbow Motor	78	289	0.0009
Wrist 1 Motor	144	362	0.008
Wrist 2 Motor	206	199	0.0007
Wrist 3 Motor	165	183	0.0054

As graph show step response and bode plot for wrist 1st motor, similarly now plot step response, bode and root locus of each motor as shown below. MATLAB code are shown in Appendix D

- **Base Motor**

$$Transfer_Function = \frac{100s + 45.65}{12s^2 + 22.25s + 65.091}$$

From Table knowing kp, ki, kd values. Step response, bode plot and root locus are shown below

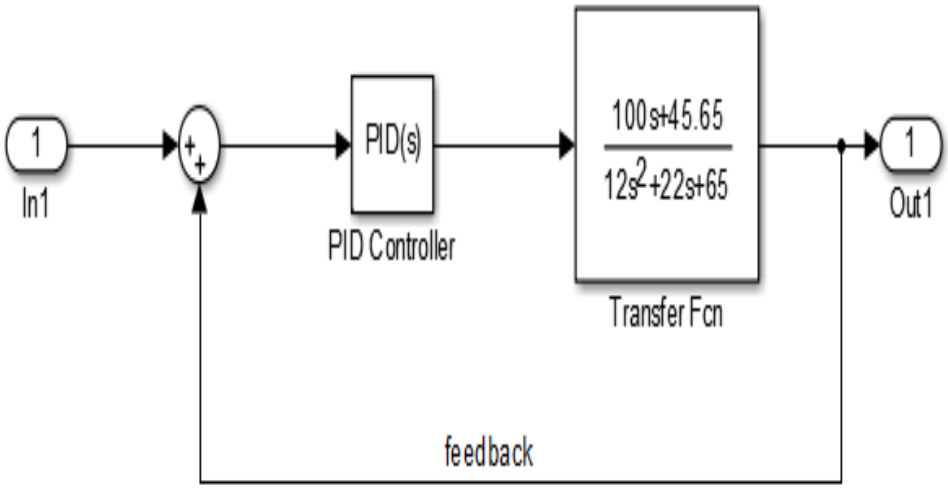

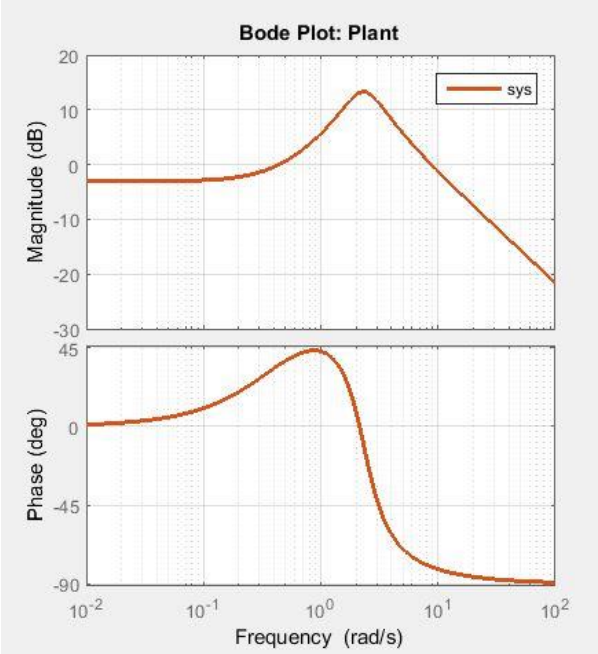

Figure 41: Bode Plot of Base Joint Motor

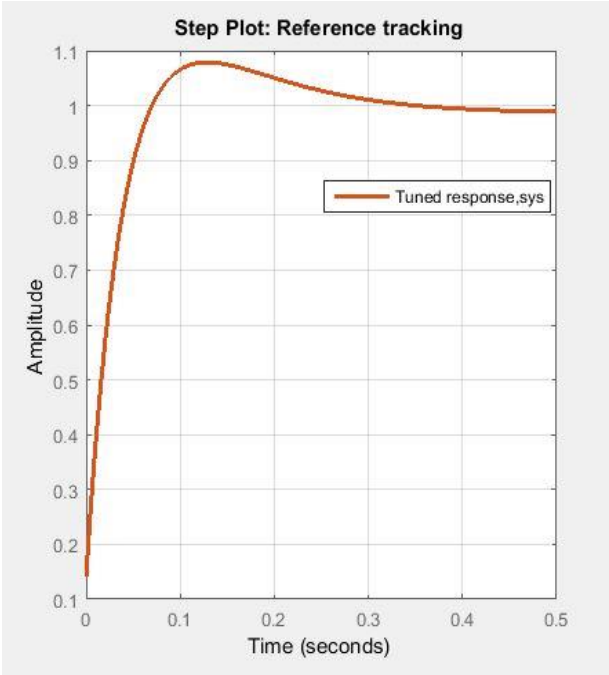

Figure 40: Step Response of Base Joint Motor

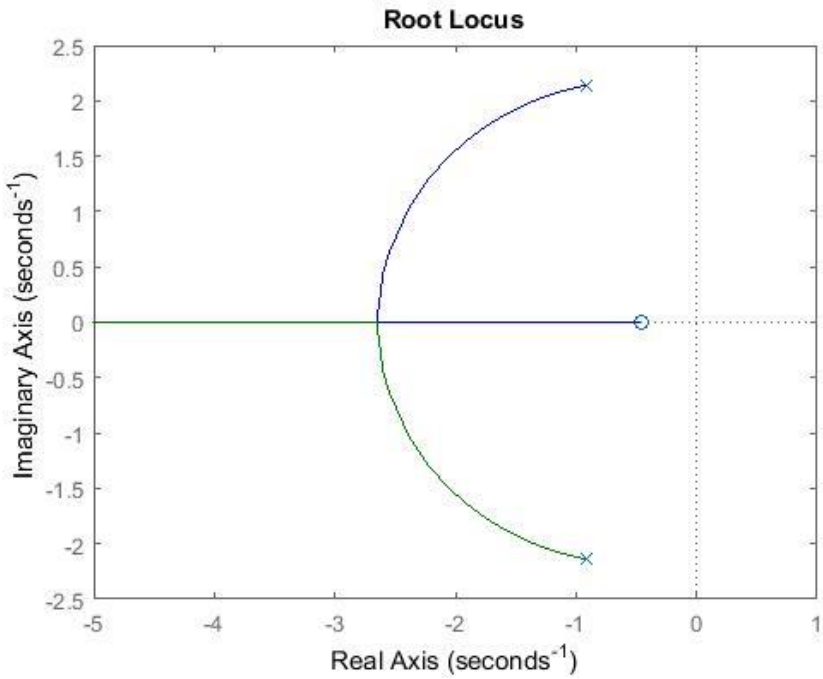

Figure 42: Root Locus of Base Joint Motor

- **Shoulder Motor**

$$Transfer_Function = \frac{75s + 58.65}{s^2 + 14.29s + 78.091}$$

From Table knowing kp, ki, kd values. Step response, bode plot and root locus are shown below

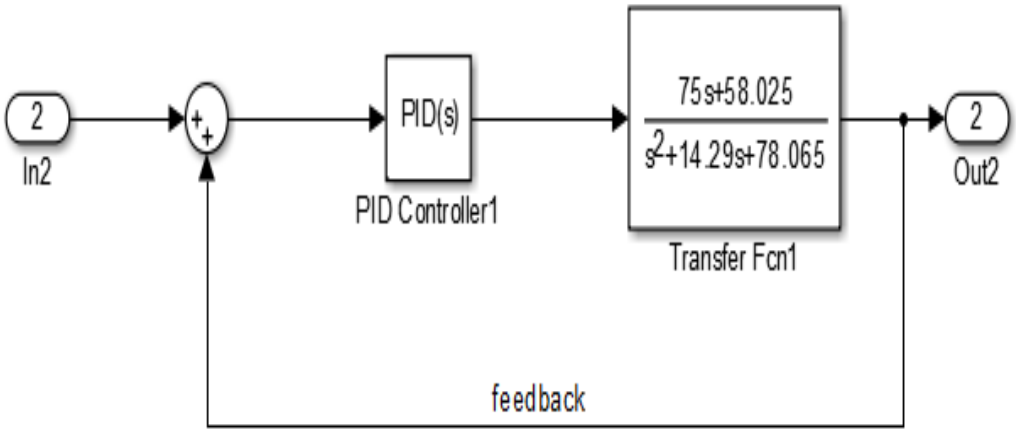

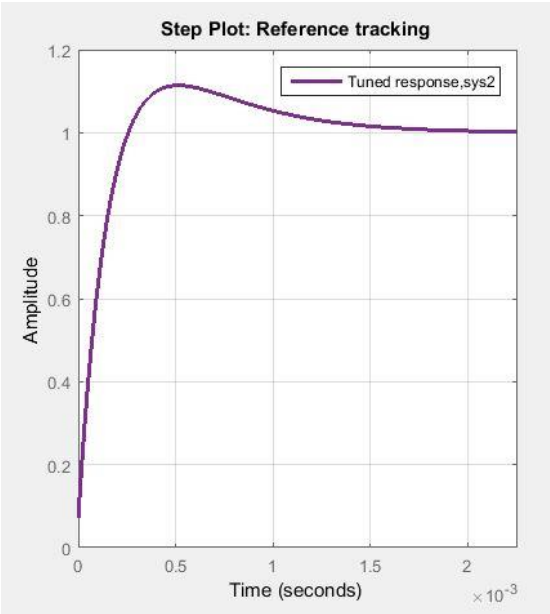

Figure 44: Step Response of Shoulder Joint Motor

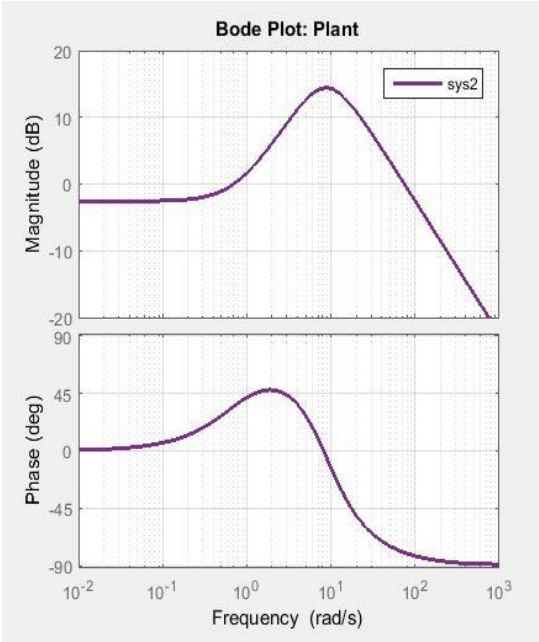

Figure 43: Bode Plot of Shoulder Joint Motor

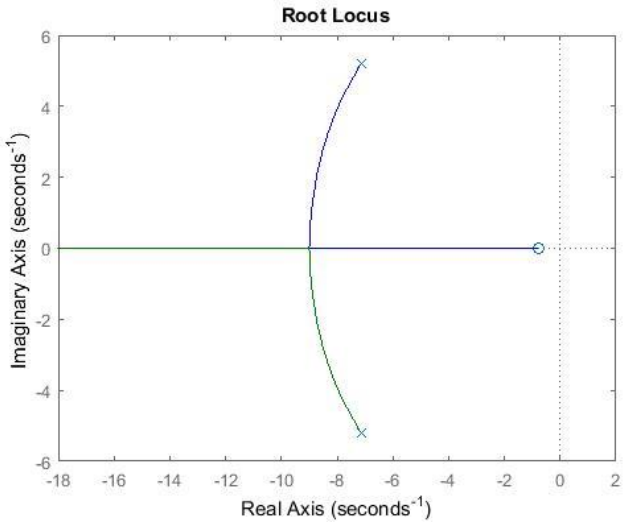

Figure 45: Root Locus of Shoulder Joint Motor

- **Elbow Motor**

$$Transfer_Function = \frac{13s + 12.65}{10.25s^2 + 12.25s + 8.091}$$

From Table knowing kp, ki, kd values. Step response, bode plot and root locus are shown below

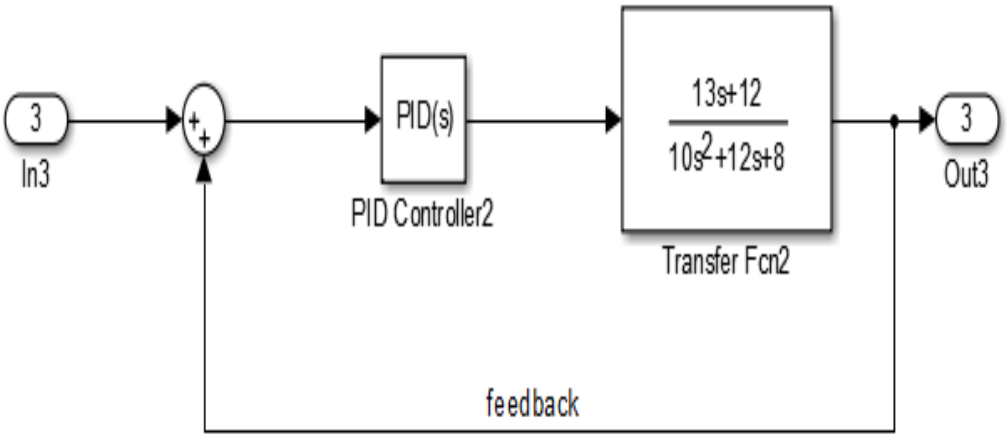

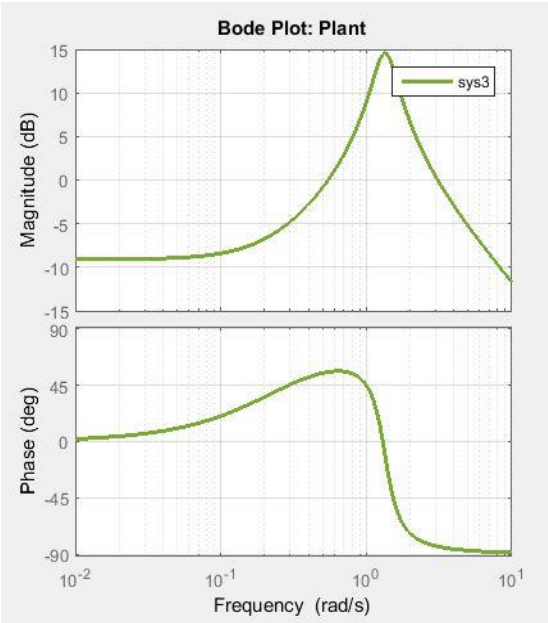

Figure 47: Bode Plot of Elbow Joint Motor

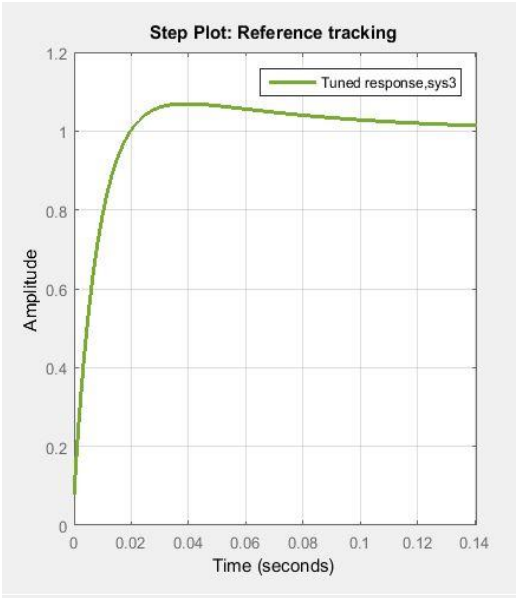

Figure 46: Step Response of Elbow Joint Motor

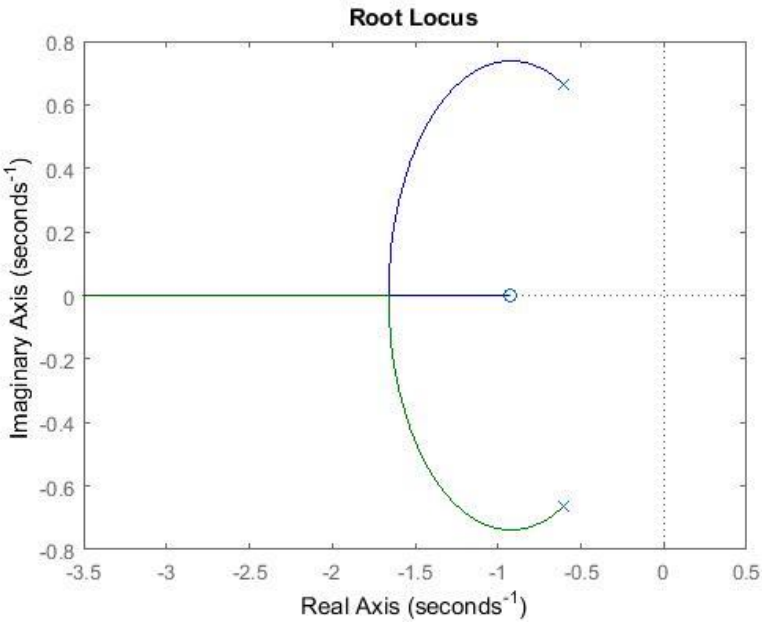

Figure 48: Root Locus of Elbow Joint Motor

- **Wrist 2nd Motor**

$$Transfer_Function = \frac{53s + 16.65}{4.64s^2 + 25.256s + 351}$$

From Table knowing kp, ki, kd values. Step response, bode plot and root locus are shown below

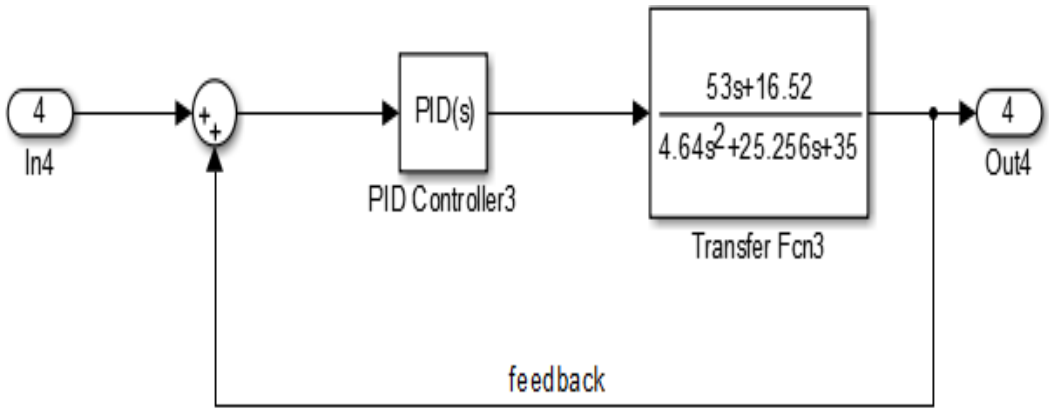

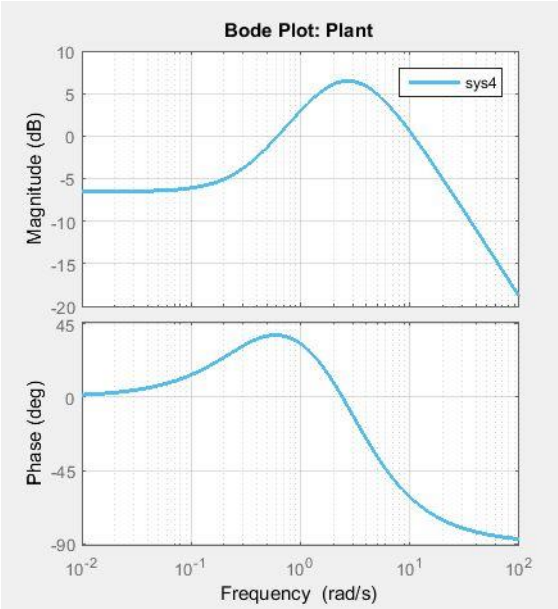

Figure 50: Bode Plot Wrist 2nd Joint Motor

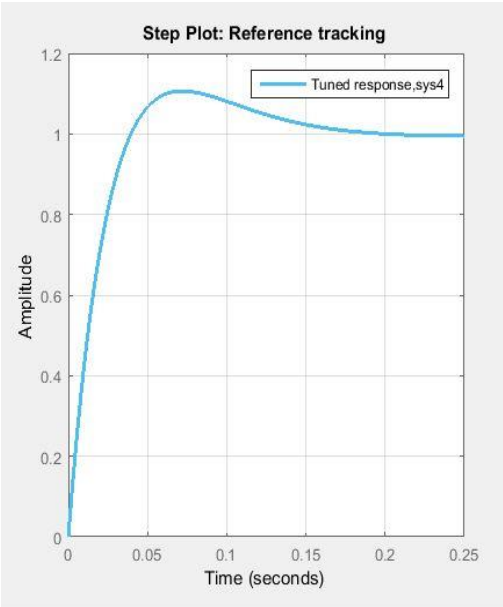

Figure 49: Step Response Wrist 2nd Joint Motor

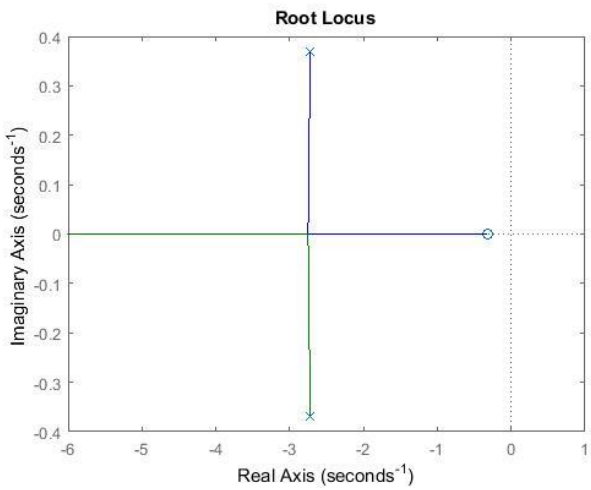

Figure 51: Root Locus Wrist 2nd Joint Motor

- **Wrist 3rd Motor**

$$Transfer_Function = \frac{100s + 45.65}{12s^2 + 22.25s + 65.091}$$

From Table knowing kp, ki, kd values. Step response, bode plot and root locus are shown below

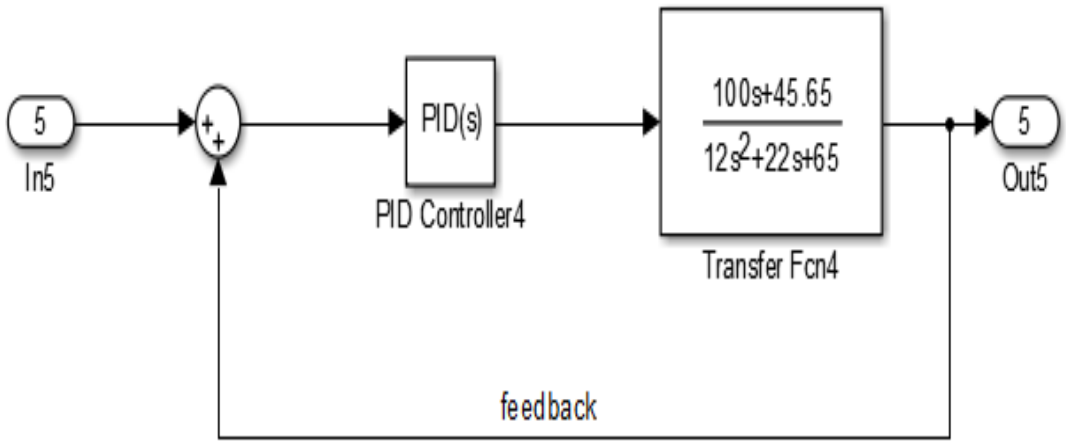

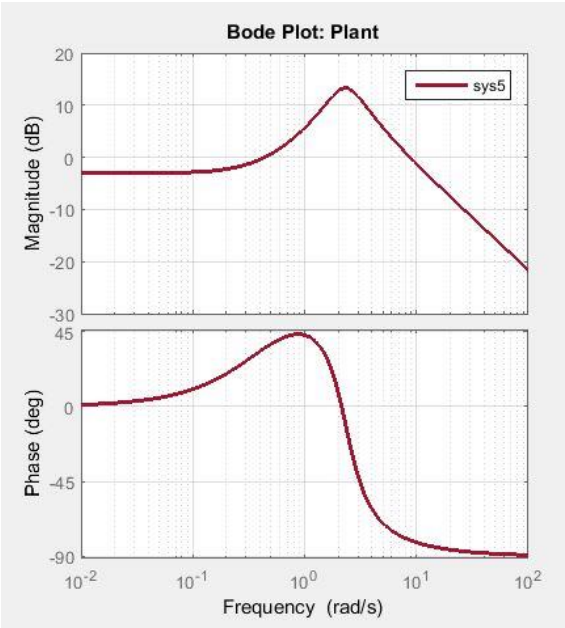

Figure 53: Bode Plot Wrist 3rd Joint Motor

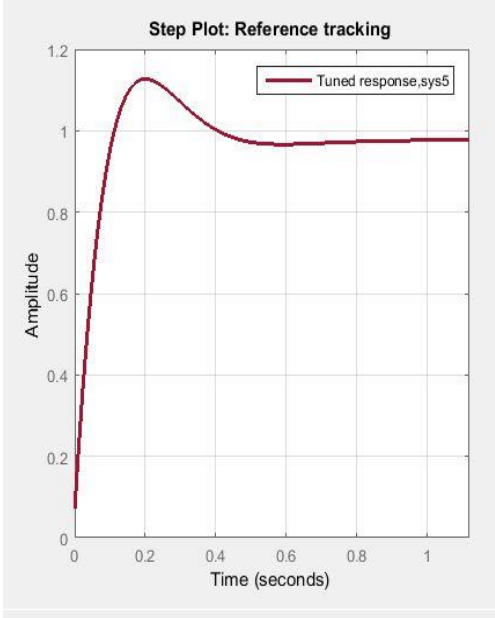

Figure 52: Step Response Wrist 3rd Joint Motor

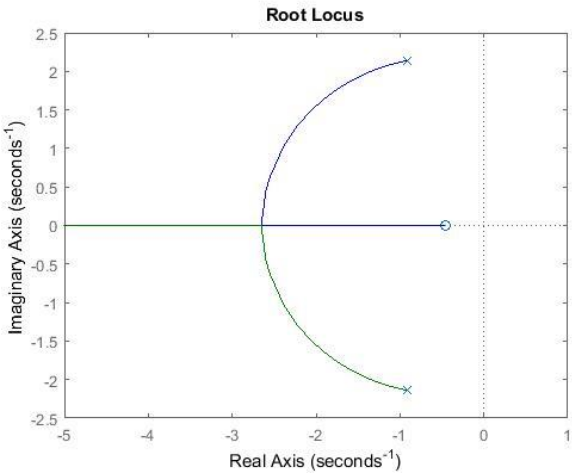

Figure 54: Root Locus of Wrist 3rd Joint Motor

5.2 Simulation

MATLAB software is used for simulation purpose, MATLAB code are shown in Appendix E

5.1.2 Forward Kinematics Simulation Results

Home Position

Final DH matrix of manipulator can be calculated using RVC MATLAB toolbox as

$$T = \begin{bmatrix} -.6410 & 0 & 0.7675 & 3.038 \\ 0 & 1 & 0 & 0 \\ -0.7675 & 0 & -.6410 & 11.95 \\ 0 & 0 & 0 & 1 \end{bmatrix}$$

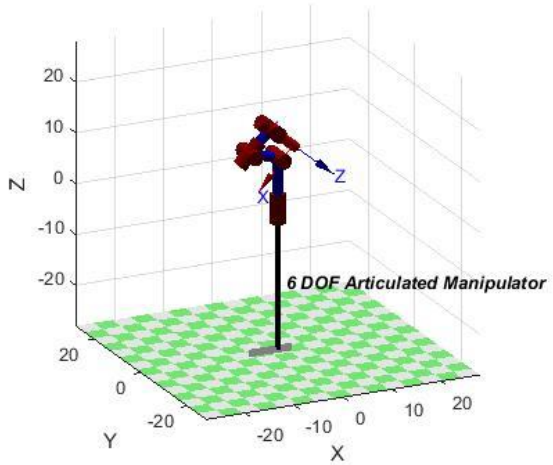

Figure 55: Home Position

Now simulating single joint step by step and find out final DH matrix in each case.

- **Base Joint Simulation**

Final DH matrix for base joint rotation from 0 to 90 or pi/2 degree.

$$T = \begin{bmatrix} 0 & -1 & 0 & 0 \\ -0.6410 & 0 & 0.7675 & 3.038 \\ -0.7675 & 0 & -.6410 & 11.95 \\ 0 & 0 & 0 & 1 \end{bmatrix}$$

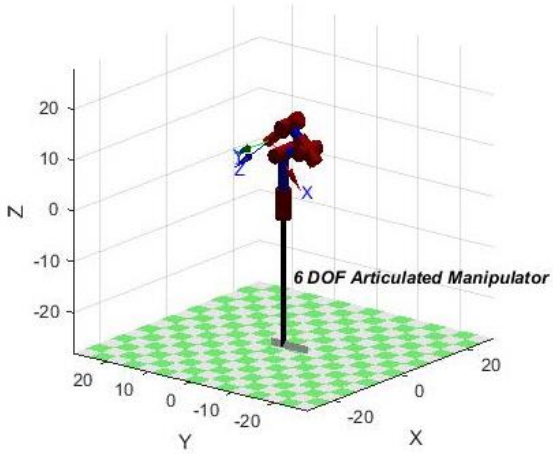

Figure 56: Base Joint Rotation

- **Shoulder Joint Simulation**

Final DH matrix for Shoulder joint rotation from 0 to –(60 or pi/3) degree.

$$T = \begin{bmatrix} -0.9852 & 0 & -0.1714 & 3.204 \\ 0 & 1 & 0 & 0 \\ 0.1714 & 0 & -0.9852 & 8.342 \\ 0 & 0 & 0 & 1 \end{bmatrix}$$

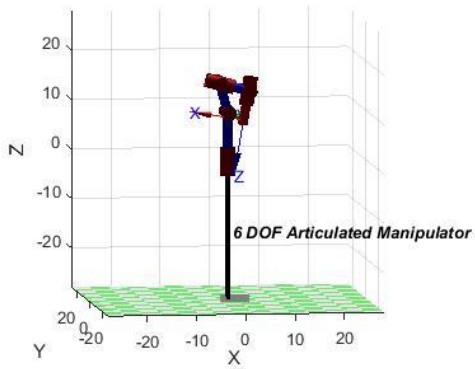

Figure 57: Shoulder Joint Rotation

- **Elbow Joint Simulation**

Final DH matrix for elbow joint rotation from 0 to –(60 or pi/3) degree.

$$T = \begin{bmatrix} 0.3442 & 0 & 0.9389 & -1.733 \\ 0 & 1 & 0 & 0 \\ -0.9389 & 0 & 0.3442 & 19.4 \\ 0 & 0 & 0 & 1 \end{bmatrix}$$

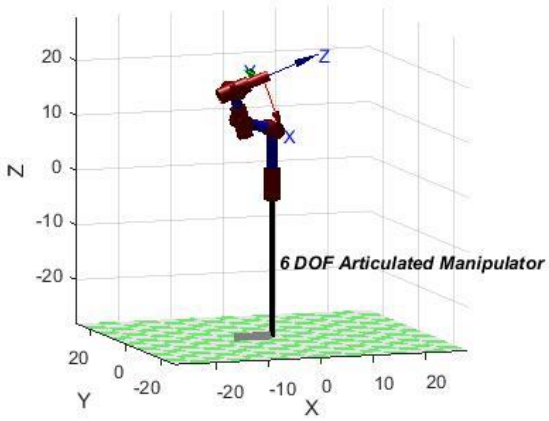

Figure 58: Elbow Joint Rotation

5.3 Forward Kinematics Implementation

Home position of manipulator can be shown in following picture

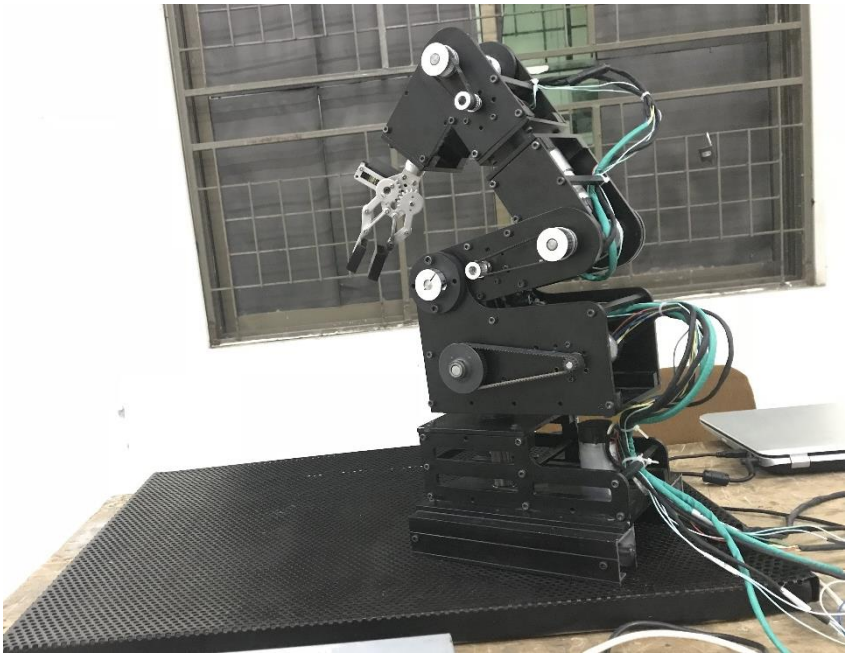

Figure 59: Home Position

- **Shoulder Joint 60 Degree Rotation**

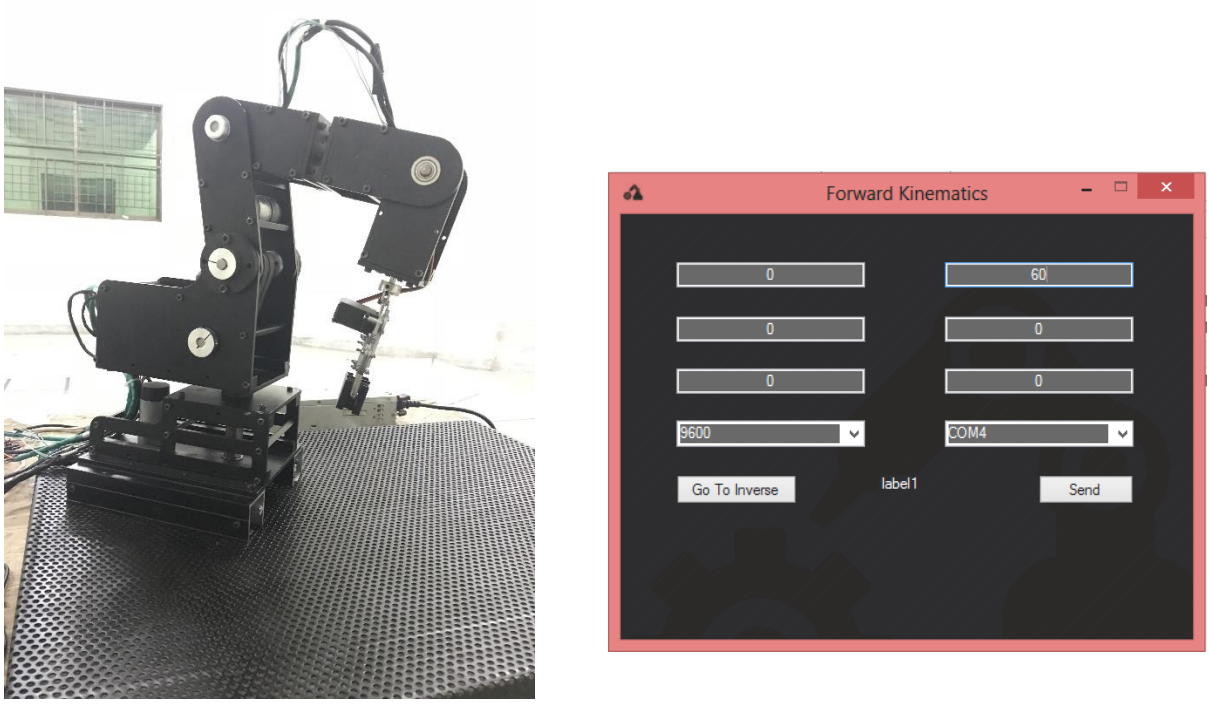

Figure 60: Shoulder Joint Movement

- **Elbow Joint 45 Degree Rotation**

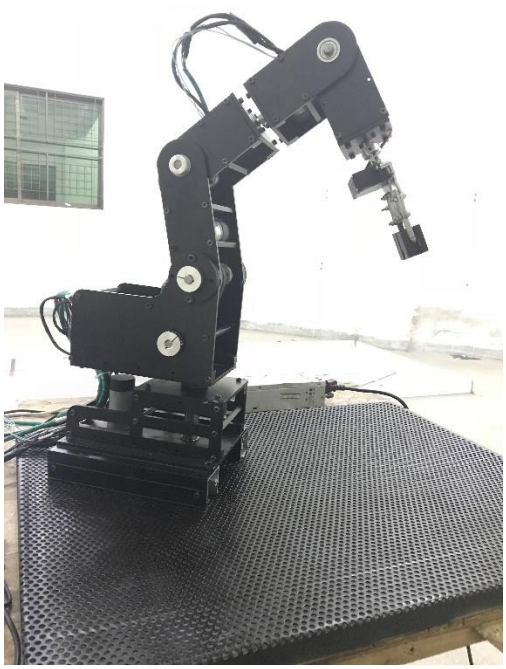

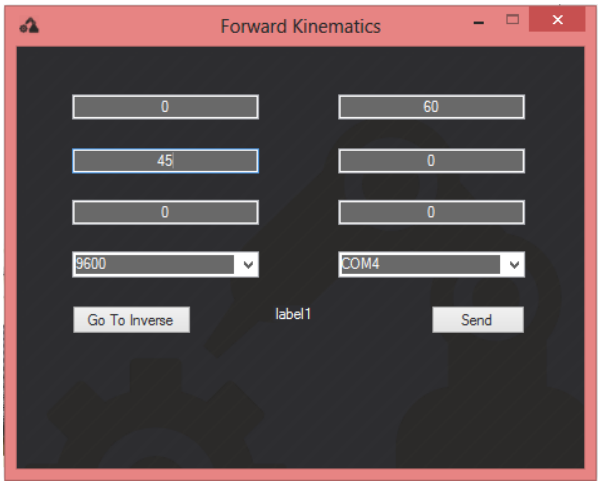

Figure 61: Elbow Joint Movement

- **First Wrist Joint 45 Degree Rotation**

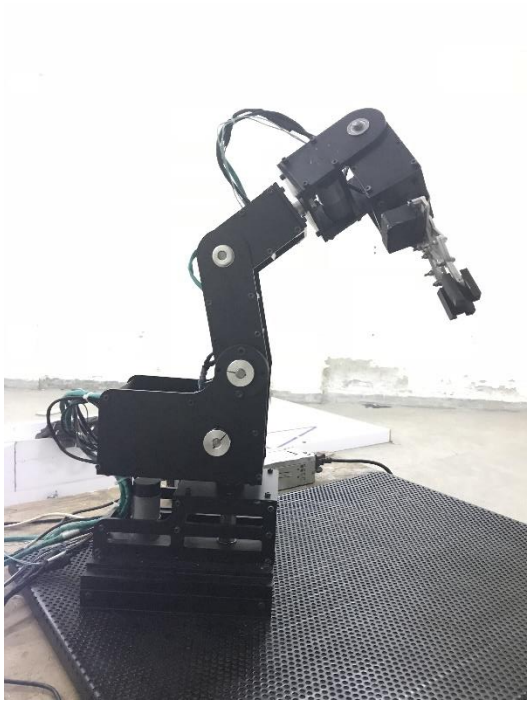

Figure 62: wrist 1st joint Movement

- **Second Wrist Joint 45 Degree Rotation:**

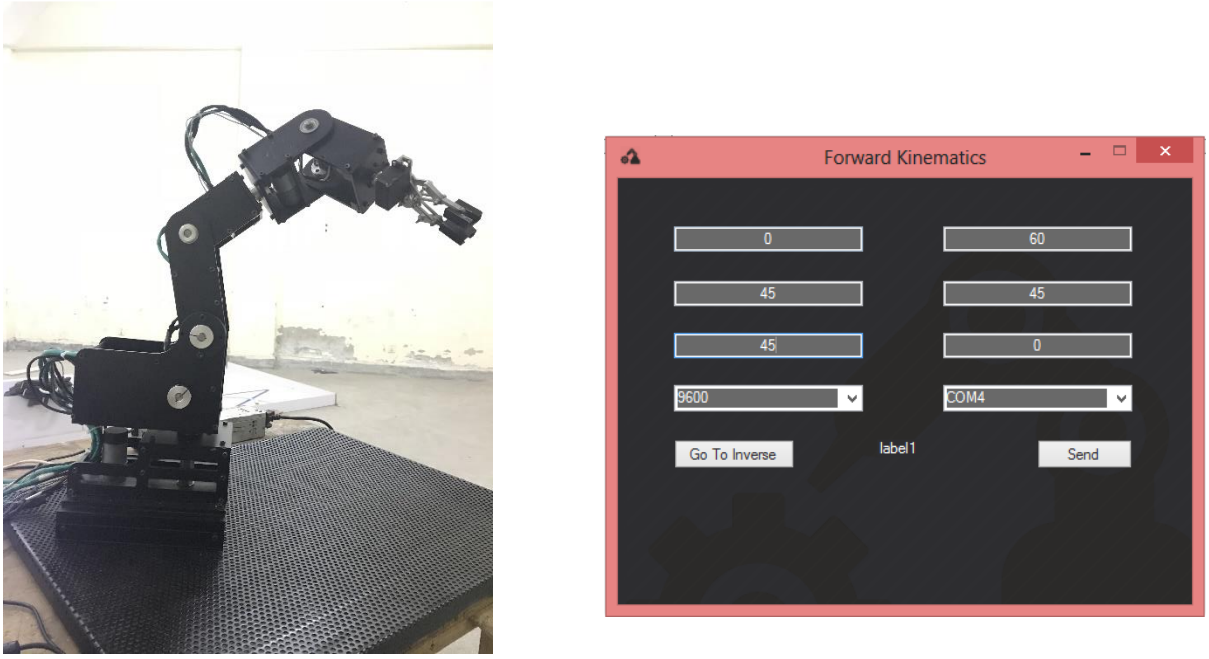

Figure 63: Wrist 2nd Joint Movement

- **Third Wrist Joint 45 Degree Rotation**

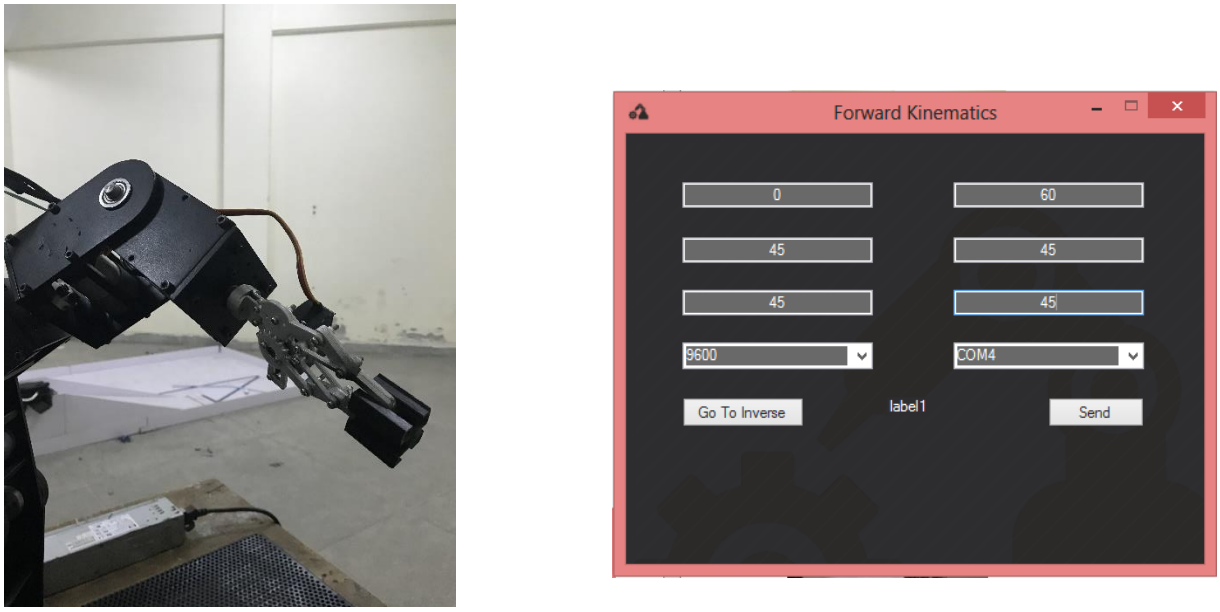

Figure 64: End-effector Movement

PROJECT COST

S. No	Item Name	No. of Units	Per Unit Cost	Total
1	Actuators (DC encoded Motor)	6	4500	27000
2	Micro-controller	3	2400	7200
3	Motor driver	4	300	1200
4	Gripper	1	2500	2500
5	Mechanical Structure	-	40000	40000
6	Miscellaneous	-	10000	10000
7	**Total**			**87900 PKR**

CONCLUSION

Achievements

The goal of our project is to improve end-effector control for an industrial robotic manipulator operating with flexible tools. In this project we wanted to achieve maximum goals but due to some limitations, we are restricted. So we have achieved following task:

- Six DOF Robotic Manipulator as proposed in synopsis
- Forward and inverse kinematics included in the robotic manipulator
- Position control of encoded DC gear motor using PID controller
- Force sensor is used for pick and place of fragile objects
- Graphical user interface (GUI)

Future Extensions

- Velocity Control of actuators
- Trajectory and path planning
- Impedance Control
- Parallel working of actuators

APPENDIX

Appendix A

Forward Kinematics

$$T_0^1 = \begin{bmatrix} cos(t1) & 0 & sin(t1) & 0 \\ sin(t1) & 0 & -cos(t1) & 0 \\ 0 & 1 & 0 & 10 \\ 0 & 0 & 0 & 1 \end{bmatrix}$$

$$T_0^2 = \begin{bmatrix} cos(t1) * cos(t2 + w) & -\sin(t2 + w) * \cos(t1) & sin(t1) & b * \cos(t2 + w) * \cos(t1) \\ \cos(t2 + w) * \sin(t1) & -\sin(t2 + w) * \sin(t1) & -cos(t1) & b * \cos(t2 + w) * \sin(t1) \\ \sin(t2 + w) & \cos(t2 + w) & 0 & a + b * \sin(t2 + w) \\ 0 & 0 & 0 & 1 \end{bmatrix}$$

$$T_0^3 = \begin{bmatrix} r_{11} & r_{12} & r_{13} & r_{14} \\ r_{21} & r_{22} & r_{23} & r_{24} \\ r_{31} & r_{32} & r_{33} & r_{34} \\ 0 & 0 & 0 & 1 \end{bmatrix}$$

$$where\ \ u = pi/2;\ w = pi/1.09;\ e = pi/6 + pi;\ r = pi/1.6363;$$

$r_{11} = cos(t2 + w) * cos(t1) * cos(e - t3) + sin(e - t3) * sin(t2 + w) * cos(t1)$

$r_{12} = -sin(t1)$

$r_{13} = sin(e - t3) * cos(t2 + w) * cos(t1) - sin(t2 + w) * cos(t1) * cos(e - t3)$

$r_{14} = b * cos(t2 + w) * cos(t1)$

$r_{21} = sin(e - t3) * sin(t2 + w) * sin(t1) + cos(t2 + w) * sin(t1) * cos(e - t3)$

$r_{22} = cos(t1)$

$r_{23} = sin(e - t3) * cos(t2 + w) * sin(t1) - sin(t2 + w) * sin(t1) * cos(e - t3)$

$r_{24} = b * cos(t2 + w) * sin(t1)$

$r_{31} = -sin(e - t2 - t3 - w)$

$r_{32} = \dfrac{sin(2 * u) * (cos(e - t2 - t3 - w) - 1)}{2}$

$r_{33} = cos(t2 + w) * cos(e - t3) + sin(e - t3) * sin(t2 + w)$

$r_{34} = a + b * sin(t2 + w)$

$$T_0^4 = \begin{bmatrix} r_{11} & r_{12} & r_{13} & r_{14} \\ r_{21} & r_{22} & r_{23} & r_{24} \\ r_{31} & r_{32} & r_{33} & r_{34} \\ 0 & 0 & 0 & 1 \end{bmatrix}$$

$r_{11} = cos(t4) * (cos(t2 + w) * cos(t1) * cos(e - t3) + sin(e - t3) * sin(t2 + *$
$cos(t1)) - sin(t1) * sin(t4)$

$r_{12} = sin(e - t3) * cos(t2 + w) * cos(t1) - sin(t2 + w) * cos(t1) * cos(e - t3)$

$r_{13} = cos(t4) * sin(t1) + sin(t4) * (cos(t2 + w) * cos(t1) * cos(e - t3) + sin(e - t3) * sin(t2 + w) * cos(t1))$

$r_{14} = c * (sin(e - t3) * cos(t2 + w) * cos(t1) - sin(t2 + w) * cos(t1) * cos(e - t3)) + b * cos(t2 + w) * cos(t1)$

$r_{21} = cos(t1) * sin(t4) + cos(t4) * (sin(e - t3) * sin(t2 + w) * sin(t1) + cos(t2 + w) * sin(t1) * cos(e - t3))$

$r_{22} = sin(e - t3) * cos(t2 + w) * sin(t1) - sin(t2 + w) * sin(t1) * cos(e - t3)$

$r_{23} = sin(t4) * (sin(e - t3) * sin(t2 + w) * sin(t1) + cos(t2 + w) * sin(t1) * cos(e - t3)) - cos(t1) * cos(t4)$

$r_{24} = c * (sin(e - t3) * cos(t2 + w) * sin(t1) - sin(t2 + w) * sin(t1) * cos(e - t3)) + b * cos(t2 + w) * sin(t1)$

$r_{31} = (sin(2 * u) * sin(t4) * (cos(e - t2 - t3 - w) - 1))/2 - sin(e - t2 - t3 - w) * cos(t4)$

$r_{32} = cos(t2 + w) * cos(e - t3) + sin(e - t3) * sin(t2 + w)$

$r_{33} = -sin(e - t2 - t3 - w) * sin(t4)$

$r_{34} = a + b * sin(t2 + w) + c * cos(t2 + w) * cos(e - t3) + c * sin(e - t3) * sin(t2 + w)$

$$T_0^5 = \begin{bmatrix} r_{11} & r_{12} & r_{13} & r_{14} \\ r_{21} & r_{22} & r_{23} & r_{24} \\ r_{31} & r_{32} & r_{33} & r_{34} \\ 0 & 0 & 0 & 1 \end{bmatrix}$$

$r_{11} = -cos(r - t5) * (sin(t1) * sin(t4) - cos(t4) * (cos(t2 + w) * cos(t1) * cos(e - t3) + sin(e - t3) * sin(t2 + w) * cos(t1))) - sin(r - t5) * (sin(e - t3) * cos(t2 + w) * cos(t1) - sin(t2 + w) * cos(t1) * cos(e - t3))$

$r_{12} = -cos(t4) * sin(t1) - sin(t4) * \big(cos(t2 + w) * cos(t1) * cos(e - t3) + sin(e - t3) * sin(t2 + w) * cos(t1)\big)$

$r_{13} = cos(r - t5) * \big(sin(e - t3) * cos(t2 + w) * cos(t1) - sin(t2 + w) * cos(t1) * cos(e - t3)\big) - sin(r - t5) * \big(sin(t1) * sin(t4) - cos(t4) * \big(cos(t2 + w) * cos(t1) * cos(e - t3) + sin(e - t3) * sin(t2 + w) * cos(t1)\big)\big)$

$r_{14} = c * (sin(e - t3) * cos(t2 + w) * cos(t1) - sin(t2 + w) * cos(t1) * cos(e - t3)) + b * cos(t2 + w) * cos(t1)$

$r_{21} = [\, cos(r - t5) * (cos(t1) * sin(t4) + cos(t4) * (sin(e - t3) * sin(t2 + w) * sin(t1) + cos(t2 + w) * sin(t1) * cos(e - t3))) - sin(r - t5) * (sin(e - t3) * cos(t2 + w) * sin(t1) - sin(t2 + w) * sin(t1) * cos(e - t3)),$

$r_{22} = cos(t1) * cos(t4) - sin(t4) * \big(sin(e - t3) * sin(t2 + w) * sin(t1) + cos(t2 + w) * sin(t1) * cos(e - t3)\big),$

$r_{23} = sin(r - t5) * \Big(cos(t1) * sin(t4) + cos(t4) * \big(sin(e - t3) * sin(t2 + w) * sin(t1) + cos(t2 + w) * sin(t1) * cos(e - t3)\big)\Big) + cos(r - t5) * \big(sin(e - t3) * cos(t2 + w) * sin(t1) - sin(t2 + w) * sin(t1) * cos(e - t3)\big),$

$r_{24} = c * (sin(e - t3) * cos(t2 + w) * sin(t1) - sin(t2 + w) * sin(t1) * cos(e - t3)) + b * cos(t2 + w) * sin(t1)]$

$r_{31} = -sin(r - t5) * \big(cos(t2 + w) * cos(e - t3) + sin(e - t3) * sin(t2 + w)\big) - cos(r - t5) * \Big(sin(e - t2 - t3 - w) * cos(t4) - \frac{sin(2*u)*sin(t4)*(cos(e - t2 - t3 - w) - 1)}{2}\Big),$

$$r_{32} = sin(e - t2 - t3 - w) * sin(t4),$$

$r_{33} = cos(r - t5) * \big(cos(t2 + w) * cos(e - t3) + sin(e - t3) * sin(t2 + w)\big) - sin(r - t5) * \Big(sin(e - t2 - t3 - w) * cos(t4) - \frac{sin(2*u)*sin(t4)*(cos(e - t2 - t3 - w) - 1)}{2}\Big),$

$r_{34} = a + b * sin(t2 + w) + c * cos(t2 + w) * cos(e - t3) + c * sin(e - t3) * sin(t2 + w)$

$$T_0^6 = \begin{bmatrix} r_{11} & r_{12} & r_{13} & r_{14} \\ r_{21} & r_{22} & r_{23} & r_{24} \\ r_{31} & r_{32} & r_{33} & r_{34} \\ 0 & 0 & 0 & 1 \end{bmatrix}$$

$r_{11} = -sin(t6) * (cos(t4) * sin(t1) + sin(t4) * (cos(t2 + w) * cos(t1) * cos(e - t3) + sin(e - t3) * sin(t2 + w) * cos(t1))) - cos(t6) * (cos(r - t5) * (sin(t1) * sin(t4) - cos(t4) * (cos(t2 + w) * cos(t1) * cos(e - t3) + sin(e - t3) * sin(t2 + w) * cos(t1))) + sin(r - t5) * (sin(e - t3) * cos(t2 + w) * cos(t1) - sin(t2 + w) * cos(t1) * cos(e - t3))),$

$r_{12} = sin(t6) * \Big(cos(r - t5) * \Big(sin(t1) * sin(t4) - cos(t4) * \big(cos(t2 + w) * cos(t1) * cos(e - t3) + sin(e - t3) * sin(t2 + w) * cos(t1)\big)\Big) + sin(r - t5) * \big(sin(e - t3) * cos(t2 + w) * cos(t1) - sin(t2 + w) * cos(t1) * cos(e - t3)\big)\Big) - cos(t6) * \Big(cos(t4) * sin(t1) + sin(t4) * \big(cos(t2 + w) * cos(t1) * cos(e - t3) + sin(e - t3) * sin(t2 + w) * cos(t1)\big)\Big),$

$r_{13} = cos(r - t5) * \big(sin(e - t3) * cos(t2 + w) * cos(t1) - sin(t2 + w) * cos(t1) * cos(e - t3)\big) - sin(r - t5) * \Big(sin(t1) * sin(t4) - cos(t4) * \big(cos(t2 + w) * cos(t1) * cos(e - t3) + sin(e - t3) * sin(t2 + w) * cos(t1)\big)\Big),$

$r_{14} = c * (sin(e - t3) * cos(t2 + w) * cos(t1) - sin(t2 + w) * cos(t1) * cos(e - t3)) - d * (sin(r - t5) * (sin(t1) * sin(t4) - cos(t4) * (cos(t2 + w) * cos(t1) * cos(e - t3) + sin(e - t3) * sin(t2 + w) * cos(t1))) - cos(r - t5) * (sin(e - t3) * cos(t2 + w) * cos(t1) - sin(t2 + w) * cos(t1) * cos(e - t3))) + b * cos(t2 + w) * cos(t1)]$

$r_{21} = [\, sin(t6) * (cos(t1) * cos(t4) - sin(t4) * (sin(e - t3) * sin(t2 + w) * sin(t1) + cos(t2 + w) * sin(t1) * cos(e - t3))) + cos(t6) * (cos(r - t5) * (cos(t1) * sin(t4) + cos(t4) * (sin(e - t3) * sin(t2 + w) * sin(t1) + cos(t2 + w) * sin(t1) * cos(e - t3))) - sin(r - t5) * (sin(e - t3) * cos(t2 + w) * sin(t1) - sin(t2 + w) * sin(t1) * cos(e - t3))),$

$r_{22} = cos(t6) * \Big(cos(t1) * cos(t4) - sin(t4) * \big(sin(e - t3) * sin(t2 + w) * sin(t1) + cos(t2 + w) * sin(t1) * cos(e - t3)\big)\Big) - sin(t6) * \Big(cos(r - t5) * \big(cos(t1) * sin(t4) + cos(t4) * \big(sin(e - t3) * sin(t2 + w) * sin(t1) + cos(t2 + w) * sin(t1) * cos(e - t3)\big)\big) - sin(r - t5) * \big(sin(e - t3) * cos(t2 + w) * sin(t1) - sin(t2 + w) * sin(t1) * cos(e - t3)\big)\Big),$

$r_{23} = sin(r - t5) * \Big(cos(t1) * sin(t4) + cos(t4) * \big(sin(e - t3) * sin(t2 + w) * sin(t1) + cos(t2 + w) * sin(t1) * cos(e - t3)\big)\Big) + cos(r - t5) * \big(sin(e - t3) * cos(t2 + w) * sin(t1) - sin(t2 + w) * sin(t1) * cos(e - t3)\big),$

$r_{24} = c * (sin(e - t3) * cos(t2 + w) * sin(t1) - sin(t2 + w) * sin(t1) * cos(e - t3)) + d * (sin(r - t5) * (cos(t1) * sin(t4) + cos(t4) * (sin(e - t3) * sin(t2 + w) * sin(t1) + cos(t2 + w) * sin(t1) * cos(e - t3))) + cos(r - t5) * (sin(e - t3) * cos(t2 + w) * sin(t1) - sin(t2 + w) * sin(t1) * cos(e - t3))) + b * cos(t2 + w) * sin(t1)]$

$r_{31} = [\, sin(e - t2 - t3 - w) * sin(t4) * sin(t6) - cos(t6) * (sin(r - t5) * (cos(t2 + w) * cos(e - t3) + sin(e - t3) * sin(t2 + w)) + cos(r - t5) * (sin(e - t2 - t3 - w) * cos(t4) - (sin(2 * u) * sin(t4) * (cos(e - t2 - t3 - w) - 1))/2)),$

$r_{32} = sin(t6) * \Big(sin(r - t5) * \big(cos(t2 + w) * cos(e - t3) + sin(e - t3) * sin(t2 + w)\big) + cos(r - t5) * \Big(sin(e - t2 - t3 - w) * cos(t4) - \frac{sin(2*u)*sin(t4)*(cos(e - t2 - t3 - w) - 1)}{2}\Big)\Big) + sin(e - t2 - t3 - w) * cos(t6) * sin(t4),$

$r_{33} = cos(r - t5) * \big(cos(t2 + w) * cos(e - t3) + sin(e - t3) * sin(t2 + w)\big) - sin(r - t5) * \Big(sin(e - t2 - t3 - w) * cos(t4) - \frac{sin(2*u)*sin(t4)*(cos(e - t2 - t3 - w) - 1)}{2}\Big),$

$r_{34} = a + b * sin(t2 + w) + c * cos(t2 + w) * cos(e - t3) + c * sin(e - t3) * sin(t2 + w) + d * cos(r - t5) * cos(t2 + w) * cos(e - t3) + d * cos(r - t5) * sin(e - t3) * sin(t2 + w) - d * sin(e - t3) * sin(r - t5) * cos(t2 + w) * cos(t4) + d * sin(r - t5) * sin(t2 + w) * cos(t4) * cos(e - t3)]$

$x = r14 = 6 * sin(t5 - 110) * (sin(t1) * sin(t4) - cos(t4) * (cos(t2 + 165) * cos(t3 - 210) * cos(t1) - sin(t2 + 165) * sin(t3 - 210) * cos(t1))) - 6 * sin(t1) * sin(t4) - 6 * cos(t5 - 110) * (cos(t2 + 165) * sin(t3 - 210) * cos(t1) + cos(t3 - 210) * sin(t2 + 165) * cos(t1)) + 6 * cos(t2 + 165) * cos(t1) + 6 * cos(t4) * (cos(t2 + 165) * cos(t3 - 210) * cos(t1) - sin(t2 + 165) * sin(t3 - 210) * cos(t1)) - 6 * cos(t2 + 165) * sin(t3 - 210) * cos(t1) - 6 * cos(t3 - 210) * sin(t2 + 165) * cos(t1)$

$y = r24 = 6 * cos(t1) * sin(t4) + 6 * cos(t4) * (cos(t2 + 165) * cos(t3 - 210) * sin(t1) - sin(t2 + 165) * sin(t3 - 210) * sin(t1)) - 6 * sin(t5 - 110) * (cos(t1) * sin(t4) + cos(t4) * (cos(t2 + 165) * cos(t3 - 210) * sin(t1) - sin(t2 + 165) * sin(t3 - 210) * sin(t1))) + 6 * cos(t2 + 165) * sin(t1) - 6 * cos(t5 - 110) * (cos(t2 + 165) * sin(t3 - 210) * sin(t1) + cos(t3 - 210) * sin(t2 + 165) * sin(t1)) - 6 * cos(t2 + 165) * sin(t3 - 210) * sin(t1) - 6 * cos(t3 - 210) * sin(t2 + 165) * sin(t1)$

$z = r34 = 6 * sin(t2 + 165) + 6 * cos(t2 + 165) * cos(t3 - 210) - 6 * sin(t2 + 165) * sin(t3 - 210) + 6 * cos(t5 - 110) * cos(t2 + 165) * cos(t3 - 210) - 6 * cos(t5 - 110) * sin(t2 + 165) * sin(t3 - 210) + 6 * cos(t2 + 165) * sin(t3 - 210) * cos(t4) + 6 * cos(t3 - 210) * sin(t2 + 165) * cos(t4) - 6 * cos(t2 + 165) * sin(t5 - 110) * sin(t3 - 210) * cos(t4) - 6 * cos(t3 - 210) * sin(t5 - 110) * sin(t2 + 165) * cos(t4) + 10$

Inverse Position Kinematics

$$\theta_1 = tan^{-1}\left(\frac{y}{x}\right)$$

$$K = tan^{-1}\left(\frac{z - l_1}{\sqrt{x^2 + y^2}}\right)$$

$$P = cos^{-1}\left(\frac{l_2^2 - l_3^2 + \left(x^2 + y^2 + z^2 + l_1^2 - (2 \times z \times l_1)\right)}{2 \times l_2 \times \sqrt{x^2 + y^2 + z^2 + l_1^2 - (2 \times z \times l_1)}}\right)$$

$$\theta_2 = K - P$$

$$\theta_3 = tan^{-1}\left(\frac{z - l_1 - l_2 \times \sin(\theta_2)}{\sqrt{x^2 + y^2} - \cos(\theta_2)}\right) - \theta_2$$

Where

x, y and z represent coordinates. l_1, l_2 and l_3 represent link length of base, shoulder and elbow respectively.

$$T_3^6 = \begin{bmatrix} r_{11} & r_{12} & r_{13} & r_{14} \\ r_{21} & r_{22} & r_{23} & r_{24} \\ r_{31} & r_{32} & r_{33} & r_{34} \\ 0 & 0 & 0 & 1 \end{bmatrix}$$

$$\theta_5 = atan2(\sqrt{r_{31}^2 + r_{32}^2}, r_{33})$$

$$if\ \theta_5 = 0$$

$$\{$$

$$\theta_4 = 0$$

$$\theta_6 = atan2(-r_{12}, r_{11})$$

$$\}$$

$$if\ \theta_5 = 180$$

$$\{$$

$$\theta_4 = 0$$

$$\theta_6 = atan2(r_{12}, -r_{11})$$

$$\}$$

$Otherwise$

$$\theta_4 = atan2\left(\frac{r_{23}}{\sin(\theta_5)}, \frac{r_{13}}{\sin(\theta_5)}\right)$$

$$\theta_6 = atan2\left(\frac{r_{32}}{\sin(\theta_5)}, \frac{-r_{31}}{\sin(\theta_5)}\right)$$

Appendix B

```
Clc
Clear all
Close all
vol=[1:1:100]'; % Applied Volatge
rpm=[3.555 12.54 21.525 ...... 100 ]
ts=0.1; % Sampling Time
z = iddata(rpm,vol,ts) % Create identification variable
ze=z(1:50);  % first half is use for estimation
zv=z(51:100);% Second half is use for validation
ident % command for Toolbox
```

Appendix C

Current error = desired value - actual value;

*Integral error = (accumulator error) * time period;*

*Derivative error = (Current error – previous error) * 1/time period;*

*PID = kp * Current error + ki * Integral error + kd * Derivative error ;*

Previous error = Current error;

Accumulator error += Current error;

Where

Kp = proportional term, Ki = Integral term, Kd = derivative term

Appendix D

```
%%%%% Base Motor %%%%%
num=[100 45.65];
den=[12 22 65];
sys=tf(num,den);
rlocus(sys)
%%%%% Shoulder Motor %%%%%
num=[75 58.025];
den=[1 14.29 78.065];
sys2=tf(num,den);
rlocus(sys2)
%%%%% Elbow Motor %%%%%
num=[13 12];
den=[10 12 8];
sys3=tf(num,den);
rlocus(sys3)
%%%%%% Wrist 2nd Motor %%%%%
num=[53 16.52];
den=[4.64 25.256 35];
sys4=tf(num,den);
rlocus(sys4)
%%%%%% Wrist 3rd Motor %%%%%
num=[100 45.65];
den=[12 22 65];
```

```
sys5=tf(num,den);
rlocus(sys5)
```

Appendix E

```
Clc
Clear all
Close all
u=pi/2; w=pi/1.09; e=pi/6+pi; r=-pi/1.6363+pi/7.2;
 a=10; b=6; c=6; d=6;
%syms a b c d u w e r t1 t2 t3 t4 t5 t6
L(1)=Link([0 a 0 u 0]);
L(2) = Link('revolute', 'd', 0, 'a', b, 'alpha', 0,'offset',w);
L(3) = Link('revolute', 'd', 0, 'a', 0, 'alpha', -u,'offset',-
e);
L(4) = Link('revolute', 'd', c, 'a', 0, 'alpha', u,'offset',0);
L(5) = Link('revolute', 'd', 0, 'a', 0, 'alpha', -u,'offset',r);
L(6)=Link([0 d 0 0 0]);
Rob=SerialLink(L,'name','Articulated');
T=Rob.fkine([0 0 0 0 0 0])
Rob.plot([0 0 0 0 0 0])
```

Appendix F

Velocity jacobain of 1st three joints can be represented as

$$J_w = \begin{bmatrix} 0 & s_1 & s1 \\ 0 & -c_1 & -c1 \\ 1 & 0 & 0 \end{bmatrix}$$

$$J = \begin{bmatrix} J_v \\ J_w \end{bmatrix}$$

Spherical wrist velocity jacobain can be represented as

Due to origin lie at same point $O_4=O_5=O_6$

$$J_v = \begin{bmatrix} 0 & 0 & 0 \\ 0 & 0 & 0 \\ 0 & 0 & 0 \end{bmatrix}$$

$$z_3 = \begin{bmatrix} c_1 s_{23} \\ s_1 s_{23} \\ c_{23} \end{bmatrix}, z_4 = \begin{bmatrix} -c_4 s_1 - s_4(c_1 s_2 s_3 - c_1 c_2 c_3) \\ -s_4(s_1 s_2 s_3 - c_2 c_3 c_1) + c_1 c_4 \\ s_{23} s_4 \end{bmatrix}, z_5 = \left[Third_column_of_T_5^0 \right]$$

Appendix G

By calculating determinant of J_{11}, we get

$$a_2 a_3 s_3 (a_2 c_2 + a_3 c_{23}) = 0$$
$$a_2 a_3 s_3 = 0$$
$$a_2 a_3 \neq 0$$
$$s_3 = 0$$
$$\theta_3 = \sin^{-1}(0)$$
$$\theta_3 = 0, \pi$$

Similarly solving for wrist singularity, we get

$$\theta_5 = 0, \pi$$

View publication stats