# Hardware Design Report

**ANONYMOUS**, University College London, UK

**ACM Reference Format:**
Anonymous. Hardware Design Report. (November 2025), 18 pages.

## 1 Abstract

This report documents the end-to-end hardware development of a compact Smart Gym Wearable designed to monitor user activity and physiological state during exercise. The device combines motion sensing using an ADXL343 accelerometer with BPM and oxygen level measurements from a MAX30102 module, enabling the capture of real-time workout intensity and movement patterns. Central to the system is an STM32WB55CEU6 microcontroller, selected for its integrated Bluetooth Low Energy (BLE) capabilities, low-power operation, and suitability for wearable applications.

The report outlines the purpose behind each major design choice, including sensor interfacing through I2C and external QSPI flash memory for extended data storage. Additionally, a reliable power subsystem utilising a lithium-ion battery, a dedicated charge-management IC, and a regulated 3.3 V supply. The complete schematic is detailed, and the interactions between subsystems, such as, power, sensing, actuation, wireless communication, memory, and user input are justified.

The PCB layout process is then examined, addressing component placement constraints, RF considerations for the BLE antenna path, trace routing strategies, and grounding techniques appropriate for a mixed-signal wearable device. Manufacturing factors, including board stack-up selection, assembly tolerances, and bill-of-materials optimisation, are also evaluated. The report reflects on the overall hardware workflow and highlights potential enhancements for future design iterations, such as improved power efficiency, expanded sensor integration, and broader usability in diverse fitness scenarios.

## 2 Introduction

Over the past decade, wearable technology has become an integral part of everyday life, offering individuals new ways to monitor and improve their personal health. Devices such as smartwatches and fitness bands have enabled users to easily track heart rate, sleep patterns, daily steps, and overall activity levels throughout the day. Commercial wearables including the Apple Watch and Fitbit Charge have built on this trend by having advanced sensors and algorithms that provide feedback on cardiovascular activity, sleep quality, and general physical wellbeing [1].

Despite these advancements, most consumer wearables still offer only high-level metrics about a user's fitness performance. They excel at tracking what was done, such as number of steps, total calories burned, or minutes spent in a heart-rate zone, but provide limited insight into how well a workout was executed. For individuals who wish to optimise their training, avoid injury, or evaluate their long-term progress in a structured way, current products may not assist them with those goals. In strength training, for example, wearables rarely provide meaningful feedback on repetition quality, the consistency of movement, or whether exercises are being performed safely and efficiently.

The motivation for developing the device described in this report arises from these limitations, as well as from personal experience. During resistance training sessions, it is often difficult for the user to maintain concentration on repetition counting or to remain aware of their form throughout the set. Like many gym-goers, I frequently lose track of the number of repetitions completed, especially during longer sets or when fatigued. This disrupts the flow of the workout and reduces the accuracy of performance tracking.

Another challenge I face personally is the management of rest intervals between sets, rest times can easily become longer than necessary. Over-resting significantly reduces workout efficiency and lowers training intensity, ultimately affecting progress. My goal for this project was therefore to design a wearable system that not only tracks the physiological state of the user, but also assists in maintaining consistent rest periods, monitoring exercise execution, and providing real-time feedback that enhances both safety and performance.

This hardware design report presents the development of a Smart Gym Wearable that addresses these issues by expanding the capabilities of current fitness trackers. By combining motion analysis with biometric sensing, the device aims to provide detailed, actionable insights into the quality of workout execution, enabling users to optimise their training sessions, reduce inefficiencies, and support long-term fitness goals. In parallel with local data logging, the wearable transmits raw motion and biometric measurements to the user's smartphone via Bluetooth Low Energy (BLE). The application on the user's smartphone processes this data to generate an evaluation of the user's workout performance and highlight areas for future improvement. Prior to beginning a training session, the user specifies the exercise they intend to perform, ensuring that the motion analysis algorithms interpret the data accurately.

## 2.1 Circuit Specification

The Smart Gym Wearable is a compact, battery-powered device designed to collect real-time motion and biometric data during resistance training and transmit this information wirelessly to a smartphone. To achieve this, the circuit must support reliable sensor acquisition, efficient processing and storage, and low-power wireless communication, all while making sure it is suitable to be on the wrist of the user.

All digital components operate from a regulated supply of 3.3 V. The device is powered from a single-cell lithium-ion (Li-ion) or lithium-polymer (Li-Po) battery, whose nominal voltage of 3.7 V can rise to 4.2 V when fully charged. To provide a stable 3.3 V rail across this range, the design incorporates a low-dropout regulator (LDO) with low quiescent current and enough headroom to support peak activity, particularly during wireless transmission and sensor operation. Decoupling capacitors are placed throughout the supply rails to minimise noise and ensure stable operation.

At the centre of the circuit is a Bluetooth-enabled microcontroller that handles data acquisition, processing, and communication. A device with an integrated BLE radio is preferred over a discrete radio module to reduce power consumption, board area, and firmware complexity. The microcontroller must provide hardware support for I2C, SPI, QSPI, and a number of GPIO pins for sensor interrupts and basic user interaction. Enough computational capability and memory are required to run the BLE stack while processing motion and optical sensor data in real time.

Two principal sensors are included in the design. A 3-axis accelerometer provides motion data for repetition analysis, movement quality assessment, and detection of workout phases. Alongside this, an optical heart-rate and SpO2 (percentage of oxygen-saturated haemoglobin in the blood) sensor measures biometric signals important for exercise monitoring. Both

devices communicate over I2C, which simplifies wiring and supports multiple peripherals on the same bus. The accelerometer operates directly from the 3.3 V domain, while the optical sensor requires a 1.8 V digital supply in addition to its LED driver domain. Because of the voltage mismatch, its I2C signals are routed through a bidirectional level shifter to maintain compatibility. Each sensor exposes one or more interrupt lines to signal when new data are available, enabling the microcontroller to operate in a low-power mode.

To allow longer workouts and higher-resolution data capture, the wearable includes external non-volatile memory. A QSPI flash device is used instead of standard SPI, as QSPI offers higher throughput and more efficient writes when storing time-sensitive sensor samples.

Wireless connectivity relies entirely on Bluetooth Low Energy. The 2.4 GHz radio output from the microcontroller is routed to a compact surface-mount antenna through a tuned matching network. This RF path must be routed with controlled impedance and minimal discontinuities, and the surrounding ground plane must be arranged carefully to maintain antenna performance.

User interaction is deliberately simple. A single LED, driven through a current-limiting resistor, provides feedback on device states such as workout start and rest period timing. A tactile push-button acts as the primary user input to turn on the device, and is connected to a microcontroller GPIO configured with a pull-down or pull-up resistor. Firmware debouncing ensures the button behaves reliably in use.

The power-management subsystem includes a dedicated Li-ion charging IC connected to a USB-C port. The USB-C port also incorporates ESD protection for both data and power pins, safeguarding the circuit during handling and charging.

Finally, during development and manufacturing, the microcontroller is programmed and tested through a Serial Wire Debug (SWD) interface exposed via a compact Tag-Connect footprint.

By defining these electrical requirements and the relationships between subsystems, the circuit specification establishes the component selection and detailed schematic design that follows in the next section.

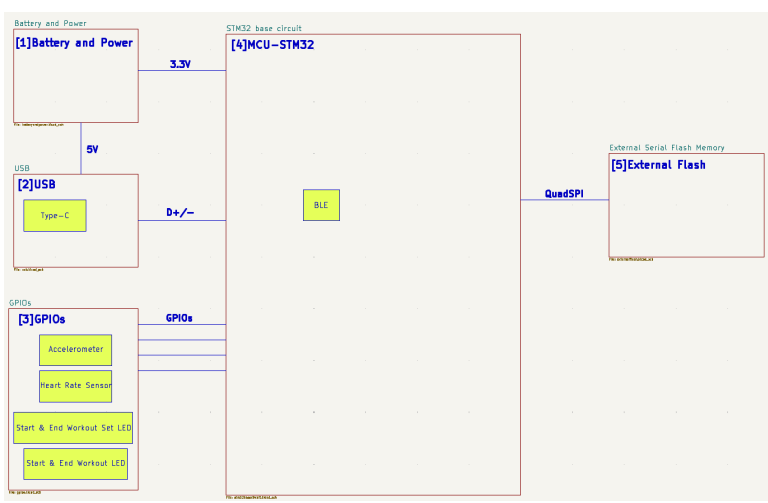


**Figure 1:** Schematic block diagram of circuit

# 3 Methodology

With the core functional requirements established, the specification was refined by considering how the wearable would be used in practice. Because the Smart Gym Wearable is body-mounted during resistance training, size and comfort are critical. The device must be compact and lightweight so it does not affect grip or range of motion. This constraint strongly influenced component footprints, PCB dimensions, and battery capacity.

The expected environment is an indoor gym, so components only need to operate over normal room temperature and humidity ranges. This allowed the design focus to shift toward low power and reliable signal acquisition. As the device is only active during sets and short rest periods, the specification prioritised low-power sensing, short high-current bursts for BLE transmission, and efficient charging so that the wearable can be used repeatedly throughout the day.

To quantify workout quality, the sensing subsystem had to capture both motion and physiological effort. The accelerometer therefore needed sufficient resolution for typical lifting motions without excessive noise or drift, while the optical heart-rate sensor had to provide robust BPM and oxygen level signals despite motion, strap tightness, and rapid changes in blood flow. Both sensors share an I2C bus.

User interaction was also taken into account. In the final system, the user will specify the exercise type in the user's smartphone application, which will shape how the motion data are interpreted, although this is outside the scope of this report. On the device itself, immediate feedback is provided via a low-power LED that indicates when rest periods have elapsed and the next set should begin, so the refined specification included an actuator that is bright, responsive, and energy-efficient.

BLE was selected as the wireless interface for sending raw accelerometer and heart-rate data to the phone, where more computationally intensive analysis can occur. Offloading the main algorithms to the smartphone allows the wearable to remain small and power-efficient. Consequently, the MCU had to integrate a BLE radio, accurate 32 MHz and 32.768 kHz crystals, and support an RF layout compatible with a compact antenna on the constrained PCB.

Finally, manufacturability and availability were considered. The design relies on several specialised ICs (BPM and oxygen level sensor, accelerometer sensor, BLE MCU), so preference was given to devices with stable supply and multiple distributors. Surface-mount packaging was chosen throughout to minimise board area and support automated assembly. The aim was to meet the functional requirements of the prototype while keeping the design scalable to small-volume production.

## 3.1 Micro-Controller

The microcontroller (MCU) controls processing, sensor interfaces, and wireless communication, so its selection is central to the design. Following module guidance, the STM32WB55CEU6 was chosen because it integrates Bluetooth Low Energy, supports multiple digital interfaces, and offers extensive low-power features. It combines an Arm Cortex-M4 core for application code with a dedicated Cortex-M0+ core for the BLE stack, freeing the main CPU during radio activity. Its peripheral set (multiple I2C buses, QSPI for external flash, and sufficient GPIO for LEDs, buttons, and interrupts) aligns well with the wearable's needs. Additionally, STM32 CubeIDE support and university tutorials for schematic and PCB design reduced development risk [2, 3].

The CEU6 package offers a good compromise between capability, size, and price. Its integrated SMPS and low-power modes suit a battery-powered wearable, enabling efficient operation. The main limitation is the 1MB internal Flash [4], but this is mitigated by adding external QSPI memory. Overall, the STM32WB55CEU6 provides sufficient performance and connectivity at a reasonable unit cost (approximately $9.60 at the time of writing).

## 3.2 Sensors

### 3.2.1 Accelerometer ADXL343

The ADXL343 was selected as the primary motion sensor because it is well suited to wrist- or arm-mounted wearables. It offers a selectable ±2g to ±16g range with 10–13-bit resolution, capturing both slow controlled lifts and faster movements. Built-in tap and activity/inactivity detection, together with two interrupt pins, allow simple motion events to be handled in hardware, reducing MCU load and power. The device supports I2C and SPI; I2C was chosen to share a bus with the MAX30102. Its 2.0–3.6 V supply range matches the 3.3 V rail, and the small MEMS package and 10 000 g shock rating make it robust for gym use. The internal FIFO further reduces processor wake-ups and overall energy consumption [5].

A key trade-off is between noise and output data rate (ODR). At 100 Hz, the noise is around $1\text{LSB}_{\text{rms}}$ on the x/y axes and $1.5\text{LSB}_{\text{rms}}$ on z, which is adequate for large workout motions. Above 100Hz, noise increases roughly with $\sqrt{\text{ODR}}$, exceeding $2\text{LSB}_{\text{rms}}$ by 400Hz, and the z-axis remains the noisiest, as shown in the datasheet [5]. For this application, where movements are relatively large and low-frequency, operating near 100Hz offers a good balance between resolution, bandwidth, and signal clarity.

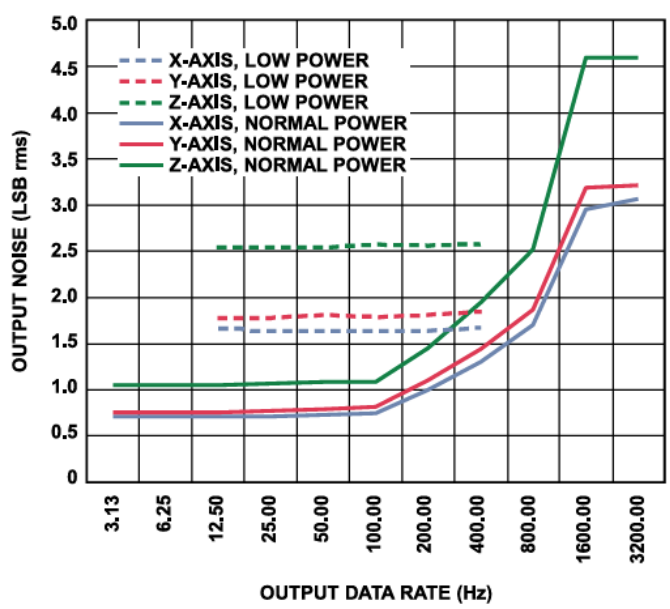


**Figure 2:** Noise vs Output Data Rate (ODR) for normal and low-power modes [5]

### 3.2.2 Pulse Oximeter and Heart-Rate Sensor MAX30102

The MAX30102 integrates red/IR LEDs, photodiode and low-noise analog front end in a single compact module, avoiding the need for a discrete optical chain and saving significant PCB area. This integration, together with built-in ambient-light cancellation (up to 200 $\mu$A), makes it suitable for variable indoor lighting in gyms. A 32-sample FIFO reduces I2C traffic

and MCU wake-ups, supporting low-power operation. Dual-rail operation (1.8V logic, 3.1–5V LEDs) matches the system's supplies without extra regulators [6].

The main trade-off is that high LED currents generate short, high-di/dt pulses, which can inject noise onto the power rail if decoupling is poor. The layout therefore follows the datasheet's recommendation for tight local bypassing and short traces [6].

Physiologically, resistance exercise causes heart rate to rise and $SpO_2$ to fall as working muscles demand more oxygen and many lift-goers briefly hold their breath. Toward the end of a set, heart rate peaks and $SpO_2$ decreases very slightly; during rest, heart rate decreases and $SpO_2$ returns towards baseline. By tracking these trends, the wearable can estimate when the user has recovered sufficiently to begin the next set. The device uses threshold-based logic: when heart rate has dropped by a chosen fraction of its peak and $SpO_2$ has risen toward the user's calibrated resting value, the LED indicator is activated to signal to start the next workout set. On first use, the system records resting heart rate and typical $SpO_2$ to personalise these thresholds.

### 3.3 USB and Power

To keep the wearable compact, rechargeable, and safe while supporting continuous sensing and BLE, the power subsystem uses a USB-C connector, a Li-Po charge controller, and a low-noise LDO regulator.

USB-C was chosen for charging because it is reversible and widely adopted. In this design it is used in USB2.0 passive mode, providing a 5V VBUS line for charging. The D+ and D lines are protected by a USBLC6-2SC6 ESD suppressor, which offers ±15kV contact discharge protection with low line capacitance [7].

The 5V input is stepped down to 3.3V using the MIC5365-3.3YD5 LDO. Its low quiescent current (around 20 $\mu$A) and fast transient response make it well suited to bursty loads from the MCU and radio, while its ∼120 mV dropout at 150 mA maintains regulation close to battery end-of-life [8]. A switching converter would offer higher efficiency but at the cost of additional noise near sensitive analogue circuitry; the LDO provides a less noisy solution.

Energy storage is provided by a single-cell Li-Po battery (3.7V nominal, 4.2V full). Charging is handled by the MCP73832-2-OT, a small Li-Po charge-management IC that implements CC/CV charging, thermal regulation, and charge termination. The programmable charge current allows a conservative charge rate to be chosen for battery health, and the device's very low standby current ($< 26\,\mu$A) limits drain when USB is disconnected [9]. A status LED and current-set resistor complete the charging circuit according to the reference design.

Across VBUS, charger output, and the 3.3V rail, 4.7 $\mu$F and 100nF capacitors are used in combination to provide stable supply rails and suppress high-frequency noise.

### 3.4 Actuator: LED

The main actuator is a small LED that signals when the wearable is on and when the user should begin their next set. A compact, low-current SMD LED was required so that it could be driven directly from the MCU with a single series resistor. The SK6805D-EC2018 (green) LED meets these needs at low cost.

With a forward voltage of roughly 2.0–2.2V and a 470Ω resistor, the LED current is limited to about 2–3mA, providing adequate brightness indoors while keeping power consumption negligible. Green is a natural choice for a "ready/go" indicator in a workout context. The part is widely available through JLCPCB and other suppliers [10].

## 3.5 Flash Memory

On-chip flash in the STM32WB55CEU6 (1MB) is largely reserved for program code and BLE stack, so an external device was added for workout data logging. The W25Q128JVS provides 128Mbit (16MB) of Quad-SPI NOR flash in a compact SOIC-8 package [11].

Quad-SPI enables higher throughput than standard SPI by using up to four data lines, allowing multiple sensor samples per second to be stored without stalling the MCU. The device operates from 2.7–3.6V and includes deep-power-down modes with currents around 1$\mu$A, aligning with the low-power goals of the wearable. Its 16MB capacity provides headroom for logging accelerometer and BPM and oxygen level data across long sessions [11].

As with all NOR flash, writes and erases are slower and more energy-intensive than RAM operations, and data must be erased in blocks before being overwritten. However, for sequential log storage this is manageable.

## 3.6 Resistors and Capacitors

All resistors use the 0402 (1005 metric) footprint. Because none of them dissipate significant power, they are mainly pull-ups, bias networks, or LED current-limiters, 0402 parts provide sufficient power rating while conserving board space and simplifying assembly through footprint standardisation.

Most capacitors also use the 0402 package, particularly the numerous 100nF decoupling capacitors placed near the MCU, sensors, and regulators. Their low parasitics and adequate voltage rating make them effective for high-frequency decoupling. Larger bulk values such as 4.7$\mu$F use the 0603 (1608 metric) footprint, as this capacitance is too big for 0402. Small 10pF load capacitors for the HSE and LSE crystals remain in 0402 to minimise trace length and parasitic effects near the oscillators.

| Ref | MFR.Part # | Description | Package | Datasheet | JLCPCB Part # | Page URL | Unit Price | Qty |
|---|---|---|---|---|---|---|---|---|
| 1 | STM32WB55CEU6 | UFQFPN-48-EP(7x7) Microcontrollers (MCU/MPU/SOC) ROHS | UFQFPN-48(7x7) | Datasheet - LCSC | C404023 | LCSC Electron | $4.45 | 1 |
| 2 | ADXL312WACPZ-RL | -40℃~+105℃ 100nA 13bit 2V~3.6V Accelerometer SPI X,Y,Z ±12g LFCSP-32(5x5) Accelerometers ROHS | LFCSP-32(5x5) | 8.58891E+18 | C662298 | LCSC Electron | $7.2210 | 1 |
| 3 | KH-TYPE-C-16P-T | -30℃~+80℃ 1 16P 500mA Female Surface Mount, Right Angle Type-C SMD USB Connectors ROHS | SMD | (\\2013-1118-114 | C709358 | LCSC Electron | $0.0792 | 1 |
| 4 | MAX30101EFD+T | -40℃~+85℃ 1.1mA 1.7V~2V 18bit 4 I2C OLGA-14(3.3x5.6) Heart Rate Sensors ROHS | OLGA-14(3.3x5.6) | 8.58892E+18 | C2859066 | LCSC Electron | $7.7655 | 1 |
| 5 | SK6805D-EC2018 | -40℃~+80℃ 0.65mA 0.7mm 1.8mm 2000V 2mm 3V~7.5V 4kHz 800Kbit/s G:520nm~535nm R:40mcd~160mcd SMD-4P,2x1.8mm RGB LEDs(Built-in IC) ROHS | SMD-4P,2x1.8mm | 8.60316E+18 | C5440835 | LCSC Electron | $0.0756 | 2 |
| 6 | PCA9306DCUR | 1 2 VSSOP-8 Translators, Level Shifters ROHS | VSSOP-8 | PCA9306 Dual Bid | C33196 | LCSC Electron | $0.2718 | 1 |
| 7 | W25Q128JVSIQ | -40℃~+85℃ 100,000 Cycles 120ms@(32KB) 128Mbit 133MHz 1uA 2.7V~3.6V 20 Years 3ms SPI SOIC-8-208mil NOR FLASH ROHS | SOIC-8-208mil | W25Q128JV Data | C97521 | LCSC Electron | $1.2810 | 1 |
| 8 | Q22FA12800025 | -20℃~+75℃ 32MHz 60Ω 8pF Crystal Oscillator ±10ppm ±10ppm SMD2016-4P Crystals ROHS | SMD2016-4P | 8.58888E+18 | C1187794 | LCSC Electron | $0.2205 | 1 |
| 9 | SC-20S,32.768kHz,20PPM,7pF | 32.768kHz 7pF ±20ppm SMD2012-2P Crystals ROHS | SMD2012-2P | SC-20S_Leaflet_r | C97602 | LCSC Electron | $0.2012 | 1 |
| 10 | USBLC6-2SC6 | -40℃~+125℃ 150nA 17V 2 3.5pF 5.25V 5A 6V ESD IEC 61000-4-2 Unidirectional SOT-23-6L ESD and Surge Protection (TVS/ESD) ROHS | SOT-23-6L | Very low capacita | C7519 | LCSC Electron | $0.1013 | 1 |

**Figure 3:** Component List

# 4 Results and Discussion

## 4.1 Schematics

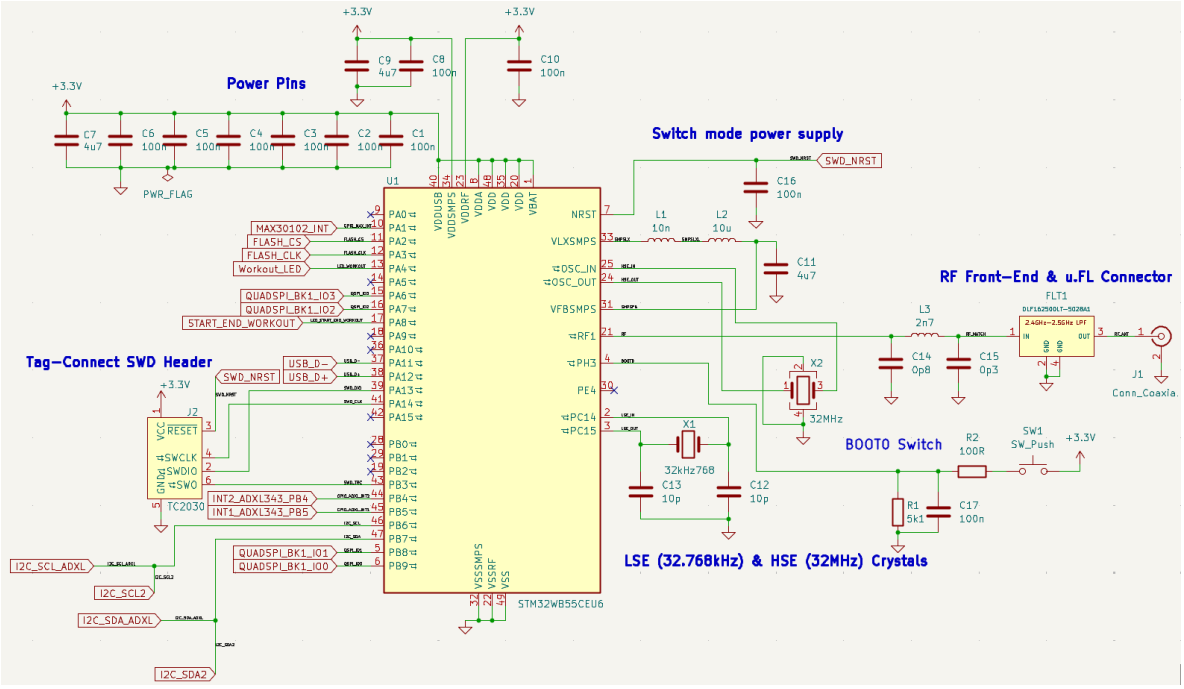


**Figure 4:** STM32WB55CEU6 with peripherals needed for normal operations of the MCU

With the refined specification defined and major components selected, the next step was to translate the system design into a complete schematic and verify that it met the wearable's functional requirements. The final schematic, shown in Fig.4, integrates the microcontroller, sensors, power circuitry, external memory, and user-interface components into a coherent system.

The STM32WB55CEU6 forms the core of the circuit, with SPI, I2C, and GPIO pins assigned based on the device's constraints and required functionality. Both sensors share the I2C bus, an acceptable approach as long as proper pull-ups and interrupt handling are used. Power integrity is maintained through multiple 100nF and 4.7µF decoupling capacitors placed close to the MCU, following ST's guidelines for minimising supply impedance.

To improve efficiency, the schematic includes the STM32WB's integrated SMPS using the inductor values recommended in ST's design notes. Timing is provided by the required 32MHz HSE and 32.768kHz LSE crystals, each placed with matched capacitors and short traces to ensure frequency stability for BLE and RTC functions.

The RF path follows AN5165, using the FLT1 low-pass filter and matching network to maintain a 50Ω impedance between the MCU and the antenna. A u.FL connector was chosen to simplify antenna placement during enclosure design and to aid RF tuning.

Overall, the schematic adheres closely to manufacturer recommendations and satisfies the functional requirements of the wearable.

### 4.1.1 USB and Power

The USB-C connector provides a 5V VBUS supply for both battery charging and the 3.3V system rail. The USB data lines are protected using the USBLC6-2SC6 ESD array, which withstands ±15kV air discharge, and 5.1kΩ pull-down resistors on CC1 and CC2 identify the wearable as a power-sinking device [7].

Battery charging is managed by the MCP73831 Li-ion charger, which uses a CC/CV profile with a fixed 4.20V regulation point [9]. A 2kΩ PROG resistor sets a charge current of roughly 500 mA, and a STAT LED indicates charging status. Following datasheet guidance, 4.7$\mu$F capacitors are placed at both VDD and VBAT for stability [9].

The system voltage is generated by the MIC5365-3.3YD5 LDO, which provides a clean 3.3V rail with a 155mV dropout at 150mA and a low 29$\mu$A quiescent current [8]. 1$\mu$F capacitors at VIN and VOUT ensure regulator stability and good noise performance for the MCU and analogue sensors.

A JST-PH connector is used for the Li-Po battery, and the MCP73831's reverse-discharge protection ($< 2\,\mu$A) prevents the battery from feeding current back into the USB port when disconnected [9].

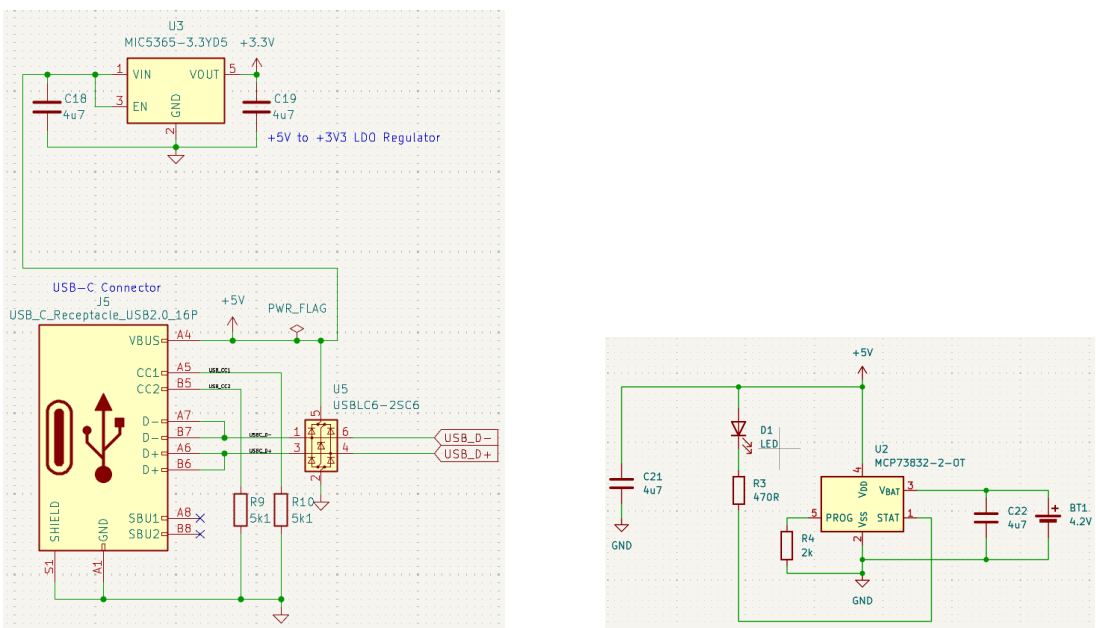


**(a)** **(b)**

**Figure 5:** (a) USB and (b) Power Circuits

### 4.1.2 Sensors

The MAX30102 pulse-oximeter and heart-rate sensor is connected to the STM32 using the I2C interface. As the device operates with a 1.8 V digital core, while the microcontroller uses 3.3 V, a PCA9306 voltage-level translator is required between the two domains. This translator ensures that the SDA and SCL lines remain within safe operating limits, preventing over-voltage damage to the MAX30102. Pull-up resistors of 3.3 kΩ were placed on both sides of the translator, as recommended in the datasheet, to ensure clean rising edges and reliable I2C communication [6]. Additionally, decoupling capacitors of 4.7 µF and 0.1 µF were placed close to the MAX30102 supply pins, which is necessary to stabilise the LED driver current

and reduce noise during sampling [6].

Similarly, the ADXL343 accelerometer also uses the I2C interface. Since this device already supports 3.3V operation, it can be connected directly to the STM32WB55. As recommended by the datasheet, 4.7kΩ pull-ups were used on the SDA and SCL lines to maintain correct bus timing [5]. Two decoupling capacitors (0.1µF and 1µF) were placed near its supply pin to ensure stable operation during sudden changes in measurement mode. The accelerometer's interrupt pins are connected to dedicated MCU GPIOs.

Finally, because the MAX30102 requires a 1.8V reference and the accelerometer operates at 3.3V, the PCA9306 level-translator ensures that both sensors can share the same I2C bus.

Overall, the chosen sensors meet the measurement requirements of the device while keeping the circuit simple and power-efficient. The MAX30102 provides high-quality heart-rate and SpO2 data for monitoring recovery between sets, and the ADXL343 captures movement information needed for workout analysis. Both components integrate cleanly into the system through the shared I2C bus, ensuring reliable operation with minimal additional circuitry.

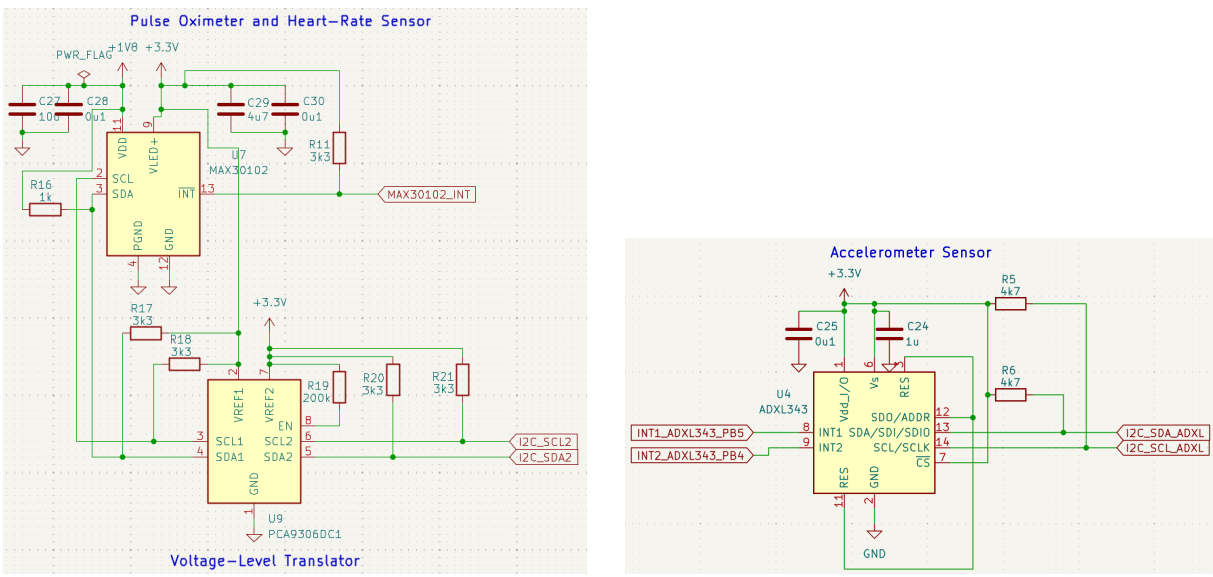


**(a)** **(b)**

**Figure 6:** (a) Pulse Oximeter and Heart-rate Sensor and (b) Accelerometer Sensor Circuits

### 4.1.3 Actuator: LED

The actuator used to signal workout events to the user is a simple indicator LED driven directly by a GPIO pin of the STM32WB55 microcontroller. As shown in Figures 7a and 7b, the circuit consists of a single green SK6805D-EC2018 LED in series with a 470Ω resistor (R7). The LED is powered from the 3.3V rail, and the MCU controls its cathode through the Workout LED net. This configuration provides a clear, low-power visual when the wearable is active or when the user should begin their next set.

The choice of a 470Ω resistor ensures safe LED operation. According to the LED datasheet [10], the green channel forward voltage is typically around 2.8V. With a 3.3V supply, the remaining 0.5V across the resistor produces a forward current of approximately 1mA, which is sufficient for visibility while keeping the current draw extremely low. This is important for a battery-powered wearable where indicator LEDs must not significantly impact total power consumption.

A second user-input button circuit (SW4) is implemented nearby to register the "start/end workout" action. This circuit incorporates a 10kΩ pull-up resistor (R8) and a 100 nF capacitor (C20) for hardware debouncing, ensuring clean transitions when the user presses the button.

Together, these two circuits provide the essential user-interface controls for the device. The LED serves as a simple, immediate visual confirmation that the wearable is powered and ready, and later in operation acts as a prompt for workout progression. Because of its minimal size and low current consumption, the selected LED offers an unobtrusive and power-efficient signalling method ideal for a compact wearable system.

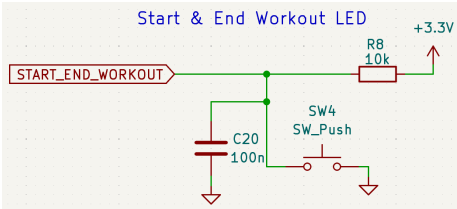


(a)

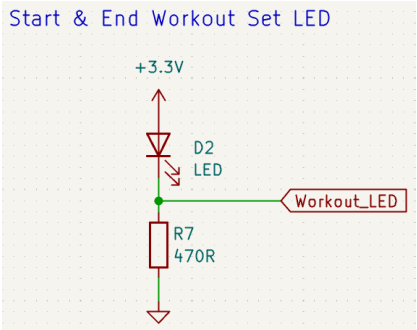


(b)

**Figure 7:** (a) Start/End Workout LED and (b) Start Workout Set LED Circuits

### 4.1.4 Flash memory

The external flash memory used in this design is the Winbond W25Q128JV, a 16-Mbyte Quad-SPI (QSPI) device selected to provide non-volatile storage for logged workout data and future firmware expansion. The device operates from 2.7–3.6V, matching the system's 3.3V rail, and supports Standard, Dual, and Quad SPI modes for flexible interfacing with the STM32WB55 microcontroller [11].

In the schematic, the flash connects to the MCU through the QUADSPI peripheral using the dedicated signals CS, CLK, IO0–IO3, exactly as defined in the datasheet [11]. Quad-SPI operation allows up to 133 MHz SPI clocking, enabling high read throughput, useful if the device later supports data-logging or if firmware assets grow in size. The IO2 (/WP) and IO3 (/HOLD) pins are also routed, which permits write-protection or bus-hold features if needed, although in practice these functions are disabled during Quad-SPI mode [11].

The memory's architecture, consisting of 4 KB sectors and 64 KB blocks, gives flexibility for small configuration writes as well as larger erase cycles [11]. This is beneficial for a wearable device where data such as user profiles, calibration values, or exercise logs may be updated frequently. The STM32WB55's QUADSPI peripheral is designed to interface with this class of memory, supporting Execute-in-Place (XiP) and fast linear reads [12]. This compatibility reduces firmware overhead and simplifies implementation.

Electrically, the flash is powered directly from the 3.3 V rail with the ground pin tied to system ground, meeting the recommended layout guidelines. No additional level shifting is required.

Overall, the W25Q128JV provides a reliable, low-power, and high-throughput external memory solution, ensuring scalability for future firmware and user-data requirements.

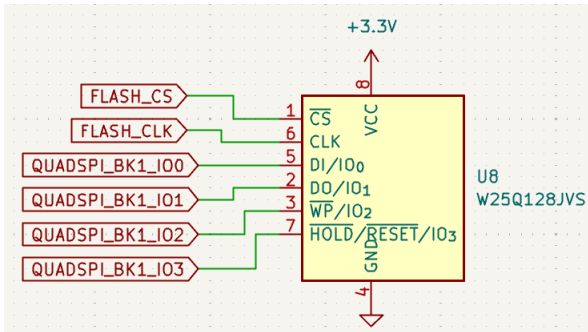


**Figure 8:** External Flash memory circuit

## 4.2 PCB

The PCB for this wearable device was designed as a four-layer board, using the stack-up of Signal, Ground, Ground, Signal. The copper and clearance constraints were taken directly from the PCB manufacturer's guidelines, Fig. 10, ensuring all track widths, via sizes, and spacing meet fabrication requirements.

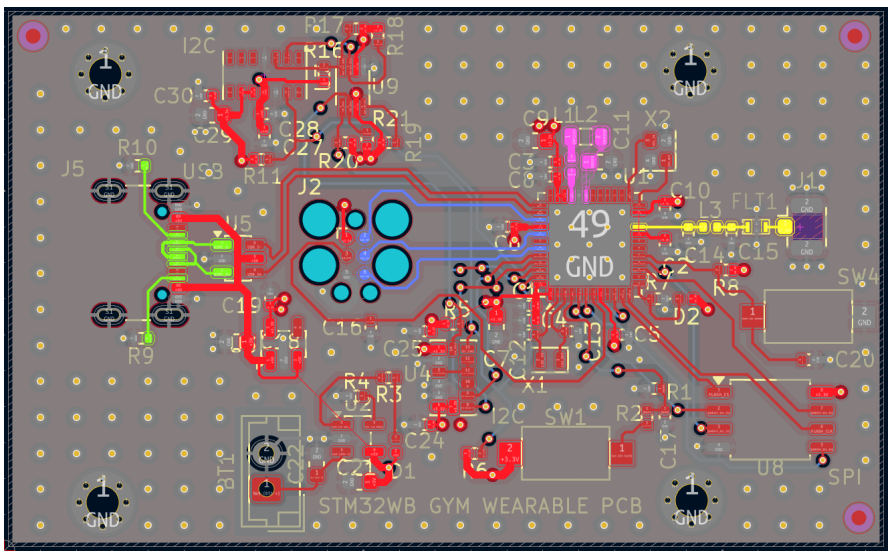


**Figure 9:** Top Layer PCB Design

### 4.2.1 Top layer

The top layer, Fig. 9, contains the majority of the components, including the STM32WB microcontroller, the sensors, flash memory, and the RF matching network. Components were placed as close as possible to their associated pins to minimise trace length and reduce noise, particularly important for the QSPI flash and the MAX30102 analogue front end. Short and direct routing was prioritized for the 32MHz and 32.768kHz crystals, following ST's layout recommendations for reducing oscillator startup time and jitter.

The RF section required special attention. The trace from the RF pin to the low-pass filter (FLT1) was kept short, and controlled-impedance routing was applied. The u.FL footprint was placed at the board edge to allow a clean transition to an external antenna. Around this RF region, copper clearances were maintained to maintain the matching network.

Placement was driven by functional grouping, the RF front-end and u.FL connector were

located at the board edge for a clean antenna path. The QSPI flash was placed close to the MCU to minimise trace length. The MAX30102 and accelerometer were separated from the RF section to reduce interference. The USB connector was kept at the edge, with ESD protection located between the port and the MCU.

The dense layout around the microcontroller required careful via usage and short trace lengths to avoid crossing and to maintain clarity.

### 4.2.2 PCB Constraints and Routing

The fabrication constraints set in KiCad, Fig. 10 dictated a minimum clearance and track width of 0.15mm, with vias sized at 0.6mm diameter and 0.25mm drilled holes. Power traces were routed with wider widths (0.5mm) to handle higher current, while most signal traces remained at 0.3mm, sufficient for digital interfaces without increasing parasitic effects.

A number of connections required use of the bottom layer due to the dense routing around the microcontroller. These traces were taken down through vias placed next to their pins, then returned to the top layer when needed. This approach preserved clarity on the top layer while still enabling all required connections.

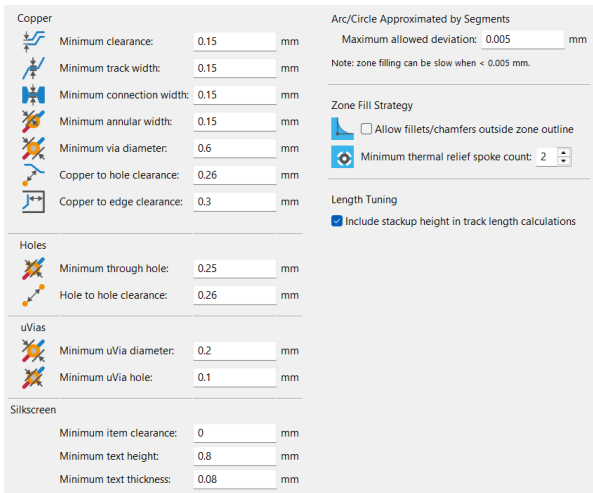


**Figure 10:** Physical constraints of PCB

### 4.2.3 Bottom Layer

The bottom layer, Fig. 11, mainly consists of signal return paths and shorter local connections. Because this device includes sensors sensitive to analogue noise, the ground plane on the inner layers provided stable reference potential, while the bottom layer's large copper pours helped reduce overall impedance. Ground stitching vias were added around the perimeter and near sensitive circuits to tie all ground regions together and improve EMC performance.

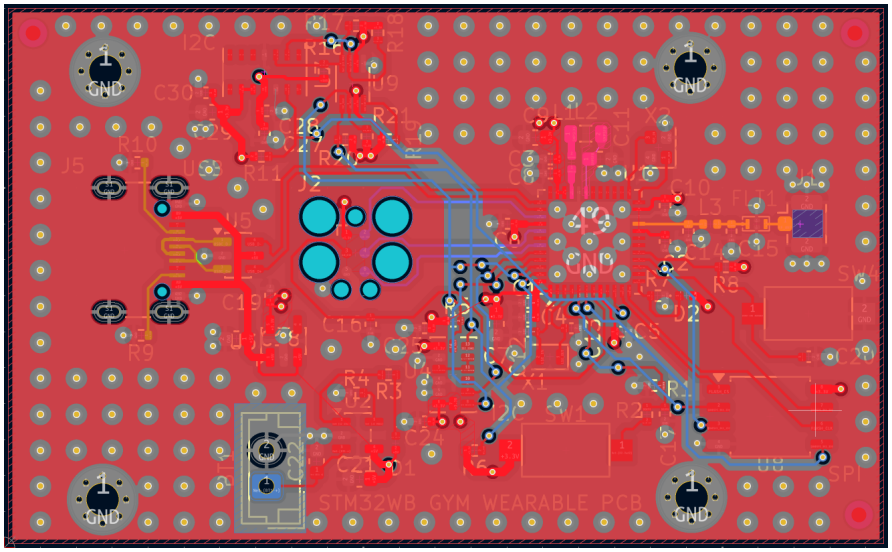


**Figure 11:** Bottom Layer PCB Design

### 4.2.4 Power and Ground Management

Both internal layers were assigned as ground planes, providing low-impedance return paths, especially important for the MAX30102 analogue front end and the RF transceiver. Numerous stitching vias were added around the perimeter and near critical nets to tie the top and bottom reference planes together, reducing EMI.

Decoupling capacitors were placed immediately beside each VDD/VSS pair on the STM32WB, using the shortest possible routing. Power vias are placed directly adjacent to these capacitors to minimise loop area. This matches ST's layout guidelines and the design philosophy highlighted in the video.

### 4.2.5 Design Rule Checking

Both the ERC and DRC checks completed without errors, Fig. 12a and 12b, confirming that the layout complies with the schematic connectivity and PCB constraints. This verifies that the routing, clearances, and manufacturing rules are valid and that the board meets the electrical and physical specifications defined earlier in the design process.

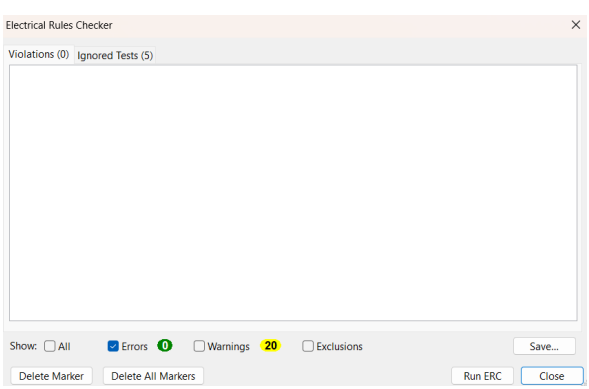


**(a)**

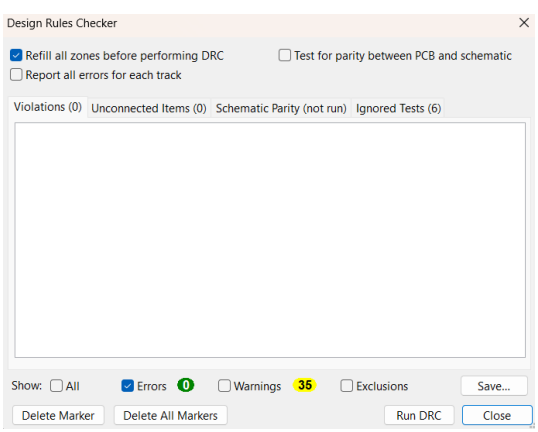


**(b)**

**Figure 12:** (a) Electrical Rules Checker (ERC) and (b) Design Rules Checker (DRC)

### 4.2.6 BOM

The full Bill of Materials, including component links, part numbers, and datasheets, is provided in the appendix. The BOM covers all electrical components used in the wearable, including passives, sensors, the microcontroller, connectors, and the external memory, as summarised in Fig.13.

Most resistors and capacitors use standard 0402 and 0603 footprints, keeping manufacturing cost low and ensuring excellent availability. The higher-value components, such as the STM32WB55CEU6 MCU, MAX30102 pulse-oximeter, ADXL343 accelerometer, and W25Q128JVS flash, cover the main cost, but the overall device remains affordable at roughly $20 for a single unit. In large-volume production, this cost would drop significantly due to bulk-order discounts.

Overall, the BOM confirms that the device is cost-effective, easy to source, and suitable for scalable manufacturing without requiring redesign.

| Reference | Qty | Value | Exclude from BO... | Exclude... | Footprint | Datasheet | Manufacturer | Manufacturer Part Number |
|---|---|---|---|---|---|---|---|---|
| R2 | 1 | 100R | ☐ | ☐ | Resistor_SMD:R_0402_1005Metric | https://jlcpcb.com/api/file/downloadByFileSystemAccessId/857 | UNI-ROYAL | 0402WGF1000TCE |
| R16 | 1 | 1k | ☐ | ☐ | Resistor_SMD:R_0402_1005Metric | https://jlcpcb.com/api/file/downloadByFileSystemAccessId/857 | UNI-ROYAL | 0402WGF1001TCE |
| R4 | 1 | 2k | ☐ | ☐ | Resistor_SMD:R_0402_1005Metric | https://jlcpcb.com/api/file/downloadByFileSystemAccessId/857 | UNI-ROYAL | 0402WGF2001TCE |
| > R11, R17, | 5 | 3k3 | ☐ | ☐ | Resistor_SMD:R_0402_1005Metric | https://jlcpcb.com/api/file/downloadByFileSystemAccessId/857 | UNI-ROYAL | 0402WGF3301TCE |
| > R3, R7 | 2 | 470R | ☐ | ☐ | Resistor_SMD:R_0402_1005Metric | https://jlcpcb.com/api/file/downloadByFileSystemAccessId/857 | UNI-ROYAL | 0402WGF4700TCE |
| > R5, R6 | 2 | 4k7 | ☐ | ☐ | Resistor_SMD:R_0402_1005Metric | https://jlcpcb.com/api/file/downloadByFileSystemAccessId/857 | UNI-ROYAL | 0402WGF4701TCE |
| > R1, R9, R | 3 | 5k1 | ☐ | ☐ | Resistor_SMD:R_0402_1005Metric | https://jlcpcb.com/api/file/downloadByFileSystemAccessId/857 | UNI-ROYAL | 0402WGF5101TCE |
| R8 | 1 | 10k | ☐ | ☐ | Resistor_SMD:R_0402_1005Metric | https://jlcpcb.com/api/file/downloadByFileSystemAccessId/858 | UNI-ROYAL | 0402WGJ0103TCE |
| R19 | 1 | 200k | ☐ | ☐ | Resistor_SMD:R_0402_1005Metric | https://jlcpcb.com/api/file/downloadByFileSystemAccessId/858 | UNI-ROYAL | 0402WGJ0204TCE |
| U4 | 1 | ADXL343 | ☐ | ☐ | Package_LGA:LGA-14_3x5mm_P0.8mm_LayoutBorder1x6y | https://www.analog.com/media/en/technical-documentation/d | | ADXL312WACPZ-RL |
| > C1-C6, C8 | 11 | 100n | ☐ | ☐ | Capacitor_SMD:C_0402_1005Metric | https://jlcpcb.com/api/file/downloadByFileSystemAccessId/858 | KEMET | C320C104K3R5TA |
| > C12, C13 | 2 | 10p | ☐ | ☐ | Capacitor_SMD:C_0402_1005Metric | https://jlcpcb.com/api/file/downloadByFileSystemAccessId/858 | KEMET | C410C100K3G5TA7200 |
| > C7, C9, C | 7 | 4u7 | ☐ | ☐ | Capacitor_SMD:C_0603_1608Metric | https://jlcpcb.com/api/file/downloadByFileSystemAccessId/858 | KEMET | C430C475K3R5TA |
| C19 | 1 | 4u7 | ☐ | ☐ | Capacitor_SMD:C_0402_1005Metric | https://jlcpcb.com/api/file/downloadByFileSystemAccessId/858 | KEMET | C430C475K3R5TA |
| C15 | 1 | 0p3 | ☐ | ☐ | Capacitor_SMD:C_0402_1005Metric | https://jlcpcb.com/api/file/downloadByFileSystemAccessId/858 | KEMET | CBR04C308B1GAC |
| C14 | 1 | 0p8 | ☐ | ☐ | Capacitor_SMD:C_0402_1005Metric | https://jlcpcb.com/api/file/downloadByFileSystemAccessId/858 | KEMET | CBR04C808B1GAC |
| L1 | 1 | 10n | ☐ | ☐ | Inductor_SMD:L_0402_1005Metric | https://jlcpcb.com/api/file/downloadByFileSystemAccessId/860 | Panasonic | ELJRF10NFB |
| L3 | 1 | 2n7 | ☐ | ☐ | Inductor_SMD:L_0402_1005Metric | https://jlcpcb.com/api/file/downloadByFileSystemAccessId/860 | Panasonic | ELJRF2N7FB |
| C27 | 1 | 10u | ☐ | ☐ | Capacitor_SMD:C_0402_1005Metric | https://jlcpcb.com/api/file/downloadByFileSystemAccessId/858 | TDK | FG14X7R1A106KRT00 |
| C24 | 1 | 1u | ☐ | ☐ | Capacitor_SMD:C_0402_1005Metric | https://jlcpcb.com/api/file/downloadByFileSystemAccessId/858 | TDK | FK18X5R1A105K |
| > C25, C28, | 3 | 0u1 | ☐ | ☐ | Capacitor_SMD:C_0402_1005Metric | https://jlcpcb.com/api/file/downloadByFileSystemAccessId/857 | TDK | FK28X7R1E104KN000 |
| > D1, D2 | 2 | LED | ☐ | ☐ | LED_SMD:LED_0402_1005Metric | file:///C:/Users/nmits/OneDrive/Yr%204%20EEE/ELEC0152%20 | Inolux | IN-S42BT5UW |
| U7 | 1 | MAX30102 | ☐ | ☐ | OptoDevice:Maxim_OLGA-14_3.3x5.6mm_P0.8mm | https://datasheets.maximintegrated.com/en/ds/MAX30102.pd | | MAX30101EFD+T |
| U2 | 1 | MCP73832-2-OT | ☐ | ☐ | Package_TO_SOT_SMD:SOT-23-5 | http://ww1.microchip.com/downloads/en/DeviceDoc/2000198 | Microchip Tech | MCP73832-2XXI/OT |
| U3 | 1 | MIC5365-3.3YD5 | ☐ | ☐ | Package_TO_SOT_SMD:TSOT-23-5 | https://ww1.microchip.com/downloads/aemDocuments/docur | Microchip Tech | MIC5365-3.3YD5-TR |
| L2 | 1 | 10u | ☐ | ☐ | Inductor_SMD:L_0805_2012Metric | https://jlcpcb.com/api/file/downloadByFileSystemAccessId/855 | TDK | MLF2012E100JT000 |
| X1 | 1 | 32kHz768 | ☐ | ☐ | Crystal:Crystal_SMD_2012-2Pin_2.0x1.2mm | https://www.vishay.com/docs/35071/xt13.pdf | NDK | NX2012SA-32.768KHZ-STD-M |
| X2 | 1 | 32MHz | ☐ | ☐ | Crystal:Crystal_SMD_2016-4Pin_2.0x1.6mm | https://www.mouser.co.uk/datasheet/3/294/1/ecx_1637.pdf | NDK | NX2016SA-32MHZ-STD-CZS-5 |
| U9 | 1 | PCA9306DC1 | ☐ | ☐ | Package_SO:VSSOP-8_2.3x2mm_P0.5mm | https://www.nxp.com/docs/en/data-sheet/PCA9306.pdf | | PCA9306DCUR |
| U5 | 1 | USBLC6-2SC6 | ☐ | ☐ | Package_TO_SOT_SMD:SOT-23-6 | https://www.st.com/resource/en/datasheet/usblc6-2.pdf | Nexperia | PESD5V0X1BL,315 |
| > SW1, SW | 2 | SW_Push | ☐ | ☐ | Button_Switch_SMD:SW_SPST_CK_RS282G05A3 | https://www.nkkswitches.com/wp-content/uploads/2022/03/C | C&K | RS282G05A3SM |
| U1 | 1 | STM32WB55CEU6 | ☐ | ☐ | Package_DFN_QFN:QFN-48-1EP_7x7mm_P0.5mm_EP5.6x5.6mr | https://www.st.com/resource/en/datasheet/stm32wb55ce.pdf | | STM32WB55CEU6 |
| J2 | 1 | TC2030 | ☑ | ☐ | Connector:Tag-Connect_TC2030-IDC-FP_2x03_P1.27mm_Vertic | https://www.tag-connect.com/wp-content/uploads/bsk-pdf-m | Microchip Tech | TC2030-MCP |
| U8 | 1 | W25Q128JVS | ☐ | ☐ | Package_SO:SOIC-8_5.3x5.3mm_P1.27mm | https://www.winbond.com/resource-files/w25q128jv_dtr%20re | | W25Q128JVSIQ |

**Figure 13:** Bill of Materials

# 5 Conclusion

In conclusion, this project involved selecting appropriate components, designing the schematic, and developing the PCB layout for a compact gym-wearable device. Since many of the components were unfamiliar, a significant part of the work required studying datasheets, application notes, and layout guidelines to ensure correct connections. The final schematic passed all ERC checks, and the PCB completed with no DRC errors, confirming that the design followed both electrical and manufacturing rules.

Although the schematic stage was straightforward, the PCB layout was the most challenging aspect. Careful consideration had to be given to routing constraints, power distribution, RF requirements, and the limited space available. Multiple revisions were necessary to optimise trace widths, reduce congestion, and position components in a way that met both functional and performance needs.

Possible future improvements include refining the enclosure and mechanical integration of the wearable, as well as adding more advanced sensing features. Additionally, firmware development and testing will be essential next steps to validate the functionality of the heart-rate and motion-analysis algorithms intended for this device. Overall, this project provided valuable experience in embedded hardware design, from component selection through to a completed PCB ready for fabrication.

# 6 Appendix

The screenshots have been taken from JLCPCB and LCSC Electronics to prove the stock status of the components.

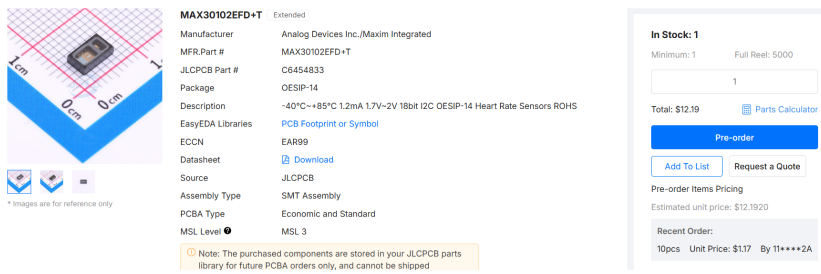


**Figure 14:** Pulse Oximeter and Heart Rate Sensor Stock

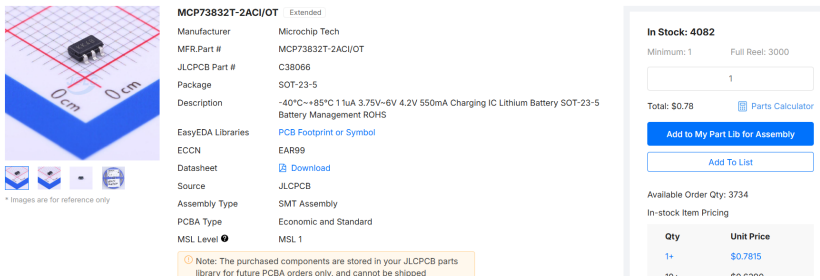


**Figure 15:** Battery Management Controller Stock

**Figure 16:** Regulator Stock

* Images are for reference only

**W25Q128JVSIQ** Basic

| | |
|---|---|
| Manufacturer | Winbond Elec |
| MFR.Part # | W25Q128JVSIQ |
| JLCPCB Part # | C97521 |
| Package | SOIC-8-208mil |
| Description | -40°C~+85°C 100,000 Cycles 120ms@(32KB) 128Mbit 133MHz 1uA 2.7V~3.6V 20 Years 3ms SPI SOIC-8-208mil NOR FLASH ROHS |
| EasyEDA Libraries | PCB Footprint or Symbol |
| ECCN | 3A991B1A |
| Datasheet | Download |
| Source | JLCPCB |
| Assembly Type | SMT Assembly |
| PCBA Type | Economic and Standard |
| MSL Level | MSL 3 |

Note: The purchased components are stored in your JLCPCB parts library for future PCBA orders only, and cannot be shipped separately.

**In Stock: 88722**

Minimum: 1 Full Reel: 2000

1

Total: $1.28 Parts Calculator

Add to My Part Lib for Assembly

Add To List

Available Order Qty: 67208

In-stock Item Pricing

| Qty | Unit Price |
|---|---|
| 1+ | $1.2810 |
| 10+ | $1.1235 |

**Figure 17:** Flash memory Stock

## References


[1] Science News Today, "How wearables are redefining fitness and health," 2024. Accessed: 2025-03-01.

[2] P. Salmony, "Kicad 7 stm32 bluetooth hardware design (1/2 schematic) – phil's lab #127." YouTube video, 2023. Published 15 December 2023.

[3] P. Salmony, "Kicad 7 stm32 bluetooth hardware design (2/2 pcb) – phil's lab #128." YouTube video, 2023. Published 22 December 2023.

[4] STMicroelectronics, *STM32WB55CEU6: Ultra-Low-Power Bluetooth Low Energy Wireless MCU – Datasheet (DS13293 Rev. 9)*. STMicroelectronics, 2023. Datasheet.

[5] A. Devices, "ADXL343: 3-Axis, ±2 g/±4 g/±8 g/±16 g Digital MEMS Accelerometer (Rev. A)." `https://www.analog.com/media/en/technical-documentation/data-sheets/adxl343.pdf`, 2022. Accessed: 2025-02-14.

[6] M. Integrated, *MAX30102: High-Sensitivity Pulse Oximeter and Heart-Rate Sensor for Wearable Health*, 2018. Rev. 1, 32 pages.

[7] STMicroelectronics, *USBLC6-2: Very Low-Capacitance ESD Protection for High-Speed Interfaces*, 2021. Accessed: 2025-03-01.

[8] M. Inc., "Mic5365/6: High-performance single 150ma ldo." `https://www.micrel.com/_PDF/mic5365.pdf`, 2013. Accessed: 2025-01-01.

[9] M. T. Inc., "Mcp73831/2: Miniature single-cell, fully integrated li-ion, li-polymer charge management controllers." `https://ww1.microchip.com/downloads/en/DeviceDoc/20001984G.pdf`, 2014. Accessed: 2025-01-01.

[10] M. O. Optoelectronics), "Sk6805d-ec2018-001 smart rgb led datasheet." Datasheet, 2023. Rev. 01, Dongguan OPSCO Optoelectronics Co., Ltd.

[11] W. E. Corporation, *W25Q128JV 128M-bit Serial Flash Memory Datasheet*, 2021. Accessed: 2025-02-15.

[12] STMicroelectronics, *RM0434: STM32WB55xx and STM32WB35xx Advanced Arm®-based 32-bit MCUs Reference Manual*. STMicroelectronics, 2019. Revision 6.