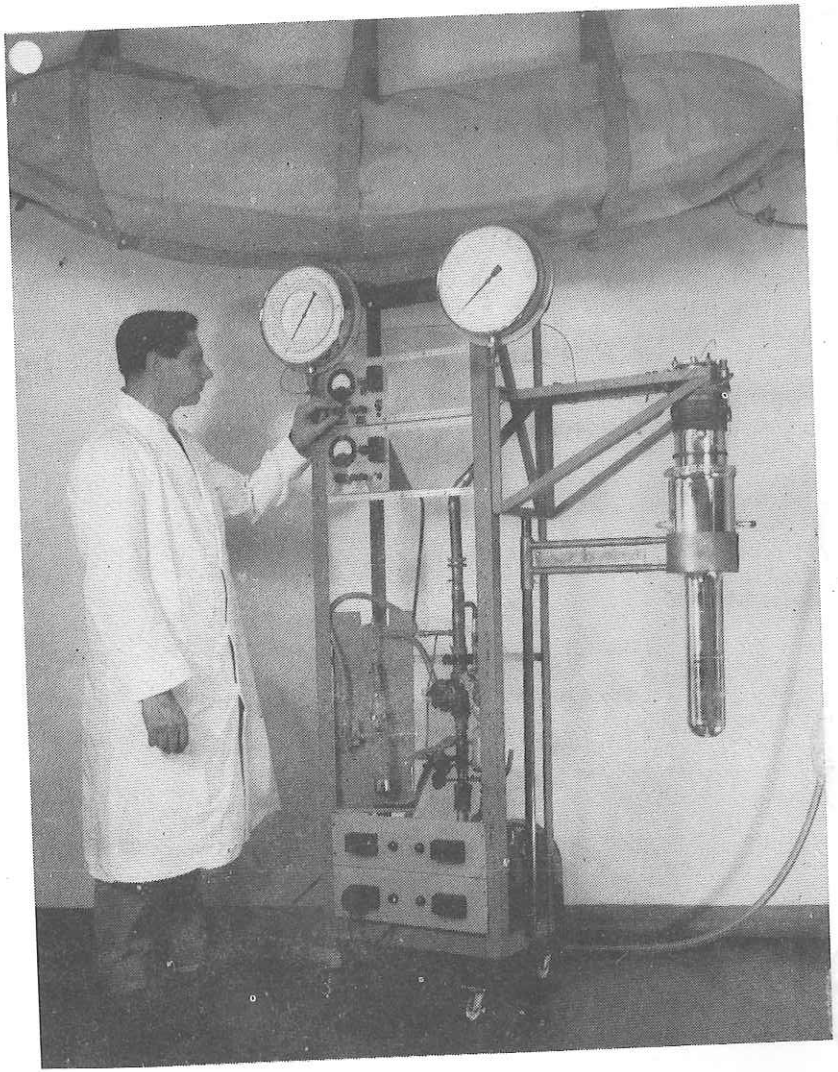

Frontispiece: **A complete portable liquid helium cryostat** (see p. 50).

One large dial indicates the pressure in the helium dewar, the other is the manometer of a gas thermometer. The rotary pump for pumping the helium dewar is behind the plug-boards at the bottom of the frame. From the ceiling hangs a rubberised fabric bag in which the helium gas is collected.

(Photo by courtesy of the Admiralty, Crown Copyright reserved).

LOW TEMPERATURE LABORATORY TECHNIQUES

The use of Liquid Helium in the Laboratory

A. C. ROSE-INNES
M.A., D.Phil., D.Sc., F.Inst.P.
Professor of Physics and Electrical Engineering
University of Manchester Institute of Science and Technology

THE ENGLISH UNIVERSITIES PRESS LTD

536.56
ROS
338B7

APPLIED PHYSICS GUIDES

General Editor
SIR GRAHAM SUTTON
C.B.E., D.SC., LL.D., F.R.S.

The Physics of Musical Sounds
C. A. TAYLOR
D.SC., F.INST.P.

Physics of Nuclear Reactors
D. JAKEMAN
B.SC., PH.D.

Power Travelling Wave Tubes
J. F. GITTINS
B.SC., A.R.C.S.

The Physics of Lightning
D. J. MALAN
D.SC., F.R.S.S.AF.

ISBN 0 340 04778 X

First printed 1964
Second impression 1970
Second edition 1973

Copyright © 1973 A. C. Rose-Innes

All rights reserved. No part of this publication may be reproduced or transmitted in any form or by any means, electronic or mechanical, including photocopy, recording, or any information storage and retrieval system, without permission in writing from the publisher.

Printed in Great Britain by
Elliott Bros. & Yeoman Ltd., Speke, Liverpool L24 9JL

324263

To
Frank Nicholls
and
Nicholas Rose-Innes
with thanks for all their help

GENERAL EDITOR'S FOREWORD

by

SIR GRAHAM SUTTON, C.B.E., D.Sc., LL.D., F.R.S.

ONE of the characteristics of modern science is the use it makes of specialized techniques. Only too often the technologist or engineer finds himself unable to proceed because he needs the knowledge and experience of an expert in another technique to guide him. If he is one of a large team, the difficulty may be easily resolved, but less fortunate beings often have to grope through a widely scattered literature before they can find exactly what they want. The Applied Physics Guides are designed primarily to help those who face this kind of difficulty.

This particular contribution to the series admirably illustrates the intentions outlined above, for in it Dr. Rose-Innes has drawn on his long experience in research in low temperature physics to provide exactly the kind of guide needed by those called upon to handle substances such as liquid helium. But the volume is more than a laboratory handbook, for it provides an illuminating introduction to a particularly exciting and rewarding branch of modern physics. As such I feel sure that it will be welcomed in the physics laboratories of universities and colleges of technology.

PREFACE TO THE SECOND EDITION

Ten years ago I published a book called *Low Temperature Techniques*. Since then there have been considerable advances in this field, and it is now necessary to bring the material up to date. This new book, while based to a large extent on my original, contains considerable additional and revised material. It will be seen that I have changed the title to *Low Temperature Laboratory Techniques*. At the time of writing my original book, very low temperatures were found only in the research laboratory, but in the past 10 years engineers have begun to make use of extreme cold. However this book is not concerned with these 'engineering' or 'large scale' applications, and I hope the modified title reflects its contents. I also hope, however, that the techniques described will be useful to Cryogenic Engineers.

Since the appearance of my original book, the use of helium^3 has become quite commonplace and the invention of helium^3 dilution cooling has enabled temperatures down to a few millidegrees to be reached with comparative ease. I have had, therefore, to expand considerably the chapters dealing with cooling by helium^3 and the measurement of temperatures below 1K. Consequently, it has seemed best to divide this book into two parts: Part I deals with the use of liquid helium^4 to obtain temperatures down to about 1K, and describes the simple techniques and apparatus which can be used; Part II deals with the use of liquid helium^3 to obtain temperatures below 1K and will, I hope, be useful to those who wish to enter this more specialised field.

I am, however, anxious that this book should still be useful to those who, without previous experience, need to start low temperature work. Because this book now contains more than is necessary for the strict beginner, I have included on p.x a selection of the contents, intended for those who want to use this book as a first introduction to the subject.

This preface gives me the opportunity to acknowledge with real gratitude the time and trouble taken by J. Lowell, H. E. Hall, J. B. McKinnon and J. J. Rowland who read chapters of the manuscript and helped me so much with advice and criticism. I must also thank Miss D. Denton and Mrs. A. J. Lamb for typing the manuscript with such care and efficiency.

UMIST
Manchester

A.C.R.-I.

SUGGESTED INTRODUCTORY READING

Below is given a selection of Chapters and paragraphs which would form a suitable first reading for those using this book as an introduction to low temperature techniques. Symbol ● in the text indicates the beginning and end of sections which may be omitted.

Chapter 1

Chapter 2: pp. 17–19, 20–23, 24–26, 29–32, 32–34.

Chapter 3: pp. 43–45, 46–53, 55–58, 61, 63–66, 71–73, 78–83, 83–92, 94–101.

Chapter 4: pp. 105–108, 116–117, 121–123, 128–140, 141–144, 148–151.

Chapter 5: pp. 154–156, 159–167, 170–171.

Chapter 6: pp. 173–182.

Chapter 7: pp. 211–223.

CONTENTS

Chapter 1—**Introduction** 15

PART I

Temperatures down to 1K; the use of Helium[4] .

Chapter 2—**Storage and Distribution of Helium** . . 17
2.1 Storage Vessels for Liquid Helium . . . 17
2.2 Evaporation of Liquid Helium; Enthalpy and Latent Heat 21
2.3 Thermal Oscillations 22
2.4 Measurement of Evaporation - Rate . . . 23
2.5 Level Indicators 24
2.5a Level detectors 24
2.5b Depth gauges 26
2.6 Syphons 29
2.7 Gas Storage 34
2.7a Low pressure storage 35
2.7b High pressure storage 36
2.7c Purity testers 39

Chapter 3—**Cryostats and the Design of Apparatus** . . 43
3.1 The Storage-Vessel as a Cryostat 43
3.2 Simple Basic Cryostat 46
3.3 Dewar Vessels 51
3.3a Glass dewars 51
3.3b Metal dewars 55
3.3c Dewars for superconducting electromagnets . 60
3.3d Operation of metal dewars 61
3.4 Small Portable Cryostats 62
3.5 Lowering the Temperature: The Helium Film . 63
3.5a Cryostat to reach below 1K . . . 66
3.5b Charcoal sorption pumps 67
3.6 Precooling 71
3.7 Manipulation of Liquid Helium 74
3.8 Design of Experimental Apparatus . . . 78
3.8a Electrical leads 81
3.8b Vacuum technique 86

3.8c Thermal insulation, thermal contact, heat switches 91
3.8d Materials 94
3.8e Calculation of heat conduction . . . 97
3.8f Mechanical motion 99
3.9 Superconducting Electromagnets 101

Chapter 4—**Measurement of Temperature** 105
4.1 Sensitivity and Accuracy 106
4.2 Types of Thermometer 107
4.3 Gas Thermometer 108
4.3a Corrections 112
4.3b Construction 114
4.3c Merits and demerits of gas thermometers . 116
4.4 Vapour Pressure Thermometry 116
4.4a He^4 temperature scales 124
4.5 Metallic Resistance Thermometers . . . 124
4.6 Semiconductor Resistance Thermometers . . 128
4.6a Crystalline semiconductors . . . 130
4.6b Carbon resistors 135
4.6c Thermistors 140
4.7 Thermocouples 141
4.8 Effect of Magnetic Field on Electrical Thermometers 144
4.9 Other Thermometers 145
4.10 Calibration 148

Chapter 5—**Control of Temperature** 154
5.1 Control of Vapour Pressure 154
5.2 Control above 4·2K 159
5.3 Continuous-Flow Cryostats 164
5.4 Automatic Temperature Control 168
5.5 Closed-cycle Refrigerators 170

PART II

Temperatures below 1K

Chapter 6—**The Use of Helium³** 173
6.1 Storage and Handling of Helium³ 175
6.2 Helium³ Cryostats 178
6.2a Sorption pumping 182
6.3 Helium³ Refrigerators 184
6.4 Helium³ Dilution Cooling 190
6.4a Helium³ dilution cryostat 194

6.4b Continuous refrigeration by Helium³ dilution 196
6.4c Simple Helium³ dilution refrigerator . . 206
6.5 Cooling by Solidification of Helium³ . . . 208

Chapter 7—**Temperature Measurement Below 1K** . . 211
7.1 Thermal contact 211
7.2 He^3 Vapour Pressure 211
7.3 Semiconductor Resistance Thermometers . . 213
7.3a Carbon resistors 214
7.3b Calibration 216
7.4 Paramagnetic Thermometers 216
7.5 Nuclear Orientation Thermometer . . . 223

Chapter 8—**Data** 226

Appendix, Suppliers of Materials and Equipment . . . 243

Index 250

CHAPTER 1

INTRODUCTION

There are two methods by which low temperatures can be obtained in the laboratory. All gases liquefy if cooled sufficiently, and experiments at very low temperature are usually carried out by using liquefied gases as coolants. Alternatively, it is now possible to buy mechanical refrigerators which can cool equipment down to a few degrees above the absolute zero of temperature. These refrigerators are convenient to use but they are expensive (£3000 upwards) and at present the most common way of obtaining low temperatures is by use of liquefied gases. In this book we are chiefly concerned with the use of liquid helium to obtain temperatures below about 55K, which is the lowest temperature that can be reached by boiling liquid oxygen at reduced pressure. Refrigerators are, however, discussed briefly in §**5**.5, and of course many of the low temperature techniques discussed in this book do not depend on the method used to produce the cold.

Table **1**.1 shows the normal boiling points of some coolants commonly used in low temperature laboratories.

Oxygen	Air	Nitrogen	(Neon)	Hydrogen	Helium^4	Helium^3
90	~80	77	27	20	4·2	3·2

Table **1**.1. Approximate normal boiling points (K) of coolants used in low temperature work.

The temperature of any boiling liquid can be lowered by reducing the pressure over its surface, though below a certain temperature, the 'freezing point', all liquids except helium become solid. However, the solid can still be cooled below its freezing point by a further reduction of the pressure over it.

It is possible to obtain temperatures from 27 down to about 17K with condensed neon. The chief attraction of neon as a liquid coolant is its relatively high latent heat of vaporisation, 108 joules/ml of liquid, about 40 times that of the same volume of liquid helium, so a given volume of liquid lasts a long time. Neon is, however, very expensive (£23–£45 per litre) and consequently is little used at present.

Temperatures down to about 6K can be reached by evaporating condensed hydrogen at reduced pressure (L1), and liquid hydrogen is often used in laboratories, to obtain low temperatures. Hydrogen, however, has disadvantages, most of which stem from the risk of fire and explosion. It should be pointed out, however, that by taking simple precautions

liquid hydrogen can be used with very little danger. Nevertheless, it seems best to avoid the use of liquid hydrogen, because with very few exceptions, liquid helium can be used to carry out experiments over the whole of the very low temperature range. In any case, helium has a lower boiling point than hydrogen, so a wider range of temperature can be covered. The author's laboratories have been engaged in very low temperature work for over eighteen years without the use of any liquid hydrogen.

The advent of commercially manufactured helium liquefiers has greatly changed low temperature practice. It is now almost universal procedure to liquify fairly large quantities of helium in a central liquefier and to store the liquid in metal Dewar flasks from which it may be transferred into the experimental equipment. Liquid helium can also be bought from firms who will fill customers' storage Dewar vessels (Appendix, 2). It is now uncommon to find small helium liquefiers incorporated in experimental apparatus, and we shall not deal with this kind of equipment in this book. As an experimenter need not now be concerned with producing liquid helium, his apparatus can be of simple design. In fact, the minimum amount of equipment needed to do experiments with liquid helium is just a liquid helium storage-vessel, because simple measurements may be done within this vessel itself. However, it is usually advantageous to have some cryostats into which the liquid helium may be transferred; this gives scope for a wider variety of experiment. In this case one will also need a vacuum insulated "syphon" to transfer the liquid helium from the storage-vessel into the apparatus (§**2.6**).

In countries other than the U.S.A. helium is expensive and it is necessary to collect the gas that evaporates from the liquid, so that this gas can be used again to provide more liquid. In the U.S.A. helium gas is usually allowed to escape into the atmosphere though, even in that country, some laboratories are now installing helium gas recovery systems. If helium gas is to be collected, two things are needed: a low temperature gas holder and a compressor to pump the gas into high pressure cylinders in which it can be stored and transported. Once a gas recovery system has been installed, the conservation of helium presents little trouble. At the present time (1971) it should be possible to set up a complete liquid helium system including a storage-vessel, syphon, cryostat, low pressure gas storage, compressor and high pressure gas cylinders for about £1000.

The next chapter describes equipment for storing liquid helium and recovering the gas. Subsequent chapters describe experimental techniques and the use of liquid helium for low temperature experiments.

REFERENCE

L1. Lazarev, B. G., Milenko, Yu. Ya., Breslavets, K. G., 1966, *Sov. Phys.-Doklady*, **13**, 27.

PART I

TEMPERATURES DOWN TO 1K, THE USE OF HELIUM[4]

CHAPTER 2

STORAGE AND DISTRIBUTION OF HELIUM

In this chapter we discuss methods of storing and distributing liquid helium on the assumption that the helium is liquefied in a central liquefier and stored in containers from which cryostats are filled when needed. We also describe methods used to conserve helium gas, should this be necessary.

Liquid helium may be produced by a liquefier situated in the laboratory or it may be bought from firms who fill customers' storage-vessels (Appendix, 2). Whether it is better to have a liquefier or to buy the liquid depends on circumstances, and it is not possible to give any general rule. At present (1971) the price of liquid helium in England is between £2 and £3 a litre (depending on the amount bought) with a rebate of 9p per 100 litres ($2\frac{1}{2}$p per cu. ft) for pure gas at STP returned to the supplier. One litre of liquid produces 740 litres of gas so, if 100% of gas is returned, the cost is reduced by between 20 and 30%.

Several firms sell liquefiers for laboratory use (Appendix, 3). Liquefiers producing between 3 and 10 litres of helium an hour (say, 300 and 1000 litres per week) cost between about £17 000 and £26 000. It is also possible to hire Philips' helium liquefiers (Appendix, 3). Descriptions of helium liquefiers, both commercial and 'home-made' are given in the review article by Croft (C1).

As a very rough guide, one may say that a laboratory using less than about 5000 litres of liquid per year will probably find it cheaper to buy the liquid instead of buying and operating a liquefier.

2.1 Storage Vessels for Liquid Helium

Liquid helium is usually stored in metal vacuum-insulated vessels like that shown in Fig. **2.1**. Such storage-vessels consist basically of two metal dewars, one inside the other. The inner dewar H holds the liquid helium, and the outer one N contains liquid nitrogen (or air or oxygen) to reduce the heat leak into the inner container. These storage vessels are obtainable commercially (Appendix 4) with capacities ranging from 2 to 100 litres, and are extremely efficient, only losing each 24 hours an amount of liquid helium equal to about 1% of the total volume of the helium container. (Manufacturers sometimes quote the liquid helium evaporation rate from vessels as a certain percentage of the contents per day. In fact, the rate of evaporation is virtually independent of the amount of liquid in the vessel, and the figure quoted by manufacturers is the daily evaporation, given as a fraction of the total capacity of the helium container).

The vessel needs to be replenished periodically with liquid nitrogen (or air, or oxygen) and, typically, may consume 2 or 3 litres of liquid nitrogen a day. These storage vessels are quite robust and full vessels can be transported by road or rail without difficulty. For small laboratories with three or four workers, 20-litre containers are quite convenient; larger groups may need 50-litre vessels. A laboratory would be well advised to buy a vessel rather than to try to construct one, and, for this reason, we describe the design of these vessels only briefly.

The helium container H (Fig. **2.**1) hangs on a long thin-walled tube T made of an alloy of low heat conduction, such as stainless steel or Inconel (§**3.**8d). This helium container is surrounded by a vacuum jacket and, when the vessel contains liquid helium, the vacuum insulation is extremely

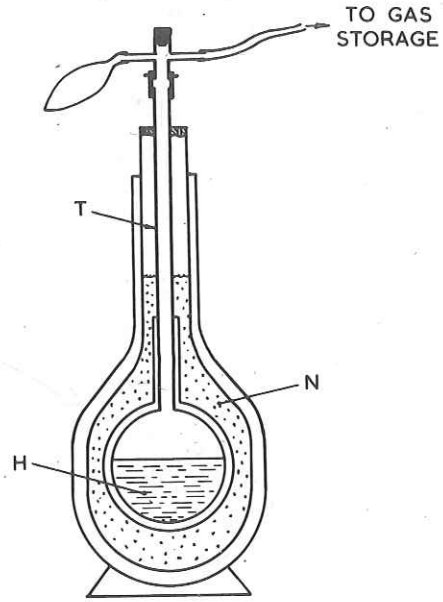

Fig. **2.**1. A Metal Helium Storage-Vessel

good, because any residual gas in the vacuum-space condenses on to the cold surface with very low vapour pressure. Under these conditions the major sources of heat leak into the helium container are: (1) radiation from the outer shell of the vacuum jacket, which is at liquid air temperature; (2) radiation down the neck; (3) heat conducted down the neck. Radiation across the vacuum jacket is reduced to a minimum if the inside surfaces of the jacket are highly polished (the emissivity of polished copper is about 0·02). Radiation transmitted down the neck could be a serious source of heat influx, but is lessened if the inner surface of the tube T has a dull finish so that the radiation is absorbed by this tube

and the resulting heat given up to the out-flowing gas (§**2.**2). Vessels in which the evaporation rate is rather high, may sometimes be improved by means of a radiation shield suspended in the neck. A suitable shield can be made of light-weight material of poor thermal conductivity, such as foamed plastic, in the form of a loosely fitting cylinder which extends from the mouth of the helium container up to the top of the vacuum jacket. This shield absorbs radiation coming down the neck and ensures good heat contact between the outflowing gas and the tube T. By use of such a shield the author has reduced by 15% the evaporation rate from a vessel which normally lost 300 cm³ of liquid helium a day.

A minor problem in liquid nitrogen shielded vessels can arise from superheating of the liquid nitrogen. Some heat is always leaking into the nitrogen container but, because of the absence of suitable nuclei for bubble formation, the liquid may not boil. Consequently its temperature rises above the boiling point; the resulting superheated state is unstable and, after a time, explosive boiling suddenly occurs. This explosive boiling can eject a considerable amount of liquid nitrogen from the vessel but does no damage, providing the orifice at the top of the vessel can cope with the sudden rush of gas. However, explosive boiling is often triggered off by moving a vessel which has been standing for some time and there is a risk that the operator may get a jet of cold nitrogen in his face. The orifices at the top of the nitrogen container should be arranged so that any jets are not directed towards the face. Explosive boiling can be prevented by providing nuclei on which bubbles can form, but in practice it is not easy to provide suitable nuclei. Metal particles are often ineffective. It has been found (R1) that coating the surface of the liquid nitrogen container with a very thin film of grease (applied as grease dissolved in a solvent) encourages bubble formation on the surface and prevents superheating and, therefore, the risk of explosive boiling.

Modern helium storage-vessels often dispense with the nitrogen-cooled high-vacuum shell round the helium container and instead use multilayer insulation (often called 'superinsulation'). This consists of a large number (say 50 to 100) of alternate layers of thin porous insulator (e.g. glass fibre paper) and highly opaque reflective sheets (e.g. aluminium foil) wrapped round the helium container. These layers are encased in a vacuum jacket which is pumped out to a moderate vacuum; a pressure less than 10^{-3} torr seems satisfactory. This results in very good thermal insulation, because the porous insulator has very poor heat conductivity and the metallic layers stop thermal radiation. The effective mean thermal conductivity of multilayer insulation is about 10^{-6} W cm^{-1} K^{-1}, and this value is approximately the same for temperature differences of 300 to 77K and 300 to 4K. Multilayer insulated vessels are much lighter than liquid nitrogen shielded vessels, so that quite a large vessel can be lifted by

one person and, furthermore, no supply of liquid nitrogen is needed. On the other hand, in the smaller sizes they are usually more expensive than nitrogen-shielded vessels and the evaporation rate may be about twice as high (say 2 litres of liquid per 24 hours for 100-litre vessel).

Details of the design and construction of liquid helium storage vessels can be found in reference S1.

If a proper liquid helium storage dewar cannot be obtained, liquid helium can be stored satisfactorily in a narrow-necked metal liquid nitrogen dewar, if the *outside* of this is cooled with liquid nitrogen (Fig. **2.**2). For lightness and simplicity of construction the outer container for the liquid nitrogen can be made of styrofoam or other suitable heat-insulating material.

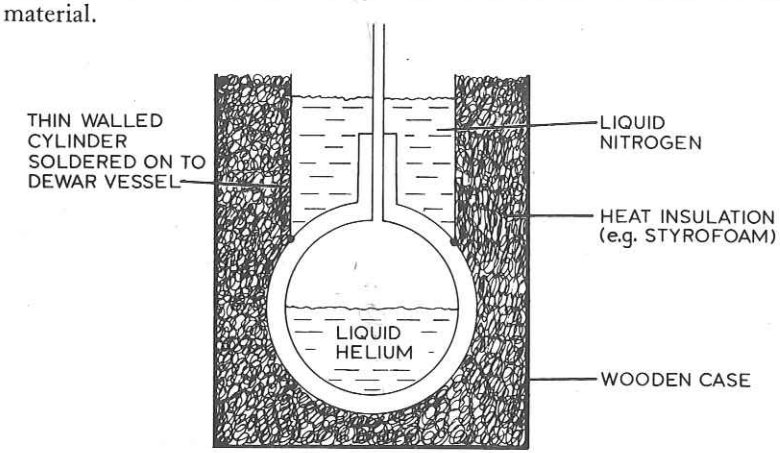

Fig. **2.**2. Liquid nitrogen storage dewar adapted for liquid helium (after Gonzalez, White and Johnston, G1)

A storage vessel should not be left standing for long periods with its entrance open to the atmosphere, as there is danger of air and water vapour condensing into the neck and blocking it. This may be prevented by a simple Bunsen valve made from a short length of rubber tube closed at one end and with a slit, a centimetre or so in length, made longitudinally in the wall by a razor blade. If the open end of such a valve is placed over the exit of the helium vessel, air cannot enter, though, when a slight overpressure builds up in the vessel, the slit opens and allows the helium gas to escape. Alternatively, the safety valve described in Fig. **3.**5 can be used.●

If helium gas has to be conserved, the outlet of the storage-vessel must be connected by a pipe to the low pressure gas store. In Fig. **2.**1 is shown a convenient manifold which may be permanently attached to the mouth of the vessel. To one arm is connected a flexible tube which goes to the gas store and to the other arm is fixed a rubber football bladder, used

when transferring liquid (§**2.**6). The top orifice, through which the syphon used for transferring liquid is inserted, is normally closed by a rubber bung or safety valve of the type mentioned above. The gas leaving the vessel may flow into the gas return line through a small bubbler filled with butyl phthalate (Fig. **2.**10). This prevents any air or water vapour, which may have accidentally got into the storage system, leaking back into the neck of the vessel and collecting there.

A storage-vessel may be mounted on a small trolley so that it can be wheeled up to an apparatus into which helium is to be transferred. In some laboratories it is the practice to have a lifting mechanism on the trolley in order that the vessel may be raised to different heights to suit the various apparatuses. Such an arrangement can, however, result in a rather clumsy trolley, and the author has found it more convenient to place the vessel on a simple trolley of fixed height and to mount cryostats so that their caps are at the correct height with respect to the vessel.

The storage vessel should, if possible, be returned for refilling with a little liquid helium left in it. It is easier to fill the vessel in this condition, and no liquid is wasted in cooling it to 4.2K. However, it is also advisable occasionally, say once a year, to allow the vessel to warm up to room temperature, so that any accumulation of frozen water vapour or air may be drained off.

The evaporation rate of helium is increased somewhat during transport as a result of jolting. This increase is not however, serious. As an example, the evaporation rate from a 16-litre flask which normally lost 300 cm^3 of liquid a day was found to increase by about 50% during transport in a van. The journey therefore produced an extra evaporation of only about 6 cm^3 per hour.

2.2 Evaporation of Helium: Enthalpy and Latent Heat

At this point we discuss the rate at which liquid helium is evaporated by heat. We may think of the evaporation of a cold liquid in a vessel as taking place in two stages. First, the liquid is evaporated into cold gas, a process which requires the latent heat of vaporisation L to be supplied. Second, the gas evolved must leave the vessel and, in doing this, must be heated at constant pressure to the temperature of the exit of the vessel. This heating requires energy, and the energy needed is called the increase in *enthalpy* (or total heat) ΔH of the gas. The latent heat of liquid helium at $4 \cdot 2$K is about $2 \cdot 7 \times 10^3$ J/litre of liquid: the increase in enthalpy of helium gas evolved from 1 litre of liquid when raised from $4 \cdot 2$K to room temperature at atmospheric pressure is about $2 \cdot 1 \times 10^5$ J (Fig. **8.**4). Hence we see that the energy required to evaporate the liquid is much less than the energy needed to raise the resulting gas to room temperature.

When considering the rate at which liquid helium evaporates we must distinguish carefully between two extreme situations. In one situation, heat comes into a vessel from the outside along a path throughout which

there is heat exchange with the outflowing gas; for example, heat leaking into a storage-vessel down the neck. In this case the energy needed to evaporate the liquid and the energy needed to increase the enthalpy of the gas are both taken from the incoming heat. A heat leak of dQ_L/dt into the vessel will cause the liquid to evaporate at a rate $dV/dt = \frac{dQ_L/dt}{L+\triangle H}$.

If there is perfect heat exchange, so that the gas leaves the vessel's exit at room temperature, $L+\triangle H$ amounts to about $2\cdot1\times10^5$ J/litre of liquid, so that a heat inflow of one watt causes evaporation of about 17 ml of liquid per hour. This low rate can be nearly achieved in practice for the heat conducted into a storage vessel along the neck or down leads into the liquid, if care is taken to ensure a good heat exchange with the outflowing gas.

In the other situation, heat is generated within the liquid, for example by immersed apparatus. In this case all the heat is used to evaporate the liquid, and for a heat input of dQ_A/dt, liquid is evaporated at a rate $(1/L)\ (dQ_A/dt)$. Since this heat is not available to warm the gas, cold gas is driven out of the vessel. This gas acquires its increase in enthalpy by extracting heat from the vessel's exit and from the atmosphere, both of which will therefore be cooled. Under these conditions one watt evaporates about 1·4 litres of liquid per hour (i.e. about 80 times more than when there is complete heat exchange with the outflowing gas).

If the power dQ_A/dt generated by an immersed apparatus is small, it may appear to evaporate liquid at a rate less than $(1/L)\ (dQ_A/dt)$. This occurs when the rate of liquid evaporation due to the power is less than the rate due to the heat leak. In this case the extra cold gas flowing out may reduce the heat leaking in. In many cases, however, most of the escaping gas is generated by the immersed power and it will be found that evaporation approaches the full rate $(1/L)\ (dQ_A/dt)$.

2.3 Thermal Oscillations

Longitudinal oscillations may build up in helium gas in an open-ended tube running from high to low temperature. The energy of oscillation can be quite large and transfer considerable amounts of heat into the low temperature region. The mechanism by which these oscillations are set up is not properly understood and it is difficult to specify exactly the conditions under which oscillations may or may not occur. Oscillations usually appear in narrow tubes (say less than 1 cm diameter) along which there is a steep temperature gradient (C2), but they do not seem to arise if the lower end of the tube is above about 30K. The character of the oscillations can vary from a barely audible hum to violent pulsations with a frequency of a few tens of cycles per second. As an example of the effect, oscillations in an 80 cm long, 2·5 mm diameter tube with its upper end at room temperature and its lower end just above the liquid helium in a storage-dewar caused the helium evaporation rate to increase

by about 170 cm³ of liquid per hour. When the bottom of the tube was immersed in the liquid the increase in evaporation rate was about half this (see §2.5a). It is, therefore, important in the design of low temperature equipment to avoid conditions under which oscillations may occur. In particular, there should not be narrow gas-filled tubes running directly from room temperature to the low temperature region. If, however, such tubes are unavoidable, oscillations may be prevented by some damping. A wire or strand of hairy wool pushed down the inside of a tube is often effective. If the tube does not have to be gas-tight, small holes cut in the side at intervals of 10 cm or so may stop oscillation.

These oscillations do not only occur in cylindrical channels; they may arise, for example, in the annular space between the outer jacket of a syphon and a tube into which the syphon is inserted for liquid transfer. The oscillations may be so violent that transfer of liquid helium is difficult or impossible. For this reason, the outer diameter of the syphon jacket should be considerably smaller than the neck of any vessels into which it has to be inserted.

2.4 Measurement of Evaporation-Rate

The rate of evaporation of liquid helium in storage vessels and cryostats can be determined by measuring the rate at which gas flows out of the vessel (1 litre of liquid produces 740 litres of gas at STP). Simple gas flowmeters in which the height of a float in a vertical glass tube indicates

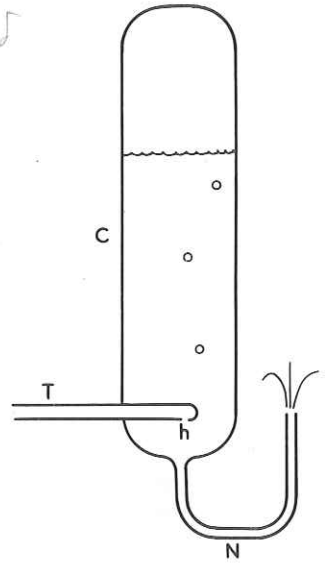

Fig. 2.3. Evaporation Rate-Meter

the rate of gas flow through the tube can be obtained with full-scale sensitivities down to 100 cc of helium gas per minute (Appendix 5).

Fig. **2.**3 shows an alternative instrument for measuring the rate of evaporation of liquid helium in storage-vessels and cryostats. A tube T, ending in a hole h, passes through the side of a glass cylinder C. The volume of the cylinder above the tube is 740 cm^3 which is the space occupied at room temperature and pressure by the gas evolved from 1 ml of liquid helium. The lower end of the cylinder terminates in a neck N bent over so that its open end is level with tube T. Initially the instrument is filled with water by turning it upside down and filling through the tube T until the cylinder is completely full and water flows out of N. The instrument is then righted. In this upright position atmospheric pressure prevents the water flowing out. T is then connected by a rubber tube to the gas outlet of the vessel whose evaporation is to be measured. Gas bubbles up into the cylinder C pushing the water out through N. The time taken for the water level to fall to the tube T is noted; this is the time taken for 1 cm^3 of liquid helium to evaporate. The top of the neck N being level with tube T ensures that, when the water surface has fallen down to T, the gas inside is at atmospheric pressure.

2.5 Level Indicators

Since one cannot see into a metal vessel, some device is required to indicate how much liquid is inside. We consider two types of indicator: *level detectors*, small probes which merely indicate whether or not they are immersed in the liquid, and *depth gauges*, long vertical elements which indicate at any time the actual depth of the liquid.

2.5a Level Detectors

The simplest level detector is the open end of a tube, and makes use of the thermal oscillations (§**2.**3) that can occur in helium gas (G2). The device consists of a long, narrow, thin-walled alloy tube, of say 2·5 mm diameter. This is lowered into the vessel, and when the lower end is at liquid helium temperature, the gas in the tube breaks into oscillation. If this end is immersed in the liquid these oscillations are fairly slow, but if the tube is raised so that the end is in the gas above the liquid both the amplitude and frequency are markedly increased. A drum attached to the top of the tube with a rubber membrane stretched across it (Fig. **2.**4) allows the change in the oscillations, which occurs when the dipstick passes through the liquid surface, to be detected easily by a finger laid on the membrane. This form of level detector is particularly convenient, as it is very easily constructed and requires no power supply. It must not, however, be left permanently in the vessel because the energy of the oscillations evaporates liquid helium; it is instead used as a dipstick lowered into the vessel when the liquid height needs to be known, An even more positive indication of when the lower end of the tube is at the

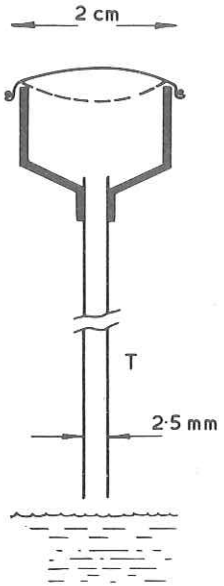

Fig. **2.**4. Liquid Helium Level-Indicator (after Gafney and Clement, G2)

liquid surface may be obtained by replacing the rubber membrane by a very thin sheet of metal soldered across the top of the drum. This produces a loud buzzing whose tone changes markedly when the end of the tube passes through the liquid surface (S2).

An ordinary carbon radio resistor may be used as a level detector. The heating of such a resistor by a current is greater when the resistor is in helium gas than when it is in the liquid, since heat is carried away much more efficiently by the liquid. Hence, because the resistance of such resistors decreases rapidly with temperature (§**4.**6b), there is a marked change when the resistor passes through the surface of the liquid. A very simple but effective circuit is shown in Fig. **2.**5. R is a carbon resistor from which the insulating cover has been removed to provide better heat contact to the surroundings. Current is fed from a low impedance source, such as a transformer, and when the resistor passes into the liquid from the gas there is a sudden decrease in the current shown on the meter. Some experiment may be required to find the best operating voltage. If there is too little current the resistor does not heat up sufficiently in the gas, but if there is too much current the resistor heats up even when immersed. The author has found that the current through a 330 ohm, $\frac{1}{2}$-watt LAB carbon resistor, bared of its insulation and fed from a 12v transformer, changes from 8 to 2 mA when the resistor passes from the gas into the liquid. Alternatively, the sensing resistor can be connected

into the bias circuit of a transistor so that the change of resistance can be used to light a lamp or operate a relay (see, for example, S3). A sensing resistor can be attached to a dipstick in order to find the liquid level in a vessel, and is also very useful when filling metal experimental cryostats into which one cannot see. In this case the resistor is simply attached inside the vessel at the appropriate height.

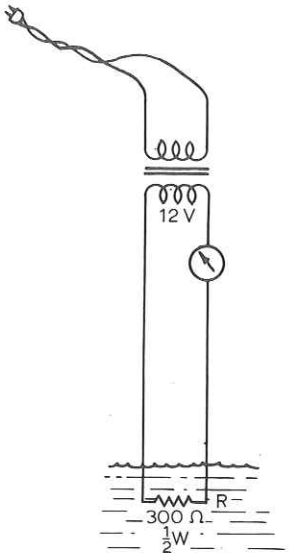

Fig. 2.5. Carbon Resistor Level-Indicator

Sometimes a level detector is needed which dissipates very little heat; for example, for continuous monitoring to indicate whether the liquid in a cryostat has fallen below a certain level. A level indicator (C3) that dissipates less than 1 mW can be made with a horizontal 5 mm length of fine resistance wire, the centre 3 mm of which have been coated with a thin layer of Pb-In alloy (50–50 by weight). This alloy has a superconducting transition temperature of about 6·2K, and if a current is passed through the wire there will be a relatively large voltage across it when it is in the gas above the liquid, but this voltage will decrease when the liquid covers the wire and makes the centre coating superconducting. The uncoated ends are necessary to ensure that there is some heat to drive the centre above the superconducting transition temperature when the wire is in the gas.

2.5b Depth Gauges

It is not always convenient to probe for the liquid helium surface with a dipstick, and occasionally a device is needed which can be located in

in a vessel and which can indicate the depth of liquid when desired. One such depth gauge makes use of a superconducting wire with a transition temperature a little greater than the normal boiling point of liquid helium. If the wire is held vertically in a vessel of liquid helium, that part which is below the surface of the liquid is very efficiently cooled but that part which is in the gas above the liquid is much less efficiently cooled. Therefore, if a sufficiently large current is passed along the wire, the upperpart which is in the gas can be driven into the normal resistive state while the lower part immersed in the liquid remains superconducting with no resistance. We should be able to determine what fraction of the wire has zero resistance, i.e. how much is covered by the liquid, by measuring the voltage between the ends of the wire. A suitable superconducting wire can be formed by coating a non-superconducting alloy wire of high electrical resistance, e.g. Nichrome, with a thin layer of superconductor (F1, R2). Ordinary tin-lead solder applied with a soldering iron can be used for the coating (solder is a superconductor with a transition temperature of about 7K), but a solder consisting of 80% indium and 20% lead (by weight) is better because it has a lower superconducting transition temperature, about 5K, which is only a little above the temperature of liquid helium. Therefore only a small current is needed to drive the unimmersed part into the resistive state and, consequently, not much heat is generated when the indicator is in use.

When considering superconducting gauges to indicate the depth of liquid helium, we must distinguish between two situations. One situation occurs when the liquid helium is in a container of relatively large volume with a narrow outlet tube (e.g. a storage vessel). In this case all the gas in the container above the liquid is at nearly the same temperature as the liquid, and a simple gauge of the form just described can be used. The other situation occurs, for example, in the wide-necked cylindrical Dewar vessels used in cryostats (see §3.3b). Here the temperature of the gas above the liquid, may increase sharply with height, the temperature distribution depending on the shape of container, rate of evaporation, etc. In this situation the simple single wire superconducting gauge described above is not reliable because the resistance of metals and alloys varies with temperature, and so the measured resistance of the wire is not solely dependent on how much of its length is above the surface of the liquid. This difficulty can be overcome by using an alloy whose resistance varies very little with temperature; 'Karma' is a suitable alloy which can be bought in wire form (Appendix 21). If this special wire cannot be obtained, an ordinary resistance alloy wire can be used, and the temperature variation of its resistance compensated by use of a second wire connected into a Wheatstone bridge circuit, as shown in Fig. 2.6. This second wire has the same length and diameter as the sensing wire but has no superconducting coating. The two wires lie alongside each other so that the temperature distribution along each is the same. If the solder coating on the sensor

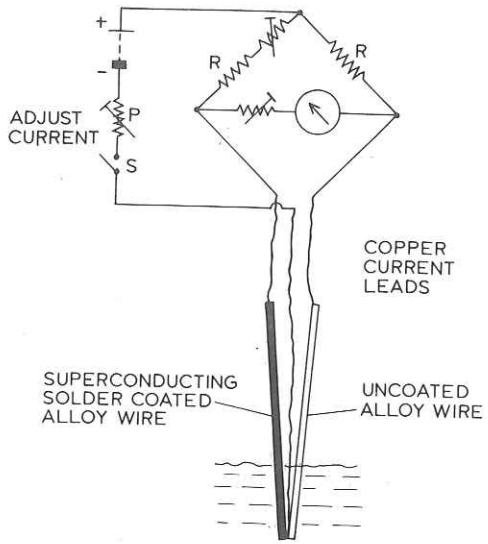

Fig. 2.6. Liquid helium depth gauge using superconducting wire

wire is thin, the resistance of that part of both wires which is above the liquid surface will be almost the same and, as they are in opposite arms of the bridge, this part of their resistance does not contribute to its unbalance (provided the resistance of the resistors R is much greater than the resistance of the alloy wires). The deflection of the meter depends, therefore, only on the fraction of the coated wire which has zero resistance, i.e. on the height of the liquid. Resistor P is preset so that the current through the superconducting wire is a little more than that needed to drive the exposed part into the resistive state and, because resistors R have a value large compared to the resistance of the alloy wires, this current does not depend on how much of the wire is immersed in the liquid. The meter must be of sufficient sensitivity so that the current for full scale deflection is small compared to the current passing along the superconducting wire.

Heat is generated by the passage of the current along those lengths of the alloy wires are not superconducting and so liquid helium will be evaporated while the gauge is operating. For example, a 0·15 mm diameter 'Nichrome' wire coated with indium-lead solder has when in the normal state at low temperatures a resistance of about 0·5 ohms/cm and can be operated with a current of about 0·1A. Hence the power generated is about 5×10^{-3} watts per cm length of gauge. Thus a gauge 30 cm long would boil away about 0·2 litres of liquid per hour. However, it is not

necessary for the gauge to be in continuous operation; switch S (Fig. 2.6) can be spring-loaded so that it is normally open, and is closed only when a reading is required. Since a reading takes no more than a few seconds, the evaporation of helium is negligible.

An a.c. gauge which also gives a reading unaffected by the temperature distribution above the liquid is described in reference R3.

Occasionally there is a need for continuous indication of the level of liquid helium in a container. Under this circumstance the level sensor must generate very little power when operating. Capacitor level gauges, though more complicated than the gauges described above, can be designed so that only negligible power is generated in the liquid helium. These level sensors are based on the fact that the permitivity of the liquid helium is greater than that of the gas. The sensor consists of a long capacitor (either coaxial or helical) which dips down into the liquid helium, the capacity of this capacitor depending on how much of it is immersed in the liquid (there is about 5% difference between the permitivities of liquid and gaseous helium). The variation in capacity due to changing height of the liquid is detected either with an a.c. bridge, or by making the capacitor the frequency controlling element of an oscillator, whose frequency is then a measure of the liquid height. Particularly simple capacitors and measuring circuits are described in references P1, V1 and Z1.

Glass Dewar vessels, such as those used in experimental cryostats, are usually made with an unsilvered vertical strip that enables one to observe the liquid level directly. Helium is a transparent, colourless liquid and it is not always easy to see its surface. Certain very light expanded cellular plastics (e.g. polystyrene foam) float on liquid helium, and a few fragments of this in the vessel enables the surface to be observed more easily.

2.6 Syphons

Liquid helium is transferred from the storage-vessel into experimental cryostats by means of a vacuum-jacketed transfer-tube which is often called a 'syphon', though, strictly speaking, syphon action is not involved.

Syphons for transferring liquid helium can be bought (Appendix 6), but are, however, quite simple and cheap to make. The construction of a very simple syphon is illustrated in Fig. 2.7. An outer casing of thin-walled brass tubing (e.g. diameter 10 mm, wall thickness 0·5 mm, Appendix 25b) is bent in a J-shape, as shown at A. The inner tube, through which the liquid helium flows, consists of a thin-walled alloy tube B (e.g. 'ferry' or stainless steel) which has been softened by previous heating to red heat. At intervals along this tube triangular plastic spacers (such as Tufnol or Micarta, 0·8 mm thick) are held loosely in place by metal bushes. This soft inner tube is then threaded through the J-shaped outer brass casing until a short length projects from the far end. The triangular spacers, which are a loose fit in the outer casing, guide the inner tube round and

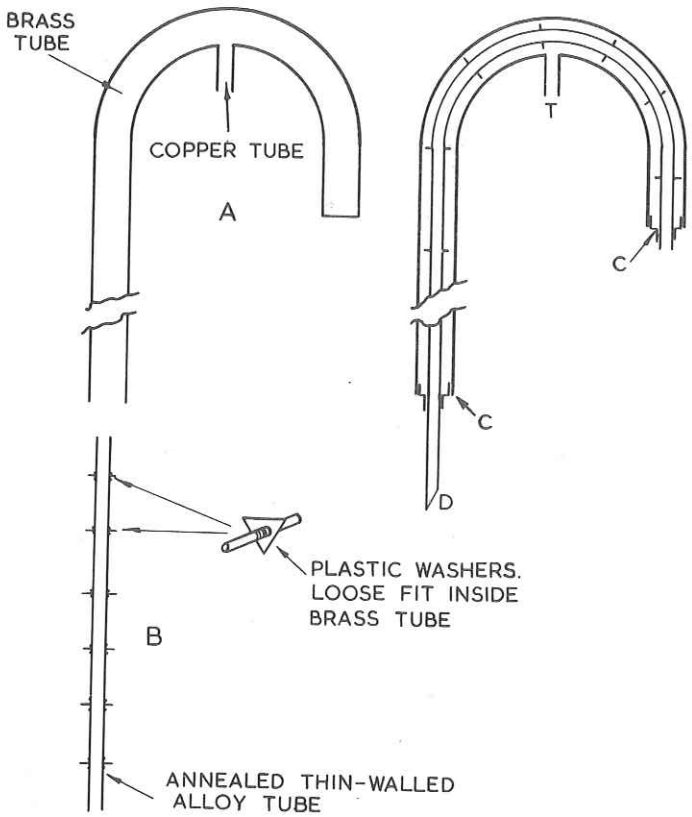

Fig. 2.7. Construction of a Syphon (after Serin, S2)

support it in a central position. They provide poor heat contact because they only touch the outer case at their points. The two sealing bushes *C* may now be soldered into place. The space between the two tubes need not be evacuated; it is sufficient to close the side tube *T* with a small rubber bung, because when the syphon is in use the air between the tubes will condense onto the cold inner tube leaving a very good thermally insulating vacuum. Nevertheless, the syphon should, after construction, be carefully tested for leaks, because any helium leaking into the space between the tubes will not condense and the vacuum insulation will be spoilt. The outer tube of a syphon which is operating properly does not feel cold to the touch when liquid helium is passing through. If, the outer jacket is cold, there is either helium gas between the walls, or the inner tube is touching the outer tube. Should a leak be so large that liquid

helium or solid air collects in the vacuum space a large pressure may build up suddenly when the syphon is withdrawn from the storage vessel. Should this happen, the rubber bung acts as a safety valve, because it will blow out before the pressure bursts the tubes.

The brass tube used for the outer casing makes the syphon much more robust than if the usual thin-walled, low conductivity alloy tube were used. Though the thermal conductivity of brass is relatively high (Fig. **8.**8), a negligible amount of liquid helium is evaporated during the short time that a transfer is taking place.

The longer vertical limb of the syphon goes into the storage-vessel and should be long enough to reach almost to the bottom of the helium container. If it actually touches the bottom, however, there is a risk that the syphon may become blocked by sediment. The chance of blockage is reduced if the inlet opening is cut on the slant as shown at *D* in Fig. **2.**7. The vacuum jacket should also extend down into the helium container of the storage vessel so that when the syphon is put into this storage

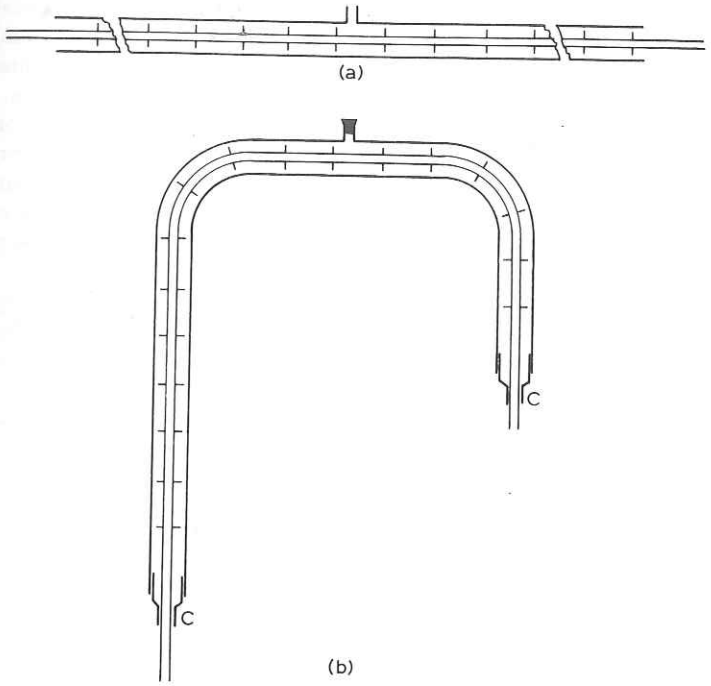

Fig. **2.**8. Construction of a syphon (based on Dowley and Knight, D1)

vessel the air in the jacket will quickly condense with a very low vapour pressure.

The syphon just described is extremely easy to make; however, one may need a syphon which is more rectangular in shape without the semi-circular top part that may extend rather high above the apparatus. The construction of such a syphon is illustrated in Fig. 2.8. Instead of first bending the outer tube into shape, as just described, the inner tube with the spacers on it is threaded through a straight outer tube (Fig. 2.8a). The resulting coaxial pair is then bent into shape, frozen liquid being used to support the tubes and prevent kinking. In order to make the bends, one end of the straight coaxial pair is blocked off and both tubes are filled with benzene. A length of about 150 mm where a bend is to be made is cooled with finely crushed solid carbon dioxide packed round the tube. The use of *crushed* carbon dioxide rather than lumps ensures uniform cooling along this length. When the benzene has frozen, a bend slightly greater than 90° is made with a tube bender. Due to the elasticity of the metal, the bend springs back to 90° when the frozen benzene melts. After both bends have been made, the benzene is drained out and the tubes dried by passing a current of air through them. (Water can be used instead of benzene, but there is a risk of the tubes being ruptured by the expansion of the water on freezing (B1)). Next a check is made with an ohmmeter to ensure that there is no contact between the inner and outer tubes, and finally the two sealing bushes *C* are soldered into place at the ends of the syphon. Note that, for this method of construction, it is better for the inner tube to be of copper nickel alloy rather than stainless steel; stainless steel, being harder, is more liable to kink or break when bent into a small radius. Another simple way of constructing a vacuum insulated syphon is described in reference J1.

Occasionally the construction of an apparatus is such that a syphon cannot be inserted and withdrawn but has to be permanently attached to the helium chamber. The syphon must then, of course, be made of thin-walled low conductivity alloy tube. Care must be taken that oscillations do not build up in the inner tube. It may be convenient to have a coupling in the syphon so that the half which goes into the storage-vessel can be detached from the apparatus. A suitable coupling has been described by White (W1).

The way in which a syphon is used to fill a cryostat from the storage-vessel is illustrated in Fig. 2.9. The storage-vessel is brought up to the cryostat, which has been precooled to liquid nitrogen temperature, and is connected to it by a rubber tube attached to the valve *X* on the cryostat cap. With *X* shut, the syphon is lowered into the vessels, and when it is in position the short rubber sleeves *S* on the syphon legs fit over the neck of the storage dewar and the bush on the cryostat cap to form gas-tight

seals. The syphon should be lowered slowly into the storage-vessel so that the liquid does not boil too violently. The introduction of the syphon into the storage-dewar causes the liquid helium to evaporate and an over-pressure is built up in this vessel. This pressure forces the liquid helium through the syphon into the cryostat. The football bladder *B* becomes inflated, and the rate of the flow may be increased by squeezing this bladder. At first, when the liquid helium enters the cryostat it immediately evaporates producing large volumes of cold gas. Eventually, the contents of the cryostat cool to 4·2K and the liquid helium begins to collect in the bottom. When this happens, the pressure in the storage-vessel

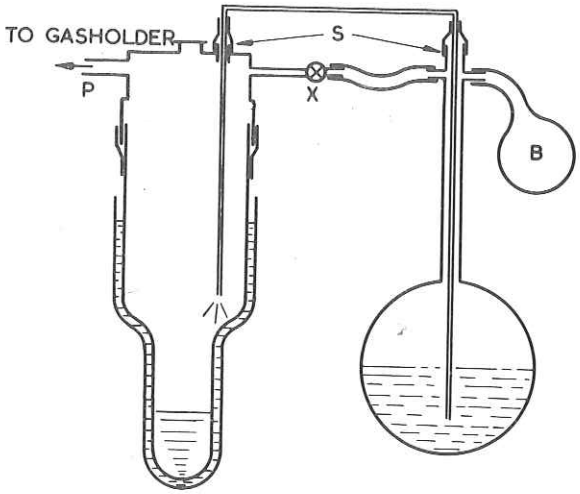

Fig. 2.9. Syphoning Liquid Helium

falls and it may be necessary to maintain the flow of helium by squeezing the bladder *B*. When enough liquid has been transferred, the flow is stopped by opening the valve *X* to equalise the pressure in the two vessels. The syphon can now be withdrawn and the holes closed with rubber bungs.

The pressure in a vessel into which helium is being syphoned varies in a characteristic manner and can be used to follow the stages in the syphoning process, especially when it is not possible to see into the vessel. At the beginning of the syphoning process, before the liquid condenses in the receiving vessel, a small overpressure, usually about 10 mm Hg, is built up and can be observed on a manometer attached to the cryostat. This pressure falls back to approximately atmospheric value when liquid starts to collect. This fall is a clear indication of when the cryostat is beginning to fill. A simple carbon resistor level-indicator, such as that

described in §2.5a, can be used to show when the cryostat has filled to the desired height. If the helium is being syphoned into a closed can supported by a narrow filling tube, the pressure will rise again when the can is full.

Instead of using a rubber bladder one may push the liquid over by a slight pressure of helium gas fed into the storage-vessel from a cylinder via a reducing valve. Alternatively, the liquid can be sucked over by pumping the cryostat gently with a rotary pump.

When liquid helium is syphoned into a cryostat which contains massive apparatus, for example a superconducting solenoid, it is particularly important to ensure efficient heat exchange between the fluid issuing from the syphon and the appratus to be cooled. If the heat exchange is poor, large quantities of liquid helium will be needed to cool the apparatus down to 4·2K. The liquid helium should always be introduced *below* the apparatus, so that this is cooled by the cold vapour flowing up past it. The limb of the syphon which goes into the cryostat must therefore be long enough to reach below the apparatus, and space must be left between the apparatus and the wall of the cryostat so that the syphon tube can pass between them. If the syphon is not long enough to reach below the apparatus, an extension tube may be attached to the end of the syphon by a short length of rubber tube.

If liquid helium is not to be wasted, syphoning should be carried out slowly, especially before the liquid begins to collect in the receiving vessel. If the flow is too fast, cold gas is driven out of the cryostat before it has had time to cool the contents. In an efficient transfer no frost should form on the cryostat cap.

The time taken to syphon liquid helium into a cryostat depends on several factors, including the heat capacity of the contents of the cryostat. As a very rough guide, we may expect about five or ten minutes to elapse, under normal experimental conditions, before liquid helium begins to collect in the cryostat. It is a great help when syphoning to have a wide-range thermometer attached to the apparatus so that the temperature can be watched. Other aspects of syphoning liquid helium into a cryostat are discussed in §3.6 and §3.7.

2.7 Gas Storage

If helium has to be conserved, a low pressure gas-holder is needed to contain the helium that evaporates from storage-vessels and cryostats. The gas from this low pressure holder is subsequently pumped into high pressure cylinders for storage and transport.

A gas recovery system must ensure not only that the evaporated helium gas is collected, but, even more important, that this helium does not become contaminated. Little harm is done if a small quantity of helium gas is lost, but it is important that gas returned for liquefaction be fairly pure. If appreciable amounts of other gases are present these will solidify

in the low temperature section of the liquefier and block it. Gas fed to a liquefier should be passed through a cleaner but, if this is to be kept reasonably small, it can only deal with low concentrations of foreign gases. Fortunately there is little difficulty in maintaining a purity better than 95% for helium gas collected in a recovery system. It is possible, with very little trouble to recover 80 to 90% of the helium used.

2.7a Low Pressure Storage

It is convenient to have running through the laboratory a pipe connected to the low pressure gas-holder. The output from storage-vessels and cryostats is fed into this pipe (Fig. 2.10). Standard light-gauge copper water pipe (obtainable from any plumbers' suppliers) can be used, and

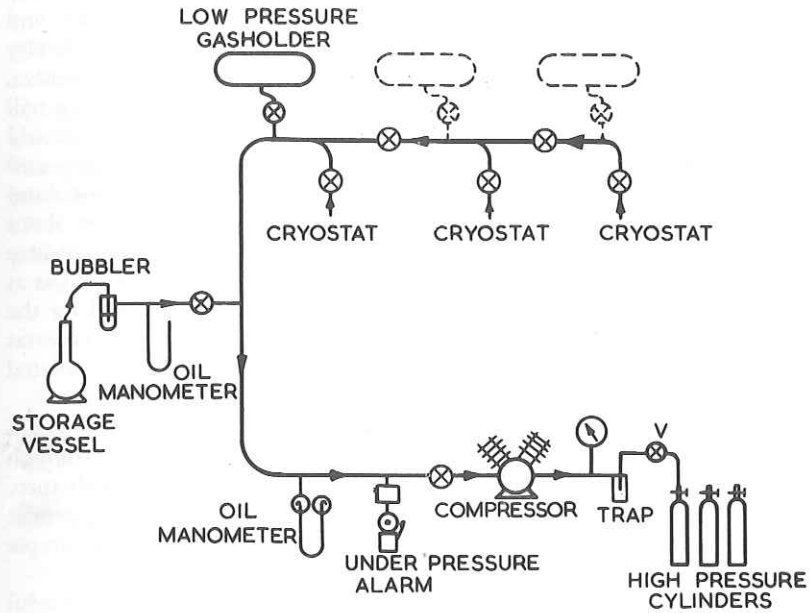

Fig. 2.10. Gas Storage

the 1 in. size is convenient. Elbows, tees, connections, etc., are easily made with 'Yorkshire' or 'Ideal' fittings (Appendix 7). Saunders diaphragm valves (Appendix 8, obtainable from plumbers' suppliers) are suitable for low pressure gas lines. Valves with iron or gun-metal bodies can be soft-soldered directly to copper pipe. Alternatively, plastic tubing can be employed. In the author's laboratory, flexible PVC tubing, 18 mm internal diameter, 3 mm wall thickness is used; this is much easier to install and re-arrange than rigid copper tubing. Ordinary doemstic gas cocks (obtain-

able from any plumbers' suppliers) are suitable for use as valves in the low pressure helium system.

In laboratories where fairly large quantities of gas have to be stored, metal gasometers can be installed. These are, however, expensive and occupy considerable space. An alternative method, which is both simple and cheap, is to use flexible bags made of rubberised fabric. These can be suspended from the ceiling and do not take up floor space. A very suitable form, which can be bought as a stock commercial product, is an inflatable 'fend-off' manufactured for ship use (Appendix 9: see frontispiece). This is a sausage-shaped rubberised fabric cylinder about 2 m long and, when inflated, about 0·6 m in diameter, with a capacity of about 540 litres (19 cu. ft). The fabric is tough and durable and, in the author's laboratory, these 'fend-offs' have been in use for over six years without needing any attention. The material is relatively impermeable to helium and air, and a helium gas purity better than 95% can be maintained without difficulty in a system using these gas bags. When 1 litre of liquid helium evaporates, the gas evolved occupies about 740 litres at STP. Hence each bag will take the gas evaporated from about 0·8 litres of liquid helium. It should be remembered that helium vapour has a high density at 4·2K, and consequently a storage-vessel may contain quite a large amount of helium in the space over the liquid. At 4·2K the density of helium gas is about 100 times its value at room temperature, so that an 'empty' 20-litre vessel at 4·2K may still hold the equivalent of about 2000 litres of gas at room temperature. A central low pressure gas store may be used for the whole laboratory, though it is usually more convenient for each cryostat to have its own low pressure gasholder. The cryostats can then be isolated and experiments are quite independent of each other.

Gas-bags of concertina-like construction, which expand as they fill, are sometimes used. These may be made of rubber or polythene, though the latter material is somewhat permeable to helium and rather easily torn. Concertina-like gas-bags are constructed to customers' orders (Appendix 9). They do not, however, appear to offer any advantages over the simple rubberised-fabric bags already described.

The simple open-ended oil manometer shown in Fig. **2.**10 is a useful accessory to the low pressure gas system. In addition to indicating the pressure in the system, the manometer also acts as a safety valve. If the pressure rises as a result of the gas-holders becoming completely inflated, gas bubbles out through the manometer and excessive pressure cannot build up.

2.7b High Pressure Storage

Helium gas is usually stored and transported in high pressure steel cylinders into which it is pumped from the low pressure gas-holders.

Ordinary air compressors, slightly modified, are suitable for compressing helium gas. Helium has a higher specific heats ratio than air and becomes

hotter during compression. For this reason, a compressor designed for handling air should be run more slowly when used for helium. If helium is to be conserved the compressor should have a good gas-tight shaft seal and the outlets of the crankcase breather and high-pressure relief valve should be connected by pipes back into the input. It is possible to buy air compressors which have been modified by the makers for use with helium. A small laboratory could use a Broomwade type TNX compressor (Appendix 10) with an output pressure of 30 atmos. (450 lb/sq in.). This two-stage air-cooled compressor, driven by a $1\frac{1}{2}$ horsepower motor, has been found to be very reliable, running for many years with negligible maintenance. At this pressure a standard 200 cu. ft gas cylinder (see p. 38) can hold the gas evolved from about 1·8 litres of liquid helium. If it is desired to compress the gas to a higher pressure so that fewer cylinders are needed, a 'Bristol' Duplex high pressure air compressor, type 308/BM4S (Appendix 10) may be used. This is a four-stage air-cooled compressor, driven by a $7\frac{1}{2}$ horsepower motor with an output pressure of 140 atmos. (2000 lb/sq. in.). At this pressure a 200 cu. ft cylinder will hold the gas from about 8 litres of liquid helium. It is best to use a detergent-free oil (e.g. Castrol Perfecto TT) in a compressor. Normal lubricating oils usually contain a detergent, and this results in the formation of a 'sludge' which can hinder the operation of the compressor's high pressure valves.

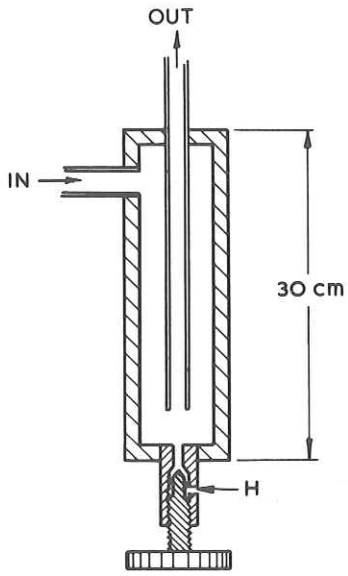

Fig. **2.**11. Trap for Droplets in High-Pressure Line

When helium gas, which has been stored in a low pressure gas-holder, is compressed, a small amount of water is sometimes precipitated; furthermore, oil droplets may be carried over from the compressor. To prevent these accumulating in the cylinders, a trap can be inserted in the output pipe of the compressor. A simple high pressure vessel with a re-entrant pipe as shown in Fig. **2.**11 is quite effective. The valve at the bottom allows fluid which has accumulated to be blown out through the hole *H*. More efficient pressure traps incorporating a porous ceramic filter may be bought (Appendix 11).

A compressor may be harmed if it is started against a high pressure at its outlet. Clearing the trap as just described, at the end of each operation ensures that there is only a low pressure left at the compressor's outlet. However, should the valve on a cylinder leak or not be turned off properly, a high pressure will gradually build up again on the output side of the compressor. This is undesirable for two reasons: the drive of the compressor may be strained on starting, and the high pressure cylinder may empty itself slowly through the compressor back into the low pressure gas-holder. It is desirable, therefore, to have a valve in the high pressure line between the compressor and the cylinders (*V*, Fig. **2.**10). This can be a hand-operated valve which is closed when the compressor is not working. When a cylinder is to be filled, the compressor should be started before this valve and the valve on the cylinder are opened. Valve *V* can, more conveniently, be an automatic non-return valve (Appendix 12) which allows gas to pass only from the compressor towards the cylinders.

Having started the compressor, one may easily forget that it is running, with the result that it completely empties the low pressure gas-storage system and begins to suck in air. For this reason the low-pressure storage system should include a device to give a warning when an underpressure develops. A simple mercury U-tube manometer in which the mercury rises to make an electrical contact and ring a bell is very satisfactory.

The pipework between the compressor and the cylinders must, of course, be able to withstand the highest pressure that the compressor can produce. For a pressure of 140 atmos. (2000 lb/sq. in) the wall thickness of annealed copper pipe should be at least 0·06 of the external diameter, and of half hard copper pipe at least 0·04 of the external diameter. It should be remembered that copper pipe may become annealed close to where it has been heated during brazing on of fittings, etc. $\frac{1}{8}$, $\frac{3}{16}$ and $\frac{1}{4}$ in. sizes of standard light-gauge water pipe (deoxydised arsenical copper) are suitable for pressures up to 140 atmos. A full discussion and tables of pipes for high pressure is given by Croft (C4).

Gas is stored at high pressure in steel cylinders which may be bought commercially (Appendix 13). The capacity of such cylinders is usually described as being a certain number of cubic feet. This is not the actual internal volume; a capacity of 'X cu. ft' means that the amount of gas this cylinder holds at a pressure of 140 atmos. (2000 lb/sq. in.) would occupy

X cubic feet at STP. Flat-bottomed '200 cu.' ft cylinders are convenient for storing gas; these are about the largest size that can be handled by one person.

The standard valves fitted on cylinders intended for high pressure oxygen or nitrogen are satisfactory for use with helium. It is, however, convenient to have valves fitted whose connections conform to the conventional design for use with helium, so that adaptors are not required to connect cylinders to standard equipment. The outlets on such valves have a male left-hand thread, 14 turns per inch, 0·825 in. outside diameter (complete drawings and dimensions are given in American Standard, ASA B57.1–1957, connection 350). Valves with this connection are not a standard commercial product in Britain but can be made to order. It is important that valves are attached to cylinders and the completed assemblies tested by an organisation properly equipped for high pressure tests. This assembly and testing can be carried out commercially (Appendix 14). In Britain helium cylinders are painted brown.

2.7c Purity Testers

It is necessary to know that the helium gas pumped into the high pressure cylinders has not become contaminated. Fig. **2.**12 shows a very simple instrument for measuring the purity of gaseous helium. The instrument consists of a long thin-walled alloy tube *T* closed at the

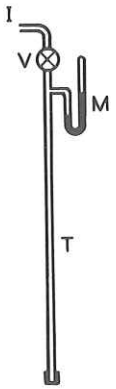

Fig. **2.**12. Helium Gas-Purity Tester

lower end by a copper cap. At the top is a small mercury manometer *M* and a valve *V*. First the instrument is evacuated and when the manometer shows zero pressure, valve *V* is closed. The instrument is then connected to the high pressure cylinder, whose gas is to be tested, by a rubber tube

which has a slit in its wall close to where it is pushed over the end-piece *I*. The valve of the cylinder is now opened slightly so that the helium gas flows through the rubber tube and out through the slit. After about half a minute all the air will have been flushed out of the rubber tube which will then contain only gas from the cylinder. Valve *V* is now opened so that the instrument fills with this gas. The gas must be admitted slowly, otherwise the mercury rises violently in the glass manometer and may break the end. The slit in the rubber tube acts as a pressure relief valve preventing the instrument from being filled appreciably above atmospheric pressure. When the instrument is full, valve *V* is closed, and the cylinder disconnected. Next, tube *T* is lowered down the neck of a liquid helium storage-dewar. Any gases present, other than helium, will solidify at the bottom of *T* with a very small vapour pressure. The helium gas is now pumped out through valve *V*, but the solid impurities remain behind. When the manometer shows zero pressure, *V* is closed, the instrument is lifted out of the storage vessel and, on warming up, the impurity gases vaporise. The pressure finally shown by the manometer *M* indicates the amount of contamination. It is important when pumping the instrument

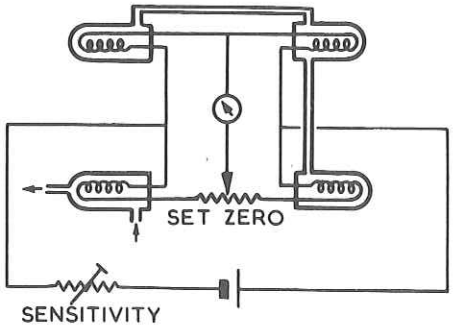

Fig. 2.13. Electrical Gas-Purity Tester

in the storage-dewar to allow the pressure to fall completely to zero. This may take several minutes. The instrument has the advantage of not requiring calibration; the final pressure shown by *M* is the true partial pressure of the impurities in the helium gas.

The instrument just described though simple, inexpensive and accurate, is a little tedious to use. Fig. 2.13 shows a more elaborate purity meter which gives a direct indication on a meter of the purity of helium gas flowing through it. This instrument makes use of the fact that the loss of heat from a hot wire depends on the composition of the surrounding gas. Four helices, each consisting of about 200 turns of 0·05 mm tungsten wire, are sealed into cylindrical cavities in a metal block. The coils are

connected to form a Wheatstone bridge, and the current through the bridge heats the wires. Three of the cavities are interconnected and filled with pure helium gas at atmospheric pressure before being sealed off. The helium gas to be tested is passed slowly through the fourth cavity. If this gas contains air, the coil in this cavity gets hotter and its resistance rises relative to the other three coils. For small concentrations the deflection of the meter is proportional to the impurity concentration. This instrument is not absolute and must be calibrated, for example by comparison with the purity meter described above.

Gas Purification. Impurities may be removed from helium by passing the gas at high pressure over cold activated charcoal. Efficient cleaning can be obtained in a pressure vessel immersed in liquid nitrogen and full of activated charcoal, when nearly all impurities, other than hydrogen, will adsorb on to the charcoal. The charcoal can be cleaned ready for use again by heating the vessel to a few hundred degrees centigrade and pumping it with a rotary pump at the same time. Care must, of course, be taken when heating the vessel that the released gas can escape easily so that very high pressures are not built up.

REFERENCES

B1. Blancett, A. L., Canfield, F. B., 1964, *Rev. Sci. Instrum.*, **35**, 1088.
C1. Croft, A. J., 1961, *Progress in Cryogenics*, **3**, Heywood, London, p.1.
C2. Clement, J. R., Gaffney, J., *Proceedings* 1954 *Cryogenic Engineering Conference*, Boulder (N.B.S. Report 3517).
C3. Clarke, G. R., 1971, *J. Phys.* (*E*), **4**, 243.
C4. Croft, A. J., 1970, *Cryogenic Laboratory Equipment*, Plenum Press, London.
D1. Dowley, M. W., Knight, R. D., 1963, *Rev. Sci. Instrum.*, **34**, 1449.
F1. Figgins, B. F., Shepherd, T. A., Snowman, J. W., 1964, *J. Sci. Instrum.*, **41**, 520.
G1. Gonzalez, O. D., White, D., Johnston, H. L., 1951, *Rev. Sci. Instrum.*, **22**, 702.
G2. Gaffney, J., Clement, J. R., 1955, *Rev. Sci. Instrum.*, **26**, 620
J1. Jacobs, R. B., Richards, R. J., 1957, *Rev. Sci. Instrum.*, **28**, 291
P1. Peshkov, V. P., Vetchinkin, A. N., Elonin, B. V., 1968, *Instrum. and Exp. Techs*, March/April 491.
R1. Rinderer, L., Haemssler, F., 1962, *Cryogenics*, **2**, 288.
R2. Ries, R., Satterthwaite, C. B., 1964, *Rev. Sci. Instrum.*, **35**, 762.
R3. Rose-Innes, A. C., Rowland, J. J., 1969, *J. Sci. Instrum.*, **2**, 729.
S1. Scott, L. E., Van Merbeeke, R. C., Kirk, B. S., Nubel, G. C., in *Technology of Liquid Helium*, National Bureau of Standards Monograph 111, U.S. Government Printing Office, 1968, p. 155.

S2. Serin, B. (Rutgers University), private communication.
S3. Strait, S. F., Bertam, B., 1969, *Cryogenics*, **9**, 328.
V1. Vrba, J., 1971, *Cryogenics*, **11**, 313.
W1. White, G. K., *Experimental Techniques in Low Temperature Physics*, Clarendon Press, Oxford, 1959.
Z1. Zimmerman, J. E., Root, R. C., 1961, *Rev. Sci. Instrum.*, **32**, 853.

CHAPTER 3

CRYOSTATS AND THE DESIGN OF APPARATUS

An apparatus in which low temperature experiments can be carried out is usually called a *cryostat*. In earlier days cryostats often incorporated small hydrogen or helium liquefiers, but nowadays they are nearly always filled with liquid helium obtained from a separate liquefier. We shall not, therefore, discuss here the design of liquefier-cryostats, but the interested reader may consult the article by Parkinson (P1).

Many different kinds of experiment and measurement are now carried out at low temperatures and it is impossible to include all varieties of apparatus which have been designed for the various kinds of measurement. We shall not, therefore, describe cryostats for particular kinds of experiment, but will discuss principles of design and the construction of general-purpose cryostats so that the reader may be able to build apparatus suitable for his own requirements. In particular we shall concentrate on cryostats of simple design.

A cryostat should, of course, be designed so that only a small amount of heat leaks in. In former times, when liquid helium was only available in quantities of a few hundred ml, extreme precautions were needed to prevent heat entering and evaporating the liquid, but now that the liquid is available in litre quantities, a higher evaporation rate can be tolerated, and cryostats can be of simpler construction.

The simplest form of cryostat consists of a Dewar vessel into which liquid helium is syphoned, and the experimental apparatus is immersed in this liquid. In order to reduce heat influx, this Dewar vessel is usually surrounded by another vessel filled with liquid nitrogen (or air or oxygen).

The temperature of a boiling liquid depends on the pressure over it; the lower the pressure the lower the temperature at which the liquid boils. Hence, by reducing the pressure in the Dewar vessel containing the liquid helium we can reduce its temperature below the normal boiling point, 4·2K. This Dewar vessel should, therefore, have a leak-tight cap which can be connected to a pump. This pump is also used to extract air before admitting the helium and, in any case, the cryostat should be gas-tight so that air does not enter and freeze inside. When it is necessary to conserve helium gas, the output of the pump must be connected through a pipe to a low pressure gas-holder.

3.1 The Storage-Vessel as a Cryostat

The simplest cryostat is in fact the liquid helium storage-vessel itself, and many experiments can be designed to be done inside this vessel.

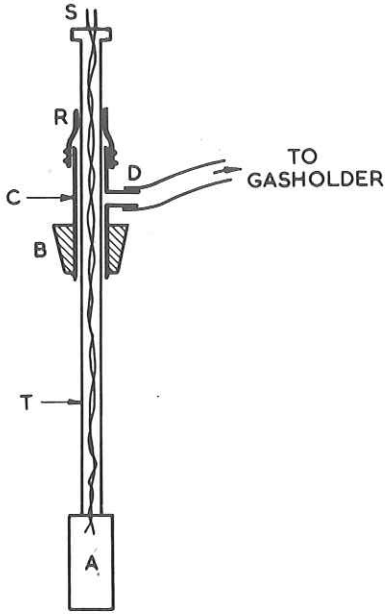

Fig. 3.1. Apparatus for Insertion into Liquid Helium Storage-Vessel

Fig. 3.1 shows a simple arrangement which can be inserted down the the neck of a storage-vessel. The apparatus *A* is attached to the bottom of a long thin-walled alloy or Pyrex glass tube *T*. This slides through a short stout tube *C* which fits in a rubber bung *B*. A rubber sleeve *R*, wired on to *C*, forms a gas-tight sliding seal between *C* and *T*. With the tube *T* drawn up so that *A* is fairly close to *B*, the apparatus is first pre-cooled by dipping *A* in liquid nitrogen. The equipment is then quickly transferred to the storage-vessel and inserted into the neck with the bung *B* fitted into the vessel's mouth. *T* is then pushed down until the apparatus is immersed in the liquid helium. The apparatus should be lowered gently so that it cools slowly in the neck of the vessel and liquid helium is not boiled off violently. Helium gas which is evaporated passes out through the side-tube *D*. Electrical leads, etc., pass up the inside of tube *T* and out through the seal *S*. The diameter of *A* should be considerably less than that of the neck of the vessel so as to lessen the risk of it freezing to the sides.

Simple apparatus may, of course, be lowered into the storage-vessel directly without the sliding seal arrangement shown in Fig. 3.1, and usually only a little helium gas will be lost. If, however, the apparatus is to remain in the vessel for any length of time, some arrangement such as that described above should be used to prevent air condensing into

the vessel's neck, and also so that helium gas can be conserved if necessary.

It is very important, when inserting apparatus down the neck of a storage vessel, to keep the apparatus in constant motion by jogging it up and down slightly as it is slowly lowered towards the helium container. If the apparatus is allowed to remain at rest for any appreciable time there is a risk that it may become firmly cemented to the wall of the neck by a small amount of frozen air.

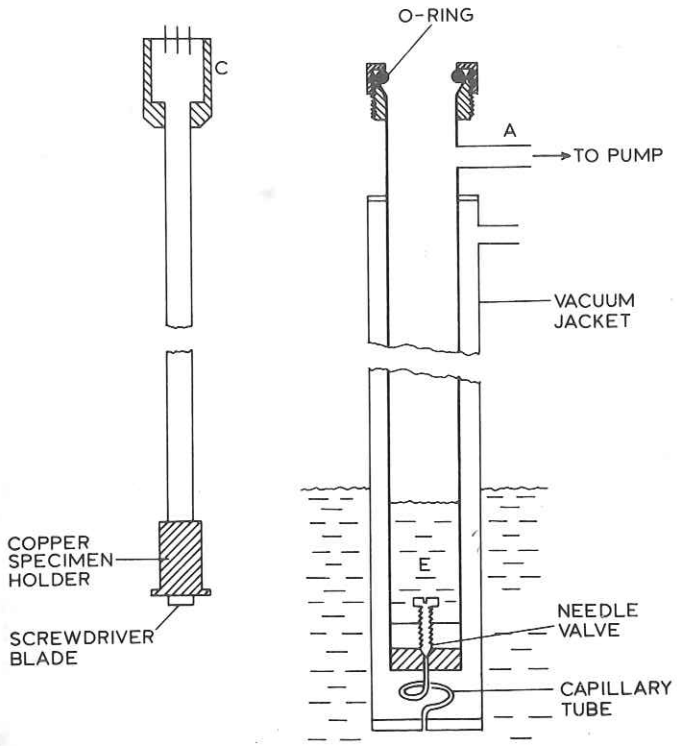

Fig. 3.2. Apparatus for Obtaining Temperatures Below 4·2K within a Storage-Vessel. The component on the left fits inside that on the right (based on Stilwell, Gardner and Littlejohn, S1)

If temperatures below 4·2K are needed, it is advisable not to lower the temperature by reducing the pressure in the storage-vessel, because in cooling the stored helium from 4·2 to, say, 2K about one-third of the liquid will be evaporated (§3.5). Fig. 3.2 shows a simple apparatus, which, though employed for experiments inside a helium storage-vessel, uses only small amounts of liquid helium for cooling below 4·2K. The

two main components are shown separately. On the right is the long outer component which can be inserted down the neck of the storage vessel so that the lower part is immersed in the liquid helium. The component on the left, which fits inside the one on the right, is the sample holder, but also acts as a rotatable screwdriver to operate the brass needle valve at the bottom of the experimental chamber E. At the top of the thin-walled alloy tube supporting the specimen holder is a hollow thick-walled cylinder C which carries the electrical lead-throughs and also forms a rotatable vacuum-tight seal with the O-ring inside the cap of the outer component. Liquid helium is admitted into the space E by opening the needle valve by rotation of the inner component. The valve is then closed, and the temperature of the liquid lowered by pumping through the side-arm A.

In many experiments it is necessary to apply a magnetic field to the specimen. With commercially available superconducting wire (Appendix 28) solenoids can be constructed that can generate strong magnetic fields and yet are small enough to pass down the neck of a helium storage vessel. For example, a 50 mm long coil of outside diameter 20 mm consisting of 8 layers of niobium-titanium wire wound on a 16 mm diameter former can generate an axial field of about 15 kG with a current of 30 A (M1).

3.2 Simple Basic Cryostat

Although experiments performed inside the storage-vessel are perfectly satisfactory, their range is limited by the fact that apparatus must be small enough to go through the neck of the storage-vessel. Moreover, several workers may wish to use the liquid helium at the same time. Most experiments are therefore carried out in cryostats into which the liquid helium is transferred from the storage-vessel. We now describe some general-purpose cryostats.

The first type to be described has been in use at the author's laboratories for a number of years (B1) and, although very simple, has proved to be efficient and extremely versatile. In many laboratories it is necessary to carry out a wide range of experiments at low temperatures but it is not possible to build a separate cryostat for every kind of measurement. The cryostat to be described is particularly suitable for such conditions, because the equipment to be cooled can be changed very easily. Fig. **3.3** shows the arrangement. An inner double-walled Pyrex glass vessel D_1 contains the liquid helium. Around this is a Dewar vessel D_2 full of liquid nitrogen. Many experiments require the application of a magnetic field, and so the vessels may have narrow tails in order that the cryostat can be placed between the poles of a magnet (alternatively, magnetic fields may be generated by superconducting solenoids immersed in the liquid helium, see §**3.9**). Both D_1 and D_2 are silvered, but clear slits run vertically from top to bottom so that it is possible to see into the apparatus. Vessel D_1 is sealed to the metal cap C by a rubber sleeve S. The apparatus A is supported on the end of one or more thin alloy tubes T, any electrical

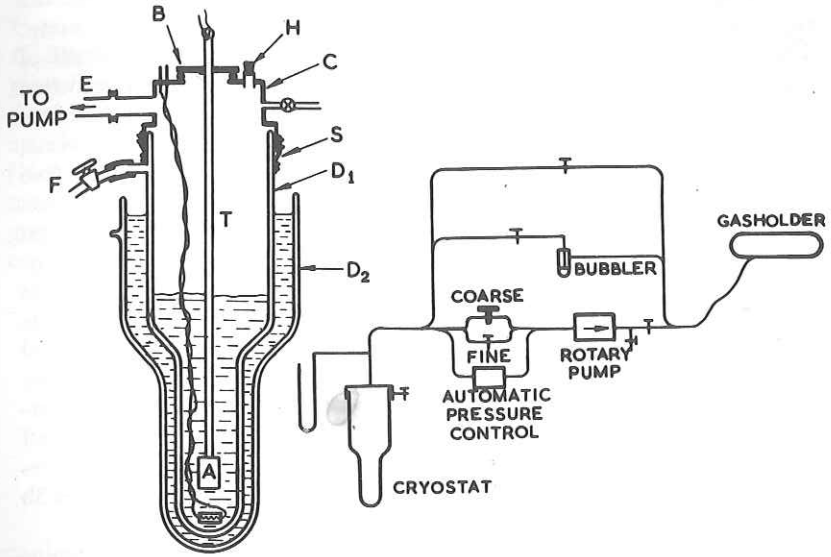

Fig. 3.3. Glass Cryostat and Connections

leads being taken out through the seals at the top (see §**3.8**a). Apparatus can easily be changed by undoing the O-ring seal at B and withdrawing A on the end of its supporting tube T. The procedure for cooling down is as follows: with the whole system initially at room temperature the cryostat is first pumped out through E with a rotary pump to remove the air inside, and is then filled with helium gas by connecting it to the low pressure gas-holder. The space between the walls of the inner vessel D_1 is evacuated through the tap F with a rotary pump and then air is admitted. It is then evacuated again and air again admitted. This flushing out process may be repeated several times to ensure that no helium gas remains between the walls (some helium gas may have diffused through the glass into this space since the last experiment, see §**3.3**a). A small pressure of helium will be enough to spoil the heat-insulating properties of the inner vessel. Finally, air at atmospheric pressure should be left between the walls of D_1 and the tap F closed. Before syphoning in liquid helium, the system must be precooled, and this is accomplished by filling the outer Dewar vessel D_2 with liquid nitrogen. Cooling of the contents of the inner vessel to the temperature of the liquid nitrogen then occurs through convection and conduction by the air left between the walls of D_1. This cooling normally takes about threequarters of an hour. As the inside of D_1 cools, helium gas is drawn in from the gas-holder. It is useful to let the gas enter via a bubbler so that one can tell that precooling is complete from the fact that gas is no longer being sucked in. When

the precooling is finished, and before syphoning in liquid helium, the air between the walls of D_1 is pumped out through F with a rotary pump. The rotary pump cannot itself evacuate the space between the walls of D_1 to a low enough pressure to provide good thermal insulation, but when the cold helium is admitted to the interior of D_1, the small amount of air remaining between the walls solidifies, leaving a very good vacuum. (Note, it is necessary to pump out most of the air from between the walls before syphoning in the liquid helium, because if there is too much air between the walls, this can condense into very fine crystals on the inner wall when the inner vessel is filled with liquid helium. These crystals may subsequently break off, fall to the bottom of the space where they evaporate to recondense on the inner wall. This refluxing can carry considerable heat across the vacuum space (K2)). Liquid helium may now be syphoned in, as described in §2.6, through the hole H, which is normally closed by a rubber bung. The system and procedure just described are very convenient because most glasses are permeable to helium, and a sealed-off Dewar vessel for holding the liquid helium would frequently need re-evacuating. A metal Dewar vessel of the type to be described in §3.3b can be used instead of the glass vessels.

Apparatus may be changed if necessary, while the cryostat contains liquid helium, though a little gas will be lost during this process. Before inserting a new apparatus, it should be precooled by immersion in liquid nitrogen.

The vessel containing the liquid helium must be attached to its cap by a vacuum-tight seal. The simplest method of doing this is by means of a rubber sleeve, as shown in Fig. 3.3. Suitable sleeves can be cut from the inner tubes of motor car tyres. The cap is usually supported rigidly on some framework and the helium dewar hangs from this cap and is also supported by a cradle attached to the cap. An alternative and very simple method of sealing the vessel to its cap is to have a soft rubber ring moulded on to the top rim of the Dewar vessel; the gas-tight seal is formed by simply pressing the cryostat cap down against this (R5). Such a sealing ring can be made from a liquid which, when mixed with a catalyst, sets to a firm but soft rubber ('Cold Cure Silastomer 9161' + catalyst N9162, Appendix 15). An anular well at the top of the vessel is made with adhesive tape (e.g. Sellotape) stuck to the inside and outside of the rim, and the liquid poured in to a depth of about 10 mm. This liquid sets in about 24 hours and, provided the rim was degreased before the liquid rubber was introduced, the resulting rubber adheres strongly to the glass or metal after the sticky tape has been peeled off. This rubber remains soft even when fairly cold. It is better not to use grease on the ring because this grease may crack if it gets cold.

Figure 3.4 shows a more elaborate but very satisfactory method of firmly sealing a Dewar vessel to its cap. The top of the dewar fits into the flanged cylindrical block A and rests against a rubber washer E. The

annular plate B is screwed up against A by six equally spaced screws to form a vacuum-tight seal, which grips the glass by means of the O-ring C. Apparatus to go into the dewar may be suspended from the circular plate D, which is screwed down on to the top of block A to form a vacuum-tight joint by means of the top O-ring. Alternatively, D may be a flange attached to the bottom of a cryostat cap such as that shown in Fig. 3.3. (Note: it is the O-rings which form the vacuum-tight seals; the washer E merely cushions the top of the glass vessel against the metal). The O-ring C grips the dewar vessel so firmly that the vessel can be suspended from the cap without any other support.

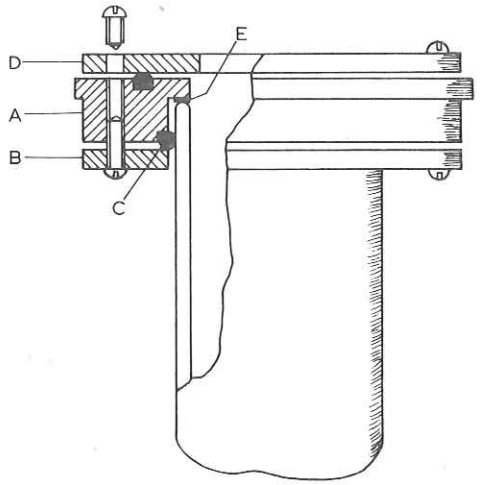

Fig. 3.4. Cap and Support for Dewar Vessel (after Serin, S2)

Because the dewar vessel is attached to its cap by a gas-tight seal, high pressure can build up inside should the exit pipe for the gas become blocked or accidently closed. It is desirable therefore, especially when using glass dewars, to provide a safety valve which will automatically relieve any overpressure. In the author's laboratory the bung used to close the filling-hole H in the cryostat cap (Fig. 3.3) always incorporates a simple safety valve as illustrated in Fig. 3.5.

With a single-stage rotary pump having a speed of 150 litres per minute a minimum temperature of about 1·3K can be obtained. In order that the effective pumping speed should not be appreciably reduced by the pipe joining the pump to the cryostat cap, this pipe should have a flow conductance not less than that of a pipe about 2 metres long and 2 cm in diameter (the conductance of a pipe, for pressures greater than about

1 torr, is proportional to the 4th power of its diameter and inversely proportional to its length).

The glass bubbler, shown in Fig. 3.3, filled with butyl phthalate, is a very simple and useful accessory to a cryostat, both when precooling (as described above) and when liquid helium is in the vessel. It gives a simple indication of the rate at which the liquid is evaporating and it can be seen at a glance whether the cryostat is behaving normally.

The system just described can be made into a very compact and self-contained unit. Such a unit, mounted on wheels, is shown in the frontispiece. The pipework can be made from standard 1 in. and ½ in. copper

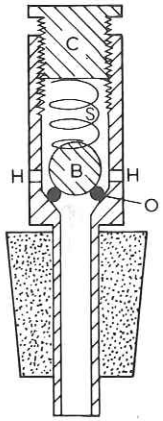

Fig. 3.5. Simple safety valve fitted into a rubber bung. Normally the spring *S* holds the ball-bearing *B* against the O-ring to form a gas-tight seal. An overpressure under *B* causes it to lift and the gas can then escape through the holes *H*. The pressure at which *B* lifts can be adjusted by the screw-cap *C*

water pipe soldered together with standard elbows and T's. The valves can be Saunders diaphragm valves for use with such pipe (all these components are easily obtained from plumbers' and builders' merchants). Alternatively, the pipework can be of Nylon tubing and Wade couplings (Appendix 16). These are very easily assembled and equally easily dismantled if modifications are needed.

In the author's laboratory all Dewar vessels have been made to a standard size and likewise all the caps (Fig. 3.3) conform to a standard pattern. This has been found to be a very useful practice, because all units can be interchanged, and any piece of equipment with a flange which fits on to the O-ring seal *B* (Fig. 3.3) can be inserted into any cryostat.

The amount of liquid helium used depends, of course, on the apparatus *A*. As a guide, however, we can say that about half a litre of helium is

usually used in cooling the apparatus down to 4·2K and in most experiments, where not too much heat is being generated, an additional half litre filling should last several hours. The rate at which the liquid evaporates is reduced if the cryostat can be made fairly long, so that the top, which is at room temperature, is well separated from the surface of the liquid helium. The evaporation rate decreases considerably when the liquid level falls so that it is in the tail, and for many experiments it is not necessary to fill more than this tail. In a typical glass cryostat with a total length of about 80 cm the evaporation rate due to heat conducted down the dewar walls and supports to the apparatus might be about 50 ml of liquid helium per hour. If the outer wall of the helium dewar is not cooled by liquid nitrogen but is at room temperature this evaporation may increase 50-fold. However, Schoen and Broida (S3) have described a cryostat in which the liquid helium is contained in a glass vessel that is not shielded by liquid nitrogen but by a copper screen cooled by the outflowing helium gas. The helium in this cryostat evaporated at about 120 cm³ per hour.

3.3 Dewar Vessels

Dewar vessels for cryostats may be made of metal or glass. Glass Dewar vessels are very convenient but there has been a tendency in recent years for laboratory workers to choose metal vessels. However, in the author's opinion, glass dewar vessels are usually more satisfactory in a laboratory. They have the enormous advantage that the experimenter can see into them, so there is no need to provide a liquid level detector, and it is easy to check that apparatus is correctly aligned or that specimens have not become detached from their holders, etc. In addition, glass dewars are very much cheaper than those of metal. Dewars made of glass are less robust, but this is not of great consequence in a laboratory, as opposed to an industrial environment.

3.3a Glass Dewars

If glass Dewar vessels are used, account must be taken of the fact that all glasses are to some extent permeable to helium gas, and therefore sealed-off glass Dewar vessels lose their vacuum insulation after some use. Unfortunately the 'hard' boro-silicate glasses of low thermal expansion such as 'Pyrex', which are naturally used for Dewar vessels, are particularly porous to helium (see Fig. 3.6.). The vacuum insulation of a Pyrex Dewar vessel at room temperature will not last an hour if the vessel contains helium gas at atmospheric pressure. There is, however, a suitable glass called Monax (Appendix 17) which is relatively impermeable to helium. A Dewar vessel of Monax should not need repumping until it has been used many times. Monax is, however, more difficult to work than the more common Pyrex glass.

In practice it is seldom necessary in the laboratory to use a permanently

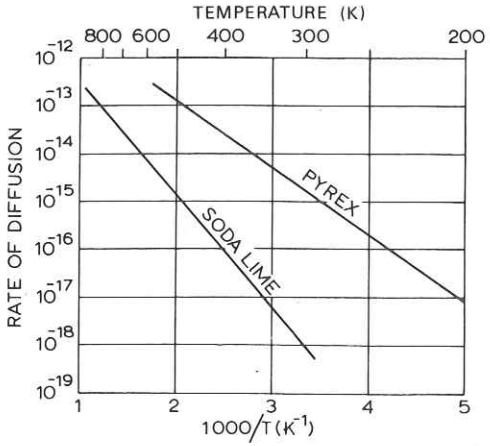

Fig. 3.6. Diffusion of helium gas through glass. The rate of diffusion is in units of ml gas(NTP)/sec/mm^2 area/mm thickness/torr pressure difference (based on Norton, see A1)

sealed-off glass Dewar vessel for liquid helium. A double-walled vessel with a side arm and tap as shown in Fig. 3.7b is usually more convenient. Any helium gas which has diffused through the walls since the last experiment may be flushed out through the tap T as described on p. 47. When the vessel contains liquid helium a very good vacuum is maintained between the walls because any small amount of air will freeze on to the inner wall with an extremely low vapour pressure. A detailed description of the use of such a vessel has been given in §3.2. If the tap T is attached

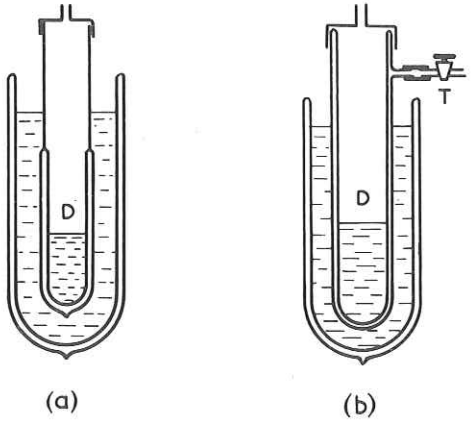

Fig. 3.7. Systems for Containing Helium in Pyrex Glass Vessels

to a short side arm by a length of rubber tube, as shown, there is less chance of breakage than if it is fused directly onto the vessel. However, if rubber tubing is used to connect the tap to the vessel, precautions must be taken against a rather unexpected side-effect which arises because helium gas diffuses very rapidly through rubber. The concentration of helium gas in the air of a laboratory where several cryostats are in use can quite easily become high enough for an appreciable quantity to diffuse through the rubber connector and spoil the vacuum insulation of the dewar (for good thermal insulation, the pressure between the walls of a dewar holding liquid helium should not exceed about 10^{-5} torr). Thus it sometimes happens that after a large quantity of helium gas has been released into the laboratory, for example while a cryostat was being filled, the dewars of neighbouring cryostats go 'soft' and the evaporation rate of the helium in them rises dramatically. This mishap is seldom likely to occur in laboratories where helium gas is collected and not allowed to escape into the atmosphere. Where helium gas is not collected, it is best to lead the gas issuing from cryostats through a pipe out of the laboratory window.

Should it be necessary, for some reason, to employ a permanently sealed-off Pyrex Dewar vessel, the construction shown in Fig. 3.7a can be used. The rate of diffusion of helium through glass falls very rapidly with temperature (Fig. 3.6) and is quite negligible at the temperature of liquid nitrogen. Hence we arrange that the double wall is never exposed to helium gas unless it is cold. The Dewar vessel D is made with a cylindrical single-walled extension at the top. When in use, helium is never admitted to this vessel unless the liquid nitrogen in the outer vessel is above the level of the join. At the end of an experiment, any helium is pumped out of D while the liquid nitrogen is still round it.

Glass Dewar vessels are available commercially in a number of sizes and several glass-blowing firms will construct them according to customers' designs (Appendix 18).

●Glass Dewar vessels can, however, be fairly easily made in the laboratory by a glass-blower using a glass-blowing lathe. A useful method of holding the inner section centrally inside the outer one, prior to sealing the two together at the top, is to wind coiled copper wire around the inner section to act as a spacer (Fig. 3.8). When the inner and outer sections have been sealed together the wire may be dissolved away with acid. Alternatively spacers in the form of coils of paper wrapped round the inner tube may be used. This paper will burn away to a fine powder during the annealing of the vessel and may be blown or washed out through the sealing-arm. A little experiment will be needed to determine which of the papers available burns away to a fine grey powder without leaving a carbon deposit. Annealing of glass double-walled vessels should, if possible, be done with the vessel in a vertical position so that there is no risk of the inner section sagging and touching the outer section.

It is sometimes necessary for the space between the walls of a dewar to be as narrow as possible; for example where the tail of a dewar has to fit between the poles of an electromagnet. It is often not possible, however, to construct glass dewars with a narrow vacuum space, because glass tubes and cylinders supplied by manufacturers are usually somewhat variable in diameter along their length. Griffith (G1) has described a simple method by which heated glass tubes can be drawn over a carbon mandrel to produce straight tubes of very constant diameter. Such accurately drawn tubes can be used to construct dewars with vacuum clearances of less than 1 mm.

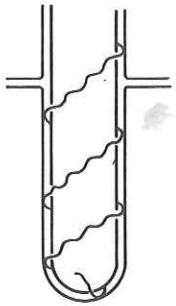

Fig. 3.8. Use of Coiled Copper Wire to separate the two Shells of a Glass Dewar Vessel prior to sealing them together

Several glass-blowing firms will undertake silvering of double-walled glass vessels (Appendix 18), though this may be carried out in the laboratory if preferred. Several methods of silvering are described in the literature (O1, S4, U1).

As mentioned previously, it is usually convenient with silvered glass vessels to have two clear slits running vertically from top to bottom (say about 1 cm wide) so that one can see into the vessels. It is much easier to provide these clear slits if the vessels are constructed with *two* side arms as shown in Fig. 3.8. For silvering, the vessel is laid on its side with one arm pointing downwards and the silvering fluids are fed in through this lower arm until they rise to a level just below the centre. This process is then repeated with the other side arm downwards, so that a strip is left unsilvered along the centre of the vessel.

To obtain good heat insulation, Dewar vessels should be evacuated to a pressure no greater than 10^{-6} torr, and the walls must be freed from adsorbed and dissolved gases by heating during evacuation. The best results are obtained by raising the temperature slowly to 550°C while pumping, but the temperature should subsequently be lowered to 400°C, and evacuation continued at this lower temperature for an hour before

sealing off. Above 550°C Pyrex glass begins to lose its rigidity. Quite satisfactory vessels may be made by heating only to 450°C and sealing off after a vacuum better than 10^{-6} torr has been maintained for an hour at this temperature. When evacuating silvered vessels, it is important to raise the temperature slowly, otherwise the silvering may disintegrate. Quite a good procedure is to raise the temperature in steps of 50°C, pumping for about an hour at constant temperature after each step.

Thermally insulated vessels to hold liquid nitrogen, for example the outer vessels shown in Fig. 3.7, can be made from expanded polystyrene foam about 25 mm thick. These styrofoam vessels are lighter, less fragile and less expensive than equivalent glass vessels, but have the disadvantage that they cannot have a transparent slit to enable the contents to be viewed. A method of making expanded foam vessels from commercially available polystyrene beads is described in reference D1.●

3.3b Metal Dewars

Dewar vessels made of metal are more robust than those made of glass; moreover they have the advantage that the diameter of the helium container need be only a little less than the outside diameter of the vessel. This is useful in obtaining the maximum working space inside a dewar whose outside diameter must be kept small, for example, if it is to go between the pole pieces of a magnet. Fig. 3.9 shows the construction of

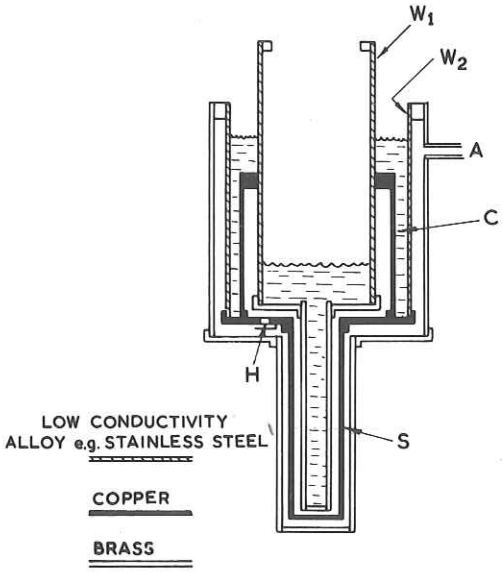

Fig. 3.9. Metal Dewar Vessel with Narrow Tail. Not to scale (after Henry and Doldeck, H1)

such a vessel. The liquid helium in the tail is shielded, not directly by liquid nitrogen, but by a shield S of copper cooled by conduction from the liquid nitrogen in the top container C. Hence, there are only three walls separating the working space in the tail from the outside. Furthermore these metal walls can be thinner than those of glass and it is not difficult when constructing a metal vessel to arrange for the walls to be close together. These facts enable the diameter of the outer casing of the tail to be not much greater than the diameter of the helium container inside. For example, a vessel with an internal working space of 35 mm diameter can be constructed with an outside diameter of 48 mm. The cylindrical tubes which form the upper walls W_1 and W_2 must be made of thin-walled low heat conductivity alloy, or at least their top portion must be of such material. The metal must, however, be thick enough so that the walls are not distorted by the one atmosphere pressure difference across them. Stainless steel about 0·3 mm thick was used in a dewar constructed in the author's laboratory. Because these vessels are generally required for experiments in magnetic fields, they should be constructed entirely of non-magnetic metals, and all joins which will be at low temperature should be hard-soldered not soft-soldered. The vessel shown in Fig. **3.**9 is pumped out through the side arm A which is then sealed off. There is a common vacuum space surrounding the liquid helium and the liquid nitrogen connected through the hole H.

It is possible to buy experimental metal dewars similar to those described above (Appendix 1).

The evaporation rate of liquid helium in a metal dewar need not be greater than that in a glass dewar. If necessary, the evaporation rate can be reduced by means of radiation shields above the liquid helium surface. Two horizontal copper baffles about 40 mm apart situated above the liquid helium at a height where the temperature is about that of liquid nitrogen can reduce the evaporation rate by 50% (L1). Alternatively a plug of polystyrene foam about 100 mm thick can be used, but after being used several times its efficiency disminshes due to absorption of helium gas.

Figure **3.**10 shows a somewhat different construction of a metal dewar which allows easy changing of the lower part to suit different kinds of experiment. The detachable tail T is secured to the main liquid helium reservoir R with low melting-point solder, or by a helium-tight flange-coupling F that uses either an indium O-ring or a sealing compound, as described in §**3.**8b. In the particular arrangement shown, the specimen holder H is not immersed in the liquid helium but is attached to the outside of the bottom of the tail T and surrounded by the radiation shield S. This in turn is surrounded by the detachable copper radiation shield C which is bolted on to the bottom of the liquid nitrogen container N. This join should provide good heat contact but need not be vacuum-tight. The outer casing, which is, of course, at room temperature, is secured

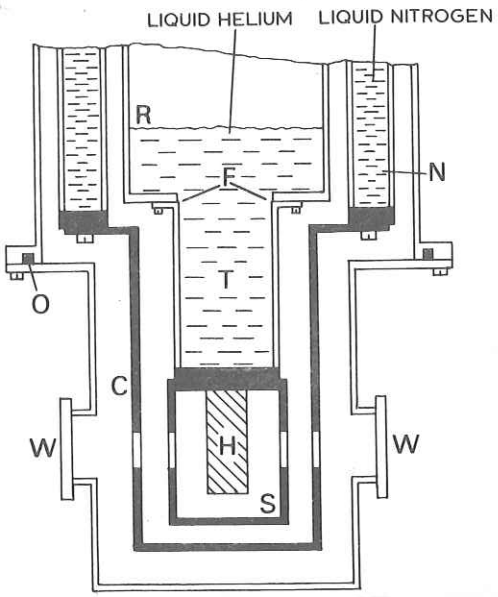

Fig. **3.**10. Metal Dewar with Detachable Tail, Arranged for an Optical Experiment

to the main vacuum jacket by a rubber O-ring seal O. It can be seen that this dewar can easily be dismantled, either for changing specimens or for substituting a different arrangement. Several firms sell 'modular' metal dewar combinations similar to that shown in Fig. **3.**10 (Appendix 1). The top parts of these dewars are standard, and a variety of units are available which can be attached to the bottom for different kinds of experiment.

This form of construction is particularly useful for optical experiments. By having windows on the outer casing and holes in the radiation shields, as shown in Fig. **3.**10, light can be shone through the apparatus. There is only a short path for the light, which does not pass through any liquid, and the windows W and their seals are at room temperature. With such an arrangement, however, one must be careful not to assume that the temperature of the apparatus is the same as that of the liquid helium. The apparatus may in fact be considerably hotter, depending on the amount of radiation falling on it and the heat contact to the helium. Consequently, there should be some independent measure of the temperature of the specimen.

When a Dewar vessel with windows is not available, light can be transmitted to and from low temperature apparatus along light guides running

down from the top-cap of the dewar. Metal tubes with polished inner surfaces or solid rods of perspex, glass or silica can be used to transmit light efficiently.

•Figure 3.11 shows an alternative arrangement for a metal dewar in which the liquid helium container H can be withdrawn by undoing the O-ring seal at O, either to substitute a different type of container, or to get access to the specimen, if this is mounted on the outside of the helium container as shown.

It is sometimes necessary to construct a Dewar vessel with an extremely narrow vacuum space between its walls; for example, when the outside diameter of the vessel has to be as small as possible. Fig. 3.12 shows a construction for the tail of a metal Dewar vessel which enables the insulation spaces to be very narrow. There is only about 0·33 mm between the outer surface of one tube and the inner surface of the tube surrounding it but the tubes are prevented from touching by the filament, woven of fine quartz threads, which has been wound along the inner two tubes. By means of this construction, and using tubes of about 0·5 mm wall thickness, the total thickness of the three tubes and two vacuum spaces surrounding the liquid helium can be reduced to about 2 mm, though the liquid helium evaporation rate is no higher than in a dewar of normal construction.

One can in fact use metal dewars for liquid helium without any liquid

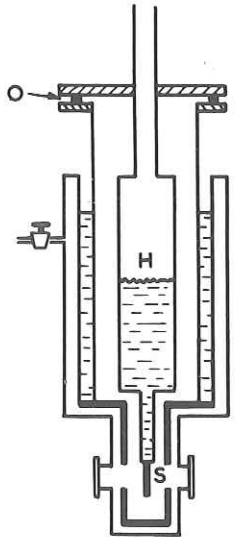

Fig. 3.11. Demountable Cryostat
(based on a design by Pesteil and Philip, P2)

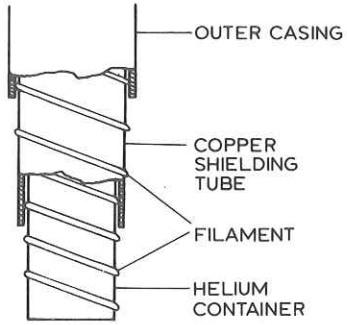

Fig. 3.12. Construction for very narrow vacuum gap between walls of a Dewar vessel (after Shal'nikov and Shal'nikova, S5)

nitrogen shielding (F1). Fig. 3.13 shows such an arrangement. The liquid helium container H hangs on the thin-walled alloy tube T and is surrounded by two polished copper radiation shields R_1 and R_2. These shields are attached to the tube T and are cooled by the cold gas evaporating from the liquid helium. The points of attachment should be such that the inner shield is at about 75K and the outer shield at about 155K. Under these conditions the evaporation rate may be about 50 cm³ of liquid helium per hour. The efficiency of this kind of dewar can be increased by surrounding the radiation shields with multilayer insulation (see §2.1). Multilayer insulation is obtainable in the form of convoluted 'mylar' sheet coated with aluminium ('dimplar', Appendix 19). Alternate

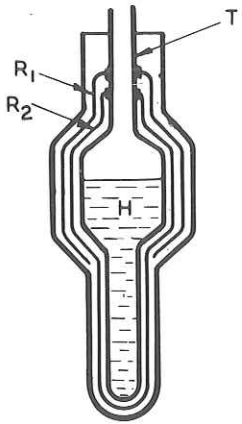

Fig. 3.13. Metal Dewar without Liquid Nitrogen Shielding
(after Fradkov, F1)

layers are dimpled and smooth, about 20 such layers occupying a thickness of 25 mm. The layers are not wound directly on to the radiation shields but are spaced away from them by low conductivity spacers. Suitable spacers can be made from adhesive-backed plastic foam, such as is sold for sealing doors and windows against draughts. The sheets must be wound on loosely so as not to be compressed, and at corners the sheets must be interleaved and folded so that there is no optical path by which radiation can reach the low temperature region.* The radiation shield and any attached insulation must be pre-cooled by first filling the dewar with liquid nitrogen which is then syphoned out (see p. 72) before the liquid helium is syphoned in. Note that the multilayer insulation is applied to the radiation shields and not directly on to the liquid helium container. If the insulation were on the container, a considerable amount of liquid helium would be needed to cool the insulation to 4·2K and, furthermore, it would take a long time for the final temperature gradient to establish itself across the insulation, so there would be a relatively high rate of liquid helium evaporation long after the vessel has been filled.

3.3c Dewars for Superconducting Electromagnets

Strong magnetic fields are often obtained by means of superconducting solenoids (see §3.9) immersed in liquid helium. Dewar vessels to hold such solenoids can be of normal design and, if the specimen to which the magnetic field is to be applied can also be immersed in liquid helium, there are no special problems. It must however be remembered that a superconducting solenoid may by accident suddenly regain resistance. Should this happen, a large amount of liquid helium may be evaporated in a short time, and provision must be made for the easy venting of large amounts of gas before a high pressure builds up in the cryostat.

Sometimes it is necessary that the region of strong magnetic field generated by a superconducting solenoid be at room temperature. The most straightforward method of achieving this is to have a long, thin tubular Dewar vessel which can run from the cap of the cryostat down into the central hole of the superconducting solenoid. The specimen holder is inserted down this tubular dewar and, if necessary, its temperature can be maintained by a heater. The construction illustrated in Fig. 3.12 can be used to ensure that the walls of the long tubular dewar occupy as little space as possible within the solenoid. Fig. 3.14 illustrates two special designs of metal cryostat which allow direct access at room temperature to the magnetic field region within a superconducting solenoid. Again the construction illustrated in Fig. 3.12 can be used for that part of the dewar which is inside the solenoid so that the tubes take up as little space as possible in the central hole. A very neat multilayer

*The author is indebted to Dr. J. Good for this description of a superinsulated cryostat constructed by him.

insulated dewar system for holding a horizontal superconducting solenoid with room temperature access to the magnetic field has been described by Hawkins and Harshman (H2).●

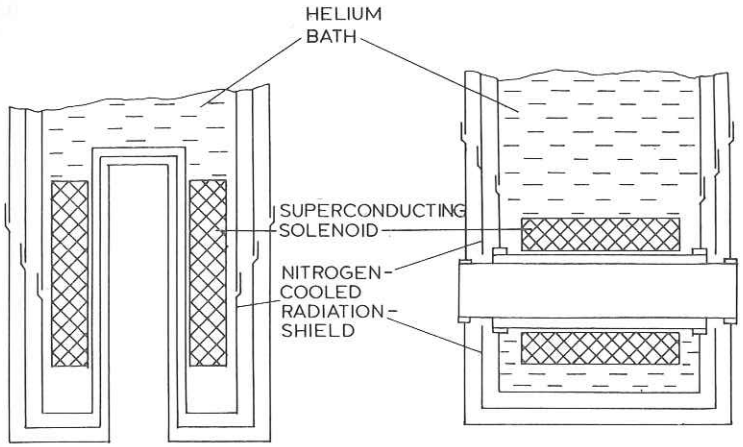

Fig. 3.14. Diagrams (not to scale) of cross-section of lower ends of metal dewars allowing access at room temperature to magnetic field within a superconducting solenoid (based on Fradkov, F2)

3.3d Operation of Metal Dewars

Precooling the interior of a metal Dewar vessel prior to filling with liquid helium presents a problem because the inner chamber is vacuum-insulated and will cool only slowly after the outer container is filled with liquid nitrogen. Precooling may be carried out by pouring liquid nitrogen directly into the inner chamber. After this has cooled down, the liquid can be withdrawn through a tube inserted through the filling hole in the cap and thin enough to pass beside any apparatus down to the bottom of the tail. If this tube is fitted through a rubber bung which fits into the filling hole, the excess pressure that builds up in the vessel will blow the liquid nitrogen out. When the liquid nitrogen has gone, the tube is withdrawn, the remaining nitrogen gas is pumped out and the vessel refilled with helium gas. It is important to remove *all* the liquid nitrogen before attempting to fill with liquid helium (see §3.6).

It is necessary to have some form of level indicator in a metal dewar, because one cannot see into the vessel when filling it. Level indicators have been described in §2.5. In many cases it is sufficient to have two carbon resistors at the appropriate heights to indicate when the required amount of helium has been syphoned in and when it has fallen to too low a level.

•3.4 Small Portable Cryostats

Figure 3.15 shows a very small cryostat which is completely portable and is arranged so that the cold specimen may, for example, be viewed under a microscope. The lower chamber *H* holds about 100 cm³ of liquid helium and is surrounded by the copper radiation shield *R* screwed on to the bottom of the liquid nitrogen container *N*. The helium container is supported by its thin-walled alloy filling tube *F*, which is not attached to the bottom of the container *N* but to the top of the re-entrant cylinder *C*. By this means the heat path from the liquid nitrogen bath to the liquid helium is made long, and the evaporation rate of the helium is kept low. The outer brass jacket *J* is secured by an O-ring seal to the top cap from which the helium and nitrogen chambers hang. The jacket is pumped out to a good heat-insulating vacuum through the valve *V*.

The specimen can be fixed to the top of the copper post *D*, which passes through a hole in *N* and screws into a copper insert *I* in the helium chamber. The specimen may then be observed through the glass window

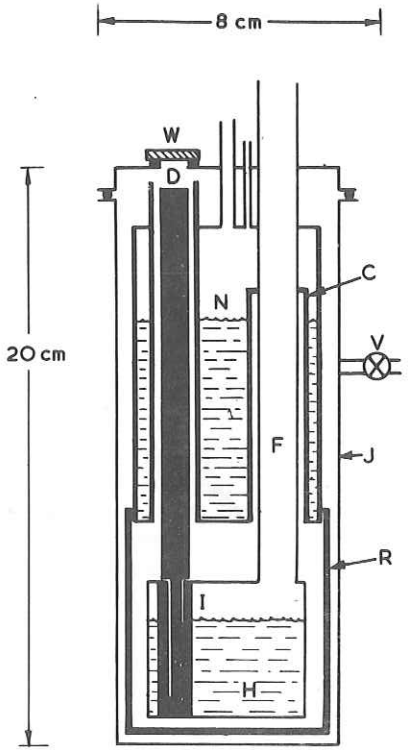

Fig. 3.15. Portable Metal Cryostat (after Hull and Rosenberg, H3)

W sealed by an O-ring to the outside of the top cap. Under these conditions the specimen will be a few degrees hotter than the liquid helium. If the specimen does not need to be visible, it may be mounted directly on top of the helium chamber. Although this cryostat is only 20 cm tall, it will retain liquid helium for several hours after one filling, and may be easily carried about when full. The method of filling such a cryostat is described in §2.6.

Another kind of cryostat which is mounted on top of a standard liquid helium storage-vessel and which is coooled by a flow of cold helium drawn from the vessel is described in §5.3.•

3.5 Lowering the Temperature: the Helium Film

A bath of liquid helium may be cooled below its normal boiling point, 4·2K, by reducing the pressure in the container so that the liquid boils at a lower temperature. Methods of controlling the temperature by this means are described in detail in Chapter 5.

When the temperature of a helium bath is lowered, heat must be extracted both from the apparatus and from the liquid helium itself. Because the specific heat and enthalpy per unit volume is so much greater for liquid helium than for solids, nearly all the heat which has to be extracted in cooling a cryostat comes from the liquid helium rather than the apparatus and, when cooling by reducing the pressure, most of the evaporation of the helium is used to cool the liquid itself. Table 3.1 shows the fraction of the original volume that remains after liquid helium has been cooled by evaporation from 4·2K to various lower temperatures. It can be seen that, if the temperature is to be lowered by pumping, a helium bath must be filled with rather more liquid than will be finally needed. It is, however, possible to fill a cryostat directly with liquid helium II if a syphon is used which has a valve on the end that goes into the storage vessel (G2).

Final temperature (K)	3·5	3·0	2·5	2·0	1·6
Fraction remaining	0·83	0·74	0·68	0·63	0·58

Table 3.1. Fraction of the original volume of liquid helium remaining after it has been cooled from 4·2K by evaporation. (These figures, determined experimentally, do not include the the additional loss due to heat leak during the time the liquid is being cooled.)

When lowering temperature the pressure should be reduced slowly otherwise liquid helium is wasted. The pumping rate should be slow enough to allow the gas to warm to room temperature before leaving the cryostat. Should ice form on the pipes leading from the cryostat to the pump, the cryostat is being pumped too fast and part of the cooling capacity of the helium is wasted in cooling these pipes.

Because the liquid is evolving gas continuously, the lowest pressure, and hence the lowest temperature, will be determined by the maximum speed of the pumping system. The variation of liquid helium vapour pressure with temperature is shown in Fig. **4.**9, and it can be seen that, if the pressure could be reduced to 2×10^{-5} torr, the temperature would fall to 0·5K. Unfortunately, it is not possible by pumping to reduce the pressure to such a low value, because of peculiar properties helium acquires when it cools below its 'λ-point', 2·17K. Below this temperature surfaces in contact with the liquid or gas become covered with a thin film of highly mobile helium atoms. In a vessel containing helium II (as the liquid below its λ-point is called) a film about 100Å thick rises up the sides from the liquid surface to a level where the temperature equals the λ-point and evaporates there. Because this film is transporting helium up from the liquid, the pump has to remove far more vapour than if there were just evaporation from the liquid surface, and so the pressure cannot be reduced to a very low value. The amount of helium transported in the film over clean surfaces is shown in Fig. **8.**5. On clean metal the flow-rate is about three times higher than on glass. By pumping on an ordinary Dewar vessel with a 150 l/min rotary pump one can expect to achieve a minimum pressure of about 1·3 torr, which corresponds to a temperature of about 1·3K. If the pumping speed is increased by the use of a fast diffusion pump, lower pressures and temperatures may be obtained, say down to 0·1 torr, or about 1K. By the use of very fast 'booster' diffusion pumps, of speed about 700 l/s., a minimum temperature of about 0·73K can be obtained, corresponding to a pressure of about 0·0041 torr (A2). It can be seen that, to reduce the temperature of liquid helium, pumps of high speed rather than low ultimate pressure are required. Very large pumps are inconvenient in normal experimental work, but, as shown below, it is possible to reduce film flow to some extent and so make use of smaller pumps.

The rate at which helium is transported in the film is roughly independent of the length of the path along which it travels, but is proportional to the smallest perimeter that it has to cross. Therefore we may reduce the flow of helium through the film by providing an internal constriction in the vessel, as shown in Fig. **3.**16, or by making the lower part of the vessel which contains the helium as narrow as possible. It must be remembered that only about two-thirds of the liquid will remain after cooling from 4·2K to below the λ-point and so, to get the longest time at the lowest temperature, the vessel must be filled initially so that there is at least a third of the liquid above the narrowing part of the vessel. Above this minimum perimeter the vessel should be made as wide as possible to give the maximum pumping speed for extracting the vapour. Very low temperatures may be achieved with moderately sized pumps if the constriction is reduced to pin-hole size, say 0·5 mm. With such a tiny orifice temperatures down to about 0·75K can be reached with a

pump having a speed of a few tens of litres per second, though it may take several hours for the helium to cool down. An example of a cryostat in which low temperatures are reached as a result of pumping a helium bath through a fairly small hole is shown in Fig. **3.**17.

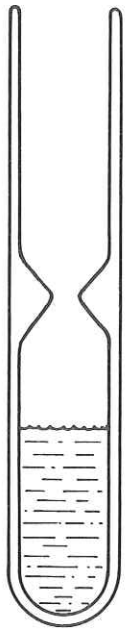

Fig. **3.**16. Dewar with Internal Constriction to Reduce Film Flow (after Giaever and Megerle, G6)

Film flow is considerably greater over a rough surface than over a smooth one, and therefore, when aiming for the lowest temperatures, the internal surface of the smallest orifice through which the helium has to flow should be smooth and clean. The undesirable film flow out of metal helium chambers can be considerably reduced by electropolishing the exit hole. In general, clean vessels should be used that have been well evacuated before admitting helium, so that a film of condensed air does not form on the walls. An air film may increase the film flow ten-fold.

The situation may be roughly summarised as follows: in a simple cylindrical Dewar vessel pumped directly by a mechanical pump we may expect to reach temperatures down to about 1·3K. With extra precautions to limit the film flow and to reduce heat leak, temperatures down to about 0·85K may be obtained. Temperatures below this and down to the minimum of about 0·73K are only reached with difficulty by the use of rather elaborate apparatus. By employing the isotope, helium^3, tempera-

tures down to 0·3K may be obtained; this technique is discussed in Chapter **6**.

In some laboratories it is the practice to have one large fast mechanical pump (e.g. a 'Kinney' pump) connected by wide pumping tubes to valves in various parts of the building on to which experimenters may attach their cryostats. However, it is usually more convenient for every apparatus to have its own pump. For most experiments a 150 litre/min. single-stage rotary pump is sufficient. This system allows greater flexibility in the design and positioning of apparatus and, in addition, the cryostats are quite independent of each other. Large pipes, which are necessary in the central pump scheme to provide high pumping speed, are very clumsy and rather difficult to alter when a change in arrangements is needed. The cost of the two schemes is probably about the same, though this will depend on various local factors.

If helium gas is to be conserved, the mechanical pumps must not, of course, be of the 'air ballast' type, because these pumps inject air into the outflow.

•3.5a Cryostat to Reach below 1K

Figure **3**.17 shows a simple cryostat in which temperatures below 1K can be obtained without difficulty (C1). It is arranged so that the specimens

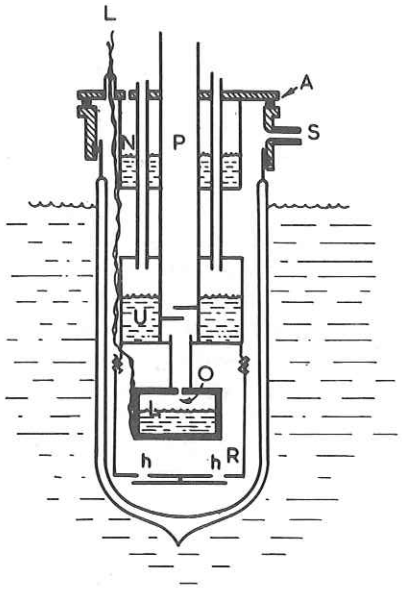

Fig. **3**.17. Two-Stage Helium Cryostat for Obtaining Temperatures Below 1K. Not to scale (after Chanin, Lynton and Serin, C1)

can easily be changed without the need to break and reseal joints that have to remain vacuum-tight at low temperatures. The principle helium bath *L* is of copper and is suspended from an upper helium bath *U* by a short length of thin-walled low thermal conductivity alloy tube. Film flow out of *L* is restricted by a 2·5 mm hole *O*. The samples to be measured are attached to the outside of the bottom of the copper chamber *L*. Heat leak to *L* and the attached samples is reduced by the radiation shield *R* screwed on to the bottom of the upper helium container *U*. The entire combination is sealed with O-rings into a Dewar vessel assembly as shown and this is in turn surrounded by a Dewar vessel filled with liquid nitrogen. The upper reservoir *N* is also filled with liquid nitrogen.

After precooling to liquid nitrogen temperature the upper helium chamber is filled in the usual way by syphoning in liquid helium. During this filling the helium vessels *U* and *L* are surrounded by helium exchange gas contained inside the Dewar vessel. It is found that for efficient cooling of the lower vessel a fairly high pressure of exchange gas is needed, say about 1 atmos. at liquid nitrogen temperature, so that the cooling is aided by convection. While the upper chamber *U* is being filled with liquid helium, the lower helium bath *L* is connected through *P* to a helium gas supply at a slight overpressure and so liquid helium condenses into *L*. When *U* and *L* are filled, the exchange gas is pumped out through the side arm *S*. A good vacuum can be obtained in a few minutes, the gas surrounding *L* escaping easily through the holes *h* in the radiation shield. The temperature of *L* can now be reduced below 4·2K by pumping through *P*. A temperature of 0·85K was reached by pumping with a 22 litre/s mechanical pump through the 1·6 cm pumping tube *P*.

Specimens can be changed by undoing the O-ring seal *A*, withdrawing the helium assembly from the Dewar vessel and unscrewing the radiation shield *R*. Because this radiation shield does not have to be gas-tight, electrical leads *L* to the sample can pass through a hole in the mounting, as shown, up the sides of the chamber and out through a vacuum seal in the cap. These leads are not disturbed when changing specimens.

If the tubes supporting the helium can *U* from the cap of the apparatus are sufficiently long (say about 45 cm) the nitrogen vessel *N* can probably be omitted. However, because there is also the vessel *L* and the radiation shield *R* below *U*, the apparatus may become invonveniently long.

3.5b Charcoal Sorption Pumps

Simple cryostats to reach temperatures down to about 0·7K may be made by using charcoal sorption pumps instead of large diffusion pumps to pump the vapour off the liquid helium (E1). Activiated charcoal is an extremely porous material, which, when cooled to low temperature, adsorbs large quantities of helium into its pores. Fig. **3**.18 shows how the amount of helium adsorbed depends on the pressure of the helium gas surrounding the charcoal and on the temperature. It can be seen that a

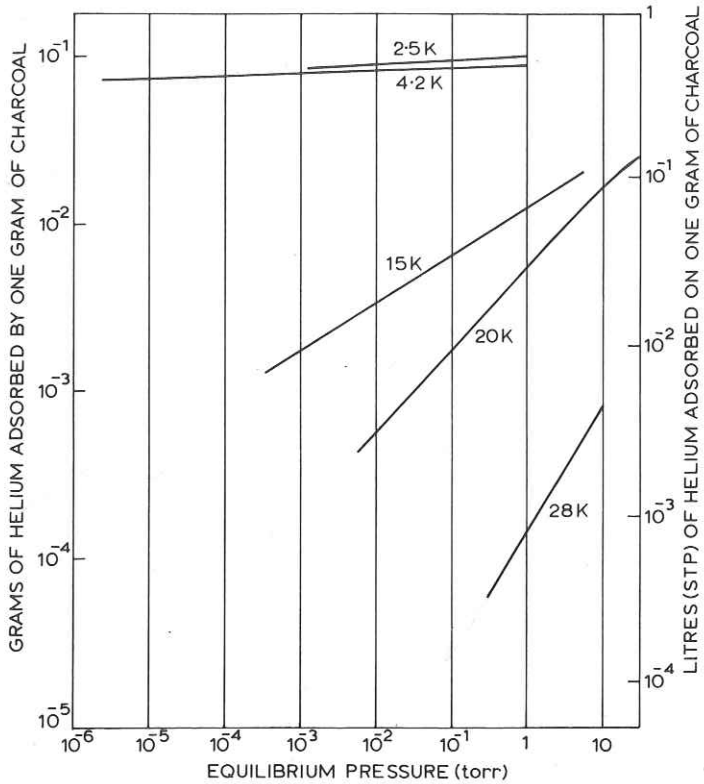

Fig. 3.18. Adsorption of helium on charcoal (Weidemann and Smolic, W1)

gram of charcoal cooled to liquid helium temperature can adsorb an amount of helium equivalent to about $\frac{1}{2}$ litre of gas at STP (i.e. about 0·05 litre STP of helium gas per cc of charcoal pellets) and that, because at 4·2K the amount adsorbed is almost independent of the pressure, the charcoal will still adsorb this amount even if the pressure of the surrounding helium gas has fallen to less than 10^{-5} torr. Consequently, charcoal pellets cooled to 4·2K are very efficient in absorbing helium gas and act as a pump. Charcoal is better than zeolite or molecular sieve for adsorbing helium.

A very simple adsorption pump consists of activated charcoal pellets in a cylindrical metal cylinder attached to the end of a long thin-walled alloy tube. The charcoal can then be coolled by immersing the cylinder in a dewar of liquid helium (if the diameter of the pump is small enough, it can be inserted down the neck of a liquid helium storage vessel). The

pump can be connected by a flexible nylon tube to the cryostat which is to be pumped. A charcoal pump connected to a cryostat by a 2m long, 24 mm diameter tube can reduce the pressure in the cryostat to about 4×10^{-2} torr, corresponding to a liquid helium temperature of about 0·9K. At the end of an experiment the helium gas can be released from the charcoal, for example into a storage tank, by removing the adsorption pump from the dewar so that it warms to room temperature. It should be noted that there is little advantage in cooling charcoal adsorption pumps below 4·2K because, as can be seen from Fig. 3.18, there is virtually no increase in the gas adsorbed into charcoal below 4·2K.

Sorption pumps have, in addition to their simplicity, the advantage that they produce no vibration.

The pressure drop along the pumping line can be greatly reduced by locating the charcoal adsorption pump inside the cryostat which is to be pumped (E1). By this means the pumping line can be kept short and cold, and consequently very high pumping rates are achieved. A schematic diagram of such an arrangement is shown in Fig. 3.19. The charcoal adsorption pump C can be slid up and down the tube T by means of the supporting rod R which passes through a vacuum-tight sliding seal at the top of the apparatus. At the bottom of T is a tail of thin walled alloy, the bottom of which forms the liquid helium bath H which is to be cooled. This tail is surrounded by a vacuum jacket V. The assembly is pre-cooled with the charcoal pump C held at the top of the tube T. The lower part of the assembly is immersed in liquid helium whose temperature is reduced to about 1·3K by pumping off its vapour in the usual way. Helium gas is then admitted into tube T; the gas condenses on the lower cold wall and collects as liquid in the bottom of the tail H. A few torr of helium gas previously admitted into the vacuum space V via the tube P acted as exchange gas for precooling the helium evaporator, but when the evaporator cools to liquid helium temperature this exchange gas is adsorbed into the charcoal granules stuck onto the outside of the tail with epoxy resin mixed with copper powder, leaving a good thermally-insulating vacuum.

Pumping on the liquid helium in the tail is achieved by lowering slowly (at a few mm per second) the charcoal pump from the upper position, where it was at liquid nitrogen temperature, so that it cools to liquid helium temperature. The cold charcoal starts to adsorb helium vapour rapidly and the temperature of the liquid helium in the tail can be reduced to about 0·7K. This sorption pumping system is equivalent to a pump at room temperature with a pumping speed greater than 1000 ls^{-1}. The temperature of the liquid helium in H can be controlled by varying the rate at which the charcoal pump adsorbs the vapour; the hotter the charcoal the less rapidly it adsorbs. Therefore temperature control can be achieved by adjusting the height of the charcoal container so that its temperature lies between 4·2 and 30K. The temperature of H

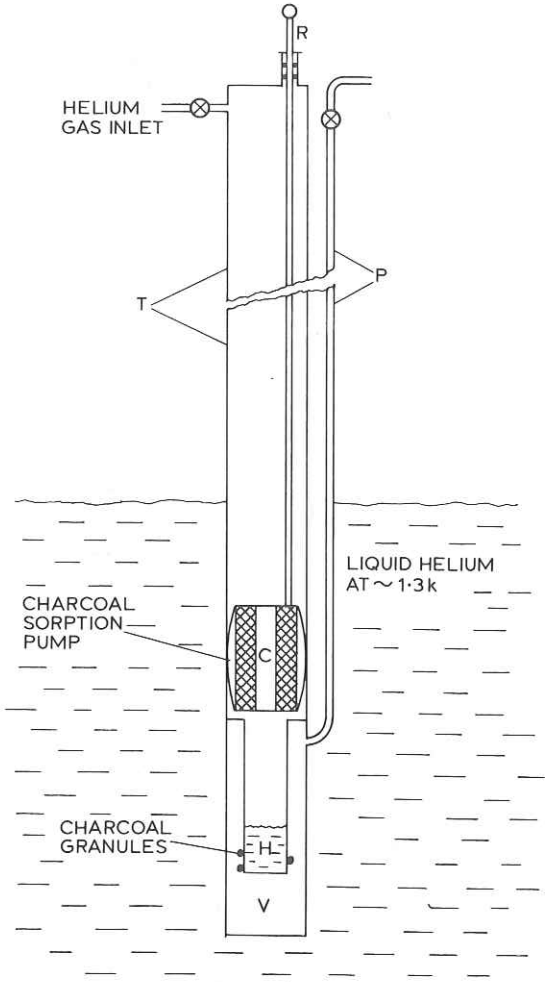

Fig. 3.19. Cryostat containing charcoal sorption pump (based on Esel'son, Lazarev and Shvets (E1) and Weidemann and Smolic (W1)). Also suitable for use with helium[3] (see § 6.2a)

can be held steady by continuously observing the reading of a thermometer attached to it and making appropriate adjustments of the height of the charcoal container as required. This method of temperature control is simple but rather tedious, and it may be more convenient to adjust the pumping speed by means of a throttle valve between the charcoal pump and the helium bath *H*. The valve can be of very simple design

because it does not need to be gas-tight but only needs to present an adjustable aperture in the pumping line.

When all the liquid helium in the tail has evaporated, the adsorbed gas may be released from the charcoal by raising it above the level of the outer liquid helium to a position where its temperature is about 30K (see Fig. 3.18). If the experiment is to be continued, the released gas can be immediately recondensed into the tail, though, of course, this recondensation will evaporate some of the outer liquid helium. We need warm the pump only to about 30K because, as was pointed out earlier, nearly all the adsorbed helium is released at this temperature. If the pump is not raised above this temperature only a little of the outer helium is needed to recool the charcoal. However, during the time the charcoal is pumping gas, the adsorption of each gas atom releases energy (heat of adsorption) and this heat also evaporates some of the outer helium. In fact, for every millilitre of liquid helium pumped away by the charcoal pump, about 1·5 ml of the surrounding helium will be evaporated.

It was pointed out earlier that there is no advantage in cooling charcoal adsorption pumps below 4·2K. In the cryostat just described the outer liquid helium bath need only be pumped below 4·2K for the condensation of the helium gas into the tail. During operation of the cryostat the outer liquid helium can be allowed to warm to 4·2K.

The movable charcoal pump can consist of charcoal granules between two coaxial cylinders of copper netting. The central hole of this annular container allows direct access from the top of the cryostat to the experimental space in the cold tail. For the sorption pump to have high performance the charcoal in it must be efficiently cooled. Good thermal contact can be established between the pump and the wall of the tube *T* by copper leaf springs which are attached to the top and bottom of the container and which press against the wall.

A very simple cryostat with a sorption pump that employs no moving parts is described in Chapter **6** (Fig. **6**.10). Though originally designed for use with helium[3], there seems no reason why it could not also be used to pump helium.[4]●

3.6 Precooling

Liquid oxygen (90K), air (~80K) or nitrogen (77K) may be used for precooling cryostats before filling with liquid helium and also as shielding to reduce heat leak. Liquid oxygen is quite satisfactory but there are some dangers from fire. There is, furthermore, an additional advantage in using the colder liquid nitrogen, because a cryostat precooled to a lower temperature needs less liquid helium to cool it down to 4·2K. The amount of heat to be extracted from a cryostat is the amount by which its total enthalpy at the precooling temperature exceeds its enthalpy at 4·2K. At 4·2K the enthalpy is very small and so the amount of liquid helium consumed will be proportional to the value of the enthalpy of the cryostat

at the precooling temperature. Enthalpy falls rapidly with decreasing temperature (Fig. **8.**11) and so less liquid helium will be used if we precool to liquid nitrogen rather than liquid oxygen temperature. From Table **3.**2 it can be seen that the enthalpy of the metal is much greater than that of the same volume of helium gas. If the apparatus is massive and there is a great deal of metal to be cooled, it may be worthwhile to lower the precooling temperature by reducing the pressure over the liquid nitrogen, so that the enthalpy of the metal is reduced and less liquid helium is used in cooling it down. The enthalpy of copper is halved if we reduce its temperature from 77 to 60K.

	60K	77K	90K
Copper	22	48	71
Helium gas	0·28	0·27	0·27

Table **3.**2. Volume enthalpy (joules/cm^3) of helium gas at 1 At. pressure, and of copper.

It may be difficult to precool massive apparatus, for example a large superconducting solenoid, by conduction from a separate liquid nitrogen bath through the gas surrounding the apparatus. Yet it is precisely when the apparatus has a large mass that it should be precooled to as low a temperature as possible; otherwise an excessive amount of liquid helium will be needed to cool it to 4·2K. Massive apparatus is best precooled by direct immersion in liquid nitrogen. However, if this is done by first filling the cryostat with liquid nitrogen, it is extremely important that *all* this liquid nitrogen be removed before syphoning in the liquid helium. This complete removal is necessary because liquid and solid nitrogen have a very high specific heat (see Fig. **8.**12); the specific heat per unit *volume* is an order of magntude greater than that of copper for example, and consequently, if any liquid nitrogen remains, a great deal of liquid helium will be wasted in cooling it. All the liquid nitrogen can be extracted from a cryostat by means of a tube running from the very bottom of the dewar out through the cryostat cap. The liquid nitrogen can be blown out through this tube by allowing an overpressure to build up in the dewar vessel. Alternatively, the liquid nitrogen can be evaporated away by an electric heater situated at the very bottom of the vessel.

Figure **3.**20 indicates the amount of liquid helium needed to cool various metals from an initial temperature T, down to 4·2K. The amount depends, of course, on the degree of heat exchange between the metal object being cooled and the cold gas evolved from the incoming liquid, i.e. on what fraction of the total enthalpy of the helium is usefully employed. The least liquid is consumed if there is complete heat exchange between the gas and the metal, and this defines the lower edges of the bands shown in Fig. **3.**20. The upper edges of the bands refer to the very

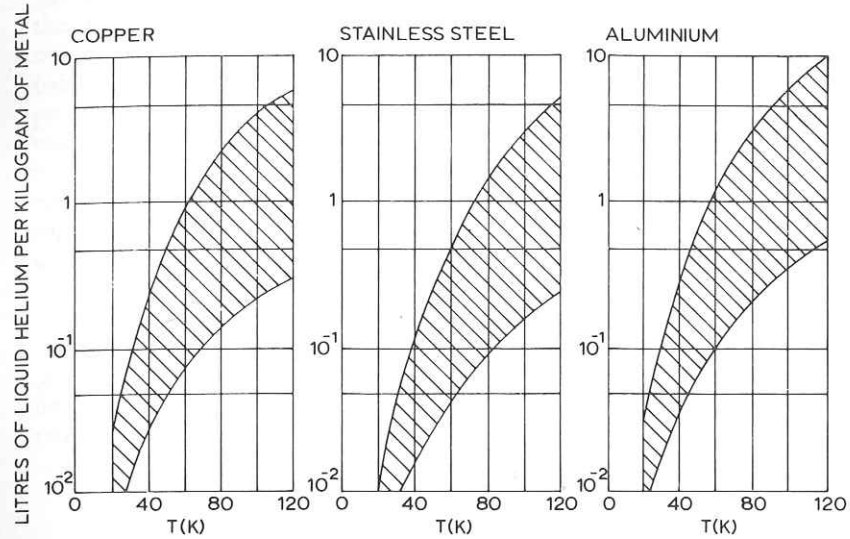

Fig. **3.**20. Amount of liquid helium to cool metals from starting temperature T to 4·2K. The lower edge of the bands indicates the liquid helium consumption if there is complete heat exchange with the cold gas evolved; the upper edge refers to the case where there is no heat exchange with the gas, so that only the latent heat of evaporation is used (based on Jacobs, J1)

inefficient situation where there is no heat exchange at all between the evolved gas and the metal, so that only the latent heat of the liquid is employed to cool the metal. With careful design to ensure good heat exchange between the cold gas and the object being cooled, and by transferring liquid helium slowly into the cryostat so that there is time for this heat exchange to take place, one may achieve a situation nearer to the lower than the upper edge of the bands shown in Fig. **3.**20. Of course, in addition to the liquid helium needed to cool the apparatus to 4·2K, some helium will evaporate in the syphon during transfer into the cryostat.

As an example of what may be achieved without excessive precautions, it may be noted that no more than about a litre of liquid helium need be used to cool a superconducting electromagnet weighing 2 kg from 77 to 4·2K in about an hour.

●If it is impracticable to precool a helium chamber or apparatus directly with liquid nitrogen, precooling can be achieved by means of a thermosyphon (Fig. **3.**21). This consists of a small copper 'condenser' and an 'evaporator' connected by a thin-walled low-conductivity alloy tube. The

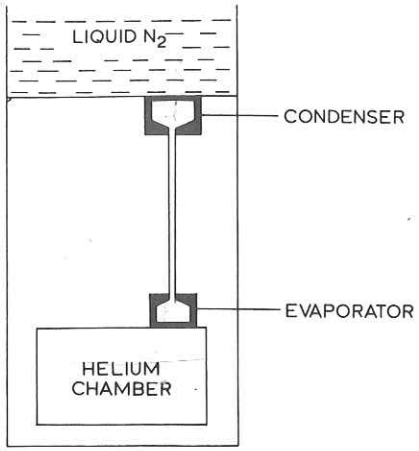

Fig. 3.21. Precooling by thermosyphon
(based on Bewilogua, Knöner and Kappler, (B2)

condenser is thermally attached to the underside of a liquid nitrogen chamber and the evaporator to the top of the chamber or apparatus to be precooled. The thermosyphon has been filled with nitrogen gas to a pressure such that, when the whole syphon is at 77K, about a millilitre of liquid nitrogen condenses in the evaporator. The action is as follows: when the upper chamber is filled with liquid nitrogen, the gas in the condenser liquefies and trickles down into the evaporator, cooling the lower chamber or apparatus attached to it. The liquid reaching the evaporator boils and the 'hot' vapour ascends to the condenser to maintain the cycle. When, after precooling, liquid helium is admitted to the lower chamber, the nitrogen in the thermosyphon freezes with negligible vapour pressure and heat contact to the liquid nitrogen chamber is automatically destroyed. A thermosyphon with a 100 mm long, 6 mm diameter, tube joining a condenser and evaporator, each with a surface area of about 20cm^2, can cool 1 kg of copper to liquid nitrogen temperature, in about an hour (B2).

3.7 Manipulation of Liquid Helium

The way in which a cryostat is filled by syphoning in liquid helium from a storage-vessel has already been described in §2.6.

A cryostat in which the liquid helium level has fallen too low may be refilled by syphoning in more liquid from the storage-vessel. Some liquid helium is used up in this operation because the relatively warm gas flowing through the syphon at the beginning of the transfer carries heat into the experimental cryostat. If there is no need to conserve helium

gas, it is more economical in liquid helium not to insert the syphon into the cryostat until liquid begins to flow out of the syphon's outlet. Clearly one cannot insert a syphon directly into an ordinary cryostat which is being held at a temperature below 4·2K under reduced pressure. The pressure must be allowed to rise to atmospheric value before the syphon can be introduced. It is, however, possible to modify a cryostat so that it can be refilled even though the helium inside is being evaporated under reduced pressure. The syphon is not inserted directly through the cryostat cap, but instead is inserted into a tube which runs down from the cap into the cryostat. This tube ends in a needle valve which can be operated from the top of the cryostat. To fill the cryostat, liquid helium is syphoned into the tube and is sucked through the needle valve into the low pressure cryostat. Having passed through the valve into the low pressure region, part of the liquid cools by 'flash evaporation' and replenishes the cold liquid already in the cryostat. Details of this refilling device are given in reference M2.

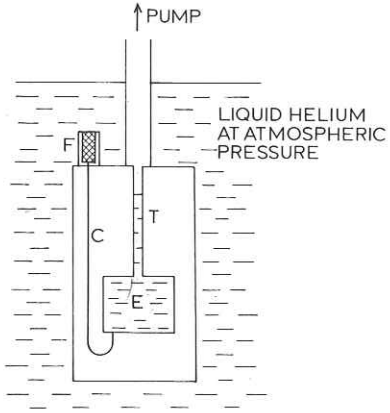

Fig. 3.22. Continuously operating helium refrigerator
(DeLong, Symko and Wheatley, D2)

An alternative device for indefinitely maintaining temperatures down to about 1·3K is the continuously-operating evaporation refrigerator (D2). A simple form is shown in Fig. 3.22. The equipment to be cooled is attached to the small (few cc) evaporation chamber E which is suspended inside a vacuum jacket by the thin-walled alloy pumping tube T. The jacket is immersed in a bath of liquid helium at atmospheric pressure. When the evaporator E is pumped, liquid helium is drawn in through the capillary tube C. The liquid fills E and rises up the tube T to a height where the heat flown down T causes it to evaporate. E falls to a low temperature because the latent heat of evaporation is greater than the

heat carried in to the evaporator by the inflowing helium. With a cupronickel tube T 6 cm long, 3 mm diameter and 0·1 mm wall thickness, pumping with a rotary pump of speed of 10 litres s^{-1} can reduce the temperature of E to about 1·3K. The capillary C must have a rather high flow impedance, and a suitable impedance has been made by using 18 cm of 0·25 mm bore cupronickel tubing with an 8 cm length of alloy wire of just slightly smaller diameter pushed into it. The sintered copper inlet filter F prevents the capillary becoming blocked by small particles. Because the outer helium can be replenished without disturbing the temperature of the evaporator, the evaporator can be run indefinitely at temperatures below 2·2K. The temperature of the evaporator is self-stablising; at temperatures below the λ-point the evaporator and tube must be at the same temperature, because of the very high thermal conductivity of helium II, so an increase in heat input to the evaporator causes more rapid evaporation, and the level of the liquid in T falls. Consequently, it receives less heat by conduction down T.

A chamber has sometimes to be filled with liquid helium in circumstances where it is not possible to syphon in helium from a storage-vessel. Such a chamber may be filled as follows: first cool the chamber to 4·2K or below by thermal contact with a helium bath, and then admit helium gas at a slight overpressure. The gas can be admitted through a capillary tube from a high pressure cylinder via a needle valve as shown in Fig. 3.23. The gas is allowed to enter in small quantities and, when the pressure in the chamber reaches the vapour pressure of liquid helium at the temperature of the chamber, the gas begins to condense and the pressure remains

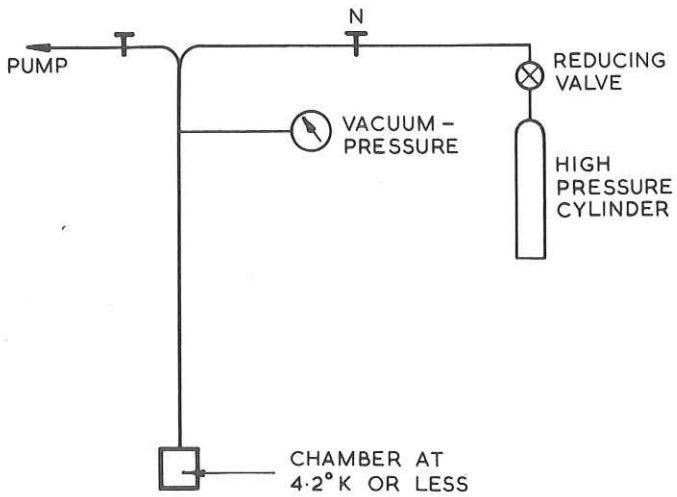

Fig. 3.23. Condensing Helium into a Cold Chamber

constant as more gas is let in. When the chamber is completely filled the pressure will rise as more gas is admitted. If the capillary is narrow, gas must be admitted very slowly to allow the pressure in the chamber to be in equilibrium with that shown on the gauge. It is also important that this capillary tube is in good thermal contact with the cold gas above the liquid helium bath, otherwise warm gas will enter the chamber and boil off a great deal of liquid helium.

A more rapid method of filling is to admit liquid helium from a bath through a needle valve as illustrated in Fig. 3.24. The valve, which may consist of a stainless steel needle N in a brass seating, is immersed in the liquid helium. Suitable valves may be constructed from the needle and modified body of a normal commercial needle valve. Liquid helium is taken in through the filter F and fed to the chamber through the tube T. The valve is operated by raising and lowering the needle on the end of the

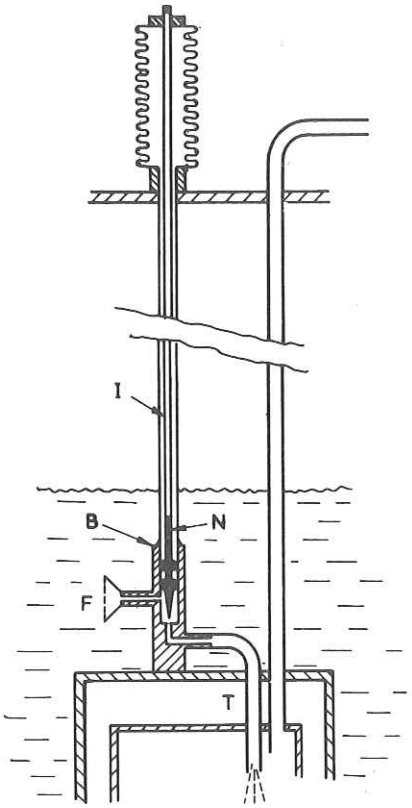

Fig. 3.24. Needle Valve for admitting Liquid Helium into a Chamber

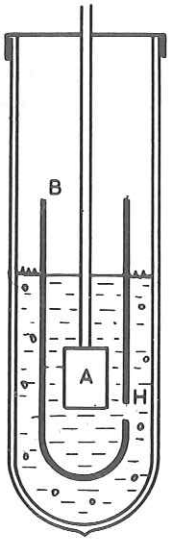

Fig. 3.25. Method of preventing boiling of Liquid Helium around apparatus

inner thin-walled alloy tube T by means of a bellows or other vacuum-tight movement on the cryostat cap.

It is sometimes necessary to suppress boiling of liquid helium where an apparatus immersed in the liquid would be disturbed by bubbles. Such a requirement exists, for example, if the specimen on a torsion balance has to be suspended directly in the liquid. Where strict control of temperature is not essential, boiling can be stopped for a short while by reducing slightly the pressure over the helium bath, so that the liquid cools a little, and then shutting off the pump. Boiling ceases or is greatly reduced during the time the temperature of the liquid is rising back to its original value. Another method of reducing boiling around apparatus is shown in Fig. 3.25. The apparatus A is surrounded by a single-walled glass tube B open at the top and closed at the bottom. A small hole H allows the inside of the tube to fill with liquid helium to the same level as the helium outside. The liquid helium surrounding A is effectively in a vessel shielded by liquid helium, and so, if the heat produced by the apparatus is negligible, this inner liquid will not boil even though the helium outside is bubbling vigorously.

3.8 Design of Experimental Apparatus

It is clearly impossible to describe individually arrangements for every kind of experiment and measurement which might be carried out at low temperatures. Nor is it necessary to do so, because principles used to

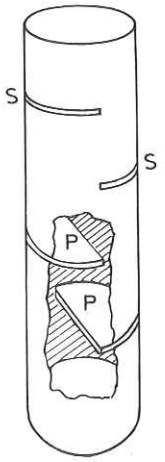

Fig. 3.26. Radiation baffle for insertion into a straight tube. The outside of a short length of brass tubing is coated with a layer of soft solder. Copper plates P are soldered into slots S cut in this tube and the interior is blackened with colloidal graphite. The assembly is dropped into the tube to be baffled, and soldered into place by heating the exterior of that tube (based on Anderson, A3)

make a measurement are not changed by the fact that it is to be carried our near Absolute Zero. Nevertheless, it is necessary to design experiments with regard to some of the special conditions which exist at very low temperatures.

The most important consideration is the necessity of keeping to a low value any heat generated by an experiment. This is necessary for two reasons: first to prevent rapid evaporation of liquid helium, and, second, to prevent heating specimens above their surroundings. Because of the very small specific heats of most materials at low temperatures, the temperature of a sample may be raised rapidly by a very small amount of energy, and sources of heat which would be negligible at ordinary temperatures become significant in low temperature work. For example, the specific heat of copper at 1K is only about 10^{-5} j g^{-1} deg.$^{-1}$, so that 10^{-7} joule (the energy released when 1 g falls 1/10 mm!) will, at 1K, raise the temperature of one gram by about 1%. A particular case is the serious heating that may be produced as a result of eddy-currents induced in metal apparatus by changing magnetic fields. This may occur, for example, in magnetic resonance experiments. Pure copper components have a high electrical conductivity at low temperatures, and eddy-currents produced by a 50 c/s alternating magnetic field of a few tens of oersted may heat such components by several degrees. To reduce eddy-current heating, components which are exposed to changing magnetic fields

should be made of insulating material or low-conductivity alloys. Unwanted heating may also occur as a result of radiation entering the cryostat. For instance, to measure the electrical properties of conductors, small samples of these are often mounted on insulating jigs, and it is sometimes difficult to ensure a very good thermal contact between the samples and a heat sink. Consequently, room temperature radiation and light falling on such specimens may easily heat them above their surroundings. Care should be taken to shield such specimens by screens and radiation traps. Heat in the form of room temperature radiation can be transmitted down hollow tubes and it may be necessary to prevent this by ensuring that there is no optical path down the tube. A baffle which can be inserted into a straight tube to absorb most of the radiation is shown in Fig. **3**.26. Alternatively the tube may be constructed with bends in it or its lower end may be covered with a radiation shield as in Fig. **5**.5.

In the design of experiments it may also be necessary to take account of special properties that some substances acquire at very low temperatures, such as the superfluidity of liquid helium below 2·2K (see §**3**.5 and §**3**.8b) and the superconductivity of certain metals.

The most convenient way of mounting apparatus in a Dewar vessel is to suspend it from the top-cap of the vessel. If, as in Fig. **3**.3, the apparatus is attached to a plate *B* which rests on the top-cap, we can get at the apparatus either by withdrawing the apparatus or by removing the helium dewar. The supports on which the apparatus hangs must not conduct too much heat into the cryostat. Apparatus may be conveniently supported by thin-walled metal alloy tubes (see §**3**.8d) or insulators such as glass or plastic may be used. These tubes may also act as waveguides, etc., and as pumping lines to evacuate apparatus. Furthermore, electrical leads and other connections to the apparatus may be brought down inside them.

An apparatus to be cooled by liquid helium should be as lightly constructed as possible so that the minimum amount of liquid helium is needed to cool it down to 4·2K. Cylindrical apparatus should not fit at all tightly inside the Dewar vessel; otherwise, when the Dewar is filled, the liquid helium may sit on top of the apparatus and not flow round the sides to fill up the lower part of the vessel. A clearance of at least a millimetre should be left between the apparatus and the walls.

It is important to make cryostats fairly long with sufficient distance from the cap to the liquid helium level to restrict the heat conduction, which is inversely proportional to length. Dewars with the liquid helium level about 70 cm below the cap should have an evaporation rate of about 50 cm^3 of liquid per hour. Where the cryostat has to be short, say less than 30 cm., it may be necessary to support apparatus from a cap cooled with liquid nitrogen (as in Fig. **3**.17).

If the supporting tubes are not evacuated but contain helium gas there is a possibility that thermal oscillations (see §**2**.3) may arise inside them.

It is surprising how easily these oscillations can occur. Often they are not very violent and can only be detected by placing an ear against the cryostat, when a hum will be heard. Oscillations can be prevented if the tube walls are pierced by small holes, say at intervals of about 10 cm.

3.8a Electrical Leads

Electrical leads to apparatus can be taken up the inside of the hollow supporting tubes, and out through gas-tight seals at the top. Fig. **3**.27a shows a simple but versatile seal for passing leads through a cryostat cap. Thin enamel-insulated wires are led through a rubber tube which has been liberally coated inside with grease. The tube is pinched tight on to the wires by an ordinary hose-clamp. This arrangement provides a vacuum-tight seal for a number of wires, but any wire may easily be changed or replaced by undoing the clamp. Fig. **3**.27b shows another cheap and

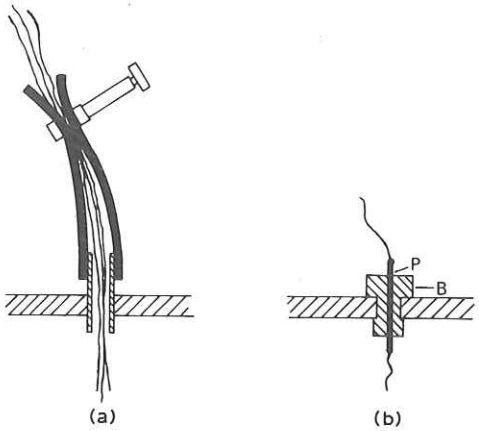

Fig. **3**.27. Seals for taking electrical leads through cryostat cap (based on Serin (S2) and McKinnon (M3))

neat method of taking leads through a cryostat cap. This method makes use of 'barb' electrical lead-throughs (manufactured by Oxley Developments Ltd, Appendix 20). A PTFE bush *B* is pushed through a hole of suitable size drilled in the cryostat cap. A metal pin *P* is then forced through the hole along the centre of the bush. Insertion of the pin makes the bush expand slightly to form a tight seal in the metal. Leads can then be soldered to the top and bottom of the pin. These lead-throughs have the advantage that they can be added to an existing cryostat cap simply by drilling an extra hole. They may be obtained in various sizes; the larger sizes are useful when heavy currents have to be taken into cryostats, e.g. for superconducting electromagnets.

R2. Roberts, V., 1954, *J. Sci. Instrum.*, **31**, 251.
R3. Rauch, C. J., Kernan, W. C., 1962, *Rev. Sci. Instrum.*, **33**, 496.
R4. Reese, W., Steyert, W. A., 1962, *Rev. Sci. Instrum.*, **33**, 43.
R5. Rechowicz, M., Smith, S. J., 1969, *Cryogenics*, **9**, 392.
S1. Stilwell, E. P., Gardner, R. L., Littlejohn, H. T., 1967, *Amer. J. Phys.*, **35**, 502.
S2. Serin, B. (Rutgers University), private communication.
S3. Schoen, L. J., Broida, H. P., 1962, *Rev. Sci. Instrum.*, **33**, 470.
S4. Scott, R. B., Cooke, J. W., Brickwedde, F. G., 1931, *U.S. Bureau of Standards J. Res.*, **7**, 935.
S5. Shal'nikov, A. I., Shal'nikova, T. A., 1969, *Cryogenics*, **9**, 479.
S6. Szabo, A., Dimock, E. L., 1961, *Rev. Sci. Instrum.*, **32**, 1256.
S7. Seki, H., 1959, *Rev. Sci. Instrum.*, **30**, 943.
S8. Spees, A. H., Reynolds, C. A. Boxer, A., Pearson, G., 1957, *Rev. Sci. Instrum.*, **28**, 1090.
S9. Shore, F. J., Sailor, V. L., Marshak, H., Reynolds, C. A., 1960, *Rev. Sci. Instrum.*, **31**, 966.
S10. Seidel, G., Keesom, P. H., 1958, *Rev. Sci. Instrum.*, **29**, 606.
U1. Upton, P. B. G., Heatherington, E. F. G., 1950, *Research*, **3**, 289.
V1. Van Itterbeek, A., Labro, M., 1962, *Physica*, **28**, 721.
W1. Weidermann, W., Smolic, E., 1968, *Proc. 2nd Internat. Cryogenic Eng. Conf.*, Iliffe, Guildford, 59.
W2. Webb, F. J., Wilks, J., 1955, *Proc. Roy. Soc.*, **A230**, 549.
W3. Wheatley, J. C., Griffing, D. F., Estle, T. L., 1956, *Rev. Sci. Instrum.*, **27**, 1070.
W4. Wood, G. H., 1971, *Cryogenics*, **11**, 234.
W5. Wheatley, J. C., Vilches, O. E., Abel, W. R., 1968, *Physics*, **4**, 1.
W6. White, G. K., *Experimental Techniques in Low Temperature Physics*, Clarendon Press, Oxford, 1959.
Z1. Zimmerman, J. E., Arrott, A., Skalyo, J., 1958, *Rev. Sci. Instrum.*, **29**, 1148.

CHAPTER 4

MEASUREMENT OF TEMPERATURE

Methods used to measure low temperatures do not, of course, differ in principle from those used at higher temperatures. Nevertheless, at low temperatures certain problems become more serious, for example, those involving thermal contact with the thermometer and the heat generated by the thermometer itself.

Heat capacities of systems at low temperature are generally very small and a little heat may produce a large rise in temperature. Furthermore, thermal contact between systems is often poor at low temperature so that a body may easily be heated above its surroundings. For example, it is important to ensure that small specimens mounted on insulators are well shielded from room temperature radiation coming into the cryostat, otherwise they will be quickly heated. For these reasons it is necessary to ensure that a thermometer is in good heat contact with the system to be measured. Heat contact between loosely touching surfaces at low temperature is extremely poor, but if two metal surfaces are firmly clamped together the thermal contact can be very good. The best method of ensuring good contact between two metals is to solder or weld them together. For example, the metal bulb of a gas thermometer should be soldered to, not just resting against, any metallic apparatus. The thermal conductivity of pure copper is high at low temperatures and thermometers may sometimes be connected to copper wires the other ends of which are soldered to those points whose temperatures are to be measured. (It is worth remembering that at low temperatures the thermal conductivity of some crystalline insulators, such as quartz, or silicon, can be as high or higher than that of metals (see Fig. **8.**6).

It is sometimes necessary to make a good thermal contact which is at the same time electrically insulating, for example, where a resistance thermometer must be electrically isolated from the apparatus. In this case only a very thin insulating layer must be used. Mylar and other plastics can be obtained in very thin sheets down to 3×10^{-3} mm and, if a sheet of such material is stuck on to a surface and the thermometer stuck on to the other side, there need be only a small heat resistance between the two. Thin transformer and cigarette papers are also useful for this application.

Because of the small heat capacities, a thermometer must not produce too much heat by its operation. This is especially important with electric resistance thermometers, which, by their very nature, generate Joule heat. Here we have an additional reason for ensuring good thermal contact,

so that the thermometer does not raise itself to a higher temperature than the system being measured. It is a wise precaution in electric resistance thermometry to measure the resistance at two different currents in order to check that the thermometer is not heating itself up.

When a solid body is immersed in liquid helium, there is a thermal resistance at the boundary between the body and the liquid. This means that an apparatus in which heat is being generated will be slightly warmer than the surrounding liquid. The value of the boundary resistance depends considerably on the condition of the solid surface. For smooth copper the value ρ is found to be very roughly given by

$$\log_{10}\rho = -2\cdot5-0\cdot7\mathrm{T}\ \mathrm{deg\ m^2/W\ (SI)}.$$

For example, at 1·5K a cylinder 10 mm long and 10 mm in diameter in which 0·1 watt is being dissipated will, according to the above expression, be about 0·07K hotter than the liquid helium II in which it is immersed. For helium above the λ-point the heat transfer corresponds to a boundary resistance of about 10^{-3}deg. cm^2 watt^{-1} (CI).

4.1 Sensitivity and Accuracy

When considering thermometers we are interested in their sensitivity or accuracy. However, the terms 'sensitivity' and 'accuracy' may be defined in various ways, so we now derive practical quantities which can be used as indications of the performance of a thermometer. In thermometry we measure a quantity X(T) where X is some quantity (for example, the pressure of a gas or the resistance of a wire) which varies with the temperature T. The change in X per unit temperature change, $\mathrm{d}X/\mathrm{d}T$, will be called the response of the thermometer element. However, in most experiments it is the fractional change in temperature, $\Delta T/T$, which is important rather than the magnitude ΔT of the change. For example, a variation of 0·1K at 4K can be as significant as a change of 2·5K at 100K. It is therefore convenient to define the sensitivity at temperature T by

$$\frac{T}{\Delta T} = \frac{T}{\Delta X}\frac{\mathrm{d}X}{\mathrm{d}T}\bigg|_T$$

where ΔX is the smallest change in X that the measuring instrument can detect.*

The sensitivity can be written

$$\frac{T}{\Delta T} = \frac{X}{\Delta X}\cdot\frac{T}{X}\frac{\mathrm{d}X}{\mathrm{d}T}\bigg|_T$$

which can be regarded as the product of the sensitivity $X/\Delta X$ of the measuring instrument and the total sensitivity $\frac{T}{X}\frac{\mathrm{d}X}{\mathrm{d}T}\Big|_T$ of the

* The definition of sensitivity has been changed from that used in the first edition of this book.

thermometer element. We shall use both the sensitivity and the total sensitivity when discussing the merits of particular thermometers.

The *accuracy* of a thermometer is the precision with which it can indicate the absolute value of temperature. In this book we are not concerned with highly accurate thermometry, but it may be worth pointing out that at present (1972) the scale of temperature below 15K is not defined to better than about 0·1%

4.2 Types of Thermometer

No single kind of thermometer can be expected to cover all applications, and in Fig. 4.1 are shown the approximate temperature ranges which can be covered by various types of thermometer. Helium gas thermometers cover a wide range and after calibration at two known temperatures may

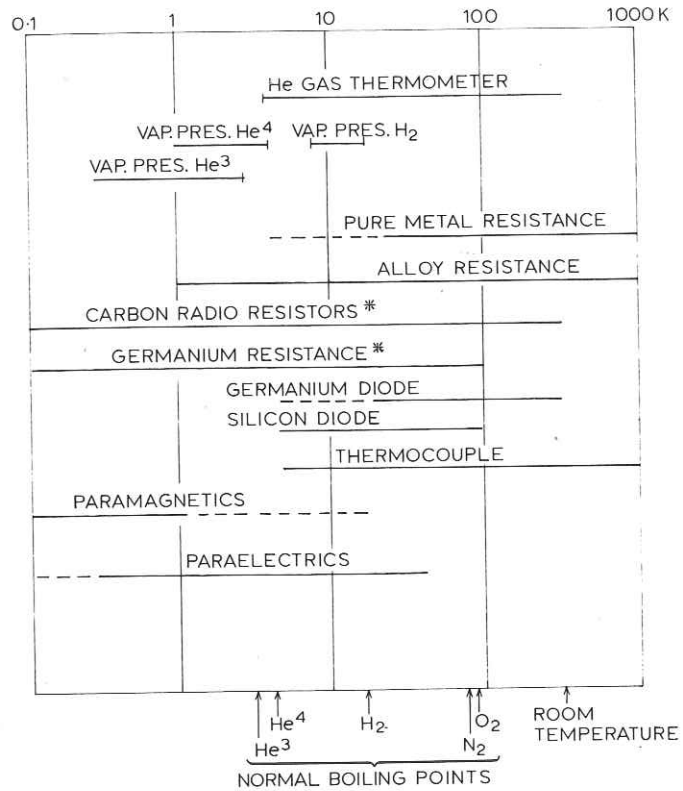

Fig. 4.1. Thermometers for use in various temperature ranges (*indicates that a single thermometer will not cover the whole range shown with adequate sensitivity. One unit may be expected to be sensitive over about a decade in temperature)

be used to calibrate other thermometers. Vapour pressure thermometers and thermocouples do not need calibration because vapour pressures and thermoelectric e.m.f.'s have been accurately measured, and tables of the results are available. However, vapour pressure thermometers only cover limited ranges of temperature, and thermocouples become rather insensitive at low temperature. Electric resistance thermometers are convenient, especially when measuring small temperature changes or rapid fluctuations, though they usually need to be calibrated throughout their range. Gas and vapour pressure thermometers have the advantage that, unlike electrical thermometers, they are completely unaffected by the presence of a magnetic field (see §4.8).

We now describe separately the various kinds of thermometer that are suitable for use at low temperatures.

•4.3 Gas Thermometer

A gas thermometer is very useful in a low temperature laboratory and one simple instrument can measure temperature to an accuracy of 1% between 90 and 4K.

Gas thermometers are most conveniently used in the constant volume form (Fig. 4.2). A bulb at the low temperature to be measured is connected by a fine capillary tube to a pressure gauge of constant volume. Helium gas is used for filling because this gas most nearly obeys the perfect gas laws and will not liquefy in the bulb at low temperatures. The thermometer requires calibration at not more than two known temperatures, after which all other temperatures can be calculated.

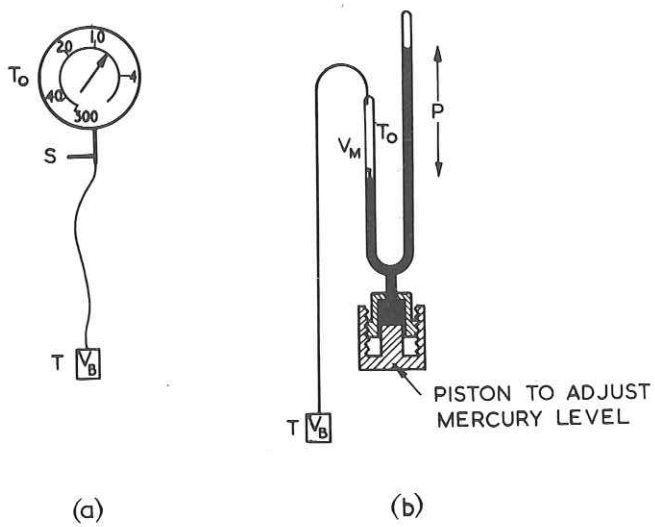

Fig. 4.2. Constant Volume Gas Thermometers

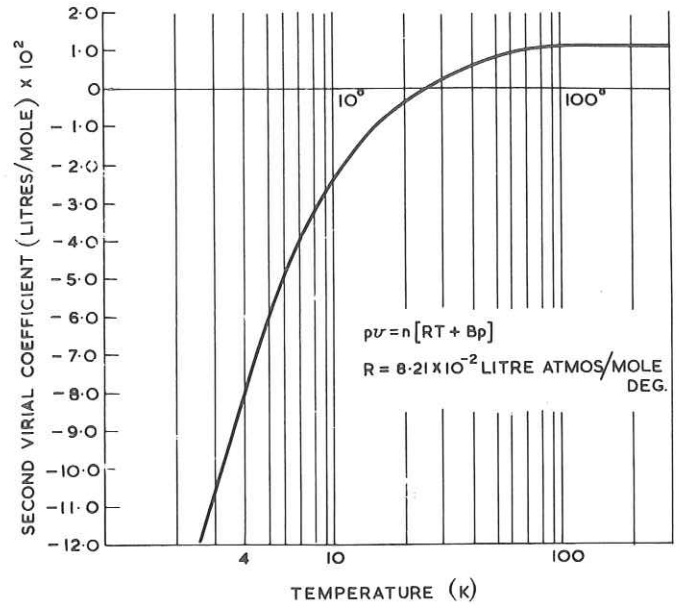

Fig. 4.3. Second Virial Coefficient of Helium Gas (K1)

We now describe how temperatures may be calculated from pressure readings of constant volume gas thermometers of the kind shown in Fig. 4.2. When the bulb of the thermometer is very cold the gas within it becomes dense and the behaviour can no longer be accurately described by the perfect gas laws. We may instead describe the relation between the volume v and the pressure p of n moles of gas by an equation of state

$$pv = n\,[RT+B(T)p+C(T)p^2+\ldots].$$

The third virial coefficient $C(T)$ and higher coefficients are so small that we can neglect them and rewrite the equation of state as

$$\frac{pv}{RT+B(T)p} = n.$$

The second virial coefficient $B(T)$ is a function of T; its values are shown in Fig. 4.3. Suppose that the bulb has a volume v_B and the manometer a constant volume v_M. If the capillary tube has negligible volume and the manometer remains at room temperature, T_0, we have

$$\frac{pv_M}{RT_0+B_0p} + \frac{pv_B}{RT+Bp} = n \qquad \textbf{4.1}$$

The virial coefficients become small at high temperature so we may neglect the coefficient B_0 for the gas at room temperature and rewrite equation **4.1**

$$T = \frac{\alpha T_0 p}{\beta T_0 - p} - \frac{Bb}{R} \qquad 4.2$$

where α is the ratio of the bulb to the manometer volume v_B/v_M, and β equals nR/v_M. Equation **4.2** is the calibration equation which connects the pressure and the temperature. Each instrument will have its own value of the ratio α, and the value of β will depend on the amount of gas put into the thermometer. The values of these two unknown constants may be determined from the measured pressures at two known temperatures, for example, the boiling points of liquid oxygen and helium.

Unfortunately we cannot use equation **4.2** directly to calculate the temperature T corresponding to a pressure reading p, because, until we know T, we do not know what value of B to use. We can however employ the following procedure. First determine T approximately by neglecting the small non-ideality term Bp/R in equation **4.2**, then use the value of B (given in Fig. **4.3**) corresponding to this temperature in the complete equation **4.2**. This gives a good approximation to the true value of T.

If the gas in the thermometer had behaved like a perfect gas, the virial coefficient B would have been zero and the calibration equation would have reduced to

$$T = \frac{\alpha T_0 p}{\beta T_0 - p}. \qquad 4.3$$

Since the pressure corresponding to a given temperature depends both on α and β, the error introduced by assuming the gas to be perfect depends on the constants of the thermometer. For the thermometer to be described in §**4.3**b this error in T would be about 5% at 4K, but less at higher temperatures. Equation **4.3** is therefore a fairly good approximation to the true behaviour of a thermometer. It is convenient to use this simpler equation to study the behaviour of the thermometer and it is sufficiently accurate to be used in the calculation of small corrections. The complete equation **4.2** must, however, be used to calculate the temperature if an accuracy of better than a few per cent is required.

We now discuss points which must be taken into account when designing a low temperature gas thermometer. The sensitivity of a thermometer varies over its range and also depends on the values of the constants α and β. We must therefore be careful to design the instrument so that it has adequate sensitivity over the temperature range in which it is to be used. Let us consider the case of a thermometer filled to a pressure P_1 when the bulb is at a temperature T_1 and the gauge is at room temperature T_0. Under these conditions the value of β, obtained from equation **4.3**, is

$$\beta = \frac{P_1}{T_0}\left(1+\alpha\frac{T_0}{T_1}\right)$$

and the pressure-temperature relationship becomes

$$\frac{P}{T_0}+\alpha\frac{P}{T} = \frac{P_1}{T_0}\left(1+\alpha\frac{T_0}{T_1}\right). \qquad 4.4$$

We can rewrite this in terms of the reduced pressures and temperatures P/P_1 and T/T_0

$$P/P_1 = \frac{(1+\alpha T_0/T_1)}{1+\dfrac{\alpha}{T/T_0}}.$$

This relationship for several values of α is plotted in Fig. **4.4**. When the volume of the pressure gauge is negligible relative to the volume of the bulb ($\alpha \to \infty$), the pressure is proportional to the temperature. When, however, the gauge has appreciable volume, the sensitivity is reduced

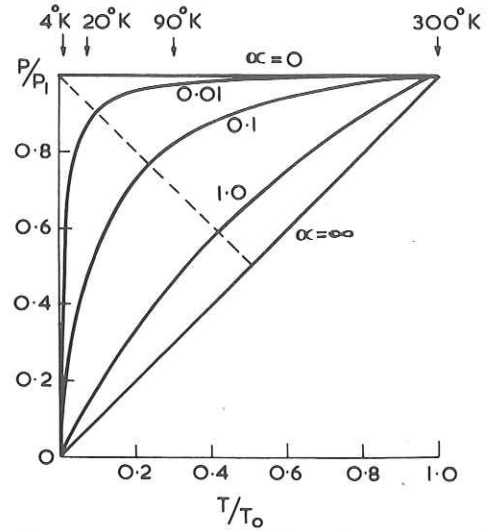

Fig. **4.4**. Pressure-temperature relations in constant volume gas thermometers having different ratios, α, of bulb to manometer volume

at high temperatures but increased at low temperatures (W1, R1). We must therefore design a thermometer so that the ratio of the bulb to the gauge volume gives sufficient sensitivity over the desired temperature range. Suppose that the smallest change in pressure that we can measure is δP and that this corresponds to a temperature change δT, then

$$\delta T = \frac{dT}{dP}\delta P.$$

The sensitivity of the thermometer will be $T/\delta T$. From equation **4.4** this is found to be

$$\frac{T}{\delta T} = \left[\frac{T\,T_0 P_0 \alpha(1+\alpha T_0/T_1)}{(T+\alpha T_0)^2}\right]\cdot\frac{1}{\delta P}. \qquad 4.5$$

A useful thermometer can be obtained by filling the instrument with gas to atmospheric pressure when the bulb is at room temperature.

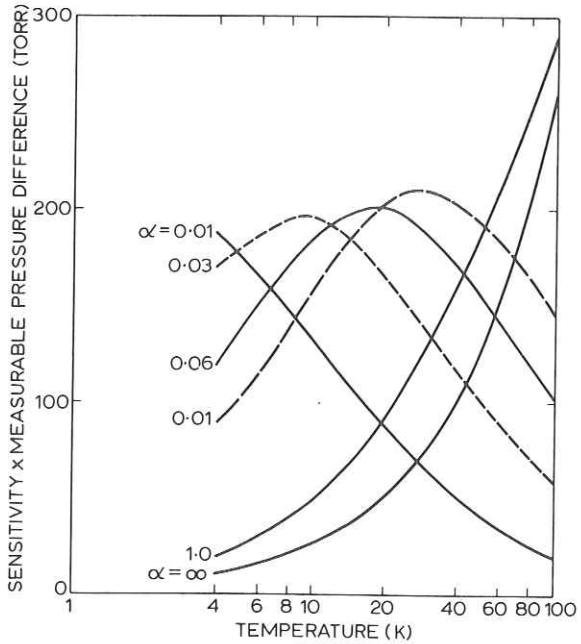

Fig. 4.5. Sensitivity of a Gas Thermometer for various ratios, α, of bulb to gauge volume, assuming the thermometer to be filled at room temperature to a pressure of 760 torr. The sensitivity expected at any temperature is obtained by dividing the value obtained from the graph by the smallest pressure difference in torr that can be measured on the pressure gauge

In Fig. **4.5** we show the expression in the square brackets of equation **4.5** as a function of T for different values of α, for this case with $T_1 = T_0 =$ 295K and $P_0 = 760$ torr. The sensitivity to be expected at any temperature is derived by dividing the value obtained from the graph by the smallest change, in torr, that can be measured with the pressure gauge. We have considered the special case of a gas thermometer filled to atmospheric pressure at room temperature. Similar calculations apply if other filling pressures and temperatures are used. The special case we have discussed represents, as we shall see in §**4.3**b, a particularly convenient and simple arrangement.

4.3a Corrections

So far we have considered an idealised form of thermometer and we now list some effects that we have neglected and see if it is necessary to take these into account:

a. Variation in temperature of the manometer.
b. Thermal expansion of the bulb.
c. Thermomolecular pressure difference between the bulb and gauge.
d. Volume of the capillary tube.

We now discuss these effects separately.

Variation in temperature of the manometer. In using equation **4.2** to determine the temperature of the bulb we assume that the temperature T_0 of the manometer remains constant. In practice this will not be so, and it is necessary to make a correction for any variation in the temperature of the laboratory. An increase δT_0 in the temperature of the manometer will produce an increase δP in the pressure of the gas in the thermometer. δP may be found by differentiating equation **4.3**

$$\delta P = \frac{P^2}{\beta T_0^2} \cdot \delta T_0.$$

In order to obtain the correct pressure to put into equation **4.2**, the correction δP must be subtracted from the pressure indicated on the manometer. The correction will be greater at higher bulb temperatures, when P is larger. For each degree variation of room temperature a typical thermometer will need a correction of only about $\frac{1}{3}$ mm when the bulb is at 4K, but a correction of $2\frac{1}{2}$ mm per degree when the bulb is at 90K.

Thermal expansion of the bulb. The bulb of a thermometer shrinks on cooling and this introduces an error if the temperature is deduced on the assumption of constant volume. If the change in volume of the bulb is δV_B, the percentage error in the temperature will be

$$100\,\frac{\delta T}{T} = -100\frac{\delta V_B}{V_B}.$$

Copper shrinks in volume by about 0·9% on cooling from room temperature to 4K. It can be seen, however, from Fig. **8.10** that nearly all this contraction has taken place above a temperature of 90K, and that there is only a 0·05% volume contraction between 90 and 4K. If, therefore, we calibrate our thermometers at liquid oxygen and liquid helium temperatures, the error arising from thermal contraction will not be greater than 0·05% within this temperature range.

Thermomolecular pressure difference. If two enclosures at different temperatures are connected by an orifice whose diameter is not large compared to the mean free path of the gas molecules, the gas in the hotter volume will be at a higher pressure than that in the colder one. Such a pressure difference arises between the bulb and the gauge in a gas thermometer. The pressure difference depends on the ratio of the mean free path of the gas molecules to the diameter of the capillary tube. The magnitude of the effect in helium gas has been measured by Roberts and Sydoriak,

who give tables of results (R2). The correction is negligible in gas thermometers of the type described here. For a capillary tube of 0·5 mm diameter running between room temperature and 4K, the thermomolecular pressure difference will only exceed 0·1% if the pressure is less than about 20 torr.

Volume of capillary tube. In formulating the calibration equation **4.**2 we have neglected the gas in the capillary tube joining the manometer to the bulb. The upper part of this tube will be at room temperature and we may consider this to form a small addition to the volume of the manometer. This part of the additional volume will, therefore, be included automatically when we calibrate the thermometer. The lower part of the capillary, however, passes through the temperature gradient from room temperature to the temperature of the bulb. Because this distribution of temperature will be different for each apparatus we cannot make a general calculation of the error introduced through neglecting this part of the tube. We can, however, estimate an *upper* limit to the error by supposing that *all* the gas in the length l which runs from room temperature to the bulb is at the temperature of the bulb T. There will then be an addition to the volume of the bulb, $\delta V_B = \pi r^2 l$, where r is the radius of the tube. The maximum percentage error introduced by neglecting the capillary is

$$100\frac{\delta T}{T} = -100\frac{\delta V_B}{V_B}.$$

The percentage error in the calculated temperature equals the percentage volume of the capillary relative to the bulb. We must therefore make sure that the bulb is sufficiently large in relation to the capillary tube. This is fairly easily achieved: the volume of a capillary of 0·3 mm inner diameter and 1 m length is 0·07 cm³. Hence, for a temperature error of less than 1%, the bulb should have a volume not less than 7 cm³.

4.3b **Construction**

A simple and useful gas thermometer may be made by connecting a copper bulb of a few cubic centimeters volume through a fine capillary tube (say $\frac{1}{3}$ mm inside diameter) to a standard Bourdon or aneriod-type manometer (Appendix 32) as shown in Fig. **4.**2a. The thermometer is evacuated through the annealed copper side tube S which is then used to admit the helium gas. Finally this copper tube can be sealed off by pinching it between two hard cylindrical rods. If the thermometer is constructed entirely of metal, as described here, it should retain its calibration for a long time. If, however, glass tubing is used to connect the pressure gauge to the capillary tube or helium input, the helium gas will diffuse slowly through the glass and the calibration of the thermometer may alter by a few per cent after a year or so.

A 'standard' Bourdon vacuum gauge can measure pressures to an accuracy of about 1 torr. We can see from Fig. **4.**5 that for such a gas

thermometer, i.e. with $\delta P = 1$, an accuracy of 100 or better can be obtained over the range 90 to 4K if the volume of the bulb is about 0·06 of the volume of the gauge. If the bulb is too large the accuracy will fall off at low temperature and, if the bulb is too small, the accuracy will not be sufficient at higher temperatures. The volume of the gauge must be taken to include any 'dead-space' at room temperature, such as the volume of any connecting tubes. Once the thermometer has been calibrated, a temperature scale may be inscribed on the gauge as shown in Fig. **4.**2a. If, however, the Bourdon gauge is not of the sealed type, it will be necessary to correct for any deviation of atmospheric pressure from the standard value. This will necessitate the addition of this (positive or negative) pressure deviation from the reading on the gauge. If the temperature scale is pasted on to the transparent front-covering of the gauge the correction may be applied by simply rotating the whole scale relative to the instrument.

For more precise work a U-tube manometer must be used instead of the dial manometer. The level of a mercury meniscus can be read to about 0·1 mm with the aid of a travelling microscope. This corresponds to a ten-fold increase in accuracy. It must of course be possible to adjust the level of the mercury so as to maintain a constant gas volume in the manometer (see Fig. **4.**2b). When using a U-tube manometer it is necessary to make the usual corrections for variation in the density of the liquid, variation of the gravitational constant, etc. However, we shall not discuss the precautions that must be taken in order to obtain high precision in gas thermometry (for such discussions see B1, F1).

The thermometer described above is a particularly convenient form. It is filled initially at a relatively high temperature. Sensitivity is obtained at low temperatures by making the manometer volume rather large compared to the volume of the bulb and, if we do not desire high accuracy, a direct-reading Bourdon-type pressure gauge may be used to measure the pressure. The scale is not linear: the magnitude of $\mathrm{d}P/\mathrm{d}T$ increases as the temperature falls. A gas thermometer may be used in another form in which we make the volume of the manometer as small as possible relative to the volume of the bulb. In this case the pressure will be approximately proportional to the temperature (Fig. **4.**4) throughout the range. If such a thermometer were filled at room temperature the sensitivity would be poor at low temperatures, because the pressure will have fallen to a small value. For example, if the thermometer were filled to atmospheric pressure at room temperature, the pressure at 4K would be about 10 torr, and to get a sensitivity of 1% in temperature we would have to read the pressure to an accuracy of 0·1 torr. We can, however, increase the sensitivity by filling the thermometer when the bulb is cold, so that there is a higher pressure to measure. Under these conditions the correction for the non-ideality (second virial coefficient) is rather large because the gas is dense, but the correction for variation in room

temperature is small. A gas thermometer of this form filled at low temperatures can be a sensitive and accurate instrument (see, for example, F1), but the fact that it must be refilled each time it is cooled down, and the fact that a mercury manometer must be used, make it a somewhat inconvenient instrument. For most purposes the type of thermometer previously described with a large manometer volume, filled at room temperature, will be found more useful.

4.3c Merits and demerits of gas thermometers

The chief advantage of a gas thermometer is that it is a semi-absolute instrument, only requiring calibration at two known temperatures (for example 90 and 4K), after which all other temperatures may be calculated. The thermometer can cover a wide range of temperature and be designed so that it has roughly constant percentage sensitivity from room temperature to the temperature of liquid helium. If a dial manometer is used, the instrument can be direct reading and, after calibration, the temperature scale may be inscribed on the dial. A gas thermometer, of course, requires no electrical supplies and does not generate appreciable heat by its operation. On the other hand it is a rather unwieldly instrument, the bulb may be inconveniently big with a rather large heat capacity and the manometer can be somewhat cumbersome. The instrument is also slow-acting. Because of the long length of capillary tube, it may take several minutes for the pressures in the bulb and manometer to equalise. Consequently, the instrument is not suitable for experiments in which the temperature is changing at all rapidly. For this reason it is often best to use a gas thermometer as a standard against which more convenient secondary electrical thermometers are calibrated (§**4.**9).●

4.4 Vapour Pressure Thermometry

The vapour pressure of a substance decreases as the temperature falls and so this pressure may be used as a measure of temperature. Vapour pressure thermometers do not usually need calibration because the vapour pressures of condensed gases used in low temperature work have been accurately measured and the values tabulated as functions of temperature (Tables **8.**2 and **8.**4).

The simplest form of vapour pressure thermometry is a measurement of the vapour pressure over the liquid used as a coolant (Fig. **4.**6). Table **8.**2 may be used to derive the temperature of liquid helium from its vapour pressure. A simple U-tube manometer can be used to determine vapour pressure, because this pressure is not dependent on volume. Fig. **4.**6b shows an arrangement which reduces the error arising from any drop in pressure that may result from the flow of gas when the liquid is being pumped.

The following point is extremely important when making measurements at varying temperatures. To deduce the temperature from the vapour

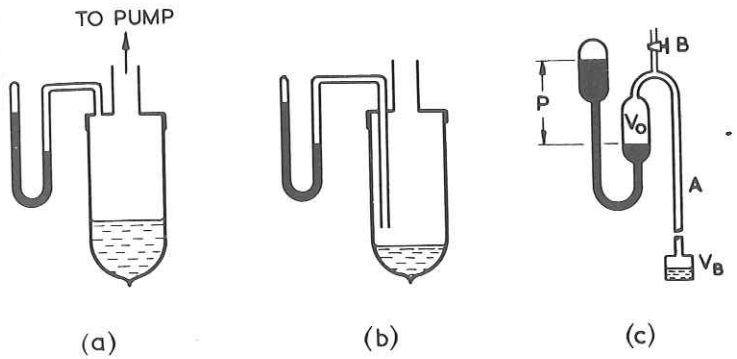

Fig. **4.**6. Vapour Pressure Thermometers

pressure we must assume that the liquid and vapour are in equilibrium. This will be so when the temperature of the liquid is *reduced* by pumping away the vapour. If, however, we try to *increase* the temperature of previously cooled liquid helium by allowing the pressure in the vessel to rise, it may take a long time for the liquid to heat up. The gas evaporating from the liquid allows the pressure to rise, but liquid helium has a large heat capacity, so the heat influx may not be enough to raise the temperature to its new equilibrium value. Consequently the liquid and vapour are not in equilibrium and the pressure is *not* a measure of the increasing temperature. Temperatures deduced from the pressure will be too high. For this reason, when using vapour pressure thermometry to make measurements over a temperature range, the temperature should always be *lowered* rather than raised. If it is necessary to raise the temperature, some other thermometer (e.g. a carbon resistor, see §**4.**6b) which has previously been calibrated should be used. There is another reason for preferring to lower rather than raise the temperature: when the temperature of a liquid is lowered by reducing the pressure over the surface, convection currents maintain equilibrium throughout the liquid, and the vapour pressure over the surface (with any corrections for hydrostatic pressure, see below) is a measure of the temperature. If, however, the liquid is being warmed, it is possible for the fluid near the surface to be considerably hotter than that at greater depths. Consequently, if liquid helium must be warmed the heater should be put at the bottom of the container so that there will be stirring by convection.

●For many experiments it is sufficiently accurate to measure the pressure of the vapour above the surface of the coolant in which an apparatus is immersed. If, however, a more precise measure of temperature is required it must be remembered that the temperature within a liquid

is not necessarily the same as that at its surface. Below the surface of a boiling liquid a higher vapour pressure is required to form bubbles, due to the extra hydrostatic pressure at that depth. Hence, liquid boiling below the surface has a slightly higher temperature. The density of liquid helium is about one hundredth that of mercury so that an apparatus 10 cm below the surface may be hotter than the surface by an amount corresponding to a vapour pressure increase of about 1 torr. Since the rate of change of temperature with pressure becomes larger as the temperature is lowered this correction becomes more important at low temperatures (Fig. **4.**7). An apparatus 10 cm below the surface of liquid helium which

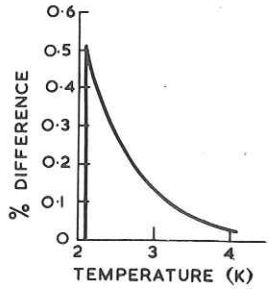

Fig. **4.**7. Effect of Hydrostatic Pressure. Per cent by which temperature (T) of apparatus 10 cm below surface of boiling liquid helium could exceed temperature (T_s) of surface. $100\,(T-T_s)/T_s$

is boiling at 2·2K could be about 0·5% higher in temperature than the liquid at the surface. Fig. **4.**8 shows the variation in density with pressure of liquid helium, and can be used to find a correction to be applied to the measured vapour pressure in order to account for hydrostatic pressure (but see below). Below the λ-point (2·17K) liquid helium has extremely high thermal conductivity so that the temperature is the same at all depths and boiling only occurs at the surface. Below this temperature, therefore, no correction need be made for hydrostatic pressure.

The simple correction for hydrostatic pressure described above is not

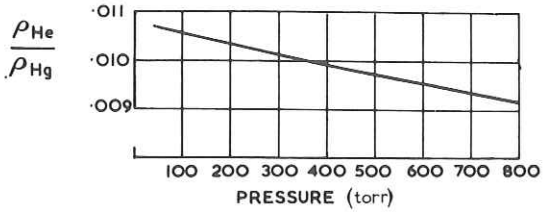

Fig. **4.**8. Ratio of density of liquid helium under its saturation vapour pressure to the density of mercury (B2)

adequate for accurate work. It has been pointed out (C2) that, if, as a result of hydrostatic pressure, the temperature increases at greater depths, convection takes place and tends to equalise the temperature throughout the liquid. This departure from the hydrostatic temperature gradient may be reduced by supplying sufficient heat to the bottom of the liquid so that boiling occurs there and a stream of bubbles rises and encourages liquid-vapour equilibrium at all levels. Even with this precaution, however, the temperature deduced from the surface vapour pressure with a hydrostatic correction may be in error by 0·5%. If accurate temperature measurements are to be made, or if we do not want the apparatus to be in contact with the coolant, a separate vapour pressure bulb attached to the apparatus must be used, as in Fig. **4.**6c. In this arrangement a manometer is connected by a tube to a bulb which is at the temperature to be measured. When the bulb is at a sufficiently low temperature the gas in the instrument liquefies there and the vapour pressure indicated by the manometer is a measure of the bulb's temperature. If the instrument is to be filled with gas and sealed off at room temperature it is necessary to have at room temperature a volume V_0 sufficiently large relative to the volume V_B of the bulb. Otherwise, the pressure in the instrument falls so much as the bulb cools that the gas does not liquefy until the temperature of the bulb is far below the normal boiling point. However, only a small amount of liquid is required in the bulb and it is important that the bulb does not become overfilled, because the liquid surface will then be up in the tube and the vapour pressure will correspond to the temperature at this point. Care must also be taken that the bulb is the coldest part of the instrument. If a point such as A is coldest, some liquid may condense there and the vapour pressure will not correspond to the temperature of the bulb. It is clearly important to prevent the possibility of such a 'cold spot' forming. If the configuration of the apparatus is such that part of the tube could be colder than the bulb, this can be prevented either by vacuum-jacketing that part of the tube or making it of high thermal conductivity metal, according to circumstance (C3). It may be more convenient not to have the large reservoir volume V_0 but to fill the thermometer when the bulb is just colder than the normal boiling point of the filling gas. The gas is admitted through a side-arm into the evacuated thermometer in small quantities until the pressure measured on the manometer ceases to rise. This shows that the gas is beginning to liquefy in the bulb and no more gas need be put in. When there is no storage-bulb the thermometer must be pumped out before the apparatus is warmed up, or very high pressures will be produced. A thermometer of this form may be filled with He^3 gas and used down to temperatures where the vapour pressure of He^4 would be too small to measure (Fig. **4.**9).

However, a source of error can arise when a vapour pressure thermometer with a separate bulb, Fig. **4.**6c, is used at temperatures below the λ-point, 2·17K. Below this temperature the liquid helium in

the bulb becomes helium-II. Consequently, a helium film rises up the inside wall of the tube and evaporates where the temperature equals the λ-point (see §**3**.5). Because there can be no net flow out of the bulb, the helium vapour produced recondenses into the bulb. This vapour carries in heat which must escape by conduction through the walls of the bulb.

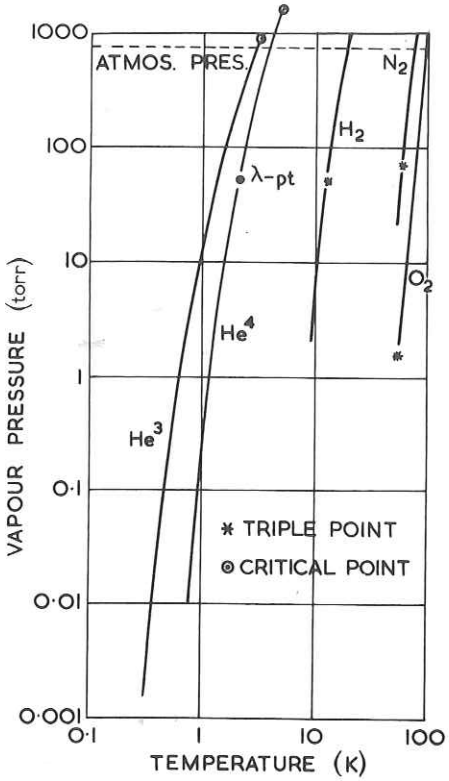

Fig. **4**.9. Vapour Pressures

The temperature of the bulb is, therefore, raised slightly above its surroundings. This heating of the bulb begins when the temperature is reduced below the λ-point and increases as the temperature is further decreased. At 1·5K the heating of the bulb above its surrounding can be 1%. For accurate thermometry below the λ-point it is necessary to eliminate this effect. This may be done by using helium^3 gas instead of helium^4 in the thermometer (helium^3 does not form a superfluid film, see Chapter 6) but the thermometer can then be used only for temperatures below the liquefaction point of helium^3, 3·2K. Alternatively, if the specimen holder can be immersed in liquid helium, one should measure the

vapour pressure over this liquid (Fig. **4**.6b) rather than use a separate vapour pressure bulb.

The variation of vapour pressure with temperature for several liquid coolants is shown in Fig. **4**.9. Liquids other than helium solidify below a certain temperature and pressure (the triple point), but the vapour pressure is still determined by the temperature. It is more difficult, however, to ensure good heat contact between a solidified coolant and the apparatus. Heat contact to a metal apparatus can be greatly improved if a mesh of copper wool is soldered to the outside of the apparatus so that the coolant solidifies in the pores. Some special considerations which arise when hydrogen is used for vapour pressure thermometry are discussed in §**4**.9.●

The range over which a vapour pressure thermometer may be used extends from the normal boiling point down to the temperature at which the vapour pressure becomes unmeasurably small. A simple mercury U-tube manometer with a mirror scale may be read by eye to an accuracy of about $\pm 0 \cdot 25$ mm, which means that temperatures down to 1·7K may be determined with an accuracy of 1 per cent. With a cathetometer heights of mercury columns may be read to $\pm 0 \cdot 05$ mm so that temperatures down to 1·3K can be measured with a 1% accuracy. Measurements with a cathetometer are very tedious and so it may be convenient to use a more sensitive device than a mercury U-tube to measure small vapour pressures. Fortunately, the rate of vapour pressure variation with temperature increases as the temperature falls, so a highly accurate device is not required. There are some very simple McLeod-type mercury pressure gauges on the market which are suitable for pressure measurements below 10 torr. With such instruments temperatures down to 1·3K may be determined to within 1%. These McLeod gauges are not continuously indicating and it may be preferable to use a simple U-tube filled with a light oil to determine low vapour pressures. Butyl phthalate is a suitable fluid for this application. Its vapour pressure at room temperature is less than 10^{-3} torr and its density (1·0455 g ml^{-1} at 22C) is almost exactly 13 times less than that of mercury, so that pressures 13 times lower can be measured to the same percentage accuracy (the rate of change of density of butyl phthalate with temperature is 10^{-3} g ml^{-1} °C^{-1}, and can be ignored (J1)). Such liquids wet glass and care must be taken when measuring meniscus levels that time has been allowed for the fluid to drain off the walls of the manometer.

Oil manometers provide an easy and direct way of measuring low pressures, but oils such as butyl phthalate can contain large quantities of gas in solution. When the pressure over the oil is reduced this gas comes out in the form of bubbles, and these bubbles, rising into the space above the liquid in the closed arm of a manometer, alter the pressure there and spoil the calibration. It is surprising how much gas an oil can

contain in solution, and it is very important that the fluid be thoroughly outgassed before the manometer is used. Fig. **4.**10 shows a simply constructed manometer in which the oil can be quickly outgassed before use. To degas the oil, the manometer is laid on its side so that all the oil runs into the bulb *B* to form a shallow pool with a large surface area. The other arm is now connected to a vacuum pump through a rubber tube and the manometer, still in the horizontal position, is shaken vigorously. This agitation of the oil releases the gas which is pumped away. After about 10 minutes the oil is degassed, the vacuum stopcock *S* can be closed and the manometer is ready for use in the vertical position.

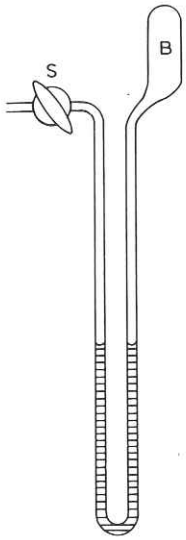

Fig. **4.**10. Easily-outgassed oil manometer (Hayward, H1)

One may inscribe temperatures directly on to the scale of the pressure-indicating instrument (U-tube manometer or dial gauge) of a vapour pressure thermometer. However, most simple manometers have a scale which is linear in pressure and, because vapour pressures vary far from linearly with temperature (see for example Fig. **4.**9) the resulting temperature scale becomes very cramped at the lower temperatures (e.g. all temperatures below the λ-point, 2·2K, correspond to less than 40 torr). This is the reason why both mercury and oil manometers are needed to cover the whole range, say 1·3 to 4·2K, normally available with liquid helium. A simple modification to an oil manometer which allows one instrument to cover the whole range from 1·3 to 4·2K has been described (R3). A particularly useful gauge for liquid helium vapour pressure thermometry is the 'Diavac' diaphragm vacuum gauge manufactured by Leybold-Heraeus (Appendix 32). This has a non-linear pressure scale,

the sensitivity increasing at lower pressures. Consequently a single instrument can be used to indicate temperatures in the whole range from 4·2 to 1·3K, and the scale is approximately linear in temperature over all this range. Table **4.**1 shows the lowest temperatures which can be determined to a 1 per cent accuracy by different kinds of manometer.

He^3 gas has, at any given temperature, a higher vapour pressure than He^4 (see Fig. **4.**9) and can be used to measure temperatures down to about 0·3K. A simple vapour pressure thermometer, such as the form shown in Fig. **4.**6c can be used. He^3 vapour pressure thermometry below 1K is discussed in §**7.**2.

It has been pointed out (p. 106) that there is a thermal resistance between a solid surface and liquid helium. If heat is flowing out of an apparatus there is a temperature drop across this boundary resistance, and an immersed apparatus may be somewhat hotter than the surrounding fluid. It may be necessary to take this temperature rise into account when appreciable heat is being generated in an apparatus.

gas	manometer	method	Approx. pressure uncertainty (torr)	Approx. min. temp. for 1% accuracy (K)
He^4	mercury	by eye	±0·25	1·7
He^4	mercury	cathetometer	±0·05	1·3
He^4	simple McLeod gauge		±0·05	1·3
He^4	butyl phthalate	by eye	±0·02	1·3
He^4	butyl phthalate	cathetometer	±0·004	0·9
He^4	'Diavac' vacuum gauge	pointer		
He^3	mercury	by eye	±0·25	1·0
He^3	mercury	cathetometer	±0·05	0·7

Table **4.**1. Minimum temperatures measurable to an accuracy of 1% with helium vapour pressure thermometers.

•4.4a He⁴ Temperature Scales

The temperature scale between 1 and 5·2K is defined in terms of the vapour pressure of liquid He^4. There have been several determinations of the vapour pressure of helium as a function of temperature and the temperature scales derived from these do not agree exactly. Differences between different scales which have been in common use are, however, small and, for most experiments, insignificant. At present the international standard for thermometry between 1 and 5·2K is the '1958 He^4 Scale of Temperatures' whose values are labelled with the symbol T_{58}. The uncertainty of this scale is estimated to be not greater than $\pm 0{\cdot}2\%$ between 4·5 and 1K. An abbreviated form of this scale is given in Table **8.2**. The deviations of some earlier scales from the 1958 scale can be obtained from references B2 and R4. The deviations are less than 0·4%.

4.5 Metallic Resistance Thermometers

The resistivity of a metal decreases as the temperature is lowered and so we may use the resistance of a wire to measure temperature. Fig. **4.11** shows how the resistance of three typical metals varies with temperature.

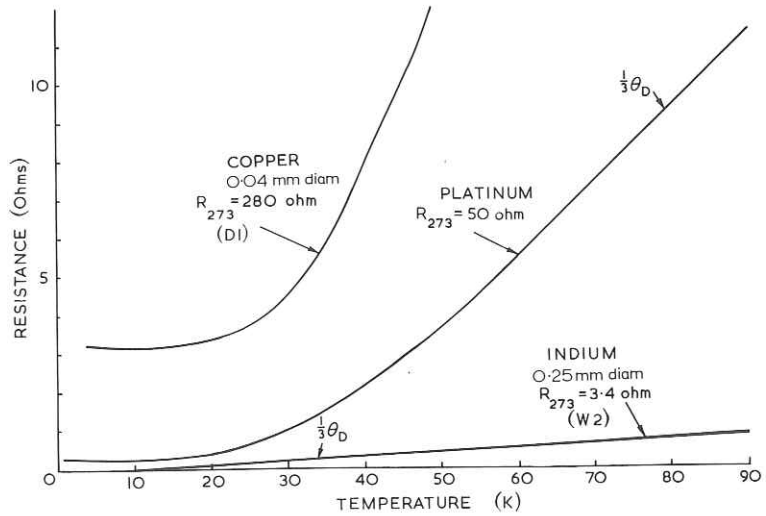

Fig. **4.11**. Characteristics of some metal wire resistance thermometers

At high temperatures the major contribution to the resistance is the scattering of electrons by lattice vibrations. As the temperature is lowered the resistance decreases almost linearly down to about one-third of the characteristic Debye temperature (θ_D) of the metal. Below this the resistance falls as some higher power of the temperature. At the lowest

temperature electron scattering by vibrations becomes negligible compared to scattering by impurities and, because the latter is approximately independent of temperature, the resistance levels off to a constant value. This 'residual resistance' R_0 decreases as the purity of the metal increases. In fact, the ratio of the room temperature resistance to the residual resistance can be used as a measure of the purity of the metal. We can see that metallic resistance thermometers become insensitive at the lowest temperatures where the variation of resistance with temperature diminishes. For reasonably pure metals there are two contributions to the resistivity: a temperature-dependent part $\rho(T)$ which does not vary with impurity concentration and a temperature independent part ρ_0 which depends on the impurity concentration. We may, therefore, write the resistivity as

$$\rho = \rho_0 + \rho(T).$$

Hence, once the values of $\rho(T)$ have been found for one specimen of the metal, we may approximately calculate the values for another reasonably pure specimen by adding its value of ρ_0, measured at liquid helium temperature.

Platinum is the metal most commonly used for resistance thermometers, and thermometers of this metal are useful down to between 10 and 20K. Platinum is chemically stable and, because of its cubic structure, has isotropic thermal expansion and is unlikely to become internally strained on cooling. Resistance thermometers made from annealed pure platinum wire supported in a strain-free manner are capable of very high accuracy, and the International Temperature Scale between 90 and 900K is defined in terms of the properties of such thermometers. We shall not discuss the construction and calibration of such high precision thermometers here but refer the reader to review articles (e.g. H2, S2).

The form of the resistance variation between 273 and 4K is almost the same for all samples of wire of sufficient purity, i.e. the function

$$Z(T) = (R_T - R_{4\cdot 2})/(R_{273} - R_{4\cdot 2})$$

varies very little from sample to sample. The function $Z(T)$ has been tabulated (W3), so once the resistance of a thermometer has been measured at 4·2 and 273K, the temperature corresponding to a measured resistance can be found from the table.

Platinum wire with a residual resistivity ratio $\rho_{273}/\rho_{4\cdot 2}$ greater than 100 is sufficiently pure for thermometers with an accuracy of at least 1% down to 20K, and it is possible to buy insulated wire of this purity (Appendix 33). The temperature variation of resistance of platinum is approximately linear down to about 60K, and for many purposes it is sufficiently accurate to construct a calibration graph for the range 60K to room temperature by plotting the resistance measured at the temperatures of liquid oxygen and melting ice and drawing a straight line through these two points. The maximum error in temperature for this graph will be about 2%, the thermometer reading high below 90K and low between 90 and 273K.

Platinum resistance thermometers with a reproducibility sufficient for most laboratory experiments can be made very simply. Fig. 4.12 shows the construction of a simple thermometer used by the author. It is also possible to buy platinum resistance thermometers calibrated if required (Appendix 34).

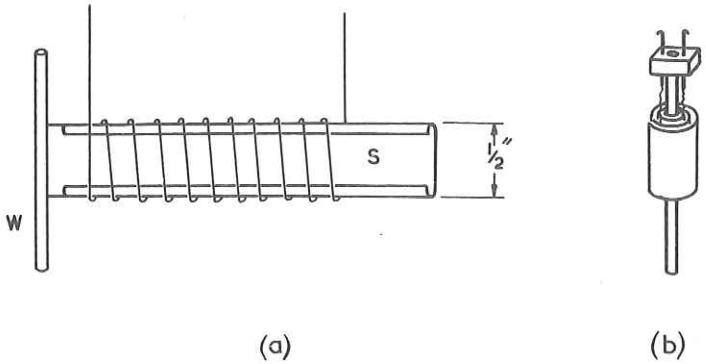

Fig. 4.12. Construction of a Simple Platinum Resistance Thermometer. A strip of thin platinum S ($\sim 0 \cdot 03$ mm thick) is soldered to a thick copper wire W. The sides of the strip are bent over to prevent sharp edges. The strip is lightly varnished and a suitable length of platinum wire is wound on (160 cms of 45 SWG wire will have a room temperature resistance of about 50 ohms). The winding begins some distance away from the right hand end of the strip so that, when the strip is wrapped round the thick copper wire, as in (b), the outermost turn carries no wire and acts as a protective sheath. When the strip has been rolled up it may be impregnated with varnish and a small plastic terminal block fixed to the top of the thick copper wire. The other end of the wire W may be tinned so that it can be soft-soldered to apparatus

Though platinum has many desirable qualities it is not an ideal metal for low temperature resistance thermometers. There are other metals which have a lower Debye temperature and which can be obtained in a purer state than platinum. Such metals should, in principle, be more suitable for use at low temperatures. White and Woods (W2) have given details of thermometers made from indium, which has a Debye temperature of about 100K. Their thermometers were made from $0 \cdot 25$ mm wire extruded from very high purity indium with a resistivity ratio $R_{273}/R_{4 \cdot 2}$ of about 10^4. The variation of resistance was nearly linear down to 30K, but the room temperature resistance was only $3 \cdot 4$ ohms, and at 20K was only about $0 \cdot 07$ ohms (Fig. 4.11). These low resistances are rather inconvenient for accurate measurement and thin indium wire is extremely fragile.

Dauphinee and Preston-Thomas (D1) have shown that ordinary commercial copper wire can be used for resistance thermometers, sensitive down to about 20K. The low temperature part of a cryostat is often made

of copper and in this case the wire may be wound directly on to the copper and attached by varnish without fear of strain from thermal contraction. Because of the higher Debye Temperature ($\sim$330K) and the fairly high impurity of commercial copper wire the resistivity is not very temperature sensitive at low temperatures, and long lengths of fine wire must be used to retain sensitivity down to 20K. For example, one can use 20 metres of $0 \cdot 04$ mm diameter wire which would have a room temperature resistance of about 280 ohms (Fig. 4.11). However, the use of long lengths of fine wire gives very good thermal contact to the substrate. Dauphinee and Preston-Thomas tabulated the variation of resistivity with temperature for one of their copper thermometers and it has been found that the temperature dependent part of the resistivity is substantially the same in different samples of fairly pure copper (say, with $R_{273}/R_{4 \cdot 2} \simeq 100$). Therefore, once the residual resistivity of another copper wire thermometer has been determined by a measurement in liquid helium, its temperature variation may be determined from this table (D1) by adding or subtracting to each value of resistance a constant equal to the difference between the residual resistances of the two thermometers.

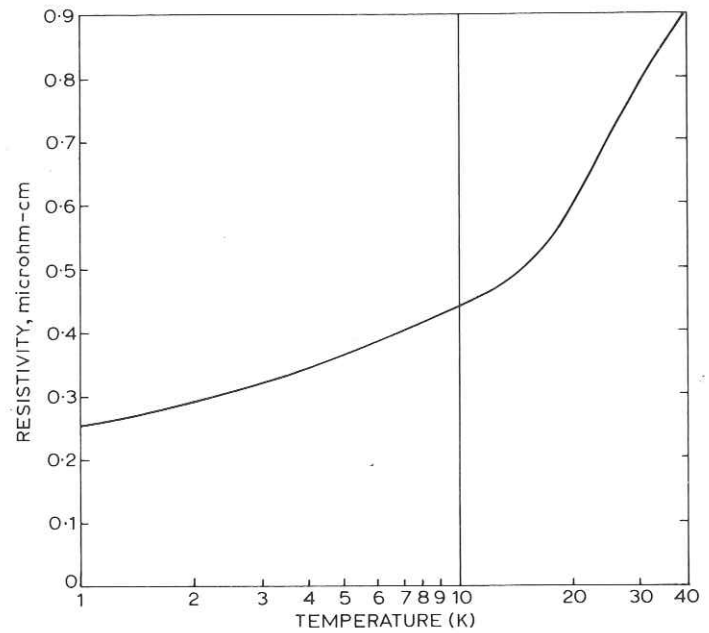

Fig. 4.13. Electrical resistivity of rhodium + ½at.% iron alloy (based on Coles, C4)

Alloys. We may mention that certain copper alloys such as constantan and manganin have resistivities which, below about 200K, decrease smoothly down to the lowest temperatures. However, the change of resistivity with temperature is rather small and to achieve an accuracy of 1% at 4K a thermometer having a resistance of about 100 ohms would have to be measured to within about 0·003 ohms (i.e. a precision of about one part in 30 000). However it has been found (C4) that dilute rhodium-iron alloys have a resistivity which varies rapidly with temperature down to below 1K. Wire of composition rhodium + $\frac{1}{2}$ at. % iron can be bought (Appendix 35) and is suitable for resistance thermometers down to about 1K. Fig. **4.**13 shows how the resistivity of this alloy varies with temperature. The magnetoresistance of this alloy is small in the liquid helium range; a field of 1T (10 kgauss) produces a 1% change in resistance.

The resistance of metallic thermometers is rather small, especially at low temperatures, and so it is important when measuring the resistance to use a circuit which makes allowance for the resistance of the leads to the thermometer. A simple three terminal bridge is shown in Fig. **4.**14.

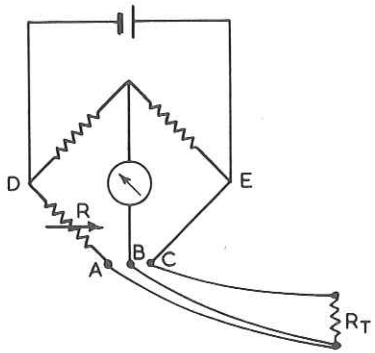

Fig. **4.**14. Circuit of a three-terminal bridge for eliminating the effect of lead resistance

The thermometer R_T is connected to the three terminals A, B, C by three identical leads plaited together, the leads from A and B being connected together at one side of the thermometer. The arms BD and BE of the bridge, therefore, each contain two lengths of lead and the bridge will be balanced when $R = R_T$, irrespective of the resistance of the leads. For accurate work a potentiometer is probably superior to a bridge though it is less convenient.●

4.6 Semiconductor Resistance Thermometers

The electrical thermometers we have discussed so far have a disadvantage: their sensitivity decreases at low temperatures. The resistance

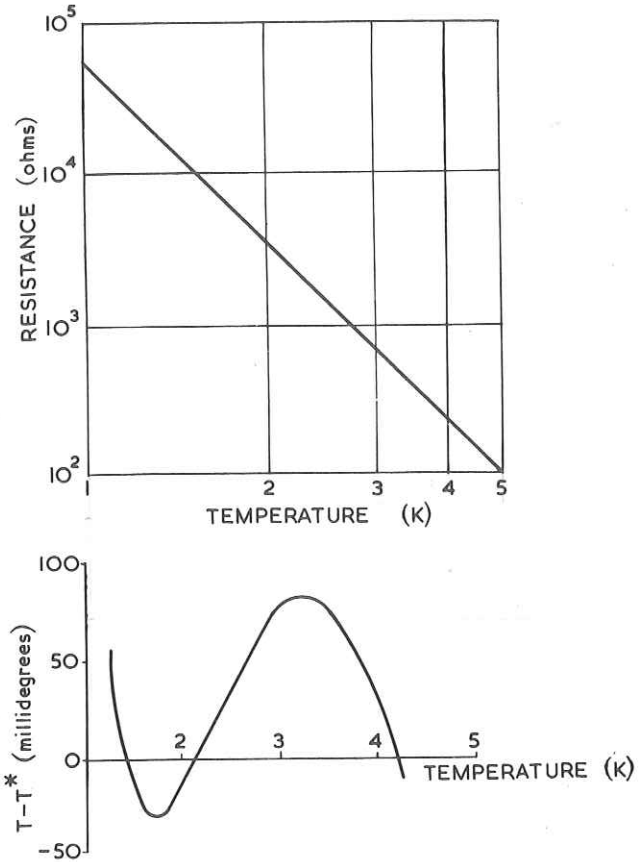

Fig. **4.**15. Calibration of a Semiconducting (Germanium) Thermometer. The top graph shows the measured variation of resistance with temperature. This curve lies close to that given by 3·917 log T = 4·697 − log R. The lower graph shows the difference between the temperature given by this formula and the true temperature corresponding to a given resistance (based on Lindenfeld, L1)

of metallic resistance thermometers becomes so small at low temperatures that refined methods must be used to measure them and to eliminate contributions from resistances of leads and contacts. The resistance of semiconductors, however, increases as the temperature falls and some of these materials are suitable for resistance thermometry at low temperatures. Because the resistance is large, it can be measured by simple ohmeter circuits and the resistance of leads and contacts can often be ignored.

It is often not possible to represent the variation of resistance with

temperature accurately over a wide range by any simple algebraic formula, and in these cases it is necessary to draw a calibration graph. However, a calibration graph of sufficient size to give a fair degree of accuracy over a wide range may be very unwieldly. It is more convenient, therefore, to find a simple algebraic formula which gives an approximate relation between the resistance and temperature and then to plot a correction graph showing the deviation of this formula from the measured variation of resistance with temperature. An example of this procedure is shown in Fig. **4.**15.

Semiconductors show a higher magnetoresistance than metals and this must be remembered when making measurements in strong magnetic fields. The magnetoresistance depends on the nature of the semiconductor. In general, materials with higher carrier mobilities show greater increase of resistance in a magnetic field. Consequently the effect is more noticeable in crystalline semiconductors than in carbon-composition resistors (see §**4.**8).

4.6a Crystalline Semiconductors

Probably the most satisfactory secondary thermometers for use at low temperatures are resistance thermometers made from crystals of semiconductors such as germanium or silicon. These thermometers are sensitive at low temperatures and their calibration can be remarkably reproducible. The increase of resistance with decreasing temperature is governed by different processes at different temperatures and is illustrated in Fig. **4.**16. At high temperatures, above the point *A*, the conductivity is mainly dependent on thermal generation of free electron-hole pairs; at lower temperatures, between *A* and *C*, the conductivity is governed by free charge carriers thermally excited from impurities; and at the lowest temperatures, below *C*, conduction is by electrons hopping between impurities. The detailed shape of the resistivity-temperature characteristic

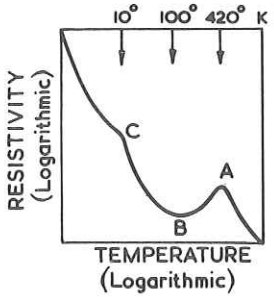

Fig. **4.**16. Typical Temperature Variation of Resistivity of a Semiconductor. The figures at the top indicate the temperature scale for Germanium with about 10^{16} impurities per cc (after Blakemore, B3)

depends on the particular semiconductor and the concentration of impurities. Because the rate of increase of resistance with decreasing temperature in the low temperature range depends on the nature and concentration of a very small number of impurities, it is difficult to tell by measurements at room temperature whether a piece of semiconductor is suitable for a low temperature thermometer. Two samples of germanium whose resistivities differ by only 12% at room temperature may differ by two orders of magnitude at 1K. Hence it is usually necessary to find by measurements at low temperature whether a given piece of semiconductor is suitable for a low temperature themometer. Blakemore (B3) has discussed the characteristics and preparation of germanium suitable for thermometry. By adjusting the relative concentration of donor and acceptor impurities, the bump in the characteristic at *C* may be almost entirely suppressed, and in Fig. **4.**17 is shown the variation of resistance of an *n*-type germanium sample containing $1 \cdot 8 \times 10^{17}$ arsenic atoms and $1 \cdot 4 \times 10^{16}$ gallium atoms per cm^3.

Because it is seldom possible to represent the variation of resistance with temperature over a wide range by any simple formula, it is usually necessary to use a calibration graph as described on p. 130.

If great care is taken in the construction and mounting of a semi-

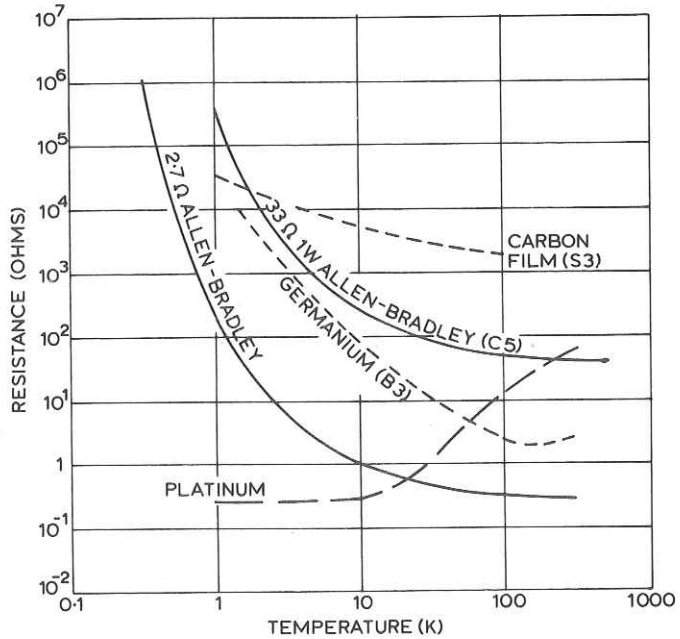

Fig. **4.**17. Typical Resistance-Temperature Relations for Resistance Thermometers

conducting crystal thermometer its resistance-temperature characteristic can be remarkably stable. Thermometers of *n*-type germanium supported in a strain-free manner with side-arms for potential contacts and enclosed in a capsule containing helium gas can be reproducible to better than 0·003% (H8). However, commercially available thermometers are not all as reproducible as this; irreproducibility equivalent to 0·2% in temperature has been reported (M1). Thermometers of a reproducibility suitable for most laboratory experiments can be constructed quite simply. The ends of a small bar of the material are plated with a suitable metal (e.g. copper) and leads are soldered to these plated contacts. A contact can often be improved by a short pulse of intense heat. This may be done by discharging a condenser (say 4μF charged to 100v) through the contact. Slices of semiconductor crystals may be cut into the shapes necessary for use as thermometers either with an ultrasonic cutter or by an abrasive jet (e.g. 'Airbrasive', Appendix 36). Germanium thermometers seem to be stable without encapsulation, and the absence of a protective can means that the thermometer has very small heat capacity (typically about 10^{-6}j K^{-1}). In specific heat measurements below 4·2K the presence of helium exchange gas inside an encapsulated thermometer can in fact be a positive disadvantage, because condensation of this gas may give rise to a specific heat anomaly. Some form of encapsulation is, however, necessary because germanium thermometers, being photo-sensitive, must be shielded from light. However, the growth of single crystals doped to give the correct dependence of resistance on temperature requires the special facilities of a semiconductor laboratory. Several firms sell germanium thermometers, calibrated or uncalibrated (Appendix 37) and it is also possible to have thermometers calibrated commercially (Appendix 38). Calibrated germanium thermometers are at present rather expensive but, because of their great stability, they are valuable as standards against which other thermometers in the laboratory may be calibrated.

Germanium resistance thermometers are affected by magnetic fields (see §**4.8**). Carbon resistor thermometers (to be discussed in §**4.6**b), though less reproducible than germanium thermometers, are much less affected by magnetic fields.

Semiconductor diodes

The resistance of a semiconductor *p-n* junction varies with temperature and commercial germanium diodes can be used as low temperature thermometers (B4). It has been found that for a fixed current in the *forward* direction through a germanium diode the voltage drop decreases linearly with temperature from room temperature to about 20K (Fig. **4.18**). Below this, in the liquid helium range, the sensitivity increases. This form of thermometer is very convenient because the temperature sensitive element is an easily available commercial product. Instead of a diode one junction of a germanium transistor may be used.

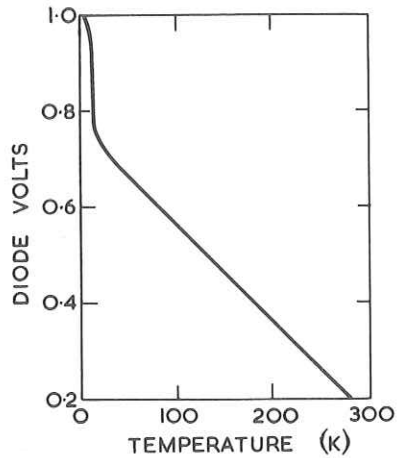

Fig. **4.18**. Germanium Diode Thermometer at Constant Current (after Barton, B4)

The sudden change in the sensitivity of germanium diode thermometers at low temperature makes their use inconvenient below about 20K. Some commercially available silicon diodes have, however, a voltage characteristic which varies smoothly over the whole range 4 to 100K. In particular it has been found (U1) that the base-collector junctions of Fairchild C111 planar silicon transistors have a characteristic which makes them suitable as thermometers over this range. Not all C111's are suitable; Fig. **4.19** shows typical characteristics for three C111's. Clearly No. 3 is unsatisfactory. However, C111's are cheap, and it is a simple matter to select those which have suitable characteristics by immersing them in liquid helium and liquid nitrogen and choosing those which show a suitable voltage change. In Fig. **4.19** it can be seen that, though No. 1 is not as sensitive as No. 2, No. 1 has the advantage of roughly constant sensitivity over the whole range.

Gallium Arsenide diodes have been used for low temperature thermometry and diodes for this purpose can be bought (Appendix 39). For a given current, the voltage across a gallium arsenide diode increases smoothly as the temperature falls; with a current of 10μA the response is about a millivolt per degree. This variation is, however, superimposed on a standing voltage of about 1·3V, so the total sensitivity (see §**4.1**) is low, falling to about 10^{-3} at 4K. Gallium arsenide diodes have the advantage, however, that they are relatively unaffected by magnetic fields (see §**4.8**).

When using diodes as thermometers it is important to remember that they will rectify alternating currents, and quite large spurious fluctuating

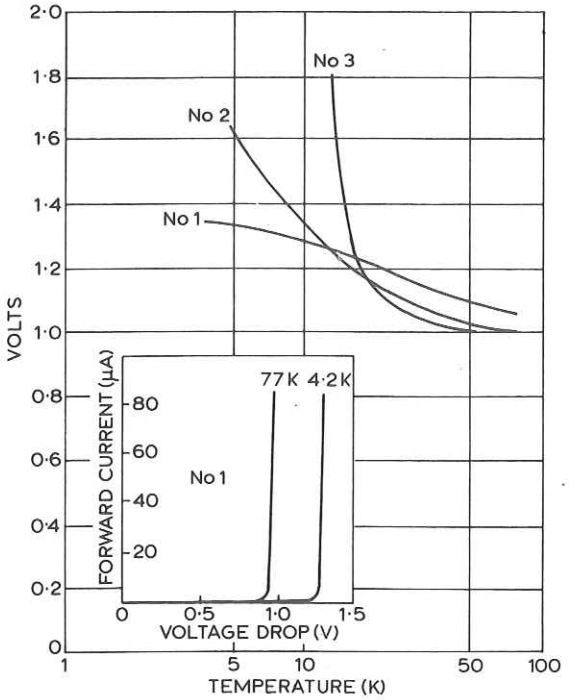

Fig. 4.19. Silicon Diode Thermometer. Variation with temperature of voltage across base-collector junctions of C111 silicon transistors at constant forward current of 10 μA (Unsworth and Rose-Innes, U1)

voltages may appear from the pick-up and rectification of a.c. fields, especially radio and TV broadcasts. For this reason diode thermometer circuits should be carefully screened and filtered (R5).

Semiconductor diode thermometers have the advantage that, provided enough current is passed through them, the voltage at any given temperature is almost independent of the current (see, for example, Fig. **4.**19, inset). Therefore, it is not necessary to adjust the current through the diode to any high degree of accuracy, and we can use a simple current supply and a simple meter to read the current. This contrasts with a resistance thermometer where the voltage at any given temperature is proportional to the current.

For extremely accurate temperature measurement, however, a semiconductor resistance thermometer is preferable to a diode. This is because, though the voltage across a diode is not very dependent on the current, it nevertheless depends to a small degree on the current. Consequently once the thermometer has been calibrated at a certain current, subsequent measurements must, if accuracy is required, be made with exactly the same

current. With a resistance thermometer, however, the resistance R should be independent of current so, once the variation of resistance with temperature has been determined, any current may be used and the ratio of voltage to current gives the resistance. Of course the current must be small enough for the heating of the thermometer to be negligible. It is wise to make sure that this is so by making measurements with two different values of current and checking that the resistance does not depend on the current.

4.6b Carbon Resistors

Though semiconducting crystals make excellent resistance thermometers, suitable crystals are not easily obtained and the crystals must be cut and contacts made to them. It is more convenient to use something easily available in any laboratory, and it has been found that some ordinary commercial carbon radio resistors make good resistance thermometers.

Different kinds of resistors vary widely in their characteristics, and it is necessary to select a type with suitable properties. For example, a resistor must have a reasonable change of resistance over the temperature range to be measured. The resistance increases more and more rapidly as the temperature falls and so one must be chosen whose value does not rise beyond a reasonable limit (say 10^6 ohms) at the lowest temperature to be measured. As a rough guide, a resistor which is to be used down to 1K should have a resistance less than 300 ohms at room temperature. Furthermore, the calibration should change as little as possible each time the resistor is cooled down (see below). Resistors made by different manufacturers are produced by different processes and some are more suitable for thermometers than others. Resistors sold under the name of 'LAB' (in Britain) and resistors manufactured by the Allen-Bradley and Speer Resistor Companies (in the USA) have been found particularly suitable for thermometry (M2, C6). Fortunately resistors of a given make which have the same nominal resistance and wattage usually have similar characteristics at low temperatures. Fig. **4.**17 shows the variation in resistance of two carbon resistors between 300 and 0·3K. Note that the smaller the resistance at room temperature, the lower the temperature to which the resistor can be cooled before its resistance increases rapidly with decreasing temperature.

It appears that for all Allen-Bradley resistors the curves connecting the logarithm of resistance and the logarithm of temperature have nearly the same shape (C5). That is to say the curves may be made to lie on top of each other by a simple translation of the axes. Fig. **4.**20 shows the form of the temperature-resistance relationship. Though the similarity between the characteristics is not sufficiently exact to allow this graph to be used as a general calibration curve, it is useful for predicting the approximate behaviour of a resistor over a wide range of temperature once the resistance has been measured at two known temperatures.

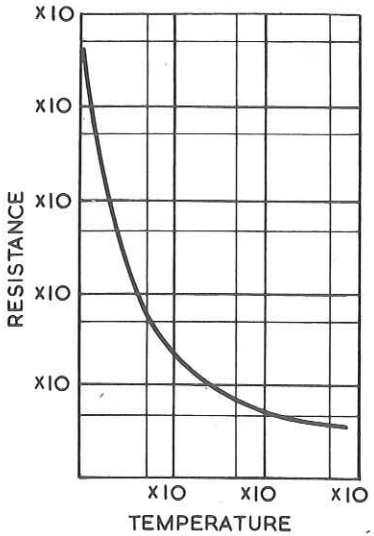

Fig. 4.20. General Relation Between Resistance and Temperature for Allen-Bradley Resistors Plotted on a Log-Log Graph. This relation has been found to hold for resistors between 2·7 and 270 ohms at room temperature in the 1/10th, ½ and 1 watt ratings (after Clement, Dolecek and Logan, C5)

For a given resistor, sensitivity is approximately inversely proportional to the temperature. For example, in certain resistors it was found that for a 1% precision in temperature measurement the resistance had to be determined to an accuracy of 0·6% at 20K but only to 6·0% at 2K (C6). Because the law relating the resistance of a carbon resistor to the temperature is not known, we must calibrate a resistor at several known temperatures and then try to find an expression, relating the resistance R to the temperature T, which gives a smooth curve passing through these calibration points. For many purposes it is sufficient to calibrate the resistor at several temperatures (e.g. against a gas thermometer or the vapour pressure of helium or hydrogen) and then to draw on a graph a smooth curve passing through these points. For greater accuracy we may try to find an algebraic formula relating the resistance to the temperature. The greater the number of adjustable parameters there are in our formula and the greater the number of calibration points, the better will our formula represent the behaviour of the thermometer. We may write a relationship connecting temperature and resistance in the approximate form

$$1/T = \ldots + a_{-2}(\ln R)^{-2} + a_{-1}(\ln R)^{-1} + a_0 + a_1(\ln R) + a_2(\ln R)^2 + \ldots$$

The behaviour of an Allen-Bradley resistor below 20K may be described

with an accuracy of ±0·5% by a formula which includes only three terms of the series:

$$1/T = a_{-1}(\ln R)^{-1} + a_0 + a_1(\ln R) \qquad \textbf{4.6}$$

where the three constant a_{-1}, a_0 and a_1 are found by experiment (C6). The use of this three-constant formula is, however, tedious and it has been found (M3) that many resistors have characteristics that can be represented by a formula with only two constants. If we multiply formula **4.6** throughout by $\ln R$, we get

$$\frac{\ln R}{T} = a_{-1} + a_0 \ln R + a_1(\ln R)^2.$$

For many thermometers the right-hand side of this equation is found to be a perfect square (i.e. $a_0 = 2\sqrt{a_1 a_{-1}}$). In this case we have the simple two-constant formula

$$T = \frac{\ln R}{(\sqrt{a_{-1}} + \sqrt{a_1}\ln R)^2}. \qquad \textbf{4.7}$$

Unfortunately, the temperature-resistance relationship may differ slightly each time a resistor is cooled down from room temperature, though the calibration does not alter if the resistor is not allowed to heat up above about 90K. For those experiments where accurate values of the temperature are needed it will be necessary to recalibrate the thermometer each time it is cooled down from room temperature. The complete calibration of a resistor involves measuring the resistance at several accurately known temperatures and then calculating the best values of the constants in equations such as **4.6** or **4.7** and is rather a tedious procedure. Equations may, however, be used in which, once the values of the constants have been determined by a complete calibration experiment, any variation in calibration in subsequent experiments can be accounted for by adjusting the value of one of these constants. Hence in experiments after the original calibration, it is only necessary to calibrate the resistor at one convenient known temperature (for example, the boiling point of liquid helium). Thus Lounasmaa (L2) found that the behaviour of a ¼-watt 47-ohm LAB resistor could be represented over the range 4 to 15K by a formula of the form

$$T + \theta = A/(R - R_0)$$

where θ and A are constants determined in the original calibration experiment, and R_0 is determined in each experiment by one measurement at the reference temperature. It has also been found (H3) that the variation with temperature of the 'reduced resistance' R_T/R_0 of a resistor, i.e. the measured resistance R_T at a temperature T relative to the resistance R_0 at any reference temperature T_0, may vary very little from experiment to experiment. In this case it is sufficient in each experiment to calibrate the thermometer only at the one reference temperature.

Allen-Bradley ⅛W carbon resistors, type BB (Appendix 40), are very useful for thermometry over a wide temperature range because these

resistors all seem to have the same form of variation of resistance with temperature. It has been found (B5) that their resistance R varies with temperature T according to

$$\log_{10}R = a+b\left(\frac{\log_{10}R}{T}\right)^{\frac{1}{2}}$$

from room temperature down to 4·2K, and all resistors of the same nominal room temperature value have the same value for the constants a and b. These values are tabulated in Table **4.2**. For approximate thermometry it is not necessary to calibrate these resistors; a calibration curve can be prepared by drawing the appropriate straight line on a graph of $\log_{10}R$ vs $[\log R)/T]^{\frac{1}{2}}$ using the values of a and b from Table **4.2**. From this graph a more convenient plot, e.g. R vs $\log_{10}T$ or R vs T, can be prepared.

Nominal value (ohms)	Constants a	Constants b	Typical resistance at 4·2K (ohms)	$\frac{R_{4\cdot2}}{R_{300}}$
10	0·97	1·10	47	4·7
27	1·35	1·29	210	7·6
47	1·58	1·38	470	10
100	1·88	1·48	1400	14
220	2·16	1·57	4000	18
270	2·28	1·55	6400	21
330	2·33	1·64	8100	25
1000	2·85	1·60	33000	32
4700	3·48	1·63	200000	44

Table **4.2**. Constants for Allen-Bradley carbon resistors type BB, $\frac{1}{8}$W, used as resistance thermometers (Borcherds, B5).

Carbon resistor thermometers can be calibrated between about 5 and 1·3K by direct comparison with the vapour pressure of liquid helium. Below 1·3K the vapour pressure of liquid helium becomes too small to measure conveniently, even with an oil manometer, but there is a convenient formula which enables the calibration of a carbon resistor to be extrapolated down to the lowest temperatures obtainable with liquid helium. It has been found (C7) that the resistance R of Allen-Bradley

10 ohm, 0·5W resistors* is related to the vapour pressure P of the liquid helium by

$$\log R = a-b\log P \qquad \textbf{4.8}$$

where a and b are constants determined by calibration at temperatures at which the vapour pressure of the helium is high enough to be measured easily. If a graph of log R against log P is plotted, the straight line passing through the two calibration points can be extended out to lower value of P. Because the relation between the vapour pressure P and the temperature is known down to temperatures well below 1K (see Table **8.2**), this extrapolation may be used to determine the temperature from the measured resistance. This extrapolation appears to give temperatures accurate to within 0·4% down to 0·9K.

Where measurements are to be made both above and below the λ-point of liquid helium (2·17K) the carbon resistor thermometer must be mounted so that it is not in contact with the liquid. Below the λ-point the helium II penetrates into the resistor producing a sudden increase in resistance.

Unfortunately the material of a carbon resistor has poor thermal conductivity and consequently certain precautions must be taken when using these resistors as low temperature thermometers. The resistance of a carbon composition resistor at a given temperature is found to depend on the measuring current, the resistance decreasing with increase of current. This effect arises, not because the resistor is a non-ohmic conductor, but because Joule heating sets up a temperature gradient within the resistor. This variation of resistance with current makes it necessary to use the thermometer every time under similar conditions; for example, at constant measuring voltage. A further effect of the low thermal conductivity is that some time is required for the thermometer to reach thermal equilibrium. Clement and Quinnell (C6) found a time constant of about 5 seconds for a 1-watt resistor at 3K.

An advantage of carbon composition thermometers is that magnetic fields have very little effect on their resistance (see §**4.8**).

A carbon resistor thermometer can be thermally connected to a metal specimen simply by soldering one of its leads directly on to the specimen. However, because of the poor thermal conductivity of the resistor, the measuring current may set up an appreciable temperature gradient within the thermometer itself. This effect can be considerably reduced by connecting a small mica capacitor across the resistor (Z1). Such a capacitor has a relatively high thermal conductance (see §**3.8**c) and helps to short out any temperature gradient.

Carbon radio resistors are sometimes encased in a ceramic covering, which prevents good thermal contact to the resistive element. Heat

*Preliminary experiments suggest that the formula also holds for other nominal values of resistor, e.g. 100 ohm. (A. Bruck, private communication).

contact to the thermometer may be improved by grinding off this ceramic covering and then wrapping an insulated copper wire around the exposed carbon core. The wire can be secured to the carbon by a layer of varnish and one end of the wire bared and soldered to the appropriate part of the apparatus (M2).

Very small carbon resistance thermometers can be made by cutting discs from commercial carbon resistors (M4).

There have been several articles on the use of carbon resistors as thermometers. Much of this published work, however, is concerned with the use of these thermometers for measurement of temperature to high accuracy (e.g. V1). For a discussion of this aspect and references the reader may consult the reviews by Friedberg (F2), Hill (H4) and Lindenfeld (L3).

It can be seen from Fig. **4.**17 that the resistance of carbon resistors rises more and more rapidly as the temperature is lowered. For this reason any single resistor is suitable for covering only about one decade of temperature; if it has enough sensitivity to be useful in one decade, its resistance will rise to an inconveniently high value in the next lower decade. The carbon film resistors, described in the next paragraph, have a gentler variation of resistance with temperature.

●*Carbon films.* Films of colloidal carbon in the form of lampblack, india ink, 'Aquadag' etc. painted on to a surface can be used as resistance thermometers (G1, H5, Z2). They behave similarly to carbon radio resistors, though they are less rugged and not so reproducible. On the other hand they have a very small heat capacity and it is possible to ensure that there is very little thermal resistance between the film and the specimen to be measured. A mixture of colloidal graphite and lampblack can give a thermometer useful over a wide range of temperature (S3); the carbon film whose characteristic is shown in Fig. **4.**17 was painted from a mixture of 44 parts by weight of Acheson S305 colloidal graphite in methyl-isobutyl ketone, 10 parts lampblack (from a smoky oil flame) and 42 parts Araldite AT1 powder as a binding agent. The Araldite can be dissolved in acetone. After painting on, the mixture is baked as recommended by the Araldite manufacturer. Electrical leads can be attached with silver paint.

4.6c **Thermistors**

Thermistors can be used as low temperature resistance thermometers, and special thermistors for this purpose can be bought (Appendix 41). However, their resistance increases so rapidly as the temperature falls that they are useful over only a rather limited temperature range. Thermistors have the advantage of being very little affected by magnetic fields.●

4.7 **Thermocouples**

A thermocouple is the simplest electrical thermometer. In a closed circuit consisting of a number of wires of different metals in series, with one junction at a different temperature from the rest, there will be an e.m.f. whose magnitude increases with the temperature difference of the odd junction. At a given temperature the magnitude of this e.m.f. depends only on the nature of the two metals at the odd junction.

A thermocouple thermometer is just a pair of wires of different metals in contact (usually melted or soldered together) at the temperature to be measured, the other ends being connected (through leads of a third metal, if necessary) to a high-resistance voltmeter. Unfortunately, in accordance with the Third Law of Thermodynamics, the rate of change of e.m.f. with temperature $\mathrm{d}E/\mathrm{d}T$ (the thermoelectric power) approaches zero as the temperature approaches zero. Therefore, thermocouples become insensitive at low temperatures. Nevertheless, because of their simplicity, it may be convenient to use thermocouples at low temperatures when only a rough indication of temperature is required.

Thermocouples have the advantage that they give a continuous indication of temperature, and the voltage-measuring instrument may be calibrated to read temperature directly. A thermocouple generates negligible heat and the junction is small, so that it can be precisely located and has little heat capacity. Tables are available which give the thermal e.m.f. and thermoelectric power for most common pairs of thermocouple metals, so in principle it is not necessary to calibrate the thermometer. Calibration tables have been published for low temperature thermocouples using gold-iron (S4) or contantan (P1). In practice, however, it may be necessary to calibrate thermocouples if they are to be used for better than a rough indication of temperature (say, better than 2%). Different batches of wire from the same manufacturer may have slightly different thermoelectric properties due to small variations in composition, strain, etc. However, once a length from a reel has been calibrated, one can usually assume that the rest of that reel will have the same properties.

The largest thermopowers at low temperature are obtained with dilute gold-iron alloys (B6). Wires of gold+0·07 at % iron, and gold+0·03 at % iron can be bought (Appendix 35), and Fig. **4.**21b shows that a thermocouple of one of these alloys in combination with chromel (also known as 'T-1') has a thermopower exceeding 10 μV/K right down to 4K. Thermocouples employing gold-iron wires are at present the only ones practicable for use down to liquid helium temperatures, though thermocouples of copper in combination with Chromel or Constantan are useful down to about 50K. Detailed tables of the variation of thermovoltage and thermoelectric power with temperature for the thermocouples shown in Fig. **4.**21 are given in reference S4 and in the wire manufacturers' literature. The junctions between the gold-iron wire and the chromel are easily made by twisting the two bare ends of the wires together and

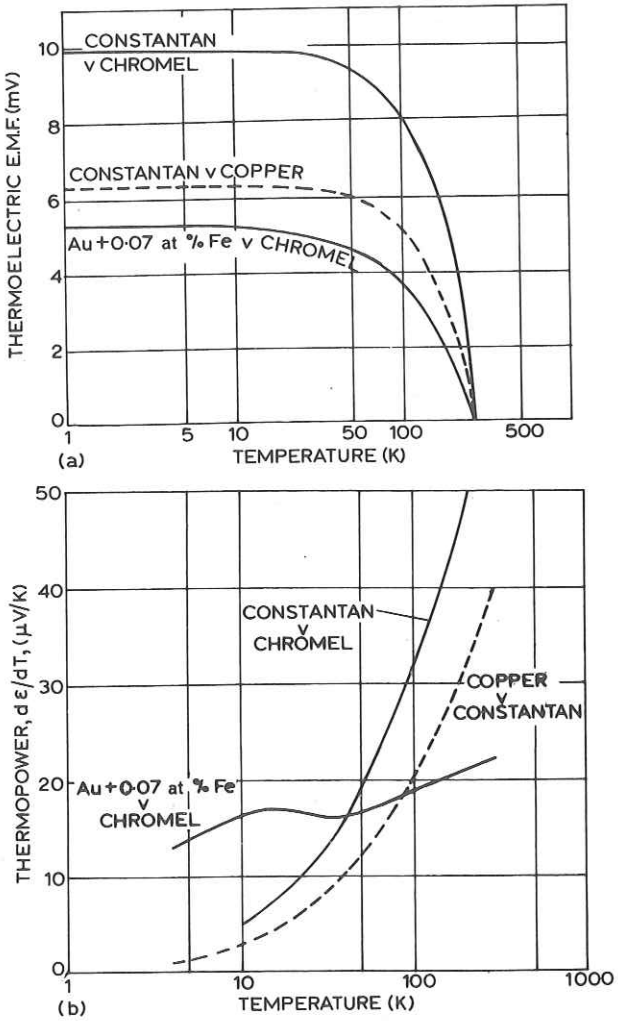

Fig. 4.21. Thermocouples. (a) Thermoelectric e.m.f. (reference junction at 273K). (b) Thermoelectric power (S42)

then soldering with a low melting point solder, such as Wood's metal, and flux.

Greater accuracy can be obtained at low temperatures if the reference junction is immersed in liquid helium and a sensitive voltmeter used to measure the small e.m.f. developed. For an accuracy of 10% at 10K, a voltage of about 80 μV must be measured to about 5 μV (i.e. a precision of 1 part in 16) if a gold-iron vs chromel thermocouple is used with its

reference junction at 4·2K. But if the reference junction were at 273K a voltage of about 5 mV would have to be measured within 5 μV (i.e. 1 part in 1000). Furthermore, in this case the temperature of the reference junction must be constant to within 0·001K. Because of the small value of thermopower one must be sure, when using thermocouples to measure low temperatures, that no spurious e.m.f.'s are generated in the rest of the circuit. For example, all connections to the terminals of the measuring instrument must be at the same temperature and carefully shielded from draughts. Figure **4.22** shows schematically an arrangement of leads for minimising spurious e.m.f.'s. The leads from the low temperature region up to the voltmeter are both continuous wires of pure copper so as to reduce the chance of thermal e.m.f.'s being generated by the temperature gradient. The thermocouple leads are connected to the copper leads at thermal anchors, which are copper posts in contact with liquid helium.

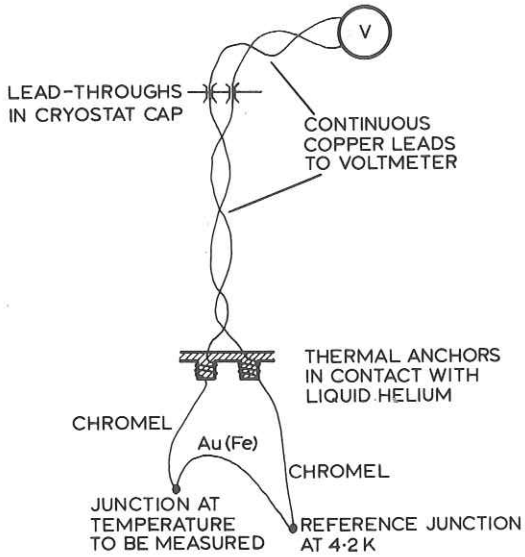

Fig. 4.22. Arrangement of thermocouple leads to minimise spurious e.m.f's

Several turns of the wires are wrapped round these posts, to ensure that both connections are at the same temperature so that no thermal e.m.f. is generated there.

Unfortunately, near 4·2K gold-iron thermocouples are strongly magnetic field dependent (but see §**4.8**).

A disadvantage of the use of alloys for thermocouples is that their thermopower is very dependent on their composition. Consequently,

even wires of the same nominal composition may have rather different thermopowers, and it is difficult to determine temperatures from published tables with confidence. A good test of a thermocouple is to measure its e.m.f. with one junction in liquid helium and the other in melting ice. If the measured e.m.f. is close to the published value one may use the thermocouple over the whole range with reasonable confidence. If thermocouple wires vary in composition along their length, additional, unwanted e.m.f.'s may be generated. The composition of alloy wires is less likely to be uniform than that of single metals. This is an additional reason for maintaining the reference junction at a low rather than a high temperature, so that the temperature drop along the alloy wire is kept to a minimum. Alloy wires should be tested to check that no such unwanted e.m.f.'s are produced. Uniformity may be checked simply by winding the wire along a stick and measuring any e.m.f.'s that arise when this coil is lowered slowly into liquid helium.

•4.8 Effect of Magnetic Field on Electrical Thermometers

Low temperature experiments often require the presence of a strong magnetic field and, as all electrical thermometers are to some extent affected by a magnetic field, we now discuss how magnetic fields affect the various kinds of thermometer.

Crystalline semiconductors are strongly affected by a magnetic field. The magnetoresistance $\Delta R/R_0$ of a germanium resistance thermometer varies as the square of the magnetic field. The magnitude of the magnetoresistance depends on the temperature, on the exact composition of the material and on the directions of both measuring current and magnetic field relative to the axes of the crystal, and so it is not possible to give any simple values for the increase in resistance. This increase in resistance is, however, minimised if the thermometer is arranged so that the measuring current flows parallel to the direction of the magnetic field. The magnetoresistance of germanium thermometers has been discussed by Blakemore, Schultz and Myers (B7). These workers found that for a certain thermometer a magnetic field of 0·3T (3000 gauss) resulted in a maximum temperature error of only 0·1% in the liquid helium range.

Gallium arsenide diodes (see §4.6a) are relatively unaffected by magnetic fields. The temperature error, $\frac{T(H)-T(O)}{T(O)}$ is roughly proportional to the square of the magnetic field strength. Near 4·2K a gallium arsenide diode in a field of 3T (30 kgauss) typically indicates a temperature about 5% too low. The error due to magnetic fields becomes less at higher temperatures (A1).

Carbon resistors are not much affected by a magnetic field. Typically at 4·2K one may expect a change in resistance of about 1% in a magnetic field of 0·5 Tesla (5000 gauss). The magnitude of the magnetoresistance effect increases with the nominal resistance and with decreasing temperature, but it appears to make little difference whether the magnetic field is parallel or perpendicular to the axis of the resistor. Apart from the above facts, however, it is not possible to discern any general pattern in the magnetorestive behaviour of carbon resistors; both positive and negative magnetoresistance have been reported, and also variation proportional to the magnetic field and to the square of the magnetic field (C6, H6, D2, B8, K2). It seems, therefore, that if accurate temperatures must be determined in strong magnetic fields, each kind of carbon resistor must be separately calibrated.

The magnetoresistance of carbon film thermometers (p. 140) is quite small, the increase in resistance at 1·2K being of the order of 1% at 0·1 Tesla (1000 gauss) and 10% at 10 Tesla (H7).

The gold-iron alloy used for thermocouples sensitive to low temperatures has a Seebeck effect which is dependent on magnetic field strength (M5). The effect of the magnetic field is greater at lower temperatures. For example, at 4·2K the thermoelectric power of a gold-iron v. chromel thermocouple is reduced 40 per cent by a field of 6T and 10% by a field of 2T, but above 20K the effect of these fields is less than 3%. The e.m.f. of a thermocouple can, however, be made independent of magnetic field by arranging its wires so that those lengths which run from the high field region to where the field is negligible are at constant temperature (R6). Under this condition a magnetic field of 10T (100 kgauss) has been found to change the e.m.f. of a gold-iron vs copper thermocouple with its cold junction at 4·2K by an amount corresponding to an indicated temperature change of less than 0·01K.

Thermometer elements have recently been developed which are completely unaffected by magnetic fields up to 10T (100 kgauss). These thermometer elements consist of a capacitor whose dielectric has strongly temperature-dependent permitivity. The capacitance of an element with crystallised $SrTiO_3$ as its dielectric increases monotonically with temperature between about 0·1 and 70K, and in a typical capacitor of 200 μF gives a response of about 200 pf/K (L4, L5, R7). The capacity can be measured with an a.c. bridge dissipating less than 10^{-10} W in the capacitor. $SrTiO_3$ capacitor thermometer elements can be bought (Appendix 42).

Doped potassium chloride is also useful in capacitor thermometers; it becomes paraelectric when doped with certain impurities, and its permitivity increases rapidly with falling temperature. Potassium chloride doped with about 3×10^{18} Li ions cm^{-3} has a linear increase of permitivity between 1 and 30K and is unaffected by magnetic fields up to 10T (B9). Potassium chloride doped with OH or CN has been used between 0·1K and 10K and has been found to be unaffected by magnetic fields up to 5T (F3).

4.9 Other Thermometers

We now mention briefly some other forms of thermometer that can be

used at low temperature but which for various reasons are restricted in their use.

Noise thermometers. The noise generated within an electrical conductor increases with its temperature. For a conductor of resistance R at temperature T the mean square voltage fluctuation generated within a frequency band of width $d\nu$ is

$$\overline{v}^2 = 4kTRd\nu,$$

where k is Boltzmann's constant. Therefore, if we can measure the noise voltage appearing across a resistor within a certain waveband we can determine its temperature. Noise thermometry is attractive because it gives, in principle, an absolute measure of the temperature; we need only know the resistance of our thermometer as a function of frequency and the band-width over which we are measuring. Unfortunately the noise generated in a resistor at low temperature is very small: at 4K the rms noise voltage within a 10 kHz band across a 10^4 ohm resistor is about $1 \cdot 5 \times 10^{-7}$V. Sensitive amplifiers with a very low inherent noise are required, and the absolute accuracy which has been achieved at low temperature is not very high. Low temperature noise thermometers have been described by Fink (F4) and by Patronis and his colleagues (P2). In the latter thermometers the error in absolute temperature determination was about 5%. A correlator amplifier system has been proposed (S5) which should largely cancel amplifier noise and enable temperatures down to below 1K to be measured.

Recently a new form of noise thermometer has been developed (K3) which can work down to very low temperatures. The sensing resistor is connected in parallel with a superconducting 'weak-link' (e.g. a Josephson junction, see R8). A constant current fed through the resistor biases the junction so that it oscillates. The frequency of oscillation is directly proportional to the voltage across the junction, and so the noise voltage of the resistor appears as a random frequency modulation of the oscillation. This can be analysed by electronic circuits, and the absolute temperature of the resistor deduced. This form of noise thermometer has been used down to about $0 \cdot 1$K and may be capable of development for much lower temperatures.

Critical fields of Superconductors. The *critical field* of a superconductor (the magnetic field required to restore a superconducting metal to the normal state) increases with decreasing temperature and may be used for thermometry. Fig. **4.**23 shows the critical field H_c as a function of temperature for several metals. The curves approximate closely to a parabolic relation, $H_c = H_o[1-(T/T_c)^2]$, where H_o is the critical field at 0K and T_c is the critical temperature. Unfortunately the critical field at any temperature is only sharply defined for a very pure metal; for an impure or strained metal the critical field may be altered slightly, and if

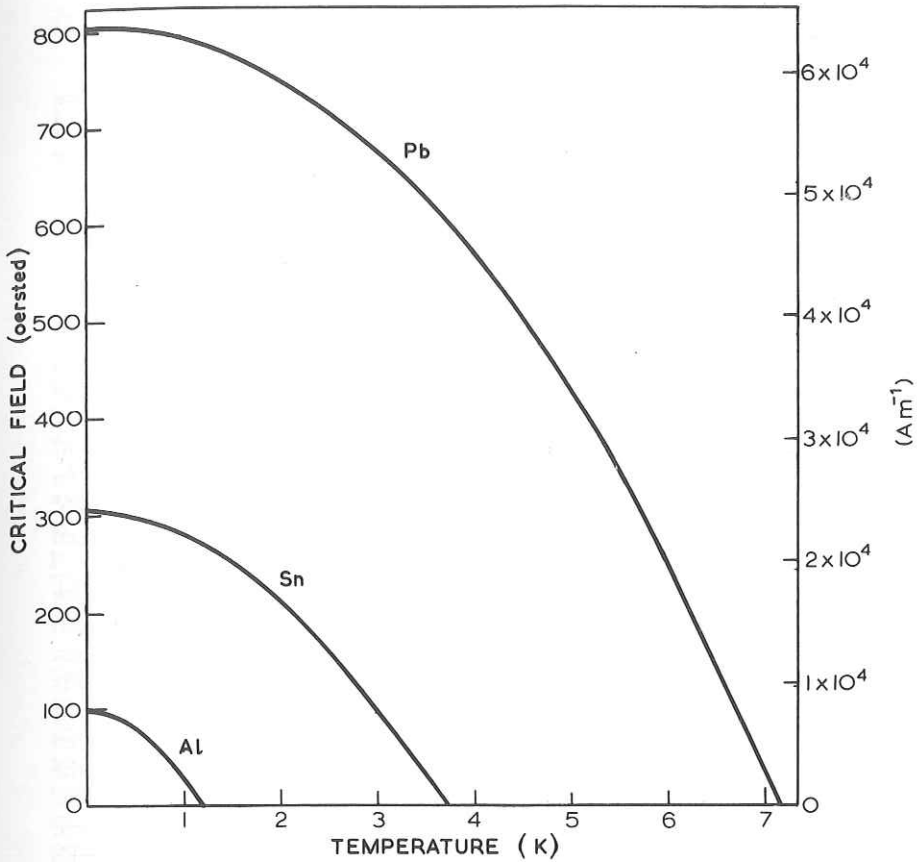

Fig. **4.**23. Critical Fields of some Superconductors

the metal is too impure the transition from the superconducting to the normal state is spread over a range of magnetic fields. For thermometry, therefore, we must use very pure strain-free metals. The use of the critical field of pure aluminium or gallium to measure temperatures below 1K has been suggested (C8, G2).

Acoustic Thermometer. The velocity of sound in a gas can be related to the temperature of the gas with considerable accuracy, and thermometers can be made in which the temperature is determined from the velocity of sound in helium gas. Such thermometers involve the measurement of the wavelength of sound in acoustic resonators at low temperature. The acoustic thermometer is, however, much too complicated and inconvenient

for use in day-to-day experimental work, though it is rivalling the constant volume gas thermometer as a primary low temperature thermometer in standards laboratories.

Paramagnetics. The magnetic susceptibility of a paramagnetic substance increases as the temperature falls and this property is extensively used in low temperature thermometry, especially below 1K. Paramagnetic thermometry and other methods of measuring temperatures below 1K are desribed in §**7**.4.●

4.10 Calibration

Some thermometers, electrical ones in particular, need to be calibrated. The simplest method is to pay a specialised laboratory to carry out this calibration (Appendix 38). However, this may not always be possible, and so we now discuss some methods of obtaining known temperatures for thermometer calibration.

The most direct method is to immerse the thermometer in a liquid coolant over which the vapour pressure can be varied and measured. In this way thermometers may be calibrated between about 1·0 and 4·2K in liquid helium, between 10 and 20K in liquid hydrogen, and between 54 and 90K in liquid oxygen (see Tables **8**.2 and **8**.4).

A special problem arises in the use of liquid hydrogen to calibrate thermometers. Hydrogen molecules exist in two forms: in *ortho*-hydrogen the nuclear spins of the two atoms are parallel, while in *para*-hydrogen they are antiparallel. The vapour pressure over liquid hydrogen depends slightly on the ortho-para concentration, and so this concentration must be known for accurate thermometry. The energy levels of ortho-hydrogen are higher than those of para-hydrogen so that at low temperatures the equilibrium liquid is almost completely in the *para* form. As the temperature is raised, however, there is an increasing fraction of the *ortho* form. At 20K there is only 0·2% of ortho-hydrogen but at 300K the ortho molecules form about 75% ('normal' hydrogen). The difference in temperature between normal and equilibrium hydrogen may amount to 1% (Table **4**.3). The rate of conversion from normal to equilibrium liquid may be very slow and liquid formed by condensing normal gas from room temperature may not reach the equilibrium low temperature concentration for several days. Normal hydrogen condensed from room temperature into a clean vessel may be considered to remain close to 20·39K for about an hour. The conversion to equilibrium ortho-para concentration may be greatly speeded up by the presence of a catalyst such as ferric hydroxide gel (W4).

Outside the temperature ranges attainable with liquid helium and hydrogen a gas thermometer can be used for calibration. It should be remembered that a gas thermometer has rather a long time constant, so that it is important to hold the temperature steady at each calibration

	Boiling point (at 760 torr)	Triple point	Temperature (at 2 torr)
Normal H_2 (25% para)	20·39K	13·96K, 54·0 torr	10·12K
Equilibrium H_2 (100% para)	20·27K	13·81K, 52·8 torr	10·02K

Table **4**.3. Some differences between normal and equilibrium hydrogen. (For a complete table of vapour pressure and temperature of normal and equilibrium hydrogen see Wooley, Scott and Brickwedde, W5).

point for several minutes to ensure that the thermometer has reached its true reading. Calibration should *not* be carried out by allowing the temperature to drift continuously, the temperature indicated by the gas thermometer being read at various intervals. Simple apparatus which can maintain steady temperatures above 4K and which is suitable for the calibration of thermometers is described in §**5**.2.

In principle a gas thermometer is an absolute instrument but in practice a simple gas thermometer of the form described in §**4**.3 needs calibration at two known temperatures, and it is also desirable to have a third fixed point in order to check the correctness of the calculated calibration. Table **4**.4 lists a number of fixed points that may be used to calibrate low temperature thermometers.

The temperatures at which phase transitions occur in certain substances can often be detected by the increase of specific heat at that point. For example, if the temperature of liquid hydrogen is slowly lowered by gradually reducing the pressure over it, the fall in temperature ceases when the liquid reaches its triple point and the temperature remains constant for some time while the latent heat of solidification is being extracted. This provides a useful calibration point. A similar phenomenon occurs at the λ-point in liquid helium. A simple device for calibrating thermometers at the triple point of neon, 24·6K, is described in reference F5.

The superconducting transition of lead provides a useful calibration point in the region between the temperatures covered by liquid hydrogen and liquid helium. For pure lead this transition takes place at 7·193K$\pm$0·005 (F1). Unfortunately the transition temperature of a metal depends slightly on its purity but lead of high purity is fairly easy to obtain. For lead of purity better than 99·997% the transition temperature will be within the range given above. The superconducting transition point may be detected by the change in magnetic properties which occurs at this temperature; on passing into the superconducting state a metal becomes perfectly diamagnetic, ejecting all magnetic flux. In a simple arrangement for detecting the transition temperature of lead, two coils, each of about 200 turns of fine insulated copper wire, are wound along the length of a

	Temperature (K)	
Boiling point of oxygen	90·19	
Boiling point of argon	87·29	
Boiling point of nitrogen	77·40	see §**4.**10
Boiling point of neon	27·1	
Triple point of neon	24·6	
Boiling point of hydrogen		see §**4.**10
normal	29·39	
equilibrium	20·27	
Triple point of hydrogen		
normal	13·95	
equilibrium	13·81	
Superconducting transition of pure lead	7·193±0·005	
Boiling point of helium^4	4·214±0·004	
Boiling point of helium^3	3·19	
λ-point of helium^4	2·172± ·0003	
Superconducting transition of aluminium	1·175± ·001	

Table **4.**4. Some known temperatures.

pure lead rod about 2·5 cm long and 2 mm thick, so that the lead forms the core of a mutual inductance. An alternating current of about 1 mA is passed through one of the coils, and the voltage induced in the other is amplified and measured. When the lead passes into the superconducting

state the coupling between the coils is greatly reduced and the voltage across the secondary falls to a small value.

The boiling points of liquid nitrogen (77·4K) and oxygen (90·19K) can be used as calibration points. The temperature at which liquid nitrogen boils may, however, be slightly indefinite because oxygen from the air can condense into the liquid and raise the boiling point. 1 mole per cent of oxygen increases the boiling point of nitrogen by 0·05 deg.

Oxygen forms a stable liquid with a boiling point of 90·19K under a pressure of 760 torr. The rate of change of boiling point with pressure near normal atmospheric pressure is 0·01K per torr. Unfortunately it is possible for liquid oxygen in a Dewar vessel to superheat so that its temperature may be as much as 1K above the boiling point. Though this is a rare occurrence, one can ensure that oxygen is boiling at its equilibrium temperature by bubbling oxygen gas through it.

REFERENCES

A1. Arends, J., Wright, R. C., 1969, *Cryogenics*, **9**, 281.
B1. Beattie, J. A., 1955, *Temperature II*, Chapman and Hall, London, p. 63.
B2. Brickwedde, F. G., van Dijk, H., Durieux, M., Clement, J. R., Logan, J. K., 1960, *J. Res. Nat. Bureau of Standards*, **64A**, N.B.S. Monograph No. 10.
B3. Blakemore, J. S., 1962, *Rev. Sci. Instrum.*, **33**, 106.
B4. Barton, L. E., 1962, *Electronics*, **35**, No. 18, 38.
B5. Borcherds, P. H., 1969, *Cryogenics*, **9**, 138.
B6. Berman, R., Huntley, D. J., 1963, *Cryogenics*, **3**, 70.
B7. Blakemore, J. S., Schultz, J. W., Myers, J. G., 1962, *Rev. Sci. Instrum.*, **33**, 545.
B8. Belanger, B. C., 1969, *Rev. Sci. Instrum.*, **40**, 1082.
B9. Brand, R. A., Letzring, S. A., Sack, H. S., Webb, W. W., 1971, *Rev. Sci. Instrum.*, **42**, 927.
C1. Challis, L. J. (Nottingham University), private communication.
C2. Corak, W. S., Garfunkel, M. P., Satterthwaite, C. B., Wexler, A., 1955, *Phys. Rev.*, **98**, 1699.
C3. Campisi, G. J., Frankl, D. R., 1970, *Rev. Sci. Instrum.*, **41**, 144.
C4. Coles, B. R., 1964, *Phys. Letters*, **8**, 243.
C5. Clement, J. R., Dolecek, R. L., Logan, J. K., *Advances in Cryogenic Engineering*, **2**, Plenum, New York, 1956.
C6. Clement, J. R., Quinnell, E. H., 1952, *Rev. Sci. Instrum.*, **23**, 213. Clement, J. R., 1955, *Temperature II*, Chapman and Hall, London, p. 380.

C7. Cunsolo, S., Santini, M., Vicentini-Missoni, M., 1965, *Cryogenics*, **5**, 168.
C8. Cochran, J. F., Mapother, D. E., 1958, *Phys. Rev.*, **111**, 132.
D1. Dauphinee, T. M., Preston-Thomas, H., 1954, *Rev. Sci. Instrum.*, **25**, 884.
D2. Decker, D. L., Laquer, H., *Cryogenics*, **9**, 481.
F1. Frank, J. P., Martin, D. L., 1961, *Can. J. Phys.*, **39**, 1320.
F2. Friedberg, S. A., *Temperature II*, Chapman and Hall, London, 1955, p. 359.
F3. Fiory, A. T., 1971, *Rev. Sci. Instrum.*, **42**, 930
F4. Fink, H. J., *Can. J. Phys.*, **37**, 1397.
F5. Flippen, R. B., Frederick, C. G., 1967, *Rev. Sci. Instrum.*, **38**, 137.
G1. Geballe, T. H., Lyon, D. N., Whelan, J. M., Giauque, W. F., 1952, *Rev. Sci. Instrum.*, **23**, 489.
G2. Gregory, W. D., Sheahen, T. P., Cochran, J. F., 1966, *Phys. Rev.*, **150**, 315.
H1. Hayward, A. T. J., 1963, *J. Sci. Instrum.*, **40**, 173.
H2. Hall, J. A., *Temperature II*, Chapman and Hall, London, 1955, p. 115.
H3. Hoare, F. E., Matthews, J. C., Yates, B., 1955, *Proc. Phys. Soc.*, **B68**, 388.
H4. Hill, R. W., *Progress in Cryogenics I*, Academic Press, New York, 1959, p. 179.
H5. Hart, H. R., Wheatley, J. C., 1959, *Problems of Low Temperature Physics and Thermodynamics*, Pergamon, London, p. 311.
H6. Hudson, W. R., 1968, *Rev. Sci. Instrum.*, **39**, 253.
H7. Hornung, E. W., Lyon, D. N., 1961, *Rev. Sci. Instrum.*, **32**, 684.
H8. Halverson, G., Johns, A., 1972, *Proc. Fifth Symposium on Temperature; its Measurement and Control in Science and Industry*, Reinhold, New York.
J1. Johnson, D. L., 1968, *Rev. Sci. Instrum.*, **39**, 399.
K1. Keesom, W. H., *Helium*, Elsevier, Amsterdam, 1942.
K2. Kollias, N., Dreesen, J., Giles, M., Terry, C., 1971, *Cryogenics*, **11**, 61.
K3. Kamper, R. A., Zimmerman, J. E., 1971, *J. Appl. Phys.*, **42**, 132.
L1. Lindenfeld, P., 1961, *Rev. Sci. Instrum.*, **32**, 9.
L2. Lounasmaa, O. V., 1958, *Phil. Mag.*, **3**, 652.
L3. Lindenfeld, P., *Temperature III*, Reinhold, New York.
L4. Lawless, W. N., 1971, *Rev. Sci. Instrum.*, **42**, 561.
L5. Lawless, W. N., Radebaugh, R., 1971, *Rev. Sci. Instrum.*, **42**, 567.
M1. Martin, D. L., 1966, *Phys. Rev.*, **141(2)**, 576
M2. Montgomery, H., 1958, *Proc. Roy. Soc.*, **A244**, 85.
M3. Markham, A. H., Netzel, R. G., Dillinger, J. R., 1957, *Rev. Sci. Instrum.*, **28**, 382.
M4. Mezhov-Deglen, L. P., Shal'nikov, A. I., 1969, *Cryogenics*, **9**, 60.

M5. von Middendorff, A., 1971, *Cryogenics*, **11**, 318.
P1. Powell, R. L., Bunch, M. D., Corruccini, R. J., 1961, *Cryogenics*, **1**, 139.
P2. Patronis, E. T., Marshak, H., Reynolds, C. A., Sailor, V. L., Shore, F. J., 1959, *Rev. Sci. Instrum.*, **30**, 578.
R1. Rothwarf, F., Steinberg, J., 1958, *Problems of Low Temperature Physics and Thermodynamics*, Pergamon, London, p. 117.
R2. Roberts, T. R., Sydoriak, S. G., 1956, *Phys. Rev.*, **102**, 304.
R3. Rose-Innes, A. C., 1970, *J. Phys. (E)*, **3**, 544.
R4. Rose-Innes, A. C., 1964, *Low Temperature Techniques*, English Universities Press, London, 1st Edition, p. 98.
R5. Ricketson, B. W. A., Cryogenic Calibrations Ltd., private communication.
R6. Richards, D. R., Edwards, L. R., Legvold, 1969, *J. Appl Phys.*, **40**, 3836.
R7. Rubin, L. G., Lawless, W. N., 1971, *Rev. Sci. Instrum.*, **42**, 571.
R8. Rose-Innes, A. C., Rhoderick, E. H., 1969, *Introduction to Superconductivity*, Pergamon, Oxford.
S1. Snyder, N. S., 1970, *Cryogenics*, **10**, 89.
S2. Stimson, H. F., *Temperature II*, Chapman and Hall, London, 1955, p. 141.
S3. Star, W. M., van Dam, J. E., van Baarle, C., 1969, *J. Sci. Instrum.*, **2**, 257.
S4. Sparks, L. L., Powell, R. L., Hall, W. J., 1968, N.B.S. report 9712, National Bureau of Standards, Boulder, Colorado 80302, U.S.A.
S5. Shore, F. J., Williamson, R. S., 1966, *Rev. Sci. Instrum.*, **37**, 787.
U1. Unsworth, J., Rose-Innes, A. C., 1966, *Cryogenics*, **6**, 239.
V1. de Vroomen, A. R., 1958, *Problems of Low Temperature Physics and Thermodynamics*, Pergamon, London, 1959, p. 137.
W1. Woodcock, A. H., 1938, *Can. J. Res.*, **A16**, 133.
W2. White, G. K., Woods, S. B., *Low Temperature Physics and Chemistry*, Vth International Conference on Low Temperature Physics and Chemistry, University of Wisconsin Press, 1958, 209.
W3. White, G. K., *Experimental Techniques in Low Temperature Physics*, Clarendon Press, Oxford, 1959.
W4. Weitzel, D. H., Park, O. E., 1956, *Rev. Sci. Instrum.*, **27**, 57. Weitzel, D. H., Lobenstein, W. V., Draper, J. W., Park, O. E., 1958, *J. Res. National Bureau of Standards*, **60**, 221.
W5. Wooley, H. W., Scott, R. W., Brickwedde, F. G., 1948, *J. Res. Nat. Bur. Standards*, **41**, 379.
Z1. Zimmerman, J. E., Arrott, A., Skalyo, J., 1958, *Rev. Sci., Instrum.*, **29**, 1148.
Z2. Zavaritskii, N. V., Shal'nikov, A. I., 1961, *Cryogenics*, **1**, 235.

CHAPTER 5

CONTROL OF TEMPERATURE

When discussing control of temperature we can distinguish between three situations. First, the desired temperatures can be obtained by immersing the apparatus in a liquid coolant. In this case the problem is that of maintaining the coolant at the required temperature, usually by controlling the pressure over the liquid. The second situation arises when the desired temperatures lie above the normal boiling point of the liquid coolant. In this case we can put the apparatus into poor thermal contact with the coolant, and supply heat at a rate such that the temperature is raised to the required level. Alternatively, we can cool the apparatus by a stream of cold gas which has been precooled by contact with the liquid coolant. As a third case we must consider the possibility of connecting apparatus to some form of refrigerator, and controlling the refrigeration rate so that the desired temperatures are obtained without the use of liquid coolant.

5.1 Control of Vapour Pressure

The temperature of a boiling liquid depends on the pressure over its surface; the lower the pressure the lower the temperature. It is worth noting that the pressure of the atmosphere can vary over a range of about ± 50 torr, and hence liquid helium boiling under atmospheric pressure may vary in temperature between about $4 \cdot 1$ and $4 \cdot 3$K.

We can control the temperature of an apparatus immersed in a liquid refrigerant by controlling the pressure in the container. With liquid helium, temperatures can be obtained from about 5K down to a minimum of about $0 \cdot 75$K (see §3·5). The liquid evaporates continuously as a result of heat leaks into the cryostat and heat generated by the apparatus, and so, in order to maintain the temperature constant, the vapour must be pumped away at just the rate at which it is generated, i.e. the pumping speed must be correctly adjusted. The simple way of doing this is by manual control of a valve in the pipe leading from the cryostat to the pump. It is convenient to have a needle valve in parallel with a large aperture valve as shown in Fig. **5.1**(i). Temperatures down to about 2K can be obtained by pumping through the smaller valve, and the larger valve is opened to obtain lower temperatures. An alternative method of controlling the pumping speed is to feed a controlled flow of gas into the input of the pump, as shown in Fig. **5.1**(ii). This method, useful at low pressures, avoids the use of large valves in the main pumping line.

If valves are chosen which are free from backlash it is quite easy to

maintain a constant temperature. The constancy achieved depends to a large extent on the sensitivity of the device used to indicate temperature changes. For this purpose a differential oil manometer of the type shown in Fig. **5.2** is very suitable. With the tap T open, the pumping speed to the cryostat is adjusted until the desired temperature is reached. Tap T is then closed, so that reference gas at the required pressure is trapped in the right-hand side of the manometer. The temperature of the helium in the cryostat may now be kept constant by slight adjustments of the pumping speed to keep the two oil levels in alignment. It is of course

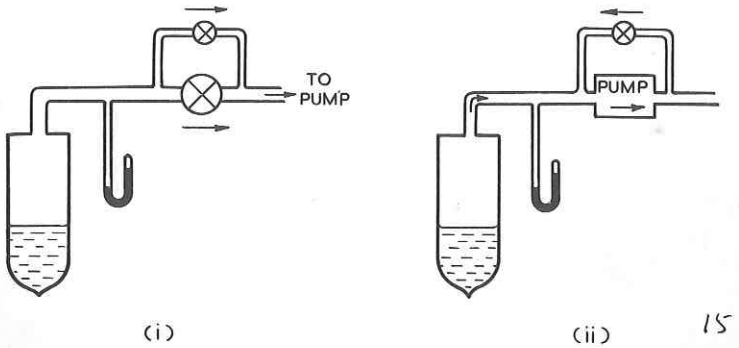

Fig. **5.1**. Simple Methods of Controlling Temperature of a Boiling Liquid

necessary to keep the tap T open when the temperature of the cryostat is being deliberately changed. Sooner or later, however, the experimenter will forget to do this, and so it is important to include the bulbs B to prevent oil from entering the apparatus. If the temperature of the reference gas varies, its pressure will change. The effect of this, however, is small;

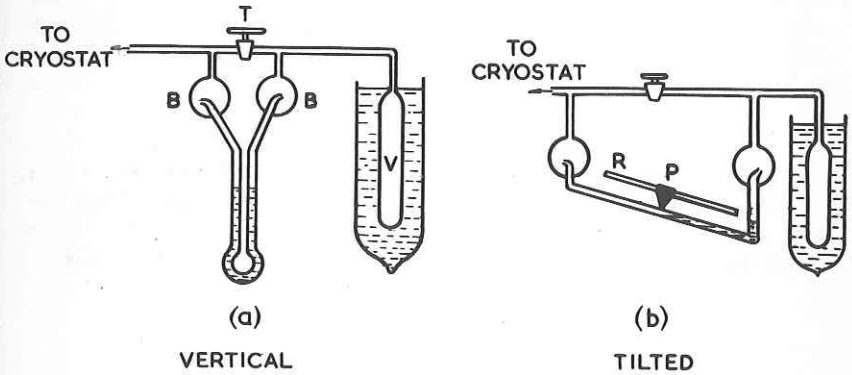

Fig. **5.2**. Oil Manometers for Temperature Control

a room temperature variation of 5° produces a pressure change in the manometer equivalent to a change of only about 0·3% in the temperature of liquid helium. When a high degree of temperature stability is wanted, we may prevent such pressure changes by including the bulb V immersed in a Dewar vessel of oil. If the volume of this bulb is large compared to the other volumes on the right-hand side of the manometer, the reference pressure will not alter appreciably with changes in room temperature. An even more accurate control of temperature may be obtained by use of the tilted manometer shown in Fig. 5.2b. The pointer P, which slides on the Rail R, is set on the oil meniscus when the tap is closed. A small change in pressure causes a large sideways shift of the meniscus and very accurate pressure control can be maintained.

•It may be convenient to regulate the temperature of the coolant automatically. There are several simple devices which accomplish this by automatically adjusting the pumping speed so as to keep the vapour pressure constant at any desired value. An effective yet very simple device, based on a method described by Walker (W1), is shown in Fig. 5.3(a). The inlet pipe A is connected to the cryostat and the outlet pipe B to the pump. The two pipes are joined inside the vacuum-tight container C by a very thin-walled rubber tube T.* With the valve D open, so that there is the same pressure inside and outside T, the cryostat is pumped through T down to the desired pressure. When this is reached, valve D is closed so that the correct reference pressure is trapped around the outside of T. The pump would continue to reduce the pressure but the tube collapses under the excess pressure outside it, and so shuts off the pump. When the pressure in the cryostat rises above the reference pressure, tube T opens slightly allowing the pump to reduce the pressure. T should be long enough to be slack so that it can crumple up completely under an external pressure. The ends of the pipes A and B are closed with a wire gauze so that the tube cannot be sucked inside them. Another slightly more complicated device, called a Cartesian manostat (G1) is shown in Fig. 5.3b. In this instrument the reference pressure is trapped inside a float F which floats on a pool of mercury. The top of F is sealed by a rubber membrane. If the pressure in the cryostat, and hence above F, falls below the reference pressure inside F, the float rises and the diaphragm presses against the orifice O, shutting off the pump. Glass pips on the side of the float centre it in the tube and yet allow a free rise and fall. The diameter of O must be much less than the diameter of the top of F, otherwise, after the orifice has been closed, the membrane will be held up there for some time by suction (since the pump will now evacuate the tube above O), even while the pressure in the cryostat increases. This would give rise to large amplitude oscillations of the

*e.g. Surgeon's latex finger cot, manufactured by Durex Ltd.

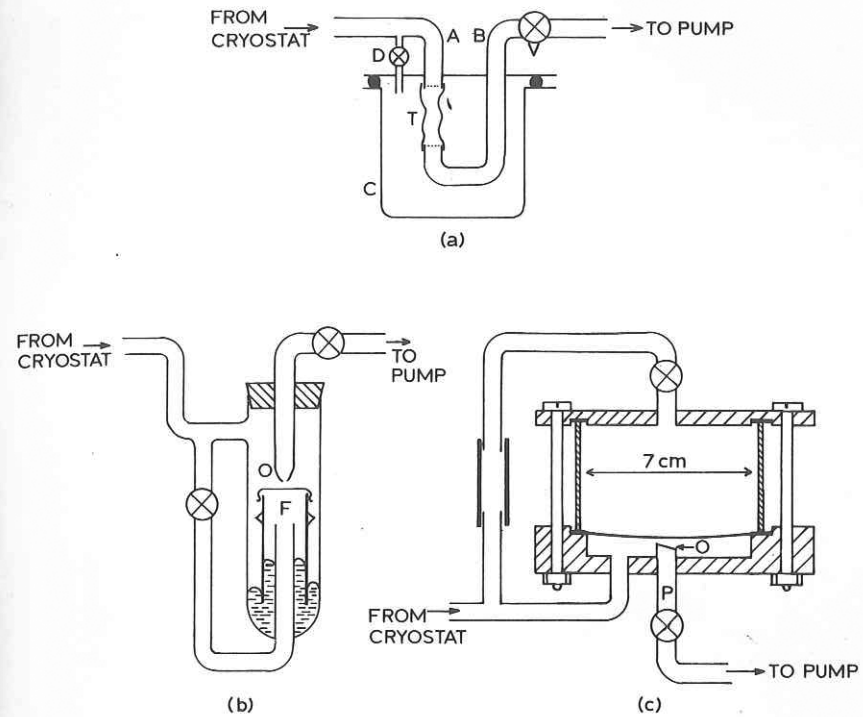

Fig. 5.3. Automatic Pressure Controllers

cryostat pressure. Even when operating correctly, the float may vibrate giving a very small pressure oscillation about the mean value. The need for a small orifice limits the pumping speed, and therefore limits the minimum temperature which can be obtained by pumping through this device. A metal version of this manostat can be bought (Appendix 29).

Figure 5.3(c) shows an easily-constructed and effective manostat that employs a rubber diaphragm, about 1·5 mm thick, which, when there is a pressure difference across it, bows out and blocks the pumping orifice O (K1). The performance of this manostat is greatly improved if the orifice O is cut slightly on the slant as shown. If the opening is square to the tube, the diaphragm completely shuts the opening when the cryostat pressure falls below the reference pressure. The pumping tube P then becomes completely evacuated, sucking the diaphragm hard against its inlet. As a result the diaphragm does not lift off until the cryostat pressure has risen appreciably above the reference pressure, with the result that the pressure fluctuates in sharp jumps. A slanting orifice ensures a more gradual closing and opening of the inlet by the diaphragm. This manostat is effective down to a cryostat pressure of about 6 torr (1·6K).

At vapour pressures so low that the simple manostats described above do not work properly, or where a very high degree of temperature stability is needed, an electrical heater may be used to control the temperature of a liquid helium bath. Fig. 5.4 shows a very simple arrangement in which changes in the level of a differential oil manometer are detected photoelectrically, and the resulting signal controls current through a heater in the liquid helium. That part of the differential manometer tube which contains the oil forms a cylindrical lens that focuses light from a small electric lamp placed against it into a line image a few millimetres away.

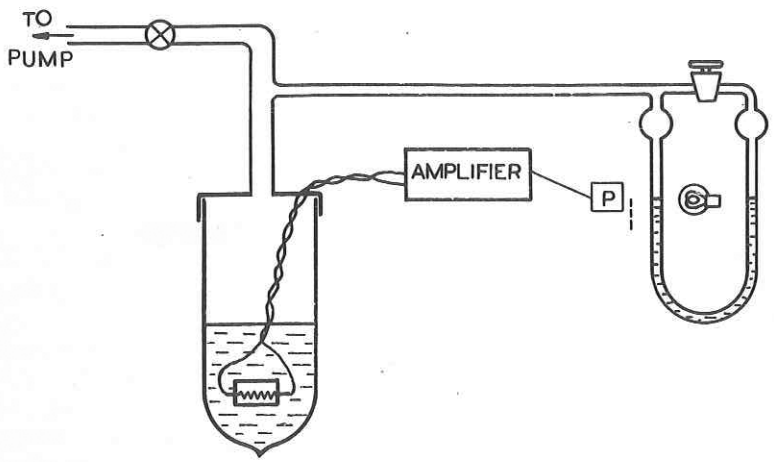

Fig. 5.4. Vapour Pressure Control System (after Adkins, A1)

A phototransistor P is placed in the image plane so that the illumination of its sensitive area by the bright line increases as the oil level rises. This phototransistor forms the first stage of a simple three-stage transistor amplifier of which the third stage drives a heater in the liquid helium, raising the heater current when the illumination of the phototransistor increases. The instrument can stabilise the oil height to within 0·2 mm, equivalent to a vapour pressure variation of 0·015 torr, or a temperature stability of 0·2% at 1·3K. The temperature regulation will be even better at higher temperatures.

Alternatively, a resistance thermometer may be used to detect changes in the temperature of the liquid. In the system described by Forstat and Novak (F1) a carbon resistor forms one arm of a Wheatstone bridge. When the liquid has been pumped to the desired temperature the bridge

is balanced. Any subsequent variation of temperature causes the galvanometer of the bridge to deflect and thereby change the illumination of a photocell placed against its scale. This photocell controls, via an amplifier, the current through a heater in the liquid in such a manner as to correct for the temperature change.●

5.2 Control above 4·2K

Liquid nitrogen normally boils at 77K but can be cooled to about 55K by reducing the pressure in the container with a rotary pump. Liquid oxygen normally boils at about 90K and it can also be cooled by pumping away the vapour. However, temperatures below 77K are more satisfactorily obtained with liquid nitrogen, because liquid oxygen tends to superheat and the temperature deduced from the pressure over the liquid may be considerably less than the true temperature. Furthermore, lower temperatures can be reached with nitrogen than with oxygen, which can only be cooled to about 65K. If oxygen is pumped, any rotory pump should be filled with a special oil, such as tricresolphosphate or Cellulube 300 (Appendix 30), in order to avoid the risk of explosion.

We now describe some methods for obtaining and holding temperatures outside the ranges covered by liquid coolants, for example, between 4·2 and 55K if only liquid helium and nitrogen are available. It may be noted that the methods described do not involve chambers which have to be vacuum-tight at low temperature or vacuum seals which have to be broken and remade when specimens are changed.

The temperature of liquid helium may be raised about 1° by allowing the vapour pressure to increase above atmospheric pressure. A glass Dewar vessel, tightly sealed to its cap, should be able to withstand an overpressure of about 1 atmos., under which condition the temperature will be about 5K. The critical temperature of helium is 5·2K and the critical pressure 1711 torr. Pressure rises rapidly with temperature in this region, so, if liquid helium is heated above its normal boiling point, some form of safety valve should be attached to the cryostat (see Fig. 3.5).

The simplest and crudest method of covering a wide temperature range is to lower an apparatus into a Dewar vessel to some distance above the level of the liquid helium, when the apparatus will take up some temperature between 4·2K and room temperature. This method is satisfactory for rough measurements but one cannot expect good control of temperature, especially as temperature gradients in a Dewar vessel are often very steep and confined to a narrow region (C1).

A more refined method of temperature control is shown in Fig. 5.5. The experiment is contained within a thick-walled (say 3 mm) copper chamber C which is suspended by a thin alloy tube T. On to the bottom of C is screwed a rod A whose upper part is made of brass and lower part of copper. This rod dips into the liquid helium. Conduction along the rod tends to cool the chamber down to the temperature of the liquid,

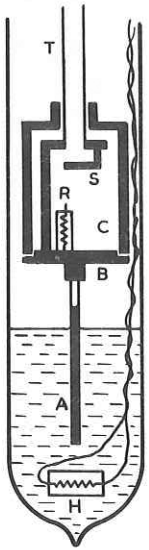

Fig. 5.5. Apparatus for Obtaining Temperatures above that of Liquid Helium

but, by supplying power to the heater *R*, a temperature drop can be established across the rod and the chamber raised to a higher temperature. The reason for making the lower part of the rod of copper, a good heat conductor, is so that the heating power does not need much adjustment as the liquid level falls. Electrical leads to *R* and to apparatus within the chamber may be brought down the tube *T*. *S* is a shield to screen apparatus inside the experimental chamber from radiation coming down this tube. Chamber *C* is not gas-tight, and so is full of helium gas at about atmospheric pressure. This gas maintains a constant temperature throughout the interior of the chamber. If more convenient, the heater *R* may be mounted on the outside of the chamber. An ordinary radio resistor is suitable as a heater. A wire-wound resistor is more convenient than a carbon composition one because its resistance does not vary very much with temperature. If a heater is required whose resistance is almost completely independent of temperature, it may be made from 'Karma' resistance wire (Appendix 21) whose resistance varies by only about 1% between room temperature and 4K. Another heater *H*, at the bottom of the liquid helium, serves two purposes. Even when no power is being supplied to the resistor *R*, the chamber, as a result of heat leaks into it, will be at a temperature slightly above that of the liquid helium. If we wish to make measurements very close to 4·2K we use the heater *H* to evaporate some helium so that a stream of cold gas cools the chamber.

The apparatus may also be used for experiments below 4·2K. For work in this range the Dewar vessel is initially filled with liquid helium to a level above the chamber. The temperature is then lowered by reducing the pressure in the usual way. If we wish to continue with experiments above 4·2K the excess helium is boiled off by means of the heater *H* until the level has fallen below the chamber. In the particular construction shown in Fig. **5.5** the upper part of the chamber rests loosely on the base *B* and may be slid up tube *T* to give access to the apparatus inside. A great advantage of this method of temperature control is that no high vacuum enclosures are needed and one does not have to open and remake leak-tight seals in order to get at the apparatus.

Figure **5.6** shows another simple method of obtaining temperatures above 4·2K. The specimen holder *H* is mounted at the top of a post *P* of insulating material (e.g. Tufnol) about 80 mm long. This post is

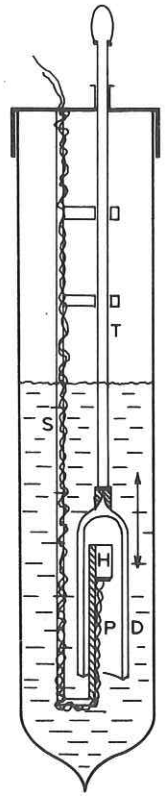

Fig. 5.6. 'Inverted dewar' method of obtaining temperatures above 4·2K (Zakrzewski and Dziuba, Z1)

connected by a horizontal strut to a thin-walled alloy tube *S* which supports it from the cryostat cap. *D* is a small inverted glass Dewar vessel, which need not be silvered, open at the lower end, and attached to the thin-walled alloy tube *T*. *T* passes through a sliding seal in the cryostat cap and so the inverted dewar may be raised and lowered to be either above or to surround the specimen holder and supporting post. Initially the main Dewar vessel is filled with liquid helium while *D* is held above the specimen holder *H* which is therefore cooled to 4·2K. To obtain higher temperatures, the small inverted dewar *D* is lowered to surround the specimen holder and supporting post, as shown in the figure. Current is now passed through an electrical heater attached to *H*; the inside of the inverted dewar fills with gas and so the specimen holder becomes isolated from the liquid helium. *H* may now be heated to any desired temperature. Electrical leads to this heater and to the specimen are strapped to the insulating post *P* and the supporting tube *S*. Because these leads pass through the liquid helium they cannot conduct unwanted heat to the specimen.

Figure **5.7** shows an extremely simple device for obtaining temperatures above 4·2K in any metal cryostat dewar which has a narrow tail made from poor thermal conductivity material (e.g. stainless steel). This method requires no modification of the dewar. *T* is the tail section of the liquid helium container. The specimen holder *S* is attached to the outside of the copper base *B* in the usual way. *P* is a plug of foamed plastic, about 30 mm high, to the bottom of which is attached the copper former *C*.

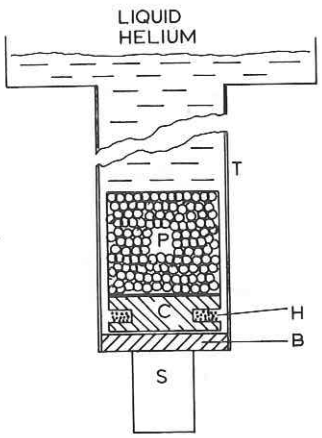

Fig. **5.7**. Variable temperature device for tailed dewar (based on Welber and Tynan, W2)

On *C* is wound a heater *H*. The diameter of *P* and *C* is slightly less than the inside diameter of the tail so that, when they are in position at the bottom of the tail, an annular space a fraction of a millimeter wide is left between them and the wall. The copper former *C* may be anchored to the base by a coating of grease. When the dewar is filled with liquid helium, the cold liquid runs down the annular space between the plug and the wall, and the specimen holder is cooled to 4·2K. When higher temperatures are needed, heat is supplied to the heater. This heat vapourises the helium so that the annular space around the plug becomes filled with gas which forces the liquid helium up to the top of the plug. Both the helium gas around the plug, and the plug itself, are poor heat conductors so the temperature of *C*, and consequently of *H*, can be raised to the desired value. Very little power is needed; for example, when the specimen holder is being held at 40K the evaporation rate of the liquid helium is only increased by about 100 ml/h. The temperature can be quickly returned to 4·2K by cessation of the heating.

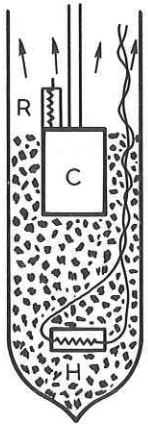

Fig. **5.8**. Temperature control by desorption

Temperatures above 4·2K may be obtained and controlled very simply for limited periods by a desorption method (R1). In the simplest arrangement, shown in Fig. **5.8**, the experimental chamber *C* is surrounded by granular charcoal which is poured in to fill the bottom of the Dewar vessel. After precooling to liquid nitrogen temperature in the usual way, liquid helium is syphoned in to fill the vessel to some level above *C*. Any measurements that are needed below 4·2K may first be carried out by lowering the vapour pressure in the usual way. When temperatures above 4·2K are required, the remaining liquid helium is boiled off at atmospheric pressure by means of the heater *H* at the bottom of the