GEISTER

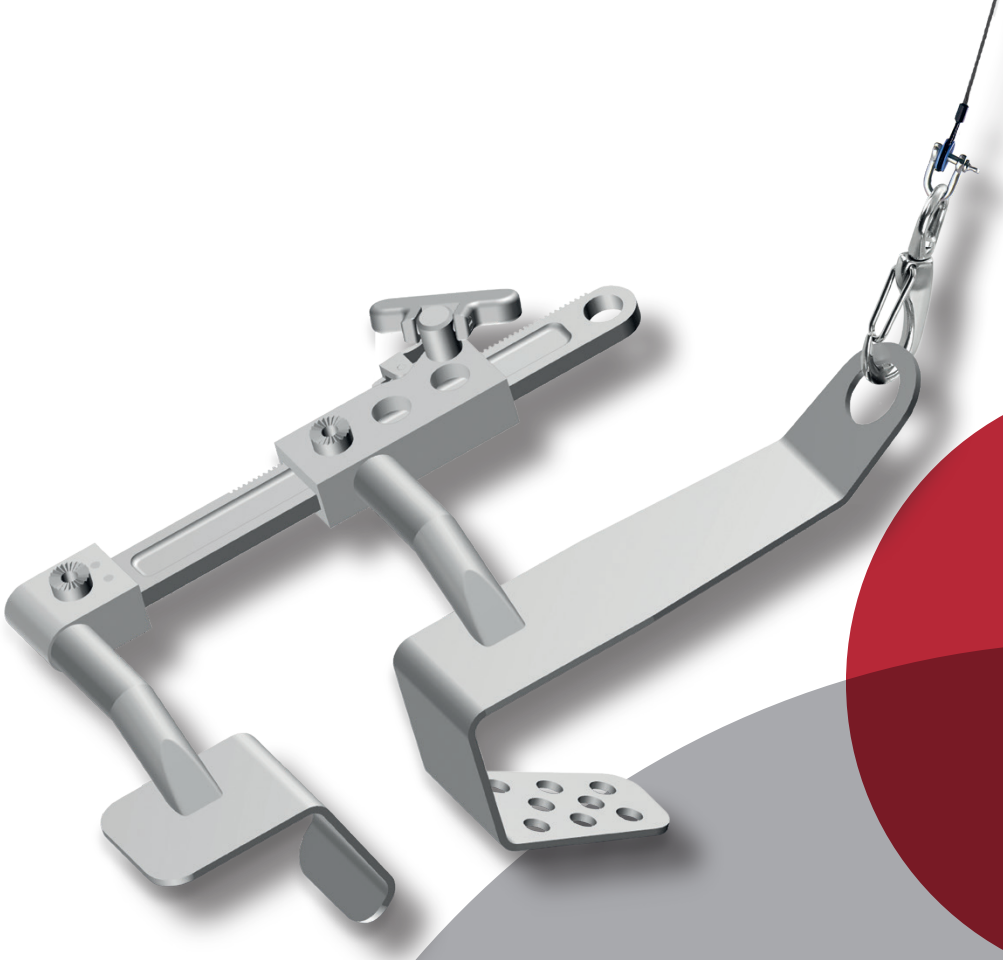

IMAGATE™

HIGHLIGHT

IMAgate™

Retractor system with modular components that can be customized for different surgical procedures.

Body

Art.-No.	Description
29-1180	Body only

Technical changes, which serve progress and misprint reserved.

Lifting Blades

	Art.-No.	Description
1	29-1182	80 x 45 / 32 mm, with hole
2	29-1183	80 x 45 / 32 mm
3	29-1184	75 x 60 / 26 mm, with depressor

Sternal and Lateral Blades

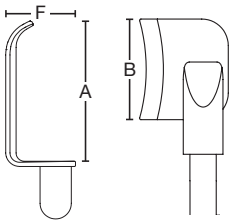

	Art.-No.	A x B / F	Description
4	29-1185	70 x 45 / 30 mm	concave, left/upper
5	29-1186	70 x 45 / 30 mm	concave, right/lower
5	29-1188	70 x 38 / 30 mm	concave, right/lower
4	29-1189	70 x 38 / 30 mm	concave, left/lower
6	29-1191	50 x 45 / 70 mm	right/lower, depressor
7	29-1192	23 x 35 / 50 mm	right/lower, depressor
6	29-1197	50 x 38 / 70 mm	right/lower, depressor
8	29-1198	50 x 45 / 70 mm	left/lower, depressor
8	29-1199	50 x 38 / 70 mm	left/lower, depressor

Depressor wings

	Art.-No.	Description
9	29-1193	20 x 50 mm, right, with soft tissue depressor wings
10	29-1194	20 x 50 mm, left, with soft tissue depressor wings

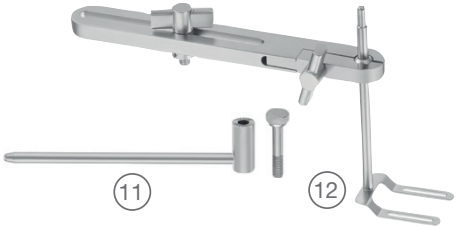

T-Bar and Tissue Stabilizer

	Art.-No.	Description
11	29-1195	T-Bar
12	29-1196	Stabilizer

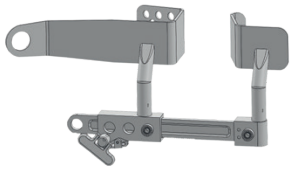

Combination 1

29-1180 + 29-1182 +
29-1191 + 29-1175*

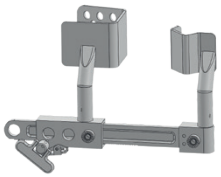

Combination 2

29-1180 + 29-1183 +
29-1192 + 29-1175*

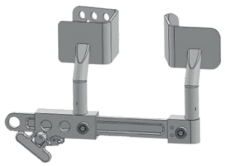

Combination 3

29-1180 + 29-1183 +
29-1191 + 29-1175*

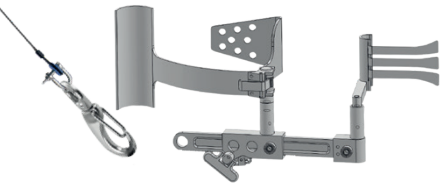

Combination 4

29-1180 + 29-1184 + 29-1194

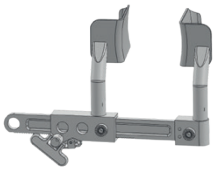

Combination 5

29-1180 + 29-1185 + 29-1186

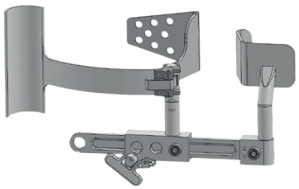

Combination 6

29-1180 + 29-1184 + 29-1191

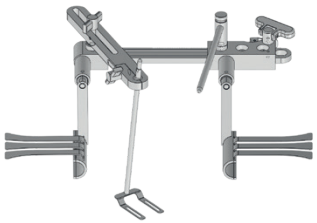

Combination 7

with soft tissue depressor wings

29-1180 + 29-1193 +
29-1194 + (29-1195) + 29-1196

*Or you can use with height adjustable lift system 29-1176.

Technical changes, which serve progress and misprint reserved.

29-1175

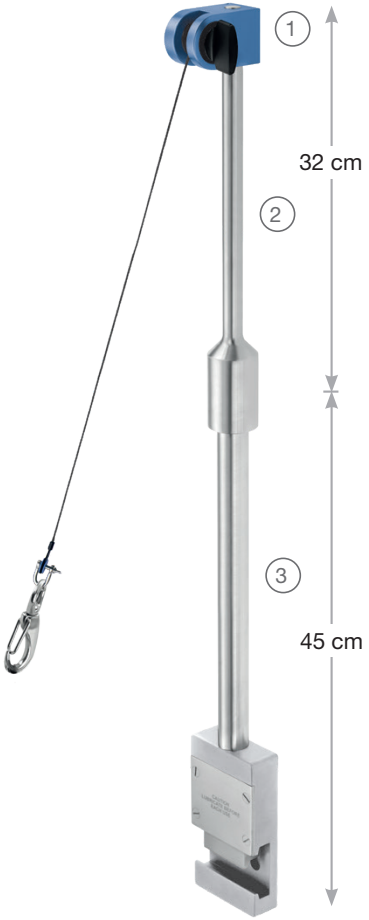

29-1176

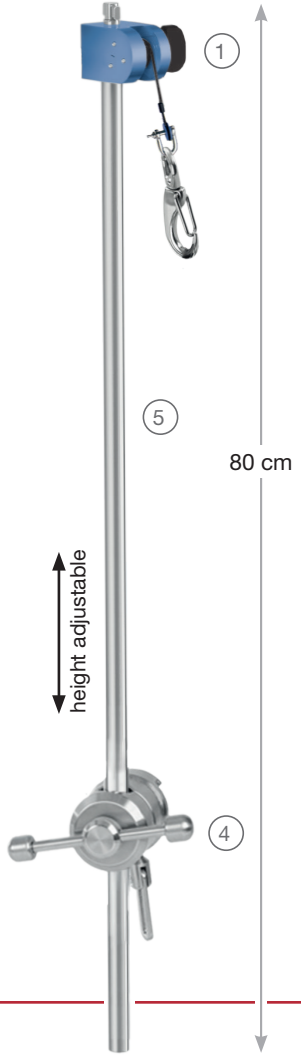

For lateral tension:

complete

	Art.-No.	Description	Qty.
	29-1175	**Consisting of:**	
1	29-3730.90	Adjustable cable winch retractor	1 ea
2	29-1175.10	Upper handle bar, 32 cm	1 ea
3	30-3131	Table Post 25 mm, 45 cm	1 ea

complete

	Art.-No.	Description	Qty.
	29-1176	**Consisting of:**	
1	29-3730.90	Adjustable cable winch retractor	1 ea
4	29-1476.1	Fixation element for Wire Lift System	1 ea
5	29-1176.10	handle bar, 80 cm	1 ea

Technical changes, which serve progress and misprint reserved.

Recommended combination

Art.-No.	Description	A
29-3730.10	Table Post 25 mm, Tractator™	45 cm
29-3730.10L	Table Post 25 mm, Tractator™	60 cm

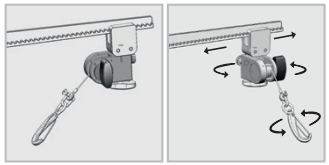

360° moveable

Art.-No.	Description
29-3730.70	Special crank housing kit Tractator™

Combination
29-1180 + 29-1182 + 29-1192

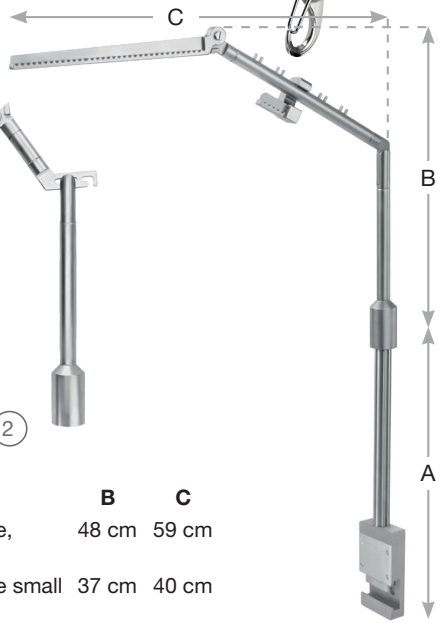

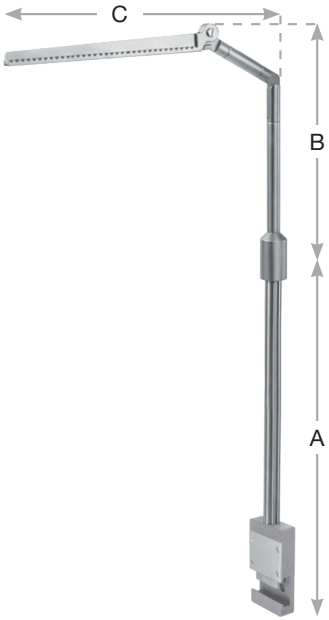

	Art.-No.	Description	B	C
1	29-3730.20	Upper bar foldable, Tractator™	48 cm	59 cm
2	29-3730.21	Upper bar foldable small Tractator™	37 cm	40 cm

Set Option 1	Set Option 2
29-3730.10	29-3730.10L
29-3730.20	29-3730.21
29-3730.70	29-3730.70
29-1180	29-1180
29-1182	29-1182
29-1192	29-1192

Technical changes, which serve progress and misprint reserved.

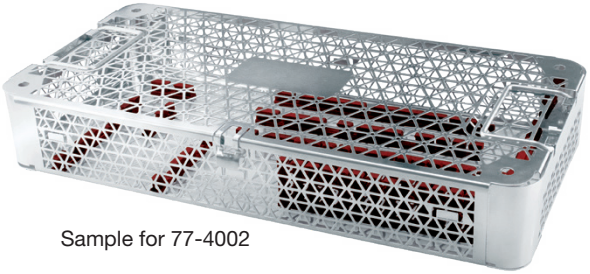

Sample for 77-4002

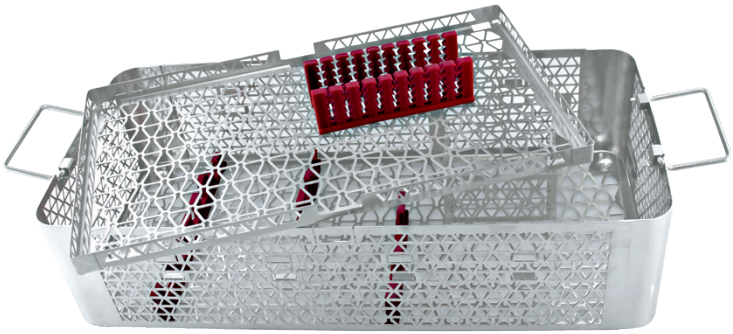

77-4001

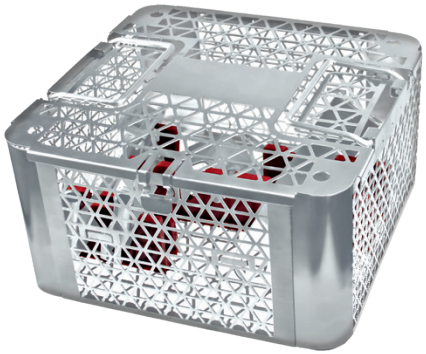

77-4004

Storage sieve Basket

for SurgiBox™ 600, 1/1 size

Art-No.	Description	for example	high
77-4001	for Tractator™	for 29-3760	130 mm
77-4002	for IMAgate™ winch retractor alone	for 29-1175	80 mm
77-4003	for IMAgate™ Retractor with valve set	for 29-1180 to 29-1194	130 mm

for SurgiBox™ 300, 1/2 size

Art-No.	Description	for example	high
77-4004	for IMAgate™ small	to 29-1180, 29-1182, 29-1191, 29-1192	130 mm

Technical changes, which serve progress and misprint reserved.

The better way to operate™

GEISTER®

GEISTER MEDIZINTECHNIK GMBH

Föhrenstrasse 2 | D-78532 Tuttlingen | Germany

☎ +49 7461/966240 | 🖷 +49 7461/9662422

www.geister.com

© Geister Medizintechnik GmbH 2025 | All rights reserved | Ref-Nr. 99-9135.1 | Rev. D

Technical changes, which serve progress and misprint reserved. Some products in this catalogue may not be approved in your country. Please contact your local dealer for more information.