GEISTER

PHLEBECTOMY INSTRUMENTS

SPECIALIST

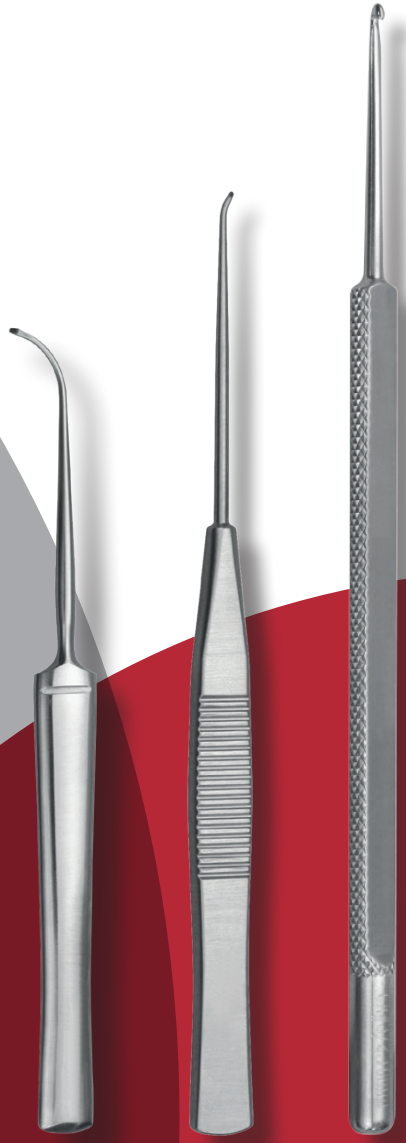

Oesch

right-handed

Fig.	Art.-No.	length mm / ''	description
A	28-0320	165 / 6 ½	Fig. 1
B	28-0321	165 / 6 ½	Fig .2
C	28-0322	165 / 6 ½	Fig. 3

right-handed, very delicate, black coated

Fig.	Art.-No.	length mm / ''	description
D	28-0323	165 / 6 ½	Oesch Hook with finest tip of all. For the reduction of abrasion it is black coated.

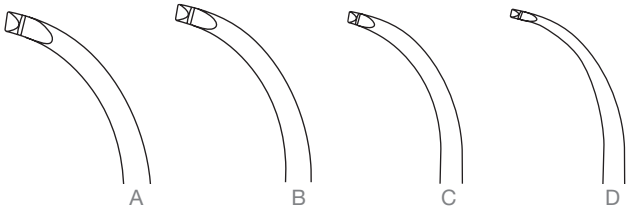

left-handed

Fig.	Art.-No.	length mm / ''	description
E	28-0325	165 / 6 ½	Fig. 1
F	28-0326	165 / 6 ½	Fig. 2
G	28-0327	165 / 6 ½	Fig. 3

left-handed, very delicate, black coated

Fig.	Art.-No.	length mm / ''	description
H	28-0328	165 / 6 ½	Fig.4 Oesch Hook with finest tip of all. For the reduction of abrasion it is black coated.

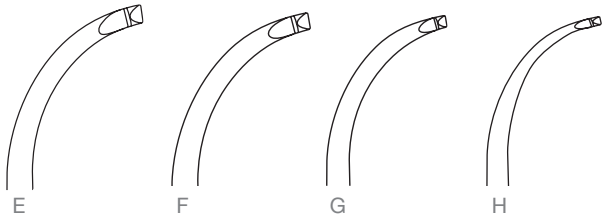

Oesch

Illustrations not 1:1

Oesch black titanium coated

This instrument shows the finest tip of all Oesch-hooks. For the reduction of abrasion it´s black coated.

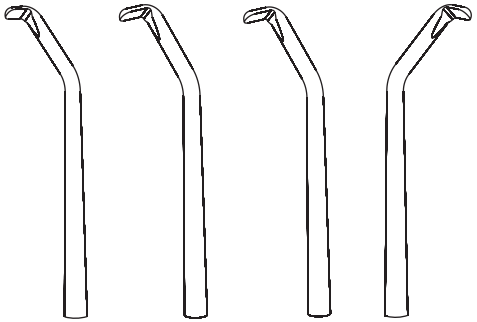

Ramelet

right-handed

Fig.	Art.-No.	length mm / "
A	28-0350	100 / 4
B	28-0351	100 / 4

left-handed

Fig.	Art.-No.	length mm / "
C	28-0355	100 / 4
D	28-0356	100 / 4

Ramelet II

right-handed

Fig.	Art.-No.	length mm / "
A	28-0340	125 / 5
B	28-0341	125 / 5

left-handed

Fig.	Art.-No.	length mm / "
C	28-0345	125 / 5
D	28-0346	125 / 5

Ramelet

Ramelet II

Illustrations not 1:1

Ramelet clamp for polypectomy

Fig.	Art.-No.	length mm
E	28-0359	125 / 5

Müller

right-handed

Fig.	Art.-No.	length mm / ''	description
A	28-0330	125 / 5	Fig. 1
B	28-0331	125 / 5	Fig. 2
C	28-0332	125 / 5	Fig. 3
D	28-0333	125 / 5	Fig. 4

left-handed

Fig.	Art.-No.	length mm	
E	28-0335	125 / 5	Fig. 5
F	28-0336	125 / 5	Fig. 6
G	28-0337	125 / 5	Fig. 7
H	28-0338	125 / 5	Fig. 8

Müller

Illustrations not 1:1

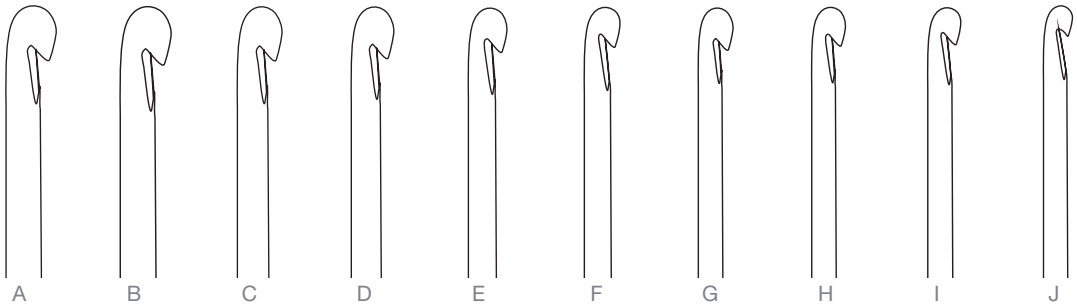

Crochet

Fig.	Art.-No.	tip mm	length mm / "
A	28-0360	3.00	150 / 6
B	28-0361	2.75	150 / 6
C	28-0362	2.60	150 / 6
D	28-0363	2.45	150 / 6
E	28-0364	2.30	150 / 6
F	28-0365	2.15	150 / 6
G	28-0366	2.00	150 / 6
H	28-0367	1.85	150 / 6
I	28-0368	1.70	150 / 6
J	28-0369	1.55	150 / 6

Crochet

Illustrations not 1:1

Varady

Phlebodissector

Fig.	Art.-No.	length mm / ''
A	28-0301	180 / 7

Phlebextractor

Fig.	Art.-No.	length mm / ''	description
B	28-0302	180 / 7	Spatula/ball 2mm
C	28-0303	180 / 7	Spatula/hook 1,7mm

Micro-Double-Spatula

Fig.	Art.-No.	length mm / ''
D	28-0304	175 / 7

Micro-Phlebextractor

Fig.	Art.-No.	length mm / ''
E	28-0305	170 / 6 ¾

Mini-Phlebextractor

Fig.	Art.-No.	length mm / ''
F	28-0306	170 / 6 ¾

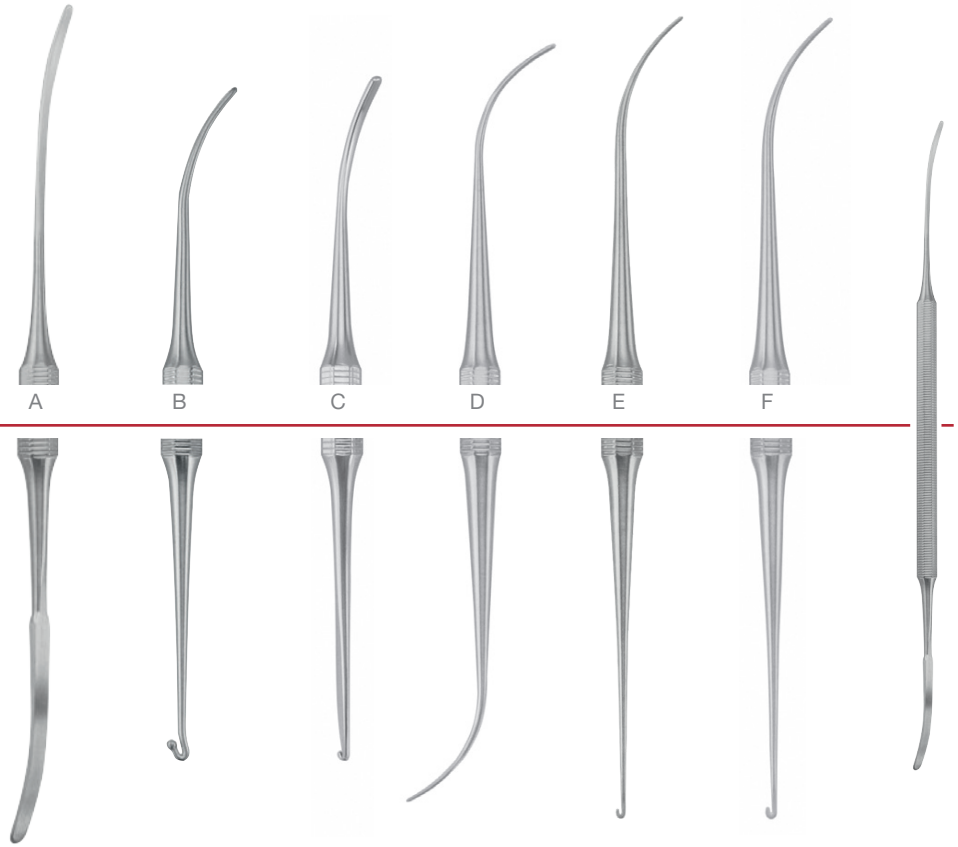

Illustrations not 1:1

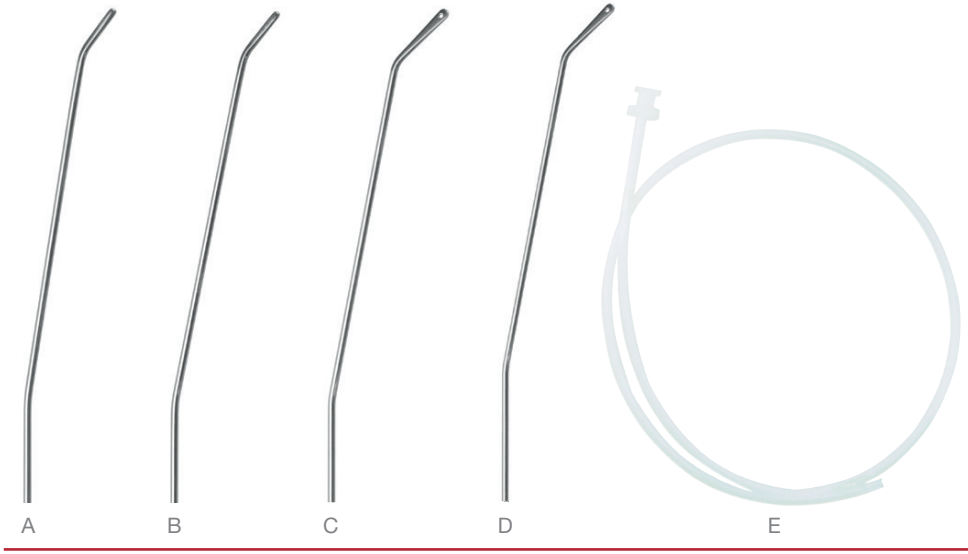

Oesch Recovery

Fig.	Art.-No.	length mm / "	description
A	28-0310	300 / 11 ¾	Parva, 1.8 mm
B	28-0311	520 / 20 ½	Magna 2 mm
C	28-0312	520 / 20 ½	Retriever 2 mm
D	28-0313	520 / 20 ½	2 mm, without rinse tube
E	28-0314	600 / 23 ½	Rinse tube Luer-Lock

Illustrations not 1:1

Scalpel Handles

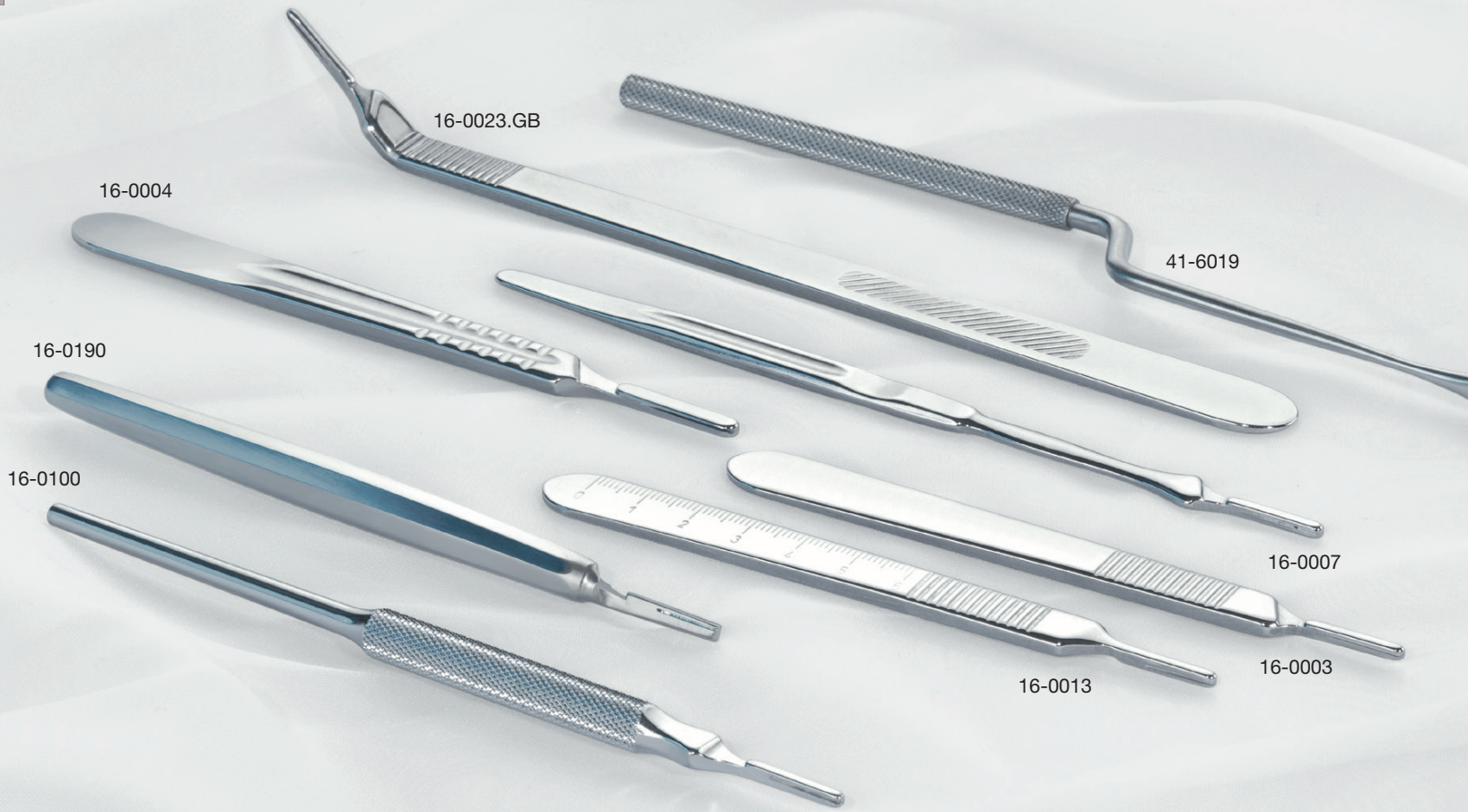

Handles

for Blades 16-2018 until 16-2036

Art.-No.	length mm / "	description
16-0004	135 / 5 1/4	Fig. 4
16-0014	210 / 8 1/4	Fig. 4L, long

for Blades 16-2009.E until 16-2017.E

Art.-No.	length mm / "	description
16-0003	125 / 5	Fig. 3
16-0013	125 / 5	Fig. 3, with scale
16-0023	210 / 8 1/4	Fig. 3L, long,
16-0023.GB	200 / 8	Fig. 3L, long, angled up
16-0007	160 / 6 1/4	Fig. 7L, long
16-0017	120 / 4 3/4	Fig. 7K, short
16-0100	150 / 6	round handle, Fig. 3
16-0102	145 / 5 3/4	round handle, Fig. 3, angled up
16-0190	135 / 5 1/4	Barron, Fig. 3
41-6019	210 / 8 1/4	Landolt, Fig. 3

Ruettgers®

Sterile, pack of 100 Pieces

for handle Fig. 3

Fig.	Art.-No.	description
A	16-2009.E/CE	# 9E
B	16-2010/CE	# 10
C	16-2010.A/CE	# 10A
D	16-2011/CE	# 11
E	16-2012/CE	# 12
F	16-2012.D/CE	# 12D
G	16-2013/CE	# 13
H	16-2014/CE	# 14
I	16-2015/CE	# 15
J	16-2015.C/CE	# 15C
K	16-2015.E/CE	# 15E
L	16-2017/CE	# 17

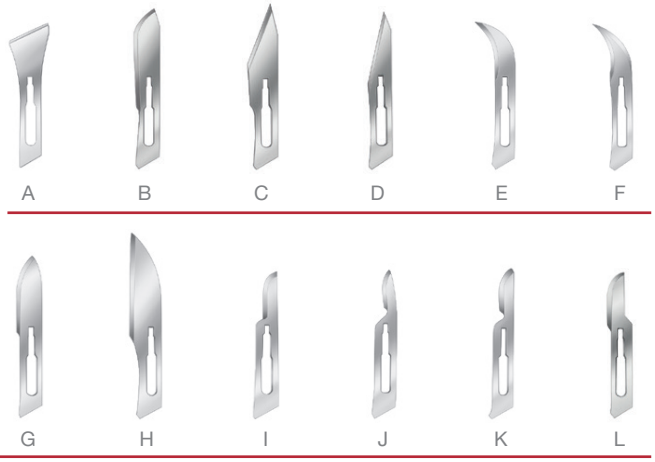

for handle Fig. 4

Fig.	Art.-No.	description
Q	16-2018/CE	# 18
R	16-2019/CE	# 19
S	16-2020/CE	# 20
T	16-2021/CE	# 21
U	16-2022/CE	# 22
V	16-2023/CE	# 23
W	16-2024/CE	# 24
X	16-2025/CE	# 25
Y	16-2034/CE	# 34
Z	16-2036/CE	# 36

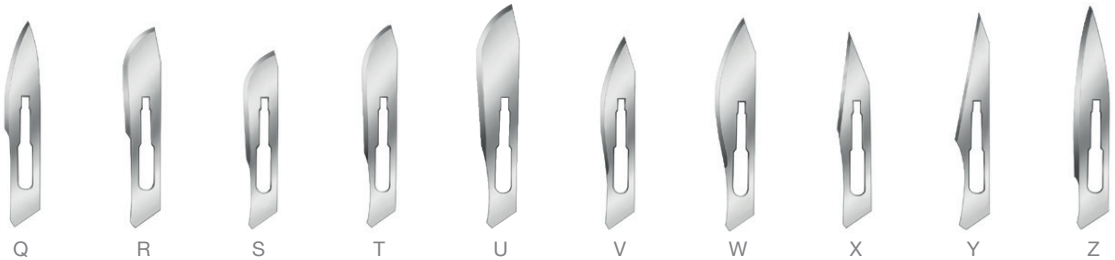

Illustrations not 1:1

GEISTER®

Microsurgical Knife

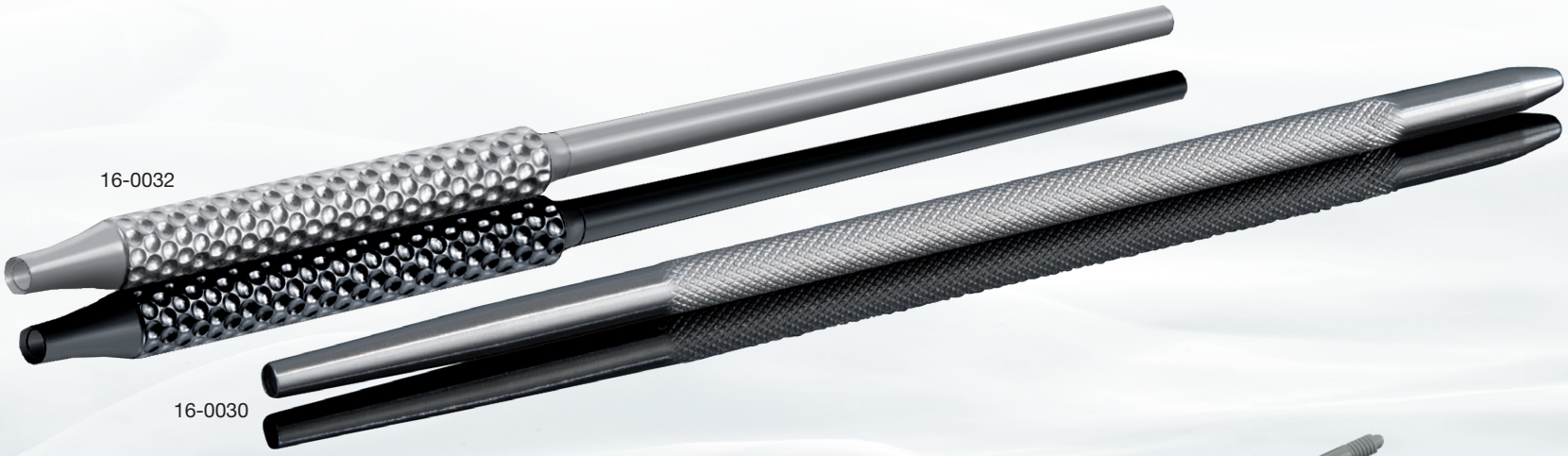

Art.-No.	Type	Description
16-2070	52-1502	Micro Scalpel Blade, 15°, 6/ pack sterile, STYLUS,
16-2075	54-5000	Micro Scalpel Blade, half-moon, 2.0 mm ,6/ pack sterile, STYLUS
16-0031		Handle for disposable knives, 18 cm, Aluminium
16-0032		Handle for disposable knives, 18 cm, Aluminium, Fairgrip™ultra
16-0032.TI		Handle for disposable knives, 18 cm, Titanium, Fairgrip™ultra
16-0030		Handle for disposable knives, 18 cm, stainless steel
16-0030.DF		Handle for disposable knives, 18 cm, heavy, stainless steel, PANDOR™
16-5050		Handle for disposable knives, 9.5 cm

Microsurgical Scalpel Handles and Blades

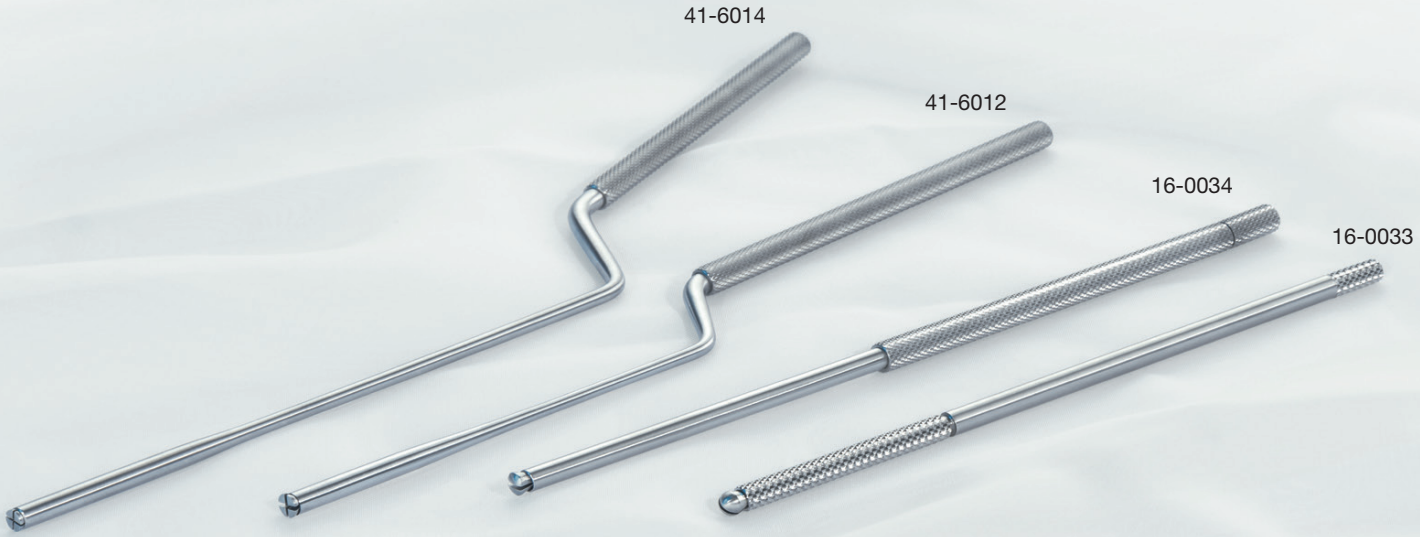

Handles

for Micro surgical blades

Art.-No.	length mm / "
16-0033	155/6
16-0033.10	100/4
16-0034	180/7
41-6012	210/8¼
41-6014	250/10

Micro Blades, Ruettgers®

sterile, pack of 10 pieces EU

Fig.	Art.-No.	description
A	16-2061/CE	# 61
B	16-2062/CE	# 62
C	16-2062.S/CE	# 62S
D	16-2064/CE	# 64
E	16-2065/CE	# 65
F	16-2067/CE	# 67
G	16-2069/CE	# 69

Illustrations not 1:1

* **bold** = shown

Probes

Set complete

Fig.	03-5910 Art.-No.	consisting of qty.	 description
A	03-5900	1	Handle, 110 mm / 4 1/4''
B	03-5904	1	Ø 4 mm, 550 mm / 21 ¾''
C	03-5905	1	Ø 6 mm, 550 mm / 21 ¾''
D	03-5906	1	Ø 8 mm, 550 mm / 21 ¾''
E	03-5907	1	Ø 10 mm, 550 mm / 21 ¾''
F	03-5908	1	Ø 12 mm, 550 mm / 21 ¾''
G	03-5909	1	Ø 14 mm, 550 mm / 21 ¾''

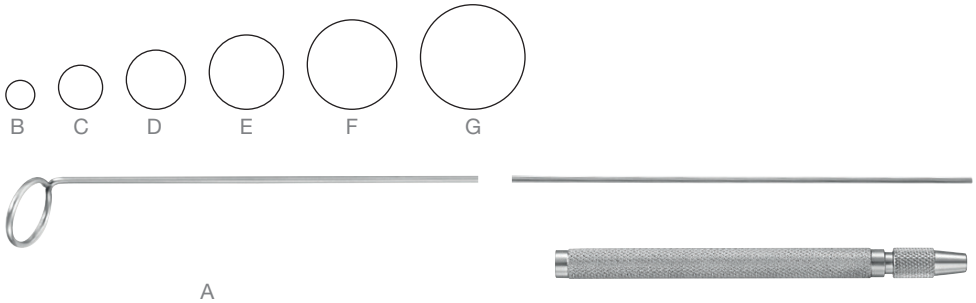

Nabatoff

Set complete

Fig.	21-1250 Art.-No.	consisting of qty.	 description
H	21-1250.02	1	Plastic probe tip
I	21-1250.03	1	3 mm metal probe tip
J	21-1250.06	1	6 mm olive
K	21-1250.09	1	9 mm olive
L	21-1250.12	1	12 mm olive
M	21-1250.BX	1	Box 135 x 100 x 25 mm
N	21-1250.GR	1	Handle
O	21-1250.ZS	1	Wire pull 90 cm

Additional

Art.-No.	description
21-1250.ZV	Adaptor to extend Wire pulls
21-1250.02SS	Stainless steel probe tip

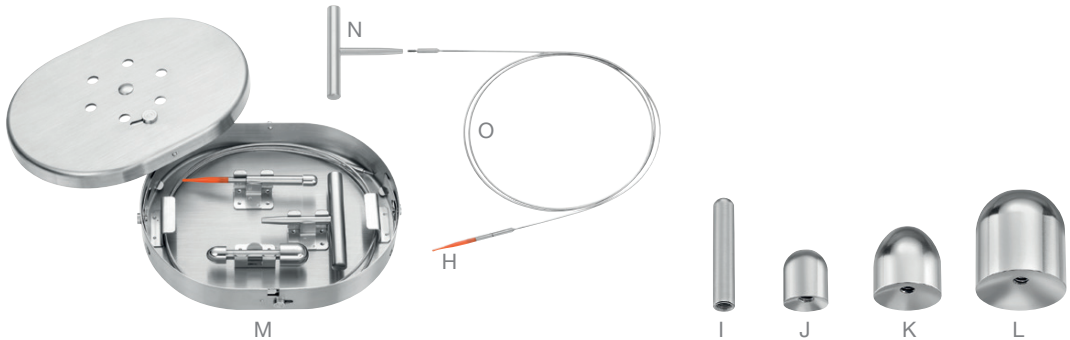

Illustrations not 1:1

Procedure Set

01-1649	consisting of	
Art.-No	**qty.**	**desciption**
16-0003	1	Scalpel handle No. 3, 12.5 cm
25-1021	6	Micro-Halstead-Mosquito Clamp 12.5 cm, curved
25-1026	1	Micro-Halstead-Mosquito Clamp 1 x 2 Teeth, 12.5 cm, curved
26-6209	1	Metzenbaum-Fino Scissors 14 cm, curved
26-6691	1	Iris Scissors 12.5 cm, curved
26-6161.ST	1	Stevens Tenotomy Scissors 12.5 cm, blunt, curved, SwedishEdge™, 1 gold shank
24-0292	1	Webster Needle Holder 12 cm, TC (S) 1.4 mm, gold rings
24-0310	1	Crile-Wood Needle Holder 15 cm, TC (F), 2 mm, gold rings
10-1831	1	Adson Forceps 1 x 2 Teeth, serrated, 12 cm
10-0105	1	DeBakey-Adson Tissue Forceps, 1.5 mm, 12.5 cm
30-0176	1	Senn-Mueller Retractor 7 x 8.5 mm, blunt, 16 cm
77-3100	1	Double Level Tray with 2 Mats, 270 x 160 x 35 mm

Tunneling Instruments

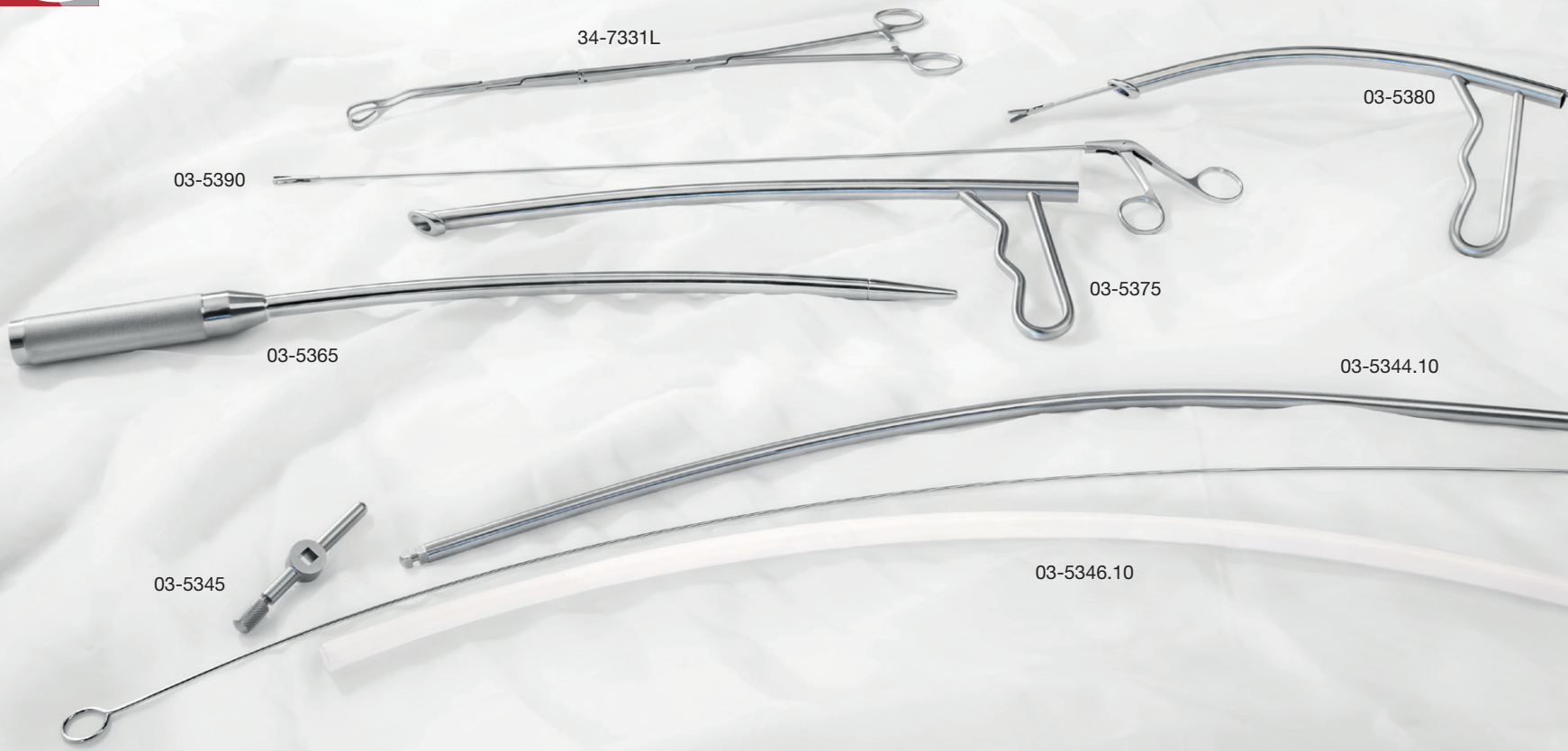

03-5395

03-5347

Tunneling Tubes

Tubes				Forceps		
Art-Nr	**Description**	**Length**	**Diameter**	**Art-Nr**	**Description**	**Length**
03-5370	slightly curved	28.0 cm	12 mm	03-5385	straight	38.0 cm
03-5375	slightly curved	38.0 cm	12 mm	03-5390	straight	48.0 cm
03-5377	slightly curved	68.0 cm	12 mm	03-5392	straight	78.0 cm
03-5380	strongly curved	28.0 cm	12 mm	03-5395	slightly curved	38.0 cm

Bullet-Tunneler

Tubes				Forceps		
Art-Nr	**Description**	**Length**	**Diameter**	**Art-Nr**	**Description**	**Length**
03-5360	slightly curved	30.0 cm	12 mm	03-5385	straight	38.0 cm
03-5365	slightly curved	40.0 cm	12 mm	03-5390	straight	48.0 cm
03-5366	slightly curved	50.0 cm	12 mm	03-5391	straight	58.0 cm
03-5367	slightly curved	70.0 cm	12 mm	03-5392	straight	78.0 cm

Tunneler Rod

Tubes (PTFE)				Forceps			Rod	Handle	Set
Art-Nr	**Description**	**Length**	**Diameter**	**Art-Nr**	**Description**	**Length**	**Art-Nr**	**Art-Nr**	**Art-Nr**
03-5346.08	slightly curved	60.0 cm	8/10 mm	03-5347	slightly curved	72.0 cm	03-5344.08	03-5345	03-5354
03-5346.10	slightly curved	60.0 cm	10/12 mm	03-5347	slightly curved	72.0 cm	03-5344.10	03-5345	03-5355
03-5346.12	slightly curved	60.0 cm	12/14 mm	03-5347	slightly curved	72.0 cm	03-5344.12	03-5345	03-5356
				03-5340.01/83	slightly curved	83.0 cm			

Tunneling forceps

Forceps		
Art-Nr	**Description**	**Length**
34-7331L	double-hinged curved	36.0 cm

* **bold** = shown

The better way to operate™

GEISTER®

GEISTER MEDIZINTECHNIK GMBH

Föhrenstrasse 2 | D-78532 Tuttlingen | Germany

☎ +49 7461/966240 | 🖷 +49 7461/9662422

www.geister.com

© Geister Medizintechnik GmbH 2025 | All rights reserved | Ref-Nr. 99-9214 | Rev | D
Technical changes, which serve progress and misprint reserved. Some products in this catalogue may not be approved in your country. Please contact your local dealer for more information.