GEISTER

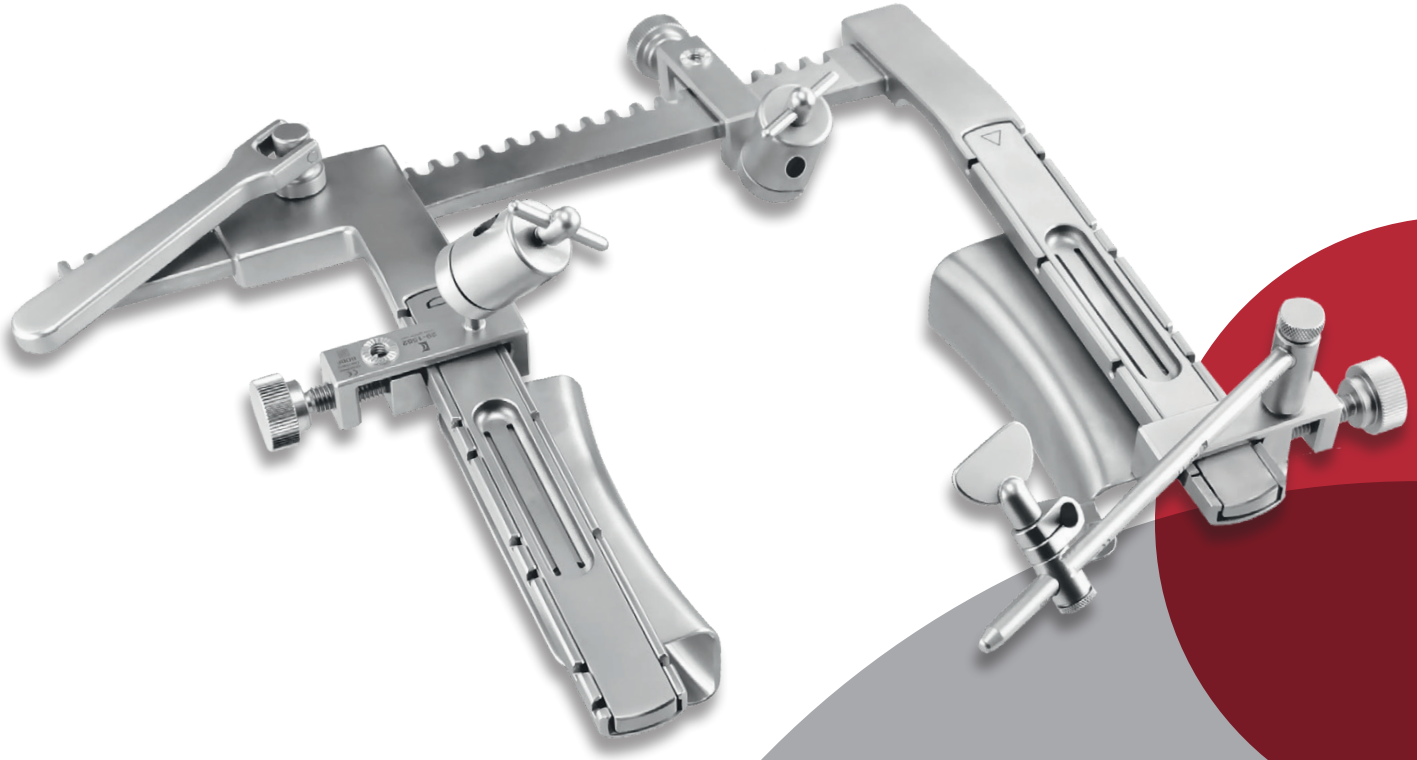

CARDIOFRAME™

HIGHLIGHT

CardioFrame™

Now with a lower profile and deeper reach than ever! Universal sternum retractor system and operating platform.

This low profile operating platform keeps operating area free for surgeon's maneuvers and combines maximum comfort through a unique quick snap-in coupling for accessories with less traumatic tissue handling, stable fixation and excellent exposure. New malleable hooks provide for a deeper reach as well as for versatile adjustment to individual requirements and patient anatomy. Carriers can be moved and fixed to any desired position on arms or spreading bar.

A wide range of GEISTER® accessories can also be used with this platform.

The system also accomodates some of the most common disposable flexible arms.

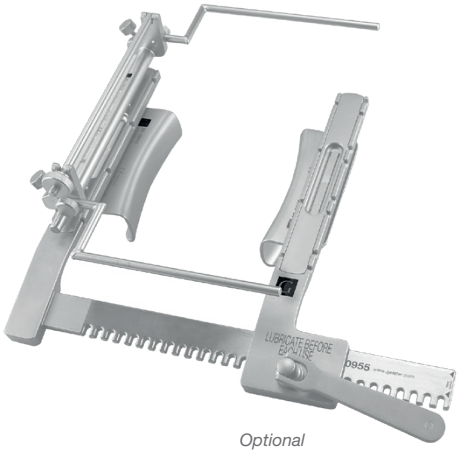

Optional

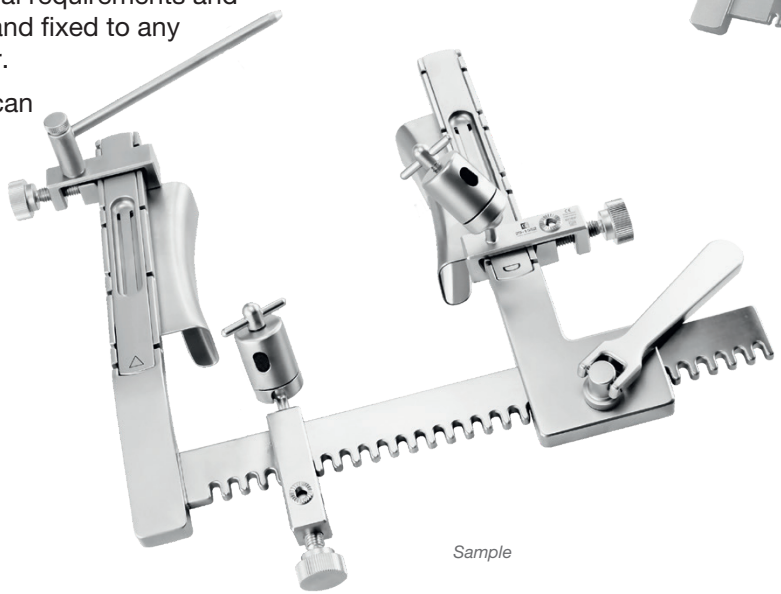

Sample

CardioFrame™ Retractor

Art.-No.	Description
29-0955	Frame (29-0955.BD) with 2 inserts (29-0955.IN) and 2x Cooley blades 30 mm deep (*29-0956.30)

Optional others

** included in 29-0955*

Optional Morse-Blades:

Art.-No.	Deep	Qty.
29-0955.30	30 x 30 mm	4 ea
29-0955.40	30 x 40 mm	4 ea
29-0955.50	30 x 50 mm	4 ea

Optional Cooley-Blades:

Art.-No.	Deep	Qty.
*29-0956.30	30 x 100 mm	2 ea
29-0956.40	40 x 100 mm	2 ea
29-0956.50	50 x 100 mm	2 ea

* **bold** = shown

CardioFrame™ Retractor – Optional accessories

Optional others

29-1550

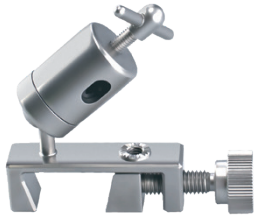

29-1552

29-1553

Art.-No.	Description
29-1511	Fixation Clamp Cleveland

Universal holding device for Hooks

Art.-No.	Description	Qty.
29-1550	horizontal	1 ea
29-1552	vertical	1 ea
29-1553	vertical, for Suture-catcher or turnable arm	1 ea

Art.-No.	Description
29-1195	Turnable arm

Art.-No.	Description	Qty.
29-0955.CV	Locking Inlay with holder CardioFrame	1 ea

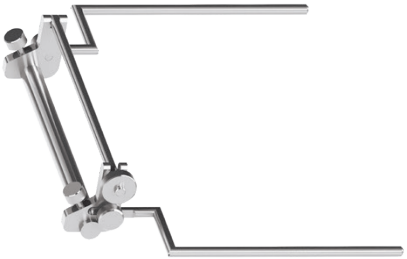

Sternum Retractor

Art.-No.	Description
29-1510	Attachment Cleveland

Suture Holder

Art.-No.	Description
29-1397.06	with 2 removable springs ValveGate™

Technical changes reserved.

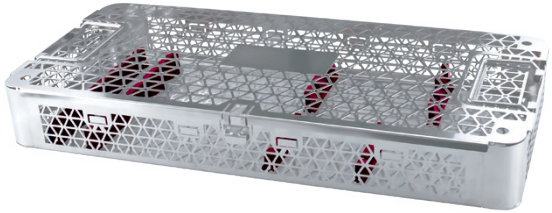

Storage tray and sterilization

Art.-No.	Description	for example
77-4015	Tray for Retractor CardioFrame™, storage wire basket with lid	for 29-0955

Our website gives a selection of various catalogs, just drop by.

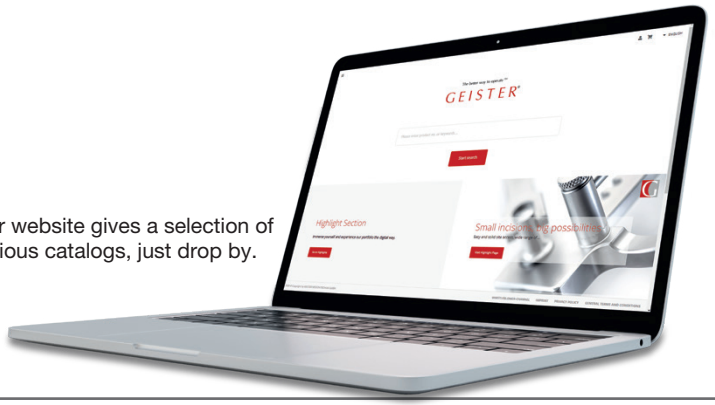

www.geister.com

The better way to operate™

GEISTER®

GEISTER MEDIZINTECHNIK GMBH

Föhrenstrasse 2 | D-78532 Tuttlingen | Germany

☎ +49 7461/966240 | 🖷 +49 7461/9662422

www.geister.com

© Geister Medizintechnik GmbH 2025 | All rights reserved | Ref-Nr. 99-9050 | Rev | D
Technical changes, which serve progress and misprint reserved. Some products in this catalogue may not be approved in your country. Please contact your local dealer for more information.