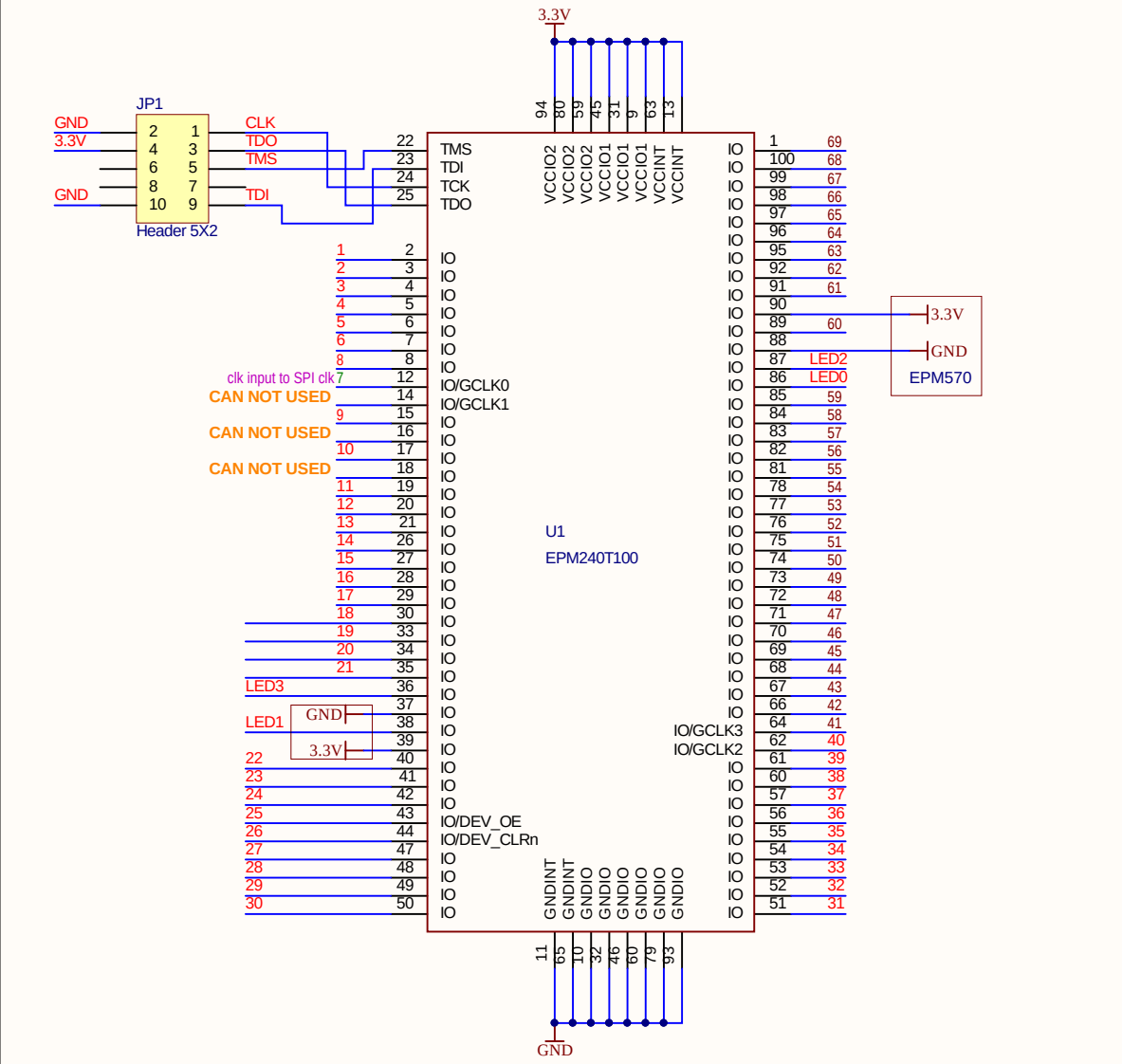

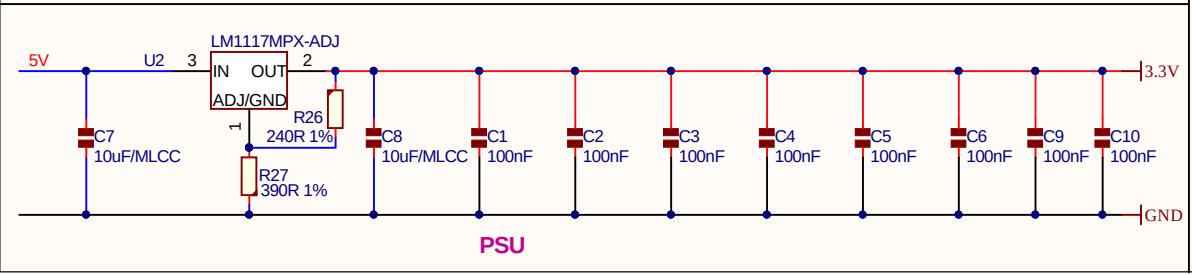

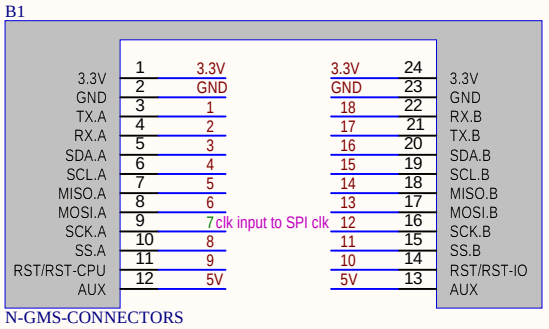

PSU CONN

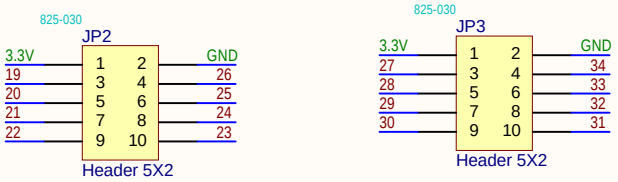

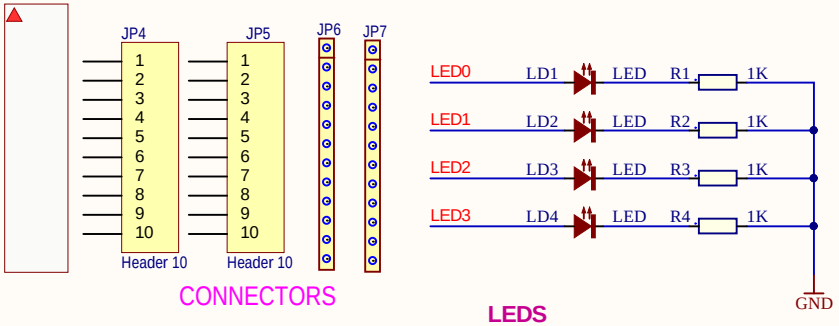

Title: prj			SIZE size
Status status	Assembled asem	Tested test	Modifications to PCB modi
PCB pcb	CODE code	txt	
Design designer1 designer2	Review reviewer1	FILE NAME: n-MAX.SchDoc	Rev ver
Creation Date: created	Updated: 05/12/2016	Sheet * of *	